ORGANIZED SEWAGE COLLECTION SYSTEM MODIFICATION

2525 CR 172 INDUSTRIAL
2525 CR 172, ROUND ROCK, TX 78681
ROUND ROCK, WILLIAMSON COUNTY, TEXAS

Prepared For:

AMAZON.COM SERVICES, LLC
Amazon Tower 1
101 Platform Way N
Nashville, TN 37203
(901) 438-4156

Prepared By:

KIMLEY-HORN AND ASSOCIATES, INC.
10814 Jollyville Road, Avallon IV, Suite 200
Austin, TX 78759
(512) 418-1771

Firm No. 928
KHA Project No. 069284918

May 2025

TABLE OF CONTENTS

EDWARDS AQUIFER APPLICATION COVER PAGE ..... SECTION 1
EDWARDS AQUIFER APPLICATION COVER PAGE *TCEQ-20705*

GENERAL INFORMATION FORM ..... SECTION 2
GENERAL INFORMATION FORM *TCEQ-0587*
Road Map ..... Attachment A
USGS / Edwards Recharge Zone Map ..... Attachment B
Project Description ..... Attachment C

GEOLOGICAL ASSESSMENT FORM ..... SECTION 3
GEOLOGICAL ASSESSMENT FORM *TCEQ-0585*
Geological Assessment Table (TCEQ-585-Table) ..... Attachment A
Stratigraphic Column ..... Attachment B
Site Geology ..... Attachment C
Site Geologic Map(s) ..... Attachment D

MODIFICATION OF A PREVIOUSLY APPROVED PLAN ..... SECTION 4
MODIFICATION OF A PREVIOUSLY APPROVED PLAN *TCEQ-0590*
Original Approval Letter and Approved Modification Letters ..... Attachment A
Narrative of Proposed Modifiation ..... Attachment B
Current Site Plan of the Approved Project ..... Attachment C

ORGANIZED SEWAGE COLLECTION SYSTEM PLAN ..... SECTION 5
ORGANIZED SEWAGE COLLECTION SYSTEM PLAN *TCEQ-0582*
SCS Engineering Design Report ..... Attachment A
Justification and Calculations for Deviation in Straight Alignment Without Manholes ..... Attachment B
Justification for Variance from Maximum Manhole Spacing ..... Attachment C
Calculations for Slopes for Flows Greater Than 10.0 Feet Per Second ..... Attachment D
Site Plan ..... Attachment E
Final Plan and Profile Sheets ..... Attachment F

LIFT STATION / FORCE MAIN SYSTEM APPLICATION ..... SECTION 6
LIFT STATION / FORCE MAIN SYSTEM APPLICATION *TCEQ-0624*
Engineering Design Report ..... Attachment A
Site Plan ..... Attachment B
Final Plan and Profile Sheets ..... Attachment C

TEMPORARY STORMWATER SECTION ..... SECTION 7
TEMPORARY STORMWATER SECTION *TCEQ-0602*
Spill Response Actions ..... Attachment A
Potential Sources of Contamination ..... Attachment B
Sequence of Major Activities ..... Attachment C
Temporary Best Management Practices and Measures ..... Attachment D
Request to Temporarily Seal a Feature ..... Attachment E
Structural Practices ..... Attachment F
Drainage Area Map ..... Attachment G
Temporary Sediment Pond(s) Plans and Calculations ..... Attachment H
Inspection and Maintenance for BMPs ..... Attachment I
Schedule of Interim and Permanent Soil Stabilization Practices ..... Attachment J

ADDITIONAL FORMS ..... SECTION 8
AGENT AUTHORIZATION FORM *TCEQ-0599*
APPLICATION FEE FORM *TCEQ-0574*
Check Payable to the "Texas Commission on Environmental Quality"
CORE DATA *FORM* *TCEQ-10400*

SECTION 1:
EDWARDS AQUIFER APPLICATION COVER PAGE

Texas Commission on Environmental Quality

Edwards Aquifer Application Cover Page

Our Review of Your Application

The Edwards Aquifer Program staff conducts an administrative and technical review of all applications. The turnaround time for administrative review can be up to 30 days as outlined in 30 TAC 213.4(e). Generally administrative completeness is determined during the intake meeting or within a few days of receipt. The turnaround time for technical review of an administratively complete Edwards Aquifer application is 90 days as outlined in 30 TAC 213.4(e). Please know that the review and approval time is directly impacted by the quality and completeness of the initial application that is received. In order to conduct a timely review, it is imperative that the information provided in an Edwards Aquifer application include final plans, be accurate, complete, and in compliance with 30 TAC 213.

Administrative Review

1. Edwards Aquifer applications must be deemed administratively complete before a technical review can begin. To be considered administratively complete, the application must contain completed forms and attachments, provide the requested information, and meet all the site plan requirements. The submitted application and plan sheets should be final plans. Please submit one full-size set of plan sheets with the original application, and half-size sets with the additional copies.

   To ensure that all applicable documents are included in the application, the program has developed tools to guide you and web pages to provide all forms, checklists, and guidance. Please visit the below website for assistance: http://www.tceq.texas.gov/field/eapp.

2. This Edwards Aquifer Application Cover Page form (certified by the applicant or agent) must be included in the application and brought to the administrative review meeting.

3. Administrative reviews are scheduled with program staff who will conduct the review. Applicants or their authorized agent should call the appropriate regional office, according to the county in which the project is located, to schedule a review. The average meeting time is one hour.

4. In the meeting, the application is examined for administrative completeness. Deficiencies will be noted by staff and emailed or faxed to the applicant and authorized agent at the end of the meeting, or shortly after. Administrative deficiencies will cause the application to be deemed incomplete and returned.

   An appointment should be made to resubmit the application. The application is re-examined to ensure all deficiencies are resolved. The application will only be deemed administratively complete when all administrative deficiencies are addressed.

5. If an application is received by mail, courier service, or otherwise submitted without a review meeting, the administrative review will be conducted within 30 days. The applicant and agent will be contacted with the results of the administrative review. If the application is found to be administratively incomplete, it can be retrieved from the regional office or returned by regular mail. If returned by mail, the regional office may require arrangements for return shipping.

6. If the geologic assessment was completed before October 1, 2004 and the site contains “possibly sensitive” features, the assessment must be updated in accordance with the *Instructions to Geologists* (TCEQ-0585 Instructions).

Technical Review

1. When an application is deemed administratively complete, the technical review period begins. The regional office will distribute copies of the application to the identified affected city, county, and groundwater conservation district whose jurisdiction includes the subject site. These entities and the public have 30 days to provide comments on the application to the regional office. All comments received are reviewed by TCEQ.

2. A site assessment is usually conducted as part of the technical review, to evaluate the geologic assessment and observe existing site conditions. The site must be accessible to our staff. The site boundaries should be

clearly marked, features identified in the geologic assessment should be flagged, roadways marked and the alignment of the Sewage Collection System and manholes should be staked at the time the application is submitted. If the site is not marked the application may be returned.

3. We evaluate the application for technical completeness and contact the applicant and agent via Notice of Deficiency (NOD) to request additional information and identify technical deficiencies. There are two deficiency response periods available to the applicant. There are 14 days to resolve deficiencies noted in the first NOD. If a second NOD is issued, there is an additional 14 days to resolve deficiencies. If the response to the second notice is not received, is incomplete or inadequate, or provides new information that is incomplete or inadequate, the application must be withdrawn or will be denied. Please note that because the technical review is underway, whether the application is withdrawn or denied **the application fee will be forfeited**.

4. The program has 90 calendar days to complete the technical review of the application. If the application is technically adequate, such that it complies with the Edwards Aquifer rules, and is protective of the Edwards Aquifer during and after construction, an approval letter will be issued. Construction or other regulated activity may not begin until an approval is issued.

Mid-Review Modifications

It is important to have final site plans prior to beginning the permitting process with TCEQ to avoid delays.

Occasionally, circumstances arise where you may have significant design and/or site plan changes after your Edwards Aquifer application has been deemed administratively complete by TCEQ. This is considered a "Mid-Review Modification". Mid-Review Modifications may require redistribution of an application that includes the proposed modifications for public comment.

If you are proposing a Mid-Review Modification, two options are available:

- If the technical review has begun your application can be denied/withdrawn, your fees will be forfeited, and the plan will have to be resubmitted.
- TCEQ can continue the technical review of the application as it was submitted, and a modification application can be submitted at a later time.

If the application is denied/withdrawn, the resubmitted application will be subject to the administrative and technical review processes and will be treated as a new application. The application will be redistributed to the affected jurisdictions.

Please contact the regional office if you have questions. If your project is located in Williamson, Travis, or Hays County, contact TCEQ's Austin Regional Office at 512-339-2929. If your project is in Comal, Bexar, Medina, Uvalde, or Kinney County, contact TCEQ's San Antonio Regional Office at 210-490-3096

Please fill out all required fields below and submit with your application.

1. Regulated Entity Name: 2525 CR 172 Industrial						**2. Regulated Entity No.:** RN112000070			
3. Customer Name: Amazon.com Services, LLC						**4. Customer No.:** CN605619519			
5. Project Type: **(Please circle/check one)**	New		Modification			Extension		Exception	
6. Plan Type: **(Please circle/check one)**	WPAP	CZP	SCS	UST	AST	EXP	EXT	Technical Clarification	Optional Enhanced Measures
7. Land Use: **(Please circle/check one)**	Residential		Non-residential			**8. Site (acres):**		69.56 acres	
9. Application Fee:	$ 650		**10. Permanent BMP(s):**			StormTrap Up-Flo Filter			
11. SCS (Linear Ft.):	494		**12. AST/UST (No. Tanks):**			N/A			
13. County:	Williamson		**14. Watershed:**			Lake Creek			

Application Distribution

Instructions: Use the table below to determine the number of applications required. One original and one copy of the application, plus additional copies (as needed) for each affected incorporated city, county, and groundwater conservation district are required. Linear projects or large projects, which cross into multiple jurisdictions, can require additional copies. Refer to the "Texas Groundwater Conservation Districts within the EAPP Boundaries" map found at:

http://www.tceq.texas.gov/assets/public/compliance/field_ops/eapp/EAPP%20GWCD%20map.pdf

For more detailed boundaries, please contact the conservation district directly.

Austin Region			
County:	**Hays**	**Travis**	**Williamson**
Original (1 req.)	__	__	X
Region (1 req.)	__	__	X
County(ies)	__	__	X
Groundwater Conservation District(s)	__Edwards Aquifer Authority __Barton Springs/ Edwards Aquifer __Hays Trinity __Plum Creek	__Barton Springs/ Edwards Aquifer	NA
City(ies) Jurisdiction	__Austin __Buda __Dripping Springs __Kyle __Mountain City __San Marcos __Wimberley __Woodcreek	__Austin __Bee Cave __Pflugerville __Rollingwood __Round Rock __Sunset Valley __West Lake Hills	__Austin __Cedar Park __Florence __Georgetown __Jerrell __Leander __Liberty Hill __Pflugerville X Round Rock

San Antonio Region					
County:	**Bexar**	**Comal**	**Kinney**	**Medina**	**Uvalde**
Original (1 req.)	__	__	__	__	__
Region (1 req.)	__	__	__	__	__
County(ies)	__	__	__	__	__
Groundwater Conservation District(s)	__ Edwards Aquifer Authority __Trinity-Glen Rose	__Edwards Aquifer Authority	__Kinney	__EAA __Medina	__EAA __Uvalde
City(ies) Jurisdiction	__Castle Hills __Fair Oaks Ranch __Helotes __Hill Country Village __Hollywood Park __San Antonio (SAWS) __Shavano Park	__Bulverde __Fair Oaks Ranch __Garden Ridge __New Braunfels __Schertz	NA	__San Antonio ETJ (SAWS)	NA

I certify that to the best of my knowledge, that the application is complete and accurate. This application is hereby submitted to TCEQ for administrative review and technical review. Nicholas C. Brown, P.E.
Print Name of Customer/Authorized Agent
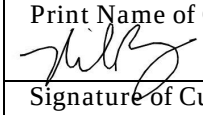 05/15/2025
Signature of Customer/Authorized Agent Date

FOR TCEQ INTERNAL USE ONLY				
Date(s)Reviewed:		Date Administratively Complete:		
Received From:		Correct Number of Copies:		
Received By:		Distribution Date:		
EAPP File Number:		Complex:		
Admin. Review(s) (No.):		No. AR Rounds:		
Delinquent Fees (Y/N):		Review Time Spent:		
Lat./Long. Verified:		SOS Customer Verification:		
Agent Authorization Complete/Notarized (Y/N):		Fee Check:	Payable to TCEQ (Y/N):	
Core Data Form Complete (Y/N):			Signed (Y/N):	
Core Data Form Incomplete Nos.:			Less than 90 days old (Y/N):	

SECTION 2:
GENERAL INFORMATION FORM

General Information Form

Texas Commission on Environmental Quality

For Regulated Activities on the Edwards Aquifer Recharge and Transition Zones and Relating to 30 TAC §213.4(b) & §213.5(b)(2)(A), (B) Effective June 1, 1999

To ensure that the application is administratively complete, confirm that all fields in the form are complete, verify that all requested information is provided, consistently reference the same site and contact person in all forms in the application, and ensure forms are signed by the appropriate party.

Note: Including all the information requested in the form and attachments contributes to more streamlined technical reviews.

Signature

To the best of my knowledge, the responses to this form accurately reflect all information requested concerning the proposed regulated activities and methods to protect the Edwards Aquifer. This **General Information Form** is hereby submitted for TCEQ review. The application was prepared by:

Print Name of Customer/Agent: Nicholas C. Brown, P.E.

Date: 05/15/2025

Signature of Customer/Agent:



Project Information

1. Regulated Entity Name: 2525 CR 172 Industrial
2. County: Williamson
3. Stream Basin: Lake Creek
4. Groundwater Conservation District (If applicable): N/A
5. Edwards Aquifer Zone:

   [X] Recharge Zone
   [ ] Transition Zone

6. Plan Type:

   [ ] WPAP
   [X] SCS
   [X] Modification
   [ ] AST
   [ ] UST
   [ ] Exception Request

7. Customer (Applicant):

Contact Person: David Barnett
Entity: Amazon.com Services, LLC
Mailing Address: Amazon Tower 1, 101 Platform Way N
City, State: Nashville, TN Zip: 37203
Telephone: 901-438-4156 FAX: N/A
Email Address: barnettu@amazon.com

8. Agent/Representative (If any):

Contact Person: Nicholas C. Brown, P.E.
Entity: Kimley-Horn and Associates
Mailing Address: 10814 Jollyville Rd, Avallon IV, Suite 200
City, State: Austin, TX Zip: 78759
Telephone: 512-418-1771 FAX: N/A
Email Address: nick.brown@kimley-horn.com

9. Project Location:

☐ The project site is located inside the city limits of _____.
☒ The project site is located outside the city limits but inside the ETJ (extra-territorial jurisdiction) of Round Rock.
☐ The project site is not located within any city's limits or ETJ.

10. ☒ The location of the project site is described below. The description provides sufficient detail and clarity so that the TCEQ's Regional staff can easily locate the project and site boundaries for a field investigation.

2525 CR 172

11. ☒ **Attachment A – Road Map**. A road map showing directions to and the location of the project site is attached. The project location and site boundaries are clearly shown on the map.

12. ☒ **Attachment B - USGS / Edwards Recharge Zone Map**. A copy of the official 7 ½ minute USGS Quadrangle Map (Scale: 1" = 2000') of the Edwards Recharge Zone is attached. The map(s) clearly show:

☒ Project site boundaries.
☒ USGS Quadrangle Name(s).
☒ Boundaries of the Recharge Zone (and Transition Zone, if applicable).
☒ Drainage path from the project site to the boundary of the Recharge Zone.

13. ☒ **The TCEQ must be able to inspect the project site or the application will be returned**. Sufficient survey staking is provided on the project to allow TCEQ regional staff to locate the boundaries and alignment of the regulated activities and the geologic or manmade features noted in the Geologic Assessment.

☒ Survey staking will be completed by this date: 05/31/2024

14. [X] **Attachment C – Project Description**. Attached at the end of this form is a detailed narrative description of the proposed project. The project description is consistent throughout the application and contains, at a minimum, the following details:

- [X] Area of the site
- [X] Offsite areas
- [X] Impervious cover
- [X] Permanent BMP(s)
- [X] Proposed site use
- [X] Site history
- [X] Previous development
- [X] Area(s) to be demolished

15. Existing project site conditions are noted below:

- [ ] Existing commercial site
- [ ] Existing industrial site
- [ ] Existing residential site
- [ ] Existing paved and/or unpaved roads
- [ ] Undeveloped (Cleared)
- [X] Undeveloped (Undisturbed/Uncleared)
- [ ] Other: _____

Prohibited Activities

16. [X] I am aware that the following activities are prohibited on the Recharge Zone and are not proposed for this project:

(1) Waste disposal wells regulated under 30 TAC Chapter 331 of this title (relating to Underground Injection Control);

(2) New feedlot/concentrated animal feeding operations, as defined in 30 TAC §213.3;

(3) Land disposal of Class I wastes, as defined in 30 TAC §335.1;

(4) The use of sewage holding tanks as parts of organized collection systems; and

(5) New municipal solid waste landfill facilities required to meet and comply with Type I standards which are defined in §330.41(b), (c), and (d) of this title (relating to Types of Municipal Solid Waste Facilities).

(6) New municipal and industrial wastewater discharges into or adjacent to water in the state that would create additional pollutant loading.

17. [X] I am aware that the following activities are prohibited on the Transition Zone and are not proposed for this project:

(1) Waste disposal wells regulated under 30 TAC Chapter 331 (relating to Underground Injection Control);

(2) Land disposal of Class I wastes, as defined in 30 TAC §335.1; and

(3) New municipal solid waste landfill facilities required to meet and comply with Type I standards which are defined in §330.41 (b), (c), and (d) of this title.

Administrative Information

18. The fee for the plan(s) is based on:

- ☐ For a Water Pollution Abatement Plan or Modification, the total acreage of the site where regulated activities will occur.
- ☒ For an Organized Sewage Collection System Plan or Modification, the total linear footage of all collection system lines.
- ☐ For a UST Facility Plan or Modification or an AST Facility Plan or Modification, the total number of tanks or piping systems.
- ☐ A request for an exception to any substantive portion of the regulations related to the protection of water quality.
- ☐ A request for an extension to a previously approved plan.

19. ☒ Application fees are due and payable at the time the application is filed. If the correct fee is not submitted, the TCEQ is not required to consider the application until the correct fee is submitted. Both the fee and the Edwards Aquifer Fee Form have been sent to the Commission's:

- ☐ TCEQ cashier
- ☒ Austin Regional Office (for projects in Hays, Travis, and Williamson Counties)
- ☐ San Antonio Regional Office (for projects in Bexar, Comal, Kinney, Medina, and Uvalde Counties)

20. ☒ Submit one (1) original and one (1) copy of the application, plus additional copies as needed for each affected incorporated city, groundwater conservation district, and county in which the project will be located. The TCEQ will distribute the additional copies to these jurisdictions. The copies must be submitted to the appropriate regional office.

21. ☒ No person shall commence any regulated activity until the Edwards Aquifer Protection Plan(s) for the activity has been filed with and approved by the Executive Director.

ROAD MAP

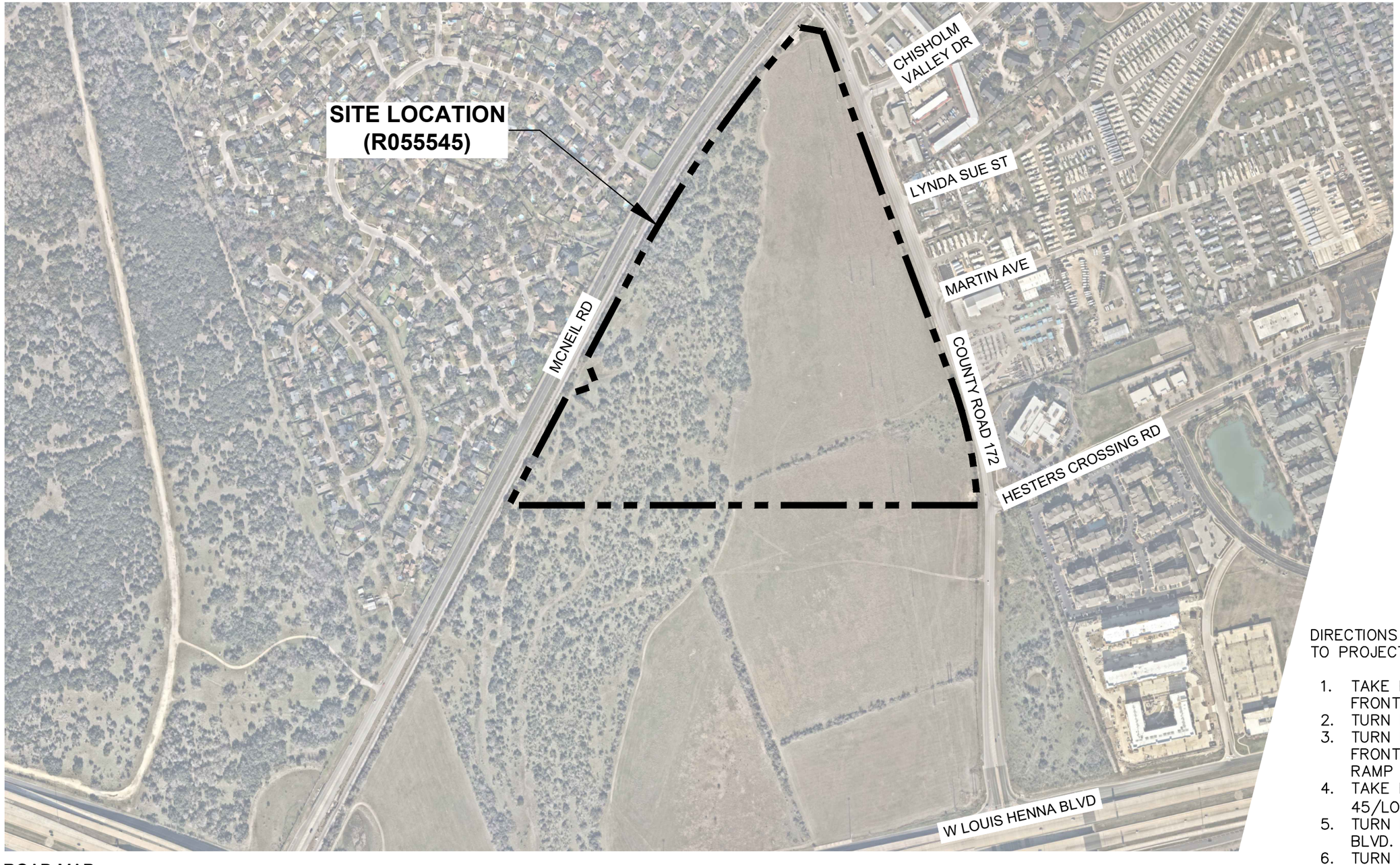

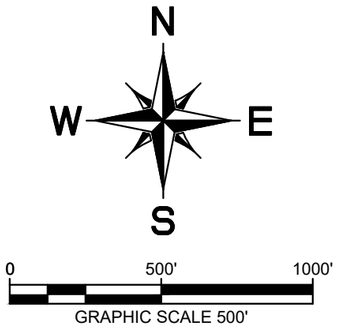

DIRECTIONS FROM TCEQ HEADQUARTERS TO PROJECT SITE:

1. TAKE PARK 35 CIR TO S I-35 FRONTAGE RD.
2. TURN LEFT ONTO E BRAKER LN.
3. TURN LEFT ONTO N I-35 FRONTAGE RD AND TAKE THE RAMP ONTO I-35 N.
4. TAKE EXIT 250 TOWARDS TEXAS 45/LOUIS HENNA BLVD.
5. TURN LEFT ONTO W LOUIS HENNA BLVD.
6. TURN RIGHT ONTO COUNTY ROAD 172.

ROAD MAP

2525 CR 172 INDUSTRIAL

ROUND ROCK, TEXAS
MAY 2024

DWG NAME K:\AUS_CIVIL\069284910 - DAU3 ROUND ROCK\CAD\EXHIBITS\PLANSHEETS\TCEQ\ATTACHMENT A - ROAD MAP.DWG
LAST SAVED 5/6/2024 1:39 PM

Kimley»Horn
10814 Jollyville Road
Campus IV, Suite 200
Austin, TX 78759
512-418-1771
State of Texas Registration No. F-928

NOTE: THIS PLAN IS CONCEPTUAL IN NATURE AND HAS BEEN PRODUCED WITHOUT THE BENEFIT OF A SURVEY, TOPOGRAPHY, UTILITIES, CONTACT WITH THE CITY, ETC.

USGS / EDWARDS RECHARGE ZONE MAP

IMAGES
XREFS
PLOTTED BY MONEGRO, MELISSA 3/12/2024 5:08 PM
DWG NAME K:\AUS_CIVIL\069284910 - DAU3 ROUND ROCK\CAD\EXHIBITS\PLANSHEETS\TCEQ\ATTACHMENT B - USGS QUADRANGLE MAP.DWG
LAST SAVED 3/12/2024 5:05 PM

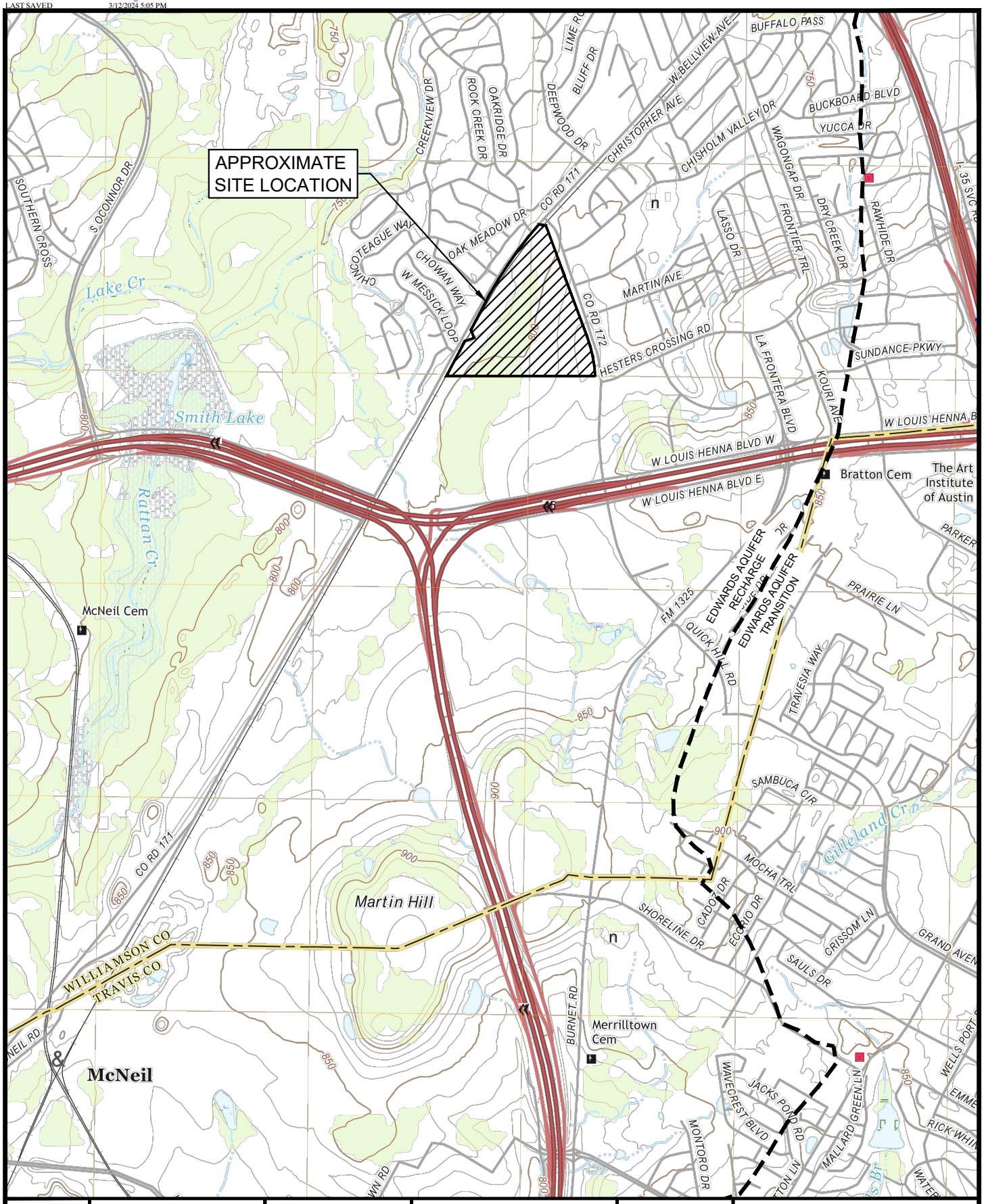

SHEET 1 OF 1 SHEETS	Scale: 1:2000 Designed by: MM Drawn by: MM Checked by: NCB Date: MAY 2024 Project No. 069284918	USGS / Edwards Recharge Zone Map	2525 CR 172 INDUSTRIAL	N W E S	Kimley»Horn

This product is for informational purposes and may not have been prepared for or be suitable for legal, engineering, or surveying purposes. It does not represent an on-th-ground survey and represents only the approximate relative location of property boundaries.

PROJECT DESCRIPTION

The proposed 2525 CR 172 Industrial project located at 2525 CR 172 in Round Rock, Texas is located south of the McNeil Rd and County Road 172 intersection within the Round Rock City Limits. The property is currently zoned Planned Unit Development (PUD) 153. The current zoning supports the use of the proposed development. The proposed existing property is approximately 69.56-acres and the site is currently undeveloped. The proposed land use would be classified as Industrial.

The proposed improvements include one (1) story building along with pedestrian improvements, private drives, loading docks, parking, and associated site improvements. Parking will be provided onsite throughout the property and access is provided on CR 172. A WPAP will be submitted separately to address any developments outside of this SCS wastewater improvements. The limits of construction for the wastewater improvements will consist of 1.01 acres out of the 69.56-total site acres.

This project is located within the Lake Creek Watershed. A portion of this site is located in the Federal Emergency Management Agency's 100-year floodplain according to FIRM 48491C0630F. The site is located within the Edwards Aquifer Recharge Zone according to the TCEQ Edward's Aquifer Maps. A Critical Environmental Feature (CEF) is located on the property, however, no wastewater or site improvements are proposed within the CEF or associated setback.

The wastewater extension will serve a proposed industrial building and miscellaneous smaller buildings located on the property.

Demolition activity will be limited to tree removal and site grading.

SECTION 3:
GEOLOGICAL ASSESSMENT FORM

Geologic Assessment

Texas Commission on Environmental Quality

For Regulated Activities on The Edwards Aquifer Recharge/transition Zones and Relating to 30 TAC §213.5(b)(3), Effective June 1, 1999

To ensure that the application is administratively complete, confirm that all fields in the form are complete, verify that all requested information is provided, consistently reference the same site and contact person in all forms in the application, and ensure forms are signed by the appropriate party.

Note: Including all the information requested in the form and attachments contributes to more streamlined technical reviews.

Signature

To the best of my knowledge, the responses to this form accurately reflect all information requested concerning the proposed regulated activities and methods to protect the Edwards Aquifer. My signature certifies that I am qualified as a geologist as defined by 30 TAC Chapter 213.

Print Name of Geologist: Dave Hill Telephone: 512-832-8005

Date: February 22, 2024 Fax: 512-837-8221

Representing: ECS Southwest, LLP (Name of Company and TBPG or TBPE registration number)

Signature of Geologist:

Katherine Moore TBPG # 15137

Regulated Entity Name: 2525 CR 172 Industrial

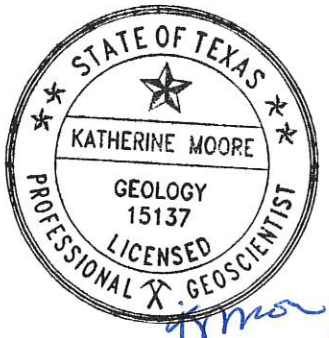

5 June 2024

Project Information

1. Date(s) Geologic Assessment was performed: February 22, 2024
2. Type of Project:
   - ☒ WPAP
   - ☐ SCS
   - ☐ AST
   - ☐ UST
3. Location of Project:
   - ☒ Recharge Zone
   - ☐ Transition Zone
   - ☐ Contributing Zone within the Transition Zone

4. ☒ **Attachment A - Geologic Assessment Table**. Completed Geologic Assessment Table (Form TCEQ-0585-Table) is attached.

5. ☒ Soil cover on the project site is summarized in the table below and uses the SCS Hydrologic Soil Groups* (Urban Hydrology for Small Watersheds, Technical Release No. 55, Appendix A, Soil Conservation Service, 1986). If there is more than one soil type on the project site, show each soil type on the site Geologic Map or a separate soils map.

Table 1 - Soil Units, Infiltration Characteristics and Thickness

Soil Name	Group*	Thickness(feet)

** Soil Group Definitions (Abbreviated)*

A. Soils having a high infiltration rate when thoroughly wetted.

B. Soils having a moderate infiltration rate when thoroughly wetted.

C. Soils having a slow infiltration rate when thoroughly wetted.

D. Soils having a very slow infiltration rate when thoroughly wetted.

6. ☒ **Attachment B – Stratigraphic Column**. A stratigraphic column showing formations, members, and thicknesses is attached. The outcropping unit, if present, should be at the top of the stratigraphic column. Otherwise, the uppermost unit should be at the top of the stratigraphic column.

7. ☒ **Attachment C – Site Geology**. A narrative description of the site specific geology including any features identified in the Geologic Assessment Table, a discussion of the potential for fluid movement to the Edwards Aquifer, stratigraphy, structure(s), and karst characteristics is attached.

8. ☒ **Attachment D – Site Geologic Map(s)**. The Site Geologic Map must be the same scale as the applicant's Site Plan. The minimum scale is 1": 400'

   Applicant's Site Plan Scale: 1" = _____'
   Site Geologic Map Scale: 1" = _____'
   Site Soils Map Scale (if more than 1 soil type): 1" = _____'

9. Method of collecting positional data:

   ☒ Global Positioning System (GPS) technology.
   ☐ Other method(s). Please describe method of data collection: _____

10. ☒ The project site and boundaries are clearly shown and labeled on the Site Geologic Map.

11. ☒ Surface geologic units are shown and labeled on the Site Geologic Map.

12. ☒ Geologic or manmade features were discovered on the project site during the field investigation. They are shown and labeled on the Site Geologic Map and are described in the attached Geologic Assessment Table.

    ☐ Geologic or manmade features were not discovered on the project site during the field investigation.

13. ☒ The Recharge Zone boundary is shown and labeled, if appropriate.

14. All known wells (test holes, water, oil, unplugged, capped and/or abandoned, etc.): If applicable, the information must agree with Item No. 20 of the WPAP Application Section.

    ☒ There are 1 (#) wells present on the project site and the locations are shown and labeled. (Check all of the following that apply.)
    - ☒ The wells are not in use and have been properly abandoned.
    - ☐ The wells are not in use and will be properly abandoned.
    - ☐ The wells are in use and comply with 16 TAC Chapter 76.

    ☒ There are no wells or test holes of any kind known to exist on the project site.

Administrative Information

15. ☒ Submit one (1) original and one (1) copy of the application, plus additional copies as needed for each affected incorporated city, groundwater conservation district, and county in which the project will be located. The TCEQ will distribute the additional copies to these jurisdictions. The copies must be submitted to the appropriate regional office.

GEOLOGICAL ASSESSMENT TABLE

GEOLOGIC ASSESSMENT TABLE

PROJECT NAME 51-3992 McNeil and CR 107

LOCATION			FEATURE CHARACTERISTICS												EVALUATION			PHYSICAL SETTING		
1A	1B *	1C*	2A	2B	3	4			5	5A	6	7	8A	8B	9	10		11		12
FEATURE ID	LATITUDE	LONGITUDE	FEATURE TYPE	POINTS	FORMATION	DIMENSIONS (FEET)			TREND (DEGREES)	DOM	DENSITY (NO/FT)	APERTURE (FEET)	INFILL	RELATIVE INFILTRATION RATE	TOTAL	SENSITIVITY		CATCHMENT AREA (ACRES)		TOPOGRAPHY
						X	Y	Z		10						<40	>40	<1.6	>1.6	
Feature 1	30.478333	-97.704167	O	5		40	590	5					N	15	20	X				Drainage
Feature 2	30.478333	-97.701944	O	5		1200	70	3					O	15	20	X				Drainage
Feature 3	30.480833	-97.702778	O	5		35	73	2					N	15	20	X				Drainage
Feature 4	30.291	97.4151	SC	20		4	7	6					O	10	30	X				Hilltop
Feature 5	30.291	97.4152	SC	20		14	9	6					O	10	30	X				Hilltop
Water Well	30.2916	97.4151	MB	30		X	X	X					N	5	35	X				

* DATUM:_____

2A TYPE	TYPE	2B POINTS
C	Cave	30
SC	Solution cavity	20
SF	Solution-enlarged fracture(s)	20
F	Fault	20
O	Other natural bedrock features	5
MB	Manmade feature in bedrock	30
SW	Swallow hole	30
SH	Sinkhole	20
CD	Non-karst closed depression	5
Z	Zone, clustered or aligned features	30

8A INFILLING	
N	None, exposed bedrock
C	Coarse - cobbles, breakdown, sand, gravel
O	Loose or soft mud or soil, organics, leaves, sticks, dark colors
F	Fines, compacted clay-rich sediment, soil profile, gray or red colors
V	Vegetation. Give details in narrative description
FS	Flowstone, cements, cave deposits
X	Other materials

12 TOPOGRAPHY

Cliff, Hilltop, Hillside, Drainage, Floodplain, Streambed

I have read, I understood, and I have followed the Texas Commission on Environmental Quality's Instructions to Geologists. The information presented here complies with that document and is a true representation of the conditions observed in the field.

My signature certifies that I am qualified as a geologist as defined by 30 TAC Chapter 213.

_____ Date: February 22, 2024

Sheet __1____ of _____

TCEQ-0585-Table (Rev. 10-01-04)

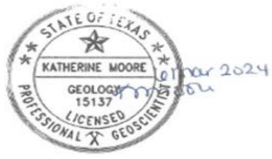

STRATIGRAPHIC COLUMN

Stratigraphic Column
McNeil and CR 107
Roundrock, Williamson County, Texas



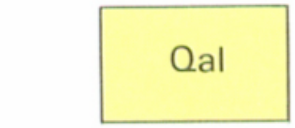

Alluvium

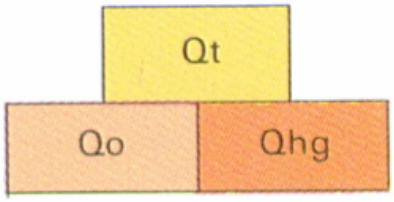

Fluviatile terrace deposits

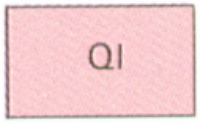

Lissie Formation undivided



Eagle Ford Group and Buda Limestone



Del Rio Clay ("Grayson Marl") and Georgetown Formation

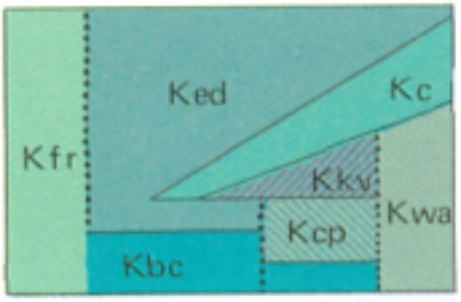

Fredericksburg Group

SITE GEOLOGY

GEOLOGIC ASSESSMENT



PROPOSED AUSTIN ROUND ROCK DEVLOPMENT
SOUTH CORNER OF CR 172 & MCNEIL ROAD
ROUND ROCK, WILLIAMSON COUNTY, TEXAS 78759

ECS PROJECT NO. 51:3992

FOR

KIMLEY-HORN

MARCH 6, 2024

March 6, 2024

Mr.Nick Brown
Kimley-Horn
10814 Jollyville Road, Avallon IV
Austin, Texas, 78759

ECS Project No. 51:3992

Reference: Geologic Assessment Report, Proposed Austin Round Rock Devlopment, South Corner of CR 172 & McNeil Road, Round Rock, Williamson County Texas

Dear Mr. Brown:

ECS Southwest, LLP (ECS) is pleased to provide Kimley-Horn with a Geologic Assessment for the above referenced property. ECS' services were conducted in accordance with the services outlined in ECS Proposal No. 51:5593 authorized on February 13, 2024

ECS did not observe recharge features on the site. ECS would like to thank Kimley-Horn for the opportunity to provide you with this Geologic Assessment. We look forward to assisting you further with this project and other environmental concerns you may have. If you have any questions, please feel free to contact us at any time at 512-837-8005.

Sincerely,

ECS Southwest, LLP







John Jones
Assistant Staff Project Manager
jjones5@ecslimited.com
512-837-8005

Katherine Moore, P.G.
Geologic Assessment
klmoore@ecslimited.com
512-837-8005

1.0 INTRODUCTION

The geologic assessment provided here, as part of the applicant's plan, addresses the required items as cited in Title 30 of the Texas Administrative Code (TAC), Part 1, Chapter 213, Subchapter A, Rule 213.5, relating to development over the Edwards Aquifer This report identifies observed potential pathways for contaminant movement into the underlying Edwards Aquifer as required by the Texas Commission on Environmental Quality (TCEQ).

The subject property is comprised of approximately 193.289 acres of undeveloped land. The subject property is identified by the Williamson County Central Appraisal District as portions of parcels R055545, located at South Corner of CR 172 & McNeil Road in Round Rock, Texas. The subject property is located over the Edwards Aquifer Recharge Zone.

The purpose of this Geologic Assessment is to fulfill the requirements for the applicant's plan for site improvements on the property. This report will describe surficial geologic units and identify the locations and extent of significant features that may impact the underlying Edwards Aquifer Recharge Zone.

2.0 SOIL UNITS

According to the United States Department of Agriculture (USDA) Soil Survey of Williamson County, Texas, there are nine (9) soil units mapped on the site (Figure 4). The soils on site consist of: Denton silty clay, 1 to 3 percent slopes, (DcB), Denton silty clay, 3 to 5 percent slopes, (DnC), Doss silty clay, moist, 1 to 5 percent slopes, (DoC), Eckrant cobbly clay, 1 to 8 percent slopes, (EaD), Eckrant stony clay, 0 to 3 percent slopes, stony, (EeB), Fairlie clay, 0 to 1 percent slopes, (FaA), Fairlie clay, 1 to 2 percent slopes, (FaB), Georgetown stony clay loam, 1 to 3 percent slopes, (GsB), and Heiden clay, 2 to 5 percent slopes, moderately eroded, (HedC2).

Denton silty clay, 1 to 3 percent slopes (DcB), and Denton silty clay, 3 to 5% slopes (DnC), The Hydrologic Soil Group is listed as D, The Denton series consists of deep, well-drained, slowly permeable soils that formed in clayey materials over residuum weathered from limestone bedrock of lower Cretaceous age (USDA, 2023). Flooding or ponding is reported as “none.” The depth to a restrictive layer is reported to be 22 to 60 inches to lithic bedrock, and the available water supply is listed as low, 0 to 60 inches.

Doss silty clay, moist, 1 to 5 percent slopes, (DoC). The Hydrologic Soil Group is listed as D, The Doss series consists of shallow to weakly cemented limestone, well drained, moderately slow permeable soils that formed in calcareous loamy and clayey residuum derived from marls and limestone. (USDA, 2023). Flooding or ponding is reported as “none.” The depth to a restrictive layer is reported to be 11 to 20 inches to lithic bedrock, and the available water supply is listed as very low, 0 to 60 inches.

Eckrant cobbly clay, 1 to 8 percent slopes, (EaD) and Eckrant cobbly clay, 0 to 3 percent slopes, stony (EeB), is formed on ridges derived from residuum weathered from limestone, very stony, (USDA, 2023). The Hydrologic Soil Group is listed as D, and the soil is well drained. Flooding or ponding is reported as “none.” The depth to a restrictive layer is reported to be 4 to 20 inches to lithic bedrock, and the available water supply is listed as very low, 0 to 60 inches.

Fairlie clay, 0 to 1 percent slopes, (FaA), and Fairlie clay, 1 to 3 percent slopes (FaB). The Fairlie series consists of deep, moderately well-drained, very slowly permeable soils (USDA, 2023). The Hydrologic Soil Group is listed as D, and the soil is well drained. Flooding or ponding is reported as “none.” The depth to a restrictive layer is reported to be 40 to 60 inches to paralithic bedrock, and the available water supply is listed as moderate, 0 to 60 inches.

Georgetown stony clay loam, 1 to 3 percent slopes, (GsB), The Georgetown series consists of moderately deep, well drained, very slowly permeable soils that have formed over indurated limestone of Cretaceous age (USDA, 2023). The Hydrologic Soil Group is listed as D, and the soil is well drained. Flooding or ponding is reported as “none.” The depth to a restrictive layer is reported to be 20 to 40 inches to lithic bedrock, and the available water supply is listed as low, 0 to 60 inches.

Heiden clay, 2 to 5 percent slopes, moderately eroded, (HedC2), The Heiden series consists of deep and very deep to mudstone, well drained, very slowly permeable soils that formed in clayey residuum weathered from mudstone (USDA, 2023). The Hydrologic Soil Group is listed as D, and the soil is well drained. Flooding or ponding is reported as “none.” The depth to a restrictive layer is reported to be 40 to 65 inches to densic material, and the available water supply is listed as very high, 0 to 60 inches

3.0 GEOLOGY

3.1 Regional Geology

Ranging from north to south, two primary physiographic provinces are present in Williamson County: the Great Plain and the Gulf Coastal Plain. The Gulf Coastal Plain is comprised mainly of Blackland prairie.

The Great Plain is comprised chiefly of limestone plains, which locally merges with the Edwards Plateau in the vicinity of the Colorado River.

Groundwater recharge and flow are controlled by faulted Edwards Aquifer and adjacent strata. Water enters the aquifer by means of solution features controlled by faults, fractures and solution conduits. Solution features are created by the dissolution of limestone primarily from rainwater and groundwater. Deformation of the Balcones fault system controls both the large- and small-scale flow barriers and pathways present in the Edwards Aquifer.

3.2 Site Geology

Geological information pertaining to the area was obtained from the Geologic Atlas of Texas, Austin Sheet, published by University of Texas at Austin, Bureau of Economic Geology (BEG), 1997. The subject property is situated on Del Rio (Kdr) (Figure 6).

BEG describes Kdr as "calcareous and gypsiferous becoming less calcareous and more gypsiferous upward, pyrite common, blocky medium gray, some thin lenticular beds of highly calcareous siltstone; marine megafossils include abundant Exogyra arietina and other pelecypods; thickness 40-70 feet"

Obvious signs of faulting were not mapped or observed on the subject property.

4.0 HYDROLOGY

4.1 Site Hydrology

Based upon interpretation of the United States Geological Survey 7.5 Minute Series topographic quadrangle map, Pflugerville West, Texas Quadrangle (2022), and the onsite reconnaissance, the estimated onsite shallow groundwater flow direction is south to an unnamed tributary of Lake Creek, and Ratten Creek Figure 2). It should be noted that shallow groundwater flow direction is estimated based on a review of published maps, surface topography, and site reconnaissance. Local conditions that may influence the subsurface hydrology would be local topography (hills and valleys), geologic anomalies, utilities, and nearby wells or sumps.

4.2 Surface Water Hydrology

Site drainage appears to slope generally to the southeast from Lake Creek, and Ratten Creek towards unkown tributary (Figure 2). Three (3) drainage features were observed at the subject site.

5.0 SITE INVESTIGATION

The site reconnaissance was performed on February 22, 2024. The site investigation was performed by traversing the subject property in meandering transects, spaced 10 to 15 meters apart depending on thickness of vegetation. Photographs were taken to document any features observed during the reconnaissance.

The subject property is currently undeveloped land. Five (5) potential site recharge features (S-1, S-2, S-3, S-4, and S-5) were observed on the subject property. S-1 and S-2 were near the southwest boundary, S-3 was located slightly north off the southern boundary, and S-4 and S-5 were located on the northern part of the subject property. These are marked on the Site Geologic Map (Figure 6C). S-1, S-2, and S-3 appeared to be natural drainage, S-1 and S-2 are karst like features. One (1) water well was observed on the northern part of the subject property. These features are described in further detail in the Geologic Assessment Table.

Other potential natural recharge features such as caves, faults, or lineaments were not observed on the subject property.

6.0 SUMMARY

The subject property is comprised of approximately 193.289 acres of developed land. The subject property is identified by the Williamson County Central Appraisal District as Parcel R055545, located at South Corner of CR 172 & McNeil Road in Round Rock, Texas. The subject property is located over the Edwards Aquifer Recharge Zone.

The subject property is currently undeveloped land. Five (5) potential site recharge features (S-1, S-2, S-3, S-4, and S-5) were observed on the subject property. S-1 and S-2 were near the southwest boundary, S-3 was located slightly north off the southern boundary, and S-4 and S-5 were located on the northern part of the subject property. These are marked on the Site Geologic Map (Figure 6C). S-1, S-2, and S-3 appeared to be natural drainage, S-1 and S-2 are karst like features. One (1) water well was observed on the northern part of the subject property. These features are described in further detail in the Geologic Assessment Table, and in the Site Narrative.

Caves, were not observed on the subject property at the time of the site reconnaissance.

7.0 REFERENCES

(BEG) The University of Texas at Austin Bureau of Economic Geology, Geologic Map of Texas, Austin Sheet, 1997.

(USDA) United States Department of Agriculture (USDA) Custom Soil Survey of Williamson County, 2022.

(USGS) United States Geologic Survey (USGS), 7.5- Minute Topographic Quadrangle Georgetown, Texas. 2019.

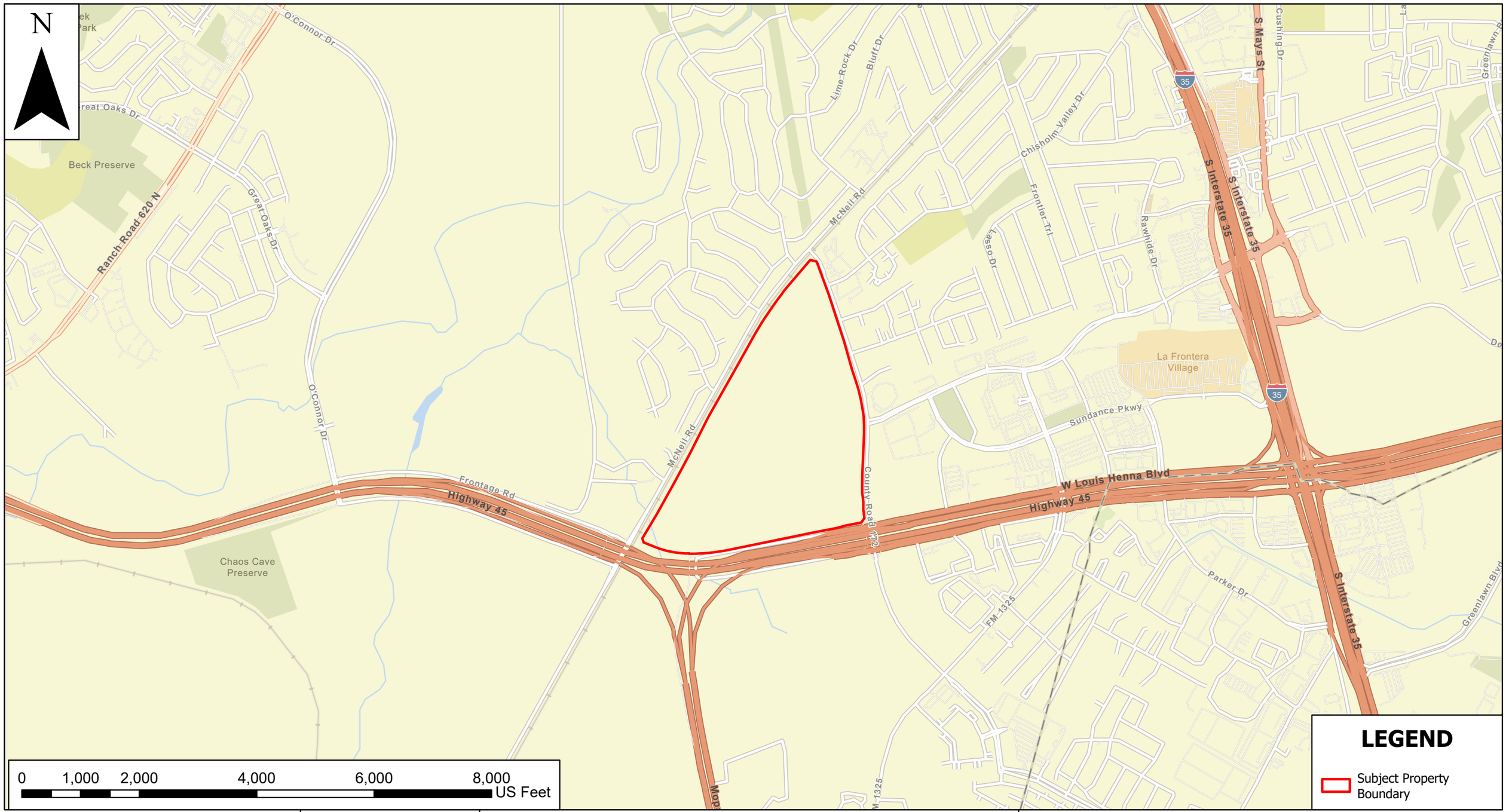

ECS Southwest, LLP
14050 Summit Drive, Suite 104
Austin, Texas 78728
Phone: (512) 837-8005
www.ecslimited.com

ECS Project No. 51:3992

Williamson County



Figure 1 - Site Location Map

McNeil Road and CR 172 Geologic Assessment (GA)
McNeil Road and CR 172, Round Round Rock, TX
Williamson County, Texas
(193.289 acres)

Watershed: San Gabriel
USGS Quadrangle: Pflugerville West, TX 2022

March 5, 2024

Service Layer Credits:
World Street Map: Austin Community College, Baylor University, City of Austin, County of Williamson, Texas Parks & Wildlife, CONANP, Esri, TomTom, Garmin, SafeGraph, GeoTechnologies, Inc, METI/NASA, USGS, EPA, NPS, US Census Bureau, USDA, USFWSUSGS Topographic Map of the Pflugerville West, Texas Quadrangle (2022)
Soils Data: USDA NRCS Web Soil Survey
Wetlands Data: National Wetlands Inventory
Floodplain Data: FEMA National Flood Hazard Layer
LIDAR Data: USGS 3D Elevation Program

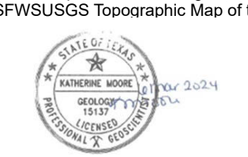

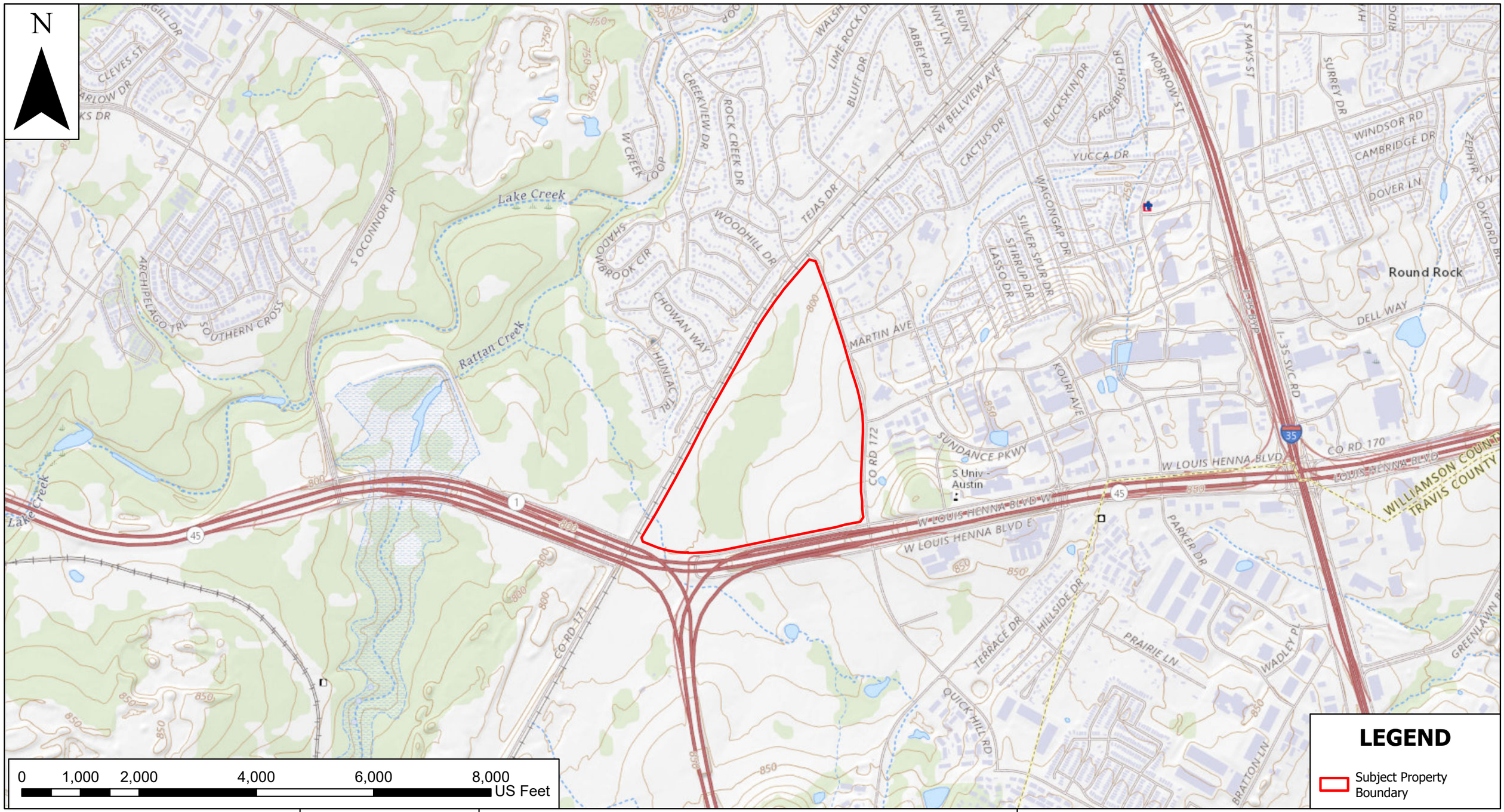

ECS Southwest, LLP
14050 Summit Drive, Suite 104
Austin, Texas 78728
Phone: (512) 837-8005
www.ecslimited.com

ECS Project No. 51:3992

Williamson County



Figure 2 - USGS Topographic Map

McNeil Road and CR 172 Geologic Assessment (GA)
McNeil Road and CR 172, Round Rock, TX
Williamson County, Texas
(193.289 acres)

Watershed: San Gabriel
USGS Quadrangle: Pflugerville West, TX 2022

March 5, 2024

Service Layer Credits:
USGSTopo: USGS The National Map: National Boundaries Dataset, 3DEP Elevation Program, Geographic Names Information System, National Hydrography Dataset, National Land Cover Database, National Structures Dataset, and National Transportation Dataset; USGS Global Ecosystems; U.S. Census Bureau TIGER/Line data; USFS Road Data; Natural Earth Data; U.S. Department of State Humanitarian Information Unit; and NOAA National Centers for Environmental Information, U.S. Coastal Relief Model. Data refreshed April, 2023.USGS Topographic Map of the Pflugerville West, Texas Quadrangle (2022)
Soils Data: USDA NRCS Web Soil Survey
Wetlands Data: National Wetlands Inventory
Floodplain Data: FEMA National Flood Hazard Layer
LIDAR Data: USGS 3D Elevation Program



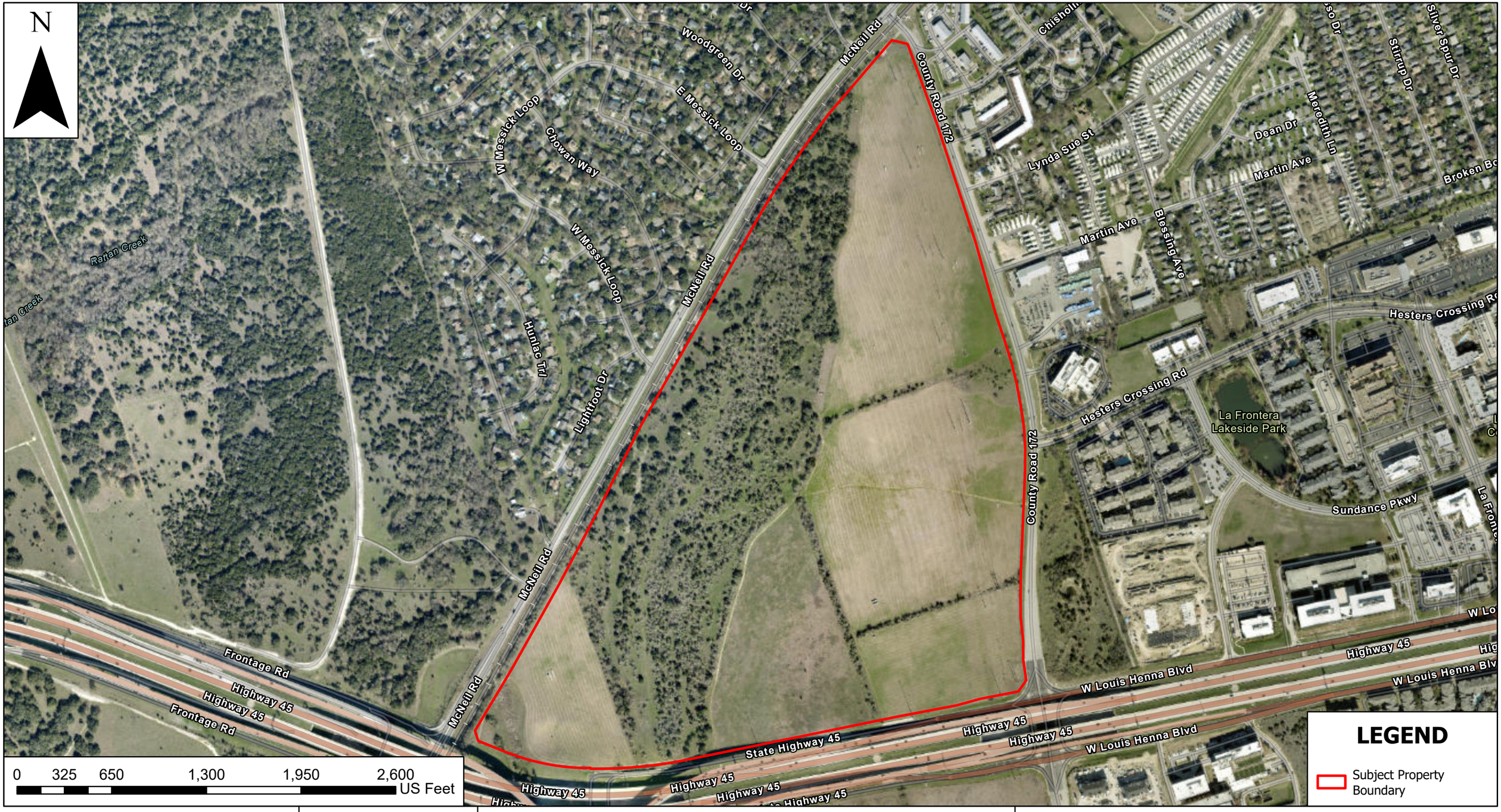

ECS Southwest, LLP
14050 Summit Drive, Suite 104
Austin, Texas 78728
Phone: (512) 837-8005
www.ecslimited.com

ECS Project No. 51:3992

Williamson County



Figure 3 - Aerial Map

McNeil Road and CR 172 Geologic Assessment (GA)
McNeil Road and CR 172, Round Rock, TX
Williamson County, Texas
(193.289 acres)

Watershed: San Gabriel
USGS Quadrangle: Pflugerville West, TX 2022

March 5, 2024

Service Layer Credits:
World Imagery: Williamson County TX, Maxar
Hybrid Reference Layer: Esri Community Maps Contributors, Austin Community College, Baylor University, City of Austin, County of Williamson, Texas Parks & Wildlife, © OpenStreetMap, Microsoft, CONANP, Esri, TomTom, Garmin, SafeGraph, GeoTechnologies, Inc, METI/NASA, USGS, EPA, NPS, US Census Bureau, USDA, USFWSUSGS Topographic Map of the Pflugerville West, Texas Quadrangle (2022)
Soils Data: USDA NRCS Web Soil Survey
Wetlands Data: National Wetlands Inventory
Floodplain Data: FEMA National Flood Hazard Layer
LIDAR Data: USGS 3D Elevation Program



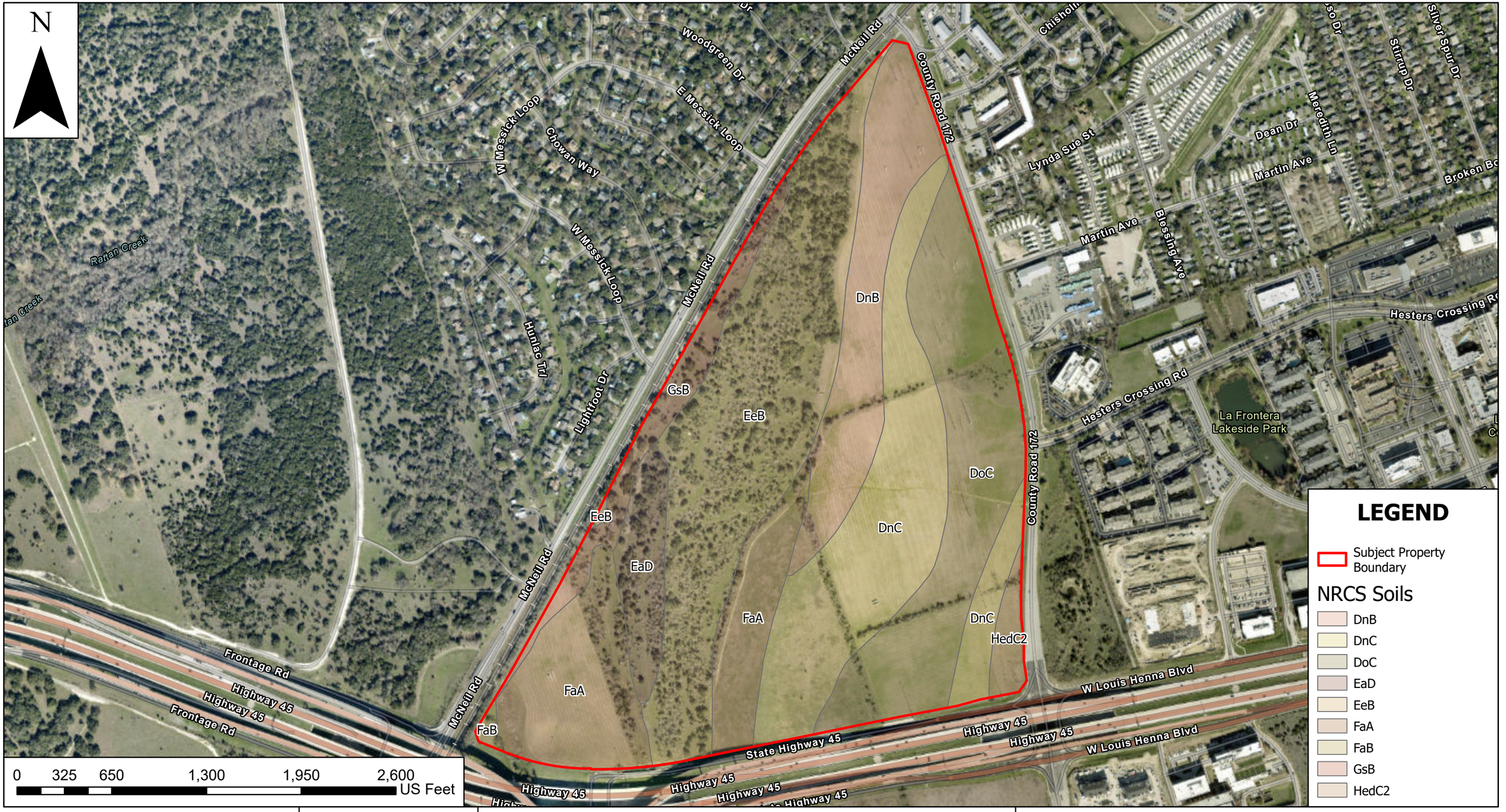

ECS Southwest, LLP
14050 Summit Drive, Suite 104
Austin, Texas 78728
Phone: (512) 837-8005
www.ecslimited.com

ECS Project No. 51:3992

Williamson County



Figure 4 - NRCS Soils Map

McNeil Road and CR 172 Geologic Assessment (GA)
McNeil Road and CR 172, Round Rock, TX
Williamson County, Texas
(193.289 acres)

Watershed: San Gabriel
USGS Quadrangle: Pflugerville West, TX 2022

March 5, 2024

Service Layer Credits:
World Imagery: Williamson County TX, Maxar
Hybrid Reference Layer: Esri Community Maps Contributors, Austin Community College, Baylor University, City of Austin, County of Williamson, Texas Parks & Wildlife, © OpenStreetMap, Microsoft, CONANP, Esri, TomTom, Garmin, SafeGraph, GeoTechnologies, Inc, METI/NASA, USGS, EPA, NPS, US Census Bureau, USDA, USFWSUSGS Topographic Map of the Pflugerville West, Texas Quadrangle (2022)
Soils Data: USDA NRCS Web Soil Survey
Wetlands Data: National Wetlands Inventory
Floodplain Data: FEMA National Flood Hazard Layer
LIDAR Data: USGS 3D Elevation Program



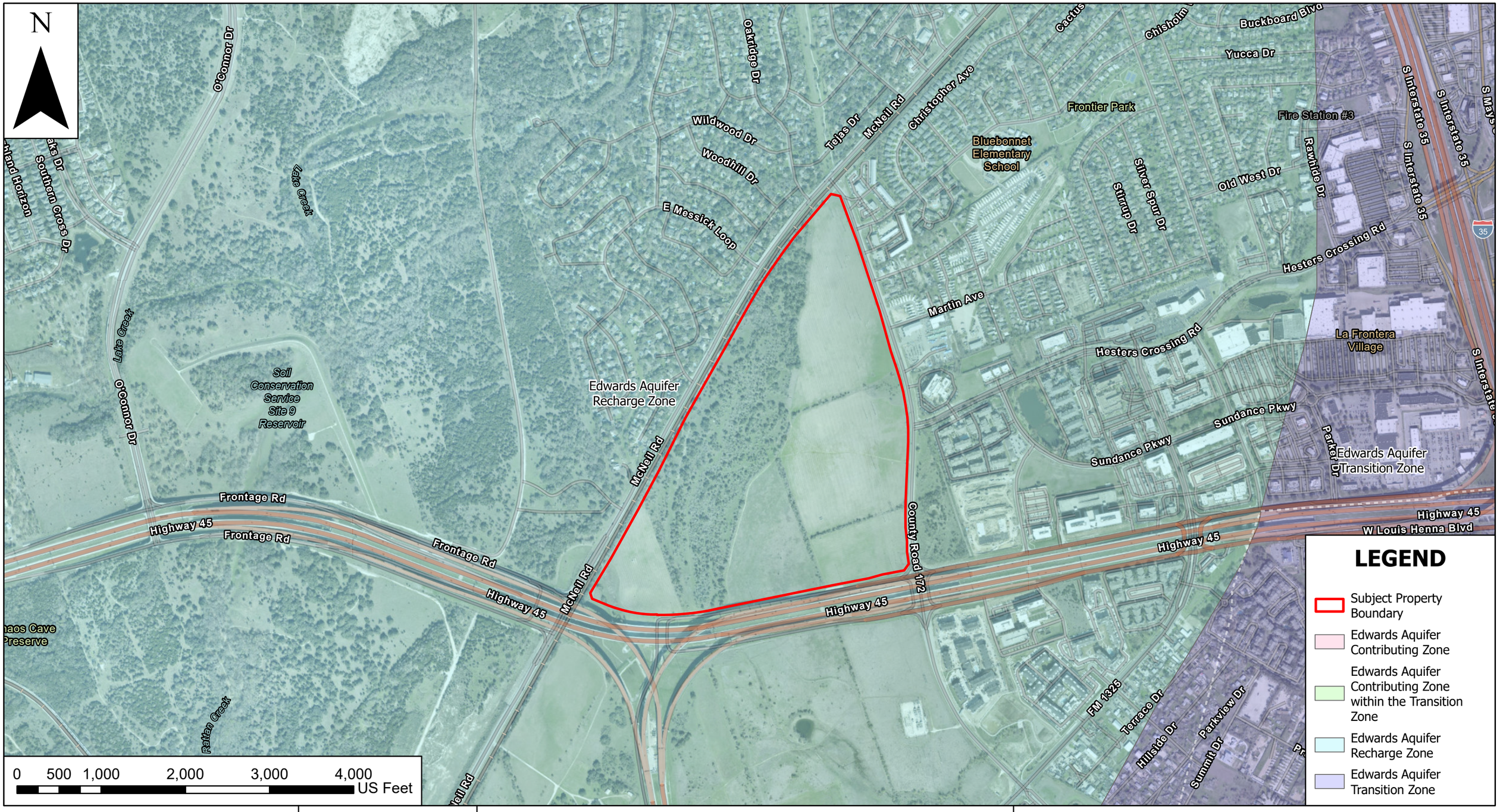

LEGEND

- Subject Property Boundary
- Edwards Aquifer Contributing Zone
- Edwards Aquifer Contributing Zone within the Transition Zone
- Edwards Aquifer Recharge Zone
- Edwards Aquifer Transition Zone

ECS Southwest, LLP
14050 Summit Drive, Suite 104
Austin, Texas 78728
Phone: (512) 837-8005
www.ecslimited.com

ECS Project No. 51:3992

Williamson County



Figure 5 - Edwards Aquifer Map

McNeil Road and CR 172 Geologic Assessment (GA)
McNeil Road and CR 172, Round Rock, TX
Williamson County, Texas
(193.289 acres)

Watershed: San Gabriel
USGS Quadrangle: Pflugerville West, TX 2022

March 5, 2024

Service Layer Credits:
World Imagery: Williamson County TX, Maxar
Hybrid Reference Layer: Esri Community Maps Contributors, Austin Community College, Baylor University, City of Austin, County of Williamson, Texas Parks & Wildlife, CONANP, Esri, TomTom, Garmin, SafeGraph, GeoTechnologies, Inc, METI/NASA, USGS, EPA, NPS, US Census Bureau, USDA, USFWSUSGS Topographic Map of the Pflugerville West, Texas Quadrangle (2022)
Soils Data: USDA NRCS Web Soil Survey
Wetlands Data: National Wetlands Inventory
Floodplain Data: FEMA National Flood Hazard Layer
LIDAR Data: USGS 3D Elevation Program



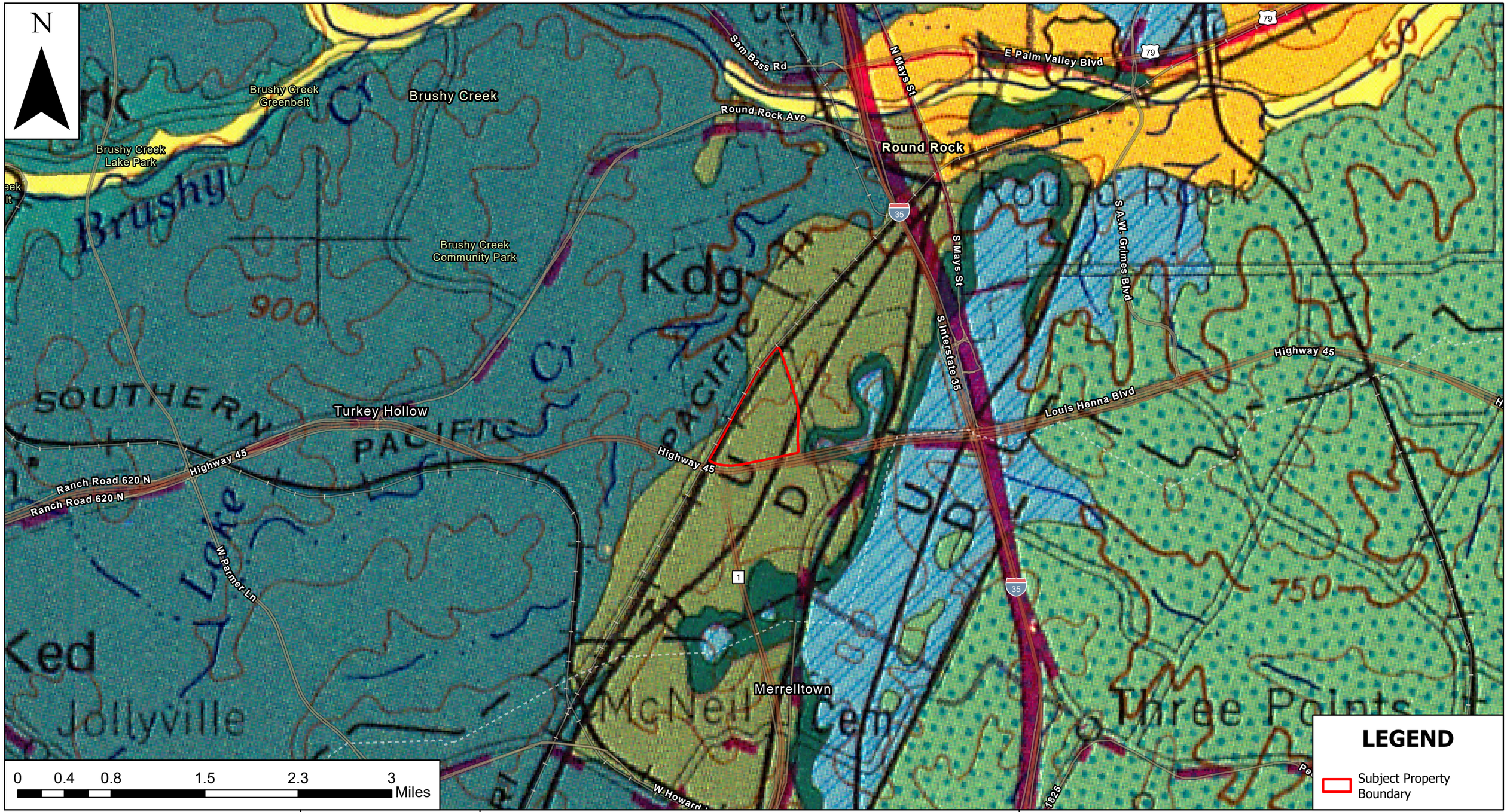

ECS Southwest, LLP
14050 Summit Drive, Suite 104
Austin, Texas 78728
Phone: (512) 837-8005
www.ecslimited.com

ECS Project No. 51:3992

Williamson County



Figure 6 - Area Geologic Map

McNeil Road and CR 172 Geologic Assessment (GA)
McNeil Road and CR 172, Round Rock, TX
Williamson County, Texas
(193.289 acres)

Watershed: San Gabriel
USGS Quadrangle: Pflugerville West, TX 2022

March 5, 2024

Service Layer Credits:
World Imagery: Williamson County TX, Maxar
Hybrid Reference Layer: Austin Community College, Baylor University, City of Austin, County of Williamson, Texas Parks & Wildlife, CONANP, Esri, TomTom, Garmin, SafeGraph, GeoTechnologies, Inc, METI/NASA, USGS, EPA, NPS, USDA, USFWSUSGS Topographic Map of the Pflugerville West, Texas Quadrangle (2022)
Soils Data: USDA NRCS Web Soil Survey
Wetlands Data: National Wetlands Inventory
Floodplain Data: FEMA National Flood Hazard Layer
LIDAR Data: USGS 3D Elevation Program

STATE OF TEXAS
KATHERINE MOORE
GEOLOGY
15137
LICENSED
PROFESSIONAL GEOSCIENTIST
Mar 2024

Stratigraphic Column
McNeil and CR 107
Roundrock, Williamson County, Texas



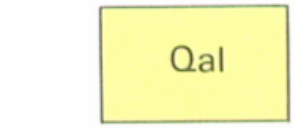

Alluvium

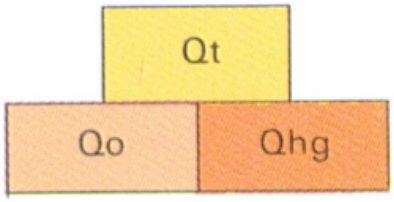

Fluviatile terrace deposits

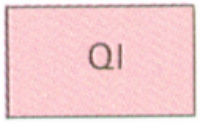

Lissie Formation undivided



Eagle Ford Group and Buda Limestone



Del Rio Clay ("Grayson Marl") and Georgetown Formation

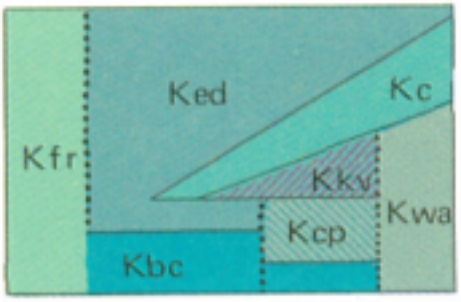

Fredericksburg Group

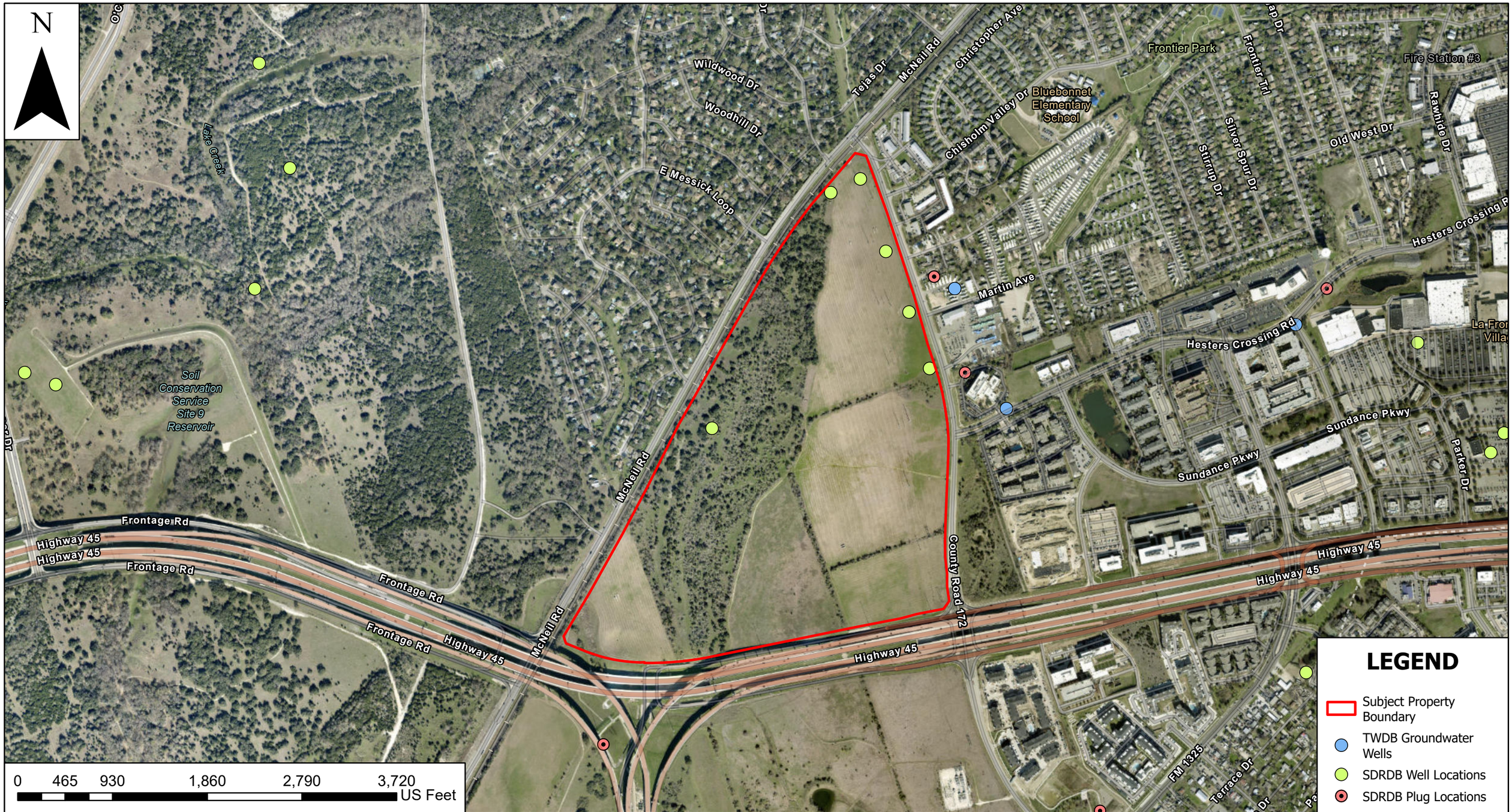

ECS Southwest, LLP
14050 Summit Drive, Suite 104
Austin, Texas 78728
Phone: (512) 837-8005
www.ecslimited.com

ECS Project No. 51:3992

Williamson County



Figure 7 - Texas Water Development Board (TWDB) Well Map

McNeil Road and CR 172 Geologic Assessment (GA)
McNeil Road and CR 172, Round Rock, TX
Williamson County, Texas
(193.289 acres)

Watershed: San Gabriel
USGS Quadrangle: Pflugerville West, TX 2022

March 5, 2024

Service Layer Credits:
World Imagery: Williamson County TX, Maxar
Hybrid Reference Layer: Esri Community Maps Contributors, Austin Community College, Baylor University, City of Austin, County of Williamson, Texas Parks & Wildlife, CONANP, Esri, TomTom, Garmin, SafeGraph, GeoTechnologies, Inc, METI/NASA, USGS, EPA, NPS, US Census Bureau, USDA, USFWSUSGS Topographic Map of the Pflugerville West, Texas Quadrangle (2022)
Soils Data: USDA NRCS Web Soil Survey
Wetlands Data: National Wetlands Inventory
Floodplain Data: FEMA National Flood Hazard Layer
LIDAR Data: USGS 3D Elevation Program

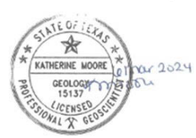

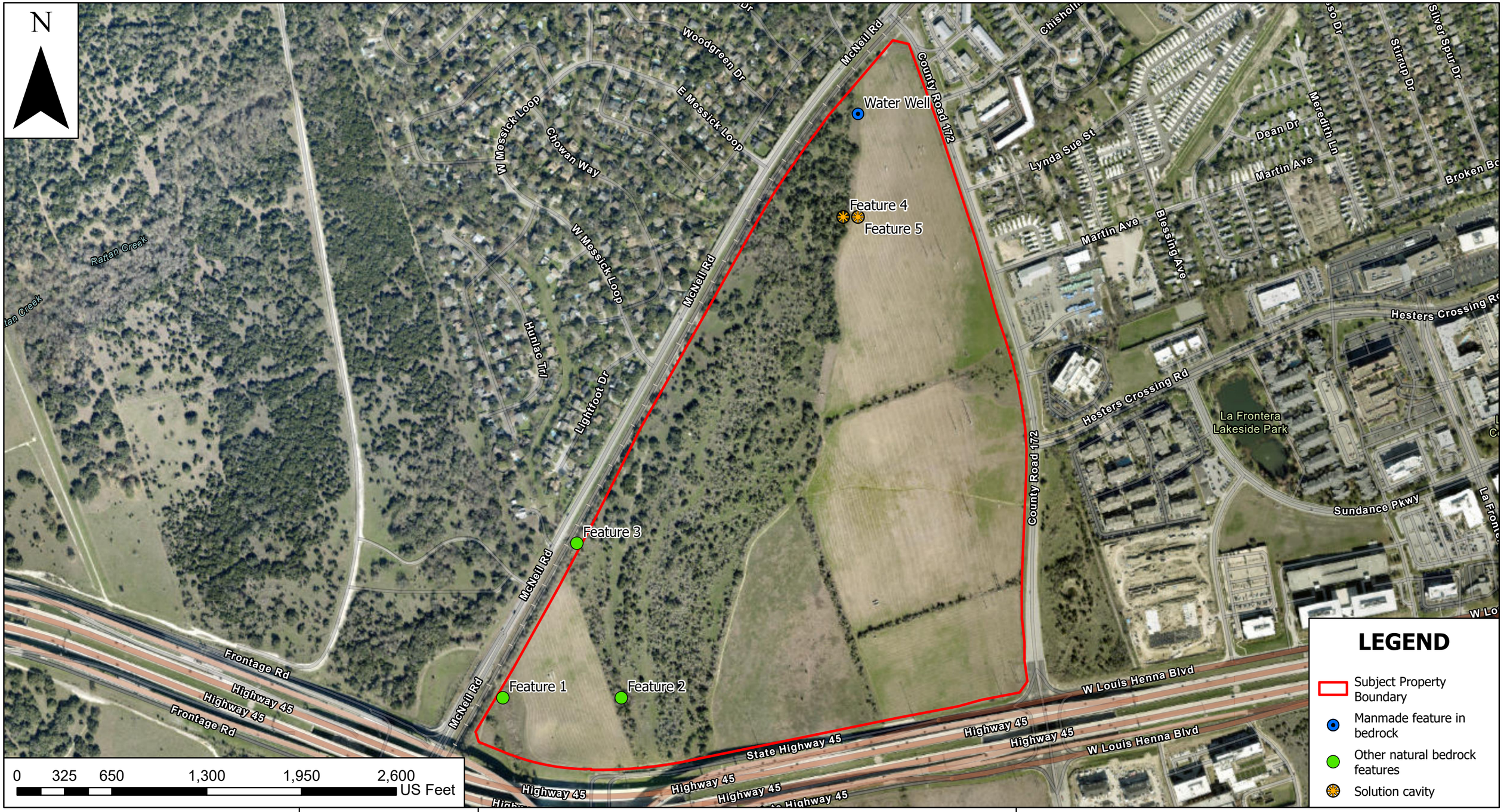

ECS Southwest, LLP
14050 Summit Drive, Suite 104
Austin, Texas 78728
Phone: (512) 837-8005
www.ecslimited.com

ECS Project No. 51:3992

Williamson County



Figure 8 - Geologic Features Map

McNeil Road and CR 172 Geologic Assessment (GA)
McNeil Road and CR 172, Round Rock, TX
Williamson County, Texas
(193.289 acres)

Watershed: San Gabriel
USGS Quadrangle: Pflugerville West, TX 2022

March 5, 2024

Service Layer Credits:
World Imagery: Williamson County TX, Maxar
Hybrid Reference Layer: Esri Community Maps Contributors, Austin Community College, Baylor University, City of Austin, County of Williamson, Texas Parks & Wildlife, © OpenStreetMap, Microsoft, CONANP, Esri, TomTom, Garmin, SafeGraph, GeoTechnologies, Inc, METI/NASA, USGS, EPA, NPS, US Census Bureau, USDA, USFWSUSGS Topographic Map of the Pflugerville West, Texas Quadrangle (2022)
Soils Data: USDA NRCS Web Soil Survey
Wetlands Data: National Wetlands Inventory
Floodplain Data: FEMA National Flood Hazard Layer
LIDAR Data: USGS 3D Elevation Program

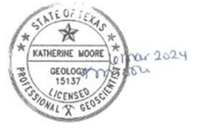

United States Department of Agriculture

NRCS

Natural Resources Conservation Service

A product of the National Cooperative Soil Survey, a joint effort of the United States Department of Agriculture and other Federal agencies, State agencies including the Agricultural Experiment Stations, and local participants

Custom Soil Resource Report for Williamson County, Texas



March 5, 2024

Preface

Soil surveys contain information that affects land use planning in survey areas. They highlight soil limitations that affect various land uses and provide information about the properties of the soils in the survey areas. Soil surveys are designed for many different users, including farmers, ranchers, foresters, agronomists, urban planners, community officials, engineers, developers, builders, and home buyers. Also, conservationists, teachers, students, and specialists in recreation, waste disposal, and pollution control can use the surveys to help them understand, protect, or enhance the environment.

Various land use regulations of Federal, State, and local governments may impose special restrictions on land use or land treatment. Soil surveys identify soil properties that are used in making various land use or land treatment decisions. The information is intended to help the land users identify and reduce the effects of soil limitations on various land uses. The landowner or user is responsible for identifying and complying with existing laws and regulations.

Although soil survey information can be used for general farm, local, and wider area planning, onsite investigation is needed to supplement this information in some cases. Examples include soil quality assessments (http://www.nrcs.usda.gov/wps/portal/nrcs/main/soils/health/) and certain conservation and engineering applications. For more detailed information, contact your local USDA Service Center (https://offices.sc.egov.usda.gov/locator/app?agency=nrcs) or your NRCS State Soil Scientist (http://www.nrcs.usda.gov/wps/portal/nrcs/detail/soils/contactus/?cid=nrcs142p2_053951).

Great differences in soil properties can occur within short distances. Some soils are seasonally wet or subject to flooding. Some are too unstable to be used as a foundation for buildings or roads. Clayey or wet soils are poorly suited to use as septic tank absorption fields. A high water table makes a soil poorly suited to basements or underground installations.

The National Cooperative Soil Survey is a joint effort of the United States Department of Agriculture and other Federal agencies, State agencies including the Agricultural Experiment Stations, and local agencies. The Natural Resources Conservation Service (NRCS) has leadership for the Federal part of the National Cooperative Soil Survey.

Information about soils is updated periodically. Updated information is available through the NRCS Web Soil Survey, the site for official soil survey information.

The U.S. Department of Agriculture (USDA) prohibits discrimination in all its programs and activities on the basis of race, color, national origin, age, disability, and where applicable, sex, marital status, familial status, parental status, religion, sexual orientation, genetic information, political beliefs, reprisal, or because all or a part of an individual's income is derived from any public assistance program. (Not all prohibited bases apply to all programs.) Persons with disabilities who require

alternative means for communication of program information (Braille, large print, audiotape, etc.) should contact USDA's TARGET Center at (202) 720-2600 (voice and TDD). To file a complaint of discrimination, write to USDA, Director, Office of Civil Rights, 1400 Independence Avenue, S.W., Washington, D.C. 20250-9410 or call (800) 795-3272 (voice) or (202) 720-6382 (TDD). USDA is an equal opportunity provider and employer.

Contents

Preface.....2
How Soil Surveys Are Made.....5
Soil Map.....8
Soil Map.....9
Legend.....10
Map Unit Legend.....11
Map Unit Descriptions.....11
Williamson County, Texas.....13
DnB—Denton silty clay, 1 to 3 percent slopes.....13
DnC—Denton silty clay, 3 to 5 percent slopes.....14
DoC—Doss silty clay, moist, 1 to 5 percent slopes.....16
EaD—Eckrant cobbly clay, 1 to 8 percent slopes.....18
EeB—Eckrant stony clay, 0 to 3 percent slopes, stony.....19
FaA—Fairlie clay, 0 to 1 percent slopes.....21
FaB—Fairlie clay, 1 to 2 percent slopes.....22
GsB—Georgetown stony clay loam, 1 to 3 percent slopes.....23
HedC2—Heiden clay, 2 to 5 percent slopes, moderately eroded.....24
References.....27

How Soil Surveys Are Made

Soil surveys are made to provide information about the soils and miscellaneous areas in a specific area. They include a description of the soils and miscellaneous areas and their location on the landscape and tables that show soil properties and limitations affecting various uses. Soil scientists observed the steepness, length, and shape of the slopes; the general pattern of drainage; the kinds of crops and native plants; and the kinds of bedrock. They observed and described many soil profiles. A soil profile is the sequence of natural layers, or horizons, in a soil. The profile extends from the surface down into the unconsolidated material in which the soil formed or from the surface down to bedrock. The unconsolidated material is devoid of roots and other living organisms and has not been changed by other biological activity.

Currently, soils are mapped according to the boundaries of major land resource areas (MLRAs). MLRAs are geographically associated land resource units that share common characteristics related to physiography, geology, climate, water resources, soils, biological resources, and land uses (USDA, 2006). Soil survey areas typically consist of parts of one or more MLRA.

The soils and miscellaneous areas in a survey area occur in an orderly pattern that is related to the geology, landforms, relief, climate, and natural vegetation of the area. Each kind of soil and miscellaneous area is associated with a particular kind of landform or with a segment of the landform. By observing the soils and miscellaneous areas in the survey area and relating their position to specific segments of the landform, a soil scientist develops a concept, or model, of how they were formed. Thus, during mapping, this model enables the soil scientist to predict with a considerable degree of accuracy the kind of soil or miscellaneous area at a specific location on the landscape.

Commonly, individual soils on the landscape merge into one another as their characteristics gradually change. To construct an accurate soil map, however, soil scientists must determine the boundaries between the soils. They can observe only a limited number of soil profiles. Nevertheless, these observations, supplemented by an understanding of the soil-vegetation-landscape relationship, are sufficient to verify predictions of the kinds of soil in an area and to determine the boundaries.

Soil scientists recorded the characteristics of the soil profiles that they studied. They noted soil color, texture, size and shape of soil aggregates, kind and amount of rock fragments, distribution of plant roots, reaction, and other features that enable them to identify soils. After describing the soils in the survey area and determining their properties, the soil scientists assigned the soils to taxonomic classes (units). Taxonomic classes are concepts. Each taxonomic class has a set of soil characteristics with precisely defined limits. The classes are used as a basis for comparison to classify soils systematically. Soil taxonomy, the system of taxonomic classification used in the United States, is based mainly on the kind and character of soil properties and the arrangement of horizons within the profile. After the soil

scientists classified and named the soils in the survey area, they compared the individual soils with similar soils in the same taxonomic class in other areas so that they could confirm data and assemble additional data based on experience and research.

The objective of soil mapping is not to delineate pure map unit components; the objective is to separate the landscape into landforms or landform segments that have similar use and management requirements. Each map unit is defined by a unique combination of soil components and/or miscellaneous areas in predictable proportions. Some components may be highly contrasting to the other components of the map unit. The presence of minor components in a map unit in no way diminishes the usefulness or accuracy of the data. The delineation of such landforms and landform segments on the map provides sufficient information for the development of resource plans. If intensive use of small areas is planned, onsite investigation is needed to define and locate the soils and miscellaneous areas.

Soil scientists make many field observations in the process of producing a soil map. The frequency of observation is dependent upon several factors, including scale of mapping, intensity of mapping, design of map units, complexity of the landscape, and experience of the soil scientist. Observations are made to test and refine the soil-landscape model and predictions and to verify the classification of the soils at specific locations. Once the soil-landscape model is refined, a significantly smaller number of measurements of individual soil properties are made and recorded. These measurements may include field measurements, such as those for color, depth to bedrock, and texture, and laboratory measurements, such as those for content of sand, silt, clay, salt, and other components. Properties of each soil typically vary from one point to another across the landscape.

Observations for map unit components are aggregated to develop ranges of characteristics for the components. The aggregated values are presented. Direct measurements do not exist for every property presented for every map unit component. Values for some properties are estimated from combinations of other properties.

While a soil survey is in progress, samples of some of the soils in the area generally are collected for laboratory analyses and for engineering tests. Soil scientists interpret the data from these analyses and tests as well as the field-observed characteristics and the soil properties to determine the expected behavior of the soils under different uses. Interpretations for all of the soils are field tested through observation of the soils in different uses and under different levels of management. Some interpretations are modified to fit local conditions, and some new interpretations are developed to meet local needs. Data are assembled from other sources, such as research information, production records, and field experience of specialists. For example, data on crop yields under defined levels of management are assembled from farm records and from field or plot experiments on the same kinds of soil.

Predictions about soil behavior are based not only on soil properties but also on such variables as climate and biological activity. Soil conditions are predictable over long periods of time, but they are not predictable from year to year. For example, soil scientists can predict with a fairly high degree of accuracy that a given soil will have a high water table within certain depths in most years, but they cannot predict that a high water table will always be at a specific level in the soil on a specific date.

After soil scientists located and identified the significant natural bodies of soil in the survey area, they drew the boundaries of these bodies on aerial photographs and

identified each as a specific map unit. Aerial photographs show trees, buildings, fields, roads, and rivers, all of which help in locating boundaries accurately.

Soil Map

The soil map section includes the soil map for the defined area of interest, a list of soil map units on the map and extent of each map unit, and cartographic symbols displayed on the map. Also presented are various metadata about data used to produce the map, and a description of each soil map unit.

Custom Soil Resource Report
Soil Map

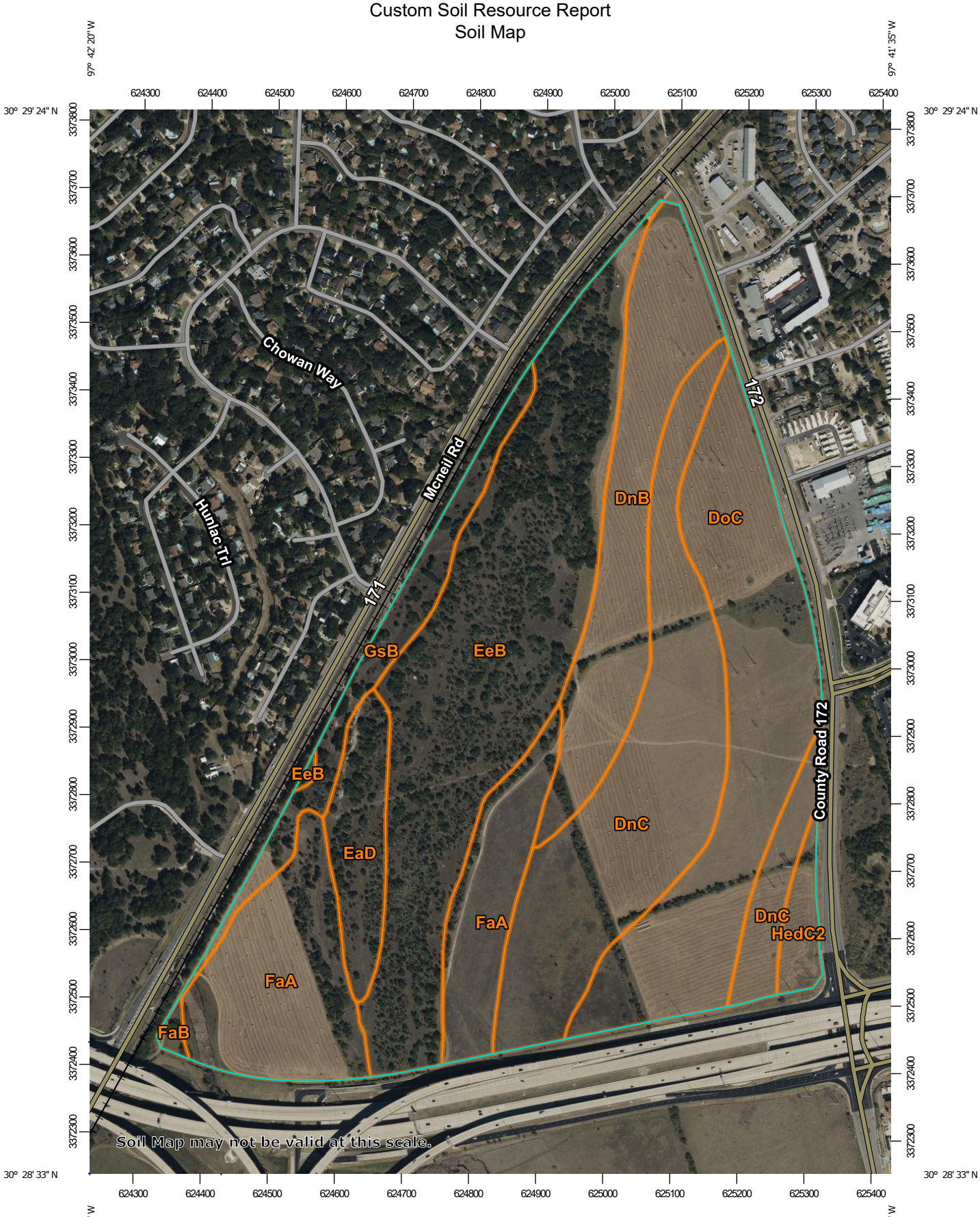

Map Scale: 1:7,700 if printed on A portrait (8.5" x 11") sheet.

N

Meters: 0 100 200 400 600

Feet: 0 350 700 1400 2100

Map projection: Web Mercator Corner coordinates: WGS84 Edge tics: UTM Zone 14N WGS84

MAP LEGEND

Area of Interest (AOI)
- Area of Interest (AOI)

Soils
- Soil Map Unit Polygons
- Soil Map Unit Lines
- Soil Map Unit Points

Special Point Features
- Blowout
- Borrow Pit
- Clay Spot
- Closed Depression
- Gravel Pit
- Gravelly Spot
- Landfill
- Lava Flow
- Marsh or swamp
- Mine or Quarry
- Miscellaneous Water
- Perennial Water
- Rock Outcrop
- Saline Spot
- Sandy Spot
- Severely Eroded Spot
- Sinkhole
- Slide or Slip
- Sodic Spot
- Spoil Area
- Stony Spot
- Very Stony Spot
- Wet Spot
- Other
- Special Line Features

Water Features
- Streams and Canals

Transportation
- Rails
- Interstate Highways
- US Routes
- Major Roads
- Local Roads

Background
- Aerial Photography

MAP INFORMATION

The soil surveys that comprise your AOI were mapped at 1:20,000.

Warning: Soil Map may not be valid at this scale.

Enlargement of maps beyond the scale of mapping can cause misunderstanding of the detail of mapping and accuracy of soil line placement. The maps do not show the small areas of contrasting soils that could have been shown at a more detailed scale.

Please rely on the bar scale on each map sheet for map measurements.

Source of Map: Natural Resources Conservation Service
Web Soil Survey URL:
Coordinate System: Web Mercator (EPSG:3857)

Maps from the Web Soil Survey are based on the Web Mercator projection, which preserves direction and shape but distorts distance and area. A projection that preserves area, such as the Albers equal-area conic projection, should be used if more accurate calculations of distance or area are required.

This product is generated from the USDA-NRCS certified data as of the version date(s) listed below.

Soil Survey Area: Williamson County, Texas
Survey Area Data: Version 24, Sep 5, 2023

Soil map units are labeled (as space allows) for map scales 1:50,000 or larger.

Date(s) aerial images were photographed: Data not available.

The orthophoto or other base map on which the soil lines were compiled and digitized probably differs from the background imagery displayed on these maps. As a result, some minor shifting of map unit boundaries may be evident.

Map Unit Legend

Map Unit Symbol	Map Unit Name	Acres in AOI	Percent of AOI
DnB	Denton silty clay, 1 to 3 percent slopes	20.5	11.2%
DnC	Denton silty clay, 3 to 5 percent slopes	36.0	19.6%
DoC	Doss silty clay, moist, 1 to 5 percent slopes	32.3	17.7%
EaD	Eckrant cobbly clay, 1 to 8 percent slopes	7.5	4.1%
EeB	Eckrant stony clay, 0 to 3 percent slopes, stony	47.9	26.2%
FaA	Fairlie clay, 0 to 1 percent slopes	27.0	14.7%
FaB	Fairlie clay, 1 to 2 percent slopes	0.6	0.3%
GsB	Georgetown stony clay loam, 1 to 3 percent slopes	8.6	4.7%
HedC2	Heiden clay, 2 to 5 percent slopes, moderately eroded	2.8	1.5%
Totals for Area of Interest		**183.1**	**100.0%**

Map Unit Descriptions

The map units delineated on the detailed soil maps in a soil survey represent the soils or miscellaneous areas in the survey area. The map unit descriptions, along with the maps, can be used to determine the composition and properties of a unit.

A map unit delineation on a soil map represents an area dominated by one or more major kinds of soil or miscellaneous areas. A map unit is identified and named according to the taxonomic classification of the dominant soils. Within a taxonomic class there are precisely defined limits for the properties of the soils. On the landscape, however, the soils are natural phenomena, and they have the characteristic variability of all natural phenomena. Thus, the range of some observed properties may extend beyond the limits defined for a taxonomic class. Areas of soils of a single taxonomic class rarely, if ever, can be mapped without including areas of other taxonomic classes. Consequently, every map unit is made up of the soils or miscellaneous areas for which it is named and some minor components that belong to taxonomic classes other than those of the major soils.

Most minor soils have properties similar to those of the dominant soil or soils in the map unit, and thus they do not affect use and management. These are called noncontrasting, or similar, components. They may or may not be mentioned in a particular map unit description. Other minor components, however, have properties and behavioral characteristics divergent enough to affect use or to require different management. These are called contrasting, or dissimilar, components. They

generally are in small areas and could not be mapped separately because of the scale used. Some small areas of strongly contrasting soils or miscellaneous areas are identified by a special symbol on the maps. If included in the database for a given area, the contrasting minor components are identified in the map unit descriptions along with some characteristics of each. A few areas of minor components may not have been observed, and consequently they are not mentioned in the descriptions, especially where the pattern was so complex that it was impractical to make enough observations to identify all the soils and miscellaneous areas on the landscape.

The presence of minor components in a map unit in no way diminishes the usefulness or accuracy of the data. The objective of mapping is not to delineate pure taxonomic classes but rather to separate the landscape into landforms or landform segments that have similar use and management requirements. The delineation of such segments on the map provides sufficient information for the development of resource plans. If intensive use of small areas is planned, however, onsite investigation is needed to define and locate the soils and miscellaneous areas.

An identifying symbol precedes the map unit name in the map unit descriptions. Each description includes general facts about the unit and gives important soil properties and qualities.

Soils that have profiles that are almost alike make up a *soil series*. Except for differences in texture of the surface layer, all the soils of a series have major horizons that are similar in composition, thickness, and arrangement.

Soils of one series can differ in texture of the surface layer, slope, stoniness, salinity, degree of erosion, and other characteristics that affect their use. On the basis of such differences, a soil series is divided into *soil phases*. Most of the areas shown on the detailed soil maps are phases of soil series. The name of a soil phase commonly indicates a feature that affects use or management. For example, Alpha silt loam, 0 to 2 percent slopes, is a phase of the Alpha series.

Some map units are made up of two or more major soils or miscellaneous areas. These map units are complexes, associations, or undifferentiated groups.

A *complex* consists of two or more soils or miscellaneous areas in such an intricate pattern or in such small areas that they cannot be shown separately on the maps. The pattern and proportion of the soils or miscellaneous areas are somewhat similar in all areas. Alpha-Beta complex, 0 to 6 percent slopes, is an example.

An *association* is made up of two or more geographically associated soils or miscellaneous areas that are shown as one unit on the maps. Because of present or anticipated uses of the map units in the survey area, it was not considered practical or necessary to map the soils or miscellaneous areas separately. The pattern and relative proportion of the soils or miscellaneous areas are somewhat similar. Alpha-Beta association, 0 to 2 percent slopes, is an example.

An *undifferentiated group* is made up of two or more soils or miscellaneous areas that could be mapped individually but are mapped as one unit because similar interpretations can be made for use and management. The pattern and proportion of the soils or miscellaneous areas in a mapped area are not uniform. An area can be made up of only one of the major soils or miscellaneous areas, or it can be made up of all of them. Alpha and Beta soils, 0 to 2 percent slopes, is an example.

Some surveys include *miscellaneous areas*. Such areas have little or no soil material and support little or no vegetation. Rock outcrop is an example.

Williamson County, Texas

DnB—Denton silty clay, 1 to 3 percent slopes

Map Unit Setting

National map unit symbol: 2t26l
Elevation: 570 to 1,870 feet
Mean annual precipitation: 31 to 36 inches
Mean annual air temperature: 65 to 68 degrees F
Frost-free period: 220 to 260 days
Farmland classification: All areas are prime farmland

Map Unit Composition

Denton and similar soils: 88 percent
Minor components: 12 percent
Estimates are based on observations, descriptions, and transects of the mapunit.

Description of Denton

Setting

Landform: Hillslopes
Landform position (two-dimensional): Toeslope
Landform position (three-dimensional): Base slope
Down-slope shape: Convex
Across-slope shape: Linear
Parent material: Silty and clayey slope alluvium over residuum weathered from limestone

Typical profile

A - 0 to 14 inches: silty clay
Bw - 14 to 25 inches: silty clay
Bk - 25 to 33 inches: silty clay
Ck - 33 to 36 inches: gravelly silty clay
R - 36 to 80 inches: bedrock

Properties and qualities

Slope: 1 to 3 percent
Depth to restrictive feature: 22 to 60 inches to lithic bedrock
Drainage class: Well drained
Runoff class: High
Capacity of the most limiting layer to transmit water (Ksat): Moderately low to moderately high (0.06 to 0.20 in/hr)
Depth to water table: More than 80 inches
Frequency of flooding: None
Frequency of ponding: None
Calcium carbonate, maximum content: 80 percent
Maximum salinity: Nonsaline to very slightly saline (0.0 to 2.0 mmhos/cm)
Available water supply, 0 to 60 inches: Low (about 4.3 inches)

Interpretive groups

Land capability classification (irrigated): None specified
Land capability classification (nonirrigated): 3s
Hydrologic Soil Group: D
Ecological site: R081CY357TX - Clay Loam 29-35 PZ
Hydric soil rating: No

Minor Components

Krum

Percent of map unit: 6 percent
Landform: Drainageways
Landform position (two-dimensional): Toeslope
Landform position (three-dimensional): Tread
Down-slope shape: Linear
Across-slope shape: Concave
Ecological site: R081CY357TX - Clay Loam 29-35 PZ
Hydric soil rating: No

Doss

Percent of map unit: 4 percent
Landform: Hillslopes
Landform position (two-dimensional): Backslope
Landform position (three-dimensional): Side slope
Down-slope shape: Convex
Across-slope shape: Linear
Ecological site: R081BY343TX - Shallow 23-31 PZ
Hydric soil rating: No

Anhalt

Percent of map unit: 2 percent
Landform: Hillslopes
Landform position (two-dimensional): Toeslope
Landform position (three-dimensional): Base slope
Down-slope shape: Linear
Across-slope shape: Linear
Ecological site: R081CY358TX - Deep Redland 29-35 PZ
Hydric soil rating: No

DnC—Denton silty clay, 3 to 5 percent slopes

Map Unit Setting

National map unit symbol: 2t26r
Elevation: 570 to 1,870 feet
Mean annual precipitation: 31 to 36 inches
Mean annual air temperature: 65 to 68 degrees F
Frost-free period: 220 to 260 days
Farmland classification: All areas are prime farmland

Map Unit Composition

Denton and similar soils: 88 percent
Minor components: 12 percent
Estimates are based on observations, descriptions, and transects of the mapunit.

Description of Denton

Setting

Landform: Hillslopes
Landform position (two-dimensional): Backslope, footslope
Landform position (three-dimensional): Side slope
Down-slope shape: Convex
Across-slope shape: Linear
Parent material: Silty and clayey slope alluvium over residuum weathered from limestone

Typical profile

A - 0 to 14 inches: silty clay
Bw - 14 to 25 inches: silty clay
Bk - 25 to 33 inches: silty clay
Ck - 33 to 36 inches: gravelly silty clay
R - 36 to 80 inches: bedrock

Properties and qualities

Slope: 3 to 5 percent
Depth to restrictive feature: 22 to 60 inches to lithic bedrock
Drainage class: Well drained
Runoff class: High
Capacity of the most limiting layer to transmit water (Ksat): Moderately low to moderately high (0.06 to 0.20 in/hr)
Depth to water table: More than 80 inches
Frequency of flooding: None
Frequency of ponding: None
Calcium carbonate, maximum content: 80 percent
Maximum salinity: Nonsaline to very slightly saline (0.0 to 2.0 mmhos/cm)
Available water supply, 0 to 60 inches: Low (about 4.3 inches)

Interpretive groups

Land capability classification (irrigated): 3s
Land capability classification (nonirrigated): 3s
Hydrologic Soil Group: D
Ecological site: R081CY357TX - Clay Loam 29-35 PZ
Hydric soil rating: No

Minor Components

Brackett

Percent of map unit: 6 percent
Landform: Hillslopes
Landform position (two-dimensional): Backslope
Landform position (three-dimensional): Side slope
Down-slope shape: Convex
Across-slope shape: Convex
Ecological site: R081CY355TX - Adobe 29-35 PZ
Hydric soil rating: No

Doss

Percent of map unit: 4 percent
Landform: Hillslopes
Landform position (two-dimensional): Backslope
Landform position (three-dimensional): Side slope

Down-slope shape: Convex
Across-slope shape: Linear
Ecological site: R081CY574TX - Shallow 29-35 PZ
Hydric soil rating: No

Purves

Percent of map unit: 2 percent
Landform: Hillslopes
Landform position (two-dimensional): Summit, shoulder
Landform position (three-dimensional): Interfluve
Down-slope shape: Convex
Across-slope shape: Linear
Ecological site: R081CY574TX - Shallow 29-35 PZ
Hydric soil rating: No

DoC—Doss silty clay, moist, 1 to 5 percent slopes

Map Unit Setting

National map unit symbol: 2s0st
Elevation: 630 to 1,840 feet
Mean annual precipitation: 30 to 36 inches
Mean annual air temperature: 66 to 68 degrees F
Frost-free period: 210 to 240 days
Farmland classification: Not prime farmland

Map Unit Composition

Doss and similar soils: 85 percent
Minor components: 15 percent
Estimates are based on observations, descriptions, and transects of the mapunit.

Description of Doss

Setting

Landform: Hillslopes
Landform position (two-dimensional): Backslope
Landform position (three-dimensional): Side slope
Down-slope shape: Convex
Across-slope shape: Linear
Parent material: Residuum weathered from limestone

Typical profile

A - 0 to 9 inches: silty clay
Bk - 9 to 17 inches: silty clay
Cr - 17 to 80 inches: bedrock

Properties and qualities

Slope: 1 to 5 percent
Depth to restrictive feature: 11 to 20 inches to paralithic bedrock
Drainage class: Well drained
Runoff class: Medium

Capacity of the most limiting layer to transmit water (Ksat): Moderately low to moderately high (0.06 to 0.57 in/hr)
Depth to water table: More than 80 inches
Frequency of flooding: None
Frequency of ponding: None
Calcium carbonate, maximum content: 70 percent
Maximum salinity: Nonsaline to very slightly saline (0.0 to 2.0 mmhos/cm)
Available water supply, 0 to 60 inches: Very low (about 2.4 inches)

Interpretive groups

Land capability classification (irrigated): None specified
Land capability classification (nonirrigated): 4e
Hydrologic Soil Group: D
Ecological site: R081CY574TX - Shallow 29-35 PZ
Hydric soil rating: No

Minor Components

Brackett

Percent of map unit: 7 percent
Landform: Ridges
Landform position (two-dimensional): Shoulder, backslope, footslope
Landform position (three-dimensional): Side slope
Down-slope shape: Linear
Across-slope shape: Convex
Ecological site: R081CY362TX - Steep Adobe 29-35 PZ
Hydric soil rating: No

Bolar

Percent of map unit: 5 percent
Landform: Ridges
Landform position (two-dimensional): Shoulder
Landform position (three-dimensional): Side slope
Down-slope shape: Convex
Across-slope shape: Convex
Ecological site: R081CY357TX - Clay Loam 29-35 PZ
Hydric soil rating: No

Denton

Percent of map unit: 1 percent
Landform: Plains
Landform position (two-dimensional): Backslope
Landform position (three-dimensional): Side slope
Down-slope shape: Linear
Across-slope shape: Linear
Ecological site: R081CY357TX - Clay Loam 29-35 PZ
Hydric soil rating: No

Eckrant

Percent of map unit: 1 percent
Landform: Ridges
Landform position (two-dimensional): Shoulder
Landform position (three-dimensional): Side slope
Down-slope shape: Convex
Across-slope shape: Convex
Ecological site: R081CY360TX - Low Stony Hill 29-35 PZ
Hydric soil rating: No

Purves

Percent of map unit: 1 percent
Landform: Plains
Landform position (two-dimensional): Backslope
Landform position (three-dimensional): Side slope
Down-slope shape: Convex
Across-slope shape: Linear
Ecological site: R081CY574TX - Shallow 29-35 PZ
Hydric soil rating: No

EaD—Eckrant cobbly clay, 1 to 8 percent slopes

Map Unit Setting

National map unit symbol: 2t0sg
Elevation: 650 to 1,900 feet
Mean annual precipitation: 30 to 35 inches
Mean annual air temperature: 65 to 69 degrees F
Frost-free period: 210 to 250 days
Farmland classification: Not prime farmland

Map Unit Composition

Eckrant and similar soils: 85 percent
Minor components: 15 percent
Estimates are based on observations, descriptions, and transects of the mapunit.

Description of Eckrant

Setting

Landform: Ridges
Landform position (two-dimensional): Summit, shoulder, backslope
Landform position (three-dimensional): Interfluve, side slope
Down-slope shape: Convex
Across-slope shape: Convex
Parent material: Residuum weathered from limestone

Typical profile

A1 - 0 to 4 inches: cobbly clay
A2 - 4 to 11 inches: very cobbly clay
R - 11 to 80 inches: bedrock

Properties and qualities

Slope: 1 to 8 percent
Surface area covered with cobbles, stones or boulders: 2.3 percent
Depth to restrictive feature: 4 to 20 inches to lithic bedrock
Drainage class: Well drained
Runoff class: Medium
Capacity of the most limiting layer to transmit water (Ksat): Moderately low to moderately high (0.06 to 0.57 in/hr)
Depth to water table: More than 80 inches
Frequency of flooding: None

Frequency of ponding: None
Calcium carbonate, maximum content: 10 percent
Maximum salinity: Nonsaline to very slightly saline (0.0 to 2.0 mmhos/cm)
Sodium adsorption ratio, maximum: 1.0
Available water supply, 0 to 60 inches: Very low (about 1.0 inches)

Interpretive groups

Land capability classification (irrigated): None specified
Land capability classification (nonirrigated): 6s
Hydrologic Soil Group: D
Ecological site: R081CY360TX - Low Stony Hill 29-35 PZ
Hydric soil rating: No

Minor Components

Brackett

Percent of map unit: 7 percent
Landform: Ridges
Landform position (two-dimensional): Backslope
Landform position (three-dimensional): Side slope
Down-slope shape: Convex
Across-slope shape: Convex
Ecological site: R081CY355TX - Adobe 29-35 PZ
Hydric soil rating: No

Bexar

Percent of map unit: 5 percent
Landform: Ridges
Landform position (two-dimensional): Footslope
Landform position (three-dimensional): Base slope
Down-slope shape: Linear
Across-slope shape: Linear
Ecological site: R081CY361TX - Redland 29-35 PZ
Hydric soil rating: No

Krum

Percent of map unit: 3 percent
Landform: Ridges
Landform position (two-dimensional): Toeslope
Landform position (three-dimensional): Base slope
Down-slope shape: Linear
Across-slope shape: Linear
Ecological site: R081CY357TX - Clay Loam 29-35 PZ
Hydric soil rating: No

EeB—Eckrant stony clay, 0 to 3 percent slopes, stony

Map Unit Setting

National map unit symbol: djpv
Elevation: 650 to 1,320 feet
Mean annual precipitation: 30 to 35 inches

Mean annual air temperature: 65 to 69 degrees F
Frost-free period: 210 to 250 days
Farmland classification: Not prime farmland

Map Unit Composition

Eckrant, stony, and similar soils: 85 percent
Minor components: 15 percent
Estimates are based on observations, descriptions, and transects of the mapunit.

Description of Eckrant, Stony

Setting

Landform: Ridges
Landform position (two-dimensional): Summit, shoulder
Landform position (three-dimensional): Interfluve
Down-slope shape: Convex
Across-slope shape: Convex
Parent material: Residuum weathered from limestone

Typical profile

A1 - 0 to 4 inches: stony clay
A2 - 4 to 11 inches: extremely stony clay
R - 11 to 80 inches: bedrock

Properties and qualities

Slope: 0 to 3 percent
Surface area covered with cobbles, stones or boulders: 0.0 percent
Depth to restrictive feature: 4 to 20 inches to lithic bedrock
Drainage class: Well drained
Runoff class: Medium
Capacity of the most limiting layer to transmit water (Ksat): Moderately low to moderately high (0.06 to 0.57 in/hr)
Depth to water table: More than 80 inches
Frequency of flooding: None
Frequency of ponding: None
Calcium carbonate, maximum content: 10 percent
Maximum salinity: Nonsaline to very slightly saline (0.0 to 2.0 mmhos/cm)
Sodium adsorption ratio, maximum: 1.0
Available water supply, 0 to 60 inches: Very low (about 0.8 inches)

Interpretive groups

Land capability classification (irrigated): None specified
Land capability classification (nonirrigated): 6s
Hydrologic Soil Group: D
Ecological site: R081CY360TX - Low Stony Hill 29-35 PZ
Hydric soil rating: No

Minor Components

Georgetown

Percent of map unit: 8 percent
Landform: Ridges
Landform position (two-dimensional): Summit
Landform position (three-dimensional): Interfluve
Down-slope shape: Linear
Across-slope shape: Linear
Ecological site: R081CY361TX - Redland 29-35 PZ

Hydric soil rating: No

Doss

Percent of map unit: 7 percent
Landform: Ridges
Landform position (two-dimensional): Shoulder
Landform position (three-dimensional): Interfluve
Down-slope shape: Convex
Across-slope shape: Convex
Ecological site: R081CY355TX - Adobe 29-35 PZ
Hydric soil rating: No

FaA—Fairlie clay, 0 to 1 percent slopes

Map Unit Setting

National map unit symbol: djq0
Elevation: 550 to 850 feet
Mean annual precipitation: 30 to 42 inches
Mean annual air temperature: 64 to 68 degrees F
Frost-free period: 230 to 260 days
Farmland classification: All areas are prime farmland

Map Unit Composition

Fairlie and similar soils: 100 percent
Estimates are based on observations, descriptions, and transects of the mapunit.

Description of Fairlie

Setting

Landform: Ridges
Landform position (two-dimensional): Footslope, toeslope
Landform position (three-dimensional): Base slope
Down-slope shape: Linear
Across-slope shape: Convex
Parent material: Residuum weathered from austin chalk formation

Typical profile

H1 - 0 to 8 inches: clay
H2 - 8 to 46 inches: clay
H3 - 46 to 54 inches: bedrock

Properties and qualities

Slope: 0 to 1 percent
Depth to restrictive feature: 40 to 60 inches to paralithic bedrock
Drainage class: Moderately well drained
Runoff class: High
Capacity of the most limiting layer to transmit water (Ksat): Very low to moderately low (0.00 to 0.06 in/hr)
Depth to water table: More than 80 inches
Frequency of flooding: None
Frequency of ponding: None

Calcium carbonate, maximum content: 20 percent
Maximum salinity: Nonsaline to very slightly saline (0.0 to 2.0 mmhos/cm)
Available water supply, 0 to 60 inches: Moderate (about 7.8 inches)

Interpretive groups

Land capability classification (irrigated): None specified
Land capability classification (nonirrigated): 2s
Hydrologic Soil Group: D
Ecological site: R086AY011TX - Southern Blackland
Hydric soil rating: No

FaB—Fairlie clay, 1 to 2 percent slopes

Map Unit Setting

National map unit symbol: djq1
Elevation: 550 to 850 feet
Mean annual precipitation: 30 to 42 inches
Mean annual air temperature: 64 to 68 degrees F
Frost-free period: 230 to 260 days
Farmland classification: All areas are prime farmland

Map Unit Composition

Fairlie and similar soils: 100 percent
Estimates are based on observations, descriptions, and transects of the mapunit.

Description of Fairlie

Setting

Landform: Ridges
Landform position (two-dimensional): Footslope, toeslope
Landform position (three-dimensional): Base slope
Down-slope shape: Linear
Across-slope shape: Convex
Parent material: Residuum weathered from austin chalk formation

Typical profile

H1 - 0 to 8 inches: clay
H2 - 8 to 46 inches: clay
H3 - 46 to 54 inches: bedrock

Properties and qualities

Slope: 1 to 2 percent
Depth to restrictive feature: 40 to 60 inches to paralithic bedrock
Drainage class: Moderately well drained
Runoff class: Very high
Capacity of the most limiting layer to transmit water (Ksat): Very low to moderately low (0.00 to 0.06 in/hr)
Depth to water table: More than 80 inches
Frequency of flooding: None
Frequency of ponding: None
Calcium carbonate, maximum content: 20 percent
Maximum salinity: Nonsaline to very slightly saline (0.0 to 2.0 mmhos/cm)

Available water supply, 0 to 60 inches: Moderate (about 7.8 inches)

Interpretive groups

Land capability classification (irrigated): None specified
Land capability classification (nonirrigated): 2e
Hydrologic Soil Group: D
Ecological site: R086AY011TX - Southern Blackland
Hydric soil rating: No

GsB—Georgetown stony clay loam, 1 to 3 percent slopes

Map Unit Setting

National map unit symbol: 2t277
Elevation: 620 to 1,250 feet
Mean annual precipitation: 32 to 36 inches
Mean annual air temperature: 65 to 68 degrees F
Frost-free period: 230 to 260 days
Farmland classification: Not prime farmland

Map Unit Composition

Georgetown and similar soils: 90 percent
Minor components: 10 percent
Estimates are based on observations, descriptions, and transects of the mapunit.

Description of Georgetown

Setting

Landform: Ridges
Landform position (two-dimensional): Summit, backslope
Landform position (three-dimensional): Interfluve, side slope
Down-slope shape: Linear
Across-slope shape: Linear
Parent material: Clayey residuum weathered from limestone

Typical profile

A - 0 to 7 inches: stony clay loam
Bt - 7 to 35 inches: cobbly clay
R - 35 to 60 inches: bedrock

Properties and qualities

Slope: 1 to 3 percent
Surface area covered with cobbles, stones or boulders: 0.1 percent
Depth to restrictive feature: 20 to 40 inches to lithic bedrock
Drainage class: Well drained
Runoff class: Very high
Capacity of the most limiting layer to transmit water (Ksat): Very low to moderately low (0.00 to 0.06 in/hr)
Depth to water table: More than 80 inches
Frequency of flooding: None
Frequency of ponding: None
Calcium carbonate, maximum content: 5 percent
Maximum salinity: Nonsaline to very slightly saline (0.0 to 2.0 mmhos/cm)

Available water supply, 0 to 60 inches: Low (about 3.8 inches)

Interpretive groups

Land capability classification (irrigated): None specified
Land capability classification (nonirrigated): 6s
Hydrologic Soil Group: D
Ecological site: R081CY361TX - Redland 29-35 PZ
Hydric soil rating: No

Minor Components

Tarpley

Percent of map unit: 5 percent
Landform: Ridges
Landform position (two-dimensional): Summit, backslope
Landform position (three-dimensional): Interfluve, side slope
Down-slope shape: Linear
Across-slope shape: Linear
Ecological site: R081CY361TX - Redland 29-35 PZ
Hydric soil rating: No

Eckrant

Percent of map unit: 3 percent
Landform: Ridges
Landform position (two-dimensional): Summit, shoulder, backslope
Landform position (three-dimensional): Interfluve, side slope
Down-slope shape: Convex
Across-slope shape: Convex
Ecological site: R081CY360TX - Low Stony Hill 29-35 PZ
Hydric soil rating: No

Fairlie

Percent of map unit: 2 percent
Landform: Ridges
Landform position (two-dimensional): Summit, backslope
Landform position (three-dimensional): Interfluve, side slope
Down-slope shape: Linear
Across-slope shape: Concave
Ecological site: R086AY011TX - Southern Blackland
Hydric soil rating: No

HedC2—Heiden clay, 2 to 5 percent slopes, moderately eroded

Map Unit Setting

National map unit symbol: 2sshp
Elevation: 320 to 750 feet
Mean annual precipitation: 37 to 40 inches
Mean annual air temperature: 67 to 68 degrees F
Frost-free period: 245 to 260 days
Farmland classification: Not prime farmland

Map Unit Composition

Heiden, moderately eroded, and similar soils: 85 percent
Minor components: 15 percent
Estimates are based on observations, descriptions, and transects of the mapunit.

Description of Heiden, Moderately Eroded

Setting

Landform: Ridges
Landform position (two-dimensional): Shoulder, backslope
Landform position (three-dimensional): Interfluve, side slope
Microfeatures of landform position: Linear gilgai
Down-slope shape: Convex
Across-slope shape: Convex
Parent material: Clayey residuum weathered from mudstone

Typical profile

Ap - 0 to 6 inches: clay
Bkss1 - 6 to 18 inches: clay
Bkss2 - 18 to 58 inches: clay
CBdk - 58 to 80 inches: clay

Properties and qualities

Slope: 2 to 5 percent
Depth to restrictive feature: 40 to 65 inches to densic material
Drainage class: Well drained
Runoff class: Very high
Capacity of the most limiting layer to transmit water (Ksat): Very low to moderately low (0.00 to 0.06 in/hr)
Depth to water table: More than 80 inches
Frequency of flooding: None
Frequency of ponding: None
Calcium carbonate, maximum content: 40 percent
Gypsum, maximum content: 5 percent
Maximum salinity: Nonsaline to very slightly saline (0.0 to 2.0 mmhos/cm)
Sodium adsorption ratio, maximum: 12.0
Available water supply, 0 to 60 inches: High (about 9.3 inches)

Interpretive groups

Land capability classification (irrigated): None specified
Land capability classification (nonirrigated): 3e
Hydrologic Soil Group: D
Ecological site: R086AY009TX - Southern Eroded Blackland
Hydric soil rating: No

Minor Components

Ferris, moderately eroded

Percent of map unit: 8 percent
Landform: Ridges
Landform position (two-dimensional): Backslope
Landform position (three-dimensional): Side slope
Microfeatures of landform position: Linear gilgai
Down-slope shape: Linear
Across-slope shape: Convex
Ecological site: R086AY009TX - Southern Eroded Blackland

Hydric soil rating: No

Heiden

Percent of map unit: 7 percent
Landform: Ridges
Landform position (two-dimensional): Shoulder, backslope
Landform position (three-dimensional): Interfluve, side slope
Microfeatures of landform position: Linear gilgai
Down-slope shape: Convex
Across-slope shape: Convex
Ecological site: R086AY011TX - Southern Blackland
Hydric soil rating: No

References

American Association of State Highway and Transportation Officials (AASHTO). 2004. Standard specifications for transportation materials and methods of sampling and testing. 24th edition.

American Society for Testing and Materials (ASTM). 2005. Standard classification of soils for engineering purposes. ASTM Standard D2487-00.

Cowardin, L.M., V. Carter, F.C. Golet, and E.T. LaRoe. 1979. Classification of wetlands and deep-water habitats of the United States. U.S. Fish and Wildlife Service FWS/OBS-79/31.

Federal Register. July 13, 1994. Changes in hydric soils of the United States.

Federal Register. September 18, 2002. Hydric soils of the United States.

Hurt, G.W., and L.M. Vasilas, editors. Version 6.0, 2006. Field indicators of hydric soils in the United States.

National Research Council. 1995. Wetlands: Characteristics and boundaries.

Soil Survey Division Staff. 1993. Soil survey manual. Soil Conservation Service. U.S. Department of Agriculture Handbook 18. http://www.nrcs.usda.gov/wps/portal/nrcs/detail/national/soils/?cid=nrcs142p2_054262

Soil Survey Staff. 1999. Soil taxonomy: A basic system of soil classification for making and interpreting soil surveys. 2nd edition. Natural Resources Conservation Service, U.S. Department of Agriculture Handbook 436. http://www.nrcs.usda.gov/wps/portal/nrcs/detail/national/soils/?cid=nrcs142p2_053577

Soil Survey Staff. 2010. Keys to soil taxonomy. 11th edition. U.S. Department of Agriculture, Natural Resources Conservation Service. http://www.nrcs.usda.gov/wps/portal/nrcs/detail/national/soils/?cid=nrcs142p2_053580

Tiner, R.W., Jr. 1985. Wetlands of Delaware. U.S. Fish and Wildlife Service and Delaware Department of Natural Resources and Environmental Control, Wetlands Section.

United States Army Corps of Engineers, Environmental Laboratory. 1987. Corps of Engineers wetlands delineation manual. Waterways Experiment Station Technical Report Y-87-1.

United States Department of Agriculture, Natural Resources Conservation Service. National forestry manual. http://www.nrcs.usda.gov/wps/portal/nrcs/detail/soils/home/?cid=nrcs142p2_053374

United States Department of Agriculture, Natural Resources Conservation Service. National range and pasture handbook. http://www.nrcs.usda.gov/wps/portal/nrcs/detail/national/landuse/rangepasture/?cid=stelprdb1043084

United States Department of Agriculture, Natural Resources Conservation Service. National soil survey handbook, title 430-VI. http://www.nrcs.usda.gov/wps/portal/nrcs/detail/soils/scientists/?cid=nrcs142p2_054242

United States Department of Agriculture, Natural Resources Conservation Service. 2006. Land resource regions and major land resource areas of the United States, the Caribbean, and the Pacific Basin. U.S. Department of Agriculture Handbook 296. http://www.nrcs.usda.gov/wps/portal/nrcs/detail/national/soils/?cid=nrcs142p2_053624

United States Department of Agriculture, Soil Conservation Service. 1961. Land capability classification. U.S. Department of Agriculture Handbook 210. http://www.nrcs.usda.gov/Internet/FSE_DOCUMENTS/nrcs142p2_052290.pdf

NARRATIVE DESCRIPTION OF SITE-SPECIFIC GEOLOGY

Ranging from north to south, two primary physiographic provinces are present in Williamson County: the Great Plain and the Gulf Coastal Plain. The Gulf Coastal Plain is comprised mainly of Blackland prairie. The Great Plain is comprised chiefly of limestone plains, which merges with the Edwards Plateau in the vicinity of the Colorado River.

Groundwater recharge and flow are controlled by faulted Edwards Aquifer and adjacent strata. Water enters the aquifer by means of solution features controlled by faults, fractures and solution conduits. Solution features are created by the dissolution of limestone primarily from rainwater and groundwater. Deformation of the Balcones fault system controls both the large- and small-scale flow barriers and pathways present in the Edwards Aquifer.

Geological information pertaining to the area was obtained from the Geologic Atlas of Texas, Austin Sheet, published by University of Texas at Austin, Bureau of Economic Geology (BEG), 1997. The subject property is situated on Terraces along streams (Qt) (Figure 6).

BEG describes Qt as "consist of three or more levels which may correspond to coastal Piestocene units; gravel, sand, silt, and clay in various proportions with gravel prominent in the older, higher terraces, gravel along Guadalupe River, siliceous, course, along Colorado River, mostly dolomite, limestone, chert, quartz, and various igneous and metamorphic rocks from the Llano Region and dolomite, limestone and chert from the Edwards Plateau; sand mostly quartz."

The Georgetown Limestone is inferred to lie just below the porous and permeable Qt. The Kgt is described by the BEG as "limestone and marl; mostly fine-grained, argillaceous, nodular, moderately indurated, light gray; some limestone, hard, brittle, thick-bedded, shite; some shale, marly soft, light gray to yellowish gray; marine megafossils include Kingena wacoensis and Gryphaea washitaensis; thickness 30 - 80 feet thing southward"

Other potential natural recharge features such as caves, sinkholes, closed depressions, solution cavities, fractured rock outcrops, faults or lineaments were not observed on the subject property. Additionally, seeps or springs were not observed on the subject property.

Attachment 1:

NRCS Soil Map Report



1 - Wellhouse located on the northern part of the subject property



2 - View of the Inside of the well house



3 - Well house located on the subject property



4 - Outside of wellhouse



5 - Outside of wellhouse faucet



6 - Drainage feature S-3



7 - Drainage feature S-2



8 - Drainage feature S-1 along the western site boundary



9 - View of wetland area observed near the southwest corner of the subject property.



10 - View of apparent wetland area observed near the southwest portion of the subject property.



11 - Drainage feature S-3 along the western site boundary



12 - Drainage feature S-3 along the western site boundary



13 - Drainage feature S-3 along the western site boundary



14 - View south along subject property boundary from near feature S-3.



15 - View north along subject property boundary from near feature S-3.



16 - View of feature S-2.



17 - View south along drainage feature S-2



18 - View of standing water observed in feature S-2.



19 - View north across property interior from the south poriton of the site.



20 - View northeast across the interior of the subject property.



21 - View south from the northern part of the subject property



22 - View north from the southern part of the subject property



23 - View of scattered/exposed rocks near the north-center of the subject property



24 - View east from west center portion of the subject property



25 - View of railroad tracks, and McNeil towards the western property boundary



26 - Karst feature S-4



27 - Karst feature S-4



28 - Karst feature S-4



29 - Karst feature S-4



30 - Karst feature S-4



31 - Karst feature S-5



32 - Karst feature S-5



33 - Karst feature S-5



34 - Karst feature S-5



35 - Karst feature S-5



36 - Karst feature S-5

SITE GEOLOGIC MAP(S)

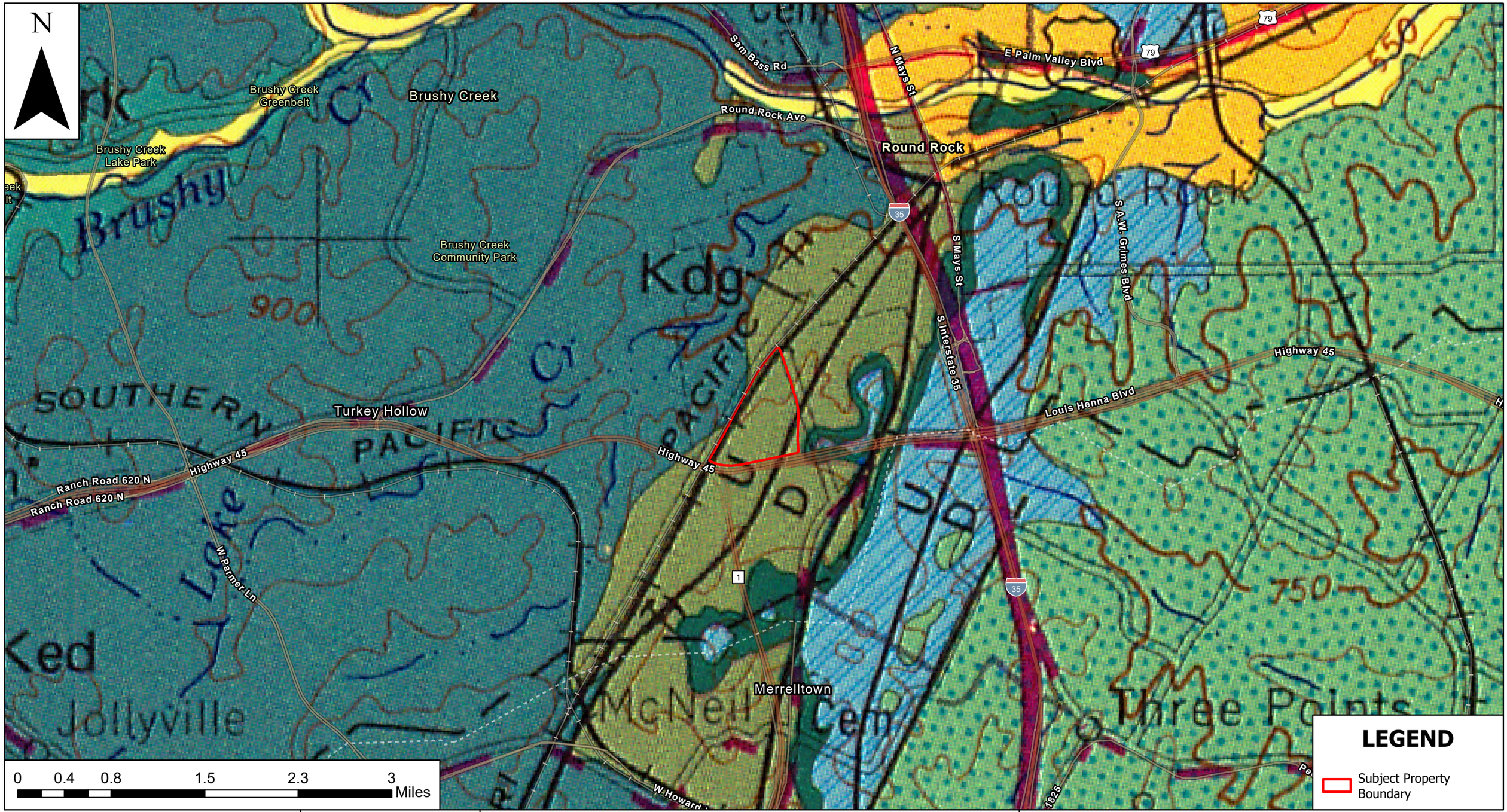

ECS Southwest, LLP
14050 Summit Drive, Suite 104
Austin, Texas 78728
Phone: (512) 837-8005
www.ecslimited.com

ECS Project No. 51:3992

Williamson County



Figure 6 - Area Geologic Map

McNeil Road and CR 172 Geologic Assessment (GA)
McNeil Road and CR 172, Round Rock, TX
Williamson County, Texas
(193.289 acres)

Watershed: San Gabriel
USGS Quadrangle: Pflugerville West, TX 2022

March 5, 2024

Service Layer Credits:
World Imagery: Williamson County TX, Maxar
Hybrid Reference Layer: Austin Community College, Baylor University, City of Austin, County of Williamson, Texas Parks & Wildlife, CONANP, Esri, TomTom, Garmin, SafeGraph, GeoTechnologies, Inc, METI/NASA, USGS, EPA, NPS, USDA, USFWSUSGS Topographic Map of the Pflugerville West, Texas Quadrangle (2022)
Soils Data: USDA NRCS Web Soil Survey
Wetlands Data: National Wetlands Inventory
Floodplain Data: FEMA National Flood Hazard Layer
LIDAR Data: USGS 3D Elevation Program

STATE OF TEXAS
KATHERINE MOORE
GEOLOGY
15137
LICENSED
PROFESSIONAL GEOSCIENTIST
Mar 2024

SECTION 4:
MODIFICATION OF A PREVIOUSLY APPROVED PLAN

Modification of a Previously Approved Plan

Texas Commission on Environmental Quality

for Regulated Activities on the Edwards Aquifer Recharge Zone and Transition Zone and Relating to 30 TAC 213.4(j), Effective June 1, 1999

To ensure that the application is administratively complete, confirm that all fields in the form are complete, verify that all requested information is provided, consistently reference the same site and contact person in all forms in the application, and ensure forms are signed by the appropriate party.

Note: Including all the information requested in the form and attachments contributes to more streamlined technical reviews.

Signature

To the best of my knowledge, the responses to this form accurately reflect all information requested concerning the proposed regulated activities and methods to protect the Edwards Aquifer. This request for a **Modification of a Previously Approved Plan** is hereby submitted for TCEQ review and executive director approval. The request was prepared by:

Print Name of Customer/Agent: Nicholas C. Brown, P.E.

Date: 05/15/2025

Signature of Customer/Agent:



Project Information

1. Current Regulated Entity Name: 2525 CR 172 Industrial
   Original Regulated Entity Name: 2525 CR 172 Industrial
   Regulated Entity Number(s) (RN): RN112000070
   Edwards Aquifer Protection Program ID Number(s): 11004052
   [X] The applicant has not changed and the Customer Number (CN) is: CN605619519
   [ ] The applicant or Regulated Entity has changed. A new Core Data Form has been provided.

2. [X] **Attachment A: Original Approval Letter and Approved Modification Letters**. A copy of the original approval letter and copies of any modification approval letters are attached.

3. A modification of a previously approved plan is requested for (check all that apply):
   - ☐ Physical or operational modification of any water pollution abatement structure(s) including but not limited to ponds, dams, berms, sewage treatment plants, and diversionary structures;
   - ☐ Change in the nature or character of the regulated activity from that which was originally approved or a change which would significantly impact the ability of the plan to prevent pollution of the Edwards Aquifer;
   - ☐ Development of land previously identified as undeveloped in the original water pollution abatement plan;
   - ☒ Physical modification of the approved organized sewage collection system;
   - ☐ Physical modification of the approved underground storage tank system;
   - ☐ Physical modification of the approved aboveground storage tank system.

4. ☒ Summary of Proposed Modifications (select plan type being modified). If the approved plan has been modified more than once, copy the appropriate table below, as necessary, and complete the information for each additional modification.

WPAP Modification Summary	***Approved Project***	***Proposed Modification***
Acres	N/A	N/A
Type of Development	N/A	N/A
Number of Residential Lots	N/A	N/A
Impervious Cover (acres)	N/A	N/A
Impervious Cover (%	N/A	N/A
Permanent BMPs	N/A	N/A
Other	N/A	N/A

SCS Modification Summary	***Approved Project***	***Proposed Modification***
Linear Feet	1,036	494
Pipe Diameter	8"	8"
Other	N/A	N/A

AST Modification Summary	***Approved Project***	***Proposed Modification***
Number of ASTs	N/A	N/A
Volume of ASTs	N/A	N/A
Other	N/A	N/A

UST Modification Summary	***Approved Project***	***Proposed Modification***
Number of USTs	N/A	N/A
Volume of USTs	N/A	N/A
Other	N/A	N/A

5. [X] **Attachment B: Narrative of Proposed Modification**. A detailed narrative description of the nature of the proposed modification is attached. It discusses what was approved, including any previous modifications, and how this proposed modification will change the approved plan.

6. [X] **Attachment C: Current Site Plan of the Approved Project**. A current site plan showing the existing site development (i.e., current site layout) at the time this application for modification is attached. A site plan detailing the changes proposed in the submitted modification is required elsewhere.
   - [ ] The approved construction has not commenced. The original approval letter and any subsequent modification approval letters are included as Attachment A to document that the approval has not expired.
   - [ ] The approved construction has commenced and has been completed. Attachment C illustrates that the site was constructed as approved.
   - [ ] The approved construction has commenced and has been completed. Attachment C illustrates that the site was **not** constructed as approved.
   - [X] The approved construction has commenced and has **not** been completed. Attachment C illustrates that, thus far, the site was constructed as approved.
   - [ ] The approved construction has commenced and has **not** been completed. Attachment C illustrates that, thus far, the site was **not** constructed as approved.

7. [ ] The acreage of the approved plan has increased. A Geologic Assessment has been provided for the new acreage.
   [X] Acreage has not been added to or removed from the approved plan.

8. [X] Submit one (1) original and one (1) copy of the application, plus additional copies as needed for each affected incorporated city, groundwater conservation district, and county in which the project will be located. The TCEQ will distribute the additional copies to these jurisdictions. The copies must be submitted to the appropriate regional office.

ORIGINAL APPROVAL LETTER AND APPROVED MODIFICATION LETTERS

Jon Niermann, *Chairman*
Bobby Janecka, *Commissioner*
Catarina R. Gonzales, *Commissioner*
Kelly Keel, *Executive Director*

TEXAS COMMISSION ON ENVIRONMENTAL QUALITY

Protecting Texas by Reducing and Preventing Pollution

August 16, 2024

Mr. David Barnett
Amazon.com Services, LLC
Amazon Tower 1, 101 Platform Way N
Nashville, TN 37203

Re: Approval of an Organized Sewage Collection System (SCS) Plan
2525 CR 172 Industrial; Located West of CR 172 and Martin Ave., Round Rock ETJ, Williamson County, Texas
Edwards Aquifer Protection Program ID: 11004052, Regulated Entity No. RN112000070

Dear Mr. Barnett:

The Texas Commission on Environmental Quality (TCEQ) has completed its review on the application for the above-referenced project submitted to the Edwards Aquifer Protection Program (EAPP) by Kimley-Horn and Associates, on behalf of the applicant, Amazon.com Services, LLC, on June 25, 2024. Final review of the application was completed after additional material was received on August 13, 2024.

As presented to the TCEQ, the application was prepared in general compliance with the requirements of 30 Texas Administrative Codes (TAC) Chapter §213 and Chapter §217. The engineering design report, technical specifications and final design plans were prepared by a Texas licensed professional engineer (PE). All construction plans and design information were sealed, signed, and dated by a Texas licensed PE. Therefore, the application for the construction of the proposed project and methods to protect the Edwards Aquifer are hereby **approved,** subject to applicable state rules and the conditions in this letter.

This approval expires two years from the date of this letter, unless, prior to the expiration date, more than 10 percent of the construction has commenced on the project or an extension of time has been officially requested. This approval or extension will expire, and no extension will be granted if more than 50 percent of the project has not been completed within ten years from the date of this letter.

The applicant or a person affected may file with the chief clerk a motion for reconsideration of the executive director's final action on this Edwards Aquifer protection plan. A motion for reconsideration must be filed in accordance with 30 TAC §50.139.

PROJECT DESCRIPTION

The proposed SCS will provide disposal service for future commercial development. The system includes a lift station, a force main, gravity lines, and other appurtenance necessary for conveying wastewater to a treatment plant. The proposed SCS will consist of 938 linear feet of 8-inch diameter PVC SDR 26 ASTM D3034 pipe gravity line, and 98 linear feet of 4-inch diameter HDPE DR-9 ASTM D3350 pipe force main, with associated appurtenance necessary for conveying wastewater to a treatment plant.

LIFT STATION DETAILS

The proposed lift station will consist of a 6-foot diameter wet well with an approximate depth of 35.5 feet, two submersible 3 HP pumps, and an Emergency Power Generator. Each pump will have a pumping capacity of 99 gallons per minute (gpm) at a total dynamic head (TDH) of 32.46 feet. **The lift station is designed and will be constructed to ensure that bypassing of sewage does not occur.**

Additional equipment will include a control panel, an audio-visual alarm, auto-dial telemetry, hoisting equipment, level pump controllers, pump supports and discharge piping with valves, and a security fence with controlled access.

TREATMENT FACILITY

The system will be connected to an existing City of Round Rock wastewater line for conveyance to the Brushy Creek Regional Wastewater Treatment Plant for treatment and disposal. **The proposed system shall be connected for conveyance prior to use of the development.** The project will conform to all applicable codes, ordinances, and requirements of the City of Round Rock.

GEOLOGY

According to the Geologic Assessment (GA) included with the application, the surficial unit of the site is Del Rio Clay and Georgetown Formation (Kdr). No sensitive geologic features were identified in the GA. The site assessment conducted on August 6, 2024 by TCEQ staff determined the site to be generally as described by the GA.

SPECIAL CONDITIONS

I. Upon completion of any lift station excavation, a geologist **must certify** that the excavation has been inspected for the presence of sensitive features. Certification that the excavation has been inspected must be submitted to the EAPP within 30 days of the inspection.

II. This approval does not authorize construction of any associated project requiring a Water Pollution Abatement Plan (WPAP) at the site. A WPAP is required for construction of any commercial project located on the Recharge Zone and shall be submitted at a later date.

STANDARD CONDITIONS

1. The plan holder (applicant) must comply with all provisions of 30 TAC Chapter §213 and all technical specifications in the approved plan. The plan holder should also acquire and comply with additional and separate approvals, permits, registrations or authorizations from other TCEQ Programs (i.e., Water Quality) as required based on the specifics of the plan.
2. In addition to the rules of the Commission, the plan holder must also comply with state and local ordinances and regulations providing for the protection of water quality as applicable.

Prior to Commencement of Construction:

3. The plan holder of any approved Edwards Aquifer protection plan must notify the EAPP and obtain approval from the executive director prior to initiating any modification to the activities described in the referenced application following the date of the approval.
4. The plan holder must provide written notification of intent to commence construction, replacement, or rehabilitation of the referenced project. Notification must be submitted to the EAPP no later than 48 hours prior to commencement of the regulated activity. Notification must include the date on which the regulated activity will commence, the name of the approved plan and program ID number for the regulated activity, and the name of the prime contractor with the name and telephone number of the contact person.
5. Temporary erosion and sedimentation (E&S) controls as described in the referenced application, must be installed prior to construction, and maintained during construction. Temporary E&S controls may be removed when vegetation is established, and the

construction area is stabilized. The TCEQ may monitor stormwater discharges from the site to evaluate the adequacy of temporary E&S control measures. Additional controls may be necessary if excessive solids are being discharged from the site.

During Construction:

6. This approval does not authorize the installation of temporary or permanent aboveground storage tanks on this project that will have a total storage capacity of 500 gallons or more of static hydrocarbons or hazardous substances without prior approval of an Aboveground Storage Tank facility application.
7. If any sensitive feature is encountered during construction, replacement, or rehabilitation on this project, all regulated activities must be **immediately** suspended near it and notification must be made to TCEQ EAPP staff. Temporary BMPs must be installed and maintained to protect the feature from pollution and contamination. Regulated activities near the feature may not proceed until the executive director has reviewed and approved the methods proposed to protect the feature and the aquifer from potentially adverse impacts to water quality.
8. If sediment escapes the construction site, the sediment must be removed at a frequency sufficient to minimize offsite impacts to water quality (e.g., fugitive sediment in street being washed into surface streams or sensitive features by the next rain). Sediment must be removed from sediment traps or sedimentation ponds not later than when design capacity has been reduced by 50 percent. Litter, construction debris, and construction chemicals shall be prevented from becoming stormwater discharge pollutants.
9. Intentional discharges of sediment laden water are not allowed. If dewatering becomes necessary, the discharge must be filtered through appropriately selected BMPs.
10. The following records shall be maintained and made available to the executive director upon request: the dates when major grading activities occur, the dates when construction activities temporarily or permanently cease on a portion of the site, and the dates when stabilization measures are initiated.
11. Stabilization measures shall be initiated as soon as practicable in portions of the site where construction activities have temporarily or permanently ceased, and construction activities will not resume within 21 days. When the initiation of stabilization measures by the 14th day is precluded by weather conditions, stabilization measures shall be initiated as soon as practicable.

After Completion of Construction:

12. No part of the organized sewage collection system may be used as a sewage holding tank, as defined in 30 TAC §213.3 (excluding lift stations), over the Edwards Aquifer recharge zone.
13. A Texas licensed PE **must certify** in writing that the new sewage collection system (including force mains) has passed all required testing. The certification shall be submitted to the EAPP within 30 days of test completion and prior to the new sewage collection system being put into service.
14. A Texas licensed PE **must certify** subsequent testing required every five years of the existing sewage collection system after being put into use to determine types and locations of structural damage and defects such as offsets, open joints, or cracked or crushed lines that would allow exfiltration to occur. The test results must be retained by the plan holder for five years and made available to the executive director upon request.

The holder of the approved Edwards Aquifer protection plan is responsible for compliance with Chapter §213 and any condition of the approved plan through all phases of plan implementation. Failure to comply with any condition within this approval letter is a violation of Chapter §213 and is subject to administrative rule or orders and penalties as provided under §213.10 of this title (relating to Enforcement). Such violations may also be subject to civil

penalties and injunction. Upon legal transfer of this property, the new owner is required to comply with all terms of the approved Edwards Aquifer protection plan.

This action is taken as delegated by the executive director of the Texas Commission on Environmental Quality. If you have any questions or require additional information, please contact Ms. Miki Chilarescu, P.E., of the Edwards Aquifer Protection Program at 512-239-6175 or the regional office at 512-339-2929.

Sincerely,

Monica Reyes

Monica Reyes, Section Manager
Edwards Aquifer Protection Program
Texas Commission on Environmental Quality

MR/mec

cc: Mr. Nicholas C. Brown, P.E. - Kimley-Horn and Associates

NARRATIVE OF PROPOSED MODIFICATION

The proposed 2525 CR 172 Industrial project located at 2525 CR 172 in Round Rock, Texas is located south of the McNeil Rd and County Road 172 intersection within the Round Rock City Limits. The property is currently zoned Planned Unit Development (PUD) 153. The current zoning supports the use of the proposed development. The proposed existing property is approximately 69.56-acres and the site is currently undeveloped. The proposed land use would be classified as Industrial. Construction has begun but has not been completed.

Two WPAP's have been submitted separately, and both have been approved (EAPP ID No. 11004138 & 11004324). The wastewater extension will serve a proposed industrial building and miscellaneous smaller buildings located on the property. The limits of construction for the wastewater improvements will consist of 1.01 acres out of the 69.56-total site acres.

The current proposed modification to the previously approved Organized Sewage Collection System includes an updated layout of the wastewater lines leading to the onsite structures. The updated layout of the wastewater lines was approved by the City of Round Rock and the client (Amazon). This layout will allow for a shallower line throughout the site. This modification does not propose any additional changes to the wastewater line.

CURRENT SITE PLAN OF THE APPROVED PROJECT

Template:KHA AUS TEMPLATE D30 2022 DM:11-08-2022

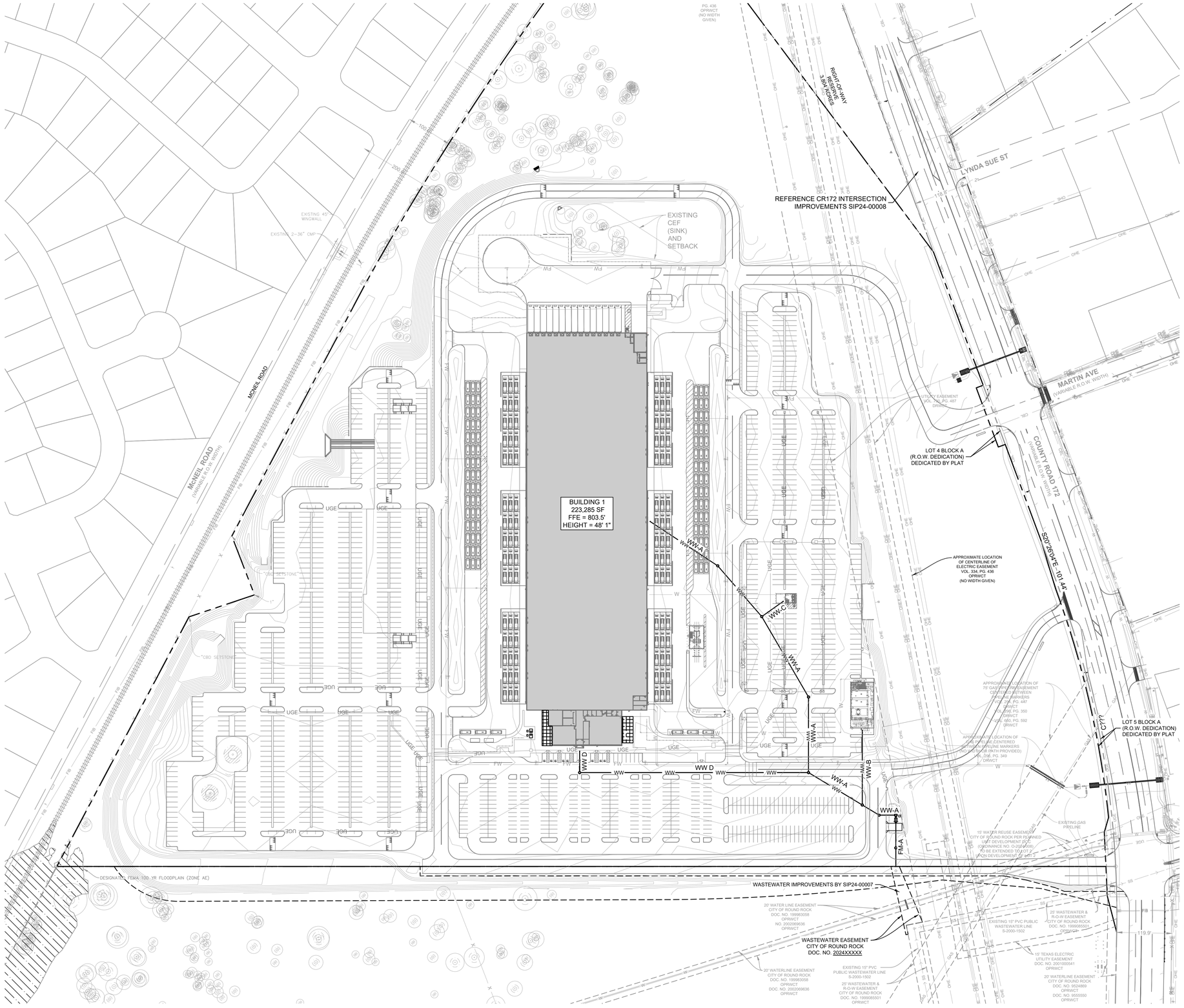

NOTES

1. ALL NON-CITY INFRASTRUCTURE INCLUDING GAS, ELECTRIC, CABLE AND TELECOMMUNICATIONS SHALL TRAVERSE UNDERNEATH CITY INFRASTRUCTURE. THIS INCLUDES, BUT IS NOT LIMITED TO WATER LINES, WASTEWATER LINES AND STORM SEWER, WITH A MINIMUM OUTSIDE-TO-OUTSIDE CLEARANCE OF 18".
2. ALL MANHOLES SHALL BE COATED AND VACUMM TESTED.
3. ALL WASETEWATER LINES ARE TO BE CONSTRUCTED OF SDR 26
4. ALL SEGMENTS OF PIPE LOCATED IN ENCASEMENT SHALL BE FULLY RESTRAINED.
6. THE DRY UTILITY ALIGNMENTS ARE PRELIMINARY. TO HAVE PRELIMINARY STATUS REMOVED FROM PDS PERMIT, THE PERMIT MUST BE REVISED ONCE DRY ALIGNMENTS ARE APPROVED BY THE FRANCHISED UTILITY. THEN INSTALLATION OF DRY UTILITIES MAY COMMENCE.
7. DRY UTILITY ALIGNMENTS ARE SCHEMATIC. CONTRACTOR TO PROVIDE APPROPRIATE CLEARANCE FROM EXISTING AND PROPOSED INFRASTRUCTURE.

BENCHMARKS

BM #51471 MAG NAIL SET "GCP 2"
SET AT THE NORTHEAST CORNER OF THE INTERSECTION OF STATE HIGHWAY 45 AND COUNTY ROAD 172, ±5.5' FROM "YIELD" SIGN.
N: 10147640.83
E: 3127942.60
ELEV.= 841.70'

BM #51473 MAG NAIL SET "GCP 3"
SET IN THE NORTH RIGHT-OF-WAY LINE OF HESTERS CROSSING ROAD, ±560' FROM THE INTERSECTION OF HESTERS CROSSING ROAD AND COUNTY ROAD 172, ±100 FROM CONCRETE SIGN "ENCOMPASS HEALTH".
N: 10149343.04
E: 3128315.81
ELEV.= 812.19'

No.	REVISIONS	DATE	BY

Kimley»Horn
© 2025 KIMLEY-HORN AND ASSOCIATES, INC.
10814 JOLLYVILLE ROAD, CAMPUS IV, SUITE 200, AUSTIN, TX 78759
PHONE: 512-418-1771 FAX: 512-418-1791
WWW.KIMLEY-HORN.COM
TEXAS REGISTERED ENGINEERING FIRM F-928

NICHOLAS C. BROWN
107175
LICENSED
PROFESSIONAL ENGINEER
03/26/2025

KHA PROJECT	060284918
DATE	MARCH 2025
SCALE:	AS SHOWN
DESIGNED BY:	MM
DRAWN BY:	MM
CHECKED BY:	NCB

OVERALL WASTEWATER PLAN

2525 CR 172 INDUSTRIAL

CITY OF ROUND ROCK
WILLIAMSON COUNTY, TEXAS

SHEET NUMBER
43 OF 227

SDP24-00001

Plotted By: jenkins, Matthew Date: April 17, 2025 04:01:35pm File Path: K:\AUS_Civil\060284910 — DAU3 Round Rock\Civil\PlanSheets-SDP\C-Overall Wastewater Plan.dwg
This document, together with the concepts and designs presented herein, as an instrument of service, is intended only for the specific purpose and client for which it was prepared. Reuse of and improper reliance on this document without written authorization and adoption by Kimley-Horn and Associates, Inc. shall be without liability to Kimley-Horn and Associates, Inc.

SECTION 5:
ORGANIZED SEWAGE COLLECTION SYSTEM PLAN

Organized Sewage Collection System Application

Texas Commission on Environmental Quality

For Regulated Activities on the Edwards Aquifer Recharge Zone and Relating to 30 TAC §213.5(c), Effective June 1, 1999

To ensure that the application is administratively complete, confirm that all fields in the form are complete, verify that all requested information is provided, consistently reference the same site and contact person in all forms in the application, and ensure forms are signed by the appropriate party.

Note: Including all the information requested in the form and attachments contributes to more streamlined technical reviews.

Regulated Entity Name: 2525 CR 172 Industrial

1. [X] **Attachment A – SCS Engineering Design Report**. This Engineering Design Report is provided to fulfill the requirements of 30 TAC Chapter 217, including 217.10 of Subchapter A, §§217.51 – 217.70 of Subchapter C, and Subchapter D as applicable, and is required to be submitted with this SCS Application Form.

Customer Information

2. The entity and contact person responsible for providing the required engineering certification of testing for this sewage collection system upon completion (including private service connections) and every five years thereafter to the appropriate TCEQ region office pursuant to 30 TAC §213.5(c) is:

   Contact Person: David Barnett
   Entity: Amazon.com Services, LLC
   Mailing Address: Amazon Tower 1, 101 Platform Way N
   City, State: Nashville, TN Zip: 37203
   Telephone: 901-438-4156 Fax: N/A
   Email Address: barnettu@amazon.com
   The appropriate regional office must be informed of any changes in this information within 30 days of the change.

3. The engineer responsible for the design of this sewage collection system is:

   Contact Person: Nicholas C. Brown, P.E.
   Texas Licensed Professional Engineer's Number: 107175
   Entity: Kimley-Horn and Associates
   Mailing Address: 10814 Jollyville Rd, Avallon IV, Suite 200
   City, State: Austin, TX Zip: 78759
   Telephone: 512-418-1771 Fax: N/A
   Email Address: nick.brown@kimley-horn.com

Project Information

4. Anticipated type of development to be served (estimated future population to be served, plus adequate allowance for institutional and commercial flows):

   ☐ Residential: Number of single-family lots: _____
   ☐ Multi-family: Number of residential units: _____
   ☐ Commercial
   ☒ Industrial
   ☐ Off-site system (not associated with any development)
   ☐ Other: _____

5. The character and volume of wastewater is shown below:

_____% Domestic	_____ gallons/day
100 % Industrial	126,695 gallons/day
_____% Commingled	_____ gallons/day

   Total gallons/day: 126,695

6. Existing and anticipated infiltration/inflow is 0 gallons/day. This will be addressed by: N/A.

7. A Water Pollution Abatement Plan (WPAP) is required for construction of any associated commercial, industrial or residential project located on the Recharge Zone.

   ☒ The WPAP application for this development was approved by letter dated 12/20/2024 & 3/7/2025 A copy of the approval letter is attached.
   ☐ The WPAP application for this development was submitted to the TCEQ on _____, but has not been approved.
   ☐ A WPAP application is required for an associated project, but it has not been submitted.
   ☐ There is no associated project requiring a WPAP application.

8. Pipe description:

Table 1 - Pipe Description

Pipe Diameter(Inches)	*Linear Feet (1)*	*Pipe Material (2)*	*Specifications (3)*
8	396	PVC SDR-26	ASTM D-3034
4 (FM)	98	HDPE DR-9	ASTM D-3350

Total Linear Feet: 494

(1) Linear feet - Include stub-outs and double service connections. Do not include private service laterals.
(2) Pipe Material - If PVC, state SDR value.
(3) Specifications - ASTM / ANSI / AWWA specification and class numbers should be included.

9. The sewage collection system will convey the wastewater to the Brushy Creek Regional Wastewater Treatment Plant. The treatment facility is:

   [X] Existing
   [ ] Proposed

10. All components of this sewage collection system will comply with:

   [X] The City of Round Rock standard specifications.
   [ ] Other. Specifications are attached.

11. [ ] No force main(s) and/or lift station(s) are associated with this sewage collection system.

   [X] A force main(s) and/or lift station(s) is associated with this sewage collection system and the **Lift Station/Force Main System Application** form (TCEQ-0624) is included with this application.

Alignment

12. [X] There are no deviations from uniform grade in this sewage collection system without manholes and with open cut construction.

13. [X] There are no deviations from straight alignment in this sewage collection system without manholes.

   [ ] **Attachment B - Justification and Calculations for Deviation in Straight Alignment without Manholes**. A justification for deviations from straight alignment in this sewage collection system without manholes with documentation from pipe manufacturer allowing pipe curvature is attached.
   [ ] For curved sewer lines, all curved sewer line notes (TCEQ-0596) are included on the construction plans for the wastewater collection system.

Manholes and Cleanouts

14. [X] Manholes or clean-outs exist at the end of each sewer line(s). These locations are listed below: (Please attach additional sheet if necessary)

Table 2 - Manholes and Cleanouts

Line	*Shown on Sheet*	*Station*	*Manhole or Clean-out?*
FM-A	44 of 227	1+00.00	Manhole
FM-A	44 of 227	2+31.17	Manhole
FM-A	44 of 227	2+80.77	Manhole
WW-A	44 of 227	1+36.25	Manhole
WW-A	44 of 227	1+78.84	Manhole
WW-A	44 of 227	3+14.71	Manhole

Line	*Shown on Sheet*	*Station*	*Manhole or Clean-out?*

15. ☒ Manholes are installed at all Points of Curvature and Points of Termination of a sewer line.

16. ☒ The maximum spacing between manholes on this project for each pipe diameter is no greater than:

Pipe Diameter (inches)	Max. Manhole Spacing (feet)
6 - 15	500
16 - 30	800
36 - 48	1000
≥54	2000

☐ **Attachment C – Justification for Variance from Maximum Manhole Spacing**. The maximum spacing between manholes on this project (for each pipe diameter used) is greater than listed in the table above. A justification for any variance from the maximum spacing is attached, and must include a letter from the entity which will operate and maintain the system stating that it has the capability to maintain lines with manhole spacing greater than the allowed spacing.

17. ☐ All manholes will be monolithic, cast-in-place concrete.

☒ The use of pre-cast manholes is requested for this project. The manufacturer's specifications and construction drawings, showing the method of sealing the joints, are attached.

Site Plan Requirements

Items 18 - 25 must be included on the Site Plan.

18. ☒ The Site Plan must have a minimum scale of 1" = 400'.

Site Plan Scale: 1" = 100 '.

19. ☒ The Site Plan must include the sewage collection system general layout, including manholes with station numbers, and sewer pipe stub outs (if any). Site plan must be overlain by topographic contour lines, using a contour interval of not greater than ten feet and showing the area within both the five-year floodplain and the 100-year floodplain of any drainage way.

20. Lateral stub-outs:

☐ The location of all lateral stub-outs are shown and labeled.
☒ No lateral stub-outs will be installed during the construction of this sewer collection system.

21. Location of existing and proposed water lines:

☐ The entire water distribution system for this project is shown and labeled.
☒ If not shown on the Site Plan, a Utility Plan is provided showing the entire water and sewer systems.
☐ There will be no water lines associated with this project.

22. 100-year floodplain:

☒ After construction is complete, no part of this project will be in or cross a 100-year floodplain, either naturally occurring or manmade. (Do not include streets or concrete-lined channels constructed above of sewer lines.)
☐ After construction is complete, all sections located within the 100-year floodplain will have water-tight manholes. These locations are listed in the table below and are shown and labeled on the Site Plan. (Do not include streets or concrete-lined channels constructed above sewer lines.)

Table 3 - 100-Year Floodplain

Line	*Sheet*	*Station*
N/A	N/A	N/A
	of	to
	of	to
	of	to

23. 5-year floodplain:

☒ After construction is complete, no part of this project will be in or cross a 5-year floodplain, either naturally occurring or man-made. (Do not include streets or concrete-lined channels constructed above sewer lines.)
☐ After construction is complete, all sections located within the 5-year floodplain will be encased in concrete or capped with concrete. These locations are listed in the table below and are shown and labeled on the Site Plan. (Do not include streets or concrete-lined channels constructed above sewer lines.)

Table 4 - 5-Year Floodplain

Line	*Sheet*	*Station*
N/A	N/A	N/A
	of	to
	of	to
	of	to

24. ☒ Legal boundaries of the site are shown.

25. ☒ The ***final plans and technical specifications*** are submitted for the TCEQ's review. Each sheet of the construction plans and specifications are dated, signed, and sealed by the Texas Licensed Professional Engineer responsible for the design on each sheet.

Items 26 - 33 must be included on the Plan and Profile sheets.

26. [X] All existing or proposed water line crossings and any parallel water lines within 9 feet of sewer lines are listed in the table below. These lines must have the type of pressure rated pipe to be installed shown on the plan and profile sheets. Any request for a variance from the required pressure rated piping at crossings must include a variance approval from 30 TAC Chapter 290.

[ ] There will be no water line crossings.
[ ] There will be no water lines within 9 feet of proposed sewer lines.

Table 5 - Water Line Crossings

Line	*Station or Closest Point*	*Crossing or Parallel*	*Horizontal Separation Distance*	*Vertical Separation Distance*
FM-A	1+55.09	Crossing	N/A	2.0 ft

27. Vented Manholes:

[X] **No part** of this sewer line is within the 100-year floodplain and vented manholes are not required by 30 TAC Chapter 217.
[ ] **A portion** of this sewer line is within the 100-year floodplain and vented manholes will be provided at less than 1500 foot intervals. These water-tight manholes are listed in the table below and labeled on the appropriate profile sheets.
[ ] **A portion** of this sewer line is within the 100-year floodplain and an alternative means of venting shall be provided at less than 1500 feet intervals. A description of the alternative means is described on the following page.
[ ] **A portion** of this sewer line is within the 100-year floodplain; however, there is no interval longer than 1500 feet located within. No vented manholes will be used.

Table 6 - Vented Manholes

Line	*Manhole*	*Station*	*Sheet*
N/A	N/A	N/A	N/A

Line	*Manhole*	*Station*	*Sheet*
N/A	N/A	N/A	N/A

28. Drop manholes:

☐ There are no drop manholes associated with this project.
☒ Sewer lines which enter new or existing manholes or "manhole structures" higher than 24 inches above the manhole invert are listed in the table below and labeled on the appropriate profile sheets. These lines meet the requirements of 30 TAC §217.55(l)(2)(H).

Table 7 - Drop Manholes

Line	*Manhole*	*Station*	*Sheet*
FM-A	4'	1+00.00	44

29. Sewer line stub-outs (For proposed extensions):

☐ The placement and markings of all sewer line stub-outs are shown and labeled.
☒ No sewer line stub-outs are to be installed during the construction of this sewage collection system.

30. Lateral stub-outs (For proposed private service connections):

☐ The placement and markings of all lateral stub-outs are shown and labeled.
☒ No lateral stub-outs are to be installed during the construction of this sewage collection system.

31. Minimum flow velocity (From Appendix A)

☒ Assuming pipes are flowing full; all slopes are designed to produce flows equal to or greater than 2.0 feet per second for this system/line.

32. Maximum flow velocity/slopes (From Appendix A)

☒ Assuming pipes are flowing full, all slopes are designed to produce maximum flows of less than or equal to 10 feet per second for this system/line.
☐ **Attachment D – Calculations for Slopes for Flows Greater Than 10.0 Feet per Second.** Assuming pipes are flowing full, some slopes produce flows which are greater than 10 feet per second. These locations are listed in the table below. Calculations are attached.

Table 8 - Flows Greater Than 10 Feet per Second

Line	*Profile Sheet*	*Station to Station*	*FPS*	*% Slope*	*Erosion/Shock Protection*
N/A	N/A	N/A	N/A	N/A	N/A

33. Assuming pipes are flowing full, where flows are ≥ 10 feet per second, the provisions noted below have been made to protect against pipe displacement by erosion and/or shock under 30 TAC §217.53(l)(2)(B).

☐ Concrete encasement shown on appropriate Plan and Profile sheets for the locations listed in the table above.
☐ Steel-reinforced, anchored concrete baffles/retards placed every 50 feet shown on appropriate Plan and Profile sheets for the locations listed in the table above.
☒ N/A

Administrative Information

34. ☒ The final plans and technical specifications are submitted for TCEQ review. Each sheet of the construction plans and specifications are dated, signed, and sealed by the Texas Licensed Professional Engineer responsible for the design on each sheet.

35. ☒ Standard details are shown on the detail sheets, which are dated, signed, and sealed by the Texas Licensed Professional Engineer, as listed in the table below:

Table 9 - Standard Details

Standard Details	*Shown on Sheet*
Lateral stub-out marking **[Required]**	N/A
Manhole, showing inverts comply with 30 TAC §217.55(l)(2) **[Required]**	SECTION 5, ATTACHMENT F
Alternate method of joining lateral to existing SCS line for potential future connections **[Required]**	N/A
Typical trench cross-sections **[Required]**	SECTION 5, ATTACHMENT F
Bolted manholes **[Required]**	N/A
Sewer Service lateral standard details **[Required]**	SECTION 5, ATTACHMENT F
Clean-out at end of line **[Required, if used]**	N/A
Baffles or concrete encasement for shock/erosion protection **[Required, if flow velocity of any section of pipe >10 fps]**	N/A
Detail showing Wastewater Line/Water Line Crossing **[Required, if crossings are proposed]**	SECTION 5, ATTACHMENT F
Mandrel detail or specifications showing compliance with 30 TAC §217.57(b) and (c) **[Required, if Flexible Pipe is used]**	N/A

Standard Details	*Shown on Sheet*
Drop manholes **[Required, if a pipe entering a manhole is more than 24 inches above manhole invert]**	SECTION 5, ATTACHMENT F

36. [X] All organized sewage collection system general construction notes (TCEQ-0596) are included on the construction plans for this sewage collection system.

37. [X] All proposed sewer lines will be sufficiently surveyed/staked to allow an assessment prior to TCEQ executive director approval. If the alignments of the proposed sewer lines are not walkable on that date, the application will be deemed incomplete and returned.

    [ ] Survey staking was completed on this date: _____

38. [X] Submit one (1) original and one (1) copy of the application, plus additional copies as needed for each affected incorporated city, groundwater conservation district, and county in which the project will be located. The TCEQ will distribute the additional copies to these jurisdictions. The copies must be submitted to the appropriate regional office.

39. [X] Any modification of this SCS application will require TCEQ approval, prior to construction, and may require submission of a revised application, with appropriate fees.

Signature

To the best of my knowledge, the responses to this form accurately reflect all information requested concerning the proposed regulated activities and methods to protect the Edwards Aquifer. This **Organized Sewage Collection System Application** is hereby submitted for TCEQ review and executive director approval. The system was designed in accordance with the requirements of 30 TAC §213.5(c) and 30 TAC §217 and prepared by:

Print Name of Licensed Professional Engineer: Nicholas C. Brown, P.E.

Date: 05/15/2025

Place engineer's seal here:



Signature of Licensed Professional Engineer:

Appendix A-Flow Velocity Table

Flow Velocity (Flowing Full) All gravity sewer lines on the Edwards Aquifer Recharge Zone shall be designed and constructed with hydraulic slopes sufficient to give a velocity when flowing full of not less than 2.0 feet per second, and not greater than 10 feet per second. The grades shown in the following table are based on Manning's formula and an n factor of 0.013 and shall be the minimum and maximum acceptable slopes unless provisions are made otherwise.

Table 10 - Slope Velocity

Pipe Diameter(Inches)	*% Slope required for minimum flow velocity of 2.0 fps*	*% Slope which produces flow velocity of 10.0 fps*
6	0.50	12.35
8	0.33	8.40
10	0.25	6.23
12	0.20	4.88
15	0.15	3.62
18	0.11	2.83
21	0.09	2.30
24	0.08	1.93
27	0.06	1.65
30	0.055	1.43
33	0.05	1.26
36	0.045	1.12
39	0.04	1.01
>39	*	*

**For lines larger than 39 inches in diameter, the slope may be determined by Manning's formula (as shown below) to maintain a minimum velocity greater than 2.0 feet per second when flowing full and a maximum velocity less than 10 feet per second when flowing full.*

$$v = \frac{1.49}{n} \times R_h^{0.67} \times \sqrt{S}$$

Figure 1 - Manning's Formula

Where:

v = velocity (ft/sec)
n = Manning's roughness coefficient (0.013)
Rh = hydraulic radius (ft)
S = slope (ft/ft)

SCS ENGINEERING DESIGN REPORT

This Engineering Design Report has been prepared to comply with the Texas Commission on Environmental Quality Design Criteria for Domestic Wastewater Systems, 30 TAC Chapter 217, including 217.10 of Subchapter A, §§217.51 – 217.70 of Subchapter C, and Subchapter D as applicable.

Project Description

Introduction

2525 CR 172 Industrial is an undeveloped 69.56 acre property located south of the McNeil Rd and County Road 172 intersection, within the Round Rock City Limits. The proposed 2525 CR 172 Industrial project includes the construction of one (1) story industrial building and miscellaneous smaller buildings with associated roadway, water, wastewater, and drainage improvements to support the project. This project proposes 40.28 acres (57.90%) of impervious cover.

This project is located within the Lake Creek Watershed. A portion of this site is located in the Federal Emergency Management Agency's 100-year floodplain according to FIRM 48491C0630F. The site is located within the Edwards Aquifer Recharge Zone according to the TCEQ Edward's Aquifer Maps. A Critical Environmental Feature (CEF) is located on the property, however, no wastewater or site improvements are proposed within the CEF or associated setback. The site consists of 69.56 acres of undeveloped land.

On-site infrastructure is comprised of water, electric, wastewater, and storm sewer lines. The wastewater service outlined in this report will consist of an 8" line that will convey wastewater to one lift station and eventually will travel via a 4" force main to a proposed public manhole. It will then travel via an 8" public gravity wastewater line through to an existing off-site manhole that leads to an off-site line. The offsite line will gravity flow and be deposited at the Brushy Creek Regional Wastewater Treatment Plant to be treated. A Development Agreement between Amazon.com Services, LLC and the City of Round Rock recognizes the proposed flow from 2525 CR 172 Industrial development and that the city will accept to treat it through the Brushy Creek Regional Wastewater Treatment Plant. All lines will consist of single service connections to all structures on-site that are proposed per this development. All proposed manholes shall be watertight, with watertight rings and covers. All proposed wastewater lines will be installed within the Edwards Aquifer Recharge Zone (EARZ).

Pipe Design

Flow Design Basis

Service for the build-out of the 69.56 ac one (1) story industrial building, located at 2525 CR 172, Round Rock, TX 78681, will be served by this wastewater system. The City of Round Rock Utility Criteria Manual (UCM) was used to determine the parameters for the design of the wastewater line system. Calculations for this wastewater line system will be shown at the end of this report.

Gravity Pipe and Joint Materials

The proposed pipe to be used for the 8" wastewater line will be ASTM D3034 SDR-26 PVC pipe (cell class 12454). The joints for this pipe shall meet the requirements of ASTM

D3212. The pipe joints shall have an integral bell and rubber gasket seal with the locked-in type gasket.

Separation Distances for Water and Wastewater

A 14.5-foot minimum horizontal separation is maintained between all proposed wastewater infrastructure and proposed water lines. There are no water line crossings that need to meet the nine-foot minimum vertical separation.

Service Connections

Service connections have been included for each proposed structure on-site.

Boring and Tunneling of Crossings

No boring or tunneling of crossings are proposed for this project.

Corrosion Potential

PVC pipe will be utilized for or all proposed wastewater lines. No deterioration of the proposed pipe or its associated components is anticipated in this application.

Odor Control

All flows contributing to the proposed wastewater lines are from industrial developments generating domestic sewage. There is a lift station proposed with development. Odor control measures are proposed for this project.

Active Geologic Faults

Per the Geologic Assessment, no active geologic faults were located within the area of the project.

Capacity Analysis

The capacity of each proposed wastewater segment is calculated below based on Manning's Equation. The calculation for each segment is based on the minimum proposed slope.

$$Q = \frac{1.49}{n} * A * R^{0.67} * S^{0.5}$$

Where:

Qfull = flow rate of fluid in pipe at full flow (ft^3/s) (cfs)

Q90%= flow rate of fluid in pipe at 90% full flow (ft^3/s) (cfs)

A = area of pipe (ft^2) = $\frac{\pi * d^2}{4}$

d = internal pipe diameter (ft) = Do – 2t

Do = outside diameter (in)

t = pipe wall thickness (in)

n = Manning's Roughness coefficient = 0.013

Rfull = hydraulic radius of pipe (full flow) = A/P = D/4 (ft)

R90%= hydraulic radius of pipe (90% full flow) = 0.9*A/P = 0.9*D/4 (ft)

P = wetted perimeter of pipe = π *D (ft)

S = slope of energy line

Pipes	Length	Slope	Slope	Diameter		Pipe	Manning's	P	A	Rfull	R90%	Qfull	Q90%	Vfull	V90%
	ft	*%*	*ft/ft*	*in*	*ft*	Material		*ft*	*sf*	*ft*	*ft*	*cfs*	*cfs*	*fps*	*fps*
FMA-1	131	3.00	0.030	8.00	0.67	PVC	0.013	2.09	0.35	0.17	0.15	2.09	1.88	5.98	5.38
FMA-2	50	1.00	0.010	8.00	0.67	PVC	0.013	2.09	0.35	0.17	0.15	1.20	1.08	3.45	3.11
FMA-3	98	-0.41	-0.004	4.00	0.33	HDPE	SEE SECTION 6 (LIFT STATION/FORCE MAIN)								
WWA-1	36	5.02	0.050	8.00	0.67	PVC	0.013	2.09	0.35	0.17	0.15	2.70	2.43	7.73	6.96
WWA-2	43	6.61	0.066	8.00	0.67	PVC	0.013	2.09	0.35	0.17	0.15	3.10	2.79	8.87	7.98
WWA-2	136	0.47	0.005	8.00	0.67	PVC	0.013	2.09	0.35	0.17	0.15	0.83	0.74	2.37	2.13

Pipe Type	Minimum Velocity *fps*	Maximum Velocity *fps*
4" HDPE	SEE SECTION 6 (LIFT STATION/FORCE MAIN)	
8" PVC	2.37	8.87
ALL	**2.37**	**8.87**

The proposed wastewater line installed at the slope specified provides capacity in excess of the calculated peak wet weather design flows at full flow and 90% full flow conditions.

Structural Analysis

Flexible pipe is proposed on this project. Structural calculations are provided for the flexible pipe to be installed. The proposed collection system piping is designed to have a minimum structural life of 50 years. As previously mentioned, all proposed PVC pipe shall be cell class 12454 with a tensile strength of 7,000 psi.

Live Load Calculations – no significant live loads are anticipated on any segment of this project.

Buckling Pressure - the following equations utilized for the calculation of buckling pressure are taken from the *Handbook of PVC Pipe: Design and Construction* (Uni-Bell PVC Pipe Association, 2001).

$$Pcr = \frac{2 * E}{(1 - v^2) * (DR - 1)^3}$$ *(Equation 7.14)*

$$Pb = 1.15 * \sqrt{Pcr * E'}$$ *(Equation 7.18)*

H = (Pb*144)/w *(Equation 6.7)*

Where:

Pcr = critical buckling pressure (psi)

E = modulus of elasticity (psi) = 400,000 psi for PVC

v = Poisson's Ratio = 0.38 for PVC

DR = dimension ratio

Pb = buckling pressure in soil (psi)

E' = modulus of soil reaction (psi) = 2,000 psi for crushed rock compacted to greater than 95% relative density

H = maximum allowable cover height of soil (ft)

w = weight of soil (lbs/ft^3) = 120 lbs/ft^3

8" ASTM D3034 SDR-26

$$Pcr = \frac{2*400{,}000}{(1-0.38^2)*(26-1)^3}$$

Pcr = 59.84 psi

$$Pb = 1.15 * \sqrt{59.84 * 2{,}000}$$

Pb = 397.84 psi

H = (397.84*144) / 120

H = 477.41 ft height of soil to cause pipe buckling

Prism Load Calculations - the following equations utilized for the calculation of prism loads are taken from the *Handbook of PVC Pipe: Design and Construction* (Uni-Bell PVC Pipe Association, 2001).

P = H*w *(Equation 6.7)*

Where:

P = prism load pressure due to soil weight (lbs/ft^2)

H = depth of pipe (ft)

w = soil density (lbs/ft^3) = 120 lbs/ft^3

8" ASTM D3034 SDR-26

P = 20 * 120

P = 2,400 lbs/ft^2 or 16.67 psi

Long Term Deflection Calculations - the following equations utilized for the calculation of long term deflection are taken from the *Handbook of PVC Pipe: Design and Construction* (Uni-Bell PVC Pipe Association, 2001).

$$\Delta Y/D = \frac{DL*K*P+K*W_1}{[2E/(3(DR-1)^3)]+0.061*E'} * 100 \qquad \textit{(Equation 7.10)}$$

Where:

ΔY/D = long term deflection (%)

DL = Deflection Lag Factor = 1.0 for prism load calculation

K = bedding constant = 0.096 for 90°

P = prism load pressure due to soil weight (lbs/ft^2)

W_1 = live load (psi) = 0 psi

E = modulus of elasticity (psi) = 400,000 psi for PVC

DR = dimension ratio

E' = modulus of soil reaction (psi) = 2,000 psi for crushed rock bedding compacted to greater than 95% relative density

Note: Leonhardt's Zeta factor is assumed to equal 1, and thus is not required in the calculation. This is a conservative assumption that results in a more conservatively calculated value for long term deflection.

8" ASTM D3034 SDR-26

$$\Delta Y/D = \frac{1.0*0.096*16.67 + 0.096*0}{[2(400{,}000)/(3(26-1)^3)] + 0.061*2{,}000} * 100$$

ΔY/D = 1.15%

Wall Crushing Calculations - the following equations utilized for the calculation of wall crushing are taken from the *Handbook of PVC Pipe: Design and Construction* (Uni-Bell PVC Pipe Association, 2001).

$$Py = \frac{\Theta c * 2 * A}{D} \qquad \textit{(Equation 7.20)}$$

$$H = Py / w \qquad \textit{(Equation 6.7)}$$

Where:

Py = pressure due to soil weight (psi)

Θc = compressive stress (psi) = 4,000 psi for PVC pipe

A= surface area of the pipe wall (in^2/in)

D = mean pipe diameter (in) = Do – t

t = pipe wall thickness (in)

H = maximum allowable height of cover (ft)

w = soil density (lbs/ft^3) = 120 lbs/ft^3

8" ASTM D3034 SDR-26

Do = 8.4– 0.323 = 8.077 in, A =3.88 in^2/ft (0.323 in * 12 in/ft)

$$Py = \frac{4{,}000*2*(3.88/12)}{8.077}$$

Py = 320.25 psi

H = (320.25*144) / 120

H = 384.30 ft height of soil to cause wall crushing

Strain Calculations - the following equations utilized for the calculation of strain are taken from the *Handbook of PVC Pipe: Design and Construction* (Uni-Bell PVC Pipe Association, 2001).

$$\varepsilon h = \frac{P*D}{2*t*E} \qquad \textit{(Equation 7.22)}$$

$$\varepsilon f = \frac{t}{D} * \frac{[3*\Delta Y/D]}{[1-2*\Delta Y/D]} \qquad \textit{(Equation 7.24)}$$

$$\varepsilon = \varepsilon h + \varepsilon f \qquad \textit{(Equation 7.25)}$$

Where:

- εh = maximum strain in the pipe wall due to hoop stress (in/in)
- P = prism load pressure due to soil weight (psi)
- D = mean pipe diameter (in) = Do – t
- t = pipe wall thickness (in)
- E = modulus of elasticity (psi) = 400,000 psi for PVC
- εf = maximum strain in the pipe due to ring deflection or flexure (in/in)
- ΔY/D = long term deflection
- ε = maximum combined strain in pipe wall (in/in)

8" ASTM D3034 SDR-26

$$\varepsilon h = \frac{16.67 * 8.077}{2 * 0.323 * 400{,}000}$$

εh = 0.00052 in/in

$$\varepsilon f = \frac{0.323}{8.077} * \frac{[3*0.0115]}{[1-2*0.0115]}$$

εf = 0.0014 in/in

ε = 0.00035 + 0.0014

ε = 0.00175 in/in

Per the *Handbook of PVC Pipe: Design and Construction* (Uni-Bell PVC Pipe Association, 2001), deflection test samples have experienced a pipe wall strain of up to 0.025 in/in and have not "showed any failures or cracks". The calculated strains for this project are significantly below this level, so no failure due to strain is anticipated.

Pipe Stiffness Calculation - the following equations utilized for the calculation of pipe stiffness are taken from the *Handbook of PVC Pipe: Design and Construction* (Uni-Bell PVC Pipe Association, 2001).

$$Ps = 4.47 * \frac{E}{(DR-1)^3} \qquad \textit{(Equation 7.3)}$$

Where:

Ps = pipe stiffness (psi)

DR = Dimensional Ration = Do / t

Do = Outside diameter (in)

t = pipe wall thickness (in)

E = modulus of elasticity (psi) = 400,000 psi for PVC

8" ASTM D3034 SDR-26

DR = 26

$$Ps = 4.47 * \frac{400{,}000}{(26-1)^3}$$

Ps = 115 psi

Criteria for Laying Pipe

Pipe Embedment

Bedding and initial backfill material selection and installation will be carried out in accordance with applicable governing procedures contained within the *City of Round Rock Standard Specifications for Underground Pipe Utilities, TCEQ Chapter 217.54(a),* and in accordance with the City of Round Rock Details WW-18 and WW-20. Bedding material shall be in accordance with City of Round Rock Standard Specification Item 510.

Compaction

Trench compaction will be carried out in accordance with the *City of Round Rock Standard Specifications for Underground Pipe Utilities* and *TCEQ Chapter 217.54(b)*. Proper placement of the backfill and compaction per City of Round Rock requirements will not negatively impact the structural integrity of the pipe.

Envelope Size

Envelope size will be in accordance with *City of Round Rock Standard Specifications for Underground Pipe Utilities* and *TCEQ Chapter 217.54(c).* Per the City of Round Rock Details WW-18 and WW-20, a minimum of 6-inch and maximum of 12-inch space shall be allowed between the outside diameter of the pipe and the trench wall and floor. In addition, a minimum of 6-inch and maximum of 12-inch space shall be allowed between the outside diameter of the pipe bell and the trench wall. The embedment and initial backfill must be installed to a minimum depth of 12 inches above the crown of the pipe.

Trench Width

Trench width will be in accordance with the City of Round Rock Details WW-18 and WW-20 and *TCEQ Chapter 217.54(d).* Per the City of Round Rock Details WW-18, and WW-20, a minimum

of 6-inch and maximum of 12-inch space shall be allowed between the outside diameter of the pipe and the trench wall and floor. In addition, a minimum of 6-inch and maximum of 12-inch space shall be allowed between the outside diameter of the pipe bell and the trench wall. These limits shall be maintained to protect the structural integrity of the pipe and will be sufficient for the placement of materials and use of compaction equipment in the pipe zone.

Manholes and Related Structures

Manhole and Appurtenance Placement

Manholes are located at all points of change in alignment or grade and at the intersection of all pipes for this project.

Manhole Stub Outs

No manholes are being placed at the end of a line that may be extended in the future, so no stub outs are included on this project.

Cleanouts

No dead-end lines are included in this project, so no cleanouts are proposed.

Manhole Material

Monolithic or precast manholes are acceptable for the contractor to utilize and are included in the City of Round Rock Detail WW-01. The use of bricks is not acceptable for the manhole or for cover adjustments.

Manhole Spacing

Manhole spacing meets the requirements of Table C.2 in *TCEQ Chapter 217.55*.

Manholes within Waterways

No manholes will be located within flow paths of waterways or in areas where water ponding is probable.

Manhole Covers, Inlets, and Bases

Per the City of Round Rock Details WW-07 and WW-08, the manhole covers shall have a 30-inch diameter clear opening. Manhole covers shall be constructed of cast iron and have no openings for water to infiltrate. No proposed manholes are located within the 100-year flood plain. All manholes shall be watertight, with watertight rings and covers.

As shown in the project details, the bottom of the manhole shall have a U-shaped channel to provide smooth continuation between the inlet and outlet pipes. For the proposed pipe, the manhole channel depth shall be equal to at least half the largest pipe diameter. Manholes with different pipe sizes shall have the tops of the pipes at the same elevation and flow channels in the invert sloped evenly from pipe to pipe.

Manhole Steps

No steps shall be allowed in any proposed manholes.

Manhole Connections

Manhole-pipe connections shall be watertight per City of Round Rock pipe to manhole connector in accordance with ASTM C923. See detail WW-10.

Manhole Venting

The proposed manholes are spaced at less than 1,500-foot intervals and none are located within the 100-year flood plain. Therefore, no vented manholes are proposed on this project.

Trenchless Pipe Installation

There will be no trenchless pipe installation.

Testing Requirements for Gravity Pipes

Infiltration/Exfiltration and Low Pressure Air Test

All testing will be in compliance with Texas Administrative Code title 30 Part 1 Chapter 217 Subchapter C 217.57 and 217.58.

Infiltration and exfiltration or low-pressure air testing in accordance with ASTM C828, C924 or F1417 are required for all proposed gravity wastewater pipe as specified in the project notes, Sheet 7. The requirements specified are in accordance with *TCEQ Chapter 217.57*.

Deflection Testing

For the proposed 8-inch wastewater line, deflection shall be measured with a rigid mandrel. The requirements specified are in accordance with *TCEQ Chapter 217.57*.

Owner Inspection

The Owner shall have an inspector on-site during construction of the project. A professional engineer registered in the state of Texas (Nicholas C. Brown, P.E.) shall be present to witness the testing of the wastewater lines.

Testing Requirements for Manholes

Manhole testing in accordance with *TCEQ Chapter 217.58* is specified in the project notes. Manholes will be tested after assembly and backfilling for leakage by either a hydrostatic test and/or a vacuum test.

For the vacuum test, all lift holes and exterior joints shall be plugged with an approved non-shrink grout and no grout shall be placed in horizontal joints before testing. All pipes entering the manhole shall be plugged, taking care to securely brace the plugs from being drawn into the manhole. Stub outs, manhole boots, and pipe plugs shall be secured to prevent movement while the vacuum is drawn. A minimum 60-inch/lb torque wrench shall be used to tighten the external clamps that secure the test cover to the top of the manhole. The test head shall be placed at the inside of the top of the cone section and the seal inflated in accordance with the manufacturer's recommendation. A vacuum of 10 inches of mercury shall be drawn and the vacuum pump shut off. With the valves closed, the time shall be measured for the vacuum to drop to 9 inches of mercury. The manhole shall pass if the time is greater than 2 minutes. If the manhole fails the initial test, necessary repairs shall be made with a non-shrink grout while the vacuum is still being drawn. If the manhole fails a second time, repairs should again be made and the manhole shall be tested by means of a hydrostatic test. If any manhole fails the hydrostatic test, after failing the vacuum test twice, the contractor should consider replacing that manhole. If the contractor chooses to attempt to repair that manhole, the manhole must be retested by means of the hydrostatic test until it passes.

Inspection will be provided during critical phases of construction by a qualified inspector under the direction of a P.E. (Nicholas C. Brown, P.E.). Critical phases of construction are deemed at a minimum to include testing of pipe and manholes for leakage and testing of flexible pipe for installed deflection.

TCEQ approval letters for plans and specifications review contain the requirement that once the project is completed, a P.E. registered in the state of Texas (Nicholas C. Brown, P.E.) much certify that the construction was performed substantially in accordance with the approved plans and specifications.

Notification and Inspection

TCEQ Chapter 213.5(f) requires that the applicant must provide written notification to the Round Rock regional office at least 48 hours prior to commencing construction on the regulated activity. If any sensitive feature is discovered during construction, then the work shall be suspended immediately and the Round Rock regional office shall be notified to then determine the appropriate course of action. All other notification and inspection requirements identified in *TCEQ Chapter 213.5(c)* shall be met.

KIMLEY-HORN AND ASSOCIATES, INC.





Nick Brown, P.E.
Senior Project Manager
(512) 418-1771
Nick.Brown@kimley-horn.com

JUSTIFICATION AND CALCULATIONS FOR DEVIATION IN STRAIGHT ALIGNMENT WITHOUT MANHOLES

(NOT APPLICABLE)

JUSTIFICATION FOR VARIANCE FROM MAXIMUM MANHOLE SPACING

(NOT APPLICABLE)

CALCULATIONS FOR SLOPES FOR FLOWS GREATER THAN 10.0 FEET PER SECOND

(NOT APPLICABLE)

SITE PLAN

REVISIONS/CORRECTIONS			
NO.	DESCRIPTION	CITY OF ROUND ROCK APPROVAL SIGNATURE	APPROVAL DATE

CIVIL SITE DEVELOPMENT IMPROVEMENTS
FOR
2525 CR 172 INDUSTRIAL
2525 CR 172, ROUND ROCK, TX 78681
SDP24-00001

GENERAL PLAN NOTES:

1. ALL RESPONSIBILITY FOR THE ADEQUACY OF THESE PLANS REMAINS WITH THE REGISTERED PROFESSIONAL ENGINEER WHO PREPARED THEM. IN REVIEWING THESE PLANS THE CITY OF ROUND ROCK MUST RELY UPON THE ADEQUACY OF THE WORK OF THE DESIGN ENGINEER.
2. APPROVAL OF THESE PLANS BY THE CITY OF ROUND ROCK INDICATES COMPLIANCE WITH APPLICABLE CITY REGULATIONS ONLY. APPROVAL BY OTHER GOVERNMENTAL ENTITIES MAY BE REQUIRED PRIOR TO THE START OF CONSTRUCTION. THE APPLICANT IS RESPONSIBLE FOR DETERMINING WHAT ADDITIONAL APPROVALS MAY BE NECESSARY.
3. A PORTION OF THIS SITE IS LOCATED WITHIN THE 100-YEAR FLOODPLAIN. FIRM PANEL NO. 48491C0630F, WILLIAMSON COUNTY, TEXAS AND INCORPORATED AREAS (EFFECTIVE DATE DECEMBER 20, 2019).
4. WATER AND WASTEWATER SERVICE WILL BE PROVIDED BY THE CITY OF ROUND ROCK, CONDITIONED UPON ALL FEES AND CHARGES ARE PAID.
5. THERE ARE KNOWN CRITICAL ENVIRONMENTAL FEATURES ON THIS SITE.
6. NO STRUCTURES CAN BE BUILT WITHIN WATER & WASTEWATER EASEMENTS.
7. RELEASE OF THIS APPLICATION DOES NOT CONSTITUTE A VERIFICATION OF ALL DATA, INFORMATION AND CALCULATIONS SUPPLIED BY THE APPLICANT. THE ENGINEER OF RECORD IS SOLELY RESPONSIBLE FOR THE COMPLETENESS, ACCURACY AND ADEQUACY OF HIS/HER SUBMITTAL, WHETHER OR NOT THE APPLICATION IS REVIEWED FOR CODE COMPLIANCE BY CITY ENGINEERS.
8. AS PART OF THIS SITE PLAN, THE STORM WATER POLLUTION PREVENTION PLAN (SWPPP) IS REQUIRED TO BE ON SITE AT ALL TIMES.
9. THIS SITE IS LOCATED IN THE EDWARDS AQUIFER RECHARGE ZONE. WATER QUALITY MEASURES ARE PROVIDED.
10. THIS SITE PROPOSES ON SITE DETENTION TO THE 100 YEAR STORM EVENT.

ZONING: PUD 153; O-2024-008

SUBDIVISION CASE NO.: FP24-000001

PREVIOUS RELATED SITE DEVELOPMENT CASE NO.: N/A

WATERSHED: LAKE CREEK

PRESSURE ZONE: ZONE 2; ELEV. 971

SUBMITTAL DATE: 03/26/2025

TCEQ SUBMITTAS:
WPAP: CASE NUMBER 11004138; APPROVED DECEMBER 20, 2024
SCS: CASE NUMBER 11004052; APPROVED AUGUST 16, 2024

IMPERVIOUS COVER		
EXISTING	0	SF
BUILDING FOOTPRINT	223,285	SF
PARKING, PRIVATE SIDEWALK & ROAD, CURB & GUTTER, ETC.	1,201,805	SF
PUBLIC SIDEWALKS	0	SF
TOTAL	1,425,090	SF
DISTURBED AREA		
TOTAL DISTURBED AREA (LOC)	59.2944	AC

BM #51471 MAG NAIL SET "GCP 2"
SET AT THE NORTHEAST CORNER OF THE INTERSECTION OF STATE HIGHWAY 45 AND COUNTY ROAD 172, ±5.5' FROM "YIELD" SIGN.
N: 10147640.83
E: 3127942.69
ELEV.= 841.70'

BM #51473 MAG NAIL SET "GCP 3"
SET IN THE NORTH RIGHT-OF-WAY LINE OF HESTERS CROSSING ROAD, ±560' FROM THE INTERSECTION OF HESTERS CROSSING ROAD AND COUNTY ROAD 172, ±100 FROM CONCRETE SIGN "ENCOMPASS HEALTH".
N: 10149343.04
E: 3128315.81
ELEV.= 812.19'

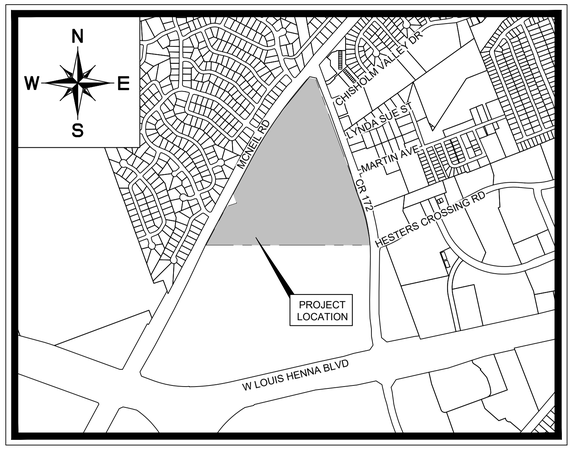

VICINITY MAP
SCALE: 1" = 1,000'

COA GRID: L40, L41
MAPSCO: 406N, 406P, 406S, 406T

MARCH 2025

LEGAL DESCRIPTION
A 149.32 ACRE TRACT OF LAND SITUATED IN THE JACOB M. HARRELL SURVEY, ABSTRACT 284, WILLIAMSON COUNTY, TEXAS; AND BEING A PORTION OF A CALLED 184.435 ACRES TRACT OF LAND DESCRIBED TO AMAZON.COM SERVICES LLC, AS SHOWN ON INSTRUMENT RECORDED IN DOCUMENT NO. 2021166943 OF THE OFFICIAL PUBLIC RECORDS OF WILLIAMSON COUNTY, TEXAS (O.P.R.W.C.T)

LISTS OF CONTACTS:

ARCHITECT
SARAH VOSS, PROJECT MANAGER
PDMS DESIGN GROUP
2225 E. RANDOL MILL RD., SUITE 300
ARLINGTON, TEXAS 76011
(817) 701-4828

LANDSCAPE ARCHITECT
MORGAN DEPINE
KIMLEY-HORN
5301 SOUTHWEST PKWY, BLDG 2, STE 200
AUSTIN, TEXAS 78735
(512) 646-2237

OWNER/DEVELOPER
DAVID BARNETT
AMAZON TOWER 1
101 PLATFORM WAY N
NASHVILLE, TN 37203
(901) 438-4156

SURVEYOR
MICHAEL A. MONTGOMERY II, RPLS
KIMLEY-HORN
10814 JOLLYVILLE ROAD, BLDG, STE 200
AUSTIN, TEXAS 78759
(512) 418-1771

WATER & SANITARY SEWER
CITY OF ROUND ROCK
3400 SUNRISE ROAD
ROUND ROCK, TEXAS 78665
(512) 218-5555

FIRE
WILLIAMSON COUNTY ESD #9
402 A WEST PALM VALLEY BLVD
SUITE 360
ROUND ROCK, TX 78664
(512) 479-9267

GAS
ATMOS ENERGY
MARTIN PEREZ
3110 N INTERSTATE HWY 35
ROUND ROCK, TX 78681
(512) 415-8426

ELECTRIC
ONCOR ELECTRIC DELIVERY
JUSTIN JACKS
350 TEXAS AVENUE
ROUND ROCK, TX 78664
(512) 244-5616

STORM SEWER
CITY OF ROUND ROCK
3400 SUNRISE ROAD
ROUND ROCK, TEXAS 78665
(512) 218-5555

DEVELOPMENT SERVICES
CITY OF ROUND ROCK
301 W. BAGDAD AVE #210
ROUND ROCK, TX 78664
(512) 218-5428

PREPARED BY:
Kimley»Horn
10814 JOLLYVILLE ROAD, AVALLON IV, SUITE 200
AUSTIN, TEXAS 78759
CERTIFICATE OF REGISTRATION #928
Tel. No. (512) 418-1771
Fax No. (512) 418-1791

ALL RESPONSIBILITY FOR THE ADEQUACY OF THESE PLANS REMAINS WITH THE ENGINEER WHO PREPARED THEM. IN ACCEPTING THESE PLANS, THE CITY OF ROUND ROCK MUST RELY UPON THE ADEQUACY OF THE WORK OF THE DESIGN ENGINEER.

ACCEPTED FOR CONSTRUCTION:

Digitally signed by Jacob Bradley
DN: CN=Jacob Bradley, E=jbradley@roundrocktexas.gov, O=City of Round Rock, OU=Planning and Development Services
Location: 301 W Bagdad Ave, Round Rock, Texas 78664
Reason: I am approving this document
Contact Info: 512-218-5536
Date: 2025.04.15 15:52:24-05'00'

Jacob Bradley
CITY OF ROUND ROCK, TEXAS — DATE
PLANNING AND DEVELOPMENT SERVICES DEPARTMENT

STATE OF TEXAS
COUNTY OF WILLIAMSON

I, NICHOLAS C. BROWN, DO HEREBY CERTIFY THAT THE PUBLIC WORKS AND DRAINAGE IMPROVEMENTS SHOWN HEREIN HAVE BEEN DESIGNED IN COMPLIANCE WITH THE SUBDIVISION AND BUILDING REGULATION ORDINANCES AND STORMWATER DRAINAGE POLICY ADOPTED BY THE CITY OF ROUND ROCK, TEXAS.

03/26/2025
NICHOLAS C. BROWN, P.E. — DATE
LICENSED PROFESSIONAL ENGINEER NO. 107175

CONTRACTOR FIELD SET
This plan set shall remain on the site or subdivision premises for the life of the project and shall be utilized for any and all improvements contained herein.

No.	REVISIONS	DATE	BY

2525 CR 172 INDUSTRIAL - ----

Kimley»Horn
© 2025 KIMLEY-HORN AND ASSOCIATES, INC.
10814 JOLLYVILLE ROAD, CAMPUS IV, SUITE 200, AUSTIN, TX 78759
PHONE: 512-418-1771 FAX: 512-418-1791
WWW.KIMLEY-HORN.COM
TEXAS REGISTERED ENGINEERING FIRM F-928

STATE OF TEXAS
NICHOLAS C. BROWN
107175
LICENSED PROFESSIONAL ENGINEER
03/26/2025

KHA PROJECT	069284918
DATE	MARCH 2025
SCALE:	AS SHOWN
DESIGNED BY:	MM
DRAWN BY:	MM
CHECKED BY:	NCB

COVER SHEET

2525 CR 172 INDUSTRIAL
CITY OF ROUND ROCK
WILLIAMSON COUNTY, TEXAS

SHEET NUMBER
1 OF 227

SDP24-00001

Plotted By: Nam, Joyce Date: April 17, 2025 04:19:40pm File Path: K:\AUS_Civil\069284910 — DAU3 Round Rock\Cad\PlanSheets-SDP\C-Cover Sheet.dwg
This document, together with the concepts and designs presented herein, as an instrument of service, is intended only for the specific purpose and client for which it was prepared. Reuse of and improper reliance on this document without written authorization and adaptation by Kimley-Horn and Associates, Inc. shall be without liability to Kimley-Horn and Associates, Inc.

SHEET INDEX

Sheet Number	Sheet Title
1	COVER SHEET
2	SHEET INDEX
3	FINAL PLAT (SHEET 1 OF 4)
4	FINAL PLAT (SHEET 2 OF 4)
5	FINAL PLAT (SHEET 3 OF 4)
6	FINAL PLAT (SHEET 4 OF 4)
7	GENERAL NOTES
8	KH GENERAL NOTES
9	EXISTING CONDITIONS AND DEMOLITION PLAN
10	TREE LIST 1 OF 2
11	TREE LIST 2 OF 2
12	OVERALL EROSION CONTROL PLAN
13	EROSION CONTROL PLAN A
14	EROSION CONTROL PLAN B
15	EROSION CONTROL PLAN C
16	EROSION CONTROL PLAN D
17	EROSION CONTROL PLAN E
18	EROSION CONTROL PLAN F
19	EROSION CONTROL PLAN G
20	EROSION CONTROL PLAN H
21	OVERALL SITE PLAN
22	SITE PLAN A
23	SITE PLAN B
24	SITE PLAN C
25	SITE PLAN D
26	SITE PLAN E
27	SITE PLAN F
28	SITE PLAN G
29	SITE PLAN H
30	OVERALL FIRE PROTECTION PLAN
31	FIRE PROTECTION PLAN A
32	FIRE PROTECTION PLAN B
33	FIRE PROTECTION PLAN C
34	FIRE PROTECTION PLAN D
35	PAVING PLAN
36	OVERALL WATER PLAN
37	PUBLIC WATER PLAN AND PROFILE
38	PRIVATE WATER PLAN A
39	PRIVATE WATER PLAN B
40	PRIVATE WATER PLAN C
41	PRIVATE WATER PLAN D
42	PRIVATE WATER PLAN E
43	OVERALL WASTEWATER PLAN
44	PRIVATE WASTEWATER PLAN A
45	PRIVATE WASTEWATER PLAN B
46	LIFT STATION NOTES
47	LIFT STATION SITE PLAN
48	LIFT STATION PLAN AND SECTION
49	LIFT STATION DETAILS I
50	LIFT STATION DETAILS II
51	LIFT STATION DETAILS III
52	CONTROL PANEL DETAIL
53	LIFT STATION ELECTRICAL PLANS I
54	LIFT STATION ELECTRICAL PLANS II
55	LIFT STATION STRUCTURAL DETAIL
56	OVERALL STORM PLAN
57	PRIVATE STORM PLAN A
58	PRIVATE STORM PLAN B
59	PRIVATE STORM PLAN C
60	PRIVATE STORM PLAN D
61	PRIVATE STORM PLAN E
62	PRIVATE STORM PLAN F
63	PRIVATE STORM PLAN G
64	PRIVATE STORM PLAN H
65	PRIVATE STORM PLAN I
66	PRIVATE STORM PLAN J
67	PRIVATE STORM PLAN K
68	PRIVATE STORM PLAN L
69	PRIVATE STORM PLAN M
70	PRIVATE STORM PLAN N
71	OVERALL GRADING PLAN
72	GRADING PLAN A
73	GRADING PLAN B
74	GRADING PLAN C
75	GRADING PLAN D
76	GRADING PLAN E
77	GRADING PLAN F
78	GRADING PLAN G
79	GRADING PLAN H
80	DETENTION POND PLAN AND DETAILS
81	DETENTION POND DETAILS (SHEET 1 OF 2)
82	DETENTION POND DETAILS (SHEET 2 OF 2)
83	WATER QUALITY PLAN DP-FLO FILTER (SHEET 1 OF 3)
84	WATER QUALITY PLAN UP-FLO FILTER (SHEET 2 OF 3)
85	WATER QUALITY PLAN UP-FLO FILTER (SHEET 3 OF 3)
86	TCEQ CALCULATIONS
87	EXISTING DRAINAGE AREA MAP
88	DEVELOPED DRAINAGE AREA MAP
89	INLET DRAINAGE AREA MAP
90	DRAINAGE CALCULATIONS
91	EROSION CONTROL DETAILS
92	SITE PLAN DETAILS (SHEET 1 OF 4)
93	SITE PLAN DETAILS (SHEET 2 OF 4)
94	SITE PLAN DETAILS (SHEET 3 OF 4)
95	SITE PLAN DETAILS (SHEET 4 OF 4)
96	PAVING DETAILS
97	WATER DETAILS
98	WASTEWATER DETAILS
99	STORM DETAILS (SHEET 1 OF 2)
100	STORM DETAILS (SHEET 2 OF 2)
101	LANDSCAPE PLANS L-0.01
102	LANDSCAPE PLANS L-1.00
103	LANDSCAPE PLANS L-1.01
104	LANDSCAPE PLANS L-1.02
105	LANDSCAPE PLANS L-1.03
106	LANDSCAPE PLANS L-1.04
107	LANDSCAPE PLANS L-1.05
108	LANDSCAPE PLANS L-1.06
109	LANDSCAPE PLANS L-1.07
110	LANDSCAPE PLANS L-1.08
111	LANDSCAPE PLANS L-2.80
112	LANDSCAPE PLANS L-2.01
113	LANDSCAPE PLANS T-0.01
114	LANDSCAPE PLANS T-0.03
115	LANDSCAPE PLANS T-0.05
116	LANDSCAPE PLANS T-0.84
117	LANDSCAPE PLANS T-1.00
118	LANDSCAPE PLANS T-1.01
119	LANDSCAPE PLANS T-1.02
120	LANDSCAPE PLANS T-1.03
121	LANDSCAPE PLANS T-1.04
122	LANDSCAPE PLANS T-1.05
123	LANDSCAPE PLANS T-1.06
124	LANDSCAPE PLANS T-1.07
125	LANDSCAPE PLANS T-1.08
126	LANDSCAPE PLANS T-1.09
127	LANDSCAPE PLANS T-1.10
128	LANDSCAPE PLANS T-1.11
129	LANDSCAPE PLANS T-1.12
130	LANDSCAPE PLANS T-1.13
131	LANDSCAPE PLANS T-1.14
132	LANDSCAPE PLANS T-1.15
133	LANDSCAPE PLANS T-1.16
134	LANDSCAPE PLANS T-1.17
135	LANDSCAPE PLANS T-1.18
136	LANDSCAPE PLANS T-1.19
137	OVERALL PHOTOMETRIC PLAN
138	PHOTOMETRIC PLAN A
139	PHOTOMETRIC PLAN B
140	PHOTOMETRIC PLAN C
141	PHOTOMETRIC PLAN D
142	RETAINING WALL (1)
143	RETAINING WALL (2)
144	RETAINING WALL (3)
145	RETAINING WALL (4)
146	RETAINING WALL (5)
147	RETAINING WALL (6)
148	RETAINING WALL (7)
149	RETAINING WALL (8)
150	RETAINING WALL (9)
151	RETAINING WALL (10)
152	RETAINING WALL (11)
153	RETAINING WALL (12)
154	RETAINING WALL (13)
155	RETAINING WALL (14)
156	RETAINING WALL (15)
157	RETAINING WALL (16)
158	RETAINING WALL (17)
159	RETAINING WALL (18)
160	RETAINING WALL (19)
161	RETAINING WALL (20)
162	RETAINING WALL (21)
163	RETAINING WALL (22)
164	RETAINING WALL (23)
165	SIGNAGE AND STRIPING PLAN A
166	SIGNAGE AND STRIPING PLAN B
167	SIGNAGE AND STRIPING PLAN C
168	SIGNAGE AND STRIPING PLAN D
169	SIGNAGE AND STRIPING PLAN E
170	SIGNAGE AND STRIPING PLAN F
171	SIGNAGE AND STRIPING PLAN G
172	SIGNAGE AND STRIPING PLAN H
173	SIGNAGE AND STRIPING DETAILS 1
174	SIGNAGE AND STRIPING DETAILS 2
175	SIGNAGE AND STRIPING DETAILS 3
176	SIGNAGE AND STRIPING DETAILS 4
177	SIGNAGE AND STRIPING DETAILS 5
178	SIGNAGE AND STRIPING DETAILS 6
179	SIGNAGE AND STRIPING DETAILS 7
180	EV PLAN G1.0
181	EV PLAN G2.0
182	EV PLAN G3.0
183	EV PLAN G3.1
184	EV PLAN G3.2
185	EV PLAN G4.0
186	EV PLAN G4.1
187	EV PLAN G4.2
188	EV PLAN G4.3
189	EV PLAN G4.4
190	EV PLAN G5.0
191	EV PLAN G5.1
192	EV PLAN G5.2
193	EV PLAN G5.3
194	EV PLAN G6.0
195	EV PLAN E1.0
196	EV PLAN C1.1
197	EV PLAN C1.2
198	EV PLAN C1.3
199	EV PLAN C1.4
200	EV PLAN E1.5
201	EV PLAN C1.5
202	EV PLAN C2.0
203	EV PLAN C2.1
204	EV PLAN C2.2
205	EV PLAN C7.1
206	EV PLAN C8.0
207	EV PLAN C8.1
208	EV PLAN E1.0
209	EV PLAN E1.1
210	EV PLAN E1.2
211	EV PLAN E1.3
212	EV PLAN E1.4
213	EV PLAN E1.5
214	EV PLAN E1.6
215	EV PLAN E2.0
216	EV PLAN E3.0
217	EV PLAN E3.1
218	EV PLAN E3.2
219	EV PLAN E3.0
220	EV PLAN E4.1
221	EV PLAN E4.2
222	EV PLAN E5.0
223	EV PLAN E5.1
224	EV PLAN E5.2
225	EV PLAN E6.0
226	EV PLAN E6.1
227	EV PLAN E7.1

SHEETS REMOVED SINCE THEY ARE NOT APPLICABLE TO TCEQ REVIEW.

CONTRACTOR FIELD SET

This plan set shall remain on the site or subdivision premises for the life of the project and shall be utilized for any and all improvements contained herein.

Plotted By: Nan, Joyce Date: April 17, 2025 04:19:43pm File Path: K:\AUS_Civil\069284918 - DAU3 Round Rock\Cad\PlanSheets-SDP\C-Cover Sheet.dwg

This document, together with the concepts and designs presented herein, as an instrument of service, is intended only for the specific purpose and client for which it was prepared. Reuse of and improper reliance on this document without written authorization and adaptation by Kimley-Horn and Associates, Inc. shall be without liability to Kimley-Horn and Associates, Inc.

No.	REVISIONS	DATE	BY

Kimley»Horn

© 2025 KIMLEY-HORN AND ASSOCIATES, INC.
10814 JOLLYVILLE ROAD, CAMPUS IV, SUITE 200, AUSTIN, TX 78759
PHONE: 512-418-1771 FAX: 512-418-1791
WWW.KIMLEY-HORN.COM
TEXAS REGISTERED ENGINEERING FIRM F-928

NICHOLAS C. BROWN
107175
LICENSED
PROFESSIONAL ENGINEER
03/26/2025

KHA PROJECT	069284918
DATE	MARCH 2025
SCALE:	AS SHOWN
DESIGNED BY:	MM
DRAWN BY:	MM
CHECKED BY:	NCB

SHEET INDEX

2525 CR 172 INDUSTRIAL
CITY OF ROUND ROCK
WILLIAMSON COUNTY, TEXAS

SHEET NUMBER
2 OF 227

2525 CR 172 INDUSTRIAL - ----

SDP24-00001

Plotted By:Nan, Joyce Date: April 17, 2025 04:19:51pm File Path:K:\AUS_Civil\069284910 - DAU3 Round Rock\Cad\PlanSheets-SDP\C-Final Plat.dwg
This document, together with the concepts and designs presented herein, as an instrument of service, is intended only for the specific purpose and client for which it was prepared. Reuse of and improper reliance on this document without written authorization and adaptation by Kimley-Horn and Associates, Inc. shall be without liability to Kimley-Horn and Associates, Inc.

Doc # 2025025826

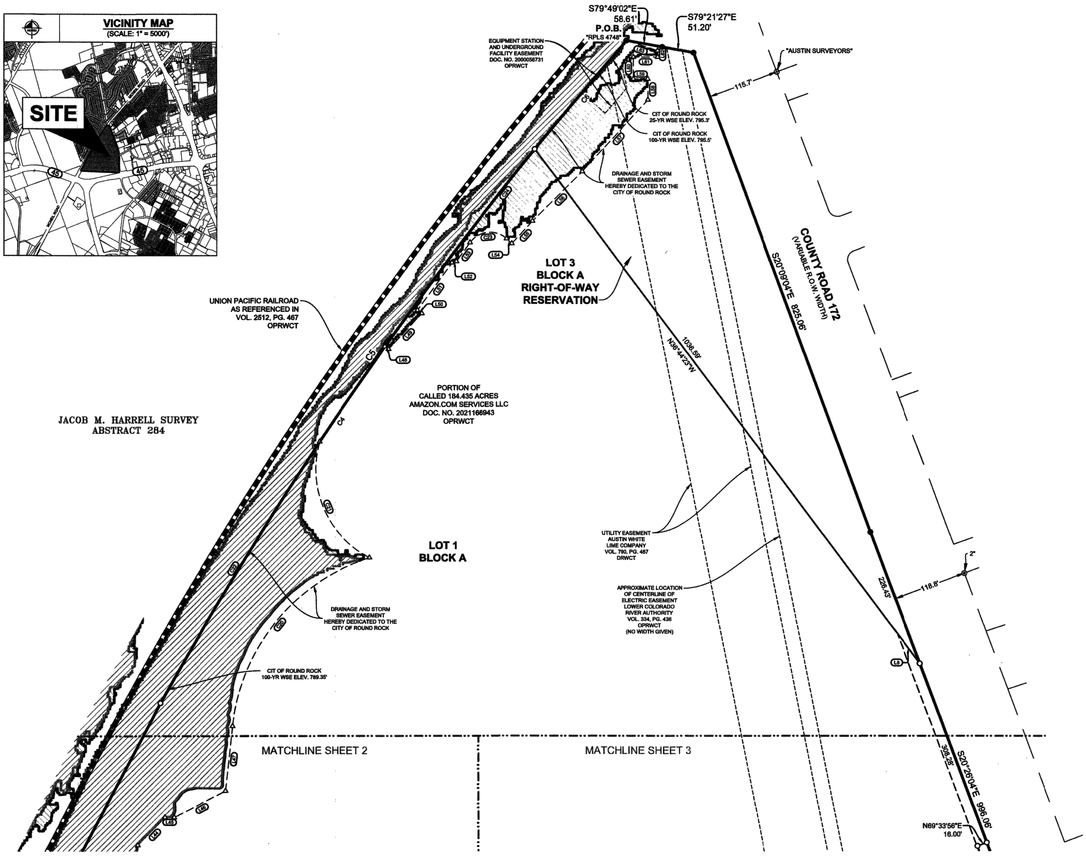

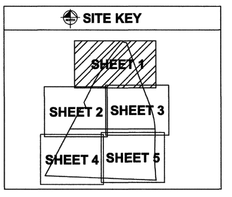

LEGEND

P.O.B.	= POINT OF BEGINNING
○	= 1/2" IRON ROD W/ "KHA" CAP SET
●	= 1/2" IRON ROD FOUND (CAP NOTED)
■	= TEXAS DEPARTMENT OF TRANSPORTATION TYPE II MONUMENT FOUND
⊕	= MAG NAIL FOUND
⊙	= IRON PIPE FOUND (SIZE NOTED)
OPRWCT	= OFFICIAL PUBLIC RECORDS OF WILLIAMSON COUNTY, TEXAS
DRWCT	= DEED RECORDS OF WILLIAMSON COUNTY, TEXAS

LINETYPE LEGEND

- BOUNDARY LINE
- ADJOINER LINE
- EASEMENT LINE
- EXISTING EASEMENT LINE
- ULTIMATE 4% CHANCE FLOODPLAIN LINE
- ULTIMATE 1% CHANCE FLOODPLAIN LINE
- MATCH LINE
- RAILROAD LINE

FLOOD ZONE LEGEND

- CITY OF ROUND ROCK 25 YEAR FLOODPLAIN
- CITY OF ROUND ROCK 100 YEAR FLOODPLAIN
- FEMA FLOOD ZONE AE

NORTH

GRAPHIC SCALE IN FEET
100 0 50 100 200
1" = 100' @ 18X24

BENCHMARKS

VERTICAL DATUM IS BASED ON THE NORTH AMERICAN. VERTICAL DATUM OF 1988 (NAVD '88), GEOID 18

BM #51471 MAG NAIL SET "GCP 2" SET AT THE NORTHEAST CORNER OF THE INTERSECTION OF STATE HIGHWAY 45 AND COUNTY ROAD 172, ±5.5' FROM "YIELD" SIGN.
N: 10147640.83
E: 3127942.60
ELEV.= 841.70'

BM #51473 MAG NAIL SET "GCP 3" SET IN THE NORTH RIGHT-OF-WAY LINE OF HESTERS CROSSING ROAD, ±500' FROM THE INTERSECTION OF HESTERS CROSSING ROAD AND COUNTY ROAD 172, ±100 FROM CONCRETE SIGN "ENCOMPASS HEALTH".
N: 10149343.04
E: 3128315.81
ELEV.= 812.19'

SUBDIVISION INFORMATION

OWNER: AMAZON.COM SERVICES LLC
SURVEYOR: KIMLEY-HORN & ASSOCIATES, INC.
ENGINEER: KIMLEY-HORN & ASSOCIATES, INC.
PATENT SURVEY: JACOB M. HARRELL SURVEY, ABSTRACT 284
SUBMITTAL DATE: 10/25/2024

DATE OF PLANNING AND DEVELOPMENT SERVICES REVIEW: OCTOBER 2, 2024

TOTAL SITE ACREAGE	149.32
TOTAL BLOCKS	1
TOTAL R.O.W. RESERVATION	1
TOTAL OPEN SPACE LOTS	0
TOTAL R.O.W. DEDICATION LOTS	2
TOTAL DEVELOPMENT LOTS	3
TOTAL ACREAGE OF R.O.W. DEDICATION LOTS	0.34
TOTAL ACREAGE OF R.O.W. RESERVATION	3.80
TOTAL ACREAGE OF DEVELOPMENT LOTS	145.28
TOTAL LOTS	5
TOTAL PROPOSED STREET LENGTH	0'

COPYRIGHT © 2025 KIMLEY-HORN AND ASSOCIATES, INC. ALL RIGHTS RESERVED

FINAL PLAT
HESTERS CROSSING INDUSTRIAL
BEING 149.32 ACRES OUT OF THE
JACOB M. HARRELL SURVEY, ABSTRACT 284
WILLIAMSON COUNTY, TEXAS

Kimley»Horn
10814 JOLLYVILLE ROAD, CAMPUS IV
SUITE 200, AUSTIN, TEXAS 78759
TEL. NO. (512) 418-1771
TBPELS FIRM # 10194624
WWW.KIMLEY-HORN.COM

SCALE	DRAWN BY	CHECKED BY	DATE	PROJECT NO.	SHEET NO.
1" = 100'	RPP	MMII	1/28/2025	168864169	1 OF 7

FP24-000001

Doc # 2025025826

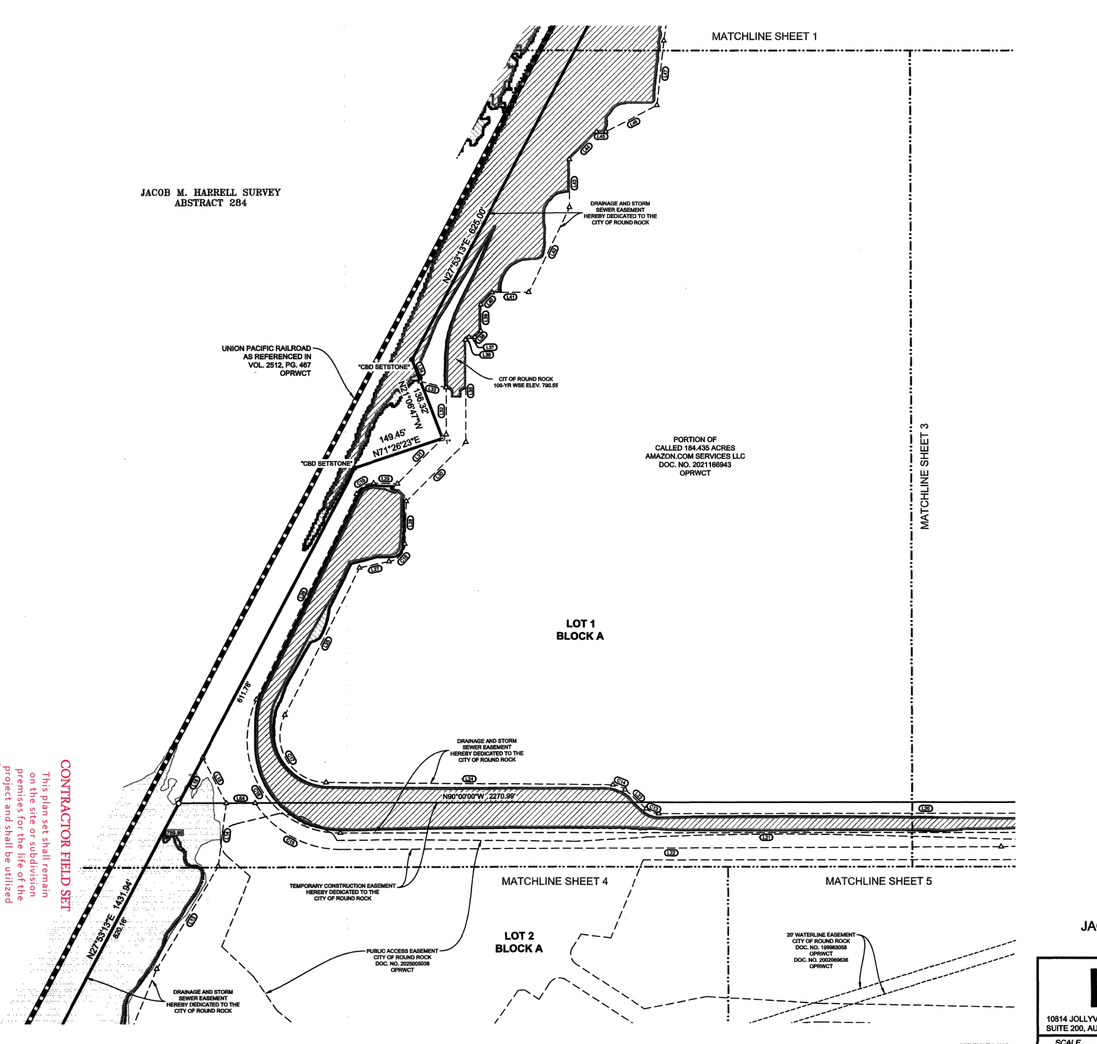

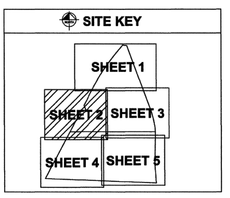

LEGEND

P.O.B.	= POINT OF BEGINNING
○	= 1/2" IRON ROD W/ "KHA" CAP SET
●	= 1/2" IRON ROD FOUND (CAP NOTED)
■	= TEXAS DEPARTMENT OF TRANSPORTATION TYPE II MONUMENT FOUND
⊕	= MAG NAIL FOUND
⊙	= IRON PIPE FOUND (SIZE NOTED)
OPRWCT	= OFFICIAL PUBLIC RECORDS OF WILLIAMSON COUNTY, TEXAS
DRWCT	= DEED RECORDS OF WILLIAMSON COUNTY, TEXAS

LINETYPE LEGEND

- BOUNDARY LINE
- ADJOINER LINE
- EASEMENT LINE
- EXISTING EASEMENT LINE
- ULTIMATE 4% CHANCE FLOODPLAIN LINE
- ULTIMATE 1% CHANCE FLOODPLAIN LINE
- MATCH LINE
- RAILROAD LINE

FLOOD ZONE LEGEND

- CITY OF ROUND ROCK 25 YEAR FLOODPLAIN
- CITY OF ROUND ROCK 100 YEAR FLOODPLAIN
- FEMA FLOOD ZONE AE

NORTH

GRAPHIC SCALE IN FEET
100 0 50 100 200
1" = 100' @ 18X24

CONTRACTOR FIELD SET
This plan set shall remain on the construction premises for the life of the project and shall be utilized for any and all improvements contained herein.

NOTES
1. PROPOSED FINAL PLAT SHOWN FOR REFERENCE.

FINAL PLAT
HESTERS CROSSING INDUSTRIAL
BEING 149.32 ACRES OUT OF THE
JACOB M. HARRELL SURVEY, ABSTRACT 284
WILLIAMSON COUNTY, TEXAS

Kimley»Horn
10814 JOLLYVILLE ROAD, CAMPUS IV
SUITE 200, AUSTIN, TEXAS 78759
TEL. NO. (512) 418-1771
TBPELS FIRM # 10194624
WWW.KIMLEY-HORN.COM

SCALE	DRAWN BY	CHECKED BY	DATE	PROJECT NO.	SHEET NO.
1" = 100'	RPP	MMII	1/28/2025	168864169	2 OF 7

FP24-000001

SDP24-00001

SHEET NUMBER 3 OF 227

2525 CR 172
INDUSTRIAL
CITY OF ROUND ROCK
WILLIAMSON COUNTY, TEXAS

FINAL PLAT
(SHEET 1 OF 4)

KHA PROJECT	069284918
DATE	MARCH 2025
SCALE:	AS SHOWN
DESIGNED BY:	MM
DRAWN BY:	MM
CHECKED BY:	NCB

02/26/2025

Kimley»Horn
© 2025 KIMLEY-HORN AND ASSOCIATES, INC.
10814 JOLLYVILLE ROAD, CAMPUS IV, SUITE 200, AUSTIN, TX 78759
PHONE: 512-418-1771 FAX: 512-418-1791
WWW.KIMLEY-HORN.COM
TEXAS REGISTERED ENGINEERING FIRM F-928

No.	REVISIONS	DATE	BY

Plotted By:Nan, Joyce Date: April 17, 2025 04:19:58pm File Path:K:\AUS_Civil\069284910 - DAU3 Round Rock\Cad\PlanSheets-SDP\C-Final Plat.dwg
This document, together with the concepts and designs presented herein, as an instrument of service, is intended only for the specific purpose and client for which it was prepared. Reuse of and improper reliance on this document without written authorization and adaptation by Kimley-Horn and Associates, Inc. shall be without liability to Kimley-Horn and Associates, Inc.

DOC#2025025824 Page 4 of 8

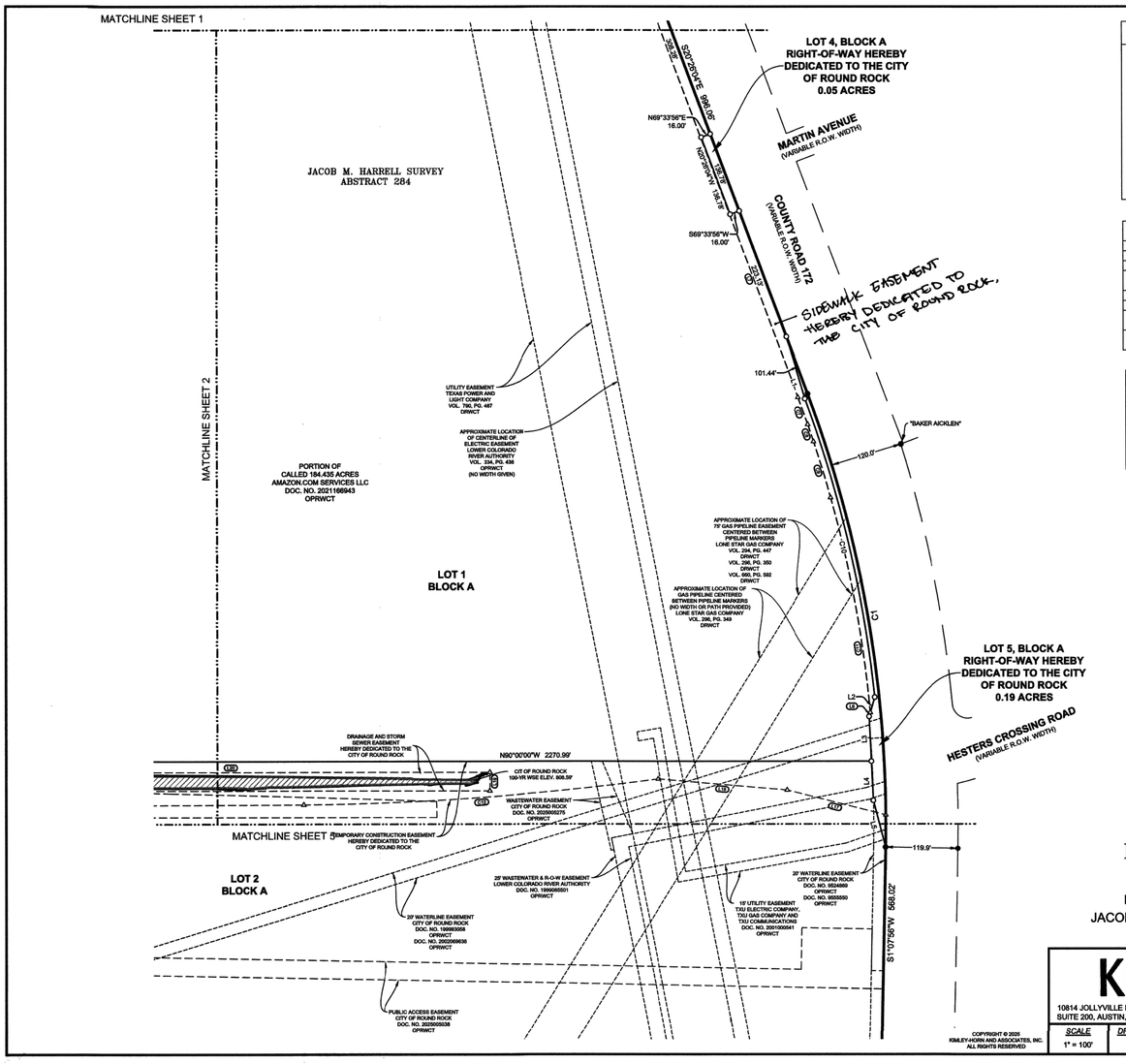

SITE KEY

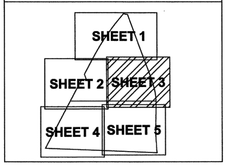

LEGEND

P.O.B.	= POINT OF BEGINNING
○	= 1/2" IRON ROD W/ "KHA" CAP SET
●	= 1/2" IRON ROD FOUND (CAP NOTED)
■	= TEXAS DEPARTMENT OF TRANSPORTATION TYPE II MONUMENT FOUND
●	= MAG NAIL FOUND
⊙	= IRON PIPE FOUND (SIZE NOTED)
OPRWCT	= OFFICIAL PUBLIC RECORDS OF WILLIAMSON COUNTY, TEXAS
DRWCT	= DEED RECORDS OF WILLIAMSON COUNTY, TEXAS

LINETYPE LEGEND

- BOUNDARY LINE
- ADJOINER LINE
- EASEMENT LINE
- EXISTING EASEMENT LINE
- ULTIMATE 4% CHANCE FLOODPLAIN LINE
- ULTIMATE 1% CHANCE FLOODPLAIN LINE
- MATCH LINE
- RAILROAD LINE

FLOOD ZONE LEGEND

- CITY OF ROUND ROCK 25 YEAR FLOODPLAIN
- CITY OF ROUND ROCK 100 YEAR FLOODPLAIN
- FEMA FLOOD ZONE AE

NORTH

GRAPHIC SCALE IN FEET
100 0 50 100 200
1" = 100' @ 18X24

FINAL PLAT

HESTERS CROSSING INDUSTRIAL

BEING 149.32 ACRES OUT OF THE
JACOB M. HARRELL SURVEY, ABSTRACT 284
WILLIAMSON COUNTY, TEXAS

Kimley»Horn
10814 JOLLYVILLE ROAD, CAMPUS IV
SUITE 200, AUSTIN, TEXAS 78759
TBPELS FIRM # 10194624
TEL. NO. (512) 418-1771
WWW.KIMLEY-HORN.COM

SCALE	DRAWN BY	CHECKED BY	DATE	PROJECT NO.	SHEET NO.
1" = 100'	RPP	MMII	1/28/2025	168864169	3 OF 7

COPYRIGHT © 2025
KIMLEY-HORN AND ASSOCIATES, INC.
ALL RIGHTS RESERVED

FP24-000001

DOC#2025025824 Page 5 of 8

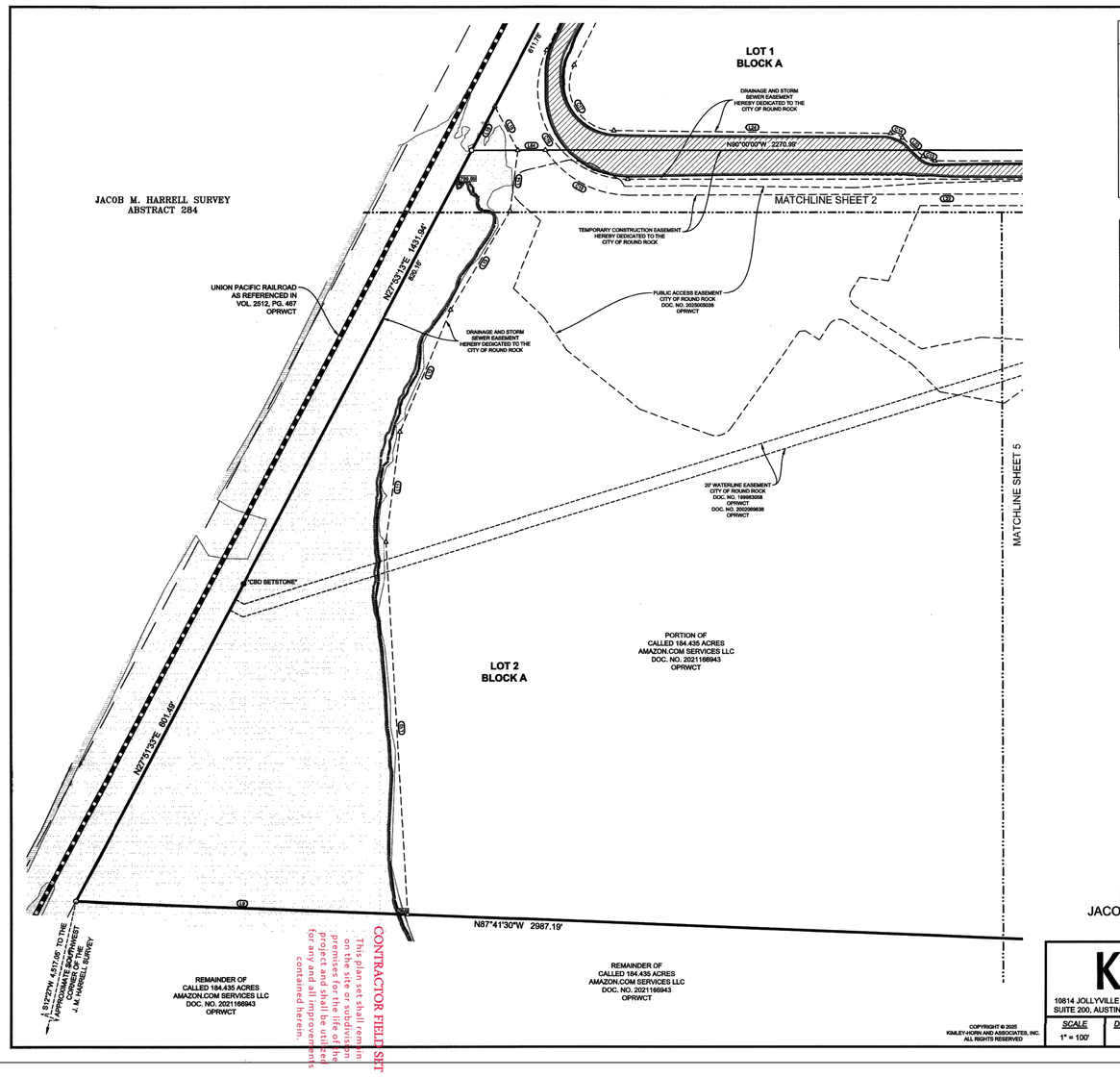

SITE KEY

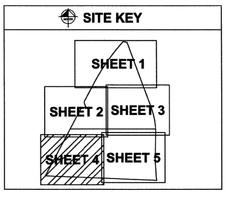

LEGEND

P.O.B.	= POINT OF BEGINNING
○	= 1/2" IRON ROD W/ "KHA" CAP SET
●	= 1/2" IRON ROD FOUND (CAP NOTED)
■	= TEXAS DEPARTMENT OF TRANSPORTATION TYPE II MONUMENT FOUND
●	= MAG NAIL FOUND
⊙	= IRON PIPE FOUND (SIZE NOTED)
OPRWCT	= OFFICIAL PUBLIC RECORDS OF WILLIAMSON COUNTY, TEXAS
DRWCT	= DEED RECORDS OF WILLIAMSON COUNTY, TEXAS

LINETYPE LEGEND

- BOUNDARY LINE
- ADJOINER LINE
- EASEMENT LINE
- EXISTING EASEMENT LINE
- ULTIMATE 4% CHANCE FLOODPLAIN LINE
- ULTIMATE 1% CHANCE FLOODPLAIN LINE
- MATCH LINE
- RAILROAD LINE

FLOOD ZONE LEGEND

- CITY OF ROUND ROCK 25 YEAR FLOODPLAIN
- CITY OF ROUND ROCK 100 YEAR FLOODPLAIN
- FEMA FLOOD ZONE AE

NORTH

GRAPHIC SCALE IN FEET
100 0 50 100 200
1" = 100' @ 18X24

FINAL PLAT

HESTERS CROSSING INDUSTRIAL

BEING 149.32 ACRES OUT OF THE
JACOB M. HARRELL SURVEY, ABSTRACT 284
WILLIAMSON COUNTY, TEXAS

Kimley»Horn
10814 JOLLYVILLE ROAD, CAMPUS IV
SUITE 200, AUSTIN, TEXAS 78759
TBPELS FIRM # 10194624
TEL. NO. (512) 418-1771
WWW.KIMLEY-HORN.COM

SCALE	DRAWN BY	CHECKED BY	DATE	PROJECT NO.	SHEET NO.
1" = 100'	RPP	MMII	1/28/2025	168864169	4 OF 7

COPYRIGHT © 2025
KIMLEY-HORN AND ASSOCIATES, INC.
ALL RIGHTS RESERVED

FP24-000001

NOTES
1. PROPOSED FINAL PLAT SHOWN FOR REFERENCE.

CONTRACTOR FIELD SET
This plan set shall remain on the site or subdivision premises for the life of the project and shall be utilized for any and all improvements contained herein.

SDP24-00001

SHEET NUMBER 4 OF 227

2525 CR 172
INDUSTRIAL
CITY OF ROUND ROCK
WILLIAMSON COUNTY, TEXAS

FINAL PLAT
(SHEET 2 OF 4)

KHA PROJECT	069284918
DATE	MARCH 2025
SCALE:	AS SHOWN
DESIGNED BY:	MM
DRAWN BY:	MM
CHECKED BY:	NCB

03/26/2025

Kimley»Horn
© 2025 KIMLEY-HORN AND ASSOCIATES, INC.
10814 JOLLYVILLE ROAD, CAMPUS IV, SUITE 200, AUSTIN, TX 78759
PHONE: 512-418-1771 FAX: 512-418-1791
WWW.KIMLEY-HORN.COM
TEXAS REGISTERED ENGINEERING FIRM F-928

No.	REVISIONS	DATE	BY

Plotted By:Nan, Joyce Date: April 17, 2025 04:20:08pm File Path:K:\AUS_Civil\069284910 - DAU3 Round Rock\Cad\PlanSheets-SDP\C-Final Plat.dwg
This document, together with the concepts and designs presented herein, as an instrument of service, is intended only for the specific purpose and client for which it was prepared. Reuse of and improper reliance on this document without written authorization and adaptation by Kimley-Horn and Associates, Inc. shall be without liability to Kimley-Horn and Associates, Inc.

DOC #20250258208

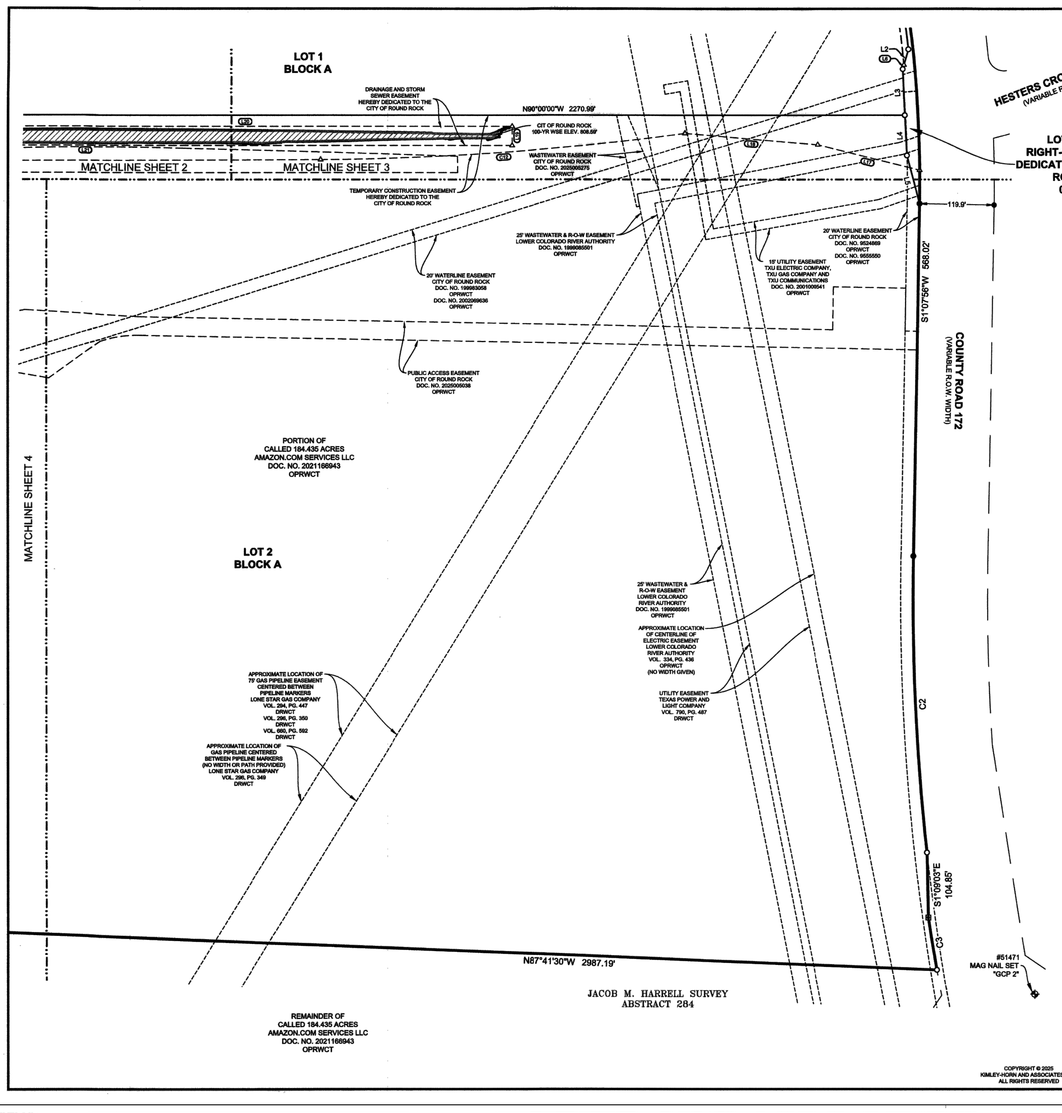

SITE KEY

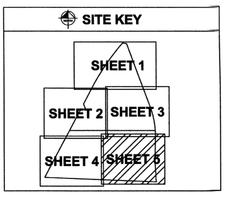

LEGEND

P.O.B.	= POINT OF BEGINNING
○	= 1/2" IRON ROD W/ "KHA" CAP SET
●	= 1/2" IRON ROD FOUND (CAP NOTED)
■	= TEXAS DEPARTMENT OF TRANSPORTATION TYPE II MONUMENT FOUND
●	= MAG NAIL FOUND
⊙	= IRON PIPE FOUND (SIZE NOTED)
OPRWCT	= OFFICIAL PUBLIC RECORDS OF WILLIAMSON COUNTY, TEXAS
DRWCT	= DEED RECORDS OF WILLIAMSON COUNTY, TEXAS

LINETYPE LEGEND

- BOUNDARY LINE
- ADJOINER LINE
- EASEMENT LINE
- EXISTING EASEMENT LINE
- ULTIMATE 4% CHANCE FLOODPLAIN LINE
- ULTIMATE 1% CHANCE FLOODPLAIN LINE
- MATCH LINE
- RAILROAD LINE

FLOOD ZONE LEGEND

- CITY OF ROUND ROCK 25 YEAR FLOODPLAIN
- CITY OF ROUND ROCK 100 YEAR FLOODPLAIN
- FEMA FLOOD ZONE AE

NORTH

GRAPHIC SCALE IN FEET
100 0 50 100 200
1" = 100' @ 18X24

FINAL PLAT
HESTERS CROSSING INDUSTRIAL
BEING 149.32 ACRES OUT OF THE
JACOB M. HARRELL SURVEY, ABSTRACT 284
WILLIAMSON COUNTY, TEXAS

Kimley»Horn
10814 JOLLYVILLE ROAD, CAMPUS IV
SUITE 200, AUSTIN, TEXAS 78759
TEL. NO. (512) 418-1771
TBPELS FIRM # 10194624
WWW.KIMLEY-HORN.COM

COPYRIGHT © 2025 KIMLEY-HORN AND ASSOCIATES, INC. ALL RIGHTS RESERVED

SCALE	DRAWN BY	CHECKED BY	DATE	PROJECT NO.	SHEET NO.
1" = 100'	RPP	MMII	1/28/2025	168864169	5 OF 7

FP24-000001

DOC #20250258208

LINE TABLE

NO.	BEARING	LENGTH
L1	S16°41'43"E	107.65'
L2	S16°12'48"W	33.24'
L3	S02°46'54"E	74.24'
L4	S02°46'54"E	65.19'
L5	S14°33'37"E	80.06'
L6	S16°12'48"W	6.97'
L7	N20°28'04"W	827.73'
L8	S36°44'23"E	60.37'
L9	N87°41'30"W	555.71'
L10	S03°12'18"E	624.67'
L11	S07°19'02"W	185.64'
L12	S22°36'18"W	221.16'
L13	S31°09'28"W	193.03'
L14	S07°19'01"W	102.74'
L15	S27°31'53"E	82.94'
L16	N27°53'13"E	53.21'
L17	N75°53'44"W	168.98'
L18	N85°04'03"W	214.95'
L19	S00°00'00"E	30.86'
L20	N90°00'00"E	861.23'
L21	N90°00'00"W	1376.19'
L22	S89°48'01"W	1064.60'
L23	S48°00'43"E	46.18'
L24	S89°25'31"E	463.71'
L25	S27°04'10"W	266.70'
L26	N26°04'45"E	369.62'
L27	S78°09'40"W	48.84'
L28	S02°00'04"W	68.95'
L29	S88°36'41"E	38.23'
L30	S45°28'28"W	136.31'
L31	N45°00'02"E	111.99'
L32	N00°00'02"E	75.82'
L33	N77°00'44"W	42.52'
L34	N21°06'47"W	38.25'
L35	S00°00'29"E	165.15'
L36	S51°45'15"W	7.17'
L37	N90°00'00"W	9.42'
L38	S44°57'27"W	13.74'
L39	S00°00'00"E	43.01'
L40	S43°53'29"W	27.13'
L41	N90°00'00"W	58.94'
L42	S25°42'22"W	152.49'
L43	S00°00'00"E	77.15'
L44	S44°08'46"W	62.84'
L45	N90°00'00"W	14.86'
L46	S62°44'46"W	93.60'
L47	S06°13'51"W	104.71'
L48	N54°33'38"W	7.30'
L49	S42°53'52"W	79.10'
L50	S53°49'28"E	8.92'
L51	S36°10'32"W	95.03'
L52	S73°44'40"W	7.61'
L53	S36°10'32"W	37.37'
L54	N47°27'58"W	11.44'
L55	S42°32'04"W	49.34'
L56	S48°00'04"W	113.36'
L57	S42°32'04"W	157.68'
L58	S00°00'01"E	33.63'
L59	N89°59'59"E	23.10'
L60	S00°00'01"E	35.36'
L61	S89°59'59"W	39.12'
L62	S00°00'01"E	10.25'
L63	S71°50'19"E	52.88'
L64	N90°00'00"E	46.58'

CURVE TABLE

NO.	DELTA	RADIUS	LENGTH	CHORD BEARING	CHORD
C1	21°34'00"	2040.19'	767.95'	S09°39'04"E	763.42'
C2	7°22'06"	3720.44'	478.46'	S02°33'22"E	478.13'
C3	2°21'57"	2061.08'	85.11'	S09°12'07"E	85.10'
C4	10°01'21"	6183.54'	1081.65'	S34°09'04"W	1080.27'
C5	12°09'26"	6183.54'	1312.02'	N35°13'07"E	1309.56'
C6	2°08'05"	6183.54'	230.37'	S40°13'47"W	230.36'
C7	1°21'14"	2022.53'	47.79'	N19°45'29"W	47.79'
C8	1°05'14"	1578.53'	29.95'	N18°36'00"W	29.95'
C9	2°48'52"	1976.10'	97.07'	N16°52'36"W	97.06'
C10	14°15'46"	2050.00'	510.33'	N13°02'46"W	509.01'
C11	10°17'26"	2023.19'	363.38'	N10°20'21"W	362.89'
C12	7°16'35"	4649.07'	590.41'	S85°52'16"W	590.02'
C13	41°59'17"	30.00'	21.98'	S69°00'22"E	21.50'
C14	41°24'43"	30.00'	21.68'	S68°43'07"E	21.21'
C15	67°07'29"	166.00'	185.50'	N61°35'59"W	158.73'
C16	116°04'45"	150.00'	303.89'	N31°57'37"W	254.52'
C17	116°29'41"	75.00'	152.49'	S31°10'40"E	127.55'
C18	79°20'24"	30.00'	41.54'	S41°40'16"W	38.30'
C19	65°56'18"	30.00'	34.53'	N58°26'11"E	32.65'
C20	66°07'29"	321.75'	371.33'	S39°11'05"W	351.06'
C21	79°17'15"	159.40'	220.56'	S23°18'26"E	203.39'
C22	4°34'42"	6183.54'	494.11'	N31°25'45"E	493.98'
C23	96°21'31"	40.00'	67.27'	S84°21'18"W	59.62'
C24	6°52'27"	6156.17'	631.14'	N38°22'50"E	630.87'

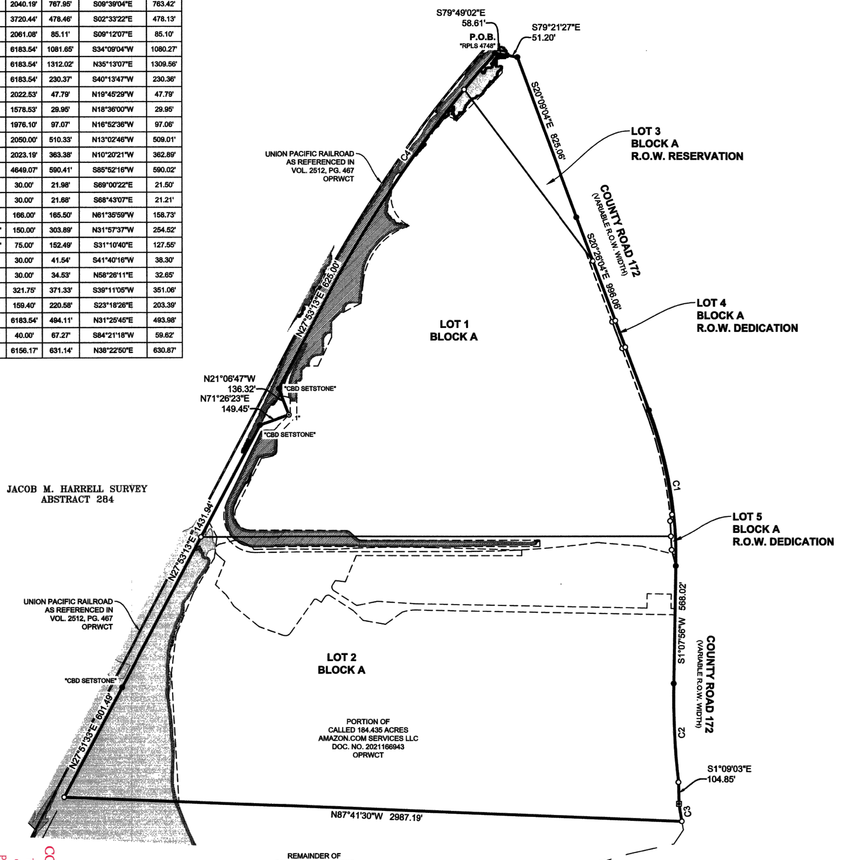

LOT TABLE

LOT NO.	ACRES
LOT 1	65.568
LOT 2	79.707
LOT 3 RIGHT-OF-WAY RESERVATION	3.804
LOT 4 RIGHT-OF-WAY DEDICATION	0.050
LOT 5 RIGHT-OF-WAY DEDICATION	0.188

LEGEND

P.O.B.	= POINT OF BEGINNING
○	= 1/2" IRON ROD W/ "KHA" CAP SET
●	= 1/2" IRON ROD FOUND (CAP NOTED)
■	= TEXAS DEPARTMENT OF TRANSPORTATION TYPE II MONUMENT FOUND
●	= MAG NAIL FOUND
⊙	= IRON PIPE FOUND (SIZE NOTED)
OPRWCT	= OFFICIAL PUBLIC RECORDS OF WILLIAMSON COUNTY, TEXAS
DRWCT	= DEED RECORDS OF WILLIAMSON COUNTY, TEXAS

LINETYPE LEGEND

- BOUNDARY LINE
- ADJOINER LINE
- EASEMENT LINE
- EXISTING EASEMENT LINE
- ULTIMATE 4% CHANCE FLOODPLAIN LINE
- ULTIMATE 1% CHANCE FLOODPLAIN LINE
- MATCH LINE
- RAILROAD LINE

FLOOD ZONE LEGEND

- CITY OF ROUND ROCK 25 YEAR FLOODPLAIN
- CITY OF ROUND ROCK 100 YEAR FLOODPLAIN
- FEMA FLOOD ZONE AE

NORTH

GRAPHIC SCALE IN FEET
300 0 150 300 600
1" = 300' @ 18X24

FINAL PLAT
HESTERS CROSSING INDUSTRIAL
BEING 149.32 ACRES OUT OF THE
JACOB M. HARRELL SURVEY, ABSTRACT 284
WILLIAMSON COUNTY, TEXAS

Kimley»Horn
10814 JOLLYVILLE ROAD, CAMPUS IV
SUITE 200, AUSTIN, TEXAS 78759
TEL. NO. (512) 418-1771
TBPELS FIRM # 10194624
WWW.KIMLEY-HORN.COM

COPYRIGHT © 2025 KIMLEY-HORN AND ASSOCIATES, INC. ALL RIGHTS RESERVED

SCALE	DRAWN BY	CHECKED BY	DATE	PROJECT NO.	SHEET NO.
1" = 300'	RPP	MMII	1/28/2025	168864169	6 OF 7

FP24-000001

NOTES
1. PROPOSED FINAL PLAT SHOWN FOR REFERENCE.

CONTRACTOR FIELD SET
This plan set shall remain on the construction premises for the life of the project and shall be utilized for any and all improvements contained herein.

SDP24-00001

SHEET NUMBER 5 OF 227

2525 CR 172
INDUSTRIAL
CITY OF ROUND ROCK
WILLIAMSON COUNTY, TEXAS

FINAL PLAT
(SHEET 3 OF 4)

KHA PROJECT 069284918	
DATE	MARCH 2025
SCALE:	AS SHOWN
DESIGNED BY:	MM
DRAWN BY:	MM
CHECKED BY:	NCB

02/26/2025

Kimley»Horn
© 2025 KIMLEY-HORN AND ASSOCIATES, INC.
10814 JOLLYVILLE ROAD, CAMPUS IV, SUITE 200, AUSTIN, TX 78759
PHONE: 512-418-1771
WWW.KIMLEY-HORN.COM
TEXAS REGISTERED ENGINEERING FIRM F-928

No.	REVISIONS	DATE	BY

Plotted By:Nan, Joyce Date: April 17, 2025 04:20:18pm File Path:K:\AUS_Civil\069284910 - DAU3 Round Rock\Cad\PlanSheets-SDP\C-Final Plat.dwg
This document, together with the concepts and designs presented herein, as an instrument of service, is intended only for the specific purpose and client for which it was prepared. Reuse of and improper reliance on this document without written authorization and adaptation by Kimley-Horn and Associates, Inc. shall be without liability to Kimley-Horn and Associates, Inc.

Doc #20250225 926

SURVEYOR'S NOTES:

1. BASIS OF BEARINGS IS THE TEXAS COORDINATE SYSTEM OF 1983, CENTRAL ZONE (4203). ALL COORDINATES AND DISTANCES SHOWN HEREON HAVE BEEN SCALED FROM POINT (#5144), COORDINATES BEING N: 10148758.780, E: 3128329.818, WITH A SCALE FACTOR OF 1.00011119033. THE UNIT OF LINEAR MEASUREMENT IS U.S. SURVEY FEET.
2. ALL LOTS LOCATED IN THIS SUBDIVISION WILL BE MONUMENTED WITH A 1/2" IRON ROD WITH A SURVEYOR'S CAP STAMPED "KHA" OR A MAG NAIL WITH WASHER STAMPED "KHA" PRIOR TO LOT SALES, UNLESS OTHERWISE STATED.

PLAT NOTES

1. NO OBJECTS, INCLUDING BUT NOT LIMITED TO BUILDINGS, FENCES, LANDSCAPING OR OTHER STRUCTURES MAY BE PLACED IN DRAINAGE EASEMENTS, EXCEPT AS APPROVED BY WILLIAMSON COUNTY AND THE CITY OF ROUND ROCK.
2. THE OWNER/DEVELOPER OF THIS SUBDIVISION/LOT SHALL PROVIDE AUSTIN ENERGY WITH ANY EASEMENT AND/OR ACCESS REQUIRED, IN ADDITION TO THOSE INDICATED, FOR THE INSTALLATION AND ONGOING MAINTENANCE OF OVERHEAD AND UNDERGROUND ELECTRIC FACILITIES. THESE EASEMENTS AND/OR ACCESS ARE REQUIRED TO PROVIDE ELECTRIC SERVICE TO THE BUILDING, AND WILL NOT BE LOCATED SO AS TO CAUSE THE SITE TO BE OUT OF COMPLIANCE WITH THE CITY OF ROUND ROCK LAND DEVELOPMENT CODE.
3. THE OWNER SHALL BE RESPONSIBLE FOR INSTALLATION OF TEMPORARY EROSION CONTROL, REVEGETATION AND TREE PROTECTION. IN ADDITION, THE OWNER SHALL BE RESPONSIBLE FOR ANY INITIAL TREE PRUNING AND TREE REMOVAL THAT IS WITHIN TEN (10) FEET OF THE CENTERLINE OF THE PROPOSED OVERHEAD ELECTRICAL FACILITIES DESIGNED TO PROVIDE ELECTRIC SERVICE TO THE PROJECT. THE OWNER SHALL INCLUDE AUSTIN ENERGY'S WORK WITHIN THE LIMITS OF CONSTRUCTION FOR THIS PROJECT.
4. PRIOR TO CONSTRUCTION ON LOTS IN THIS SUBDIVISION, DRAINAGE PLANS WILL BE SUBMITTED TO THE CITY OF ROUND ROCK AND WILLIAMSON COUNTY FOR REVIEW. RAINFALL RUNOFF SHALL BE HELD TO THE AMOUNT EXISTING AT UNDEVELOPED STATUS BY PONDING OR OTHER APPROVED METHODS. ALL PROPOSED CONSTRUCTION OR SITE ALTERATION REQUIRES APPROVAL OF A SEPARATE DEVELOPMENT PERMIT.
5. LANDOWNER IS RESPONSIBLE FOR PROVIDING THE SUBDIVISION INFRASTRUCTURE, INCLUDING THE WATER UTILITY IMPROVEMENTS TO SERVE EACH LOT.
6. ANY RELOCATION OF ELECTRICAL FACILITIES SHALL BE AT THE OWNERS EXPENSE.
7. THE OWNER OF THE PROPERTY IS RESPONSIBLE FOR MAINTAINING CLEARANCES REQUIRED BY THE NATIONAL ELECTRIC SAFETY CODE, OCCUPATIONAL SAFETY AND HEALTH ADMINISTRATION (OSHA) REGULATIONS, CITY OF ROUND ROCK RULES AND REGULATIONS AND TEXAS STATE LAWS PERTAINING TO CLEARANCES WHEN WORKING IN CLOSE PROXIMITY TO OVERHEAD POWER LINES AND EQUIPMENT. AUSTIN ENERGY WILL NOT RENDER ELECTRIC SERVICE UNLESS REQUIRED CLEARANCES ARE MAINTAINED. ALL COSTS INCURRED BECAUSE OF FAILURE TO COMPLY WITH THE REQUIRED CLEARANCES WILL BE CHARGED TO THE OWNER.
8. WILLIAMSON COUNTY DEVELOPMENT PERMIT IS REQUIRED PRIOR TO ANY SITE DEVELOPMENT.
9. WILLIAMSON COUNTY DRIVEWAY PERMITS ARE REQUIRED FOR WILLIAMSON COUNTY RIGHT-OF-WAY ALONG COUNTY ROAD 172.
10. BY APPROVING THIS PLAT, THE CITY OF ROUND ROCK AND WILLIAMSON COUNTY ASSUMES NO OBLIGATION TO CONSTRUCT ANY INFRASTRUCTURE IN CONNECTION WITH THIS SUBDIVISION. ANY SUBDIVISION INFRASTRUCTURE REQUIRED FOR THE DEVELOPMENT OF THE LOTS IN THIS SUBDIVISION IS THE RESPONSIBILITY OF THE DEVELOPER AND/OR THE OWNERS OF THE LOT. FAILURE TO CONSTRUCT ANY REQUIRED INFRASTRUCTURE TO THE CITY STANDARD MAY BE JUST CAUSE FOR THE CITY TO DENY APPLICATIONS FOR CERTAIN DEVELOPMENT PERMITS INCLUDING BUILDING PERMITS, SITE PLAN APPROVALS, AND/OR CERTIFICATES OF OCCUPANCY.
11. THE LOCATION OF EASEMENTS SHOWN HEREON THAT ARE GRANTED BY SEPARATE INSTRUMENT ARE APPROXIMATE AND SUCH EASEMENTS AND THEIR LOCATION ARE GOVERNED BY THE TERMS, PROVISIONS, AND CONDITIONS OF THE SEPARATE INSTRUMENT.
12. WETLAND CRITICAL ENVIRONMENTAL FEATURES AND CRITICAL ENVIRONMENTAL FEATURE SETBACKS APPLY TO THIS SITE. ALL ACTIVITIES WITHIN THE CRITICAL ENVIRONMENTAL FEATURE AND THE CRITICAL ENVIRONMENTAL FEATURE SETBACK MUST COMPLY WITH THE CITY OF ROUND ROCK LAND DEVELOPMENT CODE. THE NATURAL VEGETATIVE COVER MUST BE RETAINED TO THE MAXIMUM EXTENT PRACTICABLE; CONSTRUCTION IS PROHIBITED; AND WASTEWATER DISPOSAL OR IRRIGATION IS PROHIBITED UNLESS AUTHORIZED BY AN APPROVED SITE PLAN.
13. PROPERTY OWNER AND/OR HIS/HER ASSIGNS SHALL PROVIDE FOR ACCESS TO THE DRAINAGE AND UTILITY EASEMENTS AS MAY BE NECESSARY AND SHALL NOT PROHIBIT ACCESS BY WILLIAMSON COUNTY (AND OTHER APPROPRIATE JURISDICTION) FOR THE PLACEMENT, INSPECTION, OR MAINTENANCE OF SAID EASEMENTS.
14. ALL PROPOSED CONSTRUCTION OR SITE ALTERATION REQUIRES THE APPROVAL OF A SEPARATE DEVELOPMENT PERMIT.
15. AS APPLICABLE, OBTAIN AND IMPLEMENT A STORMWATER POLLUTION PREVENTION PLAN (SWPP). THE SWP3 REQUIRES THE IMPLEMENTATION OF TEMPORARY AND PERMANENT BEST MANAGEMENT PRACTICES, INCLUDING EROSION AND SEDIMENT CONTROLS, FOR PROTECTION OF STORMWATER RUNOFF QUALITY, IN ACCORDANCE WITH THE WILLIAMSON COUNTY CODE.
16. A SETBACK SHALL BE PROVIDED FOR ALL DETENTION, RETENTION, AND WATER QUALITY FACILITIES FOR SINGLE-FAMILY OR DUPLEX RESIDENTIAL DEVELOPMENT, NO SUCH FACILITY SHALL BE LOCATED WITHIN 15 FT OF A RESIDENTIAL STRUCTURE.
17. AS APPLICABLE, OBTAIN AND IMPLEMENT A STORMWATER POLLUTION PREVENTION PLAN (SWP3). THE SWP3 REQUIRES THE IMPLEMENTATION OF TEMPORARY AND PERMANENT BEST MANAGEMENT PRACTICES, INCLUDING EROSION AND SEDIMENT CONTROLS, FOR PROTECTION OF STORMWATER RUNOFF QUALITY, IN ACCORDANCE WITH THE WILLIAMSON COUNTY CODE.
18. UTILITY PROVIDERS:

• WATER UTILITY PROVIDER:	CITY OF ROUND ROCK
• WASTE WATER UTILITY PROVIDER:	CITY OF ROUND ROCK
• ELECTRIC UTILITY PROVIDER:	ONCOR ELECTRIC DELIVERY

19. THIS PLAT CONFORMS TO THE PRELIMINARY PLAT APPROVED BY THE PLANNING AND ZONING COMMISSION ON APRIL 14, 2024
20. A PORTION OF THIS TRACT IS ENCROACHED BY THE ULTIMATE 1% ANNUAL CHANCE FLOODPLAIN. ALL SLAB ELEVATIONS SHALL BE A MINIMUM TWO (2) FEET ABOVE THE 1% ANNUAL CHANCE FLOODPLAIN.
21. NO FENCES, STRUCTURES, STORAGE, OR FILL SHALL BE PLACED WITHIN THE LIMITS OF THE ULTIMATE 1% ANNUAL CHANCE FLOODPLAIN, UNLESS APPROVED BY THE CITY ENGINEER. FILL MAY ONLY BE PERMITTED BY THE CITY ENGINEER AFTER APPROVAL OF THE PROPER ANALYSIS.
22. A PORTION OF THIS TRACT IS ENCROACHED BY SPECIAL FLOOD HAZARD AREAS INUNDATED BY THE 1% ANNUAL CHANCE FLOODPLAIN AS IDENTIFIED BY THE U.S. FEDERAL EMERGENCY MANAGEMENT AGENCY BOUNDARY MAP (FLOOD INSURANCE RATE MAP) COMMUNITY PANEL NUMBER 48491C0630F, MAP NO. 48491C0630F, EFFECTIVE DATE DECEMBER 20, 2019 FOR WILLIAMSON COUNTY, TEXAS.
23. BUILDING SETBACKS SHALL BE IN ACCORDANCE WITH PART III, ZONING AND DEVELOPMENT CODE, CHAPTER 2, ZONING DISTRICTS AND USE REGULATIONS, CITY OF ROUND ROCK, TEXAS, 2018, AS AMENDED.
24. SIDEWALKS SHALL BE CONSTRUCTED IN ACCORDANCE WITH PART III, ZONING AND DEVELOPMENT CODE, SECTION 6-28, CITY OF ROUND ROCK, TEXAS, 2018, AS AMENDED.
25. WITH THE EXCEPTION OF PROPERTIES LOCATED WITHIN THE MU-1 AND MU-2 ZONING DISTRICTS, A TEN FOOT (10') PUE AND SIDEWALK EASEMENT ABUTTING AND ALONG THE STREET SIDE PROPERTY LINE IS HEREBY CONVEYED FOR ALL STREET SIDE PROPERTY LOTS SHOWN HEREON. ANY PRIVATE IMPROVEMENTS WITHIN THE PUE OR RIGHT-OF-WAY SHALL REQUIRE WRITTEN APPROVAL FROM THE UTILITIES DIRECTOR PRIOR TO INSTALLATION.
26. NO OBSTRUCTIONS, INCLUDING BUT NOT LIMITED TO FENCING OR STORAGE, SHALL BE PERMITTED IN ANY DRAINAGE EASEMENTS SHOWN HEREON.
27. ALL SLAB ELEVATIONS SHALL BE A MINIMUM OF TWO (2) FEET ABOVE THE ULTIMATE 1% ANNUAL CHANCE FLOODPLAIN.
28. NO FENCES, STRUCTURES, STORAGE OR FILL SHALL BE PLACED WITHIN THE LIMITS OF THE ULTIMATE 1% ANNUAL CHANCE FLOODPLAIN UNLESS APPROVED IN ACCORDANCE WITH CITY ORDINANCES.

SURVEYOR'S CERTIFICATION:

THAT I, MICHAEL A. MONTGOMERY II, DO HEREBY CERTIFY THAT I PREPARED THIS PLAT FROM AN ACTUAL AND ACCURATE N-THE-GROUND SURVEY OF THE LAND AND THAT THE CORNER MONUMENTS SHOWN THEREON WERE PROPERLY PLACED UNDER MY PERSONAL SUPERVISION, IN ACCORDANCE WITH CHAPTER 4 – SUBDIVISION DESIGN AND CONSTRUCTION, PART III – ZONING AND DEVELOPMENT CODE, CODE OF ORDINANCES, CITY OF ROUND ROCK, 2018 EDITION AS AMENDED.

PLAT COMPLETION DATE: NOVEMBER 18, 2024.

1-24-2025

MICHAEL A MONTGOMERY II, R.P.L.S.
REGISTERED PROFESSIONAL
LAND SURVEYOR NO. 6890

STATE OF TEXAS
REGISTERED
MICHAEL A MONTGOMERY II
6890
PROFESSIONAL
LAND SURVEYOR

LEGAL DESCRIPTION:
149.32 ACRES

BEING A 149.32 ACRE TRACT OF **LAND** SITUATED IN THE JACOB M. HARRELL SURVEY, ABSTRACT 284, WILLIAMSON COUNTY, TEXAS; AND BEING A PORTION OF A CALLED 184.435 ACRES TRACT OF LAND DESCRIBED TO AMAZON.COM SERVICES LLC, AS SHOWN ON INSTRUMENT RECORDED IN DOCUMENT NO. 2021156943 OF THE OFFICIAL PUBLIC RECORDS OF WILLIAMSON COUNTY, TEXAS (O.P.R.W.C.T); AND BEING MORE PARTICULARLY DESCRIBED BY METES AND BOUNDS AS FOLLOWS:

BEGINNING AT A 1/2-INCH IRON ROD WITH PLASTIC CAP STAMPED "RPLS 4748" FOUND IN THE SOUTHEASTERLY RIGHT-OF-WAY LINE OF UNION PACIFIC RAILROAD, A 100FT WIDTH RIGHT-OF-WAY, IN THE SOUTHWESTERLY RIGHT-OF-WAY OF COUNTY ROAD 172, A VARIABLE WIDTH RIGHT-OF-WAY, FOR THE NORTH CORNER OF SAID 184.435 ACRES TRACT;

THENCE, DEPARTING SAID SOUTHEASTERLY RIGHT-OF-WAY LINE OF UNION PACIFIC RAILROAD, WITH THE SOUTHWESTERLY RIGHT-OF-WAY OF SAID COUNTY ROAD 172, SAME BEING THE NORTH BOUNDARY LINE OF SAID 184.435 ACRES TRACT, THE FOLLOWING TWO (2) COURSES AND DISTANCES:

1. SOUTH 79°49'02" EAST, A DISTANCE OF 59.61 FEET TO A 1/2-INCH IRON ROD FOUND;
2. SOUTH 79°21'27" EAST, A DISTANCE OF 51.20 FEET TO A 1/2-INCH IRON ROD FOUND;

THENCE, CONTINUING WITH THE SOUTHWESTERLY RIGHT-OF-WAY LINE OF SAID COUNTY ROAD 172, SAME BEING THE EAST BOUNDARY LINE OF SAID 184.435 ACRES THE FOLLOWING SEVEN (7) COURSES AND DISTANCES:

1. SOUTH 20°09'04" EAST, A DISTANCE OF 825.06 FEET TO A 1/2-INCH IRON ROD FOUND;
2. SOUTH 20°26'04" EAST, A DISTANCE OF 999.06 FEET TO A 1/2-INCH IRON ROD FOUND FOR THE BEGINNING OF A CURVE;
3. WITH SAID CURVE TO THE **RIGHT**, HAVING A CENTRAL ANGLE OF 21°34'00", A RADIUS OF 2040.19 FEET, A CHORD BEARING AND DISTANCE OF SOUTH 09°39'04" EAST, 763.42 FEET, AND A TOTAL ARC LENGTH OF 767.85 FEET TO A 1/2-INCH IRON ROD FOUND;
4. SOUTH 01°07'56" WEST, A DISTANCE OF 568.02 FEET TO A 1/2-INCH IRON ROD FOUND FOR THE BEGINNING OF A CURVE;
5. WITH SAID CURVE TO THE **LEFT**, HAVING A CENTRAL ANGLE OF 07°22'06", A RADIUS OF 3720.44 FEET, A CHORD BEARING AND DISTANCE OF SOUTH 02°33'22" EAST, 478.18 FEET, AND A TOTAL ARC LENGTH OF 478.48 FEET TO A 1/2-INCH IRON ROD WITH PLASTIC CAP STAMPED "KHA" SET;
6. SOUTH 01°09'03" **EAST, A DISTANCE OF** 104.85 FEET TO A TEXAS DEPARTMENT OF TRANSPORTATION TYPE II MONUMENT FOUND, FOR THE BEGINNING OF A CURVE;
7. WITH SAID CURVE TO THE **LEFT**, HAVING A CENTRAL ANGLE OF 01°34'59", A RADIUS OF 3080.81 FEET, A CHORD BEARING AND DISTANCE OF SOUTH 09°12'07" EAST, 85.10 FEET, AND A TOTAL ARC LENGTH OF 85.10 FEET TO A 1/2-INCH IRON ROD WITH PLASTIC CAP STAMPED "KHA" SET IN SAID SOUTHWESTERLY RIGHT-OF-WAY LINE OF SAID COUNTY ROAD 172;

THENCE, DEPARTING SAID SOUTHWESTERLY RIGHT-OF-WAY LINE OF COUNTY ROAD 172 AND SAID EAST BOUNDARY LINE OF THE 184.435 ACRES TRACT, OVER AND ACROSS SAID **184.435 ACRES** TRACT NORTH 87°41'30" WEST, A DISTANCE OF 2067.19 FEET TO A 1/2-INCH IRON ROD WITH PLASTIC CAP STAMPED "KHA" SET IN THE SOUTHEASTERLY RIGHT-OF-WAY LINE OF UNION PACIFIC RAILROAD, SAME BEING THE WEST BOUNDARY LINE OF SAID 184.435 ACRES TRACT;

THENCE, WITH SAID SOUTHEASTERLY RIGHT-OF-WAY LINE OF UNION PACIFIC RAILROAD AND SAID WEST BOUNDARY LINE OF THE 184.435 ACRES TRACT, THE FOLLOWING SIX (5) COURSES AND DISTANCES:

1. NORTH 27°51'39" EAST, A DISTANCE OF 601.49 FEET TO A 1/2-INCH IRON ROD WITH PLASTIC CAP STAMPED "CBD SETSTONE" FOUND;
2. NORTH 27°53'13" EAST, A DISTANCE OF 1431.94 FEET TO A 1/2-INCH IRON ROD WITH PLASTIC CAP STAMPED "CBD SETSTONE" FOUND;
3. NORTH 71°28'23" EAST, A DISTANCE OF 149.45 FEET TO A 1-INCH IRON PIPE FOUND;
4. NORTH 21°06'47" WEST, A DISTANCE OF 136.32 FEET TO A 1/2-INCH IRON ROD WITH PLASTIC CAP STAMPED "CBD SETSTONE" FOUND;
5. NORTH 27°53'13" EAST, A DISTANCE OF 625.00 FEET TO A 1/2-INCH IRON ROD WITH PLASTIC CAP STAMPED "KHA" SET FOR THE BEGINNING OF A CURVE;
6. WITH SAID CURVE TO THE **RIGHT**, HAVING A CENTRAL OF 12°09'25", A RADIUS OF 8183.54 FEET, A CHORD BEARING AND DISTANCE OF NORTH 35°13'07" EAST, 1machine 1206.56 FEET, AND A TOTAL ARC LENGTH OF 1312.02 FEET TO THE **POINT OF BEGINNING** AND CONTAINING 149.32 ACRES OF LAND, MORE OR LESS, IN WILLIAMSON COUNTY, TEXAS. THIS DOCUMENT WAS PREPARED IN THE OFFICE OF KIMLEY-HORN INC. IN AUSTIN, TEXAS.

EASEMENT NOTE:

THE PERPETUAL EASEMENT, RIGHT-OF-WAY, RIGHTS, AND PRIVILEGES HEREIN GRANTED SHALL BE USED FOR THE PURPOSES OF LOCATION, PLACEMENT, RELOCATION, CONSTRUCTION, OPERATION, ENLARGEMENT, MAINTENANCE, ALTERATION, REPAIR, REBUILDING, REMOVAL, AND PATROL OF UTILITIES AND ASSOCIATED FACILITIES INCLUDING BUT NOT LIMITED TO: PIPES, VALVES, VAULTS, MANHOLES, CHANNELS, INLETS, STRUCTURES, ACCESS FACILITIES, CONDUITS, APPURTENANCES, AND ANY NECESSARY ACCESSORIES THERETO (COLLECTIVELY THE "FACILITIES").

THIS CONVEYANCE IS MADE AND ACCEPTED SUBJECT TO ANY AND ALL CONDITIONS AND RESTRICTIONS, IF ANY, RELATING TO THE HEREIN ABOVE DESCRIBED PROPERTY TO THE EXTENT, AND ONLY TO THE EXTENT, THAT THE SAME MAY STILL BE IN FORCE AND EFFECT AND SHOWN OF RECORD IN THE OFFICE OF THE COUNTY CLERK OF WILLIAMSON COUNTY, TEXAS OR TRAVIS COUNTY, TEXAS.

EXCEPT AS OTHERWISE NOTED, THE EASEMENT, RIGHTS, AND PRIVILEGES HEREIN GRANTED SHALL BE PERPETUAL, PROVIDED HOWEVER THAT SAID EASEMENT, RIGHTS, AND PRIVILEGES SHALL CEASE AND REVERT TO GRANTORS IN THE EVENT THE UTILITIES ARE ABANDONED OR SHALL CEASE TO BE IN OPERATION, FOR A PERIOD OF FIVE (5) CONSECUTIVE YEARS.

THE PERPETUAL EASEMENT, RIGHT-OF-WAY, RIGHTS, AND PRIVILEGES GRANTED HEREIN ARE EXCLUSIVE, AND GRANTOR COVENANTS NOT TO CONVEY ANY OTHER EASEMENT OR CONFLICTING RIGHTS WITHIN THE PREMISES COVERED BY THIS GRANT, WITHOUT THE EXPRESS WRITTEN CONSENT OF GRANTEE, WHICH CONSENT SHALL NOT BE UNREASONABLY WITHHELD. GRANTEE SHALL HAVE THE RIGHT TO REVIEW ANY PROPOSED EASEMENT OR CONFLICTING USE TO DETERMINE THE EFFECT, IF ANY, ON THE FACILITIES CONTEMPLATED HEREIN. PRIOR TO GRANTING ITS CONSENT FOR OTHER EASEMENTS, GRANTEE MAY REQUIRE REASONABLE SAFEGUARDS TO PROTECT THE INTEGRITY OF THE FACILITIES THEREON.

GRANTOR FURTHER GRANTS TO GRANTEE:

(a) THE RIGHT TO INSTALL ADDITIONAL FACILITIES ON THE EASEMENT TRACT;
(b) THE RIGHT TO GRADE THE EASEMENT FOR THE FULL WIDTH THEREOF AND TO EXTEND THE CUTS AND FILLS FOR SUCH GRADING INTO AND ONTO THE LAND ALONG AND ACROSS THE EASEMENT TO SUCH EXTENT AS GRANTEE MAY FIND REASONABLY NECESSARY;
(c) THE RIGHT OF INGRESS TO AND EGRESS FROM THE EASEMENT OVER AND ACROSS GRANTOR'S PROPERTY BY MEANS OF ROADS AND LANES THEREON, IF SUCH EXIST; OTHERWISE BY SUCH ROUTE OR ROUTES AS SHALL OCCASION THE LEAST PRACTICABLE DAMAGE AND INCONVENIENCE TO GRANTOR; PROVIDED THAT SUCH RIGHT OF INGRESS AND EGRESS SHALL NOT EXTEND TO ANY PORTION OF GRANTOR'S PROPERTY WHICH IS ISOLATED FROM THE EASEMENT BY ANY PUBLIC HIGHWAY OR ROAD NOW CROSSING OR HEREAFTER CROSSING THE PROPERTY; THE FOREGOING RIGHT OF INGRESS AND EGRESS INCLUDES THE RIGHT OF THE GRANTEE AND ASSIGNED EMPLOYEES OF GRANTEE TO DISASSEMBLE, REMOVE, TAKE DOWN, AND CLEAR AWAY ANY FENCE, BARRICADE, OR OTHER STRUCTURE WHICH OBSTRUCTS, PREVENTS, OR HINDERS GRANTEE'S INGRESS TO AND EGRESS FROM THE GRANTOR'S PROPERTY, AND SHOULD GRANTEE DEEM IT NECESSARY TO SO DISASSEMBLE, REMOVE, TAKE DOWN, OR CLEAR AWAY ANY SUCH FENCE, BARRICADE, OR OTHER STRUCTURE, GRANTEE SHALL, AS SOON AS IS REASONABLY FEASIBLE, REPLACE OR RESTORE GRANTOR'S PROPERTY TO AS SIMILAR A CONDITION AS REASONABLY PRACTICABLE AS EXISTED IMMEDIATELY PRIOR TO GRANTEE'S ACTIONS PURSUANT TO THIS PROVISION, UNLESS SAID FENCE, BARRICADE, OR OTHER STRUCTURE IS INCONSISTENT WITH THE RIGHTS CONVEYED TO GRANTEE HEREIN;
(d) THE RIGHT OF ACCESS, IDENTIFIED AS ELECTRONIC ACCESS, ACROSS SUCH PORTIONS OF GRANTOR'S PROPERTY AS ARE REASONABLY NECESSARY FOR THE EXERCISE OF THE RIGHTS OF INGRESS AND EGRESS GRANTED HEREIN AND TO PROVIDE ACCESS TO PROPERTY ADJACENT TO THE EASEMENT;
(e) THE RIGHT FROM TIME TO TIME TO TRIM AND TO CUT DOWN AND CLEAR AWAY ANY AND ALL TREES AND BRUSH NOW OR HEREAFTER ON THE EASEMENT AND TO TRIM AND TO CUT DOWN AND CLEAR AWAY ANY TREES ON EITHER SIDE OF THE EASEMENT WHICH NOW OR HEREAFTER IN THE OPINION OF GRANTEE MAY BE A HAZARD TO ANY PIPELINE, VALVES, APPLIANCES, FITTINGS, OR OTHER IMPROVEMENTS BY REASON OF THE DANGER OF FALLING THEREON OR ROOT INFILTRATION THEREIN, OR WHICH MAY OTHERWISE INTERFERE WITH THE EXERCISE OF GRANTEE'S RIGHTS HEREUNDER; PROVIDED HOWEVER, THAT ALL TREES WHICH GRANTEE IS HEREBY AUTHORIZED TO CUT AND REMOVE, IF VALUABLE FOR TIMBER OR FIREWOOD, SHALL CONTINUE TO BE THE PROPERTY OF GRANTOR, BUT ALL TOPS, LOPS, BRUSH AND REFUSE WOOD SHALL BE BURNED OR REMOVED BY GRANTEE;
(f) THE RIGHT TO MARK THE LOCATION OF THE EASEMENT BY SUITABLE MARKERS SET IN THE GROUND; PROVIDED THAT SUCH MARKERS SHALL BE PLACED IN FENCES OR OTHER LOCATIONS WHICH WILL NOT INTERFERE WITH ANY REASONABLE USE GRANTOR SHALL MAKE OF THE EASEMENT;

GRANTEE HEREBY COVENANTS AND AGREES:

(a) GRANTEE SHALL NOT FENCE THE EASEMENT;
(b) GRANTEE SHALL PROMPTLY BACKFILL ANY TRENCH MADE BY IT ON THE EASEMENT AND REPAIR ANY DAMAGE IT SHALL DO TO GRANTORS PRIVATE ROADS OR LANES ON THE LANDS;
(c) TO THE EXTENT ALLOWED BY LAW, GRANTEE SHALL INDEMNIFY GRANTOR AGAINST ANY LOSS AND DAMAGE WHICH SHALL BE CAUSED BY THE EXERCISE OF THE RIGHTS OF INGRESS AND EGRESS OR BY ANY WRONGFUL OR NEGLIGENT ACT OR OMISSION OF GRANTEE'S AGENTS OR EMPLOYEES IN THE COURSE OF THEIR EMPLOYMENT.

IT IS UNDERSTOOD AND AGREED THAT ANY AND ALL EQUIPMENT PLACED UPON SAID PROPERTY SHALL REMAIN THE PROPERTY OF GRANTEE.

GRANTOR HEREBY DEDICATES THE EASEMENT FOR THE PURPOSES STATED HEREIN.

TO HAVE AND TO HOLD THE RIGHTS AND INTERESTS DESCRIBED UNTO GRANTEE AND ITS SUCCESSORS AND ASSIGNS, FOREVER, TOGETHER WITH ALL AND SINGULAR ALL USUAL AND CUSTOMARY RIGHTS THERETO IN ANYWISE BELONGING, AND TOGETHER WITH THE RIGHT AND PRIVILEGE AT ANY AND ALL TIMES TO ENTER SAID PREMISES, OR ANY PART THEREOF, FOR THE PURPOSE OF CONSTRUCTING OR MAINTAINING SAID UTILITIES AND FOR MAKING CONNECTIONS THEREWITH, AND GRANTOR DOES HEREBY BIND ITSELF, ITS SUCCESSORS AND ASSIGNS AND LEGAL REPRESENTATIVES, TO WARRANT AND FOREVER DEFEND, ALL AND SINGULAR, THE SAID EASEMENT AND RIGHTS AND INTERESTS UNTO THE CITY OF ROUND ROCK, TEXAS, ITS SUCCESSORS AND ASSIGNS, AGAINST EVERY PERSON WHOMSOEVER LAWFULLY CLAIMING OR TO CLAIM THE SAME OR ANY PART THEREOF.

STATE OF TENNESSEE §
COUNTY OF DAVIDSON §

THAT AMAZON.COM SERVICES LLC, AS THE OWNER OF A CALLED 184.435 ACRE TRACT OF LAND DESCRIBED IN DOCUMENT NUMBER 2021156943, OF THE OFFICIAL PUBLIC RECORDS OF WILLIAMSON COUNTY, TEXAS, DO HEREBY CERTIFY THAT THERE ARE NO LIEN HOLDERS AND DEDICATE TO THE PUBLIC FOREVER USE OF THE STREETS, ALLEYS, EASEMENTS AND ALL OTHER LANDS INTENDED FOR PUBLIC DEDICATION AS SHOWN HEREON TO BE KNOWN AS AMAZON FINAL PLAT OF HESTERS CROSSING INDUSTRIAL

AMAZON.COM SERVICES LLC

NAME: Frederick Lutz
TITLE: Authorized Signatory

THE STATE OF TENNESSEE §
COUNTY OF Davidson §

THIS INSTRUMENT WAS ACKNOWLEDGED BEFORE ME ON THE 17th DAY OF January 2025 BY Frederick Lutz
AS Authorized Signatory OF Amazon.com Services, LLC
ON BEHALF OF SAID ENTITY.

NOTARY PUBLIC, STATE OF TEXAS TENNESSEE

PRINTED NAME: Mary Ingebrecht

MY COMMISSION EXPIRES: 5-8-2028

STATE OF TENNESSEE NOTARY PUBLIC DAVIDSON COUNTY NOTARY PUBLIC ENVIRONMENTAL ENGINEER & AGENT

APPROVED THIS 14 DAY OF APRIL, 2024, BY THE CITY PLANNING AND ZONING COMMISSION OF THE CITY OF ROUND ROCK, TEXAS, AND AUTHORIZED TO BE FILED FOR RECORD BY THE COUNTY CLERK OF WILLIAMSON COUNTY, TEXAS.

THE PROPERTY COVERED BY THIS PLAT IS WITHIN THE EXTRATERRITORIAL JURISDICTION OF THE CITY OF ROUND ROCK.

PLANNING AND ZONING COMMISSION CHAIRMAN
CITY OF ROUND ROCK PLANNING & ZONING COMMISSION

BRADLEY DUSHKIN, AICP PLANNING DIRECTOR
CITY OF ROUND ROCK PLANNING AND DEVELOPMENT SERVICES

ENGINEER'S CERTIFICATION:

THAT I, NICHOLAS C. BROWN, P.E., DO HEREBY CERTIFY THAT THE INFORMATION CONTAINED ON THIS PLAT COMPLIES WITH CHAPTER 4 – SUBDIVISION DESIGN AND CONSTRUCTION, PART III ZONING AND DEVELOPMENT CODE, CODE OF ORDINANCES, CITY OF ROUND ROCK, 2018 EDITION AS AMENDED, AND THE DESIGN AND CONSTRUCTION STANDARDS ADOPTED BY THE CITY OF ROUND ROCK, TEXAS.

NICHOLAS C. BROWN, P.E.
REGISTERED PROFESSIONAL ENGINEER NO. 107175
10814 JOLLYVILLE ROAD
CAMPUS IV, SUITE 200
AUSTIN, TEXAS 78759

STATE OF TEXAS
NICHOLAS C. BROWN
107175
LICENSED
PROFESSIONAL ENGINEER

1-24-2025

I, NANCY RISTER, CLERK OF WILLIAMSON COUNTY, TEXAS, DO HEREBY CERTIFY THAT THE FOREGOING INSTRUMENT OF WRITING AND ITS CERTIFICATION OF AUTHENTICATION WAS FILED FOR RECORD IN MY OFFICE ON THE 8th DAY OF April 2025 A.D. AT 10:35 O'CLOCK A.M. AND DULY RECORDED ON THE 8th DAY OF April 2025 A.D. AT 10:35 O'CLOCK A.M. IN THE PLAT RECORDS OF SAID COUNTY AND STATE IN DOCUMENT NO. 2025025925 OF THE OFFICIAL PUBLIC RECORDS OF WILLIAMSON COUNTY, TEXAS.

WITNESS MY HAND AND OFFICIAL SEAL OF OFFICE OF THE COUNTY CLERK, THIS THE 8th DAY OF April 2025 A.D.

NANCY RISTER, COUNTY CLERK,
WILLIAMSON COUNTY, TEXAS

BY: Shirley Mackey, Deputy

COUNTY COURT WILLIAMSON COUNTY, TEXAS

FINAL PLAT
HESTERS CROSSING INDUSTRIAL
BEING 149.32 ACRES OUT OF THE
JACOB M. HARRELL SURVEY, ABSTRACT 284
WILLIAMSON COUNTY, TEXAS

Kimley»Horn
10814 JOLLYVILLE ROAD, CAMPUS IV
SUITE 200, AUSTIN, TEXAS 78759
TEL NO. (512) 418-1771
TBPELS FIRM # 10194624
WWW.KIMLEY-HORN.COM

SCALE	DRAWN BY	CHECKED BY	DATE	PROJECT NO.	SHEET NO.
	RPP	MMII	11/18/2024	168864169	7 OF 7

COPYRIGHT © 2024
KIMLEY-HORN AND ASSOCIATES, INC.
ALL RIGHTS RESERVED

FP24-000001

DWG NAME: P:\AUS_SURVEY\AUSTIN SURVEY PROJECTS\168864169 - DAU3 - ROBINSON RANCH SURVEY\ONGOING\PLAT\PLAT-168864169.DWG PLOTTED BY: PAZIENT, ROB 11/18/2024 4:40 PM LAST SAVED 11/18/2024 4:33 PM

NOTES
1. PROPOSED FINAL PLAT SHOWN FOR REFERENCE.

CONTRACTOR FIELD SET
This plan set shall remain on the site or subdivision premises for the life of the project and shall be utilized for any and all inspections contained herein.

SDP24-00001
SHEET NUMBER 6 OF 227

2525 CR 172
INDUSTRIAL
CITY OF ROUND ROCK
WILLIAMSON COUNTY, TEXAS

FINAL PLAT
(SHEET 4 OF 4)

KHA PROJECT	069284918
DATE	MARCH 2025
SCALE:	AS SHOWN
DESIGNED BY:	MM
DRAWN BY:	MM
CHECKED BY:	NCB

04/28/2025

Kimley»Horn
© 2025 KIMLEY-HORN AND ASSOCIATES, INC.
10814 JOLLYVILLE ROAD, CAMPUS IV, SUITE 200, AUSTIN, TX 78759
PHONE: 512-418-1771 FAX: 512-418-1791
WWW.KIMLEY-HORN.COM
TEXAS REGISTERED ENGINEERING FIRM F-928

No.	REVISIONS	DATE	BY

Texture ########################## DM ########
Plotted By:Nan, Joyce Date:April 17, 2025 03:25:36pm File Path:K:\AUS_Civil\069284918 - DAU3 Round Rock\Cad\PlanSheets-SDP\C-General Notes.dwg
This document, together with the concepts and designs presented herein, as an instrument of service, is intended only for the specific purpose and client for which it was prepared. Reuse of and improper reliance on this document without written authorization and adaptation by Kimley-Horn and Associates, Inc. shall be without liability to Kimley-Horn and Associates, Inc.

CITY OF ROUND ROCK

GENERAL NOTES

1. ALL CONSTRUCTION SHALL BE IN ACCORDANCE WITH THE CITY OF ROUND ROCK (CORR) DESIGN AND CONSTRUCTION STANDARDS (DACS) SPECIFICATIONS MANUAL.
2. ANY EXISTING UTILITIES, PAVEMENT, CURBS, SIDEWALKS, STRUCTURES, TREES, ETC. (NOT PLANNED FOR DEMOLITION OR REMOVAL) THAT ARE DAMAGED OR REMOVED, SHALL BE REPAIRED, OR REPLACED, AT THE CONTRACTOR'S EXPENSE.
3. THE CONTRACTOR SHALL VERIFY ALL DEPTHS AND LOCATIONS OF EXISTING UTILITIES PRIOR TO ANY CONSTRUCTION ACTIVITIES. ANY DISCREPANCIES WITH THE CONSTRUCTION PLANS FOUND IN THE FIELD SHALL IMMEDIATELY BE BROUGHT TO THE ATTENTION OF THE ENGINEER WHO SHALL BE RESPONSIBLE FOR REVISING THE PLANS AS APPROPRIATE. FAILURE TO COMPLETE THIS STEP PRIOR TO COMMENCEMENT OF CONSTRUCTION MAY RESULT IN SIGNIFICANT DELAYS AND/OR EXPENDITURES FOR WHICH THE CITY SHALL NOT BE HELD LIABLE.
4. MANHOLE FRAMES, COVERS, VALVES, CLEANOUTS, ETC. SHALL BE RAISED TO FINISHED GRADE PRIOR TO FINAL PAVING CONSTRUCTION.
5. THE CONTRACTOR SHALL PROVIDE THE CITY OF ROUND ROCK WITH A 48-HOUR NOTICE BEFORE BEGINNING EACH PHASE OF CONSTRUCTION. TELEPHONE (512) 218-5428 (PLANNING AND DEVELOPMENT SERVICES DEPARTMENT - PDS)
6. ALL AREAS DISTURBED OR EXPOSED DURING CONSTRUCTION SHALL BE REVEGETATED IN ACCORDANCE WITH THE PLANS AND SPECIFICATIONS. THIS INCLUDES ANY AREAS LOCATED OUTSIDE OF THE DEFINED LIMITS OF CONSTRUCTION (LOC), IN RIGHTS-OF-WAY (ROW), OR LOCATED ON ADJACENT PROPERTIES. REVEGETATION OF ALL DISTURBED OR EXPOSED AREAS SHALL CONSIST OF SODDING OR SEEDING, AT THE CONTRACTOR'S DISCREPANCY, AS OUTLINED IN THE CITY'S DESIGN AND CONSTRUCTION STANDARDS. THE TYPE OF REVEGETATION PROVIDED MUST BE EQUIVALENT TO OR EXCEED THE TYPE OF VEGETATION PRESENT PRIOR TO CONSTRUCTION.
7. PRIOR TO ANY CONSTRUCTION, A PRE-CONSTRUCTION MEETING SHALL BE HELD BETWEEN THE CITY OF ROUND ROCK, THE DESIGN ENGINEER, THE CONTRACTOR, SUBCONTRACTORS, OTHER UTILITY COMPANIES, AND ANY AFFECTED PARTIES OR OTHER ENTITY THE CITY OR DESIGN ENGINEER DEEM NECESSARY.
8. THE CONTRACTOR AND THE DESIGN ENGINEER SHALL KEEP ACCURATE RECORDS OF ALL CONSTRUCTION THAT DEVIATES FROM THE PLANS. CHANGES TO APPROVED, CONSTRUCTION-STAMPED PLANS WILL REQUIRE A REVISION FROM THE DESIGN ENGINEER THAT IS APPROVED BY THE CITY PRIOR TO FIELD USE. THE DESIGN ENGINEER SHALL FURNISH THE CITY OF ROUND ROCK ACCURATE "AS-BUILT" RECORD DRAWINGS FOLLOWING COMPLETION OF ALL CONSTRUCTION. THESE "AS- BUILT" RECORD DRAWINGS SHALL MEET WITH THE SATISFACTION OF THE PLANNING AND DEVELOPMENT SERVICES DEPARTMENT PRIOR TO FINAL ACCEPTANCE OF THE PROJECT.
9. THE CITY OF ROUND ROCK SHALL NOT BE PETITIONED FOR ACCEPTANCE UNTIL ALL NECESSARY EASEMENT DOCUMENTS HAVE BEEN SIGNED AND RECORDED.
10. WHENEVER CONSTRUCTION ACTIVITIES ARE TAKING PLACE WITHIN AN EXISTING EASEMENT, THE CONTRACTOR SHALL CONFINE THEIR WORK TO WITHIN THE BOUNDS OF SAID EASEMENT. PRIOR TO FINAL ACCEPTANCE, THE CONTRACTOR SHALL BE RESPONSIBLE FOR REMOVING ALL TRASH AND DEBRIS WITHIN ANY PERMANENT OR TEMPORARY EASEMENTS. CLEAN-UP SHALL BE TO THE SATISFACTION OF THE CITY OF ROUND ROCK CIVIL INSPECTOR AND/OR THE CITY ENGINEER.
11. PRIOR TO ANY CONSTRUCTION, THE CONTRACTOR SHALL APPLY FOR AND SECURE ALL PROPER PERMITS FROM THE APPROPRIATE AUTHORITIES.
12. AVAILABLE PERMANENT BENCHMARKS (CITY OF ROUND ROCK DATUM) WITH VERTICAL DATUM INFORMATION THAT MAY BE UTILIZED FOR THE CONSTRUCTION OF THIS PROJECT AND ARE DESCRIBED AS FOLLOWS:

    VERTICAL DATUM: NAVD88
    GEOID: 18

    BM #51471 MAG NAIL SET "GCP 2"
    SET AT THE NORTHEAST CORNER OF THE INTERSECTION OF STATE HIGHWAY 45 AND COUNTRY ROAD 172, +/-5.5' FROM "YIELD" SIGN.
    A: 10147640.83
    E: 3127942.60
    ELEV.= 841.70'

    BM #51473 MAG NAIL SET "GCP 3"
    SET IN THE NORTH RIGHT-OF-WAY LINE OF HESTERS CROSSING RAOD, +/-560' FROM THE INTERSECTION FO HESTERS CROSSING ROAD AND COUNTY ROAD 172, +/-100' FROM CONCRETE SIGN "ENCOMPASS HEALTH".
    N: 10149343.04
    E: 3128315.81
    ELEV.= 812.19'

TRENCH SAFETY NOTES:

1. IN ACCORDANCE WITH THE LAWS OF THE STATE OF TEXAS AND THE U.S. OCCUPATIONAL SAFETY AND HEALTH ADMINISTRATION (OSHA) REGULATIONS, ALL TRENCHES OVER 5 FEET IN DEPTH, IN EITHER HARD AND COMPACT OR SOFT AND UNSTABLE SOIL, SHALL BE SLOPED, SHORED, SHEETED, BRACED OR OTHERWISE SUPPORTED. FURTHERMORE, ALL TRENCHES LESS THAN 5 FEET IN DEPTH SHALL ALSO BE EFFECTIVELY PROTECTED WHEN HAZARDOUS GROUND MOVEMENT MAY BE EXPECTED. TRENCH SAFETY SYSTEMS TO BE UTILIZED FOR THIS PROJECT SHALL BE PROVIDED AS PART OF A PACKAGE REQUIRED PRIOR TO THE PRE-CONSTRUCTION MEETING AND ANY CONSTRUCTION ACTIVITIES.
2. IN ACCORDANCE WITH THE U.S. OCCUPATIONAL SAFETY AND HEALTH ADMINISTRATION REGULATIONS, WHEN PERSONS ARE IN TRENCHES 4 FEET DEEP OR MORE, ADEQUATE MEANS OF EXIT, SUCH AS A LADDER OR STEPS, MUST BE PROVIDED AND LOCATED IN SUCH A MANNER AS TO REQUIRE NO MORE THAN 25 FEET OF LATERAL TRAVEL.
3. IF TRENCH SAFETY SYSTEM DETAILS WERE NOT PROVIDED IN THE PLANS BECAUSE TRENCHES WERE ANTICIPATED TO BE LESS THAN 5 FEET IN DEPTH BUT, DURING CONSTRUCTION, IT IS FOUND THAT TRENCHES ARE IN FACT 5 FEET OR MORE IN DEPTH (OR) TRENCHES LESS THAN 5 FEET IN DEPTH ARE IN AN AREA WHERE HAZARDOUS GROUND MOVEMENT IS EXPECTED, ALL CONSTRUCTION SHALL CEASE, THE TRENCHED AREA SHALL BE BARRICADED AND THE DESIGN ENGINEER NOTIFIED IMMEDIATELY. CONSTRUCTION SHALL NOT RESUME UNTIL APPROPRIATE TRENCH SAFETY SYSTEM DETAILS, AS DESIGNED BY A PROFESSIONAL ENGINEER, ARE SUBMITTED TO THE CITY OF ROUND ROCK FOR REVIEW AND APPROVAL.

STREET AND DRAINAGE NOTES:

1. ALL TESTING SHALL BE DONE BY AN INDEPENDENT LABORATORY AT THE OWNER'S EXPENSE. ANY RETESTING SHALL BE PAID FOR BY THE CONTRACTOR. A CITY INSPECTOR SHALL BE PRESENT DURING ALL TESTS. TESTING SHALL BE COORDINATED WITH THE CITY INSPECTOR, AND THEY SHALL BE GIVEN A MINIMUM 24-HOUR NOTICE PRIOR TO ANY TESTING.
2. PUBLIC ROADWAYS CONSTRUCTED AS PART OF ANY DEVELOPMENT PERMIT SHALL BE FREE FROM DEFECTS, PATCHES, OR REPAIRS PRIOR TO ACCEPTANCE BY THE CITY OF ROUND ROCK. ROADWAYS SHALL HAVE A CLEAR SURFACE FREE FROM ANY GOUGES, MARRING, OR CRACKING TO BE CONSIDERED SUITABLE TO THE CITY OF ROUND ROCK TRANSPORTATION DEPT. NO NEW ROADWAYS SHALL BE ACCEPTED UNTIL ALL CONSTRUCTION TRAFFIC RELATED TO THIS OR ANY ASSOCIATED PERMIT HAS CEASED, AND THE ROADWAY IS OPEN TO AND EXCLUSIVELY USED BY THE GENERAL PUBLIC.
3. BACKFILL BEHIND THE CURB SHALL BE COMPACTED TO OBTAIN A MINIMUM OF 95% MAXIMUM DENSITY TO WITHIN 3" OF TOP OF CURB. MATERIAL USED SHALL BE PRIMARILY GRANULAR WITH NO ROCKS LARGER THAN 6" IN THE GREATEST DIMENSION. THE REMAINING 3" SHALL BE CLEAN TOPSOIL FREE FROM ALL CLUMPS AND SUITABLE FOR SUSTAINING PLANT LIFE.
4. THE DEPTH OF COVER FOR ALL CROSSINGS UNDER PAVEMENT INCLUDING GAS, ELECTRIC, TELEPHONE, CABLE TV, WATER SERVICES, ETC. SHALL BE A MINIMUM OF 30" BELOW SUBGRADE.
5. STREET RIGHTS-OF-WAY SHALL BE GRADED AT A SLOPE OF 1/4" PER FOOT TOWARD THE CURB UNLESS OTHERWISE INDICATED. HOWEVER, IN NO CASE SHALL THE WIDTH OF RIGHT-OF-WAY AT 1/4" PER FOOT SLOPE BE LESS THAN 10 FEET UNLESS A SPECIFIC REQUEST FOR AN ALTERNATE GRADING SCHEME IS SUBMITTED TO AND APPROVED BY THE CITY OF ROUND ROCK PLANNING AND DEVELOPMENT SERVICES DEPARTMENT.
6. BARRICADES, BUILT TO CITY OF ROUND ROCK STANDARDS, SHALL BE CONSTRUCTED ON ALL DEAD-END STREETS AND, AS NECESSARY, DURING CONSTRUCTION TO MAINTAIN JOB AND PUBLIC SAFETY.
7. ALL REINFORCED CONCRETE PIPE (RCP) SHALL BE MINIMUM CLASS III. ALL PUBLIC RCP SHALL BE A MINIMUM OF 18-INCHES IN DIAMETER.
8. THE SUBGRADE MATERIAL FOR THE STREETS SHOWN HEREIN WAS TESTED BY ECS SOUTHWEST, LLP ON THIS DATE: MARCH 22, 2024 AND THE PAVING SECTIONS DESIGNED IN ACCORDANCE WITH THE CURRENT CITY OF ROUND ROCK DESIGN CRITERIA. THE PAVING SECTIONS ARE TO BE CONSTRUCTED AS FOLLOWS:

PAVEMENT SECTION	PORTLAND CEMENT	ASPHALT SURFACE	ASPHALT BASE COURSE	LIME STAB. THICKNESS
STANDARD DUTY (RIGID)	5 IN			4 IN
STANDARD DUTY (ASPHALT)		2 IN	3 IN	15 IN
HEAVY-DUTY (RIGID)	8 IN			6 IN
HEAVY-DUTY (ASPHALT)		2 IN	4 IN	19 IN
EXTRA HEAVY-DUTY	8 IN			6 IN

THE GEOTECHNICAL ENGINEER SHALL INSPECT THE SUBGRADE FOR COMPLIANCE WITH THE DESIGN ASSUMPTIONS MADE DURING PREPARATION OF THE ACCEPTED GEOTECHNICAL REPORT. ANY ADJUSTMENTS THAT ARE REQUIRED SHALL BE MADE THROUGH REVISION OF THE CONSTRUCTION PLANS AND ADDENDUM TO ANY ACCEPTED GEOTECHNICAL REPORT.

9. WHERE PLASTICITY INDEX (PI) IS OVER 20, SUBGRADES MUST BE STABILIZED UTILIZING A METHOD ACCEPTABLE TO THE PLANNING AND DEVELOPMENT SERVICES DEPARTMENT. THE GEOTECHNICAL ENGINEER SHALL RECOMMEND AN APPROPRIATE SUBGRADE STABILIZATION IF SULFATES ARE DETERMINED TO BE PRESENT. WHEN UTILIZING LIME FOR SOIL STABILIZATION, PLACEMENT SHALL BE IN THE FORM OF LIME SLURRY, NOT PELLETS.
10. FIELD DENSITY CONTROL REQUIREMENTS

SOIL DESCRIPTION	DENSITY, PERCENT TEX-115-E	MOISTURE CONTENT TEX-115-E
PI<15	≥ 98% D_A* AND ≤ 105% D_A	N/A
15 ≤ PI ≤ 35	≥ 98% D_A AND ≤ 102% D_A	≥ W_{OPT} + 3%
PI > 35	≥ 95% D_A AND ≤100% D_A	≥ W_{OPT} +3%

WATER AND WASTEWATER NOTES:

1. PIPE MATERIAL FOR WATER MAINS SHALL BE PVC (AWWA C-900, MIN. CLASS 200), OR DUCTILE IRON (AWWA C-100, MIN. CLASS 200). WATER SERVICES (2" OR LESS) SHALL BE POLYETHYLENE TUBING (BLACK, 200 PSI, DR 9).
2. PIPE MATERIAL FOR PRESSURE WASTEWATER MAINS SHALL BE PVC (AWWA C-900, MIN. CLASS 150), SDR26 HIGHER PRESSURE RATED (160 PSI), OR DUCTILE IRON (AWWA C-100, MIN. CLASS 200). PIPE MATERIAL FOR GRAVITY WASTEWATER MAINS SHALL BE SDR26 PVC, PVC (ASTM D2241 OR D3034, MAX. DR-26), DUCTILE IRON (AWWA C-100, MIN. CLASS 200).
3. UNLESS OTHERWISE ACCEPTED BY THE PLANNING AND DEVELOPMENT SERVICES DEPARTMENT, MINIMUM DEPTH OF COVER FOR ALL LINES OUTSIDE OF THE PAVED AREAS SHALL BE 42" BELOW FINISHED GRADE AND 30" BELOW SUBGRADE FOR ALL LINES LOCATED IN PAVED AREAS.
4. ALL FIRE HYDRANT AND SPRINKLER LEADS SHALL BE DUCTILE IRON PIPE (AWWA C-100, MIN. CLASS 200).
5. ALL DUCTILE IRON PIPE AND FITTINGS SHALL BE WRAPPED WITH A MINIMUM OF 8-MIL POLYETHYLENE AND SEALED WITH DUCT TAPE OR EQUAL ACCEPTED BY THE CITY OF ROUND ROCK CIVIL INSPECTOR.
6. THE CONTRACTOR SHALL CONTACT THE CITY OF ROUND ROCK INSPECTOR TO COORDINATE UTILITY TIE-INS AND NOTIFY THEM AT LEAST 48 HOURS PRIOR TO CONNECTING TO ANY EXISTING LINES.
7. ALL MANHOLES SHALL BE CONCRETE WITH CAST IRON RING AND COVER. ALL MANHOLES LOCATED OUTSIDE OF THE PAVEMENT SHALL HAVE BOLTED COVERS. CORE CONNECTIONS TO FIBERGLASS MANHOLES ARE PROHIBITED.
8. THE CONTRACTOR MUST OBTAIN A BULK WATER PERMIT OR PURCHASE AND INSTALL A WATER METER FOR ALL WATER USED DURING CONSTRUCTION. A COPY OF THIS PERMIT MUST ALWAYS BE POSSESSED BY ANY PARTIES WHO UTILIZE WATER. CONTACT WATER DISTRIBUTION AT (512) 801-4435 FOR ADDITIONAL INFORMATION.
9. LINE FLUSHING, OR ANY ACTIVITY USING A LARGE QUANTITY OF WATER, MUST BE SCHEDULED A MINIMUM (10) DAYS IN ADVANCE WITH THE CITY OF ROUND ROCK CIVIL INSPECTOR.
10. THE CONTRACTOR, AT HIS EXPENSE, SHALL PERFORM STERILIZATION OF ALL POTABLE WATER LINES CONSTRUCTED AND SHALL PROVIDE ALL EQUIPMENT (INCLUDING TEST GAUGES), SUPPLIES (INCLUDING CONCENTRATED CHLORINE DISINFECTING MATERIAL), AND NECESSARY LABOR REQUIRED FOR THE STERILIZATION PROCEDURE. THE STERILIZATION PROCEDURE SHALL BE MONITORED BY THE CITY OF ROUND ROCK CIVIL INSPECTOR. WATER SAMPLES WILL BE COLLECTED BY THE CITY OF ROUND ROCK TO VERIFY EACH TREATED LINE HAS ATTAINED AN INITIAL CHLORINE CONCENTRATION OF 50 PPM. WHERE MEANS OF FLUSHING IS NECESSARY, THE CONTRACTOR, AT HIS EXPENSE, SHALL PROVIDE FLUSHING DEVICES AND REMOVE SAID DEVICES PRIOR TO FINAL ACCEPTANCE BY THE CITY OF ROUND ROCK.
11. SAMPLING TAPS SHALL BE BROUGHT UP TO 3 FEET ABOVE GRADE AND SHALL BE EASILY ACCESSIBLE FOR CITY PERSONNEL. AT THE CONTRACTOR'S REQUEST, AND IN THEIR PRESENCE, SAMPLES FOR BACTERIOLOGICAL TESTING WILL BE COLLECTED BY THE CITY OF ROUND ROCK NOT LESS THAN (24) HOURS AFTER THE TREATED LINE HAS BEEN FLUSHED OF THE CONCENTRATED CHLORINE SOLUTION AND CHARGED WITH WATER APPROVED BY THE CITY. THE CONTRACTOR SHALL SUPPLY A CHECK OR MONEY ORDER, PAYABLE TO THE CITY OF ROUND ROCK, TO COVER THE FEE CHARGED FOR TESTING EACH WATER SAMPLE. FEE AMOUNTS MAY BE OBTAINED BY CONTACTING THE CITY OF ROUND ROCK ENVIRONMENTAL SERVICES LABORATORY AT (512) 218-5561 OR WATERLAB@ROUNDROCKTEXAS.GOV.
12. THE CONTRACTOR, AT THEIR EXPENSE, SHALL PERFORM QUALITY TESTING FOR ALL WASTEWATER PIPE INSTALLED AND PRESSURE PIPE HYDROSTATIC TESTING OF ALL WATERLINES CONSTRUCTED. THE CONTRACTOR SHALL PROVIDE ALL EQUIPMENT (INCLUDING PUMPS AND GAUGES), SUPPLIES, AND LABOR NECESSARY TO PERFORM THESE TESTS. QUALITY AND PRESSURE TESTING SHALL BE MONITORED BY THE CITY OF ROUND ROCK CIVIL INSPECTOR.
13. THE CONTRACTOR SHALL COORDINATE TESTING WITH THE CITY OF ROUND ROCK CIVIL INSPECTOR AND PROVIDE NO LESS THAN (24) HOURS OF NOTICE PRIOR TO PERFORMING STERILIZATION, QUALITY TESTING, OR PRESSURE TESTING.
14. THE CONTRACTOR (OR SUBCONTRACTORS) SHALL NOT OPEN OR CLOSE ANY VALVES UNLESS DIRECTED TO DO SO BY CITY OF ROUND ROCK PERSONNEL.
15. ALL VALVE BOXES AND COVERS SHALL BE CAST IRON.
16. ALL WATER SERVICE, WASTEWATER SERVICE AND VALVE LOCATIONS SHALL BE APPROPRIATELY MARKED AS FOLLOWS:

- WATER SERVICE "W" ON TOP OF CURB (BLUE COLOR)
- WASTEWATER SERVICE "S" ON TOP OF CURB
- VALVE "V" ON FACE OF CURB

17. TOOLS FOR MARKING THE CURB SHALL BE PROVIDED BY THE CONTRACTOR. OTHER APPROPRIATE MEANS OF MARKING SERVICE AND VALVE LOCATIONS SHALL BE PROVIDED IN AREAS WITHOUT CURBS. SUCH MEANS OF MARKING SHALL BE AS SPECIFIED BY THE DESIGN ENGINEER AND APPROVED BY THE CITY OF ROUND ROCK.
18. CONTACT THE CITY OF ROUND ROCK UTILITIES AND ENVIRONMENTAL SERVICES (UES) DEPARTMENT FOR ASSISTANCE IN DETERMINING EXISTING WATER AND WASTEWATER LOCATIONS.
19. THE CITY OF ROUND ROCK FIRE DEPARTMENT SHALL BE NOTIFIED (48) HOURS PRIOR TO THE TESTING OF ANY BUILDING SPRINKLER PIPING SO THAT THEY MAY BE PRESENT TO MONITOR SUCH TESTING.
20. SAND, AS DESCRIBED IN SPECIFICATION ITEM 510 PIPE, SHALL NOT BE USED AS BEDDING FOR WATER AND WASTEWATER LINES. ACCEPTABLE BEDDING MATERIALS ARE PIPE BEDDING STONE, PEA GRAVEL AND, IN LIEU OF SAND, A NATURALLY OCCURRING OR MANUFACTURED STONE MATERIAL CONFORMING TO ASTM C33 FOR STONE QUALITY AND MEETING THE FOLLOWING GRADATION SPECIFICATION:

SIEVE SIZE	PERCENT RETAINED BY WEIGHT
1/2"	0
3/8"	0-2
#4	40-85
#10	95-100

21. THE CONTRACTOR IS HEREBY NOTIFIED THAT CONNECTING TO, SHUTTING DOWN, OR TERMINATING EXISTING UTILITY LINES MAY HAVE TO OCCUR AT OFF-PEAK HOURS. SUCH HOURS ARE USUALLY OUTSIDE NORMAL WORKING HOURS (7AM - 4 PM) AND POSSIBLY BETWEEN 12 AM AND 6 AM.
22. ALL WASTEWATER CONSTRUCTION SHALL BE IN ACCORDANCE WITH THE TEXAS COMMISSION ON ENVIRONMENTAL QUALITY (TCEQ) REGULATIONS, 30 TAC CHAPTER 213 AND 217, AS APPLICABLE. ALL WATER CONSTRUCTION SHALL BE IN ACCORDANCE WITH TCEQ REGULATIONS, 30 TAC CHAPTER 290. WHENEVER TCEQ AND CITY OF ROUND ROCK SPECIFICATIONS CONFLICT, THE MORE STRINGENT SHALL APPLY.

TRAFFIC MARKING NOTES:

1. ANY METHODS, STREET MARKINGS AND SIGNAGE NECESSARY FOR WARNING MOTORISTS, WARNING PEDESTRIANS, OR DIVERTING TRAFFIC DURING CONSTRUCTION SHALL CONFORM TO THE TEXAS MANUAL OF UNIFORM TRAFFIC CONTROL DEVICES FOR STREETS AND HIGHWAYS (TMUTCD), LATEST EDITION.
2. ALL PAVEMENT MARKINGS, MARKERS, PAINT, TRAFFIC BUTTONS, TRAFFIC CONTROLS, AND SIGNS SHALL BE INSTALLED IN ACCORDANCE WITH THE TEXAS DEPARTMENT OF TRANSPORTATION STANDARD SPECIFICATIONS FOR CONSTRUCTION OF HIGHWAYS, STREETS AND BRIDGES AND, THE TEXAS MANUAL OF UNIFORM TRAFFIC CONTROL DEVICES FOR STREETS AND HIGHWAYS, LATEST EDITIONS.

EROSION AND SEDIMENTATION CONTROL NOTES:

1. EROSION CONTROL MEASURES, SITE WORK, AND RESTORATION WORK SHALL BE IN ACCORDANCE WITH THE CITY OF ROUND ROCK DESIGN AND CONSTRUCTION STANDARDS (DACS) AND CODE OF ORDINANCES.
2. ALL SLOPES SHALL BE SODDED OR SEEDED WITH APPROVED GRASS, GRASS MIXTURES, OR GROUND COVER THAT IS SUITABLE TO THE AREA AND THE SEASON IN WHICH THEY ARE APPLIED.
3. SILT FENCES, ROCK BERMS, SEDIMENTATION BASINS, AND SIMILARLY RECOGNIZED TECHNIQUES AND MATERIALS SHALL BE EMPLOYED DURING CONSTRUCTION TO PREVENT POINT SOURCE SEDIMENTATION LOADING OF DOWNSTREAM FACILITIES. INSTALLATION AND CONDITION SHALL BE REGULARLY INSPECTED BY THE CITY OF ROUND ROCK FOR EFFECTIVENESS. ADDITIONAL MEASURES MAY BE REQUIRED IF, IN THE OPINION OF THE CITY ENGINEER, THEY ARE WARRANTED.
4. ALL TEMPORARY EROSION CONTROL MEASURES SHALL NOT BE REMOVED UNTIL REVEGETATION HAS BEEN ESTABLISHED AND APPROVAL RECEIVED FROM THE CIVIL INSPECTOR. IT SHALL BE THE RESPONSIBILITY OF THE CONTRACTOR TO MAINTAIN ALL TEMPORARY EROSION CONTROL STRUCTURES AND TO REMOVE ALL ONCE APPROVED TO DO SO BY THE CIVIL INSPECTOR.
5. ALL MUD, DIRT, ROCKS, DEBRIS, ETC., SPILLED, TRACKED, OR OTHERWISE DEPOSITED ON EXISTING PAVED STREETS, DRIVES AND AREAS USED BY THE PUBLIC SHALL BE CLEANED UP IMMEDIATELY.

ROUND ROCK FIRE DEPARTMENT NOTES:

1. GENERAL: ALL DEVELOPMENTS SHALL COMPLY WITH THE CURRENT FIRE CODE, APPENDICES, AND ANY LOCAL AMENDMENTS AS ADOPTED BY THE CITY OF ROUND ROCK.
2. COMBUSTIBLE MATERIALS ON-SITE: ALL-WEATHER ACCESS ROADS/DRIVES (ASPHALT/CONCRETE CAPABLE OF SUPPORTING 80,000 LB. APPARATUS LOADING) SHALL BE CONSTRUCTED, AND ALL WATER LINES SHALL BE TESTED AND FIRE HYDRANTS IN-SERVICE, PRIOR TO BRINGING COMBUSTIBLE MATERIALS (WOOD, PACKAGING, PLASTICS, ETC.) ON ANY JOB SITE. BASE MATERIAL IS NOT ACCEPTABLE FOR FIRE ACCESS ROADS/DRIVES.
3. FIRE LANES: FIRE APPARATUS ACCESS ROADS/DRIVES SHALL HAVE A MINIMUM UNOBSTRUCTED WIDTH OF (20) FEET. WHERE TRAFFIC IS TWO-WAY DIRECTIONAL, BUILDINGS EXCEED (30) FEET OR THREE STORIES IN HEIGHT, TOTAL BUILDING AREA EXCEEDS 62,000 SQUARE FEET, OR WHERE HYDRANTS ARE LOCATED ALONG THE FIRE ACCESS ROADS, THE MINIMUM WIDTH SHALL BE (26) FEET. IF RAISED CURBING OR MEDIANS COMPROMISE MINIMUM WIDTH, CURBING SHALL BE MOUNTABLE AND RAISED AREA SHALL CONTAIN NO OBSTRUCTIONS SUCH AS LANDSCAPING, SIGNAGE, GROUND-MOUNTED EQUIPMENT, ETC.
4. ALL-WEATHER SURFACE: THE PAVEMENT STRUCTURE FOR FIRE ACCESS ROADS/DRIVES MUST BE ALL- WEATHER SURFACE (ASPHALT/CONCRETE) DESIGNED TO SUPPORT AN 80,000 LB. APPARATUS LOADING.
5. GRADE: THE GRADE THROUGH THE FIRE LANE ACCESS SHALL NOT EXCEED 7% AND NO GRADE BREAKS SHALL EXCEED 3%.
6. TURNING RADII: TURNING RADII SHALL BE A MINIMUM OF 25-FTT INSIDE AND 50-FT OUTSIDE AS MEASURED FROM FACE-OF-CURB (WHEN PRESENT) OR ON DRIVABLE, PAVED SURFACE.
7. VERTICAL CLEARANCE: THE VERTICAL CLEARANCE OVER A DESIGNATED FIRE LANE SHALL NOT BE LESS THAN 13'-6".
8. EMERGENCY RESPONDER RADIO COVERAGE: ADEQUATE EMERGENCY RESPONDER RADIO COVERAGE SHALL BE REQUIRED FOR ALL NEW BUILDINGS. A PRE-ENHANCEMENT RADIO SURVEY SHALL BE REQUIRED AT THE 80% CONSTRUCTION PHASE FOR CERTAIN BUILDING TYPES BASED ON THE SIZE OF THE BUILDING. PRE- ENHANCEMENT RADIO SURVEY REQUIREMENTS INCLUDE THE FOLLOWING BUILDING TYPES:
   - GREATER THAN (5) STORIES
   - BELOW GRADE PLANE
   - WOOD FRAMED CONSTRUCTION GREATER THAN 50,000 SF
   - CONCRETE OR METAL FRAMED CONSTRUCTION GREATER THAN 25,000 SF
9. REQUIRED FIRE FLOWS: A PROJECT'S MINIMUM FIRE FLOW FOR THE LARGEST BUILDING SHALL BE MEASURED AT (20) PSI RESIDUAL PRESSURE THAT IS AVAILABLE FOR FIREFIGHTING PER THE FLOWS ON TABLES B105.1 OR B105.2 OF THE INTERNATIONAL FIRE CODE (IFC), APPENDIX B. DISCLAIMER: IT IS THE RESPONSIBILITY OF THE DEVELOPER AND ENGINEER TO ENSURE THESE MINIMUM FIRE FLOW REQUIREMENTS FOR THE SITE ARE MET VIA FLOW TESTING AND WATER MODELING.
10. SPRINKER SYSTEMS: BUILDINGS EQUIPPED WITH ANY FIRE DEPARTMENT CONNECTIONS (FDC) SHALL HAVE A FIRE HYDRANT LOCATED WITHIN 100' OF THE FDC (REMOTE FDC IS PERMISSIBLE). FDC SHALL BE IDENTIFIED ON THE SITE VIA SIGNAGE.
11. GATES: IF GATES ARE PROVIDED ALONG ANY FIRE ACCESS ROAD/DRIVE, MINIMUM PASSABLE WIDTH SHALL NOT BE LESS THAN (20) FEET AND SHALL COMPLY WITH IFC APPENDIX D AND ROUND ROCK CODE OF ORDINANCES REGARDING EMERGENCY ACCESS SYSTEMS. GATES WILL REQUIRE A KNOX-BOX® KEY BOX THAT SHALL CONTAIN KEYS TO GAIN NECESSARY ACCESS AS REQUIRED BY THE FIRE CODE OFFICIAL.

CONSTRUCTION SUMMARY

Pipe Size	WATER	
	TYPE	LENGTH (LF)
2"	BLACK POLY DR9	60
12"	DUCTILE IRON	324

VALVES	
Size	Total
12"	8

THESE PLAN AND GENERAL NOTES REFER TO:
GEOTECHNICAL REPORT BY ECS SOUTHWEST, LLP, ECS PROJECT NUMBER 17:6399-A
DATED: MARCH 22, 2024
INCLUDING ALL REVISIONS AND ADDENDA TO THIS REPORT THAT MAY HAVE BEEN RELEASED AFTER THE NOTED DATE.

CONTRACTOR FIELD SET

This plan set shall remain on the site or subdivision premises for the life of the project and shall be utilized for any and all improvements contained herein.

BENCHMARKS

BM #51471 MAG NAIL SET "GCP 2"
SET AT THE NORTHEAST CORNER OF THE INTERSECTION OF STATE HIGHWAY 45 AND COUNTY ROAD 172, ±5.5' FROM "YIELD" SIGN.
N: 10147640.83
E: 3127942.60
ELEV.= 841.70'

BM #51473 MAG NAIL SET "GCP 3"
SET IN THE NORTH RIGHT-OF-WAY LINE OF HESTERS CROSSING ROAD, ±560' FROM THE INTERSECTION OF HESTERS CROSSING ROAD AND COUNTY ROAD 172, ±100 FROM CONCRETE SIGN "ENCOMPASS HEALTH".
N: 10149343.04
E: 3128315.81
ELEV.= 812.19'

© COPYRIGHT 2022 KIMLEY-HORN AND ASSOCIATES, INC., ALL RIGHTS RESERVED

No.	REVISIONS	DATE	BY

Kimley»Horn
© 2025 KIMLEY-HORN AND ASSOCIATES, INC.
10814 JOLLYVILLE ROAD, CAMPUS IV, SUITE 200, AUSTIN, TX 78759
PHONE: 512-418-1771 FAX: 512-418-1791
WWW.KIMLEY-HORN.COM
TEXAS REGISTERED ENGINEERING FIRM F-928

NICHOLAS C. BROWN 107175 LICENSED PROFESSIONAL ENGINEER
03/26/2025

KHA PROJECT 069284918	SCALE: AS SHOWN	DESIGNED BY: MM	DRAWN BY: MM	CHECKED BY: NCB
DATE MARCH 2025				

GENERAL NOTES

2525 CR 172
INDUSTRIAL
CITY OF ROUND ROCK
WILLIAMSON COUNTY, TEXAS

SHEET NUMBER
7 OF 227

SDP24-00001

Plotted By:Non_Joyce Date:April 17, 2025 03:25:41pm File Path:K:\AUS_Civil\092849\18 — DAUS Round Rock\Cad\PlanSheets-SDP\C-KH General Notes.dwg
This document, together with the concepts and designs presented herein, as an instrument of service, is intended only for the specific purpose and client for which it was prepared. Reuse of and improper reliance on this document without written authorization and adaptation by Kimley»Horn and Associates, Inc. shall be without liability to Kimley»Horn and Associates, Inc.

KH GENERAL NOTES

OVERALL:

1. ALL CONSTRUCTION AND MATERIALS SHALL BE IN ACCORDANCE WITH THESE PLANS, CITY (OR TOWN) STANDARD DETAILS AND SPECIFICATIONS, THE FINAL GEOTECHNICAL REPORT AND ALL ISSUED ADDENDA, AND COMMONLY ACCEPTED CONSTRUCTION STANDARDS. THE CITY SPECIFICATIONS SHALL GOVERN WHERE OTHER SPECIFICATIONS DO NOT EXIST. IN CASE OF CONFLICTING SPECIFICATIONS OR DETAILS, THE MORE RESTRICTIVE SPECIFICATION AND DETAIL SHALL BE FOLLOWED.
2. THE CONTRACTOR SHALL COMPLY WITH CITY (OR TOWN) "GENERAL NOTES" FOR CONSTRUCTION, IF EXISTING AND REQUIRED BY THE CITY. FOR INSTANCES WHERE THEY CONFLICT WITH THESE KH GENERAL NOTES, THEN THE MORE RESTRICTIVE SHALL APPLY.
3. THE CONTRACTOR SHALL FURNISH ALL MATERIAL AND LABOR TO CONSTRUCT THE FACILITY AS SHOWN AND DESCRIBED IN THE CONSTRUCTION DOCUMENTS IN ACCORDANCE WITH THE APPROPRIATE AUTHORITIES' SPECIFICATIONS AND REQUIREMENTS.
4. THE CONTRACTOR SHALL VISIT THE SITE PRIOR TO BIDDING TO DETERMINE EXISTING CONDITIONS.
5. THE EXISTING CONDITIONS SHOWN ON THESE PLANS WERE PROVIDED BY THE TOPOGRAPHIC SURVEY PREPARED BY THE PROJECT SURVEYOR, AND ARE BASED ON THE BENCHMARKS SHOWN. THE CONTRACTOR SHALL REFERENCE THESE BENCHMARKS.
6. THE CONTRACTOR SHALL REVIEW AND VERIFY THE EXISTING TOPOGRAPHIC SURVEY SHOWN ON THE PLANS REPRESENTS EXISTING FIELD CONDITIONS PRIOR TO CONSTRUCTION, AND SHALL REPORT ANY DISCREPANCIES FOUND TO THE OWNER AND ENGINEER IMMEDIATELY.
7. IF THE CONTRACTOR DOES NOT ACCEPT THE EXISTING TOPOGRAPHIC SURVEY AS SHOWN ON THE PLANS, WITHOUT EXCEPTION, THEN THE CONTRACTOR SHALL SUPPLY AT THEIR OWN EXPENSE, A TOPOGRAPHIC SURVEY BY A REGISTERED PROFESSIONAL LAND SURVEYOR TO THE OWNER AND ENGINEER FOR REVIEW.
8. CONTRACTOR SHALL PROVIDE ALL CONSTRUCTION SURVEYING AND STAKING.
9. CONTRACTOR SHALL VERIFY HORIZONTAL AND VERTICAL CONTROL, INCLUDING BENCHMARKS PRIOR TO COMMENCING CONSTRUCTION OR STAKING OF IMPROVEMENTS. PROPERTY LINES AND CORNERS SHALL BE HELD AS THE HORIZONTAL CONTROL.
10. THE CONTRACTOR SHALL REVIEW AND VERIFY ALL DIMENSIONS, ELEVATIONS, AND FIELD CONDITIONS THAT MAY AFFECT CONSTRUCTION. ANY DISCREPANCIES ON THE DRAWINGS SHALL BE IMMEDIATELY BROUGHT TO THE ATTENTION OF THE ARCHITECT AND ENGINEER BEFORE COMMENCING WORK. NO FIELD CHANGES OR DEVIATIONS FROM DESIGN ARE TO BE MADE WITHOUT PRIOR APPROVAL OF THE ARCHITECT, ENGINEER, AND IF APPLICABLE THE CITY AND OWNER. NO CONSIDERATION WILL BE GIVEN TO CHANGE ORDERS FOR WHICH THE CITY, ENGINEER, AND OWNER WERE NOT CONTACTED PRIOR TO CONSTRUCTION OF THE AFFECTED ITEM.
11. CONTRACTOR SHALL THOROUGHLY CHECK COORDINATION OF CIVIL, LANDSCAPE, MEP, ARCHITECTURAL, AND OTHER PLANS PRIOR TO COMMENCING CONSTRUCTION. OWNER/ENGINEER SHALL BE NOTIFIED OF ANY DISCREPANCY PRIOR TO COMMENCING WITH CONSTRUCTION.
12. IT IS THE CONTRACTOR'S RESPONSIBILITY TO CONTACT THE VARIOUS UTILITY COMPANIES WHICH MAY HAVE BURIED OR AERIAL UTILITIES WITHIN OR NEAR THE CONSTRUCTION LIMITS BEFORE THEY COMMENCE WORK TO HAVE THEM LOCATE THEIR EXISTING UTILITIES PRIOR TO CONSTRUCTION. THE CONTRACTOR SHALL PROVIDE AN ADEQUATE MINIMUM NOTICE TO ALL UTILITY COMPANIES PRIOR TO BEGINNING CONSTRUCTION.
13. CONTRACTOR SHALL, IN TEXAS 811 AN ADEQUATE AMOUNT OF TIME PRIOR TO COMMENCING CONSTRUCTION OR ANY EXCAVATION.
14. CONTRACTOR SHALL USE EXTREME CAUTION AS THE SITE CONTAINS VARIOUS KNOWN AND UNKNOWN PUBLIC AND PRIVATE UTILITIES.
15. THE LOCATIONS, ELEVATIONS, DEPTH, AND DIMENSIONS OF EXISTING UTILITIES SHOWN ON THE PLANS WERE OBTAINED FROM AVAILABLE UTILITY COMPANY MAPS AND PLANS, AND ARE CONSIDERED APPROXIMATE AND INCOMPLETE. IT SHALL BE THE CONTRACTORS' RESPONSIBILITY TO VERIFY THE PRESENCE, LOCATION, ELEVATION, DEPTH, AND DIMENSION OF EXISTING UTILITIES SUFFICIENTLY IN ADVANCE OF CONSTRUCTION SO THAT ADJUSTMENTS CAN BE MADE TO PROVIDE ADEQUATE CLEARANCES. THE ENGINEER SHALL BE NOTIFIED WHEN A DEVELOPED IMPROVEMENT CONFLICTS WITH AN EXISTING UTILITY.
16. THE CONTRACTOR IS RESPONSIBLE FOR COORDINATING ANY ADJUSTMENTS AND RELOCATIONS OF EXISTING UTILITIES THAT CONFLICT WITH THE DEVELOPED IMPROVEMENTS, INCLUDING BUT NOT LIMITED TO, ADJUSTING EXISTING MANHOLES TO MATCH DEVELOPED GRADE, RELOCATING EXISTING POLES AND GUY WIRES THAT ARE LOCATED IN DEVELOPED DRIVEWAYS, ADJUSTING THE HORIZONTAL OR VERTICAL ALIGNMENT OF EXISTING UTILITIES TO MATCH DEVELOPED GRADE OR CROSSING DEVELOPED GRADE OR CROSSING WITH A DEVELOPED UTILITY, AND ANY OTHERS THAT MAY BE ENCOUNTERED THAT ARE UNKNOWN AT THIS TIME AND NOT SHOWN ON THESE PLANS.
17. CONTRACTOR SHALL ARRANGE FOR OR PROVIDE, AT ITS EXPENSE, ALL GAS, TELECOMMUNICATIONS, CABLE, OVERHEAD AND UNDERGROUND POWER LINE, AND UTILITY POLE ADJUSTMENTS NEEDED.
18. CONTRACTOR IS RESPONSIBLE FOR COORDINATING INSTALLATION OF FRANCHISE UTILITIES THAT ARE NECESSARY FOR ON-SITE AND OFF-SITE CONSTRUCTION, AND SERVICE TO THE DEVELOPED DEVELOPMENT.
19. THE CONTRACTOR SHALL BE FULLY RESPONSIBLE FOR ALL DAMAGES DUE TO THE CONTRACTORS' FAILURE TO EXACTLY LOCATE AND PRESERVE ALL UTILITIES. THE OWNER OR ENGINEER WILL ASSUME NO LIABILITY FOR ANY DAMAGES SUSTAINED OR COST INCURRED BECAUSE OF THE OPERATIONS IN THE VICINITY OF EXISTING UTILITIES OR STRUCTURES. IF IT IS NECESSARY TO TEMPORARILY SWING OR RELOCATE A UTILITY, THE UTILITY COMPANY OR DEPARTMENT AFFECTED SHALL BE CONTACTED BY THE CONTRACTOR AND THEIR PERMISSION OBTAINED REGARDING THE METHOD TO USE FOR SUCH WORK.
20. BRACING OF UTILITY POLES MAY BE REQUIRED BY THE UTILITY COMPANIES WHEN TRENCHING OR EXCAVATING IN CLOSE PROXIMITY TO THE POLES. THE COST OF BRACING POLES WILL BE BORNE BY THE CONTRACTOR, WITH NO SEPARATE PAY ITEM FOR THIS WORK. THE COST IS INCIDENTAL TO THE PAY ITEM.
21. CONTRACTOR SHALL USE ALL NECESSARY SAFETY PRECAUTIONS TO AVOID CONTACT WITH OVERHEAD AND UNDERGROUND POWER LINES. CONTRACTOR SHALL COMPLY WITH ALL APPLICABLE LOCAL, STATE, FEDERAL AND UTILITY OWNER REGULATIONS PERTAINING TO WORK SETBACKS FROM POWER LINES.
22. THE CONTRACTOR SHALL BE RESPONSIBLE TO OBTAIN ALL REQUIRED CONSTRUCTION PERMITS, APPROVALS, AND BONDS PRIOR TO CONSTRUCTION.
23. THE CONTRACTOR SHALL HAVE AVAILABLE AT THE JOB SITE AT ALL TIMES A COPY OF THE CONTRACT DOCUMENTS INCLUDING PLANS, GEOTECHNICAL REPORT AND ADDENDA, PROJECT AND CITY SPECIFICATIONS, AND SPECIAL CONDITIONS, COPIES OF ANY REQUIRED CONSTRUCTION PERMITS, EROSION CONTROL PLANS, SWPPP AND INSPECTION REPORTS.
24. ALL SHOP DRAWINGS AND OTHER DOCUMENTS THAT REQUIRE ENGINEER REVIEW SHALL BE SUBMITTED BY THE CONTRACTOR SUFFICIENTLY IN ADVANCE OF CONSTRUCTION OF THAT ITEM, SO THAT NO LESS THAN 10 BUSINESS DAYS FOR REVIEW AND RESPONSE IS AVAILABLE.
25. ALL NECESSARY INSPECTIONS AND/OR CERTIFICATIONS REQUIRED BY CODES, JURISDICTIONAL AGENCIES, AND/OR UTILITY SERVICE COMPANIES SHALL BE PERFORMED PRIOR TO USE OF THE FACILITY AND THE FINAL CONNECTION OF SERVICES.
26. CONTRACTOR SHALL ARRANGE FOR REQUIRED CITY INSPECTIONS.
27. CONTRACTOR'S BID PRICE SHALL INCLUDE ALL INSPECTION FEES.
28. ALL SYMBOLS SHOWN ON THESE PLANS (E.G. FIRE HYDRANT, METERS, VALVES, INLETS, ETC...) ARE FOR PRESENTATION PURPOSES ONLY AND ARE NOT TO SCALE. CONTRACTOR SHALL COORDINATE FINAL SIZES AND LOCATIONS WITH APPROPRIATE SUBCONTRACTOR.
29. THE SCOPE OF WORK FOR THE CIVIL IMPROVEMENTS SHOWN ON THESE PLANS TERMINATES 5-FEET FROM THE BUILDING. REFERENCE THE BUILDING PLANS (E.G. ARCHITECTURAL, STRUCTURAL, MEP) FOR AREAS WITHIN 5-FEET OF THE BUILDING AND WITHIN THE BUILDING FOOTPRINT.
30. REFER TO ARCHITECTURAL AND STRUCTURAL PLANS FOR ALL FINAL BUILDING DIMENSIONS.
31. THE DEVELOPED BUILDING FOOTPRINT(S) SHOWN IN THESE PLANS WAS PROVIDED TO KIMLEY-HORN AND ASSOCIATES, INC. (KH) BY THE PROJECT ARCHITECT AT THE TIME THESE PLANS WERE PREPARED. IT MAY NOT BE THE FINAL CORRECT VERSION BECAUSE THE BUILDING DESIGN WAS ONGOING. THE CONTRACTOR IS SOLELY RESPONSIBLE TO VERIFY WHAT PART OF THE BUILDING THE ARCHITECT'S FOOTPRINT REPRESENTS (E.G. SLAB, OUTSIDE WALL, MASONRY LEDGE, ETC. ...) AND TO CONFIRM ITS FINAL POSITION ON THE SITE BASED ON THE FINAL ARCHITECTURAL FOOTPRINT, CIVIL DIMENSION CONTROL PLAN, SURVEY BOUNDARY AND/OR PLAT. ANY DIFFERENCES FOUND SHALL BE REPORTED TO KH IMMEDIATELY.
32. ALL CONSTRUCTION SHALL COMPLY WITH THE PROJECT'S FINAL GEOTECHNICAL REPORT (OR LATEST EDITION), INCLUDING SUBSEQUENT ADDENDA.
33. CONTRACTOR IS RESPONSIBLE FOR ALL MATERIALS TESTING AND CERTIFICATION, UNLESS SPECIFIED OTHERWISE BY OWNER. ALL MATERIALS TESTING SHALL BE COORDINATED WITH THE APPROPRIATE CITY INSPECTOR AND COMPLY WITH CITY STANDARD SPECIFICATIONS AND GEOTECHNICAL REPORT. TESTING SHALL BE PERFORMED BY AN APPROVED INDEPENDENT AGENCY FOR TESTING MATERIALS. OWNER SHALL APPROVE THE AGENCY NOMINATED BY THE CONTRACTOR FOR MATERIALS TESTING.
34. ALL COPIES OF MATERIALS TEST RESULTS SHALL BE SENT TO THE OWNER, ENGINEER AND ARCHITECT DIRECTLY FROM THE TESTING AGENCY.
35. IT SHALL BE THE CONTRACTORS RESPONSIBILITY TO SHOW, BY THE STANDARD TESTING PROCEDURES OF THE MATERIALS, THAT THE WORK CONSTRUCTED MEETS THE PROJECT REQUIREMENTS AND CITY SPECIFICATIONS.
36. DUE TO THE POTENTIAL FOR DIFFERENTIAL SOIL MOVEMENT ADJACENT TO THE BUILDING, THE CONTRACTOR SHALL ADHERE TO GEOTECHNICAL REPORT'S RECOMMENDATION FOR SUBGRADE PREPARATION SPECIFIC TO FLATWORK ADJACENT TO THE DEVELOPED BUILDING. THE OWNER AND CONTRACTOR ARE ADVISED TO OBTAIN A GEOTECHNICAL ENGINEER RECOMMENDATION SPECIFIC TO FLATWORK ADJACENT TO THE BUILDING, IF NONE IS CURRENTLY EXISTING.
37. ALL CONTRACTORS MUST CONFINE THEIR ACTIVITIES TO THE WORK AREA. NO ENCROACHMENTS OUTSIDE OF THE WORK AREA WILL BE ALLOWED, ANY DAMAGE RESULTING THEREFROM SHALL BE CONTRACTOR'S RESPONSIBILITY TO REPAIR OR OTHERWISE CORRECT.
38. THE CONTRACTOR SHALL PROTECT ALL EXISTING STRUCTURES, UTILITIES, MANHOLES, POLES, GUY WIRES, VALVE COVERS, VAULT LIDS, FIRE HYDRANTS, COMMUNICATION BOXES/PEDESTALS, AND OTHER FACILITIES TO REMAIN AND SHALL REPAIR ANY DAMAGES AT NO COST TO THE OWNER.
39. THE CONTRACTOR SHALL IMMEDIATELY REPAIR OR REPLACE ANY PHYSICAL DAMAGE TO PRIVATE PROPERTY OR PUBLIC IMPROVEMENTS, INCLUDING BUT NOT LIMITED TO: FENCES, WALLS, SIGNS, PAVEMENT, CURBS, UTILITIES, SIDEWALKS, GRASS, TREES, LANDSCAPING, AND IRRIGATION SYSTEMS, ETC... TO ORIGINAL CONDITION OR BETTER AT NO COST TO THE OWNER.
40. ALL AREAS IN EXISTING RIGHT-OF-WAY DISTURBED BY CONSTRUCTION SHALL BE REPAIRED TO ORIGINAL CONDITION OR BETTER, INCLUDING AS NECESSARY GRADING, LANDSCAPING, CULVERTS, AND PAVEMENT.
41. THE CONTRACTOR SHALL SALVAGE ALL EXISTING POWER POLES, SIGNS, WATER VALVES, FIRE HYDRANTS, METERS, ETC... THAT ARE TO BE RELOCATED DURING CONSTRUCTION.
42. CONTRACTOR SHALL MAINTAIN ADEQUATE SITE DRAINAGE DURING ALL PHASES OF CONSTRUCTION, INCLUDING MAINTAINING EXISTING DITCHES OR CULVERTS FREE OF OBSTRUCTIONS AT ALL TIMES.
43. THE CONTRACTOR IS RESPONSIBLE FOR OBTAINING AND SUBMITTING A TRENCH SAFETY PLAN, PREPARED BY A PROFESSIONAL ENGINEER IN THE STATE OF TEXAS, TO THE CITY PRIOR TO CONSTRUCTION. CONTRACTOR IS RESPONSIBLE FOR MAINTAINING TRENCH SAFETY REQUIREMENTS IN ACCORDANCE WITH CITY, STATE, AND FEDERAL REQUIREMENTS, INCLUDING OSHA FOR ALL TRENCHES. NO OPEN TRENCHES SHALL BE ALLOWED OVERNIGHT WITHOUT PRIOR WRITTEN APPROVAL OF THE CITY.
44. THE CONTRACTOR SHALL KEEP TRENCHES FREE FROM WATER.
45. SITE SAFETY IS SOLELY THE RESPONSIBILITY OF THE CONTRACTOR.
46. THESE PLANS DO NOT EXTEND TO OR INCLUDE ANY SECTIONS PERTAINING TO THE SAFETY OF THE CONTRACTOR OR ITS EMPLOYEES, AGENTS OR REPRESENTATIVES IN THE PERFORMANCE OF THE WORK. THE ENGINEER'S SEAL HEREON DOES NOT EXTEND TO ANY SUCH SAFETY SYSTEM. THE CONTRACTOR SHALL BE RESPONSIBLE FOR IMPLEMENTATION OF ALL REQUIRED SAFETY PROCEDURES AND PROGRAMS.
47. SIGNS RELATED TO SITE OPERATION OR SAFETY ARE NOT INCLUDED IN THESE PLANS.
48. CONTRACTOR OFFICE AND STAGING AREA SHALL BE AGREED ON BY THE OWNER AND CONTRACTOR PRIOR TO BEGINNING OF CONSTRUCTION. CONTRACTOR IS RESPONSIBLE FOR ALL PERMITTING REQUIREMENTS FOR THE CONSTRUCTION OFFICE, TRAILER, STORAGE, AND STAGING OPERATIONS AND LOCATIONS.
49. LIGHT POLES, SIGNS, AND OTHER OBSTRUCTIONS SHALL NOT BE PLACED IN ACCESSIBLE ROUTES.
50. ALL SIGNS, PAVEMENT MARKINGS, AND OTHER TRAFFIC CONTROL DEVICES SHALL CONFORM TO THE "TEXAS MANUAL ON UNIFORM TRAFFIC CONTROL DEVICES".
51. TOP RIM ELEVATIONS OF ALL EXISTING AND DEVELOPED MANHOLES SHALL BE COORDINATED WITH TOP OF PAVEMENT OR FINISHED GRADE AND SHALL BE ADJUSTED TO BE FLUSH WITH THE ACTUAL FINISHED GRADE AT THE TIME OF PAVING.
52. CONTRACTOR SHALL ADJUST ALL EXISTING AND DEVELOPED VALVES, FIRE HYDRANTS, AND OTHER UTILITY APPURTENANCES TO MATCH ACTUAL FINISHED GRADES AT THE TIME OF PAVING.
53. THE CONTRACTOR IS RESPONSIBLE FOR CONSTRUCTION SEQUENCING AND PHASING, AND SHALL CONTACT THE APPROPRIATE CITY OFFICIALS, INCLUDING BUILDING OFFICIAL, ENGINEERING INSPECTOR, AND FIRE MARSHALL TO LEARN OF ANY REQUIREMENTS.
54. CONTRACTOR IS RESPONSIBLE FOR PREPARATION, SUBMITTAL, AND APPROVAL BY THE CITY OF A TRAFFIC CONTROL PLAN PRIOR TO THE START OF CONSTRUCTION, AND THEN THE IMPLEMENTATION OF THE PLAN.
55. CONTRACTOR SHALL KEEP A NEAT AND ACCURATE RECORD OF CONSTRUCTION, INCLUDING ANY DEVIATIONS OR VARIANCES FROM THE PLANS.
56. THE CONTRACTOR SHALL BE RESPONSIBLE FOR PROVIDING AS-BUILT PLANS TO THE ENGINEER AND CITY IDENTIFYING ALL DEVIATIONS AND VARIATIONS FROM THESE PLANS MADE DURING CONSTRUCTION.

EROSION CONTROL:

1. THE CONTRACTOR SHALL COMPLY WITH ALL LOCAL, STATE, AND FEDERAL EROSION CONTROL AND WATER QUALITY REQUIREMENTS, LAWS, AND ORDINANCES THAT APPLY TO THE CONSTRUCTION SITE LAND DISTURBANCE.
2. CONTRACTOR SHALL COMPLY WITH THE REQUIREMENTS OF THE "TCEQ GENERAL PERMIT TO DISCHARGE UNDER THE TEXAS POLLUTANT DISCHARGE ELIMINATION SYSTEM TXR 150000".
3. EROSION CONTROL DEVICES SHOWN ON THE EROSION CONTROL PLAN FOR THE PROJECT SHALL BE INSTALLED PRIOR TO THE START OF LAND DISTURBANCE.
4. ALL EROSION CONTROL DEVICES ARE TO BE INSTALLED IN ACCORDANCE WITH THE APPROVED PLANS AND SPECIFICATIONS FOR THE PROJECT.
5. CONTRACTOR IS SOLELY RESPONSIBLE FOR INSTALLATION, IMPLEMENTATION, MAINTENANCE, AND EFFECTIVENESS OF ALL EROSION CONTROL DEVICES, BEST MANAGEMENT PRACTICES (BMPS), AND FOR UPDATING THE EROSION CONTROL PLAN DURING CONSTRUCTION AS FIELD CONDITIONS CHANGE.
6. CONTRACTOR SHALL DOCUMENT THE DATES OF INSTALLATION, MAINTENANCE OR MODIFICATION, AND REMOVAL FOR EACH BMP EMPLOYED IN THE STORM WATER POLLUTION PREVENTION PLAN (SWPPP) IF APPLICABLE.
7. AS STORM SEWER INLETS ARE INSTALLED ON-SITE, TEMPORARY EROSION CONTROL DEVICES SHALL BE INSTALLED AT EACH INLET PER APPROVED DETAILS.
8. THE EROSION CONTROL DEVICES SHALL REMAIN IN PLACE UNTIL THE AREA IT PROTECTS HAS BEEN PERMANENTLY STABILIZED.
9. CONTRACTOR SHALL PROVIDE ADEQUATE EROSION CONTROL DEVICES NEEDED DUE TO PROJECT PHASING.
10. CONTRACTOR SHALL OBSERVE THE EFFECTIVENESS OF THE EROSION CONTROL DEVICES AND MAKE FIELD ADJUSTMENTS AND MODIFICATIONS AS NEEDED TO PREVENT SEDIMENT FROM LEAVING THE SITE. IF THE EROSION CONTROL DEVICES DO NOT EFFECTIVELY CONTROL EROSION AND PREVENT SEDIMENTATION FROM WASHING OFF THE SITE, THEN THE CONTRACTOR SHALL NOTIFY THE ENGINEER.
11. OFF-SITE SOIL BORROW, SPOIL, AND STORAGE AREAS (IF APPLICABLE) ARE CONSIDERED AS PART OF THE PROJECT SITE AND MUST ALSO COMPLY WITH THE EROSION CONTROL REQUIREMENTS FOR THIS PROJECT. THIS INCLUDES THE INSTALLATION OF BMPS TO CONTROL EROSION AND SEDIMENTATION AND THE ESTABLISHMENT OF PERMANENT GROUND COVER ON DISTURBED AREAS PRIOR TO FINAL APPROVAL OF THE PROJECT. CONTRACTOR IS RESPONSIBLE FOR MODIFYING THE SWPPP AND EROSION CONTROL PLAN TO INCLUDE BMPS FOR ANY OFF-SITE THAT ARE NOT ANTICIPATED OR SHOWN ON THE EROSION CONTROL PLAN.
12. ALL STAGING, STOCKPILES, SPOIL, AND STORAGE SHALL BE LOCATED SUCH THAT THEY WILL NOT ADVERSELY AFFECT STORM WATER QUALITY. PROTECTIVE MEASURES SHALL BE PROVIDED IF NEEDED TO ACCOMPLISH THIS REQUIREMENT, SUCH AS COVERING OR ENCIRCLING THE AREA WITH AN APPROPRIATE BARRIER.
13. CONTRACTORS SHALL INSPECT ALL EROSION CONTROL DEVICES, BMPS, DISTURBED AREAS, AND VEHICLE ENTRY AND EXIT AREAS WEEKLY AND WITHIN 24 HOURS OF ALL RAINFALL EVENTS OF 0.5 INCHES OR GREATER, AND KEEP A RECORD OF THIS INSPECTION IN THE SWPPP BOOKLET IF APPLICABLE, TO VERIFY THAT THE DEVICES AND EROSION CONTROL PLAN ARE FUNCTIONING PROPERLY.
14. CONTRACTOR SHALL CONSTRUCT A STABILIZED CONSTRUCTION ENTRANCE AT ALL PRIMARY POINTS OF ACCESS IN ACCORDANCE WITH CITY SPECIFICATIONS. CONTRACTOR SHALL ENSURE THAT ALL CONSTRUCTION TRAFFIC USES THE STABILIZED ENTRANCE AT ALL TIMES FOR ALL INGRESS/EGRESS.
15. SITE ENTRY AND EXITS SHALL BE MAINTAINED IN A CONDITION THAT WILL PREVENT THE TRACKING AND FLOWING OF SEDIMENT AND DIRT ONTO OFF-SITE ROADWAYS. ALL SEDIMENT AND DIRT FROM THE SITE THAT IS DEPOSITED ONTO AN OFF-SITE ROADWAY SHALL BE REMOVED IMMEDIATELY
16. THE CONTRACTOR IS RESPONSIBLE FOR REMOVING ALL SILT AND DEBRIS FROM THE AFFECTED OFF-SITE ROADWAYS THAT ARE A RESULT OF THE CONSTRUCTION, AS REQUESTED BY OWNER AND CITY. AT A MINIMUM, THIS SHOULD OCCUR ONCE PER DAY FOR THE OFF-SITE ROADWAYS.
17. WHEN WASHING OF VEHICLES IS REQUIRED TO REMOVE SEDIMENT PRIOR TO EXITING THE SITE, IT SHALL BE DONE IN AN AREA STABILIZED WITH CRUSHED STONE THAT DRAINS INTO AN APPROVED SEDIMENT TRAP BMP.
18. CONTRACTOR SHALL INSTALL A TEMPORARY SEDIMENT BASIN FOR ANY ON-SITE DRAINAGE AREAS THAT ARE GREATER THAN 10 ACRES, PER TCEQ AND CITY STANDARDS. IF NO ENGINEERING DESIGN HAS BEEN PROVIDED FOR A SEDIMENTATION BASIN ON THESE PLANS, THEN THE CONTRACTOR SHALL ARRANGE FOR AN APPROPRIATE DESIGN TO BE PROVIDED.
19. ALL FINES IMPOSED FOR SEDIMENT OR DIRT DISCHARGED FROM THE SITE SHALL BE PAID BY THE RESPONSIBLE CONTRACTOR.
20. WHEN SEDIMENT OR DIRT HAS CLOGGED THE CONSTRUCTION ENTRANCE VOID SPACES BETWEEN STONES OR DIRT IS BEING TRACKED ONTO A ROADWAY, THE AGGREGATE PAD MUST BE WASHED DOWN OR REPLACED. RUNOFF FROM THE WASH-DOWN OPERATION SHALL NOT BE ALLOWED TO DRAIN DIRECTLY OFF SITE WITHOUT FIRST FLOWING THROUGH ANOTHER BMP TO CONTROL SEDIMENTATION. PERIODIC RE-GRADING OR NEW STONE MAY BE REQUIRED TO MAINTAIN THE EFFECTIVENESS OF THE CONSTRUCTION ENTRANCE.
21. TEMPORARY SEEDING AND OTHER MEASURES SHALL BE IMPLEMENTED WITHIN 14 DAYS OF THE LAST DISTURBANCE OF ANY AREA, UNLESS ADDITIONAL CONSTRUCTION IN THE AREA IS EXPECTED WITHIN 21 DAYS OF THE LAST DISTURBANCE.
22. CONTRACTOR SHALL FOLLOW GOOD HOUSEKEEPING PRACTICES DURING CONSTRUCTION, ALWAYS CLEANING UP DIRT, LOOSE MATERIAL, AND CONSTRUCTION RELATED DEBRIS.
23. UPON COMPLETION OF FINE GRADING, ALL SURFACES OF DISTURBED AREAS SHALL BE PERMANENTLY STABILIZED. STABILIZATION IS ACHIEVED WHEN THE AREA IS EITHER COVERED BY PERMANENT IMPERVIOUS STRUCTURES, SUCH AS BUILDINGS, SIDEWALK, PAVEMENT, OR A UNIFORM PERENNIAL VEGETATIVE COVER.
24. AT THE CONCLUSION OF THE PROJECT, ALL INLETS, DRAIN PIPE, CHANNELS, DRAINAGEWAYS AND BORROW DITCHES AFFECTED BY THE CONSTRUCTION SHALL BE DREDGED, AND THE SEDIMENT GENERATED BY THE PROJECT SHALL BE REMOVED AND DISPOSED IN ACCORDANCE WITH APPLICABLE REGULATIONS.
25. ANY SEQUENCE OF CONSTRUCTION SHOWN HEREON IS A GENERAL OVERVIEW AND IS INTENDED TO CONVEY THE GENERAL CONCEPTS OF THE EROSION CONTROL DESIGN AND SHOULD NOT BE RELIED UPON FOR CONSTRUCTION PURPOSES. THE CONTRACTOR IS SOLELY RESPONSIBLE FOR DETAILED PHASING AND CONSTRUCTION SEQUENCING NECESSARY TO CONSTRUCT THE DEVELOPED IMPROVEMENTS WHILE MAINTAINING TEMPORARY EROSION CONTROL MEASURES AS NECESSARY. CONTRACTOR TO AND/OR DURING CONSTRUCTION IF ANY ADDITIONAL INFORMATION ON THE CONSTRUCTION SEQUENCE IS NECESSARY. CONTRACTOR IS SOLELY RESPONSIBLE FOR COMPLYING WITH THE REQUIREMENTS OF THE AUTHORITY HAVING JURISDICTION AND ALL OTHER APPLICABLE LAWS.

STORM WATER DISCHARGE AUTHORIZATION:

1. CONTRACTOR SHALL COMPLY WITH TCEQ AND EPA STORM WATER POLLUTION PREVENTION REQUIREMENTS.
2. CONTRACTOR SHALL COMPLY WITH THE REQUIREMENTS OF THE TCEQ GENERAL PERMIT TO DISCHARGE UNDER THE TEXAS POLLUTANT DISCHARGE ELIMINATION SYSTEM TXR 150000.
3. THE CONTRACTOR SHALL SUBMIT THE LIST OF OPERATORS SUBMIT A NOI TO TCEQ AT LEAST SEVEN DAYS PRIOR TO COMMENCING CONSTRUCTION (IF APPLICABLE), OR IF UTILIZING ELECTRONIC SUBMITTAL, PRIOR TO COMMENCING CONSTRUCTION. ALL PRIMARY OPERATORS SHALL PROVIDE A COPY OF THE SIGNED NOI TO THE OPERATOR OF ANY MS4 (TYPICALLY THE CITY) RECEIVING DISCHARGE FROM THE SITE.
4. CONTRACTOR SHALL BE RESPONSIBLE FOR THE IMPLEMENTATION OF THE STORM WATER POLLUTION PREVENTION PLAN (SWPPP) IF APPLICABLE, INCLUDING POSTING SITE NOTICE, INSPECTIONS, DOCUMENTATION, AND SUBMISSION OF ANY INFORMATION REQUIRED BY THE TCEQ AND EPA (E.G. NOT).
5. ALL CONTRACTORS AND SUBCONTRACTORS PROVIDING SERVICES RELATED TO THE SWPPP SHALL SIGN THE REQUIRED CONTRACTOR CERTIFICATION STATEMENT ACKNOWLEDGING THEIR RESPONSIBILITIES AS SPECIFIED IN THE SWPPP.
6. A COPY OF THE SWPPP, INCLUDING ON SITE INSPECTION REPORTS AND ANY REVISIONS, SHALL BE SUBMITTED TO THE CITY BY THE CONTRACTOR AND SHALL BE RETAINED ON-SITE DURING CONSTRUCTION.
7. A NOTICE OF TERMINATION (NOT) SHALL BE SUBMITTED TO TCEQ BY ANY PRIMARY OPERATOR WITHIN 30 DAYS AFTER ALL SOIL DISTURBING ACTIVITIES AT THE SITE HAVE BEEN COMPLETED AND A UNIFORM VEGETATIVE COVER HAS BEEN ESTABLISHED ON ALL UNPAVED AREAS OR EQUIVALENT PERMANENT STABILIZATION HAS BEEN IMPLEMENTED. A TRANSFER OF OPERATIONAL CONTROL HAS OCCURRED, OR THE OPERATOR HAS OBTAINED ALTERNATIVE AUTHORIZATION UNDER A DIFFERENT PERMIT. A COPY OF THE NOT SHALL BE PROVIDED TO THE OPERATOR OF ANY MS4 RECEIVING DISCHARGE FROM THE SITE.

DEMOLITION:

1. KH IS NOT RESPONSIBLE FOR THE MEANS AND METHODS EMPLOYED BY THE CONTRACTOR TO IMPLEMENT THIS DEMOLITION PLAN. THIS PRELIMINARY DEMOLITION PLAN SIMPLY INDICATES THE KNOWN OBJECTS ON THE SUBJECT TRACT THAT ARE TO BE DEMOLISHED AND REMOVED FROM THE SITE.
2. KH DOES NOT WARRANT OR REPRESENT THAT THE PLAN, WHICH WAS PREPARED BASED ON SURVEY AND UTILITY INFORMATION PROVIDED TO KH BY OTHERS, SHOWS ALL IMPROVEMENTS TO BE DEMOLISHED AND REMOVED FROM THE SITE ACCURATELY, OR THAT THE UTILITIES SHOWN CAN BE REMOVED. THE CONTRACTOR IS RESPONSIBLE FOR PERFORMING ITS OWN SITE RECONNAISSANCE TO SCOPE ITS WORK AND TO CONFIRM WITH THE OWNERS OF IMPROVEMENTS AND UTILITIES THE ABILITY AND PROCEDURES FOR THE REMOVAL ON EACH OBJECT.
3. THIS PLAN IS INTENDED TO GIVE A GENERAL GUIDE TO THE CONTRACTOR, NOTHING MORE. THE GOAL OF THE DEMOLITION IS TO LEAVE THE SITE IN A STATE SUITABLE FOR THE CONSTRUCTION OF THE DEVELOPED DEVELOPMENT. REMOVAL OR PRESERVATION OF IMPROVEMENTS, UTILITIES, ETC. TO ACCOMPLISH THIS GOAL ARE THE RESPONSIBILITY OF THE CONTRACTOR.
4. CONTRACTOR IS STRONGLY CAUTIONED TO REVIEW THE FOLLOWING REPORTS DESCRIBING SITE CONDITIONS PRIOR TO BIDDING AND IMPLEMENTING THE DEMOLITION PLAN:
   a. ENVIRONMENTAL SITE ASSESSMENT PROVIDED BY THE OWNER,
   b. ASBESTOS BUILDING INSPECTION REPORT(S) PROVIDED BY THE OWNER,
   c. GEOTECHNICAL REPORT PROVIDED BY THE OWNER,
   d. OTHER REPORTS THAT ARE APPLICABLE AND AVAILABLE.
5. CONTRACTOR SHALL CONTACT THE OWNER TO VERIFY WHETHER ADDITIONAL REPORTS OR AMENDMENTS TO THE ABOVE CITED REPORTS HAVE BEEN PREPARED AND TO OBTAIN/REVIEW/AND COMPLY WITH THE RECOMMENDATION OF SUCH STUDIES PRIOR TO STARTING ANY WORK ON THE SITE.
6. CONTRACTOR SHALL COMPLY WITH ALL LOCAL, STATE, AND FEDERAL REGULATIONS REGARDING THE DEMOLITION OF OBJECTS ON THE SITE AND THE DISPOSAL OF DEBRIS GENERATED BY THE DEMOLITION OFF-SITE. IT IS THE CONTRACTOR'S SOLE RESPONSIBILITY TO REVIEW THE SITE, DETERMINE THE APPLICABLE REGULATIONS, RECEIVE THE REQUIRED PERMITS AND AUTHORIZATIONS, AND COMPLY.
7. KH DOES NOT REPRESENT THAT THE REPORTS AND SURVEYS REFERENCED ABOVE ARE ACCURATE, COMPLETE, OR COMPREHENSIVE SHOWING ALL ITEMS THAT WILL NEED TO BE REMOVED AND REMOVED.
8. SURFACE PAVEMENT INDICATED MAY OVERLAY OTHER HIDD

Twinlake ########################## DM ########
Plotted By: Nan, Joyce Date: April 17, 2025 03:26:05pm File Path: K:\AUS_Civil\069284918 - DAU3 Round Rock\Cad\PlanSheets - SDP\C- Existing Conditions and Demolition Plan.dwg
This document, together with the concepts and designs presented herein, as an instrument of service, is intended only for the specific purpose and client for which it was prepared. Reuse of and improper reliance on this document without written authorization and adoption by Kimley-Horn and Associates, Inc. shall be without liability to Kimley-Horn and Associates, Inc.

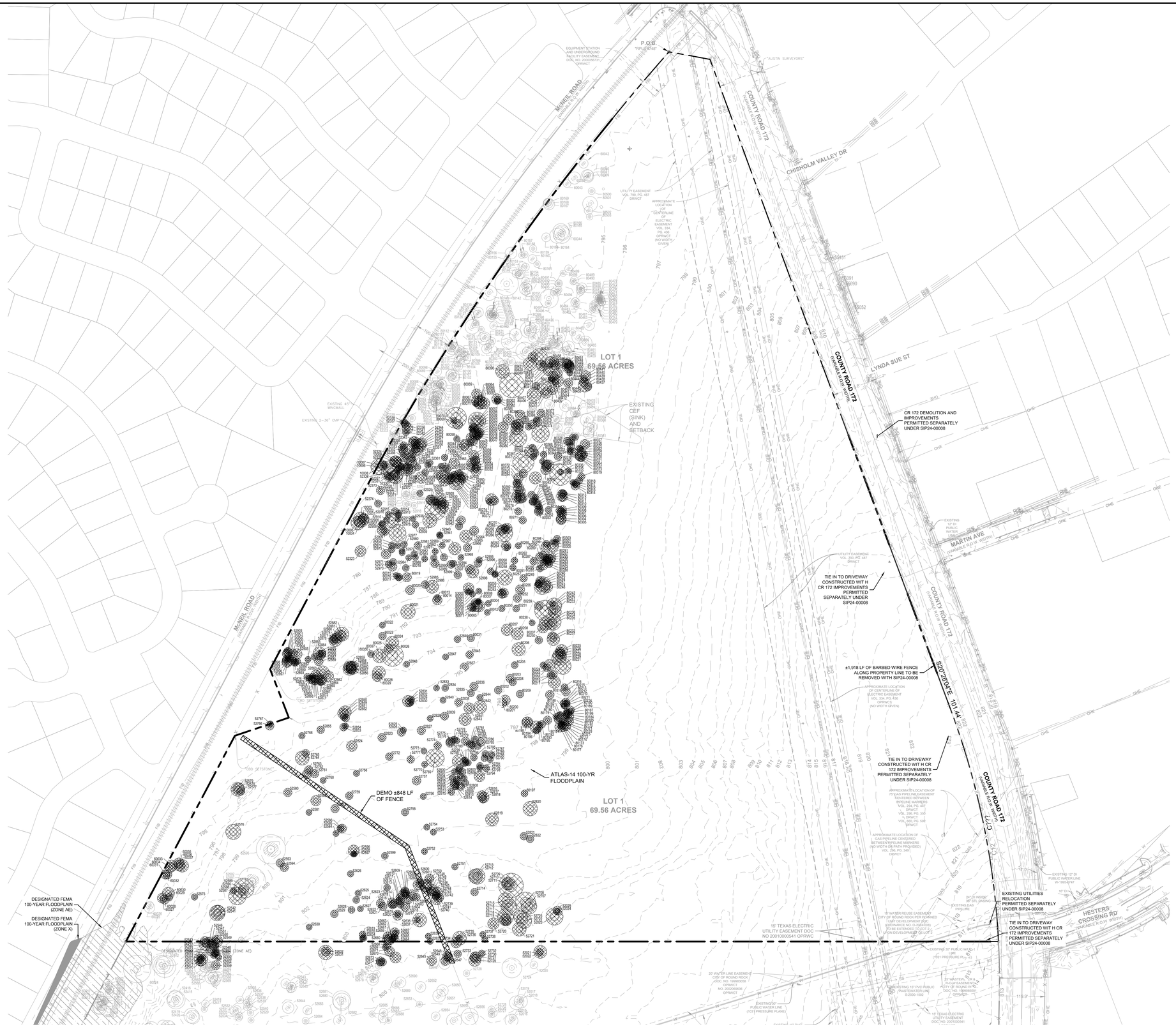



0 120' 240'
GRAPHIC SCALE 120'

LEGEND

- PROPERTY LINE
- ADJACENT PROPERTY LINE
- EASEMENT LINE
- WATER LINE
- WASTEWATER LINE
- STORM SEWER LINE
- GAS
- GUARD RAIL
- OVERHEAR ELECTRIC
- BENCHMARK
- FIRE HYDRANT
- WATER METER
- WATER MANHOLE
- WATER VAULT
- WATER VALVE
- IRRIGATION VALVE
- WASTEWATER CLEANOUT
- WASTEWATER MANHOLE
- STORM SEWER GRATE INLET
- STORM SEWER MANHOLE
- GAS METER
- GAS SIGN
- GAS VALVE
- TELEPHONE BOX
- TELEPHONE MANHOLE
- ELECTRIC BOX
- ELECTRIC METER
- ELECTRIC MANHOLE
- UTILITY POLE
- GUY ANCHOR
- TRAFFIC SIGNAL
- SIGN
- DEMOLITION AREA: ITEMS TO BE REMOVED AS NOTED
- LIMITS OF CONSTRUCTION AREA
- XXXXX — EXISTING TREE TO REMAIN
- XXXXX — MONARCH TREE
- XXXXX — EXISTING TREE TO BE REMOVED
- EXISTING CITY OF ROUND ROCK 1% CHANCE FLOODPLAIN. LAKE CREEK TRIBUTARY 9.
- EXISTING CITY OF ROUND ROCK 4% CHANCE FLOODPLAIN. LAKE CREEK TRIBUTARY 9.
- DESIGNATED FEMA 100-YR FLOODPLAIN (ZONE AE)
- DESIGNATED FEMA 100-YR FLOODPLAIN (ZONE X)

CONTRACTOR FIELD SET

This plan set shall remain on the site or subdivision premises for the life of the project and shall be utilized for any and all improvements contained herein.

BENCHMARKS

BM #51471 MAG NAIL SET "GCP 2" SET AT THE NORTHEAST CORNER OF THE INTERSECTION OF STATE HIGHWAY 45 AND COUNTY ROAD 172, ±5.5' FROM "YIELD" SIGN.
N: 10147640.83
E: 3127942.60
ELEV.= 841.70'

BM #51473 MAG NAIL SET "GCP 3" SET IN THE NORTH RIGHT-OF-WAY LINE OF HESTERS CROSSING ROAD, ±560' FROM THE INTERSECTION OF HESTERS CROSSING ROAD AND COUNTY ROAD 172, ±100 FROM CONCRETE SIGN "ENCOMPASS HEALTH".
N: 10149343.04
E: 3128315.81
ELEV.= 812.19'

No.	REVISIONS	DATE	BY

Kimley»Horn
© 2025 KIMLEY-HORN AND ASSOCIATES, INC.
10814 JOLLYVILLE ROAD, CAMPUS IV, SUITE 200, AUSTIN, TX 78759
PHONE: 512-418-1771 FAX: 512-418-1791
WWW.KIMLEY-HORN.COM
TEXAS REGISTERED ENGINEERING FIRM F-928

STATE OF TEXAS
NICHOLAS C. BROWN
107175
LICENSED
PROFESSIONAL ENGINEER
03/26/2025

KHA PROJECT	069284918
DATE	MARCH 2025
SCALE:	AS SHOWN
DESIGNED BY:	MM
DRAWN BY:	MM
CHECKED BY:	NCB

EXISTING CONDITIONS AND DEMOLITION PLAN

2525 CR 172 INDUSTRIAL

CITY OF ROUND ROCK
WILLIAMSON COUNTY, TEXAS

SHEET NUMBER
9 OF 227

SDP24-00001

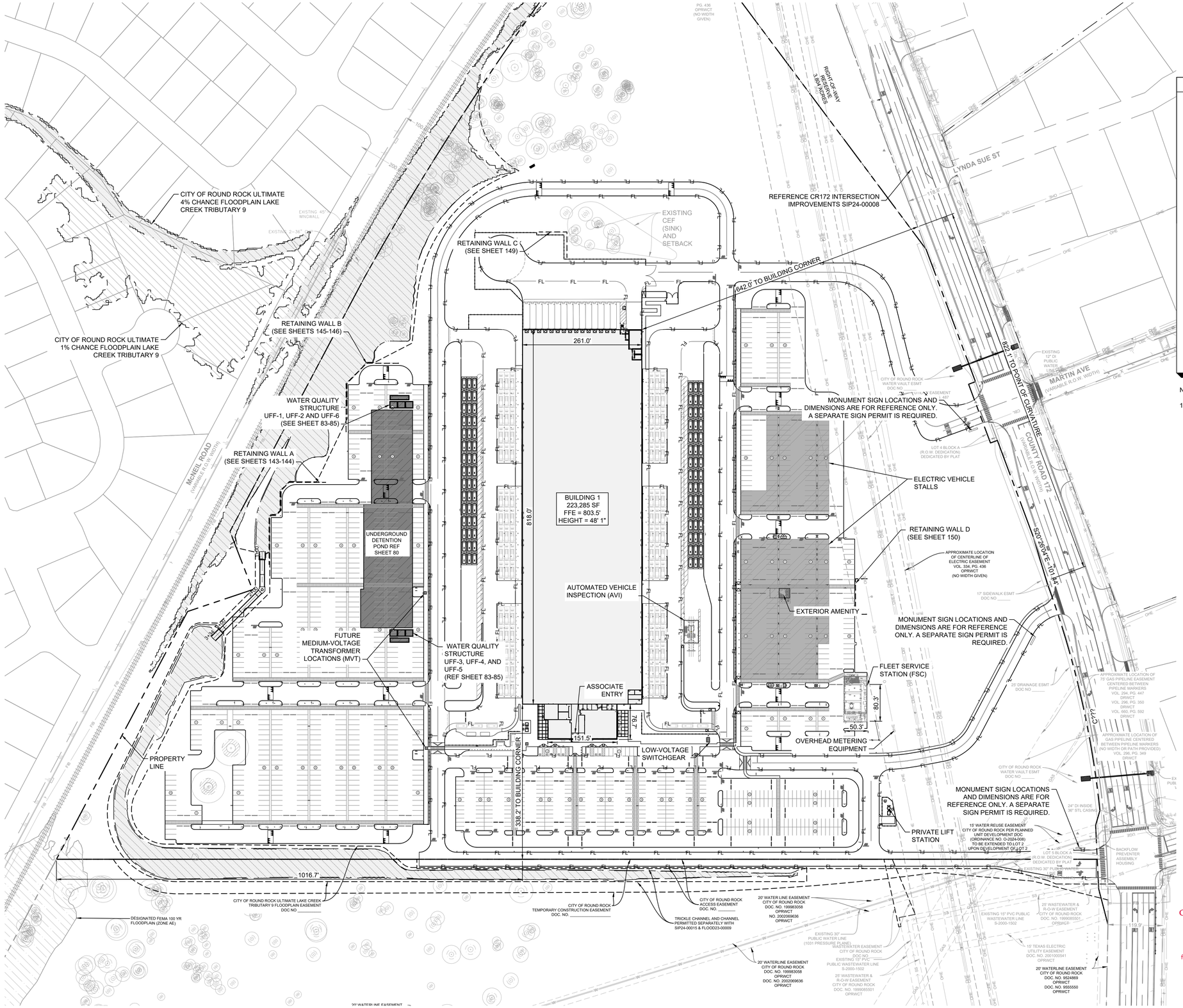

LEGEND

- PROPERTY LINE
- ADA ACCESSIBLE ROUTE
- BUILDING SETBACK
- UPRR ROW
- FIRE LANE MARKING STRIPING
- ELECTRIC VEHICLE PARKING
- UNDERGROUND DETENTION POND
- XXXXX — EXISTING TREE TO REMAIN
- CITY OF ROUND ROCK ULTIMATE 1% CHANCE FLOODPLAIN. LAKE CREEK TRIBUTARY 9.
- CITY OF ROUND ROCK ULTIMATE 4% CHANCE FLOODPLAIN. LAKE CREEK TRIBUTARY 9.

NOTES:

1. MONUMENT SIGNS SHOWN FOR PLANNING PURPOSES ONLY. A SEPARATE SIGN PERMIT IS REQUIRED.

PROVIDED PARKING	
TYPE	AMOUNT
9'X18' (ASSOCIATE STALLS)	357
9'X18' (ADA ASSOCIATE STALLS)	8
11'X24' (VAN STALLS)	908
LOADING	15
TOTAL	1288
REQUIRED	134

PARKING CATEGORY BY BUILDING	
BUILDING 1	
TOTAL BUILDING AREA (SQFT)	223,285
INDOOR STORAGE AREA (90%) (SQFT)	210826
OFFICE (SQFT)	12,459
PROVIDED PARKING	357
REQUIRED PARKING	134
1 STALL PER 2500 SQFT OF STORAGE	84
1 STALL PER 25 SQFT OF OFFICE	50

BENCHMARKS

BM #51471 MAG NAIL SET "GCP 2"
SET AT THE NORTHEAST CORNER OF THE INTERSECTION OF STATE HIGHWAY 45 AND COUNTY ROAD 172, ±5.5' FROM "YIELD" SIGN.
N: 10147640.83
E: 3127942.60
ELEV.= 841.70'

BM #51473 MAG NAIL SET "GCP 3"
SET IN THE NORTH RIGHT-OF-WAY LINE OF HESTERS CROSSING ROAD, ±560' FROM THE INTERSECTION OF HESTERS CROSSING ROAD AND COUNTY ROAD 172, ±100 FROM CONCRETE SIGN "ENCOMPASS HEALTH".
N: 10149343.04
E: 3128315.81
ELEV.= 812.19'

CONTRACTOR FIELD SET

This plan set shall remain on the site or subdivision premises for the life of the project and shall be utilized for any and all improvements contained herein.

No.	REVISIONS	DATE	BY

Kimley»Horn
© 2025 KIMLEY-HORN AND ASSOCIATES, INC.
10814 JOLLYVILLE ROAD, CAMPUS IV, SUITE 200, AUSTIN, TX 78759
PHONE: 512-418-1771 FAX: 512-418-1791
WWW.KIMLEY-HORN.COM
TEXAS REGISTERED ENGINEERING FIRM F-928

NICHOLAS C. BROWN
107175
LICENSED PROFESSIONAL ENGINEER
03/26/2025

KHA PROJECT 069284918
DATE MARCH 2025
SCALE: AS SHOWN
DESIGNED BY: MM
DRAWN BY: MM
CHECKED BY: NCB

OVERALL SITE PLAN

2525 CR 172 INDUSTRIAL

CITY OF ROUND ROCK
WILLIAMSON COUNTY, TEXAS

SHEET NUMBER
21 OF 227

SDP24-00001

Posted By: Nam, Joyce Date: April 17, 2025 04:08:16pm File Path: K:\AUS_Civil\069284918 — DAU3 Round Rock\Cad\PlanSheets-SDP\C-Overall Site Plan.dwg
This document, together with the concepts and designs presented herein, as an instrument of service, is intended only for the specific purpose and client for which it was prepared. Reuse of and improper reliance on this document without written authorization and adaptation by Kimley-Horn and Associates, Inc. shall be without liability to Kimley-Horn and Associates, Inc.

Plotted By: Nam, Joyce Date: April 17, 2025 03:51:19pm File Path: K:\AUS_Civil\069284910 – DAU3 Round Rock\Cad\PlanSheets–SDP\C–Site Plan.dwg
This document, together with the concepts and designs presented herein, as an instrument of service, is intended only for the specific purpose and client for which it was prepared. Reuse of and improper reliance on this document without written authorization and adoption by Kimley-Horn and Associates, Inc. shall be without liability to Kimley-Horn and Associates, Inc.

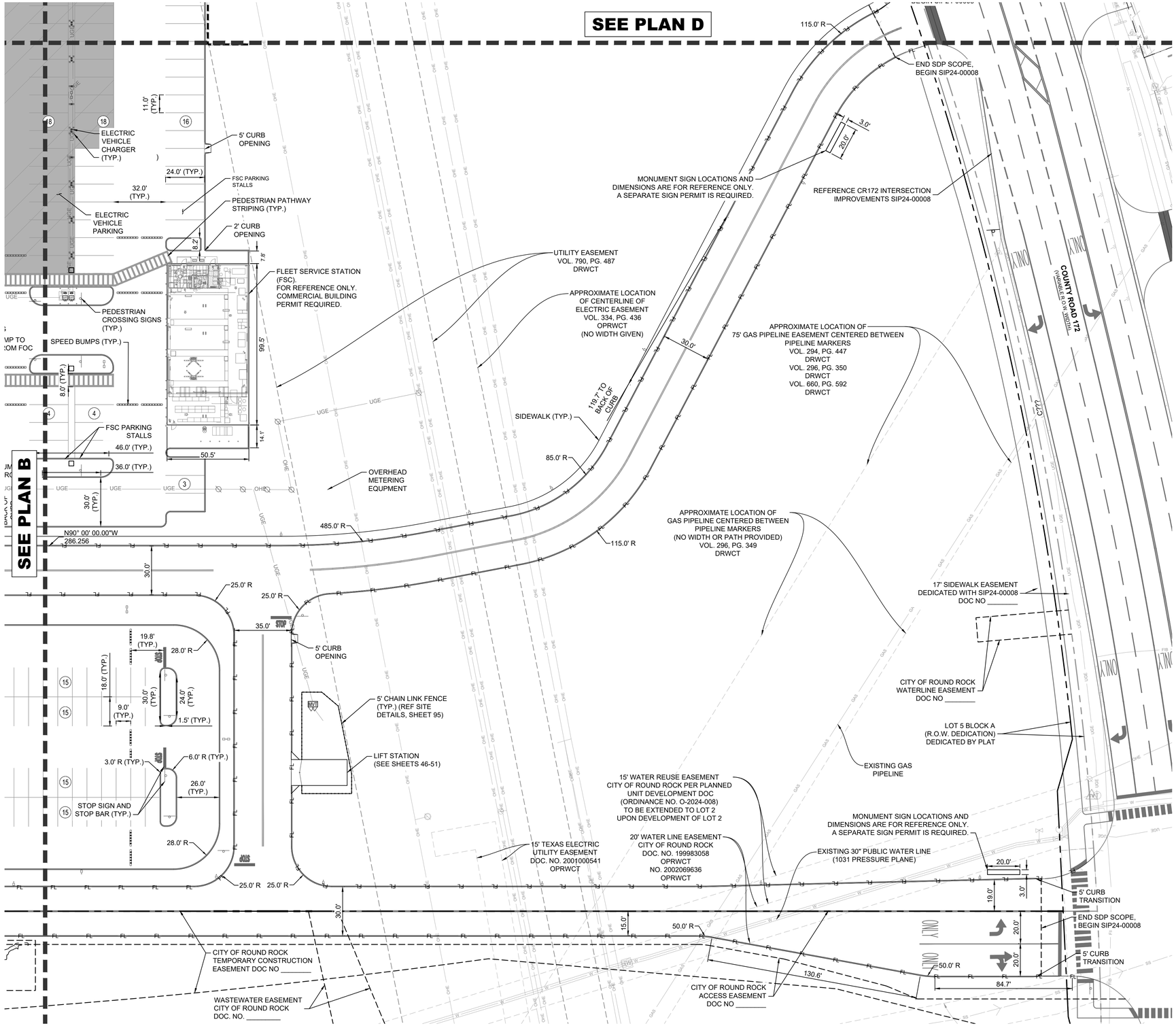

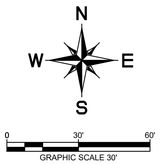

LEGEND

- PROPERTY LINE
- BUILDING SETBACK
- FIRE LANE MARKING STRIPING
- SITE LIGHTING
- ELECTRIC VEHICLE PARKING
- UNDERGROUND DETENTION POND
- PARKING STALL COUNT (REGULAR) (XX)
- PARKING STALL COUNT (HANDICAP) (XX HC)
- EXISTING TREE TO REMAIN (XXXXX)

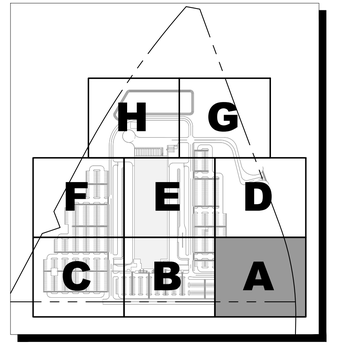

KEYMAP
N.T.S

NOTES:

1. ALL FIRE DEPARTMENT ACCESS DRIVES/ROADS TO HAVE A MINIMUM 13'-6" VERTICAL CLEARANCE.
2. FIRE LANE STRIPING TO BE 6" WIDE RED PAINT WITH "NO PARKING FIRE LANE" IN 4" TALL WHITE LETTERS. WORDING MAY NOT BE SPACED MORE THAN 30' APART. STRIPING TO BE PAINTED ON THE FACE OF CURB WHEN PRESENT AND PAINTED FLAT ON THE PARKING SURFACE WHEN IT IS NOT.
3. EVERY HANDICAP ACCESSIBLE PARKING SPACE SHALL BE IDENTIFIED BY A SIGN CENTERED 5 FEET ABOVE THE PARKING SURFACE, AT THE HEAD OF THE PARKING SPACE. THE SIGN MUST INCLUDE THE INTERNATIONAL SYMBOL OF ACCESSIBILITY AND STATE RESERVED, OR EQUIVALENT LANGUAGE. SUCH SIGNS SHALL NOT BE OBSCURED BY A VEHICLE PARKED IN THE SPACE AND SHALL MEET THE CRITERIA SET FORTH IN UBC, 3108(c) AND ANSI A1171-1986-4.6.2.
4. CONTRACTOR TO HAVE STAKING VERIFIED BY OWNER PRIOR TO PROCEEDING WITH CONSTRUCTION.
5. ALL DIMENSIONS ARE TO FACE OF CURB UNLESS OTHERWISE NOTED.
6. ALL RADII TO BE 3' UNLESS OTHERWISE NOTED.
7. SEE OVERALL SITE PLAN ON SHEET 21 FOR ADDITIONAL INFORMATION.
8. RETAINING WALLS OVER FOUR FEET IN HEIGHT MEASURED FROM THE BOTTOM OF FOOTING TO THE TOP OF THE WALL SHALL BE ENGINEERED AND REQUIRE A SEPARATE BUILDING PERMIT [IBC 105.2].
9. SCREENING FOR SOLID WASTE COLLECTION AND LOADING AREAS SHALL BE THE SAME AS, OR OF EQUAL QUALITY TO, PRINCIPAL BUILDING MATERIALS.
10. MONUMENT SIGNS SHOWN FOR PLANNING PURPOSES ONLY. A SEPARATE SIGN PERMIT IS REQUIRED.

BENCHMARKS

BM #51471 MAG NAIL SET "GCP 2" SET AT THE NORTHEAST CORNER OF THE INTERSECTION OF STATE HIGHWAY 45 AND COUNTY ROAD 172, ±5.5' FROM "YIELD" SIGN.
N: 10147640.83
E: 3127942.60
ELEV.= 841.70'

BM #51473 MAG NAIL SET "GCP 3" SET IN THE NORTH RIGHT-OF-WAY LINE OF HESTERS CROSSING ROAD, ±560' FROM THE INTERSECTION OF HESTERS CROSSING ROAD AND COUNTY ROAD 172, ±100 FROM CONCRETE SIGN "ENCOMPASS HEALTH".
N: 10149343.04
E: 3128315.81
ELEV.= 812.19'

CONTRACTOR FIELD SET

This plan set shall remain on the site or subdivision premises for the life of the project and shall be utilized for any and all improvements contained herein.

No.	REVISIONS	DATE	BY

Kimley»Horn
© 2025 KIMLEY-HORN AND ASSOCIATES, INC.
10814 JOLLYVILLE ROAD, CAMPUS IV, SUITE 200, AUSTIN, TX 78759
PHONE: 512-418-1771 FAX: 512-418-1791
WWW.KIMLEY-HORN.COM
TEXAS REGISTERED ENGINEERING FIRM F-928

NICHOLAS C. BROWN
107175
LICENSED
PROFESSIONAL ENGINEER
03/26/2025

KHA PROJECT	069284918
DATE	MARCH 2025
SCALE:	AS SHOWN
DESIGNED BY:	MM
DRAWN BY:	MM
CHECKED BY:	NCB

SITE PLAN A

2525 CR 172
INDUSTRIAL
CITY OF ROUND ROCK
WILLIAMSON COUNTY, TEXAS

SHEET NUMBER
22 OF 227

SDP24-00001

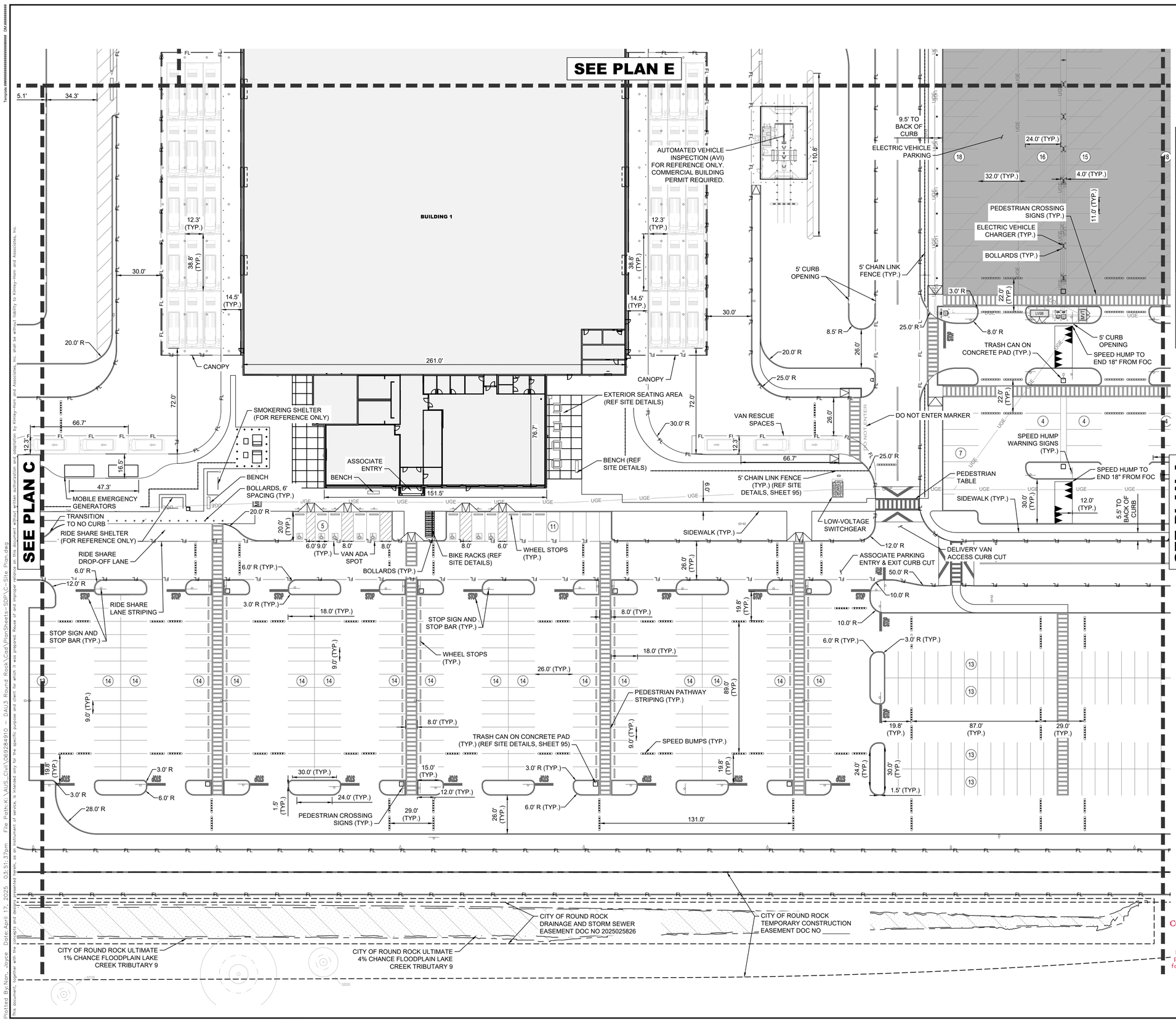

KEYMAP
N.T.S

NOTES:

1. ALL FIRE DEPARTMENT ACCESS DRIVES/ROADS TO HAVE A MINIMUM 13'-6" VERTICAL CLEARANCE.
2. FIRE LANE STRIPING TO BE 6" WIDE RED PAINT WITH "NO PARKING FIRE LANE" IN 4" TALL WHITE LETTERS. WORDING MAY NOT BE SPACED MORE THAN 30' APART. STRIPING TO BE PAINTED ON THE FACE OF CURB WHEN PRESENT AND PAINTED FLAT ON THE PARKING SURFACE WHEN IT IS NOT.
3. EVERY HANDICAP ACCESSIBLE PARKING SPACE SHALL BE IDENTIFIED BY A SIGN CENTERED 5 FEET ABOVE THE PARKING SURFACE, AT THE HEAD OF THE PARKING SPACE. THE SIGN MUST INCLUDE THE INTERNATIONAL SYMBOL OF ACCESSIBILITY AND STATE RESERVED, OR EQUIVALENT LANGUAGE. SUCH SIGNS SHALL NOT BE OBSCURED BY A VEHICLE PARKED IN THE SPACE AND SHALL MEET THE CRITERIA SET FORTH IN UBC, 3108(c) AND ANSI A1171-1986-4.6.2.
4. CONTRACTOR TO HAVE STAKING VERIFIED BY OWNER PRIOR TO PROCEEDING WITH CONSTRUCTION.
5. ALL DIMENSIONS ARE TO FACE OF CURB UNLESS OTHERWISE NOTED.
6. ALL RADII TO BE 3' UNLESS OTHERWISE NOTED.
7. SEE OVERALL SITE PLAN ON SHEET 21 FOR ADDITIONAL INFORMATION.
8. RETAINING WALLS OVER FOUR FEET IN HEIGHT MEASURED FROM THE BOTTOM OF FOOTING TO THE TOP OF THE WALL SHALL BE ENGINEERED AND REQUIRE A SEPARATE BUILDING PERMIT [IBC 105.2].
9. SCREENING FOR SOLID WASTE COLLECTION AND LOADING AREAS SHALL BE THE SAME AS, OR OF EQUAL QUALITY TO, PRINCIPAL BUILDING MATERIALS.

BENCHMARKS

BM #51471 MAG NAIL SET "GCP 2"
SET AT THE NORTHEAST CORNER OF THE INTERSECTION OF STATE HIGHWAY 45 AND COUNTY ROAD 172, ±5.5' FROM "YIELD" SIGN.
N: 10147640.83
E: 3127942.60
ELEV.= 841.70'

BM #51473 MAG NAIL SET "GCP 3"
SET IN THE NORTH RIGHT-OF-WAY LINE OF HESTERS CROSSING ROAD, ±560' FROM THE INTERSECTION OF HESTERS CROSSING ROAD AND COUNTY ROAD 172, ±100 FROM CONCRETE SIGN "ENCOMPASS HEALTH".
N: 10149343.04
E: 3128315.81
ELEV.= 812.19'

CONTRACTOR FIELD SET

This plan set shall remain on the site or subdivision premises for the life of the project and shall be utilized for any and all improvements contained herein.

No.	REVISIONS	DATE	BY

Kimley»Horn
© 2025 KIMLEY-HORN AND ASSOCIATES, INC.
10814 JOLLYVILLE ROAD, CAMPUS IV, SUITE 200, AUSTIN, TX 78759
PHONE: 512-418-1771 FAX: 512-418-1791
WWW.KIMLEY-HORN.COM
TEXAS REGISTERED ENGINEERING FIRM F-928

NICHOLAS C. BROWN
107175
LICENSED
PROFESSIONAL ENGINEER
03/26/2025

KHA PROJECT 069284918
DATE MARCH 2025
SCALE: AS SHOWN
DESIGNED BY: MM
DRAWN BY: MM
CHECKED BY: NCB

SITE PLAN B

2525 CR 172 INDUSTRIAL
CITY OF ROUND ROCK
WILLIAMSON COUNTY, TEXAS

SHEET NUMBER
23 OF 227

SDP24-00001

Plotted By: Nom, Joyce Date: April 17, 2025 03:51:37pm File Path: K:\AUS_Civil\069284910 — DAU3 Round Rock\Cad\PlanSheets-SDP\C-Site Plan.dwg
This document, together with the concepts and designs presented herein, as an instrument of service, is intended only for the specific purpose and client for which it was prepared. Reuse of and improper reliance on this document without written authorization and adaptation by Kimley-Horn and Associates, Inc. shall be without liability to Kimley-Horn and Associates, Inc.

Plotted By:Nan, Joyce Date:April 17, 2025 03:51:51pm File Path:K:\AUS_Civil\069284910 — DAU3 Round Rock\Cad\PlanSheets—SDP\C—Site Plan.dwg
This document, together with the concepts and designs presented herein, as an instrument of service, is intended only for the specific purpose and client for which it was prepared. Reuse of and improper reliance on this document without written authorization and adaptation by Kimley-Horn and Associates, Inc. shall be without liability to Kimley-Horn and Associates, Inc.

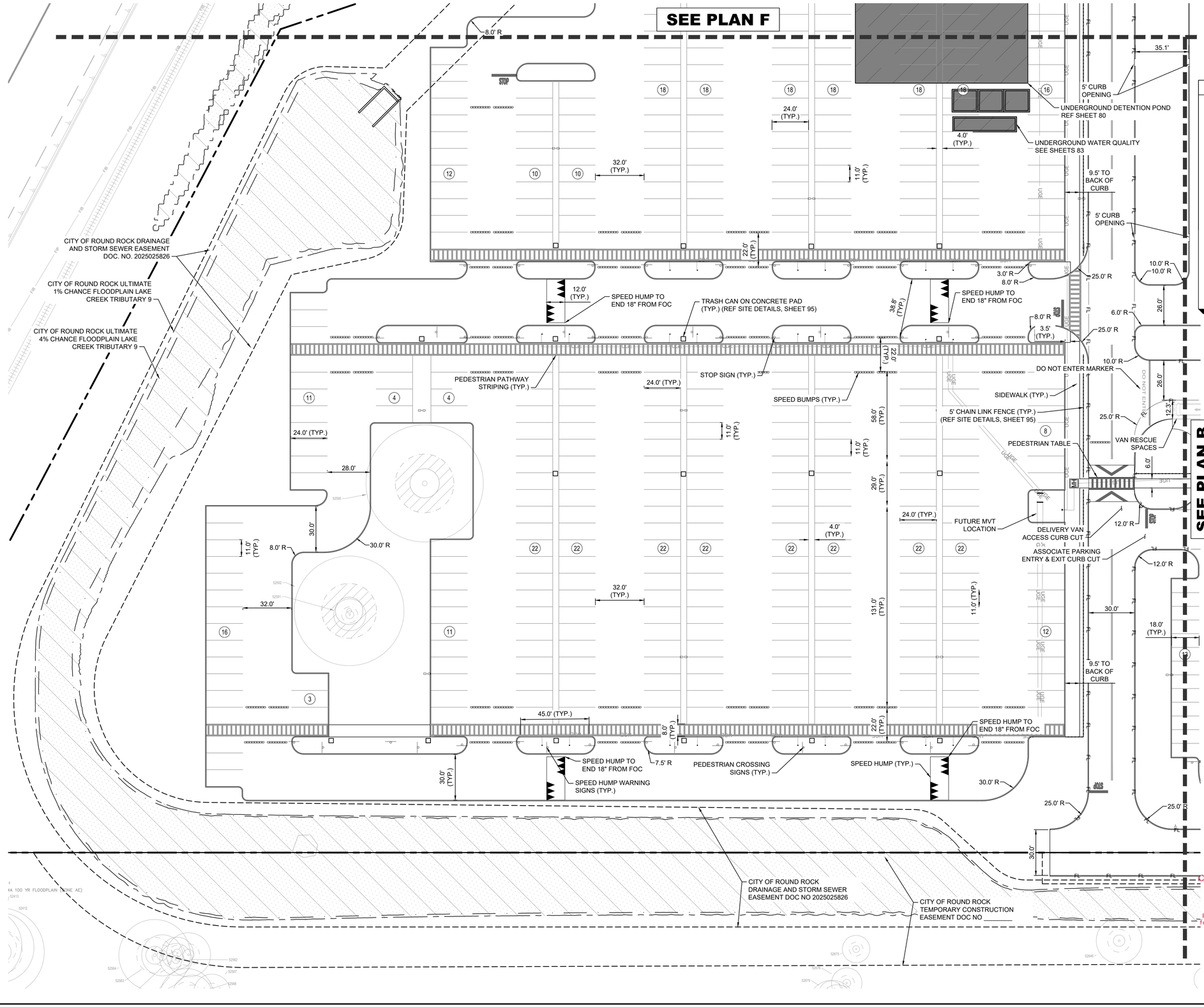

N

W E

S

0 30' 60'

GRAPHIC SCALE 30'

LEGEND

- PROPERTY LINE
- BUILDING SETBACK
- FIRE LANE MARKING STRIPING
- SITE LIGHTING
- ELECTRIC VEHICLE PARKING
- UNDERGROUND DETENTION POND
- (XX) PARKING STALL COUNT (REGULAR)
- (XX) HC PARKING STALL COUNT (HANDICAP)
- XXXXX EXISTING TREE TO REMAIN

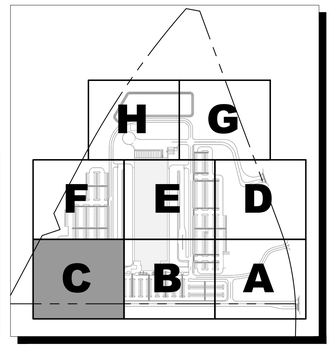

KEYMAP

N.T.S

NOTES:

1. ALL FIRE DEPARTMENT ACCESS DRIVES/ROADS TO HAVE A MINIMUM 13'-6" VERTICAL CLEARANCE.
2. FIRE LANE STRIPING TO BE 6" WIDE RED PAINT WITH "NO PARKING FIRE LANE" IN 4" TALL WHITE LETTERS. WORDING MAY NOT BE SPACED MORE THAN 30' APART. STRIPING TO BE PAINTED ON THE FACE OF CURB WHEN PRESENT AND PAINTED FLAT ON THE PARKING SURFACE WHEN IT IS NOT.
3. EVERY HANDICAP ACCESSIBLE PARKING SPACE SHALL BE IDENTIFIED BY A SIGN CENTERED 5 FEET ABOVE THE PARKING SURFACE, AT THE HEAD OF THE PARKING SPACE. THE SIGN MUST INCLUDE THE INTERNATIONAL SYMBOL OF ACCESSIBILITY AND STATE RESERVED, OR EQUIVALENT LANGUAGE. SUCH SIGNS SHALL NOT BE OBSCURED BY A VEHICLE PARKED IN THE SPACE AND SHALL MEET THE CRITERIA SET FORTH IN UBC, 3108(c) AND ANSI A1171-1986-4.6.2.
4. CONTRACTOR TO HAVE STAKING VERIFIED BY OWNER PRIOR TO PROCEEDING WITH CONSTRUCTION.
5. ALL DIMENSIONS ARE TO FACE OF CURB UNLESS OTHERWISE NOTED.
6. ALL RADII TO BE 3' UNLESS OTHERWISE NOTED.
7. SEE OVERALL SITE PLAN ON SHEET 21 FOR ADDITIONAL INFORMATION.
8. RETAINING WALLS OVER FOUR FEET IN HEIGHT MEASURED FROM THE BOTTOM OF FOOTING TO THE TOP OF THE WALL SHALL BE ENGINEERED AND REQUIRE A SEPARATE BUILDING PERMIT [IBC 105.2].
9. SCREENING FOR SOLID WASTE COLLECTION AND LOADING AREAS SHALL BE THE SAME AS, OR OF EQUAL QUALITY TO, PRINCIPAL BUILDING MATERIALS.

CONTRACTOR FIELD SET

This plan set shall remain on the site or subdivision premises for the life of the project and shall be utilized for any and all improvements contained herein.

BENCHMARKS

BM #51471 MAG NAIL SET "GCP 2"
SET AT THE NORTHEAST CORNER OF THE INTERSECTION OF STATE HIGHWAY 45 AND COUNTY ROAD 172, ±5.5' FROM "YIELD" SIGN.
N: 10147640.83
E: 3127942.60
ELEV.= 841.70'

BM #51473 MAG NAIL SET "GCP 3"
SET IN THE NORTH RIGHT-OF-WAY LINE OF HESTERS CROSSING ROAD, ±560' FROM THE INTERSECTION OF HESTERS CROSSING ROAD AND COUNTY ROAD 172, ±100 FROM CONCRETE SIGN "ENCOMPASS HEALTH".
N: 10149343.04
E: 3128315.81
ELEV.= 812.19'

No.	REVISIONS	DATE	BY

Kimley»Horn
© 2025 KIMLEY-HORN AND ASSOCIATES, INC.
10814 JOLLYVILLE ROAD, CAMPUS IV, SUITE 200, AUSTIN, TX 78759
PHONE: 512-418-1771 FAX: 512-418-1791
WWW.KIMLEY-HORN.COM
TEXAS REGISTERED ENGINEERING FIRM F-928

NICHOLAS C. BROWN
107175
LICENSED PROFESSIONAL ENGINEER
03/26/2025

KHA PROJECT	069284918
DATE	MARCH 2025
SCALE:	AS SHOWN
DESIGNED BY:	MM
DRAWN BY:	MM
CHECKED BY:	NCB

SITE PLAN C

2525 CR 172
INDUSTRIAL
CITY OF ROUND ROCK
WILLIAMSON COUNTY, TEXAS

SHEET NUMBER
24 OF 227

SDP24-00001

Plotted By:Non, Joyce Date:April 17, 2025 03:52:06pm File Path:K:\AUS_Civil\069284910 — DAU3 Round Rock\Cad\PlanSheets—SDP\C—Site Plan.dwg
This document, together with the concepts and designs presented herein, as an instrument of service, is intended only for the specific purpose and client for which it was prepared. Reuse of and improper reliance on this document without written authorization and adoption by Kimley-Horn and Associates, Inc. shall be without liability to Kimley-Horn and Associates, Inc.

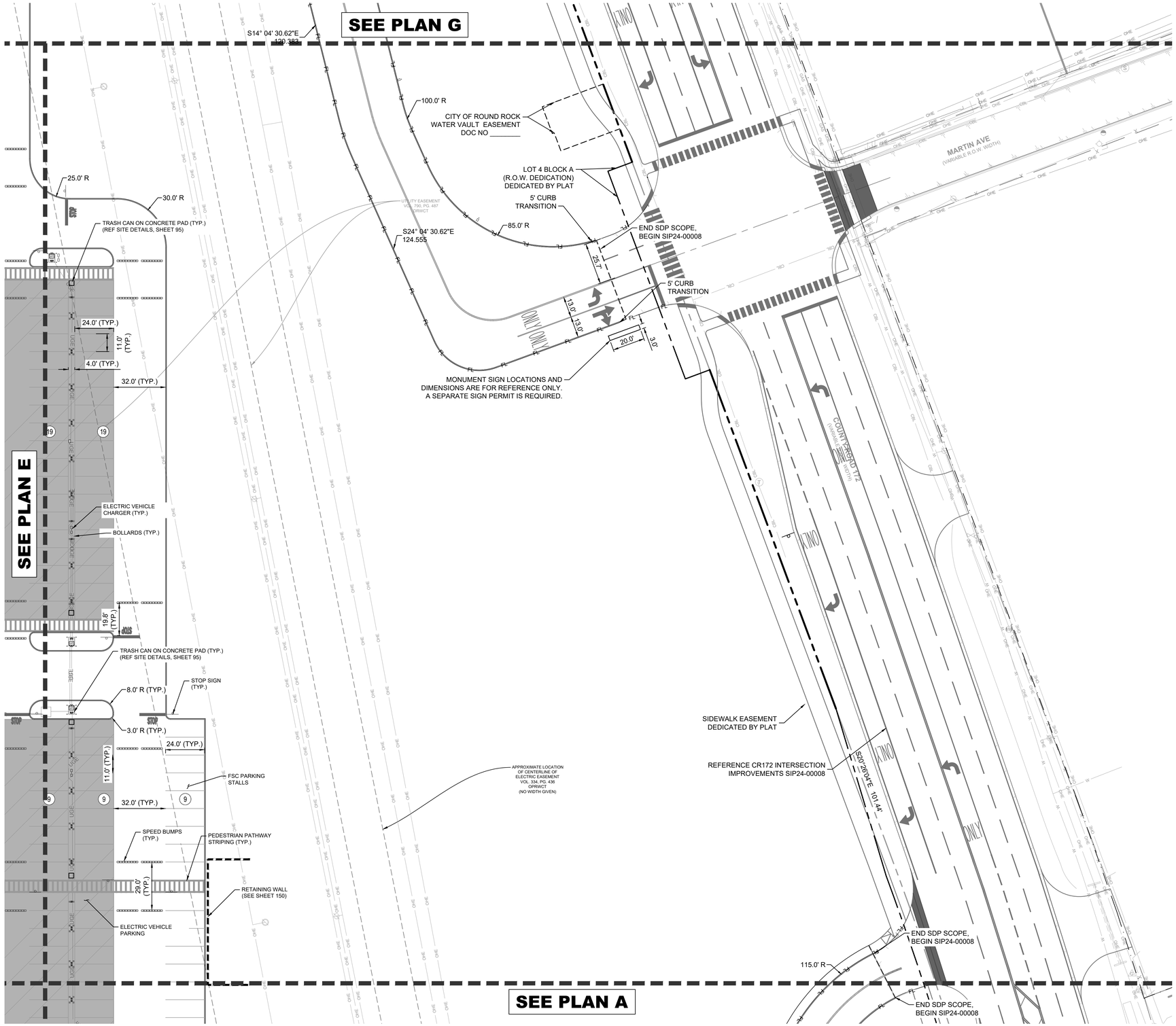

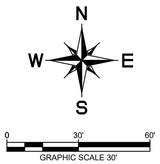

LEGEND

- PROPERTY LINE
- BUILDING SETBACK
- FIRE LANE MARKING STRIPING
- SITE LIGHTING
- ELECTRIC VEHICLE PARKING
- UNDERGROUND DETENTION POND
- XX — PARKING STALL COUNT (REGULAR)
- XX HC — PARKING STALL COUNT (HANDICAP)
- XXXXX — EXISTING TREE TO REMAIN

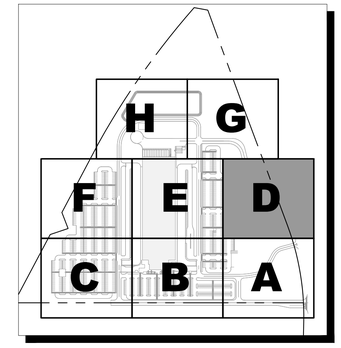

KEYMAP
N.T.S

NOTES:

1. ALL FIRE DEPARTMENT ACCESS DRIVES/ROADS TO HAVE A MINIMUM 13'-6" VERTICAL CLEARANCE.
2. FIRE LANE STRIPING TO BE 6" WIDE RED PAINT WITH "NO PARKING FIRE LANE" IN 4" TALL WHITE LETTERS. WORDING MAY NOT BE SPACED MORE THAN 30' APART. STRIPING TO BE PAINTED ON THE FACE OF CURB WHEN PRESENT AND PAINTED FLAT ON THE PARKING SURFACE WHEN IT IS NOT.
3. EVERY HANDICAP ACCESSIBLE PARKING SPACE SHALL BE IDENTIFIED BY A SIGN CENTERED 5 FEET ABOVE THE PARKING SURFACE, AT THE HEAD OF THE PARKING SPACE. THE SIGN MUST INCLUDE THE INTERNATIONAL SYMBOL OF ACCESSIBILITY AND STATE RESERVED, OR EQUIVALENT LANGUAGE. SUCH SIGNS SHALL NOT BE OBSCURED BY A VEHICLE PARKED IN THE SPACE AND SHALL MEET THE CRITERIA SET FORTH IN UBC, 3108(c) AND ANSI A1171-1986-4.6.2.
4. CONTRACTOR TO HAVE STAKING VERIFIED BY OWNER PRIOR TO PROCEEDING WITH CONSTRUCTION.
5. ALL DIMENSIONS ARE TO FACE OF CURB UNLESS OTHERWISE NOTED.
6. ALL RADII TO BE 3' UNLESS OTHERWISE NOTED.
7. SEE OVERALL SITE PLAN ON SHEET 21 FOR ADDITIONAL INFORMATION.
8. RETAINING WALLS OVER FOUR FEET IN HEIGHT MEASURED FROM THE BOTTOM OF FOOTING TO THE TOP OF THE WALL SHALL BE ENGINEERED AND REQUIRE A SEPARATE BUILDING PERMIT [IBC 105.2].
9. SCREENING FOR SOLID WASTE COLLECTION AND LOADING AREAS SHALL BE THE SAME AS, OR OF EQUAL QUALITY TO, PRINCIPAL BUILDING MATERIALS.
10. MONUMENT SIGNS SHOWN FOR PLANNING PURPOSES ONLY. A SEPARATE SIGN PERMIT IS REQUIRED.

CONTRACTOR FIELD SET

This plan set shall remain on the site or subdivision premises for the life of the project and shall be utilized for any and all improvements contained herein.

BENCHMARKS

BM #51471 MAG NAIL SET "GCP 2"
SET AT THE NORTHEAST CORNER OF THE INTERSECTION OF STATE HIGHWAY 45 AND COUNTY ROAD 172, ±5.5' FROM "YIELD" SIGN.
N: 10147640.83
E: 3127942.60
ELEV.= 841.70'

BM #51473 MAG NAIL SET "GCP 3"
SET IN THE NORTH RIGHT-OF-WAY LINE OF HESTERS CROSSING ROAD, ±560' FROM THE INTERSECTION OF HESTERS CROSSING ROAD AND COUNTY ROAD 172, ±100 FROM CONCRETE SIGN "ENCOMPASS HEALTH".
N: 10149343.04
E: 3128315.81
ELEV.= 812.19'

No.	REVISIONS	DATE	BY

Kimley»Horn
© 2025 KIMLEY-HORN AND ASSOCIATES, INC.
10814 JOLLYVILLE ROAD, CAMPUS IV, SUITE 200, AUSTIN, TX 78759
PHONE: 512-418-1771 FAX: 512-418-1791
WWW.KIMLEY-HORN.COM
TEXAS REGISTERED ENGINEERING FIRM F-928

NICHOLAS C. BROWN
107175
LICENSED
PROFESSIONAL ENGINEER
03/26/2025

KHA PROJECT	069284918
DATE	MARCH 2025
SCALE:	AS SHOWN
DESIGNED BY:	MM
DRAWN BY:	MM
CHECKED BY:	NCB

SITE PLAN D

2525 CR 172 INDUSTRIAL

CITY OF ROUND ROCK
WILLIAMSON COUNTY, TEXAS

SHEET NUMBER
25 OF 227

SDP24-00001

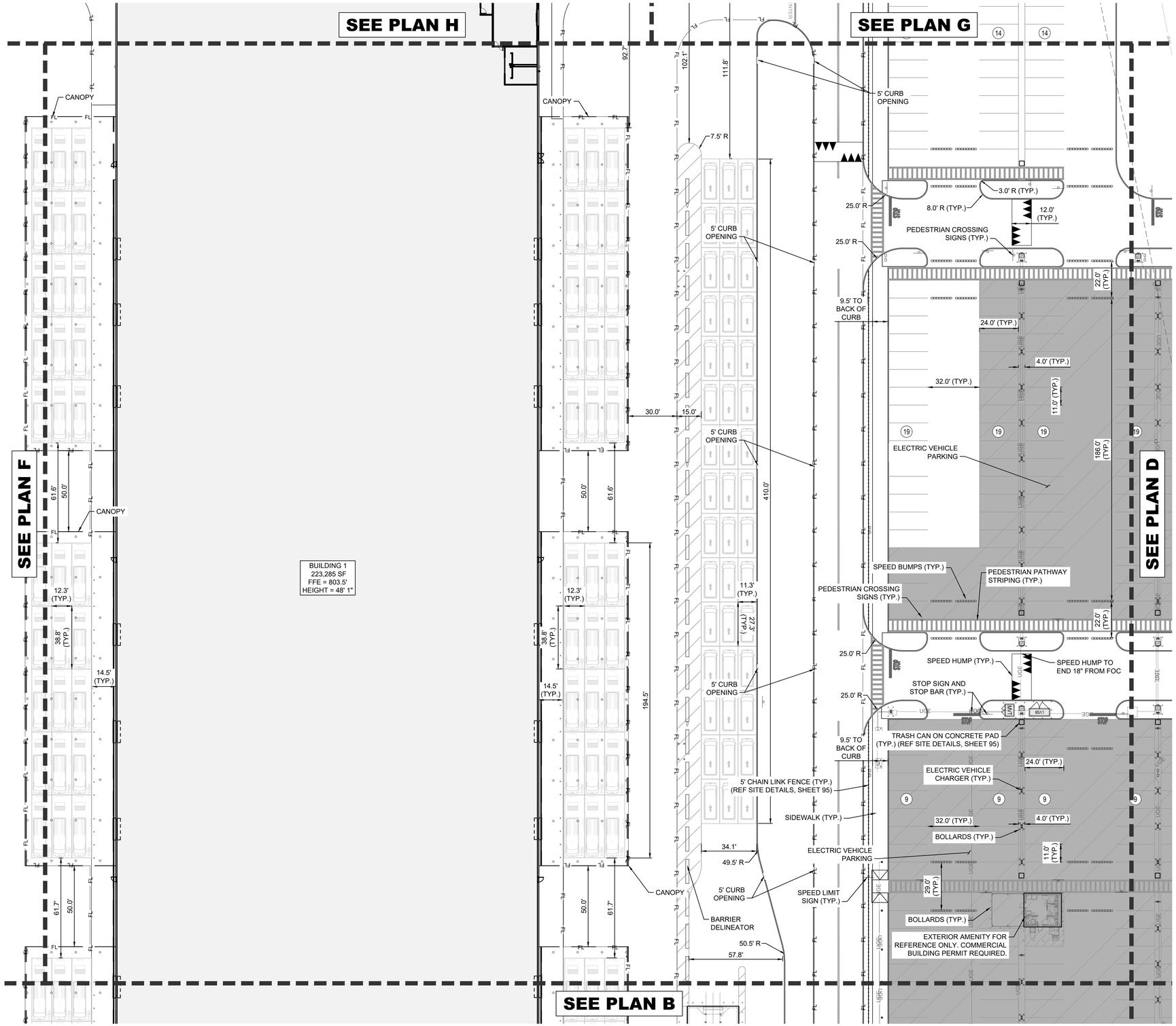

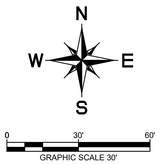

LEGEND

- PROPERTY LINE
- BUILDING SETBACK
- FIRE LANE MARKING STRIPING
- SITE LIGHTING
- ELECTRIC VEHICLE PARKING
- UNDERGROUND DETENTION POND
- XX — PARKING STALL COUNT (REGULAR)
- XX HC — PARKING STALL COUNT (HANDICAP)
- XXXXX — EXISTING TREE TO REMAIN

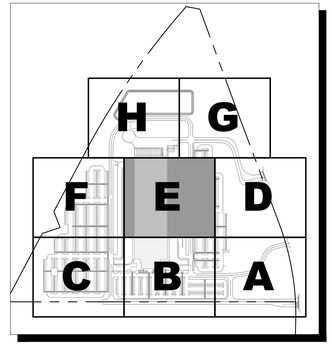

KEYMAP
N.T.S

NOTES:

1. ALL FIRE DEPARTMENT ACCESS DRIVES/ROADS TO HAVE A MINIMUM 13'-6" VERTICAL CLEARANCE.
2. FIRE LANE STRIPING TO BE 6" WIDE RED PAINT WITH "NO PARKING FIRE LANE" IN 4" TALL WHITE LETTERS. WORDING MAY NOT BE SPACED MORE THAN 30' APART. STRIPING TO BE PAINTED ON THE FACE OF CURB WHEN PRESENT AND PAINTED FLAT ON THE PARKING SURFACE WHEN IT IS NOT.
3. EVERY HANDICAP ACCESSIBLE PARKING SPACE SHALL BE IDENTIFIED BY A SIGN CENTERED 5 FEET ABOVE THE PARKING SURFACE, AT THE HEAD OF THE PARKING SPACE. THE SIGN MUST INCLUDE THE INTERNATIONAL SYMBOL OF ACCESSIBILITY AND STATE RESERVED, OR EQUIVALENT LANGUAGE. SUCH SIGNS SHALL NOT BE OBSCURED BY A VEHICLE PARKED IN THE SPACE AND SHALL MEET THE CRITERIA SET FORTH IN UBC, 3108(c) AND ANSI A1171-1986-4.6.2.
4. CONTRACTOR TO HAVE STAKING VERIFIED BY OWNER PRIOR TO PROCEEDING WITH CONSTRUCTION.
5. ALL DIMENSIONS ARE TO FACE OF CURB UNLESS OTHERWISE NOTED.
6. ALL RADII TO BE 3' UNLESS OTHERWISE NOTED.
7. SEE OVERALL SITE PLAN ON SHEET 21 FOR ADDITIONAL INFORMATION.
8. RETAINING WALLS OVER FOUR FEET IN HEIGHT MEASURED FROM THE BOTTOM OF FOOTING TO THE TOP OF THE WALL SHALL BE ENGINEERED AND REQUIRE A SEPARATE BUILDING PERMIT [IBC 105.2].
9. SCREENING FOR SOLID WASTE COLLECTION AND LOADING AREAS SHALL BE THE SAME AS, OR OF EQUAL QUALITY TO, PRINCIPAL BUILDING MATERIALS.

CONTRACTOR FIELD SET

This plan set shall remain on the site or subdivision premises for the life of the project and shall be utilized for any and all improvements contained herein.

BENCHMARKS

BM #51471 MAG NAIL SET "GCP 2"
SET AT THE NORTHEAST CORNER OF THE INTERSECTION OF STATE HIGHWAY 45 AND COUNTY ROAD 172, ±5.5' FROM "YIELD" SIGN.
N: 10147640.83
E: 3127942.60
ELEV.= 841.70'

BM #51473 MAG NAIL SET "GCP 3"
SET IN THE NORTH RIGHT-OF-WAY LINE OF HESTERS CROSSING ROAD, ±560' FROM THE INTERSECTION OF HESTERS CROSSING ROAD AND COUNTY ROAD 172, ±100 FROM CONCRETE SIGN "ENCOMPASS HEALTH".
N: 10149343.04
E: 3128315.81
ELEV.= 812.19'

No.	REVISIONS	DATE	BY

Kimley»Horn
© 2025 KIMLEY-HORN AND ASSOCIATES, INC.
10814 JOLLYVILLE ROAD, CAMPUS IV, SUITE 200, AUSTIN, TX 78759
PHONE: 512-418-1771 FAX: 512-418-1791
WWW.KIMLEY-HORN.COM
TEXAS REGISTERED ENGINEERING FIRM F-928

NICHOLAS C. BROWN
107175
LICENSED
PROFESSIONAL ENGINEER
03/26/2025

KHA PROJECT	069284918
DATE	MARCH 2025
SCALE:	AS SHOWN
DESIGNED BY:	MM
DRAWN BY:	MM
CHECKED BY:	NCB

SITE PLAN E

2525 CR 172 INDUSTRIAL

CITY OF ROUND ROCK
WILLIAMSON COUNTY, TEXAS

SHEET NUMBER
26 OF 227

SDP24-00001

Plotted By: Non, Joyce Date: April 17, 2025 03:52:21pm File Path: K:\AUS_Civil\069284918 – DAU3 Round Rock\Cad\PlanSheets–SDP\C–Site Plan.dwg
This document, together with the concepts and designs presented herein, as an instrument of service, is intended only for the specific purpose and client for which it was prepared. Reuse of and improper reliance on this document without written authorization and adaptation by Kimley-Horn and Associates, Inc. shall be without liability to Kimley-Horn and Associates, Inc.

Plotted By:Nam, Joyce Date:April 17, 2025 03:52:36pm File Path:K:\AUS_Civil\069284910 - DAU3 Round Rock\Cad\PlanSheets-SDP\C-Site Plan.dwg
This document, together with the concepts and designs presented herein, as an instrument of service, is intended only for the specific purpose and client for which it was prepared. Reuse of and improper reliance on this document without written authorization and adaptation by Kimley-Horn and Associates, Inc. shall be without liability to Kimley-Horn and Associates, Inc.

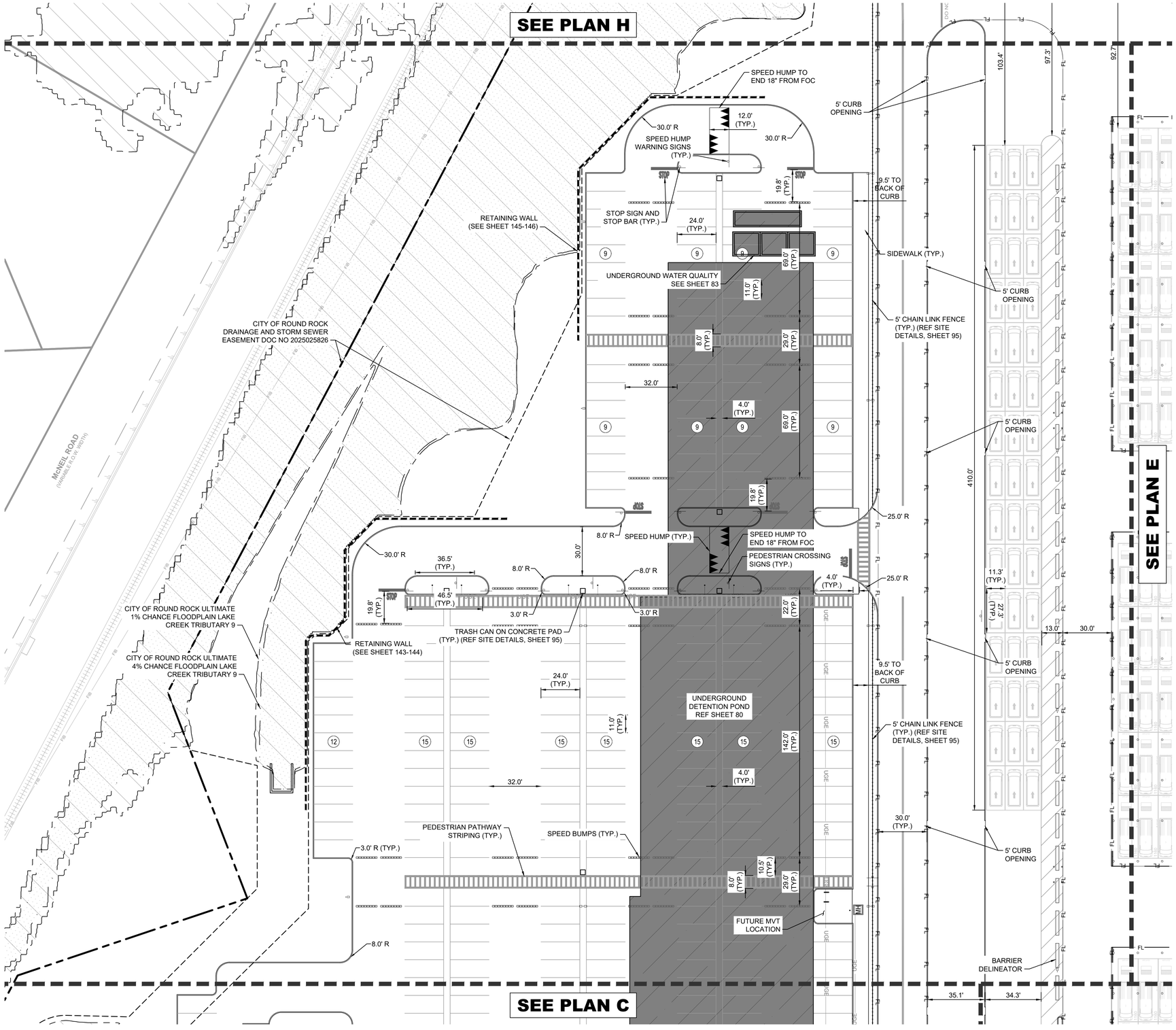

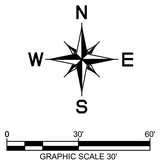

LEGEND

- PROPERTY LINE
- BUILDING SETBACK
- FIRE LANE MARKING STRIPING
- SITE LIGHTING
- ELECTRIC VEHICLE PARKING
- UNDERGROUND DETENTION POND
- PARKING STALL COUNT (REGULAR) — XX
- PARKING STALL COUNT (HANDICAP) — XX HC
- EXISTING TREE TO REMAIN — XXXXX

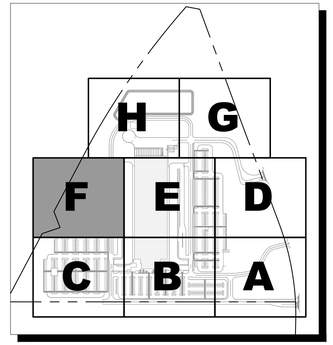

KEYMAP
N.T.S

NOTES:

1. ALL FIRE DEPARTMENT ACCESS DRIVES/ROADS TO HAVE A MINIMUM 13'-6" VERTICAL CLEARANCE.
2. FIRE LANE STRIPING TO BE 6" WIDE RED PAINT WITH "NO PARKING FIRE LANE" IN 4" TALL WHITE LETTERS. WORDING MAY NOT BE SPACED MORE THAN 30' APART. STRIPING TO BE PAINTED ON THE FACE OF CURB WHEN PRESENT AND PAINTED FLAT ON THE PARKING SURFACE WHEN IT IS NOT.
3. EVERY HANDICAP ACCESSIBLE PARKING SPACE SHALL BE IDENTIFIED BY A SIGN CENTERED 5 FEET ABOVE THE PARKING SURFACE, AT THE HEAD OF THE PARKING SPACE. THE SIGN MUST INCLUDE THE INTERNATIONAL SYMBOL OF ACCESSIBILITY AND STATE RESERVED, OR EQUIVALENT LANGUAGE. SUCH SIGNS SHALL NOT BE OBSCURED BY A VEHICLE PARKED IN THE SPACE AND SHALL MEET THE CRITERIA SET FORTH IN UBC, 3108(c) AND ANSI A1171-1986-4.6.2.
4. CONTRACTOR TO HAVE STAKING VERIFIED BY OWNER PRIOR TO PROCEEDING WITH CONSTRUCTION.
5. ALL DIMENSIONS ARE TO FACE OF CURB UNLESS OTHERWISE NOTED.
6. ALL RADII TO BE 3' UNLESS OTHERWISE NOTED.
7. SEE OVERALL SITE PLAN ON SHEET 21 FOR ADDITIONAL INFORMATION.
8. RETAINING WALLS OVER FOUR FEET IN HEIGHT MEASURED FROM THE BOTTOM OF FOOTING TO THE TOP OF THE WALL SHALL BE ENGINEERED AND REQUIRE A SEPARATE BUILDING PERMIT [IBC 105.2].
9. SCREENING FOR SOLID WASTE COLLECTION AND LOADING AREAS SHALL BE THE SAME AS, OR OF EQUAL QUALITY TO, PRINCIPAL BUILDING MATERIALS.

CONTRACTOR FIELD SET

This plan set shall remain on the site or subdivision premises for the life of the project and shall be utilized for any and all improvements contained herein.

BENCHMARKS

BM #51471 MAG NAIL SET "GCP 2" SET AT THE NORTHEAST CORNER OF THE INTERSECTION OF STATE HIGHWAY 45 AND COUNTY ROAD 172, ±5.5' FROM "YIELD" SIGN.
N: 10147640.83
E: 3127942.60
ELEV.= 841.70'

BM #51473 MAG NAIL SET "GCP 3" SET IN THE NORTH RIGHT-OF-WAY LINE OF HESTERS CROSSING ROAD, ±560' FROM THE INTERSECTION OF HESTERS CROSSING ROAD AND COUNTY ROAD 172, ±100 FROM CONCRETE SIGN "ENCOMPASS HEALTH".
N: 10149343.04
E: 3128315.81
ELEV.= 812.19'

No.	REVISIONS	DATE	BY

Kimley»Horn
© 2025 KIMLEY-HORN AND ASSOCIATES, INC.
10814 JOLLYVILLE ROAD, CAMPUS IV, SUITE 200, AUSTIN, TX 78759
PHONE: 512-418-1771 FAX: 512-418-1791
WWW.KIMLEY-HORN.COM
TEXAS REGISTERED ENGINEERING FIRM F-928

NICHOLAS C. BROWN
107175
LICENSED
PROFESSIONAL ENGINEER
03/26/2025

KHA PROJECT	069284918
DATE	MARCH 2025
SCALE:	AS SHOWN
DESIGNED BY:	MM
DRAWN BY:	MM
CHECKED BY:	NCB

SITE PLAN F

2525 CR 172
INDUSTRIAL
CITY OF ROUND ROCK
WILLIAMSON COUNTY, TEXAS

SHEET NUMBER
27 OF 227

SDP24-00001

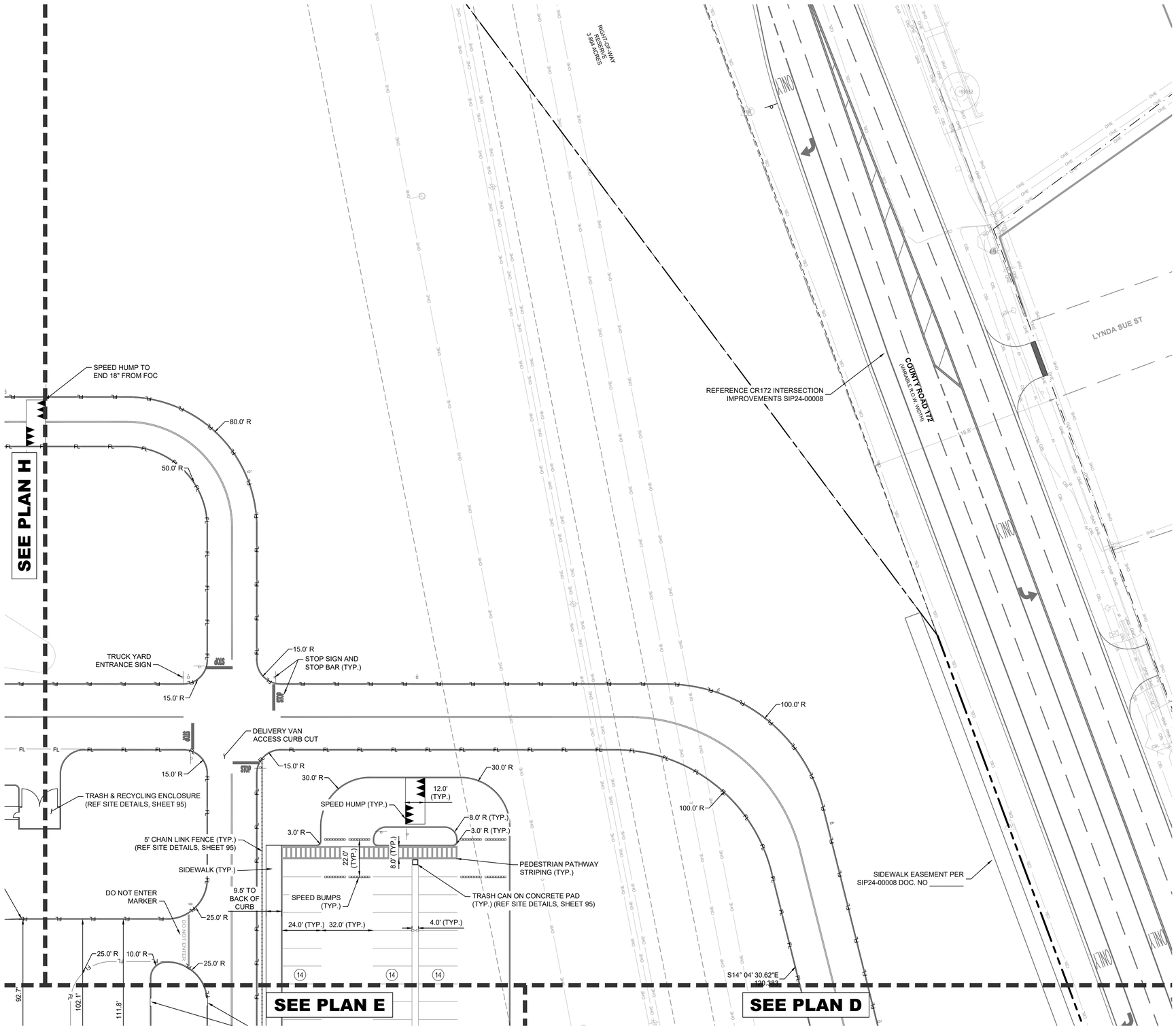

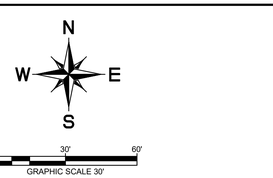

LEGEND

- PROPERTY LINE
- BUILDING SETBACK
- FIRE LANE MARKING STRIPING (FL)
- SITE LIGHTING
- ELECTRIC VEHICLE PARKING
- UNDERGROUND DETENTION POND
- (XX) PARKING STALL COUNT (REGULAR)
- (XX) HC PARKING STALL COUNT (HANDICAP)
- XXXXX EXISTING TREE TO REMAIN

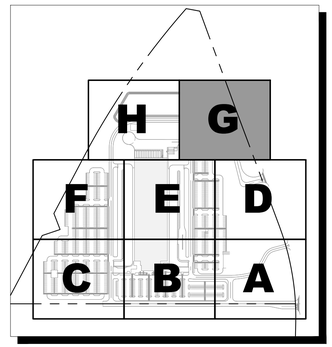

KEYMAP
N.T.S

NOTES:

1. ALL FIRE DEPARTMENT ACCESS DRIVES/ROADS TO HAVE A MINIMUM 13'-6" VERTICAL CLEARANCE.
2. FIRE LANE STRIPING TO BE 6" WIDE RED PAINT WITH "NO PARKING FIRE LANE" IN 4" TALL WHITE LETTERS. WORDING MAY NOT BE SPACED MORE THAN 30' APART. STRIPING TO BE PAINTED ON THE FACE OF CURB WHEN PRESENT AND PAINTED FLAT ON THE PARKING SURFACE WHEN IT IS NOT.
3. EVERY HANDICAP ACCESSIBLE PARKING SPACE SHALL BE IDENTIFIED BY A SIGN CENTERED 5 FEET ABOVE THE PARKING SURFACE, AT THE HEAD OF THE PARKING SPACE. THE SIGN MUST INCLUDE THE INTERNATIONAL SYMBOL OF ACCESSIBILITY AND STATE RESERVED, OR EQUIVALENT LANGUAGE. SUCH SIGNS SHALL NOT BE OBSCURED BY A VEHICLE PARKED IN THE SPACE AND SHALL MEET THE CRITERIA SET FORTH IN UBC, 3108(c) AND ANSI A1171-1986-4.6.2.
4. CONTRACTOR TO HAVE STAKING VERIFIED BY OWNER PRIOR TO PROCEEDING WITH CONSTRUCTION.
5. ALL DIMENSIONS ARE TO FACE OF CURB UNLESS OTHERWISE NOTED.
6. ALL RADII TO BE 3' UNLESS OTHERWISE NOTED.
7. SEE OVERALL SITE PLAN ON SHEET 21 FOR ADDITIONAL INFORMATION.
8. RETAINING WALLS OVER FOUR FEET IN HEIGHT MEASURED FROM THE BOTTOM OF FOOTING TO THE TOP OF THE WALL SHALL BE ENGINEERED AND REQUIRE A SEPARATE BUILDING PERMIT [IBC 105.2].
9. SCREENING FOR SOLID WASTE COLLECTION AND LOADING AREAS SHALL BE THE SAME AS, OR OF EQUAL QUALITY TO, PRINCIPAL BUILDING MATERIALS.

CONTRACTOR FIELD SET

This plan set shall remain on the site or subdivision premises for the life of the project and shall be utilized for any and all improvements contained herein.

BENCHMARKS

BM #51471 MAG NAIL SET "GCP 2"
SET AT THE NORTHEAST CORNER OF THE INTERSECTION OF STATE HIGHWAY 45 AND COUNTY ROAD 172, ±5.5' FROM "YIELD" SIGN.
N: 10147640.83
E: 3127942.60
ELEV.= 841.70'

BM #51473 MAG NAIL SET "GCP 3"
SET IN THE NORTH RIGHT-OF-WAY LINE OF HESTERS CROSSING ROAD, ±560' FROM THE INTERSECTION OF HESTERS CROSSING ROAD AND COUNTY ROAD 172, ±100 FROM CONCRETE SIGN "ENCOMPASS HEALTH".
N: 10149343.04
E: 3128315.81
ELEV.= 812.19'

No.	REVISIONS	DATE	BY

Kimley»Horn
© 2025 KIMLEY-HORN AND ASSOCIATES, INC.
10814 JOLLYVILLE ROAD, CAMPUS IV, SUITE 200, AUSTIN, TX 78759
PHONE: 512-418-1771 FAX: 512-418-1791
WWW.KIMLEY-HORN.COM
TEXAS REGISTERED ENGINEERING FIRM F-928

NICHOLAS C. BROWN
107175
LICENSED PROFESSIONAL ENGINEER
03/26/2025

KHA PROJECT	069284918
DATE	MARCH 2025
SCALE:	AS SHOWN
DESIGNED BY:	MM
DRAWN BY:	MM
CHECKED BY:	NCB

SITE PLAN G

2525 CR 172
INDUSTRIAL
CITY OF ROUND ROCK
WILLIAMSON COUNTY, TEXAS

SHEET NUMBER
28 OF 227

SDP24-00001

Plotted By:Non, Joyce Date:April 17, 2025 03:52:51pm File Path:K:\AUS_Civil\069284910 — DAU3 Round Rock\Cad\PlanSheets-SDP\C- Site Plan.dwg
This document, together with the concepts and designs presented herein, as an instrument of service, is intended only for the specific purpose and client for which it was prepared. Reuse of and improper reliance on this document without written authorization and adoption by Kimley-Horn and Associates, Inc. shall be without liability to Kimley-Horn and Associates, Inc.
Texture ##

Template ########################## DM ########
Plotted By: Nan, Joyce Date: April 17, 2025 03:53:13pm File Path: K:\AUS_Civil\069284910 — DAU3 Round Rock\Cad\PrimSheets-SDP\C-Site Plan.dwg
This document, together with the concepts and designs presented herein, as an instrument of service, is intended only for the specific purpose and client for which it was prepared. Reuse of and improper reliance on this document without written authorization and adaptation by Kimley-Horn and Associates, Inc. shall be without liability to Kimley-Horn and Associates, Inc.

CITY OF ROUND ROCK ULTIMATE 1% CHANCE FLOODPLAIN LAKE CREEK TRIBUTARY 9

CITY OF ROUND ROCK ULTIMATE 4% CHANCE FLOODPLAIN LAKE CREEK TRIBUTARY 9

CITY OF ROUND ROCK DRAINAGE AND STORM SEWER EASEMENT DOC NO 2025025826

PROPERTY LINE

SPEED HUMP TO END 18" FROM FOC

SPEED HUMP (TYP.)

30.0' (TYP.)

230.0' R

200.0' R

EXISTING CEF AND ASSOCIATED SETBACK

SEE PLAN G

RETAINING WALL (SEE SHEET 149)

TRUCK YARD ENTRY ACCESS

50.0' R

45.0' R

TRUCK TURNAROUND AREA

NO PARKING MARKER

8' CHAIN LINK FENCE (TYP.) (REF SITE DETAILS, SHEET 95)

30.0' (TYP.)

85.0'

45.0'

TRUCK ENTRANCE GATE (NOT MOTORIZED) WITH KNOX BOX

MAN GATE

145.0'

LOADING DOCK SCREEN WALL, 9' ABOVE FFE (TYP.)

13.5' (TYP.)

DOCK STALLS (TYP.)

SPILL KIT SHED

LOADING DOCK SCREEN WALL, 9' ABOVE FFE (TYP.)

DELIVERY VAN ACCESS CURB CUT

60.0' (TYP.)

SIDEWALK (TYP.)

TRANSITION TO NO CURB

25.0' R

DO NOT ENTER MARKER

STAIRS TO TDR ENTRANCE

TRANSITION TO NO CURB

30.0' R

SIDEWALK (TYP.)

26.0'

25.0' R

25.0' R

103.4'

97.3'

92.7'

SEE PLAN F

SEE PLAN E

SPEED HUMP TO END 18" FROM FOC

PROPERTY LINE

N

W E

S

0 30' 60'

GRAPHIC SCALE 30'

LEGEND

- PROPERTY LINE
- BUILDING SETBACK
- FIRE LANE MARKING STRIPING
- SITE LIGHTING
- ELECTRIC VEHICLE PARKING
- UNDERGROUND DETENTION POND
- XX — PARKING STALL COUNT (REGULAR)
- XX HC — PARKING STALL COUNT (HANDICAP)
- XXXXX — EXISTING TREE TO REMAIN

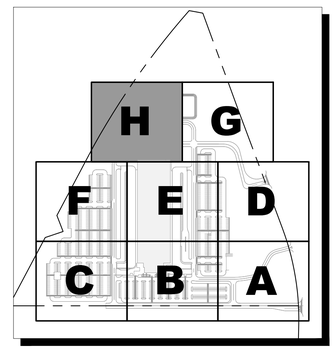

KEYMAP
N.T.S

NOTES:

1. ALL FIRE DEPARTMENT ACCESS DRIVES/ROADS TO HAVE A MINIMUM 13'-6" VERTICAL CLEARANCE.
2. FIRE LANE STRIPING TO BE 6" WIDE RED PAINT WITH "NO PARKING FIRE LANE" IN 4" TALL WHITE LETTERS. WORDING MAY NOT BE SPACED MORE THAN 30' APART. STRIPING TO BE PAINTED ON THE FACE OF CURB WHEN PRESENT AND PAINTED FLAT ON THE PARKING SURFACE WHEN IT IS NOT.
3. EVERY HANDICAP ACCESSIBLE PARKING SPACE SHALL BE IDENTIFIED BY A SIGN CENTERED 5 FEET ABOVE THE PARKING SURFACE, AT THE HEAD OF THE PARKING SPACE. THE SIGN MUST INCLUDE THE INTERNATIONAL SYMBOL OF ACCESSIBILITY AND STATE RESERVED, OR EQUIVALENT LANGUAGE. SUCH SIGNS SHALL NOT BE OBSCURED BY A VEHICLE PARKED IN THE SPACE AND SHALL MEET THE CRITERIA SET FORTH IN UBC, 3108(c) AND ANSI A1171-1986-4.6.2.
4. CONTRACTOR TO HAVE STAKING VERIFIED BY OWNER PRIOR TO PROCEEDING WITH CONSTRUCTION.
5. ALL DIMENSIONS ARE TO FACE OF CURB UNLESS OTHERWISE NOTED.
6. ALL RADII TO BE 3' UNLESS OTHERWISE NOTED.
7. SEE OVERALL SITE PLAN ON SHEET 21 FOR ADDITIONAL INFORMATION.
8. RETAINING WALLS OVER FOUR FEET IN HEIGHT MEASURED FROM THE BOTTOM OF FOOTING TO THE TOP OF THE WALL SHALL BE ENGINEERED AND REQUIRE A SEPARATE BUILDING PERMIT [IBC 105.2].
9. SCREENING FOR SOLID WASTE COLLECTION AND LOADING AREAS SHALL BE THE SAME AS, OR OF EQUAL QUALITY TO, PRINCIPAL BUILDING MATERIALS.

CONTRACTOR FIELD SET

This plan set shall remain on the site or subdivision premises for the life of the project and shall be utilized for any and all improvements contained herein.

BENCHMARKS

BM #51471 MAG NAIL SET "GCP 2" SET AT THE NORTHEAST CORNER OF THE INTERSECTION OF STATE HIGHWAY 45 AND COUNTY ROAD 172, ±5.5' FROM "YIELD" SIGN.
N: 10147640.83
E: 3127942.60
ELEV.= 841.70'

BM #51473 MAG NAIL SET "GCP 3" SET IN THE NORTH RIGHT-OF-WAY LINE OF HESTERS CROSSING ROAD, ±560' FROM THE INTERSECTION OF HESTERS CROSSING ROAD AND COUNTY ROAD 172, ±100 FROM CONCRETE SIGN "ENCOMPASS HEALTH".
N: 10149343.04
E: 3128315.81
ELEV.= 812.19'

No.	REVISIONS	DATE	BY

Kimley»Horn
© 2025 KIMLEY-HORN AND ASSOCIATES, INC.
10814 JOLLYVILLE ROAD, CAMPUS IV, SUITE 200, AUSTIN, TX 78759
PHONE: 512-418-1771 FAX: 512-418-1791
WWW.KIMLEY-HORN.COM
TEXAS REGISTERED ENGINEERING FIRM F-928

STATE OF TEXAS
NICHOLAS C. BROWN
107175
LICENSED
PROFESSIONAL ENGINEER
03/26/2025

KHA PROJECT	069284918
DATE	MARCH 2025
SCALE:	AS SHOWN
DESIGNED BY:	MM
DRAWN BY:	MM
CHECKED BY:	NCB

SITE PLAN H

2525 CR 172 INDUSTRIAL

CITY OF ROUND ROCK
WILLIAMSON COUNTY, TEXAS

SHEET NUMBER
29 OF 227

SDP24-00001

Plotted By: Jenkins, Matthew Date: April 17, 2025 03:35:50pm File Path: K:\AUS_Civil\069284910 – DAU3 Round Rock\Civil\PlanSheets–SDP\C–Paving Plan.dwg
This document, together with the concepts and designs presented herein, as an instrument of service, is intended only for the specific purpose and client for which it was prepared. Reuse of and improper reliance on this document without written authorization and adaptation by Kimley-Horn and Associates, Inc. shall be without liability to Kimley-Horn and Associates, Inc.

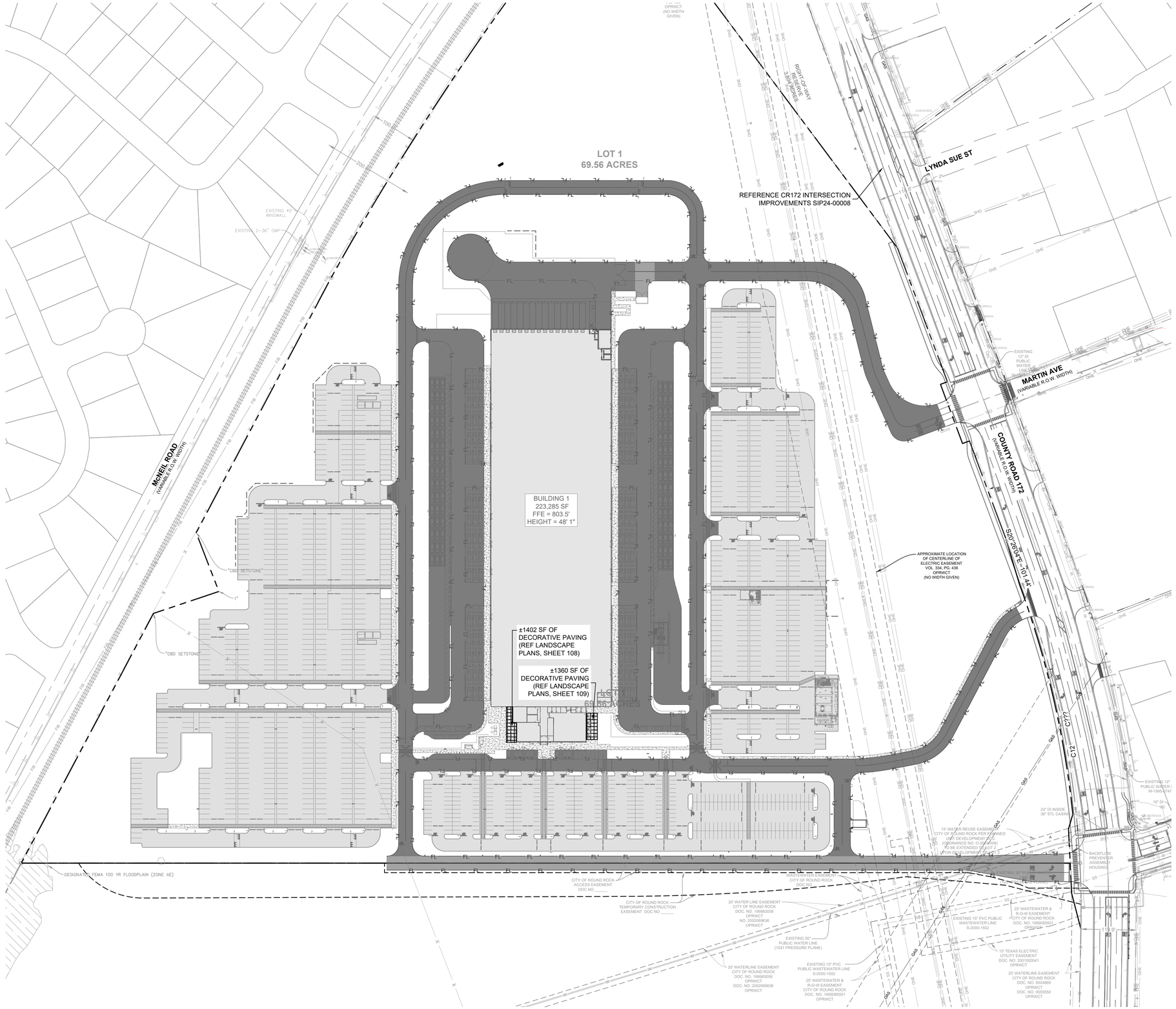

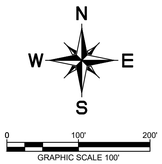

LEGEND

- PROPERTY LINE
- FL — FIRE LANE
- DECORATIVE PAVEMENT
- STANDARD DUTY CONCRETE PAVEMENT
- HEAVY DUTY CONCRETE PAVEMENT
- EXTRA HEAVY DUTY CONCRETE PAVEMENT
- SIDEWALK PER CORR DETAIL ST-01.1

GEOTECH NOTES:

1. CONTRACTOR TO REFERENCE DIV 03 CONCRETE IN THE AMZL DESIGN CRITERIA FOR LOW CARBON CONCRETE.
2. SOUTH DRIVE SHALL ONLY BE RIGID PAVEMENT PER GEOTECH REPORT.
3. FIRE LANES WILL BE HEAVY DUTY CONCRETE PAVEMENT. REFER TO THE GEOTECH REPORT NOTED BELOW FOR LOAD CAPACITY.
4. REFER TO SHEET 96 FOR ADDITIONAL PAVEMENT DETAILS.
5. DUE TO THE POTENTIAL FOR DIFFERENTIAL SOIL MOVEMENT ADJACENT TO THE BUILDING, THE CONTRACTOR SHALL ADHERE TO GEOTECHNICAL REPORT'S RECOMMENDATION FOR SUBGRADE PREPARATION SPECIFIC TO FLATWORK ADJACENT TO THE BUILDING, IF NONE IS CURRENTLY EXISTING.

REFER TO GEOTECHNICAL REPORT BY: **ECS SOUTHWEST, LLP**

GEOTECH PROJECT NUMBER: **17:6399-A**

DATED: MARCH 22, 2024

STANDARD-DUTY RIGID PAVEMENT SECTION

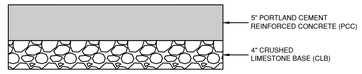

NTS

EXTRA HEAVY-DUTY AND HEAVY-DUTY RIGID PAVEMENT SECTION

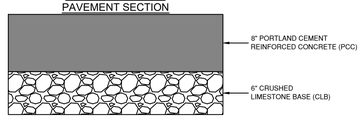

NTS

STANDARD-DUTY ASPHALT PAVEMENT SECTION

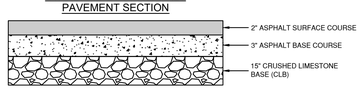

NTS

HEAVY-DUTY ASPHALT PAVEMENT SECTION

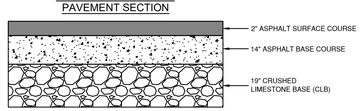

NTS

CONTRACTOR FIELD SET

This plan set shall remain on the site or subdivision premises for the life of the project and shall be utilized for any and all improvements contained herein.

BENCHMARKS

BM #51471 MAG NAIL SET "GCP 2" SET AT THE NORTHEAST CORNER OF THE INTERSECTION OF STATE HIGHWAY 45 AND COUNTY ROAD 172, ±5.5' FROM "YIELD" SIGN.
N: 10147640.83
E: 3127942.60
ELEV.= 841.70'

BM #51473 MAG NAIL SET "GCP 3" SET IN THE NORTH RIGHT-OF-WAY LINE OF HESTERS CROSSING ROAD, ±560' FROM THE INTERSECTION OF HESTERS CROSSING ROAD AND COUNTY ROAD 172, ±100 FROM CONCRETE SIGN "ENCOMPASS HEALTH".
N: 10149343.04
E: 3128315.81
ELEV.= 812.19'

No.	REVISIONS	DATE	BY

Kimley»Horn
© 2025 KIMLEY-HORN AND ASSOCIATES, INC.
10814 JOLLYVILLE ROAD, CAMPUS IV, SUITE 200, AUSTIN, TX 78759
PHONE: 512-418-1771 FAX: 512-418-1791
WWW.KIMLEY-HORN.COM
TEXAS REGISTERED ENGINEERING FIRM F-928

NICHOLAS C. BROWN
107175
LICENSED
PROFESSIONAL ENGINEER
03/26/2025

KHA PROJECT	069284916
DATE	MARCH 2025
SCALE:	AS SHOWN
DESIGNED BY:	MM
DRAWN BY:	MM
CHECKED BY:	NCB

PAVING PLAN

2525 CR 172 INDUSTRIAL

CITY OF ROUND ROCK
WILLIAMSON COUNTY, TEXAS

SHEET NUMBER
35 OF 227

SDP24-00001

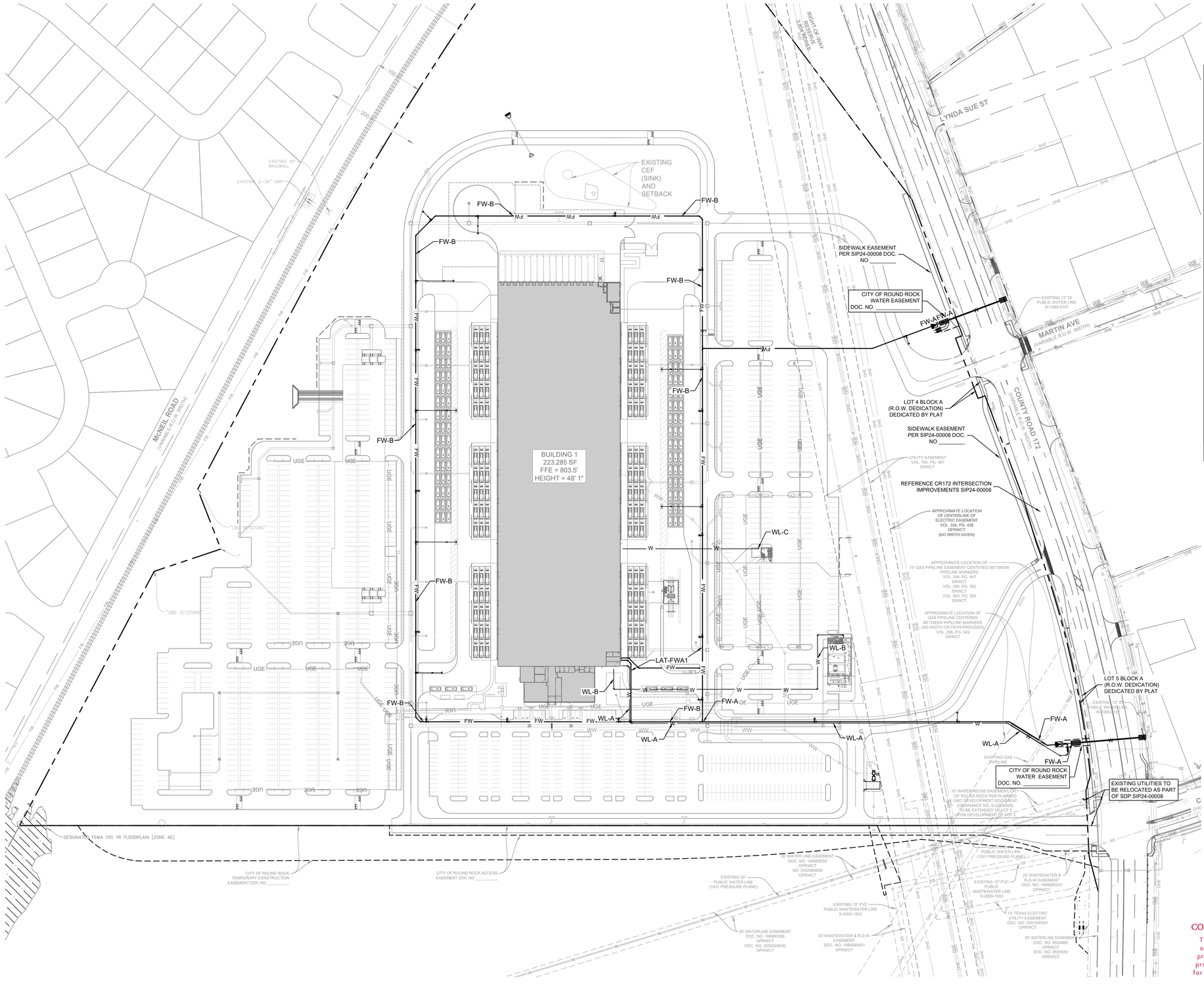

N

W E

S

0 100' 200'

GRAPHIC SCALE 100'

LEGEND

	PROPERTY LINE
XXX	EXISTING MAJOR CONTOUR
XXX	EXISTING MINOR CONTOUR
XXX	MAJOR CONTOUR
XXX	MINOR CONTOUR
W	WATER LINE
FW	FIRE WATER LINE
RW	RECLAIMED WATER LINE
	FIRE HYDRANT
	WATER GATE VALVE
	WATER BACKFLOW PREVENTOR
	WATER METER
	FIRE DEPARTMENT CONNECTION
FM	FORCE MAIN
WW	WASTEWATER LINE
WW	WASTEWATER MANHOLE
	WASTEWATER CLEANOUT
	STORM DRAIN LINE
	STORM GRATE INLET
	STORM HEADWALL
D	STORM MANHOLE
	STORM JUNCTION BOX
	STORM AREA INLET
	STORM CURB INLET
UGE	PRELIMINARY UNDERGROUND ELECTRIC
W	EXISTING WATER LINE
ss	EXISTING WASTEWATER LINE
	EXISTING STORM DRAIN LINE
	EXISTING FIRE HYDRANT
WW	EXISTING WASTEWATER MANHOLE

NOTES

1. ALL NON-CITY INFRASTRUCTURE INCLUDING GAS, ELECTRIC, CABLE AND TELECOMMUNICATIONS SHALL TRAVERSE UNDERNEATH CITY INFRASTRUCTURE. THIS INCLUDES, BUT IS NOT LIMITED TO WATER LINES, WASTEWATER LINES AND STORM SEWER, WITH A MINIMUM OUTSIDE-TO-OUTSIDE CLEARANCE OF 18".
2. ALL PIPE FITTINGS SHALL HAVE THRUST BLOCKING PER CORR WT-25.
3. ALL VALVES SHOWN ARE MUELLER BRAND.
4. ALL FIRE SERVICE LEADS SHALL BE DUCTIRE IRON.
5. ALL PVC WATER MAINS SHALL BE CONSTRUCTED OF C-900 DR-14.
6. THE DRY UTILITY ALIGNMENTS ARE PRELIMINARY. TO HAVE PRELIMINARY STATUS REMOVED FROM PDS PERMIT, THE PERMIT MUST BE REVISED ONCE DRY ALIGNMENTS ARE APPROVED BY THE FRANCHISED UTILITY. THEN INSTALLATION OF DRY UTILITIES MAY COMMENCE.

CONTRACTOR FIELD SET

This plan set shall remain on the site or subdivision premises for the life of the project and shall be utilized for any and all improvements contained herein.

BENCHMARKS

BM #51471 MAG NAIL SET "GCP 2"
SET AT THE NORTHEAST CORNER OF THE INTERSECTION OF STATE HIGHWAY 45 AND COUNTY ROAD 172, ±5.5' FROM "YIELD" SIGN.
N: 10147640.83
E: 3127942.60
ELEV.= 841.70'

BM #51473 MAG NAIL SET "GCP 3"
SET IN THE NORTH RIGHT-OF-WAY LINE OF HESTERS CROSSING ROAD, ±580' FROM THE INTERSECTION OF HESTERS CROSSING ROAD AND COUNTY ROAD 172, ±100 FROM CONCRETE SIGN "ENCOMPASS HEALTH".
N: 10149343.04
E: 3128315.81
ELEV.= 812.19'

No.	REVISIONS	DATE	BY

Kimley»Horn
© 2025 KIMLEY-HORN AND ASSOCIATES, INC.
10814 JOLLYVILLE ROAD, CAMPUS IV, SUITE 200, AUSTIN, TX 78759
PHONE: 512-418-1771 FAX: 512-418-1791
WWW.KIMLEY-HORN.COM
TEXAS REGISTERED ENGINEERING FIRM F-928

STATE OF TEXAS
NICHOLAS C. BROWN
107175
LICENSED
PROFESSIONAL ENGINEER
03/26/2025

KHA PROJECT	069284918
DATE	MARCH 2025
SCALE:	AS SHOWN
DESIGNED BY:	MM
DRAWN BY:	MM
CHECKED BY:	NCB

OVERALL WATER PLAN

2525 CR 172 INDUSTRIAL

CITY OF ROUND ROCK
WILLIAMSON COUNTY, TEXAS

SHEET NUMBER
36 OF 227

SDP24-00001

Plotted By: Jenkins, Matthew Date: April 17, 2025 03:41:09pm File Path: K:\AUS_Civil\069284918 — DAU3 Round Rock\Cad\PlanSheets—SDP\C—Overall Water Plan.dwg
This document, together with the concepts and designs presented herein, as an instrument of service, is intended only for the specific purpose and client for which it was prepared. Reuse of and improper reliance on this document without authorization and adoption by Kimley-Horn and Associates, Inc. shall be without liability to Kimley-Horn and Associates, Inc.
Template:KHA AUS TEMPLATE CSD 2022 - DM 11-08-2022

Template:KHA AUS TEMPLATE CSD 2022 - BM 11-08-2022
Plotted By: Nam, Uoyed Date: April 17, 2025 05:42:49pm File Path: K:\AUS_Civil\069284910 - DAU3 Round Rock\Cad\PlanSheets-SDP\C-Public Water Plan and Profile.dwg
This document, together with the concepts and designs presented herein, as an instrument of service, is intended only for the specific purpose and client for which it was prepared. Reuse of and improper reliance on this document without written authorization and adaptation by Kimley-Horn and Associates, Inc. shall be without liability to Kimley-Horn and Associates, Inc.

PUBLIC WATER LINE CONNECTION
(SOUTH ON CR 172)

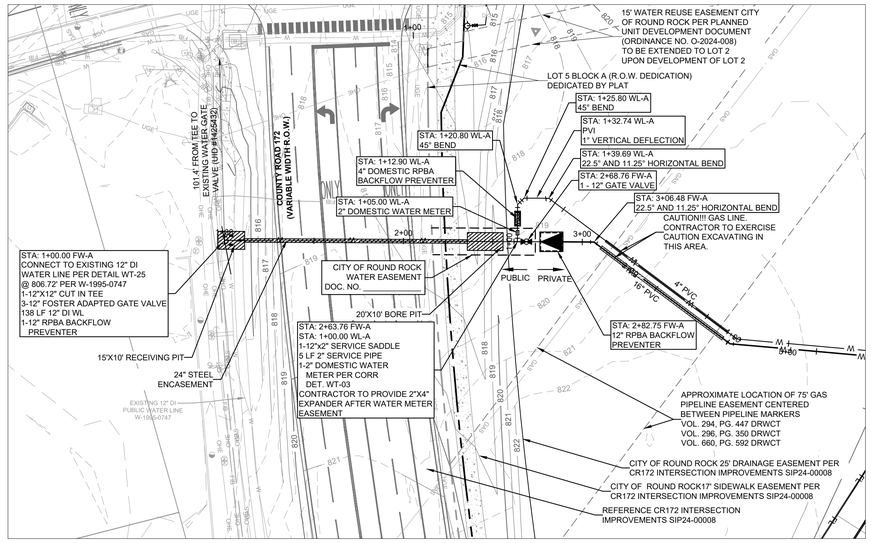

PUBLIC WATER LINE CONNECTION
(NORTH ON CR 172)

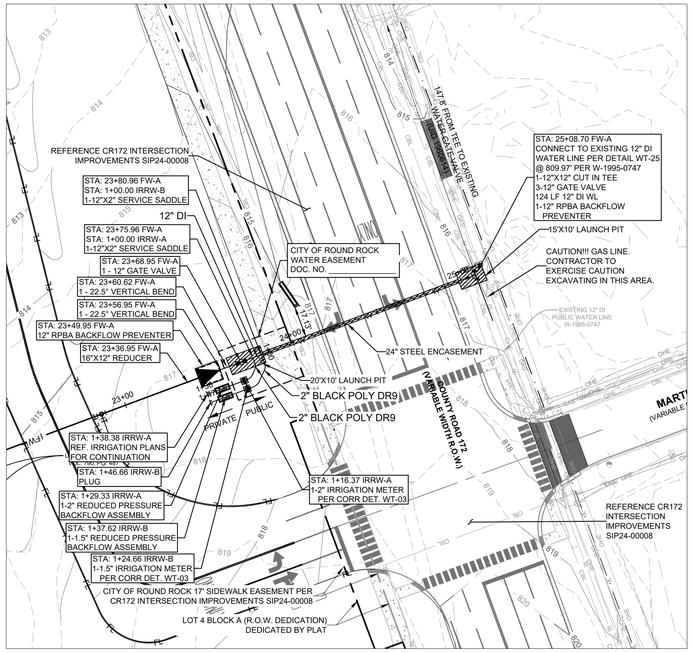

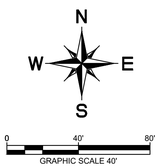

LEGEND

- PROPERTY LINE
- EXISTING MAJOR CONTOUR
- EXISTING MINOR CONTOUR
- MAJOR CONTOUR
- MINOR CONTOUR
- WATER LINE
- FIRE WATER LINE
- RECLAIMED WATER LINE
- FIRE HYDRANT
- WATER GATE VALVE
- WATER BACKFLOW PREVENTOR
- WATER METER
- FIRE DEPARTMENT CONNECTION
- FORCE MAIN
- WASTEWATER LINE
- WASTEWATER MANHOLE
- WASTEWATER CLEANOUT
- STORM DRAIN LINE
- STORM GRATE INLET
- STORM HEADWALL
- STORM MANHOLE
- STORM JUNCTION BOX
- STORM AREA INLET
- STORM CURB INLET
- EXISTING WATER LINE
- EXISTING WASTEWATER LINE
- EXISTING STORM DRAIN LINE
- EXISTING FIRE HYDRANT
- EXISTING WASTEWATER MANHOLE

PUBLIC WATER LINE CONNECTION PROFILE
(SOUTH ON CR 172)

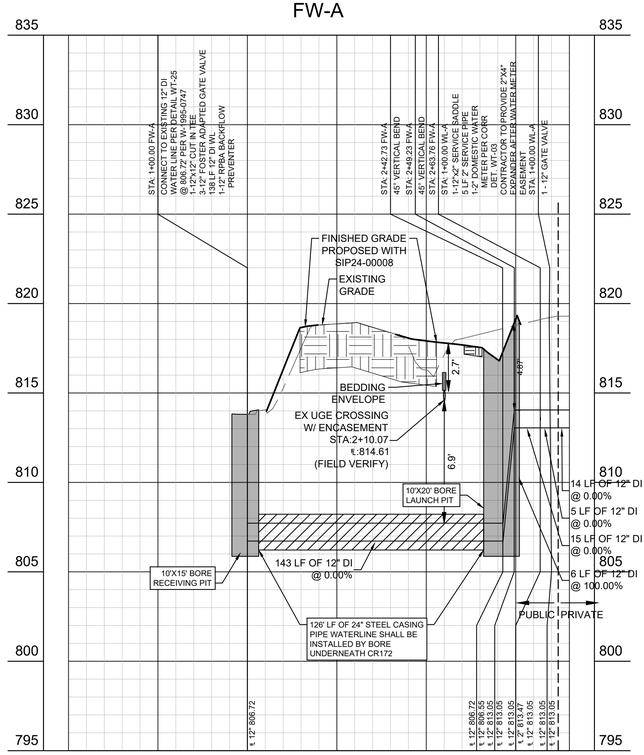

PUBLIC DOMESTC METER PROFILE
(SOUTH ON CR 172)

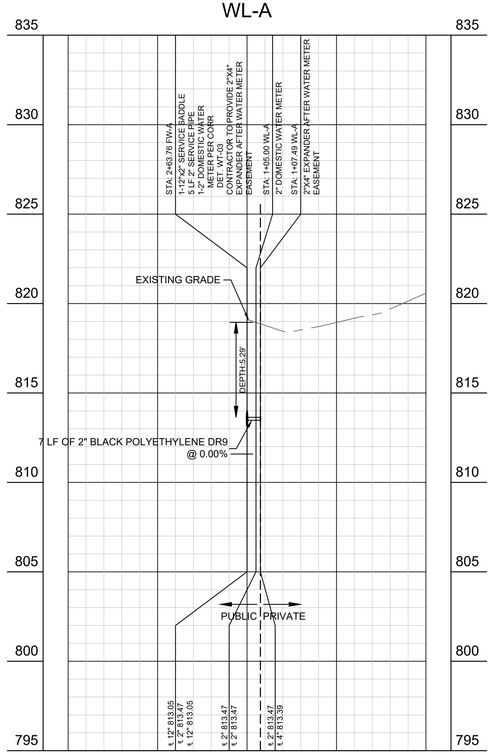

PUBLIC WATER LINE CONNECTION PROFILE
(NORTH ON CR 172)

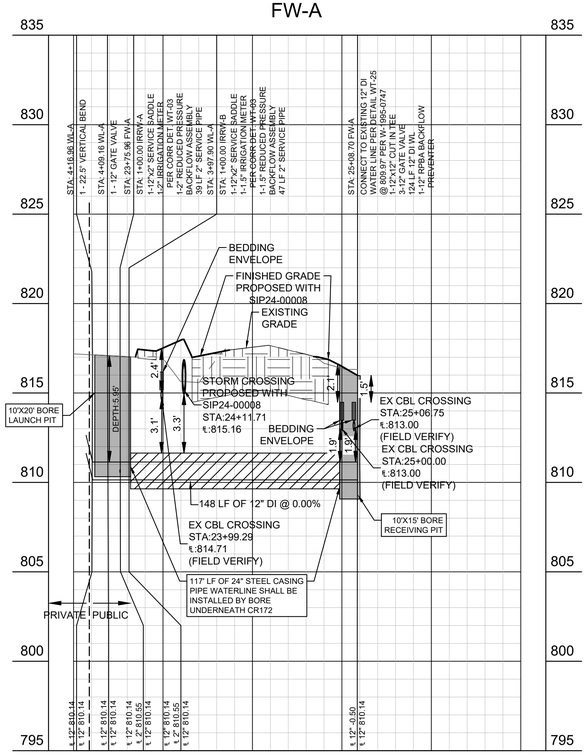

CONTRACTOR FIELD SET

This plan set shall remain on the site or subdivision premises for the life of the project and shall be utilized for any and all improvements contained herein.

PROFILE SCALE

1" = 40' HORIZONTAL
1" = 4' VERTICAL

NOTES

1. ALL NON-CITY INFRASTRUCTURE INCLUDING GAS, ELECTRIC, CABLE AND TELECOMMUNICATIONS SHALL TRAVERSE UNDERNEATH CITY INFRASTRUCTURE. THIS INCLUDES, BUT IS NOT LIMITED TO WATER LINES, WASTEWATER LINES AND STORM SEWER, WITH A MINIMUM OUTSIDE-TO-OUTSIDE CLEARANCE OF 18".
2. ALL PIPE FITTINGS SHALL HAVE THRUST BLOCKING PER CORR WT-25.
3. ALL VALVES SHOWN ARE MUELLER BRAND.
4. ALL FIRE SERVICE LEADS SHALL BE DUCTIRE IRON.
5. ALL PVC WATER MAINS SHALL BE CONSTRUCTED OF C-900 DR-14.
6. THE DRY UTILITY ALIGNMENTS ARE PRELIMINARY. TO HAVE PRELIMINARY STATUS REMOVED FROM PDS PERMIT, THE PERMIT MUST BE REVISED ONCE DRY ALIGNMENTS ARE APPROVED BY THE FRANCHISED UTILITY. THEN INSTALLATION OF DRY UTILITIES MAY COMMENCE.
7. MINIMUM DEPTH OF COVER OF PIPING TO BE 48" TO FINISHED GRADE.
8. DRY UTILITY ALIGNMENTS ARE SCHEMATIC. CONTRACTOR TO PROVIDE APPROPRIATE CLEARANCE FROM EXISTING AND PROPOSED INFRASTRUCTURE.

BENCHMARKS

BM #51471 MAG NAIL SET "GCP 2"
SET AT THE NORTHEAST CORNER OF THE INTERSECTION OF STATE HIGHWAY 45 AND COUNTY ROAD 172, ±5.5' FROM "YIELD" SIGN.
N: 10147640.83
E: 3127942.60
ELEV.= 841.70'

BM #51473 MAG NAIL SET "GCP 3"
SET IN THE NORTH RIGHT-OF-WAY LINE OF HESTERS CROSSING ROAD, ±560' FROM THE INTERSECTION OF HESTERS CROSSING ROAD AND COUNTY ROAD 172, ±100 FROM CONCRETE SIGN "ENCOMPASS HEALTH".
N: 10149343.04
E: 3128315.81
ELEV.= 812.19'

No.	REVISIONS	DATE	BY

Kimley»Horn
© 2025 KIMLEY-HORN AND ASSOCIATES, INC.
10814 JOLLYVILLE ROAD, CAMPUS IV, SUITE 200, AUSTIN, TX 78759
PHONE: 512-418-1771 FAX: 512-418-1791
WWW.KIMLEY-HORN.COM
TEXAS REGISTERED ENGINEERING FIRM F-928



03/26/2025

KHA PROJECT	069284918
DATE	MARCH 2025
SCALE:	AS SHOWN
DESIGNED BY:	MM
DRAWN BY:	MM
CHECKED BY:	NCB

PUBLIC WATER PLAN AND PROFILE

2525 CR 172 INDUSTRIAL

CITY OF ROUND ROCK
WILLIAMSON COUNTY, TEXAS

SHEET NUMBER
37 OF 227

SDP24-00001

Template:KHA AUS TEMPLATE (SD 2022) - DM 11-09-2022

Plotted By: Jenkins, Matthew Date: April 17, 2025 03:55:09pm File Path: K:\AUS_Civil\069284918 - DAI13 Round Rock\Cad\PlanSheets-SDP\C- Water Plan.dwg
This document, together with the concepts and designs presented herein, as an instrument of service, is intended only for the specific purpose and client for which it was prepared. Reuse of and improper reliance on this document without written authorization and adoption by Kimley-Horn and Associates, Inc. shall be without liability to Kimley-Horn and Associates, Inc.

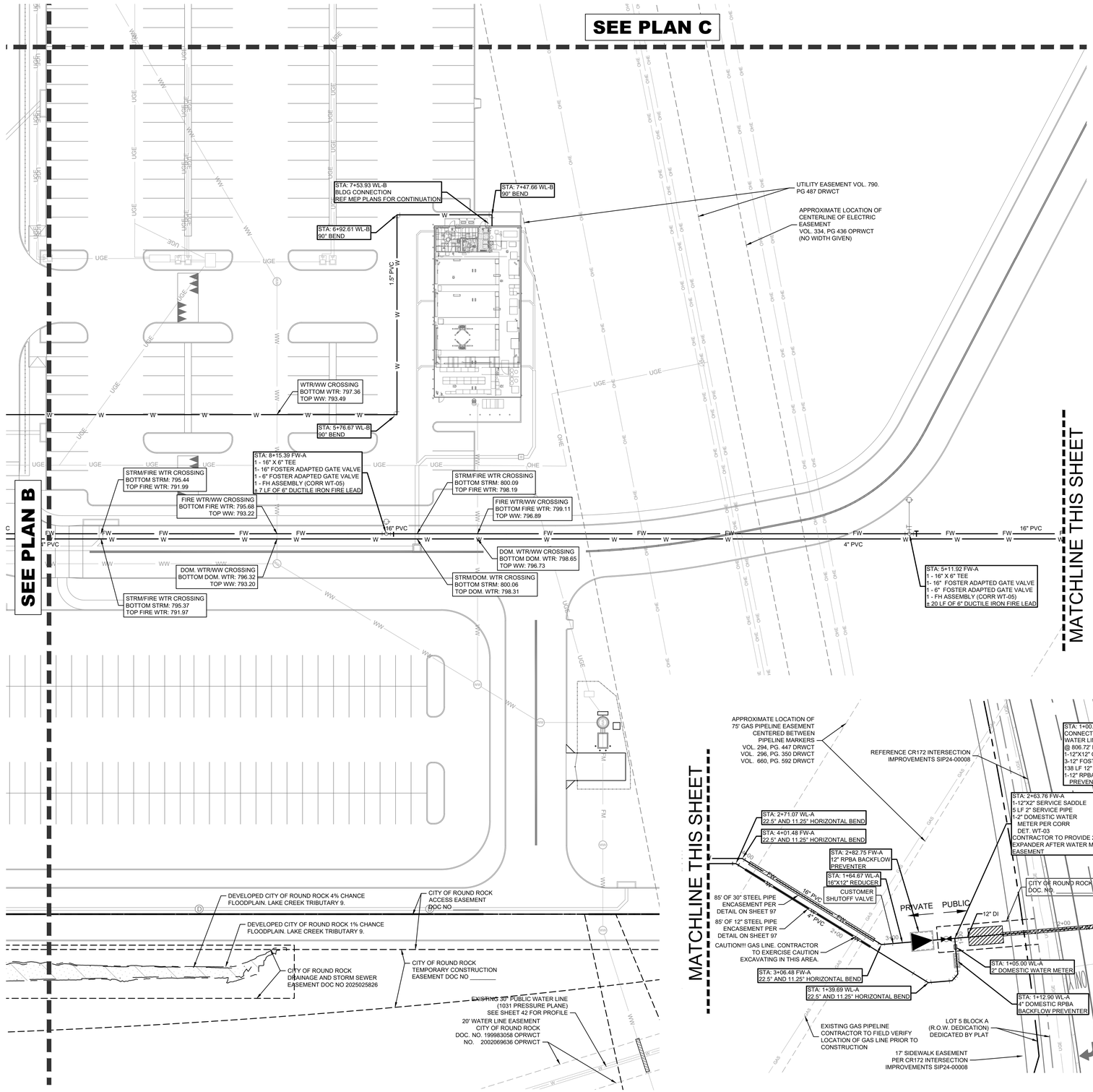



0 30' 60'

GRAPHIC SCALE 30'

LEGEND

	PROPERTY LINE
XXX	EXISTING MAJOR CONTOUR
XXX	EXISTING MINOR CONTOUR
XXX	MAJOR CONTOUR
XXX	MINOR CONTOUR
W	WATER LINE
FW	FIRE WATER LINE
RW	RECLAIMED WATER LINE
	FIRE HYDRANT
	WATER GATE VALVE
	WATER BACKFLOW PREVENTOR
	WATER METER
	FIRE DEPARTMENT CONNECTION
FM	FORCE MAIN
WW	WASTEWATER LINE
WW	WASTEWATER MANHOLE
	WASTEWATER CLEANOUT
	STORM DRAIN LINE
	STORM GRATE INLET
	STORM HEADWALL
D	STORM MANHOLE
	STORM JUNCTION BOX
	STORM AREA INLET
	STORM CURB INLET
UGE	UNDERGROUND ELECTRIC LINE
W	EXISTING WATER LINE
ss	EXISTING WASTEWATER LINE
	EXISTING STORM DRAIN LINE
	EXISTING FIRE HYDRANT
WW	EXISTING WASTEWATER MANHOLE

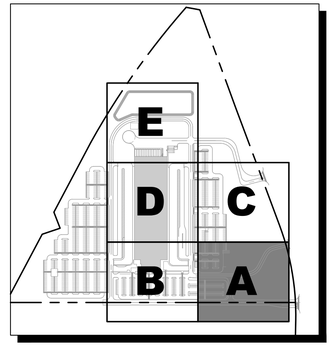

KEYMAP

N.T.S

NOTES

1. ALL NON-CITY INFRASTRUCTURE INCLUDING GAS, ELECTRIC, CABLE AND TELECOMMUNICATIONS SHALL TRAVERSE UNDERNEATH CITY INFRASTRUCTURE. THIS INCLUDES, BUT IS NOT LIMITED TO WATER LINES, WASTEWATER LINES AND STORM SEWER, WITH A MINIMUM OUTSIDE-TO-OUTSIDE CLEARANCE OF 18".
2. ALL PIPE FITTINGS SHALL HAVE THRUST BLOCKING PER CORR WT-25.
3. ALL VALVES SHOWN ARE MUELLER BRAND.
4. ALL FIRE SERVICE LEADS SHALL BE DUCTIRE IRON.
5. ALL PVC WATER MAINS SHALL BE CONSTRUCTED OF C-900 DR-14.
6. THE DRY UTILITY ALIGNMENTS ARE PRELIMINARY. TO HAVE PRELIMINARY STATUS REMOVED FROM PDS PERMIT, THE PERMIT MUST BE REVISED ONCE DRY ALIGNMENTS ARE APPROVED BY THE FRANCHISED UTILITY. THEN INSTALLATION OF DRY UTILITIES MAY COMMENCE.
7. MINIMUM DEPTH OF COVER OF PIPING TO BE 48" TO FINISHED GRADE.
8. DRY UTILITY ALIGNMENTS ARE SCHEMATIC. CONTRACTOR TO PROVIDE APPROPRIATE CLEARANCE FROM EXISTING AND PROPOSED INFRASTRUCTURE.

CONTRACTOR FIELD SET

This plan set shall remain on the site or subdivision premises for the life of the project and shall be utilized for any and all improvements contained herein.

BENCHMARKS

BM #51471 MAG NAIL SET "GCP 2"
SET AT THE NORTHEAST CORNER OF THE INTERSECTION OF STATE HIGHWAY 45 AND COUNTY ROAD 172, ±5.5' FROM "YIELD" SIGN.
N: 10147640.83
E: 3127942.60
ELEV.= 841.70'

BM #51473 MAG NAIL SET "GCP 3"
SET IN THE NORTH RIGHT-OF-WAY LINE OF HESTERS CROSSING ROAD, ±560' FROM THE INTERSECTION OF HESTERS CROSSING ROAD AND COUNTY ROAD 172, ±100 FROM CONCRETE SIGN "ENCOMPASS HEALTH".
N: 10149343.04
E: 3128315.81
ELEV.= 812.19'

No.	REVISIONS	DATE	BY

Kimley»Horn
© 2025 KIMLEY-HORN AND ASSOCIATES, INC.
10814 JOLLYVILLE ROAD, CAMPUS IV, SUITE 200, AUSTIN, TX 78759
PHONE: 512-418-1771 FAX: 512-418-1791
WWW.KIMLEY-HORN.COM
TEXAS REGISTERED ENGINEERING FIRM F-928

NICHOLAS C. BROWN
107175
LICENSED
PROFESSIONAL ENGINEER
03/26/2025

KHA PROJECT	069284918
DATE	MARCH 2025
SCALE:	AS SHOWN
DESIGNED BY:	MM
DRAWN BY:	MM
CHECKED BY:	NCB

PRIVATE WATER PLAN A

2525 CR 172 INDUSTRIAL

CITY OF ROUND ROCK
WILLIAMSON COUNTY, TEXAS

SHEET NUMBER

38 OF 227

SDP24-00001

Template:KHA AUS TEMPLATE CSD 2022 - DM 11-09-2022

Plotted By: Jenkins, Matthew Date: April 17, 2025 03:55:23pm File Path: K:\AUS_Civil\069284910 - DAU3 Round Rock\Cad\PlanSheets-SDP\C- Water Plan.dwg
This document, together with the concepts and designs presented herein, as an instrument of service, is intended only for the specific purpose and client for which it was prepared. Reuse of and improper reliance on this document without written authorization and adoption by Kimley-Horn and Associates, Inc. shall be without liability to Kimley-Horn and Associates, Inc.

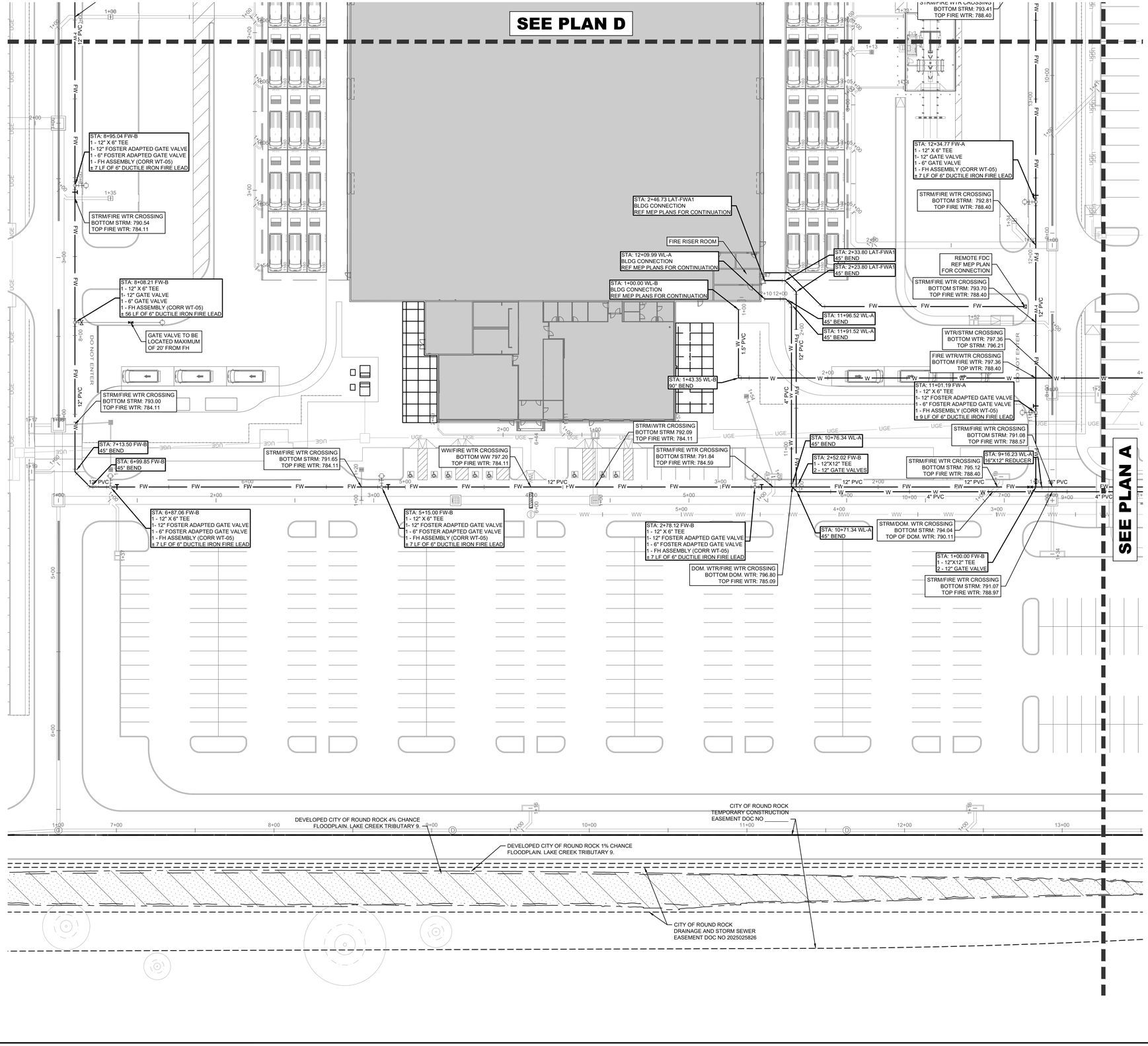

N

W E

S

0 30' 60'

GRAPHIC SCALE 30'

LEGEND

	PROPERTY LINE
XXX	EXISTING MAJOR CONTOUR
XXX	EXISTING MINOR CONTOUR
XXX	MAJOR CONTOUR
XXX	MINOR CONTOUR
W	WATER LINE
FW	FIRE WATER LINE
RW	RECLAIMED WATER LINE
	FIRE HYDRANT
	WATER GATE VALVE
	WATER BACKFLOW PREVENTOR
	WATER METER
	FIRE DEPARTMENT CONNECTION
FM	FORCE MAIN
WW	WASTEWATER LINE
WW	WASTEWATER MANHOLE
	WASTEWATER CLEANOUT
	STORM DRAIN LINE
	STORM GRATE INLET
	STORM HEADWALL
D	STORM MANHOLE
	STORM JUNCTION BOX
	STORM AREA INLET
	STORM CURB INLET
UGE	UNDERGROUND ELECTRIC LINE
W	EXISTING WATER LINE
ss	EXISTING WASTEWATER LINE
	EXISTING STORM DRAIN LINE
	EXISTING FIRE HYDRANT
WW	EXISTING WASTEWATER MANHOLE

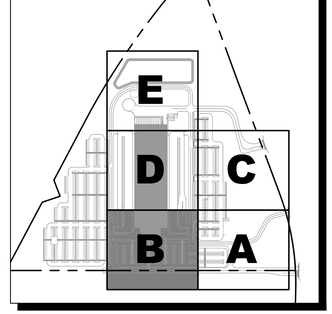

KEYMAP

N.T.S

NOTES

1. ALL NON-CITY INFRASTRUCTURE INCLUDING GAS, ELECTRIC, CABLE AND TELECOMMUNICATIONS SHALL TRAVERSE UNDERNEATH CITY INFRASTRUCTURE. THIS INCLUDES, BUT IS NOT LIMITED TO WATER LINES, WASTEWATER LINES AND STORM SEWER, WITH A MINIMUM OUTSIDE-TO-OUTSIDE CLEARANCE OF 18".
2. ALL PIPE FITTINGS SHALL HAVE THRUST BLOCKING PER CORR WT-25.
3. ALL VALVES SHOWN ARE MUELLER BRAND.
4. ALL FIRE SERVICE LEADS SHALL BE DUCTIRE IRON.
5. ALL PVC WATER MAINS SHALL BE CONSTRUCTED OF C-900 DR-14.
6. THE DRY UTILITY ALIGNMENTS ARE PRELIMINARY. TO HAVE PRELIMINARY STATUS REMOVED FROM PDS PERMIT, THE PERMIT MUST BE REVISED ONCE DRY ALIGNMENTS ARE APPROVED BY THE FRANCHISED UTILITY. THEN INSTALLATION OF DRY UTILITIES MAY COMMENCE.
7. MINIMUM DEPTH OF COVER OF PIPING TO BE 48" TO FINISHED GRADE.
8. DRY UTILITY ALIGNMENTS ARE SCHEMATIC. CONTRACTOR TO PROVIDE APPROPRIATE CLEARANCE FROM EXISTING AND PROPOSED INFRASTRUCTURE.

BENCHMARKS

BM #51471 MAG NAIL SET "GCP 2"
SET AT THE NORTHEAST CORNER OF THE INTERSECTION OF STATE HIGHWAY 45 AND COUNTY ROAD 172, ±5.5' FROM "YIELD" SIGN.
N: 10147640.83
E: 3127942.60
ELEV.= 841.70'

BM #51473 MAG NAIL SET "GCP 3"
SET IN THE NORTH RIGHT-OF-WAY LINE OF HESTERS CROSSING ROAD, ±560' FROM THE INTERSECTION OF HESTERS CROSSING ROAD AND COUNTY ROAD 172, ±100 FROM CONCRETE SIGN "ENCOMPASS HEALTH".
N: 10149343.04
E: 3128315.81
ELEV.= 812.19'

CONTRACTOR FIELD SET

This plan set shall remain on the site or subdivision premises for the life of the project and shall be utilized for any and all improvements contained herein.

No.	REVISIONS	DATE	BY

Kimley»Horn
© 2025 KIMLEY-HORN AND ASSOCIATES, INC.
10814 JOLLYVILLE ROAD, CAMPUS IV, SUITE 200, AUSTIN, TX 78759
PHONE: 512-418-1771 FAX: 512-418-1791
WWW.KIMLEY-HORN.COM
TEXAS REGISTERED ENGINEERING FIRM F-928

NICHOLAS C. BROWN
107175
LICENSED PROFESSIONAL ENGINEER
03/26/2025

KHA PROJECT	069284918
DATE	MARCH 2025
SCALE:	AS SHOWN
DESIGNED BY:	MM
DRAWN BY:	MM
CHECKED BY:	NCB

PRIVATE WATER PLAN B

2525 CR 172 INDUSTRIAL

CITY OF ROUND ROCK
WILLIAMSON COUNTY, TEXAS

SHEET NUMBER
39 OF 227

SDP24-00001

Template:KHA AUS TEMPLATE CSD 2022 - DM 11-08-2022

Plotted By:Jenkins, Matthew Date: April 17, 2025 03:55:37pm File Path:K:\AUS_Civil\060284910 – DAU3 Round Rock\Civil\PlanSheets–SDP\C– Water Plan.dwg

This document, together with the concepts and designs presented herein, as an instrument of service, is intended only for the specific purpose and client for which it was prepared. Reuse of and improper reliance on this document without written authorization and adoption by Kimley-Horn and Associates, Inc. shall be without liability to Kimley-Horn and Associates, Inc.

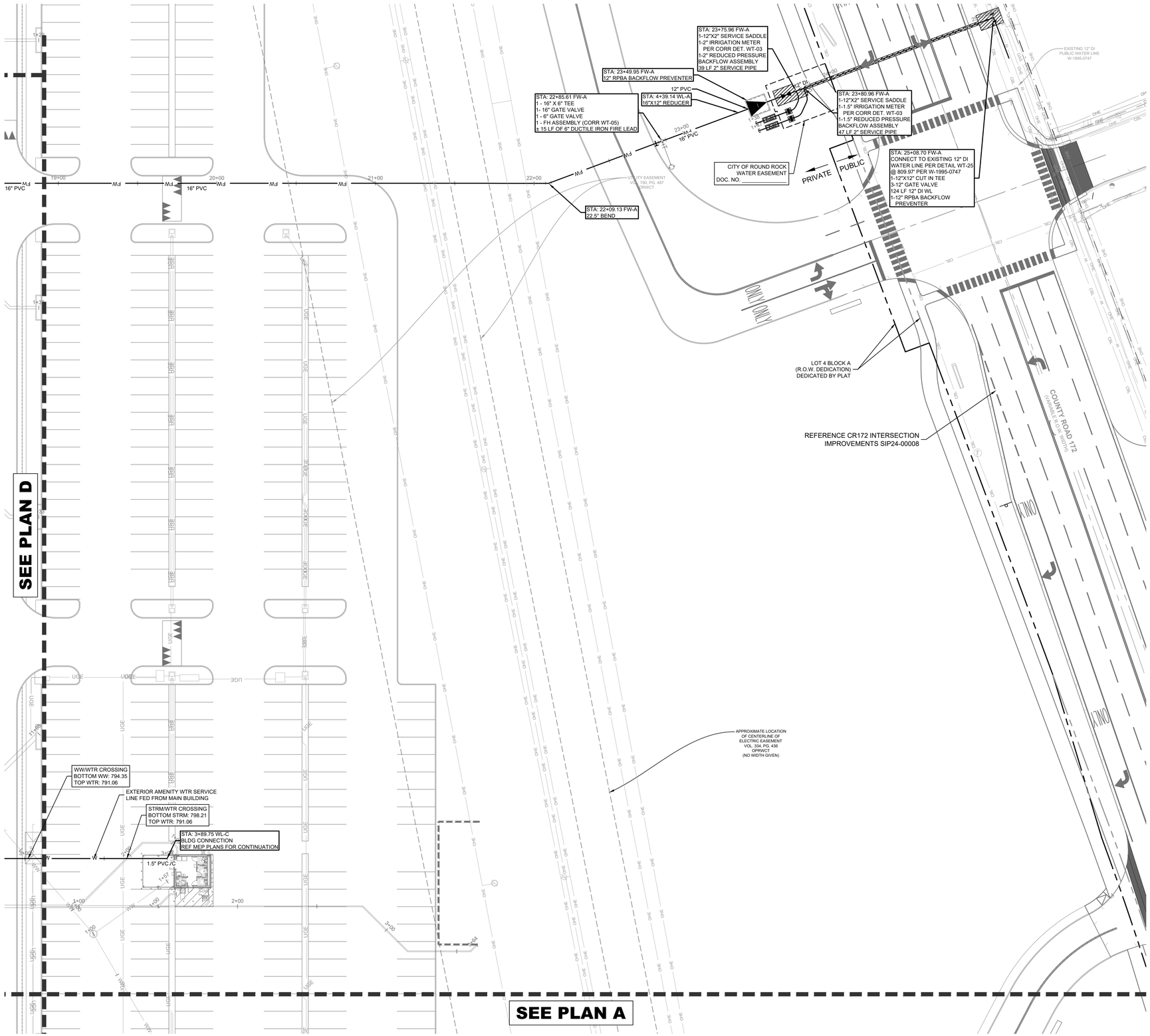

N

W E

S

0 30' 60'

GRAPHIC SCALE 30'

LEGEND

- PROPERTY LINE
- XXX EXISTING MAJOR CONTOUR
- XXX EXISTING MINOR CONTOUR
- XXX MAJOR CONTOUR
- XXX MINOR CONTOUR
- W WATER LINE
- FW FIRE WATER LINE
- RW RECLAIMED WATER LINE
- FIRE HYDRANT
- WATER GATE VALVE
- WATER BACKFLOW PREVENTOR
- WATER METER
- FIRE DEPARTMENT CONNECTION
- FM FORCE MAIN
- WW WASTEWATER LINE
- WASTEWATER MANHOLE
- WASTEWATER CLEANOUT
- STORM DRAIN LINE
- STORM GRATE INLET
- STORM HEADWALL
- STORM MANHOLE
- STORM JUNCTION BOX
- STORM AREA INLET
- STORM CURB INLET
- UGE UNDERGROUND ELECTRIC LINE
- W EXISTING WATER LINE
- SS EXISTING WASTEWATER LINE
- EXISTING STORM DRAIN LINE
- EXISTING FIRE HYDRANT
- EXISTING WASTEWATER MANHOLE

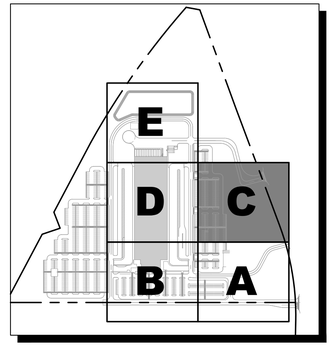

KEYMAP

N.T.S

NOTES

1. ALL NON-CITY INFRASTRUCTURE INCLUDING GAS, ELECTRIC, CABLE AND TELECOMMUNICATIONS SHALL TRAVERSE UNDERNEATH CITY INFRASTRUCTURE. THIS INCLUDES, BUT IS NOT LIMITED TO WATER LINES, WASTEWATER LINES AND STORM SEWER, WITH A MINIMUM OUTSIDE-TO-OUTSIDE CLEARANCE OF 18".
2. ALL PIPE FITTINGS SHALL HAVE THRUST BLOCKING PER CORR WT-25.
3. ALL VALVES SHOWN ARE MUELLER BRAND.
4. ALL FIRE SERVICE LEADS SHALL BE DUCTIRE IRON.
5. ALL PVC WATER MAINS SHALL BE CONSTRUCTED OF C-900 DR-14.
6. THE DRY UTILITY ALIGNMENTS ARE PRELIMINARY. TO HAVE PRELIMINARY STATUS REMOVED FROM PDS PERMIT, THE PERMIT MUST BE REVISED ONCE DRY ALIGNMENTS ARE APPROVED BY THE FRANCHISED UTILITY. THEN INSTALLATION OF DRY UTILITIES MAY COMMENCE.
7. MINIMUM DEPTH OF COVER OF PIPING TO BE 48" TO FINISHED GRADE.
8. DRY UTILITY ALIGNMENTS ARE SCHEMATIC. CONTRACTOR TO PROVIDE APPROPRIATE CLEARANCE FROM EXISTING AND PROPOSED INFRASTRUCTURE.

BENCHMARKS

BM #51471 MAG NAIL SET "GCP 2"
SET AT THE NORTHEAST CORNER OF THE INTERSECTION OF STATE HIGHWAY 45 AND COUNTY ROAD 172, ±5.5' FROM "YIELD" SIGN.
N: 10147640.83
E: 3127942.60
ELEV.= 841.70'

BM #51473 MAG NAIL SET "GCP 3"
SET IN THE NORTH RIGHT-OF-WAY LINE OF HESTERS CROSSING ROAD, ±560' FROM THE INTERSECTION OF HESTERS CROSSING ROAD AND COUNTY ROAD 172, ±100 FROM CONCRETE SIGN "ENCOMPASS HEALTH".
N: 10149343.04
E: 3128315.81
ELEV.= 812.19'

CONTRACTOR FIELD SET

This plan set shall remain on the site or subdivision premises for the life of the project and shall be utilized for any and all improvements contained herein.

No.	REVISIONS	DATE	BY

Kimley»Horn
© 2025 KIMLEY-HORN AND ASSOCIATES, INC.
10814 JOLLYVILLE ROAD, CAMPUS IV, SUITE 200, AUSTIN, TX 78759
PHONE: 512-418-1771 FAX: 512-418-1791
WWW.KIMLEY-HORN.COM
TEXAS REGISTERED ENGINEERING FIRM F-928

NICHOLAS C. BROWN
107175
LICENSED
PROFESSIONAL ENGINEER
03/26/2025

KHA PROJECT 060284918			
DATE	MARCH 2025		
SCALE:	AS SHOWN		
DESIGNED BY:	MM		
DRAWN BY:	MM		
CHECKED BY:	NCB		

PRIVATE WATER PLAN C

2525 CR 172 INDUSTRIAL

CITY OF ROUND ROCK
WILLIAMSON COUNTY, TEXAS

SHEET NUMBER

40 OF 227

SDP24-00001

Plotted By: jenkins, Matthew Date: April 17, 2025 03:55:50pm File Path: K:\AUS_Civil\069284910 - DAU3 Round Rock\Cad\PlanSheets-SDP\C- Water Plan.dwg
This document, together with the concepts and designs presented herein, as an instrument of service, is intended only for the specific purpose and client for which it was prepared. Reuse of and improper reliance on this document without written authorization and adoption by Kimley-Horn and Associates, Inc. shall be without liability to Kimley-Horn and Associates, Inc.

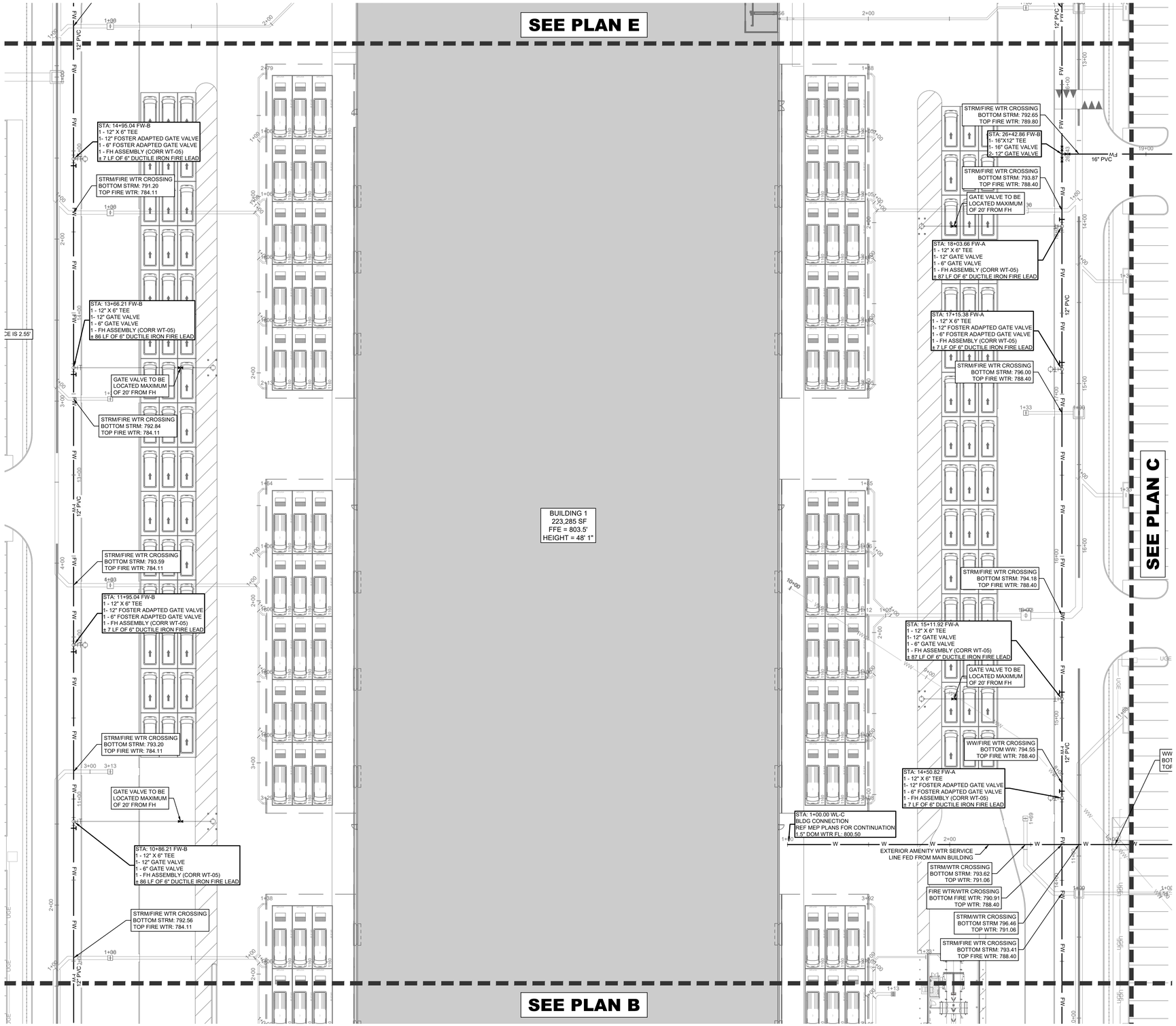

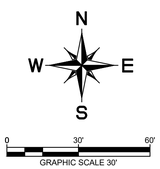

LEGEND

- PROPERTY LINE
- EXISTING MAJOR CONTOUR
- EXISTING MINOR CONTOUR
- MAJOR CONTOUR
- MINOR CONTOUR
- WATER LINE
- FIRE WATER LINE
- RECLAIMED WATER LINE
- FIRE HYDRANT
- WATER GATE VALVE
- WATER BACKFLOW PREVENTOR
- WATER METER
- FIRE DEPARTMENT CONNECTION
- FORCE MAIN
- WASTEWATER LINE
- WASTEWATER MANHOLE
- WASTEWATER CLEANOUT
- STORM DRAIN LINE
- STORM GRATE INLET
- STORM HEADWALL
- STORM MANHOLE
- STORM JUNCTION BOX
- STORM AREA INLET
- STORM CURB INLET
- UNDERGROUND ELECTRIC LINE
- EXISTING WATER LINE
- EXISTING WASTEWATER LINE
- EXISTING STORM DRAIN LINE
- EXISTING FIRE HYDRANT
- EXISTING WASTEWATER MANHOLE

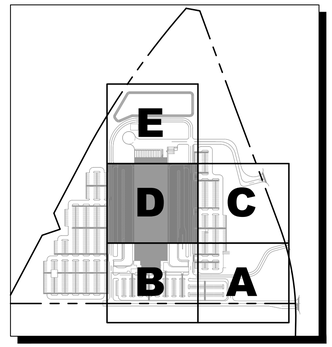

KEYMAP
N.T.S

NOTES
1. ALL NON-CITY INFRASTRUCTURE INCLUDING GAS, ELECTRIC, CABLE AND TELECOMMUNICATIONS SHALL TRAVERSE UNDERNEATH CITY INFRASTRUCTURE. THIS INCLUDES, BUT IS NOT LIMITED TO WATER LINES, WASTEWATER LINES AND STORM SEWER, WITH A MINIMUM OUTSIDE-TO-OUTSIDE CLEARANCE OF 18".
2. ALL PIPE FITTINGS SHALL HAVE THRUST BLOCKING PER CORR WT-25.
3. ALL VALVES SHOWN ARE MUELLER BRAND.
4. ALL FIRE SERVICE LEADS SHALL BE DUCTIRE IRON.
5. ALL PVC WATER MAINS SHALL BE CONSTRUCTED OF C-900 DR-14.
6. THE DRY UTILITY ALIGNMENTS ARE PRELIMINARY. TO HAVE PRELIMINARY STATUS REMOVED FROM PDS PERMIT, THE PERMIT MUST BE REVISED ONCE DRY ALIGNMENTS ARE APPROVED BY THE FRANCHISED UTILITY. THEN INSTALLATION OF DRY UTILITIES MAY COMMENCE.
7. MINIMUM DEPTH OF COVER OF PIPING TO BE 48" TO FINISHED GRADE.
8. DRY UTILITY ALIGNMENTS ARE SCHEMATIC. CONTRACTOR TO PROVIDE APPROPRIATE CLEARANCE FROM EXISTING AND PROPOSED INFRASTRUCTURE.

BENCHMARKS

BM #51471 MAG NAIL SET "GCP 2"
SET AT THE NORTHEAST CORNER OF THE INTERSECTION OF STATE HIGHWAY 45 AND COUNTY ROAD 172, ±5.5' FROM "YIELD" SIGN.
N: 10147640.83
E: 3127942.60
ELEV.= 841.70'

BM #51473 MAG NAIL SET "GCP 3"
SET IN THE NORTH RIGHT-OF-WAY LINE OF HESTERS CROSSING ROAD, ±560' FROM THE INTERSECTION OF HESTERS CROSSING ROAD AND COUNTY ROAD 172, ±100 FROM CONCRETE SIGN "ENCOMPASS HEALTH".
N: 10149343.04
E: 3128315.81
ELEV.= 812.19'

CONTRACTOR FIELD SET

This plan set shall remain on the site or subdivision premises for the life of the project and shall be utilized for any and all improvements contained herein.

No.	REVISIONS	DATE	BY

Kimley»Horn
© 2025 KIMLEY-HORN AND ASSOCIATES, INC.
10814 JOLLYVILLE ROAD, CAMPUS IV, SUITE 200, AUSTIN, TX 78759
PHONE: 512-418-1771 FAX: 512-418-1791
WWW.KIMLEY-HORN.COM
TEXAS REGISTERED ENGINEERING FIRM F-928

NICHOLAS C. BROWN
107175
LICENSED
PROFESSIONAL ENGINEER
03/26/2025

KHA PROJECT	069284918
DATE	MARCH 2025
SCALE:	AS SHOWN
DESIGNED BY:	MM
DRAWN BY:	MM
CHECKED BY:	NCB

PRIVATE WATER PLAN
D

2525 CR 172
INDUSTRIAL
CITY OF ROUND ROCK
WILLIAMSON COUNTY, TEXAS

SHEET NUMBER
41 OF 227

SDP24-00001

Plotted By: dinkins, Matthew Date: April 17, 2025 03:56:11pm File Path: K:\AUS_Civil\069284918 - DAU3 Round Rock\Cad\PlanSheets - SDP\C - Water Plan.dwg
This document, together with the concepts and designs presented herein, as an instrument of service, is intended only for the specific purpose and client for which it was prepared. Reuse of and improper reliance on this document without written authorization and adaptation by Kimley-Horn and Associates, Inc. shall be without liability to Kimley-Horn and Associates, Inc.
Template:KHA AUS TEMPLATE CSD 2022 - DM 11-08-2022

EXISTING 30" WATER LINE
(SOUTH OF THE SITE)

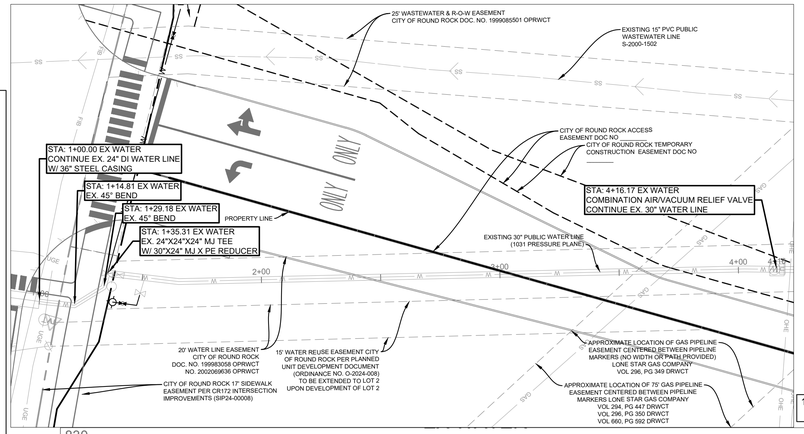

PROFILE SCALE
1" = 40' HORIZONTAL
1" = 4' VERTICAL

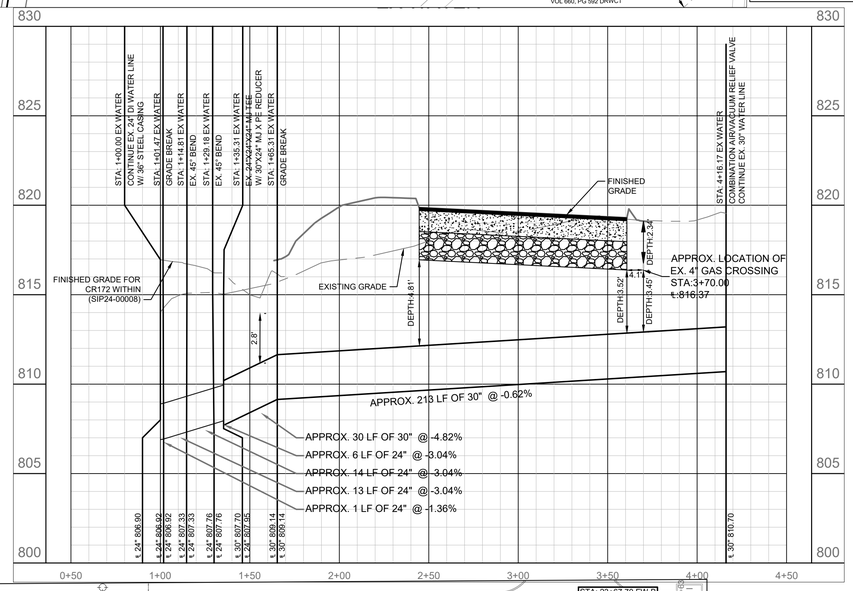

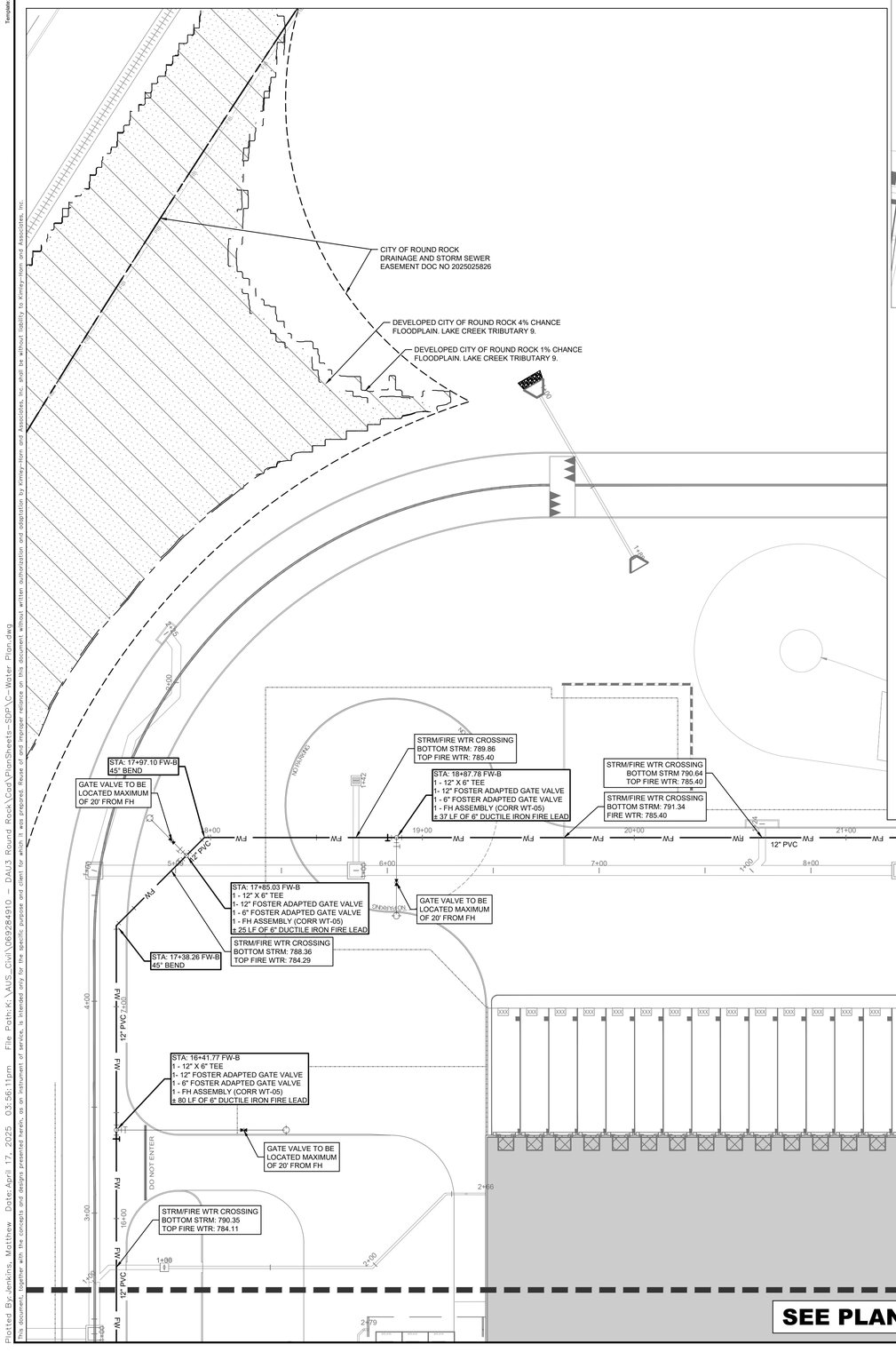



0 30' 60'
GRAPHIC SCALE 30'

LEGEND

- PROPERTY LINE
- EXISTING MAJOR CONTOUR
- EXISTING MINOR CONTOUR
- MAJOR CONTOUR
- MINOR CONTOUR
- WATER LINE
- FIRE WATER LINE
- RECLAIMED WATER LINE
- FIRE HYDRANT
- WATER GATE VALVE
- WATER BACKFLOW PREVENTOR
- WATER METER
- FIRE DEPARTMENT CONNECTION
- FORCE MAIN
- WASTEWATER LINE
- WASTEWATER MANHOLE
- WASTEWATER CLEANOUT
- STORM DRAIN LINE
- STORM GRATE INLET
- STORM HEADWALL
- STORM MANHOLE
- STORM JUNCTION BOX
- STORM AREA INLET
- STORM CURB INLET
- UNDERGROUND ELECTRIC LINE
- EXISTING WATER LINE
- EXISTING WASTEWATER LINE
- EXISTING STORM DRAIN LINE
- EXISTING FIRE HYDRANT
- EXISTING WASTEWATER MANHOLE

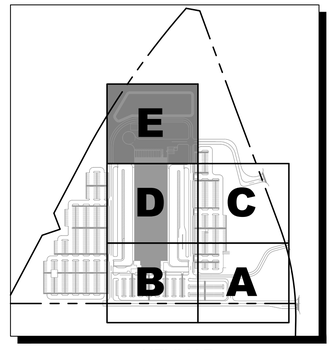

KEYMAP
N.T.S

NOTES
1. ALL NON-CITY INFRASTRUCTURE INCLUDING GAS, ELECTRIC, CABLE AND TELECOMMUNICATIONS SHALL TRAVERSE UNDERNEATH CITY INFRASTRUCTURE. THIS INCLUDES, BUT IS NOT LIMITED TO WATER LINES, WASTEWATER LINES AND STORM SEWER, WITH A MINIMUM OUTSIDE-TO-OUTSIDE CLEARANCE OF 18".
2. ALL PIPE FITTINGS SHALL HAVE THRUST BLOCKING PER CORR WT-25.
3. ALL VALVES SHOWN ARE MUELLER BRAND.
4. ALL FIRE SERVICE LEADS SHALL BE DUCTIRE IRON.
5. ALL PVC WATER MAINS SHALL BE CONSTRUCTED OF C-900 DR-14.
6. THE DRY UTILITY ALIGNMENTS ARE PRELIMINARY. TO HAVE PRELIMINARY STATUS REMOVED FROM PDS PERMIT, THE PERMIT MUST BE REVISED ONCE DRY ALIGNMENTS ARE APPROVED BY THE FRANCHISED UTILITY. THEN INSTALLATION OF DRY UTILITIES MAY COMMENCE.
7. MINIMUM DEPTH OF COVER OF PIPING TO BE 48" TO FINISHED GRADE.
8. DRY UTILITY ALIGNMENTS ARE SCHEMATIC. CONTRACTOR TO PROVIDE APPROPRIATE CLEARANCE FROM EXISTING AND PROPOSED INFRASTRUCTURE.

CONTRACTOR FIELD SET

This plan set shall remain on the site or subdivision premises for the life of the project and shall be utilized for any and all improvements contained herein.

BENCHMARKS

BM #51471 MAG NAIL SET "GCP 2" SET AT THE NORTHEAST CORNER OF THE INTERSECTION OF STATE HIGHWAY 45 AND COUNTY ROAD 172, ±5.5' FROM "YIELD" SIGN.
N: 10147640.83
E: 3127942.60
ELEV.= 841.70'

BM #51473 MAG NAIL SET "GCP 3" SET IN THE NORTH RIGHT-OF-WAY LINE OF HESTERS CROSSING ROAD, ±560' FROM THE INTERSECTION OF HESTERS CROSSING ROAD AND COUNTY ROAD 172, ±100 FROM CONCRETE SIGN "ENCOMPASS HEALTH".
N: 10149343.04
E: 3128315.81
ELEV.= 812.19'

No.	REVISIONS	DATE	BY

Kimley»Horn
© 2025 KIMLEY-HORN AND ASSOCIATES, INC.
10814 JOLLYVILLE ROAD, CAMPUS IV, SUITE 200, AUSTIN, TX 78759
PHONE: 512-418-1771 FAX: 512-418-1791
WWW.KIMLEY-HORN.COM
TEXAS REGISTERED ENGINEERING FIRM F-928

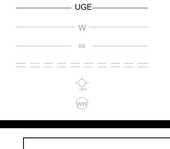

03/26/2025

KHA PROJECT	069284918
DATE	MARCH 2025
SCALE:	AS SHOWN
DESIGNED BY:	MM
DRAWN BY:	MM
CHECKED BY:	NCB

PRIVATE WATER PLAN E

2525 CR 172
INDUSTRIAL
CITY OF ROUND ROCK
WILLIAMSON COUNTY, TEXAS

SHEET NUMBER
42 OF 227

SDP24-00001

Template:KHA AUS TEMPLATE D30 2022 DM:11-08-2022

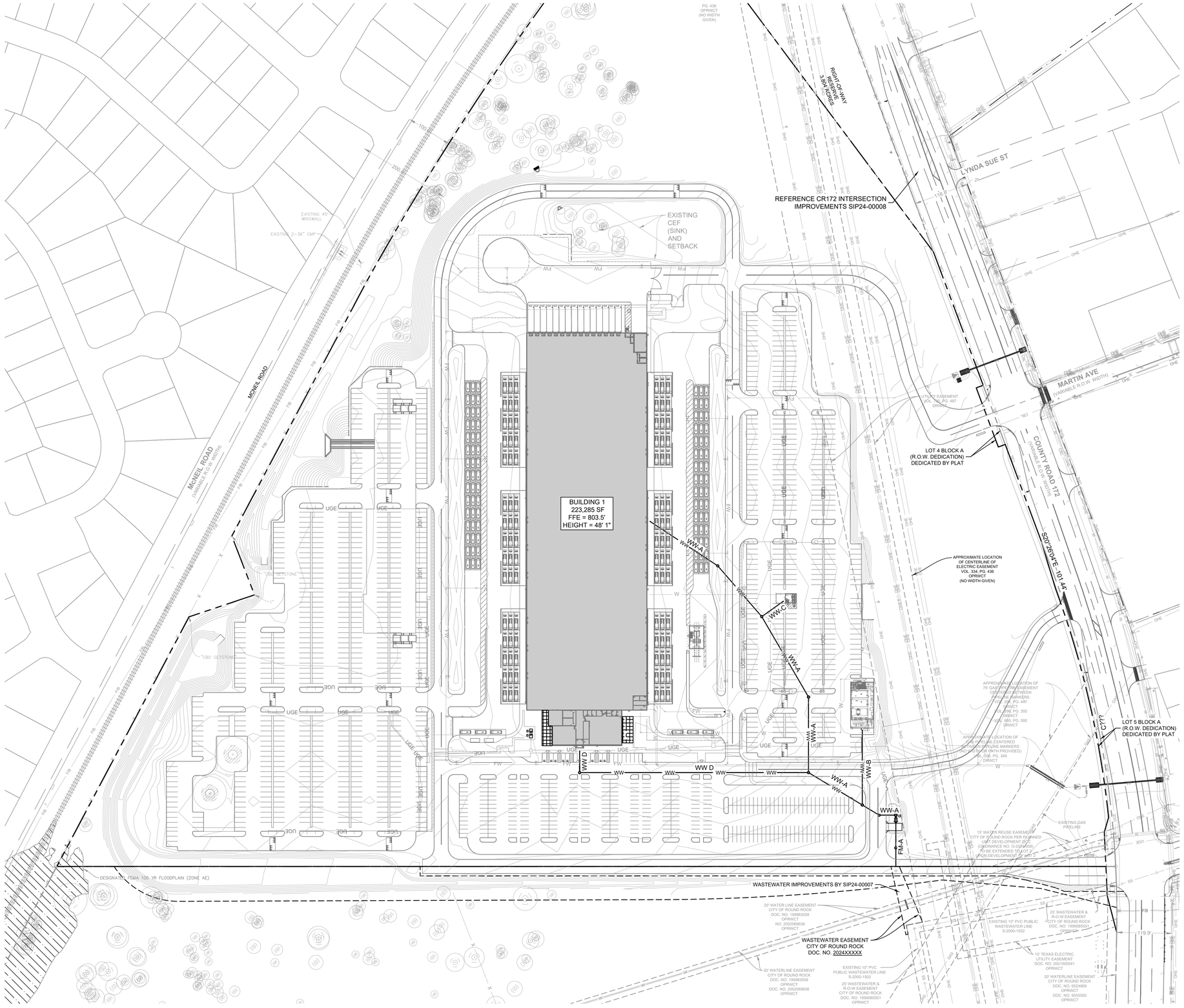

NOTES

1. ALL NON-CITY INFRASTRUCTURE INCLUDING GAS, ELECTRIC, CABLE AND TELECOMMUNICATIONS SHALL TRAVERSE UNDERNEATH CITY INFRASTRUCTURE. THIS INCLUDES, BUT IS NOT LIMITED TO WATER LINES, WASTEWATER LINES AND STORM SEWER, WITH A MINIMUM OUTSIDE-TO-OUTSIDE CLEARANCE OF 18".
2. ALL MANHOLES SHALL BE COATED AND VACUMM TESTED.
3. ALL WASETEWATER LINES ARE TO BE CONSTRUCTED OF SDR 26
4. ALL SEGMENTS OF PIPE LOCATED IN ENCASEMENT SHALL BE FULLY RESTRAINED.
6. THE DRY UTILITY ALIGNMENTS ARE PRELIMINARY. TO HAVE PRELIMINARY STATUS REMOVED FROM PDS PERMIT, THE PERMIT MUST BE REVISED ONCE DRY ALIGNMENTS ARE APPROVED BY THE FRANCHISED UTILITY. THEN INSTALLATION OF DRY UTILITIES MAY COMMENCE.
7. DRY UTILITY ALIGNMENTS ARE SCHEMATIC. CONTRACTOR TO PROVIDE APPROPRIATE CLEARANCE FROM EXISTING AND PROPOSED INFRASTRUCTURE.

BENCHMARKS

BM #51471 MAG NAIL SET "GCP 2"
SET AT THE NORTHEAST CORNER OF THE INTERSECTION OF STATE HIGHWAY 45 AND COUNTY ROAD 172, ±5.5' FROM "YIELD" SIGN.
N: 10147640.83
E: 3127942.60
ELEV.= 841.70'

BM #51473 MAG NAIL SET "GCP 3"
SET IN THE NORTH RIGHT-OF-WAY LINE OF HESTERS CROSSING ROAD, ±560' FROM THE INTERSECTION OF HESTERS CROSSING ROAD AND COUNTY ROAD 172, ±100 FROM CONCRETE SIGN "ENCOMPASS HEALTH".
N: 10149343.04
E: 3128315.81
ELEV.= 812.19'

No.	REVISIONS	DATE	BY

Kimley»Horn
© 2025 KIMLEY-HORN AND ASSOCIATES, INC.
10814 JOLLYVILLE ROAD, CAMPUS IV, SUITE 200, AUSTIN, TX 78759
PHONE: 512-418-1771 FAX: 512-418-1791
WWW.KIMLEY-HORN.COM
TEXAS REGISTERED ENGINEERING FIRM F-928

NICHOLAS C. BROWN
107175
LICENSED
PROFESSIONAL ENGINEER
03/26/2025

KHA PROJECT	060284918
DATE	MARCH 2025
SCALE:	AS SHOWN
DESIGNED BY:	MM
DRAWN BY:	MM
CHECKED BY:	NCB

OVERALL WASTEWATER PLAN

2525 CR 172 INDUSTRIAL

CITY OF ROUND ROCK
WILLIAMSON COUNTY, TEXAS

SHEET NUMBER
43 OF 227

SDP24-00001

Plotted By: jenkins, Matthew Date: April 17, 2025 04:01:35pm File Path: K:\AUS_Civil\060284910 — DAU3 Round Rock\Civil\PlanSheets-SDP\C-Overall Wastewater Plan.dwg
This document, together with the concepts and designs presented herein, as an instrument of service, is intended only for the specific purpose and client for which it was prepared. Reuse of and improper reliance on this document without written authorization and adoption by Kimley-Horn and Associates, Inc. shall be without liability to Kimley-Horn and Associates, Inc.

Plotted By: Jenkins, Matthew Date: April 17, 2025 04:06:53pm File Path: K:\AUS_Civil\069284918 - DAU3 Round Rock\Cad\PlanSheets-SDP\C- Wastewater Plan.dwg
This document, together with the concepts and designs presented herein, as an instrument of service, is intended only for the specific purpose and client for which it was prepared. Reuse of and improper reliance on this document without authorization and adaptation by Kimley-Horn and Associates, Inc. shall be without liability to Kimley-Horn and Associates, Inc.
Template:KHA AUS TEMPLATE (SD) 2022 - DM:11-09-2022

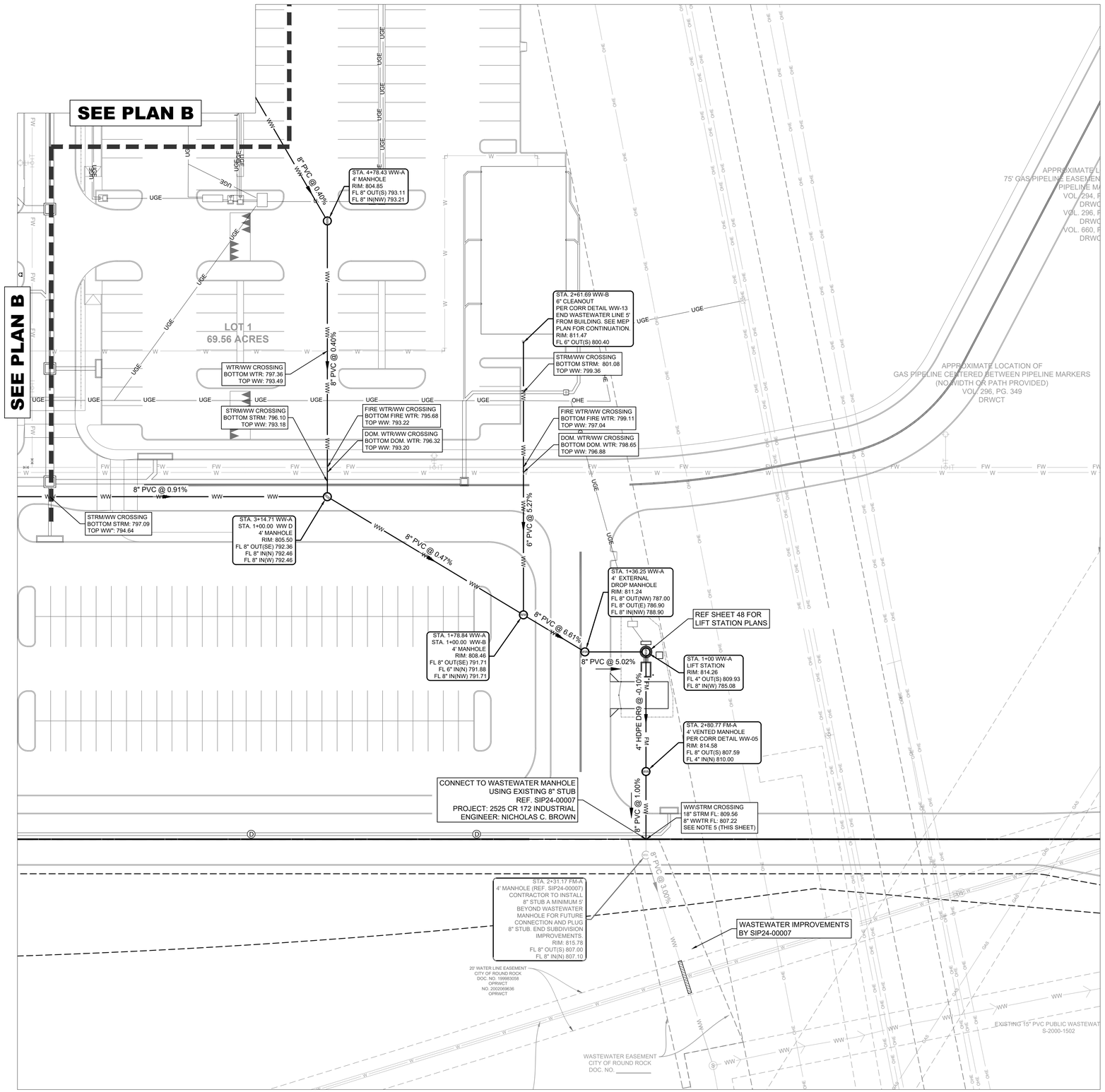

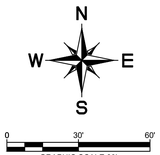

LEGEND

	PROPERTY LINE
XXX	EXISTING MAJOR CONTOUR
XXX	EXISTING MINOR CONTOUR
XXX	MAJOR CONTOUR
XXX	MINOR CONTOUR
W	WATER LINE
FW	FIRE WATER LINE
RW	RECLAIMED WATER LINE
	FIRE HYDRANT
	WATER GATE VALVE
	WATER BACKFLOW PREVENTOR
	WATER METER
	FIRE DEPARTMENT CONNECTION
FM	FORCE MAIN
WW	WASTEWATER LINE
	WASTEWATER MANHOLE
	WASTEWATER CLEANOUT
	STORM DRAIN LINE
	STORM GRATE INLET
	STORM HEADWALL
D	STORM MANHOLE
	STORM JUNCTION BOX
	STORM AREA INLET
	STORM CURB INLET
UGE	PRELIMINARY UNDERGROUND ELECTRIC
W	EXISTING WATER LINE
ss	EXISTING WASTEWATER LINE
	EXISTING STORM DRAIN LINE
	EXISTING FIRE HYDRANT
WW	EXISTING WASTEWATER MANHOLE

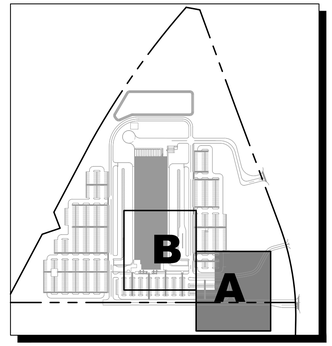

KEYMAP
N.T.S

NOTES
1. ALL NON-CITY INFRASTRUCTURE INCLUDING GAS, ELECTRIC, CABLE AND TELECOMMUNICATIONS SHALL TRAVERSE UNDERNEATH CITY INFRASTRUCTURE. THIS INCLUDES, BUT IS NOT LIMITED TO WATER LINES, WASTEWATER LINES AND STORM SEWER, WITH A MINIMUM OUTSIDE-TO-OUTSIDE CLEARANCE OF 18".
2. ALL MANHOLES SHALL BE COATED AND VACUMM TESTED.
3. ALL WASETEWATER LINES ARE TO BE CONSTRUCTED OF SDR 26
4. ALL SEGMENTS OF PIPE LOCATED IN ENCASEMENT SHALL BE FULLY RESTRAINED.
5. TEXAS ADMINISTRATIVE CODE §290.44 [E][4][B][I]. WHERE A NEW POTABLE WATERLINE CROSSES ABOVE A WASTEWATER MAIN OR LATERAL, THE SEGMENT OF THE WATERLINE PIPE SHALL BE CENTERED OVER AND MUST BE PERPENDICULAR TO THE WASTEWATER MAIN OR LATERAL SUCH THAT THE JOINTS OF THE WATERLINE PIPE ARE EQUIDISTANT AND AT LEAST NINE FEET HORIZONTALLY FROM THE CENTERLINE OF THE WASTEWATER MAIN OR LATERAL. WHEN CROSSING AN EXISTING WASTEWATER MAIN OR LATERAL AND IT IS DISTURBED OR SHOWS SIGNS OF LEAKING, THE WASTEWATER MAIN OR LATERAL SHALL BE REPLACED FOR AT LEAST NINE FEET IN BOTH DIRECTIONS [18 FEET TOTAL] WITH AT LEAST 150 PSI PRESSURE-RATED PIPE EMBEDDED IN CEMENT STABILIZED SAND [SEE CLAUSE [V] OF THIS SUBPARAGRAPH] FOR THE TOTAL LENGTH OF ONE PIPE SEGMENT PLUS 12 INCHES BEYOND THE JOINT ON EACH END.
6. THE DRY UTILITY ALIGNMENTS ARE PRELIMINARY. TO HAVE PRELIMINARY STATUS REMOVED FROM PDS PERMIT, THE PERMIT MUST BE REVISED ONCE DRY ALIGNMENTS ARE APPROVED BY THE FRANCHISED UTILITY. THEN INSTALLATION OF DRY UTILITIES MAY COMMENCE.
7. TEXAS ADMINISTRATIVE CODE §217.53 [D][7]. A CASING PIPE FOR A COLLECTION SYSTEM PIPE THAT CROSSES BELOW A WATER SUPPLY PIPE MUST BE CONSTRUCTED OF AT LEAST 150 PSI PRESSURE CLASS PIPE THAT IS: (I) SEALED AT BOTH ENDS WITH CEMENT GROUT OR A MANUFACTURED SEAL; (II) AT LEAST TWO NOMINAL SIZES LARGER THAN THE WASTEWATER COLLECTION PIPE; AND (III) SUPPORTED BY SPACED BETWEEN THE COLLECTION SYSTEM PIPE AND THE ENCASING PIPE AND AT A MAXIMUM OF FIVE-FOOT INTERVALS.
8. DRY UTILITY ALIGNMENTS ARE SCHEMATIC. CONTRACTOR TO PROVIDE APPROPRIATE CLEARANCE FROM EXISTING AND PROPOSED INFRASTRUCTURE.

CONTRACTOR FIELD SET

This plan set shall remain on the site or subdivision premises for the life of the project and shall be utilized for any and all improvements contained herein.

BENCHMARKS

BM #51471	MAG NAIL SET "GCP 2" SET AT THE NORTHEAST CORNER OF THE INTERSECTION OF STATE HIGHWAY 45 AND COUNTY ROAD 172, ±5.5' FROM "YIELD" SIGN. N: 10147640.83 E: 3127942.60 ELEV.= 841.70'
BM #51473	MAG NAIL SET "GCP 3" SET IN THE NORTH RIGHT-OF-WAY LINE OF HESTERS CROSSING ROAD, ±560' FROM THE INTERSECTION OF HESTERS CROSSING ROAD AND COUNTY ROAD 172, ±100 FROM CONCRETE SIGN "ENCOMPASS HEALTH". N: 10149343.04 E: 3128315.81 ELEV.= 812.19'

No.	REVISIONS	DATE	BY

Kimley»Horn
© 2025 KIMLEY-HORN AND ASSOCIATES, INC.
10814 JOLLYVILLE ROAD, CAMPUS IV, SUITE 200, AUSTIN, TX 78759
PHONE: 512-418-1771 FAX: 512-418-1791
WWW.KIMLEY-HORN.COM
TEXAS REGISTERED ENGINEERING FIRM F-928

NICHOLAS C. BROWN
107175
LICENSED
PROFESSIONAL ENGINEER
03/26/2025

KHA PROJECT 069284918
DATE MARCH 2025
SCALE: AS SHOWN
DESIGNED BY: MM
DRAWN BY: MM
CHECKED BY: NCB

PRIVATE WASTEWATER PLAN A

2525 CR 172 INDUSTRIAL

CITY OF ROUND ROCK
WILLIAMSON COUNTY, TEXAS

SHEET NUMBER
44 OF 227

SDP24-00001

Template:KHA AUS TEMPLATE D2D 2022 DM 11-09-2022

Plotted By: Jenkins, Matthew Date: April 17, 2025 04:07:05pm File Path: K:\AUS_Civil\069284910 – DAU3 Round Rock\Cad\PlanSheets–SDP\C– Wastewater Plan.dwg
This document, together with the concepts and designs presented herein, as an instrument of service, is intended only for the specific purpose and client for which it was prepared. Reuse of and improper reliance on this document without written authorization and adaptation by Kimley-Horn and Associates, Inc. shall be without liability to Kimley-Horn and Associates, Inc.

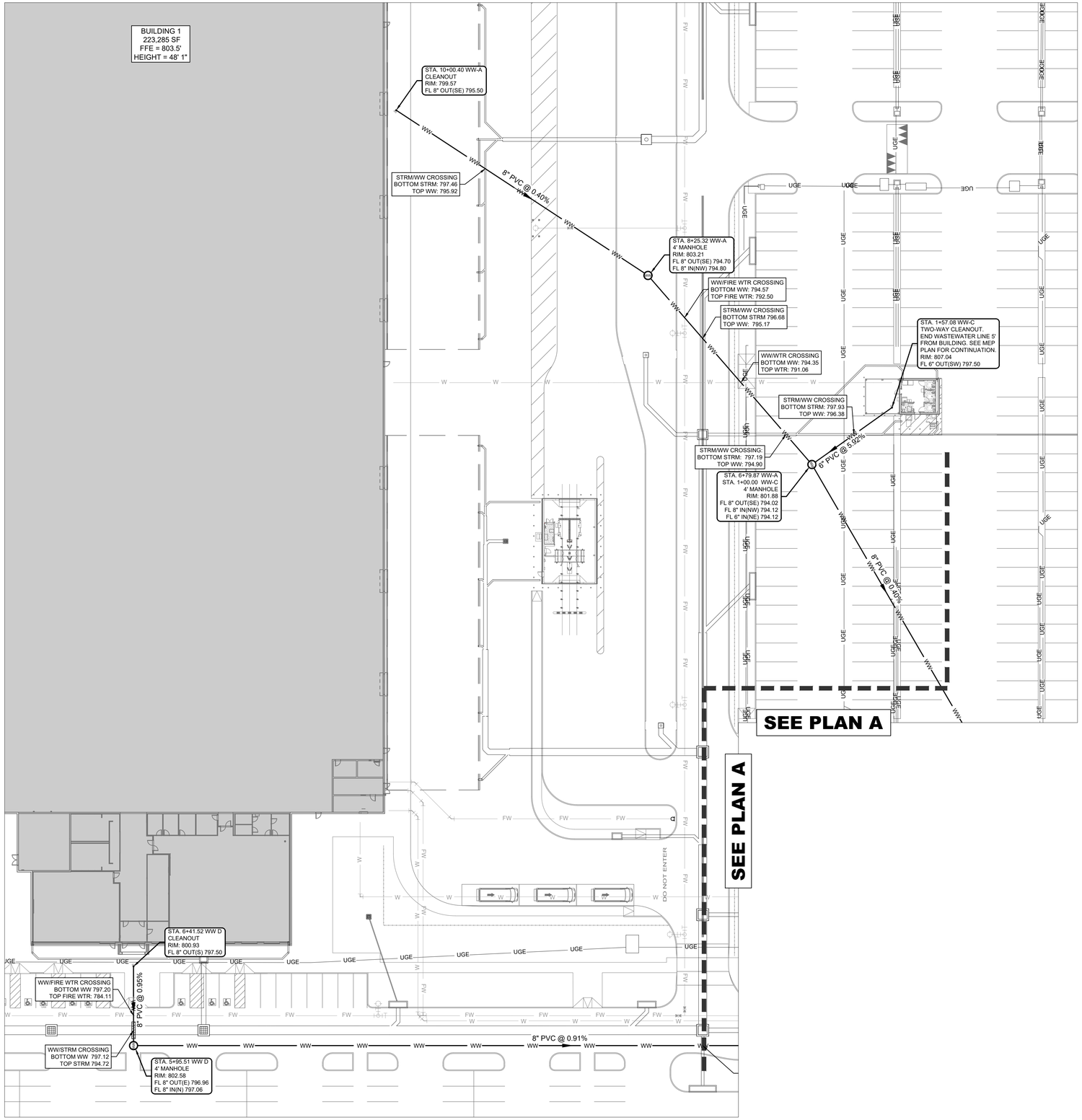

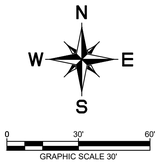

LEGEND

- PROPERTY LINE
- EXISTING MAJOR CONTOUR
- EXISTING MINOR CONTOUR
- MAJOR CONTOUR
- MINOR CONTOUR
- WATER LINE
- FIRE WATER LINE
- RECLAIMED WATER LINE
- FIRE HYDRANT
- WATER GATE VALVE
- WATER BACKFLOW PREVENTOR
- WATER METER
- FIRE DEPARTMENT CONNECTION
- FORCE MAIN
- WASTEWATER LINE
- WASTEWATER MANHOLE
- WASTEWATER CLEANOUT
- STORM DRAIN LINE
- STORM GRATE INLET
- STORM HEADWALL
- STORM MANHOLE
- STORM JUNCTION BOX
- STORM AREA INLET
- STORM CURB INLET
- PRELIMINARY UNDERGROUND ELECTRIC
- EXISTING WATER LINE
- EXISTING WASTEWATER LINE
- EXISTING STORM DRAIN LINE
- EXISTING FIRE HYDRANT
- EXISTING WASTEWATER MANHOLE

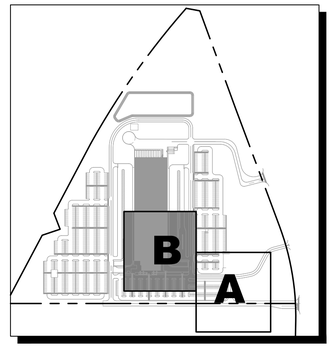

KEYMAP
N.T.S

NOTES
1. ALL NON-CITY INFRASTRUCTURE INCLUDING GAS, ELECTRIC, CABLE AND TELECOMMUNICATIONS SHALL TRAVERSE UNDERNEATH CITY INFRASTRUCTURE. THIS INCLUDES, BUT IS NOT LIMITED TO WATER LINES, WASTEWATER LINES AND STORM SEWER, WITH A MINIMUM OUTSIDE-TO-OUTSIDE CLEARANCE OF 18".
2. ALL MANHOLES SHALL BE COATED AND VACUMM TESTED.
3. ALL WASETEWATER LINES ARE TO BE CONSTRUCTED OF SDR 26
4. ALL SEGMENTS OF PIPE LOCATED IN ENCASEMENT SHALL BE FULLY RESTRAINED.
6. THE DRY UTILITY ALIGNMENTS ARE PRELIMINARY. TO HAVE PRELIMINARY STATUS REMOVED FROM PDS PERMIT, THE PERMIT MUST BE REVISED ONCE DRY ALIGNMENTS ARE APPROVED BY THE FRANCHISED UTILITY. THEN INSTALLATION OF DRY UTILITIES MAY COMMENCE.
7. DRY UTILITY ALIGNMENTS ARE SCHEMATIC. CONTRACTOR TO PROVIDE APPROPRIATE CLEARANCE FROM EXISTING AND PROPOSED INFRASTRUCTURE.

CONTRACTOR FIELD SET

This plan set shall remain on the site or subdivision premises for the life of the project and shall be utilized for any and all improvements contained herein.

BENCHMARKS

BM #51471 MAG NAIL SET "GCP 2"
SET AT THE NORTHEAST CORNER OF THE INTERSECTION OF STATE HIGHWAY 45 AND COUNTY ROAD 172, ±5.5' FROM "YIELD" SIGN.
N: 10147640.83
E: 3127942.60
ELEV.= 841.70'

BM #51473 MAG NAIL SET "GCP 3"
SET IN THE NORTH RIGHT-OF-WAY LINE OF HESTERS CROSSING ROAD, ±560' FROM THE INTERSECTION OF HESTERS CROSSING ROAD AND COUNTY ROAD 172, ±100 FROM CONCRETE SIGN "ENCOMPASS HEALTH".
N: 10149343.04
E: 3128315.81
ELEV.= 812.19'

No.	REVISIONS	DATE	BY

Kimley»Horn
© 2025 KIMLEY-HORN AND ASSOCIATES, INC.
10814 JOLLYVILLE ROAD, CAMPUS IV, SUITE 200, AUSTIN, TX 78759
PHONE: 512-418-1771 FAX: 512-418-1791
WWW.KIMLEY-HORN.COM
TEXAS REGISTERED ENGINEERING FIRM F-928

NICHOLAS C. BROWN
107175
LICENSED
PROFESSIONAL ENGINEER
03/26/2025

KHA PROJECT	069284918
DATE	MARCH 2025
SCALE:	AS SHOWN
DESIGNED BY:	MM
DRAWN BY:	MM
CHECKED BY:	NCB

PRIVATE WASTEWATER PLAN B

2525 CR 172 INDUSTRIAL

CITY OF ROUND ROCK
WILLIAMSON COUNTY, TEXAS

SHEET NUMBER
45 OF 227

SDP24-00001

GENERAL NOTES

1. CONFIGURATIONS AND DIMENSIONS SHOWN ARE BASED ON THE EQUIPMENTS SPECIFIED. THE CONTRACTOR SHALL VERIFY THE LAYOUT AND ALL DIMENSIONS PRIOR TO FABRICATION.
2. ALL COUPLINGS SHALL BE EPOXY COATED STEEL AND SHALL BE DRESSER, SMITH-BLAIR, OR EQUAL. COUPLINGS SHALL BE RESTRAINED WITH A THRUST HARNESS DESIGNED IN ACCORDANCE WITH AWWA M-11.
3. ALL PIPING WITHIN WET WELL AND VALVE VAULT SHALL BE SPECIAL THICKNESS CLASS 53 EPOXY LINED (PROTECTO 401) DUCTILE IRON PIPE.
4. ALL BURIED PIPE SHALL BE POLYWRAPPED DUCTILE IRON PRESSURE CLASS 350 PUSH JOINT PIPE WITH JOINT RESTRAINT GASKETS.
5. ALL METALS WITHIN THE WET WELL, INCLUDING FLANGE BOLTS, SHALL BE STAINLESS STEEL, UNLESS OTHERWISE INDICATED.
6. THE EDGE OF EXPOSED CONCRETE SLABS SHALL RECEIVE A 3/4" CHAMFER.
7. REINFORCED STEEL SHALL BE GRADE 60.
8. ALL VENTS SHALL HAVE SCREENS INSTALLED OVER OPENINGS AND SHALL BE 304 STAINLESS STEEL - 16 MESH. OPENINGS SHALL BE A MINIMUM OF 12" ABOVE THE SLAB.
9. THE HIGH LEVEL ALARM SHALL ACTIVATE A FLASHING RED LIGHT TO BE MOUNTED ON THE ROOF OF THE ELECTRICAL SHELTER. THE CONTRACTOR SHALL INSTALL METAL INFORMATION SIGN AT OR NEAR THE LIFT STATION ENTRY GATE, VISIBLE TO THE PUBLIC.
10. ALL PENETRATIONS SHALL BE SEALED WATER AND GAS TIGHT PER APPROVED METHODS.
11. FORCEMAIN TO CONTINUE AT THE SHOWN FLOWLINE UNTIL IT CONNECTS WITH THE FORCEMAIN SHOWN ON SHEET 44.
12. THE CONTRACTOR SHALL BE RESPONSIBLE FOR ALL OF THE NECESSARY WASTEWATER CONNECTIONS TO THE SITE. CONTRACTOR SHALL NOTIFY THE UTILITY AUTHORITIES INSPECTORS 72 HOURS PRIOR TO CONNECTING TO ANY EXISTING LINE. THE INFORMATION IS NOT TO BE RELIED ON AS BEING EXACT OR COMPLETE. THE CONTRACTOR SHALL BE RESPONSIBLE FOR ANY REPAIRS TO EXISTING UTILITIES DUE TO DAMAGE INCURRED DURING CONSTRUCTION.
13. CONTRACTOR SHALL USE KENNEDY VALVE CO. KS-RW GATYE VALVES OR APPROVED EQUAL IN ACCORDANCE WITH AWWA C517.
14. CONTRACTOR SHALL USE VAL-MATIC SWING-FLEX CHECK VALVE OR APPROVED EQUAL IN ACCORDANCE WITH AWWA C508. CHECK VALVES SHOULD BE SUITABLE FOR DIRECT BURY.
15. A CHECK VALVE MUST BE A SWING TYPE VALVE WITH AN EXTERNAL LEVER OR EXTERNAL POSITION INDICATOR TO SHOW ITS OPEN AND CLOSED POSITIONS.
16. AN ISOLATION VALVE MUST INCLUDE AN EXTERNAL POSITION INDICATOR TO SHOW ITS OPEN AND CLOSED POSITIONS, UNLESS A FULL-CLOSING VALVE IS A RISING-STEM GATE VALVE.
17. CONTRACTOR SHALL USE ARI D-020 COMBINATION AIR VALVE OR APPROVED EQUAL.
18. CONFIGURATIONS AND DIMENSIONS SHOWN ARE BASED ON THE EQUIPMENT SPECIFIED. THE CONTRACTOR SHALL VERIFY THE LAYOUT AND ALL DIMENSIONS PRIOR TO CONSTRUCTION.
19. CONTRACTOR SHALL BE RESPONSIBLE FOR PROVIDING THE STRUCTURAL DESIGN FOR BRACING THE J-VENT SYSTEM.
20. INSTALL ISOLATION KITS BETWEEN DISSIMILAR METAL PIPING.
21. CONTRACTOR SHALL FOLLOW THE INSTALLATION INSTRUCTIONS PROVIDED BY THE SUPPLIER/MANUFACTURER.
22. UPON RECEIPT OF THE LIFT STATION SHIPMENT, INSPECT THE ENTIRE SHIPMENT FOR DAMAGE BEFORE THE LIFT STATION IS TAKEN OFF THE TRUCK. IF THERE IS DAMAGE, NOTE AS SPECIFICALLY AS POSSIBLE INCLUDING CLEAR PHOTOS OF DAMAGE ON THE BILL OF LADING AS TO ANY DAMAGE, THEN OFFLOAD. CONTACT THE SHIPPER AT ONCE AND HAVE THE BILL OF LADING WITH YOU.
23. CHECK VALVE, COUPLING, GATE VALVE AND AIR RELEASE VALVES (BALL VALVES MAY BE USED DEPENDING ON TYPE OF PUMPS).
24. PUMPS TO BE SELECTED BASED ON APPLICATION, FLOW, AND HEAD CONDITIONS OF FORCE MAIN.
25. SELECT BACKFILL MATERIAL FREE OF VOIDS, SHARP OBJECTS, OR OTHER DEBRIS.

PIPE AND FITTINGS

1. FORCE MAIN
   1.1. 4" HDPE DR9 FORCE MAIN WITH PRESSURE RATING OF 200 PSI SHALL BE USED.
2. LIFT STATION PIPING
   2.1. DIP PIPE SHALL BE IN ACCORDANCE WITH AWWA C111 AND AWWA C150.
   2.2. FITTINGS AND PIPE SHALL BE FLANGED
      2.2.1. FITTINGS IN ACCORDANCE WITH AWWA C153 AND AWWA C110.
      2.2.2. FLANGES: AWWA/ANSI C115/A21.15, ASME B16.1, CLASS 125
      2.2.3. BOLTS AND NUTS SHALL BE 316 STAINLESS.
   2.3. PIPE AND FITTINGS SHALL BE LINED WITH PROTECTO 401.
   2.4. PROVIDE POLYETHYLENE ENCASEMENT IN ACCORDANCE WITH AWWA FOR BURIED DIP.

SHOP DRAWINGS, PRODUCT DATA, AND SAMPLES

1. CONTRACTOR SHALL SUBMIT SHOP DRAWINGS AND PRODUCT DATA FOR LIFT STATION EQUIPMENT, PIPING AND APPURTENANCES. CONTRACTOR SHALL SUBMIT SHOP DRAWINGS TO THE OWNER FOR REVIEW PRIOR TO INSTALLATION, ALLOWING SUFFICIENT TIME FOR THE OWNER'S REVIEW AND RESPONSE.
2. CONTRACTOR SHALL SUBMIT DIMENSIONAL LAYOUT DRAWINGS AND PRODUCT DATA, CERTIFIED CORRECT FOR CONSTRUCTION, FOR REVIEW BY THE OWNER.
3. THE CONTRACTOR WILL MAKE SPECIFIC MENTION OF THOSE ITEMS THAT VARY FROM THE REQUIREMENTS OF THE CONTRACT DOCUMENTS IN THE LETTER OF TRANSMITTAL.
4. THE CONTRACTOR WILL ASSIGN A SEQUENTIAL NUMBER TO EACH SUBMITTAL (1, 2, 3, ETC.). RE-SUBMITTALS WILL BE IDENTIFIED WITH THEIR ORIGINAL NUMBER FOLLOWED BY A SEQUENTIAL LETTER (A, B, C, ETC.). FOR EXAMPLE, SUBMITTAL 12-C IS THE THIRD RE-SUBMITTAL OF THE OF THE TWELFTH ITEM FOR THE PROJECT.
5. THE CONTRACTOR WILL NOT DELIVER TO THE SITE, STORE, OR INCORPORATE INTO THE WORK, ANY MATERIALS OR EQUIPMENT FOR WHICH APPROVED SUBMITTALS HAVE NOT BEEN OBTAINED.
6. OWNER'S REVIEW, APPROVAL, OR OTHER APPROPRIATE ACTION REGARDING CONTRACTOR'S SUBMISSIONS WILL BE ONLY TO CHECK CONFORMITY WITH THE DESIGN CONCEPT OF THE PROJECT AND FOR COMPLIANCE WITH THE INFORMATION CONTAINED IN THE CONTRACT DOCUMENTS AND SHALL NOT EXTEND TO MEANS, METHODS, TECHNIQUES, DEQUENCES OR PROCEDURES OF CONSTRUCTION (EXCEPT WHERE A SPECIFIC MEANS, METHOD, TECHNIQUE, SEQUENCE OR PROCEDURE OF CONSTRUCTION IS INDICATED IN OR REQUIRED BY THE CONTRACT DOCUMENTS) OR TO SAFETY PRECAUTIONS OR PROGRAMS INCIDENT THERETO. THE REVIEW AND APPROVAL OF A SEPARATE COMPONENT ITEM WILL NOT INDICATE APPROVAL OF THE ASSEMBLY INTO WHICH THE ITEM IS FUNCTIONALLY INTEGRATED. CONTRACTOR SHALL MAKE CORRECTIONS REQUIRED BY OWNER, AND SHALL RETURN THE REQUIRED NUMBER OF CORRECTED COPIES OF SHOP DRAWINGS TO THE OWNER. CONTRACTOR MAY BE REQUIRED TO RESUBMIT AS REQUIRED REVISED SHOP DRAWINGS OR SAMPLES FOR FURTHER REVIEW AND APPROVAL. CONTRACTOR SHALL DIRECT SPECIFIC ATTENTION IN WRITING TO ANY NEW REVISIONS NOT SPECIFIED BY CONTRACTOR ON PREVIEW CONTRACTOR SUBMISSIONS.

LIFT STATION AND SUBMERSIBLE SEWAGE PUMPS

1. CONTRACTOR SHALL FURNISH ALL LABOR, MATERIALS, ELECTRICAL EQUIPMENT AND INCIDENTALS REQUIRED TO PROVIDE A LIFT STATION AS PROVIDED BY **MANSFIELD PUMP COMPANY. (JAMES MANSFIELD, 512-745-7647)** THE CONTRACTOR'S RESPONSIBILITIES ARE AS FOLLOWS: RECEIVING THE LIFT STATION AND OFF LOADING, EXCAVATION AND SETTING, ALL PLUMBING CONNECTIONS, ALL ELECTRICAL CONDUITS FROM THE WET WELL TO CONTROL PANEL, PROVIDE PROPER BACKFILL AND COMPACTION PROCEDURES. THE CONTRACTOR WILL BE REQUIRED TO LOWER THE PUMPS INTO PLACE AND CHECK FOR PROPER ROTATION. A STARTUP PROCEDURE FORM WILL BE PROVIDED AND IT MUST BE FILLED OUT AND RETURNED TO THE LIFT STATION SUPPLIER PRIOR TO THE OWNER'S POSSESSION DATE.
2. THE PUMP SHALL HAVE A FLANGED DISCHARGE ADAPTABLE TO 3" VERTICAL DISCHARGE AND BE CAPABLE OF HANDLING SANITARY SEWAGE AND ENABLING IT TO BE PUMPED OVER LONG DISTANCES OR HIGH VERTICAL LIFTS IN PIPELINES AS SMALL AS 3.00" IN DIAMETER.
3. THE CENTRIFUGAL PUMP SHALL BE EQUAL TO THE SERIES EBG-33. A PUMP SUBMERSIBLE TYPE AS MANUFACTURED BY GRUNDFOS WITH 4" IMPELLER OR APPROVED EQUAL. THE PUMP SHALL BE EXPLOSION-PROOF. THE CASTINGS SHALL BE CONSTRUCTED OF CAST IRON.
4. SUBMERSIBLE SEWAGE PUMP MATERIALS:
   4.1. PUMP CASE: CAST IRON, ASTM A48, CLASS 30
   4.2. MOTOR HOUSING: CAST IRON, ASTM A48, CLASS 30
   4.3. IMPELLER: CAST BRASS
   4.4. INTERMEDIATE HOUSING (BACKPLATE): CAST IRON, ASTM A48, CLASS 35B
   4.5. DISCHARGE BASE ELBOW: CAST IRON, ASTM A48, CLASS 35B
   4.6. PUMP/MOTOR SHAFT: ENTIRE SHAFT IS TO BE ASTM A276 TYPE 420 STAINLESS STEEL
   4.7. O-RINGS: NITRILE RUBBER (NBR)
   4.8. FASTENERS (INCLUDING IMPELLER FASTENER): 304 STAINLESS STEEL
   4.9. LOWER SEAL FACES: SILICON CARBIDE/SILICON CARBIDE
   4.10. UPPER SEAL FACES: SILICON CARBIDE STATIONARY/CARBON ROTATING
   4.11. GUIDE RAILS/CABLES AND MOUNTING BRACKETS: STAINLESS STEEL, ASTM A276 TYPE 316 (CABLES SHALL BE NYLON COATED)
   4.12. LIFTING CHAIN OR CABLE: STAINLESS STEEL, ASTM A276 TYPE 316
   4.13. OIL-ALL USES (SEAL LUBRICATION, ETC): ECOLOGICALLY SAFE, PARIFIN OR MINERAL BASE
   4.14. POWER/CONTROL CABLE JACKET: CHLOROPRENE WITH NON-WICKING FILLERS
5. THE MOTOR HOUSING SHALL BE FINNED AND AIR-FILLED TO DISSIPATE HEAT AND ENABLE THE UNIT TO OPERATE UNSUBMERGED WITHOUT DAMAGE TO THE MOTOR. ALL EXTERNAL-MATING PARTS SHALL BE MACHINED AND SEALED WITH A BUNA-n SQUARE RING. ALL FASTENERS EXPOSED TO THE LIQUID SHALL BE 300 SERIES STAINLESS STEEL. THE MOTOR SHALL BE PROTECTED ON THE TOP SIDE WITH AN ATTACHED SEALED JUNCTION BOX CHAMBER WHICH IN THE EVENT OF CORD DAMAGE WILL PREVENT MOISTURE WICKING INTO THE MOTOR HOUSING. THE MOTOR SHALL BE PROTECTED ON THE LOWER SIDE WITH A TANDEM MECHANICAL SEAL ARRANGEMENT WITH EACH SEAL HAVING A SEPARATE SPRING ASSEMBLY THE UPPER AND LOWER BALL BEARINGS SHALL BE CAPABLE OF HANDLING ALL THRUST LOADS. THE PUMP HOUSING HAVING A SEPARATE SPRING ASSEMBLY. THE UPPER AND LOWER BALL BEARINGS SHALL BE CAPABLE OF HANDLING ALL THRUST LOADS. THE PUMP HOUSING SHALL BE OF THE CONCENTRIC DESIGN THEREBY EQUALIZING THE PRESSURE FORCES INSIDE THE HOUSING, WHICH WILL EXTEND THE SERVICE LIFE OF THE SEALS AND BEARINGS. THE TOP CAP SHALL HAVE CAST IN LIFTING LUGS. THE MOTOR SHALL BE PROTECTED BY A MOISTURE DETECTION SYSTEM, WHICH WILL ACTIVATE AN ALARM CIRCUIT IF LIQUID IS EVER PRESENT IN THE UPPER JUNCTION CHAMBER OR LOWER SEAL CAVITY. THERMAL SENSORS LOCATED IN THE OIL-FILLED MOTOR HOUSING SHALL PROVIDE TEMPERATURE PROTECTION. PROVIDE THE AUTOMATIC REVERSING FEATURE, AVAILABLE FOR 3 PHASE MODELS, THAT ENABLE THE PUMP TO ROTATE IN BOTH CW AND CCW DIRECTION.
6. THE PUMP SHALL BE SUPPLIED WITH 49.2' MULTI-CONDUCTOR POWER CORD. IT SHALL BE SO TYPE CORD CAPABLE OF CONTINUED EXPOSURE TO THE PUMPED LIQUID. POWER CORD SHALL BE SIZED FOR THE RATED FULL LOAD AMP RATING OF THE PUMP IN ACCORDANCE WITH THE NATIONAL ELECTRICAL CODE.
7. THE MOTOR SHALL BE FM LISTED FOR CLASS 1 DIVISION 1 GROUPS C&D, HAVE A CLASS F OR BETTER RATED DESIGN RATED FOR CONTINUOUS DUTY. THERMAL SENSORS LOCATED IN THE MOTOR HOUSING SHALL PROVIDE TEMPERATURE PROTECTION.
8. FURNISH UPPER AND LOWER BALL BEARINGS TO PROVIDE B10 LIFE OF, A MINIMUM 100,000 HOURS AT ALL ANTICIPATED AXIAL AND RADIAL LOADINGS.
9. PUMP SHALL HAVE A DUAL MECHANICAL SEAL CONFIGURATION WITH THE SEALS MOUNTED IN TANDEM. EACH SEAL ASSEMBLY WITH ITS OWN SPRING. PROVIDE SEALS THAT DO NOT REQUIRE ROUTINE MAINTENANCE OR ADJUSTMENT, BUT CAPABLE OF BEING REPLACED.
10. THE IMPELLER SHALL BE A NON-CLOG TYPE IMPELLER, CAPABLE OF PASSING 3" SPHERICAL SOLID. STATICALLY AND DYNAMICALLY BALANCED IMPELLERS ARE REQUIRED.
11. COMPONENTS REQUIRED FOR THE REPAIR OF THE PUMP SHALL BE READILY AVAILABLE WITHIN 24 HOURS. COMPONENTS SUCH AS MECHANICAL SEALS AND BEARINGS SHALL NOT BE OF A PROPRIETARY DESIGN AND BE AVAILABLE FROM LOCAL INDUSTRIAL SUPPLY HOUSES. SPECIAL TOOLS SHALL NOT BE REQUIRED TO SERVICE THE PUMP. A NETWORK OF SERVICE STATIONS SHALL BE AVAILABLE NATIONWIDE IN THOSE CASES WHERE SERVICE REQUIREMENTS ARE BEYOND THE COPE OF IN-HOUSE SERVICE MECHANICS.
12. THE TWO YEAR PRO-RATED WARRANTY FOR PERMANENT WASTEWATER LIFT STATIONS SHALL BE IN WRITING IN A PUBLISHED SERVICE BULLETIN. LABOR CHARGES FROM AN AUTHORIZED SERVICE STATION FOR REPAIRS WILL BE INCLUDED IN THIS WARRANTY AGREEMENT DURING THE FIRST 12 MONTHS OF OPERATION.

CONTRACTOR FIELD SET

This plan set shall remain on the site or subdivision premises for the life of the project and shall be utilized for any and all improvements contained herein.

No.	REVISIONS	DATE	BY

Kimley»Horn
© 2025 KIMLEY-HORN AND ASSOCIATES, INC.
10814 JOLLYVILLE ROAD, CAMPUS IV, SUITE 200, AUSTIN, TX 78759
PHONE: 512-418-1771 FAX: 512-418-1791
WWW.KIMLEY-HORN.COM
TEXAS REGISTERED ENGINEERING FIRM F-928

STATE OF TEXAS
TARA R. RAGOE
141851
LICENSED PROFESSIONAL ENGINEER
8/12/2024

KHA PROJECT	069294918
DATE	AUGUST 2024
SCALE:	AS SHOWN
DESIGNED BY:	ATN
DRAWN BY:	ATN
CHECKED BY:	TRR

LIFT STATION NOTES

2525 CR 172 INDUSTRIAL

CITY OF ROUND ROCK
WILLIAMSON COUNTY, TEXAS

SHEET NUMBER
46 OF 218

SDP24-00001

Plotted By: Toraldo Knight, Paula Date: April 17, 2025 02:18:45pm File Path: K:\AUS_Civil\069294910 — DAU3 Round Rock\LIFT STATION\CAD\PLANSHEETS\C-LS GENERAL NOTES.dwg
This document, together with the concepts and designs presented herein, as an instrument of service, is intended only for the specific purpose and client for which it was prepared. Reuse of and improper reliance on this document without written authorization and adaptation by Kimley-Horn and Associates, Inc. shall be without liability to Kimley-Horn and Associates, Inc.

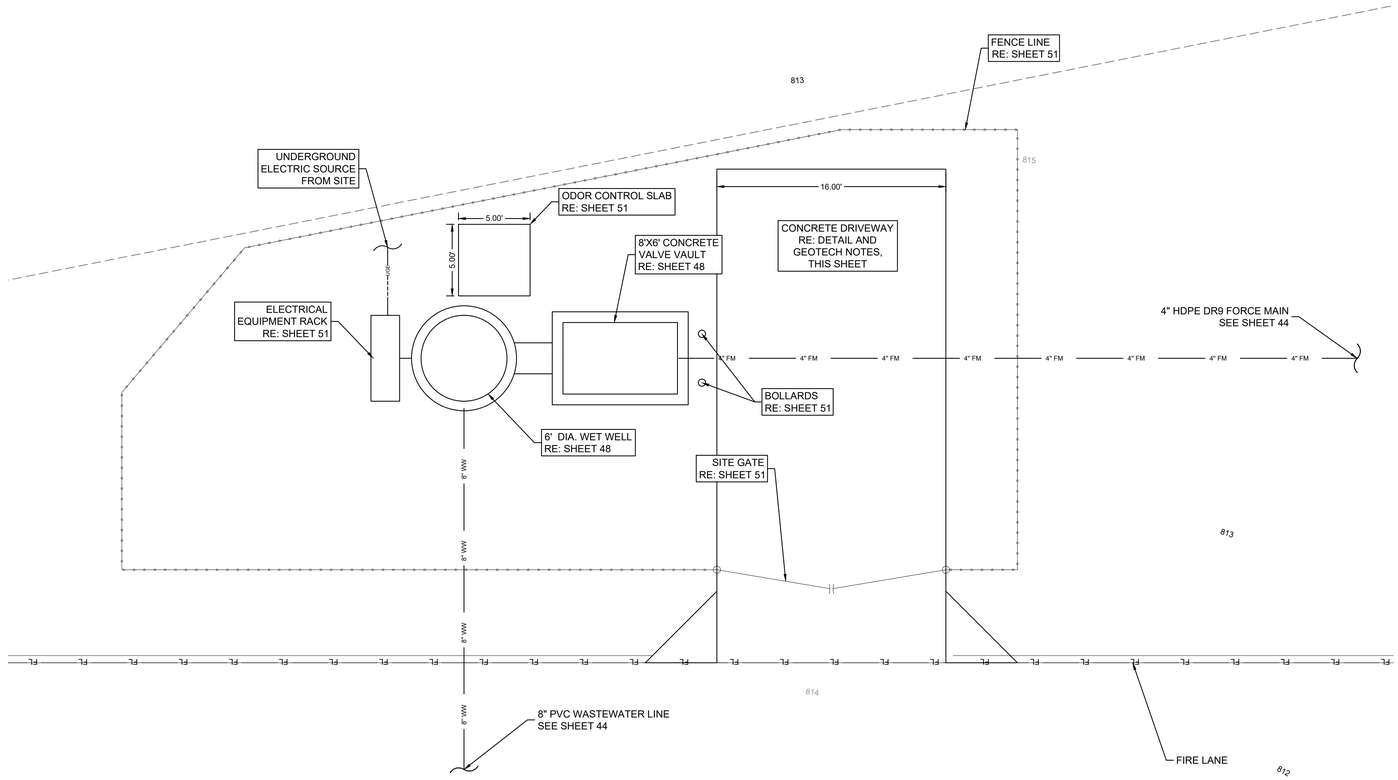

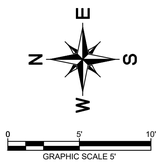

LEGEND

PROP. CONTOURS	815
EXIST. CONTOURS	815
8" WASTEWATER LINE	8" WW
4" FORCE MAIN	4" FM
FIRE LANE	FL FL
EXIST. EASEMENT	
PROP. FENCE LINE	

GEOTECH NOTES:

1. CONTRACTOR TO REFERENCE DIV 03 CONCRETE IN THE AMZL DESIGN CRITERIA FOR LOW CARBON CONCRETE.
2. FIRE LANES WILL BE HEAVY DUTY CONCRETE PAVEMENT. REFER TO THE GEOTECH REPORT NOTED BELOW FOR LOAD CAPACITY.
3. REFER TO SHEET 96 FOR ADDITIONAL PAVEMENT DETAILS.

REFER TO GEOTECHNICAL REPORT BY: **ECS SOUTHWEST, LLP**

GEOTECH PROJECT NUMBER: **17:6399-A**

DATED: MARCH 22, 2024

HEAVY-DUTY RIGID
PAVEMENT SECTION

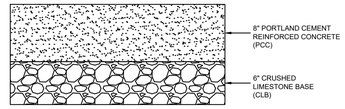

NTS

SITE PLAN NOTES

1. ALL MECHANICAL JOINTS SHALL HAVE MEGA LUG THRUST RESTRAINTS.
2. FOR ALL ELECTRICAL WORK REFER TO ELECTRICAL SHEETS.
3. BURIED DUCTILE IRON PIPES, VALVES, AND FITTINGS SHALL BE ENCASED WITH POLYETHYLENE WRAP 8 MILS THICK.
4. FOR ALL STRUCTURAL WORK REFER TO STRUCTURAL SHEETS (51 & 55).

GRADING PLAN NOTES

1. SEE DEVELOPMENT GRADING PLAN SHEETS FOR EXISTING GRADE TIE IN ELEVATIONS.
2. THE CONTRACTOR SHALL MAINTAIN ADEQUATE DRAINAGE AT ALL TIMES AND PROVIDE AND MAINTAIN EROSION PROTECTION IN AND ADJACENT TO THE CONSTRUCTION LIMITS.
3. CONTRACTOR SHALL GRADE THE SITE TO PROVIDE POSITIVE DRAINAGE AROUND ALL STRUCTURES AND SLABS.
4. NATURAL GROUND SHALL BE 6-INCHES BELOW ALL STRUCTURE SLABS.

CONTRACTOR FIELD SET

This plan set shall remain on the site or subdivision premises for the life of the project and shall be utilized for any and all improvements contained herein.

BENCHMARKS

BM #51471 MAG NAIL SET "GCP 2"
SET AT THE NORTHEAST CORNER OF THE INTERSECTION OF STATE HIGHWAY 45 AND COUNTY ROAD 172, ±5.5' FROM "YIELD" SIGN.
N: 10147640.83
E: 3127942.60
ELEV.= 841.70'

BM #51473 MAG NAIL SET "GCP 3"
SET IN THE NORTH RIGHT-OF-WAY LINE OF HESTERS CROSSING ROAD, ±560' FROM THE INTERSECTION OF HESTERS CROSSING ROAD AND COUNTY ROAD 172, ±100 FROM CONCRETE SIGN "ENCOMPASS HEALTH".
N: 10149343.04
E: 3128315.81
ELEV.= 812.19'

No.	REVISIONS	DATE	BY

Kimley»Horn
© 2025 KIMLEY-HORN AND ASSOCIATES, INC.
10814 JOLLYVILLE ROAD, CAMPUS IV, SUITE 200, AUSTIN, TX 78759
PHONE: 512-418-1771 FAX: 512-418-1791
WWW.KIMLEY-HORN.COM
TEXAS REGISTERED ENGINEERING FIRM F-928

STATE OF TEXAS
TARA R. RADCE
141851
LICENSED
PROFESSIONAL ENGINEER
8/12/2024

KHA PROJECT	069284918
DATE	AUGUST 2024
SCALE:	AS SHOWN
DESIGNED BY:	ATN
DRAWN BY:	ATN
CHECKED BY:	TRR

LIFT STATION SITE PLAN

2525 CR 172 INDUSTRIAL

CITY OF ROUND ROCK
WILLIAMSON COUNTY, TEXAS

SHEET NUMBER
47 OF 218

SDP24-00001

Plotted By: Toraldo Knight, Paula Date: April 17, 2025 02:21:19pm File Path: K:\AUS_Civil\069284910 - DAU3 Round Rock\LIFT STATION\CAD\PLANSHEETS\C-LS SITE PLAN.dwg
This document, together with the concepts and designs presented herein, as an instrument of service, is intended only for the specific purpose and client for which it was prepared. Reuse of and improper reliance on this document without written authorization and adaptation by Kimley-Horn and Associates, Inc. shall be without liability to Kimley-Horn and Associates, Inc.

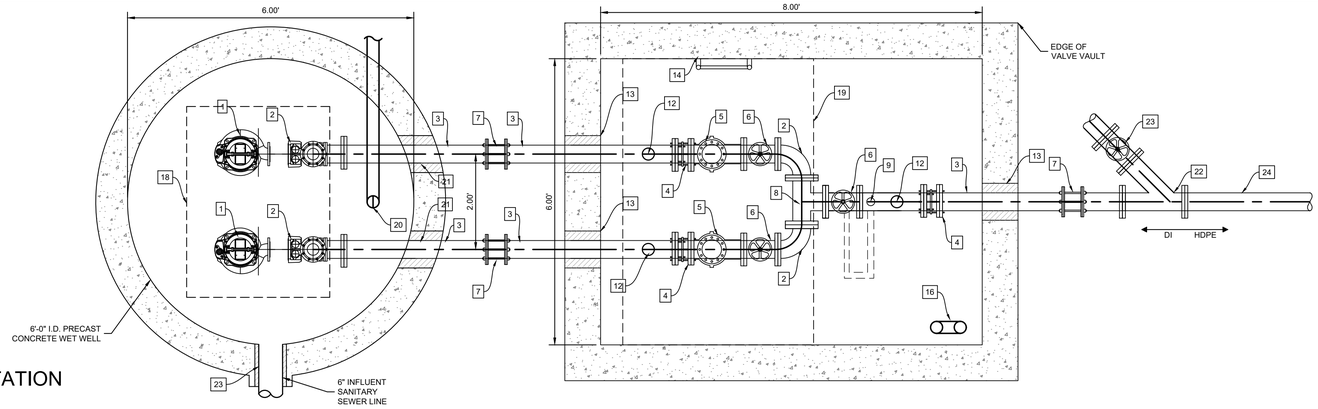

LIFT STATION PLAN

1 SCALE: 1" = 1½'

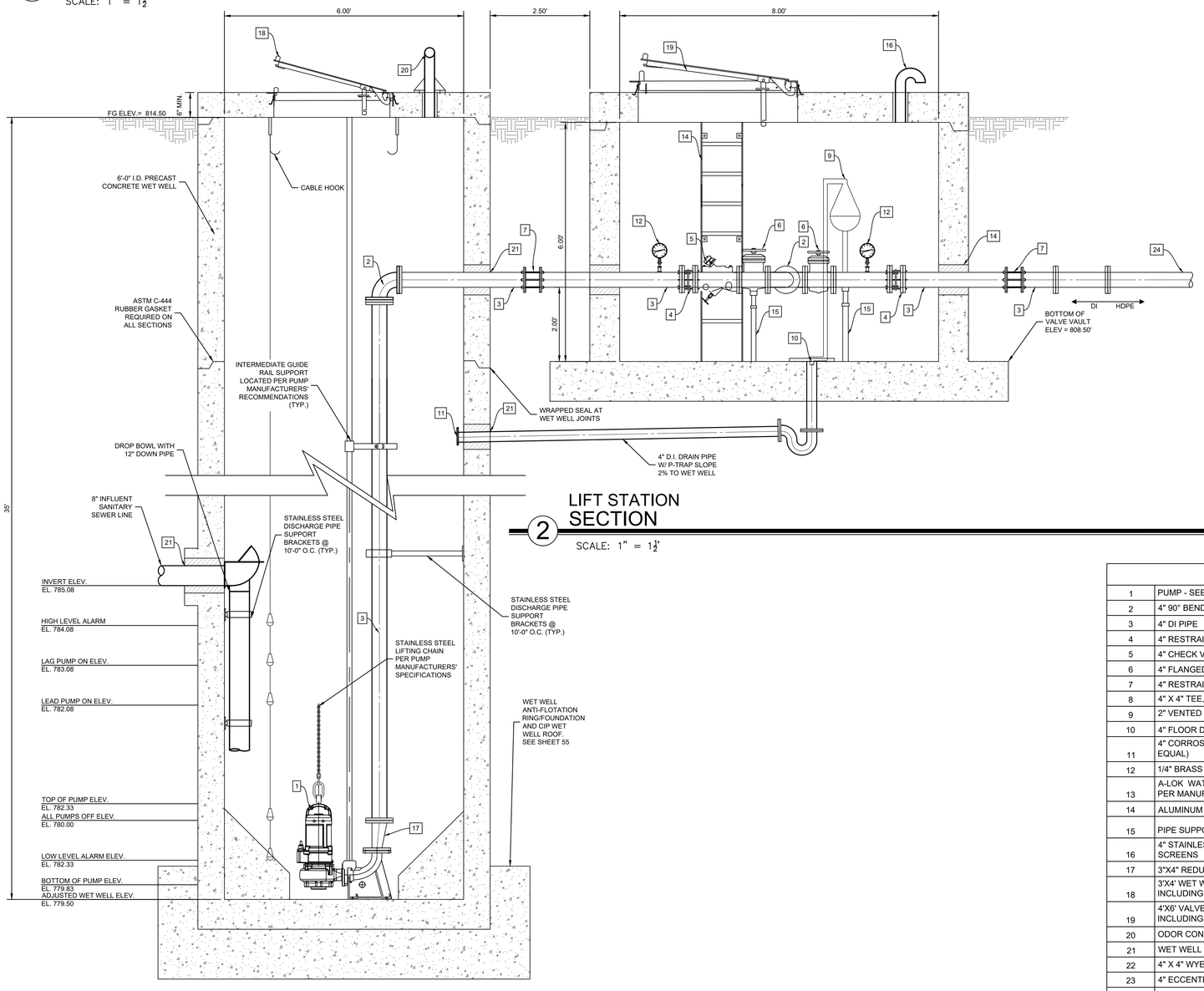

LIFT STATION SECTION

2 SCALE: 1" = 1½'

PUMP PERFORMANCE DATA	
PUMP SELECTION	EBG-33
NUMBER OF PUMPS	2
MOTOR HORSE POWER	3 HP
IMPELLER DIA.	4 IN
PUMP MOTOR VOLTAGE	60 Hz, 3 Phase, 460 Volts
FLOW @ OPERATING POINT	99 GPM
TOTAL HEAD @ OPERATING POINT	32.46' TDH

LIFT STATION INFORMATION	
SERVICE AREA TOTAL (ACRES)	69.56
SERVICE AREA SIZE (LUEs)	60
PEAK DRY WEATHER FLOW (GPM)	48
PEAK WET WEATHER FLOW (DESIGN FLOW) (GPM)	84.22914
WET WELL DIAMETER (FT)	6
ACTIVE VOLUME (GAL)	516.71
MINIMUM PUMP CYCLE TIME (MIN)	46.97
FORCE MAIN SIZE (IN)	4
FORCE MAIN LENGTH (LF)	98
FLOW VELOCITY (FPS)	3.04

MATERIAL LIST	
1	PUMP - SEE "PUMP PERFORMANCE DATA", THIS SHEET
2	4" 90° BEND, FL
3	4" DI PIPE
4	4" RESTRAINED DISMANTLING JOINT WITH S.S. HARDWARE
5	4" CHECK VALVE W/ VISUAL INDICATOR AND BACKFLOW ACTUATOR
6	4" FLANGED ECCENTRIC PLUG VALVE WITH HANDWHEEL OPERATOR
7	4" RESTRAINED COUPLING ADAPTER
8	4" X 4" TEE, FL
9	2" VENTED COMBINATION AIR RELEASE VALVE (ARI D-025L OR EQUAL)
10	4" FLOOR DRAIN
11	4" CORROSION RESISTANT FLAP VALVE (STAINLESS STEEL, RUBBER, OR EQUAL)
12	1/4" BRASS BALL VALVE & PRESSURE GAUGE, SEE SHEET 50.
13	A-LOK WATER-STOP CONNECTOR OR APPROVED EQUAL. INSTALL GROUT PER MANUFACTURER'S RECOMMENDATIONS, SEE SHEET 49.
14	ALUMINUM LADDER WITH RETRACTABLE HAND RAIL.
15	PIPE SUPPORT, SEE SHEET 49.
16	4" STAINLESS STEEL GOOSE NECK VENT WITH 304 STAINLESS STEEL SCREENS
17	3"X4" REDUCER
18	3'X4' WET WELL ALUMINUM ACCESS COVER WITH THREE DOORS INCLUDING SAFE HATCH, H-20 LOAD RATING (FLYGT OR EJIW)
19	4'X6' VALVE VAULT ALUMINUM ACCESS COVER WITH THREE DOORS INCLUDING SAFE HATCH, H-20 LOAD RATING (FLYGT OR EJIW)
20	ODOR CONTROL AERATOR , SEE SHEET 51
21	WET WELL PENETRATION, SEE SHEET 49
22	4" X 4" WYE, MJ
23	4" ECCENTRIC PLUG VALVE, MJ
24	4" HDPE DR9 PIPE

KEYNOTES:

1. PUMP SUPPLIER SHALL PROVIDE DIMENSIONS OF THE GUIDE RAILS TO ENSURE COMPATIBILITY WITH SUPPLIED EQUIPMENT. THE PUMP SHALL BE EASILY REMOVED FOR INSPECTION OR SERVICE. PERSONNEL SHALL HAVE NO REASON TO ENTER THE WET WELL. GUIDE RAILS SHALL BE SUPPORTED EVERY 10 FEET WITH STAINLESS STEEL SUPPORTS.
2. THE GUIDE BRACKETS SHALL BE CONSTURCTED OF 316 STAINLESS STEEL. GUIDE BRACKETS FOR EACH PUMP MUST BE SUPPLIED BY THE PUMP MANUFACTURER TO ENSURE COMPATIBILITY WITH SUPPLIED EQUIPMENT.
3. EACH PUMPING UNIT SHALL BE PROVIDED WITH A STAINLESS STEEL LIFTING CHAIN OR CABLE. LIFTING CHAIN SHALL EXTEND AT LEAST 3-4 FEET ABOVE WET WELL.
4. ALL HARDWARE IN THE WET WELL SHALL BE 316 STAINLESS STEEL.
5. PUMP DISCHARGE LINES SHALL HAVE 1/4 INCH TAPS WITH STAINLESS STEEL OR BRONZE BALL VALVES.
6. ALL DISCHARGE LINES SHALL HAVE ADEQUATE THRUST SUPPORT MEMBERS AT EACH FITTING. WHERE POSSIBLE, LONG RADIUS 90 DEGREE BENDS SHALL BE USED.
7. THE DISCHARGE LINE FROM EACH PUMP SHALL BE FITTED WITH A CHECK VALVE AND A ECCENTRIC PLUG VALVE, WITH THE CHECK VALVE ON THE PUMP SIDE OF THE ECCENTRIC PLUG VALVE. WHEN NECESSARY, AIR RELEASE VALVE(S) SHALL BE INSTALLED DOWNSTREAM OF THE ECCENTRIC PLUG VALVES.
8. THE VALVE VAULT SHALL BE SIZED LARGE ENOUGH TO PROVIDE AT LEAST 1 FOOT OF CLEARANCE AROUND ALL VALVES AND ALL FLANGES. THE LID OF THE VAULT SHALL BE A MINIMUM OF 42 INCHES BY 42 INCHES AND SHALL BE ABLE TO BE PADLOCKED. THE VAULT SHALL BE INTERNALLY COATED WITH SPL WW-511 COATING, AND EXTERNALLY COATED WITH A COAL TAR EPOXY.
9. THE VALVE VAULT SHALL HAVE A DRAIN TO THE WET WELL. THE DRAIN SHALL HAVE A 4 INCH MINIMUM DIAMETER AND BE FITTED WITH A FLAP VALVE OR BACK-FLOW PREVENTER AND A TRAP TO PREVENT GASES OR WATER FROM ENTERING THE VALVE VAULT. THE OPENING TO THE DRAIN SHALL BE COVERED WITH A STAINLESS STEEL SCREEN.
10. ALL VENTS SHALL BE COATED INSIDE AND OUT PER CITY OF ROUND ROCK STANDARD SPECIFICATIONS. THE WET WELL VENT SHALL BE A TEE FITTED WITH STAINLESS STEEL SCREENS 10 FEET ABOVE WET WELL COVER.

CONTRACTOR FIELD SET

This plan set shall remain on the site or subdivision premises for the life of the project and shall be utilized for any and all improvements contained herein.

GENERAL NOTES

1. THE WORK PERFORMED UNDER THIS CONTRACT SHALL COMPLY WITH THE CITY OF ROUND ROCK SUBMERSIBLE LIFT STATION SPECIFICATIONS.
2. CONFIGURATIONS AND DIMENSIONS SHOWN ARE BASED ON THE EQUIPMENTS SPECIFIED. THE CONTRACTOR SHALL VERIFY THE LAYOUT AND ALL DIMENSIONS PRIOR TO FABRICATION.
3. ALL COUPLINGS SHALL BE EPOXY COATED STEEL AND SHALL BE DRESSER, SMITH-BLAIR, OR EQUAL. COUPLINGS SHALL BE RESTRAINED WITH A THRUST HARNESS DESIGNED IN ACCORDANCE WITH AWWA M-11.
4. CONTRACTOR SHALL COORDINATE VALVE VAULT ACCESS HATCH LOCATION WITH LADDER MANUFACTURER PRIOR TO FABRICATION.
5. CONTRACTOR SHALL VERIFY WET WELL ACCESS HATCH LOCATION AND DIMENSION WITH PUMP MANUFACTURER PRIOR TO FABRICATION.
6. PROVIDE 316 STAINLESS STEEL ANCHOR BOLTS FOR PUMP BASE MOUNTING TO SLAB.
7. INSTALL ISOLATION KITS BETWEEN DISSIMILAR METAL PIPING.
8. ALL PIPING WITHIN WET WELL AND VALVE VAULT SHALL BE SPECIAL THICKNESS CLASS 53 EPOXY LINED (PROTECTO 401) DUCTILE IRON PIPE.
9. ALL BURIED PIPE SHALL BE POLYWRAPPED DUCTILE IRON PRESSURE CLASS 350 PUSH JOINT PIPE WITH JOINT RESTRAINT GASKETS.
10. ALL METALS WITHIN THE WET WELL, INCLUDING FLANGE BOLTS, SHALL BE STAINLESS STEEL, UNLESS OTHERWISE INDICATED.
11. CONCRETE FOR FOUNDATION SHALL BE CLASS S. CONCRETE SHALL HAVE A MIN COMPRESSIVE STRENGTH OF 4000 PSI AT 28 DAYS.
12. THE EDGE OF EXPOSED CONCRETE SLABS SHALL RECEIVE A 3/4" CHAMFER.
13. REINFORCED STEEL SHALL BE GRADE 60.
14. ALL VENTS SHALL HAVE SCREENS INSTALLED OVER OPENINGS AND SHALL BE 304 STAINLESS STEEL - 16 MESH. OPENINGS SHALL BE A MINIMUM OF 12" ABOVE THE SLAB.
15. THE HIGH LEVEL ALARM SHALL ACTIVATE A FLASHING RED LIGHT TO BE MOUNTED ON THE ROOF OF THE ELECTRICAL SHELTER. THE CONTRACTOR SHALL INSTALL METAL INFORMATION SIGN AT OR NEAR THE LIFT STATION ENTRY GATE, VISIBLE TO THE PUBLIC.
16. ALL PENETRATIONS SHALL BE SEALED WATER AND GAS TIGHT PER APPROVED METHODS.
17. BACK FILLING OF THE WET WELL SHALL COMPLY WITH CITY OF ROUND ROCK STANDARD SPECIFICATIONS.
18. ALL INTERIOR SURFACES OF CONCRETE WET WELL SHALL BE COATED WITH AN 80 MIL (MIN.) COAT OF RAVEN 400 SERIES HIGH BUILD EPOXY LINER OR APPROVED EQUAL.

No.	REVISIONS	DATE	BY

Kimley»Horn
© 2025 KIMLEY-HORN AND ASSOCIATES, INC.
10814 JOLLYVILLE ROAD, CAMPUS IV, SUITE 200, AUSTIN, TX 78759
PHONE: 512-418-1771 FAX: 512-418-1791
WWW.KIMLEY-HORN.COM
TEXAS REGISTERED ENGINEERING FIRM F-928

STATE OF TEXAS
TARA R. RADDE
141851
LICENSED PROFESSIONAL ENGINEER
8/12/2024

KHA PROJECT 069284918
DATE AUGUST 2024
SCALE: AS SHOWN
DESIGNED BY: ATN
DRAWN BY: ATN
CHECKED BY: TRR

LIFT STATION PLAN AND SECTION

2525 CR 172 INDUSTRIAL
CITY OF ROUND ROCK
WILLIAMSON COUNTY, TEXAS

SHEET NUMBER
48 OF 218

SDP24-00001

Plotted By: Toradrick Knight, Paula Dates: April 17, 2025 02:21:45pm File Path: K:\AUS_Civil\069284918 — DAU3 Round Rock\LIFT STATION\CAD\PLANSHEETS\C-LS PLAN AND SECTION.dwg
This document, together with the concepts and designs presented herein, as an instrument of service, is intended only for the specific purpose and client for which it was prepared. Reuse of and improper reliance on this document without authorization and adaptation by Kimley-Horn and Associates, Inc. shall be without liability to Kimley-Horn and Associates, Inc.

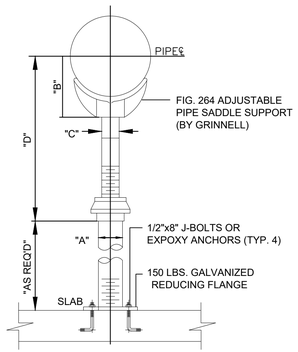

WGT APPROX. LBS EACH						D	
PIPE SIZE	COMPLETE	SADDLE ONLY	A	A	A	MINIMUM	MAXIMUM
2 1/2	9.0	4.8	2 1/2	3 1/2	1 1/2	8	13
3	9.2	5.0	2 1/2	3 3/4	1 1/2	8 1/4	13 1/4
3 1/2	9.4	5.2	2 1/2	4	1 1/2	8 1/2	13 1/2
4	15.0	7.6	3	4 1/4	2 1/2	9 1/4	14
5	16.7	8.3	3	4 7/8	2 1/2	10	14 3/4
6	17.7	10.3	3	5 1/2	2 1/2	10 1/2	15 1/4
8	20.2	12.8	3	6 7/8	2 1/2	11 3/4	16 1/2
10	25.2	17.8	3	5 1/2	2 1/2	13 1/2	18 1/4
12	29.0	21.6	3	9 15/16	2 1/2	15	19 3/4
14	49.2	38.0	4	10 15/16	3	16 1/4	20 3/4
16	53.2	42.0	4	12 3/8	3	17 3/4	22 1/4
18	70.8	51.0	6	13 7/8	3 1/2	19 1/2	24
20	104.8	85.0	6	15 3/8	3 1/2	21	25 1/2
24	137.0	110.0	6	17 15/16	4	23 3/4	28 1/2
30	170.0	150.0	6	21 5/16	4	27	31 1/2
32	181.0	161.1	6	22 1/2	4	28 1/8	32 3/4
36	249.0	229.0	6	24 1/4	4	30 1/4	34 3/4

1 ADJUSTABLE PIPE SUPPORT DETAIL
N.T.S

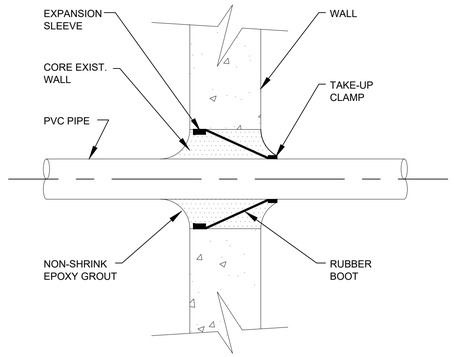

2 COA WW-146-D WET WELL PENETRATION DETAIL
N.T.S

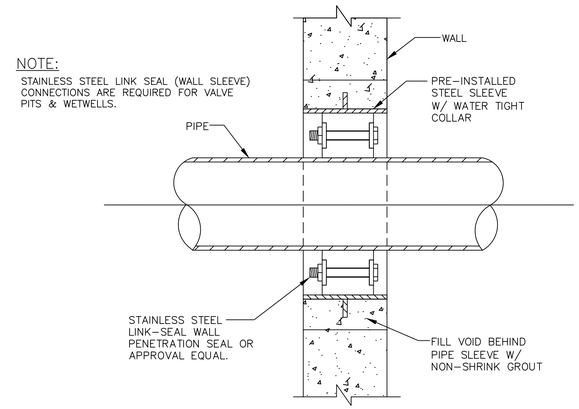

3 VAULT PIPE PENETRATION DETAIL
N.T.S

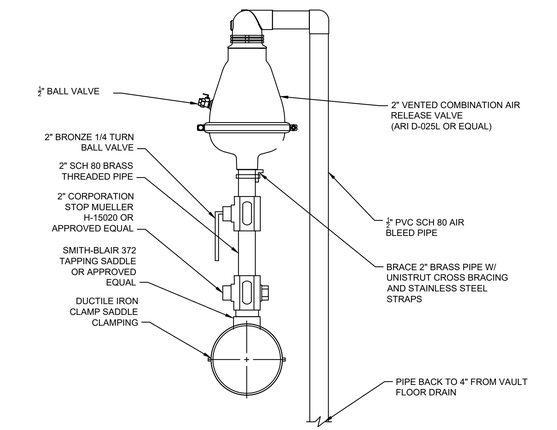

4 AIR RELEASE VALVE DETAIL
N.T.S

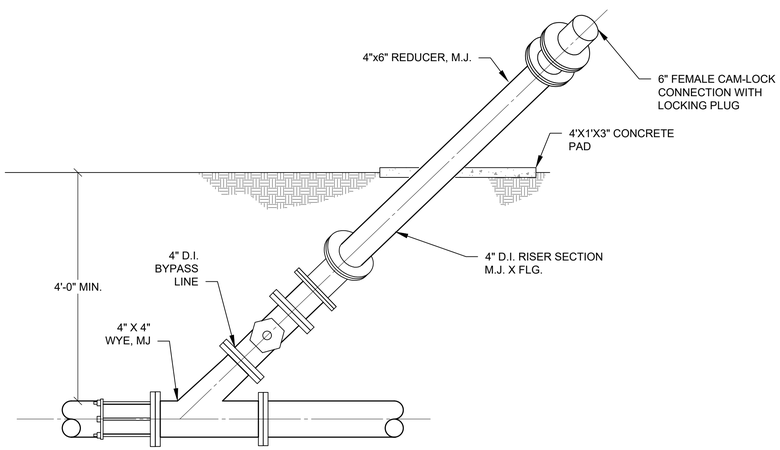

5 BYPASS STUB UP CONNECTION DETAIL
N.T.S

CONTRACTOR FIELD SET

This plan set shall remain on the site or subdivision premises for the life of the project and shall be utilized for any and all improvements contained herein.

No.	REVISIONS	DATE	BY

Kimley»Horn
© 2025 KIMLEY-HORN AND ASSOCIATES, INC.
10814 JOLLYVILLE ROAD, CAMPUS IV, SUITE 200, AUSTIN, TX 78759
PHONE: 512-418-1771 FAX: 512-418-1791
WWW.KIMLEY-HORN.COM
TEXAS REGISTERED ENGINEERING FIRM F-928

STATE OF TEXAS
TARA R. RADDE
141851
LICENSED PROFESSIONAL ENGINEER
8/12/2024

KHA PROJECT 060284918
DATE AUGUST 2024
SCALE: AS SHOWN
DESIGNED BY: ATN
DRAWN BY: ATN
CHECKED BY: TRR

LIFT STATION DETAILS I

2525 CR 172 INDUSTRIAL
CITY OF ROUND ROCK
WILLIAMSON COUNTY, TEXAS

SHEET NUMBER
49 OF 218

SDP24-00001

Plotted By: Toraldo Knight, Paula Date: April 17, 2025 02:22:16pm File Path: K:\AUS_Civil\060284918 - DAU3 Round Rock\LIFT STATION\CAD\PLANSHEETS\D-LS DETAILS.dwg
This document, together with the concepts and designs presented herein, as an instrument of service, is intended only for the specific purpose and client for which it was prepared. Reuse of and improper reliance on this document without written authorization and adaptation by Kimley-Horn and Associates, Inc. shall be without liability to Kimley-Horn and Associates, Inc.

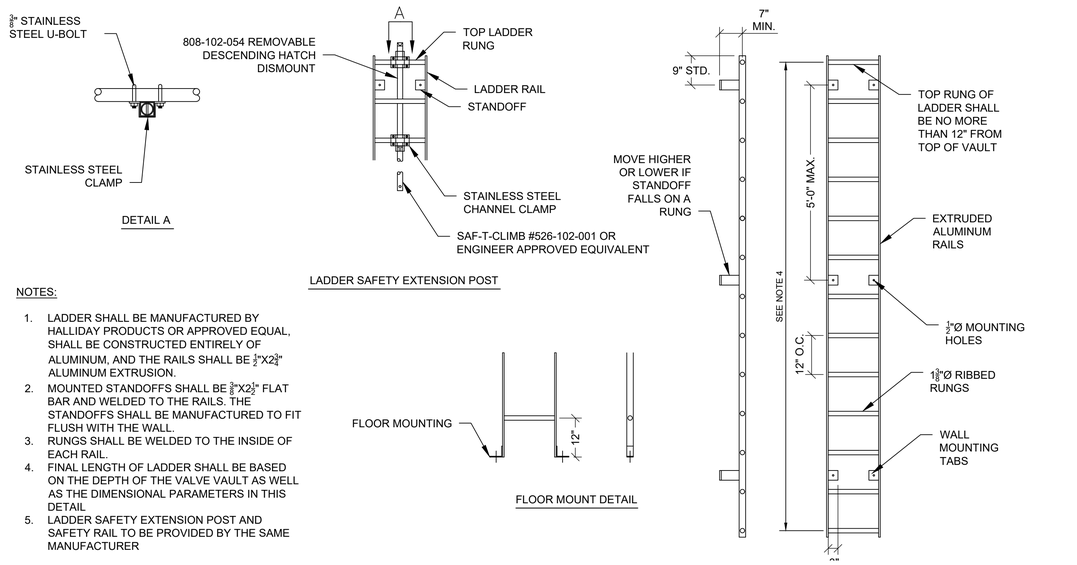

NOTES:

1. LADDER SHALL BE MANUFACTURED BY HALLIDAY PRODUCTS OR APPROVED EQUAL, SHALL BE CONSTRUCTED ENTIRELY OF ALUMINUM, AND THE RAILS SHALL BE ¾"X2¾" ALUMINUM EXTRUSION.
2. MOUNTED STANDOFFS SHALL BE ⅜"X2½" FLAT BAR AND WELDED TO THE RAILS. THE STANDOFFS SHALL BE MANUFACTURED TO FIT FLUSH WITH THE WALL.
3. RUNGS SHALL BE WELDED TO THE INSIDE OF EACH RAIL.
4. FINAL LENGTH OF LADDER SHALL BE BASED ON THE DEPTH OF THE VALVE VAULT AS WELL AS THE DIMENSIONAL PARAMETERS IN THIS DETAIL
5. LADDER SAFETY EXTENSION POST AND SAFETY RAIL TO BE PROVIDED BY THE SAME MANUFACTURER

1 LADDER DETAIL
N.T.S

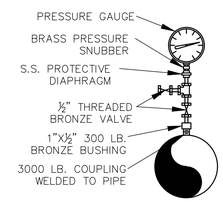

NOTES:
1. PRESSURE GAUGES SHALL HAVE 4-INCH DIAMETER FACES AND BE CALIBRATED FROM 0 TO 150 PSI.
2. GAUGE SHALL BE FILLED WITH GLYCOL AND INSTALLED WITH A PRESSURE SNUBBER AND SHALL BE OF STAINLESS STEEL CONSTRUCTION.
3. INSTALL GAUGE WITH A 0.25-INCH NPT CONNECTION AND INCLUDE A CORPORATION STOP AND AIR BLEED.
4. VALVES TO BE RATED AT 200 PSI MIN.
5. ALL WELDED COUPLINGS SHALL BE RATED FOR 3000 LBS.
6. GAUAGE SHALL BE TRERICE MANUFACTURED OR APPROVED EQUAL.

2 PRESSURE GAUGE DETAIL
N.T.S

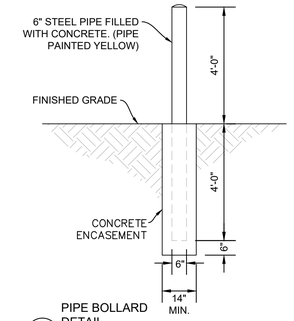

3 PIPE BOLLARD DETAIL
N.T.S

EBG-31 EBG-33 (3HP) **Synchronous Speed: 3450 RPM** **2½ / 3 inch Discharge**

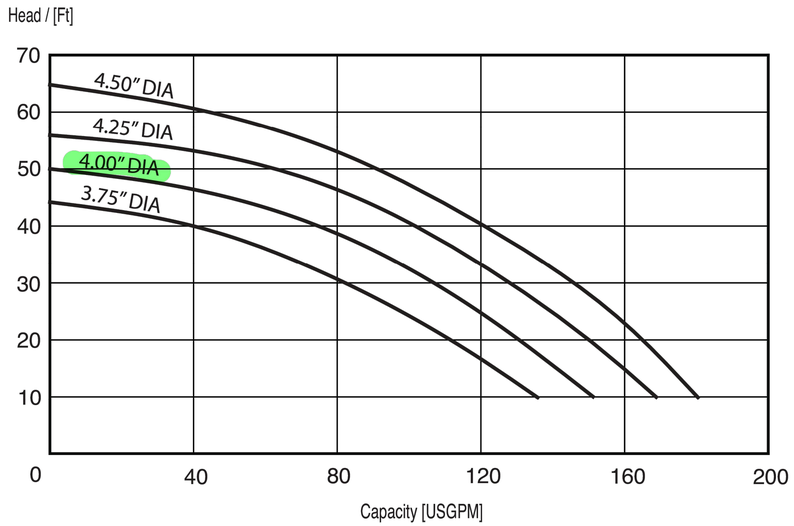

Note: Full diameter impeller included in price of pump. Consult factory for reduced diameter impeller and pricing.

EBARA Fluid Handling
www.pumpsebara.com
(t) 803 327 5005 • (f) 803 327 5097

1-197
rev. 05/15

4 PUMP INFORMATION

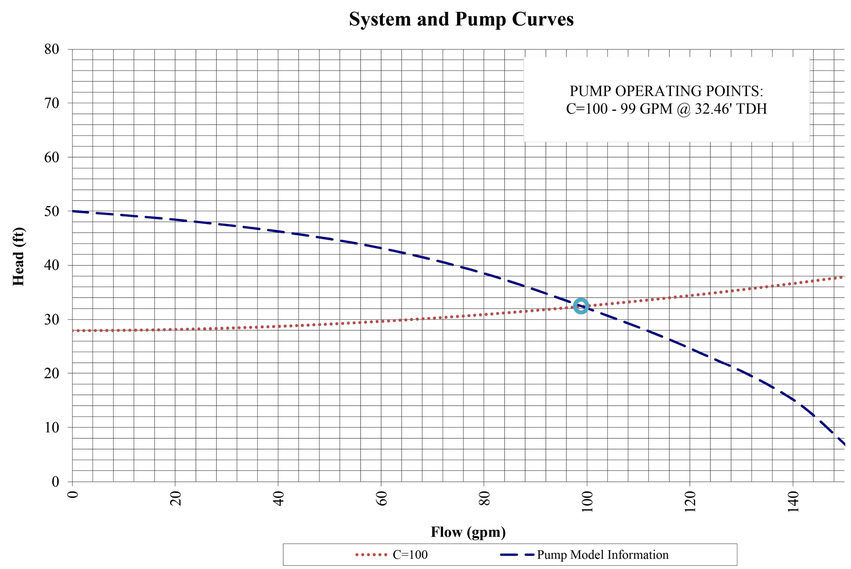

CONTRACTOR FIELD SET

This plan set shall remain on the site or subdivision premises for the life of the project and shall be utilized for any and all improvements contained herein.

5 SYSTEM AND PUMP CURVE

No.	REVISIONS	DATE	BY

Kimley»Horn

© 2025 KIMLEY-HORN AND ASSOCIATES, INC.
10814 JOLLYVILLE ROAD, CAMPUS IV, SUITE 200, AUSTIN, TX 78759
PHONE: 512-418-1771 FAX: 512-418-1791
WWW.KIMLEY-HORN.COM
TEXAS REGISTERED ENGINEERING FIRM F-928

STATE OF TEXAS
TARA R. RAGGE
141851
LICENSED PROFESSIONAL ENGINEER

8/12/2024

KHA PROJECT	060284918
DATE	AUGUST 2024
SCALE:	AS SHOWN
DESIGNED BY:	ATN
DRAWN BY:	ATN
CHECKED BY:	TRR

LIFT STATION DETAILS II

2525 CR 172 INDUSTRIAL
CITY OF ROUND ROCK
WILLIAMSON COUNTY, TEXAS

SHEET NUMBER
50 OF 218

SDP24-00001

Plotted By: Torcido Knight, Paula Date: April 17, 2025 02:22:21pm File Path: K:\AUS_Civil\060284910 — DAU3 Round Rock\LIFT STATION\CAD\P-ANSHEETS\D-LS DETAILS.dwg
This document, together with the concepts and designs presented herein, as an instrument of service, is intended only for the specific purpose and client for which it was prepared. Reuse of and improper reliance on this document without written authorization and adaptation by Kimley-Horn and Associates, Inc. shall be without liability to Kimley-Horn and Associates, Inc.

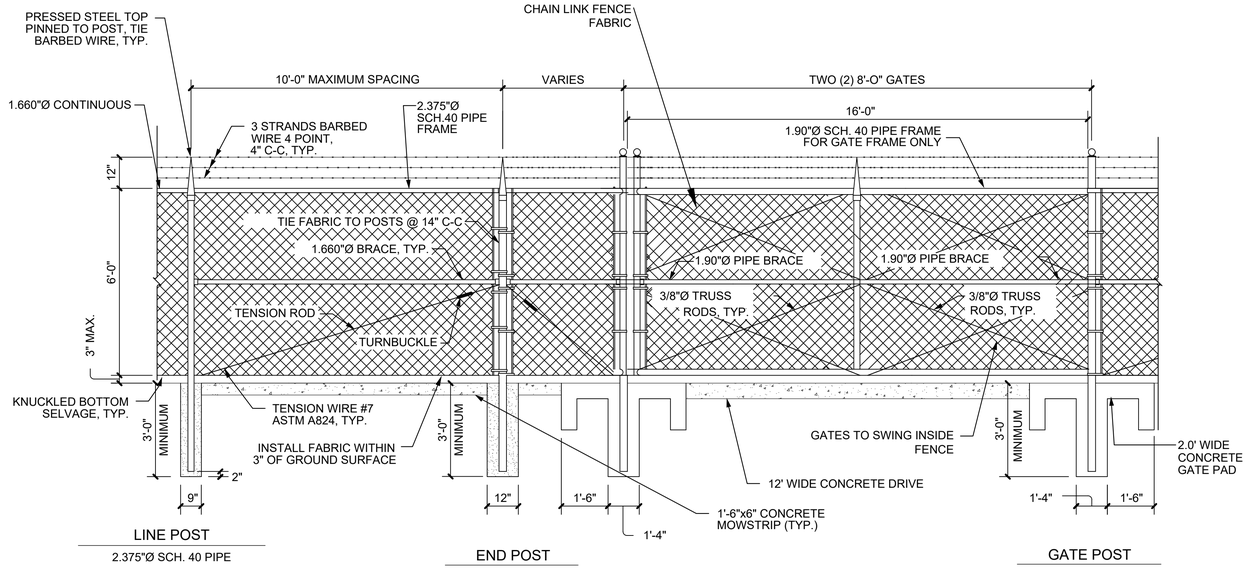

FENCE NOTES:

1. PIPE SIZES SHOWN ARE SCH. 40 PER ASTM F669.
2. PROVIDE FITTINGS FOR LOCKING GATE AND HEAVY DUTY PADLOCK KEYED TO THE OWNER'S MASTER.
3. BARBED WIRE SHOULD EXTEND OUTWARD FROM THE TOP OF FENCE AT A 45 DEGREE ANGLE WITH THE SMOOTH SIDE OF THE FENCE ON THE OUTSIDE WALL.

CHAIN LINK FENCE/GATE DETAIL

1 N.T.S

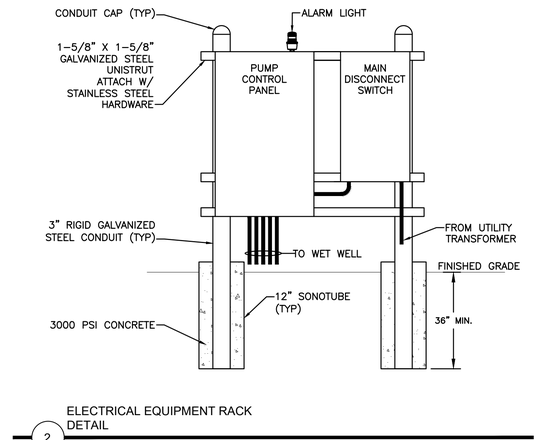

ELECTRICAL EQUIPMENT RACK DETAIL

2 N.T.S

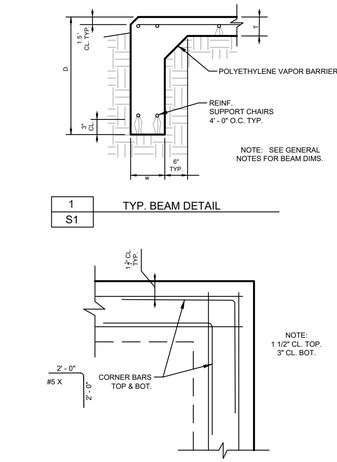

1 S1 TYP. BEAM DETAIL

2 S1 TYP. BEAM INTERSECTION DETAIL

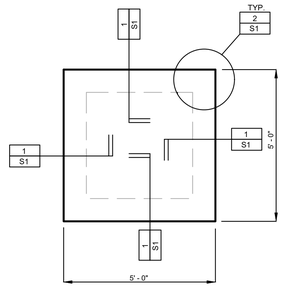

4 S1 ODOR CONTROL PAD FOUNDATION

NOTE:

6" SLAB : REINFORCED WITH #4 @ 12" O.C. EACH WAY TOP AND BOTTOM
EXTERIOR BEAMS: 12" WIDE X 18" DEEP REINFORCED WITH 2-#5 TOP AND BOTTOM U.N.O.

ODOR CONTROL PAD FOUNDATION DETAIL

3 N.T.S

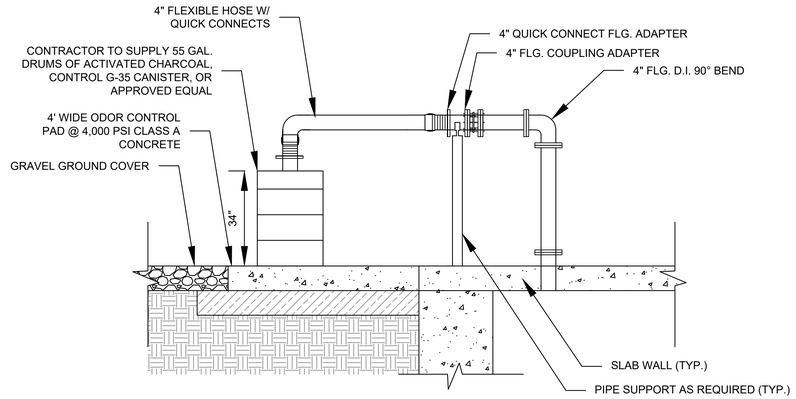

ODOR CONTROL DETAIL

4 N.T.S

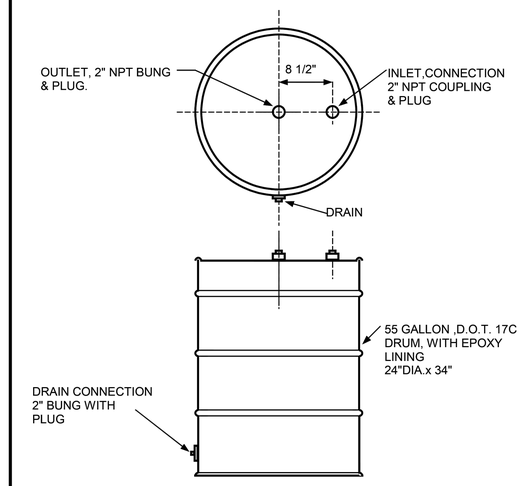

CARBTROL CORPORATION	39 RIVERSIDE AVENUE WESTPORT CONN. 06880 (203) 226-5642	
SCALE ----	PN-00101 PN-00102	BY R
DATE 10-1-85		REV 9-2-20
CARBTROL G-1		
ARRANGEMENT	S	DWG 1113/2

CONTRACTOR FIELD SET

This plan set shall remain on the site or subdivision premises for the life of the project and shall be utilized for any and all improvements contained herein.

No.	REVISIONS	DATE	BY

Kimley»Horn

© 2025 KIMLEY-HORN AND ASSOCIATES, INC.
10814 JOLLYVILLE ROAD, CAMPUS IV, SUITE 200, AUSTIN, TX 78759
PHONE: 512-418-1771 FAX: 512-418-1791
WWW.KIMLEY-HORN.COM
TEXAS REGISTERED ENGINEERING FIRM F-928

STATE OF TEXAS
TARA R. RADDE
141851
LICENSED PROFESSIONAL ENGINEER

8/12/2024

KHA PROJECT 069284918
DATE AUGUST 2024
SCALE: AS SHOWN
DESIGNED BY: ATN
DRAWN BY: ATN
CHECKED BY: TRR

LIFT STATION DETAILS III

2525 CR 172
INDUSTRIAL
CITY OF ROUND ROCK
WILLIAMSON COUNTY, TEXAS

SHEET NUMBER
51 OF 218

SDP24-00001

Plotted By: Toraldo Knight, Paula Date: April 17, 2025 02:22:31pm File Path: K:\AUS_Civil\069284910 - DAU3 Round Rock\LIFT STATION\CAD\PLANSHEETS\D-LS DETAILS.dwg
This document, together with the concepts and designs presented herein, as an instrument of service, is intended only for the specific purpose and client for which it was prepared. Reuse of and improper reliance on this document without written authorization and adaptation by Kimley-Horn and Associates, Inc. shall be without liability to Kimley-Horn and Associates, Inc.

NEMA 4X STAINLESS STEEL ENCLOSURE
48"H x 36"W x 12"DP
OUTER DOOR NOT SHOWN

FRONT

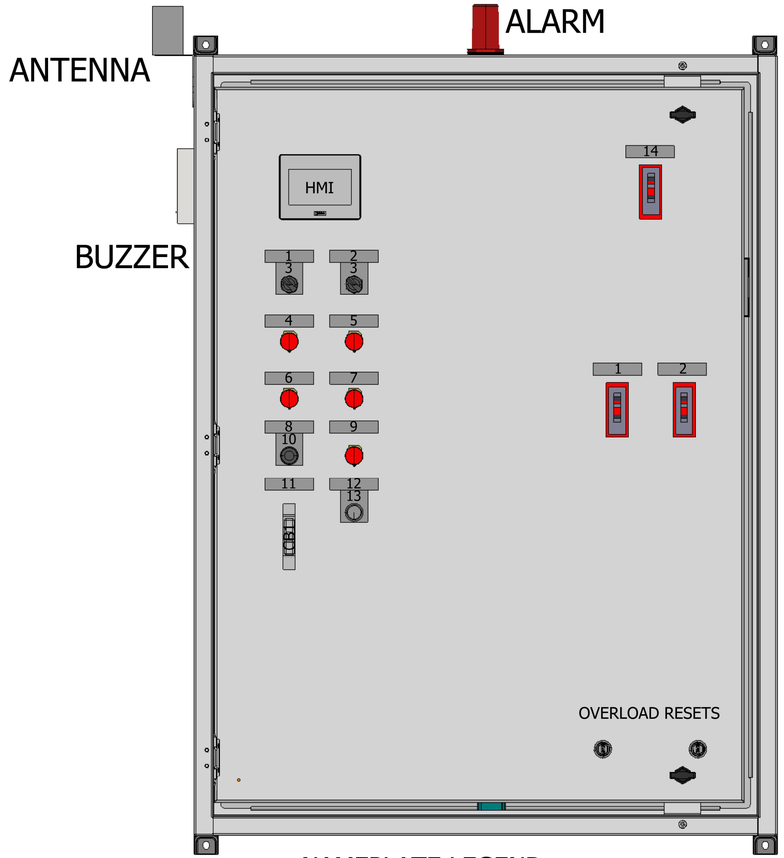

BACK PANEL

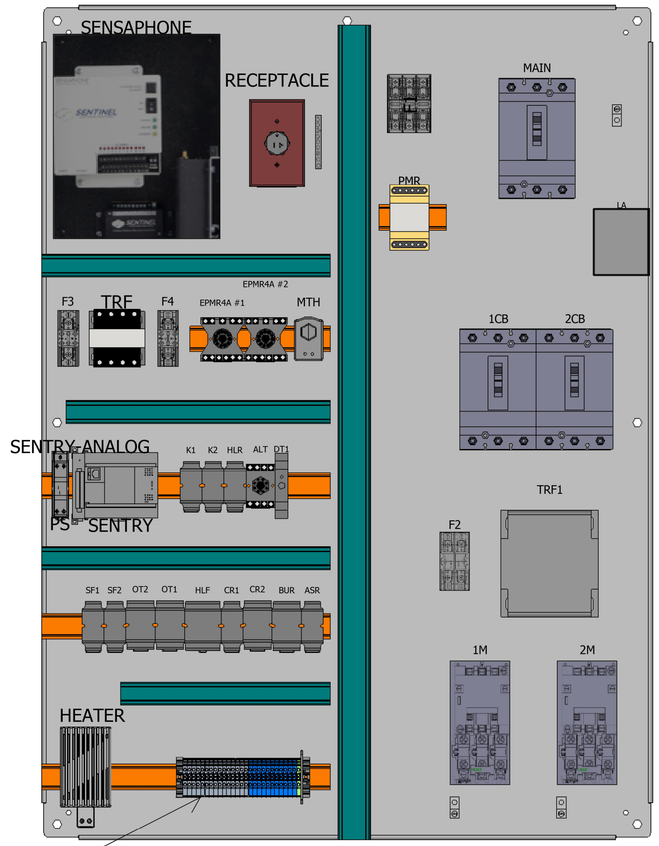

NAMEPLATE LEGEND

1. PUMP 1
2. PUMP 2
3. HAND OFF AUTO
4. PUMP 1 OVERTEMP
5. PUMP 2 OVERTEMP
6. PUMP 1 SEAL FAIL
7. PUMP 2 SEAL FAIL
8. ALARM
9. BACKUP ON
10. SILENCE
11. CONTROL
12. BACKUP
13. RESET
14. MAIN

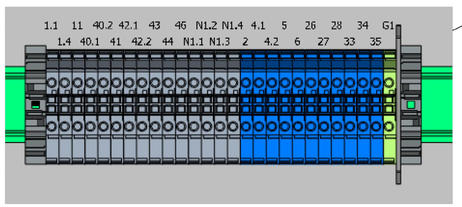

CONTRACTOR FIELD SET

This plan set shall remain on the site or subdivision premises for the life of the project and shall be utilized for any and all improvements contained herein.

LAMINATED DRAWING REQUIRED

USEMCO INCORPORATED
1602 REZIN RD, TOMAH, WI 54660
PHONE: (608) 372-5911 FAX: (608) 372-5016 WWW.USEMCO.COM

CUSTOMER: MANSFIELD PUMPCOMPANY

PROJECT DESCRIPTION: 2525 CR 172 INDUSTRIAL

REV. NO.	REVISION	NAME	DATE

	NAME	DATE
DESIGNED BY:	nchawla	05/16/24
DRAWN BY:	NIKESH CHAWLA	05/17/24
CHECKED BY:		05/17/24

PAGE DESCRIPTION: PANEL LAYOUT

PREVIOUS PAGE	&/3	TOTAL NO. OF PAGES 1	NEXT PAGE &EMC/1
PAGE NO. 1	DWG NO. &PNL/1	JOB NO. CP20205	

ELECTRICAL PANEL DETAIL
1
N.T.S

Plotted By: Toraldo Knight, Paula Date: April 17, 2025 02:22:36pm File Path: K:\AUS_Civil\069284918 — DAU3 Round Rock\LIFT STATION\CAD\PLANSHEETS\D-LS DETAILS.dwg
This document, together with the concepts and designs presented herein, as an instrument of service, is intended only for the specific purpose and client for which it was prepared. Reuse of and improper reliance on this document without written authorization and adaptation by Kimley-Horn and Associates, Inc. shall be without liability to Kimley-Horn and Associates, Inc.

No.	REVISIONS	DATE	BY

Kimley»Horn

© 2025 KIMLEY-HORN AND ASSOCIATES, INC.

10814 JOLLYVILLE ROAD, CAMPUS IV, SUITE 200, AUSTIN, TX 78759
PHONE: 512-418-1771 FAX: 512-418-1791
WWW.KIMLEY-HORN.COM
TEXAS REGISTERED ENGINEERING FIRM F-928

STATE OF TEXAS
TARA R. RAGGE
141851
LICENSED PROFESSIONAL ENGINEER
8/12/2024

KHA PROJECT	069284918
DATE	AUGUST 2024
SCALE:	AS SHOWN
DESIGNED BY:	ATN
DRAWN BY:	ATN
CHECKED BY:	TRR

CONTROL PANEL DETAIL

2525 CR 172 INDUSTRIAL
CITY OF ROUND ROCK
WILLIAMSON COUNTY, TEXAS

SHEET NUMBER
52 OF 218

SDP24-00001

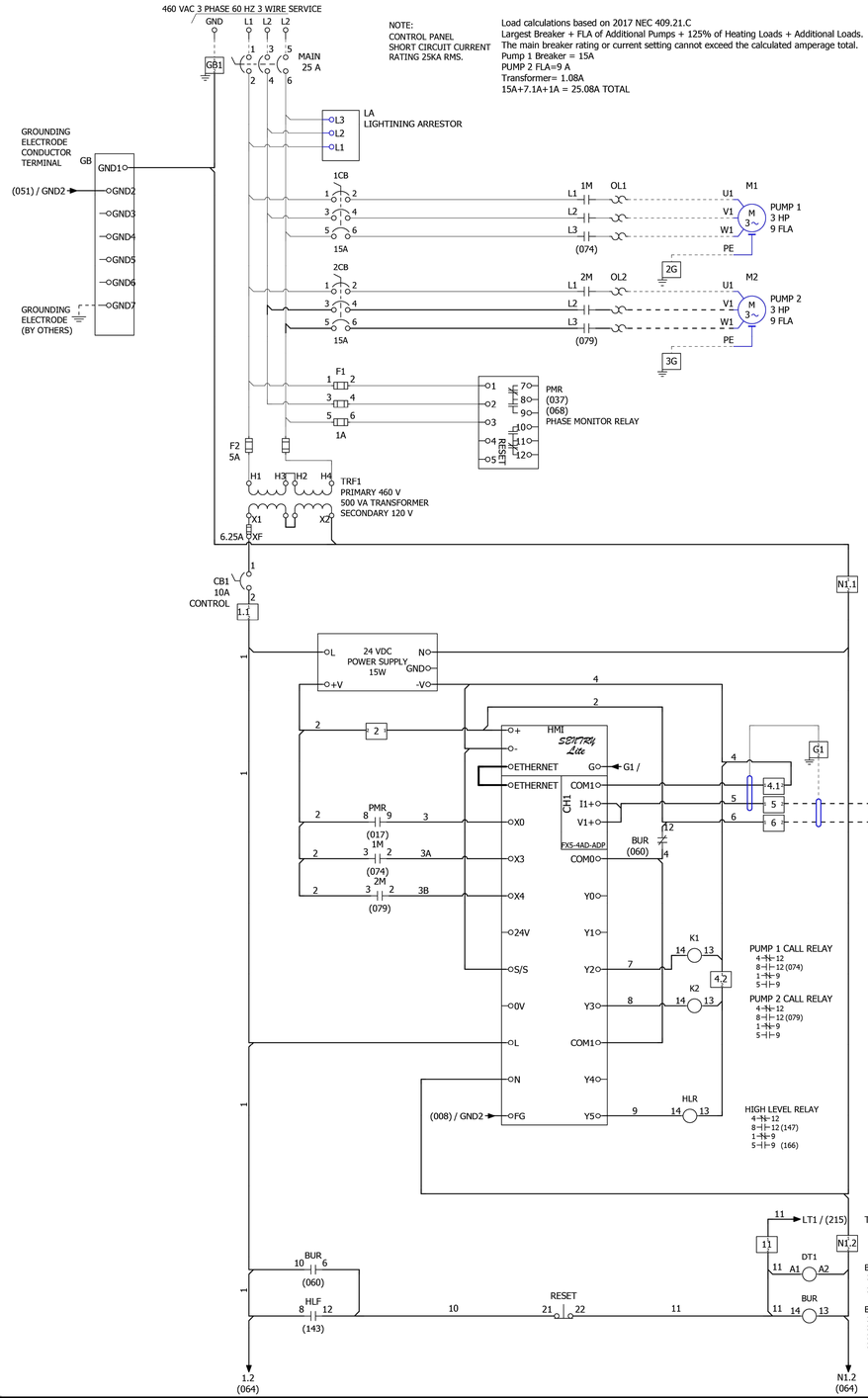

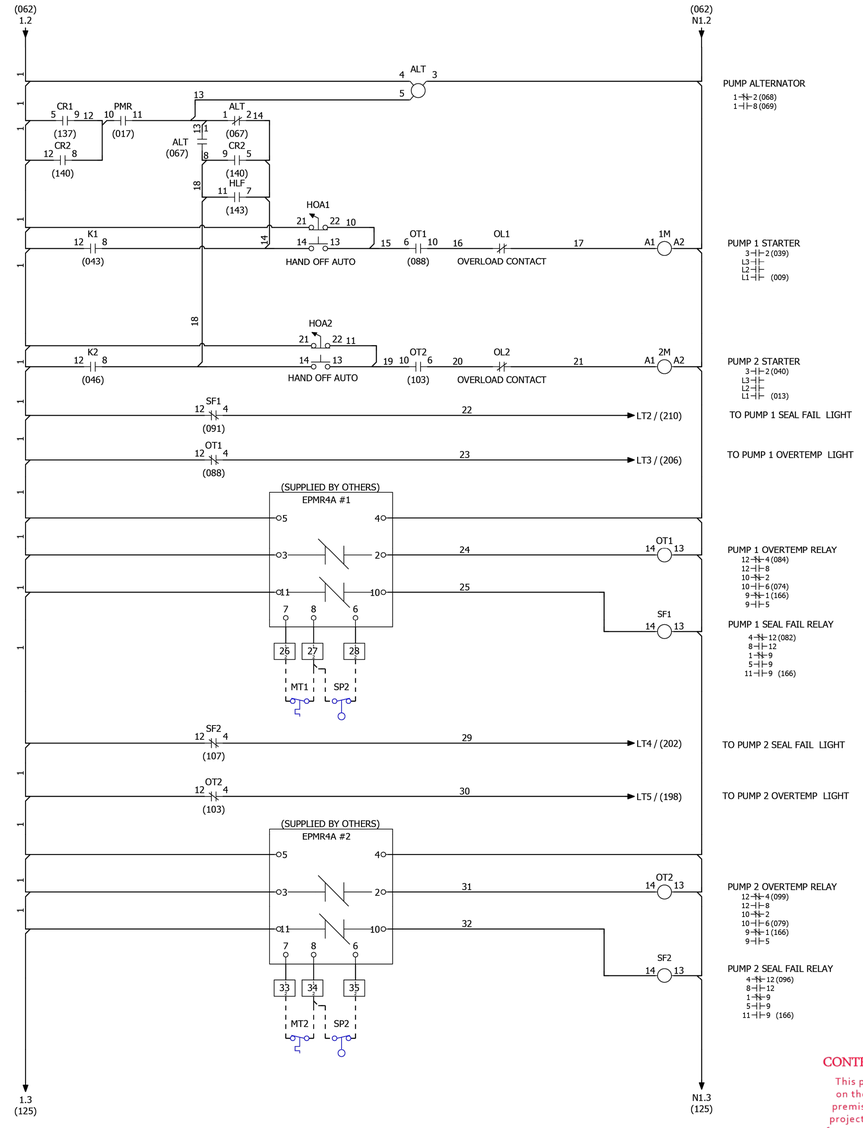

CONTRACTOR FIELD SET

This plan set shall remain on the site or subdivision premises for the life of the project and shall be utilized for any and all improvements contained herein.

COLOR CODING

BLACK	—	LINE AND LOAD
RED	—	AC CONTROL
BLUE	—	DC CONTROL
WHITE	—	NEUTRAL
GREEN	—	GROUND
YELLOW	—	INTERCONNECTING
LT. BLUE	—	INTRINSICALLY SAFE

USEMCO INCORPORATED

1602 REZIN RD, TOMAH, WI 54660
PHONE: (608) 372-5911 FAX: (608) 372-5016 WWW.USEMCO.COM

USEMCO Universal Sanitary Equipment Manufacturing Company

CUSTOMER: MANSFIELD PUMPCOMPANY

PROJECT DESCRIPTION: 2525 CR 172 INDUSTRIAL

REV. NO.	REVISION	NAME	DATE

	NAME	DATE
DESIGNED BY:	nchawla	05/16/24
DRAWN BY:	NIKESH CHAWLA	05/17/24
CHECKED BY:		05/17/24

PAGE DESCRIPTION: SCHEMATIC

PAGE NO. 1 | DWG # &EMC/1

PREVIOUS PAGE &PNL/1 | TOTAL NO. OF PAGES 2 | NEXT PAGE 2 | JOB # CP20205

No.	REVISIONS	DATE	BY

Kimley»Horn
© 2025 KIMLEY-HORN AND ASSOCIATES, INC.
10814 JOLLYVILLE ROAD, CAMPUS IV, SUITE 200, AUSTIN, TX 78759
PHONE: 512-418-1771 FAX: 512-418-1791
WWW.KIMLEY-HORN.COM
TEXAS REGISTERED ENGINEERING FIRM F-928

STATE OF TEXAS
TARA R. RADDE
141851
LICENSED PROFESSIONAL ENGINEER
8/12/2024

KHA PROJECT	069284918
DATE	AUGUST 2024
SCALE:	AS SHOWN
DESIGNED BY:	ATN
DRAWN BY:	ATN
CHECKED BY:	TRR

LIFT STATION ELECTRICAL PLANS I

2525 CR 172 INDUSTRIAL

CITY OF ROUND ROCK
WILLIAMSON COUNTY, TEXAS

SHEET NUMBER
53 OF 218

SDP24-00001

Posted By: Toraldo Knight, Paula Date: April 17, 2025 02:22:46pm File Path: K:\AUS_Civil\069284910 - DAU3 Round Rock\LIFT STATION\CAD\PLANSHEETS\D-LS DETAILS.dwg
This document, together with the concepts and designs presented herein, as an instrument of service, is intended only for the specific purpose and client for which it was prepared. Reuse of and improper reliance on this document without written authorization and adaptation by Kimley-Horn and Associates, Inc. shall be without liability to Kimley-Horn and Associates, Inc.

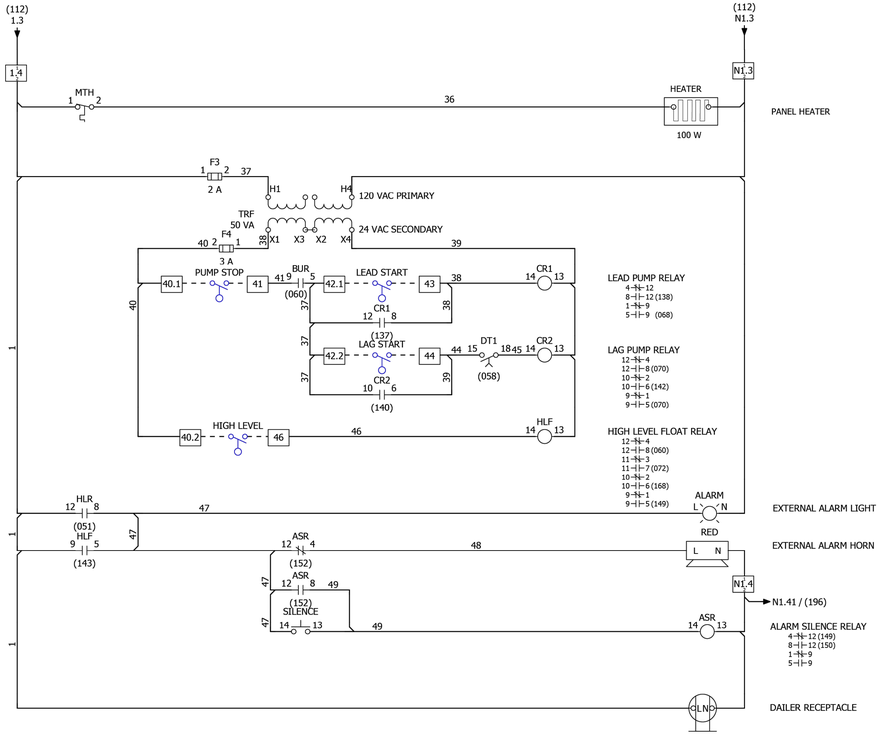

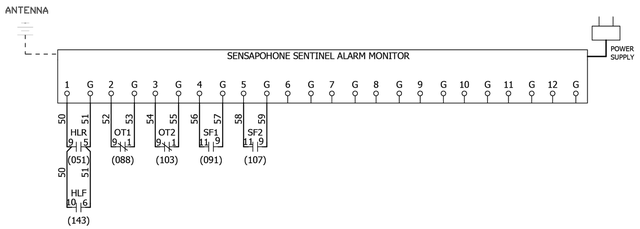

COLOR CODING		
BLACK	—	LINE AND LOAD
RED	—	AC CONTROL
BLUE	—	DC CONTROL
WHITE	—	NEUTRAL
GREEN	—	GROUND
YELLOW	—	INTERCONNECTING
LT. BLUE	—	INTRINSICALLY SAFE

NOTE:
CONTROL PANEL SHALL BEAR SERIALIZED U.L. 508A LABEL
WIRE MARKERS REQUIRED

CONTRACTOR FIELD SET

This plan set shall remain on the site or subdivision premises for the life of the project and shall be utilized for any and all improvements contained herein.

USEMCO INCORPORATED
1602 REZIN RD, TOMAH, WI 54660
PHONE: (608) 372-5911 FAX: (608) 372-5016 WWW.USEMCO.COM

CUSTOMER: MANSFIELD PUMPCOMPANY

PROJECT DESCRIPTION: 2525 CR 172 INDUSTRIAL

REV. NO.	REVISION	NAME	DATE

	NAME	DATE
DESIGNED BY:	nchawla	05/16/24
DRAWN BY:	NIKESH CHAWLA	05/17/24
CHECKED BY:		05/17/24

PAGE DESCRIPTION: SCHEMATIC

PREVIOUS PAGE 1 | TOTAL NO. OF PAGES 2 | NEXT PAGE | PAGE NO. 2 | DWG # &EMC/2 | JOB # CP20205

No.	REVISIONS	DATE	BY

Kimley»Horn
© 2025 KIMLEY-HORN AND ASSOCIATES, INC.
10814 JOLLYVILLE ROAD, CAMPUS IV, SUITE 200, AUSTIN, TX 78759
PHONE: 512-418-1771 FAX: 512-418-1791
WWW.KIMLEY-HORN.COM
TEXAS REGISTERED ENGINEERING FIRM F-928

STATE OF TEXAS
TARA R. RADDE
141851
LICENSED
PROFESSIONAL ENGINEER
8/12/2024

KHA PROJECT	060284918
DATE	AUGUST 2024
SCALE:	AS SHOWN
DESIGNED BY:	ATN
DRAWN BY:	ATN
CHECKED BY:	TRR

LIFT STATION
ELECTRICAL PLANS II

2525 CR 172
INDUSTRIAL
CITY OF ROUND ROCK
WILLIAMSON COUNTY, TEXAS

SHEET NUMBER
54 OF 218

SDP24-00001

Plotted By: Teralda Knight, Paula Date: April 17, 2025 02:23:01pm File Path: K:\AUS_Civil\060284910 — DAU3 Round Rock\LIFT STATION\CAD\PLANSHEETS\D-LS DETAILS.dwg
This document, together with the concepts and designs presented herein, as an instrument of service, is intended only for the specific purpose and client for which it was prepared. Reuse of and improper reliance on this document without written authorization and adaptation by Kimley-Horn and Associates, Inc. shall be without liability to Kimley-Horn and Associates, Inc.

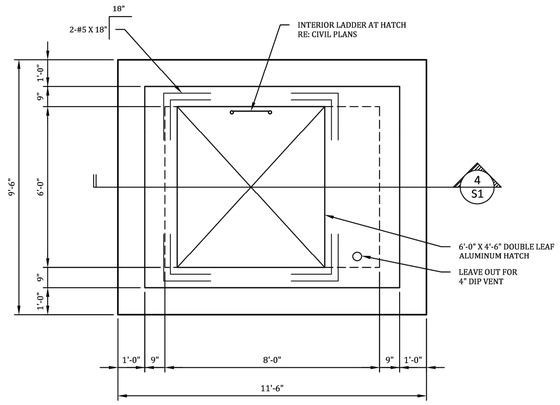

2 S1 VALVE VAULT PLAN VIEW - DIM CONTROL

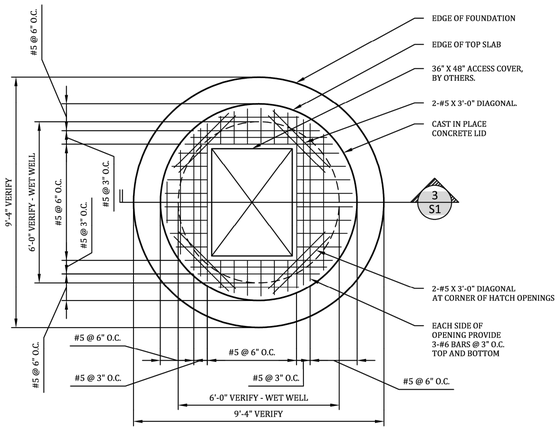

1 S1 WET WELL PLAN VIEW AND CAP REINF. AND DIM CONTROL

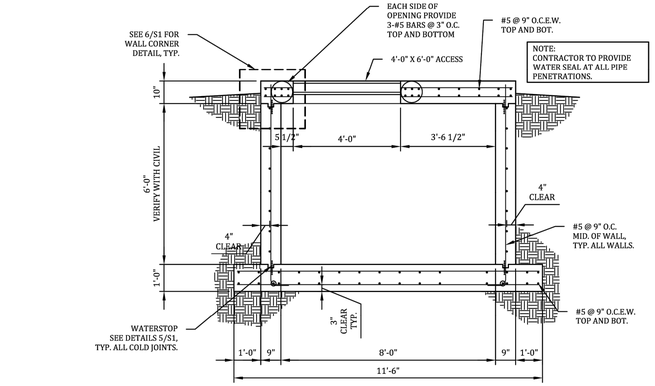

4 S1 VALVE VAULT CROSS SECTION

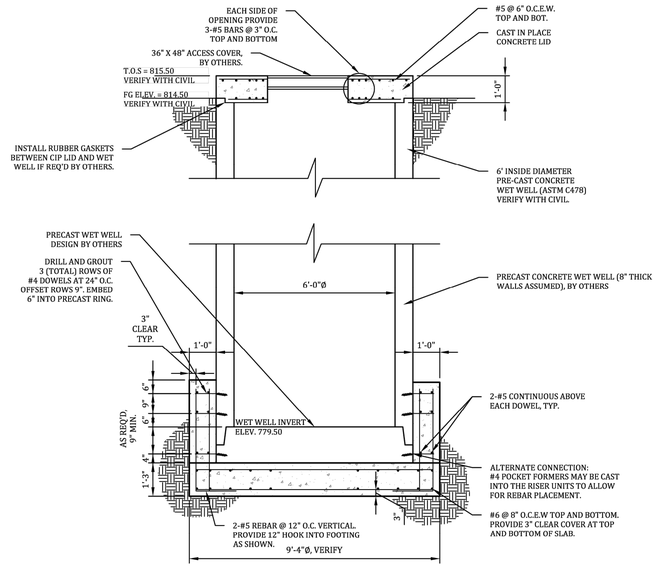

3 S1 WET WELL ANTI-FLOTATION RING/FOUNDATION AND CIP WET WELL ROOF CROSS SECTION

NOTES:

1) WET WELL ANTI-FLOTATION RING HAS BEEN DESIGNED FOR 35'-0" WET WELL DEPTH PER KIMLEY HORN PLANS DATED MAY 22, 2024.

2) ALL GROUTING IS TO BE DONE USING HILTI HIT-RE 500 V3 EPOXY MORTAR. ALL REBAR TO BE EPOXY-COATED.

3) CONTRACTOR TO VERIFY ALL DIMENSIONS AND NOTIFY ENGINEER OF DISCREPANCIES BEFORE PROCEEDING WITH CONSTRUCTION. AN 8" WET WELL WALL THICKNESS IS ASSUMED IN GEOMETRY OF ANTI-FLOTATION RING/FOUNDATION AND CIP WET WELL ROOF.

NOTE:
COORDINATE ALL PENETRATIONS AND ANCHORING WITH THE CIVIL, MECHANICAL, AND ELECTRICAL DRAWINGS.

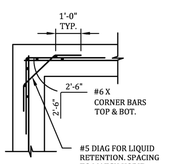

6 S1 WALL CORNER REINFORCING

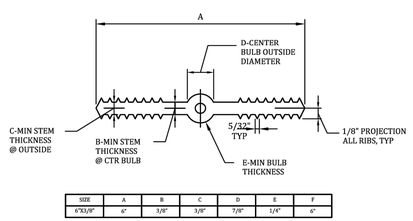

SIZE	A	B	C	D	E	F
6"X3/8"	6"	3/8"	3/8"	7/8"	1/4"	6"

NOTES:

1. DIM REQUIREMENTS INDICATED SHOULD BE GIVEN TO SUPPLIERS PRIOR TO PLACING ORDERS.
2. NON-ROUND CENTER BULBS SHALL HAVE A MIN OUTSIDE DIM OF "D".
3. SPLICING AT CORNERS AND INTERSECTIONS SHALL BE MADE PER MANUFACTURER RECOMMENDATIONS TO PROVIDE CONTINUOUS WATERTIGHT SEAL.

5 S1 WATER STOP DETAIL

GENERAL NOTES

CONCRETE MIX DESIGN:

1. ALL CONCRETE SHALL HAVE MINIMUM COMPRESSIVE STRENGTH f'c=3600 psi, TxDOT CLASS C CONCETE, AT 28 DAYS. PROVIDE 5" SLUMP. ADDING WATER AT SITE IS NOT PERMITTED.

2. THE CONCRETE MIX DESIGNS SHALL BE PROPORTIONED TO MINIMIZE THE ADVERSE EFFECTS OF CLIMATE AT THE TIME OF YEAR THE CONCRETE IS PLACED. USE OF WORKABILITY ADMIXTURES AND AIR ENTRAINMENT IS PERMITTED AND MUST BE NOTED ON MIX DESIGNS.

3. USE OF CALCIUM CHLORIDE ADMIXTURES IS NOT PERMITTED.

4. THE BUILDER/CONTRACTOR IS RESPONSIBLE FOR MAKING CONCRETE COMPRESSIVE STRENGTH CYLINDER TESTS AS REQUIRED BY A.C.I. 318-14.

CONCRETE REINFORCEMENT:

1. ALL REINFORCING STEEL SHALL BE NEW BILLET STEEL CONFORMING TO A.S.T.M. A-615 GRADE 60. REINFORCEMENT SHALL BE FREE OF RUST AND DELETERIOUS MATERIALS.

CONSTRUCTION:

1. SUFFICIENT SUPPORT BARS AND CHAIRS SHALL BE PROVIDED TO MAINTAIN PROPER REINFORCEMENT PROFILE THROUGHOUT CONCRETE PLACEMENT. BARS SHALL BE SUPPORTED ON CHAIRS AND TIED AT ALL INTERSECTIONS. USE 4'-0" MAXIMUM SPACING FOR SUPPORT CHAIRS.

2. INSURE PROPER VIBRATION OF CONCRETE AROUND ALL REINFORCEMENT.

3. TRENCHES FOR DEEP PLUMBING LINES SHOULD NOT BE LOCATED DIRECTLY UNDER (PARALLEL TO) BEAMS.

4. ALL SLABS AND BEAMS SHALL BE PROPERLY GRADED AND LEVELED. A THIN (1"±) LAYER OF SAND MAY BE USED UNDER THE SLAB.

5. A POLYETHYLENE VAPOR BARRIER SHALL BE PLACED BETWEEN THE CONCRETE AND SOIL. A THIN LAYER OF LEVELING SAND MAY BE PLACED ON TOP OF THE POLYETHYLENE.

6. CONTRACTOR NOTE: BEFORE PROCEEDING WITH ANY WORK OR ORDERING OF MATERIALS, THE CONTRACTOR AND/OR SUBCONTRACTORS SHALL VERIFY ALL MEASUREMENTS AND LOCATION OF BUILDING COMPONENTS AND THEIR INTERRELATIONSHIP AT THE BUILDING SITE AND FOR THEIR CORRECTNESS.

DESIGN:

1. THE REINFORCED CONCRETE DESIGN OF THIS FOUNDATION STRUCTURE HAS BEEN ANALYZED USING STANDARD ENGINEERING PRACTICES.

2. THE REINFORCED CONCRETE SLAB-ON-GRADE DESIGN SHOWN REFLECTS THE MINIMUM REQUIREMENTS NEEDED TO ALLOW THIS STRUCTURE SYSTEM TO ADEQUATELY PERFORM IN CONJUNCTION WITH THE SOIL PARAMETERS NOTED BELOW. THE INTENT IS NOT TO LIMIT SOIL MOVEMENT, BUT INSTEAD TO LIMIT EXCESSIVE FOUNDATION FLEXURE SO THAT DIFFERENTIAL MOVEMENT WILL NOT CAUSE UNREASONABLE DISTRESS.

3. FOUNDATION MAINTENANCE: DRAINAGE AWAY FROM THE FOUNDATION SHALL BE MAINTAINED AT ALL TIMES SO THAT GROUND WATER WILL NOT COLLECT ADJACENT TO OR UNDER THE SLAB. THE INTENT IS TO MAINTAIN AN EVEN SOIL MOISTURE CONTENT AROUND THE BUILDING SO THAT DIFFERENTIAL SOIL MOVEMENT IS LIMITED.

4. HEAVY VEGETATION SUCH AS TREES WITHIN 10-15 FEET OF THE PERIMETER OF THE FOUNDATION MAY CAUSE EXCESSIVE WATER REMOVAL FROM THE SOIL NEAR OR UNDER THE FOUNDATION. SUCH UNANTICIPATED PARAMETERS ARE NOT CONSIDERED UNLESS REPORTED BY THE CONTRACTOR TO FALKOFSKE ENGINEERING, INC. IN WRITING PRIOR TO DESIGN.

5. GEO-TECHNICAL INVESTIGATION PROVIDED BY: ROCK ENGINEERING & TESTING LABORATORY, INC.

REPORT NO. G221847
DATED: 12/23/21

ALLOWABLE SOIL BEARING PRESSURE	(BEARING IN CLAY)	Qa = 3,000 psf
ALLOWABLE SOIL BEARING PRESSURE	(BEARING IN BEDROCK)	Qa = 15,000 psf
MINIMUM DEPTH OF FOUNDATION INTO BEARING SOIL		12"
PLASTICITY INDEX		PI = 28

6. ALL FILL AREAS AND MATERIALS SHALL BE PLACED, COMPACTED, AND TESTED PER THE GEO-TECHNICAL ENGINEERS RECOMMENDATIONS.

7. BUILDING CODE: 2015 INTERNATIONAL BUILDING CODE

INSPECTIONS:

1. INSPECTIONS ARE TO BE AS REQUIRED BY LOCAL BUILDING DEPARTMENT.

2. FALKOFSKE ENGINEERING INC. SHALL BE CALLED FOR CONSTRUCTION REVIEW OF FOUNDATION BEAMS AND REINFORCEMENT PRIOR TO PLACING CONCRETE.

CONTRACTORS OPTION:
The use of precast concrete bar supports (commonly called "Dobies") to support slab reinforcement or beam reinforcement for concrete slab on grade foundations is acceptable. It is important that the precast concrete bar supports are in fact made of concrete with an allowable f'c of 3000 psi. If the pads purchased are from the Aztec Concrete Accessories, Inc. which produces them, then they are pre-approved by Falkofske Engineering, Inc.

As referenced by Aztec Concrete Accessories, Inc., the Concrete Reinforcing Steel Institute (CRSI) references the use of concrete bar supports in the Manual of Standard Practice. The Manual of Standard Practice shows the use of wire dobies, plain dobies, combination (those with grooves), and dowel dobies (those with a hole for dowel bar support). The ACI also references the use of dobies as a standard practice, and the CRSI Manual of Standard Practice as a source for placing layouts.

It is our opinion that precast concrete bar supports do a much better job of supporting slab reinforcement than plastic chairs which is typical in the today's Slab on Grade foundation construction.

Brick veneer of either clay brick or concrete brick shall not be used in any Falkofske Engineering, Inc. foundation design.

CONTRACTOR FIELD SET

This plan set shall remain on the site or subdivision premises for the life of the project and shall be utilized for any and all improvements contained herein.

CONTRACTOR TO VERIFY ALL DIMENSIONS WITH EQUIPMENT SIZES PRIOR TO CONSTRUCTION

No.	REVISIONS	DATE	BY

Kimley»Horn
© 2024 KIMLEY-HORN AND ASSOCIATES, INC.
10814 JOLLYVILLE ROAD, CAMPUS IV, SUITE 200, AUSTIN, TX 78759
PHONE: 512-418-1771 FAX: 512-418-1791
WWW.KIMLEY-HORN.COM
TEXAS REGISTERED ENGINEERING FIRM F-928

STATE OF TEXAS
ERIK GARCIA
147076
LICENSED
PROFESSIONAL ENGINEER
Date: 06-05-2024

KHA PROJECT 062284918			
DATE: JUNE 5, 2024	SCALE:	3/8" = 1'-0"	
	DESIGNED BY:	EG	EG
	DRAWN BY:		TJW
	CHECKED BY:		

Structural Engineering Consultants
TX Reg. Engineering Firm F-4038
722 North Fielder Road
Arlington, Texas 76012
(817) 261-8300
FEI Job No. 1108.23

FALKOFSKE ENGINEERING

2525 CR 172 INDUSTRIAL

CITY OF ROUND ROCK
WILLIAMSON COUNTY, TEXAS

SHEET NUMBER
55 OF 218

SDP24-00001

Plotted By:Erik Garcia Date:June 05, 2024 07:05:44am File Path:H:\Kimley Horn\2023\1108.23 Lift Station Round Rock\1108.23 S2.dwg
This document, together with the concepts and designs presented herein, as an instrument of service, is intended only for the specific purpose and client for which it was prepared. Reuse of and improper reliance on this document without written authorization and adaptation by Kimley-Horn and Associates, Inc. shall be without liability to Kimley-Horn and Associates, Inc.

Calculations for Texas Commission on Environmental Quality TSS Removal Calculations
Hydro International Up-Flo® Filter - Sizing Spreadsheet Revision 1.0

Project Name: SDP - 2525 CR 172 INDUSTRIAL
Date Prepared: 10/16/2024

1. The Required Load Reduction for the Total Project.

Calculations from RG-348, Pages 3-27 to 3-30
Page 3-29 Equation 3.3:
$L_M = 27.2(A_N \times P)$

Where:
$L_{M\ TOTAL\ PROJECT}$ = Required TSS removal resulting from the proposed development = 80% of increased load
A_N = Net increase in impervious area for the project
P = Average annual precipitation, inches

Site Data: Determine Required Load Removal Based on the Entire Project

County =	Williamson	
Total project area included in plan =	49.10	acres
Predevelopment impervious area within the limits of the plan =	0.00	acres
Total post-development impervious area within the limits of the plan =	32.72	acres
Total post-development impervious cover fraction =	0.67	
P =	32	inches
$L_{M\ TOTAL\ PROJECT}$ =	28479	lb
Number of drainage basins / outfalls areas leaving the plan area =	2	

2. Drainage Basin Parameters (This information should be provided for each basin).

Drainage Basin/Outfall Area No. =	1	
Total drainage basin/outfall area =	22.12	acres
Predevelopment impervious area within drainage basin/outfall area =	0.00	acres
Post-development impervious area within drainage basin/outfall area =	14.75	acres
Post-development impervious fraction within drainage basin/outfall area =	0.67	
$L_{M\ THIS\ BASIN}$ =	12,838	lb

3. Indicate the Proposed BMP Code for this Basin.

Proposed BMP =	Up-Flo® Filter CPZ	
Removal efficiency =	78	percent

4. Calculate Maximum TSS Load Removed (L_R) for this Drainage Basin by the Selected BMP Type.

RG-348 Page 3-33 Equation 3.7:
L_R = (BMP efficiency) x P x (A_I x 34.6 + A_P x 0.54)

Where:
A_C = Total On-Site drainage area in the BMP catchment area
A_I = Impervious area proposed in the BMP catchment area
A_P = Pervious area remaining in the BMP catchment area
L_R = TSS Load removed from this catchment area by the proposed BMP

A_C =	22.12	acres
A_I =	14.75	acres
A_P =	7.37	acres
L_R =	12,838	lb

5. Calculate Fraction of Annual Runoff to Treat the Drainage Basin / Outfall Area. Note

Desired $L_{M\ THIS\ BASIN}$ =	12,838	lb
F =	1.00	

6. Calculate Capture Volume Required by the BMP Type for this Drainage Basin / Outfall Area.

Calculations from RG-348 Pages 3-34 to 3-36

Rainfall Depth =	4.00	inches
Post Development Runoff Coefficient =	0.47	
On-site Water Quality Volume =	152,308	cubic feet

Calculations from RG-348 Pages 3-36 to 3-37

Off-site area draining to BMP =	0.00	acres
Off-site Impervious cover draining to BMP =	0.00	acres
Impervious fraction of off-site area =	0	
Off-site Runoff Coefficient =	0.00	
Off-site Water Quality Volume =	0	cubic feet
Storage for Sediment =	30,462	cubic feet
Total Capture Volume (required water quality volume x 1.20) =	182,769	cubic feet

7. Up-Flo® Filter TSS Load Based Sizing.

Minimum Filter Modules based on L_R =	98	modules
Maximum Release Rate =	5.49	cfs

STATE OF TEXAS
NICHOLAS C. BROWN
107175
LICENSED
PROFESSIONAL ENGINEER
10/17/2024

Calculations for Texas Commission on Environmental Quality TSS Removal Calculations
Hydro International Up-Flo® Filter - Sizing Spreadsheet Revision 1.0

Project Name: SDP - 2525 CR 172 INDUSTRIAL
Date Prepared: 10/16/2024

1. The Required Load Reduction for the Total Project.

Calculations from RG-348, Pages 3-27 to 3-30
Page 3-29 Equation 3.3:
$L_M = 27.2(A_N \times P)$

Where:
$L_{M\ TOTAL\ PROJECT}$ = Required TSS removal resulting from the proposed development = 80% of increased load
A_N = Net increase in impervious area for the project
P = Average annual precipitation, inches

Site Data: Determine Required Load Removal Based on the Entire Project

County =	Williamson	
Total project area included in plan =	49.10	acres
Predevelopment impervious area within the limits of the plan =	0.00	acres
Total post-development impervious area within the limits of the plan =	32.72	acres
Total post-development impervious cover fraction =	0.67	
P =	32	inches
$L_{M\ TOTAL\ PROJECT}$ =	28479	lb
Number of drainage basins / outfalls areas leaving the plan area =	2	

2. Drainage Basin Parameters (This information should be provided for each basin).

Drainage Basin/Outfall Area No. =	2	
Total drainage basin/outfall area =	26.98	acres
Predevelopment impervious area within drainage basin/outfall area =	0.00	acres
Post-development impervious area within drainage basin/outfall area =	17.97	acres
Post-development impervious fraction within drainage basin/outfall area =	0.67	
$L_{M\ THIS\ BASIN}$ =	15,641	lb

3. Indicate the Proposed BMP Code for this Basin.

Proposed BMP =	Up-Flo® Filter CPZ	
Removal efficiency =	78	percent

4. Calculate Maximum TSS Load Removed (L_R) for this Drainage Basin by the Selected BMP Type.

RG-348 Page 3-33 Equation 3.7:
L_R = (BMP efficiency) x P x (A_I x 34.6 + A_P x 0.54)

Where:
A_C = Total On-Site drainage area in the BMP catchment area
A_I = Impervious area proposed in the BMP catchment area
A_P = Pervious area remaining in the BMP catchment area
L_R = TSS Load removed from this catchment area by the proposed BMP

A_C =	26.98	acres
A_I =	17.97	acres
A_P =	9.01	acres
L_R =	15,641	lb

5. Calculate Fraction of Annual Runoff to Treat the Drainage Basin / Outfall Area. Note

Desired $L_{M\ THIS\ BASIN}$ =	15,641	lb
F =	1.00	

6. Calculate Capture Volume Required by the BMP Type for this Drainage Basin / Outfall Area.

Calculations from RG-348 Pages 3-34 to 3-36

Rainfall Depth =	4.00	inches
Post Development Runoff Coefficient =	0.47	
On-site Water Quality Volume =	185,502	cubic feet

Calculations from RG-348 Pages 3-36 to 3-37

Off-site area draining to BMP =	0.00	acres
Off-site Impervious cover draining to BMP =	0.00	acres
Impervious fraction of off-site area =	0	
Off-site Runoff Coefficient =	0.00	
Off-site Water Quality Volume =	0	cubic feet
Storage for Sediment =	37,100	cubic feet
Total Capture Volume (required water quality volume x 1.20) =	222,602	cubic feet

7. Up-Flo® Filter TSS Load Based Sizing.

Minimum Filter Modules based on L_R =	119	modules
Maximum Release Rate =	6.66	cfs

STATE OF TEXAS
NICHOLAS C. BROWN
107175
LICENSED
PROFESSIONAL ENGINEER
10/17/2024

CONTRACTOR FIELD SET

This plan set shall remain on the site or subdivision premises for the life of the project and shall be utilized for any and all improvements contained herein.

No.	REVISIONS	DATE	BY

Kimley»Horn
© 2025 KIMLEY-HORN AND ASSOCIATES, INC.
10814 JOLLYVILLE ROAD, CAMPUS IV, SUITE 200, AUSTIN, TX 78759
PHONE: 512-418-1771 FAX: 512-418-1791
WWW.KIMLEY-HORN.COM
TEXAS REGISTERED ENGINEERING FIRM F-928

STATE OF TEXAS
NICHOLAS C. BROWN
107175
LICENSED
PROFESSIONAL ENGINEER
03/26/2025

KHA PROJECT 060284918	DATE: MARCH 2025	SCALE: AS SHOWN	DESIGNED BY: MM	DRAWN BY: MM / CHECKED BY: NCB

TCEQ CALCULATIONS

2525 CR 172 INDUSTRIAL
CITY OF ROUND ROCK
WILLIAMSON COUNTY, TEXAS

SHEET NUMBER
86 OF 227

SDP24-00001

Plotted By: Toraldo Knight, Paula Date: April 17, 2025 02:48:08pm File Path: K:\AUS_Civil\060284918 - DAU3 Round Rock\Civil\PlanSheets-SDP\C-Pond Plan.dwg
This document, together with the concepts and designs presented herein, as an instrument of service, is intended only for the specific purpose and client for which it was prepared. Reuse of and improper reliance on this document without written authorization and adoption by Kimley-Horn and Associates, Inc. shall be without liability to Kimley-Horn and Associates, Inc.
Template:KHA AUS TEMPLATE (SDP 2022) (Mod:11-08-2022)

DAU3

Drainage Calculations - SCS Method

DRAINAGE AREA	AREA (Ac.)	IMPERVIOUS COVER (Ac.)	IMPERVIOUS COVER (%)	CN	SHEET FLOW P-2yr24hr 4.01 IN N	L (ft)	S (ft/ft)	Tt(min)	SHALLOW CONCENTRATED FLOW Grass Surface L (ft)	V (fps)	S (ft/ft)	Tt(min)	Paved Surface L (ft)	V (fps)	S (ft/ft)	Tt(min)	TOTAL Tc** (min)	LAG TIME (min)	Q_2 (cfs)	Q_{10} (cfs)	Q_{25} (cfs)	Q_{50} (cfs)	Q_{100} (cfs)
EX-A1	68.01	0.14	0.2%	80.04	0.15	100	0.007	13.32	2413	2.1	0.016	19.51	-	-	-	0.00	32.83	19.70	88.04	181.26	252.98	330.22	386.75
EX-A2	48.27	0.00	0.0%	80.00	0.15	100	0.043	6.46	2566	1.9	0.014	22.70	-	-	-	0.00	29.15	17.49	65.50	135.13	188.72	250.05	289.09
EX-B1	58.76	0.00	0.0%	80.00	0.15	100	0.002	21.99	2464	2.1	0.016	20.00	-	-	-	0.00	41.99	25.19	67.32	138.94	194.11	248.33	297.09

INLET PEAK FLOW CALCULATIONS - RATIONAL METHOD

Formulas: **Q = CiA**

Q = Peak Runoff (cfs)
C = Weighted Runoff Coefficient
i = Rainfall intensity (in/hr)
A = Drainage Area (acres)

Hydrologic Runoff Coefficients (Table 2-1 CoRR DCM)

	2 yr	10 yr	25 yr	50 yr	100 yr
Impervious C (Concrete)	0.75	0.83	0.88	0.92	0.97
Pervious C (Developed 2-7%)	0.33	0.38	0.46	0.49	0.53

Peak Flow Calculation - Rational Method

Drainage Area	Area (sf)	Area (Acres)	Impervious Cover (Acres)	% I.C.	RUNOFF COEFFICIENT (C) C 2 YEAR	C 10 YEAR	C 25 YEAR	C 50 YEAR	C 100 YEAR	Tc (min)	RAINFALL INTENSITY (I) I (in/hr) 2 YEAR	I (in/hr) 10 YEAR	I (in/hr) 25 YEAR	I (in/hr) 50 YEAR	I (in/hr) 100 YEAR	Q (cfs) 2 YEAR	Q (cfs) 10 YEAR	Q (cfs) 25 YEAR	Q (cfs) 50 YEAR	Q (cfs) 100 YEAR
EX-DA7	484387.200	11.120	0.922	8%	0.36	0.42	0.49	0.53	0.57	22.40	3.46	5.02	6.04	6.85	7.70	14.04	23.30	33.24	40.04	48.51

EXISTING TIME OF CONCENTRATION CALCULATIONS

DRAINAGE AREA	SHEET FLOW P-2yr24hr 4.01 IN n	L (ft)	S (ft/ft)	Tt(min)	SHEET FLOW (PAVEMENT) P-2yr24hr 4.01 IN n	L (ft)	S (ft/ft)	Tt(min)	SHALLOW CONCENTRATED FLOW Grass Surface L (ft)	V (fps)	S (ft/ft)	Tt(min)	Paved Surface L (ft)	V (fps)	S (ft/ft)	Tt(min)	CHANNEL FLOW L (ft)	V (fps)	S (ft/ft)	Tt(min)	TOTAL Tc**
EX-DA7	0.150	100	0	**12.63**	0.016	0	0.000	**0.00**	1377	2.35	0.021	**9.77**	0	-	0.000	**0.00**	0	109.9	20.000	**0.00**	**22.40**

NOTES:

1. THE CURVE NUMBER (CN) HAS BEEN DETERMINED FROM TABLE 2-2A OF TECHNICAL RELEASE 55. THE COVER TYPE, HYDROLOGIC CONDITION, AND SOIL GROUP DETERMINED FOR THE PROPOSED CONDITIONS ARE OPEN SPACE ,GOOD CONDITION (GRASS COVER > 75%), AND TYPE D SOIL GROUP WITH A CN OF 80. THE COVER TYPE, HYDROLOGIC CONDITION, AND SOIL GROUP DETERMINED FOR THE EXISTING CONDITIONS ARE PASTURE, GOOD CONDITION, AND TYPE D SOIL GROUP WITH A CN OF 80.
2. EX-DA7 CALCULATED USING RATIONAL METHOD TO MAINTAIN FLOW RATE CONTINUITY WITH SIP-24-00008.

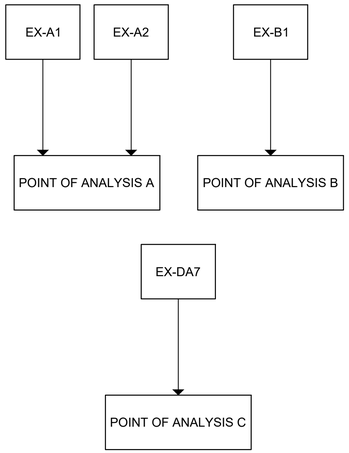

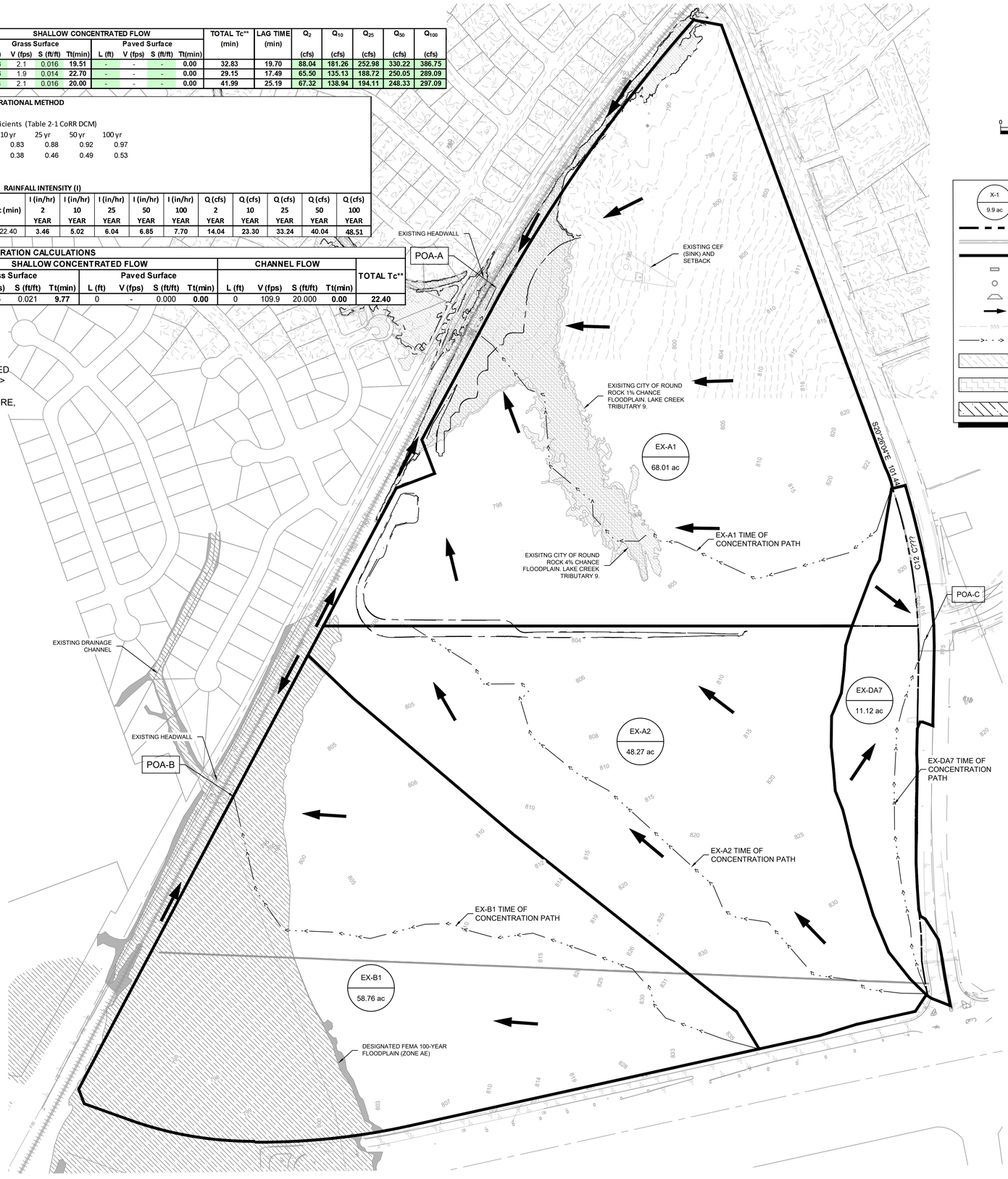

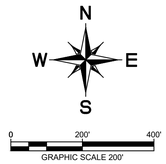

LEGEND

- X-1 / 9.9 ac — AREA DESIGNATOR / AREA IN ACRES
- PROPERTY LINE
- EXISTING STORM SEWER LINE
- EXISTING DRAINAGE DIVIDE
- EXISTING STORM SEWER INLET
- EXISTING STORM SEWER MANHOLE
- EXISTING STORM SEWER HEADWALL
- EXISTING FLOW DIRECTION
- 555 — EXISTING CONTOUR
- TIME OF CONCENTRATION FLOW PATH
- CITY OF ROUND ROCK ULTIMATE 1% CHANCE FLOODPLAIN. LAKE CREEK TRIBUTARY 9.
- CITY OF ROUND ROCK ULTIMATE 4% CHANCE FLOODPLAIN. LAKE CREEK TRIBUTARY 9.
- DESIGNATED FEMA 100-YEAR FLOODPLAIN (ZONE AE)

CONTRACTOR FIELD SET

This plan set shall remain on the site or subdivision premises for the life of the project and shall be utilized for any and all improvements contained herein.

BENCHMARKS

BM #51471 MAG NAIL SET "GCP 2"
SET AT THE NORTHEAST CORNER OF THE INTERSECTION OF STATE HIGHWAY 45 AND COUNTY ROAD 172, ±5.5' FROM "YIELD" SIGN.
N: 10147640.83
E: 3127942.60
ELEV.= 841.70'

BM #51473 MAG NAIL SET "GCP 3"
SET IN THE NORTH RIGHT-OF-WAY LINE OF HESTERS CROSSING ROAD, ±560' FROM THE INTERSECTION OF HESTERS CROSSING ROAD AND COUNTY ROAD 172, ±100 FROM CONCRETE SIGN "ENCOMPASS HEALTH".
N: 10149343.04
E: 3128315.81
ELEV.= 812.19'

No.	REVISIONS	DATE	BY

Kimley»Horn
© 2025 KIMLEY-HORN AND ASSOCIATES, INC.
10814 JOLLYVILLE ROAD, CAMPUS IV, SUITE 200, AUSTIN, TX 78759
PHONE: 512-418-1771 FAX: 512-418-1791
WWW.KIMLEY-HORN.COM
TEXAS REGISTERED ENGINEERING FIRM F-928

NICHOLAS C. BROWN 107175 LICENSED PROFESSIONAL ENGINEER
03/26/2025

KHA PROJECT 069284918	DATE MARCH 2025	SCALE: AS SHOWN	DESIGNED BY: MM	DRAWN BY: MM	CHECKED BY: NCB

EXISTING DRAINAGE AREA MAP

2525 CR 172 INDUSTRIAL

CITY OF ROUND ROCK
WILLIAMSON COUNTY, TEXAS

SHEET NUMBER
87 OF 227

SDP24-00001

Plotted By: Toraldo Knight, Paula Date: April 17, 2025 02:48:39pm File Path: K:\AUS_Civil\069284910 - DAU3 Round Rock\Cad\PlanSheets-SDP\C-Existing Drainage Area Map.dwg
This document, together with the concepts and designs presented herein, as an instrument of service, is intended only for the specific purpose and client for which it was prepared. Reuse of and improper reliance on this document without written authorization and adaptation by Kimley-Horn and Associates, Inc. shall be without liability to Kimley-Horn and Associates, Inc.
Template:KHA AUS TEMPLATE (SDP 2022) - (04.11.08.2022)

Template:KHA AUS TEMPLATE CSD 2022 - DM 11-09-2022

DAU3

Drainage Calculations - SCS Method

DRAINAGE AREA	AREA (Ac.)	IMPERVIOUS COVER (Ac.)	IMPERVIOUS COVER (%)	CN	SHEET FLOW				SHALLOW CONCENTRATED FLOW												PIPE FLOW			TOTAL Tc** (min)	LAG TIME (min)	Q_2	Q_{10}	Q_{25}	Q_{50}	Q_{100}
					P-2yr24hr 4.01 IN				Paved Surface				Grass Surface				Paved Surface				Grass Surface				Pipe Flow							
					N	L (ft)	S (ft/ft)	Tt(min)	L (ft)	V (fps)	S (ft/ft)	Tt(min)	L (ft)	V (fps)	S (ft/ft)	Tt(min)	L (ft)	V (fps)	S (ft/ft)	Tt(min)	L (ft)	V (fps)	S (ft/ft)	Tt(min)	L (ft)	V (fps)	Tt(min)			(cfs)	(cfs)	(cfs)	(cfs)	(cfs)
PR-1	49.10	32.72	66.6%	92.00	0.15	100	0.006	14.17	289	3.5067	0.0298	1.37	407	2.4126	0.022	2.81	-	-	-	0.00	0	-	-	0.00	1449	6.0	4.03	22.38	13.43	110.25	190.64	250.34	325.82	360.77
BY-1	13.31	0.00	0.0%	80.00	0.15	100	0.012	10.74	-	-	-	0.00	1665	2.2954	0.020	12.09	-	-	-	0.00	-	-	-	0.00	-	-	-	22.83	13.70	19.89	41.20	57.64	77.92	88.33
BY-2	1.49	0.00	0.0%	80.00	0.15	100	0.020	8.75	-	-	-	0.00	270	2.4995	0.024	1.80	-	-	-	0.00	-	-	-	0.00	-	-	-	10.55	6.33	2.86	5.85	8.14	11.69	12.41
BY-3	52.37	0.00	0.0%	80.00	0.15	100	0.043	6.44	737.9	1.8331	0.008	6.71	2530	2.0363	0.016	20.71	680	1.5591	0.006	7.27	65	3.0881	0.0231	0.35	220	6.0	0.61	42.09	25.25	59.47	123.18	172.58	222.49	264.91
B-1	58.76	0.00	0.0%	80.00	0.15	100	0.002	21.99	-	-	-	0.00	2464	2.0532	0.016	20.00	-	-	-	0.00	-	-	-	0.00	-	-	-	41.99	25.19	67.32	138.94	194.11	248.33	297.09

Storm Event	Existing Flows (cfs)			Developed Flows (cfs)						POA-A Delta
	EX-A1	EX-A2	POA-A	PR-1	BY-1	BY-2	BY-3	POND 1 (IN)	POND 1 (OUT)	POA-A
2	88.04	65.5	152.51	110.25	19.89	2.86	59.47	110.25	58.18	132.02	20.49
10	181.26	135.13	315.04	190.64	41.20	5.85	123.18	190.64	112.98	267.83	47.21
25	252.98	188.72	440.66	250.34	57.64	8.14	172.58	250.34	155.78	373.64	67.02
50	330.22	250.05	577.32	325.82	77.92	11.69	222.49	325.82	200.90	479.94	97.38
100	386.75	289.09	675.16	360.77	88.33	12.41	264.91	360.77	238.42	573.67	101.49

Storm Event	Existing Flows (cfs)		Developed Flows (cfs)		POA-B Delta
	EX-B1	POA-B	B-1	POA-B	
2	67.32	67.32	67.32	67.32	0
10	138.94	138.94	138.94	138.94	0
25	194.11	194.11	194.11	194.11	0
50	248.33	248.33	248.33	248.33	0
100	297.09	297.09	297.09	297.09	0

INLET PEAK FLOW CALCULATIONS - RATIONAL METHOD

Formulas: **Q = CiA**

Q = Peak Runoff (cfs)
C = Weighted Runoff Coefficient
i = Rainfall intensity (in/hr)
A = Drainage Area (acres)

Hydrologic Runoff Coefficients (Table 2-2 CoRR DCM)

	2 yr	10 yr	25 yr	50 yr	100 yr
Impervious C (Concrete)	0.75	0.83	0.88	0.92	0.97
Pervious C (Developed 2-7%)	0.33	0.38	0.46	0.49	0.53

Peak Flow Calculation - Rational Method — RUNOFF COEFFICIENT (C) — RAINFALL INTENSITY (I)

Drainage Area	Area (sf)	Area (Acres)	Impervious Cover (Acres)	% I.C.	C 2 YEAR	C 10 YEAR	C 25 YEAR	C 50 YEAR	C 100 YEAR	Tc (min)	I (in/hr) 2 YEAR	I (in/hr) 10 YEAR	I (in/hr) 25 YEAR	I (in/hr) 50 YEAR	I (in/hr) 100 YEAR	Q (cfs) 2 YEAR	Q (cfs) 10 YEAR	Q (cfs) 25 YEAR	Q (cfs) 50 YEAR	Q (cfs) 100 YEAR
PDA-7A	386416.980	8.870	7.097	80%	0.67	0.74	0.80	0.83	0.88	15.94	4.16	6.18	7.59	8.76	10.00	24.58	40.57	53.59	64.81	78.24
PDA-7B	97859.430	2.250	0.900	40%	0.50	0.56	0.63	0.66	0.71	14.72	4.29	6.39	7.85	9.07	10.40	4.81	8.05	11.09	13.51	16.52

PROPOSED TIME OF CONCENTRATION CALCULATIONS

DRAINAGE AREA	SHEET FLOW				SHEET FLOW (PAVEMENT)				SHALLOW CONCENTRATED FLOW								CHANNEL FLOW				TOTAL Tc**
	P-2yr24hr 4.01 IN				P-2yr24hr 4.01 IN				Grass Surface				Paved Surface								
	n	L (ft)	S (ft/ft)	Tt(min)	n	L (ft)	S (ft/ft)	Tt(min)	L (ft)	V (fps)	S (ft/ft)	Tt(min)	L (ft)	V (fps)	S (ft/ft)	Tt(min)	L (ft)	V (fps)	S (ft/ft)	Tt(min)	
PDA-7A	0.150	100	0.034	7.10	0.016	0	0.008	0.00	1251	2.36	0.021	8.84	0	-	0.000	0.00	0	-	0.000	0.00	15.94
PDA-7B	0.150	100	0.007	13.48	0.016	0	0.000	0.00	166	3.11	0.037	0.89	0	-	0.000	0.00	75	3.6	0.021	0.35	14.72

NOTES:

1. THE CURVE NUMBER (CN) HAS BEEN DETERMINED FROM TABLE 2-2A OF TECHNICAL RELEASE 55. THE COVER TYPE, HYDROLOGIC CONDITION, AND SOIL GROUP DETERMINED FOR THE PROPOSED CONDITIONS ARE OPEN SPACE ,GOOD CONDITION (GRASS COVER > 75%), AND TYPE D SOIL GROUP WITH A CN OF 80. THE COVER TYPE, HYDROLOGIC CONDITION, AND SOIL GROUP DETERMINED FOR THE EXISTING CONDITIONS ARE PASTURE, GOOD CONDITION, AND TYPE D SOIL GROUP WITH A CN OF 80.
2. DA-7A WAS DETERMINED WITH 80% MAXIMUM IMPERVIOUS COVER PER SIP-24-00008.
3. DA-7A AND DA-7B CALCULATED USING RATIONAL METHOD TO MAINTAIN FLOW RATE CONTINUITY WITH SIP-24-00008.
4. REFER TO SIP-24-00008 FOR CONTINUATION OF FLOW FROM DA-7A AND DA-7B.
5. REFER TO SIP-24-00016 FOR DEVELOPED CONDITIONS WITH CONSTRUCTION OF POND IN LOT 2.

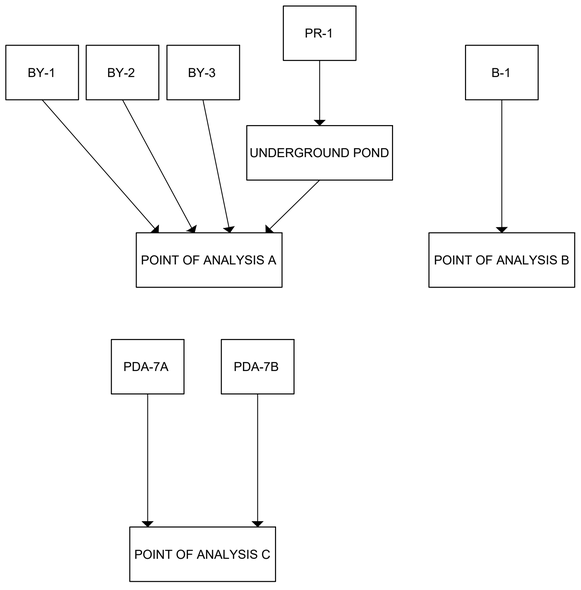

CONTRACTOR FIELD SET

This plan set shall remain on the site or subdivision premises for the life of the project and shall be utilized for any and all improvements contained herein.

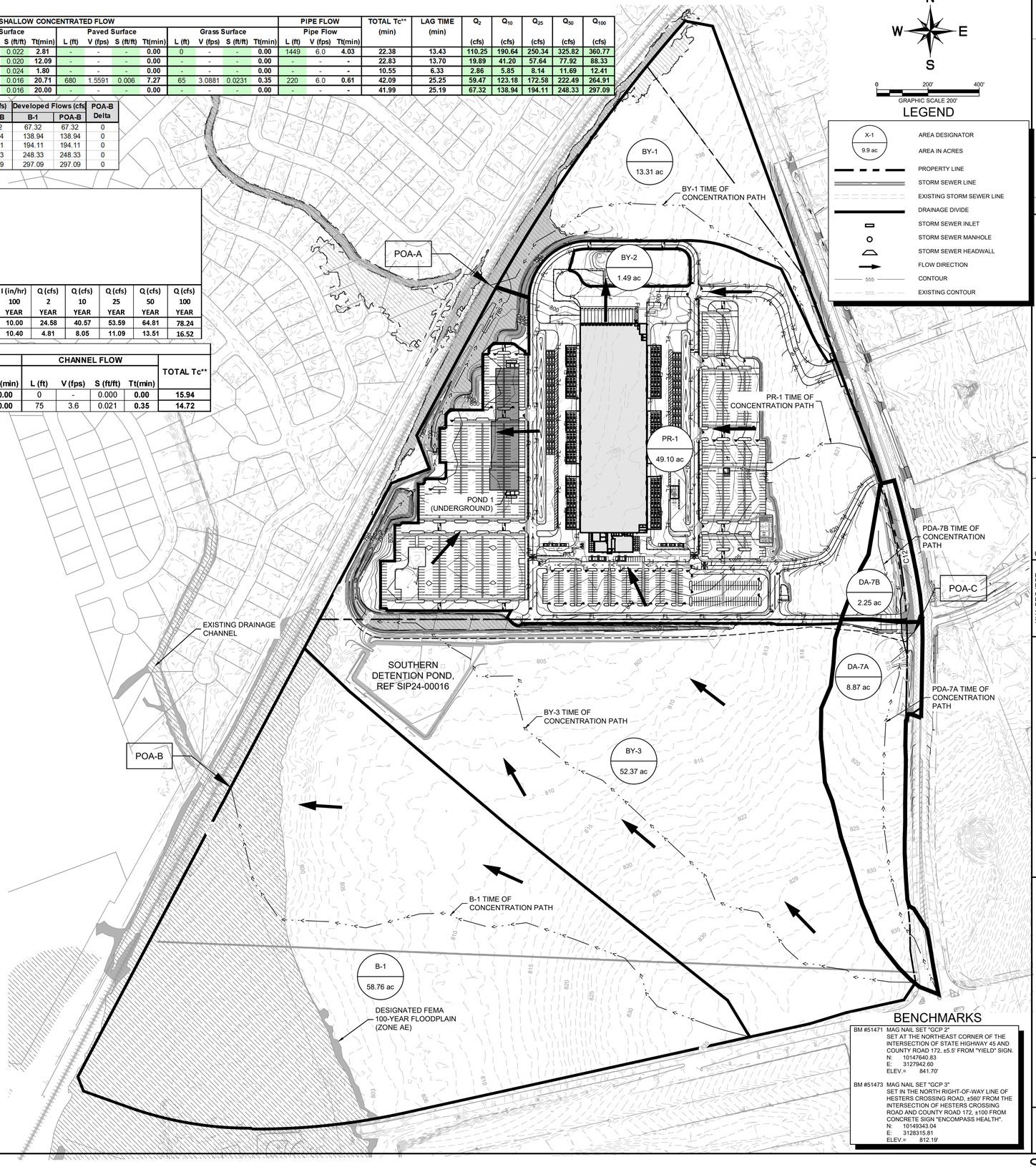

BENCHMARKS

BM #51471 MAG NAIL SET "GCP 2" SET AT THE NORTHEAST CORNER OF THE INTERSECTION OF STATE HIGHWAY 45 AND COUNTY ROAD 172, ±5.5' FROM "YIELD" SIGN.
N: 10147640.83
E: 3127942.60
ELEV.= 841.70'

BM #51473 MAG NAIL SET "GCP 3" SET IN THE NORTH RIGHT-OF-WAY LINE OF HESTERS CROSSING ROAD, ±560' FROM THE INTERSECTION OF HESTERS CROSSING ROAD AND COUNTY ROAD 172, ±100 FROM CONCRETE SIGN "ENCOMPASS HEALTH".
N: 10149343.04
E: 3128315.81
ELEV.= 812.19'

No.	REVISIONS	DATE	BY

Kimley»Horn
© 2025 KIMLEY-HORN AND ASSOCIATES, INC.
10814 JOLLYVILLE ROAD, CAMPUS IV, SUITE 200, AUSTIN, TX 78759
PHONE: 512-418-1771 FAX: 512-418-1791
WWW.KIMLEY-HORN.COM
TEXAS REGISTERED ENGINEERING FIRM F-928

NICHOLAS C. BROWN
107175
LICENSED
PROFESSIONAL ENGINEER
03/26/2025

KHA PROJECT 069284918
DATE MARCH 2025
SCALE: AS SHOWN
DESIGNED BY: MM
DRAWN BY: MM
CHECKED BY: NCB

DEVELOPED DRAINAGE AREA MAP

2525 CR 172 INDUSTRIAL

CITY OF ROUND ROCK
WILLIAMSON COUNTY, TEXAS

SHEET NUMBER
88 OF 227

SDP24-00001

Plotted By: Tordido Knight, Paula Date: April 17, 2025 02:49:09pm File Path: K:\AUS_Civil\069284910 – DAU3 Round Rock\Cad\PlanSheets–SDP\C–Proposed Drainage Area Map.dwg
This document, together with the concepts and designs presented herein, as an instrument of service, is intended only for the specific purpose and client for which it was prepared. Reuse of and improper reliance on this document without written authorization and adaptation by Kimley-Horn and Associates, Inc. shall be without liability to Kimley-Horn and Associates, Inc.

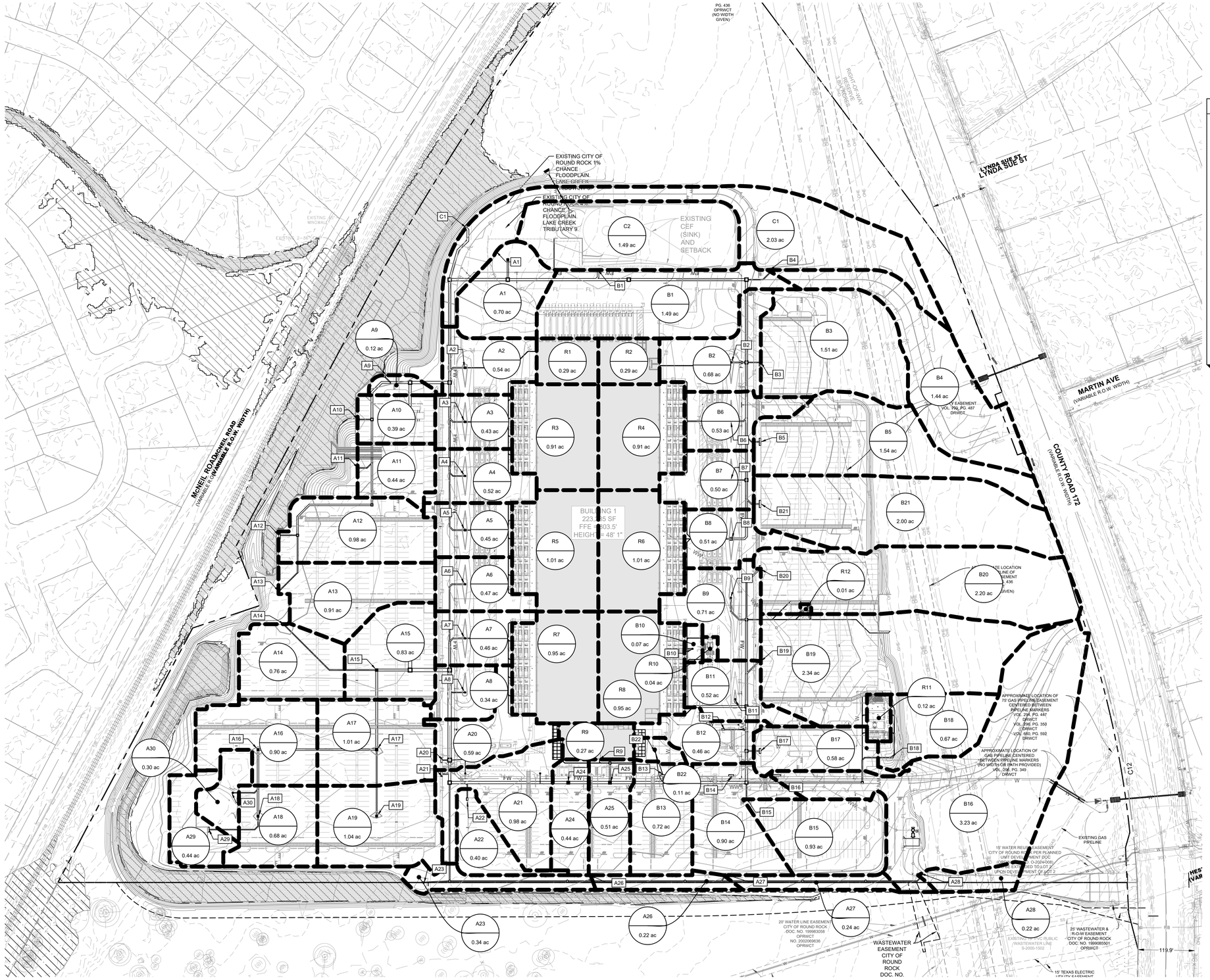

LEGEND

X-1 / 9.9 ac	AREA DESIGNATOR / AREA IN ACRES
A-1	INLET NUMBER
	PROPERTY LINE
	EXISTING STORM DRAIN LINE
	DRAINAGE DIVIDE
	STORM DRAIN LINE
	STORM GRATE INLET
	STORM HEADWALL
	STORM MANHOLE
	STORM JUNCTION BOX
	STORM AREA INLET
	STORM CURB INLET
	FLOW DIRECTION
XXX	EXISTING MAJOR CONTOUR
XXX	EXISTING MINOR CONTOUR
XXX	MAJOR CONTOUR
XXX	MINOR CONTOUR
	TIME OF CONCENTRATION PATH

WATER QUALITY 1		WATER QUALITY 2	
INLET DRAINAGE AREA	ACREAGE	INLET DRAINAGE AREA	ACREAGE
A1	0.70	A6	0.47
A2	0.54	A7	0.46
A3	0.43	A8	0.34
A4	0.52	A14	0.76
A5	0.45	A15	0.83
A9	0.12	A16	0.90
A10	0.39	A17	1.01
A11	0.44	A18	0.68
A12	0.98	A19	1.04
A13	0.91	A20	0.59
B1	1.49	A21	0.98
B2	0.68	A22	0.40
B3	1.51	A23	0.34
B4	1.44	A24	0.44
B5	1.54	A25	0.51
B6	0.53	A26	0.22
B7	0.50	A27	0.24
B8	0.51	A28	0.22
B21	2.00	A29	0.44
C1	2.03	A30	0.30
R1	0.29	B9	0.71
R2	0.29	B10	0.07
R3	0.91	B11	0.52
R4	0.91	B12	0.46
R5	1.01	B13	0.72
R6	1.01	B14	0.90
		B15	0.93
		B16	3.23
		B17	0.58
		B18	0.67
		B19	2.34
		B20	2.20
		B22	0.11
		R7	0.95
		R8	0.95
		R9	0.27
		R10	0.04
		R11	0.14
		R12	0.01
TOTAL	22.12		26.98

CONTRACTOR FIELD SET

This plan set shall remain on the site or subdivision premises for the life of the project and shall be utilized for any and all improvements contained herein.

BENCHMARKS

BM #51471 MAG NAIL SET "GCP 2"
SET AT THE NORTHEAST CORNER OF THE INTERSECTION OF STATE HIGHWAY 45 AND COUNTY ROAD 172, ±5.5' FROM "YIELD" SIGN.
N: 10147640.83
E: 3127942.60
ELEV.= 841.70'

BM #51473 MAG NAIL SET "GCP 3"
SET IN THE NORTH RIGHT-OF-WAY LINE OF HESTERS CROSSING ROAD, ±560' FROM THE INTERSECTION OF HESTERS CROSSING ROAD AND COUNTY ROAD 172, ±100 FROM CONCRETE SIGN "ENCOMPASS HEALTH".
N: 10149343.04
E: 3128315.81
ELEV.= 812.19'

No.	REVISIONS	DATE	BY

Kimley»Horn
© 2025 KIMLEY-HORN AND ASSOCIATES, INC.
10814 JOLLYVILLE ROAD, CAMPUS IV, SUITE 200, AUSTIN, TX 78759
PHONE: 512-418-1771 FAX: 512-418-1791
WWW.KIMLEY-HORN.COM
TEXAS REGISTERED ENGINEERING FIRM F-928

NICHOLAS C. BROWN
107175
LICENSED PROFESSIONAL ENGINEER
03/26/2025

KHA PROJECT 069284918
DATE MARCH 2025
SCALE: AS SHOWN
DESIGNED BY: MM
DRAWN BY: MM
CHECKED BY: NCB

INLET DRAINAGE AREA MAP

2525 CR 172 INDUSTRIAL

CITY OF ROUND ROCK
WILLIAMSON COUNTY, TEXAS

SHEET NUMBER
89 OF 227

SDP24-00001

Plotted By: Toraldo Knight, Paula Date: April 17, 2025 02:52:17pm File Path: K:\AUS_Civil\069284918 — DAU3 Round Rock\Cad\PlanSheets—SDP\C-Inlet Drainage Area Map.dwg
This document, together with the concepts and designs presented herein, as an instrument of service, is intended only for the specific purpose and client for which it was prepared. Reuse of and improper reliance on this document without written authorization and adoption by Kimley-Horn and Associates, Inc. shall be without liability to Kimley-Horn and Associates, Inc.
Template:KHA AUS TEMPLATE D30 2022 DM:11-06-2022

Kimley»Horn

INLET PEAK FACTOR CALCULATIONS - RATIONAL METHOD

Formulas: **Q=CiA**

Q=Peak Factor Runoff
C=Weighted Runoff Coefficient
i=Rainfall Intensity
A=Drainage Area (acres)

Hydrologic Runoff Coefficients (Table 2-2 DCM)

	2yr	10yr	25yr	100yr
Impervious C (Concrete)	0.75	0.83	0.88	0.97
Pervious C (Good, Average)	0.29	0.35	0.39	0.46

Rainfall Intensities from Table 6 Round Rock RAIn (NOAA Atlas 14 Lake Creek Watershed Centroid Rainfall Intensity).

					RUNOFF COEFFICIENT (C)					RAINFALL INTENSITY (I)				PEAK RUNOFF (Q)			
AREA NAME	AREA (AC.)	Pervious Cover (AC.)	Impervious Cover (AC.)	Impervious Cover %	C 2-YEAR	C 10-YEAR	C 25-YEAR	C 100-YEAR	Tc (min)	I 2-YEAR	I 10-YEAR	I 25-YEAR	I 100-YEAR	Q 2-YEAR	Q 10-YEAR	Q 25-YEAR	Q 100-YEAR
A1	0.70	0.45	0.25	36%	0.45	0.52	0.56	0.64	5	6.23	9.29	11.40	15.10	1.98	3.40	4.52	6.80
A2	0.54	0.11	0.43	80%	0.66	0.73	0.78	0.87	5	6.23	9.29	11.40	15.10	2.22	3.69	4.82	7.09
A3	0.43	0.11	0.32	75%	0.64	0.71	0.76	0.84	5	6.23	9.29	11.40	15.10	1.71	2.85	3.73	5.49
A4	0.52	0.11	0.41	79%	0.65	0.73	0.78	0.86	5	6.23	9.29	11.40	15.10	2.10	3.50	4.57	6.73
A5	0.45	0.14	0.31	68%	0.60	0.68	0.72	0.81	5	6.23	9.29	11.40	15.10	1.68	2.82	3.70	5.46
A6	0.47	0.11	0.37	77%	0.65	0.72	0.77	0.85	5	6.23	9.29	11.40	15.10	1.91	3.18	4.16	6.13
A7	0.46	0.13	0.33	72%	0.62	0.70	0.75	0.83	5	6.23	9.29	11.40	15.10	1.79	2.99	3.92	5.78
A8	0.34	0.13	0.22	63%	0.58	0.65	0.70	0.78	5	6.23	9.29	11.40	15.10	1.25	2.09	2.75	4.07
A9	0.12	0.02	0.09	80%	0.66	0.74	0.78	0.87	5	6.23	9.29	11.40	15.10	0.48	0.79	1.03	1.52
A10	0.39	0.00	0.39	100%	0.75	0.83	0.88	0.97	5	6.23	9.29	11.40	15.10	1.82	3.00	3.91	5.71
A11	0.44	0.02	0.42	96%	0.73	0.81	0.86	0.95	5	6.23	9.29	11.40	15.10	2.02	3.33	4.34	6.35
A12	0.98	0.04	0.94	96%	0.73	0.81	0.86	0.95	5	6.23	9.29	11.40	15.10	4.46	7.37	9.60	14.03
A13	0.91	0.00	0.91	100%	0.75	0.83	0.88	0.97	5	6.23	9.29	11.40	15.10	4.24	6.99	9.10	13.28
A14	0.76	0.03	0.73	96%	0.73	0.81	0.86	0.95	5	6.23	9.29	11.40	15.10	3.48	5.75	7.48	10.94
A15	0.83	0.03	0.80	97%	0.73	0.81	0.86	0.95	5	6.23	9.29	11.40	15.10	3.78	6.24	8.13	11.88
A16	0.90	0.06	0.84	94%	0.72	0.80	0.85	0.94	5	6.23	9.29	11.40	15.10	4.03	6.67	8.70	12.72
A17	1.01	0.07	0.94	93%	0.72	0.80	0.84	0.93	5	6.23	9.29	11.40	15.10	4.53	7.49	9.76	14.28
A18	0.68	0.03	0.66	96%	0.73	0.81	0.86	0.95	5	6.23	9.29	11.40	15.10	3.11	5.14	6.70	9.79
A19	1.04	0.08	0.96	92%	0.71	0.79	0.84	0.93	5	6.23	9.29	11.40	15.10	4.64	7.68	10.01	14.65
A20	0.59	0.22	0.37	63%	0.58	0.65	0.70	0.78	5	6.23	9.29	11.40	15.10	2.11	3.55	4.66	6.90
A21	0.98	0.28	0.70	72%	0.62	0.69	0.74	0.83	5	6.23	9.29	11.40	15.10	3.79	6.33	8.30	12.25
A22	0.40	0.27	0.13	32%	0.44	0.51	0.55	0.62	5	6.23	9.29	11.40	15.10	1.09	1.87	2.49	3.76
A23	0.34	0.07	0.27	80%	0.66	0.73	0.78	0.87	5	6.23	9.29	11.40	15.10	1.38	2.29	3.00	4.40
A24	0.44	0.04	0.40	92%	0.71	0.79	0.84	0.93	5	6.23	9.29	11.40	15.10	1.93	3.20	4.17	6.10
A25	0.51	0.05	0.46	91%	0.71	0.79	0.84	0.92	5	6.23	9.29	11.40	15.10	2.24	3.71	4.83	7.08
A26	0.22	0.01	0.21	96%	0.73	0.81	0.86	0.95	5	6.23	9.29	11.40	15.10	1.00	1.66	2.16	3.15
A27	0.24	0.00	0.24	100%	0.75	0.83	0.88	0.97	5	6.23	9.29	11.40	15.10	1.14	1.88	2.44	3.56
A28	0.22	0.09	0.13	61%	0.57	0.64	0.69	0.77	5	6.23	9.29	11.40	15.10	0.77	1.29	1.70	2.52
A29	0.44	0.12	0.32	73%	0.63	0.70	0.75	0.83	5	6.23	9.29	11.40	15.10	1.70	2.83	3.71	5.47
A30	0.30	0.30	0.00	0%	0.29	0.35	0.39	0.46	5	6.23	9.29	11.40	15.10	0.54	0.98	1.33	2.08
B1	1.49	0.35	1.15	77%	0.64	0.72	0.77	0.85	5	6.23	9.29	11.40	15.10	5.98	9.97	13.04	19.20
B2	0.68	0.15	0.53	77%	0.65	0.72	0.77	0.85	5	6.23	9.29	11.40	15.10	2.74	4.56	5.96	8.78
B3	1.51	0.87	0.64	42%	0.49	0.55	0.60	0.68	7	5.62	8.06	10.30	13.70	4.10	6.72	9.27	13.95
B4	1.44	0.78	0.66	46%	0.50	0.57	0.61	0.69	5	6.23	9.29	11.40	15.10	4.51	7.65	10.12	15.13
B5	1.54	1.00	0.54	35%	0.45	0.52	0.56	0.64	13	4.44	6.61	8.13	10.70	3.09	5.28	7.05	10.54
B6	0.53	0.12	0.41	78%	0.65	0.72	0.77	0.86	5	6.23	9.29	11.40	15.10	2.13	3.55	4.64	6.83
B7	0.50	0.10	0.40	80%	0.66	0.73	0.78	0.87	5	6.23	9.29	11.40	15.10	2.04	3.40	4.44	6.53
B8	0.51	0.10	0.41	80%	0.66	0.73	0.78	0.87	5	6.23	9.29	11.40	15.10	2.08	3.46	4.53	6.66
B9	0.71	0.13	0.58	81%	0.66	0.74	0.79	0.87	5	6.23	9.29	11.40	15.10	2.95	4.90	6.40	9.41
B10	0.07	0.00	0.07	100%	0.75	0.83	0.88	0.97	5	6.23	9.29	11.40	15.10	0.33	0.54	0.70	1.03
B11	0.52	0.11	0.41	79%	0.65	0.73	0.78	0.86	5	6.23	9.29	11.40	15.10	2.12	3.53	4.61	6.79
B12	0.46	0.12	0.34	75%	0.63	0.71	0.76	0.84	5	6.23	9.29	11.40	15.10	1.82	3.03	3.97	5.85
B13	0.72	0.10	0.62	87%	0.69	0.77	0.81	0.90	5	6.23	9.29	11.40	15.10	3.07	5.08	6.64	9.73
B14	0.90	0.18	0.73	80%	0.66	0.74	0.78	0.87	5	6.23	9.29	11.40	15.10	3.71	6.18	8.07	11.87
B15	0.93	0.17	0.76	81%	0.66	0.74	0.79	0.88	5	6.23	9.29	11.40	15.10	3.86	6.42	8.39	12.32
B16	3.23	2.35	0.88	27%	0.42	0.48	0.52	0.60	16	4.04	5.99	7.35	9.68	5.42	9.30	12.43	18.72
B17	0.58	0.10	0.48	82%	0.67	0.75	0.79	0.88	5	6.23	9.29	11.40	15.10	2.43	4.03	5.27	7.74
B18	0.67	0.67	0.00	0%	0.29	0.35	0.39	0.46	5	6.23	9.29	11.40	15.10	1.22	2.19	2.99	4.67
B19	2.34	1.41	0.93	40%	0.47	0.54	0.58	0.66	13	4.44	6.61	8.13	10.70	4.91	8.36	11.12	16.58
B20	2.20	1.51	0.70	32%	0.44	0.50	0.55	0.62	16	4.04	5.99	7.35	9.68	3.88	6.63	8.83	13.26
B21	2.00	1.23	0.77	39%	0.47	0.54	0.58	0.66	17	3.92	5.82	7.14	9.39	3.67	6.23	8.27	12.33
B22	0.11	0.08	0.03	31%	0.43	0.50	0.54	0.62	5	6.23	9.29	11.40	15.10	0.30	0.52	0.69	1.04
C1	2.03	1.67	0.36	18%	0.37	0.44	0.48	0.55	5	6.23	9.29	11.40	15.10	4.71	8.22	11.05	16.89
C2	1.49	1.49	0.00	0%	0.29	0.35	0.39	0.46	6	5.90	8.81	10.80	14.40	2.54	4.58	6.26	9.85
R1	0.29	0.00	0.29	100%	0.75	0.83	0.88	0.97	5	6.23	9.29	11.40	15.10	1.37	2.26	2.94	4.29
R2	0.29	0.00	0.29	100%	0.75	0.83	0.88	0.97	5	6.23	9.29	11.40	15.10	1.36	2.24	2.92	4.26
R3	0.91	0.00	0.91	100%	0.75	0.83	0.88	0.97	5	6.23	9.29	11.40	15.10	4.25	7.01	9.12	13.31
R4	0.91	0.00	0.91	100%	0.75	0.83	0.88	0.97	5	6.23	9.29	11.40	15.10	4.24	7.00	9.11	13.30
R5	1.01	0.00	1.01	100%	0.75	0.83	0.88	0.97	5	6.23	9.29	11.40	15.10	4.71	7.77	10.11	14.76
R6	1.01	0.00	1.01	100%	0.75	0.83	0.88	0.97	5	6.23	9.29	11.40	15.10	4.70	7.76	10.09	14.74
R7	0.95	0.00	0.95	100%	0.75	0.83	0.88	0.97	5	6.23	9.29	11.40	15.10	4.42	7.30	9.50	13.86
R8	0.95	0.00	0.95	100%	0.75	0.83	0.88	0.97	5	6.23	9.29	11.40	15.10	4.42	7.29	9.49	13.85
R9	0.27	0.00	0.27	100%	0.75	0.83	0.88	0.97	5	6.23	9.29	11.40	15.10	1.28	2.11	2.74	4.00
R10	0.04	0.00	0.04	100%	0.75	0.83	0.88	0.97	5	6.23	9.29	11.40	15.10	0.17	0.28	0.36	0.53
R11	0.14	0.00	0.14	100%	0.75	0.83	0.88	0.97	5	6.23	9.29	11.40	15.10	0.67	1.10	1.44	2.10
R12	0.01	0.00	0.01	100%	0.75	0.83	0.88	0.97	5	6.23	9.29	11.40	15.10	0.05	0.09	0.12	0.17

Kimley»Horn

Variable Definitions

W	depressed width	E_O	ratio of flow (Q_{out}/Q)	**Constant Values**	
a	gutter depression	L_T	inlet length (100% flow intercept)	C_w (constant-Weir)	2.3
S_e	equivalent cross slope	d_o	effective head, orifice	K_u (constant)	0.56
S_W	cross slope of depressed width	d_i	depth at lip of curb opening	K_t (constant)	0.6
T	spread or ponded width	d	depth at normal cross-slope	C_o (constant-Orifice)	0.67
S_L	longitudinal slope			S_x (cross-slope)	2.00%
				Manning's Coefficient (n)	0.013
				Maximum Spread T (ft)	12

ON-GRADE CURB INLETS (25-YR)

	Inlet Characteristics						Street Drainage			Inlet Drainage						
Drainage Area	Q-25 (cfs)	Q_{pass} (cfs)	Q_{total} (cfs)	Inlet Length	W (ft)	a (in)	S_L	d (in)	T (ft)	S_W	E_O	S_e	L_T (ft)	Efficiency	$Q_{intercept}$ (cfs)	Q_{pass} (cfs)
A26	2.16	0.06	2.21	5	1.5	7	1.00%	2.16	8.98	40.89%	0.79	34.3%	5.42	99.0%	2.19	0.02
A27	2.44	0.00	2.44	5	1.5	7	1.00%	2.24	9.32	40.89%	0.77	33.6%	5.71	97.6%	2.38	0.06
A28	1.70	0.00	1.70	5	1.5	7	1.00%	1.95	8.14	40.89%	0.83	35.9%	4.71	100.0%	1.70	0.00
B4	10.12	0.00	10.12	10	1.5	7	1.00%	3.81	15.88	40.89%	0.50	22.3%	13.29	91.9%	9.30	0.82
B15	8.39	0.00	8.39	15	1.5	7	1.00%	3.55	14.80	40.89%	0.53	23.8%	11.80	100.0%	8.39	0.00
B16	12.43	0.00	12.43	20	1.5	7	1.00%	4.12	17.15	40.89%	0.46	20.6%	15.16	100.0%	12.43	0.00

Site Curb Inlet Calculation Table

Weir Equation: $Q=C_W L h^{1.5}(1-C_f)$ | Weir Coef C_W: 3.0 | h (ft): 0.50 | Clogging Factor C_f: 10%

Drainage Area	Q_{25} (cfs)	Q_{100} (cfs)	h (ft)	$L_{Req.}$ (ft)	Inlet Selected	Weir Length (ft.)	Inlet Capacity	Q25 Pass? (Y/N)
A9	1.03 cfs	1.52 cfs	0.50'	1.1'	5' CI	5'	4.77 cfs	**YES**
A10	3.91 cfs	5.71 cfs	0.50'	4.1'	5' CI	5'	4.77 cfs	**YES**
A11	4.34 cfs	6.35 cfs	0.50'	4.5'	5' CI	5'	4.77 cfs	**YES**
A12	9.60 cfs	14.03 cfs	0.50'	10.1'	15' CI	15'	14.32 cfs	**YES**
A13	9.10 cfs	13.28 cfs	0.50'	9.5'	10' CI	10'	9.55 cfs	**YES**
A14	7.48 cfs	10.94 cfs	0.50'	7.8'	10' CI	10'	9.55 cfs	**YES**
A20	4.66 cfs	6.90 cfs	0.50'	4.9'	10' CI	10'	9.55 cfs	**YES**
A21	8.30 cfs	12.25 cfs	0.50'	8.7'	10' CI	10'	9.55 cfs	**YES**
A22	2.49 cfs	3.76 cfs	0.50'	2.6'	5' CI	5'	4.77 cfs	**YES**
A29	3.71 cfs	5.47 cfs	0.50'	3.9'	10' CI	10'	9.55 cfs	**YES**
B1	13.04 cfs	19.20 cfs	0.50'	13.7'	15' CI	15'	14.32 cfs	**YES**
B3	10.09 cfs	17.12 cfs	0.50'	10.6'	15' CI	15'	14.32 cfs	**YES**
B5	7.05 cfs	10.54 cfs	0.50'	7.4'	15' CI	15'	14.32 cfs	**YES**
B12	3.97 cfs	5.85 cfs	0.50'	4.2'	5' CI	5'	4.77 cfs	**YES**
B13	6.64 cfs	9.73 cfs	0.50'	7.0'	10' CI	10'	9.55 cfs	**YES**
B14	8.07 cfs	11.87 cfs	0.50'	8.5'	10' CI	10'	9.55 cfs	**YES**
B17	5.27 cfs	7.74 cfs	0.50'	5.5'	10' CI	10'	9.55 cfs	**YES**
B19	11.12 cfs	16.58 cfs	0.50'	11.6'	15' CI	15'	14.32 cfs	**YES**
B20	8.83 cfs	13.26 cfs	0.50'	9.3'	15' CI	15'	14.32 cfs	**YES**

Area Inlet Calculation Table

Weir Equation: $Q=C_W L h^{1.5}(1-C_f)$ | Weir Coef C_W: 3.0 | h (ft): Varies | Clogging Factor C_f: 50%

Orifice Equation: $Q=C_O h_1 L(2g d_0)^{0.5}(1-C_f)$ | Orifice Coef C_O: 0.67 | Inlet Throat h_T (ft): 0.50

Gravitational Constant g (ft/s²): 32.174 | Effective Head d_0: Varies [Orifice Head only applicable where h/h_T>1.4]

Note: Both Weir and Orifice Flow considered once provided h creates submerged condition.

Drainage Area	Q_{25} (cfs)	Q_{100} (cfs)	h (ft)	$L_{Req.}$ (ft) [Weir]	$L_{Req.}$ (ft) [Orifice]	$L_{Req.}$ (ft)	Inlet Selected	Weir Length (ft.)	Inlet Capacity (cfs)	Q25 Pass? (Y/N)
A2	4.82 cfs	7.09 cfs	1.50'	1.7'	3.2'	3.2'	2' X 2'	8'	12.02 cfs	**YES**
A3	3.73 cfs	5.49 cfs	1.50'	1.4'	2.5'	2.5'	2' X 2'	8'	12.02 cfs	**YES**
A4	4.57 cfs	6.73 cfs	1.50'	1.7'	3.0'	3.0'	2' X 2'	8'	12.02 cfs	**YES**
A5	3.70 cfs	5.46 cfs	1.50'	1.3'	2.5'	2.5'	2' X 2'	8'	12.02 cfs	**YES**
A6	4.16 cfs	6.13 cfs	1.50'	1.5'	2.8'	2.8'	2' X 2'	8'	12.02 cfs	**YES**
A7	3.92 cfs	5.78 cfs	1.50'	1.4'	2.6'	2.6'	2' X 2'	8'	12.02 cfs	**YES**
A8	2.75 cfs	4.07 cfs	1.50'	1.0'	1.8'	1.8'	2' X 2'	8'	12.02 cfs	**YES**
A23	3.02 cfs	4.78 cfs	1.50'	1.1'	2.0'	2.0'	2' X 2'	8'	12.02 cfs	**YES**
A30	1.33 cfs	2.08 cfs	1.50'	0.5'	0.9'	0.9'	2' X 2'	8'	12.02 cfs	**YES**
B2	5.96 cfs	8.78 cfs	1.50'	2.2'	4.0'	4.0'	2' X 2'	8'	12.02 cfs	**YES**
B6	4.64 cfs	6.83 cfs	1.50'	1.7'	3.1'	3.1'	2' X 2'	8'	12.02 cfs	**YES**
B7	4.44 cfs	6.53 cfs	1.50'	1.6'	3.0'	3.0'	2' X 2'	8'	12.02 cfs	**YES**
B8	4.53 cfs	6.66 cfs	1.50'	1.6'	3.0'	3.0'	2' X 2'	8'	12.02 cfs	**YES**
B9	6.40 cfs	9.41 cfs	1.50'	2.3'	4.3'	4.3'	3' X 3'	12'	18.03 cfs	**YES**
B11	4.61 cfs	6.79 cfs	1.50'	1.7'	3.1'	3.1'	3' X 3'	12'	18.03 cfs	**YES**
B18	2.99 cfs	4.67 cfs	1.50'	1.1'	2.0'	2.0'	2' X 2'	8'	12.02 cfs	**YES**

Grate Inlet Calculation Table

Orifice Equation: $Q=C_O A(2gh)^{0.5}(1-C_f)$ | Orifice Coef C_O: 0.67 | Clogging Factor C_f: 50%

Gravitational Constant g (ft/s²): 32.174 | h (ft): Varies - Parking Areas Typ. 0.5', Loading/Landscape >0.5'

Drainage Area	Q_{25} (cfs)	Q_{100} (cfs)	h (ft)	$A_{Req.}$ (S.F.) [Orifice]	Inlet Selected	Open Area (S.F.)	Inlet Capacity	Q25 Pass? (Y/N)
A1	4.52 cfs	6.80 cfs	0.50'	2.38	3' X 3'	4.52	8.59 cfs	**YES**
A15	8.13 cfs	11.88 cfs	0.50'	4.28	4' X 4'	5.69	10.82 cfs	**YES**
A16	8.70 cfs	12.72 cfs	0.50'	4.58	4' X 4'	5.69	10.82 cfs	**YES**
A17	9.76 cfs	14.28 cfs	0.50'	5.14	4' X 4'	5.69	10.82 cfs	**YES**
A18	6.70 cfs	9.79 cfs	0.50'	3.53	3' X 3'	4.52	8.59 cfs	**YES**
A19	10.01 cfs	14.65 cfs	0.50'	5.27	4' X 4'	5.69	10.82 cfs	**YES**
A24	4.17 cfs	6.10 cfs	0.50'	2.19	4' X 4'	5.69	10.82 cfs	**YES**
A25	4.83 cfs	7.08 cfs	0.50'	2.54	4' X 4'	5.69	10.82 cfs	**YES**
B10	0.70 cfs	1.03 cfs	0.50'	0.37	2' X 2'	2.17	4.13 cfs	**YES**

CONTRACTOR FIELD SET

This plan set shall remain on the site or subdivision premises for the life of the project and shall be utilized for any and all improvements contained herein.

BENCHMARKS

BM #51471 MAG NAIL SET "GCP 2"
SET AT THE NORTHEAST CORNER OF THE INTERSECTION OF STATE HIGHWAY 45 AND COUNTY ROAD 172, ±5.5' FROM "YIELD" SIGN.
N: 10147640.83
E: 3127942.60
ELEV.= 841.70'

BM #51473 MAG NAIL SET "GCP 3"
SET IN THE NORTH RIGHT-OF-WAY LINE OF HESTERS CROSSING ROAD, ±560' FROM THE INTERSECTION OF HESTERS CROSSING ROAD AND COUNTY ROAD 172, ±100 FROM CONCRETE SIGN "ENCOMPASS HEALTH".
N: 10149343.04
E: 3128315.81
ELEV.= 812.19'

No.	REVISIONS	DATE	BY

Kimley»Horn
© 2025 KIMLEY-HORN AND ASSOCIATES, INC.
10814 JOLLYVILLE ROAD, CAMPUS IV, SUITE 200, AUSTIN, TX 78759
PHONE: 512-418-1771 FAX: 512-418-1791
WWW.KIMLEY-HORN.COM
TEXAS REGISTERED ENGINEERING FIRM F-928

STATE OF TEXAS — NICHOLAS C. BROWN — 107175 — LICENSED PROFESSIONAL ENGINEER
03/26/2025

KHA PROJECT 069284918
DATE MARCH 2025
SCALE: AS SHOWN
DESIGNED BY: MM
DRAWN BY: MM
CHECKED BY: NCB

DRAINAGE CALCULATIONS

2525 CR 172 INDUSTRIAL

CITY OF ROUND ROCK
WILLIAMSON COUNTY, TEXAS

SHEET NUMBER
90 OF 227

SDP24-00001

Plotted By: Teraldo Knight, Paula Date: April 17, 2025 02:52:30pm File Path: K:\AUS_Civil\069284910 - DAU3 Round Rock\Cad\PlanSheets-SDP\C-Drainage\Calculations.dwg
This document, together with the concepts and designs presented herein, as an instrument of service, is intended only for the specific purpose and client for which it was prepared. Reuse of and improper reliance on this document without written authorization and adaptation by Kimley-Horn and Associates, Inc. shall be without liability to Kimley-Horn and Associates, Inc.
Timesaver ######################## DM ########

Plotted By: Teraldo Knight, Paula Date: April 17, 2025 02:52:50pm File Path: K:\AUS_Civil\069284910 – DAU3 Round Rock\Cad\PlanSheets–SDP\C–Erosion Control Details.dwg
This document, together with the concepts and designs presented herein, as an instrument of service, is intended only for the specific purpose and client for which it was prepared. Reuse of and improper reliance on this document without written authorization and adaptation by Kimley-Horn and Associates, Inc. shall be without liability to Kimley-Horn and Associates, Inc.

1. ALL TREES NOT LOCATED WITHIN THE LIMITS OF CONSTRUCTION AND OUTSIDE OF DISTURBED AREAS SHALL BE PRESERVED. THE CONTRACTOR IS RESPONSIBLE FOR PROTECTING ALL TREES TO BE PRESERVED FROM HIS ACTIVITIES.
2. ALL TREES SHOWN TO BE RETAINED ON THE PLANS, SHALL BE PROTECTED DURING CONSTRUCTION WITH FENCING. SEE: TREE PROTECTION TREE WELLS (EC–02), TREE PROTECTION TREE LOCATION (EC–03) AND TREE PROTECTION FENCE–CHAIN LINK (EC–04).
3. TREE PROTECTION FENCES SHALL BE ERECTED ACCORDING TO CITY STANDARDS FOR TREE PROTECTION, INCLUDING TYPES OF FENCING AND SIGNAGE.
4. TREE PROTECTION FENCES SHALL BE INSTALLED PRIOR TO THE COMMENCEMENT OF ANY SITE PREPARATION WORK (CLEARING, GRUBBING, OR GRADING) AND SHALL BE MAINTAINED THROUGHOUT ALL PHASES OF THE CONSTRUCTION PROCESS.
5. EROSION AND SEDIMENTATION CONTROL BARRIERS SHALL BE INSTALLED OR MAINTAINED IN A MANNER WHICH DOES NOT RESULT IN SOIL BUILD–UP WITHIN TREE DRIPLINES.
6. FENCES SHALL COMPLETELY SURROUND THE TREE, OR CLUSTERS OF TREES, LOCATED AT THE OUTERMOST LIMITS OF THE TREE BRANCHES (DRIPLINE) OR CRITICAL ROOT ZONE (CRZ), WHICHEVER IS GREATER, AND SHALL BE MAINTAINED THROUGHOUT THE CONSTRUCTION PERIOD IN THEIR ORIGINAL CONDITION.
   6A. SOIL COMPACTION IN CRZ AREA RESULTING FROM VEHICULAR TRAFFIC OR STORAGE OF EQUIPMENT OR MATERIAL.
   6B. CRZ DISTURBANCES DUE TO GRADE CHANGES (GREATER THAN 6 INCHES CUT OR FILL) OR TRENCHING NOT REVIEWED AND AUTHORIZED BY THE FORESTRY MANAGER.
   6C. WOUNDS TO EXPOSED ROOTS, TRUNK OR LIMBS BY MECHANICAL EQUIPMENT.
   6D. A CONCRETE OR CHEMICAL WASH–OUT OR STORAGE AREA, CHEMICAL SPILLAGE, CONCRETE TRUCK CLEANING, AND FIRES.
7. EXCEPTIONS TO INSTALLING TREE FENCES AT THE TREE DRIPLINES OR CRZ, WHICHEVER IS GREATER, MAY BE PERMITTED IN THE FOLLOWING CASES:
   7A. WHERE FENCING IS TO BE AN APPROVED GRADE CHANGE, IMPERMEABLE PAVING SURFACE, OR TREE WELL.
   7B. WHERE PERMEABLE PAVING IS TO BE INSTALLED, ERECT THE FENCE AT THE OUTER LIMITS OF THE PERMEABLE PAVING AREA.
   7C. WHERE TREES ARE CLOSE TO PROPOSED BUILDINGS, ERECT THE FENCE NO CLOSER THAN 6 FEET TO THE BUILDING.
   7D. WHERE THERE ARE SEVERE SPACE CONSTRAINTS DUE TO TRACT SIZE, OR OTHER SPECIAL REQUIREMENTS, CONTACT THE FORESTRY MANAGER TO DISCUSS ALTERNATIVES.
8. WHERE ANY OF THE ABOVE EXCEPTIONS RESULT IN A FENCE THAT IS CLOSER THAN 5 FEET TO A TREE TRUNK, THE TRUNK SHALL BE PROTECTED BY STRAPPED–ON PLANKING TO A HEIGHT OF 8 FEET (OR TO THE LIMITS OF LOWER BRANCHES) IN ADDITION TO THE REDUCED FENCING PROVIDED.
9. WHERE ANY TREE FENCE IS REMOVED FOR ACCESS, ALL EXPOSED ROOTS, UNPROTECTED ROOT ZONES UNDER THE DRIPLINE OR CRZ, WHICHEVER IS GREATER, THOSE AREAS SHOULD BE COVERED WITH 4 INCHES OF ORGANIC MULCH TO MINIMIZE SOIL COMPACTION.
10. ALL GRADING WITHIN CRZ AREAS SHALL BE DONE BY HAND OR WITH SMALL EQUIPMENT TO MINIMIZE ROOT DAMAGE. PRIOR TO GRADING, RELOCATE PROTECTIVE FENCING TO 2 FEET BEHIND THE GRADE CHANGE AREA.
11. ALL ROOTS EXPOSED DURING CONSTRUCTION SHALL BE PRUNED CLEANLY AT THE EDGE AND BACKFILLED WITH GOOD QUALITY TOP SOIL WITHIN TWO DAYS. IF EXPOSED ROOT AREAS CANNOT BE BACKFILLED WITHIN 2 DAYS, AN ORGANIC MATERIAL WHICH REDUCES SOIL TEMPERATURE AND MINIMIZES WATER LOSS DUE TO EVAPORATION SHALL BE PLACED TO A DEPTH OF 6 INCHES OVER THE ROOTS.
12. PRIOR TO EXCAVATION OR GRADE CUTTING WITHIN TREE DRIPLINES, A CLEAN CUT SHALL BE MADE BETWEEN THE DISTURBED AND UNDISTURBED ROOT ZONES WITH A ROCK SAW OR SIMILAR EQUIPMENT, IN A LOCATION AND TO A DEPTH APPROVED BY THE FORESTRY MANAGER, TO MINIMIZE DAMAGE TO REMAINING ROOTS.
13. TREES MOST HEAVILY IMPACTED BY CONSTRUCTION ACTIVITIES WILL BE WATERED DEEPLY ONCE A WEEK DURING PERIODS OF HOT WEATHER. TREE CROWNS ARE TO BE SPRAYED WITH WATER PERIODICALLY TO REDUCE DUST ACCUMULATION ON LEAVES.
14. WHEN INSTALLING CONCRETE ADJACENT TO THE ROOT ZONE OF A TREE, A PLASTIC VAPOR BARRIER SHALL BE PLACED BEHIND THE CONCRETE TO PREVENT LEACHING OF LIME INTO THE CRZ.
15. ANY TRENCHING REQUIRED FOR THE INSTALLATION OF LANDSCAPE IRRIGATION SHALL BE PLACED AS FAR FROM EXISTING TREES AS POSSIBLE.
16. NO LANDSCAPE TOPSOIL DRESSING GREATER THAN FOUR (4) INCHES SHALL BE PERMITTED WITHIN THE DRIPLINE OR CRZ OF TREES, WHICHEVER IS GREATER. NO TOPSOIL IS PERMITTED ON ROOT FLARES OF ANY TREE.
17. PRUNING TO PROVIDE CLEARANCE FOR STRUCTURES, VEHICULAR TRAFFIC, AND CONSTRUCTION EQUIPMENT SHALL TAKE PLACE PRIOR TO CONSTRUCTION BEGINNING ALL PRUNING SHALL BE DONE ACCORDING AND AS OUTLINED IN ANSI A300 (PART 1) PRUNING STANDARDS. NEVER USE TOPPING AS A TREE CUTBACK TECHNIQUE.
18. ALL OAK TREE CUTS, INTENTIONAL OR UNINTENTIONAL, SHALL BE SEALED WITH AN APPROVED PRUNING SEALER IMMEDIATELY (WITHIN 10 MINUTES). PRUNING SEAL OR TREE PAINT MUST BE KEPT ON SITE AT ALL TIMES.
19. THE FORESTRY MANAGER HAS THE AUTHORITY TO REQUIRE ADDITIONAL TREE PROTECTION BEFORE OR DURING CONSTRUCTION.
20. TREES APPROVED FOR REMOVAL SHALL BE REMOVED IN A MANNER WHICH DOES NOT IMPACT TREES TO BE PRESERVED. REFER TO THE CITY OF ROUND ROUND ROCK TREE TECHNICAL MANUAL FOR APPROPRIATE REMOVAL METHODS.
21. PRIOR TO CONSTRUCTION, ALL LOWER TREE LIMBS OVER ROADWAYS MUST BE PRUNED TO A HEIGHT OF 14 FEET USING APPROVED METHODS AS OUTLINED IN THE CITY OF ROUND ROCK TREE TECHNICAL MANUAL.
22. DEVIATIONS FROM THE ABOVE NOTES MAY BE CONSIDERED ORDINANCE VIOLATIONS IF THERE IS NON COMPLIANCE OR IF A TREE SUSTAINS DAMAGE AS A RESULT.

FOR QUESTIONS CONCERNING THIS DETAIL, PLEASE CONTACT THE FORESTRY MANAGER.

SCALE: NTS

RECORD SIGNED COPY ON FILE AT PUBLIC WORKS	CITY OF ROUND ROCK	DRAWING NO: EC–01
APPROVED 03–25–21 DATE	TREE PROTECTION NOTES	SHEET 1 of 1
THE ARCHITECT/ENGINEER ASSUMES RESPONSIBILITY FOR THE APPROPRIATE USE OF THIS DETAIL. (NOT TO SCALE)		ROUND ROCK TEXAS

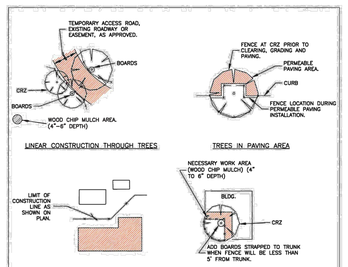

FOR QUESTIONS CONCERNING THIS DETAIL, PLEASE CONTACT THE FORESTRY MANAGER.

SCALE: NTS

RECORD SIGNED COPY ON FILE AT PUBLIC WORKS	CITY OF ROUND ROCK	DRAWING NO: EC–02
APPROVED 01–28–21 DATE	TREE PROTECTION FENCE LOCATIONS	SHEET 1 of 1
THE ARCHITECT/ENGINEER ASSUMES RESPONSIBILITY FOR THE APPROPRIATE USE OF THIS DETAIL. (NOT TO SCALE)		ROUND ROCK TEXAS

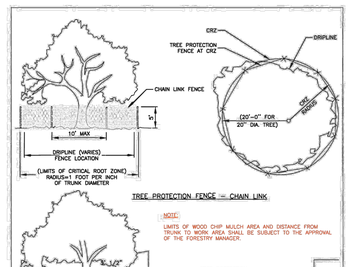

FOR QUESTIONS CONCERNING THIS DETAIL, PLEASE CONTACT THE FORESTRY MANAGER.

SCALE: NTS

RECORD SIGNED COPY ON FILE AT PUBLIC WORKS	CITY OF ROUND ROCK	DRAWING NO: EC–03
APPROVED 01–28–21 DATE	TREE PROTECTION FENCE CHAIN LINK	SHEET 1 of 1
THE ARCHITECT/ENGINEER ASSUMES RESPONSIBILITY FOR THE APPROPRIATE USE OF THIS DETAIL. (NOT TO SCALE)		ROUND ROCK TEXAS

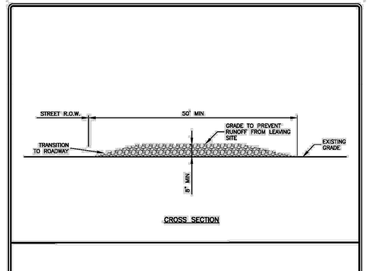

NOTES:
1. STONE SIZE SHALL BE 3" – 8" OPEN GRADED ROCK.
2. THICKNESS OF CRUSHED STONE PAD TO BE NOT LESS THAN 8".
3. LENGTH SHALL BE A MINIMUM OF 50' FROM ACTUAL ROADWAY, AND WIDTH NOT LESS THAN FULL WIDTH OF INGRESS/EGRESS.
4. ENTRANCE SHALL BE PROPERLY GRADED TO PREVENT RUNOFF FROM LEAVING THE CONSTRUCTION SITE.
5. THE ENTRANCE SHALL BE MAINTAINED IN A CONDITION WHICH WILL PREVENT TRACKING OR FLOWING OF SEDIMENT ONTO PUBLIC RIGHTS–OF–WAY. ALL SEDIMENT SPILLED, DROPPED, WASHED OR TRACKED ONTO PUBLIC RIGHTS OF WAY MUST BE REMOVED IMMEDIATELY BY CONTRACTOR.
6. AS NECESSARY, WHEELS MUST BE CLEANED TO REMOVE SEDIMENT PRIOR TO ENTRANCE ONTO PUBLIC RIGHT OF WAY. WHEN WASHING IS REQUIRED, IT SHALL BE DONE ON AN AREA STABILIZED WITH CRUSHED STONE WHICH DRAINS INTO AN APPROVED SEDIMENT TRAP OR SEDIMENT BASIN. ALL SEDIMENT SHALL BE PREVENTED FROM ENTERING ANY STORM DRAIN, DITCH OR WATERCOURSE USING APPROVED METHODS.

RECORD SIGNED COPY ON FILE AT PUBLIC WORKS	CITY OF ROUND ROCK	DRAWING NO: EC–09
APPROVED 03–25–11 DATE	STABILIZED CONSTRUCTION ENTRANCE DETAIL	
THE ARCHITECT/ENGINEER ASSUMES RESPONSIBILITY FOR THE APPROPRIATE USE OF THIS DETAIL. (NOT TO SCALE)		ROUND ROCK TEXAS

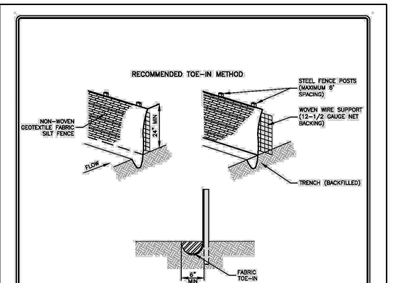

NOTES:
1. STEEL POSTS WHICH SUPPORT THE SILT FENCE SHALL BE INSTALLED ON A SLIGHT ANGLE TOWARD THE ANTICIPATED RUNOFF SOURCE. POST MUST BE EMBEDDED A MIN. OF ONE (1) FOOT.
2. THE BOTTOM OF THE SILT FENCE SHALL BE TRENCHED IN WITH A DEPTH OF 6" AND WIDTH OF 4". THE DOWNSLOPE FACE OF THE TRENCH IS FLAT AND PERPENDICULAR TO THE LINE OF FLOW. WHERE FENCE CANNOT BE TRENCHED IN (I.E. PAVEMENT) WEIGHT FABRIC FLAP WITH WASHED GRAVEL ON UPHILL SIDE TO PREVENT FLOW UNDER FENCE.
3. THE TRENCH MUST BE A MINIMUM OF 6 INCHES DEEP AND 6 INCHES WIDE TO ALLOW FOR THE SILT FENCE FABRIC TO BE LAID IN THE GROUND AND BACKFILLED WITH COMPACTED MATERIAL.
4. SILT FENCE SHALL BE SECURELY FASTENED TO EACH STEEL SUPPORT POST OR TO WOVEN WIRE, WHICH IN TURN IS SECURELY FASTENED TO THE STEEL FENCE POSTS.
5. INSPECTION SHALL BE MADE WEEKLY OR AFTER EACH RAINFALL EVENT AND REPAIR OR REPLACEMENT SHALL BE MADE PROMPTLY AS NEEDED.
6. SILT FENCE SHALL BE REMOVED WHEN THE SITE IS COMPLETELY STABILIZED SO AS NOT TO BLOCK OR IMPEDE STORM FLOW OR DRAINAGE.
7. ACCUMULATED SILT SHALL BE REMOVED WHEN IT REACHES A DEPTH OF 6 INCHES. THE SILT SHALL BE DISPOSED OF IN AN APPROVED SITE AND IN SUCH A MANNER AS TO NOT CONTRIBUTE TO ADDITIONAL SILTATION.
8. SILT FENCE SHALL BE REMOVED AS SOON AS THE SOURCE OF SEDIMENT IS STABILIZED.

RECORD SIGNED COPY ON FILE AT PUBLIC WORKS	CITY OF ROUND ROCK	DRAWING NO: EC–10
APPROVED 03–25–11 DATE	SILT FENCE DETAIL	
THE ARCHITECT/ENGINEER ASSUMES RESPONSIBILITY FOR THE APPROPRIATE USE OF THIS DETAIL. (NOT TO SCALE)		ROUND ROCK TEXAS

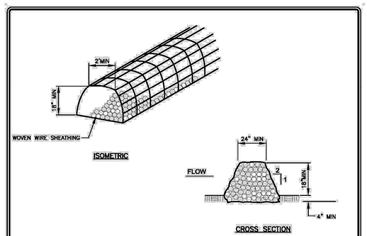

NOTES:
1. USE ONLY OPEN GRADED ROCK (3 to 8") DIAMETER FOR ALL CONDITIONS.
2. THE ROCK BERM SHALL BE SECURED WITH A WOVEN WIRE SHEATHING HAVING MAXIMUM 1" OPENING AND MINIMUM WIRE DIAMETER OF 20–GAUGE.
3. ROCK BERMS SHALL BE INSPECTED DAILY OR AFTER EACH RAIN, AND THE STONE AND/ OR FABRIC CORE–WOVEN SHEATHING SHALL BE REPLACED WHEN THE STRUCTURE CEASES TO FUNCTION AS INTENDED, DUE TO SEDIMENT ACCUMULATION AMONG THE ROCKS, WASHOUT, CONSTRUCTION TRAFFIC DAMAGE, ETC.
4. IF SEDIMENT REACHES A DEPTH OF 6", THE SEDIMENT SHALL BE REMOVED AND DISPOSED OF ON AN APPROVED SITE AND IN A MANNER THAT WILL NOT CREATE A SEDIMENTATION PROBLEM.
5. WHEN THE SITE IS COMPLETELY STABILIZED, THE BERM AND ACCUMULATED SEDIMENT SHALL BE REMOVED AND DISPOSED OF IN AN APPROVED MANNER.

RECORD SIGNED COPY ON FILE AT PUBLIC WORKS	CITY OF ROUND ROCK	DRAWING NO: EC–12
APPROVED 03–25–11 DATE	ROCK BERM DETAIL	
THE ARCHITECT/ENGINEER ASSUMES RESPONSIBILITY FOR THE APPROPRIATE USE OF THIS DETAIL. (NOT TO SCALE)		ROUND ROCK TEXAS

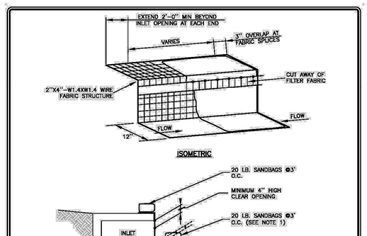

NOTES:
1. WHERE MINIMUM CLEARANCES CAUSE TRAFFIC TO DRIVE IN THE GUTTER, THE CONTRACTOR MAY SUBSTITUTE A 1" X 4" BOARD SECURED WITH CONCRETE NAILS 3' O.C. NAILED INTO THE GUTTER IN LIEU OF SANDBAGS TO HOLD THE FILTER DIKE IN PLACE. UPON REMOVAL, CLEAN ANY DIRT/DEBRIS FROM NAILING LOCATIONS. APPLY CHEMICAL SANDING AGENT AND APPLY NON–SHRINK GROUT FLUSH WITH SURFACE OF GUTTER.
2. A SECTION OF FILTER FABRIC SHALL BE REMOVED AS SHOWN ON THIS DETAIL OR AS DIRECTED BY THE CONSTRUCTION MANAGER'S REPRESENTATIVE. FABRIC MUST BE SECURED TO WIRE BACKING WITH CLIPS OR HOG RINGS AT THIS LOCATION.
3. DAILY INSPECTION SHALL BE MADE BY THE CONTRACTOR AND SILT ACCUMULATION MUST BE REMOVED WHEN DEPTH REACHES 2".
4. CONTRACTOR SHALL MONITOR THE PERFORMANCE OF INLET PROTECTION DURING EACH RAINFALL EVENT AND IMMEDIATELY REMOVE THE INLET PROTECTIONS IF THE STORM–WATER BEGINS TO OVERTOP THE CURB.
5. INLET PROTECTIONS SHALL BE REMOVED AS SOON AS THE SOURCE OF SEDIMENT IS STABILIZED.

RECORD SIGNED COPY ON FILE AT PUBLIC WORKS	CITY OF ROUND ROCK	DRAWING NO: EC–14
APPROVED 03–25–11 DATE	CURB INLET PROTECTION DETAIL	
THE ARCHITECT/ENGINEER ASSUMES RESPONSIBILITY FOR THE APPROPRIATE USE OF THIS DETAIL. (NOT TO SCALE)		ROUND ROCK TEXAS

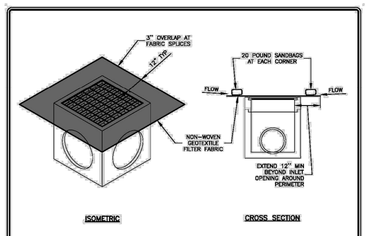

NOTES:
1. DAILY INSPECTION SHALL BE MADE BY THE CONTRACTOR AND SILT ACCUMULATION MUST BE REMOVED WHEN DEPTH REACHES 2".
2. CONTRACTOR SHALL MONITOR THE PERFORMANCE OF INLET PROTECTION DURING EACH RAINFALL EVENT AND IMMEDIATELY CLEAN THE INLET PROTECTION IF EXCESSIVE PONDING OCCURS.
3. INLET PROTECTIONS SHALL BE REMOVED AS SOON AS THE SOURCE OF SEDIMENT IS STABILIZED.

RECORD SIGNED COPY ON FILE AT PUBLIC WORKS	CITY OF ROUND ROCK	DRAWING NO: EC–15
APPROVED 03–25–11 DATE	AREA INLET PROTECTION DETAIL	
THE ARCHITECT/ENGINEER ASSUMES RESPONSIBILITY FOR THE APPROPRIATE USE OF THIS DETAIL. (NOT TO SCALE)		ROUND ROCK TEXAS

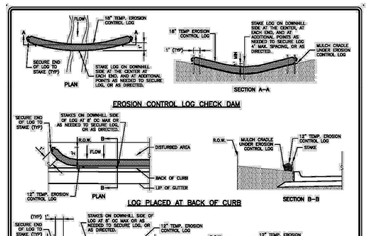

NOTES:
1. DAILY INSPECTION SHALL BE MADE BY THE CONTRACTOR AND SILT ACCUMULATION MUST BE REMOVED WHEN DEPTH REACHES 6".
2. CONTRACTOR SHALL MONITOR THE PERFORMANCE OF LOGS DURING RAINFALL EVENT FOR PROPER PERFORMANCE.
3. LOGS SHALL CONSIST OF 100% BIODEGRADABLE, PHOTODEGRADABLE OR RECYCLABLE CONTAINMENT MESH, STUFFED WITH FILTER MATERIAL.
4. STUFF LOGS WITH SUFFICIENT FILTER MATERIAL TO ACHIEVE DENSITY THAT WILL HOLD SHAPE WITHOUT EXCESSIVE EXTENSION. FILTER MATERIAL SHALL CONSIST OF MULCH, ASPEN EXCELSIOR WOOD FIBERS, COMPOST, STRAW, COCONUT FIBERS, LOOSE RECYCLED MATERIALS, OR ANY OTHER ACCEPTABLE MATERIAL, EXCLUDING STORM AND HAY.
5. STAKES SHALL BE 2" X 2" WOOD, 4' LONG, EMBEDDED SUCH THAT 2" PROTRUDES ABOVE LOG, OR AS DIRECTED.

RECORD SIGNED COPY ON FILE AT PUBLIC WORKS	CITY OF ROUND ROCK	DRAWING NO: EC–17
APPROVED 03–25–11 DATE	EROSION CONTROL LOG DETAIL	
THE ARCHITECT/ENGINEER ASSUMES RESPONSIBILITY FOR THE APPROPRIATE USE OF THIS DETAIL. (NOT TO SCALE)		ROUND ROCK TEXAS

CONTRACTOR FIELD SET

This plan set shall remain on the site or subdivision premises for the life of the project and shall be utilized for any and all improvements contained herein.

BENCHMARKS

BM #51471 MAG NAIL SET "GCP 2" SET AT THE NORTHEAST CORNER OF THE INTERSECTION OF STATE HIGHWAY 45 AND COUNTY ROAD 172, ±5.5' FROM "YIELD" SIGN.
N: 10147640.83
E: 3127942.60
ELEV.= 841.70'

BM #51473 MAG NAIL SET "GCP 3" SET IN THE NORTH RIGHT-OF-WAY LINE OF HESTERS CROSSING ROAD, ±560' FROM THE INTERSECTION OF HESTERS CROSSING ROAD AND COUNTY ROAD 172, ±100 FROM CONCRETE SIGN "ENCOMPASS HEALTH".
N: 10149343.04
E: 3128315.81
ELEV.= 812.19'

No.	REVISIONS	DATE	BY

Kimley»Horn
© 2025 KIMLEY-HORN AND ASSOCIATES, INC.
10814 JOLLYVILLE ROAD, CAMPUS IV, SUITE 200, AUSTIN, TX 78759
PHONE: 512-418-1771 FAX: 512-418-1791
WWW.KIMLEY-HORN.COM
TEXAS REGISTERED ENGINEERING FIRM F-928

NICHOLAS C. BROWN
107175
LICENSED
PROFESSIONAL ENGINEER
03/26/2025

KHA PROJECT	069284910
DATE	MARCH 2025
SCALE:	AS SHOWN
DESIGNED BY:	MM
DRAWN BY:	MM
CHECKED BY:	NCB

EROSION CONTROL DETAILS

2525 CR 172 INDUSTRIAL

CITY OF ROUND ROCK
WILLIAMSON COUNTY, TEXAS

SHEET NUMBER
91 OF 227

SDP24-00001

NOTE:
REFERENCE ARCHITECT'S PLAN TO CONFIRM FINAL SITE DETAILS

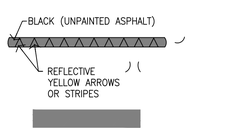

20'-0" X 1'-0"
PAVEMENT GRAPHICS SPEED BUMP.
USE TO CONTROL SPEED AT INTERIOR DRIVE AISLES. THERMAL APPLIED REFLECTIVE YELLOW ARROWS. REMOVABLE HEAVY DUTY RUBBER SPEED HUMPS NOT ALLOWED.

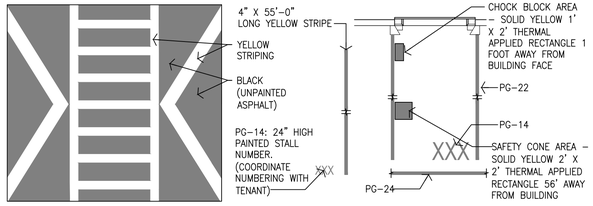

24'-0" X 22'-0"
PAVEMENT GRAPHICS - PEDESTRIAN TABLE. USE AT CROSSWALKS AT HIGH TRAFFIC AREAS PER SITE (EX. MAIN ENTRANCE) THERMAL APPLIED YELLOW STRIPING ON RAISED ASPHALT TABLE.

4" WIDE X 55'-0" (4" WIDE STRIPE) PAVEMENT GRAPHICS - EMPTY TRAILER SLIP. USE TO MAKER EMPTY TRAILER PARKING SPACES. THERMAL APPLIED YELLOW STRIPING WITH 24" TALL LETTERING (SEE PG-14)

12' WIDE X 60'-0" (4" WIDE STRIPE) PAVEMENT GRAPHICS - TRACTOR DOCK PARKING. USE TO IDENTIFY PARKING. THERMAL APPLIED YELLOW STRIPING WITH 24" TALL LETTERING (SEE PG-14). ALIGN STRIPE WITH DRIVER'S SIDE OF EDGE OG DOCK DOOR OR LOUVER OPENING. TYPICAL EACH ACTIVE DOCK AND LOUVER POSITION. PROVIDE C11 ORANGE WARNING LINE AT PARKING SPACES 66' ALONGSIDE BUILDING

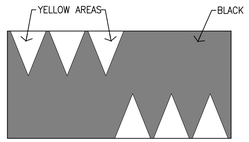

20'-0" WIDE
PAVEMENT GRAPHICS - SPEED HUMP. USE TO CONTROL SPEED AT OUTLYING DRIVE AREAS. YELLOW THERMAL APPLIED YELLOW ARROWS. REMOVABLE RUBBER SPEED HUMPS NOT ALLOWED.

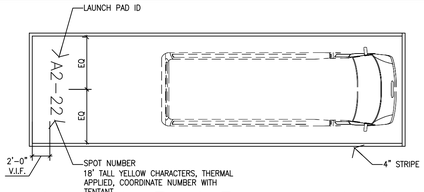

4 Van Launch Pad Pavement Marking Detail
N.T.S

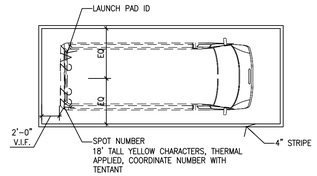

5 Van Staging Pad Pavement Marking Detail
N.T.S

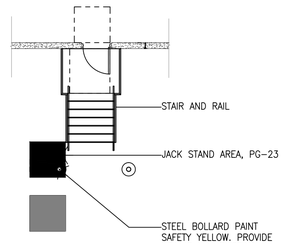

PAVEMENT GRAPHIC NOTES:

1. PAVEMENT MARKINGS SHALL BE WHITE ON ASPHALT AND YELLOW ON CONCRETE FOR ASSOCIATE, VISITOR, AND OTHER NON-TRUCK YARD PARKING AREAS. IN HIGHER TRAFFIC IMPACT AREAS SUCH AS PRIMARY AISLES AND TRANSIT/TRUCK ACCESS OR SERVICE YARDS WITH CONCRETE PAVING, WHITE PAINT MAY BE APPLIED OVER A BLACK PAINT BACKGROUND TO INCREASE VISIBILITY. PROVIDE ALL YELLOW STRIPING FOR DOCK DOOR AND TRAILER PARKING SLIPS, REGARDLESS OF BACKGROUND SURFACE COLOR.
2. ALL STRIPING SHALL BE PREMIUM PAINT AND 4" WIDE UNLESS OTHERWISE NOTED WITH ANTICIPATED LIFESPAN OF 3 YEARS MINIMUM.
3. PAVEMENT STRIPING MATERIAL SHALL BE SELECTED ACCORDING TO SUCH LOCAL FACTORS AS CLIMATE REGION, COST OF MARKING VERSUS EXPECTED LIFE (MIN. 3 YEARS), LOCATION AND FUNCTION OF MARKING, PAVEMENT TYPE, ENVIRONMENTAL CONDITIONS AT THE TIME OF APPLICATION, AVAILABILITY OF EQUIPMENT AND LABOR, AND MARKET AVAILABILITY.
   - PREMIUM PAINT SHALL BE ELECTED TO INCREASE PAINT LONGEVITY. AT A MINIMUM, PREMIUM PAINT SHALL BE WATER-BASED, FAST-DRY, ACRYLIC RESIN PAINT CONTAINING A 100% ACRYLIC RESIN EMULSION, PRIME AND EXTENDER PIGMENTS, ADDITIVES, AND WATER AS THE SOLVENT/EMULSION AGENT.
   - 2-PART EPOXY PAINT MAY BE USED IN LOCATION WHERE CONDITIONS WARRANT, SUCH AS HIGH TRAFFIC AREAS DUE TO ITS HIGH DURABILITY.
   - ENSURE PAINT (WITHOUT GLASS BEADS) HAS A MINIMUM DIRECTIONAL REFLECTANCE, RELATIVE TO A MAGNESIUM OXIDE STANDARD, OF 80 PERCENT FOR WHITE AND 50 PERCENT FOR YELLOW WHEN TESTED ACCORDING TO ASTM E1347. BLACK BACKGROUND PAINT IF USED TO ENHANCE VISIBILITY OF WHITE OR YELLOW PAINT, SHALL NOT INCLUDE REFLECTING MATERIALS. USE THERMOPLASTIC STRIPING WITH GLASS BEADS FOR HIGH-USE, TRAFFIC/TRANSIT/TRUCK CONTROL AND CIRCUMSTANCES WHERE SAFETY MUST BE ENSURES (STOP BARS, CROSSWALKS, PEDESTRIAN CORRIDORS, AND LANE STRIPING (STOP BARS, CROSSWALKS, PEDESTRIAN CORRIDORS, AND LANE STRIPING (CENTER LINES, SHOULDERS, CORE AREAS, ETC.)
   - ACCEPTABLE ALTERNATIVES TO PREMIUM PAINT INCLUDE: THERMOPLASTICS, POLYUREA, PREFORMED FLAT TAPE, AND METHYL METHACRYLATE (MMA) FOR APPLICATION IN COLDER CLIMATES. SOLVENT-BASED PAINT SHALL NOT BE USED.
4. ALL PAINT SHALL BE APPLIED FOLLOWING MANUFACTURER RECOMMENDATIONS TO PRESERVE AVAILABLE WARRANTIES.
5. ALL PAVEMENT GRAPHICS SHALL BE HOT-APPLIED THERMOPLASTIC (REFLECTIVE). APPLY IN ACCORDANCE WITH MANUFACTURER'S RECOMMENDATIONS TO PRESERVE AVAILABLE WARRANTIES.

GRAPHICS / PAVEMENT PAINT

1/PP1	WHITE	
2/PP2	RED	(PANTONE 485C)
3/PP3	BLUE	(PANTONE 294)
4/PP4	GREEN	(PANTONE 342)
5/PP5	YELLOW	(PANTONE 116)

NOTE: TWO COAT APPLICATION REQUIRED FOR ALL PAVEMENT GRAPHICS.

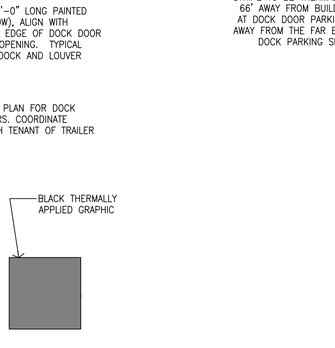

WIDTH OF LANE x 2'-0"
YELLOW STOP BAR. USE AT ALL STOP SIGN (S-1) LOCATIONS.
MUTCD SEC 7C.04

WARNING LINE
4" WIDE STRIPE C11 ORANGE LINE AND GRAPHICS. 4" WIDE ORANGE STRIPE TO BE THERMALLY APPLIED 66' AWAY FROM BUILDING WALL AT DOCK DOOR PARKING AND 6' AWAY FROM THE FAR END OF THE DOCK PARKING SPACES

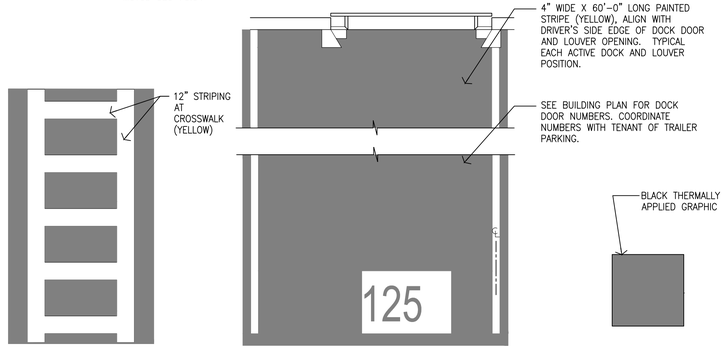

12" STRIPING OUTLINE AND HATCH FILL AT 36" O.C.
PAVEMENT GRAPHICS - DRIVER ENTRANCE.
USE TO DIRECT DRIVER ENTRANCE IN DOCK FIELD. POSITION IN TRUCK COURT TO CORRESPOND WITH THE LOCATION OF THE TRUCKER'S LOUNGE AND TRUCKER'S ENTRY POINTS. FC (TOM)/SC (LOGISTICS) PARTNER WITH SAFETY TO FIND CLOSEST APPROVED EXIT DOOR TO GUARD SHACK. DESIGNATE A PARKING AREA FOR THE HOSTLER VEHICLE(S). PROVIDE WALKING SPACE AROUND THE PARKING AREA FOR THE PRE-OPERATIONAL INSPECTION PARTNER WITH BASE BUILDING MANAGER TO MARK A CROSSWALK FROM THE BUILDING EXIT POINT TO THE GUARD SHACK AND HOSTLER PARKING AREA USING THE SHORTEST LOGICAL PATH. ASSOCIATES WILL NEED TO BE INSIDE THIS PATH TO TRANSIT THE YARD WITHOUT A SPOTTER. THERMAL APPLIED C14 YELLOW STRIPES. (BLACK INDICATES ASPHALT)

4' X 4' SOLID BLACK SQUARE.
PAVEMENT GRAPHICS - JACK STAND AREAS. USE TO IDENTIFY JACK STAND LOCATION. THERMAL APPLIED GRAPHICS

5'-0" X 3'-6" (24" TALL LETTERING)
PAVEMENT GRAPHICS - TRAILER SPACE NUMBERING. USE TO LABEL TRAILER SPACES. TYPICAL ALL TRUCK SPACES. YELLOW GRAPHICS (BLACK INDICATES ASPHALT).
SEE PLANS FOR DOCK DOOR NUMBERS. COORDINATE NUMBERS WITH TENANT OF TRAILER PARKING.

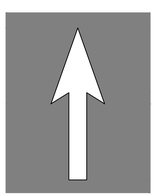

8'-0" X 10'-0"
PAVEMENT GRAPHICS - STRAIGHT ARROW. USE TO DIRECT TRAFFIC AT ONE-WAY DRIVE AISLES. YELLOW THERMAL GRAPHIC. (BLACK INDICATES ASPHALT)

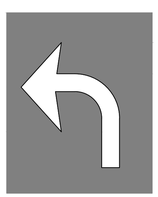

8'-0" X 8'-0"
PAVEMENT GRAPHICS - LEFT TURN ARROW.
USE TO INDICATE TURNING LANES. YELLOW THERMAL GRAPHIC. (BLACK INDICATES ASPHALT)

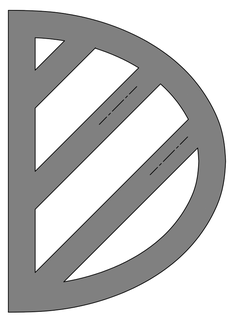

18" STRIPING OUTLINE AND FILL AT 45 DEGREES.
PAVEMENT GRAPHICS - TRAFFIC ISLAND.
USE TO PROHIBIT VEHICLE TRAVEL AND PARKING. C14 YELLOW AT NO TRAFFIC, C8 BLUE AT ACCESSIBLE PARKING SPACES, YELLOW AT VENDOR PARKING (BLACK INDICATES ASPHALT). INCLUDE AT ALL EMERGENCY EXITS INTO THE PARKING LOT AT ALL PARKING SPACES THAT IMPEDE DIRECT ACCESS TO THE THOROUGHFARE.

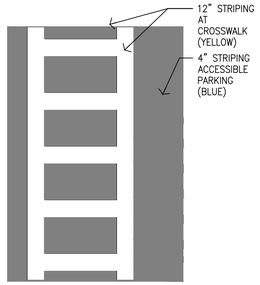

12" STRIPING OUTLINE AND HATCH FILL AT 36" O.C. PAVEMENT GRAPHICS - PEDESTRIAN CROSSWALK. USE TO INDICATE PEDESTRIAN CROSSING. YELLOW STRIPES, SEE PLAN FOR WIDTH OF CROSSWALK (BLACK INDICATES ASPHALT)

6 Pavement Graphic Details
1/4" = 1'-0"

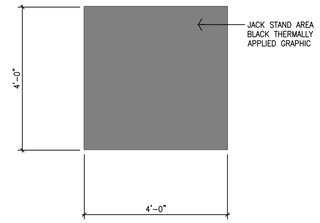

2 Van Stall Numbering Pavement Graphic
N.T.S

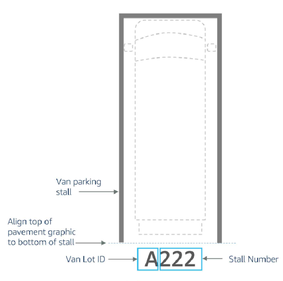

Figure 2.P: Van Stall Numbering Pavement Graphic

CONTRACTOR FIELD SET
This plan set shall remain on the site or subdivision premises for the life of the project and shall be utilized for any and all improvements contained herein.

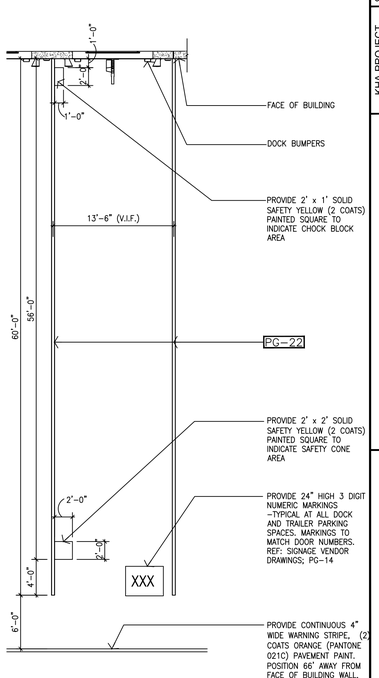

3 Typical Striping at Stairs
Scale: 1/8" = 1'-0"

1 Trailer Parking at Dock
Scale: 1/8" = 1'-0"

No.	REVISIONS	DATE	BY

Kimley»Horn

© 2025 KIMLEY-HORN AND ASSOCIATES, INC.

10814 JOLLYVILLE ROAD, CAMPUS IV, SUITE 200, AUSTIN, TX 78759
PHONE: 512-418-1771 FAX: 512-418-1791
WWW.KIMLEY-HORN.COM
TEXAS REGISTERED ENGINEERING FIRM F-928



03/26/2025

KHA PROJECT 060284918	DATE: MARCH 2025	SCALE: AS SHOWN	DESIGNED BY: MM
			DRAWN BY: MM
			CHECKED BY: NCB

SITE PLAN DETAILS
(SHEET 1 OF 4)

2525 CR 172
INDUSTRIAL
CITY OF ROUND ROCK
WILLIAMSON COUNTY, TEXAS

SHEET NUMBER
92 OF 227

SDP24-00001

Plotted By: Teralda Knight, Fayla Date: April 17, 2025 02:53:26pm File Path: K:\AUS_Civil\060284910 - DAI3 Round Rock\Cad\PlanSheets-SDP\C-Site Plan Details.dwg
This document, together with the concepts and designs presented herein, as an instrument of service, is intended only for the specific purpose and client for which it was prepared. Reuse of and improper reliance on this document without written authorization and adaptation by Kimley-Horn and Associates, Inc. shall be without liability to Kimley-Horn and Associates, Inc.

NOTE:
REFERENCE ARCHITECT'S PLAN TO CONFIRM FINAL SITE DETAILS

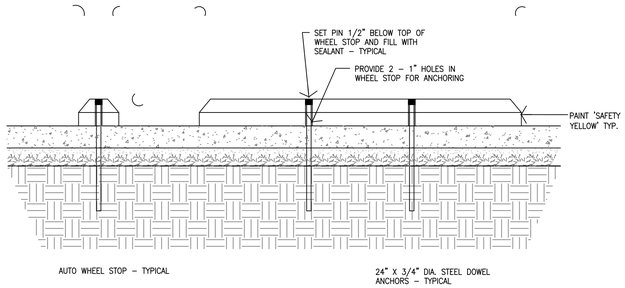

6 Wheel Stop – Auto
Scale: 3/4" = 1'-0"

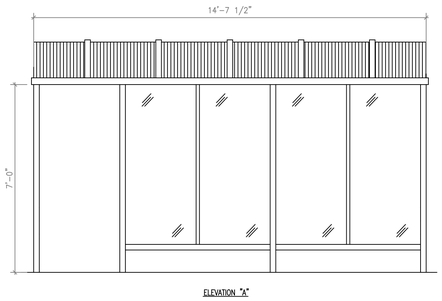

ELEVATION "A"

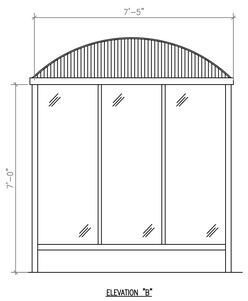

ELEVATION "B"

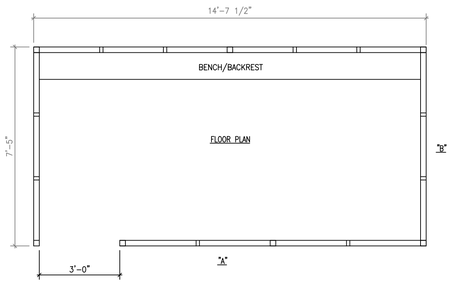

FINISHES:

PANEL FINISH:	CLEAR ANODIZED
STRUCTURE:	ALUMINUM 6063-T5 ALLOY CHANNELS & POSTS
WALL PANELS:	1/2" MEDEX LAMINATED WITH GRAY FIBERGLASS REINFORCED PLASTIC IN BOTH SIDES
CEILING:	5/8" WHITE VINYL- FACED BOARD
INTERIOR HEIGHT:	89"
WINDOWS:	1/4" THICK CLEAR TEMPERED SAFETY GLASS

GENERAL NOTES:
1) ALUMINUM FRAMING EXTRUSIONS HAVE A MILL FINISH.
2) FIXED WINDOWS TO INCLUDE CLEAR TEMPERED GLAZING.
3) UNIT INCLUDES FACTORY INSTALLED INTEGRAL ROOF WITH PERIMETER GUTTER.
4) UNIT PROVIDED FACTORY ASSEMBLED, (NO FLOORING PROVIDED).
5) ORDER WITH CEILING MOUNTED SOLAR LIGHT.
6) REF: PROJECT MANUAL FOR ALTERNATIVE VENDOR OPTIONS

MODEL NUMBER:
56-3B

10 Prefabricated Rideshare Shelter Plan Elevation
Scale: 3/8" = 1'-0"

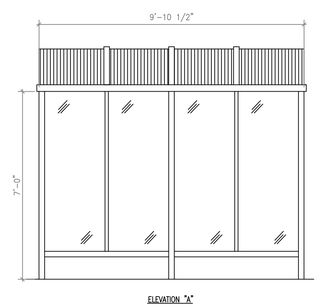

ELEVATION "A"

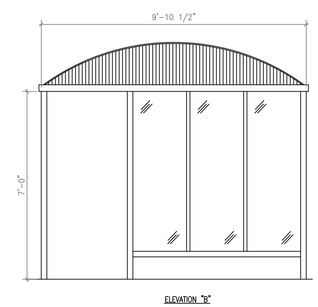

ELEVATION "B"

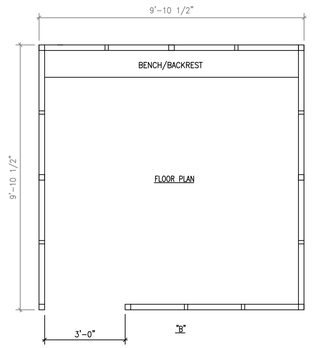

FINISHES:

PANEL FINISH:	CLEAR ANODIZED
STRUCTURE:	ALUMINUM 6063-T5 ALLOY CHANNELS & POSTS
WALL PANELS:	1/2" MEDEX LAMINATED WITH GRAY FIBERGLASS REINFORCED PLASTIC IN BOTH SIDES
CEILING:	5/8" WHITE VINYL- FACED BOARD
INTERIOR HEIGHT:	89"
WINDOWS:	1/4" THICK CLEAR TEMPERED SAFETY GLASS

GENERAL NOTES:
1) ALUMINUM FRAMING EXTRUSIONS HAVE A MILL FINISH.
2) FIXED WINDOWS TO INCLUDE CLEAR TEMPERED GLAZING.
3) UNIT INCLUDES FACTORY INSTALLED INTEGRAL ROOF WITH PERIMETER GUTTER.
4) UNIT PROVIDED FACTORY ASSEMBLED, (NO FLOORING PROVIDED).
5) ORDER WITH CEILING MOUNTED SOLAR LIGHT.
6) REF: PROJECT MANUAL FOR ALTERNATIVE VENDOR OPTIONS

MODEL NUMBER:
54-4B

9 Prefabricated Smoker's Shelter Plan Elevation
Scale: 3/8" = 1'-0"

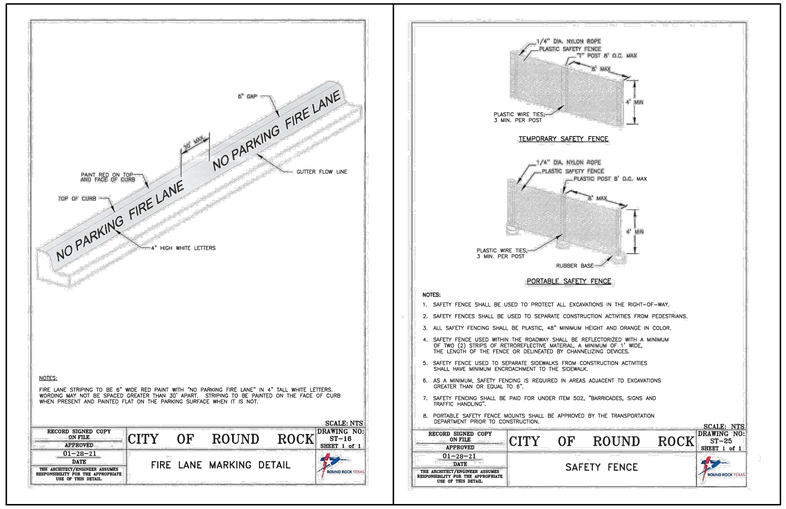

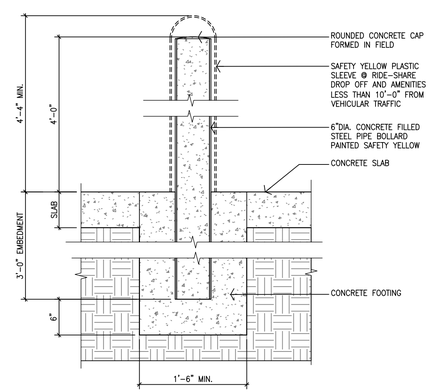

2 Pipe Bollard Detail
Scale: 1" = 1'-0"

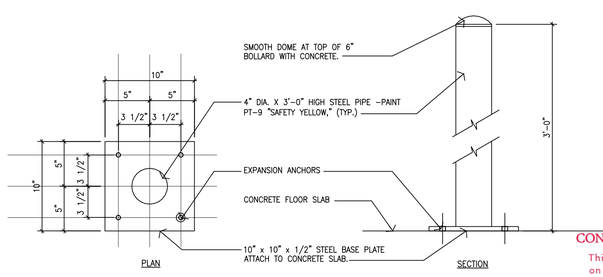

1 Surface Mounted Bollard
Scale: 1 1/2"= 1'-0"

NOTES:
1. TO BE COORDINATED WITH TENANT STARTUP FOR LOCATIONS AND QUANTITIES.
2. BOLLARDS SHALL BE EQUAL TO HEARTLAND ENGINEERED PRODUCTS B4HD – 4" HEAVY DUTY BOLT-DOWN BOLLARD, ANCHOR TO CONCRETE SLAB WITH MANUFACTURER PROVIDED ANCHORS

CONTRACTOR FIELD SET
This plan set shall remain on the site or subdivision premises for the life of the project and shall be utilized for any and all improvements contained herein.

No.	REVISIONS	DATE	BY

Kimley»Horn
© 2025 KIMLEY-HORN AND ASSOCIATES, INC.
10814 JOLLYVILLE ROAD, CAMPUS IV, SUITE 200, AUSTIN, TX 78759
PHONE: 512-418-1771 FAX: 512-418-1791
WWW.KIMLEY-HORN.COM
TEXAS REGISTERED ENGINEERING FIRM F-928

NICHOLAS C. BROWN
107175
LICENSED
PROFESSIONAL ENGINEER
03/26/2025

KHA PROJECT	060284918
DATE	MARCH 2025
SCALE:	AS SHOWN
DESIGNED BY:	MM
DRAWN BY:	MM
CHECKED BY:	NCB

SITE PLAN DETAILS (SHEET 2 OF 4)

2525 CR 172 INDUSTRIAL
CITY OF ROUND ROCK
WILLIAMSON COUNTY, TEXAS

SHEET NUMBER
93 OF 227

SDP24-00001

Plotted By: Teralda Knight, Paula Date: April 17, 2025 02:53:38pm File Path: K:\AUS_Civil\060284910 – DAU3 Round Rock\Cad\PlanSheets-SDP\C-Site Plan Details.dwg
This document, together with the concepts and designs presented herein, as an instrument of service, is intended only for the specific purpose and client for which it was prepared. Reuse of and improper reliance on this document without written authorization and adaptation by Kimley-Horn and Associates, Inc. shall be without liability to Kimley-Horn and Associates, Inc.

NOTE:
REFERENCE ARCHITECT'S PLAN TO CONFIRM FINAL SITE DETAILS

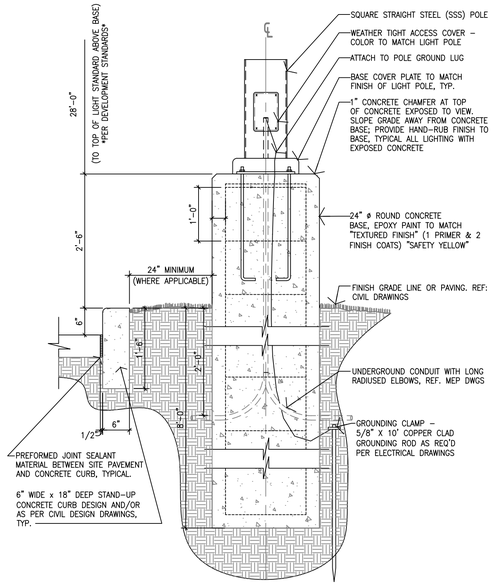

13 Development Site Lighting Pole Base

Scale: 3/4" = 1'-0"

NOTE:
REF. STRUCTURAL DRAWINGS

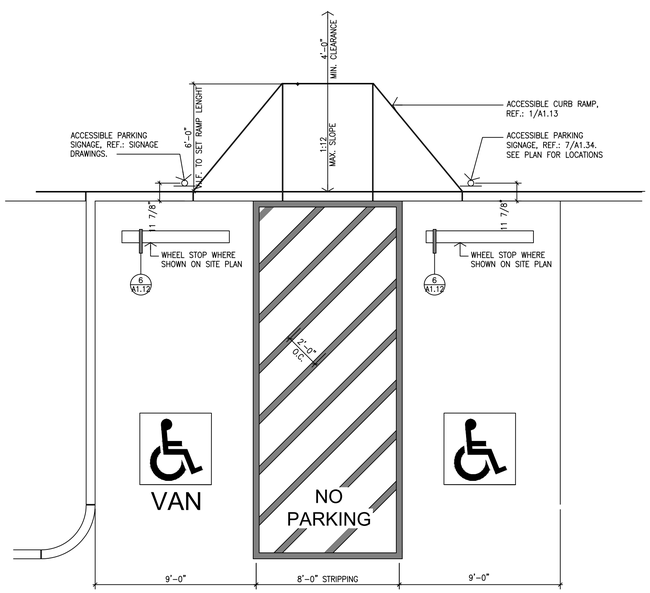

4 Accessible Ramp

Scale: 1/4" = 1'-0"

FOR REFERENCE ONLY

NOTE:
SLOPE SHALL BE 1:12 MAX. & CROSS SLOPE SHALL BE 1:48 OR 2% MAX., PER IBC SECTION 1012

NOTE:
FOR REFERENCE ONLY. SEE CIVIL SHEETS AND 7/A1.11

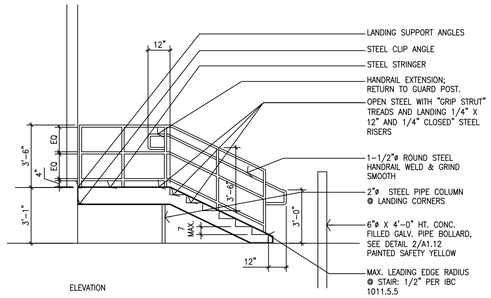

6 Pre-Eng. MTL. Stair Section

Scale: 1/4"= 1'-0"

NOTE:
SEE EXTERIOR METAL FINISH SPECIFICATIONS

NOTE:
"SAFETY YELLOW" IS PT-9

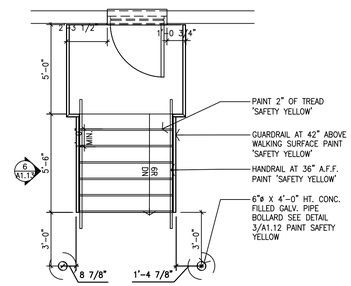

5 Pre-Eng. MTL. Stair Plan

Scale: 1/4" = 1'-0"

NOTE:
"SAFETY YELLOW" IS PT-9

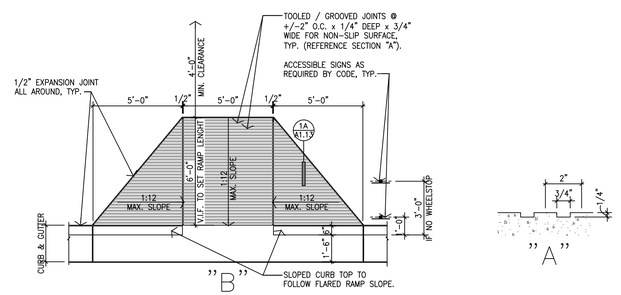

1 Accessible Curb Ramp

Scale: 1/4" = 1'-0"

NOTES:
PROVIDE INTEGRALLY COLORED CONCRETE FOR ALL CURB RAMP SURFACE. COLOR TO BE APPROVED BY ARCHITECT.

HANDRAILS SHOULD BE PROVIDED IF WALK OR RAMP SURFACE IS GREATER THAN 6'-0" IN LENGTH FOR MAX. 1:12 SLOPE, TYPICAL FOR ALL THIS PROJECT.

FOR FLARED SIDES TO BE CONSTRUCTED TO A 1:10 SLOPE, 48" OF CLEARANCE MUST BE MAINTAINED BEYOND RAMP TOP, OTHERWISE FLARED SIDES MUST BE SLOPED 1:12 MAXIMUM.

MEDIUM BROOM FINISH PERPENDICULAR TO DIRECTION OF TRAVEL ON ALL RAMP SURFACES, TYP.

CENTER CROWN RAMP SLOPE TO SIDES, (1/8"/12") FOR GROOVE DRAINAGE.

CONTRACTOR FIELD SET

This plan set shall remain on the site or subdivision premises for the life of the project and shall be utilized for any and all improvements contained herein.

No.	REVISIONS	DATE	BY

Kimley»Horn
© 2025 KIMLEY-HORN AND ASSOCIATES, INC.
10814 JOLLYVILLE ROAD, CAMPUS IV, SUITE 200, AUSTIN, TX 78759
PHONE: 512-418-1771 FAX: 512-418-1791
WWW.KIMLEY-HORN.COM
TEXAS REGISTERED ENGINEERING FIRM F-928

NICHOLAS C. BROWN
107175
LICENSED PROFESSIONAL ENGINEER
03/26/2025

KHA PROJECT	069284918
DATE	MARCH 2025
SCALE:	AS SHOWN
DESIGNED BY:	MM
DRAWN BY:	MM
CHECKED BY:	NCB

SITE PLAN DETAILS (SHEET 3 OF 4)

2525 CR 172 INDUSTRIAL
CITY OF ROUND ROCK
WILLIAMSON COUNTY, TEXAS

SHEET NUMBER
94 OF 227

SDP24-00001

Plotted By: Teralda Knight, Paula Date: April 17, 2025 02:53:54pm File Path: K:\AUS_Civil\069284918 - DAU3 Round Rock\Cad\PlanSheets-SDP\C-Site Plan Details.dwg
This document, together with the concepts and designs presented herein, as an instrument of service, is intended only for the specific purpose and client for which it was prepared. Reuse of and improper reliance on this document without written authorization and adaptation by Kimley-Horn and Associates, Inc. shall be without liability to Kimley-Horn and Associates, Inc.
Template: ########################## DM ########

NOTE:
REFERENCE ARCHITECT'S PLAN TO CONFIRM FINAL SITE DETAILS

NOTE:
GATE SHALL HAVE A KNOX BOX INSTALLED TO ALLOW FOR EMERGENCY ACCESS. IF NEEDED SLIDING OPTION CAN BE PROVIDED.

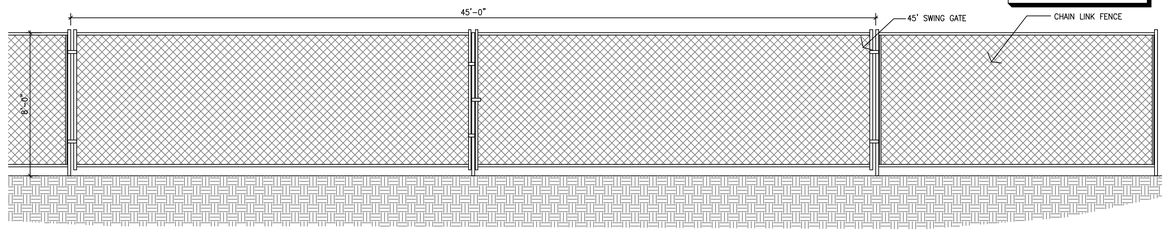

12 Chain Link Fence @ Truck Court Elevation
Scale: 1/4" = 1'-0"

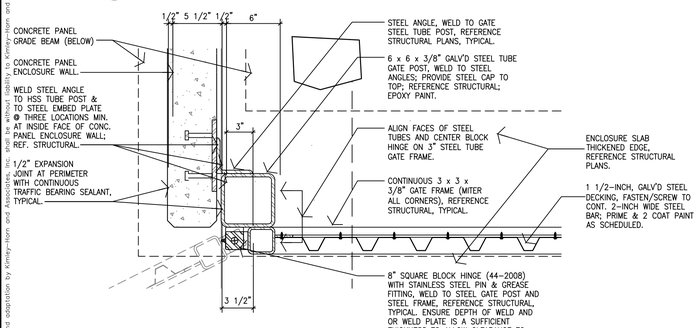

7 Enclosure Gate Detail
Scale: 1-1/2" = 1'-0"

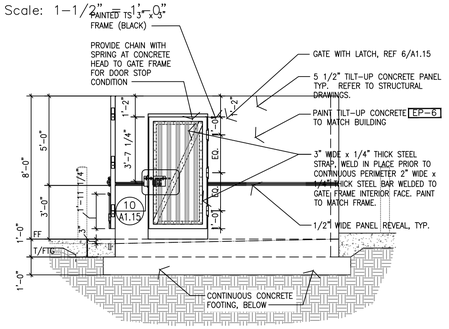

8 Enclosure Gate Slide Bolt Detail
Scale: 1-1/2" = 1'-0"

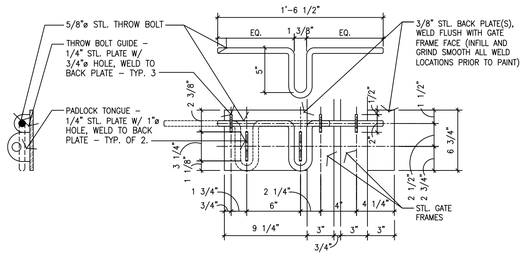

NOTE:
ALL EXTERIOR EXPOSED STEEL TO BE GALVANIZED & EPOXY PAINTED; REFERENCE FINISH SCHEDULE.

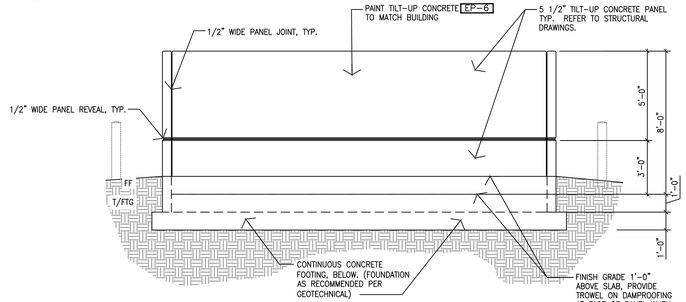

5 Trash Enclosure West Elevation
Scale: 1/4" = 1'-0"

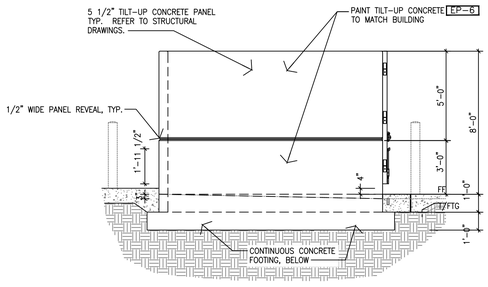

3 Trash Enclosure North Elevation
Scale: 1/4" = 1'-0"

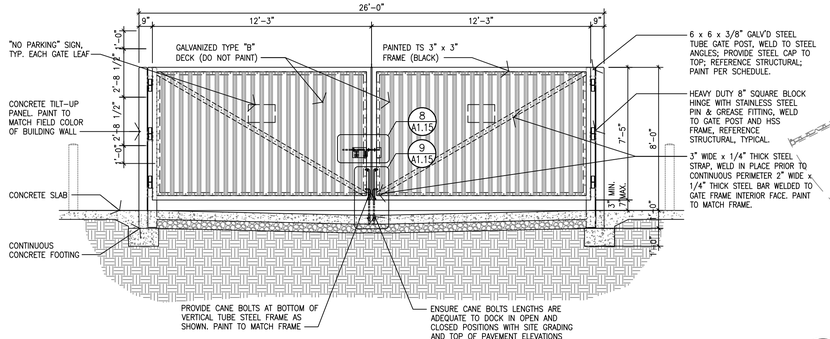

4 Trash Enclosure East Elevation
Scale: 1/4" = 1'-0"

2 Trash Enclosure South Elevation
Scale: 1/4" = 1'-0"

NOTE:
ALL EXTERIOR EXPOSED STEEL TO BE GALVANIZED & EPOXY PAINTED; REFERENCE FINISH SCHEDULE.

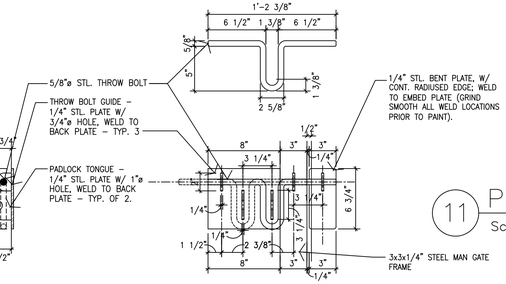

10 Man Gate Slide Bolt Detail
Scale: 1-1/2" = 1'-0"

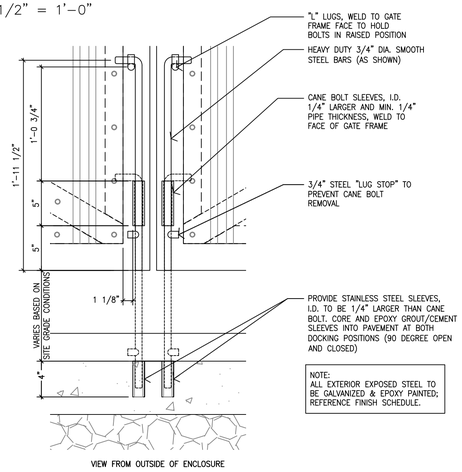

NOTE:
ALL EXTERIOR EXPOSED STEEL TO BE GALVANIZED & EPOXY PAINTED; REFERENCE FINISH SCHEDULE.

9 Enclosure Gate Slide Bolt Detail
Scale: 1-1/2" = 1'-0"

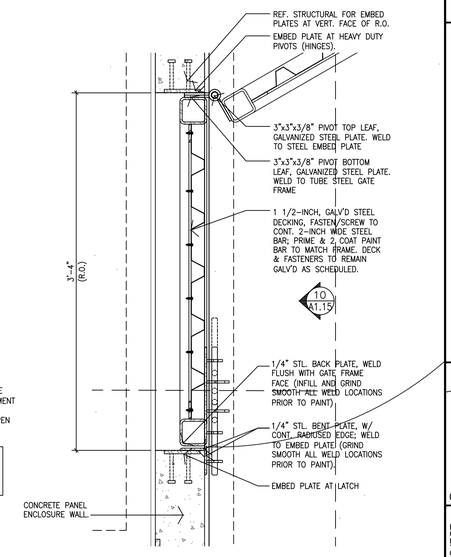

6 Man Gate Detail
Scale: 1-1/2" = 1'-0"

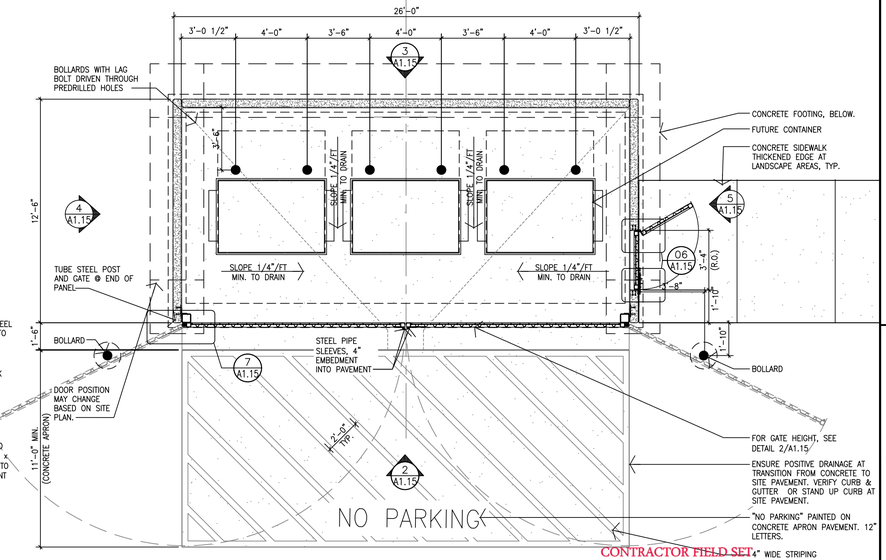

CONTRACTOR FIELD SET

This plan set shall remain on the site or subdivision premises for the life of the project and shall be utilized for any and all improvements contained herein.

1 Trash Enclosure Plan
Scale: 1/4" = 1'-0"

NOTE:
ALTERNATIVE FOR TRASH ENCLOSURE COULD BE POSSIBLE WITH TENANT AND AHJ APPROVAL

NOTE:
BASIS OF DESIGN FOR TRASH ENCLOSURE IS TILT UP CONCRETE WALLS. AOR AND EOR TO COORDINATE WITH DEVELOPER AND JURISDICTION FOR ANY ADDITIONAL REQUIREMENTS.

No.	REVISIONS	DATE	BY

Kimley»Horn

© 2025 KIMLEY-HORN AND ASSOCIATES, INC.

10814 JOLLYVILLE ROAD, CAMPUS IV, SUITE 200, AUSTIN, TX 78759
PHONE: 512-418-1771 FAX: 512-418-1791
WWW.KIMLEY-HORN.COM
TEXAS REGISTERED ENGINEERING FIRM F-928

STATE OF TEXAS
NICHOLAS C. BROWN
107175
LICENSED
PROFESSIONAL ENGINEER
03/26/2025

KHA PROJECT	069284918
DATE	MARCH 2025
SCALE:	AS SHOWN
DESIGNED BY:	MM
DRAWN BY:	MM
CHECKED BY:	NCB

SITE PLAN DETAILS
(SHEET 4 OF 4)

2525 CR 172
INDUSTRIAL
CITY OF ROUND ROCK
WILLIAMSON COUNTY, TEXAS

SHEET NUMBER
95 OF 227

SDP24-00001

Plotted By: Toraldo Knight, Paula Date: April 17, 2025 02:54:45pm File Path: K:\AUS_Civil\069284910 – DAU3 Round Rock\Cad\PlanSheets-SDP\C-Site Plan Details.dwg
This document, together with the concepts and designs presented herein, as an instrument of service, is intended only for the specific purpose and client for which it was prepared. Reuse of and improper reliance on this document without written authorization and adaptation by Kimley-Horn and Associates, Inc. shall be without liability to Kimley-Horn and Associates, Inc.

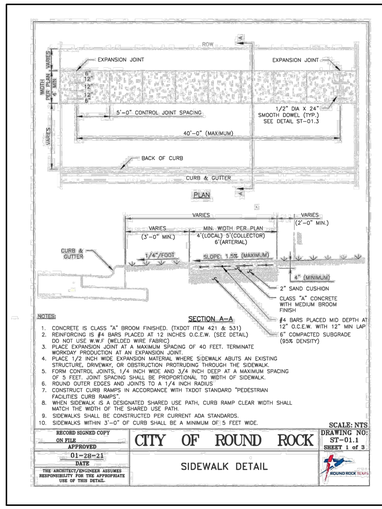

NOTES:

1. CONCRETE IS CLASS "A" BROOM FINISHED. (TXDOT ITEM 421 & 531)
2. REINFORCING IS #4 BARS PLACED AT 12 INCHES O.C.E.W. (SEE DETAIL) DO NOT USE W.W.F (WELDED WIRE FABRIC)
3. PLACE EXPANSION JOINT AT A MAXIMUM SPACING OF 40 FEET, TERMINATE WORKDAY PRODUCTION AT AN EXPANSION JOINT.
4. PLACE 1/2 INCH WIDE EXPANSION MATERIAL WHERE SIDEWALK ABUTS AN EXISTING STRUCTURE, DRIVEWAY, OR OBSTRUCTION PROTRUDING THROUGH THE SIDEWALK.
5. FORM CONTROL JOINTS, 1/4 INCH WIDE AND 3/4 INCH DEEP AT A MAXIMUM SPACING OF 5 FEET, JOINT SPACING SHALL BE PROPORTIONAL TO WIDTH OF SIDEWALK.
6. ROUND OUTER EDGES AND JOINTS TO A 1/4 INCH RADIUS
7. CONSTRUCT CURB RAMPS IN ACCORDANCE WITH TXDOT STANDARD "PEDESTRIAN FACILITIES CURB RAMPS".
8. WHEN SIDEWALK IS A DESIGNATED SHARED USE PATH, CURB RAMP CLEAR WIDTH SHALL MATCH THE WIDTH OF THE SHARED USE PATH.
9. SIDEWALKS SHALL BE CONSTRUCTED PER CURRENT ADA STANDARDS.
10. SIDEWALKS WITHIN 3'-0" OF CURB SHALL BE A MINIMUM OF 5 FEET WIDE.

SCALE: NTS

RECORD SIGNED COPY ON FILE	CITY OF ROUND ROCK	DRAWING NO: ST-01.1
APPROVED 01-28-21	SIDEWALK DETAIL	SHEET 1 of 3
DATE		ROUND ROCK TEXAS
THE ARCHITECT/ENGINEER ASSUMES RESPONSIBILITY FOR THE APPROPRIATE USE OF THIS DETAIL.		

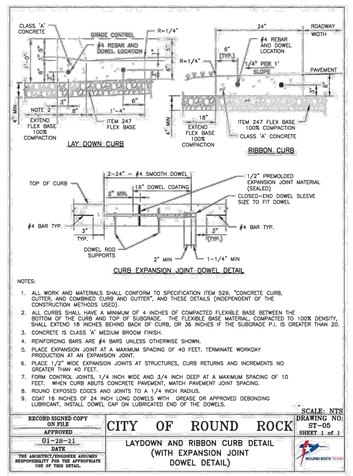

NOTES:

1. ALL WORK AND MATERIALS SHALL CONFORM TO SPECIFICATION ITEM 529, "CONCRETE CURB, GUTTER, AND COMBINED CURB AND GUTTER", AND THESE DETAILS (INDEPENDENT OF THE CONSTRUCTION METHODS USED)
2. ALL CURBS SHALL HAVE A MINIMUM OF 4 INCHES OF COMPACTED FLEXIBLE BASE BETWEEN THE BOTTOM OF THE CURB AND TOP OF SUBGRADE. THE FLEXIBLE BASE MATERIAL, COMPACTED TO 100% DENSITY, SHALL EXTEND 18 INCHES BEHIND BACK OF CURB, OR 36 INCHES IF THE SUBGRADE P.I. IS GREATER THAN 20.
3. CONCRETE IS CLASS 'A' MEDIUM BROOM FINISH.
4. REINFORCING BARS ARE #4 BARS UNLESS OTHERWISE SHOWN.
5. PLACE EXPANSION JOINT AT A MAXIMUM SPACING OF 40 FEET, TERMINATE WORKDAY PRODUCTION AT AN EXPANSION JOINT.
6. PLACE 1/2" WIDE EXPANSION JOINTS AT STRUCTURES, CURB RETURNS AND INCREMENTS NO GREATER THAN 40 FEET.
7. FORM CONTROL JOINTS, 1/4 INCH WIDE AND 3/4 INCH DEEP AT A MAXIMUM SPACING OF 10 FEET. WHEN CURB ABUTS CONCRETE PAVEMENT, MATCH PAVEMENT JOINT SPACING.
8. ROUND EXPOSED EDGES AND JOINTS TO A 1/4 INCH RADIUS.
9. COAT 16 INCHES OF 24 INCH LONG DOWELS WITH GREASE OR APPROVED DEBONDING LUBRICANT, INSTALL DOWEL CAP ON LUBRICATED END OF THE DOWELS.

SCALE: NTS

RECORD SIGNED COPY ON FILE	CITY OF ROUND ROCK	DRAWING NO: ST-05
APPROVED 01-28-21	LAYDOWN AND RIBBON CURB DETAIL (WITH EXPANSION JOINT DOWEL DETAIL)	SHEET 1 of 1
DATE		ROUND ROCK TEXAS
THE ARCHITECT/ENGINEER ASSUMES RESPONSIBILITY FOR THE APPROPRIATE USE OF THIS DETAIL.		

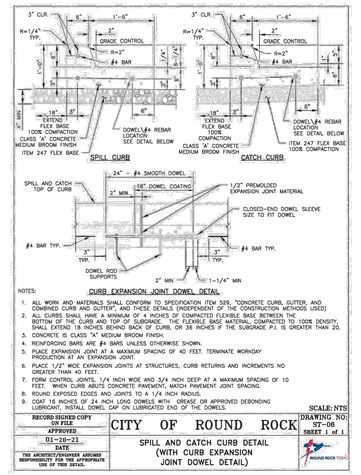

NOTES:

1. ALL WORK AND MATERIALS SHALL CONFORM TO SPECIFICATION ITEM 529, "CONCRETE CURB, GUTTER, AND COMBINED CURB AND GUTTER", AND THESE DETAILS (INDEPENDENT OF THE CONSTRUCTION METHODS USED)
2. ALL CURBS SHALL HAVE A MINIMUM OF 4 INCHES OF COMPACTED FLEXIBLE BASE BETWEEN THE BOTTOM OF THE CURB AND TOP OF SUBGRADE. THE FLEXIBLE BASE MATERIAL, COMPACTED TO 100% DENSITY, SHALL EXTEND 18 INCHES BEHIND BACK OF CURB, OR 36 INCHES IF THE SUBGRADE P.I. IS GREATER THAN 20.
3. CONCRETE IS CLASS "A" MEDIUM BROOM FINISH.
4. REINFORCING BARS ARE #4 BARS UNLESS OTHERWISE SHOWN.
5. PLACE EXPANSION JOINT AT A MAXIMUM SPACING OF 40 FEET. TERMINATE WORKDAY PRODUCTION AT AN EXPANSION JOINT.
6. PLACE 1/2" WIDE EXPANSION JOINTS AT STRUCTURES, CURB RETURNS AND INCREMENTS NO GREATER THAN 40 FEET.
7. FORM CONTROL JOINTS, 1/4 INCH WIDE AND 3/4 INCH DEEP AT A MAXIMUM SPACING OF 10 FEET. WHEN CURB ABUTS CONCRETE PAVEMENT, MATCH PAVEMENT JOINT SPACING.
8. ROUND EXPOSED EDGES AND JOINTS TO A 1/4 INCH RADIUS.
9. COAT 16 INCHES OF 24 INCH LONG DOWELS WITH GREASE OR APPROVED DEBONDING LUBRICANT, INSTALL DOWEL CAP ON LUBRICATED END OF THE DOWELS.

SCALE: NTS

RECORD SIGNED COPY ON FILE	CITY OF ROUND ROCK	DRAWING NO: ST-06
APPROVED 01-28-21	SPILL AND CATCH CURB DETAIL (WITH CURB EXPANSION JOINT DOWEL DETAIL)	SHEET 1 of 1
DATE		ROUND ROCK TEXAS
THE ARCHITECT/ENGINEER ASSUMES RESPONSIBILITY FOR THE APPROPRIATE USE OF THIS DETAIL.		

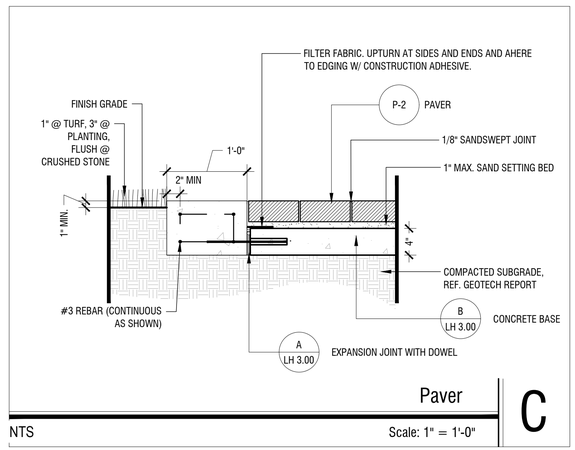

CONTRACTOR FIELD SET

This plan set shall remain on the site or subdivision premises for the life of the project and shall be utilized for any and all improvements contained herein.

BENCHMARKS

BM #51471 MAG NAIL SET "GCP 2"
SET AT THE NORTHEAST CORNER OF THE INTERSECTION OF STATE HIGHWAY 45 AND COUNTY ROAD 172, ±5.5' FROM "YIELD" SIGN.
N: 10147640.83
E: 3127942.60
ELEV.= 841.70'

BM #51473 MAG NAIL SET "GCP 3"
SET IN THE NORTH RIGHT-OF-WAY LINE OF HESTERS CROSSING ROAD, ±560' FROM THE INTERSECTION OF HESTERS CROSSING ROAD AND COUNTY ROAD 172, ±100 FROM CONCRETE SIGN "ENCOMPASS HEALTH".
N: 10149343.04
E: 3128315.81
ELEV.= 812.19'

No.	REVISIONS	DATE	BY

Kimley»Horn
© 2025 KIMLEY-HORN AND ASSOCIATES, INC.
10814 JOLLYVILLE ROAD, CAMPUS IV, SUITE 200, AUSTIN, TX 78759
PHONE: 512-418-1771 FAX: 512-418-1791
WWW.KIMLEY-HORN.COM
TEXAS REGISTERED ENGINEERING FIRM F-928



03/26/2025

KHA PROJECT 069284916	DATE MARCH 2025	SCALE: AS SHOWN	DESIGNED BY: MM
DRAWN BY: MM	CHECKED BY: NCB		

PAVING DETAILS

2525 CR 172 INDUSTRIAL
CITY OF ROUND ROCK
WILLIAMSON COUNTY, TEXAS

SHEET NUMBER
96 OF 227

SDP24-00001

Plotted By: Toraldo Knight, Paula Date: April 17, 2025 02:55:03pm File Path: K:\AUS_Civil\069284910 - DAU3 Round Rock\Cad\PlanSheets-SDP\C-Paving Details.dwg
This document, together with the concepts and designs presented herein, as an instrument of service, is intended only for the specific purpose and client for which it was prepared. Reuse of and improper reliance on this document without written authorization and adaptation by Kimley-Horn and Associates, Inc. shall be without liability to Kimley-Horn and Associates, Inc.

Plotted By: Tordrik Knight, Paula Date: April 17, 2025 02:55:31pm File Path: K:\AUS_Civil\069284918 - DAU3 Round Rock\Cad\PlanSheets-SDP\C-Water Details.dwg
This document, together with the concepts and designs presented herein, as an instrument of service, is intended only for the specific purpose and client for which it was prepared. Reuse of and improper reliance on this document without written authorization and adaptation by Kimley-Horn and Associates, Inc. shall be without liability to Kimley-Horn and Associates, Inc.

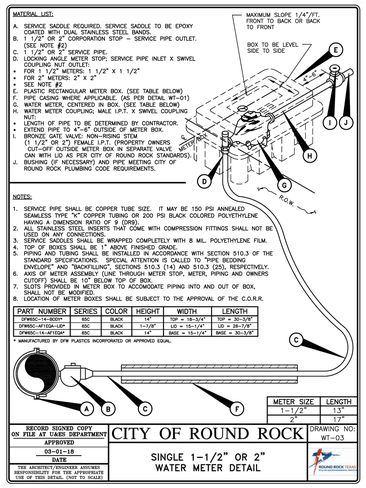

RECORD SIGNED COPY ON FILE AT UARS DEPARTMENT
APPROVED 03-01-18 DATE
THE ARCHITECT/ENGINEER ASSUMES RESPONSIBILITY FOR THE APPROPRIATE USE OF THIS DETAIL. (NOT TO SCALE)

CITY OF ROUND ROCK

SINGLE 1-1/2" OR 2" WATER METER DETAIL

DRAWING NO: WT-03

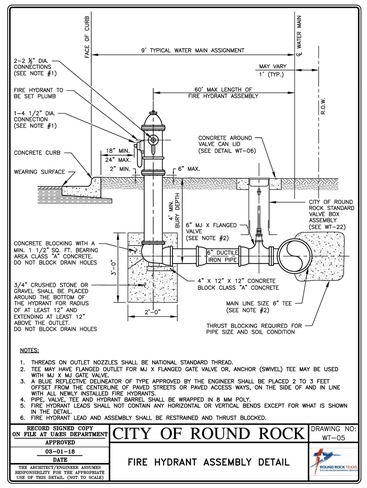

NOTES:
1. THREADS ON OUTLET NOZZLES SHALL BE NATIONAL STANDARD THREAD.
2. TEE MAY HAVE FLANGED OUTLET FOR MJ X FLANGED GATE VALVE OR, ANCHOR (SWIVEL) TEE MAY BE USED WITH MJ X MJ GATE VALVE.
3. A BLUE REFLECTIVE DELINEATOR OF TYPE APPROVED BY THE ENGINEER SHALL BE PLACED 2 TO 3 FEET OFFSET FROM THE CENTERLINE OF PAVED STREETS OR PAVED ACCESS WAYS, ON THE SIDE OF AND IN LINE WITH ALL NEWLY INSTALLED FIRE HYDRANTS.
4. PIPE, VALVE, TEE AND HYDRANT BARREL SHALL BE WRAPPED IN 8 MM POLY.
5. FIRE HYDRANT LEADS SHALL NOT CONTAIN ANY HORIZONTAL OR VERTICAL BENDS EXCEPT FOR WHAT IS SHOWN IN THE DETAIL.
6. FIRE HYDRANT LEAD AND ASSEMBLY SHALL BE RESTRAINED AND THRUST BLOCKED.

RECORD SIGNED COPY ON FILE AT UARS DEPARTMENT
APPROVED 03-01-18 DATE
THE ARCHITECT/ENGINEER ASSUMES RESPONSIBILITY FOR THE APPROPRIATE USE OF THIS DETAIL. (NOT TO SCALE)

CITY OF ROUND ROCK

FIRE HYDRANT ASSEMBLY DETAIL

DRAWING NO: WT-05

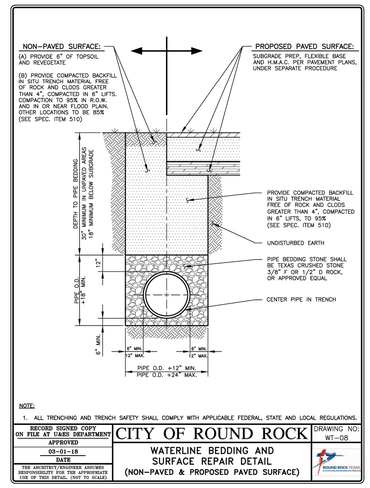

NOTE:
1. ALL TRENCHING AND TRENCH SAFETY SHALL COMPLY WITH APPLICABLE FEDERAL, STATE AND LOCAL REGULATIONS.

RECORD SIGNED COPY ON FILE AT UARS DEPARTMENT
APPROVED 03-01-18 DATE
THE ARCHITECT/ENGINEER ASSUMES RESPONSIBILITY FOR THE APPROPRIATE USE OF THIS DETAIL. (NOT TO SCALE)

CITY OF ROUND ROCK

WATERLINE BEDDING AND SURFACE REPAIR DETAIL (NON-PAVED & PROPOSED PAVED SURFACE)

DRAWING NO: WT-08

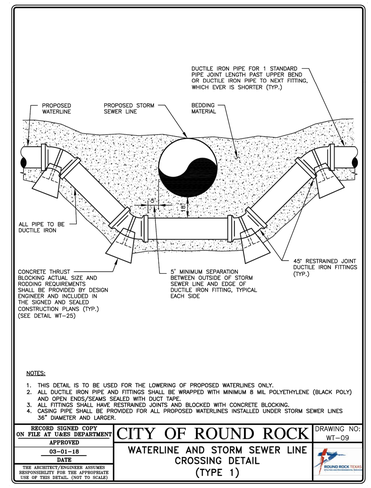

NOTES:
1. THIS DETAIL IS TO BE USED FOR THE LOWERING OF PROPOSED WATERLINES ONLY.
2. ALL DUCTILE IRON PIPE AND FITTINGS SHALL BE WRAPPED WITH MINIMUM 8 MIL POLYETHYLENE (BLACK POLY) AND OPEN ENDS/SEAMS SEALED WITH DUCT TAPE.
3. ALL FITTINGS SHALL HAVE RESTRAINED JOINTS AND BLOCKED WITH CONCRETE BLOCKING.
4. CASING PIPE SHALL BE PROVIDED FOR ALL PROPOSED WATERLINES INSTALLED UNDER STORM SEWER LINES 36" DIAMETER AND LARGER.

RECORD SIGNED COPY ON FILE AT UARS DEPARTMENT
APPROVED 03-01-18 DATE
THE ARCHITECT/ENGINEER ASSUMES RESPONSIBILITY FOR THE APPROPRIATE USE OF THIS DETAIL. (NOT TO SCALE)

CITY OF ROUND ROCK

WATERLINE AND STORM SEWER LINE CROSSING DETAIL (TYPE 1)

DRAWING NO: WT-09

NOTES:
1. ALL VALVES AND VALVE CANS SHALL BE ACCESSIBLE FOR OPERATION ONCE THE NEW WATERLINE IS PUT INTO SERVICE. BURYING LINE VALVES IS PROHIBITED.
2. ALL VALVE LOCATIONS SHALL BE APPROPRIATELY MARKED "V" ON FACE OF CURB.

RECORD SIGNED COPY ON FILE AT UARS DEPARTMENT
APPROVED 03-01-18 DATE
THE ARCHITECT/ENGINEER ASSUMES RESPONSIBILITY FOR THE APPROPRIATE USE OF THIS DETAIL. (NOT TO SCALE)

CITY OF ROUND ROCK

VERTICAL VALVE INSTALLATION DETAIL

DRAWING NO: WT-11

GALVANIZED IRON PIPE
AIR VALVE | BALL VALVE
1" | 1"
2" | 2"

NOTES:
1. AIR RELEASE VALVE VAULT FOR USE IN NON-PAVEMENT AREAS.
2. EXTERIOR SURFACES OF EXPOSED AIR VENT PIPE AND STEEL SUPPORT PIPE SHALL BE CLEANED, PREPPED, PRIMED AND PAINTED WITH ONE (1) GLIDUM SAFETY BLUE ACRYLIC #5225402 PAINT, OR APPROVED EQUAL.
3. THE AIR VENT PIPE SHALL BE 5' MINIMUM IN HEIGHT AND SHALL BE SUPPORTED BY A 4" STEEL PIPE, WHICH IS TO BE SET IN 2500 P.S.I. CONCRETE, FILLED WITH CONCRETE AND SUPPORTED WITH 3 STAINLESS STEEL CLAMPS.
4. CONCRETE VAULT PENETRATION SHALL BE CORE BIT DRILLED. VOID SHALL BE FILLED BY PRESS-SEAL GASKET CORP. PSX RESILIENT CONNECTOR MEETING A.S.T.M. C923, OR APPROVED EQUAL.
5. PIPE SUPPORT TO BE PROVIDED FOR THE AIR RELEASE VALVE.

RECORD SIGNED COPY ON FILE AT UARS DEPARTMENT
APPROVED 03-01-18 DATE
THE ARCHITECT/ENGINEER ASSUMES RESPONSIBILITY FOR THE APPROPRIATE USE OF THIS DETAIL. (NOT TO SCALE)

CITY OF ROUND ROCK

1" THRU 2" AIR RELEASE VALVE INSTALLATION DETAIL (UNDEVELOPED AREAS)

DRAWING NO: WT-15

PIPE SIZE–CARRIER (DIAMETER)	PIPE SIZE–CASING (DIAMETER) (MIN.)	MINIMUM PIPE THICKNESS (INCHES)
6"	16"	1/4	0.2500
8"	18"	1/4	0.2500
10"	20"	5/16	0.3125
12" – 14"	24"	3/8	0.3750
16" – 18"	30"	7/16	0.4375
20"	36"	1/2	0.5000
24"	42"	1/2	0.5000
30"	48"	1/2	0.5000

NOTES:
1. CASING SPACER CONFIGURATION AND SPACING SHALL BE AS SHOWN ON MANUFACTURER'S DRAWINGS FOR SPECIFIC WORK; THESE MUST BE ACCEPTABLE TO THE CITY OF ROUND ROCK.
2. CASING SPACER SHALL BE AS MANUFACTURED BY CASCADE WATERWORKS MANUFACTURING COMPANY, MODEL CCS, OR APPROVED EQUAL.

RECORD SIGNED COPY ON FILE AT PUBLIC WORKS
APPROVED 04-01-10 DATE
THE ARCHITECT/ENGINEER ASSUMES RESPONSIBILITY FOR THE APPROPRIATE USE OF THIS DETAIL. (NOT TO SCALE)

CITY OF ROUND ROCK

PIPE ENCASEMENT DETAIL

DRAWING NO: WT-16

RECORD SIGNED COPY ON FILE AT UARS DEPARTMENT
APPROVED 03-01-18 DATE
THE ARCHITECT/ENGINEER ASSUMES RESPONSIBILITY FOR THE APPROPRIATE USE OF THIS DETAIL. (NOT TO SCALE)

CITY OF ROUND ROCK

GATE VALVE DETAIL

DRAWING NO: WT-22

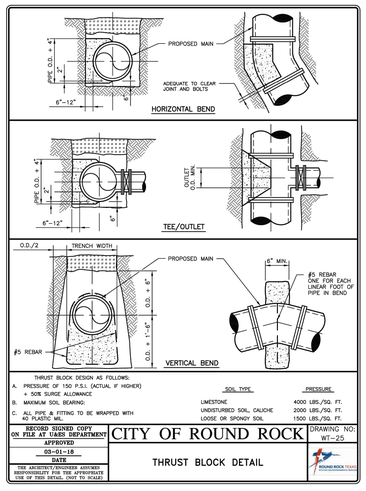

THRUST BLOCK DESIGN AS FOLLOWS:
A. PRESSURE OF 150 P.S.I. (ACTUAL IF HIGHER) + 50% SURGE ALLOWANCE
B. MAXIMUM SOIL BEARING
C. ALL PIPE & FITTING TO BE WRAPPED WITH 4Q PLASTIC MIL.

SOIL TYPE	PRESSURE
LIMESTONE	4000 LBS./SQ. FT.
UNDISTURBED SOIL, CALICHE	2000 LBS./SQ. FT.
LOOSE OR SPONGY SOIL	1500 LBS./SQ. FT.

RECORD SIGNED COPY ON FILE AT UARS DEPARTMENT
APPROVED 03-01-18 DATE
THE ARCHITECT/ENGINEER ASSUMES RESPONSIBILITY FOR THE APPROPRIATE USE OF THIS DETAIL. (NOT TO SCALE)

CITY OF ROUND ROCK

THRUST BLOCK DETAIL

DRAWING NO: WT-25

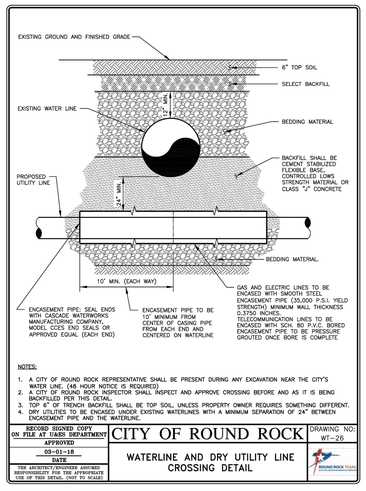

NOTES:
1. A CITY OF ROUND ROCK REPRESENTATIVE SHALL BE PRESENT DURING ANY EXCAVATION NEAR THE CITY'S WATER LINE. (48 HOUR NOTICE IS REQUIRED)
2. A CITY OF ROUND ROCK INSPECTOR SHALL INSPECT AND APPROVE CROSSING BEFORE AND AS IT IS BEING BACKFILLED PER THIS DETAIL.
3. TOP 6" OF TRENCH BACKFILL SHALL BE TOP SOIL, UNLESS PROPERTY OWNER REQUIRES SOMETHING DIFFERENT.
4. DRY UTILITIES TO BE ENCASED UNDER EXISTING WATERLINES WITH A MINIMUM SEPARATION OF 24" BETWEEN ENCASEMENT PIPE AND THE WATERLINE.

RECORD SIGNED COPY ON FILE AT UARS DEPARTMENT
APPROVED 03-01-18 DATE
THE ARCHITECT/ENGINEER ASSUMES RESPONSIBILITY FOR THE APPROPRIATE USE OF THIS DETAIL. (NOT TO SCALE)

CITY OF ROUND ROCK

WATERLINE AND DRY UTILITY LINE CROSSING DETAIL

DRAWING NO: WT-26

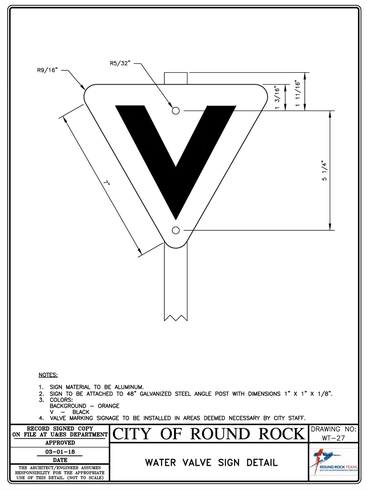

NOTES:
1. SIGN MATERIAL TO BE ALUMINUM.
2. SIGN TO BE ATTACHED TO 48" GALVANIZED STEEL ANGLE POST WITH DIMENSIONS 1" X 1" X 1/8".
3. COLORS:
BACKGROUND = ORANGE
W = BLACK
4. VALVE MARKING SIGNAGE TO BE INSTALLED IN AREAS DEEMED NECESSARY BY CITY STAFF.

RECORD SIGNED COPY ON FILE AT UARS DEPARTMENT
APPROVED 03-01-18 DATE
THE ARCHITECT/ENGINEER ASSUMES RESPONSIBILITY FOR THE APPROPRIATE USE OF THIS DETAIL. (NOT TO SCALE)

CITY OF ROUND ROCK

WATER VALVE SIGN DETAIL

DRAWING NO: WT-27

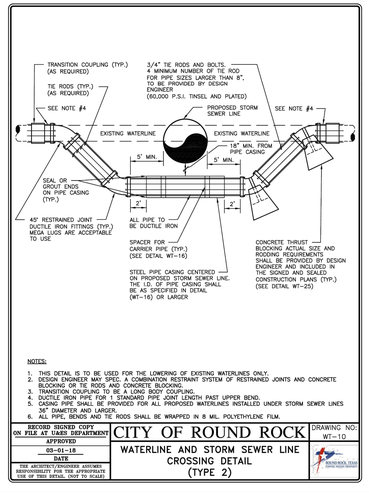

NOTES:
1. THIS DETAIL IS TO BE USED FOR THE LOWERING OF EXISTING WATERLINES ONLY.
2. DESIGN ENGINEER MAY SPEC A COMBINATION RESTRAINT SYSTEM OF RESTRAINED JOINTS AND CONCRETE BLOCKING OR TIE RODS AND CONCRETE BLOCKING.
3. TRANSITION COUPLING TO BE A LONG BODY COUPLING.
4. DUCTILE IRON PIPE FOR 1 STANDARD PIPE JOINT LENGTH PAST UPPER BEND.
5. CASING PIPE SHALL BE PROVIDED FOR ALL PROPOSED WATERLINES INSTALLED UNDER STORM SEWER LINES 36" DIAMETER AND LARGER.
6. ALL PIPE, BENDS AND TIE RODS SHALL BE WRAPPED IN 8 MIL. POLYETHYLENE FILM.

RECORD SIGNED COPY ON FILE AT UARS DEPARTMENT
APPROVED 03-01-18 DATE
THE ARCHITECT/ENGINEER ASSUMES RESPONSIBILITY FOR THE APPROPRIATE USE OF THIS DETAIL. (NOT TO SCALE)

CITY OF ROUND ROCK

WATERLINE AND STORM SEWER LINE CROSSING DETAIL (TYPE 2)

DRAWING NO: WT-10

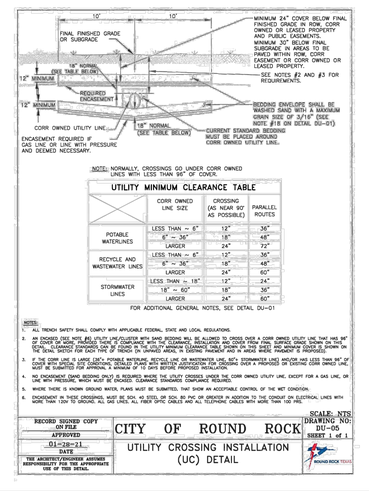

NOTE: NORMALLY, CROSSINGS GO UNDER CORR OWNED LINES WITH LESS THAN 96" OF COVER.

UTILITY MINIMUM CLEARANCE TABLE

	CORR OWNED LINE SIZE	CROSSING (AS NEAR 90° AS POSSIBLE)	PARALLEL ROUTES
POTABLE WATERLINES	LESS THAN – 6"	12"	36"
	6" – 36"	18"	48"
	LARGER	24"	72"
RECYCLE AND WASTEWATER LINES	LESS THAN – 6"	12"	36"
	8" – 36"	18"	48"
	LARGER	24"	60"
STORMWATER LINES	LESS THAN – 18"	12"	24"
	18" – 60"	18"	36"
	LARGER	24"	60"

FOR ADDITIONAL GENERAL NOTES, SEE DETAIL DU-01

NOTES:
1. ALL TRENCH SAFETY SHALL COMPLY WITH APPLICABLE FEDERAL, STATE AND LOCAL REGULATIONS.
2. AN ENCASED (TAPE INTO JEE UTILITY LINE/FILLISTER WITH SAND BEDDING WILL BE ALLOWED TO CROSS OVER A CORR OWNED UTILITY LINE THAT HAS 96" OF COVER OR MORE WITHOUT ENCASEMENT. THE CONTRACTOR SHALL EXCAVATE AND EXPOSE THE EXISTING UTILITY LINE AT LEAST 24 HOURS PRIOR TO CONSTRUCTION TO CONFIRM ELEVATIONS SHOWN ON THE PLANS. ELEVATIONS SHOWN ON THE PLANS ARE BASED ON DATA OBTAINED FROM SURFACE UTILITY MARKINGS AND ARE NOT GUARANTEED TO BE ACCURATE OR COMPLETE.
3. IF THE CORR LINE IS LARGE (36"+, POTABLE WATERLINE, RECYCLE LINE OR WASTEWATER LINE, 60"+ STORMWATER LINE) AND/OR HAS LESS THAN 96" OF COVER PROPOSED UTILITY LINE CROSSINGS, DETAILED PLANS WITH DEPTH AND ELEVATION FOR CROSSING SHOR A PROPOSED OR EXISTING CORR OWNED LINE MUST BE SUBMITTED FOR APPROVAL A MINIMUM OF 10 DAYS BEFORE PROPOSED INSTALLATION.
4. NO ENCASEMENT (SAND BEDDING ONLY) IS REQUIRED WHERE THE UTILITY CROSSES UNDER THE CORR OWNED UTILITY LINE, EXCEPT FOR A GAS LINE, OR LINE WITH PRESSURE, WHICH MUST BE ENCASED. CLEARANCE STANDARDS COMPLIANCE REQUIRED.
5. WHERE THERE IS KNOWN GROUND WATER, PLANS MUST BE SUBMITTED, THAT SHOW AN ACCEPTABLE CONTROL OF THE WET CONDITION.
6. ENCASEMENT IN THESE CROSSINGS, MUST BE SCH. 40 STEEL OR SCH. 80 PVC OR GREATER IN ADDITION TO THE CONDUIT OR ELECTRICAL LINES WITH MORE THAN 1,000 VOLTS GROUND. ALL GAS LINES, ALL FIBER OPTIC CABLES AND ALL TELEPHONE CABLES WITH MORE THAN 100 PRS.

SCALE: NTS

RECORD SIGNED COPY ON FILE
APPROVED 01-28-21 DATE
THE ARCHITECT/ENGINEER ASSUMES RESPONSIBILITY FOR THE APPROPRIATE USE OF THIS DETAIL.

CITY OF ROUND ROCK

UTILITY CROSSING INSTALLATION (UC) DETAIL

DRAWING NO: DU-05
SHEET 1 of 1

CONTRACTOR FIELD SET

This plan set shall remain on the site or subdivision premises for the life of the project and shall be utilized for any and all interpretations contained herein.

BENCHMARKS

BM #51471 MAG NAIL SET "GCP 2"
SET AT THE NORTHEAST CORNER OF THE INTERSECTION OF STATE HIGHWAY 45 AND COUNTY ROAD 172, ±5.5' FROM "YIELD" SIGN.
N: 10147640.83
E: 3127942.60
ELEV.= 841.70'

BM #51473 MAG NAIL SET "GCP 3"
SET IN THE NORTH RIGHT-OF-WAY LINE OF HESTERS CROSSING ROAD, ±560' FROM THE INTERSECTION OF HESTERS CROSSING ROAD AND COUNTY ROAD 172, ±100 FROM CONCRETE SIGN "ENCOMPASS HEALTH".
N: 10149343.04
E: 3128315.81
ELEV.= 812.19'

No.	REVISIONS	DATE	BY

Kimley»Horn
© 2025 KIMLEY-HORN AND ASSOCIATES, INC.
10814 JOLLYVILLE ROAD, CAMPUS IV, SUITE 200, AUSTIN, TX 78759
PHONE: 512-418-1771 FAX: 512-418-1791
WWW.KIMLEY-HORN.COM
TEXAS REGISTERED ENGINEERING FIRM F-928

STATE OF TEXAS
NICHOLAS C. BROWN
107175
LICENSED
PROFESSIONAL ENGINEER
03/26/2025

KHA PROJECT 069284918
DATE MARCH 2025
SCALE: AS SHOWN
DESIGNED BY: MM
DRAWN BY: MM
CHECKED BY: NCB

WATER DETAILS

2525 CR 172
INDUSTRIAL
CITY OF ROUND ROCK
WILLIAMSON COUNTY, TEXAS

SHEET NUMBER
97 OF 227

SDP24-00001

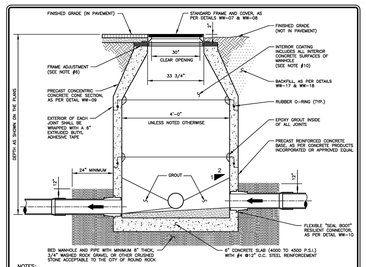

NOTES:

1. IF DROP IS SIX INCHES (6") TO TWO FEET (2'-0"), CONSTRUCTION OF DROP SHALL PROVIDE AN OVERSIZED INVERT TO EXTEND UNDER THE DROP CONNECTION.
2. SEE CONSTRUCTION PLANS FOR MANHOLE SIZE, LOCATION, CONFIGURATION, TYPE OF TOP SECTION, VENTING REQUIREMENTS, PIPE SIZES AND TYPES.
3. MANHOLES SHALL BE PRECAST A.S.T.M. C478 BELL AND SPIGOT WITH "O" RING JOINTS.
4. MANHOLE DEPTH SHALL BE MEASURED FROM THE TOP OF THE CASTING TO THE INVERT FROM MANHOLE DEPTH. ADDITIONALLY, MANHOLES LOCATED IN PAVEMENT TO BE DESIGNED FOR H20 TRAFFIC LOADING.
5. ALL MANHOLE COVERS SHALL BE BOLTED AND GASKETED, WHEN MANHOLES ARE LOCATED OUTSIDE OF PAVEMENT.
6. FRAME ADJUSTMENT HEIGHT SHALL CONSIST OF FIVE INCHES (5") MINIMUM TO EIGHTEEN INCHES (18") MAXIMUM. GRADE RINGS SHALL BE GROUTED WITH A NON-SHRINK GROUT INSIDE AND OUTSIDE. HDPE GRADE RINGS, MAY NOT BE USED.
7. FOR MANHOLES TO BE VENTED, SEE DETAILS WW-05 AND WW-06.
8. A FLOW CHANNEL SHALL BE CONSTRUCTED INSIDE MANHOLE TO DIRECT INFLUENT INTO THE FLOW STREAM. ALL DEBRIS SHALL BE REMOVED FROM INVERTS.
9. BASE SECTION SHALL BE DESIGNED FOR H20 LOADING, PLUS EARTH LOAD AT 130 PCF.
10. ENTIRE INTERIOR CONCRETE SURFACES OF WASTEWATER MANHOLES TO BE COATED WITH RAVEN 405, SPRAYWALL, OR APPROVED EQUAL, (WITH A UNIFORM THICKNESS OF 124 MILS AND A MINIMUM THICKNESS OF 100 MILS, APPLIED AFTER MANHOLE HAS PASSED THE VACUUM TEST). FOR REHABILITATING MANHOLES 1/2" MINIMUM THICKNESS CALCIUM ALUMINATE CEMENTITIOUS COATING AND OTHER INTERIOR SURFACES MAY BE COATED IF RECOMMENDED BY COATING MANUFACTURER. (IN LIEU OF INTERIOR COATINGS NEW PRECAST MANHOLES CONTAINING CONSHIELD WILL BE ACCEPTED PROVIDING THE MANUFACTURER STENCILS "CONSHIELD" ON THE INSIDE AND OUTSIDE OF ALL MANHOLE SECTIONS.)

RECORD SIGNED COPY ON FILE AT UARS DEPARTMENT	CITY OF ROUND ROCK	DRAWING NO:
APPROVED 03-01-18 DATE	PRECAST CONCRETE WASTEWATER MANHOLE DETAIL	WW-01

THE ARCHITECT/ENGINEER ASSUMES RESPONSIBILITY FOR THE APPROPRIATE USE OF THIS DETAIL. (NOT TO SCALE)

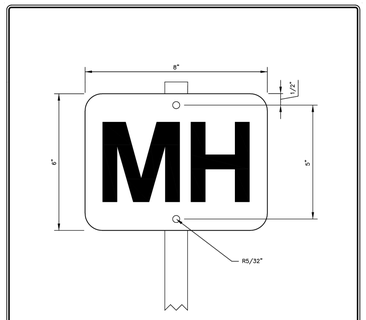

NOTES:

1. SIGN MATERIAL TO BE ALUMINUM.
2. SIGN TO BE ATTACHED TO 48" GALVANIZED STEEL ANGLE POST WITH DIMENSIONS 1" X 1" X 1/8".
3. COLORS:
   BACKGROUND – ORANGE
   LETTERING – BLACK
4. MANHOLE MARKING SIGNAGE TO BE INSTALLED IN AREAS DEEMED NECESSARY BY CITY STAFF.

RECORD SIGNED COPY ON FILE AT UARS DEPARTMENT	CITY OF ROUND ROCK	DRAWING NO:
APPROVED 03-01-18 DATE	MANHOLE MARKER SIGNAGE DETAIL	WW-19

THE ARCHITECT/ENGINEER ASSUMES RESPONSIBILITY FOR THE APPROPRIATE USE OF THIS DETAIL. (NOT TO SCALE)

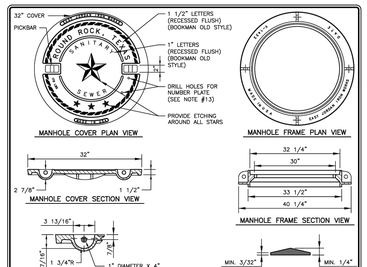

NOTES:

1. COVER AND FRAME SHALL COMPLY WITH STANDARD SPECIFICATIONS FOR DRAINAGE, SEWER, UTILITY AND RELATED CASTINGS: AASHTO DESIGNATION M306-04.
2. MANHOLE COVER SHALL BE MODEL NUMBER: V-1432–3 (PRODUCT NUMBER: 41432059), AS MANUFACTURED BY EAST JORDAN IRON WORKS INCORPORATED, OR APPROVED EQUAL.
3. MANHOLE FRAME SHALL BE MODEL NUMBER: V-1432 (PRODUCT NUMBER: 41432010), AS MANUFACTURED BY EAST JORDAN IRON WORKS INCORPORATED, OR APPROVED EQUAL.
4. MANHOLE COVER AND FRAME ASSEMBLY, IF ORDERED AS A SET, SHALL BE MODEL NUMBER: V-1432 (PRODUCT NUMBER: 41432089), AS MANUFACTURED BY EAST JORDAN IRON WORKS INCORPORATED, OR APPROVED EQUAL.
5. ALL CORNERS AND EDGES SHALL HAVE A 1/16" MINIMUM AND 1/8" MAXIMUM RADIUS.
6. MANHOLE COVERS SHALL BE CAST WITH TWO 1" DIAMETER STEEL PICKBARS.
7. MANHOLE COVER WEIGHT SHALL BE 175 LBS. FOR DUCTILE IRON. WEIGHT SHALL BE CAST ON BOTH TOP AND BOTTOM OF COVER.
8. MANUFACTURER SHALL CERTIFY THAT EACH MANHOLE COVER MEETS H5–20 LOADING.
9. FILLETS SHALL BE 1/4" RADIUS UNLESS OTHERWISE SPECIFIED.
10. MANUFACTURER SHALL REMOVE EXCESS IRON AND MACHINE FINISH SEATING SURFACES TO NOTED DIMENSIONS.
11. COVER SHALL BE DIPPED IN A WATER–BASED ASPHALTIC COATING, PRIOR TO SHIPMENT FROM FOUNDRY.
12. BOLTS SHALL BE 5/8"–11NC X 2" LONG HEX STAINLESS STEEL WITH WASHER.
13. MANUFACTURER SHALL DRILL 2–3/16" X 1/2" DEEP HOLES FOR A MANHOLE NUMBER PLATE TO BE PROVIDED BY THE CITY OF ROUND ROCK. THE TOP HOLE SHALL BE DRILLED 1" O.C. FROM THE BOTTOM OF THE PICKBAR AND THE BOTTOM HOLE SHALL BE DRILLED 4" O.C. FROM THE TOP HOLE.

RECORD SIGNED COPY ON FILE AT UARS DEPARTMENT	CITY OF ROUND ROCK	DRAWING NO:
APPROVED 03-01-18 DATE	NON–BOLTED WASTEWATER MANHOLE COVER AND FRAME DETAIL	WW-08

THE ARCHITECT/ENGINEER ASSUMES RESPONSIBILITY FOR THE APPROPRIATE USE OF THIS DETAIL. (NOT TO SCALE)

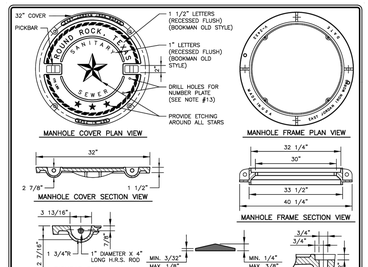

NOTES:

1. COVER AND FRAME SHALL COMPLY WITH STANDARD SPECIFICATIONS FOR DRAINAGE, SEWER, UTILITY AND RELATED CASTINGS: AASHTO DESIGNATION M306–04.
2. MANHOLE COVER SHALL BE MODEL NUMBER: V–2432–3 (PRODUCT NUMBER: 42432033), AS MANUFACTURED BY EAST JORDAN IRON WORKS INCORPORATED, OR APPROVED EQUAL.
3. MANHOLE FRAME SHALL BE MODEL NUMBER: V–2432 (PRODUCT NUMBER: 42432010), AS MANUFACTURED BY EAST JORDAN IRON WORKS INCORPORATED, OR APPROVED EQUAL.
4. MANHOLE COVER AND FRAME ASSEMBLY, IF ORDERED AS A SET, SHALL BE MODEL NUMBER: V–2432 (PRODUCT NUMBER: 42432073), AS MANUFACTURED BY EAST JORDAN IRON WORKS INCORPORATED, OR APPROVED EQUAL.
5. ALL CORNERS AND EDGES SHALL HAVE A 1/16" MINIMUM AND 1/8" MAXIMUM RADIUS.
6. MANHOLE COVERS SHALL BE CAST WITH TWO 1" DIAMETER STEEL PICKBARS.
7. MANHOLE COVER WEIGHT SHALL BE 175 LBS. FOR DUCTILE IRON. WEIGHT SHALL BE CAST ON BOTH TOP AND BOTTOM OF COVER.
8. MANUFACTURER SHALL CERTIFY THAT EACH MANHOLE COVER MEETS H5–20 LOADING.
9. FILLETS SHALL BE 1/4" RADIUS UNLESS OTHERWISE SPECIFIED.
10. MANUFACTURER SHALL REMOVE EXCESS IRON AND MACHINE FINISH SEATING SURFACES TO NOTED DIMENSIONS.
11. COVER SHALL BE DIPPED IN A WATER–BASED ASPHALTIC COATING, PRIOR TO SHIPMENT FROM FOUNDRY.
12. BOLTS SHALL BE 5/8"–11NC X 2" LONG HEX STAINLESS STEEL WITH WASHER.
13. MANUFACTURER SHALL DRILL 2–3/16" X 1/2" DEEP HOLES FOR A MANHOLE NUMBER PLATE TO BE PROVIDED BY THE CITY OF ROUND ROCK. THE TOP HOLE SHALL BE DRILLED 1" O.C. FROM THE BOTTOM OF THE PICKBAR AND THE BOTTOM HOLE SHALL BE DRILLED 4" O.C. FROM THE TOP HOLE.

RECORD SIGNED COPY ON FILE AT UARS DEPARTMENT	CITY OF ROUND ROCK	DRAWING NO:
APPROVED 03-01-18 DATE	BOLTED WASTEWATER MANHOLE COVER AND FRAME DETAIL	WW-07

THE ARCHITECT/ENGINEER ASSUMES RESPONSIBILITY FOR THE APPROPRIATE USE OF THIS DETAIL. (NOT TO SCALE)

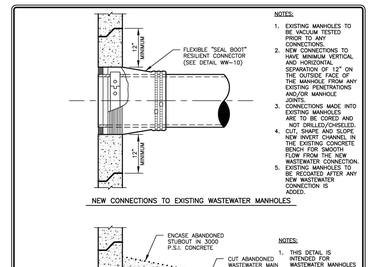

NOTES:

1. THIS DETAIL IS INTENDED FOR WASTEWATER MANHOLES THAT WILL REMAIN IN SERVICE. FOR WASTEWATER MANHOLES THAT ARE TO BE ABANDONED, REFERENCE DETAIL WW–15.
2. WASTEWATER MANHOLE TO BE RECOATED AFTER GROUT IS INSTALLED.
3. BLOCK THE INLET OF THE MANHOLE WITH CHICKEN WIRE AND 2–#3 REBAR. GROUT THE INSIDE OF THE MANHOLE FLUSH WITH THE MANHOLE WALL.
4. CONNECTIONS 24" AND LARGER REQUIRE BRICK BLOCKING TO BE INSTALLED PRIOR TO GROUTING.

RECORD SIGNED COPY ON FILE AT UARS DEPARTMENT	CITY OF ROUND ROCK	DRAWING NO:
APPROVED 03-01-18 DATE	EXISTING WASTEWATER MANHOLE CONNECTION DETAIL	WW-21

THE ARCHITECT/ENGINEER ASSUMES RESPONSIBILITY FOR THE APPROPRIATE USE OF THIS DETAIL. (NOT TO SCALE)

NOTES:

1. AIR VENT PIPE TO BE 4" D.I.P., CLASS 53 WITH FLANGED CONNECTIONS.
2. ALL FITTINGS TO BE 150 PSIG RATED & ANSI/AWWA C110/A21.10.
3. AIR VENT PIPE RISER SHALL BE INSTALLED TO A MINIMUM DEPTH FROM GROUND SURFACE AS POSSIBLE, PREFERABLY LOCATED IN THE CONCENTRIC CONCRETE CONE.
4. MINIMUM ELEVATION AT THE VENT OPENING SHALL BE 1 FOOT (1'–0") ABOVE THE ULTIMATE 100 YEAR FLOOD PLAIN ELEVATION. IF ELEVATION OF VENT OPENING IS LESS THAN 1 FOOT (1'–0") ABOVE THE ULTIMATE 100 YEAR FLOOD PLAIN ELEVATION, A FLOMATIC MODEL 408, PART #2145 BALL CHECK VALVE, OR APPROVED EQUAL, WITH FLOATING TYPE BALL, SHALL BE INSTALLED AT DOWN TURNED OPENING OF VENT. A 16 MESH 304 STAINLESS STEEL INSECT SCREEN SHALL BE PLACED IN THE OPENING.

RECORD SIGNED COPY ON FILE AT UARS DEPARTMENT	CITY OF ROUND ROCK	DRAWING NO:
APPROVED 03-01-18 DATE	MANHOLE VENT FOR ABOVE GROUND INSTALLATION DETAIL (UNDEVELOPED AREAS)	WW-06

THE ARCHITECT/ENGINEER ASSUMES RESPONSIBILITY FOR THE APPROPRIATE USE OF THIS DETAIL. (NOT TO SCALE)

NOTE:

CONCENTRIC CONCRETE CONE SECTION SHALL BE MANUFACTURED USING 4000 TO 4500 P.S.I. CONCRETE, 28 DAY STRENGTH AND IN ACCORDANCE WITH A.S.T.M. C478, AS MANUFACTURED BY CONCRETE PRODUCTS INCORPORATED, OR APPROVED EQUAL.

RECORD SIGNED COPY ON FILE AT UARS DEPARTMENT	CITY OF ROUND ROCK	DRAWING NO:
APPROVED 03-01-18 DATE	PRECAST 48" CONCENTRIC CONCRETE CONE SECTION DETAIL	WW-09

THE ARCHITECT/ENGINEER ASSUMES RESPONSIBILITY FOR THE APPROPRIATE USE OF THIS DETAIL. (NOT TO SCALE)

NOTES:

1. MINIMUM DROP FROM INLET TO OUTLET OF MANHOLE IS 0.1 FEET AND MAXIMUM DROP IS 2 FEET, UNLESS SPECIAL APPROVAL IS OBTAINED FROM THE CITY OF ROUND ROCK.
2. INVERT CHANNELS TO BE CONSTRUCTED FOR SMOOTH FLOW WITH NO OBSTRUCTIONS.
3. SPILLWAYS SHALL BE CONSTRUCTED BETWEEN PIPES WITH DIFFERENT INVERT ELEVATIONS PROVIDING FOR SMOOTH FLOW.
4. CHANNELS FOR FUTURE CONSTRUCTIONS, SHALL BE CONSTRUCTED WITH PIPE EXTENDING 3' BEYOND EXTERIOR OF MANHOLE WALL, WITH GLUED PLUG.
5. SLOPE MANHOLE BENCH AT 2:1 SLOPE FROM MANHOLE WALL TO CHANNEL.
6. INVERT CHANNEL SHALL BE A MINIMUM OF 1/2 THE DIAMETER OF THE LARGEST PIPE OR FOUR INCHES (4") DEEP.

RECORD SIGNED COPY ON FILE AT UARS DEPARTMENT	CITY OF ROUND ROCK	DRAWING NO:
APPROVED 03-01-18 DATE	WASTEWATER FLOW PATTERNS FOR INVERT CHANNELS DETAIL	WW-11

THE ARCHITECT/ENGINEER ASSUMES RESPONSIBILITY FOR THE APPROPRIATE USE OF THIS DETAIL. (NOT TO SCALE)

NOTES:

1. ALL PIPE TO BE SDR 26.
2. ALL FITTINGS TO BE SCR 35 SOLVENT WELD FITTINGS.

RECORD SIGNED COPY ON FILE AT UARS DEPARTMENT	CITY OF ROUND ROCK	DRAWING NO:
APPROVED 03-01-18 DATE	WASTEWATER SERVICE CLEAN–OUT DETAIL (NON–PAVED SURFACE)	WW-14

THE ARCHITECT/ENGINEER ASSUMES RESPONSIBILITY FOR THE APPROPRIATE USE OF THIS DETAIL. (NOT TO SCALE)

NOTES:

1. ALL PIPE TO BE SDR 26.
2. ALL FITTINGS TO BE SCR 35 SOLVENT WELD FITTINGS.

RECORD SIGNED COPY ON FILE AT UARS DEPARTMENT	CITY OF ROUND ROCK	DRAWING NO:
APPROVED 03-01-18 DATE	WASTEWATER SERVICE CLEAN–OUT DETAIL (PAVED SURFACE)	WW-13

THE ARCHITECT/ENGINEER ASSUMES RESPONSIBILITY FOR THE APPROPRIATE USE OF THIS DETAIL. (NOT TO SCALE)

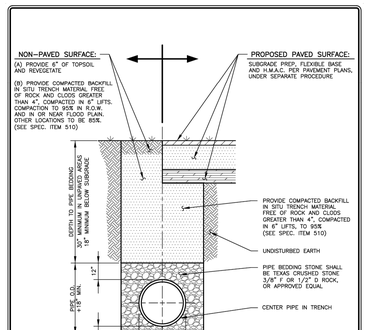

NOTE:

ALL TRENCHING AND TRENCH SAFETY SHALL COMPLY WITH APPLICABLE FEDERAL, STATE AND LOCAL REGULATIONS.

RECORD SIGNED COPY ON FILE AT UARS DEPARTMENT	CITY OF ROUND ROCK	DRAWING NO:
APPROVED 03-01-18 DATE	WASTEWATER LINE BEDDING AND SURFACE REPAIR DETAIL (NON–PAVED & PROPOSED PAVED SURFACE)	WW-18

THE ARCHITECT/ENGINEER ASSUMES RESPONSIBILITY FOR THE APPROPRIATE USE OF THIS DETAIL. (NOT TO SCALE)

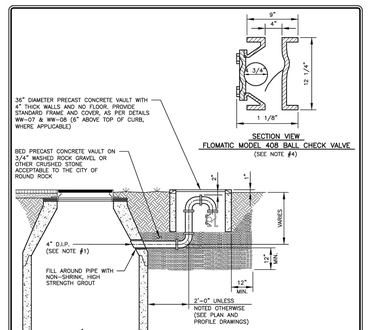

NOTES:

1. AIR VENT PIPE TO BE 4" D.I.P., CLASS 53 WITH FLANGED CONNECTIONS.
2. ALL FITTINGS TO BE 150 PSIG RATED & ANSI/AWWA C110/A21.10.
3. AIR VENT PIPE RISER SHALL BE INSTALLED TO A MINIMUM DEPTH FROM GROUND SURFACE AS POSSIBLE, PREFERABLY LOCATED IN THE CONCENTRIC CONCRETE CONE.
4. MINIMUM ELEVATION AT THE VENT OPENING SHALL BE 1 FOOT (1'–0") ABOVE THE ULTIMATE 100 YEAR FLOOD PLAIN ELEVATION. IF ELEVATION OF VENT OPENING IS LESS THAN 1 FOOT (1'–0") ABOVE THE ULTIMATE 100 YEAR FLOOD PLAIN ELEVATION, A FLOMATIC MODEL 408, PART #2145 BALL CHECK VALVE, OR APPROVED EQUAL, WITH FLOATING TYPE BALL, SHALL BE INSTALLED AT DOWN TURNED OPENING OF VENT. A 16 MESH 304 STAINLESS STEEL INSECT SCREEN SHALL BE PLACED IN THE OPENING.

RECORD SIGNED COPY ON FILE AT UARS DEPARTMENT	CITY OF ROUND ROCK	DRAWING NO:
APPROVED 03-01-18 DATE	MANHOLE VENT FOR BELOW GROUND INSTALLATION DETAIL (DEVELOPED AREAS)	WW-05

THE ARCHITECT/ENGINEER ASSUMES RESPONSIBILITY FOR THE APPROPRIATE USE OF THIS DETAIL. (NOT TO SCALE)

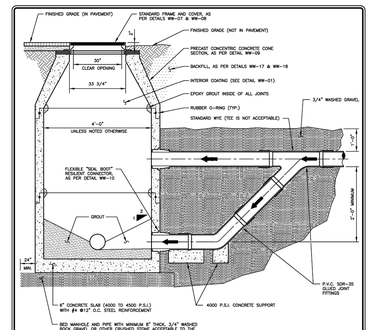

NOTES:

1. SEE NOTES #2 THROUGH #10 ON DETAIL WW–01.
2. DROP CONNECTIONS SHALL BE REQUIRED WHENEVER AN INFLUENT SEWER IS LOCATED MORE THAN TWO FEET (2'–0") ABOVE THE MAIN INVERT CHANNEL.
3. WHEN P.V.C. PIPE IS USED IN SANITARY SEWER LINES, SOLVENT TYPE JOINT P.V.C. FITTINGS TO BE UTILIZED IN THE DROP ASSEMBLY ONLY. FITTINGS TO BE P.V.C. SCR–35 WITH TWO PART WATER RESISTANT GLUE AT ALL JOINTS.

RECORD SIGNED COPY ON FILE AT UARS DEPARTMENT	CITY OF ROUND ROCK	DRAWING NO:
APPROVED 03-01-18 DATE	PRECAST CONCRETE WASTEWATER MANHOLE WITH DROP CONNECTION DETAIL	WW-02

THE ARCHITECT/ENGINEER ASSUMES RESPONSIBILITY FOR THE APPROPRIATE USE OF THIS DETAIL. (NOT TO SCALE)

TYPICAL SANITARY SEWER/WATER CROSSING DETAIL

NOT–TO–SCALE

CONTRACTOR FIELD SET

This plan set shall remain on the site or subdivision premises for the life of the project and shall be utilized for any and all improvements contained herein.

BENCHMARKS

BM #51471 MAG NAIL SET "GCP 2"
SET AT THE NORTHEAST CORNER OF THE INTERSECTION OF STATE HIGHWAY 45 AND COUNTY ROAD 172, ±5.5' FROM "YIELD" SIGN.
N: 10147640.83
E: 3127942.60
ELEV.= 841.70'

BM #51473 MAG NAIL SET "GCP 3"
SET IN THE NORTH RIGHT–OF–WAY LINE OF HESTERS CROSSING ROAD, ±560' FROM THE INTERSECTION OF HESTERS CROSSING ROAD AND COUNTY ROAD 172, ±100 FROM CONCRETE SIGN "ENCOMPASS HEALTH".
N: 10149343.04
E: 3128315.81
ELEV.= 812.19'

No.	REVISIONS	DATE	BY

Kimley»Horn
© 2025 KIMLEY–HORN AND ASSOCIATES, INC.
10814 JOLLYVILLE ROAD, CAMPUS IV, SUITE 200, AUSTIN, TX 78759
PHONE: 512-418-1771 FAX: 512-418-1791
WWW.KIMLEY–HORN.COM
TEXAS REGISTERED ENGINEERING FIRM F-928

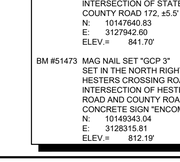

03/26/2025

KHA PROJECT 069284918	DATE MARCH 2025	SCALE: AS SHOWN	DESIGNED BY: MM	DRAWN BY: MM	CHECKED BY: NCB

WASTEWATER DETAILS

2525 CR 172
INDUSTRIAL
CITY OF ROUND ROCK
WILLIAMSON COUNTY, TEXAS

SHEET NUMBER
98 OF 227

SDP24-00001

Plotted By: Toraldo Knight, Paula Date: April 17, 2025 02:56:06pm File Path: K:\AUS_Civil\069284910 – DAUS Round Rock\Cad\PlanSheets–SDP\C– Wastewater Details.dwg
This document, together with the concepts and designs presented herein, as an instrument of service, is intended only for the specific purpose and client for which it was prepared. Reuse of and improper reliance on this document without authorization and adaptation by Kimley–Horn and Associates, Inc. shall be without liability to Kimley–Horn and Associates, Inc.

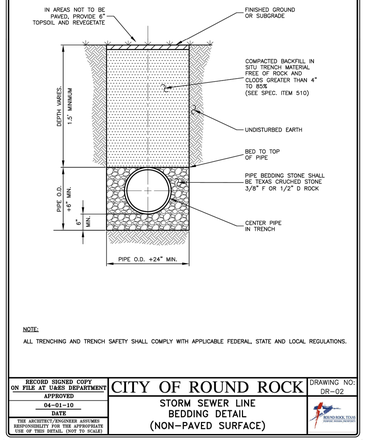

NOTE:

ALL TRENCHING AND TRENCH SAFETY SHALL COMPLY WITH APPLICABLE FEDERAL, STATE AND LOCAL REGULATIONS.

RECORD SIGNED COPY ON FILE AT UARS DEPARTMENT	CITY OF ROUND ROCK	DRAWING NO: DR-02
APPROVED 04-01-10 DATE	STORM SEWER LINE BEDDING DETAIL (NON-PAVED SURFACE)	ROUND ROCK, TEXAS

THE ARCHITECT/ENGINEER ASSUMES RESPONSIBILITY FOR THE APPROPRIATE USE OF THIS DETAIL. (NOT TO SCALE)

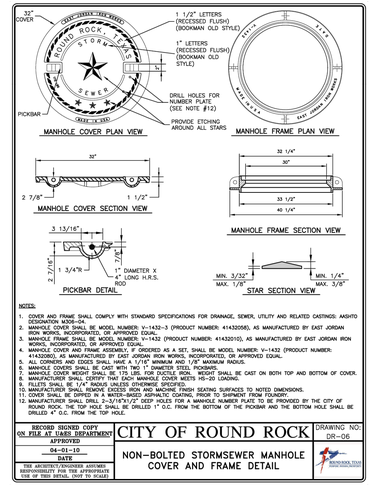

NOTES:

1. COVER AND FRAME SHALL COMPLY WITH STANDARD SPECIFICATIONS FOR DRAINAGE, SEWER, UTILITY AND RELATED CASTINGS: AASHTO DESIGNATION M306-04.
2. MANHOLE COVER SHALL BE MODEL NUMBER: V-1432-3 (PRODUCT NUMBER: 41432058), AS MANUFACTURED BY EAST JORDAN IRON WORKS, INCORPORATED, OR APPROVED EQUAL.
3. MANHOLE FRAME SHALL BE MODEL NUMBER: V-1432 (PRODUCT NUMBER: 41432010), AS MANUFACTURED BY EAST JORDAN IRON WORKS, INCORPORATED, OR APPROVED EQUAL.
4. MANHOLE COVER AND FRAME ASSEMBLY, IF ORDERED AS A SET, SHALL BE MODEL NUMBER: V-1432 (PRODUCT NUMBER: 41432000), AS MANUFACTURED BY EAST JORDAN IRON WORKS, INCORPORATED, OR APPROVED EQUAL.
5. ALL CORNERS AND EDGES SHALL HAVE A 1/16" MINIMUM AND 1/8" MAXIMUM RADIUS.
6. MANHOLE COVER WEIGHT SHALL BE 175 LBS. FOR DUCTILE IRON. WEIGHT SHALL BE CAST ON BOTH TOP AND BOTTOM OF COVER.
7. MANUFACTURER SHALL CERTIFY THAT EACH MANHOLE COVER MEETS HS-20 LOADING.
8. FILLETS SHALL BE 1/4" RADIUS UNLESS OTHERWISE SPECIFIED.
9. MANUFACTURER SHALL REMOVE EXCESS IRON AND MACHINE FINISH SEATING SURFACES TO NOTED DIMENSIONS.
10. MANUFACTURER SHALL DRILL 2-3/16"X1/2" DEEP HOLES FOR A MANHOLE NUMBER PLATE TO BE PROVIDED BY THE CITY OF ROUND ROCK. THE TOP HOLE SHALL BE DRILLED 1" O.C. FROM THE BOTTOM OF THE PICKBAR AND THE BOTTOM HOLE SHALL BE DRILLED 4" O.C. FROM THE TOP HOLE.

RECORD SIGNED COPY ON FILE AT UARS DEPARTMENT	CITY OF ROUND ROCK	DRAWING NO: DR-06
APPROVED 04-01-10 DATE	NON-BOLTED STORMSEWER MANHOLE COVER AND FRAME DETAIL	ROUND ROCK, TEXAS

THE ARCHITECT/ENGINEER ASSUMES RESPONSIBILITY FOR THE APPROPRIATE USE OF THIS DETAIL. (NOT TO SCALE)

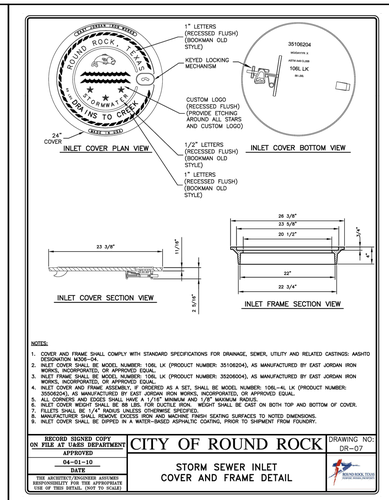

NOTES:

1. COVER AND FRAME SHALL COMPLY WITH STANDARD SPECIFICATIONS FOR DRAINAGE, SEWER, UTILITY AND RELATED CASTINGS: AASHTO DESIGNATION M306-04.
2. INLET COVER SHALL BE MODEL NUMBER: 106L LK (PRODUCT NUMBER: 35106204), AS MANUFACTURED BY EAST JORDAN IRON WORKS, INCORPORATED, OR APPROVED EQUAL.
3. INLET FRAME SHALL BE MODEL NUMBER: 106L LK (PRODUCT NUMBER: 35206004), AS MANUFACTURED BY EAST JORDAN IRON WORKS, INCORPORATED, OR APPROVED EQUAL.
4. INLET COVER AND FRAME ASSEMBLY, IF ORDERED AS A SET, SHALL BE MODEL NUMBER: 106L-LK (PRODUCT NUMBER: 35006204), AS MANUFACTURED BY EAST JORDAN IRON WORKS, INCORPORATED, OR APPROVED EQUAL.
5. ALL CORNERS AND EDGES SHALL HAVE A 1/16" MINIMUM AND 1/8" MAXIMUM RADIUS.
6. INLET COVER WEIGHT SHALL BE 85 LBS. FOR DUCTILE IRON. WEIGHT SHALL BE CAST ON BOTH TOP AND BOTTOM OF COVER.
7. FILLETS SHALL BE 1/4" RADIUS UNLESS OTHERWISE SPECIFIED.
8. MANUFACTURER SHALL REMOVE EXCESS IRON AND MACHINE FINISH SEATING SURFACES TO NOTED DIMENSIONS.
9. INLET COVER SHALL BE DIPPED IN A WATER-BASED ASPHALTIC COATING, PRIOR TO SHIPMENT FROM FOUNDRY.

RECORD SIGNED COPY ON FILE AT UARS DEPARTMENT	CITY OF ROUND ROCK	DRAWING NO: DR-07
APPROVED 04-01-10 DATE	STORM SEWER INLET COVER AND FRAME DETAIL	ROUND ROCK, TEXAS

THE ARCHITECT/ENGINEER ASSUMES RESPONSIBILITY FOR THE APPROPRIATE USE OF THIS DETAIL. (NOT TO SCALE)

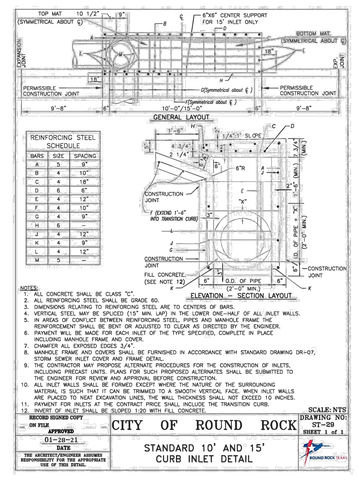

NOTES:

1. ALL CONCRETE SHALL BE CLASS "C".
2. ALL REINFORCING STEEL SHALL BE GRADE 60.
3. DIMENSIONS RELATING TO REINFORCING STEEL ARE TO CENTERS OF BARS.
4. VERTICAL STEEL MAY BE SPLICED (15" MIN. LAP) IN THE LOWER ONE-HALF OF ALL INLET WALLS.
5. IN AREAS OF CONFLICT BETWEEN REINFORCING STEEL, PIPES AND MANHOLE FRAME THE REINFORCEMENT SHALL BE BENT OR ADJUSTED TO CLEAR AS DIRECTED BY THE ENGINEER.
6. PAYMENT WILL BE MADE FOR EACH INLET OF THE TYPE SPECIFIED, COMPLETE IN PLACE INCLUDING MANHOLE FRAME AND COVER.
7. CHAMFER ALL EXPOSED EDGES 3/4".
8. MANHOLE FRAME AND COVERS SHALL BE FURNISHED IN ACCORDANCE WITH STANDARD DRAWING DR-07, STORM SEWER INLET COVER AND FRAME DETAIL.
9. THE CONTRACTOR SHALL SUBMIT ALTERNATE PROCEDURES FOR THE CONSTRUCTION OF INLETS, INCLUDING PRECAST UNITS, PLANS FOR SUCH PROPOSED ALTERNATES SHALL BE SUBMITTED TO THE ENGINEER FOR REVIEW AND APPROVAL BEFORE CONSTRUCTION.
10. ALL INLET WALLS SHALL BE FORMED EXCEPT WHERE THE NATURE OF THE SURROUNDING MATERIAL IS SUCH THAT IT CAN BE TRIMMED TO A SMOOTH VERTICAL FACE. WHEN INLET WALLS ARE PLACED TO NEAT EXCAVATION LINES, THE WALL THICKNESS SHALL NOT EXCEED 10 INCHES.
11. PAYMENT FOR INLETS AT THE CONTRACT PRICE SHALL INCLUDE THE TRANSITION CURB.
12. INVERT OF INLET SHALL BE SLOPED 1/2D, WITH FILL CONCRETE.

SCALE: NTS

RECORD SIGNED COPY — ON FILE APPROVED 01-28-21 DATE	CITY OF ROUND ROCK	DRAWING NO: ST-09 SHEET 1 of 1
	STANDARD 10' AND 15' CURB INLET DETAIL	ROUND ROCK, TEXAS

THE ARCHITECT/ENGINEER ASSUMES RESPONSIBILITY FOR THE APPROPRIATE USE OF THIS DETAIL.

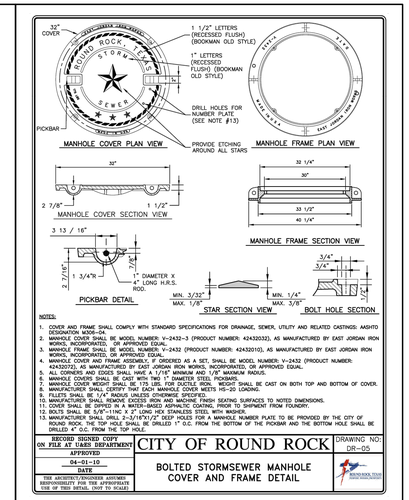

NOTES:

1. COVER AND FRAME SHALL COMPLY WITH STANDARD SPECIFICATIONS FOR DRAINAGE, SEWER, UTILITY AND RELATED CASTINGS: AASHTO DESIGNATION M306-04.
2. MANHOLE COVER SHALL BE MODEL NUMBER: V-2432-3 (PRODUCT NUMBER: 42432032), AS MANUFACTURED BY EAST JORDAN IRON WORKS, INCORPORATED, OR APPROVED EQUAL.
3. ALL CORNERS AND EDGES SHALL HAVE A 1/16" MINIMUM AND 1/8" MAXIMUM RADIUS.
4. MANHOLE FRAME SHALL BE MODEL NUMBER: V-2432 (PRODUCT NUMBER: 42432010), AS MANUFACTURED BY EAST JORDAN IRON WORKS, INCORPORATED, OR APPROVED EQUAL.
5. MANHOLE COVER AND FRAME ASSEMBLY, IF ORDERED AS A SET, SHALL BE MODEL NUMBER: V-2432 (PRODUCT NUMBER: 42432000), AS MANUFACTURED BY EAST JORDAN IRON WORKS, INCORPORATED, OR APPROVED EQUAL.
6. ALL CORNERS AND EDGES SHALL HAVE A 1/16" MINIMUM AND 1/8" MAXIMUM RADIUS.
7. MANHOLE COVERS SHALL BE CAST WITH TWO 1" DIAMETER STEEL PICKBARS.
8. MANHOLE COVER WEIGHT SHALL BE 175 LBS. FOR DUCTILE IRON. WEIGHT SHALL BE CAST ON BOTH TOP AND BOTTOM OF COVER.
9. MANUFACTURER SHALL CERTIFY THAT EACH MANHOLE COVER MEETS HS-20 LOADING.
10. FILLETS SHALL BE 1/4" RADIUS UNLESS OTHERWISE SPECIFIED.
11. MANUFACTURER SHALL REMOVE EXCESS IRON AND MACHINE FINISH SEATING SURFACES TO NOTED DIMENSIONS.
12. COVER SHALL BE DIPPED IN A WATER-BASED ASPHALTIC COATING, PRIOR TO SHIPMENT FROM FOUNDRY.
13. BOLTS SHALL BE 5/8"-11NC X 2" LONG HEX STAINLESS STEEL WITH WASHER.
14. MANUFACTURER SHALL DRILL 2-3/16"X1/2" DEEP HOLES FOR A MANHOLE NUMBER PLATE TO BE PROVIDED BY THE CITY OF ROUND ROCK. THE TOP HOLE SHALL BE DRILLED 1" O.C. FROM THE BOTTOM OF THE PICKBAR AND THE BOTTOM HOLE SHALL BE DRILLED 4" O.C. FROM THE TOP HOLE.

RECORD SIGNED COPY ON FILE AT UARS DEPARTMENT	CITY OF ROUND ROCK	DRAWING NO: DR-05
APPROVED 04-01-15 DATE	BOLTED STORMSEWER MANHOLE COVER AND FRAME DETAIL	ROUND ROCK, TEXAS

THE ARCHITECT/ENGINEER ASSUMES RESPONSIBILITY FOR THE APPROPRIATE USE OF THIS DETAIL. (NOT TO SCALE)

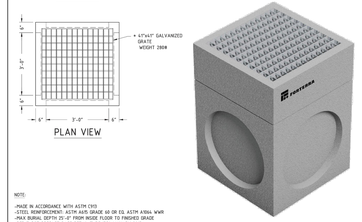

NOTE:

-PAGE IN ACCORDANCE WITH ASTM C923
-LOCEL REINFORCEMENT: ASTM A425 GRADE 60 OR EQ. ASTM A1064 WWR
-MAX BURIAL DEPTH 25'-0" FROM INSIDE FLOOR TO FINISHED GRADE
-PER TxDOT PRECAST BASE DETAIL TYPE "PB" JANUARY 2015.
-STEPS NOT AVAILABLE
-ADA GRATE AVAILABLE.

FORTERRA	REGION, STATE: CENTRAL TX	GRATE INLET - GALVANIZED 3'-0" x 3'-0"
	DATE: 2018 SECT/PAGE: 24-2	

ALL CONCRETE SHALL HAVE A 28 DAY COMPRESSIVE STRENGTH OF 4500 psi.

REINFORCING STEEL SHALL COMPLY WITH ASTM A615 GRADE 60, A706 GRADE 60 OR A497 GRADE 70. BAR BENDING AND PLACEMENT SHALL COMPLY WITH THE LATEST ACI STANDARDS

STANDARD STRUCTURAL DESIGN IS BASED ON AASHTO H-20 SIDEWALK LOADING.

WATER TABLE IS AT 3'-0" BELOW GRADE FOR STANDARD STRUCTURAL DESIGN

THE STANDARD DESIGN IS BASED ON THE TOP AT GRADE AND THE BASE AT 5'-0" MAX. BELOW GRADE.

THE STRUCTURE SHALL BE PLACED ON A COMPACTED GRANULAR BASE TO INSURE UNIFORM DISTRIBUTION OF SOIL PRESSURES.

SPECIAL DESIGNS BASED ON OTHER LOADINGS OR DEEPER INSTALLATION DEPTHS ARE AVAILABLE ON REQUEST.

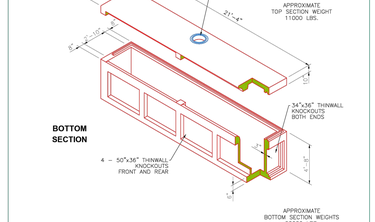

Oldcastle Precast	SI20-INL5	SAN ANTONIO 20 FT. CURB INLET WITH 5.0 INVERT
1900 Rolling Road San Antonio, TX 78214 Phone: (210) 923-4523 Fax: (210) 921-0473	FILE NAME: SANIN20.dwg ISSUE DATE: March, 2005 www.oldcastlesanantonio.com	Copyright 2005 Stoneworks, Ltd. All Rights Reserved

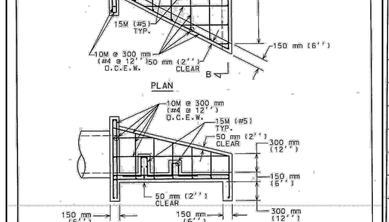

CITY OF AUSTIN DEPARTMENT OF WATERSHED PROTECTION AND DEVELOPMENT REVIEW	STANDARD HEADWALL AND ENERGY DISSIPATORS	STANDARD NO. 508S-13 1 OF 2
Bill Gardner 8/26/13 ADOPTED	THE ARCHITECT/ENGINEER ASSUMES RESPONSIBILITY FOR APPROPRIATE USE OF THIS STANDARD.	

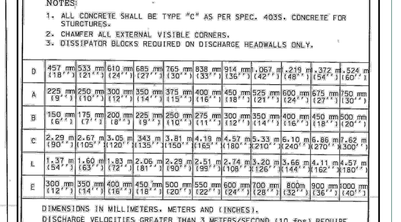

NOTES:

1. ALL CONCRETE SHALL BE TYPE "C" AS PER SPEC. 403S. CONCRETE FOR STRUCTURES.
2. CHAMFER ALL EXTERNAL VISIBLE CORNERS.
3. DISSIPATOR BLOCKS REQUIRED ON DISCHARGE HEADWALLS ONLY.

	D	A	B	C	L	E
18"	457 mm (18")	225 mm (9")	150 mm (6")	2.29 m (90")	1.37 m (54")	300 mm (12")
21"	533 mm (21")	250 mm (10")	175 mm (7")	2.67 m (105")	1.60 m (63")	350 mm (14")
24"	610 mm (24")	300 mm (12")	200 mm (8")	3.05 m (120")	1.83 m (72")	400 mm (16")
27"	685 mm (27")	350 mm (14")	225 mm (9")	3.43 m (135")	2.06 m (81")	450 mm (18")
30"	765 mm (30")	375 mm (15")	250 mm (10")	3.81 m (150")	2.29 m (90")	500 mm (20")
33"	838 mm (33")	400 mm (16")	275 mm (11")	4.19 m (165")	2.51 m (99")	550 mm (22")
36"	914 mm (36")	450 mm (18")	300 mm (12")	4.57 m (180")	2.74 m (108")	600 mm (24")
42"	1.067 m (42")	525 mm (21")	350 mm (14")	5.33 m (210")	3.20 m (126")	700 mm (28")
48"	1.219 m (48")	600 mm (24")	400 mm (16")	6.10 m (240")	3.66 m (144")	800m (32")
54"	1.372 m (54")	675 mm (27")	450 mm (18")	6.86 m (270")	4.11 m (162")	900 mm (36")
60"	1.524 m (60")	750 mm (30")	500 mm (20")	7.62 m (300")	4.57 m (180")	1000 mm (40")

DIMENSIONS IN MILLIMETERS. METERS AND (INCHES).
DISCHARGE VELOCITIES GREATER THAN 3 METERS/SECOND (10 fps) REQUIRE ROCK OUTLET PROTECTION.

CITY OF AUSTIN DEPARTMENT OF WATERSHED PROTECTION AND DEVELOPMENT REVIEW	STANDARD HEADWALL AND ENERGY DISSIPATORS	STANDARD NO. 508S-13 2 OF 2
Bill Gardner 8/26/13 ADOPTED	THE ARCHITECT/ENGINEER ASSUMES RESPONSIBILITY FOR APPROPRIATE USE OF THIS STANDARD.	

ALL CONCRETE SHALL HAVE A 28 DAY COMPRESSIVE STRENGTH OF 4500 psi.

REINFORCING STEEL SHALL COMPLY WITH ASTM A615 GRADE 60, A706 GRADE 60 OR A497 GRADE 70. BAR BENDING AND PLACEMENT SHALL COMPLY WITH THE LATEST ACI STANDARDS

STANDARD STRUCTURAL DESIGN IS BASED ON AASHTO H 20 SIDEWALK LOADING.

WATER TABLE IS AT 3'-0" BELOW GRADE FOR STANDARD STRUCTURAL DESIGN.

THE STANDARD DESIGN IS BASED ON THE TOP AT GRADE AND THE BASE AT 5'-0" MAX. BELOW GRADE.

THE STRUCTURE SHALL BE PLACED ON A COMPACTED GRANULAR BASE TO INSURE UNIFORM DISTRIBUTION OF SOIL PRESSURES.

SPECIAL DESIGNS BASED ON OTHER LOADINGS OR DEEPER INSTALLATION DEPTHS ARE AVAILABLE ON REQUEST.

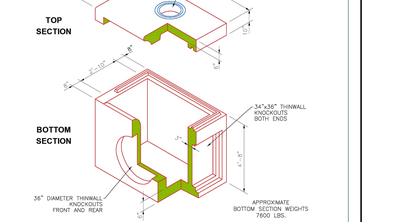

Oldcastle Precast	SI5-INL5	SAN ANTONIO 5 FT. CURB INLET WITH 5.0 INVERT
1900 Rolling Road San Antonio, TX 78214 Phone: (210) 923-4523 Fax: (210) 921-0473	FILE NAME: SANIN5.dwg ISSUE DATE: March, 2005 www.oldcastlesanantonio.com	Copyright 2005 Stoneworks, Ltd. All Rights Reserved

INSERTA TEE ® DETAIL (HDPE)

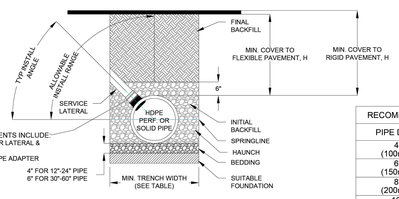

RECOMMENDED MINIMUM TRENCH WIDTHS	
PIPE DIAM.	MIN. TRENCH WIDTH
4" (100mm)	21" (533mm)
6" (150mm)	23" (584mm)
8" (200mm)	26" (660mm)
10" (250mm)	28" (711mm)
12" (300mm)	30" (762mm)
15" (375mm)	34" (864mm)
18" (450mm)	39" (991mm)
24" (600mm)	48" (1219mm)
30" (750mm)	56" (1422mm)
36" (900mm)	64" (1626mm)
42" (1050mm)	72" (1829mm)
48" (1200mm)	80" (2032mm)
54" (1350mm)	88" (2235mm)
60" (1500mm)	96" (2438mm)

NOTES:

1. ALL PIPE SYSTEMS SHALL BE INSTALLED IN ACCORDANCE WITH ASTM D2321, "STANDARD PRACTICE FOR UNDERGROUND INSTALLATION OF THERMOPLASTIC PIPE FOR SEWERS AND OTHER GRAVITY FLOW APPLICATIONS", LATEST ADDITION
2. MEASURES SHOULD BE TAKEN TO PREVENT MIGRATION OF NATIVE FINES INTO BACKFILL MATERIAL, WHEN REQUIRED.
3. THE INSERTA TEE CONNECTION CAN BE INSTALLED UP TO A VERTICAL ORIENTATION, BUT A 45° INSTALL ANGLE IS MOST COMMON. GREATER ANGLES ARE SUBJECT TO DESIGN ENGINEER APPROVAL AND MAY REQUIRE PREMIUM BACKFILL.
4. FOUNDATION: WHERE THE TRENCH BOTTOM IS UNSTABLE, THE CONTRACTOR SHALL EXCAVATE TO A DEPTH REQUIRED BY THE ENGINEER AND REPLACE WITH SUITABLE MATERIAL AS SPECIFIED BY THE ENGINEER, AS AN ALTERNATIVE AND AT THE DISCRETION OF THE DESIGN ENGINEER, THE TRENCH BOTTOM MAY BE STABILIZED USING A GEOTEXTILE MATERIAL
5. BEDDING: SUITABLE MATERIAL SHALL BE CLASS I, II OR III. THE CONTRACTOR SHALL PROVIDE DOCUMENTATION FOR MATERIAL SPECIFICATION TO ENGINEER. UNLESS OTHERWISE NOTED BY THE ENGINEER, MINIMUM BEDDING THICKNESS SHALL BE 4" (100mm) FOR 4"-24" (100mm-600mm), 6" (150mm) FOR 30"-60" (750mm-1500mm).
6. INITIAL BACKFILL: SUITABLE MATERIAL SHALL BE CLASS I, II OR III IN THE PIPE ZONE EXTENDING NOT LESS THAN 6" ABOVE CROWN OF PIPE. THE CONTRACTOR SHALL PROVIDE DOCUMENTATION FOR MATERIAL SPECIFICATION TO ENGINEER. MATERIAL SHALL BE INSTALLED AS REQUIRED IN ASTM D2321, LATEST EDITION.
7. MINIMUM COVER: MINIMUM COVER, H, IN NON-TRAFFIC APPLICATIONS (GRASS OR LANDSCAPE AREAS) IS 12" FROM THE TOP OF PIPE TO GROUND SURFACE. ADDITIONAL COVER MAY BE REQUIRED TO PREVENT FLOTATION. FOR TRAFFIC APPLICATIONS, MINIMUM COVER, H, IS 12" UP TO 48" DIAMETER PIPE AND 24" OF COVER FOR 54"-60" DIAMETER PIPE, MEASURED FROM TOP OF PIPE TO BOTTOM OF FLEXIBLE PAVEMENT OR TO TOP OF RIGID PAVEMENT.

NOTE: FOR INSTALLATION INSTRUCTIONS, REFER TO DETAIL STD–1100. FOR PROTRUSION INFORMATION, REFER TO DETAIL STD–1101. FOR HOLE SAW INFORMATION, REFER TO DETAIL STD–1102.

ADVANCED DRAINAGE SYSTEMS, INC. ("ADS") HAS PREPARED THIS DETAIL BASED ON INFORMATION PROVIDED TO ADS. THIS DRAWING IS INTENDED TO DEPICT THE COMPONENTS AS REQUESTED. ADS HAS NOT PERFORMED ANY ENGINEERING OR DESIGN SERVICES FOR THIS PROJECT, NOR HAS ADS INDEPENDENTLY VERIFIED THE INFORMATION SUPPLIED. THE INSTALLATION DETAILS PROVIDED HEREIN ARE GENERAL RECOMMENDATIONS AND ARE NOT SPECIFIC FOR THIS PROJECT. THE DESIGN ENGINEER SHALL REVIEW THESE DETAILS PRIOR TO CONSTRUCTION. IT IS THE DESIGN ENGINEERS RESPONSIBILITY TO ENSURE THE DETAILS PROVIDED HEREIN MEETS OR EXCEEDS THE APPLICABLE NATIONAL, STATE, OR LOCAL REQUIREMENTS AND TO ENSURE THAT THE DETAILS PROVIDED HEREIN ARE ACCEPTABLE FOR THIS PROJECT.

INSERTA TEE DETAIL (HDPE)	ADS 4640 TRUEMAN BLVD HILLIARD, OH 43026	DRAWN BY: HAK DATE: 07/19/23 SCALE: ENG. SHEET: NTS REV: 1
DRAWING NUMBER STD–1011		

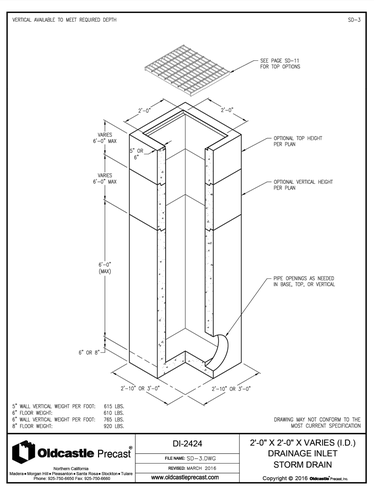

Oldcastle Precast Northern California Modesto • Morgan Hill • Pleasanton • Santa Rosa • Stockton • Tulare Phone: 925-756-6650 Fax: 925-756-6665	DI-2424 FILE NAME: SD–3.DWG REVISED: MARCH 2016 www.oldcastleprecast.com	2'-0" X 2'-0" X VARIES (I.D.) DRAINAGE INLET STORM DRAIN Copyright © 2016 Oldcastle Precast, Inc.

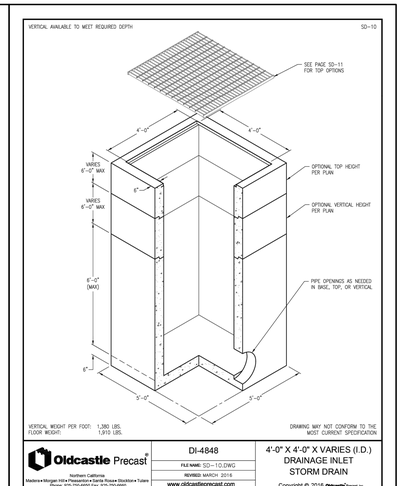

Oldcastle Precast Northern California Modesto • Morgan Hill • Pleasanton • Santa Rosa • Stockton • Tulare Phone: 925-756-6650 Fax: 925-756-6665	DI-4848 FILE NAME: SD–10.DWG REVISED: MARCH 2016 www.oldcastleprecast.com	4'-0" X 4'-0" X VARIES (I.D.) DRAINAGE INLET STORM DRAIN Copyright © 2016 Oldcastle Precast, Inc.

CONTRACTOR FIELD SET

This plan set shall remain on the site or subdivision premises for the life of the project and shall be utilized for any and all improvements contained herein.

BENCHMARKS

BM #51471 MAG NAIL SET "GCP 2" SET AT THE NORTHEAST CORNER OF THE INTERSECTION OF STATE HIGHWAY 45 AND COUNTY ROAD 172, ±5.5' FROM "YIELD" SIGN.
N: 10147640.83
E: 3127942.60
ELEV.= 841.70'

BM #51473 MAG NAIL SET "GCP 3" SET IN THE NORTH RIGHT-OF-WAY LINE OF HESTERS CROSSING ROAD, ±560' FROM THE INTERSECTION OF HESTERS CROSSING ROAD AND COUNTY ROAD 172, ±100 FROM CONCRETE SIGN "ENCOMPASS HEALTH".
N: 10149343.04
E: 3128315.81
ELEV.= 812.19'

Kimley»Horn

© 2025 KIMLEY-HORN AND ASSOCIATES, INC.

10814 JOLLYVILLE ROAD, CAMPUS IV, SUITE 200, AUSTIN, TX 78759
PHONE: 512-418-1771 FAX: 512-418-1791
WWW.KIMLEY-HORN.COM
TEXAS REGISTERED ENGINEERING FIRM F-928

No.	REVISIONS	DATE	BY

NICHOLAS C. BROWN 107175 LICENSED PROFESSIONAL ENGINEER
03/26/2025

KHA PROJECT 069284916	DATE: MARCH 2025	SCALE: AS SHOWN	DESIGNED BY: MM	DRAWN BY: MM	CHECKED BY: NCB

STORM DETAILS (SHEET 1 OF 2)

2525 CR 172 INDUSTRIAL
CITY OF ROUND ROCK
WILLIAMSON COUNTY, TEXAS

SHEET NUMBER
99 OF 227

SDP24-00001

Plotted By: Tordin Knight, Paula Date: April 17, 2025 02:56:55pm File Path: K:\AUS_Civil\069284910 – DAU3 Round Rock\Cad\PlanSheets-SDP\C-Storm Drain Details.dwg
This document, together with the concepts and designs presented herein, as an instrument of service, is intended only for the specific purpose and client for which it was prepared. Reuse of and improper reliance on this document without written authorization and adaptation by Kimley-Horn and Associates, Inc. shall be without liability to Kimley-Horn and Associates, Inc.

Plotted By: Toroldo Knight, Paula Date: April 17, 2025 02:57:07pm File Path: K:\AUS_Civil\069284910 - DAU3 Round Rock\Cad\PlanSheets-SDP\C-Storm Drain Details.dwg
This document, together with the concepts and designs presented herein, as an instrument of service, is intended only for the specific purpose and client for which it was prepared. Reuse of and improper reliance on this document without written authorization and adaptation by Kimley-Horn and Associates, Inc. shall be without liability to Kimley-Horn and Associates, Inc.

Oldcastle Precast — Water — 2'-0"x2'-0" I.D. "Y" Inlet — Model: IN-220-Y

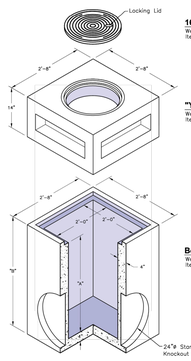

16 1/2"Ø C.I. Cover
Weight = 55 Lbs.
Item# = 7102600

"Y" Top w/ Frame
Weight = 975 Lbs.
Item# = 1207020

GENERAL NOTES:
1. Different Height of Bodies are Available by Request.

SPECIFICATIONS:
1. Concrete has a design strength of 5000 PSI at 28 days.
2. Steel reinforcement: ASTM A-615 Grade 60 or ASTM A-497 Welded wire fabric.
3. Loading: Designed for H20 Loading.
4. C.I. Castings: ASTM A-48, Class 30/35.

Body
Weight = See Table
Item# = See Table

Body			
A	B	Weight	Item #
24"	24"	805 Lbs.	1202450
30"	24"	1000 Lbs.	1202460
36"	24"	1200 Lbs.	1202470
24"	36"	1350 Lbs.	1202480
30"	36"	1700 Lbs.	1202490

Texas Region — For more information about our products please visit us on the web at: oldcastleprecast.com — © 2013 Oldcastle Precast, Inc. IN-17 — 888-9 Oldcastle (888-965-3227)

Oldcastle Precast — Water — 3'-0"x3'-0" I.D. "Y" Inlet — Model: IN-330-Y

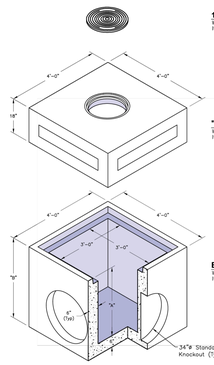

19"Ø C.I. Cover
Weight = 205 Lbs.
Item# = 7102500

"Y" Top w/ Frame
Weight = 1725 Lbs.
Item# = 1207260

GENERAL NOTES:
1. Different Height of Bodies are Available by Request.
2. Other Frames and Covers Also Available.

SPECIFICATIONS:
1. Concrete has a design strength of 5000 PSI at 28 days.
2. Steel reinforcement: ASTM A-615 Grade 60 or ASTM A-497 Welded wire fabric.
3. Loading: Designed for H20 Loading.
4. C.I. Castings: ASTM A-48, Class 30/35.

Bottom
Weight = See Table
Item# = See Table

Bottom Section			
A	B	Weight	Item #
12"	18"	2400 Lbs.	1203020
24"	24"	3000 Lbs.	1203040
30"	24"	3600 Lbs.	1203060
24"	36"	4800 Lbs.	1203080
30"	36"	5400 Lbs.	1203100
36"	36"	6000 Lbs.	1203120
48"	36"	7800 Lbs.	1203140
48"	48"	9600 Lbs.	1203160
48"	54"	5400 Lbs.	1203960

Texas Region — For more information about our products please visit us on the web at: oldcastleprecast.com — © 2013 Oldcastle Precast, Inc. IN-18 — 888-9 Oldcastle (888-965-3227)

Oldcastle Precast — Water — 5'-0"x5'-0" I.D. Junction Box — Model: JB-550

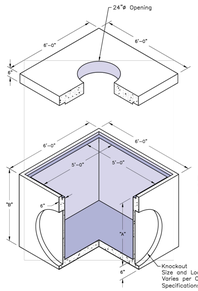

Roof Slab
Weight = 3150 Lbs.
Item# = 1207980

GENERAL NOTES:
1. Different Height of Bodies are Available by Request.
2. Frames and Covers Also Available.

SPECIFICATIONS:
1. Concrete has a design strength of 5000 PSI at 28 days.
2. Steel reinforcement: ASTM A-615 Grade 60 or ASTM A-497 Welded wire fabric.
3. Loading: Designed for H20 Loading.
4. C.I. Castings: ASTM A-48, Class 30/35.

Body
Weight = See Table
Item# = See Table

Body			
A	B	Weight	Item #
24"	48"	5100 Lbs.	1205400
48"	24"	5100 Lbs.	1205420
24"	60"	10,125 Lbs.	1205440
60"	24"	10,950 Lbs.	1205460

Texas Region — For more information about our products please visit us on the web at: oldcastleprecast.com — © 2013 Oldcastle Precast, Inc. JB-11 — 888-9 Oldcastle (888-965-3227)

Oldcastle Precast — WATER — 4'-0"x4'-0"x3'-0" ID Junction Box — Model: 44 JB

Junction Box

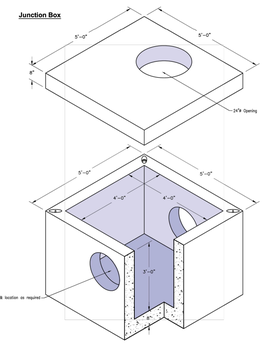

GENERAL NOTES:
1. Concrete: 28 Day Compressive Strength f'c = 4,000psi.
2. Steel Reinforcement: ASTM A-615, Grade 60.
3. Designed for AASHTO HS-20 loading with 24" cover.

Mid Atlantic Region — For more information about our products please visit us on the web at: oldcastleprecast.com — © 2013 Oldcastle Precast, Inc. W-CA-4 — 888-9 Oldcastle (888-965-3227)

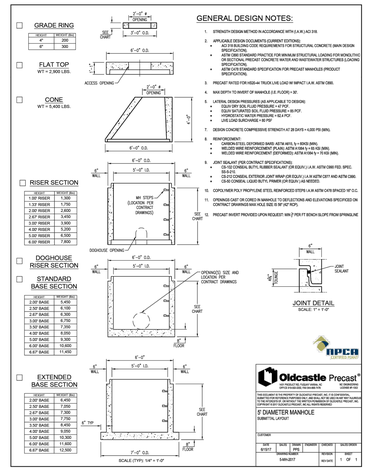

GENERAL DESIGN NOTES:

1. STRENGTH DESIGN METHOD IN ACCORDANCE WITH ACI 318 AND ACI 318.
2. APPLICABLE DESIGN DOCUMENTS (CURRENT EDITIONS):
   - ACI 318 BUILDING CODE REQUIREMENTS FOR STRUCTURAL CONCRETE (MAIN DESIGN SPECIFICATIONS)
   - ACI 350 CODE REQUIRED PRACTICE FOR ENVIRONMENTAL STRUCTURAL LOADING FOR MONOLITHIC OR SEGMENTAL PRECAST CONCRETE WATER AND WASTEWATER STRUCTURES (LOADING SPECIFICATION)
   - ASTM C478 STANDARD SPECIFICATION FOR PRECAST MANHOLES (PRODUCT SPECIFICATION)
3. PRECAST NOTED FOR HS20-44 TRUCK LIVE LOAD W/ IMPACT (1.M. ASTM C890.
4. MAX DEPTH TO INVERT OF MANHOLE (I.E. FLOOR) = 30'.
5. LATERAL DESIGN PRESSURES (AS APPLICABLE TO DESIGN):
   - EQUIV SOIL FLUID PRESSURE = 47 PCF
   - GROUNDWATER PRESSURE = 62.4 PCF
   - HYDROSTATIC HEIGHT PRESSURE = 62.4 PCF
   - LIVE LOAD SURCHARGE = 80 PSF
6. DESIGN CONCRETE COMPRESSIVE STRENGTH AT 28 DAYS = 4,000 PSI (MIN).
7. REINFORCEMENT:
   - CARBON STEEL DEFORMED BARS: ASTM A615, Gr 60(420 MPA)
   - WELDED WIRE REINFORCEMENT (FLAT): ASTM A1064 Gr 60 (420 MPA)
   - WELDED WIRE REINFORCEMENT (DEFORMED): ASTM A1064 Gr 70 (485 MPA)
8. JOINT SEALANT (PER CONTRACT SPECIFICATIONS):
   - ISO-SIL CONSEAL BUTYL RUBBER SEALANT OR EQUIV.) U.N.M. ASTM C990 RED. SPEC.
   - OR
   - CS-012 CONSEAL EXTERIOR JOINT WRAP (OR EQUIV.) U.N.M ASTM C877 AND ASTM C990.
   - CS-90 CONSEAL LIQUID BUTYL PRIMER (OR EQUIV.) AS NEEDED.
9. COPOLYMER POLY PROPYLENE STEEL REINFORCED STEPS U.N.M. ASTM C478 SPACED 16" O.C.
10. OPENINGS CAST OR CORED IN MANHOLE TO SELECTIONS AND ELEVATIONS SPECIFIED ON CONTRACT DRAWINGS MAX HOLE SIZE IS 96" (8' ROM).
11. PRECAST INVERT PROVIDED UPON REQUEST. MIN 2" FROM FLT BENCH SLOPE FROM SPRINGLINE

5' DIAMETER MANHOLE
SUBMITTAL LAYOUT

EDITIONS						
DATE	BY/CT	SHEET	SHEETS	CHECKED	BY/CHECKED
8/15/17		DESIGN	1	REVISED	1 OF 1
		SHEET		AS-BUILT	

Oldcastle Precast — Water — 6'-0"x6'-0" I.D. Junction Box — Model: JB-660

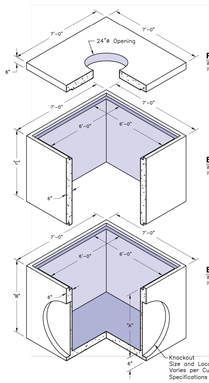

GENERAL NOTES:
1. Different Height of Extensions and Bodies are Available by Request.
2. Specific Cast Iron Ring and Cover by request, Cast-in or Loose.

Roof Slab
Weight = 3450 Lbs.
Item# = 1208280

SPECIFICATIONS:
1. Concrete has a design strength of 5000 PSI at 28 days.
2. Steel reinforcement: ASTM A-615 Grade 60 or ASTM A-497 Welded wire fabric.
3. Loading: Designed for H20 Loading.
4. C.I. Castings: ASTM A-48, Class 30/35.

Extension
Weight = See Table
Item# = See Table

Extension			
C	Weight	Item#
24"	1900 Lbs.	1205960
30"	2850 Lbs.	1205970
48"	7600 Lbs.	1205740
60"	9500 Lbs.	1205750
66"	10,925 Lbs.	1205760
72"	11,700 Lbs.	1205770

Body
Weight = See Table
Item# = See Table

Body			
A	B	Weight	Item#
24"	24"	6525 Lbs.	1206020
48"	24"	10,900 Lbs.	1206030
24"	48"	11,475 Lbs.	1206040
24"	60"	14,450 Lbs.	1206050
48"	48"	18,300 Lbs.	1206060
60"	48"	19,575 Lbs.	1206070

Texas Region — For more information about our products please visit us on the web at: oldcastleprecast.com — © 2013 Oldcastle Precast, Inc. JB-19 — 888-9 Oldcastle (888-965-3227)

Oldcastle Precast — Water — 7'-0"x7'-0" I.D. Junction Box — Model: JB-770

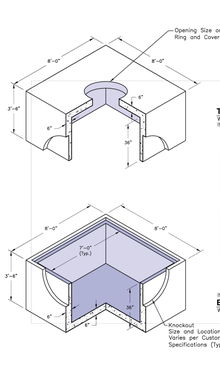

Top Section
Weight = 12,100 Lbs.
Item# = 1208120

GENERAL NOTES:
1. Different Height of Top and Bottom Sections are Available by Request.
2. Specific Cast Iron Ring and Cover by request, Cast-in or Loose.

SPECIFICATIONS:
1. Concrete has a design strength of 5000 PSI at 28 days.
2. Steel reinforcement: ASTM A-615 Grade 60 or ASTM A-497 Welded wire fabric.
3. Loading: Designed for H20 Loading.
4. C.I. Castings: ASTM A-48, Class 30/35.

Item# = 1208120
Bottom Section
Weight = 12,650 Lbs.

Texas Region — For more information about our products please visit us on the web at: oldcastleprecast.com — © 2013 Oldcastle Precast, Inc. JB-13 — 888-9 Oldcastle (888-965-3227)

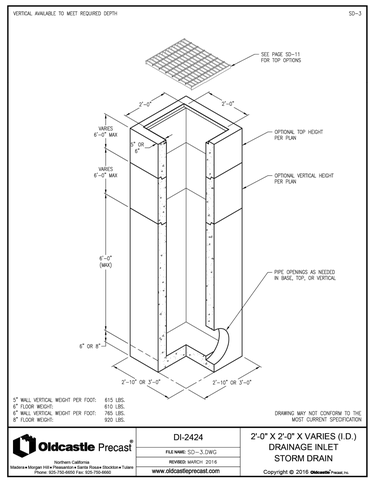

5" WALL VERTICAL WEIGHT PER FOOT: 615 LBS.
6" FLOOR WEIGHT: 610 LBS.
8" WALL VERTICAL WEIGHT PER FOOT: 765 LBS.
6" FLOOR WEIGHT: 920 LBS.

DRAWING MAY NOT CONFORM TO THE MOST CURRENT SPECIFICATION

Oldcastle Precast — Northern California — Modesto • Morgan Hill • Pleasanton • Rocklin • Tulare — Shockline • Tulare — Phone: 925-792-4600 • Fax: 925-792-4650

DI-2424	2'-0" X 2'-0" X VARIES (I.D.) DRAINAGE INLET STORM DRAIN
FILE NAME: SD-~3.DWG	
REVISED: MARCH 2014	
www.oldcastleprecast.com	Copyright © 2016 Oldcastle Precast, Inc.

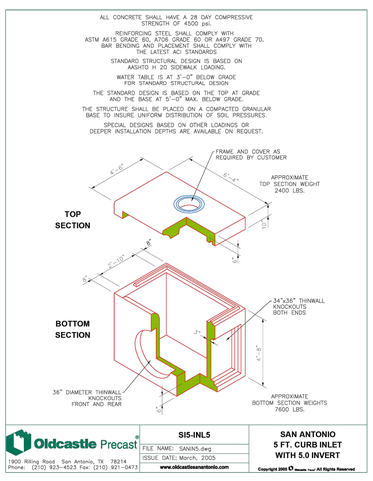

Oldcastle Precast — Northern California — Modesto • Morgan Hill • Pleasanton • Rocklin • Tulare — Shockline • Tulare — Phone: 925-792-4600 • Fax: 925-792-4650

SI5-INL5	SAN ANTONIO 5 FT. CURB INLET WITH 5.0 INVERT
FILE NAME: SAINN5.dwg	
ISSUE DATE: March, 2005	
www.oldcastlesanantonio.com	Copyright 2005 Stewart Title® All Rights Reserved

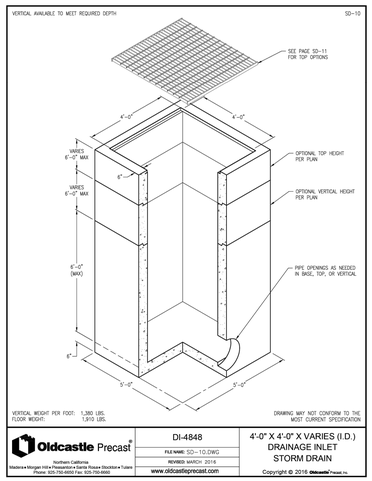

VERTICAL WEIGHT PER FOOT: 1,380 LBS.
FLOOR WEIGHT: 1,910 LBS.

DRAWING MAY NOT CONFORM TO THE MOST CURRENT SPECIFICATION

Oldcastle Precast — Northern California — Modesto • Morgan Hill • Pleasanton • Rocklin • Tulare — Shockline • Tulare — Phone: 925-792-4600 • Fax: 925-792-4650

DI-4848	4'-0" X 4'-0" X VARIES (I.D.) DRAINAGE INLET STORM DRAIN
FILE NAME: SD-~10.DWG	
REVISED: MARCH 2014	
www.oldcastleprecast.com	Copyright © 2016 Oldcastle Precast, Inc.

TABLE OF VARIABLE DIMENSIONS AND QUANTITIES FOR ONE HEADWALL (2)

Pipe Dia. D (in)	Values for One Pipe W	X	Y	L	Reinf (Lbs) (1)	Conc (CY) (1)	Values to be Added for Each Add'l Pipe X and W	Reinf (Lbs) (1)	Conc (CY) (1)
12"	4'-7½"	2'-6"	2'-10"	3'-3½"	88	0.6	1'-9"	20	0.2
15"	5'-1½"	2'-9½"	3'-4"	3'-10½"	103	0.7	2'-2"	24	0.3
18"	5'-7½"	3'-1"	3'-10½"	4'-5"	124	0.8	2'-6"	32	0.3
21"	7'-2½"	3'-4½"	4'-4"	5'-0"	143	1.1	3'-1"	43	0.4
24"	8'-3½"	3'-8½"	4'-10"	5'-7"	164	1.3	3'-7"	50	0.5
27"	9'-1"	4'-1"	5'-4"	6'-2"	179	1.5	3'-11"	56	0.6
30"	9'-11½"	4'-4½"	5'-10"	6'-8½"	203	1.7	4'-4"	65	0.8
33"	10'-10"	4'-8"	6'-4"	7'-3½"	224	2.0	4'-8"	71	0.9
36"	11'-8½"	4'-11½"	6'-10"	7'-10½"	249	2.2	5'-1"	81	1.0
42"	13'-3½"	5'-6½"	7'-10"	9'-0½"	298	2.8	5'-10"	97	1.3
48"	15'-9"	6'-1½"	9'-4"	10'-9½"	360	3.8	6'-7"	117	1.7
54"	17'-5½"	6'-8½"	10'-4"	11'-11½"	427	4.5	7'-4"	151	2.1
60"	19'-2½"	7'-3½"	11'-4"	13'-1"	481	5.3	8'-3"	174	2.5
66"	20'-11½"	7'-10½"	12'-4"	14'-3"	544	6.2	9'-0"	194	2.9
72"	22'-8½"	8'-5½"	13'-4"	15'-4½"	601	7.1	9'-9"	213	3.3
12"	6'-9"	2'-6"	4'-3"	4'-11"	118	0.8	1'-9"	22	0.2
15"	7'-5"	2'-9½"	5'-0"	5'-9½"	137	1.1	2'-2"	28	0.3
18"	8'-6½"	3'-1"	5'-9"	6'-7½"	170	1.3	2'-8"	37	0.5
21"	9'-10½"	3'-4½"	6'-8"	7'-6"	195	1.6	3'-1"	48	0.6
24"	11'-0"	3'-9½"	7'-3"	8'-4½"	227	2.0	3'-7"	58	0.7
27"	12'-2"	4'-1"	8'-0"	9'-2½"	251	2.3	3'-11"	67	0.8
30"	13'-4"	4'-4½"	8'-9"	10'-1½"	293	2.7	4'-4"	77	1.0
33"	14'-5½"	4'-8"	9'-8"	10'-11½"	318	3.1	4'-8"	84	1.2
36"	15'-7½"	4'-11½"	10'-3"	11'-10"	351	3.5	5'-1"	96	1.4
42"	17'-11½"	5'-6½"	11'-3"	13'-6½"	432	4.5	5'-10"	119	1.7
48"	20'-1½"	6'-1½"	12'-3"	14'-3"	527	6.1	6'-7"	146	2.3
54"	22'-5½"	6'-8½"	13'-0"	17'-10½"	630	7.3	7'-4"	186	2.9
60"	23'-9½"	7'-3½"	13'-9"	19'-7½"	719	8.7	8'-3"	219	3.4
66"	26'-1"	7'-10½"	14'-6"	21'-4½"	811	10.1	8'-9"	242	3.9
72"	28'-4½"	8'-5½"	15'-3"	23'-1½"	924	11.7	9'-6"	273	4.4
12"	7'-10½"	2'-6"	5'-4"	5'-8"	148	1.1	1'-9"	24	0.3
15"	9'-4"	2'-9½"	6'-3"	7'-0½"	181	1.5	2'-2"	32	0.4
18"	10'-9½"	3'-1"	7'-1"	8'-0½"	221	1.9	2'-8"	42	0.5
21"	12'-2½"	3'-4½"	8'-0"	9'-0"	260	2.3	3'-1"	57	0.7
24"	13'-9½"	3'-9½"	8'-9"	11'-1"	301	2.8	3'-7"	67	0.9
27"	15'-3"	4'-1"	9'-9"	12'-3½"	334	3.3	3'-11"	77	1.0
30"	16'-8½"	4'-4½"	10'-6"	13'-5½"	385	3.8	4'-4"	89	1.3
33"	18'-1½"	4'-8"	11'-3"	14'-7½"	425	4.5	4'-8"	101	1.4
36"	19'-7"	4'-11½"	12'-0"	15'-9½"	472	5.1	5'-1"	115	1.7
42"	22'-5½"	5'-6½"	13'-0"	18'-1"	583	6.5	5'-10"	141	2.1
48"	26'-6½"	6'-1½"	14'-3"	21'-6½"	730	8.9	6'-7"	175	2.8
54"	29'-1½"	6'-8½"	15'-0"	23'-10½"	875	10.7	7'-4"	226	3.6
60"	32'-3½"	7'-3½"	15'-9"	26'-2"	996	12.7	8'-3"	264	4.3
66"	34'-7½"	7'-10½"	16'-6"	28'-5½"	1,140	14.8	8'-9"	300	4.9
72"	38'-1½"	8'-5½"	17'-3"	30'-9½"	1,297	17.3	9'-6"	334	5.6
12"	11'-4"	2'-6"	6'-5"	6'-9"	224	1.8	1'-9"	28	0.4
15"	13'-2½"	2'-9½"	7'-0"	8'-0½"	268	2.5	2'-2"	37	0.5
18"	15'-2½"	3'-1"	7'-7"	8'-8½"	330	3.2	2'-8"	50	0.7
21"	17'-2½"	3'-4½"	8'-3"	10'-0½"	387	3.9	3'-1"	69	0.9
24"	19'-4½"	3'-9½"	8'-9"	10'-9"	453	4.8	3'-7"	80	1.2
27"	21'-4½"	4'-1"	9'-6"	11'-5½"	512	5.7	3'-11"	96	1.4
30"	23'-5½"	4'-4½"	10'-0"	12'-5½"	593	6.7	4'-4"	110	1.7
33"	25'-5½"	4'-8"	10'-6"	13'-11½"	675	7.8	4'-8"	127	2.0
36"	27'-5½"	4'-11½"	11'-0"	15'-4½"	735	9.0	5'-1"	144	2.3
42"	31'-6½"	5'-6½"	12'-0"	17'-1½"	902	11.5	5'-10"	179	3.0
48"	35'-3½"	6'-1½"	12'-9"	20'-4½"	1,191	15.9	6'-7"	231	4.0
54"	41'-4½"	6'-8½"	13'-6"	23'-9½"	1,424	19.2	7'-4"	300	5.0
60"	45'-4½"	7'-3½"	14'-3"	26'-2"	1,613	22.8	8'-3"	353	6.0

(1) Quantities shown are for concrete pipe and will increase slightly for metal pipe installations.
(2) For vehicle safety, construct curbs no more than 3" above finished grade. Reduce curb heights, if necessary, to meet these requirements. Adjustments will be made in quantities and no additional compensation will be allowed for this work.
(3) Provide a 3'-0" footing as shown where required to maintain 4" minimum cover for pipes.
(4) Dimensions shown are usual and maximum.
(5) Quantities shown are for one structure and only (one headwall).
(6) Min Length = $B' + 2' \times \left[\frac{12 \times H - 7}{12 \times 7} \right]$
Max Length = $12' \times H' - 3' \times \left[\frac{12 \times H - 7}{12 \times 7} \right] - 3'$
(7) Lengths of wings based on SLI shape along this line.

MATERIAL NOTES:
Provide Grade 60 reinforcing steel.
Provide Class C concrete (f'c = 3,600 psi).

GENERAL NOTES:
Designed according to AASHTO LRFD Bridge Design Specifications.
Do not mount bridge rails of any type directly to these headwalls.
This standard may not be used for wall heights, H, exceeding the values shown.

Cover dimensions are clear dimensions, unless noted otherwise. Reinforcing dimensions are out-to-out of bars.

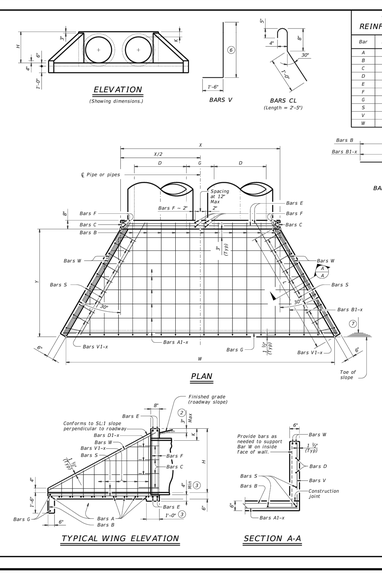

TABLE OF REINFORCING STEEL (5)			
Bar	Size	Spa	No
A	#4	1'-0"	–
B	#3	1'-0"	–
C	#4	1'-0"	–
D	#3	1'-0"	–
E	#5	–	4
F	#5	–	–
G	#3	–	2
S	#4	–	6
V	#4	1'-0"	–
W	#5	–	4

TABLE OF CONSTANT DIMENSIONS			
Dia of Pipe (D)	G	K (4)	H
12"	0'-9"	1'-0"	2'-0"
15"	0'-11"	1'-0"	2'-3"
18"	1'-2"	1'-0"	2'-6"
21"	1'-4"	1'-0"	2'-9"
24"	1'-7"	1'-0"	3'-0"
27"	1'-9"	1'-0"	3'-3"
30"	1'-10"	1'-0"	3'-6"
33"	1'-11"	1'-0"	3'-9"
36"	2'-1"	1'-0"	4'-0"
42"	2'-4"	1'-0"	4'-6"
48"	2'-7"	1'-3"	5'-3"
54"	3'-0"	1'-3"	5'-9"
60"	3'-3"	1'-3"	6'-3"
66"	3'-3"	1'-3"	6'-9"
72"	3'-4"	1'-3"	7'-3"

Texas Department of Transportation — Bridge Division Standard

CONCRETE HEADWALLS WITH FLARED WINGS FOR 0° SKEW PIPE CULVERTS

CH-FW-0

mpc CH-FW-20.dgn	TxDOT February 2020	DN: TxDOT	CK: TxDOT	CW: TxDOT
REVISIONS		DW:	CK:	CONTROL:
		DIST	COUNTY	SHEET NO.

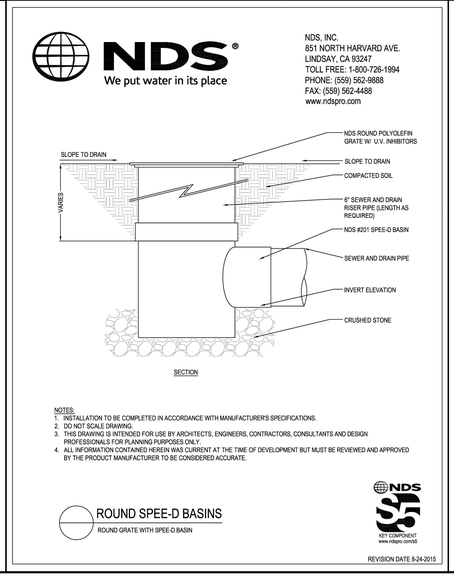

NOTES:
1. INSTALLATION TO BE COMPLETED IN ACCORDANCE WITH MANUFACTURER'S SPECIFICATIONS.
2. DO NOT SCALE DRAWING.
3. THIS DRAWING IS INTENDED FOR USE BY ARCHITECTS, ENGINEERS, CONTRACTORS, CONSULTANTS AND DESIGN PROFESSIONALS FOR PLANNING PURPOSES ONLY.
4. ALL INFORMATION CONTAINED HEREIN WAS CURRENT AT THE TIME OF DEVELOPMENT BUT MUST BE REVIEWED AND APPROVED BY THE PRODUCT MANUFACTURER TO BE CONSIDERED ACCURATE.

REVISION DATE 8-24-2015

CONTRACTOR FIELD SET

This plan set shall remain on the site or subdivision premises for the life of the project and shall be utilized for any and all improvements contained herein.

BENCHMARKS

BM #51471 MAG NAIL SET "GCP 2"
SET AT THE NORTHEAST CORNER OF THE INTERSECTION OF STATE HIGHWAY 45 AND COUNTY ROAD 172, ±5.5' FROM "YIELD" SIGN.
N: 10147640.83
E: 3127942.60
ELEV.= 841.70'

BM #51473 MAG NAIL SET "GCP 3"
SET IN THE NORTH RIGHT-OF-WAY LINE OF HESTERS CROSSING ROAD, ±560' FROM THE INTERSECTION OF HESTERS CROSSING ROAD AND COUNTY ROAD 172, ±100 FROM CONCRETE SIGN "ENCOMPASS HEALTH".
N: 10149343.04
E: 3128315.81
ELEV.= 812.19'

No.	REVISIONS	DATE	BY

Kimley»Horn
© 2025 KIMLEY-HORN AND ASSOCIATES, INC.
10814 JOLLYVILLE ROAD, CAMPUS IV, SUITE 200, AUSTIN, TX 78759
PHONE: 512-418-1771 FAX: 512-418-1791
WWW.KIMLEY-HORN.COM
TEXAS REGISTERED ENGINEERING FIRM F-928

NICHOLAS C. BROWN 107175 LICENSED PROFESSIONAL ENGINEER
03/26/2025

KHA PROJECT	069284918
DATE	MARCH 2025
SCALE:	AS SHOWN
DESIGNED BY:	MM
DRAWN BY:	MM
CHECKED BY:	NCB

2525 CR 172 INDUSTRIAL
CITY OF ROUND ROCK
WILLIAMSON COUNTY, TEXAS

STORM DETAILS (SHEET 2 OF 2)

SHEET NUMBER
100 OF 227

SDP24-00001

FINAL PLAN AND PROFILE SHEETS

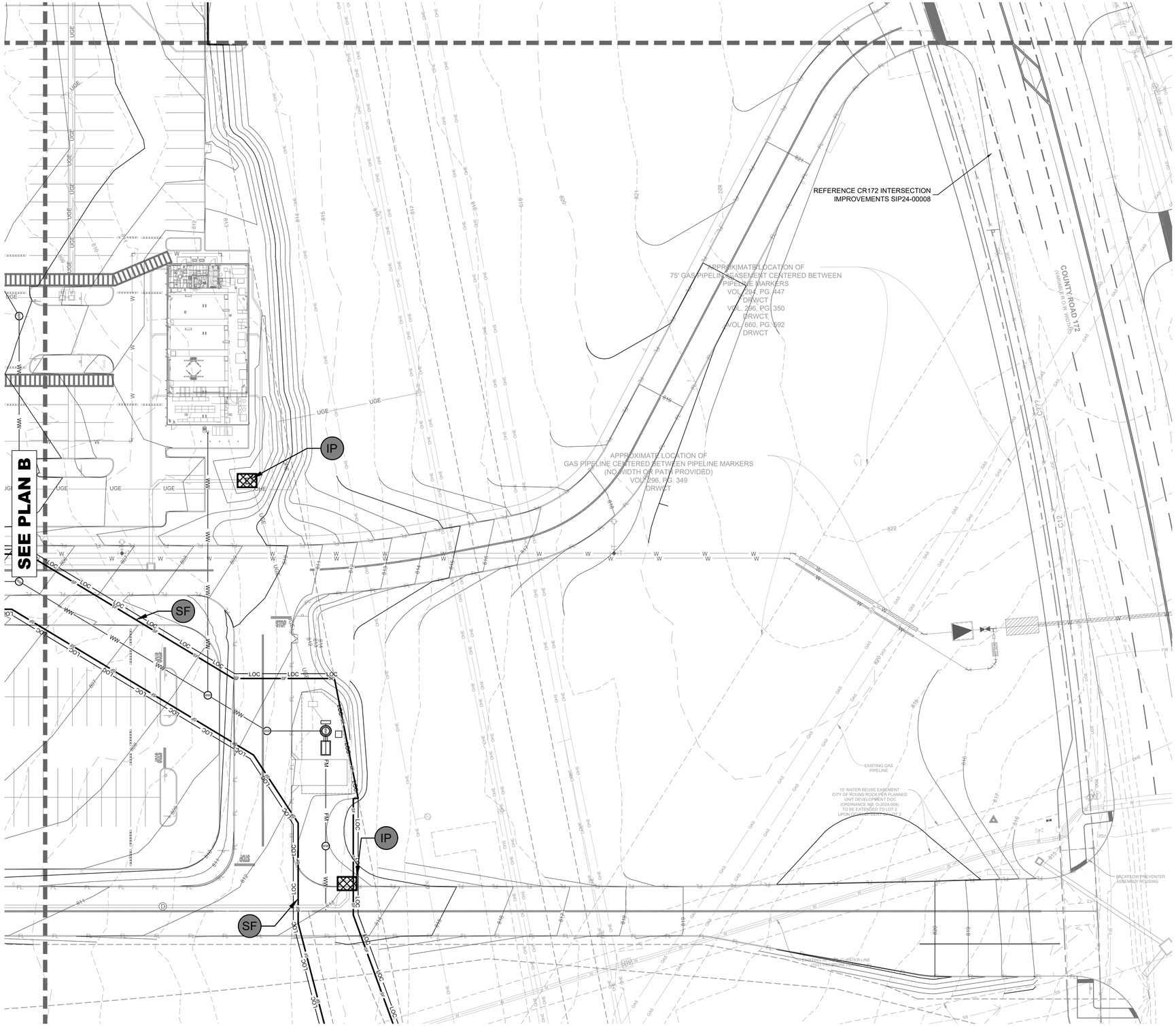

N
W E
S

0 30' 60'
GRAPHIC SCALE 30'

LEGEND

	PROPERTY LINE
LOC	LIMITS OF CONSTRUCTION
XXX	EXISTING MAJOR CONTOUR
XXX	EXISTING MINOR CONTOUR
XXX	MAJOR CONTOUR
XXX	MINOR CONTOUR
CE	CONSTRUCTION ENTRANCE
SA	STAGING AREA
CW	CONCRETE WASHOUT
IP	INLET PROTECTION
TP	TREE PROTECTION
RB	ROCK BERM
SF	SILT FENCE
MS	MULCH SOCK
CF	CHAIN LINK FENCE
XXXXX	EXISTING TREE TO REMAIN
	MONARCH TREE
	MONARCH TREE TO BE REMOVED
XXXXX	EXISTING TREE TO BE REMOVED

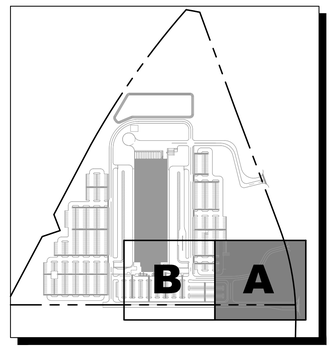

KEYMAP
N.T.S

NOTES
1. ANY DIRT, MUD, ROCKS, DEBRIS, ETC. THAT IS SPILLED, TRACKED, OR OTHERWISE DEPOSITED ON ANY EXISTING PAVED STREETS SHALL BE CLEANED UP IMMEDIATELY.
2. ALL DISTURBED AREAS SHALL BE REVEGETATED PER CITY OF ROUND ROCK SPECIFICATIONS.

BENCHMARKS

BM #51471 MAG NAIL SET "GCP 2"
SET AT THE NORTHEAST CORNER OF THE INTERSECTION OF STATE HIGHWAY 45 AND COUNTY ROAD 172, ±5.5' FROM "YIELD" SIGN.
N: 10147640.83
E: 3127942.60
ELEV.= 841.70'

BM #51473 MAG NAIL SET "GCP 3"
SET IN THE NORTH RIGHT-OF-WAY LINE OF HESTERS CROSSING ROAD, ±560' FROM THE INTERSECTION OF HESTERS CROSSING ROAD AND COUNTY ROAD 172, ±100 FROM CONCRETE SIGN "ENCOMPASS HEALTH".
N: 10149343.04
E: 3128315.81
ELEV.= 812.19'

No.	REVISIONS	DATE	BY

Kimley»Horn

© 2025 KIMLEY-HORN AND ASSOCIATES, INC.
10814 JOLLYVILLE ROAD, CAMPUS IV, SUITE 200, AUSTIN, TX 78759
PHONE: 512-418-1771 FAX: 512-418-1791
WWW.KIMLEY-HORN.COM
TEXAS REGISTERED ENGINEERING FIRM F-928

STATE OF TEXAS
NICHOLAS C. BROWN
107175
LICENSED
PROFESSIONAL ENGINEER
05/XX/2024

KHA PROJECT 069284918
DATE MAY 2024
SCALE: AS SHOWN
DESIGNED BY: MM
DRAWN BY: MM
CHECKED BY: NCB

TCEQ EROSION CONTROL PLAN A

2525 CR 172 INDUSTRIAL
CITY OF ROUND ROCK
WILLIAMSON COUNTY, TEXAS

SHEET NUMBER
1 OF 5

Template:KHA AUS TEMPLATE C3D 2022 DM:11-28-2023
Plotted By:Monegro, Melissa Date:May 21, 2025 02:12:07pm File Path:K:\AUS_Civil\069284910 - DAU3 Round Rock\Cad\Plan Sheets-TCEQ\C-TCEQ Erosion Control Plan.dwg
This document, together with the concepts and designs presented herein, as an instrument of service, is intended only for the specific purpose and client for which it was prepared. Reuse of and improper reliance on this document without written authorization and adaptation by Kimley-Horn and Associates, Inc. shall be without liability to Kimley-Horn and Associates, Inc.

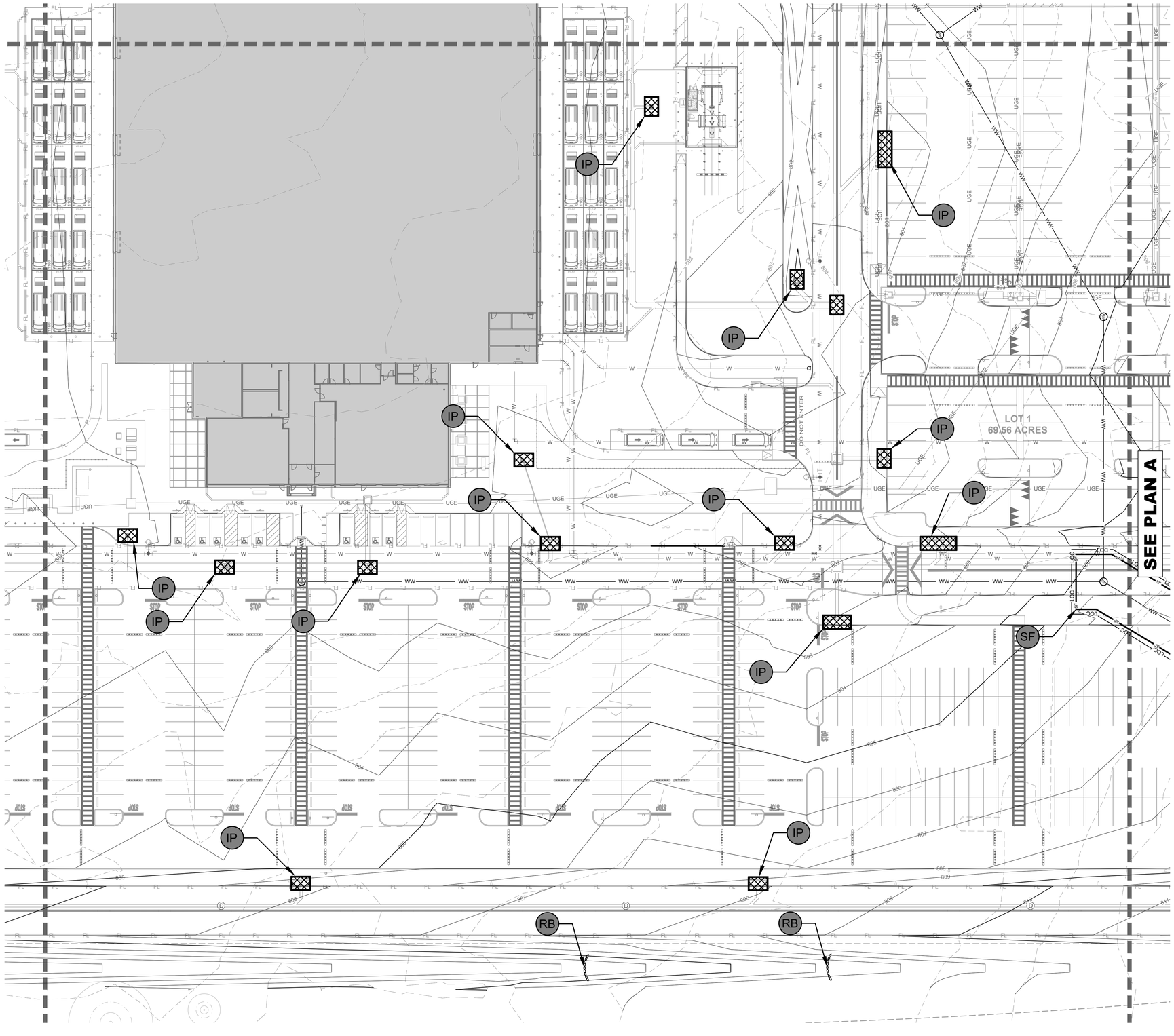

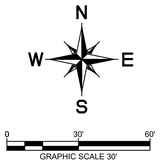

LEGEND

		PROPERTY LINE
LOC		LIMITS OF CONSTRUCTION
XXX		EXISTING MAJOR CONTOUR
XXX		EXISTING MINOR CONTOUR
XXX		MAJOR CONTOUR
XXX		MINOR CONTOUR
	CE	CONSTRUCTION ENTRANCE
	SA	STAGING AREA
	CW	CONCRETE WASHOUT
	IP	INLET PROTECTION
TP	TP	TREE PROTECTION
	RB	ROCK BERM
SF	SF	SILT FENCE
MS	MS	MULCH SOCK
X X X X X	CF	CHAIN LINK FENCE
XXXXX		EXISTING TREE TO REMAIN
		MONARCH TREE
		MONARCH TREE TO BE REMOVED
XXXXX		EXISTING TREE TO BE REMOVED

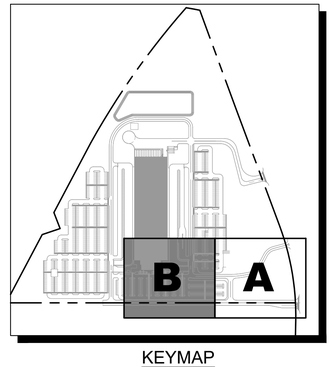

KEYMAP
N.T.S

NOTES
1. ANY DIRT, MUD, ROCKS, DEBRIS, ETC. THAT IS SPILLED, TRACKED, OR OTHERWISE DEPOSITED ON ANY EXISTING PAVED STREETS SHALL BE CLEANED UP IMMEDIATELY.
2. ALL DISTURBED AREAS SHALL BE REVEGETATED PER CITY OF ROUND ROCK SPECIFICATIONS.

BENCHMARKS

BM #51471 MAG NAIL SET "GCP 2"
SET AT THE NORTHEAST CORNER OF THE INTERSECTION OF STATE HIGHWAY 45 AND COUNTY ROAD 172, ±5.5' FROM "YIELD" SIGN.
N: 10147640.83
E: 3127942.60
ELEV.= 841.70'

BM #51473 MAG NAIL SET "GCP 3"
SET IN THE NORTH RIGHT-OF-WAY LINE OF HESTERS CROSSING ROAD, ±560' FROM THE INTERSECTION OF HESTERS CROSSING ROAD AND COUNTY ROAD 172, ±100 FROM CONCRETE SIGN "ENCOMPASS HEALTH".
N: 10149343.04
E: 3128315.81
ELEV.= 812.19'

No.	REVISIONS	DATE	BY

Kimley»Horn

© 2025 KIMLEY-HORN AND ASSOCIATES, INC.
10814 JOLLYVILLE ROAD, CAMPUS IV, SUITE 200, AUSTIN, TX 78759
PHONE: 512-418-1771 FAX: 512-418-1791
WWW.KIMLEY-HORN.COM
TEXAS REGISTERED ENGINEERING FIRM F-928

STATE OF TEXAS
NICHOLAS C. BROWN
107175
LICENSED
PROFESSIONAL ENGINEER
05/XX/2024

KHA PROJECT 069284918
DATE MAY 2024
SCALE: AS SHOWN
DESIGNED BY: MM
DRAWN BY: MM
CHECKED BY: NCB

TCEQ EROSION CONTROL PLAN B

2525 CR 172 INDUSTRIAL
CITY OF ROUND ROCK
WILLIAMSON COUNTY, TEXAS

SHEET NUMBER
2 OF 5

Template:KHA AUS TEMPLATE CSD 2022 DM:11-28-2023
Plotted By:Monegro, Melissa Date:May 21, 2025 02:12:20pm File Path:K:\AUS_Civil\069284910 - DAU3 Round Rock\Cad\Plan Sheets-TCEQ\C-TCEQ Erosion Control Plan.dwg
This document, together with the concepts and designs presented herein, as an instrument of service, is intended only for the specific purpose and client for which it was prepared. Reuse of and improper reliance on this document without written authorization and adaptation by Kimley-Horn and Associates, Inc. shall be without liability to Kimley-Horn and Associates, Inc.

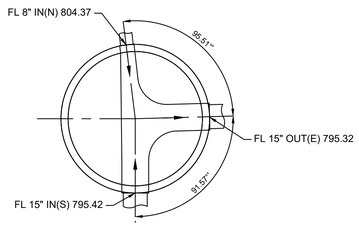

EXISTING MANHOLE #1437340

FM A STA. 1+00.00

4' MANHOLE
RIM: 816.27
N.T.S

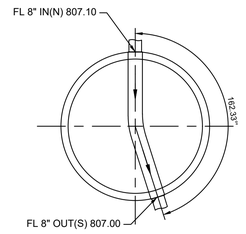

MANHOLE

FM A STA. 2+31.17

4' MANHOLE
RIM: 813.24
N.T.S

TCEQ WASTEWATER PLAN

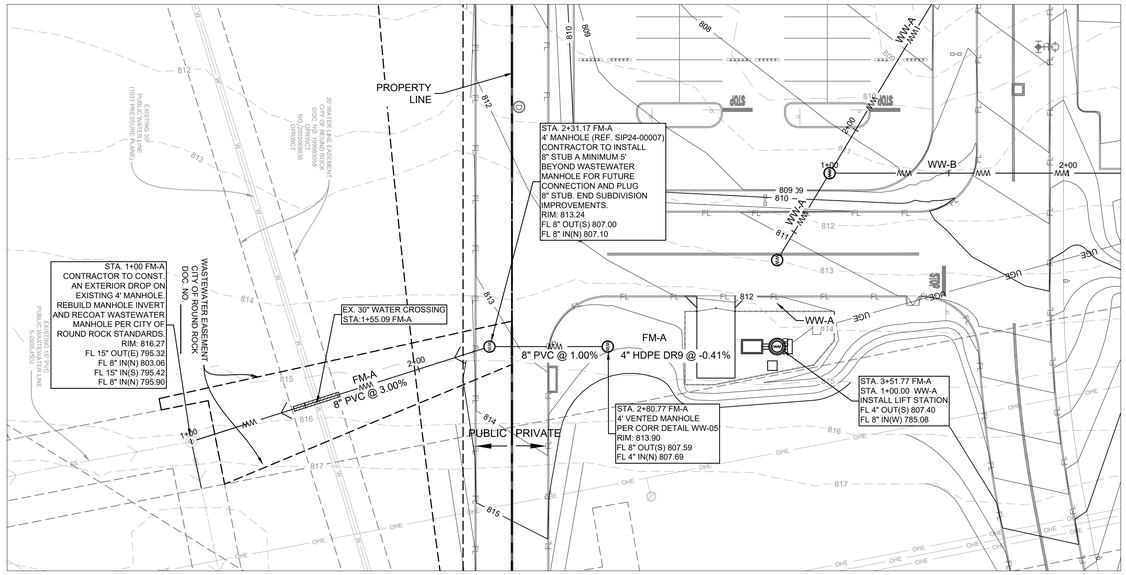

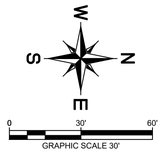

LEGEND

- PROPERTY LINE
- EXISTING MAJOR CONTOUR
- EXISTING MINOR CONTOUR
- PROPOSED MAJOR CONTOUR
- PROPOSED MINOR CONTOUR
- PROPOSED WATER LINE
- PROPOSED FIRE WATER LINE
- PROPOSED RECLAIMED WATER LINE
- PROPOSED FIRE HYDRANT
- PROPOSED WATER GATE VALVE
- PROPOSED WATER BACKFLOW PREVENTOR
- PROPOSED WATER METER
- PROPOSED FIRE DEPARTMENT CONNECTION
- PROPOSED FORCE MAIN
- PROPOSED WASTEWATER LINE
- PROPOSED WASTEWATER MANHOLE
- PROPOSED WASTEWATER CLEANOUT
- PROPOSED STORM DRAIN LINE
- PROPOSED STORM GRATE INLET
- PROPOSED STORM HEADWALL
- PROPOSED STORM MANHOLE
- PROPOSED STORM JUNCTION BOX
- PROPOSED STORM AREA INLET
- PROPOSED STORM CURB INLET
- EXISTING WATER LINE
- EXISTING WASTEWATER LINE
- EXISTING STORM DRAIN LINE
- EXISTING FIRE HYDRANT
- EXISTING WASTEWATER MANHOLE

FM-A

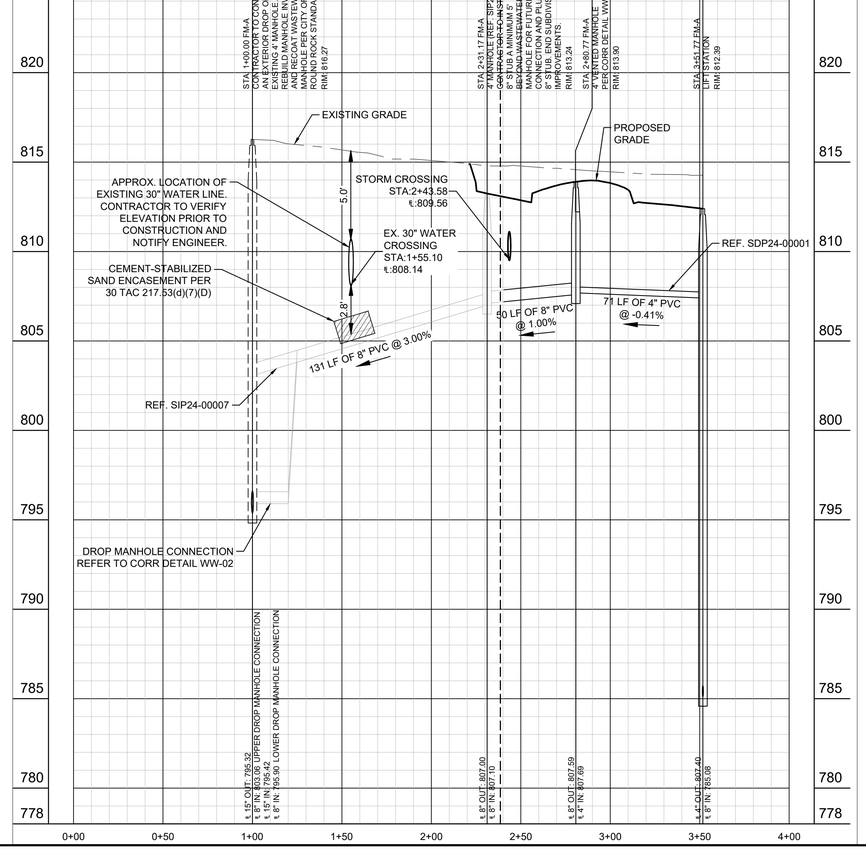

PROFILE SCALE
1" = 40' HORIZONTAL
1" = 4' VERTICAL

NOTES
1. ALL NON-CITY INFRASTRUCTURE INCLUDING GAS, ELECTRIC, CABLE AND TELECOMMUNICATIONS SHALL TRAVERSE UNDERNEATH CITY INFRASTRUCTURE. THIS INCLUDES, BUT IS NOT LIMITED TO WATER LINES, WASTEWATER LINES AND STORM SEWER, WITH A MINIMUM OUTSIDE-TO-OUTSIDE CLEARANCE OF 18".
2. ALL MANHOLES SHALL BE COATED AND VACUMM TESTED.
3. ALL WASETEWATER LINES ARE TO BE CONSTRUCTED OF SDR 26
4. ALL SEGMENTS OF PIPE LOCATED IN ENCASEMENT SHALL BE FULLY RESTRAINED.

BENCHMARKS

BM #51471 MAG NAIL SET "GCP 2"
SET AT THE NORTHEAST CORNER OF THE INTERSECTION OF STATE HIGHWAY 45 AND COUNTY ROAD 172, ±5.5' FROM "YIELD" SIGN.
N: 10147640.83
E: 3127942.60
ELEV.= 841.70'

BM #51473 MAG NAIL SET "GCP 3"
SET IN THE NORTH RIGHT-OF-WAY LINE OF HESTERS CROSSING ROAD, ±560' FROM THE INTERSECTION OF HESTERS CROSSING ROAD AND COUNTY ROAD 172, ±100 FROM CONCRETE SIGN "ENCOMPASS HEALTH".
N: 10149343.04
E: 3128315.81
ELEV.= 812.19'

No.	REVISIONS	DATE	BY

Kimley»Horn
© 2025 KIMLEY-HORN AND ASSOCIATES, INC.
10814 JOLLYVILLE ROAD, CAMPUS IV, SUITE 200, AUSTIN, TX 78759
PHONE: 512-418-1771 FAX: 512-418-1791
WWW.KIMLEY-HORN.COM
TEXAS REGISTERED ENGINEERING FIRM F-928

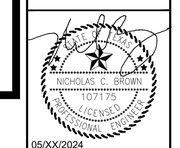

05/XX/2024

KHA PROJECT	069284918
DATE:	MAY 2024
SCALE:	AS SHOWN
DESIGNED BY:	MM
DRAWN BY:	MM
CHECKED BY:	NCB

TCEQ WASTEWATER PLAN AND PROFILE (SHEET 1 OF 2)

2525 CR 172 INDUSTRIAL

CITY OF ROUND ROCK
WILLIAMSON COUNTY, TEXAS

SHEET NUMBER
3 OF 5

Plotted By: Monegro, Melissa Date: May 21, 2025 02:13:50pm File Path: K:\AUS_Civil\069284918 — DAU3 Round Rock\Cad\Plan Sheets—TCEQ\C—TCEQ Wastewater Plan and Profile — SCS mod.dwg
This document, together with the concepts and designs presented herein, as an instrument of service, is intended only for the specific purpose and client for which it was prepared. Reuse of and improper reliance on this document without written authorization and adaptation by Kimley-Horn and Associates, Inc. shall be without liability to Kimley-Horn and Associates, Inc.
Template:KHA AUS TEMPLATE CSD 2022 - DM 11-09-2022

Template:KHA AUS TEMPLATE D2D 2022 DM:11-08-2022

Plotted By:Monegro, Melissa Date:May 21, 2025 02:14:05pm File Path:K:\AUS_Civil\069284910 – DAU3 Round Rock\Cad\Plan Sheets–TCEQ\C– TCEQ Wastewater Plan and Profile – SCS mod.dwg

This document, together with the concepts and designs presented herein, as an instrument of service, is intended only for the specific purpose and client for which it was prepared. Reuse of and improper reliance on this document without written authorization and adaptation by Kimley-Horn and Associates, Inc. shall be without liability to Kimley-Horn and Associates, Inc.

TCEQ WASTEWATER PLAN

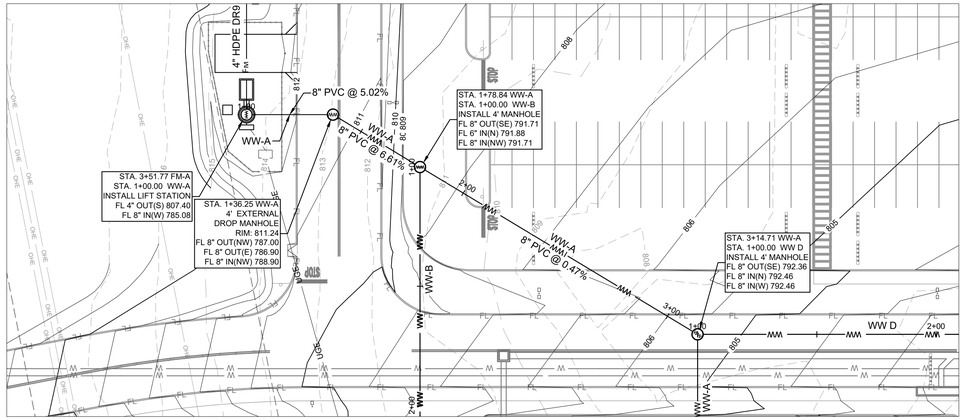

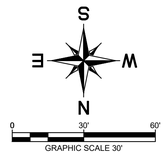

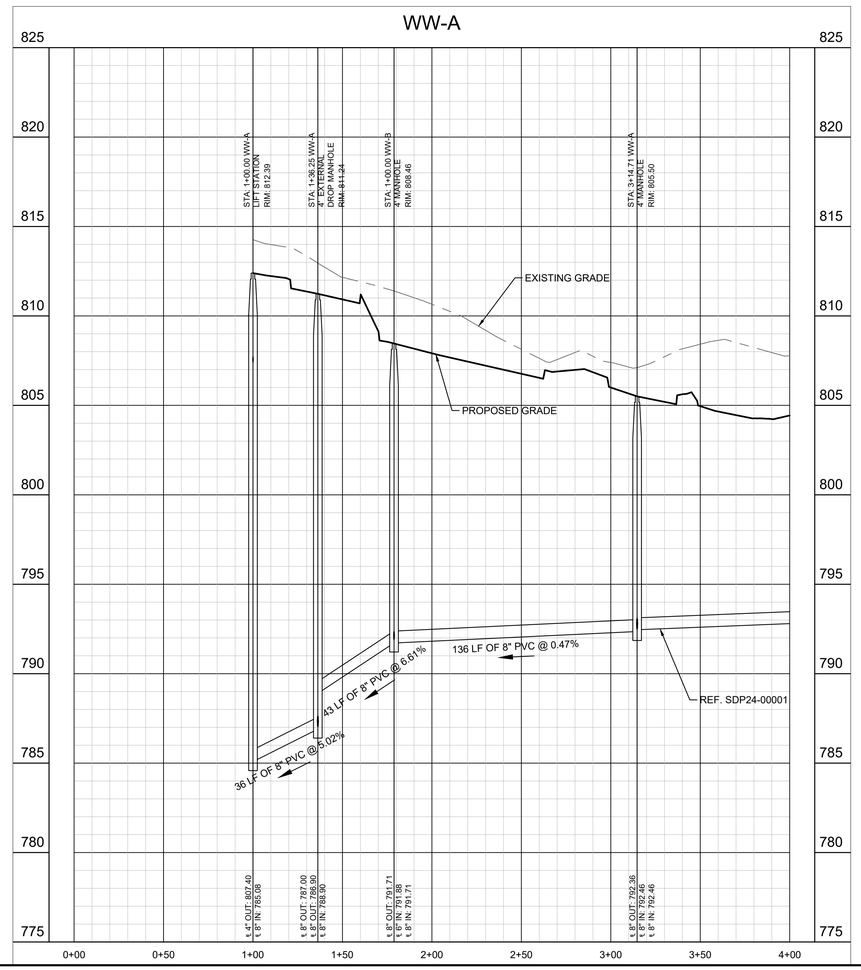

PROFILE SCALE
1" = 40' HORIZONTAL
1" = 4' VERTICAL

LEGEND

	PROPERTY LINE
XXX	EXISTING MAJOR CONTOUR
XXX	EXISTING MINOR CONTOUR
XXX	PROPOSED MAJOR CONTOUR
XXX	PROPOSED MINOR CONTOUR
W	PROPOSED WATER LINE
FW	PROPOSED FIRE WATER LINE
RW	PROPOSED RECLAIMED WATER LINE
	PROPOSED FIRE HYDRANT
	PROPOSED WATER GATE VALVE
	PROPOSED WATER BACKFLOW PREVENTOR
	PROPOSED WATER METER
	PROPOSED FIRE DEPARTMENT CONNECTION
FM	PROPOSED FORCE MAIN
WW	PROPOSED WASTEWATER LINE
	PROPOSED WASTEWATER MANHOLE
	PROPOSED WASTEWATER CLEANOUT
	PROPOSED STORM DRAIN LINE
	PROPOSED STORM GRATE INLET
	PROPOSED STORM HEADWALL
	PROPOSED STORM MANHOLE
	PROPOSED STORM JUNCTION BOX
	PROPOSED STORM AREA INLET
	PROPOSED STORM CURB INLET
W	EXISTING WATER LINE
SS	EXISTING WASTEWATER LINE
	EXISTING STORM DRAIN LINE
	EXISTING FIRE HYDRANT
WW	EXISTING WASTEWATER MANHOLE

NOTES
1. ALL NON-CITY INFRASTRUCTURE INCLUDING GAS, ELECTRIC, CABLE AND TELECOMMUNICATIONS SHALL TRAVERSE UNDERNEATH CITY INFRASTRUCTURE. THIS INCLUDES, BUT IS NOT LIMITED TO WATER LINES, WASTEWATER LINES AND STORM SEWER, WITH A MINIMUM OUTSIDE-TO-OUTSIDE CLEARANCE OF 18".
2. ALL MANHOLES SHALL BE COATED AND VACUMM TESTED.
3. ALL WASETEWATER LINES ARE TO BE CONSTRUCTED OF SDR 26
4. ALL SEGMENTS OF PIPE LOCATED IN ENCASEMENT SHALL BE FULLY RESTRAINED.

BENCHMARKS

BM #51471 MAG NAIL SET "GCP 2"
SET AT THE NORTHEAST CORNER OF THE INTERSECTION OF STATE HIGHWAY 45 AND COUNTY ROAD 172, ±5.5' FROM "YIELD" SIGN.
N: 10147640.83
E: 3127942.60
ELEV.= 841.70'

BM #51473 MAG NAIL SET "GCP 3"
SET IN THE NORTH RIGHT-OF-WAY LINE OF HESTERS CROSSING ROAD, ±560' FROM THE INTERSECTION OF HESTERS CROSSING ROAD AND COUNTY ROAD 172, ±100 FROM CONCRETE SIGN "ENCOMPASS HEALTH".
N: 10149343.04
E: 3128315.81
ELEV.= 812.19'

No.	REVISIONS	DATE	BY

Kimley»Horn
© 2025 KIMLEY-HORN AND ASSOCIATES, INC.
10814 JOLLYVILLE ROAD, CAMPUS IV, SUITE 200, AUSTIN, TX 78759
PHONE: 512-418-1771 FAX: 512-418-1791
WWW.KIMLEY-HORN.COM
TEXAS REGISTERED ENGINEERING FIRM F-928

STATE OF TEXAS
NICHOLAS C. BROWN
107175
LICENSED
PROFESSIONAL ENGINEER
05/XX/2024

KHA PROJECT	069284918
DATE:	MAY 2024
SCALE:	AS SHOWN
DESIGNED BY:	MM
DRAWN BY:	MM
CHECKED BY:	NCB

TCEQ WASTEWATER PLAN AND PROFILE (SHEET 2 OF 2)

2525 CR 172 INDUSTRIAL

CITY OF ROUND ROCK
WILLIAMSON COUNTY, TEXAS

SHEET NUMBER
4 OF 5

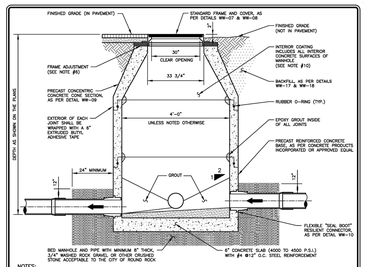

NOTES:

1. IF DROP IS SIX INCHES (6") TO TWO FEET (2'-0"), CONSTRUCTION OF DROP SHALL PROVIDE AN OVERSIZED INVERT TO EXTEND UNDER THE DROP CONNECTION.
2. SEE CONSTRUCTION PLANS FOR MANHOLE SIZE, LOCATION, CONFIGURATION, TYPE OF TOP SECTION, VENTING REQUIREMENTS, PIPE SIZES AND TYPES.
3. MANHOLES SHALL BE PRECAST A.S.T.M. C478 BELL AND SPIGOT WITH "O" RING JOINTS.
4. MANHOLE SHALL BE A MINIMUM OF 4 FEET IN DIAMETER AND EXTEND 2 FEET FROM MANHOLE DEPTH. ADDITIONALLY, MANHOLES LOCATED IN PAVEMENT TO BE DESIGNED FOR H20 TRAFFIC LOADS.
5. ALL MANHOLE COVERS SHALL BE BOLTED AND GASKETED, WHEN MANHOLES ARE LOCATED OUTSIDE OF PAVEMENT.
6. FRAME ADJUSTMENT HEIGHT SHALL CONSIST OF FIVE INCHES (5") MINIMUM TO EIGHTEEN INCHES (18") MAXIMUM. GRADE RINGS SHALL BE GROUTED WITH A NON-SHRINK GROUT INSIDE AND OUTSIDE. ROPE GRADE RINGS, MAY NOT BE USED.
7. FOR MANHOLES TO BE VENTED, SEE DETAILS WW-05 AND WW-06.
8. A FLOW CHANNEL SHALL BE CONSTRUCTED INSIDE MANHOLE TO DIRECT INFLUENT INTO THE FLOW STREAM. ALL DEBRIS SHALL BE REMOVED FROM INVERTS.
9. BASE SECTION SHALL BE DESIGNED FOR H20 LOADING, PLUS EARTH LOAD AT 130 PCF.
10. ENTIRE INTERIOR CONCRETE SURFACES OF WASTEWATER MANHOLES TO BE COATED WITH RAVEN 405, SPRAYWALL, OR APPROVED EQUAL, (WITH A UNIFORM THICKNESS OF 124 MILS AND A MINIMUM THICKNESS OF 100 MILS, APPLIED AFTER MANHOLE HAS PASSED THE VACUUM TEST). FOR REHABILITATING MANHOLES 1/2" MINIMUM THICKNESS CALCIUM ALUMINATE CEMENTITIOUS COATING AND OTHER INTERIOR SURFACES MAY BE COATED IF RECOMMENDED BY COATING MANUFACTURER. (IN LIEU OF INTERIOR COATINGS NEW PRECAST MANHOLES CONTAINING CONSHIELD WILL BE ACCEPTED PROVIDING THE MANUFACTURER STENCILS "CONSHIELD" ON THE INSIDE AND OUTSIDE OF ALL MANHOLE SECTIONS.)

RECORD SIGNED COPY ON FILE AT UARS DEPARTMENT	CITY OF ROUND ROCK	DRAWING NO:
APPROVED 03-01-18 DATE	PRECAST CONCRETE WASTEWATER MANHOLE DETAIL	WW-01

THE ARCHITECT/ENGINEER ASSUMES RESPONSIBILITY FOR THE APPROPRIATE USE OF THIS DETAIL, (NOT TO SCALE)

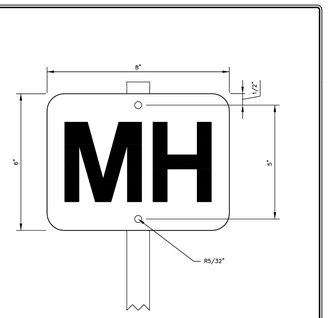

NOTES:

1. SIGN MATERIAL TO BE ALUMINUM.
2. SIGN TO BE ATTACHED TO 48" GALVANIZED STEEL ANGLE POST WITH DIMENSIONS 1" X 1" X 1/8".
3. COLORS:
   BACKGROUND – ORANGE
   LETTERING – BLACK
4. MANHOLE MARKING SIGNAGE TO BE INSTALLED IN AREAS DEEMED NECESSARY BY CITY STAFF.

RECORD SIGNED COPY ON FILE AT UARS DEPARTMENT	CITY OF ROUND ROCK	DRAWING NO:
APPROVED 03-01-18 DATE	MANHOLE MARKER SIGNAGE DETAIL	WW-19

THE ARCHITECT/ENGINEER ASSUMES RESPONSIBILITY FOR THE APPROPRIATE USE OF THIS DETAIL, (NOT TO SCALE)

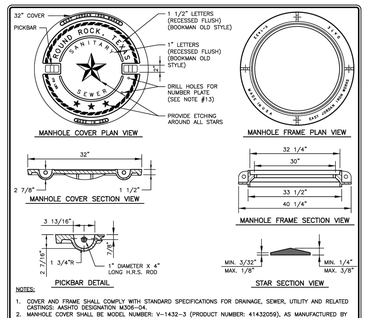

NOTES:

1. COVER AND FRAME SHALL COMPLY WITH STANDARD SPECIFICATIONS FOR DRAINAGE, SEWER, UTILITY AND RELATED CASTINGS: AASHTO DESIGNATION M306-04.
2. MANHOLE COVER SHALL BE MODEL NUMBER: V-1432–3 (PRODUCT NUMBER: 41432059), AS MANUFACTURED BY EAST JORDAN IRON WORKS INCORPORATED, OR APPROVED EQUAL.
3. MANHOLE FRAME SHALL BE MODEL NUMBER: V-1432 (PRODUCT NUMBER: 41432010), AS MANUFACTURED BY EAST JORDAN IRON WORKS INCORPORATED, OR APPROVED EQUAL.
4. MANHOLE COVER AND FRAME ASSEMBLY, IF ORDERED AS A SET, SHALL BE MODEL NUMBER: V-1432 (PRODUCT NUMBER: 41432089), AS MANUFACTURED BY EAST JORDAN IRON WORKS INCORPORATED, OR APPROVED EQUAL.
5. ALL CORNERS AND EDGES SHALL HAVE A 1/8" MINIMUM AND 1/8" MAXIMUM RADIUS.
6. MANHOLE COVERS SHALL BE CAST WITH TWO 1" DIAMETER STEEL PICKBARS.
7. MANHOLE COVER WEIGHT SHALL BE 170 LBS. FOR DUCTILE IRON. WEIGHT SHALL BE CAST ON BOTH TOP AND BOTTOM OF COVER.
8. MANUFACTURER SHALL CERTIFY THAT EACH MANHOLE COVER MEETS H5–20 LOADING.
9. FILLETS SHALL BE 1/4" RADIUS UNLESS OTHERWISE SPECIFIED.
10. MANUFACTURER SHALL REMOVE EXCESS IRON AND MACHINE FINISH SEATING SURFACES TO NOTED DIMENSIONS.
11. COVER SHALL BE DIPPED IN A WATER–BASED ASPHALTIC COATING, PRIOR TO SHIPMENT FROM FOUNDRY.
12. BOLTS SHALL BE 5/8"–11NC X 2" LONG HEX STAINLESS STEEL WITH WASHER.
13. MANUFACTURER SHALL DRILL 2–3/16" X 1/2" DEEP HOLES FOR A MANHOLE NUMBER PLATE TO BE PROVIDED BY THE CITY OF ROUND ROCK. THE TOP HOLE SHALL BE DRILLED 1" O.C. FROM THE BOTTOM OF THE PICKBAR AND THE BOTTOM HOLE SHALL BE DRILLED 4" O.C. FROM THE TOP HOLE.

RECORD SIGNED COPY ON FILE AT UARS DEPARTMENT	CITY OF ROUND ROCK	DRAWING NO:
APPROVED 03-01-18 DATE	NON–BOLTED WASTEWATER MANHOLE COVER AND FRAME DETAIL	WW-05

THE ARCHITECT/ENGINEER ASSUMES RESPONSIBILITY FOR THE APPROPRIATE USE OF THIS DETAIL, (NOT TO SCALE)

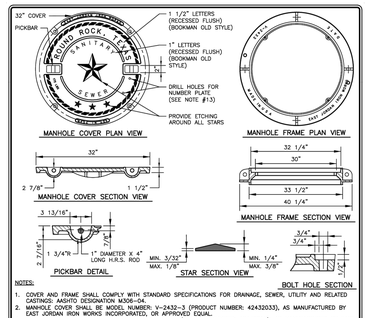

NOTES:

1. COVER AND FRAME SHALL COMPLY WITH STANDARD SPECIFICATIONS FOR DRAINAGE, SEWER, UTILITY AND RELATED CASTINGS: AASHTO DESIGNATION M306–04.
2. MANHOLE COVER SHALL BE MODEL NUMBER: V–2432–3 (PRODUCT NUMBER: 42432033), AS MANUFACTURED BY EAST JORDAN IRON WORKS INCORPORATED, OR APPROVED EQUAL.
3. MANHOLE FRAME SHALL BE MODEL NUMBER: V–2432 (PRODUCT NUMBER: 42432010), AS MANUFACTURED BY EAST JORDAN IRON WORKS INCORPORATED, OR APPROVED EQUAL.
4. MANHOLE COVER AND FRAME ASSEMBLY, IF ORDERED AS A SET, SHALL BE MODEL NUMBER: V–2432 (PRODUCT NUMBER: 42432073), AS MANUFACTURED BY EAST JORDAN IRON WORKS INCORPORATED, OR APPROVED EQUAL.
5. ALL CORNERS AND EDGES SHALL HAVE A 1/16" MINIMUM AND 1/8" MAXIMUM RADIUS.
6. MANHOLE COVERS SHALL BE CAST WITH TWO 1" DIAMETER STEEL PICKBARS.
7. MANHOLE COVER WEIGHT SHALL BE 175 LBS. FOR DUCTILE IRON. WEIGHT SHALL BE CAST ON BOTH TOP AND BOTTOM OF COVER.
8. MANUFACTURER SHALL CERTIFY THAT EACH MANHOLE COVER MEETS H5–20 LOADING.
9. FILLETS SHALL BE 1/4" RADIUS UNLESS OTHERWISE SPECIFIED.
10. MANUFACTURER SHALL REMOVE EXCESS IRON AND MACHINE FINISH SEATING SURFACES TO NOTED DIMENSIONS.
11. COVER SHALL BE DIPPED IN A WATER–BASED ASPHALTIC COATING, PRIOR TO SHIPMENT FROM FOUNDRY.
12. BOLTS SHALL BE 5/8"–11NC X 2" LONG HEX STAINLESS STEEL WITH WASHER.
13. MANUFACTURER SHALL DRILL 2–3/16" X 1/2" DEEP HOLES FOR A MANHOLE NUMBER PLATE TO BE PROVIDED BY THE CITY OF ROUND ROCK. THE TOP HOLE SHALL BE DRILLED 1" O.C. FROM THE BOTTOM OF THE PICKBAR AND THE BOTTOM HOLE SHALL BE DRILLED 4" O.C. FROM THE TOP HOLE.

RECORD SIGNED COPY ON FILE AT UARS DEPARTMENT	CITY OF ROUND ROCK	DRAWING NO:
APPROVED 03-01-18 DATE	BOLTED WASTEWATER MANHOLE COVER AND FRAME DETAIL	WW-07

THE ARCHITECT/ENGINEER ASSUMES RESPONSIBILITY FOR THE APPROPRIATE USE OF THIS DETAIL, (NOT TO SCALE)

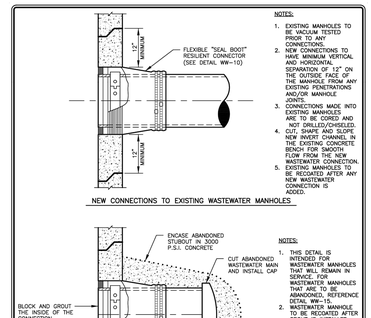

NOTES:

1. EXISTING MANHOLES TO BE VACUUM TESTED PRIOR TO ANY CONSTRUCTION.
2. NEW CONNECTIONS TO HAVE MINIMUM VERTICAL AND HORIZONTAL SEPARATION OF 12" ON THE OUTSIDE FACE OF THE MANHOLE FROM ANY EXISTING PENETRATIONS AND/OR MANHOLE CONNECTIONS.
3. CONNECTIONS MADE INTO EXISTING MANHOLES ARE TO BE CORED AND NOT DRILLED/CHISELED.
4. CUT, SHAPE AND SLOPE NEW INVERT CHANNEL IN THE EXISTING CONCRETE TO ENSURE SMOOTH FLOW FROM THE NEW WASTEWATER CONNECTION.
5. EXISTING MANHOLES TO BE RECOATED AFTER ANY NEW WASTEWATER CONNECTION IS MADE.

NOTES:

1. THIS DETAIL IS INTENDED FOR WASTEWATER MANHOLES THAT WILL REMAIN IN SERVICE FOR WASTEWATER MANHOLES THAT ARE TO BE ABANDONED, REFERENCE DETAIL WW–15.
2. WASTEWATER MANHOLE TO BE RECOATED AFTER GROUT IS INSTALLED.
3. BLOCK THE INLET OF MANHOLE WITH CHICKEN WIRE AND 2–#3 REBAR. GROUT THE INSIDE OF THE MANHOLE FLUSH WITH THE MANHOLE WALL.
4. CONNECTIONS 24" AND LARGER REQUIRE BRICK BLOCKING TO BE INSTALLED PRIOR TO GROUTING.

RECORD SIGNED COPY ON FILE AT UARS DEPARTMENT	CITY OF ROUND ROCK	DRAWING NO:
APPROVED 03-01-18 DATE	EXISTING WASTEWATER MANHOLE CONNECTION DETAIL	WW-21

THE ARCHITECT/ENGINEER ASSUMES RESPONSIBILITY FOR THE APPROPRIATE USE OF THIS DETAIL, (NOT TO SCALE)

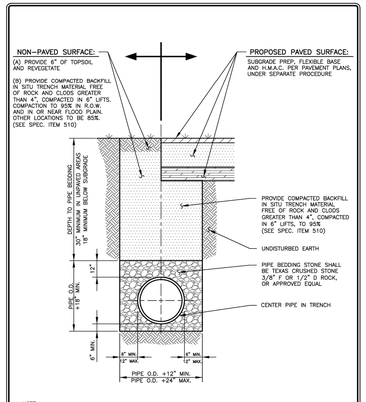

NOTES:

1. AIR VENT PIPE TO BE 4" D.I.P., CLASS 53 WITH FLANGED CONNECTIONS.
2. ALL FITTINGS TO BE 150 PSIG RATED & ANSI/AWWA C110/A21.10.
3. AIR VENT PIPE RISER SHALL BE INSTALLED TO A MINIMUM DEPTH FROM GROUND SURFACE AS POSSIBLE, PREFERABLY LOCATED IN THE CONCENTRIC CONCRETE CONE.
4. MINIMUM ELEVATION AT THE VENT OPENING SHALL BE 1 FOOT (1'–0") ABOVE THE ULTIMATE 100 YEAR FLOOD PLAIN ELEVATION. IF ELEVATION OF VENT OPENING IS LESS THAN 1 FOOT (1'–0") ABOVE THE ULTIMATE 100 YEAR FLOOD PLAIN ELEVATION, A FLOMATIC MODEL 408, PART #2145 BALL CHECK VALVE, OR APPROVED EQUAL, WITH FLOATING TYPE BALL, SHALL BE INSTALLED AT DOWN TURNED OPENING OF VENT. A 16 MESH 304 STAINLESS STEEL INSECT SCREEN SHALL BE PLACED IN THE OPENING.

RECORD SIGNED COPY ON FILE AT UARS DEPARTMENT	CITY OF ROUND ROCK	DRAWING NO:
APPROVED 03-01-18 DATE	MANHOLE VENT FOR ABOVE GROUND INSTALLATION DETAIL (UNDEVELOPED AREAS)	WW-06

THE ARCHITECT/ENGINEER ASSUMES RESPONSIBILITY FOR THE APPROPRIATE USE OF THIS DETAIL, (NOT TO SCALE)

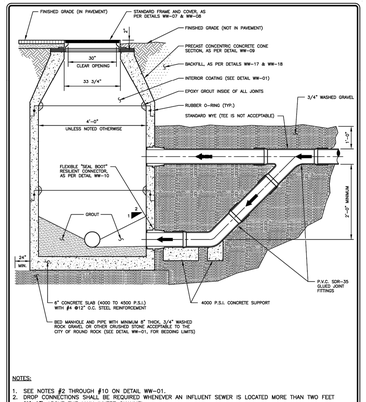

NOTE:

CONCENTRIC CONCRETE CONE SECTION SHALL BE MANUFACTURED USING 4000 TO 4500 P.S.I. CONCRETE, 28 DAY STRENGTH AND IN ACCORDANCE WITH A.S.T.M. C478, AS MANUFACTURED BY CONCRETE PRODUCTS INCORPORATED, OR APPROVED EQUAL.

RECORD SIGNED COPY ON FILE AT UARS DEPARTMENT	CITY OF ROUND ROCK	DRAWING NO:
APPROVED 03-01-18 DATE	PRECAST 48" CONCENTRIC CONCRETE CONE SECTION DETAIL	WW-09

THE ARCHITECT/ENGINEER ASSUMES RESPONSIBILITY FOR THE APPROPRIATE USE OF THIS DETAIL, (NOT TO SCALE)

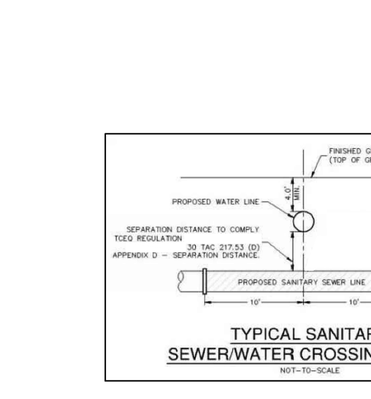

NOTES:

1. MINIMUM DROP FROM INLET TO OUTLET OF MANHOLE IS 0.1 FEET AND MAXIMUM DROP IS 2 FEET, UNLESS SPECIAL APPROVAL IS OBTAINED FROM THE CITY OF ROUND ROCK.
2. INVERT CHANNELS TO BE CONSTRUCTED FOR SMOOTH FLOW WITH NO OBSTRUCTIONS.
3. SPILLWAYS SHALL BE CONSTRUCTED BETWEEN PIPES WITH DIFFERENT INVERT ELEVATIONS PROVIDING FOR SMOOTH FLOW.
4. CHANNELS FOR FUTURE CONSTRUCTIONS, SHALL BE CONSTRUCTED WITH PIPE EXTENDING 3' BEYOND EXTERIOR OF MANHOLE WALL, WITH GLUED PLUG.
5. SLOPE MANHOLE BENCH AT 2:1 SLOPE FROM MANHOLE WALL TO CHANNEL.
6. INVERT CHANNEL SHALL BE A MINIMUM OF 1/2 THE DIAMETER OF THE LARGEST PIPE OR FOUR INCHES (4") DEEP.

RECORD SIGNED COPY ON FILE AT UARS DEPARTMENT	CITY OF ROUND ROCK	DRAWING NO:
APPROVED 03-01-18 DATE	WASTEWATER FLOW PATTERNS FOR INVERT CHANNELS DETAIL	WW-11

THE ARCHITECT/ENGINEER ASSUMES RESPONSIBILITY FOR THE APPROPRIATE USE OF THIS DETAIL, (NOT TO SCALE)

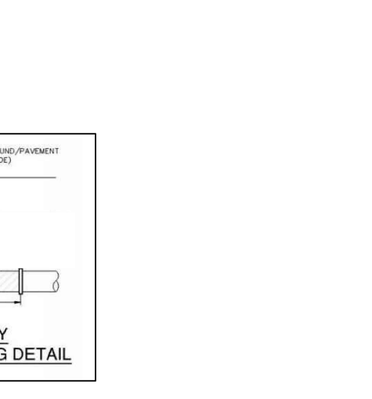

NOTES:

1. ALL PIPE TO BE SDR 26.
2. ALL FITTINGS TO BE SCH 35 SOLVENT WELD FITTINGS.

RECORD SIGNED COPY ON FILE AT UARS DEPARTMENT	CITY OF ROUND ROCK	DRAWING NO:
APPROVED 03-01-18 DATE	WASTEWATER SERVICE CLEAN–OUT DETAIL (NON–PAVED SURFACE)	WW-14

THE ARCHITECT/ENGINEER ASSUMES RESPONSIBILITY FOR THE APPROPRIATE USE OF THIS DETAIL, (NOT TO SCALE)

NOTES:

1. ALL PIPE TO BE SDR 26.
2. ALL FITTINGS TO BE SCH 35 SOLVENT WELD FITTINGS.

RECORD SIGNED COPY ON FILE AT UARS DEPARTMENT	CITY OF ROUND ROCK	DRAWING NO:
APPROVED 03-01-18 DATE	WASTEWATER SERVICE CLEAN–OUT DETAIL (PAVED SURFACE)	WW-13

THE ARCHITECT/ENGINEER ASSUMES RESPONSIBILITY FOR THE APPROPRIATE USE OF THIS DETAIL, (NOT TO SCALE)

NOTE:

ALL TRENCHING AND TRENCH SAFETY SHALL COMPLY WITH APPLICABLE FEDERAL, STATE AND LOCAL REGULATIONS.

RECORD SIGNED COPY ON FILE AT UARS DEPARTMENT	CITY OF ROUND ROCK	DRAWING NO:
APPROVED 03-01-18 DATE	WASTEWATER LINE BEDDING AND SURFACE REPAIR DETAIL (NON–PAVED & PROPOSED PAVED SURFACE)	WW-18

THE ARCHITECT/ENGINEER ASSUMES RESPONSIBILITY FOR THE APPROPRIATE USE OF THIS DETAIL, (NOT TO SCALE)

NOTES:

1. SEE NOTES #2 THROUGH #10 ON DETAIL WW–01.
2. DROP CONNECTIONS SHALL BE REQUIRED WHENEVER AN INFLUENT SEWER IS LOCATED MORE THAN TWO FEET (2'–0") ABOVE THE MAIN INVERT CHANNEL.
3. WHEN P.V.C. PIPE IS USED IN SANITARY SEWER LINES, SOLVENT TYPE JOINT P.V.C. FITTINGS TO BE UTILIZED IN THE DROP ASSEMBLY ONLY. FITTINGS TO BE P.V.C. SCH–35 WITH TWO PART WATER RESISTANT GLUE AT ALL JOINTS.

RECORD SIGNED COPY ON FILE AT UARS DEPARTMENT	CITY OF ROUND ROCK	DRAWING NO:
APPROVED 03-01-18 DATE	PRECAST CONCRETE WASTEWATER MANHOLE WITH DROP CONNECTION DETAIL	WW-02

THE ARCHITECT/ENGINEER ASSUMES RESPONSIBILITY FOR THE APPROPRIATE USE OF THIS DETAIL, (NOT TO SCALE)

TYPICAL SANITARY SEWER/WATER CROSSING DETAIL

NOT–TO–SCALE

BENCHMARKS

BM #51471 MAG NAIL SET "GCP 2"
SET AT THE NORTHEAST CORNER OF THE INTERSECTION OF STATE HIGHWAY 45 AND COUNTY ROAD 172, ±5.5' FROM "YIELD" SIGN.
N: 10147640.83
E: 3127942.60
ELEV.= 841.70'

BM #51473 MAG NAIL SET "GCP 3"
SET IN THE NORTH RIGHT–OF–WAY LINE OF HESTERS CROSSING ROAD, ±560' FROM THE INTERSECTION OF HESTERS CROSSING ROAD AND COUNTY ROAD 172, ±100 FROM CONCRETE SIGN "ENCOMPASS HEALTH".
N: 10149343.04
E: 3128315.81
ELEV.= 812.19'

No.	REVISIONS	DATE	BY

Kimley»Horn
© 2025 KIMLEY–HORN AND ASSOCIATES, INC.
10814 JOLLYVILLE ROAD, CAMPUS IV, SUITE 200, AUSTIN, TX 78759
PHONE: 512-418-1771 FAX: 512-418-1791
WWW.KIMLEY–HORN.COM
TEXAS REGISTERED ENGINEERING FIRM F-928

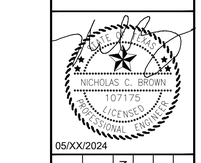

05/XX/2024

KHA PROJECT 069284918	DATE MAY 2024	SCALE: AS SHOWN	DESIGNED BY: MM	DRAWN BY: MM	CHECKED BY: NCB

TCEQ WASTEWATER DETAILS

2525 CR 172 INDUSTRIAL

CITY OF ROUND ROCK
WILLIAMSON COUNTY, TEXAS

SHEET NUMBER
5 OF 5

Plotted By:Monegro, Melissa Date:May 21, 2025 02:14:28pm File Path:K:\AUS_Civil\069284918 – DAU3 Round Rock\Cad\Plan Sheets–TCEQ\C–TCEQ Wastewater Details.dwg
This document, together with the concepts and designs presented herein, as an instrument of service, is intended only for the specific purpose and client for which it was prepared. Reuse of and improper reliance on this document without written authorization and adaptation by Kimley–Horn and Associates, Inc. shall be without liability to Kimley–Horn and Associates, Inc.

SECTION 6:
LIFT STATION / FORCE MAIN SYSTEM APPLICATION

Lift Station / Force Main System Application

Texas Commission on Environmental Quality

for Regulated Activities On the Edwards Aquifer Recharge Zone and Relating to 30 TAC §213.5(c)(3)(B)and(c), Effective June 1, 1999

To ensure that the application is administratively complete, confirm that all fields in the form are complete, verify that all requested information is provided, consistently reference the same site and contact person in all forms in the application, and ensure forms are signed by the appropriate party.

Note: Including all the information requested in the form and attachments contributes to more streamlined technical reviews.

Regulated Entity Name: 2525 CR 172 Industrial

Customer Information

(If different than customer information provided on core data form)

1. The person(s) responsible for providing the engineering certification to the TCEQ pursuant to 30 TAC §213.5(f)(2)(C) during construction and 30 TAC §213.5 (c)(3)(D) upon completion of construction is:

   Contact Person: David Barnett
   Entity: Amazon.com Services, LLC
   Mailing Address: Amazon Tower 1, 101 Platform Way N
   City, State: Nashville, TN Zip: 37203
   Telephone: 901-438-4156 Fax: N/A
   Email Address: barnettu@amazon.com

2. The engineer responsible for the design of this lift station and force main:

   Contact Person: Tara Raoof, P.E.
   Entity: Kimley-Horn and Associates
   Mailing Address: 10814 Jollyville Rd, Avallon IV, Suite 200
   City, State: Austin, TX Zip: 78759
   Telephone: 512-418-1771 Fax: N/A
   Email Address: tara.raoof@kimley-horn.com
   Texas Licensed Professional Engineer's Serial Number: 141851

Project Information

3. This project is for the construction or replacement of:

   ☐ Lift Station only.

☐ Lift Station and Force Main system.
☒ Lift Station, Force Main, and Gravity system.

4. The sewage collection system will convey the wastewater to the Brushy Creek Regional Wastewater Treatment Plant. The treatment facility is:

   ☒ Existing
   ☐ Proposed

5. All components of this lift station/force main system will comply with:

   ☒ The City of Round Rock standard specifications and City of Austin Utilities Design Criteria Manual.
   ☐ Other. Specifications are attached.

Site Plan Requirements

Items 6-14 must be included on the Site Plan.

6. ☒ The Site Plan must have a minimum scale of 1" = 400'.

   Site Plan Scale: 1" = 100 '.

7. ☒ Lift station/force main system layout meets all requirements of 30 TAC Chapter 217.

8. Geologic or Manmade Features:

   ☐ No geologic or manmade features were identified in the Geologic Assessment.
   ☒ All geologic or manmade features identified in the Geologic Assessment (caves, solution openings, sinkholes, fractures, joints, porous zones, etc.) which exist at the site of the proposed lift station and along the path(s) or within **50 feet of each side** of a proposed force main line are shown on the Site Plan and are listed in the table below. Designs used to protect the integrity of the sewer line crossing each feature are described and labeled on the attached page. A detailed design drawing for each feature is shown on Plan Sheet N/A of N/A.
   ☐ No Geologic Assessment is required for this project.

Table 1 - Geologic or Manmade Features

Line	*Station to Station*	*Type of Feature*
N/A	N/A	N/A
	to	
	to	
	to	
	to	
	to	
	to	
	to	

9. [X] Existing topographic contours are shown and labeled. The contour interval is 1 feet. (Contour interval must not be greater than 5 feet).

10. [X] Finished topographic contours are shown and labeled. The contour interval is 1 feet. (Contour interval must not be greater than 5 feet).

    [ ] Finished topographic contours will not differ from the existing topographic configuration and are not shown.

11. 100-year floodplain boundaries

    [X] Some part(s) of the project site is located within the 100-year floodplain. The floodplain is shown and labeled.

    [ ] No part of the project site is located within the 100-year floodplain.

    The 100-year floodplain boundaries are based on the following specific (including date of material) sources(s): FEMA Flood Insurance Rate Map (FIRM) dated December 20, 2019

12. 5-year floodplain:

    [X] After construction is complete, no part of this project will be in or cross a 5-year floodplain, either naturally occurring or manmade. (Do not include streets or concrete-lined channels constructed above sewer lines.)

    [ ] After construction is complete, all sections of the force main located within the 5-year floodplain will be encased in concrete or capped with concrete. These locations are listed in the table below and are shown and labeled on the Site Plan. (Do not include streets or concrete-lined channels constructed above sewer lines.)

Table 2 - 5-Year Floodplain

Line	*Sheet*	*Station to Station*
N/A	N/A	N/A
	of	to
	of	to
	of	to

13. All known wells (oil, water, unplugged, capped and/or abandoned, test holes, etc.):

    If applicable, this must agree with Item No. 15 on the Geologic Assessment Form.

    [ ] There are _____ (#) wells present on the project site and the locations are shown and labeled. (Check all of the following that apply)

    [ ] The wells are not in use and have been properly plugged.
    [ ] The wells are not in use and will be properly plugged.
    [ ] The wells are in use and comply with 16 TAC Chapter 76.

    [X] There are no wells or test holes of any kind known to exist on the project site.

14. [X] Legal boundaries of the site are shown.

Plan and Profile Sheets

*The construction drawings and technical specifications will not be considered for review unless they are the **final plans and technical specifications** which will be used by the contractor for bidding and construction.*

Items 15 – 18 must be included on the Plan and Profile sheets.

15. [X] The equipment installation construction plans must have a minimum scale of 1" = 10'.

    Plan sheet scale: 1" = 5 '.

16. [X] Locations, descriptions and elevations of all required equipment and piping for the lift station and force main are shown and labeled.

17. [X] Air Release/Vacuum Valves will be provided at all peaks in elevation of the proposed force main. These locations are listed in the table below and labeled on the appropriate plan and profile sheets.

Table 3 - Air Release / Vacuum Valves

Line	*Station*	*Sheet*
4" FM in Valves Vault	N/A	47
		of
		of
		of
		of
		of

18. [X] The **final plans and technical specifications** are submitted for the TCEQ's review. Each sheet of the construction plans and specifications are dated, signed, and sealed by the Texas Licensed Professional Engineer responsible for the design on each sheet.

19. [X] **Attachment A - Engineering Design Report**. An engineering design report with the following required items is attached:

    - [X] The report is dated, signed, and sealed by a Texas Licensed Professional Engineer.
    - [X] Calculations for sizing system.
    - [X] Pump head calculations, including, but not limited to, system head and pump capacity curves, head loss calculations, and minimum and maximum static head C values for normal and peak operational conditions.
    - [X] 100-year and 25-year flood considerations.
    - [X] Total lift station pumping capacity with the largest pump out of service.
    - [X] Type of pumps, including standby units.
    - [X] Type of pump controllers, including standby air supply for bubbler controllers, as applicable.

[X] Pump cycle time.
[X] Type of wet well ventilation; include number of air changes for mechanical ventilation.
[X] Minimum and maximum flow velocities for the force main.
[X] Lift station security.
[X] Lift station emergency provisions and reliability.

Administrative Information

20. [X] Upon completion of the wet well excavation, a geologist must certify that the excavation was inspected for the presence of sensitive features and submit the signed, sealed, and dated certification to the appropriate regional office.

21. [X] The TCEQ Lift Stations and Force Mains General Construction Notes (TCEQ-0591) are included on the General Notes Sheet of the Final Construction Plans for this lift station and/or force main system.

22. [X] Submit one (1) original and one (1) copy of the application, plus additional copies as needed for each affected incorporated city, groundwater conservation district, and county in which the project will be located. The TCEQ will distribute the additional copies to these jurisdictions. The copies must be submitted to the appropriate regional office.

23. [X] Any modification of this lift station/force main system application will require TCEQ approval, prior to construction, and may require submission of a revised application, with appropriate fees.

Signature

To the best of my knowledge, the responses to this form accurately reflect all information requested concerning the proposed regulated activities and methods to protect the Edwards Aquifer. This **Lift Station/Force Main System Application** is hereby submitted for TCEQ review and executive director approval. The system was designed in accordance with the requirements of 30 TAC §213.5(c)(3)(C) and 30 TAC Chapter 217, and prepared by:

Print Name of Licensed Professional Engineer: Tara Raoof, P.E.

Place engineer's seal here:

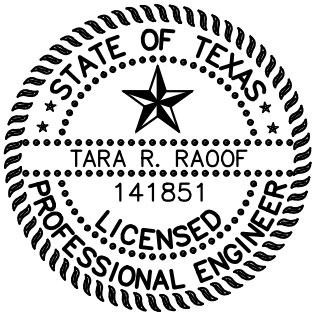

Date: 05/16/2024

Signature of Licensed Professional Engineer:

T.R.R

ENGINEERING DESIGN REPORT

Lift Station Report

2525 CR 172 Industrial Lift Station

Williamson County, Texas

May 15, 2024

Prepared for:

Amazon.com Services, LLC
Amazon Tower 1
101 Platform Way N
Nashville, TN 37203
(901) 438-4156



5/15/2024

Prepared by:

Kimley»Horn

(Texas Firm Registration No. F-928)
10814 Jollyville Road, Campus IV, Suite 200
Austin, Texas 78759

KHA Project No. 069284918

Contents

I. PROJECT BACKGROUND 2

II. INTRODUCTION 3

III. DESIGN 3

A. Lift Station Site Layout 3

B. Planning Flows 3

C. Lift Station & Force Main Design Calculations 4

1. **Wet Well Sizing** 4
2. **Total Dynamic Head** 4
3. **Pump Selection** 5
4. **Net Positive Suction Head (NPSH)** 6
5. **Vent Sizing** 6
6. **Force Main Velocity and System Flush Time** 6

D. Surge Protection and Water Hammer 6

APPENDIX

Appendix A – Lift Station Design Calculations

Appendix B – Pump Data

Appendix C – Control Panel Data

I. PROJECT BACKGROUND

Kimley-Horn and Associates, Inc. (KHA) was retained by Amazon.com Services, LLC to design an industrial building and miscellaneous smaller buildings. The site is located south of the McNeil Rd and County Road 172 intersection within the Round Rock City Limits in Williamson County, Texas. This report addresses the design of the proposed preliminary lift station to serve the 2525 CR 172 Industrial (Amazon) site.

The Amazon Lift Station will be constructed during the development of the site and will be in the southeast quadrant of the Amazon site development, shown below in Figure 1. The lift station is at a high point on the site. Wastewater flows from the site will gravity flow to the lift station, and then will be pumped via force main to a public manhole. The design of the lift station will serve the Amazon development only, which contributes 84.23 gallons per minute (GPM) (0.12 million gallons per day (MGD)).

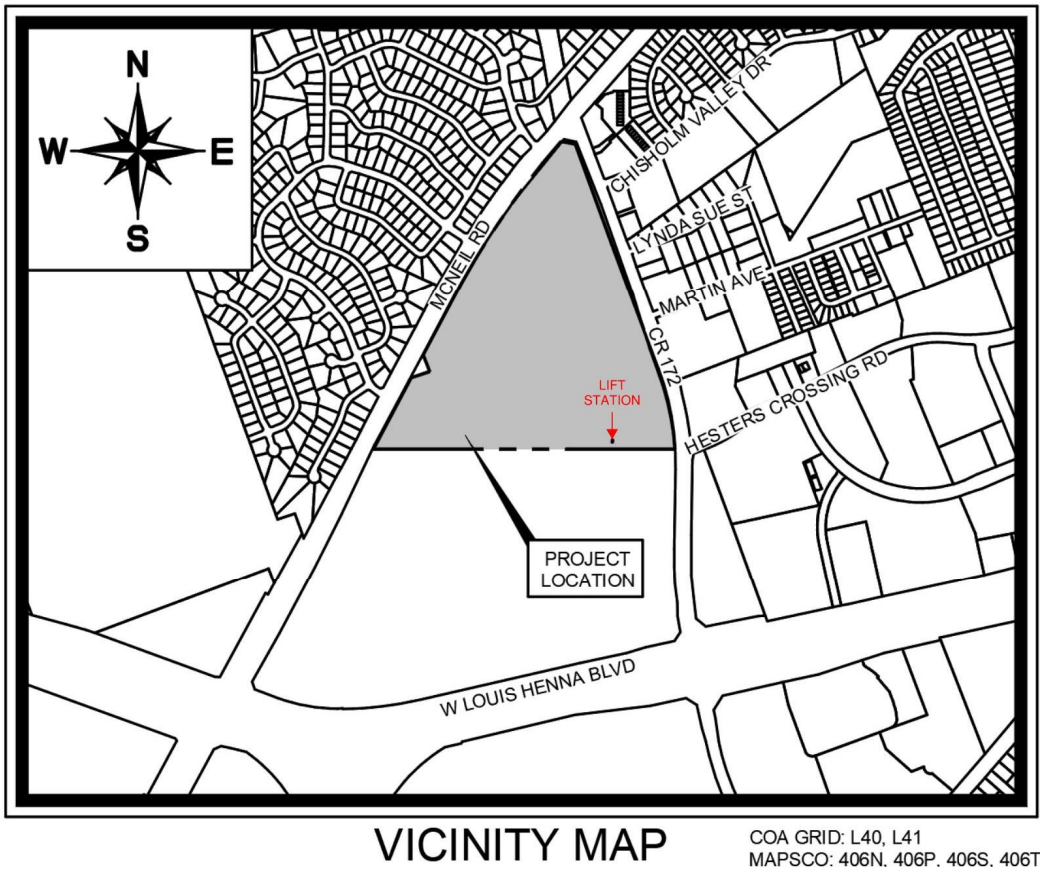

Figure 1 – Project Location Map

II. INTRODUCTION

The Amazon Lift Station is defined as a private lift station necessary to serve the Amazon site only. The Amazon Lift Station will have an ultimate capacity design. The design will have a pumping capacity of 100.42 GPM (0.14 MGD) to provide capacity for wastewater flows on-site. The purpose of the design is to serve the entire Amazon site which has a total area of approximately 69.56 acres with 60 living unit equivalents (LUEs).

The design construction will include the private Amazon Lift Station and one (1) 4-inch HDPE force main that will connect to a proposed 4-foot public manhole. This force main will meet the TCEQ velocity requirements and will have flows of 3.04 feet per second (fps) which will be maintained over time. The force main will run for 98 linear feet (this includes the length of the force main inside the wet well) before out falling to the public 4-foot wastewater manhole that leads into a public 8-inch gravity sewer main.

The Peak Wet Weather Flow (PWWF) for the proposed development has been calculated to be 84.23 GPM. The PWWF has been rounded up to 88 GPM to allow for a more conservative design for the Lift Station. The Total Dynamic Head (TDH) calculated for the design flow was approximately 31.51 ft. The lift station design will consist of two (2) pumps with a flow at operating point of 99 GPM to provide the required pumping capacity for the design flow of 88 GPM at the required TDH (operating TDH is approximately 32.46 ft). Rail and piping will be installed for ease of installation for the system. The wet well has been designed to accommodate the detention volume required by the design flow of 88 GPM.

III. DESIGN

A. Lift Station Site Layout

Refer to site layout in lift station plans. The lift station site footprint is approximately 30.76 feet X 53.83 feet (1634.49 square feet). A 12-foot-wide access concrete driveway will be constructed within the lift station and will tie-in to the Amazon site. A pedestrian barrier and truck yard perimeter safety chain-link fence will be installed through-out the site. The pedestrian safety chain-link security fence will stand five feet in height with iron bars spaced on four-inch centers. The site will have dedicated slab for the odor control unit.

B. Planning Flows

The lift station is designed for 60 LUEs within the proposed project site. The planning flows were calculated using City of Round Rock's Design Criteria. The Average Dry Weather Flow (ADWF) of 11.67 GPM (0.02 MGD) is determined based on the number of LUEs and a capacity of 280 gallons per day (GPD) per LUE. Based on the calculated ADWF, the Peaking Factor (PF) was determined to be 4.11. The Amazon lift station will accommodate the flow for 69.56 total acres, so the Inflow and Infiltration (I&I) was determined to be based 36.23 GPM (0.05 MGD) at 750 gallons per acre. The Peak Dry Weather Flow (PDWF) was determined by applying a peaking factor of 4.11 to the ADWF resulting in a PDWF of 48 GPM (0.07 MGD). The Peak Wet Weather Flow (PWWF) was determined by the sum of the PDWF and the I&I leading to a PWWF of 84.23 GPM (0.12 MGD) for the Amazon development. The PWWF was rounded up to a design flow of 88

GPM to remain conservative. See Exhibit 1 for the properties and flows planned for the preliminary lift station.

The design of the lift station will serve up to 88 GPM, which includes 60 LUEs and 69.56 acres of proposed development in the sewer shed contributing to the lift station.

C. Lift Station & Force Main Design Calculations

All the calculations performed for the proposed lift station and force main are in accordance with the *City of Round Rock Water and Wastewater Systems Design Criteria,* as well as *TCEQ Chapter 217*. All components of this lift station and force main system also comply with City of Round Rock standard specifications. The Amazon lift station will have one (1) 4-inch discharge line coming from the pumps. A valve to the force main will remain closed until the lift station design is installed. The force main is approximately 98 linear feet and made of 4-inch HDPE DR9. The detailed lift station and force main calculations can be found in Appendix A.

1. Wet Well Sizing

A 6-foot diameter precast concrete wet well was proposed for the Amazon lift station. The depth of the wet well was determined with the design flow of 88 GPM with two (2) 3 HP pumps. Minimum 6 minutes cycle time and the design flow of 88 GPM was used to determine the detention volume. With the selected 6-foot diameter wet well, there is 3.44 feet of storage (between the lag pump on and all pumps off) which resulted in the total depth of the wet well to be approximately 36 feet.

2. Total Dynamic Head

The Total Dynamic Head (TDH) was derived by summing up static head, friction loss and the minor losses. The static head of 27.94 feet was calculated by subtracting the anticipated "All Pumps Off Elevation" at 780.50 feet from the highest point along the force main system which is approximately 808.44 feet. Hazen-Williams Coefficient (C) of 100 and 120 were utilized in the design to calculate the friction losses in the system. Minor losses were incorporated based on anticipated valves and fittings for the proposed lift station discharge piping and the force main system. HDPE DR-9 force main was proposed for this development with an inner pipe diameter of 3.44 inches. The velocity in the force main will be 3.04 fps, which meets TCEQ requirements of wastewater flows between 3 fps and 7 fps.

The force main system includes one 4-inch HDPE DR9 force main that runs for approximately 98 feet before discharging into a downstream public manhole that connects to a public gravity wastewater line. The lift station operator can turn on both pumps periodically to ensure there is no blockage in the force main after installation.

TDH for the 4-inch force main was calculated to be 31.51feet (C=100) at the design flow of 88 GPM. System curves were generated and are shown in Figure 2.

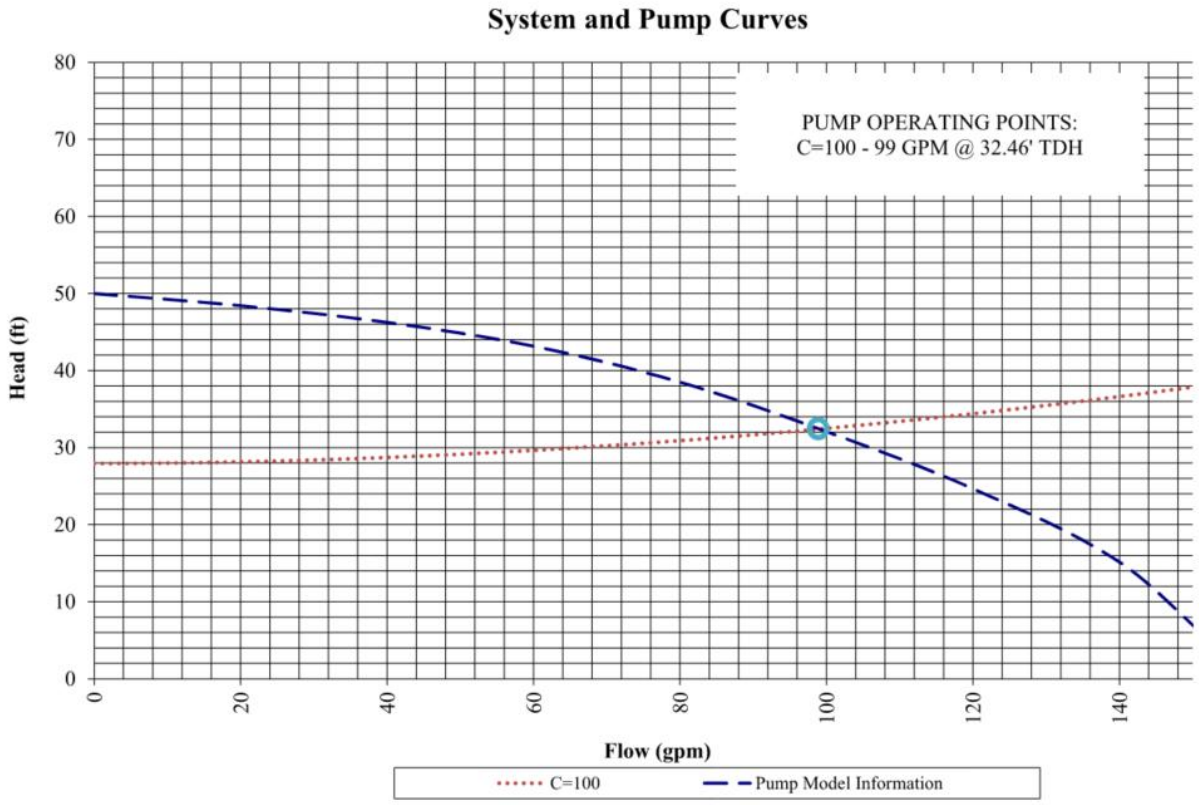

Figure 2 -Phase I Lift Station Pump and System Curves

3. Pump Selection

A duplex system was adopted in the design phase. The engineer's intention was to select a pump that can serve the design. Two (2) 3 HP pumps with 4-inch impeller were selected to accommodate the design flow of 88 GPM. Pump information and operating conditions are summaries in Table 1 below. Additional pump data can be found in Appendix B.

Table 1 – EBARA Submersible Pump Design

EBARA Submersible Pump Model	Force Main Diameter (in)	Force Main Length (ft)	Operating Flow (GPM)	Total Dynamic Head (ft)	Velocity (ft/s)	Impeller Size (in)
EBG-33	4	98	99	32.46	3.04	4

4. Net Positive Suction Head (NPSH)

The Available Net Positive Suction Head (NPSHa) was calculated by using the equation from the *City of Round Rock Water and Wastewater System Design Criteria.* Barometric pressure (P_B) of 33.4 feet and vapor pressure (P_V) of 1.4 feet were given and used in the calculation. Minimum static suction head (H_S) was estimated to be 1.4 feet from All Pumps Off elevation to the eye of the impeller. Since the selected pumps are submersible without suction pipe, friction loss (H_{fs}) is expected to be negligible. Therefore, NPSHa was determined to be 32.50 feet. Which is greater than Required Net Positive Suction Head (NPSHr) of the pump.

5. Vent Sizing

Per the TCEQ design criteria, the maximum passive ventilation system is to not exceed air velocity no greater than 600 feet per minute. Based on the pumping capacity during the initial design phase, the air velocity has been determined to be 539.18 feet per minute with a diameter of 2-inch diameter vent pipe. One 4-inch diameter vent pipes will be used. The vent pipe will be connected to a passive Carbtrol Activated Carbon odor control unit as shown on the plans.

6. Force Main Velocity and System Flush Time

The proposed 4-inch force main shall be HDPE. With the design flow of 88 GPM, the velocity inside the 4-inch diameter force main was calculated to be approximately 3.04 fps. The total flush time for the 4-inch diameter force main based on the Peak Wet Weather Flow during the design is 51.07 minutes. Detailed detention time and flush time calculations can be found in Appendix A.

D. Surge Protection and Water Hammer

Surge can occur in the pipes from the pumps starting and stopping and valves opening and closing. The surge pressure in the pipe shall be 63.61 psi based on the design flow of 88 GPM. The recommended pipe is DR9, which is rated for 250psi, which is greater than the surge pressure in the pipe. Therefore, the pipe will not be damaged due to a water hammer. Refer to Surge Pressure Calculations in Appendix A.

EXHIBIT 1 – WASTEWATER FLOW PROJECTIONS

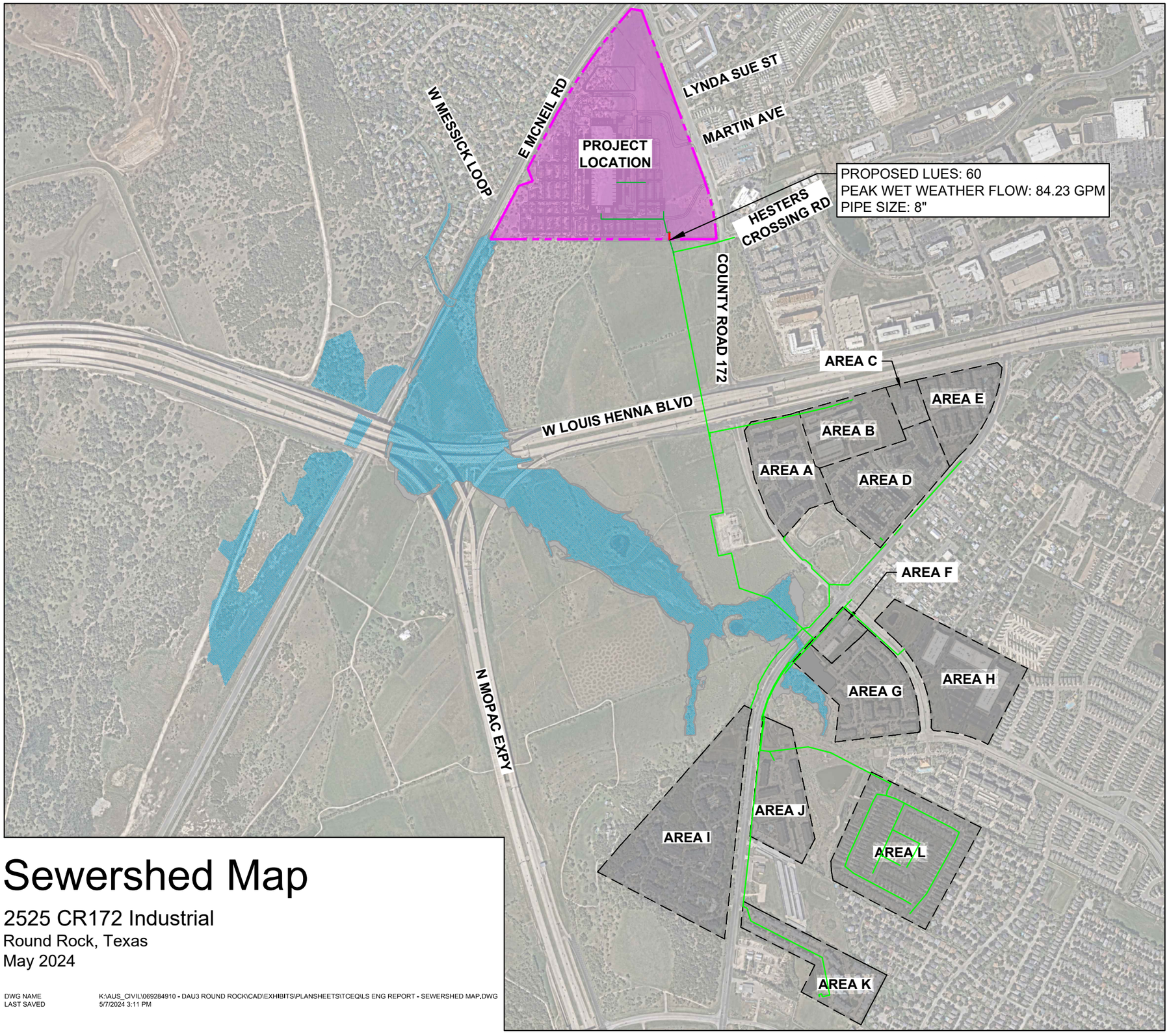

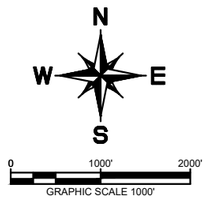

LEGEND

- PROPERTY LINE
- PROPOSED GRAVITY WASTEWATER
- PROPOSED FORCE MAIN
- EXISTING GRAVITY WASTEWATER
- AREA SERVED BY PROPOSED PRIVATE LIFT STATION
- AREAS SERVED BY THE EXISTING WASTEWATER COLLECTION SYSTEM
- ATLAS 14 100-YEAR FLOODPLAIN

Sewershed Map

2525 CR172 Industrial
Round Rock, Texas
May 2024

DWG NAME K:\AUS_CIVIL\069284910 - DAU3 ROUND ROCK\CAD\EXHIBITS\PLANSHEETS\TCEQ\LS ENG REPORT - SEWERSHED MAP.DWG
LAST SAVED 5/7/2024 3:11 PM

Kimley»Horn
10814 Jollyville Road
Campus IV, Suite 200
Austin, TX 78759
512-418-1771
State of Texas Registration No. F-928

NOTE: THIS PLAN IS CONCEPTUAL IN NATURE AND HAS BEEN PRODUCED WITHOUT THE BENEFIT OF A SURVEY, TOPOGRAPHY, UTILITIES, CONTACT WITH THE CITY, ETC.

APPENDIX A – LIFT STATION CALCULATIONS

Flow Calculations

Maximum Build Out

LUEs (total)	60	
Area (total)	69.56	acres

Flow Properties

Q/LUE	280	GPD/LUE
I&I	750	GPD/Ac
Peaking Factor	4.11	

Flow Values

Avg Dry Weather Flow (F)	11.66667	gpm
Peak Dry Weather Flow	48	gpm
I & I Flow	36.22914	gpm
Peak Wet Weather Flow	84.22914	gpm
Minimum Dry Weather Flow	2	gpm

Design Flow

Design Flow	84.22914	gpm
	0.19	cfs

Operating Information

One Pump Operating Flow	88	gpm
	0.2	cfs
Two Pump Operating Flow	88	gpm
	0.2	cfs

Wet Well Sizing Calculations

City of Round Rock

Generator? (yes or no) n

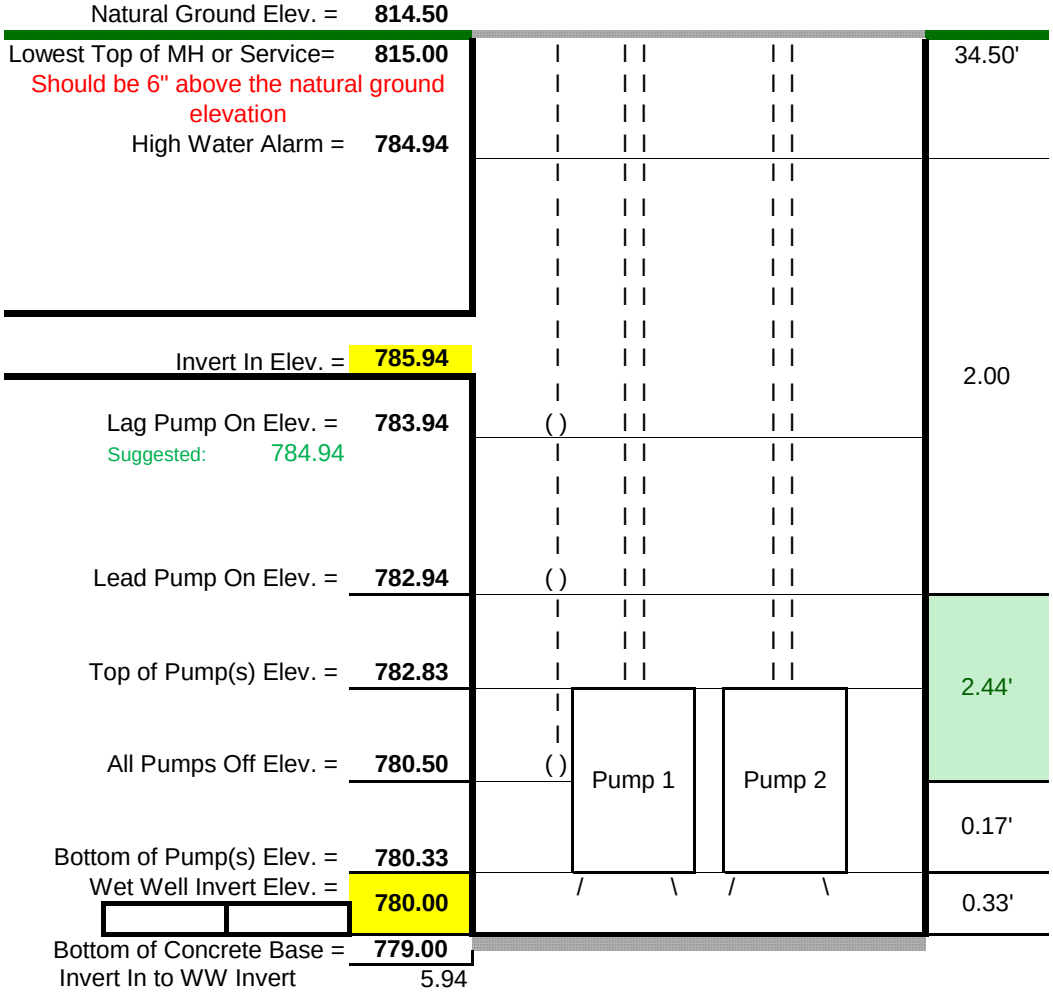

Needed Input

Longest Power Outage	20
Wetwell Diameter (feet) =	6
Elev. of Deepest Invert In =	808.50
Dual Pump Capacity (gpm) =	88
Single Pump Capacity (gpm) =	88
Pump Height (ft) =	2.33
Minimum Submersed Depth (ft) =	0.50
Natural Ground Elev. =	814.50
Bottom of Pump to Invert Dimension (ft) =	0.33

Wet Well Depth Calculations

Storage Depth (ft) =	0.00
Total Depth (ft) =	36.00

Volume Calculations

Gallons/Foot of Wet Well =	211.51
Minimum Cycle Time (TCEQ) =	6
Required Active Volume (gal) =	132.00
Depth Required Active Volume (feet) =	0.62
Active Volume Provided (gal) =	**516.71**
Active Volume Depth (feet) =	2.44
Total Emergency Storage Needed (gal) =	1684.58
Required Emergency Storage Depth (feet) =	7.96
Available Emergency Storage Depth (feet) =	30.06
Available Emergency Storage Volume (gal) =	**6357.26**

TDH CALCULATIONS

Minor Loss	K-Value	Qty.	Totals
Discharge Into Manhole	1.00	1	1.00
90 Degree Bend	0.70	6	4.20
45 Degree Bend	0.50	0	0.00
22.5 Degree Bend	0.30	0	0.00
11.25 Degree Bend	0.20	0	0.00
5.625 Degree Bend	0.10	0	0.00
Reducer	0.50	1	0.50
Gate Valve	2.50	2	5.00
Check Valve	0.20	2	0.40
		K(total) =	11.1

Minor loss coefficient for valves, bends, tees, and other fittings

C = 100.00
C = 120.00

Minor Losses	1.59	ft	Headloss due to a fitting
Friction Head(c=120)	1.98		
Friction Head(c=140)	1.41	ft	Calculated using Hazen Williams equation; C value based on pipe material
"All Off" Elev.	780.50		
FM High-Point Elevation	808.44		This is the ultimate elevation that the pumps will have to pump against.
Static Head	27.94		Only a function of elevation

Q	D (in)	V	length	Pipe Area
88	3.44	3.04	98	0.065

Nominal	4
Outer Diameter	4.44
Pipe Thickness	0.5

Diameter is based on values from North American Pipe Co or JM Eagle

Total Head (C=100)	31.51
Total Head (C=120)	30.95

This is the total amount of pressure that the pumps will overcome to see that the wastewater is sufficiently lifted beyond the highest point to wherever the FM is discharging

Detention Times Calculation

One Pump Flow (gpm) 88

Two Pump Flow (gpm) 88

	Active Volume (gal) Primary	gpd	*i (gpm)*	Q (gpm)	Tf	Te	Td	Tc	
Average Daily Flow	517	16,800	11.66667	88	44.29	6.77	51.06	102.12	
Peak Dry Weather Flow	517	69,120	48	88	10.76	12.92	23.68	47.37	
Peak Wet Weather Flow	517	121,290	84.22914	88	6.13	5.78	11.91	23.83	
Minimum Dry Weather Flow	517	2,880	2	88	258.36	6.01	**264.36**	528.73	
							Max detention time		
Minimum Cycle Time	517	63,360	44	88	11.74	11.74	**23.49**	46.97	<== always occurs at 1/2 outflow (normally PWWF)

Tf = time to fill the wet well in minutes
Te = time to empty the wet well in minutes. This considers wastewater flowing in at the same time the wet well is emptying.
Td = detention time (sum of Tf and Te)
Tc = cycle time is equal to twice the detention time

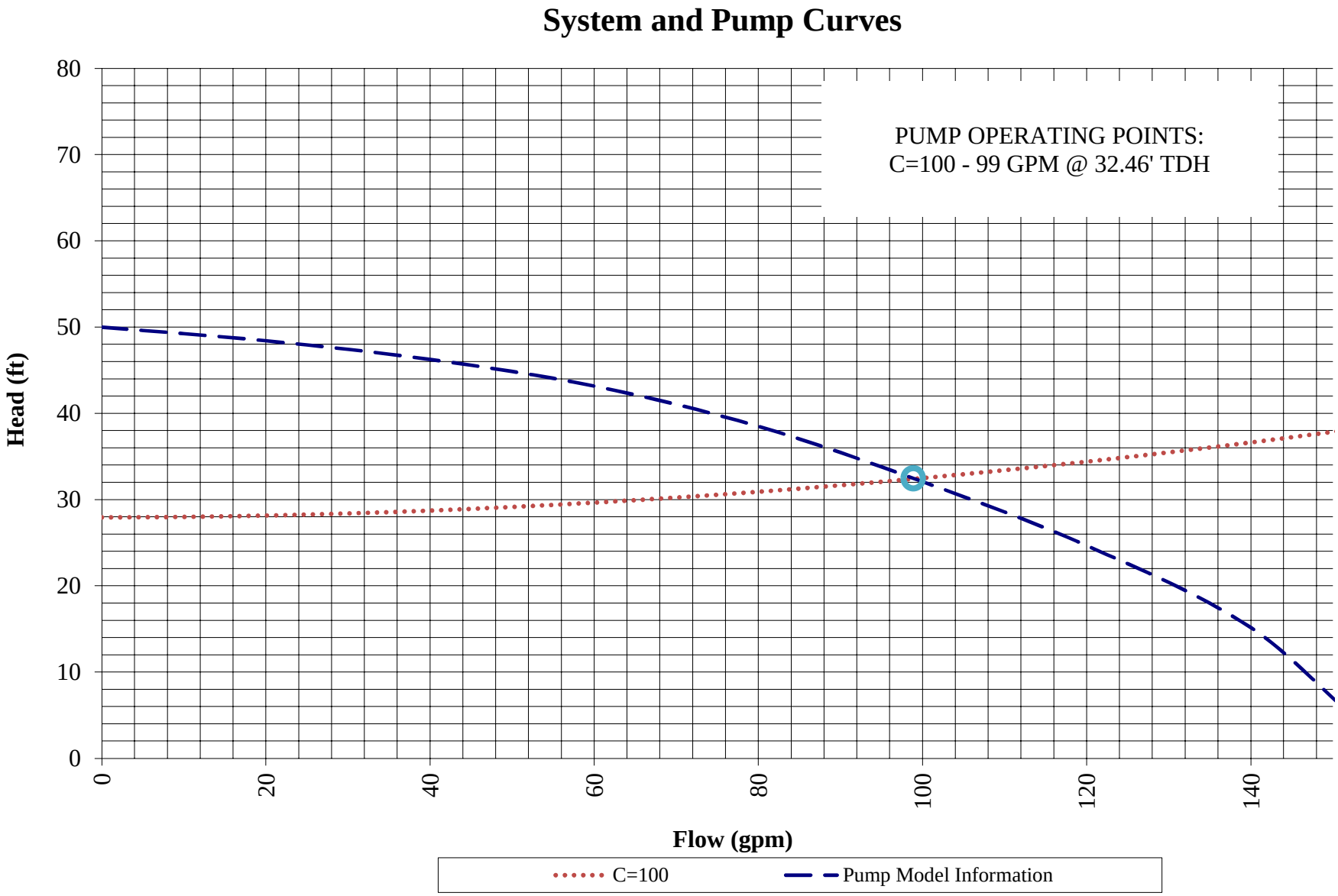
System and Pump Curves
PUMP OPERATING POINTS:
C=100 - 99 GPM @ 32.46' TDH
Head (ft)
80
70
60
50
40
30
20
10
0
0
20
40
60
80
100
120
140
Flow (gpm)
C=100
Pump Model Information

Force Main Flush Time

Wetwell dia (ft)	6	
Δ(on - off) (ft)	2.44	
i (gpm)	11.66666667	*USE AVERAGE DAILY FLOW!
Pumped Q (gpm)	88	
FM Length (ft)	98	
FM Velocity (fps)	3.04	
Wet Well Filling Time	44.292	mins
Pump Run Time	6.77	mins
Wet Well Det. Time	51.06	mins
Flushing Cycles	0.08	cycles
Flush Cycle Whole #	0.00	<== whole cycles
Flush Cycle Decimal#	0.08	<== decimal cycles
Flush Time	**0.54**	mins
Flush Time (COA - using PWW	0.415951313	

COA Tflush - average dry weather flow

Tf [min]	44.29
Te [min]	6.77
Foce Main Length [ft]	98
θ (pump cycle time) [min]	6
Vfm (force main velocty) [fps]	0.40
Tflush	51.06938368

SURGE PRESSURE CALCULATIONS

INSTRUCTIONS: REFER TO UNI-BELL HANDBOOK OF PVC PIPE. UPDATE E BASED ON PIPE MATERIAL. VERIFY WITH TABLE 6-2

Critical Time, tc (s)

tc = 2 L / a

L = Length of Pipe (ft)

L = **98** ft — Approximate Maximum Pipe Length from plans

$$a = \frac{4{,}660}{\sqrt{1 + \frac{K * d_i}{E * t}}}$$

K = Bulk Modulus of Elasticity of the liquid (lb/in2)

K = **3.00E+05** lb/in2 — @ 70oF

E = Modulus of Elasticity of pipe material (lb/in2)

E = **1.53E+05** lb/in2

D = Inside Pipe Diameter (in)

D = 3.44 in

e = Pipe Wall Thickness (ft)

e = **0.50** in

a = **1,223** ft/s — see Table 6-2 for typical range

tc = 0.16 s — using a = 1,223 ft/s

ΔH = -a Dv / g

a = Elastic Wave Speed (ft/s) — Calculated Previously

g = Gravitational Constant (ft/s2)

g = 32.2 ft/s2

Δϖ = Change in Liquid velocity (ft/s)

Δϖ = v2 - v1

Δϖ = (Q2 - Q1) / A — By Continuity Principle

Q2 = **0.00** gpm (min. flow)

Q1 = **88.00** gpm (max. pump flow)

A = **0.06** ft2

Δϖ = **-3.0** ft/s

		ΔH =	**115.42**	**ft**		using a =	1,223	ft/s (calculated previously)	
	Therefore, the pressure increase on the pipe associated with								
	the rapid velocity change across a waterhammer wave (Psurge) is:								
		Pressure	**49.97**	**psi**		using a =	1,223	ft/s (calculated previously)	
Total Pressure in Pipe Due to Waterhammer/Surge and TDH:									
The Total Dynamic Head (TDH) @ peak flow was calculated as:						**31.51**	ft (See system curve for Hazen-Williams)		
Therefore, the pressure in the pipe at this TDH (P TDH) is:						**13.64**	psi		
Therefore, the total pressure that the PVC pipe (P tot)will be subjected to during water hammer conditions @ peak									
	flow is:								
		Ptot = Psurge + PTDH							
		Pressure	**63.61**	**psi**		using a =	1,223	ft/s (calculated previously)	

APPENDIX B – PUMP DATA

Contents

Model

EBG2-2115(A)
EBG2-212C
EBG2-21
EBG2-23
EBG-31
EBG-33
EBG-51
EBG-53
EBG-103
EBHG2-212C
EBHG2-21
EBHG2-23
EBHG-31
EBHG-33
EBHG-51
EBHG-53
EBHG-71
EBHG-73

Section	Page
Specifications	1-191
Selection Chart	1-192
Performance Curves	1-195
Dimensions	1-201
QDC Information	1-204
Motor Data wiring diagrams motor electrical data	1-207

Model Designation

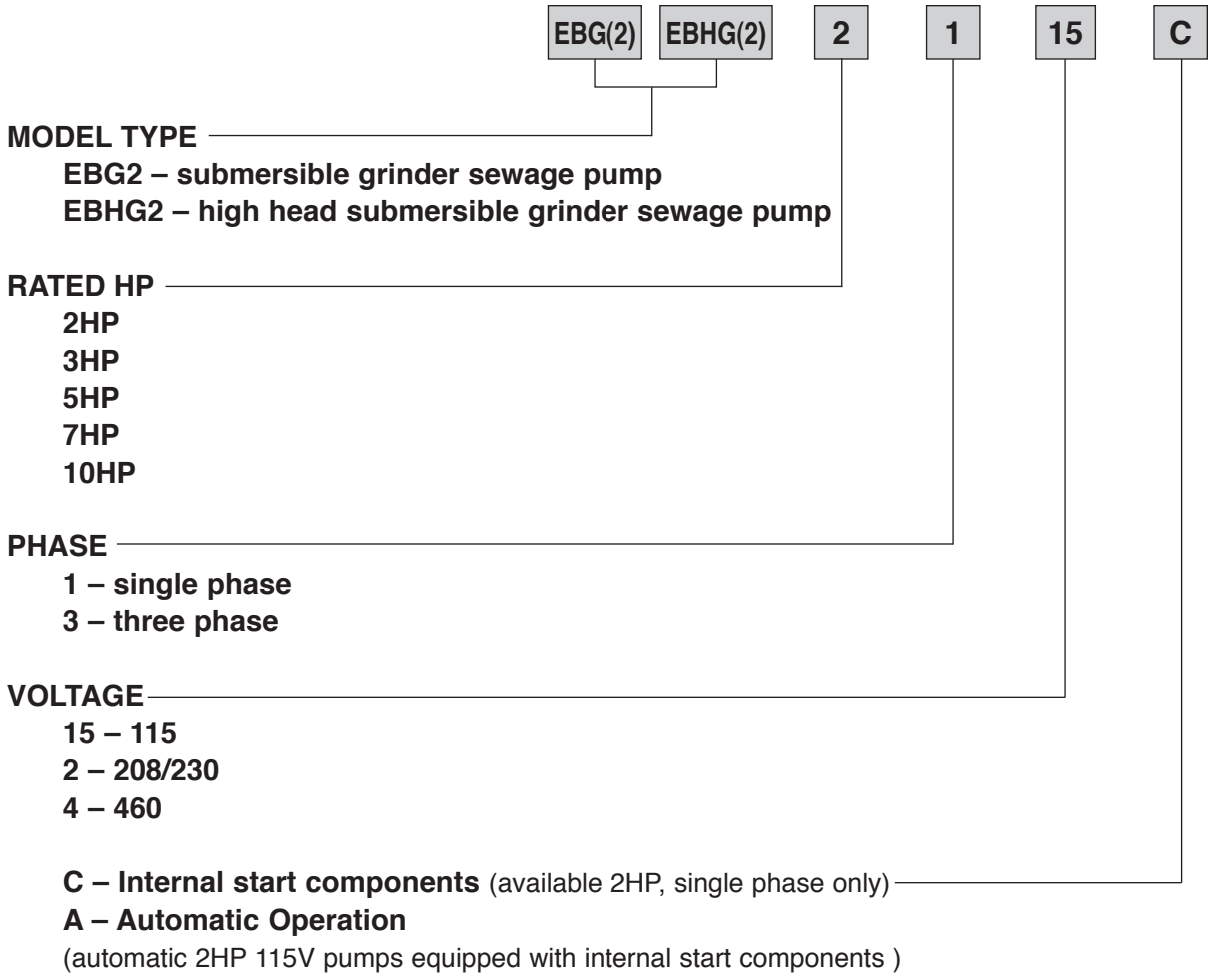

Specifications

Discharge Size/Connection	1¼" NPT, 2½", 3" ANSI (3, 5, 7½ 10 HP)
Range of HP	2, 3, 5, 7½ 10 HP
Range of Performance	Capacity 20 to 190 GPM Head 8 to 175 feet
Limitation	
Maximum Water Temperature	120°F (49°C) *[140°F (60°C) intermittent]*
Synchronous Speed	3450 RPM
Materials	
Casing	Cast Iron ASTM A-48, Class 30
Impeller	Ductile Iron (2HP models) Cast Brass (3-10HP models)
Shredding Ring	Hardened 440C Stainless Steel, 56-60 Rockwell C
Grinder Impeller	Hardened 440C Stainless Steel, 56-60 Rockwell C
Shaft	416 Stainless Steel
Motor Housing	Cast Iron ASTM A-48, Class 30
Fastener	304 Stainless Steel
Mechanical Seal	Double Mechanical Seal, Type 21
Material – Upper Side	Silicon Carbide/Silicon Carbide
Material – Lower Side	Silicon Carbide/Silicon Carbide
Impeller Type	Recessed Vortex
Bearing – Upper/Lower	Single Row, Ball, Oil Lubricated
– Sleeve Bearing	Bronze with Oil Groove (3, 5, 7½ 10 HP)
Motor	Oil-filled, Insulation Class F
Single Phase	115 V, 208/230V for 2 HP 208/230V only for 3, 5, 7½ HP
Three Phase	208/230V, 460V
Motor Protection	Internal moisture detection
Single Phase	Built-in Automatic Overload Protection
Three Phase	Non-overloading on-winding temperature sensor
	Submersible Cable 30 ft. Submersible Cable 40 ft. (3, 5, 7½ 10 HP) *Consult factory for additional cable lengths.*
Accessories	QDC System

Note: Models EBG2-115 and EBG2-212C have Internal start component (Control box not required).

Selection Chart

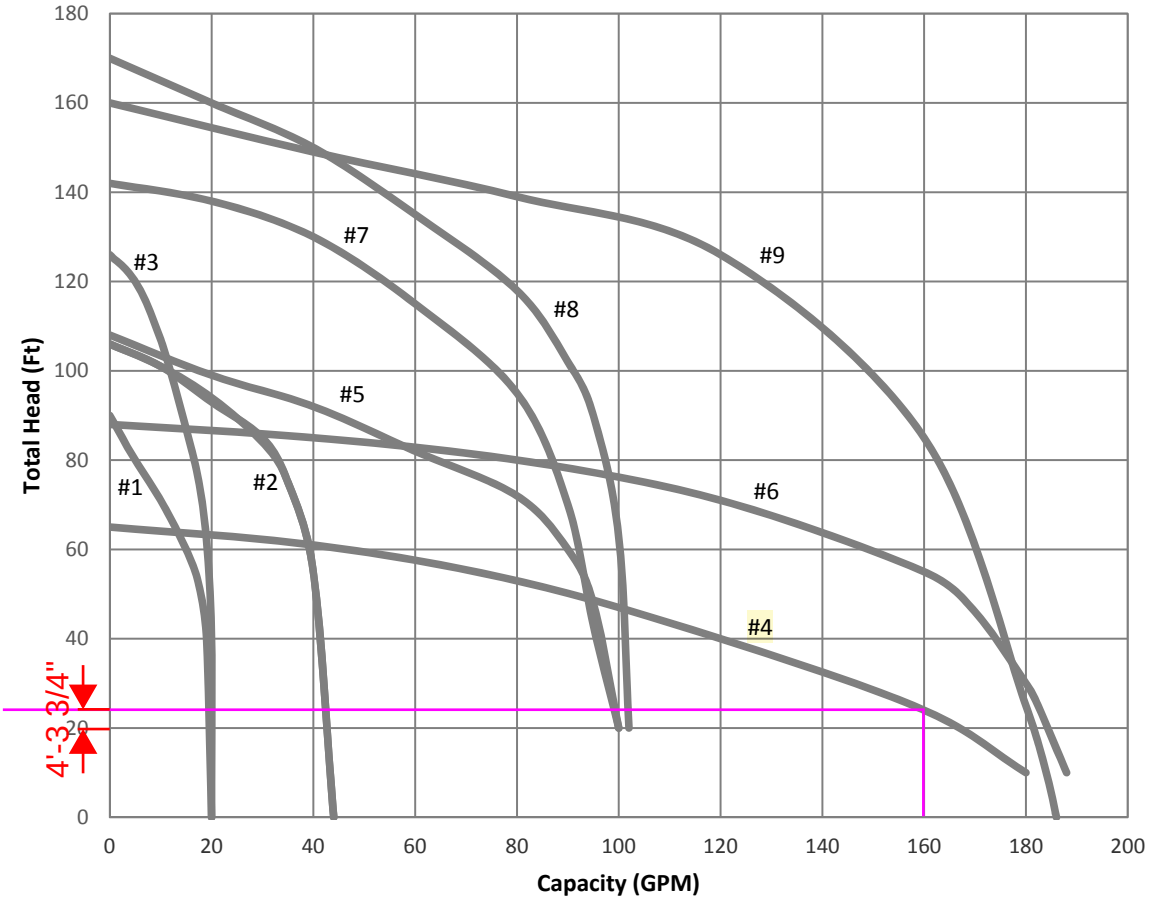

1	EBG2-2115 2HP
2	EBG2-2 2HP
3	EBHG2-2 2HP
4	EBG-3 3HP
5	EBHG-3 3HP
6	EBG-5 5HP
7	EBHG-5 5HP
8	EBHG-7 7.5HP
9	EBG-103 10HP

Specifications – 2 HP

Pump Model:
Pump shall be of the centrifugal type with an integrally built-in grinder unit and submersible type motor. The grinder unit shall be capable of macerating all material in normal domestic and commercial sewage, including reasonable amounts of foreign objects such as sanitary napkins, disposable diapers, thin rubber, small wood, plastic and the like to a fine slurry that will easily pass through the pump and 1-1/4" NPT discharge.

Operating Conditions:
The pump shall have a capacity of _____ GPM at a total head of _____ feet, and shall use a motor rated at 2 HP and 3450 RPM.

Pump Impeller:
Ductile Iron threaded on a stainless steel shaft. The impeller shall be of the recessed vortex type to provide an unobstructed passage through the volute for the ground solids.

Grinder Construction:
Both grinder impellers and shredding ring shall be of 440C stainless steel hardened to 56-60 Rockwell C. The grinder assembly shall consist of a grinder impeller and shredding ring mounted directly below the volute passage. The grinder impeller is threaded to a stainless steel shaft, locked with a screw and washer. The shredding ring shall be pressed into the cast iron volute for easy removal. All grinding of solids shall be from the action of the grinder impeller against the shredding ring.

Seals:
Type 21, dual mechanical seal construction mounted in tandem, shall protect the motor. Primary seal shall be silicon / carbide. Secondary seal shall be silicon / carbide. The seal face shall be lapped to a flatness of one light band. An electrode shall be mounted in the seal chamber to detect water entering the chamber through the lower seal. Water in the chamber shall cause a red light to turn on at the control box. This signal shall not stop the motor, but shall act as a warning only, indicating service is required. Single and three phase pumps shall have an internal seal leak probe that signals an alarm in the control panel in the case of water intrusion into the seal chamber [EBG2-2115(A), EB(H)G2-21C excluded].

Motor:
The pump motor shall be of the submersible type, rated 2 HP, 3450 RPM. The motor shall be for 60 Hz, either 115, 208, 230, 460 volt, single or three phase operation. Single-phase motors shall be capacitor start, capacitor run type for high starting torque. For the 115V motor, run capacitor ratings shall not exceed 300 volts. The motor will utilize mechanical starting switch. Start and run capacitors, and electronic relay for operating the motor will be found in the control box. Major motor operating temperature must not exceed Class B ratings.

The stator winding shall be of the open type with Class F insulation. Winding housing shall be filled with clean, high dielectric oil that lubricates bearings and seals, transferring heat from windings and rotor to the outer cast housing.

The motor shall have two heavy-duty ball bearings to support the pump shaft, taking radial and thrust loadings. Ball bearings shall be designed for a minimum 50,000 hours B-10 life. The stator shall be pressed into the motor housing. The common motor pump and grinder shaft shall be of 416 SST, threaded to take the pump and grinder impeller.

Single-phase motors shall have automatic reset overload protection attached to the top end of the motor windings to stop the motor if the motor winding temperature reaches 130 degrees C. The high temperature shut-off will cause the pump to cease operation, should a control failure cause the pump to run in a dry wet well. The overload shall automatically reset when the motor cools to a safe operating temperature. Three phase motors contain temperature sensors with (2) wires for attachment to the control panel.

Power Cord:
The motor power cord shall be 12 Ga. SOW/SJOWA or SOOW. The cable jacket shall be sealed at the motor entrance by means of a rubber compression washer and compression nut. An epoxy filled tube shall seal the outer cable jacket and individual leads to prevent water from entering the motor housing. Individual conductor strands shall be soldered within.

Specifications – 3, 5, 7.5 10 HP

Pump Model:
Pump shall be of the centrifugal type with an integrally built-in grinder unit and submersible type motor. The grinder unit shall be capable of macerating all material in normal domestic and commercial sewage, including reasonable amounts of foreign objects such as sanitary napkins, disposable diapers, thin rubber, small wood, plastic and the like to a fine slurry that easily pass through the pump and 2" discharge pipe. Discharge shall be standard with slotted bolt pattern to accomodate either a 2.5" or 3" 150 lb. ANSI flange.

Operating Conditions:
The pump shall have a capacity of _____ GPM at a total head of _____ feet, and shall use a motor rated at _____ HP and 3450 RPM.

Pump Impeller:
Cast brass and threaded on a stainless steel shaft. The impeller shall be of the recessed vortex type to provide an unobstructed passage through the volute for the ground solids.

Grinder Construction:
Both grinder impellers and shredding ring shall be of 440C stainless steel hardened to 56-60 Rockwell C. The grinder assembly shall consist of a grinder impeller and shredding ring mounted directly below the volute passage. The grinder impeller is threaded to a stainless steel shaft, locked with a screw and washer. The shredding ring shall be pressed into an iron holding flange for easy removal. The flange shall be provided with tapped back-off holes so screws can be used to push the shredding ring from the housing. All grinding of solids shall be from the action of the grinder impeller against the shredding ring.

Seals:
Type 21, dual mechanical seal construction mounted in tandem, shall protect the motor. Primary seal shall be silicon / carbide. Secondary seal shall be silicon / carbide. The seal face shall be lapped to a flatness of one light band. A double electrode shall be mounted in the seal chamber to detect water entering the chamber through the lower seal. Water in the chamber shall cause a red light to turn on at the control box. This signal shall not stop the motor, but shall act as a warning only, indicating service is required.

Motor:
The pump motor shall be of the submersible type, rated _____ HP, 3450 RPM. The motor shall be for 60 Hz, either 208, 230 or 460 volt, single or three-phase operation. Major operating temperature must not exceed Class B ratings.

The stator winding shall be of the open type with Class F insulation. Winding housing shall be filled with clean, high dielectric oil that lubricates bearings and seals, transferring heat from windings and rotor to the outer cast housing.

An upper motor bearing cap shall be a separate casting for easy mounting and replacement. The motor shall have two heavy-duty ball bearings to support the pump shaft, taking radial and thrust loadings. A sleeve guide bushing is mounted directly above the lower seal to take radial load and act as a flame path for the seal chamber. Ball bearings shall be designed for a minimum 50,000 hours B-10 life. The stator shall be pressed into the motor housing. The common motor pump and grinder shaft shall be of 416 SST, threaded to take the pump and grinder impeller.

Motors shall have a heat sensor thermostat attached to the top end of the motor windings to stop the motor if the motor winding temperature reaches 200 degrees F. The high temperature shut-off will cause the pump to cease operation, should a control failure cause the pump to run in a dry wet well. The thermostat shall automatically reset when the motor cools to a safe operating temperature.

Power Cord:
The motor power cord shall be 10 Ga. SOW/SOWA or SOOW. The cable jacket shall be sealed at the motor entrance by means of a rubber compression washer and compression nut. An epoxy filled tube shall seal the outer cable jacket and individual leads to prevent water from entering the motor housing. Individual conductor strands shall be soldered within the epoxy seal. Cords shall withstand a pull of 300 pounds.

Performance Curves

Project: GPM: TDH: EFF: HP: Chk'd: Date:

EBG2-2115(A) (2HP) **Synchronous Speed: 3450 RPM** **1¼ inch Discharge**

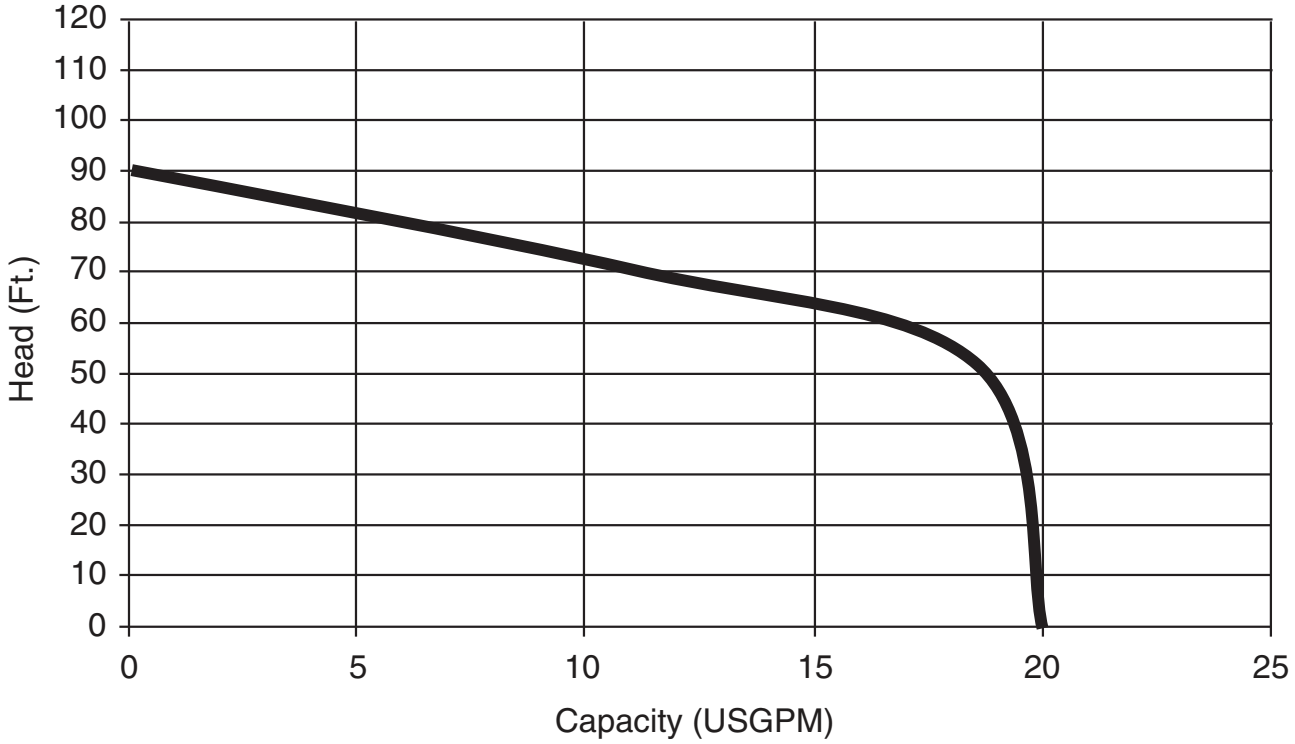

EBG2-212C (2HP) **Synchronous Speed: 3450 RPM** **1¼ inch Discharge**

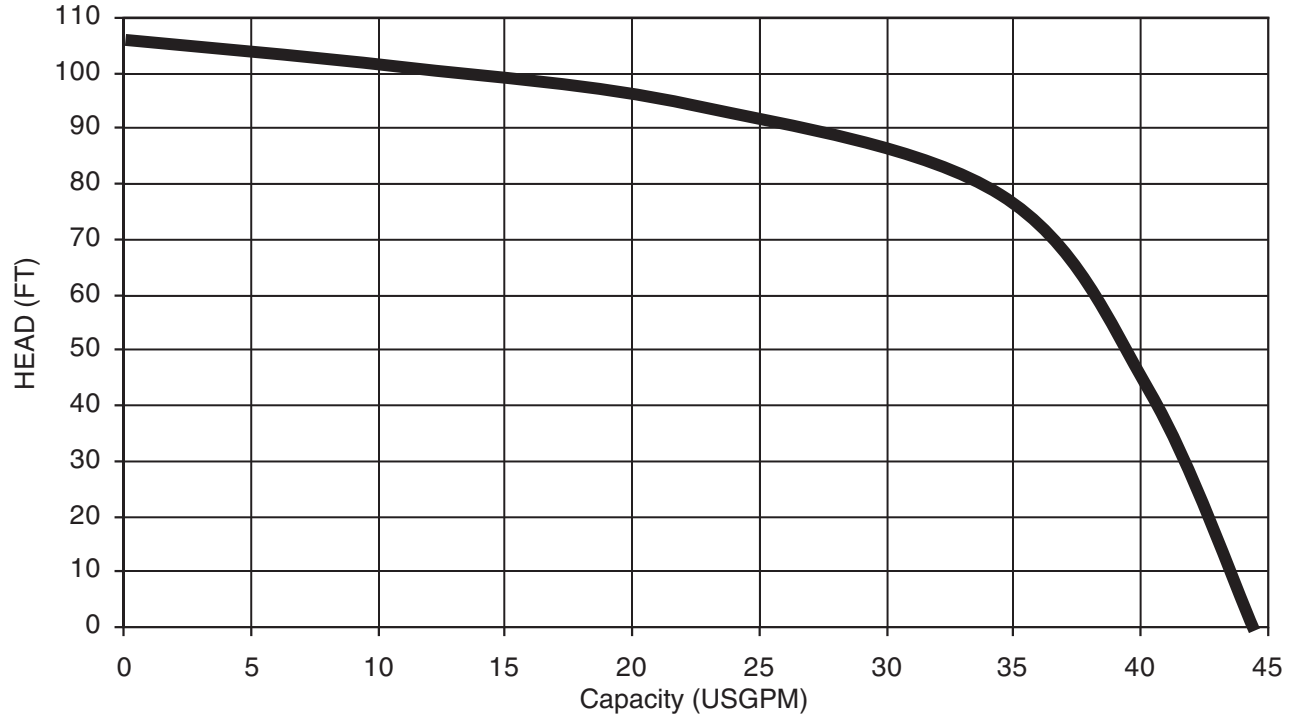

Performance Curves

Project: GPM: TDH: EFF: HP: Chk'd: Date:

EBHG2-212C (2HP) **Synchronous Speed: 3450 RPM** **1¼ inch Discharge**

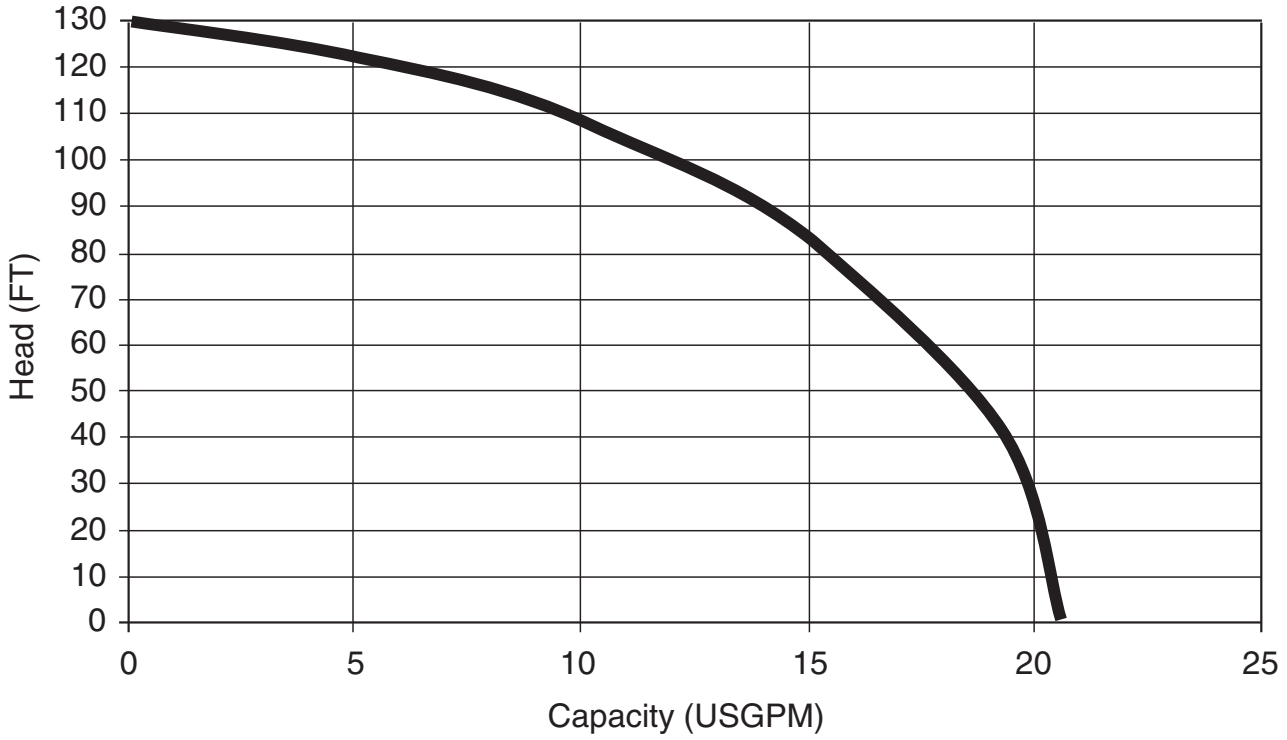

EBG2-21 EBG2-23 (2HP) **Synchronous Speed: 3450 RPM** **1¼ inch Discharge**

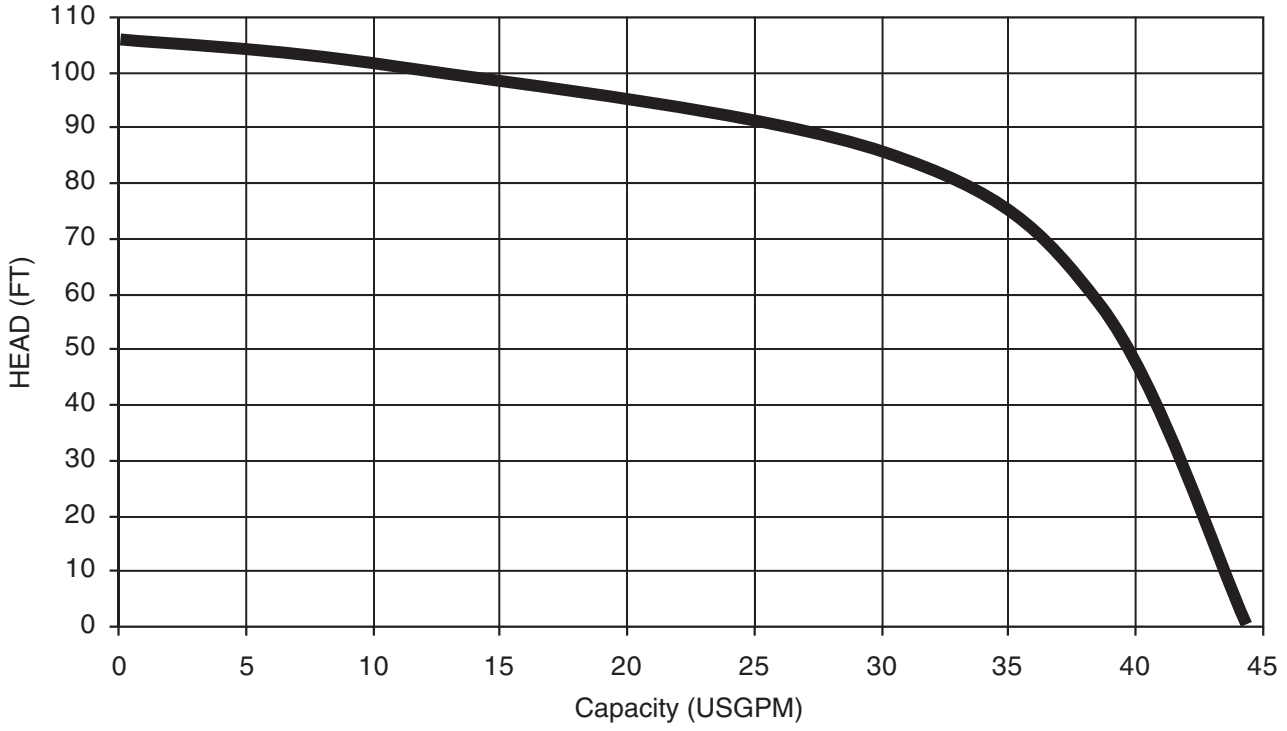

Performance Curves

Project: GPM: TDH: EFF: HP: Chk'd: Date:

EBHG2-21 EBHG2-23 (2HP) Synchronous Speed: 3450 RPM 1¼ inch Discharge

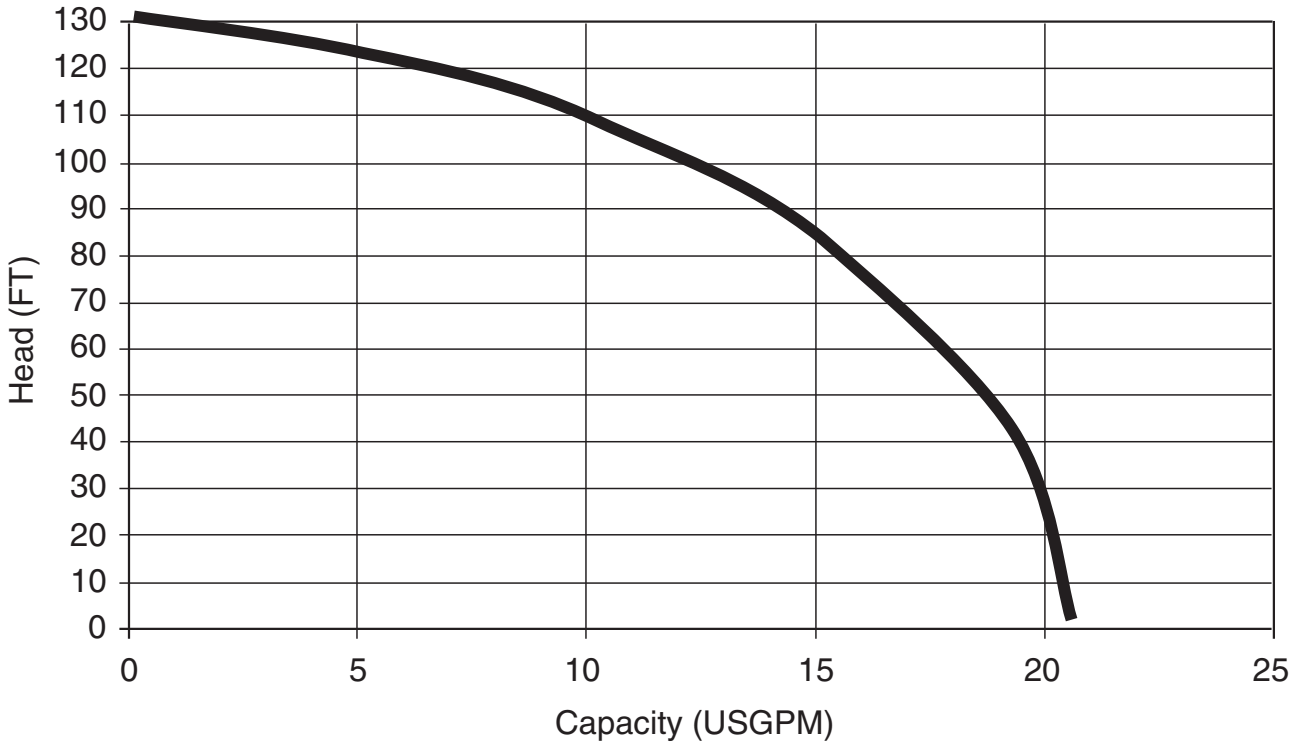

EBG-31 EBG-33 (3HP) Synchronous Speed: 3450 RPM 2½ / 3 inch Discharge

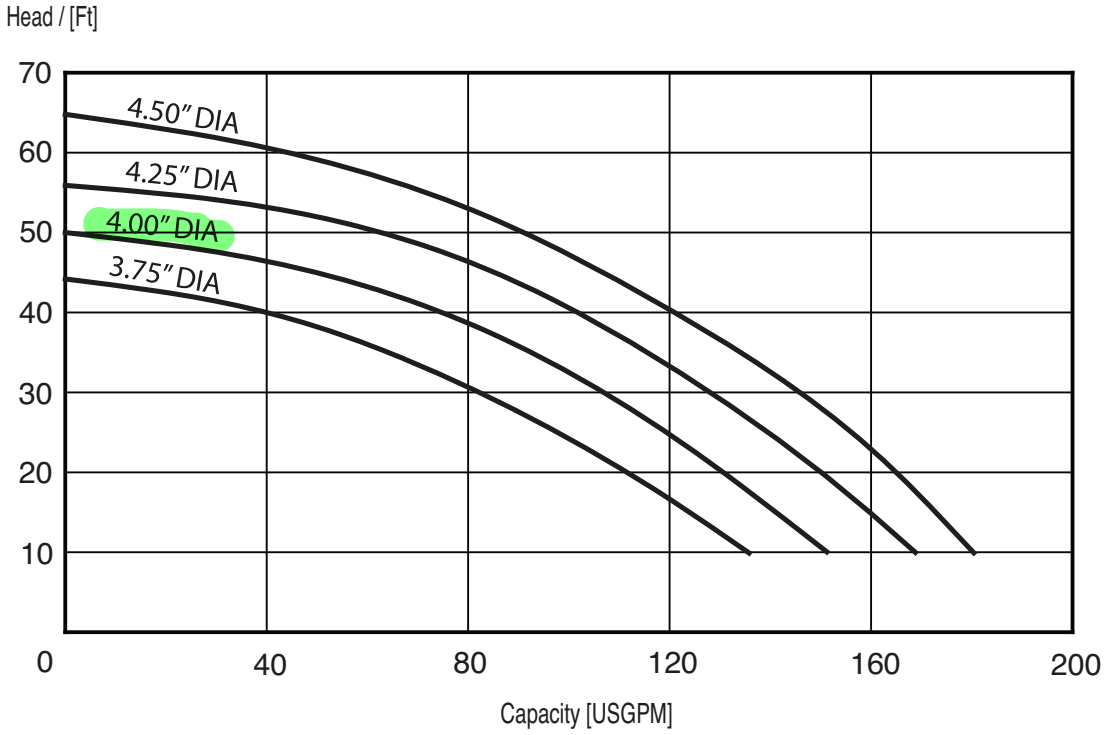

Note: Full diameter impeller included in price of pump. Consult factory for reduced diameter impeller and pricing.

Performance Curves

Project: GPM: TDH: EFF: HP: Chk'd: Date:

EBG-51 EBG 53 (5HP) Synchronous Speed: 3450 RPM 2½ / 3 inch Discharge

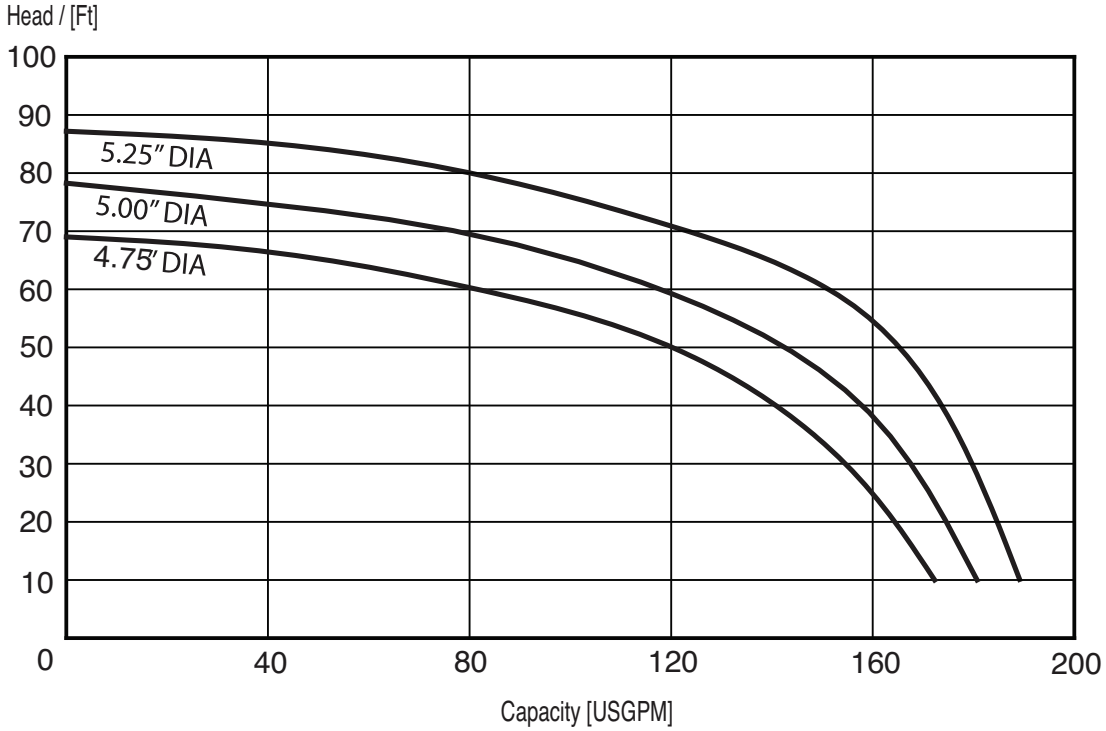

Note: Full diameter impeller included in price of pump. Consult factory for reduced diameter impeller and pricing.

EBG-103 (10HP) Synchronous Speed: 3450 RPM 2½ / 3 inch Discharge

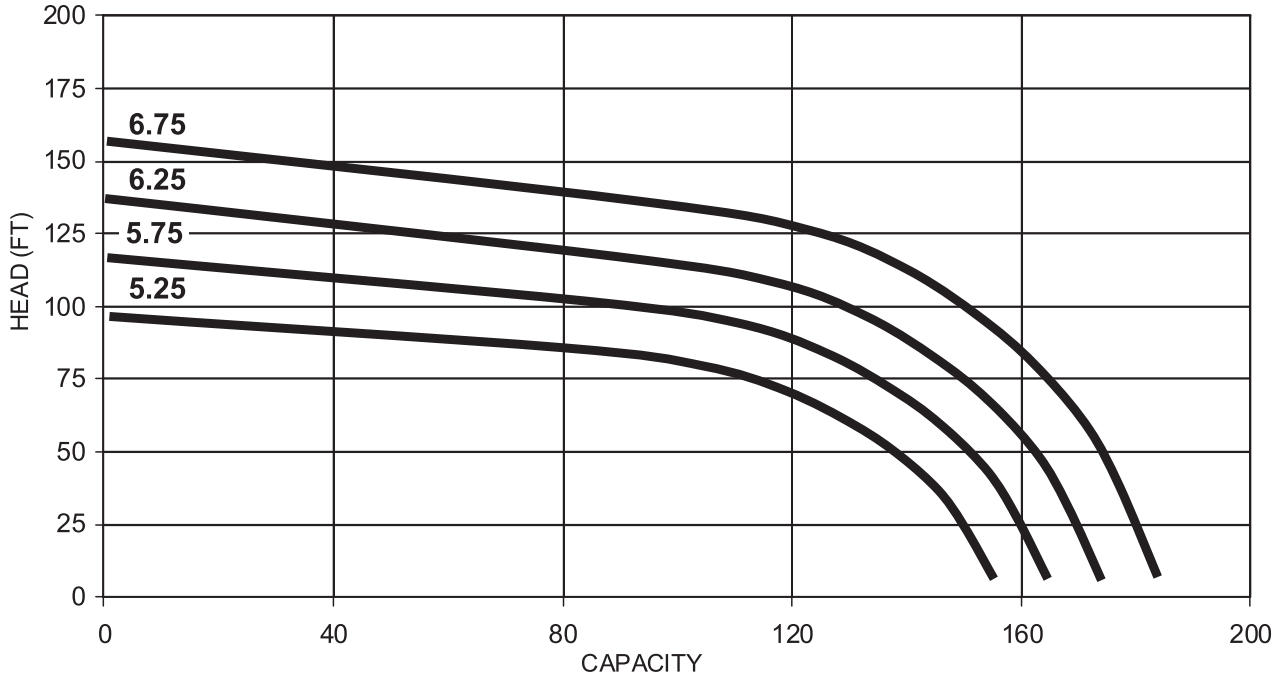

Note: Full diameter impeller included in price of pump. Consult factory for reduced diameter impeller and pricing.

Performance Curves

Project: GPM: TDH: EFF: HP: Chk'd: Date:

EBHG-31 EBHG-33 (3HP) Synchronous Speed: 3450 RPM 2½ / 3 inch Discharge

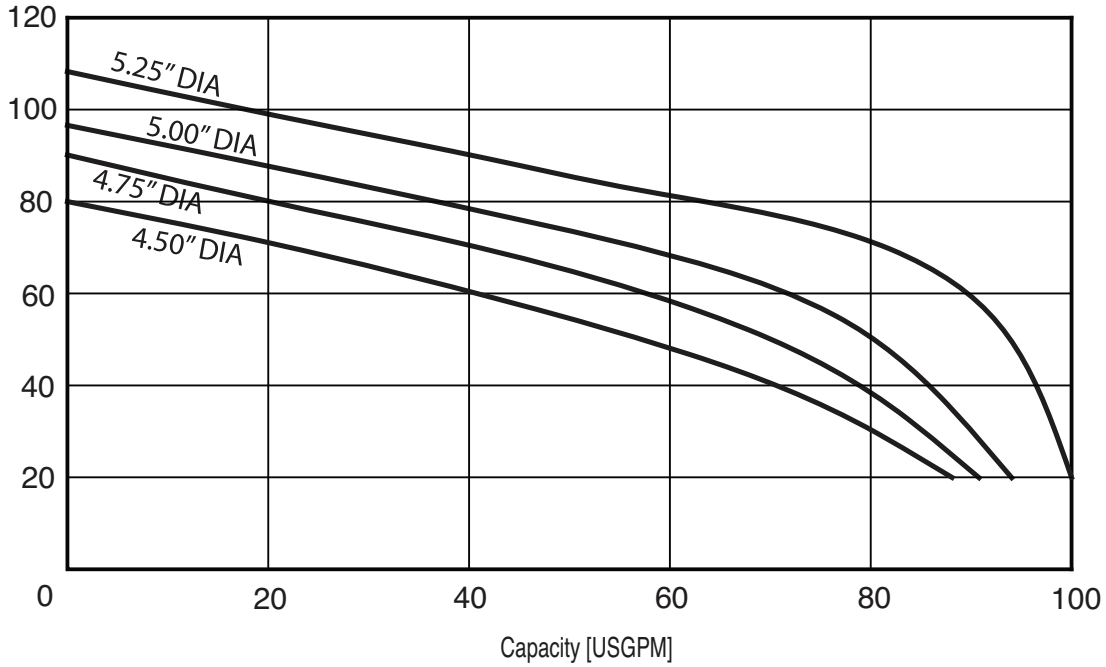

Note: Full diameter impeller included in price of pump. Consult factory for reduced diameter impeller and pricing.

EBHG-51 EBHG-53 (5HP) Synchronous Speed: 3450 RPM 2½ / 3 inch Discharge

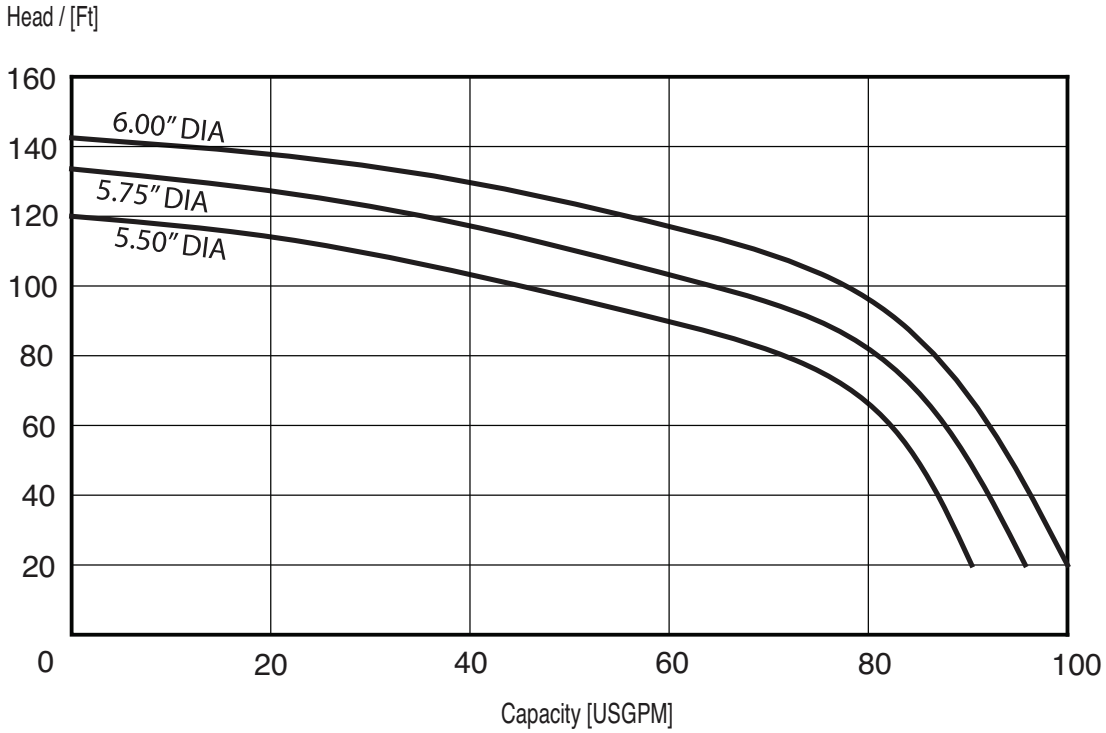

Note: Full diameter impeller included in price of pump. Consult factory for reduced diameter impeller and pricing.

Performance Curves

Project: GPM: TDH: EFF: HP: Chk'd: Date:

EBHG-71 EBHG-73 (7½ HP) Synchronous Speed: 3450 RPM 2½ / 3 inch Discharge

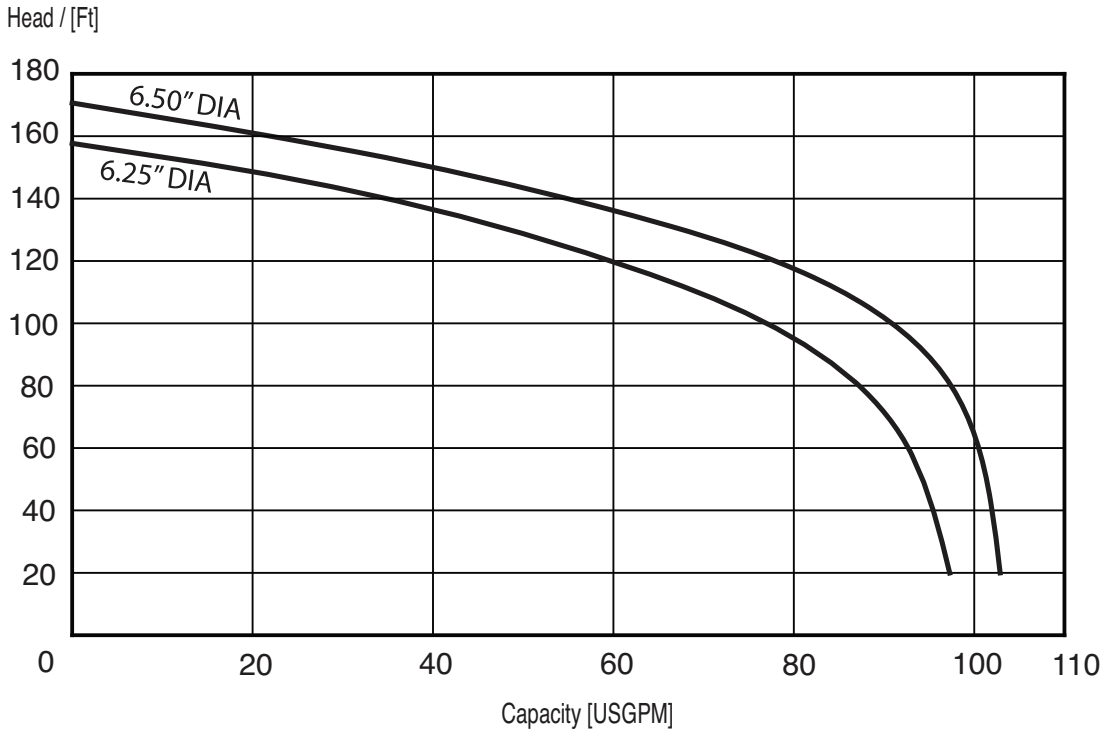

Note: Full diameter impeller included in price of pump. Consult factory for reduced diameter impeller and pricing.

Dimensions

Project: Model: Chk'd: Date:

Model EB(H)G

2 HP

Unit: inch

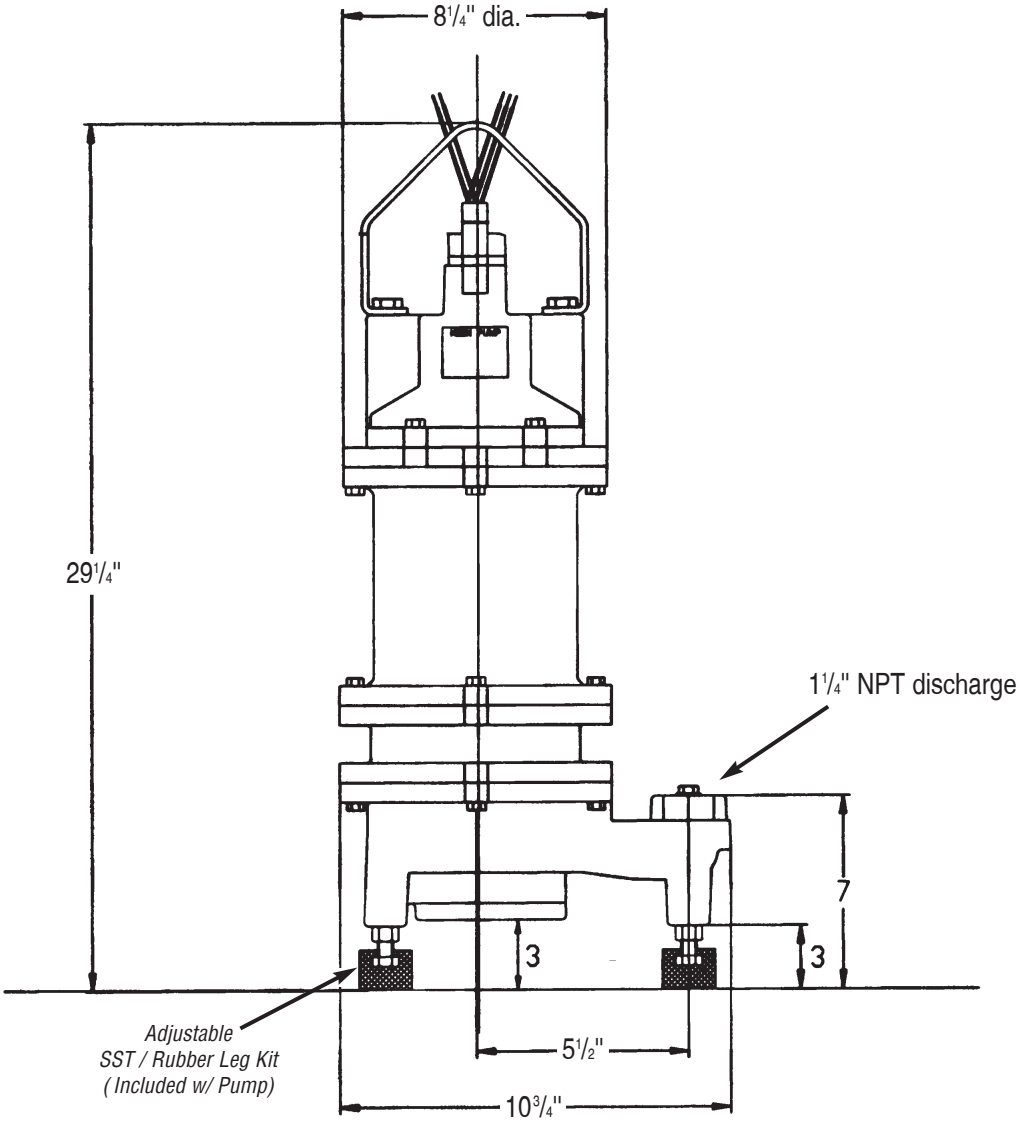

MODEL	WEIGHT – Lb
EBG2-2115(A)	83
EBG2-212C	88
EBHG2-212C	88
EBG2-21	88
EBG2-23	88
EBHG2-21	88
EBHG2-23	88

Dimensions

Project: Model: Chk'd: Date:

Model EB(H)G

3, 5, 7.5, 10HP

Unit: inch

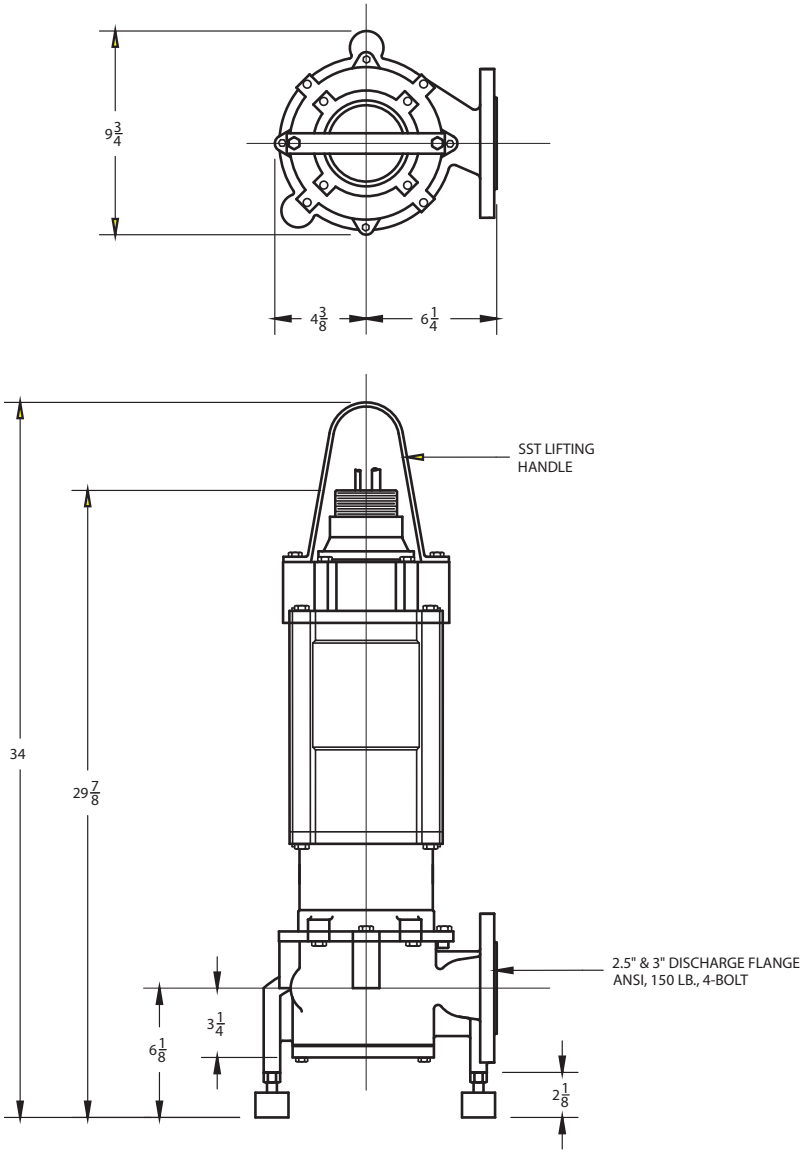

MODEL	WEIGHT – Lb (kg)
EBG-31 EBG-33	190
EBG-51 EBG-53	190
EBG-103	210
EBHG-31 EBHG-33	190
EBHG-51 EBHG-53	190
EBHG-71 EBHG-73	190

Dimensions – Lift Out Dimensions

Project: Model: Chk'd: Date:

Lift Out Dimensions

Model EB(H)G
3, 5, 7.5, 10HP
Unit: inch

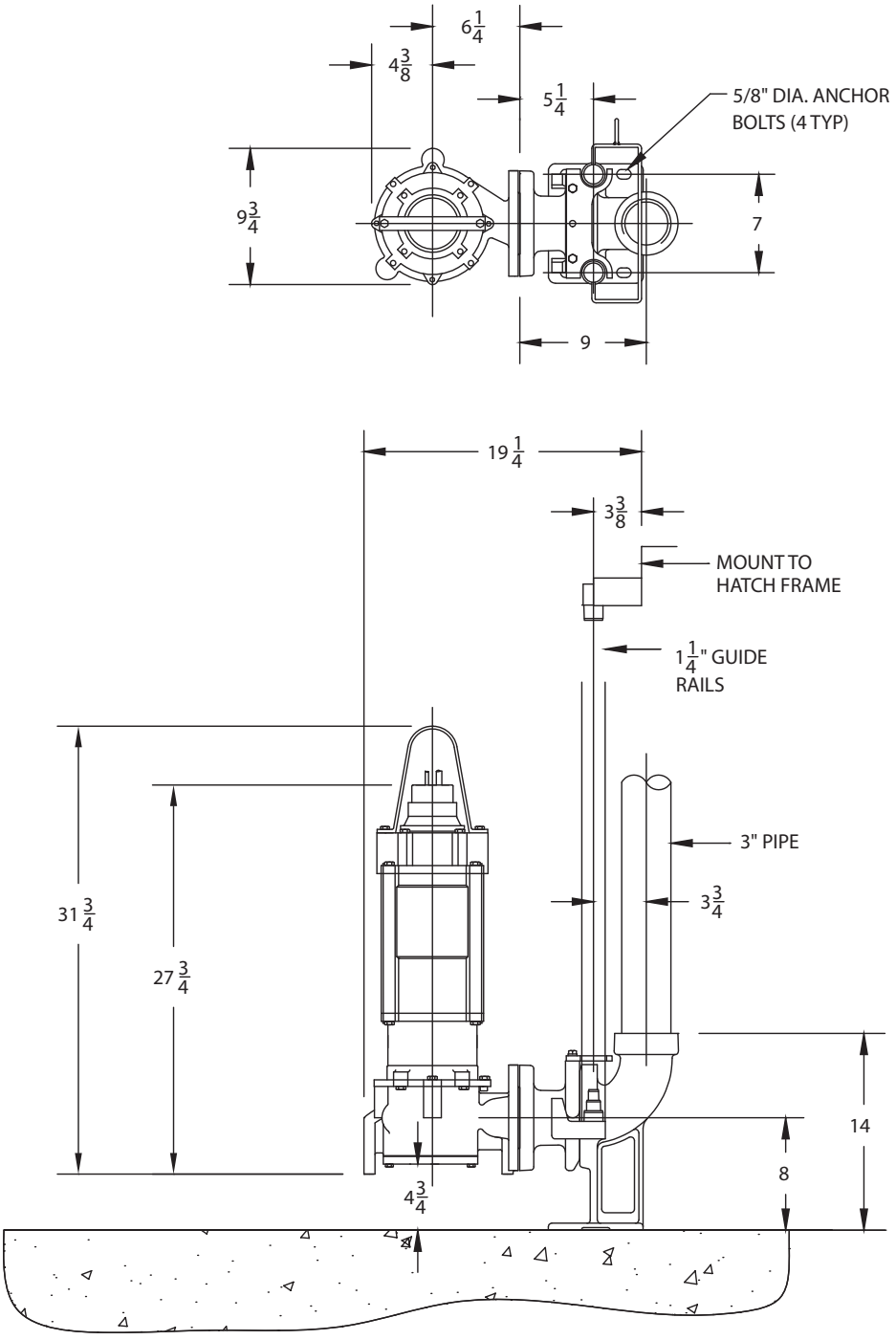

Dimensions

Project: Model: Chk'd: Date:

Quick Discharge Connector Model RS1
Model EB(H)G

EBG, 2HP
EBHG, 2HP
RS1 weight = 52 lbs

NOTE: ALL DIMENSIONS ARE IN INCHES.
MATERIALS OF CONSTRUCTION:
BASE ELBOW: CAST IRON
LIFT–OUT FLANGE: CAST IRON
LOWER GUIDE BRACKET: 304 SST
ALL FASTENERS ARE 304 SERIES SST
USEABLE RAIL SIZES: $\frac{3}{4}$" & 1"
MAXIMUM WEIGHT ALLOWANCE: 200lbs.

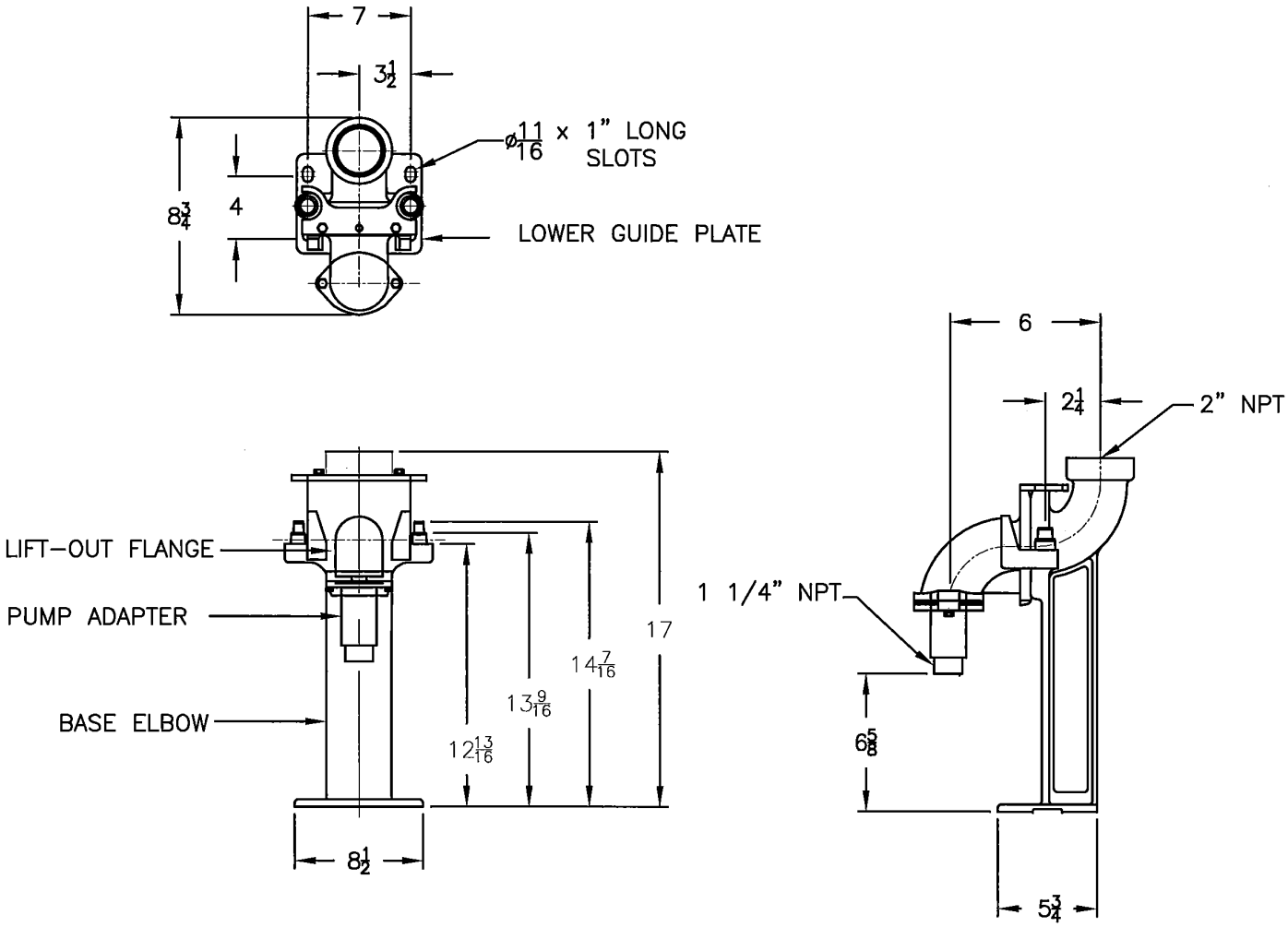

Dimensions

Project: Model: Chk'd: Date:

Quick Discharge Connector Model RS3-H
Model EB(H)G

EBG, 3, 5, 10HP
EBHG, 3, 5, 7.5HP
RS3-H weight = 70 lbs

NOTE: ALL DIMENSIONS ARE IN INCHES.
MATERIALS OF CONSTRUCTION:
BASE ELBOW: CAST DUCTILE IRON
LIFT-OUT FLANGE: CAST DUCTILE IRON
LOWER GUIDE BRACKET: 304 SST
ALL FASTENERS ARE 304 SERIES SST
USEABLE GUIDE RAIL SIZES: $\frac{3}{4}$", 1", $1\frac{1}{4}$"

MOUNTING DIMENSIONS

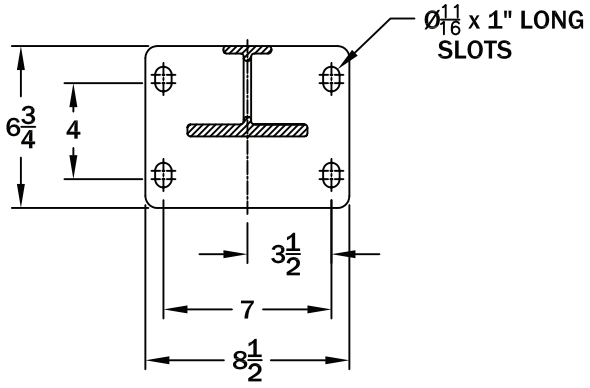

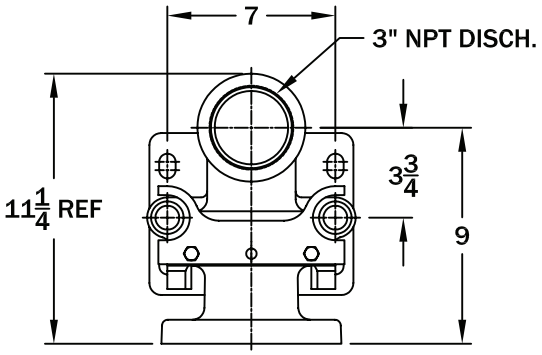

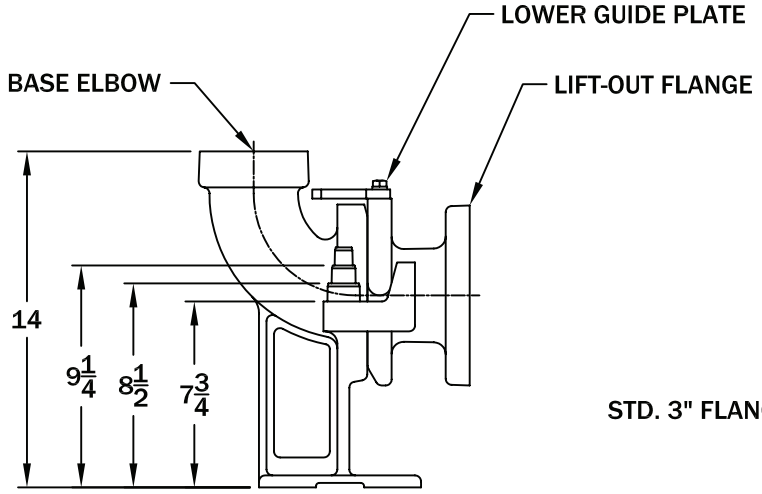

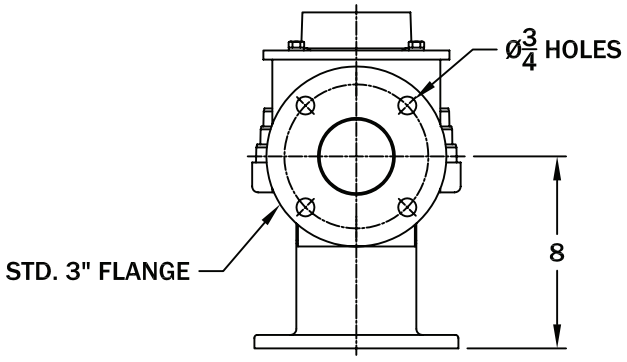

Dimensions

Project: Model: Chk'd: Date:

Upper Guide Brackets

NOTE: MOUNTING SLOTS ARE Ø$\frac{7}{16}$
ACCOMMODATES ¾ , 1 AND 1 ¼ INCH PIPE

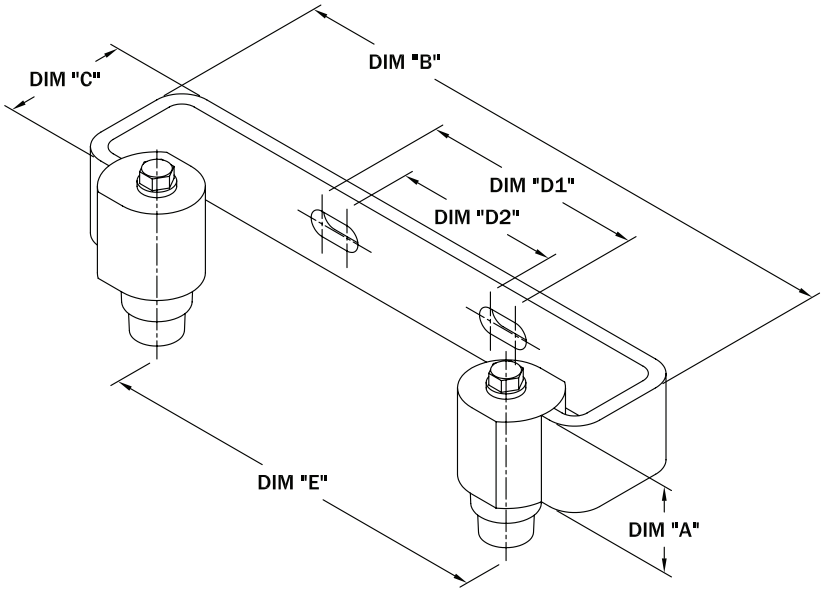

MODEL NO.	DIA. "A"	DIM "B"	DIM "C"	DIM "D1"	DIM "D2"	DIM "E"
UGB–SS	1 1/2"	10"	2 1/8"	3 7/8"	2 7/8"	7"

Intermediate Guide Brackets

NOTE: IGB-075-SS USED FOR $\frac{3}{4}$" RAILS
IGB-100-SS USED FOR 1" RAILS
IGB-125-SS USED FOR $1\frac{1}{4}$" RAILS
MOUNTING SLOTS ARE Ø$\frac{7}{16}$

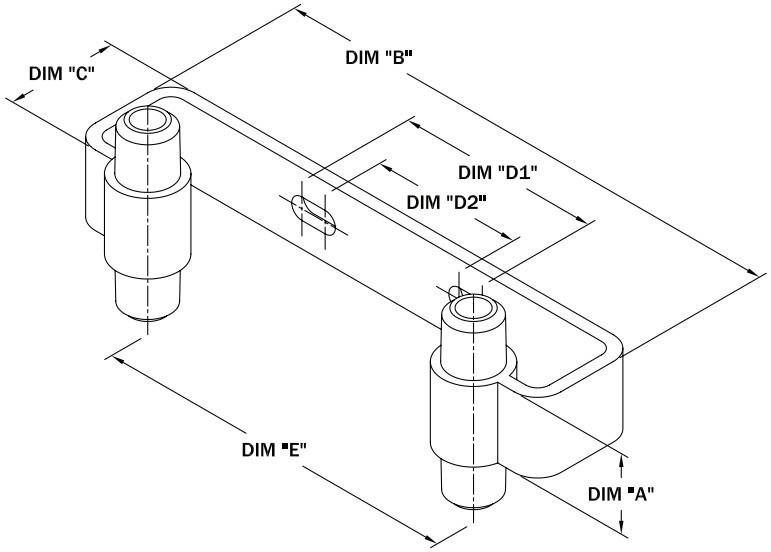

MODEL NO.	DIA. "A"	DIM "B"	DIM "C"	DIM "D1"	DIM "D2"	DIM "E"
IGB–075–SS	1 1/2"	10"	2 1/8"	3 7/8"	2 7/8"	7"
IGB–100–SS	1 1/2"	10"	2 1/8"	3 7/8"	2 7/8"	7"
IGB–125–SS	1 1/2"	10"	2 1/8"	3 7/8"	N/A	7"

Motor Wiring Diagram

Project: Model: Chk'd: Date:

EBG2-115
2HP, 115V, Single Phase

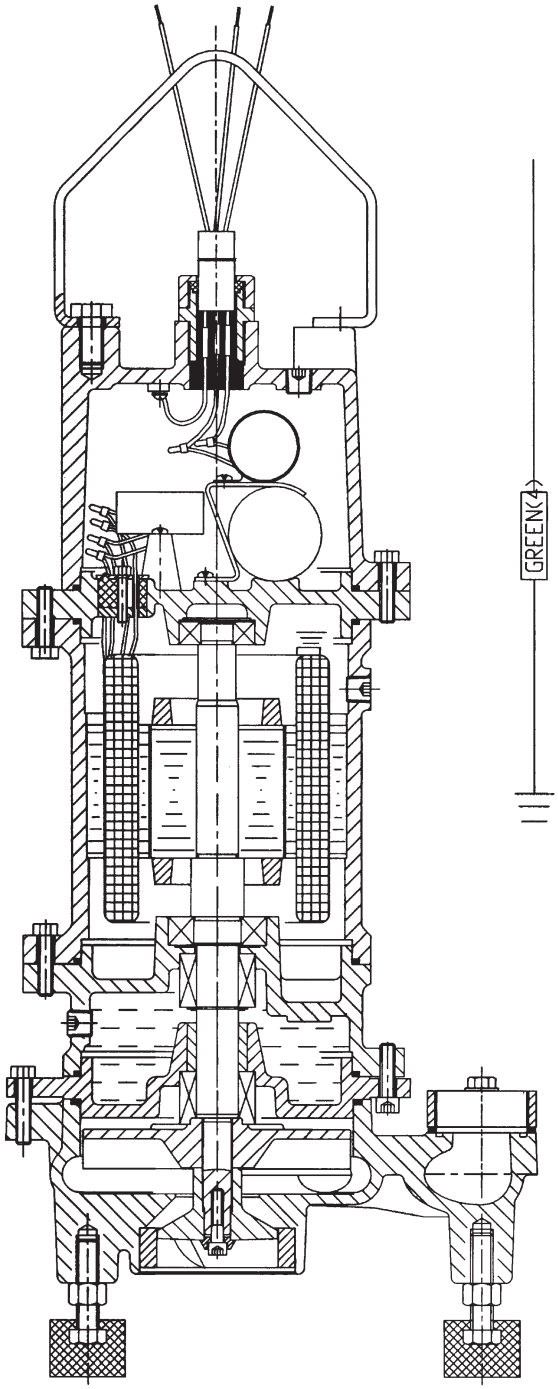

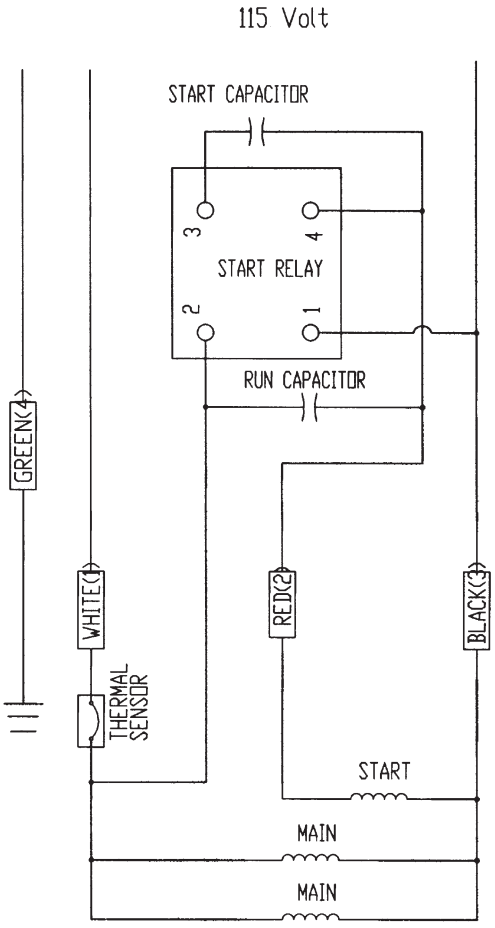

Motor Wiring Diagram

Project: Model: Chk'd: Date:

EB(H)G2-212C
2HP, 208/230V, Single Phase

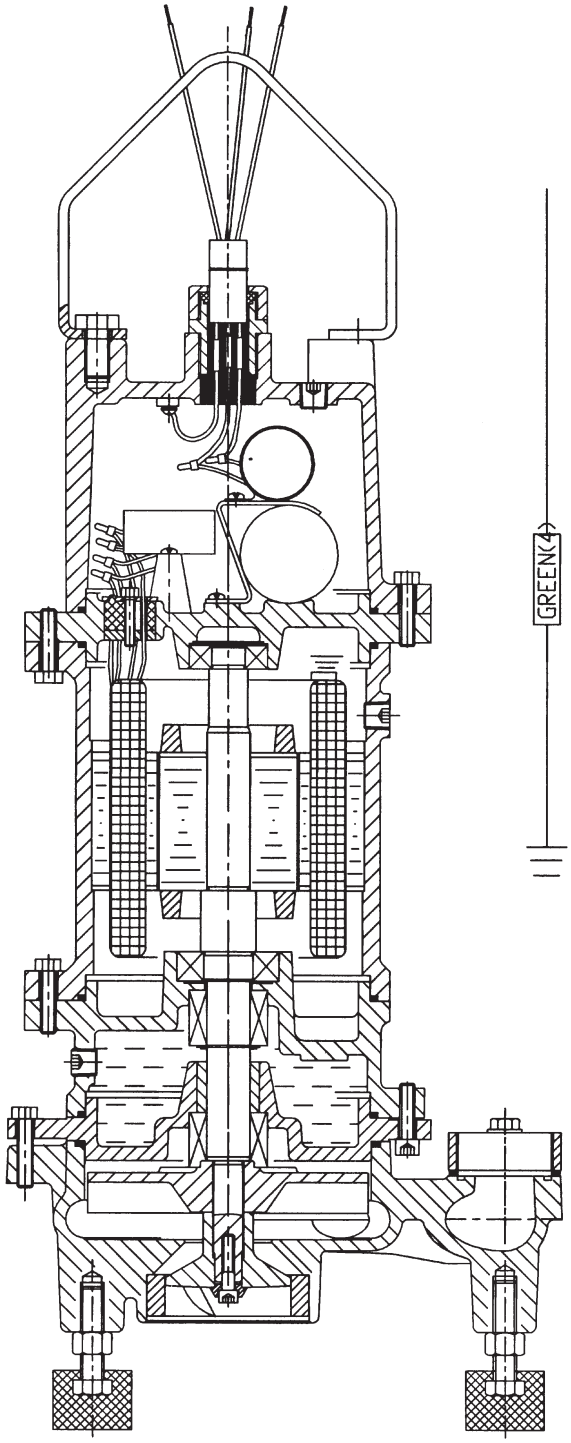

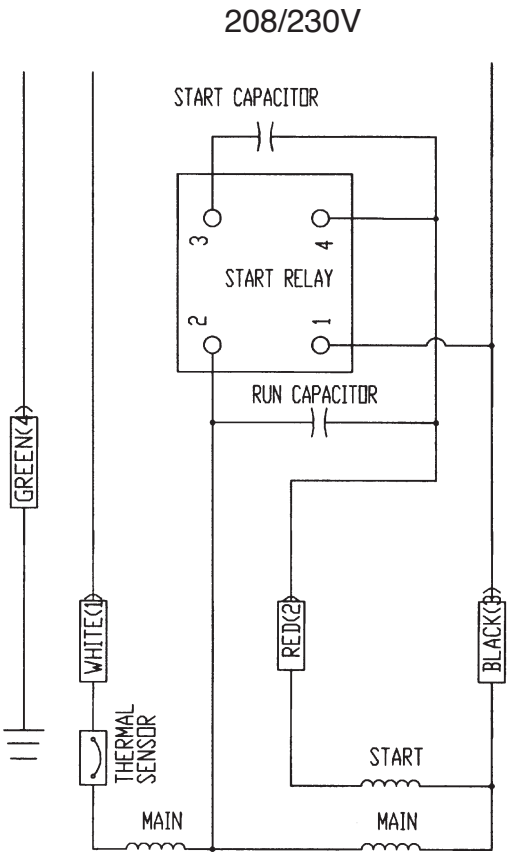

Motor Wiring Diagram

Project: Model: Chk'd: Date:

EB(H)G2-21
2HP, 208/230V, Single Phase

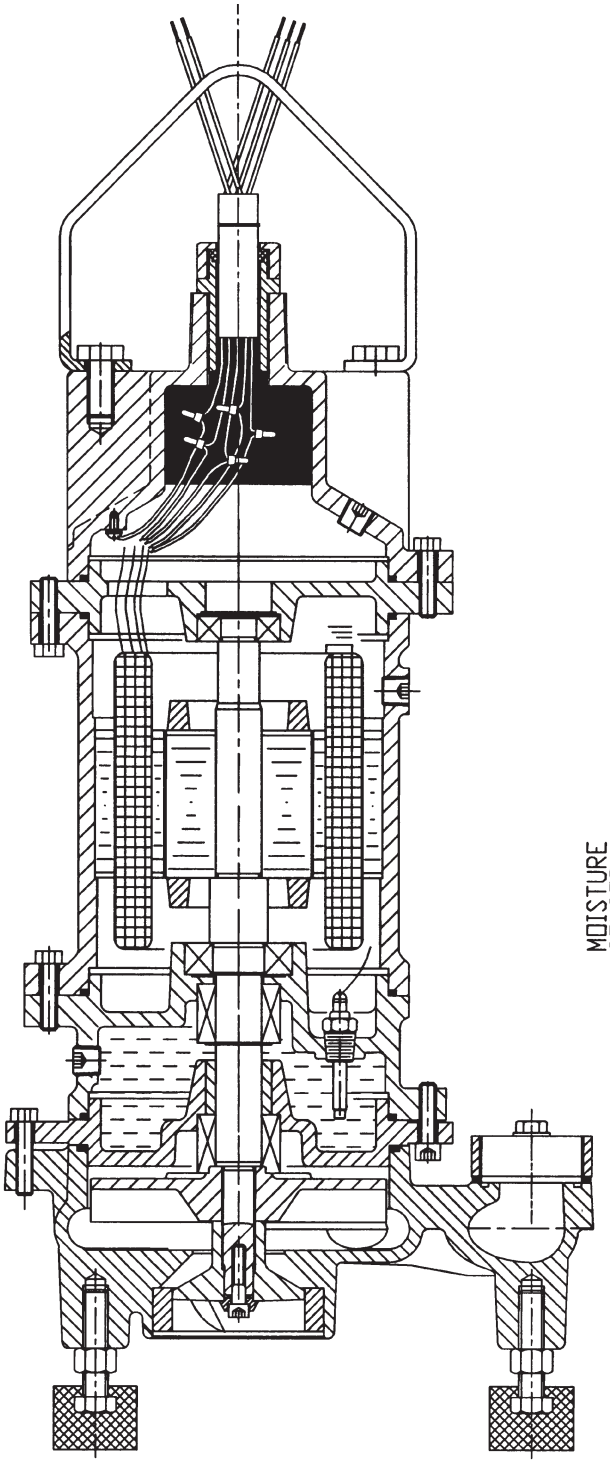

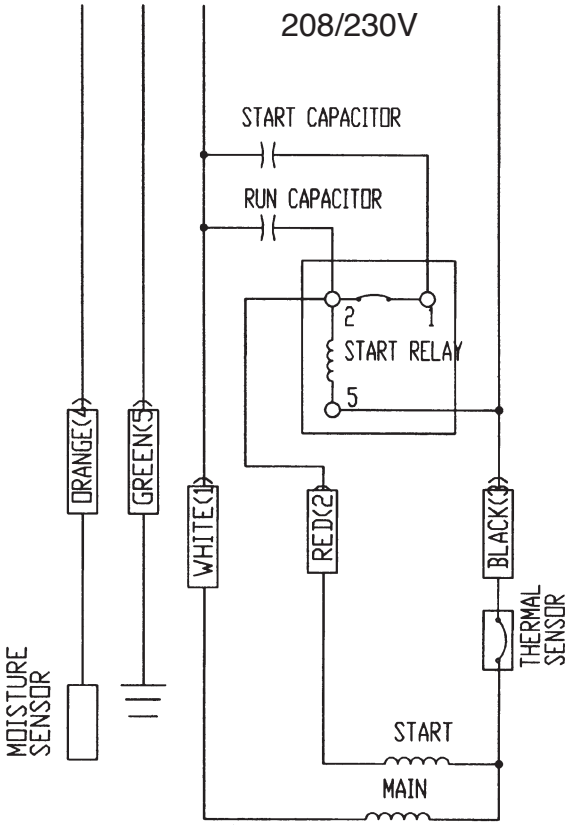

Motor Wiring Diagram

Project: Model: Chk'd: Date:

EB(H)G2-23
2HP, 208/230/460V, Three Phase

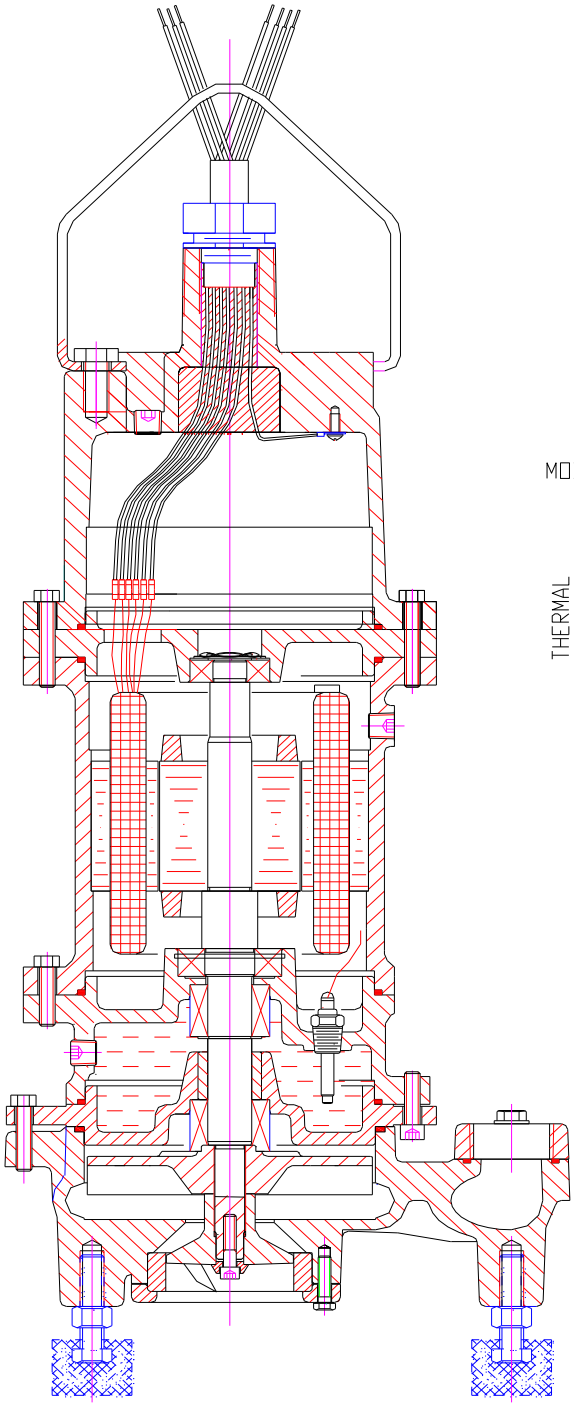

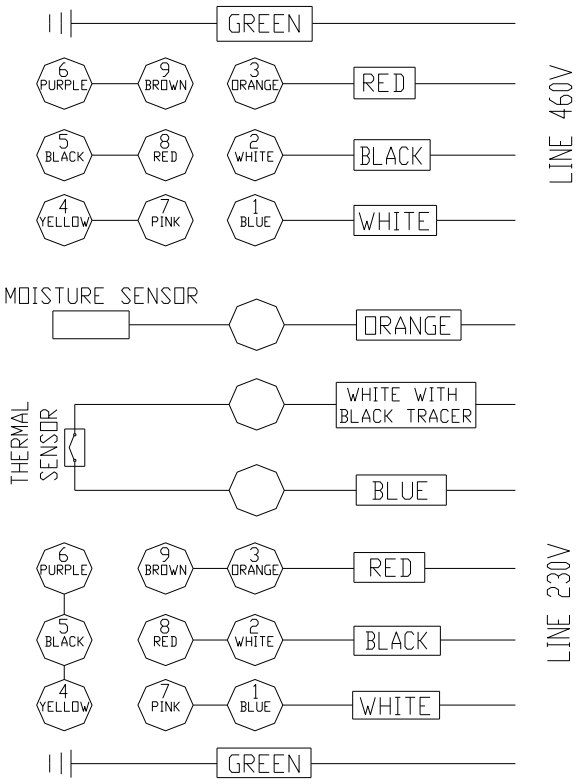

230 VOLT		OHM
WHITE	BLACK	3.1
WHITE	RED	3.1
BLACK	RED	3.1
460 VOLT		
WHITE	BLACK	12.4
WHITE	RED	12.4
BLACK	RED	12.4

Motor Wiring Diagram

Project: Model: Chk'd: Date:

EB(H)G-31, 51
3, 5HP, 208/230, Single Phase

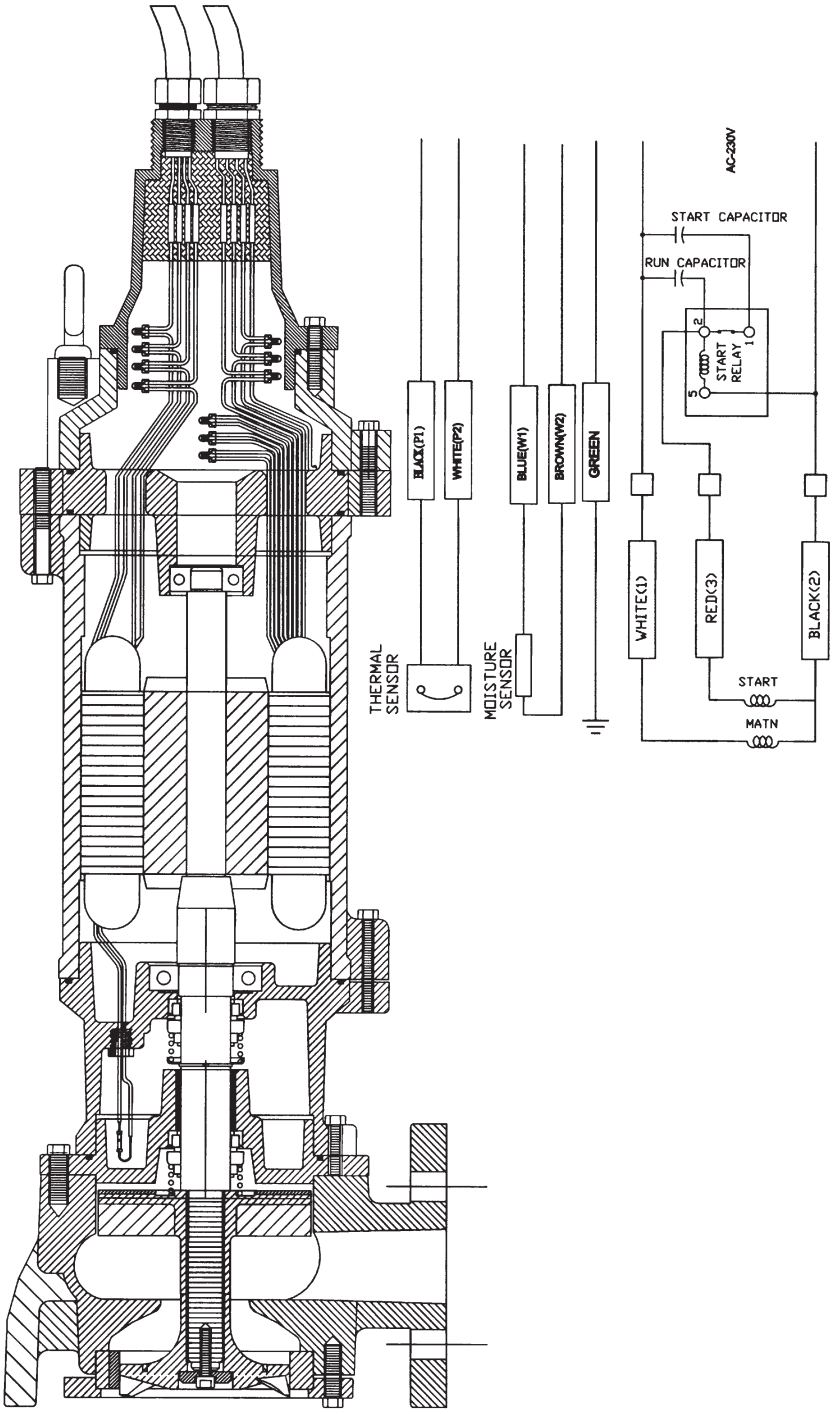

Motor Wiring Diagram

Project: Model: Chk'd: Date:

EB(H)G-33, 53, 73, 103
3, 5, 7.5, 10HP, 208/230/460V, Three Phase

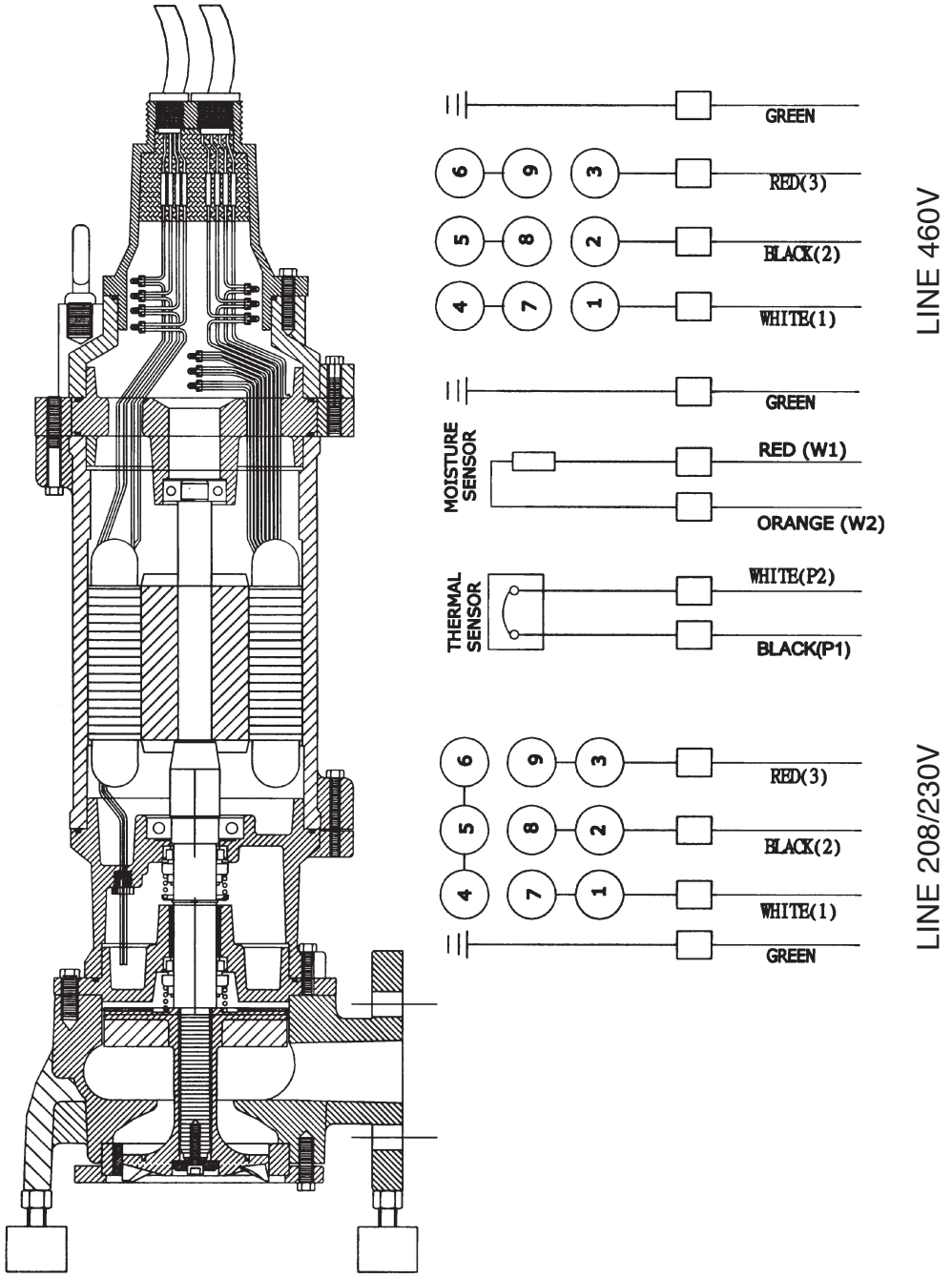

Electrical Data

Project: Model: Chk'd: Date:

Model EBG
2 HP, 60Hz, Single Phase, 115V

Name-Plate Rating	**Item No.**					
	Output (HP)	2				
	Phase	1				
	Poles	2				
	Volts	115				
	Amperes	16.9				
	Speed	3450				
	Insulation Class	F				
Capacitor μ F	Start	200				
	Run	70				
Resistance at 20°C OHMS	Main Coil	1.2				
Start Current A		48				
Service Factor		1.59				

Electrical Data

Project: Model: Chk'd: Date:

Model EBG, EBHG
2, 3, 5, 7.5 HP, 60Hz, Single Phase, 208/230V

	Item No.					
Name-Plate Rating	Output (HP)	2	3	5	7½	
	Phase	1	1	1	1	
	Poles	2	2	2	2	
	Volts	208 / 230	208 / 230	208 / 230	230	
	Amperes	15.5 / 12.8	37 / 34	44 / 40	47	
	Speed	3450	3450	3450	3450	
	Insulation Class	F	F	F	F	
Capacitor μ F	Start	150	274 - 324	274 - 324	274 - 324	
	Run	30	30	30	30	
Resistance at 20°C OHMS	Main Coil	1.8	.3	.3	.3	
	Aux. Coil	5.1	.8	.8	.8	
Start Current A		28 / 25	185 / 170	220 / 200	235	
Service Factor		1.59	3.96	2.37	1.4	

Electrical Data

Project: Model: Chk'd: Date:

Model EBG, EBHG
2, 3, 5, 7.5 10 HP, 60Hz, Three Phase, 208/230/460V

	Item No.					
Name-Plate Rating	Output (HP)	2	3	5	7½	10
	Phase	3	3	3	3	3
	Poles	2	2	2	2	2
	Volts	208 / 230 / 460	208 / 230 / 460	208 / 230 / 460	208 / 230 / 460	208 / 230 / 460
	Amperes	10 / 9 / 4.5	21 / 18 / 9	29 / 25 / 13	37 / 32 / 16	42 / 40 / 20
	Speed	3450	3450	3450	3450	3450
	Insulation Class	F	F	F	F	F
Resistance at 20°C OHMS	Main Coil	3.1 / 12.4	.6 / 2.0	.6 / 2.0	.6 / 2.0	.6 / 2.0
Start Current A		24 / 22 / 11	105 / 90 / 45	145 / 125 / 65	185 / 160 / 80	148 / 135 / 75
Service Factor		1.92	3.5	2.1	1.25	1.25

APPENDIX C – CONTROL PANEL DATA

Control Panel Submittal

Bluebonnet – Johnny Morris

USEMCO #20205

URGENT

The following information should be confirmed or supplied to USEMCO before this control panel will be entered into the manufacturing schedule.

This control panel is designed to operate on:

Voltage (V):	460
Phase:	3
Frequency (Hz):	60
Wire electrical service:	3
Motor pump count:	2
Motor rating (hp):	5
Full load amperage per motor (A):	7.1

ELECTRIC CONTROL SYMBOLS

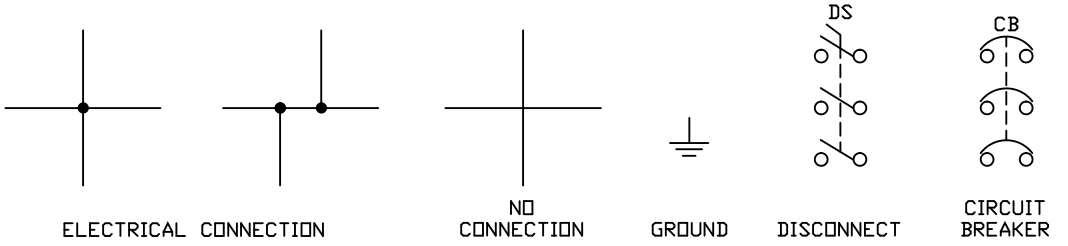

ELECTRICAL CONNECTION
NO CONNECTION
GROUND
DISCONNECT
CIRCUIT BREAKER

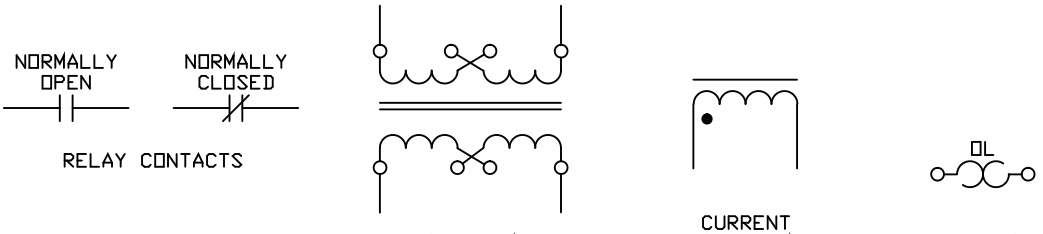

RELAY CONTACTS
TRANSFORMER
CURRENT TRANSFORMER
OVERLOAD

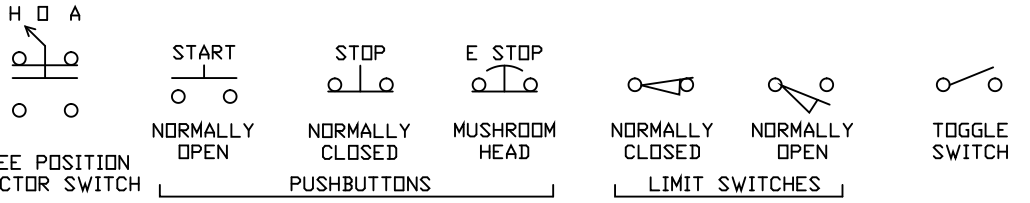

THREE POSITION SELECTOR SWITCH
NORMALLY OPEN
NORMALLY CLOSED
MUSHROOM HEAD
PUSHBUTTONS
NORMALLY CLOSED
NORMALLY OPEN
LIMIT SWITCHES
TOGGLE SWITCH

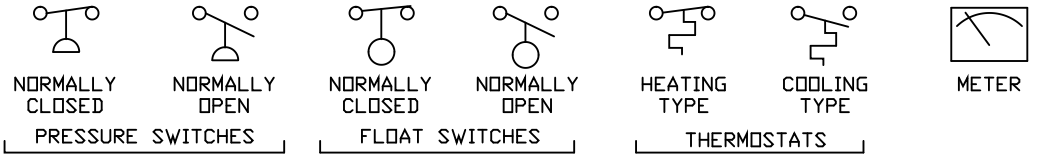

NORMALLY CLOSED
NORMALLY OPEN
PRESSURE SWITCHES
NORMALLY CLOSED
NORMALLY OPEN
FLOAT SWITCHES
HEATING TYPE
COOLING TYPE
THERMOSTATS
METER

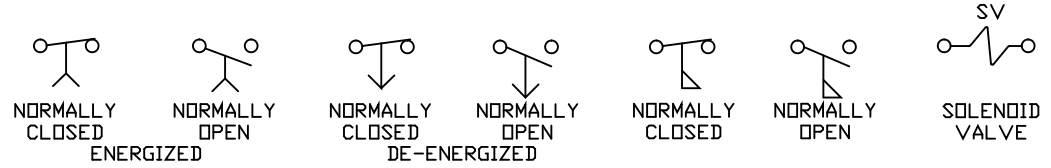

NORMALLY CLOSED
NORMALLY OPEN
ENERGIZED
NORMALLY CLOSED
NORMALLY OPEN
DE-ENERGIZED
TIMER CONTACTS
NORMALLY CLOSED
NORMALLY OPEN
FLOW SWITCHES
SOLENOID VALVE

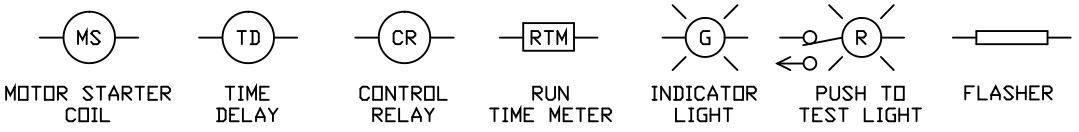

MOTOR STARTER COIL
TIME DELAY
CONTROL RELAY
RUN TIME METER
INDICATOR LIGHT
PUSH TO TEST LIGHT
FLASHER

LETTER INDICATES COLOR

R - RED
G - GREEN
A - AMBER
W - WHITE
B - BLUE
Y - YELLOW

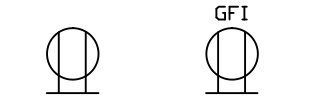

120 VOLT
GROUND FAULT
RECEPTACLES



SINGLE PHASE MOTOR

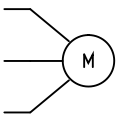

THREE PHASE MOTOR

DIM GLOW
RESISTOR

WIRE COLOR CODING

BK - BLACK
W - WHITE
R - RED
YL - YELLOW
GY - GRAY
BL - BLUE
GN - GREEN
OR - ORANGE
BR - BROWN
PK - PINK

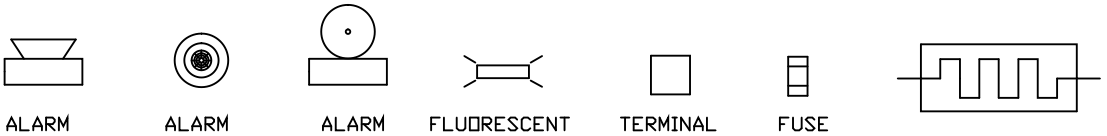

ALARM HORN
ALARM BUZZER
ALARM BELL
FLUORESCENT LIGHT
TERMINAL BLOCK
FUSE
HEATER

USEMCO INCORPORATED
P.O. BOX 550 (608) 372-5911 TOMAH, WI 54660

SYMBOLS

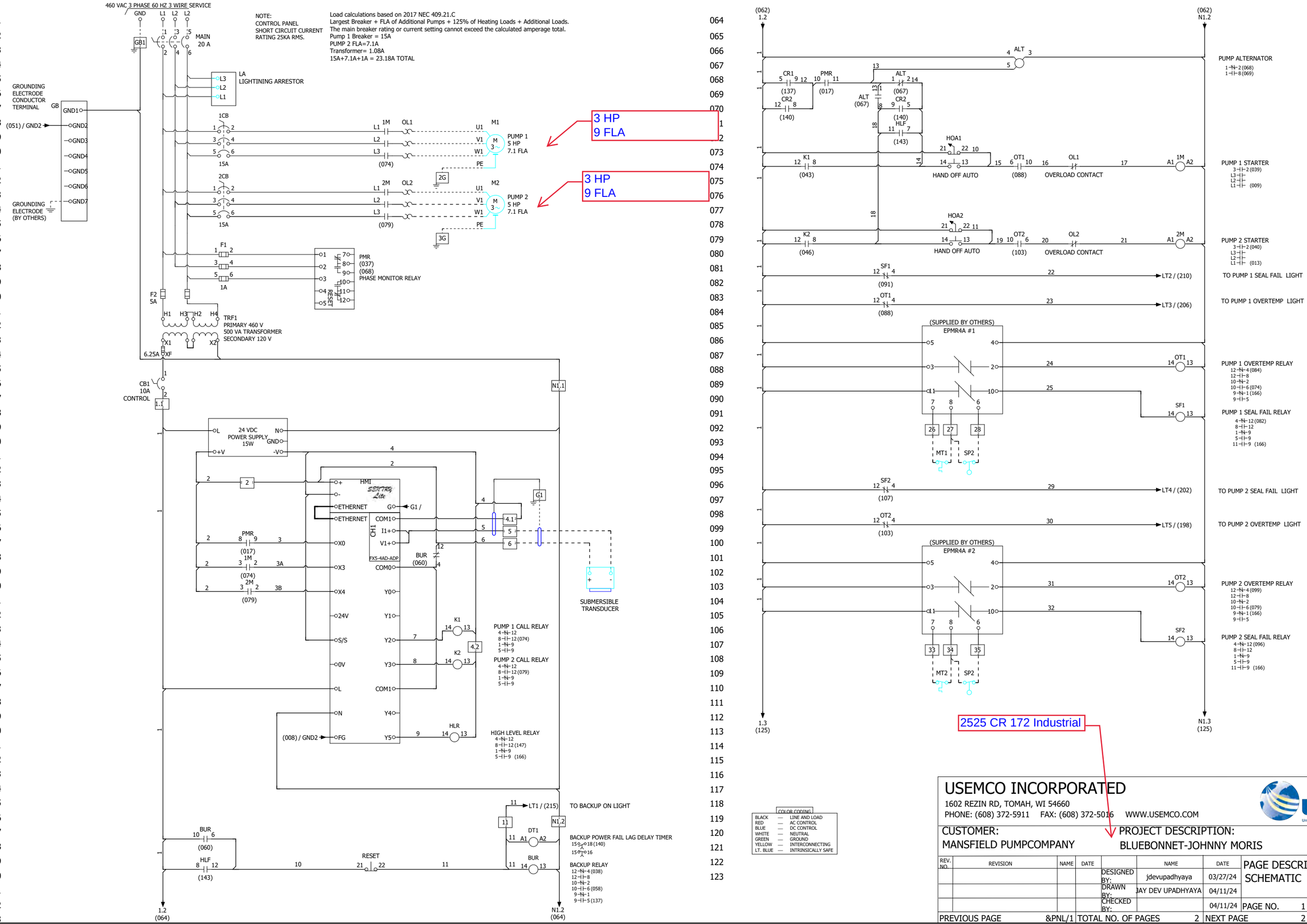

USEMCO INCORPORATED
1602 REZIN RD, TOMAH, WI 54660
PHONE: (608) 372-5911 FAX: (608) 372-5016 WWW.USEMCO.COM
Universal Sanitary Equipment Manufacturing Company

CUSTOMER: MANSFIELD PUMPCOMPANY

PROJECT DESCRIPTION: BLUEBONNET-JOHNNY MORIS

REV. NO.	REVISION	NAME	DATE		NAME	DATE	PAGE DESCRIPTION
				DESIGNED BY:	jdevupadhyaya	03/27/24	SCHEMATIC
				DRAWN BY:	JAY DEV UPADHYAYA	04/11/24	
				CHECKED BY:		04/11/24	

PREVIOUS PAGE	&PNL/1	TOTAL NO. OF PAGES	2	NEXT PAGE	2	PAGE NO.	1	DWG # &EMC/1
								JOB # CP20205

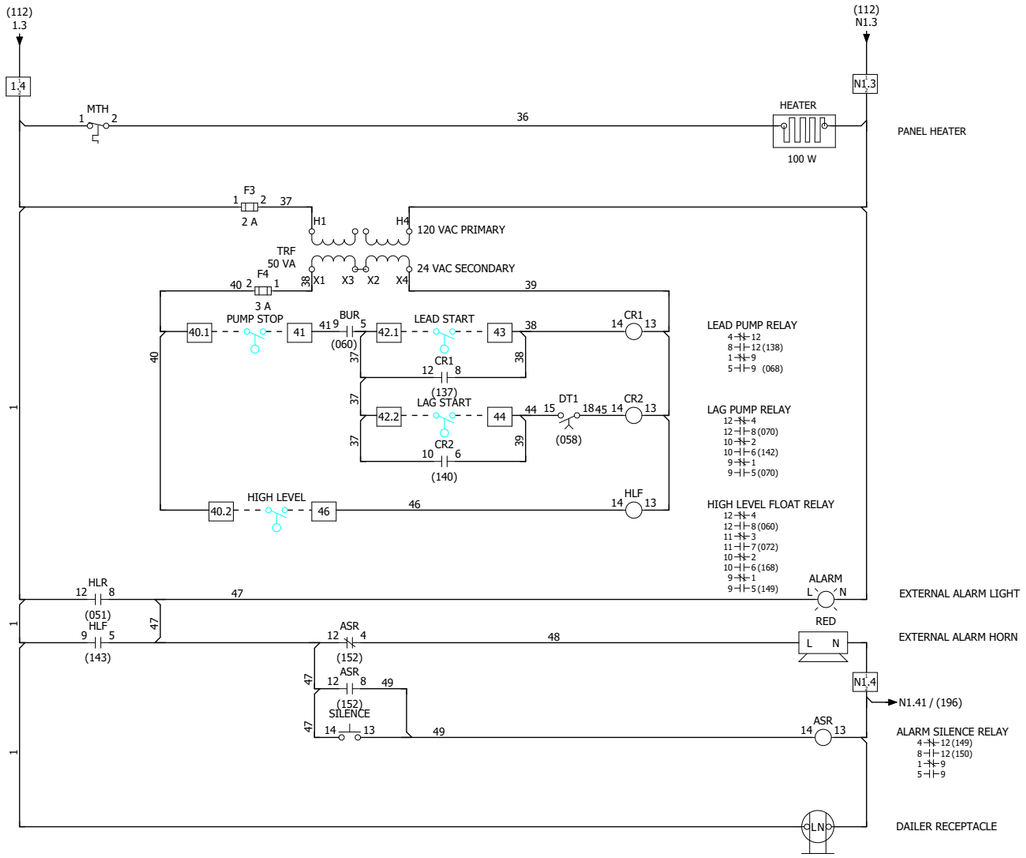

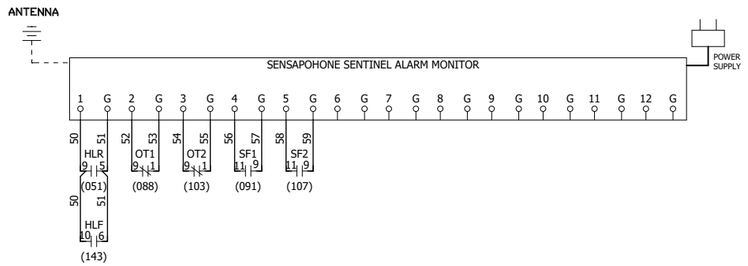

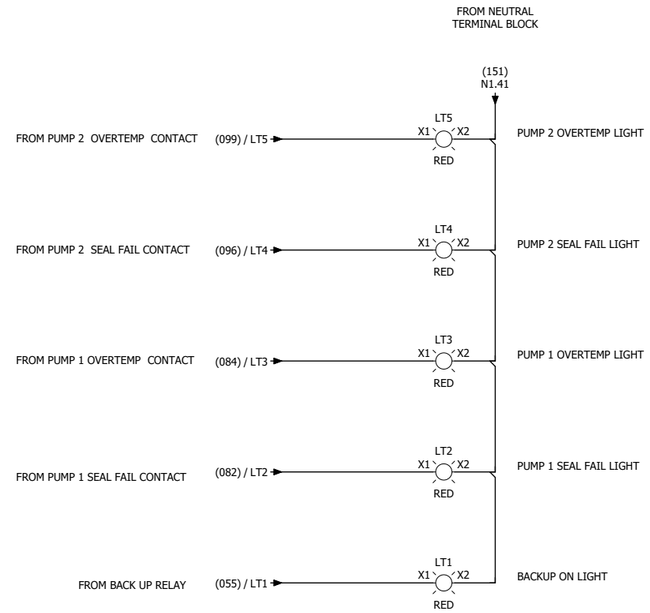

COLOR CODING		
BLACK	—	LINE AND LOAD
RED	—	AC CONTROL
BLUE	—	DC CONTROL
WHITE	—	NEUTRAL
GREEN	—	GROUND
YELLOW	—	INTERCONNECTING
LT. BLUE	—	INTRINSICALLY SAFE

NOTE:
CONTROL PANEL SHALL BEAR SERIALIZED U.L. 508A LABEL
WIRE MARKERS REQUIRED

2525 CR 172 Industrial

USEMCO INCORPORATED
1602 REZIN RD, TOMAH, WI 54660
PHONE: (608) 372-5911 FAX: (608) 372-5016 WWW.USEMCO.COM
USEMCO Universal Sanitary Equipment Manufacturing Company

CUSTOMER: MANSFIELD PUMPCOMPANY

PROJECT DESCRIPTION: BLUEBONNET-JOHNNY MORIS

REV. NO.	REVISION	NAME	DATE		NAME	DATE
				DESIGNED BY:	jdevupadhyaya	03/27/24
				DRAWN BY:	JAY DEV UPADHYAYA	04/11/24
				CHECKED BY:		04/11/24

PAGE DESCRIPTION: SCHEMATIC

PREVIOUS PAGE	1	TOTAL NO. OF PAGES	2	NEXT PAGE		PAGE NO.	2	DWG #	&EMC/2
								JOB #	CP20205

NEMA 4X STAINLESS STEEL ENCLOSURE
48"H x 36"W x 12"DP
OUTER DOOR NOT SHOWN

FRONT

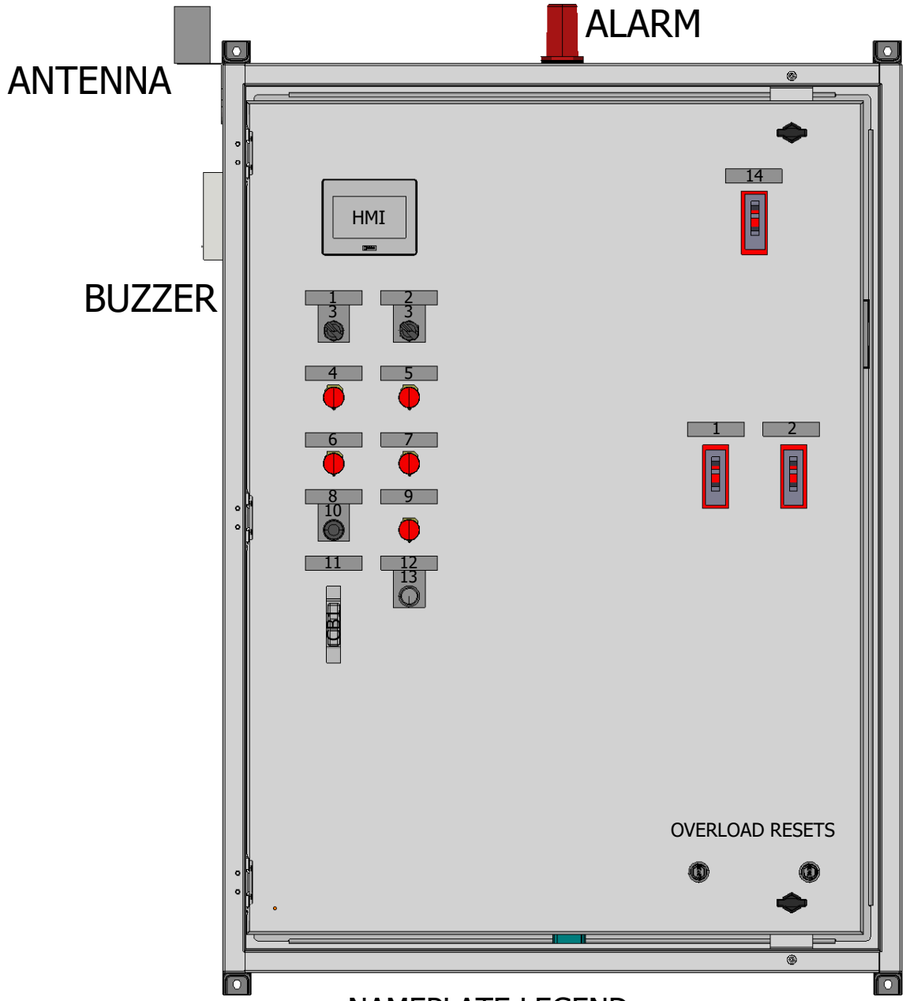

BACK PANEL

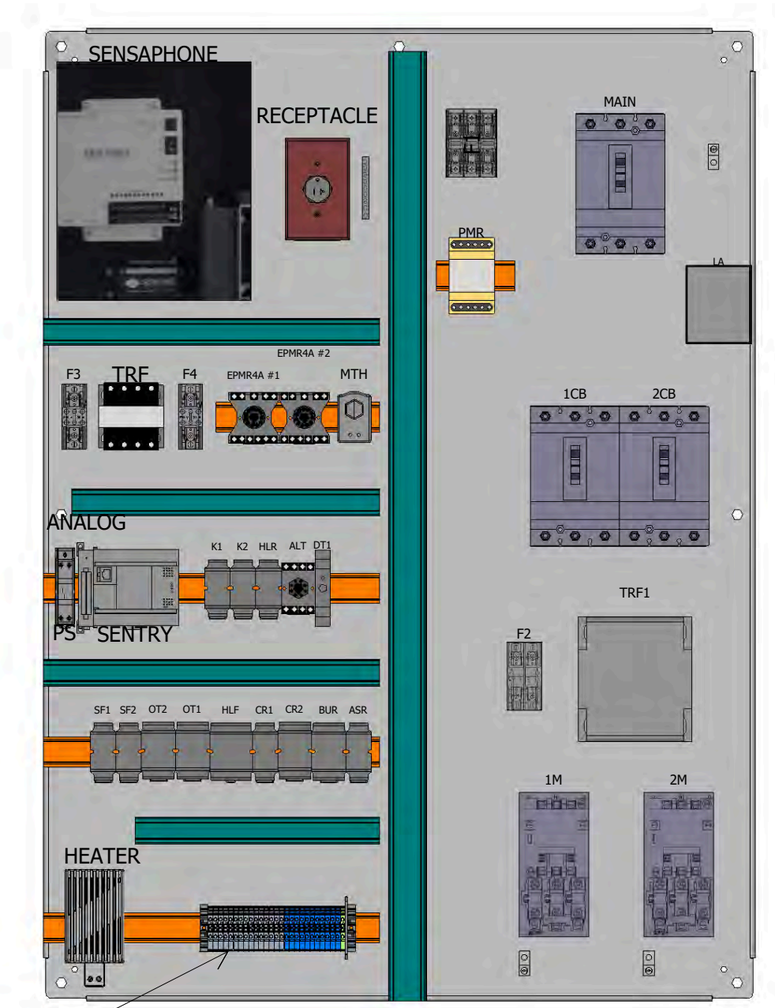

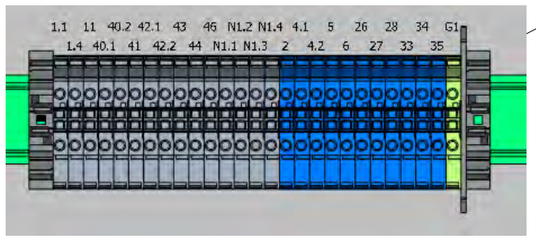

NAMEPLATE LEGEND

1. PUMP 1
2. PUMP 2
3. HAND OFF AUTO
4. PUMP 1 OVERTEMP
5. PUMP 2 OVERTEMP
6. PUMP 1 SEAL FAIL
7. PUMP 2 SEAL FAIL
8. ALARM
9. BACKUP ON
10. SILENCE
11. CONTROL
12. BACKUP
13. RESET
14. MAIN

LAMINATED DRAWING REQUIRED

2525 CR 172 Industrial

USEMCO INCORPORATED
1602 REZIN RD, TOMAH, WI 54660
PHONE: (608) 372-5911 FAX: (608) 372-5016 WWW.USEMCO.COM

CUSTOMER: MANSFIELD PUMPCOMPANY

PROJECT DESCRIPTION: BLUEBONNET-JOHNNY MORIS

REV. NO.	REVISION	NAME	DATE

	NAME	DATE
DESIGNED BY:	jdevupadhyaya	03/27/24
DRAWN BY:	AY DEV UPADHYAYA	04/11/24
CHECKED BY:		04/11/24

PAGE DESCRIPTION: PANEL LAYOUT

PREVIOUS PAGE	&/3	TOTAL NO. OF PAGES	1
PAGE NO.	1	DWG NO.	&PNL/1
NEXT PAGE	&EMC/1	JOB NO.	CP20205

M 20205-EMC - 20205-EMC - BLUEBONNET-JOHNNY MORRIS
BLUEBONNET- JOHNNY MORRIS

Detail	**Quantity**	
--10 PARTS - PART ASSEMBLY NONFABRICATED		
PART ASSEMBLY NONFABRICATED		
----322265 HORN 120VAC EDWARDS #870P-N5	1.00	IN
NEMA 4X RATED		
----322276.2 LIGHT ALARM AC-DC #BL5R-120VAC	1.00	IN
----420316 STARTER SQD 8536 SBO2V02S	2.00	IN
3 POLE NEMA SIZE 0		
----420410 ROD RESET SINGLE SQD 9066 RA-1	2.00	IN
----421494.07 BAR GROUND KIT SQD PK7GTA	1.00	IN
----421500 BREAKER DOOR MOUNT SQD QOU-110	1.00	IN
----421721 BREAKER 3 PL SQD HDL 36015	2.00	IN
25 KA @ 240 VAC 18 KA @ 480 VAC 14 KA @ 600 VAC		
----421722 BREAKER 3 PL SQD HDL 36020	1.00	IN
25 KA @ 240 VAC 18 KA @ 480 VAC 14 KA @ 600 VAC		
----422304.0535 RELAY/BASE PUMP MONITOR EBARA EPMR4A	2.00	IN
SUPPLIED BY MANSFIELD PUMP COMPANY		
----422339.10 RELAY 10A IDEC RH2B-U-AC120V	1.00	IN
----422339.11 RELAY 10A IDEC RH2B-U-DC24V	3.00	IN
----422339.12 RELAY 10A IDEC RH2B-U-AC24V	1.00	IN
----422339.20 RELAY 10A IDEC RH3B-U-AC120V	3.00	IN
----422339.22 RELAY 10A IDEC RH3B-U-AC24V	2.00	IN
----422345 RELAY ALT 10A DIV. ARA-120-ABA	1.00	IN
----422351.20 RELAY PH MNTR MACROMATIC PMDU	1.00	IN
190 - 500 VAC 2 FORM "C" CONTACTS		
----423371 POWER SUPPLY IDEC 30W 24VDC #PS5R-VC24	1.00	IN
CLASS II		
----423384.3 MOUNTING KIT SQD #QOSAMK	1.00	IN
----423385.19 ARRESTER SURGE 3PH SQD 480V D #SDSA4040D (3P3W)	1.00	IN
----423418 BLOCK TERMINAL ABB-GRAY #1SNK506010R0000	15.00	IN
ZS6		
----423418.0 BLOCK TERMINAL ABB-BLUE #1SNK506020R0000	11.00	IN
ZS6-BL		
----423418.3 BLOCK TERMINAL ABB-GN/YL #1SNK506150R0000	1.00	IN
GROUNDING ZS6-PE		
----423418.4 END SECTION COVER ABB SNK #1SNK505910R0000	1.00	IN
ES4		
----423418.5 END STOP ABB-GRAY SNK #1SNK900001R0000	2.00	IN
BAM3		
----423418.7 JUMPER 2 POLE ABB SNK #1SNK906302R0000	4.00	IN
JB6-2		
----423418.71 JUMPER 4 POLE ABB SNK #1SNK906304R0000	2.00	IN
JB6-4		
----423480.2 SOCKET RD 8 PIN IDEC SR2P-06	1.00	IN
----423481.2 SOCKET RD 11 PIN IDEC SR3P-06	2.00	IN
----423484 SOCKET MIDGET 2P IDEC SH2B-05	5.00	IN

M 20205-EMC - 20205-EMC - BLUEBONNET-JOHNNY MORRIS
BLUEBONNET- JOHNNY MORRIS

Detail	Quantity	
----423485 SOCKET MIDGET 3P IDEC SH3B-05	5.00	IN
----423627 OVERLOAD SQD #B10.2	3.00	IN
----425013.00 TIMER 120VAC DIVERSIFIED ON DELAY #175SO-110	1.00	IN
----425360.3 TRNSFMR 50VA SQD 9070 T50D13	1.00	IN
----425378 TRNSFMR 500VA HEVI-DUTY #E500	1.00	IN
W/FB2X FUSE HOLDER SBE ENCAPSULATED SERIES		
----426103 FUSE 250V TIME-DELAY 2 AMP	1.00	IN
CLASS RK5 200,000 A.I.R. 2" LONG x 9/16" DIAMETER (BUSSMANN FRN-R-2) (LITTELFUSE FLN-R-2) (MERSEN TR-2R)		
----426104 FUSE 250V TIME-DELAY 3 AMP	1.00	IN
CLASS RK5 200,000 A.I.R. 2" LONG x 9/16" DIAMETER (BUSSMANN FRN-R-3) (LITTELFUSE FLN-R-3) (MERSEN TR-3R)		
----426206 FUSE 600V FAST-ACTING 5 AMP	2.00	IN
1-1/2" LONG x 13/32" DIAMETER (BUSSMANN KTK-5) (LITTELFUSE KLK-5) (MERSEN ATM5) 100,000 A.I.R.		
----426211.0001 FUSE 600V FAST-ACTING 1 AMP	3.00	IN
CLASS CC 200,000 A.I.R. 1-1/2" LONG x 13/32" DIAMETER (BUSSMANN KTK-R-1) (LITTELFUSE KLKR-001) (MERSEN ATMR1)		
----426211.0062 FUSE 600V TIME-DELAY 6-1/4 AMP	1.00	IN
CLASS CC 200,000 A.I.R. 1-1/2" LONG x 13/32" DIAMETER (BUSSMANN FNQR-6-1/4) (LITTELFUSE KLDR-6-1/4) (MERSEN ATQR6-1/4)		
----426520 BLOCK FUSE MARATHON 6M30A2SQ	1.00	IN
13/32" X 1 1/2" FUSE SIZE		
----426520.02 BLOCK FUSE MARATHON 6M30A3SQ	1.00	IN
13/32" X 1 1/2" FUSE SIZE		
----426521 BLOCK FUSE MARATHON F30A1S	2.00	IN
FOR 9/16" x 2" FUSES		
----427712.21 DIALER WIRELESS SENSAPHONE SENTINEL SCD-1200-4GVZCD	1.00	IN
4G LTE CELLULAR MODEM ON VERIZON CLEAR DOOR 12 INPUTS 8 HOUR INTERNAL BATTERY BACKUP INCLUDES ANTENNA		
----427712.STD-2 SERVICE WIRELESS SENSAPHONE SENTINEL SCD-1200-1YCELL	1.00	IN
VERIZON 1 YEAR		
----428905.1 WIRE DUCT BASE 1.5" X 3"	3.00	IN
PANDUIT F1.5 x 3 LG6 OR TYTON SL-1.5 x 3G		
----428905.2 WIRE DUCT BASE 1" X 2"	2.00	IN
PANDUIT F1X2 LG6		

M 20205-EMC - 20205-EMC - BLUEBONNET-JOHNNY MORRIS
BLUEBONNET- JOHNNY MORRIS

Detail	Quantity	
----428905.25 WIRE DUCT BASE 1" X 3"	5.00	IN
PANDUIT F1X3 LG6		
----428908.1 WIRE DUCT COVER 1.5"	3.00	IN
PANDUIT C1.5LG6 OR TYTON TC1.5G		
----428908.2 WIRE DUCT COVER 1"	7.00	IN
PANDUIT C1LG6		
----429071.3 DECAL PANEL RATING LABEL	1.00	IN
VOLTAGE_____TOTAL FLA _____		
PHASE_____FREQ._____		
AMP_____		
HP_____ S/N_____		
SHORT CIRCUIT CURRENT RATING		
kA RMS SYMMETRICAL_____		
----429094.02 DECAL USEMCO 2 7/16" X 7 1/8"	1.00	IN
.020 MILL ALUMINUM BLK PRINT W/468 ADHESIVE		
----429094.04 DECAL USEMCO 2" X 3" MADE IN USA	1.00	IN
----429105 DECAL USEMCO LIMITED WARRANTY 1 YEAR	1.00	IN
3" X 4.75" WHITE BACKGROUND BLACK LETTERS		
Any part claimed defective will be either repaired		
or replaced, our option, when returned to our		
factory transportation charges paid. This		
guarantee only covers defect which have developed		
in the service for which the controls have been		
designed.		
The liability of the company shall not in any case		
exceed the cost of correcting defects in USEMCO^S		
controls or parts, upon the above mentioned one		
year, all such liability shall terminate.		
USEMCO shall not in any event be liable for		
indirect or consequential damages.		
USEMCO, Inc.		
Tomah, WI 54660		
WORDING AS FOLLOWS:		
All control panels manufactured by USEMCO, Inc.		
are guaranteed to be free from defect in		
workmanship and material for a period of one (1)		
year from date of shipment.		
----429118.43 LABELS "WARNING" BRADY B30-25-595-ANSIWA	1.00	IN
4" X 6" DIECUT		
ORDER 175 PER ROLL		
ORANGE "WARNING" HEADER ON WHITE LABEL		
----432080.8822 BRACKET ANTENNA PANORAMA #SP5-0470	1.00	IN
----432160 HMI IDEC 4.3" COLOR TOUCH #HG1G-4VT22TF-B	1.00	IN
TFT LCD Touch Screen		
95.04mm x 53.856mm		
480 x 272 Pixels		
12 - 24VDC		
----432359.102 PLC, MITSU, FX5 AC BASE UNIT #FX5S-30MR/ES	1.00	IN
16 DC IN / 14 RELAY OUT		
BUILT IN ETHERNET PORT		
----432359.500 PLC, MITSU, 4CH ANALOG INPUT FX5-4AD-ADP	1.00	IN
LEFT SIDE ANALOG INPUT ADAPTOR MODULE		
----460480 RING SEAL T&B 5262 1/2"	1.00	IN
OR EQUAL		
----460501.5 SPLIT CORD GRIP ICOTEK KVT-ER 25	1.00	IN
----460502.002 GROMMET ICOTEK 2MM KT1 #39941	1.00	IN

M 20205-EMC - 20205-EMC - BLUEBONNET-JOHNNY MORRIS
BLUEBONNET- JOHNNY MORRIS

Detail	Quantity	
----460690 BRKT CAP NEWARK #14F412 VR6A 1.750-1.8125" DIA.	1.00	IN
----460695 BRKT CAP NEWARK #13M2545 UNIVERSAL WRAP-AROUND 2.00" DIA. (REPLACES THE OLD 81F3217 & 72V8354)	1.00	IN
----462319.0 COVER SGL GANG BROWN P&S #P-7	1.00	IN
----462320 RECEPT SGL 20A 125V A-H 5361B NEMA CONFIG. NO. 5-20R	1.00	IN
----462850.03 ENCL N4X SAGINAW SCE-48EL3612SSLPPL TYPE 304 STAINLESS STEEL WITH 3-POINT LATCH AND KEYLOCKING/PADLOCKING HANDLE	1.00	IN
----463180.14 ENCL DEAD FRONT SAGINAW SCE-DF48EL36LP	1.00	IN
----463223.12 ENCL BP SAGINAW SCE-48P36	1.00	IN
----463442.72 THERMOSTAT NORMALLY CLOSED SCE-TEMNC NORMALLY OPEN & NORMALLY CLOSED DUAL HEATING & COOLING THERMOSTAT INDIVIDUAL ADJUSTMENTS 14-176 DEGREES HEATING & COOLING	1.00	IN
----463502.100 ENCL MTG KIT SAGINAW SCE-ELMFK4SS6-OS INCLUDES (4) 304 SS MUNTING FEET AND STAINLESS STEEL FASTENERS	1.00	IN
----469004 LUG ALUM SOLDERLESS MAX. #2 ILSCO TA-2, BLACKBURN ADR-2, BURNDY KA2U OR EQUAL	3.00	IN
----469005.0018 LUG POWER KIT SQD #PDC6HD6 (6) 14-6 AWG (3) LUGS PER KIT	1.00	IN
----469068.12 HEATER TOUCH SAFE SAGINAW 100W SCE-TSH100	1.00	IN
----470501.44 SWITCH PB BLACK TELE ZB4 BA2	2.00	IN
----470620.44 SWITCH SEL 3 POS TELE ZB4 BD3	2.00	IN
----472078.44 MOUNTING COLLAR TELE ZB4 BZ009 FOR XB4 22mm SWITCHES	9.00	IN
----472081.66 BLOCK CONTACT TELE ZBE101 ONE NORMALLY OPEN CONTACT FOR XB4 22mm SWITCHES	5.00	IN
----472082.66 BLOCK CONTACT TELE ZBE102 ONE NORMALLY CLOSED CONTACT FOR XB4 22mm SWITCHES	1.00	IN
----480141.2 LIGHT HEAD RED TELE ZB4 BV043 RED LENS FOR XB4 22mm LIGHTS	5.00	IN
----480143.0 LIGHT MODULE TELE ZBVG1 WHITE 120VAC LED FOR XB4 22mm LIGHTS	5.00	IN
----500586.X02 STANDOFF BOTTOM LEG SQD H SERIES ADJUSTABLE 4 1/4 - 6 3/8"	4.00	IN
----500586.Z09 STANDOFF TOP PLATE SQD 1-HXL	1.00	IN
----500586.Z10 STANDOFF TOP PLATE SQD 2-HXL 3P	1.00	IN
--20 PARTS - PART ASSEMBLY NONFABRICATED SHIP LOOSE ITEMS		
----470017.421 TRANSDUCER BLUE RIBBON BIRDCAGE #BC001-15-70 15PSI, 4-20mA, 70FT CABLE	1.00	IN

Saginaw Control and Engineering
95 Midland Road Saginaw, MI 48638-5770
(800) 234-6871 - Fax: (989) 799-4524
SCE@SaginawControl.com

SCE-48EL3612SSLPPL



Product Specifications:

Part Number: SCE-48EL3612SSLPPL
Description: S.S. LPPL Enclosure
Height: 48.00"
Width: 36.00"
Depth: 12.00"

Construction
- 0.075 In. stainless steel Type 304.
- Seams continuously welded and ground smooth.
- Flange trough collar around all sides of door opening.
- Collar studs provided for mounting optional panels.
- Mounting holes in back of the enclosure for wall mounting.
- Mounting hardware, sealing washers and hole plugs included.
- Stainless steel concealed hinges.
- Removable and interchangeable doors.
- Black zinc die cast keylocking/padlocking handles.
- 3-point latching mechanism.
- Removable print pocket.
- Oil and water resistant gasket.
- Ground stud on door and body.

Application
Designed to house electrical and electronic controls, instrumentation and components in indoor or outdoor locations. For outdoor applications a drip shield is recommended.

Finish
#4 Brushed finish on all exterior surfaces. Optional sub-panels are powder coated white.

Industry Standards - (IS6)
- NEMA Type 3R, 4, 4X, 12 and Type 13
- UL Listed Type 3R, 4, 4X and 12
- CSA Type 4, 4X and 12
- IEC 60529
- IP 66

Notes
Special Instructions apply for IS3, IS4 and IS6 to maintain the environmental rating of Type 3R for these parts. Instructions are located on the enclosure door. Drip shield is required on IS3, drip shield is recommended on IS4 and IS6. Drain holes are required on all.

Provision for Lifting Lugs on enclosures when Height >48" and Depth >16". The Lifting Lug assembly will be included with the enclosure bolt pack.

Optional Accessories
SCE-48P36 Subpanel, Bent
SCE-BVK Breather Vent
SCE-DF48EL36LP Panel, Dead Front (Wall Mount)
SCE-DS36SS Shield, S.S. Drip
SCE-ELMFK4SS Foot Kit, S.S. EL Mounting (4pc.)
SCE-ELSP3 KIT, Swing-Out Panel (20 High & Up)

Similar Part Numbers
SCE-36EL2412SSLPPLS.S. LPPL Enclosure
SCE-36EL3012SSLPPLS.S. LPPL Enclosure
SCE-36EL3612SSLPPLS.S. EL Enclosure
SCE-42EL3612SSLPPLS.S. LPPL Enclosure
SCE-48EL3616SSLPPLS.S. LPPL Enclosure
SCE-60EL3612SSLPPLS.S. LPPL Enclosure
SCE-60EL3616SSLPPLS.S. LPPL Enclosure
SCE-60EL3624SSLPPLS.S. LPPL Enclosure

Installation Information
- Drain/Vents
- Sealing Washer Specifications
- Dead Front Wall Mount With 3 Point Latching Hardware
- EL Flush Mount Frame
- Dead Front Wall Mount Installation Instructions
- Swing Panel ELSP for Encl. Height > 16
- Drip Shield Kit Assembly



Type SCO2
Size 1, 3-Pole Contactor



Type SCO3
Size 1, 3-Pole Starter



Starter with MOTOR LOGIC



Starter with Melting Alloy

AC MAGNETIC CONTACTORS CLASS 8502

General Information

Class 8502 Type S magnetic contactors are used to switch heating loads, capacitors, transformers, and electric motors where overload protection is separately provided. Class 8502 contactors are available in NEMA Sizes 00-7. Type S contactors are designed for operation at 600 Volts, AC 50-60 Hertz.

Holding Circuit Contact

A normally open holding circuit contact for three wire control is provided on all contactors as standard. Sizes 00-2 contactors use a Class 9999 SX11 auxiliary contact as the holding circuit contact. Sizes 3-7 contactors use a Class 9999 SX6 auxiliary contact as the holding circuit contact. See Class 9999 for the holding circuit contact electrical ratings. On Size 00-1 single phase contactors, a power pole is used as the holding circuit contact and therefore has the same rating as the power contacts.

Enclosures

Class 8502 magnetic contactors are available in the following enclosures:

- NEMA Type 1 General Purpose
- NEMA Type 4 & 4X Watertight and Dusttight Stainless Steel
- NEMA Type 4X Watertight, Dusttight, and Corrosion Resistant Glass — Polyester
- NEMA Type 7 & 9 Bolted and Spin-Top for Hazardous Locations
- NEMA Type 12 Dusttight and Driptight for Industrial Use

The NEMA Type 4 & 4X stainless steel enclosure (Sizes 0-5) has a brushed finish. For an electropolished finish, specify Form G16 and add 15% to the price of the standard device.

Also, NEMA Type 12 devices are available UL Listed for use in Class II, Division 2, Group G and Class III, Divisions 1 and 2 locations. Request Form G21, no additional charge.

Separate enclosures are available, see Class 9991.

AC MAGNETIC STARTERS CLASS 8536

General Information

Class 8536 Type S magnetic starters are used for full voltage starting and stopping AC squirrel cage motors. Motor overload protection is provided by melting alloy type thermal overload relays. Class 8536 starters are available in NEMA Sizes 00-7. Type S starters are designed for operation at 600 Volts AC, 50-60 Hertz.

Holding Circuit Contact

A normally open holding circuit contact for three wire control is provided on all contactors as standard. Sizes 00-2 contactors use a Class 9999 SX11 auxiliary contact as the holding circuit contact. Sizes 3-7 contactors use a Class 9999 SX6 auxiliary contact as the holding circuit contact. See Class 9999 for the holding circuit contact electrical ratings.

Overload Relays with Melting Alloys

Class 8536 Type S Sizes 00-6 starters are provided with a melting alloy thermal overload relay as standard. Interchangeable thermal units are available in standard trip (Class 20) Sizes 00-6, quick trip (Class 10) Sizes 00-4, and slow trip (Class 30) Sizes 00-3. Single-phase starters use one thermal unit, 3-phase starters use three thermal units.

Class 8536 Size 7 starters are provided with solid state Motor Logic which has selectable trip Class10/20, Ground fault detection, and Communication capabilities for future enhancement. The solid state overload relay is ambient insensitive and features phase loss, phase unbalance and over-current protection.

MOTOR LOGIC™ Solid State Overload Relay (SSOLR)

Solid state overload relays are available for Sizes 00 – 7 starters. These ambient insensitive overload relays provide phase loss protection, phase unbalance protection and a LED power indicator. For additional information, see the Class 9065 catalog section. To order Type S starters with solid state overload relays, see Factory Modification (FORMS).

Bimetallic overload relays are also available for Sizes 0-6. Ambient Compensated and Non-compensated versions are supplied with manual

© 1998 Square D All Rights Reserved

and automatic reset, trip current adjustment, and an alarm contact on Sizes 0-2. For additional information, see the Class 9065 catalog section. To order Type S starters with bimetallic overload relays, see Factory Modifications (FORMS).

Enclosures

Class 8536 magnetic starters are available in the following enclosures.

- NEMA Type 1 General Purpose Enclosure
- NEMA Type 3R Rainproof, Sleet Resistant for Outdoor Use
- NEMA Type 4 & 4X Watertight and Dusttight
- NEMA Type 4X Watertight, Dusttight, and Corrosion Resistant Glass – Polyester
- NEMA Type 7 & 9 Bolted and Spin-Top for Hazardous Locations
- NEMA Type 9 Bolted for Hazardous Locations
- NEMA Type 12 Dusttight and Driptight for Industrial Use

The NEMA Type 4 & 4X stainless steel enclosure (Sizes 0-5) has a brushed finish. For an electropolished finish, specify Form G16 and add 15% to the price of the standard device. Sizes 6 & 7 are painted sheet steel and are rated NEMA 4 ONLY.

Also NEMA Type 12 devices are available UL Listed for use in Class II, Division 2, Group G and Class III, Divisions 1 and 2 locations. Specify Form G21, no additional charge.

Separate enclosures are available, see Class 9991.

Coil Voltages

AC coils are available for application on 50-60 Hertz. NEMA Sizes 00-5 are supplied with coils that are designed to operate satisfactorily on line voltages of 85% – 110% of rated voltage. NEMA Size 6 and 7 contactors are supplied with a DC coil operated by a solid state rectifier circuit that is powered by an AC source.

Please note that **Voltage Codes** have been added to the Type designations in order to improve customer service. It is necessary to include the Voltage Code when ordering contactors and starters. Also, 120 Volt Polyphase contactors and starters will be wired for separate control.

Auxiliary Contacts

Additional auxiliary contacts may be added to Type S contactors. See Page 15 for maximum number of auxiliary units and Form designations for factory installed auxiliary contacts.

Type S Accessories

Additional accessories such as power poles, pneumatic timer attachments, and cover mounted control stations are available as factory or field modifications.

© 1998 Square D All Rights Reserved

Product Data Sheet

8502SBO2V02S

Full Voltage Magnetic Contactor , Non-Reversing, NEMA Size: 0, 18A



Technical Characteristics

Control Source	Separate Control Circuit
Catalog Reference Number	8502CT9701
Depth	4.22 Inches
Width	3.22 Inches
Height	4.34 Inches
Ampere Rating	18A
Application	Used to switch heating loads, capacitors, transformer and electric motors where overload protection is provided separately
Approvals	UL Listed File E78351 CCN NLDX - CSA Certified File LR60905 Class 3211 04
Enclosure Type	Open
Horsepower Rating (3-Phase)	3HP@200/230VAC - 5HP@460/575VAC
Maximum Voltage Rating	600VAC
Mounting Type	Surface
NEMA Size	0
Number of Poles	3-Pole
Operating Voltage	120VAC@60Hz - 110VAC@50Hz
Phase	3-Phase
Action	Non-Reversing
Terminal Type	Screw Clamp
Type	S
Weight	4 Pounds

Shipping and Ordering

Category	21191 - Contactors/Starters, NEMA, Open/Enclosed (NEMA 1), Size 00 & 0
Discount Schedule	CP1
Article Number	785901862833
Package Quantity	1
Weight	3.25 lbs.
Availability Code	Stock Item: This item is normally stocked in our distribution facility.
Returnability	Y

As standards, specifications, and designs change from time to time, please ask for confirmation of the information given in this document.

Generated: 05/27/2009 12:45:09

© 2009 Schneider Electric. All rights reserved.

Product data sheet

Specifications



Thermal Unit, Type S, Type B, melting alloy, Class 20

B10.2

Main

Range Of Product	B
Thermal Overload Type	Melting alloy
Motor Tripping Class	20

Ordering and shipping details

Category	US10CP121781
Discount Schedule	0CP1
Gtin	785901587477
Returnability	Yes
Country Of Origin	MX

Packing Units

Unit Type Of Package 1	PCE
Number Of Units In Package 1	1
Package 1 Height	0.80 in (2.032 cm)
Package 1 Width	1.20 in (3.048 cm)
Package 1 Length	2.50 in (6.35 cm)
Package 1 Weight	0.80 oz (22.68 g)

Contractual warranty

Warranty	18 months

Disclaimer: This documentation is not intended as a substitute for and is not to be used for determining suitability or reliability of these products for specific user applications

Price is “List Price” and may be subject to a trade discount – check with your local distributor or retailer for actual price.

Product Data Sheet

HDL36020

Molded Case Circuit Breaker , 600VAC/250VDC, 20A



SQUARE D by Schneider Electric

Technical Characteristics

Approvals	UL Listed - CSA Certified - IEC Rated
Catalog Reference Number	0611CT0401
Circuit Breaker Type	Standard
For Use With	Industrial Enclosures and Switchboards
General Application	Provides overload and short circuit protection
AC Magnetic Trip Setting	350A - 750A Adjustable Trip
Ampere Rating	20A
Frame Type	H-Frame
HACR Rated	Yes
Marketing Trade Name	Powerpact
Voltage Rating	600VAC/250VDC
Mounting Type	Unit Mount
Weight	5 Pounds
Number of Poles	3-Pole
Short Circuit Current Rating	25kA@240VAC - 18kA@480VAC - 14kA@600VAC
Type	HD
Terminal Type	Line: Lug - Load: Lug
Wire Size	#14-3/0 AWG(Al/Cu)
Height	6.40 Inches
Width	4.12 Inches
Depth	4.36 Inches

Shipping and Ordering

Category	01110 -
Discount Schedule	DE2
Article Number	785901706694
Package Quantity	1
Weight	4.15 lbs.
Availability Code	Non-Stock Item: This item is not normally stocked in our distribution facility.
Returnability	Y

As standards, specifications, and designs change from time to time, please ask for confirmation of the information given in this document.

Generated: 06/01/2009 15:13:43

© 2009 Schneider Electric. All rights reserved.

Schneider Electric

SDSA 3-Phase SPDs Features

Superior Performance

Square D brand Surgelogic SDSA 3-Phase SPDs utilize high-energy suppression circuitry that can be located at any point in the electrical system. They have the flexibility to be used with or without an Overcurrent Protective Device (OCPD).

SDSA 3-Phase SPDs provide surge suppression for equipment from severe transient activity. Each metal oxide varistor (MOV) is individually fused and the products carry a NEMA Type 4X rating suitable for installing indoors, outdoors, or in other harsh environments.

Easy Installation

Surgelogic SDSA 3-Phase SPDs are some of the most versatile, yet compact devices available on the market today. This compact package can be mounted on an electrical panel, meter socket, or inside electrical control cabinets.

Warranty

The SDSA 3-Phase SPD warranty is 2 years.

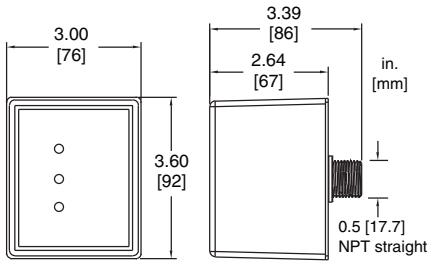

SDSA 3-Phase SPDs



Performance

Surge Current Rating per Phase	40kA
Short Circuit Current Rating	200kA
Modes of Protection	6
Fusing	Individually fused MOVs
Thermal Fusing	Yes
Overcurrent Fusing	Yes
Operating Frequency	50/60 Hz

Mechanical Description

Enclosure	Non-Metallic
NEMA Rating	NEMA Type 4X
Connection Method	#12 AWG
Weight	1.63 lbs (0.738 kg)
Mounting Method	Close Nippled, Back Mounted
Operating Altitude	Sea Level-12,000' (3,658 m)
Storage Temperature	-31˚ F to +176˚ F (-35˚ C to +80˚ C)
Operating Temperature	-31˚ F to +176˚ F (-35˚ C to +80˚ C)
Operating Humidity	0 to 95% non-condensing

Diagnostics

Green status LED

Listings and Performance

cULus Listed per UL 1449 4th Edition Type 1 SPD, CSA C22.2 No. 269.1-14

The SDSA2040, SDSA4040, and SDSA3650 is a four-wire surge suppressor designed for use on solidly grounded systems. The SDSA2040D, SDSA4040D, and SDSA3650D is a three-wire surge suppressor designed for delta applications.

Voltage	Surge Current per Phase	Modes of Protection	Configuration	Model Number	MCOV	SCCR	I_n	VPR L-N	VPR L-G	VPR L-L	VPR N-G
208Y/120V[1]	40kA	6	3 Ø, 4-wire	SDSA2040	180V L-N 360V L-L	200kA	10kA	700V	N/A	1200V	N/A
240V Delta[2]	40kA	3	3 Ø, 3-wire	SDSA2040D	360V L-L	200kA	10kA	N/A	N/A	1200V	N/A
480Y/277V[3]	40kA	6	3 Ø, 4-wire	SDSA4040	420V L-N 840V L-L	200kA	10kA	1500V	N/A	2500V	N/A
480V Delta	40kA	3	3 Ø, 3-wire	SDSA4040D	840V L-L	200kA	10kA	N/A	N/A	2500V	N/A
600Y/347V	40kA	6	3 Ø, 4-wire	SDSA3650	510V L-N 1020V L-L	200kA	10kA	1800V	N/A	3000V	N/A
600V Delta	40kA	3	3 Ø, 3-wire	SDSA3650D	1020V L-L	200kA	10kA	N/A	N/A	3000V	N/A

1 Applicable voltages: 220Y/127V, 208Y/120V
2 Applicable voltages: 240V Delta, 240/120V High-Leg Delta
3 Applicable voltages: 480Y/277V, 415Y/240V, 400Y/230V, 380Y/220V

Schneider Electric USA, Inc. 800 Federal Street Andover, MA 01810, USA Telephone: (888) 778-2733 TAG: (800) 577-7353 www.schneider-electric.com/us
Schneider Electric México, S.A. de C.V. AV. Ejercito Nacional No. 904, Col. Palmas, Polanco 11560 México, D.F. Tel. 55-5804-5000 www.schneider-electric.com.mx
Schneider Electric Canada, Inc. 5985 McLaughlin Road, Mississauga, ON L5R 1B8 Canada Tel:1-800-565-6699 www.schneider-electric.ca

© 2011-2015 Schneider Electric. All rights reserved. Schneider Electric, Square D and Surgelogic are trademarks and the property of Schneider Electric SE, its subsidiaries and affiliated companies. All other trademarks are the property of their respective owners.

Document Number 9990-0120Rev01 June 2015 bw

Product Data Sheet

HDL36015

Molded Case Circuit Breaker , 600VAC/250VDC, 15A



Technical Characteristics

Approvals	UL Listed - CSA Certified - IEC Rated
Catalog Reference Number	0611CT0401
Circuit Breaker Type	Standard
For Use With	Industrial Enclosures and Switchboards
General Application	Provides overload and short circuit protection
AC Magnetic Trip Setting	350A - 750A Adjustable Trip
Ampere Rating	15A
Frame Type	H-Frame
HACR Rated	Yes
Marketing Trade Name	Powerpact
Voltage Rating	600VAC/250VDC
Mounting Type	Unit Mount
Weight	5 Pounds
Number of Poles	3-Pole
Short Circuit Current Rating	25kA@240VAC - 18kA@480VAC - 14kA@600VAC
Type	HD
Terminal Type	Line: Lug - Load: Lug
Wire Size	#14-3/0 AWG(Al/Cu)
Height	6.40 Inches
Width	4.12 Inches
Depth	4.36 Inches

Shipping and Ordering

Category	01110 -
Discount Schedule	DE2
Article Number	785901577867
Package Quantity	1
Weight	4.06 lbs.
Availability Code	Non-Stock Item: This item is not normally stocked in our distribution facility.
Returnability	Y

As standards, specifications, and designs change from time to time, please ask for confirmation of the information given in this document.

Generated: 06/01/2009 15:13:03

© 2009 Schneider Electric. All rights reserved.

www.macromatic.com
800.238.7474

Product Specifications

PMDU



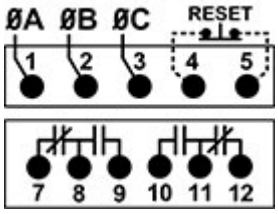

Use socket: N/A

Image may not be exact product—for reference only.

Family: 3-PHASE MONITOR RELAY
Function: PHASE LOSS, PHASE REVERSAL, PHASE UNBALANCE, UNDERVOLTAGE & OVERVOLTAGE
Line-Line Voltage: 190-500VAC
Output: 10A DPDT

Description of function:

When the proper 3-phase line voltage is applied to the unit and the phase sequence (rotation) is correct, the relay is energized after the Restart Delay is completed. Any one of five fault conditions will de-energize the relay after a delay. As standard, re-energization is automatic upon correction of the fault condition. Manual reset is available if an external momentary N.C. switch is connected to terminals 4 and 5. A bi-color status LED indicates normal condition and also provides specific fault indication to simplify troubleshooting (see right).

LED STATUS		STATUS
GREEN		NORMAL (RELAY ON)
		RESTART (DELAY)
RED		REVERSAL
		LOSS/UB (UNBALANCE)
		LOW VOLT (UNDERVOLTAGE)
		HIGH VOLT (OVERVOLTAGE)

Application Information

- **Load (Burden):** Less than 40 VA
- **Response Times:**
- **Minimum/Maximum Voltage:** 156-550V (PMDU); 77-152V (PMD120): 345-660V (PMD575), all 50/60Hz. ±5%
- **Reset:** As standard, the PMD Series relays are in the Automatic Reset mode. However, they can be set in the Manual Reset mode by connecting an external N.C. switch across terminals 4 and 5. Upon application of line voltage, the PMD Series will go into Manual Reset mode if it recognizes a closure across terminals 4 and 5. After a fault clears, the relay will not reset until the N.C. switch is opened.
- **Output Contacts:** 10A @ 277V AC/30V DC; 1/2HP @ 120/240V AC (N.O.),1/3HP @ 120/240V AC (N.C.), B300 Pilot Duty, R300 (N.O.)
- **Life:** Mechanical: 10,000,000 operations, Full Load: 100,000 operations
- **Temperature:** -28º to 65º C (-18º to 149º F)
- **Approvals:** c UL us CE

Dimensions Inches (Millimeters)

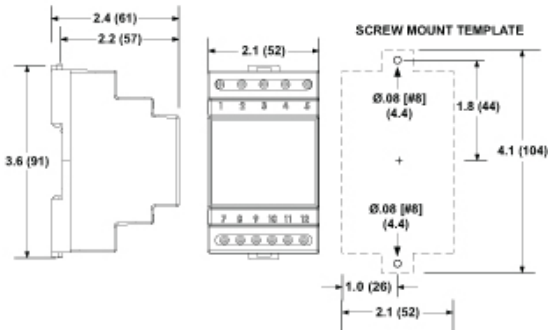

The SBE - Encapsulated Series

The SBE Encapsulated industrial control transformers are epoxy encapsulated to seal the transformer windings against moisture, dirt and industrial contaminants. Extra deep, molded terminal barriers reduce the chance of electrical failure as the result of arcing or frayed lead wires. The rugged construction and proven reliability of the SBE design is uniquely suited for all industrial environments.



E77014

Features

- 50 - 1000 VA, 50/60 Hz – suitable for worldwide applications.
- Interleaved copper windings reduce I^2R losses and maximize efficiency.
- 55°C Rise, 105°C insulation system to minimize heat
- Epoxy encapsulated to protect cores and coils against moisture, dirt, and other contaminants.
- Meets or Exceeds NEMA Standard ST 1 and ANSI C89.1 for load inrush capability.
- Integrally molded, flame retardant (IEC 707 / ISO Class 1210) Terminal Blocks provide greater terminal contact area and improved conductivity.
- Heavy gauge steel mounting plate
- Mounting dimensions are compatible with similar control transformers.
- ***Secondary fuse holders (FB2X) included for 13/32 x 1- 1/2 cartridges (fuses not included).***
- ***Factory-installed fuse holders are available (See W, WA & WB options).***
- 10 + 2 year warranty

Related Products

- Linear Power Supplies
- DIN Rail DC Power Supplies
- Constant Voltage Transformers
- Line Reactors

SBE Mounting Profiles

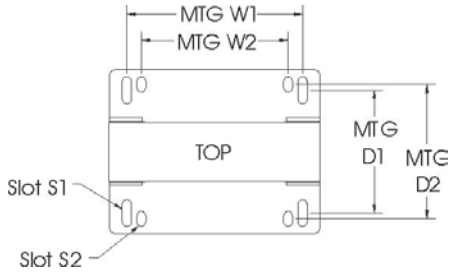

Mounting Dimensions

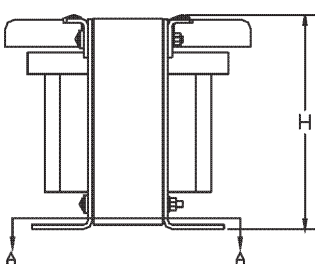

Profile

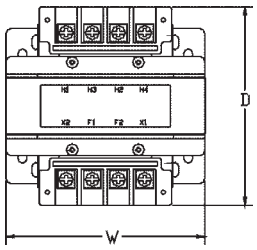

Top View

Accessories

Catalog Number	Description
FBP	Primary "CC" Rejection Type Fuse Holder (Finger Safe covers not available)
FB2	Secondary Fuse Holder only (Glass or Ceramic, ¼" x 1¼" fuse)
FB2X	Secondary Fuse Holder only included where applicable. Not sold separately. (Midget Cartridge Type, 13/32" x 1½" fuse)
FBPC1	Primary "CC" Rejection Type Fuse Holder and Finger Safe Cover Kit
IP20	IEC Touchproof Cover Kit
SBEDIN	IEC Fuse Holder Adaptor Kit
W	Factory installed Primary Fuse Holder with Midget Type (no covers)
WA	Factory installed Fuse Holder with Glass/Ceramic Type and Covers
WB	Factory installed Fuse Holder with Midget Type and Covers

Gross Automation (877) 268-3700 · www.solahevidutysales.com · sales@grossautomation.com

SBE Encapsulated Series Selection Tables

Group 2 – 220 x 440 Volt Primary, 110 Volt Secondary, 50/60 Hz
230 x 460 Volt Primary, 115 Volt Secondary, 50/60 Hz
240 x 480 Volt Primary, 120 Volt Secondary, 60 Hz

c UL us
E77014

VA	Catalog Number	Height (inch)	Width (inch)	Depth (inch)	Mtg Width W1 / W2	Mtg Depth D1 / D2	Slot Size S1 / S2	Approx. Ship Weight (lbs)
50	E050	2.72	3.01	3.99	2.51 / NA	2.02 / NA	.20 x .33 / .20 x .33	3
75	E075	2.96	3.39	4.36	2.81 / 2.50	2.10 / NA	.20 x .50 / .20 x .50	4
100	E100	2.96	3.39	4.61	2.81 / 2.50	2.37 / NA	.20 x .50 / .20 x .50	5
150	E150	3.89	4.5	4.48	3.74 / 3.12	2.56 / 2.87	.20 x .65 / .20 x .33	8
200	E200	3.89	4.5	4.79	3.74 / 3.12	2.87 / 3.18	.20 x .65 / .20 x .33	10
250	E250	3.89	4.5	5.21	3.74 / 3.12	3.29 / 3.61	.20 x .65 / .20 x .33	11
300	E300	4.53	5.25	5.09	4.38 / 3.75	3.10 / NA	.31 x .71 / .31 x .71	12
350	E350	4.53	5.25	5.53	4.38 / 3.75	3.54 / NA	.31 x .71 / .31 x .71	15
500	E500	4.53	5.25	6.31	4.38 / 3.75	4.33 / NA	.31 x .85 / .31 x .85	19
750	E750	5.56	6.38	6.93	5.32 / 4.37	4.25 / 5.75	.31 x .85 / .31 x .85	31
1000	E1000	5.56	6.38	7.36	5.32 / 4.37	4.68 / 6.18	.31 x .85 / .31 x .85	36

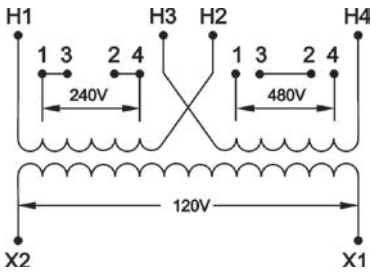

Note: Includes FB2X Secondary fuse holder.

Group 2A – Factory Installed Primary Fuse Holder Class "CC" and:

W - Secondary Fuse Holder (Midget Cartridge, 13/32" x 1½" fuse) supplied, no covers
WA - Secondary Fuse Holder (Glass or Ceramic - Type 3AG, ¼" x 1¼" fuse type)
WB - Secondary Fuse Holder (Midget Cartridge, 13/32" x 1½" fuse)

	Primary Fuse Holder Class "CC"			Dimensions						
VA	W Option - Midget Type Catalog Number	WA Option - Type 3AG w/ Covers Catalog Number	WB Option - Midget Type w/ Covers Catalog Number	Height (inch)	Width (inch)	Depth (inch)	Mtg Width W1 / W2	Mtg Depth D1 / D2	Slot Size S1 / S2	Approx. Ship Weight (lbs)
50	E050W	E050WA	E050WB	4.18	3.01	3.99	2.51 / NA	2.02 / NA	.20 x .33 / .20 x .33	**3**
75	E075W	E075WA	E0750WB	4.41	3.39	4.36	2.81 / 2.50	2.10 / NA	.20 x .50 / .20 x .50	**4**
100	E100W	E100WA	E100WB	4.41	3.39	4.61	2.81 / 2.50	2.37 / NA	.20 x .50 / .20 x .50	**5**
150	E150W	E150WA	E150WB	5.36	4.5	4.48	3.74 / 3.12	2.56 / 2.87	.20 x .65 / .20 x .33	**8**
200	E200W	E200WA	E200WB	5.36	4.5	4.79	3.74 / 3.12	2.87 / 3.18	.20 x .65 / .20 x .33	**10**
250	E250W	E250WA	E250WB	5.36	4.5	5.21	3.74 / 3.12	3.29 / 3.61	.20 x .65 / .20 x .33	**11**
300	E300W	E300WA	E300WB	5.99	5.25	5.09	4.38 / 3.75	3.10 / NA	.31 x .71 / .31 x .71	**12**
350	E350W	E350WA	E350WB	5.99	5.25	5.53	4.38 / 3.75	3.54 / NA	.31 x .71 / .31 x .71	**15**
500	E500W	E500WA	E500WB	5.99	5.25	6.31	4.38 / 3.75	4.33 / NA	.31 x .85 / .31 x .85	**19**
750	E750W	E750WA	E750WB	7.01	6.38	6.93	5.32 / 4.37	4.25 / 5.75	.31 x .85 / .31 x .85	**31**
1000	E1000W	E1000WA	E1000WB	7.01	6.38	7.36	5.32 / 4.37	4.68 / 6.18	.31 x .85 / .31 x .85	**36**

Notes: WA and WB suffix include Finger Safe covers. Fuses not included.
W option for secondary fusing requires assembly (FB2 sold separately).



SBE Control Transformer without Covers - *W Option*

Option
W



SBE Control Transformer with Covers - *WA & WB Option*

Option	Secondary Fusing	
WA	Glass/ Ceramic - Type 3AG (FB2)	
WB	Midget Type (FB2X)	

Gross Automation (877) 268-3700 · www.solahevidutysales.com · sales@grossautomation.com

Product data sheet

Specifications



Mini circuit breaker, QOU, 10A, 1 pole, 120/240VAC, 10kA

QOU110

Main

Product or Component Type	Miniature circuit-breaker
Range of Product	QOU
Circuit breaker type	Standard
Circuit breaker application	HACR rated

Complementary

Line Rated Current	10 A
Electrical connection	Slotted box lugs, line side Slotted box lugs, load side
[Ue] rated operational voltage	120/240 V AC 120 V AC 48 V DC
Mounting Mode	Unit mount
AWG gauge	AWG 14...AWG 2 aluminium/copper
Height	4.05 in (102.87 mm)
Width	0.75 in (19.05 mm)
Depth	2.95 in (74.93 mm)
Tightening torque	45 lbf.in (5.08 N.m) (AWG 14...AWG 2)

Environment

Product Certifications	IEC CSA UL Listed

Ordering and shipping details

Category	00900-QOU BREAKERS & SWITCH
Discount Schedule	DE2
GTIN	785901205678
Returnability	Yes
Country of origin	MX

* Price is “List Price” and may be subject to a trade discount – check with your local distributor or retailer for actual price.

Disclaimer: This documentation is not intended as a substitute for and is not to be used for determining suitability or reliability of these products for specific user applications

Packing Units

Unit Type of Package 1	PCE
Number of Units in Package 1	1
Package 1 Height	1.00 in (2.54 cm)
Package 1 Width	3.10 in (7.874 cm)
Package 1 Length	4.50 in (11.43 cm)
Package 1 Weight	6.40 oz (181.437 g)
Unit Type of Package 2	CAR
Number of Units in Package 2	66
Package 2 Height	3.30 in (8.382 cm)
Package 2 Width	14.00 in (35.56 cm)
Package 2 Length	20.90 in (53.086 cm)
Package 2 Weight	24.75 lb(US) (11.226 kg)
Unit Type of Package 3	PAL
Number of Units in Package 3	2772
Package 3 Height	40.00 in (101.6 cm)
Package 3 Width	40.00 in (101.6 cm)
Package 3 Length	48.00 in (121.92 cm)
Package 3 Weight	1014.00 lb(US) (459.942 kg)

Offer Sustainability

Sustainable offer status	Green Premium product
REACh Regulation	REACh Declaration
EU RoHS Directive	Compliant EU RoHS Declaration
Toxic heavy metal free	Yes
Mercury free	Yes
China RoHS Regulation	China RoHS declaration Product out of China RoHS scope. Substance declaration for your information.
RoHS exemption information	Yes
Halogen content performance	Halogen free product

Contractual warranty

Warranty	18 months

Switching Power Supplies
PS5R-V Series



PRODUCT DESCRIPTION

DIN-rail mount switching power supplies with global approvals for both industrial and hazardous locations

KEY FEATURES

- Compact size preserves panel space
- Slim size (width):
  22.5mm (10W/15W/30W)
  36mm (60W/90W)
  45mm (7.5W)
  46mm (120W)
  60mm (240W)
- Universal Voltage Input:
  85-264V AC/100-370V DC
- Wide operating temperature range
- Spring-up terminals accept ring & fork terminals
- Approved for use in Class I Division 2 hazardous locations
- Can be installed in 6 directions
- 7.5W ~ 90W meet NEC Class 2 output ratings
- Overcurrent protection with auto-reset
- Meets SEMI F47 Sag Immunity (208V AC input)
- RoHS compliant
- Five-year factory warranty

STANDARDS COMPLIANCE

Applicable Standards	Mark	File No. or Organization
UL508 UL1310[1] ANSI/ISA 12.12.01 CSA C22.2 No.107.1 CSA C22.2 No.213 CSA C22.2 No.223[1]	c UL us LISTED	UL/c-UL Listed File No. E467154, E177168
EN60950-1 EN50178 EN61204-3 EN50581	TÜV CE	TÜV SÜD[2] EU Low Voltage Directive EMC Directive RoHS Directive
SEMI F47	—	EPRI

Note 1: PS5R-VA/VB/VC/VD/VE only
Note 2: EN60950-1, EN50178 only

POWER SUPPLY PART NUMBERS

Output Capacity	Part Number	Input Voltage	Output Voltage	Output Current
7.5W	PS5R-VA05	100 to 240V AC (Voltage range: 85 to 264V AC / 100 to 370V DC)	5V	1.5A
	PS5R-VA12		12V	0.6A
	PS5R-VA24		24V	0.3A
10W	PS5R-VB05		5V	2.0A
15W	PS5R-VB12		12V	1.3A
	PS5R-VB24		24V	0.65A
30W	PS5R-VC12		12V	2.5A
	PS5R-VC24		24V	1.3A
60W	PS5R-VD24		24V	2.5A
90W	PS5R-VE24		24V	3.75A
120W	PS5R-VF24		24V	5.0A
240W	PS5R-VG24		24V	10.0A

Part Number Structure

PS5R - V □ □

Output Voltage
05: 5V[3]
12: 12V[4]
24: 24V

Output Capacity
A: 7.5W
B: 10W/15W
C: 30W
D: 60W
E: 90W
F: 120W
G: 240W

Note 3: PS5R-VA/VB only
Note 4: PS5R-VA/VB/VC only
Use only for interpreting part numbers.
Do not use for developing part numbers.

SPECIFICATIONS

Model			5V DC output	PS5R-VA05	PS5R-VB05	-	-	-	-	-
			12V DC output	PS5R-VA12	PS5R-VB12	PS5R-VC12	-	-	-	-
			24V DC output	PS5R-VA24	PS5R-VB24	PS5R-VC24	PS5R-VD24	PS5R-VE24	PS5R-VF24	PS5R-VG24
Output Capacity				7.5W	15W (5V Model is 10W)	30W	60W	90W	120W	240W
Input	Rated Input Voltage (Single-phase two-wire)[1]			100 to 240V AC (Voltage range: 85 to 264V AC/100 to 370V DC) (Load ≤ 80% at 100-105V DC)						
	Frequency			50/60 Hz						
	Input Current (Typ.)		100V AC	5V: 0.20A 12V, 24V: 0.18A	5V: 0.25A 12V, 24V: 0.35A	0.7A	1.3A	1.1A	1.4A	2.7A
			230V AC	5V: 0.12A 12V, 24V: 0.10A	5V: 0.14A 12V, 24V: 0.19A	0.3A	0.8A	0.6A	0.7A	1.2A
	Inrush Current (Typ.) (Ta=25°C, cold start)		100V AC	15A	18A					14A
			230V AC	36A	45A				41A	30A
	Leakage Current		120V AC	0.5mA max.						
			230V AC	1.0mA max.						
	Efficiency (Typ.) (at rated output)[2]		100V AC	5V: 74%, 12V: 79%, 24V: 80%	5V: 77%, 12V: 82%, 24V: 84%	12V: 83%, 24V: 85%	86%	88%		89%
			230V AC	5V: 73%, 12V: 77%, 24V: 76%	5V: 73%, 12V: 80%, 24V: 81%	12V: 85%, 24V: 87%	86%	89%		90%
	Power Factor (Typ.)		100V AC	—	—	—	—	0.99		
			230V AC	—	—	—	—	0.86	0.92	0.96
Output	Rated Voltage/Current			5V/1/5A, 12V/0.6A, 24V/0.3A	5V/2.0A[3], 12V/1.3A, 24V/0.65A	12V/2.5A, 24V/1.3A	24V/2.5A	24V/3.75A	24V/5A	24V/10A
	Adjustable Voltage Range			±10%				±5%	±10%	
	Output Holding Time (Typ.) (at rated output)		100V AC	5V: 45ms, 12V: 45ms, 24V: 47ms	5V: 53ms, 12V: 34ms, 24V: 36ms	12V: 13ms, 24V: 15ms	13ms	20ms	30ms	
			230V AC	5V: 289ms 12V: 294ms 24V: 282ms	5V: 330ms 12V: 215ms 24V: 230ms	12V: 110ms 24V: 110ms	105ms	30ms	33ms	40ms
	Start Time (at rated input and output)			450ms max.	500ms max.	600ms max.	800ms max.		700ms max.	800ms max.
	Rise Time (at rated input and output)			220ms max	5V, 12V: 200ms max. 24V: 250ms max.	200ms max.				
	Regulation	Input Fluctuation		0.4% max.						
		Load Fluctuation		5V: 2.5% max. 12V, 24V: 1.0% max.		1.0% max.				
		Temperature Change		0.04%/°C max. (-10 to +65°C)	0.05%/°C max. (-10 to +65°C)	12V: 0.05%/°C max. (-10 to +50°C) 24V: 0.05%/°C max. (-10 to +55°C)	0.05%/°C max. (-10 to +55°C)	0.05%/°C max. (-10 to +50°C)	0.05%/°C max. (-25 to +55°C)	0.05%/°C max. (-25 to +50°C)
		Ripple (including noise)		5V: 8% p-p max. (-25 to -10°C) 12V: 6% p-p max. (-25 to -10°C) 24V: 4% p-p max. (-25 to -10°C)	5V: 8% p-p max. (-25 to -10°C) 12V: 6% p-p max. (-25 to -10°C) 24V: 4% p-p max. (-25 to -10°C)	12V: 6% p-p max. (-25 to -10°C) 24V: 4% p-p max. (-25 to -10°C)	4% p-p max. (-25 to -10°C)			
				5V: 5% p-p max. (-10 to +0°C) 12V: 2.5% p-p max. (-10 to +0°C) 24V: 1.5% p-p max. (-10 to +0°C)	5V: 5% p-p max. (-10 to +0°C) 12V: 2.5% p-p max. (-10 to +0°C) 24V: 1.5% p-p max. (-10 to +0°C)	12V: 2.5% p-p max. (-10 to +0°C) 24V: 1.5% p-p max. (-10 to +0°C)	1.5% p-p max. (-10 to +0°C)			
				5V: 2.5% p-p max. (0 to +65°C) 12V: 1.5% p-p max. (0 to +65°C) 24V: 1% p-p max. (0 to +65°C)	5V: 2.5% p-p max. (0 to +65°C) 12V: 1.5% p-p max. (0 to +65°C) 24V: 1% p-p max. (0 to +65°C)	12V: 1.5% p-p max. (0 to +50°C) 24V: 1% p-p max. (0 to +55°C)	1% p-p max. (0 to +55°C)	1% p-p max. (0 to +50°C)	1% p-p max. (0 to +55°C)	1% p-p max. (0 to +50°C)
Overcurrent Protection				105% min. (auto reset)				101% min. (auto reset)	105% min. (auto reset)	
Operation Indicator				LED (green)						
Dielectric Strength	Between input and output terminals			3,000V AC, 1 minute						
	Between input and ground terminals			2,000V AC, 1 minute						
	Between output and ground terminals			500V AC, 1 minute						
Insulation Resistance				Between input and output terminals: 100MΩ min. (500V DC megger) Between input and ground terminals: 100MΩ min. (500V DC megger)						
Operating Temperature[4] (No freezing)				-25 to +75°C		-25 to +70°C		-25 to +65°C		
Operating Humidity				20 to 90% RH (no condensation)						
Storage Temperature (No freezing)				-25 to +75°C						
Storage Humidity				20 to 90% RH (no condensation)						
Vibration Resistance				10 to 55Hz, amplitude 0.375mm, 2 hours each in 3 axes (when used with BNL6 end clips)			10 to 55Hz, amplitude 0.33mm, 2 hours each in 3 axes (when used with BNL6 end clips) 10 to 55Hz, amplitude 0.375mm, 2 hours each in 3 axes (when used with BNL8 end clips)		10 to 55Hz, amplitude 0.21mm, 2 hours each in 3 axes (when used with BNL6 end clips) 10 to 55Hz, amplitude 0.375mm, 2 hours each in 3 axes (when used with BNL8 end clips)	10 to 55Hz, amplitude 0.375mm, 2 hours each in 3 axes (when used with part no. BNL6 mounting clips)
Shock Resistance				300 m/s^2 (30G), 3 times each in 6 directions						
Expected Life[5]				8 years minimum (at the rated input, 50% load, operating temperature +40°C, standard mounting direction)						
EMC	EMI			EN61204-3 (Class B)						
	EMS			EN61204-3 (industrial)						
Safety Standards				UL508 (Listing), UL1310 Class 2, ANSI/ISA-12.12.01 CSA C22.2 No. 107.1, 213, 223 EN60950-1, EN50178					UL508 (Listing) ANSI/ISA-12.12.01 CSA C22.2 No. 107.1, 213 EN60950-1, EN50178	
Other Standard				SEMI F47 (at 208V AC input only)						
Degree of Protection				IP20 (EN60529)						
Dimensions (mm)				75H × 45W × 70D	90H × 22.5W × 95D		95H × 36W × 108D		115H × 46W × 121D	125H × 60W × 125D
Weight (approx.)				130g	140g	150g	260g	310g	470g	960g
Terminal Screw				M3.5						

*At normal temperature and humidity unless otherwise specified. Notes: 1: DC input voltage is not subject to safety standards. When using on DC input, connect a fuse to the input terminal for DC input protection. 2: Under stable state. 3: PS5R-VB05 (5V DC/2.0A) is 10W (Up to 3.0A at Ta = 0 to 40°C. Not subject to safety standards above 2.0A.) 4: See the output derating curves on page 3. 5: Calculation of the expected life is based on the actual life of the aluminum electrolytic capacitor. The expected life depends on operating conditions.

SENTRY Lite™

Lift-Station Pump Controller

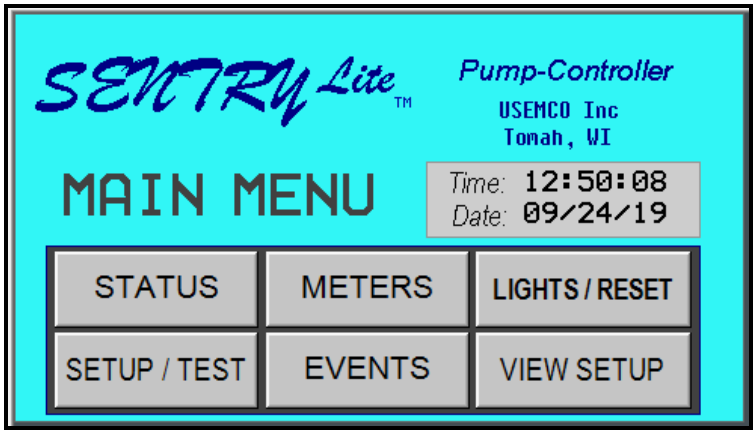

- *Bright Color Touch-screen*
- *Easy screen navigation*
- *Accurate system-monitoring*
- *Adjustable setting to fit your application and system-requirements.*

Additional Screens:

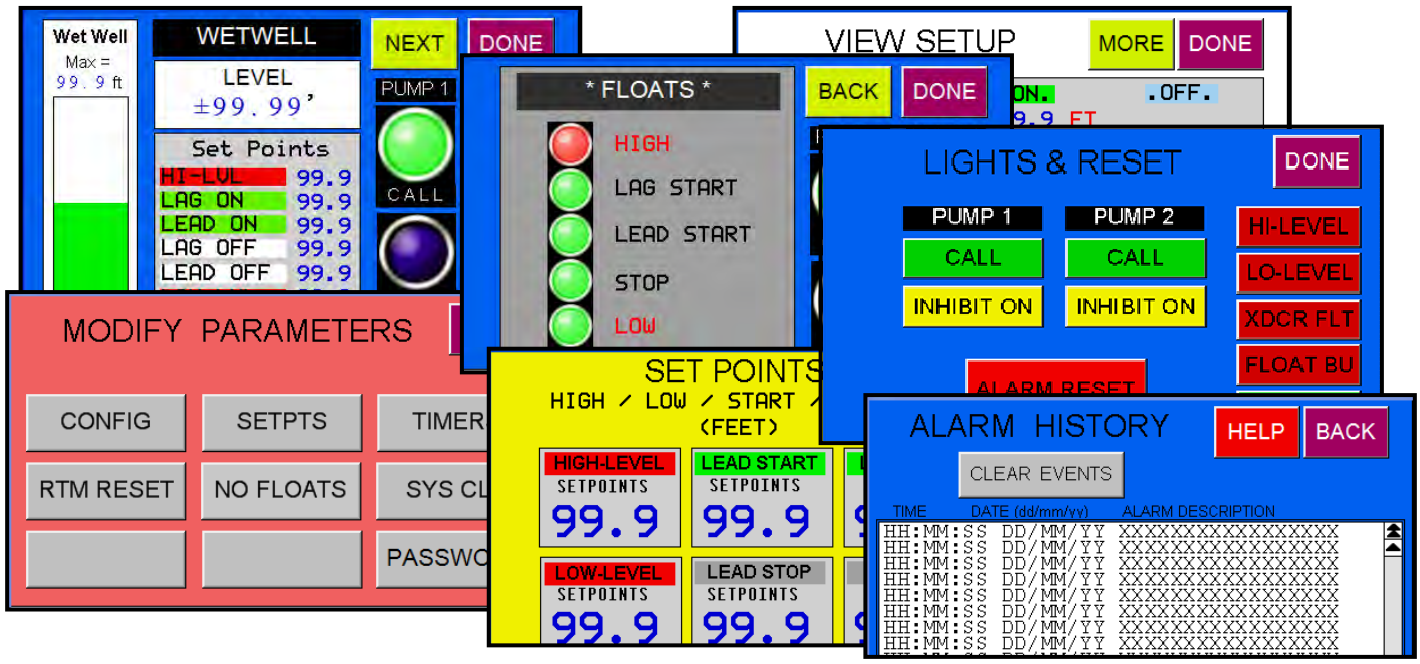

The *SENTRY Lite* ™ pump controller by USEMCO Inc. is designed with simplicity in-mind. This controller uses state-of-the-art components and incorporates control feature envied by others in the industry. All this is packaged into one unit. Up front is a bright LCD color touch-screen that can produce over 32,000 different colors. Each screen is individually designed to provide the user with the maximum amount of feedback and information. Navigation through the different screens is simple and easy to understand.

Alarm monitoring is critical and done with ease by the *SENTRY Lite* ™ pump controller. Note that every alarm event is time-and-date stamped and placed in one area for easy access and viewing.

Setup is simple and requires little to no training. Field adjustable parameters like transducer rating & offset, set points and timer-delays allow the user to custom fit this controller to the pumping system.

Hardware Specifications:

Power:	24VDC +/- 10%, 8W max	Ports: 2 Serial:	RS232/RS485 (DB9)
Bezel:	IP 66 / (NEMA 4)	USB:	Prog/SCADA/device
Screen:	4.3" 480 x 272 pixel	Ethernet (opt.):	Modbus TCP/IP, Prog.
LCD Type:	TFT Color Touch screen	Operating Temperature:	0C to 50C
Colors:	32,000	Approvals:	CE, UL (Class 1 Div 2),
Backlight:	LED		RoHS compliant
Mounting:	Front Panel Mounting, IP66, N4/4X rated		

Digital Inputs:	12 DC inputs, Bi-directional (2 high-speed) 24 VDC (Max 30 VDC) H/S Max input frequency 200 KHz
Digital Outputs:	8 Relay outputs 2 PNP
Analog Inputs:	2 (0-5V / 0-10V / 4-20mA / 0-20mA) 16-bit resolution
Analog Outputs:	1 (4-20mA / 0-20mA / 0-5V / 0-10V) 12- bit resolution

BLUE RIBBON CORP.

2770 Long Road, Grand Island, NY 14072 USA
Tel. (716) 773-9300 • Fax (716) 773-5019
brsales@blueribboncorp.com • www.blueribboncorp.com

SUBMERSIBLE / LEVEL TRANSMITTER
MODEL BC001 - BIRDCAGE® SERIES

LIFE-TIME SURGE WARRANTY REPLACEMENT PROGRAM
(Consult factory for details)



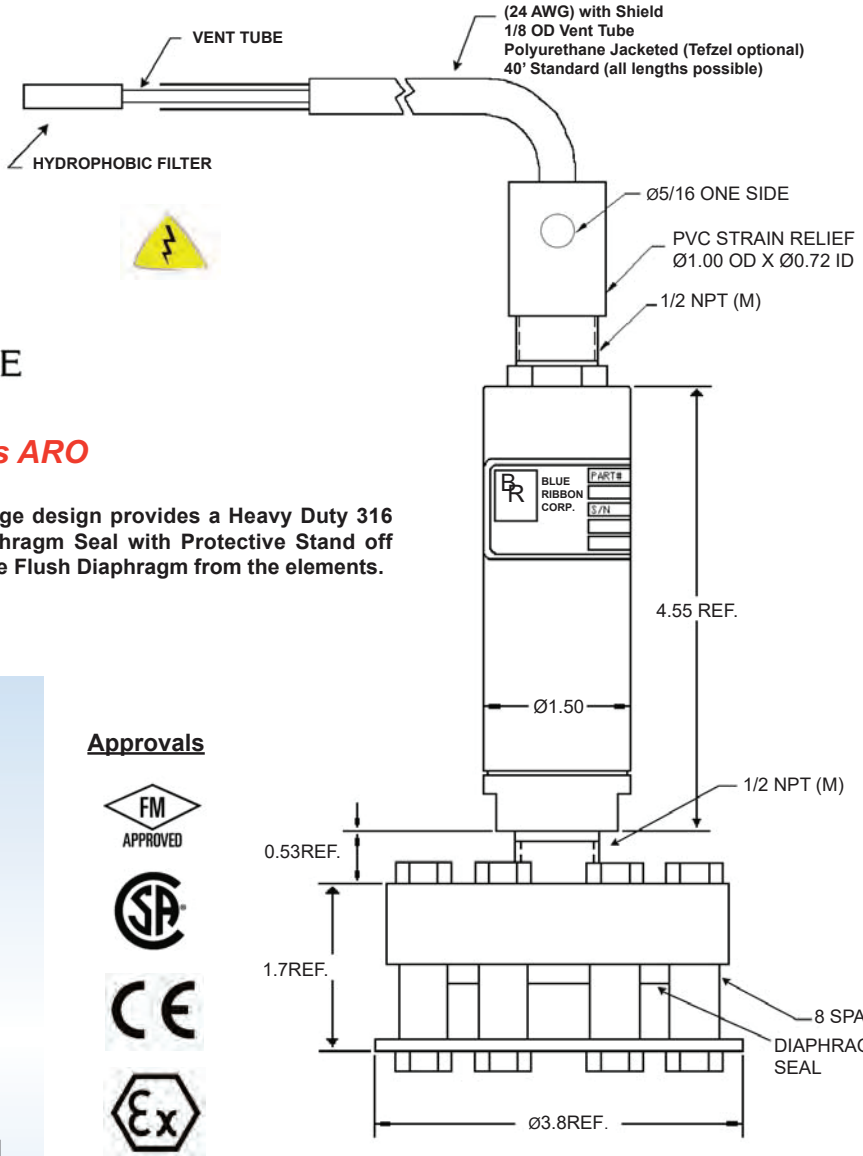

BIRDCAGE

Ships 1-3 days ARO

The Patented Birdcage design provides a Heavy Duty 316 Stainless Steel Diaphragm Seal with Protective Stand off plate that protects the Flush Diaphragm from the elements.

APPLICATIONS:

- Lift / Pump Station Sewage Level
- Sludge Level
- Oil and Gas Industry

FEATURES:

- Life-Time Surge Warranty Replacement Program when partnered with the **BCP3000 Surge Protector**
- Enhanced Internal Surge & Lightning Protection
- 2.5" Sensing Diaphragm with Dual Internal Diaphragm
- Corrosion Resistant, 316 SS Rugged, Welded Construction
- 4-20 mA , (0-5 VDC optional upon request)
- Glycerine-filled, other fluids available
- ** FM, CSA, CE, and/or ATEX/IEC
  ** Approval Available Upon Request
- Optional 4-20 mA Temperature Output

Approvals

FM APPROVED

Blue Ribbon reserves the right to make product improvements and amendments to the product specifications stated throughout this brochure without prior notification. Please contact the factory on all critical dimensions and specifications for verification.

BLUE RIBBON CORP.

2770 Long Road, Grand Island, NY 14072 USA
Tel. (716) 773-9300 • Fax (716) 773-5019
brsales@blueribboncorp.com • www.blueribboncorp.com

Standard Specifications listed below. Consult factory for further options, which may change the overall dimensions.

Output (at 70°F)	**Model BC001** 4-20mA 9.0 – 36 VDC Excitation 0-5 VDC 9.0 – 40 VDC Excitation - Optional		
Accuracy	**Static Accuracy** 0.5% FSO BFSL (0.2% optional)	**1 Year Stability** 0.20% FSO	**Error Band (with temp.)** 1.0% BFSL FSO
Pressure Ranges	**0-5 PSI to 0-100 PSI**		
Zero Balance (at 70°F)	**± 1% FSO**		
Range Calibration Signal	**Internal Calibration Resistor set to 100 ±0.5% FSO unless otherwise specified**		
Insulation Resistance	**>10 megohms @ 50 VDC & @ 70°F**		
Temperature Limits	**Compensated** +35°F to +125°F	**Operating** 0°F to +140°F	**Storage** -40°F to +250°F
Temperature Compensation (Standard)	**Zero / Span** Less than ±2% FSO/100°F at FSPR and/or URL		
Electricals	**Load Impedance** 1350 ohms maximum at 36 VDC and 750 ohms maximum at 24 VDC **RFI Protection** **Voltage Surge Suppression** **Lightning Protection**		
Electrical Connection	Polyurethane or Tefzel Reinforced Cable with Integral vent tube and Hydrophobic filter (40 Ft. Standard – other lengths available upon request)		
Mechanicals	**Proof Pressure** 3X FSPR (or URL)	**Burst Pressure** 5X FSPR (or URL)	
Pressure Response	**≤ 5 ms to 90%**		
Weight	**5.5 lbs.**		
Wetted Material	**Case** 316 Stainless Steel 2.75" diameter Sensing Diaphragm - 316 SS	**Cable** Polyurethane or Tefzel Reinforced Cable with Integral vent tube and Hydrophobic filter (40 Ft. Standard – other lengths available upon request)	
Accessories	**BCP3000** Surge Protector **LIFE-TIME SURGE WARRANTY PROGRAM FOR BC001** **BCP3005** Pluggable Surge Replacement **BCH2000** Cable Hanger		

ORDERING GUIDE FOR MODEL 01:

PART #	PRESSURE RANGE	CABLE LENGTH
●	●	●/●/●

PART #: 01

PRESSURE RANGE:

ORDER CODE	PSI or	FT. WC
001	5	11.53
002	10	23.07
004	15	36.60
017.5	17.5	40.37
020	20	46.14
025	25	57.67
030	30	69.21
100	100	230.70

WIRING CODE

WIRE COLOR	BC001
RED	+ EXC./SIGNAL
BLACK	- EXC./SIGNAL
SHIELD	OPEN

CABLE LENGTH:

AA	40' Polyurethane Cable (Standard)	
AA-CZ	Alternate Length of Cable (in feet optional)	70 ft.
AA/CT	40' Tefzel Cable	
AA/VDC	0-5 VDC	
AA/FM	Intrinsically Safe - FM	

(Custom lengths of cable available upon request)

EXAMPLE: 01001AA
5 PSI with 40' CABLE

RH Series Compact Power Relays

Key features

- SPDT through 4PDT, 10A contacts
- Compact power type relays
- Miniature power relays with a large capacity
- 10A contact capacity
- Compact size saves space



Part Number Selection

Contact	Model	Part Number: Blade Terminal	Part Number: PCB Terminal	Coil Voltage Code (Standard Stock in bold)
SPDT 	Standard	RH1B-U □	RH1V2-U □	AC6V, AC12V, **AC24V**, AC110V, **AC120V**, AC220V, **AC240V** DC6V, **DC12V**, **DC24V**, DC48V, DC110V
	With Indicator	RH1B-UL □	—	
	With Check Button	RH1B-UC □	—	
	With Indicator and Check Button	RH1B-ULC □	—	
	Top Bracket Mounting	RH1B-UT □	—	
	With Diode (DC coil only)	RH1B-UD □	RH1V2-UD □	DC6V, **DC12V**, **DC24V**, DC48V, DC110V
	With Indicator and Diode (DC coil only)	RH1B-ULD □	—	**DC12V**, **DC24V**, DC48V, DC110V
DPDT 	Standard	RH2B-U □	RH2V2-U □	AC6V, AC12V, **AC24V**, **AC110-120V**, **AC220-240V** DC6V, **DC12V**, **DC24V**, DC48V, DC100-110V
	With Indicator	RH2B-UL □	RH2V2-UL □	
	With Check Button	RH2B-UC □	—	
	With Indicator and Check Button	RH2B-ULC □	—	
	Top Bracket Mounting	RH2B-UT □	—	
	With Diode (DC coil only)	RH2B-UD □	RH2V2-UD □	DC6V, **DC12V**, **DC24V**, DC48V, DC100-110V
	With Indicator and Diode (DC coil only)	RH2B-ULD □	RH2V2-ULD □	
3PDT 	Standard	RH3B-U □	RH3V2-U □	AC6V, AC12V, **AC24V**, AC110V, **AC120V**, AC220V, **AC240V** DC6V, **DC12V**, **DC24V**, DC48V, DC110V
	With Indicator	RH3B-UL □	RH3V2-UL □	
	With Check Button	RH3B-UC □	—	
	With Indicator and Check Button	RH3B-ULC □	—	
	Top Bracket Mounting	RH3B-UT □	—	
	With Diode (DC coil only)	RH3B-UD □	—	DC6V, DC12V, DC24V, DC48V, DC110V
	With Indicator and Diode (DC coil only)	RH3B-ULD □	—	
4PDT 	Standard	RH4B-U □	RH4V2-U □	AC6V, AC12V, **AC24V**, AC110V, **AC120V**, AC220V, **AC240V** DC6V, **DC12V**, **DC24V**, DC48V, DC110V
	With Indicator	RH4B-UL □	RH4V2-UL □	
	With Check Button	RH4B-UC □	—	
	With Indicator and Check Button	RH4B-ULC □	—	
	Top Bracket Mounting	RH4B-UT □	—	
	With Diode (DC coil only)	RH4B-UD □	RH4V2-UD □	DC6V, DC12V, DC24V, DC48V, DC110V
	With Indicator and Diode (DC coil only)	RH4B-ULD □	—	

PCB terminal relays are designed to mount directly to a circuit board without any socket.

Ordering Information
When ordering, specify the Part No. and coil voltage code:
(example) **RH3B-U** **AC120V**
Part No. — Coil Voltage Code



The **Duplexor** is used in control panels where **two loads** are required to alternate to provide equal run time on the loads. The alternating action is initiated by a control switch, which is common with one side of the control voltage. The output contacts will change states each time the control switch is opened, thus alternating the two loads. The LED indicators show the position of the output relay.

The ARA series is the standard Duplexor providing automatic alternating sequence. The ARB has the automatic sequencing feature plus the option of locking it into one sequence. A three position switch permits the field selection of normal duplexing action, locking in the A-B sequence, or B-A sequence.

Duplexor

SPECIFICATIONS

CONTROL VOLTAGE	24, 120 VAC/DC, 208, 240, 480 VAC, 50/60Hz, 48 VDC, ±10%	
CONTROL SWITCH CURRENT	1 mA	
POWER REQUIRED	3 VA (Approximately)	
DUTY CYCLE	Continuous	
LIFE EXPECTANCY	Mechanical	10,000,000 Operations (Minimum)
	Electrical	100,000 Operations @ Rated Load
INDICATORS	LED Shows Output Position	
TEMPERATURES RATING	Operate	-4° to 131°F (-20° to +55°C)
	Storage	-40° to 185°F (-40° to +85°C)
CONTACT RATING	10 Amps @ 240 VAC, Resistive 1/8 hp @ 120 VAC 1/4 hp @ 240 VAC Inductive 360 VA @ 240 VAC, Inductive	
ENCLOSURE	"A" Lexan® Dust Cover	
TERMINATIONS	Industrial Plug-in	
WEIGHT	4.5 oz.	

NOTE: For Analog signal inputs, ATC offers a duplexing pump control — the ATC-Digitec 3800 Panel Meter
480 VAC is not available in the D-DPDT 11-Pin configuration

DIMENSIONS (INCHES)

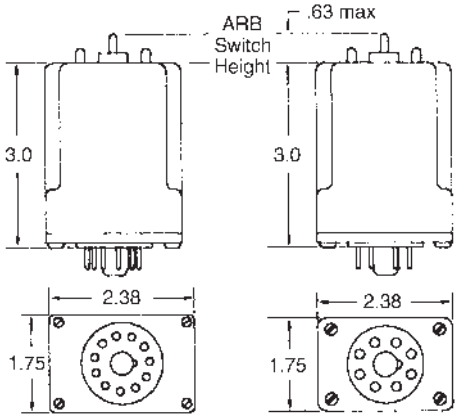

WIRING

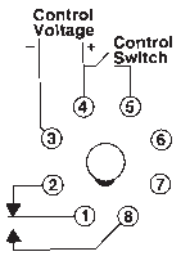

B-SPDT
RB-08/OT-08

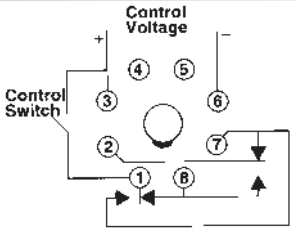

C-DPDT (cross wired)
RB-08/OT-08

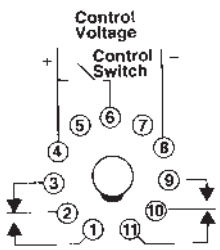

D-DPDT
RB-11/PF113A

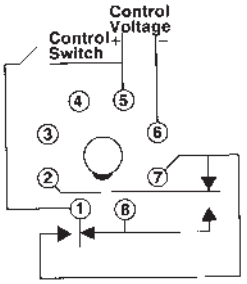

E-DPDT (cross wired)
RB-08/OT-08

MODEL NUMBER >>>>>>	AR					A
Type of Alternating Relay						
Standard Duplexor	A	←				
Special Function Duplexor	B					
Control Voltage						
24 VAC/DC		24				
48 VDC		48				
120 VAC/DC		120	←			
208 VAC		208				
240 VAC		240				
380-408 VAC (Consult Factory)		480				
Type of Voltage						
VAC or VAC/DC			A	←		
48 VDC only			D			
Contact Configuration						
SPDT				B	←	
DPDT (Cross Wired)				C		
DPDT				D		
DPDT (Cross Wired)				E		
Enclosure Style						A ←

Product data sheet
Characteristics

ZB4BA2
Harmony, 22mm Push Button, flush push button head, spring return, black, unmarked



Main

Range of Product	Harmony XB4
Product or Component Type	Head for non-illuminated push-button
Device short name	ZB4
Bezel material	Chromium plated metal
Mounting diameter	0.87 In (22 mm)
Sale per indivisible quantity	1
Head type	Standard
Shape of signaling unit head	Round
Type of operator	Spring return
Operator profile	Black flush, unmarked

Complementary

CAD overall width	1.14 In (29 mm)
CAD overall height	1.14 In (29 mm)
CAD overall depth	1.10 In (28 mm)
Mechanical durability	10000000 Cycles
Electrical composition code	C1 9 single front mounting C2 9 single and double front mounting C11 3 single front mounting C15 1 single front mounting
Device presentation	Basic element

The information provided in this documentation contains general descriptions and/or technical characteristics of the performance of the products contained herein.
This documentation is not intended as a substitute for and is not to be used for determining suitability or reliability of these products for specific user applications.
It is the duty of any such user or integrator to perform the appropriate and complete risk analysis, evaluation and testing of the products with respect to the relevant specific application or use thereof.
Neither Schneider Electric Industries SAS nor any of its affiliates or subsidiaries shall be responsible or liable for misuse of the information contained herein. *Prices are indicative



Single Mode Timer

CE

c UL us LISTED
IND. CONT. EQ.
496Y

- **On Delay**
- **10 Time Ranges**
- **Front knobs for Time Range & Time Scale**
- **Slim, Space Saving Design**
- **DIN Rail Mount**

SPECIFICATIONS

ACCURACY	Setting: ±5% of F.S. Repeat: ±0.5% (F.S. = Full Scale)
RESET	Reset time < 100 msec
OUTPUT CONTACT	SPDT (1 C/O)
CONTACT RATING	NO/5A, NC/3A @ 250V AC
MODES	On delay (A)
TIME RANGES	0.1 - 1 sec, 0.3 - 3 sec, 1-10 sec, 3-30 sec 0.1-1 min, 0.3-3 min, 1-10 min, 3-30 min 0.1-1 hr, 0.3-3 hr
SUPPLY	110V AC : (50 or 60 Hz)
POWER CONSUMPTION	4.0 VA
TEMPERATURE	Operating: 0 to 50°C (32 to 122°F) Storage: -20 to 75°C (-4 to 167°F)
HUMIDITY (NON-CONDENSING)	95% RH
WEIGHT	2.151 oz.
PROTECTION LEVEL	NEMA 12

DIMENSIONS (MILLIMETERS)

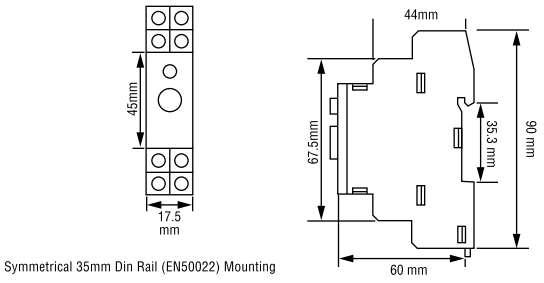

TIMING DIAGRAM

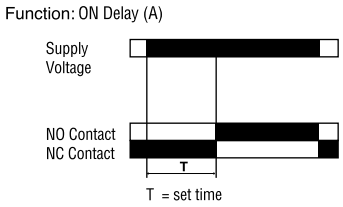

TERMINAL CONNECTIONS

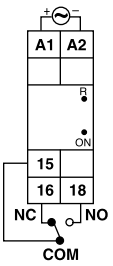

Cable Size (AWG): 16 ; Tightening Torque (Lb-inch): 4.5

Cable Size (mm²): 1.5 ; Tightening Torque (N-m): 0.5

ORDERING INFORMATION

PART NO.	SUPPLY VOLTAGE
175SO-110	110V AC

Product data sheet
Characteristics

ZB4BD3
black selector switch head Ø22 3-position stay put



Main

Commercial Status	Commercialised
Range of product	Harmony XB4
Product or component type	Head for selector switch
Device short name	ZB4
Bezel material	Chromium plated metal
Mounting diameter	0.87 in (22 mm)
Sale per indivisible quantity	1
Shape of signaling unit head	Round
Type of operator	Stay put
Operator profile	Black standard handle
Operator position information	3 positions +/- 45°

Complementary

CAD overall width	1.14 in (29 mm)
CAD overall height	1.14 in (29 mm)
CAD overall depth	1.73 in (44 mm)
Product weight	0.09 lb(US) (0.04 kg)
Resistance to high pressure washer	1015.26 psi (7000000 Pa) at 131 °F (55 °C),distance: 0.1 m
Mechanical durability	1000000 cycles
Electrical composition code	C11 for <= 3 contacts using single blocks in front mounting C8 for <= 4 contacts using single and double blocks in front mounting C7 for <= 4 contacts using single blocks in front mounting C6 for <= 5 contacts using single and double blocks in front mounting C5 for <= 5 contacts using single blocks in front mounting C4 for <= 6 contacts using single and double blocks in front mounting C3 for <= 6 contacts using single blocks in front mounting

Environment

Protective treatment	TH
Ambient air temperature for storage	-40...158 °F (-40...70 °C)
Ambient air temperature for operation	-13...158 °F (-25...70 °C)
Class of protection against electric shock	Class I conforming to IEC 60536
IP degree of protection	IP69K conforming to IEC 60529
NEMA degree of protection	NEMA 4X NEMA 13
IK degree of protection	IK06 conforming to IEC 50102
Standards	EN/IEC 60947-1 EN/IEC 60947-5-1 EN/IEC 60947-5-4 EN/IEC 60947-5-5 JIS C 4520 UL 508 CSA C22.2 No 14

The information provided in this documentation contains general descriptions and/or technical characteristics of the performance of the products contained herein.
This documentation is not intended as a substitute for and is not to be used for determining suitability or reliability of these products for specific user applications.
It is the duty of any such user or integrator to perform the appropriate and complete risk analysis, evaluation and testing of the products with respect to the relevant specific application or use thereof.
Neither Schneider Electric Industries SAS nor any of its affiliates or subsidiaries shall be responsible or liable for misuse of the information contained herein. *Prices are indicative

OPERATION

The ATC Diversified SPM Series Single channel seal failure module is a specialized control for monitoring the **shaft seal** of a **submersible pump motor.** A leak is detected by sensing the position of a resistive float switch installed in the seal cavity. When the resistance drops below the sensitivity rating, the output relay energizes and the LED illuminates. When the fault condition clears, the output relay resets automatically.



Single Channel Seal Failure Alarm

DIMENSIONS (INCHES)

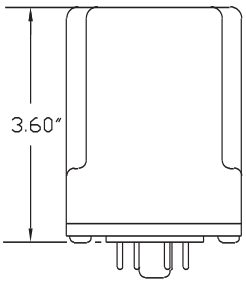

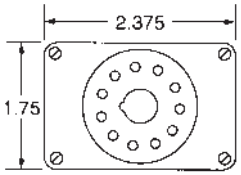

WIRING

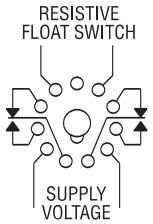

RB-11/PF013A

MODEL NUMBER >>>>>>	SPM	120	AAA	
Sensitivity				
470 ½ ±10% Fixed				470
470 ½ to 10K ½ ±10% Adjustable				10K
4.7K ½ to 100K ½ ±10% Adjustable				100K

SPECIFICATIONS

CONTROL VOLTAGE	120 VAC, 50/60 Hz	
SWITCH VOLTAGE	9 VDC	
ISOLATION	2500 Volts	
POWER REQUIRED	2 VA	
DUTY CYCLE	Continuous	
SENSITIVITY	470 ½ ±10% Fixed	
	470 ½ to 10K ½ ±10% Adjustable	
	4.7K ½ to 100K ½ ±10% Adjustable	
CONTACT RATING	DPDT, 10 A @ 250 VAC Resistive, 360 VA Inductive	
RESPONSE TIMES	Operate	15 ms (approximately)
	Release	8 ms (approximately)
LIFE EXPECTANCY	Mechanical	10,000,000 Operations (Minimum)
	Electrical	50,000 Operations @ Rated Load
INDICATORS	Red LED illuminates when leak is detected	
TEMPERATURE RATING	Operate	-4° to 131°F (-20° to +55°C)
	Storage	-40° to 185°F (-40° to +85°C)
ENCLOSURE	11-Pin plug-in "A" style enclosure	
WEIGHT	8 oz.	

Saginaw Control and Engineering
95 Midland Road Saginaw, MI 48638-5770
(800) 234-6871 - Fax: (989) 799-4524
SCE@SaginawControl.com

SCE-TEMNC



Product Specifications:

Part Number: SCE-TEMNC
Description: Thermostat (Normally Closed)
Height: 2.40"
Width: 1.26"
Depth: 1.42"

Application
Designed to regulate air temperature in enclosures that operate with heaters or fans. This mechanical bi-metallic thermostat has a set point range of 30° to 140° F and is easily installed on 35mm mounting rail. (NC) contact normally closed, or (NO) contact normally open, switch capacity 10 amp 120-250 VAC Resistive load and 1 amp 120-250VAC Inductive load, 1.25 amp 24VDC.

Industry Standards - (IS24)
- UL Component Recognized

Notes
UL File # E358385

Saginaw Control and Engineering
95 Midland Road Saginaw, MI 48638-5770
(800) 234-6871 - Fax: (989) 799-4524
SCE@SaginawControl.com

SCE-TSH100



Product Specifications:

Part Number: SCE-TSH100
Description: Heater - 100W
Height: 5.51"
Width: 2.76"
Depth: 2.48"

Watts: 100
Max Current: 5.0 A
UL File Model Number: 501100

Application
PTC (Positive Temperature Coefficient)
Din rail clip design for 35mm Din Rail. Designed for protection from low temperatures, condensation and corrosion. Touch Safe with 2 screw terminal for standard AWG 14 wire. 110-240V AC or DC.

Industry Standards - (IS24)
- UL Component Recognized

Notes
UL File #E358386

Similar Part Numbers
- SCE-TSH150Heater - 150W
- SCE-TSH25Heater - 25W
- SCE-TSH50Heater - 50W
- SCE-TSH75Heater - 75W

Installation Information
- Touch Safe Heaters

Product data sheet
Characteristics

9070T50D13
TRANSFORMER CONTROL 50VA 120V-12/24V



Product availability: Stock - Normally stocked in distribution facility

Main

Commercial Status	Commercialised
Product or component type	Industrial Control Transformer
Product certifications	CE CSA UL listed
NEMA degree of protection	Not rated (open device)
Insulation temperature	221 °F (105 °C)
Phase	1 phase
Rated power in VA	50 VA
Primary voltage	120 V
Secondary voltage	12/24 V
Temperature rise	55 °C
Electrical connection	Screw clamp terminals
Range of product	T

Ordering and shipping details

Category	16200 - 9070 T (NOT TF) 50-200VA
Discount Schedule	CP8
GTIN	00785901905578
Nbr. of units in pkg.	1
Package weight(Lbs)	2.56
Product availability	Stock - Normally stocked in distribution facility
Returnability	Y
Country of origin	MX

Offer Sustainability

Sustainable offer status	Green Premium product
RoHS (date code: YYWW)	Compliant - since 1227 - Schneider Electric declaration of conformity
REACh	Reference not containing SVHC above the threshold
Product environmental profile	Available
Product end of life instructions	Need no specific recycling operations

Contractual warranty

Warranty period	10 Years

The information provided in this documentation contains general descriptions and/or technical characteristics of the performance of the products contained herein.
This documentation is not intended as a substitute for and is not to be used for determining suitability or reliability of these products for specific user applications.
It is the duty of any such user or integrator to perform the appropriate and complete risk analysis, evaluation and testing of the products with respect to the relevant specific application or use thereof.
Neither Schneider Electric Industries SAS nor any of its affiliates or subsidiaries shall be responsible or liable for misuse of the information contained herein.

AC⚡DC
EQUIPMENT CO.

3101 Bernard Dr.
Edgewood, KY 41017
Phone (606) 341-0330
FAX (606) 341-3138

Ordering Information

Type	Lens Color
BL5	A (Amber)
	B (Blue)
	C (Clear)
	G (Green)
	R (Red)

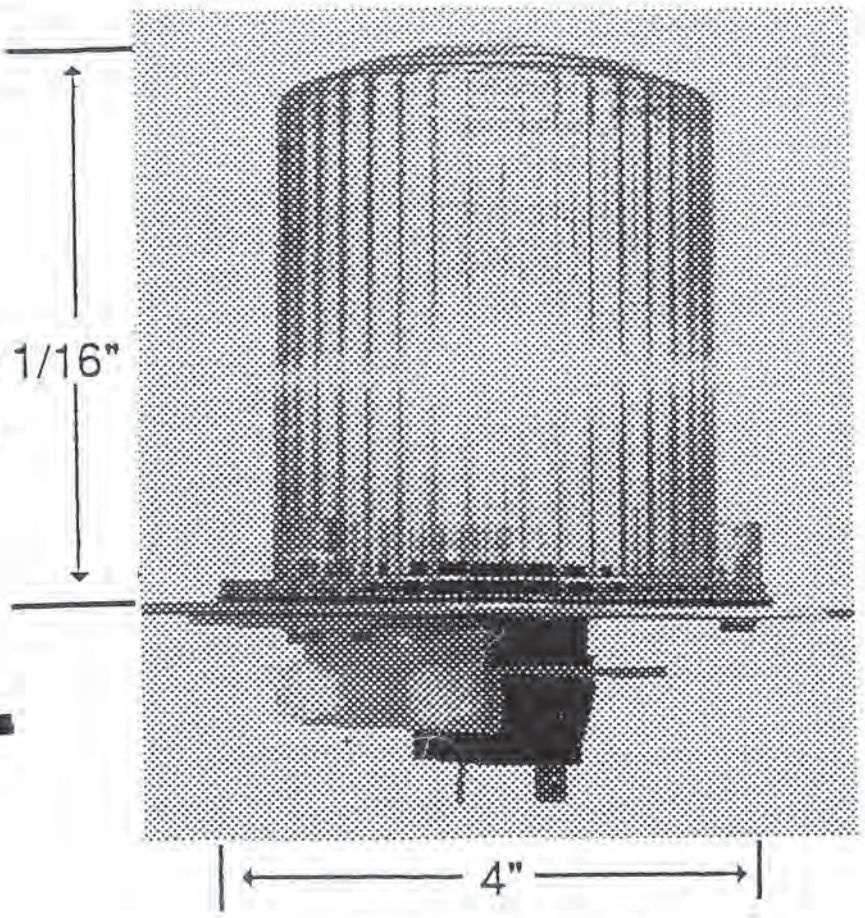

NEMA Type 4X

Modifications

EF (Electronic Flasher)
TF (Thermal Flasher)

The BL5 with a 40 watt lamp and fluted lens will emit approximately the same amount of light as a vapor-tight with a 100 watt lamp and globe.

These lights use a 40A15 clear lamp. When specified, lamps can be furnished for 12VDC, 24VDC or 24VAC.

For durability the lens is made of shatter resistant UV stabilized Lexan.

Mounting gasket and screws are included.

The socket has 1/4" push on (quick connect) terminals and ground wire.

The lens is mounted from inside the enclosure by #8 self-tapping screws which are inserted through three 3/16" dia. holes on a 3 5/8" dia. With the screws inside, this minimizes the possibility of theft by vandals.

Suggested hole size for the lamp is 1 15/16" (punch for 1 1/2" rigid).

Relamping is done from the bottom of the light by removing two thumb screws from the bracket holding the socket.

Horns
Vibrating
870 Series



The 870 Series panel mount vibrating horns are low current, high decibel for heavy-duty use. They come complete with gasket and are UL listed to NEMA 4X, NEMA 12 and NEMA 12K enclosure requirements.

Designed for semi-flush panel mounting, using supplied mounting template, or installation on a 4" square box. For NEMA 4X installation, mount to a NEMA 4X enclosure using the supplied gasket.

Features and Specifications

- Corrosion resistant finish
- Volume adjustable
- Completely assembled
- Heavy duty die-cast housing
- NEMA Type 4X, NEMA Type 12 and Type 12K Rated
- Operating range: -20% to +10% of nominal voltage

870P AC

- Adjustable output: 88 to 113dB @ 1m (78 to 103dB @ 10ft.)

871P DC

- Adjustable output: 88 to 101dB @ 1m (78 to 91dB @ 10ft.)

Ordering Information

Description	Cat. No.	Operating Voltage[2]	Current	VA	dB at 1m/10ft.[1]	DC Coil Res (Ohms)
Panel Mount, AC	**870P-E5**	12V AC	1.25 A	15.0	113/103	1.5
	870P-G5	24V AC	0.63 A	15.1	113/103	5.2
	870P-N5	120V AC	0.13 A	15.6	113/103	150
	870P-R5	240V AC	0.07 A	16.8	113/103	580
Panel Mount, DC	**871P-C1**	6V DC	0.7 A	4.2	101/91	1.4
	871P-E1	12V DC	0.27 A	3.2	101/91	6
	871P-G1	24V DC	0.16 A	3.8	101/91	24
	871P-J1	32V DC	0.11 A	3.52	101/91	40
	871P-P1	125V DC	0.025 A	3.1	101/91	600
	871P-S1	250V DC	0.014 A	3.5	101/91	2640

[1]dB rating measured in anechoic chamber.
[2]AC voltage frequency is 50/60 Hz.

Accessories

Description	Cat. No.
Plastic Projector	**872-PO**

Signal Input Load Characteristics

These devices may be operated by PLCs with output characteristics that match the input load requirements of the signal.

Cat. No.	Operating Voltage	Max. Off State Leakage Current (A)	Continuous On Current (A)	Surge (Inrush/Duration) Amps/Seconds
870P-N5	120V AC	0.025	0.120	1.02/.000026
871P-G1	24V DC	0.025	0.150	1.7/.000042

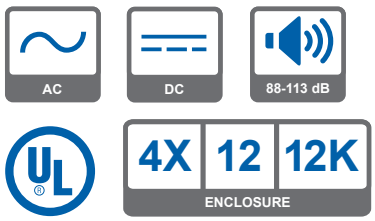

Horns
Vibrating
870 Series

Weights and Dimensions

Cat. No.	Approx. Net Weight (lb.)	Approx. Shipping Weight (lb.)
870P-E5	1.80	2.05
870P-G5	1.80	2.05
870P-N5	1.80	2.05
870P-R5	1.80	2.05
871P-C1	1.80	2.05
871P-E1	1.80	2.05
871P-G1	1.80	2.05
871P-J1	1.80	2.05
871P-P1	1.80	2.05
871P-S1	1.80	2.05
872-PO	0.34	0.58

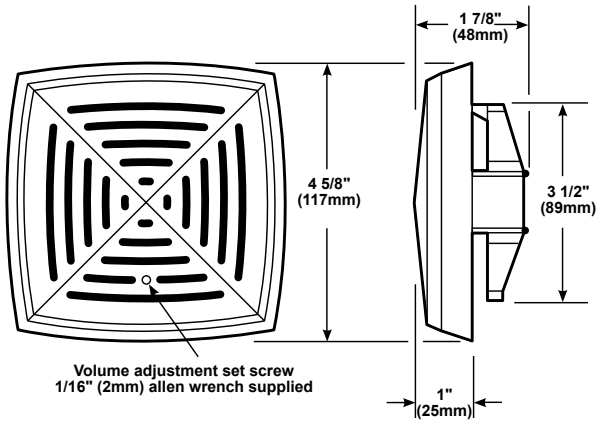

Premium industrial grade straight blade receptacles

Project Name:	Prepared By:
Project Number:	Date:
Catalog Number:	Type:



AH5262



AH5362



5461

Description

2-Pole, 3-Wire Grounding
15A 125V; 15A 250V
20A 125V; 20A 250V
NEMA 5-15, 5-20, 6-15, 6-20

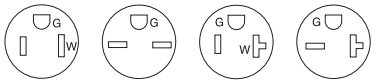

5-15R **6-15R** **5-20R** **6-20R**

Design features

- Exclusive screw terminal guards provide fast, easy insulation from conductive surfaces (duplex only)
- Exclusive five-leaf solid brass line contacts provides consistent performance and superior plug retention (duplex only)
- Rigid, glass reinforced nylon base lends ultimate strength and superior high heat resistance in contact carrier (duplex only)
- 0.05" (1.27mm) solid brass mounting strap with non-riveted, integral one-piece grounding system for highest durability – assures superior ground integrity under heaviest use (duplex only)
- High impact and chemical-resistant nylon face
- Tapered lead-in slots on back wiring holes assist in gathering stranded wires for faster, more secure connections
- All terminal and mounting screws triple combination (slot/Phillips/Robertson) head for maximum installer flexibility
- Long, broad mounting strap helps reach large panel cutouts for code compliance
- Automatic grounding system eliminates need for bonding jumper in grounded metal enclosure, provides redundant measure of ground continuity where jumper used
- Screw-Catch feature on duplex devices speeds mounting of wallplates

Table 1. Premium Industrial Grade Duplex Receptacles, Back & Side Wire

Catalog No.	Description	Amps	Volts	Color Suffix
☐ AH5262__	NEMA 5-15R Premium Duplex Receptacle, Back & Side Wire	15	125	B, BK, GY, RD, V, W
☐ 5261__	NEMA 5-15R Premium Single Receptacle, Back & Side Wire	15	125	B, GY, RD, V, W
☐ AH5362__	NEMA 5-20R Premium Duplex Receptacle, Back & Side Wire	20	125	B, BK, GY, LA, RD, V, W
☐ 5361__	NEMA 5-20R Premium Single Receptacle, Back & Side Wire	20	125	B, BK, GY, RD, V, W
☐ AH5662__	NEMA 6-15R Premium Duplex Receptacle, Back & Side Wire	15	250	B, V, W
☐ 5661__	NEMA 6-15R Premium Single Receptacle, Back & Side Wire	15	250	B, V, W
☐ AH5462__	NEMA 6-20R Premium Duplex Receptacle, Back & Side Wire	20	250	B, GY, V, W
☐ 5461__	NEMA 6-20R Premium Single Receptacle, Back & Side Wire	20	250	B, GY, V, W

EATON
Powering Business Worldwide

Compliances, specifications and availability are subject to change without notice.

Project Name:	Prepared By:
Project Number:	Date:
Catalog Number:	Type:

Applications

Industrial grade receptacles are challenged on a daily basis to provide consistent, reliable means of connectivity in a wide variety of environments and need to stand up to a high degree of abuse. The applications very greatly by environment and provide challenges from impact and chemical resistance to environmental extremes such as heat and moisture. The breadth of Arrow Hart line of premium industrial grade straight blade receptacles provides solutions to all environments and applications. High impact and chemical resistant nylon faces withstand abuse to maintain structural integrity. The durable contact designs provide long life blade retention. When the job calls for receptacles that can stand up to the test of an industrial environment, turn to Arrow Hart's line of premium industrial grade receptacles.

Table 2. Specifications

Catalog No.	AH5262, AH5362, AH5462, AH5662 Series	5261, 5361, 5461, 5661 Series
Device Type	**Industrial Grade Premium Duplex Receptacles**	**Industrial Grade Premium Single Receptacles**
Wiring Type	Back & side wire	Back & side wire
Testing & Code Compliance	• cULus Listed to UL 498, file no. E15058 • UL verified to Federal Spec. WC-596G • CSA certified to C22.2, no. 42 • NOM certified	• Listed to UL 498, file no. E15058 • UL verified to Federal Spec. WC-596G • CSA certified to C22.2, no. 42, file no. 6914 (6233-01) • NOM certified
Environmental Specifications	**Flammability:** Meets UL 94 requirements; V2 rated **Temperature Rating:** -20°C to 70°C (-4°F to 158°F)	**Flammability:** Meets UL 94 requirements; V2 rated **Temperature Rating:** -20°C to 60°C (-4°F to 140°F)
Electrical Specifications	**Dielectric Voltage:** Withstands 2000V per UL 498 **Current Interrupting:** Yes, at full-rated current **Temperature Rise:** Max. 30°C (86°F) after 250 cycles of overload @ 200% of rated current (DC)	**Dielectric Voltage:** Withstands 2000V per UL 498 **Current Interrupting:** Yes, at full-rated current **Temperature Rise:** Max. 30°C (86°F) after 250 cycles of overload @ 200% of rated current (DC)
Mechanical Specifications	**Terminal Accommodation:** #14 - 10 AWG **Voltage Ratings:** Permanently marked on device	**Terminal Accommodation:** #14 - 10 AWG **Voltage Ratings:** Permanently marked on device

Table 3. Materials

Catalog No.	AH5262, AH5362, AH5462, AH5662 Series	5261, 5361, 5461, 5661 Series
Face	Nylon	Nylon
Base	Glass-filled nylon	Nylon
Strap	0.05" thick brass	0.05" thick steel, zinc plated
Auto Ground	Brass clip	Phosphor bronze staple
Line Contacts	0.031" thick 5-leaf 688 grade high-performance brass	0.037" thick 3-leaf brass
Ground Contact	Integral	Riveted
Terminal Screws	#8-32 brass, neutral screw nickel plated	#8-32 brass, neutral screw nickel plated
Ground Screw	#8-32 steel, zince plated (green)	#8-32 steel (green)
Screw Terminal Guards	PVC hinged doors	N/A

Table 4. Color Ordering Information

For ordering devices, include Cat. No. followed by the color code: B (Brown), BK (Black), GY (Gray) LA (Light Almond), RD (Red), V (Ivory), W (White)

B	BK	GY	LA	RD	V	W
Brown	Black	Gray	Lt. Almond	Red	Ivory	White



MONITORING
&
ALERTING

HOW LONG BEFORE **YOU** KNOW **SOMETHING IS WRONG?**

COUNTLESS INDUSTRIES DEPEND ON SENSAPHONE FOR THE MOST COMPREHENSIVE REMOTE MONITORING SOLUTIONS AVAILABLE. WHEN YOU NEED TO BE ABSOLUTELY SURE A REMOTE SITE IS STABLE, SECURE, AND MONITORED AROUND THE CLOCK, THERE'S NO SUBSTITUTE FOR CERTAINTY.



SENTINEL
CLOUD BASED MONITORING

CLOUD-BASED MONITORING...
CONVENIENT WEB-BASED MANAGEMENT

- **Supervised** internet connection assures the Sentinel is online and monitoring at all times
- **Manage** an unlimited number of devices from one account
- **Monitor** up to 12 external sensors or equipment status
- **Receive** an e-mail, phone call, or text message when an alarm is detected
- **Real time** status updates available
- **Included** battery backup
- **Cellular** coverage available from AT&T and Verizon

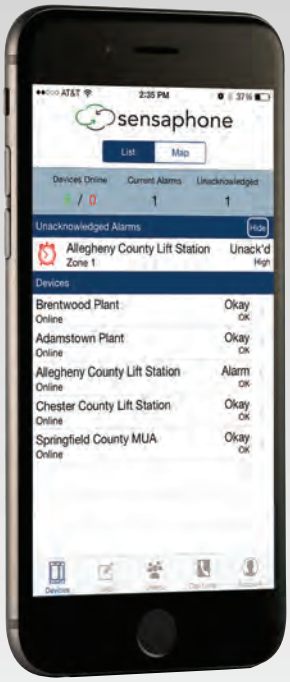

ENVIRONMENTAL MONITORING FOR THE MOBILE AGE

The cloud-based Sentinel allows you to monitor remote facilities and environments and check critical conditions of your sensitive commodities with the same degree of certainty you've come to expect from Sensaphone.

It takes the burden out of managing your system by giving you access to your readings from anywhere using a simple, powerful web-based interface and mobile app. If there's a disruption, you'll be the first to know. Alerts can be sent straight to your mobile device—keeping you updated and giving you peace-of-mind wherever you are.

Mobile app available for Android and iphone

ANDROID APP ON Google play

Available on the App Store

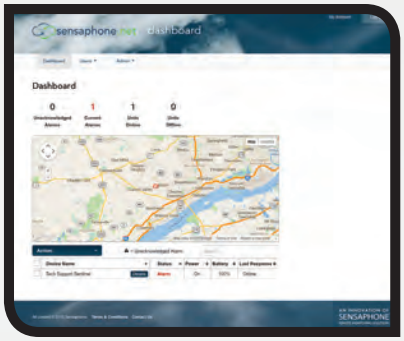

IN THE CLOUD

The Sentinel system stores all sensor readings in the cloud, which provides unlimited information storage. Multiple devices can be managed from one account using intuitive web-based management tools. Enhanced data logging capabilities allow users to print, graph or export accurate historical records. The Sentinel system also can produce event reports and deliver them daily via e-mail, as well as generate an audit trail of all user data activities, edits or deletions. The device is Ethernet based, but it is available with a cellular option for locations that do not have Internet access.

Learn More:
www.sensaphone.com/Sentinel

Powered by America's largest cellular networks

at&t

verizon

SENSAPHONE®
901 TRYENS ROAD
ASTON, PA 19014

PH: 877-838-0125
F: 610-558-0222

WWW.SENSAPHONE.COM/Sentinel

Distributed By:

LIT-1035 © SENSAPHONE 3/2016

SENSAPHONE®
REMOTE MONITORING SOLUTIONS



Sensaphone Sentinel with Cellular Modem
Technical Specifications

ALARM NOTIFICATION METHODS:

E-Mail, Text Messages, Voice Phone Calls

Programmable alarm escalation levels

Comprehensive scheduling per input, profile, and alarm destination

Unlimited number of User Profiles

Multiple contact types per user

INPUTS:

12 Universal Inputs

- Normally Open / Normally Closed Dry Contact
- 2.8K / 10K Thermistor
- 4-20mA Current Loop
- Pulse Count
- 12 Bit Resolution

TEMPERATURE SENSING RANGE:

-109° to 168°F | -85° to 76°C

RELAY OUTPUT:

Programmable. Rated for 1A 30VAC/ 1A 30VDC

DATA LOGGING:

Unlimited samples securely stored on the Sentinel servers

Programmable sampling Interval - 1 min to 24 hrs

User programmable channel selection

COMMUNICATION PORTS:

Ethernet 10/100Base–T

BATTERY BACKUP:

4.8V 2000mAHr NiMh Battery pack (included)

Provides 8 hours of backup

LOCAL INDICATORS:

12 Alarm Status LEDs

- Power LED • Online LED
- Standby LED • Ethernet link and Activity LEDs

POWER REQUIREMENTS:

Comes with 12VDC plug-in power supply.

(International power options available).

ENVIRONMENTAL:

Operating Humidity:
0-90% RH, non–condensing

Operating Temperature:
32° to 122°F | 0° to 50°C

PHYSICAL:

Dimensions:
12.5 x 12.2 x 7.0” | 318 x 310 x 178mm

Weight: 10.5 lbs. | 4.7 kg

STANDARDS:

FCC Part 15 – Class A Compliant

ENCLOSURE:

NEMA-4 rated plastic housing when ordered with the cellular modem.

901 Tryens Road • Aston, PA 19014 • PH: 877-373-2700 • F: 610-558-0222 • www.sensaphone.com

Product data sheet
Characteristics

ZB4BV043
PILOT LIGHT HEAD RED



Main

Range of product	Harmony XB4
Product or component type	Head for pilot light
Product compatibility	Integral LED
Device short name	ZB4
Bezel material	Chromium plated metal
Mounting diameter	22 mm
Sale per indivisible quantity	1
Shape of signaling unit head	Round
Cap/Operator or lens colour	Red
Operator additional information	With plain lens

Complementary

CAD overall width	29 mm
CAD overall height	29 mm
CAD overall depth	30 mm
Product weight	0.026 kg
Resistance to high pressure washer	7000000 Pa at 55 °C,distance: 0.1 m
Electrical composition code	P2 in front mounting with integral LED and transformer P1 in front mounting with integral LED

Environment

Protective treatment	TH
Ambient air temperature for storage	-40...70 °C
Ambient air temperature for operation	-25...70 °C
Class of protection against electric shock	Class I conforming to IEC 60536
IP degree of protection	IP66 conforming to IEC 60529
NEMA degree of protection	NEMA 4X NEMA 13
IK degree of protection	IK05 conforming to IEC 50102
Standards	EN/IEC 60947-1 EN/IEC 60947-5-1 EN/IEC 60947-5-4 EN/IEC 60947-5-5 JIS C 4520 UL 508 CSA C22.2 No 14
Vibration resistance	5 gn (f = 2...500 Hz) conforming to IEC 60068-2-6
Shock resistance	50 gn (duration = 11 ms) for half sine wave acceleration conforming to IEC 60068-2-27 30 gn (duration = 18 ms) for half sine wave acceleration conforming to IEC 60068-2-27

The information provided in this documentation contains general descriptions and/or technical characteristics of the performance of the products contained herein.
This documentation is not intended as a substitute for and is not to be used for determining suitability or reliability of these products for specific user applications.
It is the duty of any such user or integrator to perform the appropriate and complete risk analysis, evaluation and testing of the products with respect to the relevant specific application or use thereof.
Neither Schneider Electric Industries SAS nor any of its affiliates or subsidiaries shall be responsible or liable for misuse of the information contained herein.

Product data sheet
Characteristics

ZBVG1
white light block for head Ø22 integral LED 110...120V screw clamp terminals



Main

Range of product	Harmony XB4 Harmony XB5
Product or component type	Light block
Device short name	ZBV
Sale per indivisible quantity	5
Connections - terminals	Screw clamp terminals: <= 2 x 1.5 mm² with cable end conforming to EN 60947-1 Screw clamp terminals: >= 1 x 0.22 mm² without cable end conforming to EN 60947-1
Signalling type	Steady
Light source	Protected LED
Bulb base	Integral LED
Light block supply	Direct
Light source colour	White
[Us] rated supply voltage	110...120 V AC, 50/60 Hz

Complementary

Product weight	0.017 kg
Tightening torque	0.8...1.2 N.m conforming to EN 60947-1
Shape of screw head	Cross head compatible with Philips no 1 screwdriver Cross head compatible with pozidriv No 1 screwdriver Slotted head compatible with flat Ø 4 mm screwdriver Slotted head compatible with flat Ø 5.5 mm screwdriver
Current consumption	14 mA
Service life	100000 h at rated voltage and 25 °C
Surge withstand	1 kV conforming to IEC 61000-4-5
Mounting of block	Front mounting

Environment

Protective treatment	TH
Ambient air temperature for storage	-40...70 °C
Ambient air temperature for operation	-25...70 °C
IP degree of protection	IP20 conforming to IEC 60529
Standards	CSA C22-2 No 14 EN/IEC 60947-1 EN/IEC 60947-5-1 EN/IEC 60947-5-4 EN/IEC 60947-5-5 JIS C 4520 UL 508
Product certifications	CSA UL listed
Resistance to fast transients	2 kV conforming to IEC 61000-4-4
Resistance to electromagnetic fields	10 V/m conforming to IEC 61000-4-3
Resistance to electrostatic discharge	6 kV on contact (on metal parts) conforming to IEC 61000-4-2 8 kV in free air (in insulating parts) conforming to IEC 61000-4-2
Electromagnetic emission	Class B conforming to IEC 55011
RoHS EUR status	Compliant
RoHS EUR conformity date	0720

The information provided in this documentation contains general descriptions and/or technical characteristics of the performance of the products contained herein.
This documentation is not intended as a substitute for and is not to be used for determining suitability or reliability of these products for specific user applications.
It is the duty of any such user or integrator to perform the appropriate and complete risk analysis, evaluation and testing of the products with respect to the relevant specific application or use thereof.
Neither Schneider Electric Industries SAS nor any of its affiliates or subsidiaries shall be responsible or liable for misuse of the information contained herein.

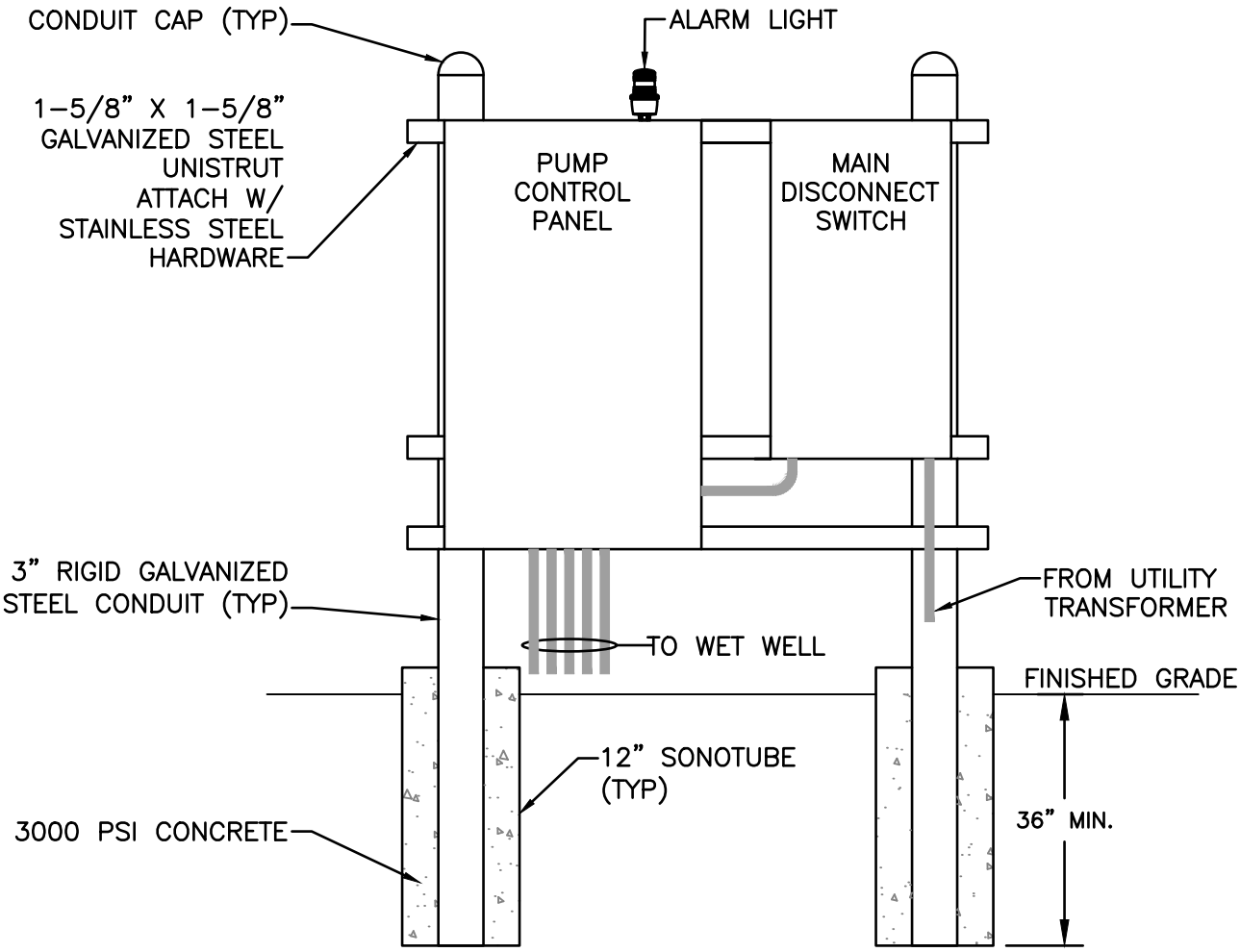

ELECTRICAL EQUIPMENT RACK DETAIL

SCALE: N.T.S.

SITE PLAN

FINAL PLAN AND PROFILE SHEETS

GENERAL NOTES

1. CONFIGURATIONS AND DIMENSIONS SHOWN ARE BASED ON THE EQUIPMENTS SPECIFIED. THE CONTRACTOR SHALL VERIFY THE LAYOUT AND ALL DIMENSIONS PRIOR TO FABRICATION.
2. ALL COUPLINGS SHALL BE EPOXY COATED STEEL AND SHALL BE DRESSER, SMITH-BLAIR, OR EQUAL. COUPLINGS SHALL BE RESTRAINED WITH A THRUST HARNESS DESIGNED IN ACCORDANCE WITH AWWA M-11.
3. ALL PIPING WITHIN WET WELL AND VALVE VAULT SHALL BE SPECIAL THICKNESS CLASS 53 EPOXY LINED (PROTECTO 401) DUCTILE IRON PIPE.
4. ALL BURIED PIPE SHALL BE POLYWRAPPED DUCTILE IRON PRESSURE CLASS 350 PUSH JOINT PIPE WITH JOINT RESTRAINT GASKETS.
5. ALL METALS WITHIN THE WET WELL, INCLUDING FLANGE BOLTS, SHALL BE STAINLESS STEEL, UNLESS OTHERWISE INDICATED.
6. THE EDGE OF EXPOSED CONCRETE SLABS SHALL RECEIVE A 3/4" CHAMFER.
7. REINFORCED STEEL SHALL BE GRADE 60.
8. ALL VENTS SHALL HAVE SCREENS INSTALLED OVER OPENINGS AND SHALL BE 304 STAINLESS STEEL - 16 MESH. OPENINGS SHALL BE A MINIMUM OF 12" ABOVE THE SLAB.
9. THE HIGH LEVEL ALARM SHALL ACTIVATE A FLASHING RED LIGHT TO BE MOUNTED ON THE ROOF OF THE ELECTRICAL SHELTER. THE CONTRACTOR SHALL INSTALL METAL INFORMATION SIGN AT OR NEAR THE LIFT STATION ENTRY GATE, VISIBLE TO THE PUBLIC.
10. ALL PENETRATIONS SHALL BE SEALED WATER AND GAS TIGHT PER APPROVED METHODS.
11. FORCEMAIN TO CONTINUE AT THE SHOWN FLOWLINE UNTIL IT CONNECTS WITH THE FORCEMAIN SHOWN ON SHEET 44.
12. THE CONTRACTOR SHALL BE RESPONSIBLE FOR ALL OF THE NECESSARY WASTEWATER CONNECTIONS TO THE SITE. CONTRACTOR SHALL NOTIFY THE UTILITY AUTHORITIES INSPECTORS 72 HOURS PRIOR TO CONNECTING TO ANY EXISTING LINE. THE INFORMATION IS NOT TO BE RELIED ON AS BEING EXACT OR COMPLETE. THE CONTRACTOR SHALL BE RESPONSIBLE FOR ANY REPAIRS TO EXISTING UTILITIES DUE TO DAMAGE INCURRED DURING CONSTRUCTION.
13. CONTRACTOR SHALL USE KENNEDY VALVE CO. KS-RW GATYE VALVES OR APPROVED EQUAL IN ACCORDANCE WITH AWWA C517.
14. CONTRACTOR SHALL USE VAL-MATIC SWING-FLEX CHECK VALVE OR APPROVED EQUAL IN ACCORDANCE WITH AWWA C508. CHECK VALVES SHOULD BE SUITABLE FOR DIRECT BURY.
15. A CHECK VALVE MUST BE A SWING TYPE VALVE WITH AN EXTERNAL LEVER OR EXTERNAL POSITION INDICATOR TO SHOW ITS OPEN AND CLOSED POSITIONS.
16. AN ISOLATION VALVE MUST INCLUDE AN EXTERNAL POSITION INDICATOR TO SHOW ITS OPEN AND CLOSED POSITIONS, UNLESS A FULL-CLOSING VALVE IS A RISING-STEM GATE VALVE.
17. CONTRACTOR SHALL USE ARI D-020 COMBINATION AIR VALVE OR APPROVED EQUAL.
18. CONFIGURATIONS AND DIMENSIONS SHOWN ARE BASED ON THE EQUIPMENT SPECIFIED. THE CONTRACTOR SHALL VERIFY THE LAYOUT AND ALL DIMENSIONS PRIOR TO CONSTRUCTION.
19. CONTRACTOR SHALL BE RESPONSIBLE FOR PROVIDING THE STRUCTURAL DESIGN FOR BRACING THE J-VENT SYSTEM.
20. INSTALL ISOLATION KITS BETWEEN DISSIMILAR METAL PIPING.
21. CONTRACTOR SHALL FOLLOW THE INSTALLATION INSTRUCTIONS PROVIDED BY THE SUPPLIER/MANUFACTURER.
22. UPON RECEIPT OF THE LIFT STATION SHIPMENT, INSPECT THE ENTIRE SHIPMENT FOR DAMAGE BEFORE THE LIFT STATION IS TAKEN OFF THE TRUCK. IF THERE IS DAMAGE, NOTE AS SPECIFICALLY AS POSSIBLE INCLUDING CLEAR PHOTOS OF DAMAGE ON THE BILL OF LADING AS TO ANY DAMAGE, THEN OFFLOAD. CONTACT THE SHIPPER AT ONCE AND HAVE THE BILL OF LADING WITH YOU.
23. CHECK VALVE, COUPLING, GATE VALVE AND AIR RELEASE VALVES (BALL VALVES MAY BE USED DEPENDING ON TYPE OF PUMPS).
24. PUMPS TO BE SELECTED BASED ON APPLICATION, FLOW, AND HEAD CONDITIONS OF FORCE MAIN.
25. SELECT BACKFILL MATERIAL FREE OF VOIDS, SHARP OBJECTS, OR OTHER DEBRIS.

PIPE AND FITTINGS

1. FORCE MAIN
   1.1. 4" HDPE DR9 FORCE MAIN WITH PRESSURE RATING OF 200 PSI SHALL BE USED.
2. LIFT STATION PIPING
   2.1. DIP PIPE SHALL BE IN ACCORDANCE WITH AWWA C111 AND AWWA C150.
   2.2. FITTINGS AND PIPE SHALL BE FLANGED
      2.2.1. FITTINGS IN ACCORDANCE WITH AWWA C153 AND AWWA C110.
      2.2.2. FLANGES: AWWA/ANSI C115/A21.15, ASME B16.1, CLASS 125
      2.2.3. BOLTS AND NUTS SHALL BE 316 STAINLESS.
   2.3. PIPE AND FITTINGS SHALL BE LINED WITH PROTECTO 401.
   2.4. PROVIDE POLYETHYLENE ENCASEMENT IN ACCORDANCE WITH AWWA FOR BURIED DIP.

SHOP DRAWINGS, PRODUCT DATA, AND SAMPLES

1. CONTRACTOR SHALL SUBMIT SHOP DRAWINGS AND PRODUCT DATA FOR LIFT STATION EQUIPMENT, PIPING AND APPURTENANCES. CONTRACTOR SHALL SUBMIT SHOP DRAWINGS TO THE OWNER FOR REVIEW PRIOR TO INSTALLATION, ALLOWING SUFFICIENT TIME FOR THE OWNER'S REVIEW AND RESPONSE.
2. CONTRACTOR SHALL SUBMIT DIMENSIONAL LAYOUT DRAWINGS AND PRODUCT DATA, CERTIFIED CORRECT FOR CONSTRUCTION, FOR REVIEW BY THE OWNER.
3. THE CONTRACTOR WILL MAKE SPECIFIC MENTION OF THOSE ITEMS THAT VARY FROM THE REQUIREMENTS OF THE CONTRACT DOCUMENTS IN THE LETTER OF TRANSMITTAL.
4. THE CONTRACTOR WILL ASSIGN A SEQUENTIAL NUMBER TO EACH SUBMITTAL (1, 2, 3, ETC.). RE-SUBMITTALS WILL BE IDENTIFIED WITH THEIR ORIGINAL NUMBER FOLLOWED BY A SEQUENTIAL LETTER (A, B, C, ETC.). FOR EXAMPLE, SUBMITTAL 12-C IS THE THIRD RE-SUBMITTAL OF THE OF THE TWELFTH ITEM FOR THE PROJECT.
5. THE CONTRACTOR WILL NOT DELIVER TO THE SITE, STORE, OR INCORPORATE INTO THE WORK, ANY MATERIALS OR EQUIPMENT FOR WHICH APPROVED SUBMITTALS HAVE NOT BEEN OBTAINED.
6. OWNER'S REVIEW, APPROVAL, OR OTHER APPROPRIATE ACTION REGARDING CONTRACTOR'S SUBMISSIONS WILL BE ONLY TO CHECK CONFORMITY WITH THE DESIGN CONCEPT OF THE PROJECT AND FOR COMPLIANCE WITH THE INFORMATION CONTAINED IN THE CONTRACT DOCUMENTS AND SHALL NOT EXTEND TO MEANS, METHODS, TECHNIQUES, DEQUENCES OR PROCEDURES OF CONSTRUCTION (EXCEPT WHERE A SPECIFIC MEANS, METHOD, TECHNIQUE, SEQUENCE OR PROCEDURE OF CONSTRUCTION IS INDICATED IN OR REQUIRED BY THE CONTRACT DOCUMENTS) OR TO SAFETY PRECAUTIONS OR PROGRAMS INCIDENT THERETO. THE REVIEW AND APPROVAL OF A SEPARATE COMPONENT ITEM WILL NOT INDICATE APPROVAL OF THE ASSEMBLY INTO WHICH THE ITEM IS FUNCTIONALLY INTEGRATED. CONTRACTOR SHALL MAKE CORRECTIONS REQUIRED BY OWNER, AND SHALL RETURN THE REQUIRED NUMBER OF CORRECTED COPIES OF SHOP DRAWINGS TO THE OWNER. CONTRACTOR MAY BE REQUIRED TO RESUBMIT AS REQUIRED REVISED SHOP DRAWINGS OR SAMPLES FOR FURTHER REVIEW AND APPROVAL. CONTRACTOR SHALL DIRECT SPECIFIC ATTENTION IN WRITING TO ANY NEW REVISIONS NOT SPECIFIED BY CONTRACTOR ON PREVIEW CONTRACTOR SUBMISSIONS.

LIFT STATION AND SUBMERSIBLE SEWAGE PUMPS

1. CONTRACTOR SHALL FURNISH ALL LABOR, MATERIALS, ELECTRICAL EQUIPMENT AND INCIDENTALS REQUIRED TO PROVIDE A LIFT STATION AS PROVIDED BY **MANSFIELD PUMP COMPANY. (JAMES MANSFIELD, 512-745-7647)** THE CONTRACTOR'S RESPONSIBILITIES ARE AS FOLLOWS: RECEIVING THE LIFT STATION AND OFF LOADING, EXCAVATION AND SETTING, ALL PLUMBING CONNECTIONS, ALL ELECTRICAL CONDUITS FROM THE WET WELL TO CONTROL PANEL, PROVIDE PROPER BACKFILL AND COMPACTION PROCEDURES. THE CONTRACTOR WILL BE REQUIRED TO LOWER THE PUMPS INTO PLACE AND CHECK FOR PROPER ROTATION. A STARTUP PROCEDURE FORM WILL BE PROVIDED AND IT MUST BE FILLED OUT AND RETURNED TO THE LIFT STATION SUPPLIER PRIOR TO THE OWNER'S POSSESSION DATE.
2. THE PUMP SHALL HAVE A FLANGED DISCHARGE ADAPTABLE TO 3" VERTICAL DISCHARGE AND BE CAPABLE OF HANDLING SANITARY SEWAGE AND ENABLING IT TO BE PUMPED OVER LONG DISTANCES OR HIGH VERTICAL LIFTS IN PIPELINES AS SMALL AS 3.00" IN DIAMETER.
3. THE CENTRIFUGAL PUMP SHALL BE EQUAL TO THE SERIES EBG-33. A PUMP SUBMERSIBLE TYPE AS MANUFACTURED BY GRUNDFOS WITH 4" IMPELLER OR APPROVED EQUAL. THE PUMP SHALL BE EXPLOSION-PROOF. THE CASTINGS SHALL BE CONSTRUCTED OF CAST IRON.
4. SUBMERSIBLE SEWAGE PUMP MATERIALS:
   4.1. PUMP CASE: CAST IRON, ASTM A48, CLASS 30
   4.2. MOTOR HOUSING: CAST IRON, ASTM A48, CLASS 30
   4.3. IMPELLER: CAST BRASS
   4.4. INTERMEDIATE HOUSING (BACKPLATE): CAST IRON, ASTM A48, CLASS 35B
   4.5. DISCHARGE BASE ELBOW: CAST IRON, ASTM A48, CLASS 35B
   4.6. PUMP/MOTOR SHAFT: ENTIRE SHAFT IS TO BE ASTM A276 TYPE 420 STAINLESS STEEL
   4.7. O-RINGS: NITRILE RUBBER (NBR)
   4.8. FASTENERS (INCLUDING IMPELLER FASTENER): 304 STAINLESS STEEL
   4.9. LOWER SEAL FACES: SILICON CARBIDE/SILICON CARBIDE
   4.10. UPPER SEAL FACES: SILICON CARBIDE STATIONARY/CARBON ROTATING
   4.11. GUIDE RAILS/CABLES AND MOUNTING BRACKETS: STAINLESS STEEL, ASTM A276 TYPE 316 (CABLES SHALL BE NYLON COATED)
   4.12. LIFTING CHAIN OR CABLE: STAINLESS STEEL, ASTM A276 TYPE 316
   4.13. OIL-ALL USES (SEAL LUBRICATION, ETC): ECOLOGICALLY SAFE, PARIFIN OR MINERAL BASE
   4.14. POWER/CONTROL CABLE JACKET: CHLOROPRENE WITH NON-WICKING FILLERS
5. THE MOTOR HOUSING SHALL BE FINNED AND AIR-FILLED TO DISSIPATE HEAT AND ENABLE THE UNIT TO OPERATE UNSUBMERGED WITHOUT DAMAGE TO THE MOTOR. ALL EXTERNAL-MATING PARTS SHALL BE MACHINED AND SEALED WITH A BUNA-n SQUARE RING. ALL FASTENERS EXPOSED TO THE LIQUID SHALL BE 300 SERIES STAINLESS STEEL. THE MOTOR SHALL BE PROTECTED ON THE TOP SIDE WITH AN ATTACHED SEALED JUNCTION BOX CHAMBER WHICH IN THE EVENT OF CORD DAMAGE WILL PREVENT MOISTURE WICKING INTO THE MOTOR HOUSING. THE MOTOR SHALL BE PROTECTED ON THE LOWER SIDE WITH A TANDEM MECHANICAL SEAL ARRANGEMENT WITH EACH SEAL HAVING A SEPARATE SPRING ASSEMBLY THE UPPER AND LOWER BALL BEARINGS SHALL BE CAPABLE OF HANDLING ALL THRUST LOADS. THE PUMP HOUSING HAVING A SEPARATE SPRING ASSEMBLY. THE UPPER AND LOWER BALL BEARINGS SHALL BE CAPABLE OF HANDLING ALL THRUST LOADS. THE PUMP HOUSING SHALL BE OF THE CONCENTRIC DESIGN THEREBY EQUALIZING THE PRESSURE FORCES INSIDE THE HOUSING, WHICH WILL EXTEND THE SERVICE LIFE OF THE SEALS AND BEARINGS. THE TOP CAP SHALL HAVE CAST IN LIFTING LUGS. THE MOTOR SHALL BE PROTECTED BY A MOISTURE DETECTION SYSTEM, WHICH WILL ACTIVATE AN ALARM CIRCUIT IF LIQUID IS EVER PRESENT IN THE UPPER JUNCTION CHAMBER OR LOWER SEAL CAVITY. THERMAL SENSORS LOCATED IN THE OIL-FILLED MOTOR HOUSING SHALL PROVIDE TEMPERATURE PROTECTION. PROVIDE THE AUTOMATIC REVERSING FEATURE, AVAILABLE FOR 3 PHASE MODELS, THAT ENABLE THE PUMP TO ROTATE IN BOTH CW AND CCW DIRECTION.
6. THE PUMP SHALL BE SUPPLIED WITH 49.2' MULTI-CONDUCTOR POWER CORD. IT SHALL BE SO TYPE CORD CAPABLE OF CONTINUED EXPOSURE TO THE PUMPED LIQUID. POWER CORD SHALL BE SIZED FOR THE RATED FULL LOAD AMP RATING OF THE PUMP IN ACCORDANCE WITH THE NATIONAL ELECTRICAL CODE.
7. THE MOTOR SHALL BE FM LISTED FOR CLASS 1 DIVISION 1 GROUPS C&D, HAVE A CLASS F OR BETTER RATED DESIGN RATED FOR CONTINUOUS DUTY. THERMAL SENSORS LOCATED IN THE MOTOR HOUSING SHALL PROVIDE TEMPERATURE PROTECTION.
8. FURNISH UPPER AND LOWER BALL BEARINGS TO PROVIDE B10 LIFE OF, A MINIMUM 100,000 HOURS AT ALL ANTICIPATED AXIAL AND RADIAL LOADINGS.
9. PUMP SHALL HAVE A DUAL MECHANICAL SEAL CONFIGURATION WITH THE SEALS MOUNTED IN TANDEM. EACH SEAL ASSEMBLY WITH ITS OWN SPRING. PROVIDE SEALS THAT DO NOT REQUIRE ROUTINE MAINTENANCE OR ADJUSTMENT, BUT CAPABLE OF BEING REPLACED.
10. THE IMPELLER SHALL BE A NON-CLOG TYPE IMPELLER, CAPABLE OF PASSING 3" SPHERICAL SOLID. STATICALLY AND DYNAMICALLY BALANCED IMPELLERS ARE REQUIRED.
11. COMPONENTS REQUIRED FOR THE REPAIR OF THE PUMP SHALL BE READILY AVAILABLE WITHIN 24 HOURS. COMPONENTS SUCH AS MECHANICAL SEALS AND BEARINGS SHALL NOT BE OF A PROPRIETARY DESIGN AND BE AVAILABLE FROM LOCAL INDUSTRIAL SUPPLY HOUSES. SPECIAL TOOLS SHALL NOT BE REQUIRED TO SERVICE THE PUMP. A NETWORK OF SERVICE STATIONS SHALL BE AVAILABLE NATIONWIDE IN THOSE CASES WHERE SERVICE REQUIREMENTS ARE BEYOND THE COPE OF IN-HOUSE SERVICE MECHANICS.
12. THE TWO YEAR PRO-RATED WARRANTY FOR PERMANENT WASTEWATER LIFT STATIONS SHALL BE IN WRITING IN A PUBLISHED SERVICE BULLETIN. LABOR CHARGES FROM AN AUTHORIZED SERVICE STATION FOR REPAIRS WILL BE INCLUDED IN THIS WARRANTY AGREEMENT DURING THE FIRST 12 MONTHS OF OPERATION.

No.	REVISIONS	DATE	BY

Kimley»Horn
© 2024 KIMLEY-HORN AND ASSOCIATES, INC.
10814 JOLLYVILLE ROAD, CAMPUS IV, SUITE 200, AUSTIN, TX 78759
PHONE: 512-418-1771 FAX: 512-418-1791
WWW.KIMLEY-HORN.COM
TEXAS REGISTERED ENGINEERING FIRM F-928

STATE OF TEXAS
TARA R. RAGOE
141851
LICENSED
PROFESSIONAL ENGINEER
6/6/2024

KHA PROJECT	069294918
DATE	MAY 2024
SCALE:	AS SHOWN
DESIGNED BY:	ATN
DRAWN BY:	ATN
CHECKED BY:	TRR

LIFT STATION NOTES

2525 CR 172
INDUSTRIAL
CITY OF ROUND ROCK
WILLIAMSON COUNTY, TEXAS

SHEET NUMBER
46 OF 204

SDP24-00001

Plotted By:Nguyen, Alexis Date:June 06, 2024 03:47:07pm File Path:K:\AUS_Civil\069294910 - DAU3 Round Rock\LIFT STATION\CAD\PLANSHEETS\G-LS GENERAL NOTES.dwg
This document, together with the concepts and designs presented herein, as an instrument of service, is intended only for the specific purpose and client for which it was prepared. Reuse of and improper reliance on this document without written authorization and adaptation by Kimley-Horn and Associates, Inc. shall be without liability to Kimley-Horn and Associates, Inc.

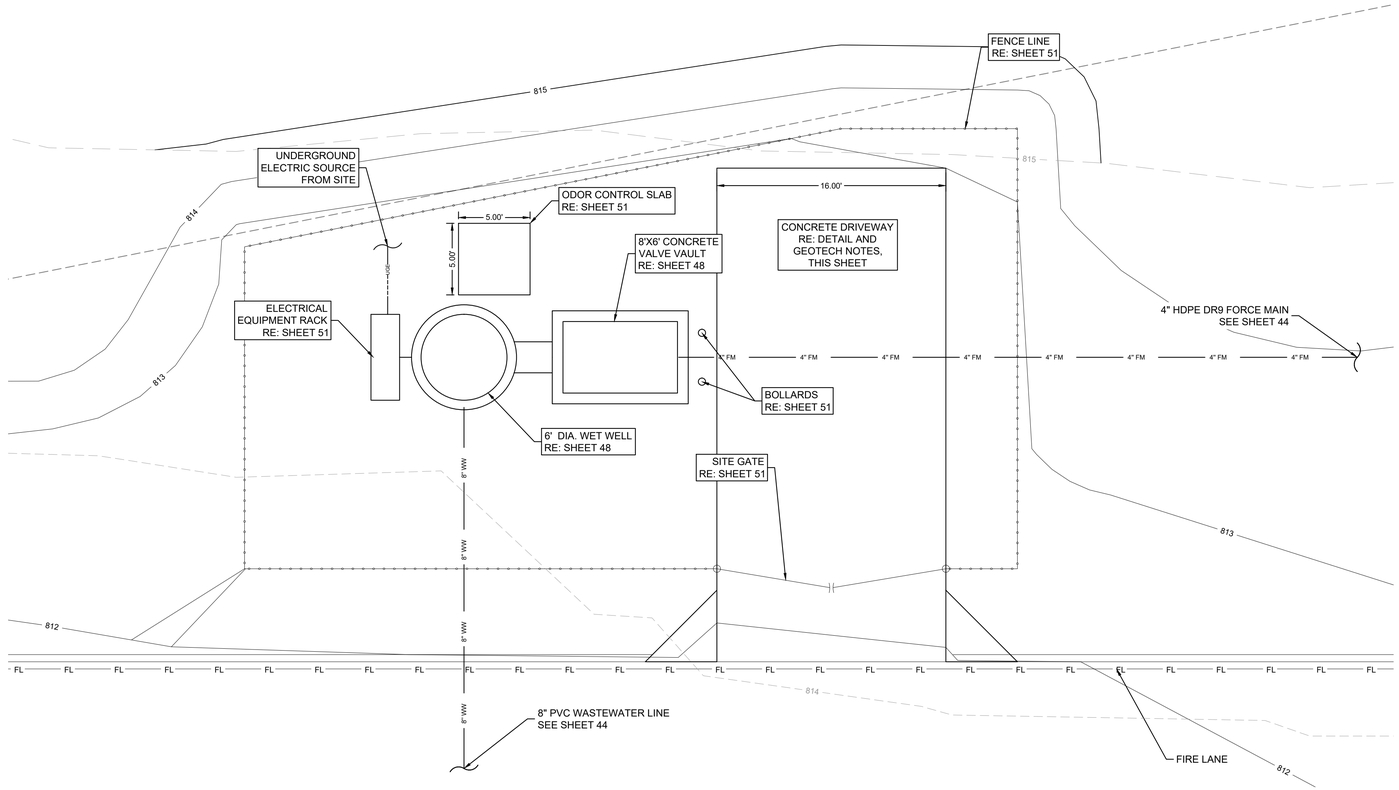

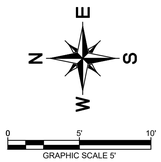

LEGEND

PROP. CONTOURS	815
EXIST. CONTOURS	815
8" WASTEWATER LINE	8" WW
4" FORCE MAIN	4" FM
FIRE LANE	FL FL
EXIST. EASEMENT	
PROP. FENCE LINE	

GEOTECH NOTES:

1. CONTRACTOR TO REFERENCE DIV 03 CONCRETE IN THE AMZL DESIGN CRITERIA FOR LOW CARBON CONCRETE.
2. FIRE LANES WILL BE HEAVY DUTY CONCRETE PAVEMENT. REFER TO THE GEOTECH REPORT NOTED BELOW FOR LOAD CAPACITY.
3. REFER TO SHEET 92 FOR ADDITIONAL PAVEMENT DETAILS.

REFER TO GEOTECHNICAL REPORT BY: **ECS SOUTHWEST, LLP**

GEOTECH PROJECT NUMBER: **17:6399-A**

DATED: MARCH 22, 2024

HEAVY-DUTY RIGID
PAVEMENT SECTION

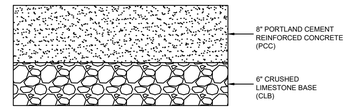

NTS

SITE PLAN NOTES

1. ALL MECHANICAL JOINTS SHALL HAVE MEGA LUG THRUST RESTRAINTS.
2. FOR ALL ELECTRICAL WORK REFER TO ELECTRICAL SHEETS.
3. BURIED DUCTILE IRON PIPES, VALVES, AND FITTINGS SHALL BE ENCASED WITH POLYETHYLENE WRAP 8 MILS THICK.
4. FOR ALL STRUCTURAL WORK REFER TO STRUCTURAL SHEETS (51 & 55).

GRADING PLAN NOTES

1. SEE DEVELOPMENT GRADING PLAN SHEETS FOR EXISTING GRADE TIE IN ELEVATIONS.
2. THE CONTRACTOR SHALL MAINTAIN ADEQUATE DRAINAGE AT ALL TIMES AND PROVIDE AND MAINTAIN EROSION PROTECTION IN AND ADJACENT TO THE CONSTRUCTION LIMITS.
3. CONTRACTOR SHALL GRADE THE SITE TO PROVIDE POSITIVE DRAINAGE AROUND ALL STRUCTURES AND SLABS.
4. NATURAL GROUND SHALL BE 6-INCHES BELOW ALL STRUCTURE SLABS.

BENCHMARKS

BM #51471 MAG NAIL SET "GCP 2"
SET AT THE NORTHEAST CORNER OF THE INTERSECTION OF STATE HIGHWAY 45 AND COUNTY ROAD 172, ±5.5' FROM "YIELD" SIGN.
N: 10147640.83
E: 3127942.60
ELEV.= 841.70'

BM #51473 MAG NAIL SET "GCP 3"
SET IN THE NORTH RIGHT-OF-WAY LINE OF HESTERS CROSSING ROAD, ±560' FROM THE INTERSECTION OF HESTERS CROSSING ROAD AND COUNTY ROAD 172, ±100 FROM CONCRETE SIGN "ENCOMPASS HEALTH".
N: 10149343.04
E: 3128315.81
ELEV.= 812.19'

No.	REVISIONS	DATE	BY

Kimley»Horn
© 2024 KIMLEY-HORN AND ASSOCIATES, INC.
10814 JOLLYVILLE ROAD, CAMPUS IV, SUITE 200, AUSTIN, TX 78759
PHONE: 512-418-1771 FAX: 512-418-1791
WWW.KIMLEY-HORN.COM
TEXAS REGISTERED ENGINEERING FIRM F-928

STATE OF TEXAS
TARA R. RADDE
141851
LICENSED
PROFESSIONAL ENGINEER
6/6/2024

KHA PROJECT 069284918
DATE MAY 2024
SCALE: AS SHOWN
DESIGNED BY: ATN
DRAWN BY: ATN
CHECKED BY: TRR

LIFT STATION SITE PLAN

2525 CR 172 INDUSTRIAL

CITY OF ROUND ROCK
WILLIAMSON COUNTY, TEXAS

SHEET NUMBER
47 OF 204

SDP24-00001

Plotted By:Nguyen, Alexis Date:June 06, 2024 03:47:19pm File Path:K:\AUS_Civil\069284910 – DAU3 Round Rock\LIFT STATION\CAD\PLANSHEETS\C-LS SITE PLAN.dwg
This document, together with the concepts and designs presented herein, as an instrument of service, is intended only for the specific purpose and client for which it was prepared. Reuse of and improper reliance on this document without written authorization and adaptation by Kimley-Horn and Associates, Inc. shall be without liability to Kimley-Horn and Associates, Inc.

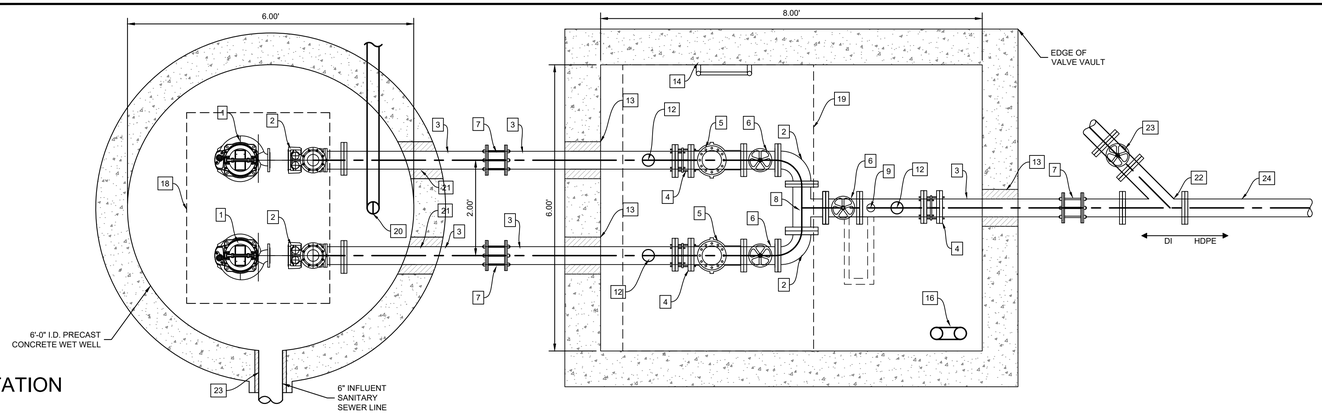

1 LIFT STATION PLAN

SCALE: 1" = 1½'

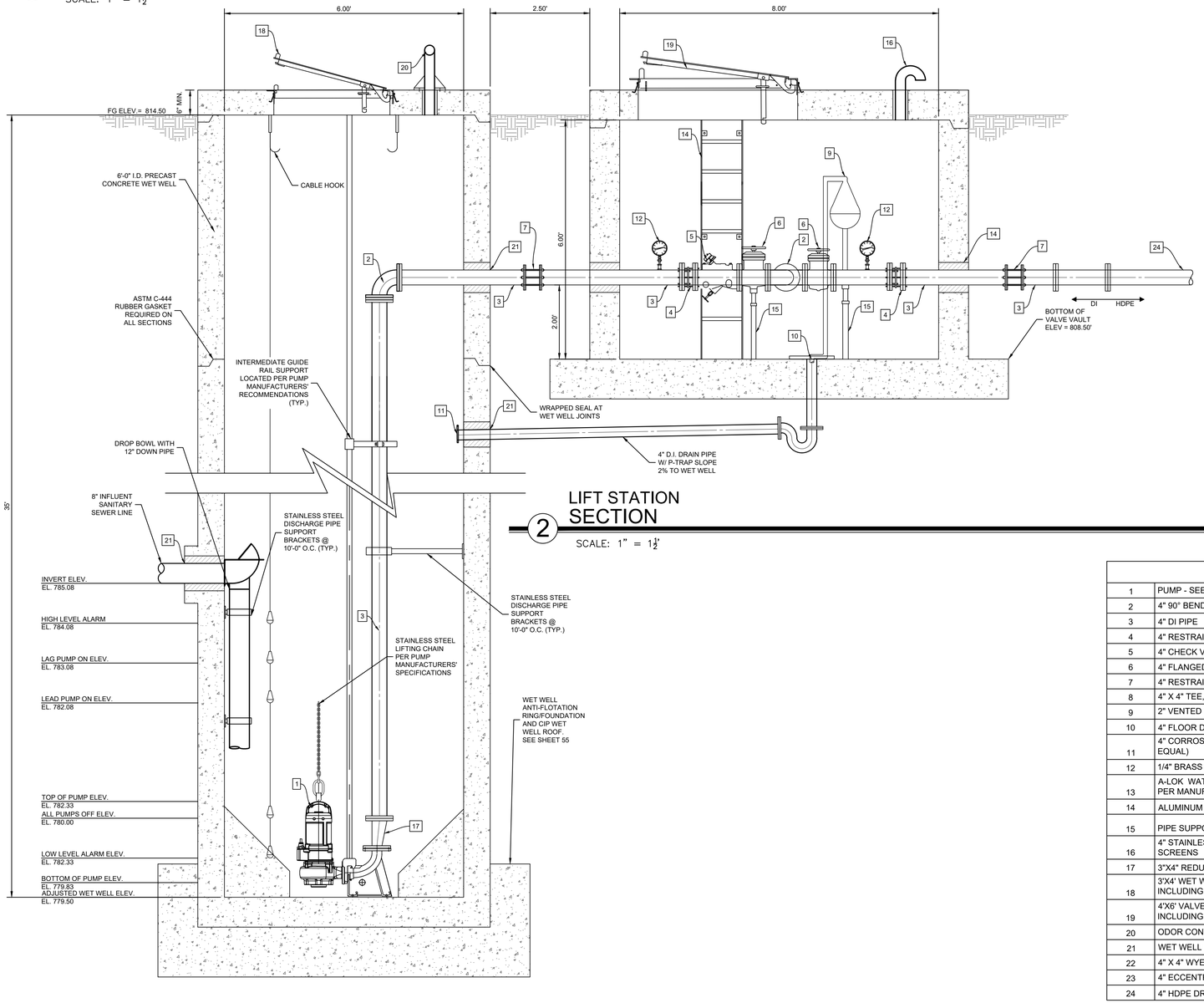

2 LIFT STATION SECTION

SCALE: 1" = 1½'

PUMP PERFORMANCE DATA	
PUMP SELECTION	EBG-33
NUMBER OF PUMPS	2
MOTOR HORSE POWER	3 HP
IMPELLER DIA.	4 IN
PUMP MOTOR VOLTAGE	60 Hz, 3 Phase, 460 Volts
FLOW @ OPERATING POINT	99 GPM
TOTAL HEAD @ OPERATING POINT	32.46' TDH

LIFT STATION INFORMATION	
SERVICE AREA TOTAL (ACRES)	69.56
SERVICE AREA SIZE (LUEs)	60
PEAK DRY WEATHER FLOW (GPM)	48
PEAK WET WEATHER FLOW (DESIGN FLOW) (GPM)	84.22914
WET WELL DIAMETER (FT)	6
ACTIVE VOLUME (GAL)	516.71
MINIMUM PUMP CYCLE TIME (MIN)	46.97
FORCE MAIN SIZE (IN)	4
FORCE MAIN LENGTH (LF)	98
FLOW VELOCITY (FPS)	3.04

MATERIAL LIST	
1	PUMP - SEE "PUMP PERFORMANCE DATA", THIS SHEET
2	4" 90° BEND, FL
3	4" DI PIPE
4	4" RESTRAINED DISMANTLING JOINT WITH S.S. HARDWARE
5	4" CHECK VALVE W/ VISUAL INDICATOR AND BACKFLOW ACTUATOR
6	4" FLANGED ECCENTRIC PLUG VALVE WITH HANDWHEEL OPERATOR
7	4" RESTRAINED COUPLING ADAPTER
8	4" X 4" TEE, FL
9	2" VENTED COMBINATION AIR RELEASE VALVE (ARI D-025L OR EQUAL)
10	4" FLOOR DRAIN
11	4" CORROSION RESISTANT FLAP VALVE (STAINLESS STEEL, RUBBER, OR EQUAL)
12	1/4" BRASS BALL VALVE & PRESSURE GAUGE, SEE SHEET 50.
13	A-LOK WATER-STOP CONNECTOR OR APPROVED EQUAL. INSTALL GROUT PER MANUFACTURER'S RECOMMENDATIONS, SEE SHEET 49.
14	ALUMINUM LADDER WITH RETRACTABLE HAND RAIL.
15	PIPE SUPPORT, SEE SHEET 49.
16	4" STAINLESS STEEL GOOSE NECK VENT WITH 304 STAINLESS STEEL SCREENS
17	3"X4" REDUCER
18	3'X4' WET WELL ALUMINUM ACCESS COVER WITH THREE DOORS INCLUDING SAFE HATCH, H-20 LOAD RATING (FLYGT OR EJIW)
19	4'X6' VALVE VAULT ALUMINUM ACCESS COVER WITH THREE DOORS INCLUDING SAFE HATCH, H-20 LOAD RATING (FLYGT OR EJIW)
20	ODOR CONTROL AERATOR , SEE SHEET 51
21	WET WELL PENETRATION, SEE SHEET 49
22	4" X 4" WYE, MJ
23	4" ECCENTRIC PLUG VALVE, MJ
24	4" HDPE DR9 PIPE

KEYNOTES:

1. PUMP SUPPLIER SHALL PROVIDE DIMENSIONS OF THE GUIDE RAILS TO ENSURE COMPATIBILITY WITH SUPPLIED EQUIPMENT. THE PUMP SHALL BE EASILY REMOVED FOR INSPECTION OR SERVICE. PERSONNEL SHALL HAVE NO REASON TO ENTER THE WET WELL. GUIDE RAILS SHALL BE SUPPORTED EVERY 10 FEET WITH STAINLESS STEEL SUPPORTS.
2. THE GUIDE BRACKETS SHALL BE CONSTURCTED OF 316 STAINLESS STEEL. GUIDE BRACKETS FOR EACH PUMP MUST BE SUPPLIED BY THE PUMP MANUFACTURER TO ENSURE COMPATIBILITY WITH SUPPLIED EQUIPMENT.
3. EACH PUMPING UNIT SHALL BE PROVIDED WITH A STAINLESS STEEL LIFTING CHAIN OR CABLE. LIFTING CHAIN SHALL EXTEND AT LEAST 3-4 FEET ABOVE WET WELL.
4. ALL HARDWARE IN THE WET WELL SHALL BE 316 STAINLESS STEEL.
5. PUMP DISCHARGE LINES SHALL HAVE 1/4 INCH TAPS WITH STAINLESS STEEL OR BRONZE BALL VALVES.
6. ALL DISCHARGE LINES SHALL HAVE ADEQUATE THRUST SUPPORT MEMBERS AT EACH FITTING. WHERE POSSIBLE, LONG RADIUS 90 DEGREE BENDS SHALL BE USED.
7. THE DISCHARGE LINE FROM EACH PUMP SHALL BE FITTED WITH A CHECK VALVE AND A ECCENTRIC PLUG VALVE, WITH THE CHECK VALVE ON THE PUMP SIDE OF THE ECCENTRIC PLUG VALVE. WHEN NECESSARY, AIR RELEASE VALVE(S) SHALL BE INSTALLED DOWNSTREAM OF THE ECCENTRIC PLUG VALVES.
8. THE VALVE VAULT SHALL BE SIZED LARGE ENOUGH TO PROVIDE AT LEAST 1 FOOT OF CLEARANCE AROUND ALL VALVES AND ALL FLANGES. THE LID OF THE VAULT SHALL BE A MINIMUM OF 42 INCHES BY 42 INCHES AND SHALL BE ABLE TO BE PADLOCKED. THE VAULT SHALL BE INTERNALLY COATED WITH SPL WW-511 COATING, AND EXTERNALLY COATED WITH A COAL TAR EPOXY.
9. THE VALVE VAULT SHALL HAVE A DRAIN TO THE WET WELL. THE DRAIN SHALL HAVE A 4 INCH MINIMUM DIAMETER AND BE FITTED WITH A FLAP VALVE OR BACK-FLOW PREVENTER AND A TRAP TO PREVENT GASES OR WATER FROM ENTERING THE VALVE VAULT. THE OPENING TO THE DRAIN SHALL BE COVERED WITH A STAINLESS STEEL SCREEN.
10. ALL VENTS SHALL BE COATED INSIDE AND OUT PER CITY OF ROUND ROCK STANDARD SPECIFICATIONS. THE WET WELL VENT SHALL BE A TEE FITTED WITH STAINLESS STEEL SCREENS 10 FEET ABOVE WET WELL COVER.

GENERAL NOTES

1. THE WORK PERFORMED UNDER THIS CONTRACT SHALL COMPLY WITH THE CITY OF ROUND ROCK SUBMERSIBLE LIFT STATION SPECIFICATIONS.
2. CONFIGURATIONS AND DIMENSIONS SHOWN ARE BASED ON THE EQUIPMENTS SPECIFIED. THE CONTRACTOR SHALL VERIFY THE LAYOUT AND ALL DIMENSIONS PRIOR TO FABRICATION.
3. ALL COUPLINGS SHALL BE EPOXY COATED STEEL AND SHALL BE DRESSER, SMITH-BLAIR, OR EQUAL. COUPLINGS SHALL BE RESTRAINED WITH A THRUST HARNESS DESIGNED IN ACCORDANCE WITH AWWA M-11.
4. CONTRACTOR SHALL COORDINATE VALVE VAULT ACCESS HATCH LOCATION WITH LADDER MANUFACTURER PRIOR TO FABRICATION.
5. CONTRACTOR SHALL VERIFY WET WELL ACCESS HATCH LOCATION AND DIMENSION WITH PUMP MANUFACTURER PRIOR TO FABRICATION.
6. PROVIDE 316 STAINLESS STEEL ANCHOR BOLTS FOR PUMP BASE MOUNTING TO SLAB.
7. INSTALL ISOLATION KITS BETWEEN DISSIMILAR METAL PIPING.
8. ALL PIPING WITHIN WET WELL AND VALVE VAULT SHALL BE SPECIAL THICKNESS CLASS 53 EPOXY LINED (PROTECTO 401) DUCTILE IRON PIPE.
9. ALL BURIED PIPE SHALL BE POLYWRAPPED DUCTILE IRON PRESSURE CLASS 350 PUSH JOINT PIPE WITH JOINT RESTRAINT GASKETS.
10. ALL METALS WITHIN THE WET WELL, INCLUDING FLANGE BOLTS, SHALL BE STAINLESS STEEL, UNLESS OTHERWISE INDICATED.
11. CONCRETE FOR FOUNDATION SHALL BE CLASS S. CONCRETE SHALL HAVE A MIN COMPRESSIVE STRENGTH OF 4000 PSI AT 28 DAYS.
12. THE EDGE OF EXPOSED CONCRETE SLABS SHALL RECEIVE A 3/4" CHAMFER.
13. REINFORCED STEEL SHALL BE GRADE 60.
14. ALL VENTS SHALL HAVE SCREENS INSTALLED OVER OPENINGS AND SHALL BE 304 STAINLESS STEEL - 16 MESH. OPENINGS SHALL BE A MINIMUM OF 12" ABOVE THE SLAB.
15. THE HIGH LEVEL ALARM SHALL ACTIVATE A FLASHING RED LIGHT TO BE MOUNTED ON THE ROOF OF THE ELECTRICAL SHELTER. THE CONTRACTOR SHALL INSTALL METAL INFORMATION SIGN AT OR NEAR THE LIFT STATION ENTRY GATE, VISIBLE TO THE PUBLIC.
16. ALL PENETRATIONS SHALL BE SEALED WATER AND GAS TIGHT PER APPROVED METHODS.
17. BACK FILLING OF THE WET WELL SHALL COMPLY WITH CITY OF ROUND ROCK STANDARD SPECIFICATIONS.
18. ALL INTERIOR SURFACES OF CONCRETE WET WELL SHALL BE COATED WITH AN 80 MIL (MIN.) COAT OF RAVEN 400 SERIES HIGH BUILD EPOXY LINER OR APPROVED EQUAL.

No.	REVISIONS	DATE	BY

Kimley»Horn
© 2024 KIMLEY-HORN AND ASSOCIATES, INC.
10814 JOLLYVILLE ROAD, CAMPUS IV, SUITE 200, AUSTIN, TX 78759
PHONE: 512-418-1771 FAX: 512-418-1791
WWW.KIMLEY-HORN.COM
TEXAS REGISTERED ENGINEERING FIRM F-928

STATE OF TEXAS
TARA R. RADD
141851
LICENSED PROFESSIONAL ENGINEER
6/6/2024

KHA PROJECT	069284918
DATE	MAY 2024
SCALE:	AS SHOWN
DESIGNED BY:	ATN
DRAWN BY:	ATN
CHECKED BY:	TRR

LIFT STATION PLAN AND SECTION

2525 CR 172 INDUSTRIAL

CITY OF ROUND ROCK
WILLIAMSON COUNTY, TEXAS

SHEET NUMBER
48 OF 204

SDP24-00001

Plotted By:Nguyen, Alexis Date:June 06, 2024 04:56:30pm File Path:K:\AUS_Civil\069284918 — DAU3 Round Rock\LIFT STATION\CAD\PLANSHEETS\C-LS PLAN AND SECTION.dwg
This document, together with the concepts and designs presented herein, as an instrument of service, is intended only for the specific purpose and client for which it was prepared. Reuse of and improper reliance on this document without written authorization and adaptation by Kimley-Horn and Associates, Inc. shall be without liability to Kimley-Horn and Associates, Inc.

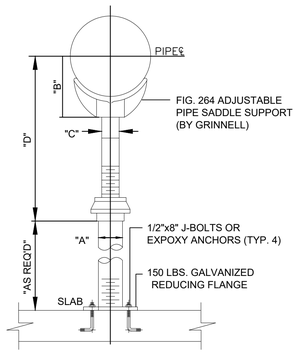

WGT APPROX. LBS EACH						D	
PIPE SIZE	COMPLETE	SADDLE ONLY	A	A	A	MINIMUM	MAXIMUM
2 1/2	9.0	4.8	2 1/2	3 1/2	1 1/2	8	13
3	9.2	5.0	2 1/2	3 3/4	1 1/2	8 1/4	13 1/4
3 1/2	9.4	5.2	2 1/2	4	1 1/2	8 1/2	13 1/2
4	15.0	7.6	3	4 1/4	2 1/2	9 1/4	14
5	16.7	8.3	3	4 7/8	2 1/2	10	14 3/4
6	17.7	10.3	3	5 1/2	2 1/2	10 1/2	15 1/4
8	20.2	12.8	3	6 7/8	2 1/2	11 3/4	16 1/2
10	25.2	17.8	3	5 1/2	2 1/2	13 1/2	18 1/4
12	29.0	21.6	3	9 15/16	2 1/2	15	19 3/4
14	49.2	38.0	4	10 15/16	3	16 1/4	20 3/4
16	53.2	42.0	4	12 3/8	3	17 3/4	22 1/4
18	70.8	51.0	6	13 7/8	3 1/2	19 1/2	24
20	104.8	85.0	6	15 3/8	3 1/2	21	25 1/2
24	137.0	110.0	6	17 15/16	4	23 3/4	28 1/2
30	170.0	150.0	6	21 5/16	4	27	31 1/2
32	181.0	161.1	6	22 1/2	4	28 1/8	32 3/4
36	249.0	229.0	6	24 1/4	4	30 1/4	34 3/4

1 ADJUSTABLE PIPE SUPPORT DETAIL
N.T.S

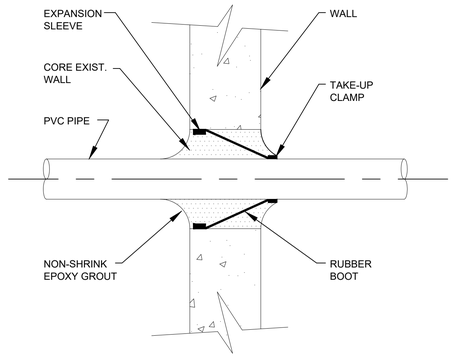

2 COA WW-146-D WET WELL PENETRATION DETAIL
N.T.S

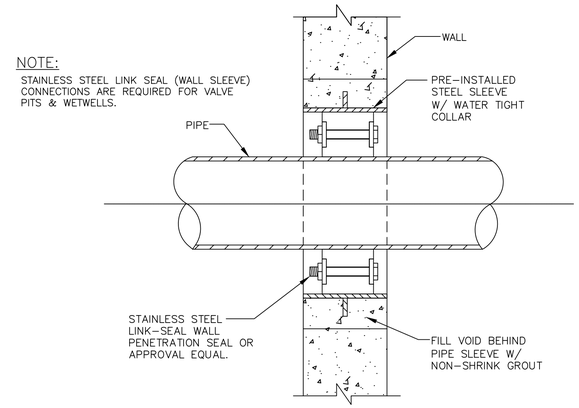

3 VAULT PIPE PENETRATION DETAIL
N.T.S

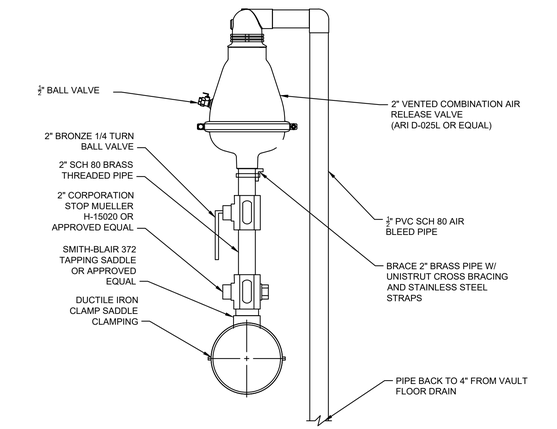

4 AIR RELEASE VALVE DETAIL
N.T.S

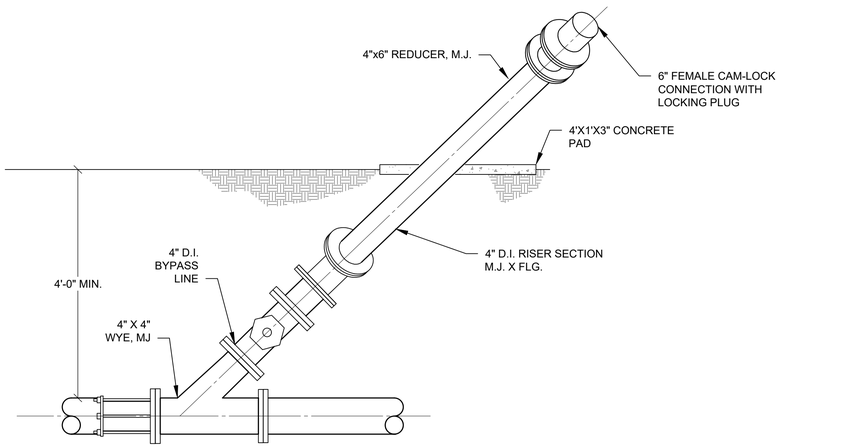

5 BYPASS STUB UP CONNECTION DETAIL
N.T.S

No.	REVISIONS	DATE	BY

Kimley»Horn
© 2024 KIMLEY-HORN AND ASSOCIATES, INC.
10814 JOLLYVILLE ROAD, CAMPUS IV, SUITE 200, AUSTIN, TX 78759
PHONE: 512-418-1771 FAX: 512-418-1791
WWW.KIMLEY-HORN.COM
TEXAS REGISTERED ENGINEERING FIRM F-928

STATE OF TEXAS
TARA R. RADDE
141851
LICENSED PROFESSIONAL ENGINEER
6/6/2024

KHA PROJECT: 069284918
DATE: MAY 2024
SCALE: AS SHOWN
DESIGNED BY: ATN
DRAWN BY: ATN
CHECKED BY: TRR

LIFT STATION DETAILS I

2525 CR 172 INDUSTRIAL

CITY OF ROUND ROCK
WILLIAMSON COUNTY, TEXAS

SHEET NUMBER
49 OF 204

SDP24-00001

Plotted By: Nguyen, Alexis Date: June 06, 2024 03:47:32pm File Path: K:\AUS_Civil\069284918 - DAU3 Round Rock\LIFT STATION\CAD\PLANSHEETS\D-LS DETAILS.dwg
This document, together with the concepts and designs presented herein, as an instrument of service, is intended only for the specific purpose and client for which it was prepared. Reuse of and improper reliance on this document without written authorization and adaptation by Kimley-Horn and Associates, Inc. shall be without liability to Kimley-Horn and Associates, Inc.

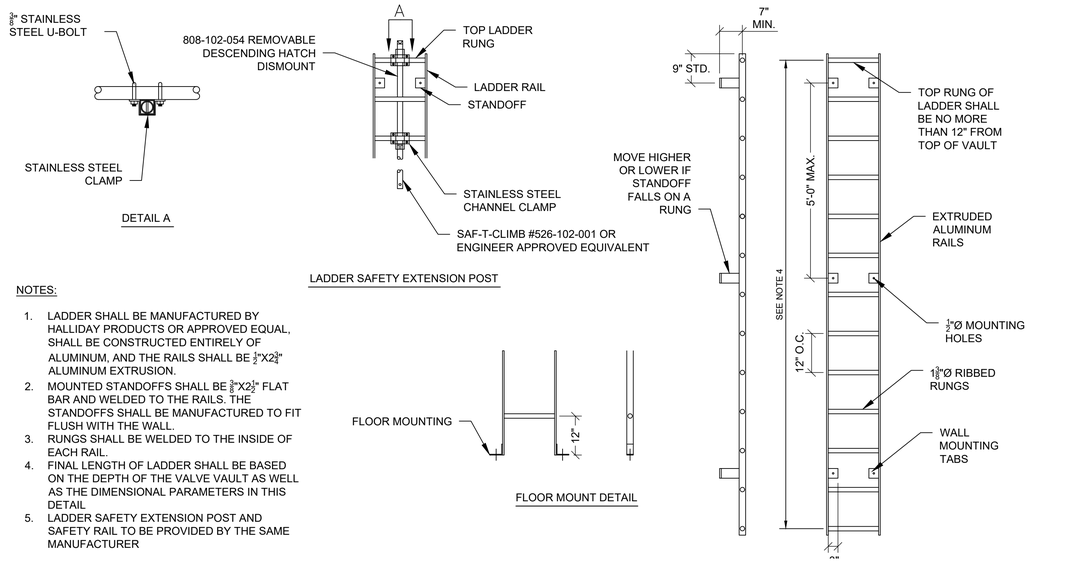

NOTES:

1. LADDER SHALL BE MANUFACTURED BY HALLIDAY PRODUCTS OR APPROVED EQUAL, SHALL BE CONSTRUCTED ENTIRELY OF ALUMINUM, AND THE RAILS SHALL BE 1½"X2¾" ALUMINUM EXTRUSION.
2. MOUNTED STANDOFFS SHALL BE ⅜"X2½" FLAT BAR AND WELDED TO THE RAILS. THE STANDOFFS SHALL BE MANUFACTURED TO FIT FLUSH WITH THE WALL.
3. RUNGS SHALL BE WELDED TO THE INSIDE OF EACH RAIL.
4. FINAL LENGTH OF LADDER SHALL BE BASED ON THE DEPTH OF THE VALVE VAULT AS WELL AS THE DIMENSIONAL PARAMETERS IN THIS DETAIL
5. LADDER SAFETY EXTENSION POST AND SAFETY RAIL TO BE PROVIDED BY THE SAME MANUFACTURER

1 LADDER DETAIL
N.T.S

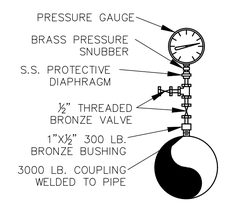

NOTES:
1. PRESSURE GAUGES SHALL HAVE 4-INCH DIAMETER FACES AND BE CALIBRATED FROM 0 TO 150 PSI.
2. GAUGE SHALL BE FILLED WITH GLYCOL AND INSTALLED WITH A PRESSURE SNUBBER AND SHALL BE OF STAINLESS STEEL CONSTRUCTION.
3. INSTALL GAUGE WITH A 0.25-INCH NPT CONNECTION AND INCLUDE A CORPORATION STOP AND AIR BLEED.
4. VALVES TO BE RATED AT 200 PSI MIN.
5. ALL WELDED COUPLINGS SHALL BE RATED FOR 3000 LBS.
6. GAUAGE SHALL BE TRERICE MANUFACTURED OR APPROVED EQUAL.

2 PRESSURE GAUGE DETAIL
N.T.S

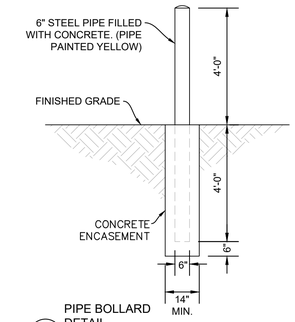

3 PIPE BOLLARD DETAIL
N.T.S

EBG-31 EBG-33 (3HP) **Synchronous Speed: 3450 RPM** **2½ / 3 inch Discharge**

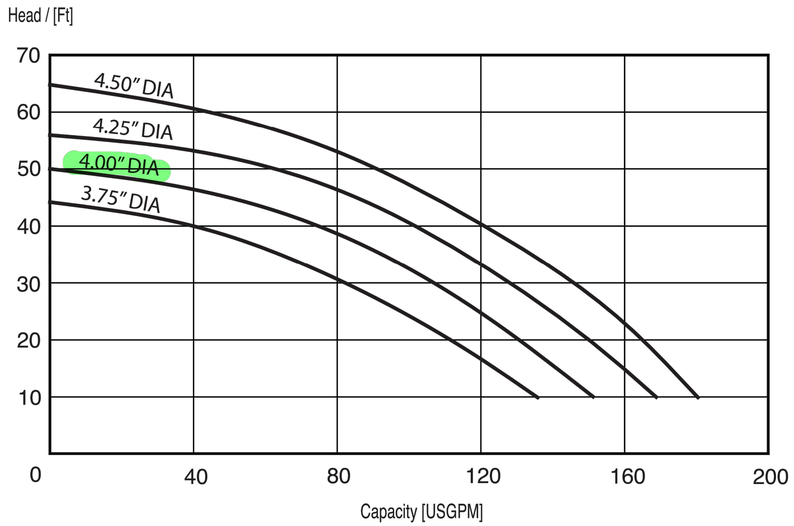

Note: Full diameter impeller included in price of pump. Consult factory for reduced diameter impeller and pricing.

EBARA Fluid Handling
www.pumpsebara.com
(t) 803 327 5005 • (f) 803 327 5097

1-197
rev. 05/15

4 PUMP INFORMATION

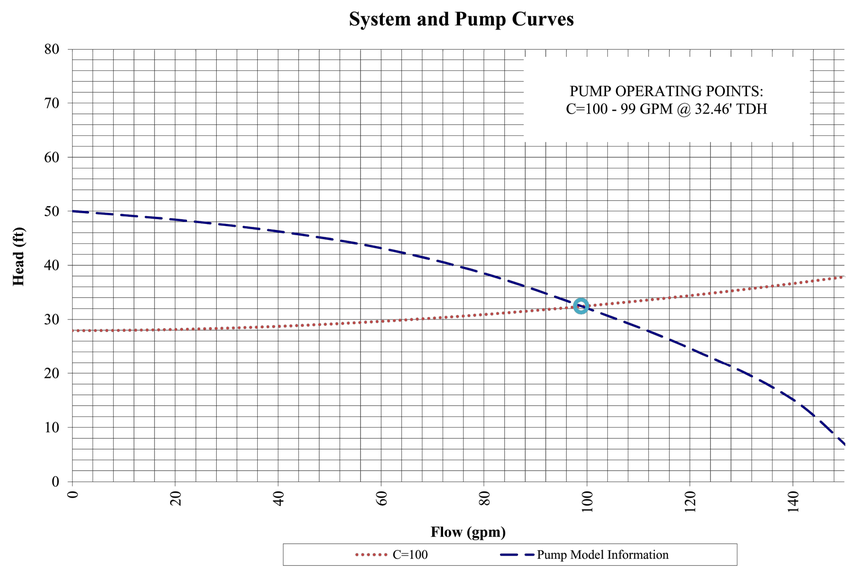

5 SYSTEM AND PUMP CURVE

No.	REVISIONS	DATE	BY

Kimley»Horn

© 2024 KIMLEY-HORN AND ASSOCIATES, INC.
10814 JOLLYVILLE ROAD, CAMPUS IV, SUITE 200, AUSTIN, TX 78759
PHONE: 512-418-1771 FAX: 512-418-1791
WWW.KIMLEY-HORN.COM
TEXAS REGISTERED ENGINEERING FIRM F-928

STATE OF TEXAS
TARA R. RAGGE
141851
LICENSED PROFESSIONAL ENGINEER
6/6/2024

KHA PROJECT	069284918
DATE	MAY 2024
SCALE:	AS SHOWN
DESIGNED BY:	ATN
DRAWN BY:	ATN
CHECKED BY:	TRR

LIFT STATION DETAILS II

2525 CR 172
INDUSTRIAL
CITY OF ROUND ROCK
WILLIAMSON COUNTY, TEXAS

SHEET NUMBER
50 OF 204

SDP24-00001

Plotted By: Nguyen, Alexis Date: June 06, 2024 03:47:36pm File Path: K:\AUS_Civil\069284918 — DAU3 Round Rock\LIFT STATION\CAD\PLANSHEETS\D-LS DETAILS.dwg
This document, together with the concepts and designs presented herein, as an instrument of service, is intended only for the specific purpose and client for which it was prepared. Reuse of and improper reliance on this document without written authorization and adaptation by Kimley-Horn and Associates, Inc. shall be without liability to Kimley-Horn and Associates, Inc.

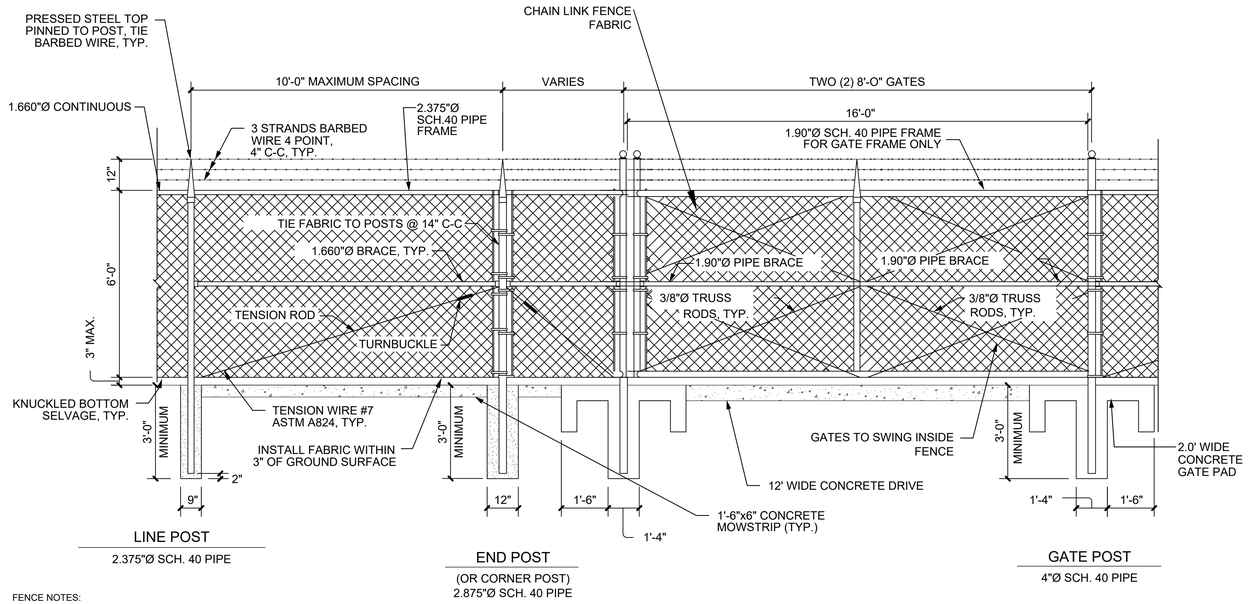

FENCE NOTES:

1. PIPE SIZES SHOWN ARE SCH. 40 PER ASTM F669.
2. PROVIDE FITTINGS FOR LOCKING GATE AND HEAVY DUTY PADLOCK KEYED TO THE OWNER'S MASTER.
3. BARBED WIRE SHOULD EXTEND OUTWARD FROM THE TOP OF FENCE AT A 45 DEGREE ANGLE WITH THE SMOOTH SIDE OF THE FENCE ON THE OUTSIDE WALL.

1 CHAIN LINK FENCE/GATE DETAIL
N.T.S

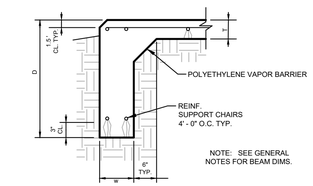

1 / S1 TYP. BEAM DETAIL

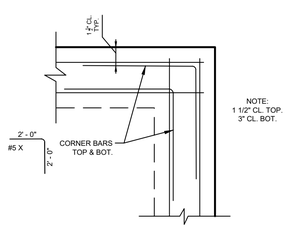

2 / S1 TYP. BEAM INTERSECTION DETAIL

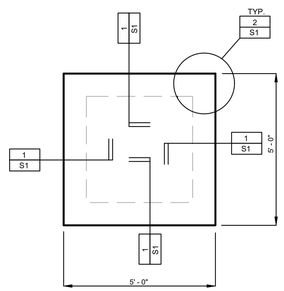

4 / S1 ODOR CONTROL PAD FOUNDATION

NOTE:

6" SLAB : REINFORCED WITH #4 @ 12" O.C. EACH WAY TOP AND BOTTOM
EXTERIOR BEAMS: 12" WIDE X 18" DEEP REINFORCED WITH 2-#5 TOP AND BOTTOM U.N.O.

3 ODOR CONTROL PAD FOUNDATION DETAIL
N.T.S

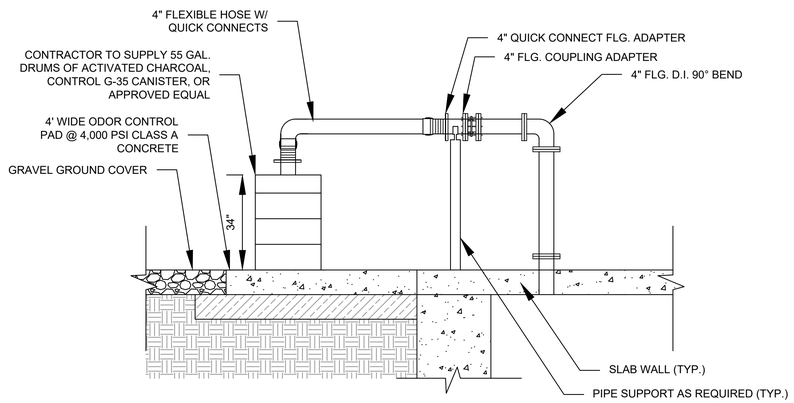

4 ODOR CONTROL DETAIL
N.T.S

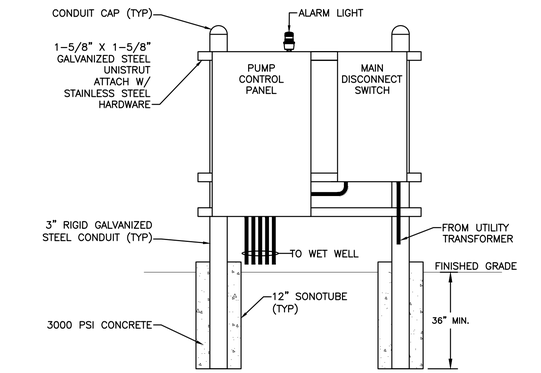

2 ELECTRICAL EQUIPMENT RACK DETAIL
N.T.S

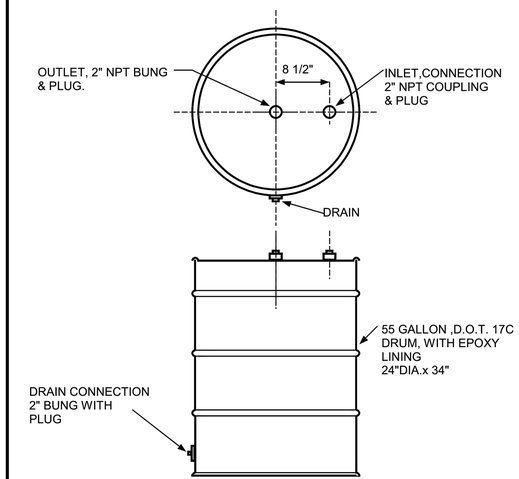

CARBTROL CORPORATION
39 RIVERSIDE AVENUE
WESTPORT CONN. 06880
(203) 226-5642

SCALE ----	PN-00101 PN-00102	BY R
DATE 10-1-85		REV 9-2-20

CARBTROL G-1

ARRANGEMENT | S | DWG 1113/2

No.	REVISIONS	DATE	BY

Kimley»Horn
© 2024 KIMLEY-HORN AND ASSOCIATES, INC.
10814 JOLLYVILLE ROAD, CAMPUS IV, SUITE 200, AUSTIN, TX 78759
PHONE: 512-418-1771 FAX: 512-418-1791
WWW.KIMLEY-HORN.COM
TEXAS REGISTERED ENGINEERING FIRM F-928

STATE OF TEXAS
TARA R. RAGOE
141851
LICENSED PROFESSIONAL ENGINEER
6/6/2024

KHA PROJECT	069284918
DATE	MAY 2024
SCALE	AS SHOWN
DESIGNED BY:	ATN
DRAWN BY:	ATN
CHECKED BY:	TRR

LIFT STATION DETAILS III

2525 CR 172
INDUSTRIAL
CITY OF ROUND ROCK
WILLIAMSON COUNTY, TEXAS

SHEET NUMBER
51 OF 204

SDP24-00001

Plotted By: Nguyen, Alexis Date: June 06, 2024 03:47:43pm File Path: K:\AUS_Civil\069284918 — DAU3 Round Rock\LIFT STATION\CAD\PLANSHEETS\D-LS DETAILS.dwg
This document, together with the concepts and designs presented herein, as an instrument of service, is intended only for the specific purpose and client for which it was prepared. Reuse of and improper reliance on this document without written authorization and adaptation by Kimley-Horn and Associates, Inc. shall be without liability to Kimley-Horn and Associates, Inc.

NEMA 4X STAINLESS STEEL ENCLOSURE
48"H x 36"W x 12"DP
OUTER DOOR NOT SHOWN

FRONT

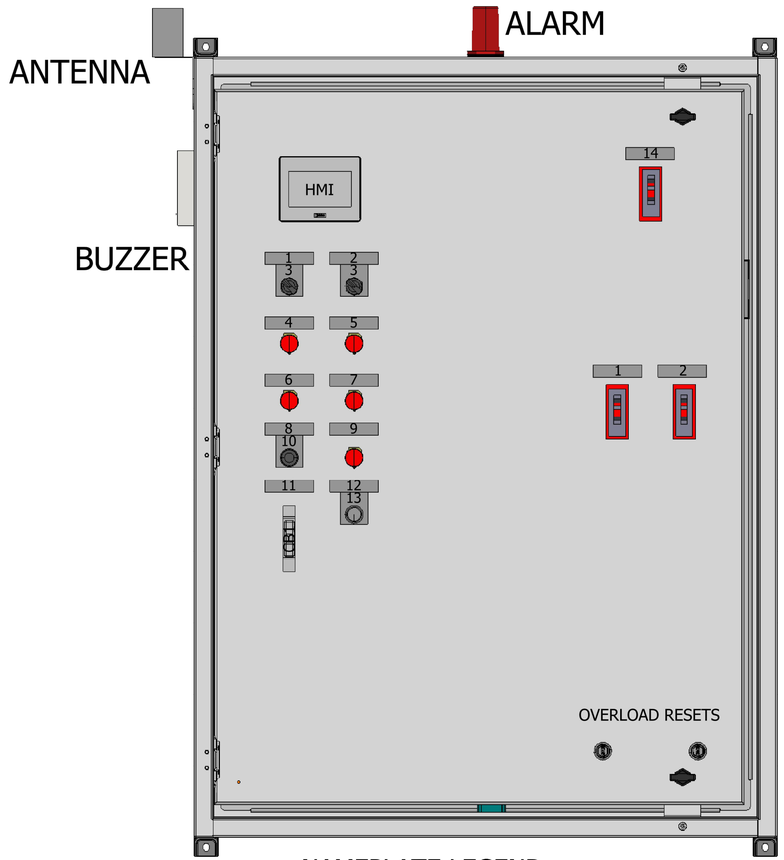

BACK PANEL

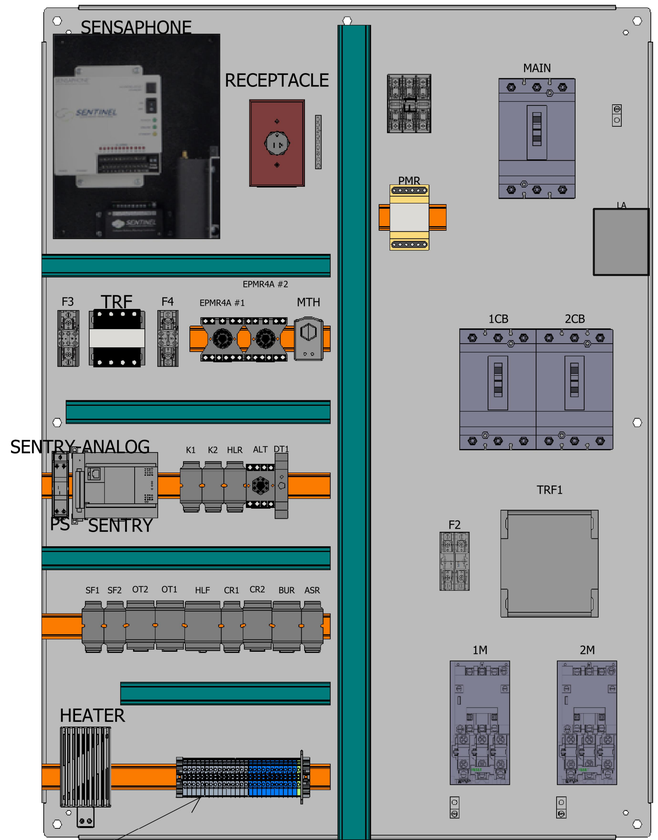

NAMEPLATE LEGEND

1. PUMP 1
2. PUMP 2
3. HAND OFF AUTO
4. PUMP 1 OVERTEMP
5. PUMP 2 OVERTEMP
6. PUMP 1 SEAL FAIL
7. PUMP 2 SEAL FAIL
8. ALARM
9. BACKUP ON
10. SILENCE
11. CONTROL
12. BACKUP
13. RESET
14. MAIN

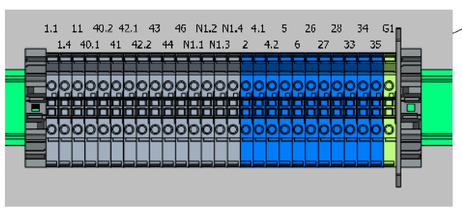

LAMINATED DRAWING REQUIRED

USEMCO INCORPORATED
1602 REZIN RD, TOMAH, WI 54660
PHONE: (608) 372-5911 FAX: (608) 372-5016 WWW.USEMCO.COM

CUSTOMER: MANSFIELD PUMPCOMPANY

PROJECT DESCRIPTION: 2525 CR 172 INDUSTRIAL

REV. NO.	REVISION	NAME	DATE

	NAME	DATE
DESIGNED BY:	nchawla	05/16/24
DRAWN BY:	NIKESH CHAWLA	05/17/24
CHECKED BY:		05/17/24

PAGE DESCRIPTION: PANEL LAYOUT

PREVIOUS PAGE	&/3	TOTAL NO. OF PAGES	1
PAGE NO.	1	DWG NO.	&PNL/1
NEXT PAGE	&EMC/1	JOB NO.	CP20205

1 ELECTRICAL PANEL DETAIL
N.T.S

Plotted By:Nguyen, Alexis Date:June 06, 2024 03:47:48pm File Path:K:\AUS_Civil\069284910 - DAU3 Round Rock\LIFT STATION\CAD\PLANSHEETS\D-LS DETAILS.dwg
This document, together with the concepts and designs presented herein, as an instrument of service, is intended only for the specific purpose and client for which it was prepared. Reuse of and improper reliance on this document without written authorization and adaptation by Kimley-Horn and Associates, Inc. shall be without liability to Kimley-Horn and Associates, Inc.

Kimley»Horn
© 2024 KIMLEY-HORN AND ASSOCIATES, INC.
10814 JOLLYVILLE ROAD, CAMPUS IV, SUITE 200, AUSTIN, TX 78759
PHONE: 512-418-1771 FAX: 512-418-1791
WWW.KIMLEY-HORN.COM
TEXAS REGISTERED ENGINEERING FIRM F-928

No.	REVISIONS	DATE	BY

STATE OF TEXAS
TARA R. RAGGE
141851
LICENSED PROFESSIONAL ENGINEER
6/6/2024

KHA PROJECT 069284918	DESIGNED BY:	AS SHOWN	ATN
DATE: MAY 2024	DRAWN BY:		ATN
SCALE:	CHECKED BY:		TRR

CONTROL PANEL DETAIL

2525 CR 172 INDUSTRIAL
CITY OF ROUND ROCK
WILLIAMSON COUNTY, TEXAS

SHEET NUMBER
52 OF 204

SDP24-00001

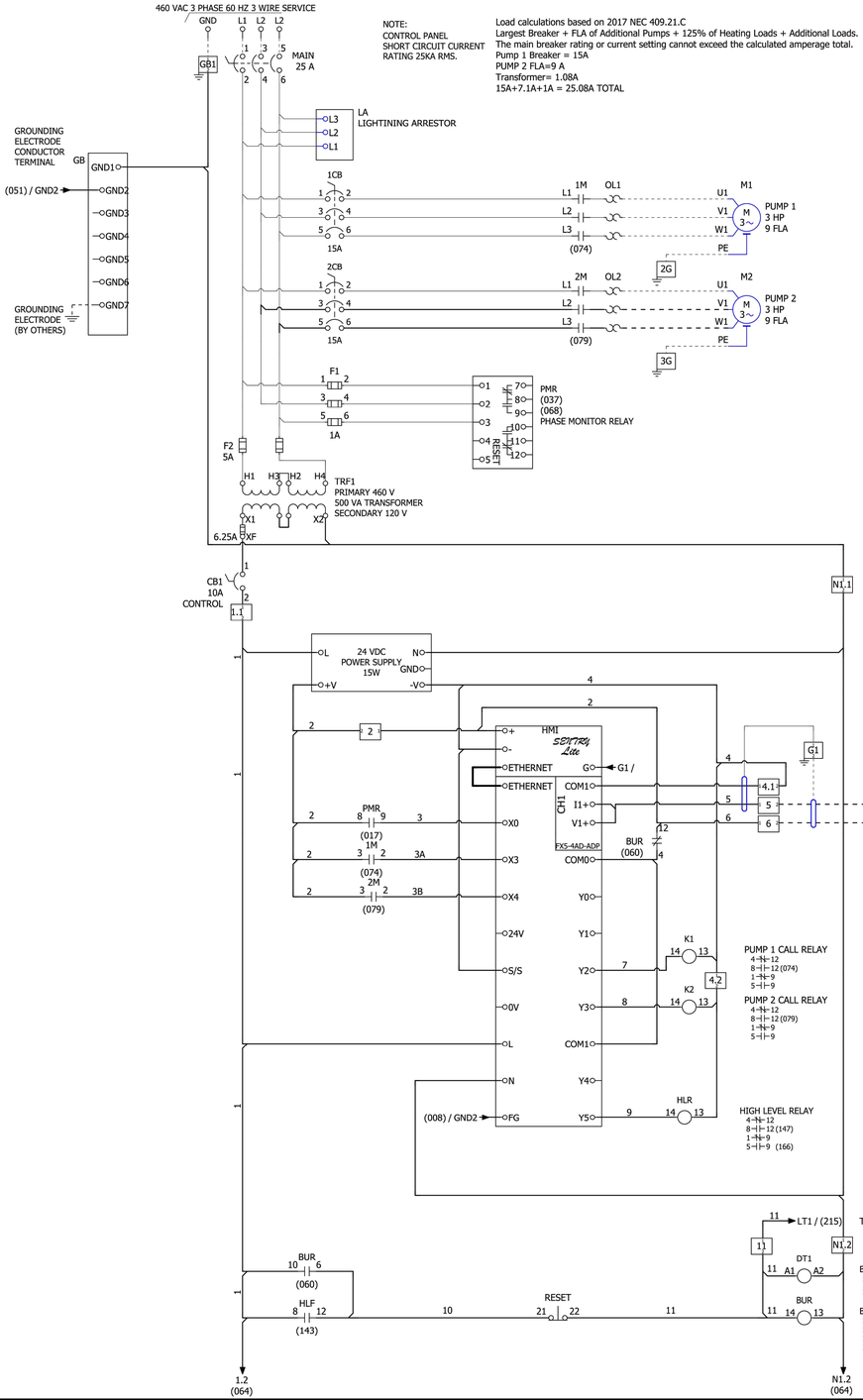

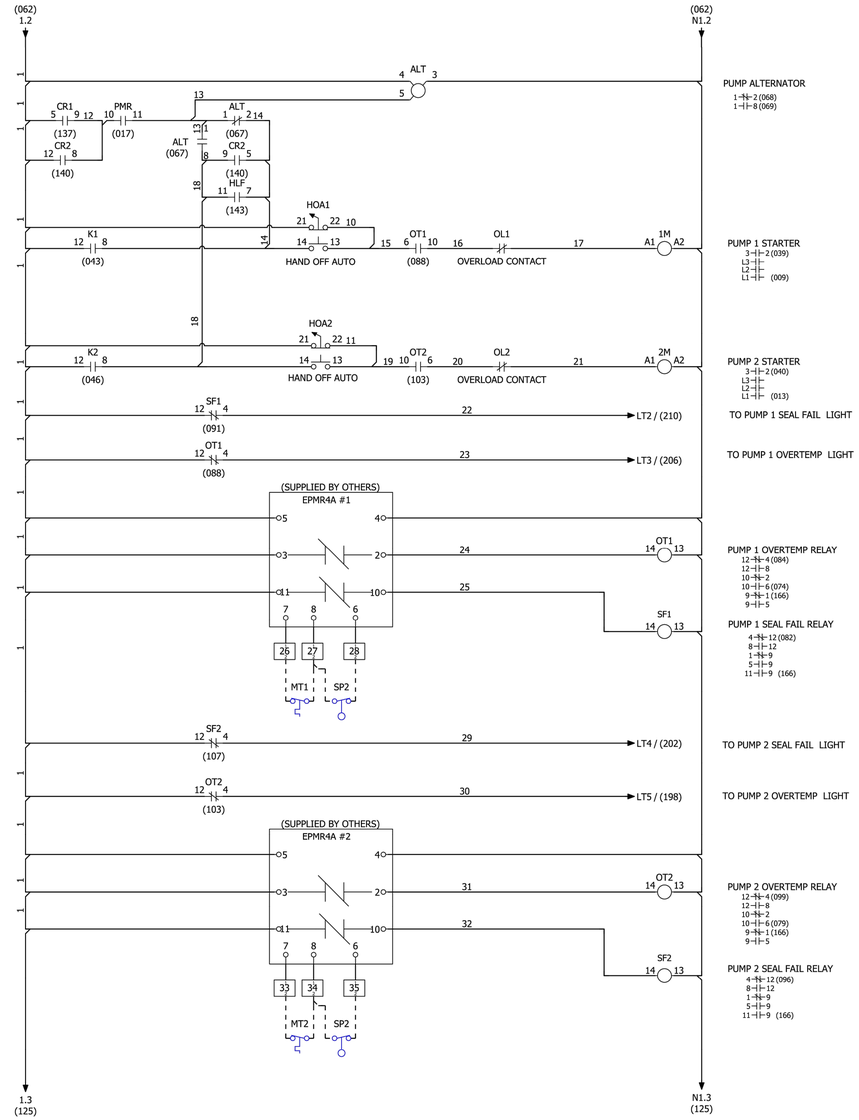

COLOR CODING

BLACK	—	LINE AND LOAD
RED	—	AC CONTROL
BLUE	—	DC CONTROL
WHITE	—	NEUTRAL
GREEN	—	GROUND
YELLOW	—	INTERCONNECTING
LT. BLUE	—	INTRINSICALLY SAFE

USEMCO INCORPORATED

1602 REZIN RD, TOMAH, WI 54660
PHONE: (608) 372-5911 FAX: (608) 372-5016 WWW.USEMCO.COM

USEMCO Universal Sanitary Equipment Manufacturing Company

CUSTOMER: MANSFIELD PUMPCOMPANY

PROJECT DESCRIPTION: 2525 CR 172 INDUSTRIAL

REV. NO.	REVISION	NAME	DATE

	NAME	DATE
DESIGNED BY:	nchawla	05/16/24
DRAWN BY:	NIKESH CHAWLA	05/17/24
CHECKED BY:		05/17/24

PAGE DESCRIPTION: SCHEMATIC

PREVIOUS PAGE	&PNL/1	TOTAL NO. OF PAGES	2	NEXT PAGE	2	PAGE NO.	1	DWG #	&EMC/1
								JOB #	CP20205

No.	REVISIONS	DATE	BY

Kimley»Horn
© 2024 KIMLEY-HORN AND ASSOCIATES, INC.
10814 JOLLYVILLE ROAD, CAMPUS IV, SUITE 200, AUSTIN, TX 78759
PHONE: 512-418-1771 FAX: 512-418-1791
WWW.KIMLEY-HORN.COM
TEXAS REGISTERED ENGINEERING FIRM F-928

STATE OF TEXAS
TARA R. RADDE
141851
LICENSED PROFESSIONAL ENGINEER
6/6/2024

KHA PROJECT	069284918
DATE	MAY 2024
SCALE:	AS SHOWN
DESIGNED BY:	ATN
DRAWN BY:	ATN
CHECKED BY:	TRR

LIFT STATION ELECTRICAL PLANS I

2525 CR 172 INDUSTRIAL
CITY OF ROUND ROCK
WILLIAMSON COUNTY, TEXAS

SHEET NUMBER
53 OF 204

SDP24-00001

Plotted By: Nguyen, Alexis Date: June 06, 2024 03:47:54pm File Path: K:\AUS_Civil\069284910 — DAU3 Round Rock\LIFT STATION\CAD\PLANSHEETS\D-LS DETAILS.dwg
This document, together with the concepts and designs presented herein, as an instrument of service, is intended only for the specific purpose and client for which it was prepared. Reuse of and improper reliance on this document without written authorization and adaptation by Kimley-Horn and Associates, Inc. shall be without liability to Kimley-Horn and Associates, Inc.

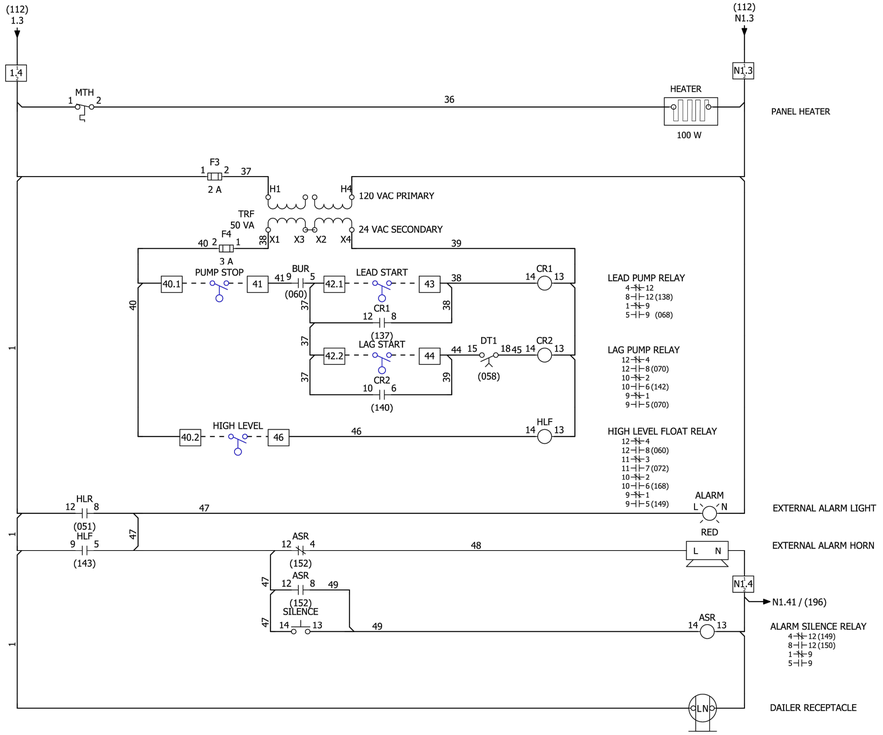

COLOR CODING		
BLACK	—	LINE AND LOAD
RED	—	AC CONTROL
BLUE	—	DC CONTROL
WHITE	—	NEUTRAL
GREEN	—	GROUND
YELLOW	—	INTERCONNECTING
LT. BLUE	—	INTRINSICALLY SAFE

NOTE:
CONTROL PANEL SHALL BEAR SERIALIZED U.L. 508A LABEL
WIRE MARKERS REQUIRED

USEMCO INCORPORATED

1602 REZIN RD, TOMAH, WI 54660
PHONE: (608) 372-5911 FAX: (608) 372-5016 WWW.USEMCO.COM

CUSTOMER: MANSFIELD PUMPCOMPANY

PROJECT DESCRIPTION: 2525 CR 172 INDUSTRIAL

REV. NO.	REVISION	NAME	DATE

	NAME	DATE
DESIGNED BY:	nchawla	05/16/24
DRAWN BY:	NIKESH CHAWLA	05/17/24
CHECKED BY:		05/17/24

PAGE DESCRIPTION: SCHEMATIC

PREVIOUS PAGE 1 | TOTAL NO. OF PAGES 2 | NEXT PAGE | PAGE NO. 2 | DWG # &EMC/2 | JOB # CP20205

No.	REVISIONS	DATE	BY

Kimley»Horn
© 2024 KIMLEY-HORN AND ASSOCIATES, INC.
10814 JOLLYVILLE ROAD, CAMPUS IV, SUITE 200, AUSTIN, TX 78759
PHONE: 512-418-1771 FAX: 512-418-1791
WWW.KIMLEY-HORN.COM
TEXAS REGISTERED ENGINEERING FIRM F-928

STATE OF TEXAS
TARA R. RADDE
141851
LICENSED
PROFESSIONAL ENGINEER
6/6/2024

KHA PROJECT	069284918
DATE	MAY 2024
SCALE:	AS SHOWN
DESIGNED BY:	ATN
DRAWN BY:	ATN
CHECKED BY:	TRR

LIFT STATION
ELECTRICAL PLANS II

2525 CR 172
INDUSTRIAL
CITY OF ROUND ROCK
WILLIAMSON COUNTY, TEXAS

SHEET NUMBER
54 OF 204

SDP24-00001

Plotted By:Nguyen, Alexis Date:June 06, 2024 03:48:01pm File Path:K:\AUS_Civil\069284910 - DAU3 Round Rock\LIFT STATION\CAD\PLANSHEETS\D-LS DETAILS.dwg
This document, together with the concepts and designs presented herein, as an instrument of service, is intended only for the specific purpose and client for which it was prepared. Reuse of and improper reliance on this document without written authorization and adaptation by Kimley-Horn and Associates, Inc. shall be without liability to Kimley-Horn and Associates, Inc.

Plotted By:Erik Garcia Date:June 05, 2024 07:05:44am File Path:H:\Kimley-Horn\2023\108.23 Lift Station Round Rock\108.23 S2.dwg
This document, together with the concepts and designs presented herein, as an instrument of service, is intended only for the specific purpose and client for which it was prepared. Reuse of and improper reliance on this document without written authorization and adaptation by Kimley-Horn and Associates, Inc. shall be without liability to Kimley-Horn and Associates, Inc.

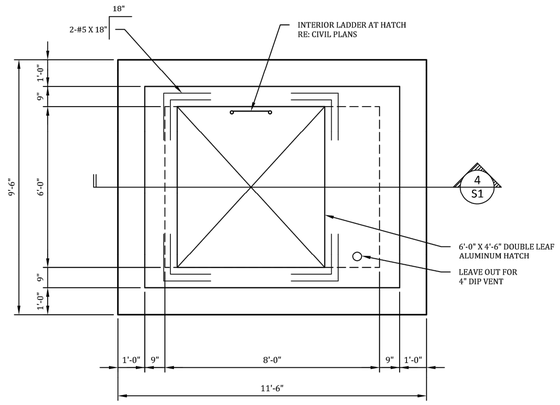

2 S1 VALVE VAULT PLAN VIEW - DIM CONTROL

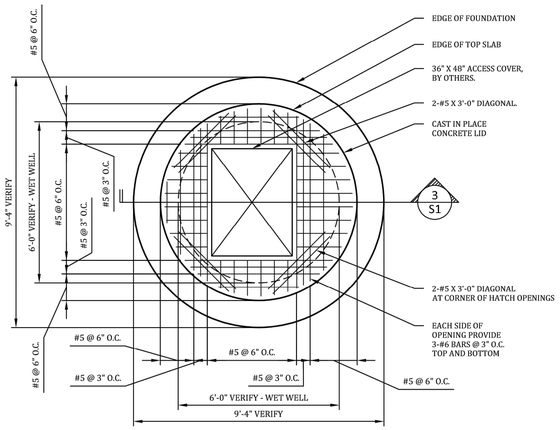

1 S1 WET WELL PLAN VIEW AND CAP REINF. AND DIM CONTROL

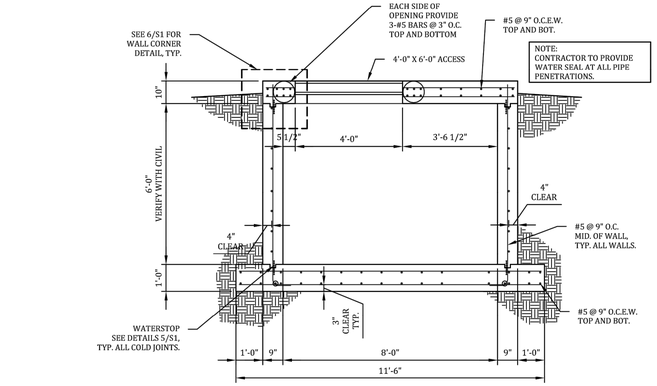

4 S1 VALVE VAULT CROSS SECTION

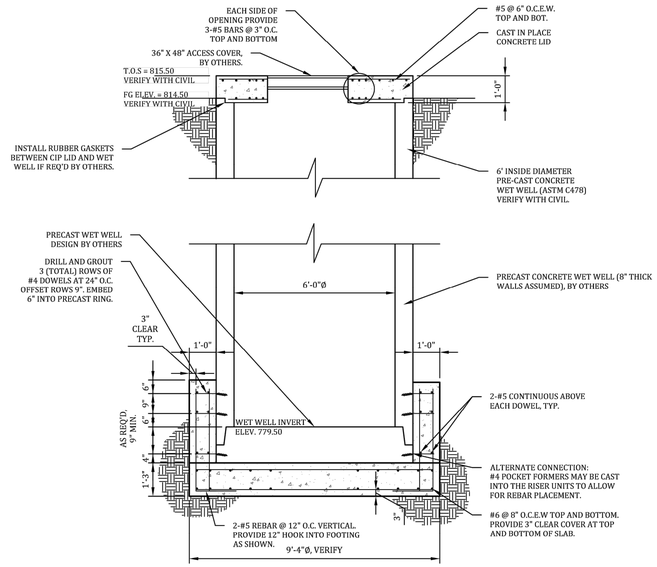

3 S1 WET WELL ANTI-FLOTATION RING/FOUNDATION AND CIP WET WELL ROOF CROSS SECTION

NOTES:

1) WET WELL ANTI-FLOTATION RING HAS BEEN DESIGNED FOR 35'-0" WET WELL DEPTH PER KIMLEY HORN PLANS DATED MAY 22, 2024.
2) ALL GROUTING IS TO BE DONE USING HILTI HIT-RE 500 V3 EPOXY MORTAR. ALL REBAR TO BE EPOXY-COATED.
3) CONTRACTOR TO VERIFY ALL DIMENSIONS AND NOTIFY ENGINEER OF DISCREPANCIES BEFORE PROCEEDING WITH CONSTRUCTION. AN 8" WET WELL WALL THICKNESS IS ASSUMED IN GEOMETRY OF ANTI-FLOTATION RING/FOUNDATION AND CIP WET WELL ROOF.

NOTE:
COORDINATE ALL PENETRATIONS AND ANCHORING WITH THE CIVIL, MECHANICAL, AND ELECTRICAL DRAWINGS.

CONTRACTOR TO VERIFY ALL DIMENSIONS WITH EQUIPMENT SIZES PRIOR TO CONSTRUCTION

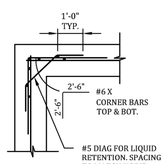

6 S1 WALL CORNER REINFORCING

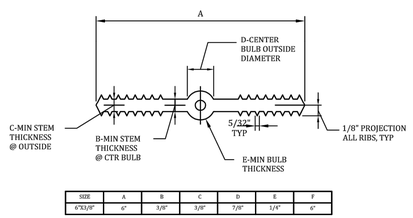

SIZE	A	B	C	D	E	F
6"X3/8"	6"	3/8"	3/8"	7/8"	1/4"	6"

NOTES:

1. DIM REQUIREMENTS INDICATED SHOULD BE GIVEN TO SUPPLIERS PRIOR TO PLACING ORDERS.
2. NON-ROUND CENTER BULBS SHALL HAVE A MIN OUTSIDE DIM OF "D".
3. SPLICING AT CORNERS AND INTERSECTIONS SHALL BE MADE PER MANUFACTURER RECOMMENDATIONS TO PROVIDE CONTINUOUS WATERTIGHT SEAL.

5 S1 WATER STOP DETAIL

GENERAL NOTES

CONCRETE MIX DESIGN:

1. ALL CONCRETE SHALL HAVE MINIMUM COMPRESSIVE STRENGTH f'c=3600 psi, TxDOT CLASS C CONCETE, AT 28 DAYS. PROVIDE 5" SLUMP. ADDING WATER AT SITE IS NOT PERMITTED.

2. THE CONCRETE MIX DESIGNS SHALL BE PROPORTIONED TO MINIMIZE THE ADVERSE EFFECTS OF CLIMATE AT THE TIME OF YEAR THE CONCRETE IS PLACED. USE OF WORKABILITY ADMIXTURES AND AIR ENTRAINMENT IS PERMITTED AND MUST BE NOTED ON MIX DESIGNS.

3. USE OF CALCIUM CHLORIDE ADMIXTURES IS NOT PERMITTED.

4. THE BUILDER/CONTRACTOR IS RESPONSIBLE FOR MAKING CONCRETE COMPRESSIVE STRENGTH CYLINDER TESTS AS REQUIRED BY A.C.I. 318-14.

CONCRETE REINFORCEMENT:

1. ALL REINFORCING STEEL SHALL BE NEW BILLET STEEL CONFORMING TO A.S.T.M. A-615 GRADE 60. REINFORCEMENT SHALL BE FREE OF RUST AND DELETERIOUS MATERIALS.

CONSTRUCTION:

1. SUFFICIENT SUPPORT BARS AND CHAIRS SHALL BE PROVIDED TO MAINTAIN PROPER REINFORCEMENT PROFILE THROUGHOUT CONCRETE PLACEMENT. BARS SHALL BE SUPPORTED ON CHAIRS AND TIED AT ALL INTERSECTIONS. USE 4'-0" MAXIMUM SPACING FOR SUPPORT CHAIRS.

2. INSURE PROPER VIBRATION OF CONCRETE AROUND ALL REINFORCEMENT.

3. TRENCHES FOR DEEP PLUMBING LINES SHOULD NOT BE LOCATED DIRECTLY UNDER (PARALLEL TO) BEAMS.

4. ALL SLABS AND BEAMS SHALL BE PROPERLY GRADED AND LEVELED. A THIN (1"±) LAYER OF SAND MAY BE USED UNDER THE SLAB.

5. A POLYETHYLENE VAPOR BARRIER SHALL BE PLACED BETWEEN THE CONCRETE AND SOIL. A THIN LAYER OF LEVELING SAND MAY BE PLACED ON TOP OF THE POLYETHYLENE.

6. CONTRACTOR NOTE: BEFORE PROCEEDING WITH ANY WORK OR ORDERING OF MATERIALS, THE CONTRACTOR AND/OR SUBCONTRACTORS SHALL VERIFY ALL MEASUREMENTS AND LOCATION OF BUILDING COMPONENTS AND THEIR INTERRELATIONSHIP AT THE BUILDING SITE AND FOR THEIR CORRECTNESS.

DESIGN:

1. THE REINFORCED CONCRETE DESIGN OF THIS FOUNDATION STRUCTURE HAS BEEN ANALYZED USING STANDARD ENGINEERING PRACTICES.

2. THE REINFORCED CONCRETE SLAB-ON-GRADE DESIGN SHOWN REFLECTS THE MINIMUM REQUIREMENTS NEEDED TO ALLOW THIS STRUCTURE SYSTEM TO ADEQUATELY PERFORM IN CONJUNCTION WITH THE SOIL PARAMETERS NOTED BELOW. THE INTENT IS NOT TO LIMIT SOIL MOVEMENT, BUT INSTEAD TO LIMIT EXCESSIVE FOUNDATION FLEXURE SO THAT DIFFERENTIAL MOVEMENT WILL NOT CAUSE UNREASONABLE DISTRESS.

3. FOUNDATION MAINTENANCE: DRAINAGE AWAY FROM THE FOUNDATION SHALL BE MAINTAINED AT ALL TIMES SO THAT GROUND WATER WILL NOT COLLECT ADJACENT TO OR UNDER THE SLAB. THE INTENT IS TO MAINTAIN AN EVEN SOIL MOISTURE CONTENT AROUND THE BUILDING SO THAT DIFFERENTIAL SOIL MOVEMENT IS LIMITED.

4. HEAVY VEGETATION SUCH AS TREES WITHIN 10-15 FEET OF THE PERIMETER OF THE FOUNDATION MAY CAUSE EXCESSIVE WATER REMOVAL FROM THE SOIL NEAR OR UNDER THE FOUNDATION. SUCH UNANTICIPATED PARAMETERS ARE NOT CONSIDERED UNLESS REPORTED BY THE CONTRACTOR TO FALKOFSKE ENGINEERING, INC. IN WRITING PRIOR TO DESIGN.

5. GEO-TECHNICAL INVESTIGATION PROVIDED BY: ROCK ENGINEERING & TESTING LABORATORY, INC.

REPORT NO. G221847
DATED: 12/23/21

ALLOWABLE SOIL BEARING PRESSURE	(BEARING IN CLAY)	Qa = 3,000 psf
ALLOWABLE SOIL BEARING PRESSURE	(BEARING IN BEDROCK)	Qa = 15,000 psf
MINIMUM DEPTH OF FOUNDATION INTO BEARING SOIL		12"
PLASTICITY INDEX		PI = 28

6. ALL FILL AREAS AND MATERIALS SHALL BE PLACED, COMPACTED, AND TESTED PER THE GEO-TECHNICAL ENGINEERS RECOMMENDATIONS.

7. BUILDING CODE: 2015 INTERNATIONAL BUILDING CODE

INSPECTIONS:

1. INSPECTIONS ARE TO BE AS REQUIRED BY LOCAL BUILDING DEPARTMENT.

2. FALKOFSKE ENGINEERING INC. SHALL BE CALLED FOR CONSTRUCTION REVIEW OF FOUNDATION BEAMS AND REINFORCEMENT PRIOR TO PLACING CONCRETE.

CONTRACTORS OPTION:
The use of precast concrete bar supports (commonly called "Dobies") to support slab reinforcement or beam reinforcement for concrete slab on grade foundations is acceptable. It is important that the precast concrete bar supports are in fact made of concrete with an allowable f'c of 3000 psi. If the pads purchased are from the Aztec Concrete Accessories, Inc. which produces them, then they are pre-approved by Falkofske Engineering, Inc.

As referenced by Aztec Concrete Accessories, Inc., the Concrete Reinforcing Steel Institute (CRSI) references the use of concrete bar supports in the Manual of Standard Practice. The Manual of Standard Practice shows the use of wire dobies, plain dobies, combination (those with grooves), and dowel dobies (those with a hole for dowel bar support). The ACI also references the use of dobies as a standard practice, and the CRSI Manual of Standard Practice as a source for placing layouts.

It is our opinion that precast concrete bar supports do a much better job of supporting slab reinforcement than plastic chairs which is typical in the today's Slab on Grade foundation construction.

Brick veneer of either clay brick or concrete brick shall not be used in any Falkofske Engineering, Inc. foundation design.

No.	REVISIONS	DATE	BY

Kimley»Horn
© 2024 KIMLEY-HORN AND ASSOCIATES, INC.
10814 JOLLYVILLE ROAD, CAMPUS IV, SUITE 200, AUSTIN, TX 78759
PHONE: 512-418-1771 FAX: 512-418-1791
WWW.KIMLEY-HORN.COM
TEXAS REGISTERED ENGINEERING FIRM F-928

STATE OF TEXAS
ERIK GARCIA
147076
LICENSED
PROFESSIONAL ENGINEER
06-05-2024

KHA PROJECT 062284918			
DATE	JUNE 5, 2024	SCALE:	3/8" = 1'-0"
		DESIGNED BY:	EG
		DRAWN BY:	EG
		CHECKED BY:	TJW

Structural Engineering Consultants
TX Reg. Engineering Firm F-4038
722 North Fielder Road
Arlington, Texas 76012
(817) 261-8300
FEI Job No. 1108.23
FALKOFSKE ENGINEERING

2525 CR 172
INDUSTRIAL
CITY OF ROUND ROCK
WILLIAMSON COUNTY, TEXAS

SHEET NUMBER
55 OF 204

SDP24-00001

SECTION 7:
TEMPORARY STORMWATER SECTION

Temporary Stormwater Section

Texas Commission on Environmental Quality

for Regulated Activities on the Edwards Aquifer Recharge Zone and Relating to 30 TAC §213.5(b)(4)(A), (B), (D)(I) and (G); Effective June 1, 1999

To ensure that the application is administratively complete, confirm that all fields in the form are complete, verify that all requested information is provided, consistently reference the same site and contact person in all forms in the application, and ensure forms are signed by the appropriate party.

Note: Including all the information requested in the form and attachments contributes to more streamlined technical reviews.

Signature

To the best of my knowledge, the responses to this form accurately reflect all information requested concerning the proposed regulated activities and methods to protect the Edwards Aquifer. This **Temporary Stormwater Section** is hereby submitted for TCEQ review and executive director approval. The application was prepared by:

Print Name of Customer/Agent: Nicholas C. Brown, P.E.

Date: 05/15/2025

Signature of Customer/Agent:



Regulated Entity Name: 2525 CR 172 Industrial

Project Information

Potential Sources of Contamination

Examples: Fuel storage and use, chemical storage and use, use of asphaltic products, construction vehicles tracking onto public roads, and existing solid waste.

1. Fuels for construction equipment and hazardous substances which will be used during construction:

   ☐ The following fuels and/or hazardous substances will be stored on the site: _____

   These fuels and/or hazardous substances will be stored in:

   ☐ Aboveground storage tanks with a cumulative storage capacity of less than 250 gallons will be stored on the site for less than one (1) year.

☐ Aboveground storage tanks with a cumulative storage capacity between 250 gallons and 499 gallons will be stored on the site for less than one (1) year.

☐ Aboveground storage tanks with a cumulative storage capacity of 500 gallons or more will be stored on the site. An Aboveground Storage Tank Facility Plan application must be submitted to the appropriate regional office of the TCEQ prior to moving the tanks onto the project.

☒ Fuels and hazardous substances will not be stored on the site.

2. ☒ **Attachment A - Spill Response Actions**. A site specific description of the measures to be taken to contain any spill of hydrocarbons or hazardous substances is attached.

3. ☒ Temporary aboveground storage tank systems of 250 gallons or more cumulative storage capacity must be located a minimum horizontal distance of 150 feet from any domestic, industrial, irrigation, or public water supply well, or other sensitive feature.

4. ☒ **Attachment B - Potential Sources of Contamination**. A description of any activities or processes which may be a potential source of contamination affecting surface water quality is attached.

Sequence of Construction

5. ☒ **Attachment C - Sequence of Major Activities**. A description of the sequence of major activities which will disturb soils for major portions of the site (grubbing, excavation, grading, utilities, and infrastructure installation) is attached.

   ☒ For each activity described, an estimate (in acres) of the total area of the site to be disturbed by each activity is given.

   ☒ For each activity described, include a description of appropriate temporary control measures and the general timing (or sequence) during the construction process that the measures will be implemented.

6. ☒ Name the receiving water(s) at or near the site which will be disturbed or which will receive discharges from disturbed areas of the project: N/A

Temporary Best Management Practices (TBMPs)

Erosion control examples: tree protection, interceptor swales, level spreaders, outlet stabilization, blankets or matting, mulch, and sod. Sediment control examples: stabilized construction exit, silt fence, filter dikes, rock berms, buffer strips, sediment traps, and sediment basins. Please refer to the Technical Guidance Manual for guidelines and specifications. All structural BMPs must be shown on the site plan.

7. ☒ **Attachment D – Temporary Best Management Practices and Measures**. TBMPs and measures will prevent pollution of surface water, groundwater, and stormwater. The construction-phase BMPs for erosion and sediment controls have been designed to retain sediment on site to the extent practicable. The following information is attached:

- [X] A description of how BMPs and measures will prevent pollution of surface water, groundwater or stormwater that originates upgradient from the site and flows across the site.
- [X] A description of how BMPs and measures will prevent pollution of surface water or groundwater that originates on-site or flows off site, including pollution caused by contaminated stormwater runoff from the site.
- [X] A description of how BMPs and measures will prevent pollutants from entering surface streams, sensitive features, or the aquifer.
- [X] A description of how, to the maximum extent practicable, BMPs and measures will maintain flow to naturally-occurring sensitive features identified in either the geologic assessment, TCEQ inspections, or during excavation, blasting, or construction.

8. [X] The temporary sealing of a naturally-occurring sensitive feature which accepts recharge to the Edwards Aquifer as a temporary pollution abatement measure during active construction should be avoided.

   - [ ] **Attachment E - Request to Temporarily Seal a Feature**. A request to temporarily seal a feature is attached. The request includes justification as to why no reasonable and practicable alternative exists for each feature.
   - [X] There will be no temporary sealing of naturally-occurring sensitive features on the site.

9. [X] **Attachment F - Structural Practices**. A description of the structural practices that will be used to divert flows away from exposed soils, to store flows, or to otherwise limit runoff discharge of pollutants from exposed areas of the site is attached. Placement of structural practices in floodplains has been avoided.

10. [X] **Attachment G - Drainage Area Map**. A drainage area map supporting the following requirements is attached:

    - [X] For areas that will have more than 10 acres within a common drainage area disturbed at one time, a sediment basin will be provided.
    - [ ] For areas that will have more than 10 acres within a common drainage area disturbed at one time, a smaller sediment basin and/or sediment trap(s) will be used.
    - [ ] For areas that will have more than 10 acres within a common drainage area disturbed at one time, a sediment basin or other equivalent controls are not attainable, but other TBMPs and measures will be used in combination to protect down slope and side slope boundaries of the construction area.
    - [ ] There are no areas greater than 10 acres within a common drainage area that will be disturbed at one time. A smaller sediment basin and/or sediment trap(s) will be used in combination with other erosion and sediment controls within each disturbed drainage area.

☐ There are no areas greater than 10 acres within a common drainage area that will be disturbed at one time. Erosion and sediment controls other than sediment basins or sediment traps within each disturbed drainage area will be used.

11. ☒ **Attachment H - Temporary Sediment Pond(s) Plans and Calculations**. Temporary sediment pond or basin construction plans and design calculations for a proposed temporary BMP or measure have been prepared by or under the direct supervision of a Texas Licensed Professional Engineer. All construction plans and design information must be signed, sealed, and dated by the Texas Licensed Professional Engineer. Construction plans for the proposed temporary BMPs and measures are attached.

    ☐ N/A

12. ☒ **Attachment I - Inspection and Maintenance for BMPs.** A plan for the inspection of each temporary BMP(s) and measure(s) and for their timely maintenance, repairs, and, if necessary, retrofit is attached. A description of the documentation procedures, recordkeeping practices, and inspection frequency are included in the plan and are specific to the site and/or BMP.

13. ☒ All control measures must be properly selected, installed, and maintained in accordance with the manufacturer's specifications and good engineering practices. If periodic inspections by the applicant or the executive director, or other information indicate a control has been used inappropriately, or incorrectly, the applicant must replace or modify the control for site situations.

14. ☒ If sediment escapes the construction site, off-site accumulations of sediment must be removed at a frequency sufficient to minimize offsite impacts to water quality (e.g., fugitive sediment in street being washed into surface streams or sensitive features by the next rain).

15. ☒ Sediment must be removed from sediment traps or sedimentation ponds not later than when design capacity has been reduced by 50%. A permanent stake will be provided that can indicate when the sediment occupies 50% of the basin volume.

16. ☒ Litter, construction debris, and construction chemicals exposed to stormwater shall be prevented from becoming a pollutant source for stormwater discharges (e.g., screening outfalls, picked up daily).

Soil Stabilization Practices

Examples: establishment of temporary vegetation, establishment of permanent vegetation, mulching, geotextiles, sod stabilization, vegetative buffer strips, protection of trees, or preservation of mature vegetation.

17. ☒ **Attachment J - Schedule of Interim and Permanent Soil Stabilization Practices**. A schedule of the interim and permanent soil stabilization practices for the site is attached.

18. [X] Records must be kept at the site of the dates when major grading activities occur, the dates when construction activities temporarily or permanently cease on a portion of the site, and the dates when stabilization measures are initiated.

19. [X] Stabilization practices must be initiated as soon as practicable where construction activities have temporarily or permanently ceased.

Administrative Information

20. [X] All structural controls will be inspected and maintained according to the submitted and approved operation and maintenance plan for the project.

21. [X] If any geologic or manmade features, such as caves, faults, sinkholes, etc., are discovered, all regulated activities near the feature will be immediately suspended. The appropriate TCEQ Regional Office shall be immediately notified. Regulated activities must cease and not continue until the TCEQ has reviewed and approved the methods proposed to protect the aquifer from any adverse impacts.

22. [X] Silt fences, diversion berms, and other temporary erosion and sediment controls will be constructed and maintained as appropriate to prevent pollutants from entering sensitive features discovered during construction.

SPILL RESPONSE REACTIONS

If there is an accidental spill on site, the contractor shall respond with appropriate action. All onsite personnel will be trained to perform and be knowledgeable of the spill response actions. The contractor will be required to contact the owner and in turn the owner will contact the TCEQ in the event of a spill on site. In addition to the following guidance, reference the latest version of TCEQ's Technical Guidance Manual (TGM) RG-348 Section 2.4.16.

Cleanup

- Clean up leaks and spills immediately.
- Use a rag for small spills on paved surfaces, a damp mop for general cleanup, and absorbent material for larger spills. If the spilled material is hazardous, then the used cleanup materials are also hazardous and must be disposed of as hazardous waste.
- Never hose down or bury dry material spills. Clean up as much of the material as possible and dispose of properly. See the waste management BMPs in this section for specific information.

Minor Spills

- Minor spills typically involve small quantities of oil, gasoline, paint, etc. which can be controlled by the first responder at the discovery of the spill.
- Use absorbent materials on small spills rather than hosing down or burying the spill.
- Absorbent materials should be promptly removed and disposed of properly.
- Follow the practice below for a minor spill:

▪ Contain the spread of the spill.
▪ Recover spilled materials.
▪ Clean the contaminated area and properly dispose of contaminated materials.

Semi-Significant Spills

Semi-significant spills still can be controlled by the first responder along with the aid of other personnel such as laborers and the foreman, etc. This response may require the cessation of all other activities.

Spills should be cleaned up immediately:

- Contain spread of the spill.
- Notify the project foreman immediately.
- If the spill occurs on paved or impermeable surfaces, clean up using "dry" methods (absorbent materials, cat litter and/or rags). Contain the spill by encircling with absorbent materials and do not let the spill spread widely.
- If the spill occurs in dirt areas, immediately contain the spill by constructing an earthen dike. Dig up and properly dispose of contaminated soil.
- If the spill occurs during rain, cover spill with tarps or other material to prevent contaminating runoff.

Significant/Hazardous Spills

For significant or hazardous spills that are in reportable quantities:

- Notify the TCEQ by telephone as soon as possible and within 24 hours at (512)339-2929 (Austin) or 210-490-3096 (San Antonio) between 8 AM and 5 PM. After hours, contact the Environmental Release Hotline at 1-800-832-8224. It is the contractor's responsibility to have all emergency phone numbers at the construction site.
- For spills of federal reportable quantities, in conformance with the requirements in 40 CFR parts 110,119, and 302, the contractor should notify the National Response Center at (800) 424-8802.
- Notification should first be made by telephone and followed up with a written report.

- The services of a spills contractor or a Haz-Mat team should be obtained immediately. Construction personnel should not attempt to clean up until the appropriate and qualified staffs have arrived at the job site.
- Other agencies which may need to be consulted include, but not limited to, the City Police Department, County Sheriff Office, Fire Departments, etc.

POTENTIAL SOURCES OF CONTAMINATION

Potential Source: Oil, grease, fuel, and hydraulic fluid contamination from construction equipment and vehicle dripping.

Preventative Measures: Vehicle maintenance will be performed within the construction staging area or a local maintenance shop.

Potential Source: Miscellaneous trash and litter from construction workers and material wrappings.

Preventative Measures: Trash containers will be placed throughout the site to encourage proper disposal of trash.

Potential Source: Silt leaving the site.

Preventative Measures: Contractor will install all temporary best management practices prior to start of construction including the stabilized construction entrance to prevent tracking onto adjoining streets.

Potential Source: Construction Debris.

Preventative Measures: Construction debris will be monitored daily by contractor. Debris will be collected weekly and placed in disposal bins. Situations requiring immediate attention will be addressed on a case-by-case basis.

Potential Source: Soil and Mud from Construction Vehicle tires as they leave the site.

Preventative Measures: A stabilized construction exit shall be utilized as vehicles leave the site. Any soil, mud, etc. carried from the project onto public roads shall be cleaned up within 24 hours.

Potential Source: Sediment from soil, sand, gravel and excavated materials stock piled on site.

Preventative Measures: Silt fence shall be installed on the down gradient side of the stock piled materials. Reinforced rock berms shall be installed at all downstream discharge locations.

Potential Source: Portable toilet spill.

Preventative Measures: Toilets on the site will be emptied on a regular basis by the contracted toilet company.

SEQUENCE OF MAJOR ACTIVITIES

The installation of erosion and sedimentation controls for this SCS shall occur prior to any excavation of materials or major disturbances on the site. The sequence of major construction activities will be as follows. Approximate acreage to be disturbed is listed in parentheses next to each activity.

Intended Schedule or Sequence of Major Activities:

1. Construct Access (1.01 Acres)
2. Installation of Temporary BMPs (1.01 Acres)
3. Initiate Grubbing and Topsoil Stripping of Site (1.01 Acres)
4. Rough Subgrade Preparation (earthwork, grading, street and drainage excavation and embankment) (1.01 Acres)
5. Wet and Dry Utility Construction (1.01 Acres)
6. Final Subgrade Preparation (1.01 Acres)
7. Installation of Base Materials (1.01 Acres)
8. Concrete (foundations, curbs, flatwork) (1.01 Acres)
9. Building Construction (0 Acres)
10. Paving Activities (1.01 Acres)
11. Topsoil, Irrigation and Landscaping (1.01 Acres)
12. Site cleanup and Removal of Temporary BMPs (1.01 Acres)

Maximum total construction time is not expected to exceed 18 months.

TEMPORARY BEST MANAGEMENT PRACTICES AND MEASURES

A. No storm water originates up gradient that impacts the site. An upstream off-site area will bypass through an existing channel.

B. Temporary BMPs will be installed prior to soil disturbing construction activity. Silt fencing will be placed along the down-gradient sides of the property to prevent silt from escaping the construction area. A temporary construction entrance will be placed on site to reduce vehicle "tracking" onto adjoining streets. A concrete washout pit will be used to collect all excess concrete during construction.

BMPs for this project will protect surface water or groundwater from turbid water, phosphorus, sediment, oil, and other contaminants, which may mobilize in storm water flows by slowing the flow of runoff to allow sediment and suspended solids to settle out of the runoff.

Practices may also be implemented on site for interim and permanent stabilization. Stabilization practices may include but are not limited to: establishment of temporary vegetation, establishment of permanent vegetation, mulching, geotextiles, sod stabilization, vegetative buffer strips, protection of existing trees and vegetation, and other similar measures.

C. There are six sensitive features located in on-site, as noted in the geologic assessment. A buffer will be provided for Feature 4 and 5 in all directions. Any excavation within 50 feet of the feature will be avoided. We are not proposing and fill or covering of the sensitive features.

There are no surface streams within the boundaries of the project. The temporary onsite BMPs will be used to treat stormwater runoff before it leaves the project and prevent pollutants from entering into surface streams or any sensitive features down-gradient of the site.

D. The BMPs for this project are designed to allow water to pass through after sedimentation has occurred. Existing flow patterns will be maintained to any naturally occurring sensitive features that are discovered during construction.

Temporary runoff protection measures will be installed according to the recommendations made in Chapter 1 of RG-348. Temporary erosion control will be placed as close to the site of construction soil disturbance as possible to minimize any disturbance with drainage areas. Frequent inspections of erosion controls will be warranted near the environmentally sensitive features, especially after every rainfall.

REQUEST TO TEMPORARY SEAL A FEATURE

(NOT APPLICABLE)

STRUCTURAL PRACTICES

Structural BMPs will be used to limit runoff discharge of pollutants from exposed areas of the site. BMPs will be installed prior to soil disturbing construction activity. Silt fencing will be placed along the down-gradient sides of the property to prevent silt from escaping the construction area. A temporary construction entrance will be placed at the site entry/exit point to reduce tracking onto adjoining streets. A construction staging area will be used onsite to perform all vehicle maintenance and for equipment and material storage. A concrete truck washout pit will be placed on site to provide containment and easier cleanup of waste from concrete operations. The location of all structural temporary BMP's are shown on the erosion control plan sheet and details and specifications are provided on the erosion control details sheet which can be found under Section 5, attachment E.

Description of Temporary BMPs

Temporary Construction Entrance/Exit

The purpose of a temporary gravel construction entrance is to provide a stable entrance/exit condition from the construction site and keep mud and sediment off public roads. A stabilized construction entrance is a stabilized pad of crushed stone located at any point traffic will be entering or leaving the construction site from a public right-of-way, street, alley, sidewalk or parking area. The purpose of a stabilized construction entrance is to reduce or eliminate the tracking or flowing of sediment onto public rights-of-way. This practice should be used at all points of construction ingress and egress.

Excessive amounts of mud can also present a safety hazard to roadway users. To minimize the amount of sediment loss to nearby roads, access to the construction site should be limited to as few points as possible and vegetation around the perimeter should be protected where access is not necessary. A rock stabilized construction entrance should be used at all designated access points.

Inspection and Maintenance Guidelines:

(1) The entrance should be maintained in a condition, which will prevent tracking or flowing of sediment onto public rights-of-way. This may require periodic top dressing with additional stone as conditions demand and repair and/or cleanout of any measures used to trap sediment.
(2) All sediment spilled, dropped, washed, or tracked onto public rights-of-way should be removed immediately by contractor.
(3) When necessary, wheels should be cleaned to remove sediment prior to entrance onto public right-of-way.
(4) When washing is required, it should be done on an area stabilized with crushed stone that drains into an approved sediment trap or sediment basin.
(5) All sediment should be prevented from entering any storm drain, ditch or water course by using approved methods.

Silt Fence

The purpose of a silt fence is to intercept and detain water-borne sediment from unprotected areas of a limited extent. Silt fence is used during the period of construction near the perimeter of a disturbed area to intercept sediment while allowing water to percolate through. This fence should remain in place until the disturbed area is permanently stabilized. Silt fence should not be used where there is a concentration of water in a channel or drainage way. If concentrated

flow occurs after installation, corrective action must be taken such as placing a rock berm in the areas of concentrated flow.

Silt fencing within the site may be temporarily moved during the day to allow construction activity provided it is replaced and properly anchored to the ground at the end of the day. Silt fences on the perimeter of the site or around drainage ways should not be moved at any time.

Inspection and Maintenance Guidelines:

(1) Inspect all fencing weekly, and after any rainfall.
(2) Remove sediment when buildup reaches 6 inches.
(3) Replace any torn fabric or install a second line of fencing parallel to the torn section.
(4) Replace or repair any sections crushed or collapsed in the course of construction activity. If a section of fence is obstructing vehicular access, consider relocating it to a spot where it will provide equal protection, but will not obstruct vehicles. A triangular filter dike may be preferable to a silt fence at common vehicle access points.
(5) When construction is complete, the sediment should be disposed of in a manner that will not cause additional siltation and the prior location of the silt fence should be revegetated. The fence itself should be disposed of in an approved landfill.

Concrete Washout Area

The purpose of concrete washout areas is to prevent or reduce the discharge of pollutants to stormwater from concrete waste by conducting washout offsite, performing onsite washout in a designated area, and training employees and subcontractors.
The following steps will help reduce stormwater pollution from concrete wastes:

- Incorporate requirements for concrete waste management into material supplier and subcontractor agreements.
- Avoid mixing excess amounts of fresh concrete.
- Perform washout of concrete trucks in designated areas only.
- Do not wash out concrete trucks into storm drains, open ditches, streets, or streams.
- Do not allow excess concrete to be dumped onsite, except in designated areas.
- For onsite washout:
- Locate washout area at least 50 feet from sensitive features, storm drains, open ditches, or water bodies. Do not allow runoff from this area by constructing a temporary pit or bermed area large enough for liquid and solid waste.
- Wash out wastes into the temporary pit where the concrete can set, be broken up, and then disposed properly.

Below grade concrete washout facilities are typical. These consist of a lined excavation sufficiently large to hold expected volume of washout material. Above grade facilities are used if excavation is not practical. Temporary concrete washout facility (type above grade) should be constructed as shown on the details at the end of this section, with sufficient quantity and volume to contain all liquid and concrete waste generated by washout operations. Plastic lining material should be a minimum of 10 mil in polyethylene sheeting and should be free of holes, tears, or other defects that compromise the impermeability of the material.

When temporary concrete washout facilities are no longer required for the work, the hardened concrete should be removed and disposed of. Materials used to construct temporary concrete washout facilities should be removed from the site of the work and disposed of. Holes, depressions or other ground disturbance caused by the removal of the temporary concrete washout facilities should be backfilled and repaired.

Rock Berm

The purpose of a rock berm is to serve as a check dam in areas of concentrated flow, to intercept sediment-laden runoff, detain the sediment and release the water in sheet flow. The rock berm should be used when the contributing drainage area is less than 5 acres. Rock berms are used in areas where the volume of runoff is too great for a silt fence to contain. They are less effective for sediment removal than silt fences, particularly for fine particles, but are able to withstand higher flows than a silt fence. As such, rock berms are often used in areas of channel flows (ditches, gullies, etc.). Rock berms are most effective at reducing bed load in channels and should not be substituted for other erosion and sediment control measures further up the watershed.

Inspection and Maintenance Guidelines:

(1) Inspection should be made weekly and after each rainfall by the responsible party. For installations in streambeds, additional daily inspections should be made.
(2) Remove sediment and other debris when buildup reaches 6 inches and dispose of the accumulated silt in an approved manner that will not cause any additional siltation.
(3) Repair any loose wire sheathing.
(4) The berm should be reshaped as needed during inspection.
(5) The berm should be replaced when the structure ceases to function as intended due to silt accumulation among the rocks, washout, construction traffic damage, etc.
(6) The rock berm should be left in place until all upstream areas are stabilized and accumulated silt removed.

Inlet Protection

Storm sewers that are made operational prior to stabilization of the associated drainage areas can convey large amounts of sediment to natural drainage ways. In case of extreme sediment loading, the storm sewer itself may clog and lose a major portion of its capacity. To avoid these problems, it is necessary to prevent sediment from entering the system at the inlets. The following guidelines for inlet protection are based primarily on recommendations by the Virginia Dept. of Conservation and Recreation (1992) and the North Central Texas Council of Governments (NCTCOG, 1993b).

In developments for which drainage is to be conveyed by underground storm sewers (i.e., streets with curbs and gutters), all inlets that may receive storm runoff from disturbed areas should be protected. Temporary inlet protection is a series of different measures that provide protection against silt transport or accumulation in storm sewer systems. This clogging can greatly reduce or completely stop the flow in the pipes. The different measures are used for different site conditions and inlet types.

Care should be taken when choosing a specific type of inlet protection. Field experience has shown that inlet protection that causes excessive ponding in an area of high construction activity may become so inconvenient that it is removed or bypassed, thus transmitting sediment-laden flows unchecked. In such situations, a structure with an adequate overflow mechanism should be utilized.

It should also be noted that inlet protection devices are designed to be installed on construction sites and not on streets and roads open to the public. When used on public streets these devices will cause ponding of runoff, which can cause minor flooding and can present a traffic hazard. An example of appropriate siting would be a new subdivision where the storm drain system is installed before the area is stabilized and the streets open to the general public. When construction occurs adjacent to active streets, the sediment should be controlled on site and not on public thoroughfares. Occasionally,
roadwork or utility installation will occur on public roads. In these cases, inlet protection is an appropriate temporary BMP.

The following inlet protection devices are for drainage areas of one acre or less. Runoff from larger disturbed areas should be routed to a temporary sediment trap or basin.

Filter barrier protection using silt fence is appropriate when the drainage area is less than one acre and the basin slope is less than five percent. This type of protection is not applicable in paved areas.

Block and gravel protection is used when flows exceed 0.5 cubic feet per second and it is necessary to allow for overtopping to prevent flooding. This form of protection is also useful for curb type inlets as it works well in paved areas.

Wire mesh and gravel protection is used when flows exceed 0.5 cubic feet per second and construction traffic may occur over the inlet. This form of protection may be used with both curb and drop inlets.

Excavated impoundment protection around a drop inlet may be used for protection against sediment entering a storm drain inlet. With this method, it is necessary to install weep holes to allow the impoundment to drain completely. If this measure is implemented, the impoundment should be sized such that the volume of excavation is 3,600 cubic feet per acre (equivalent to 1 inch of runoff) of disturbed area entering the inlet.

Inspection and Maintenance Guidelines:

(1) Inspection should be made weekly and after each rainfall. Repair or replacement should be made promptly as needed by the contractor.
(2) Remove sediment when buildup reaches a depth of 3 inches. Removed sediment should be deposited in a suitable area and in such a manner that it will not erode.
(3) Check placement of device to prevent gaps between device and curb.
(4) Inspect filter fabric and patch or replace if torn or missing.
(5) Structures should be removed and the area stabilized only after the remaining drainage area has been properly stabilized.

DRAINAGE AREA MAP

PR-A is greater than 10 acres and will be disturbed. An existing and proposed drainage area map is provided on the next page.

DAU3

Drainage Calculations - SCS Method

DRAINAGE AREA	AREA (Ac.)	IMPERVIOUS COVER (Ac.)	IMPERVIOUS COVER (%)	CN	SHEET FLOW P-2yr24hr 4.01 IN N	L (ft)	S (ft/ft)	Tt(min)	SHALLOW CONCENTRATED FLOW Grass Surface L (ft)	V (fps)	S (ft/ft)	Tt(min)	Paved Surface L (ft)	V (fps)	S (ft/ft)	Tt(min)	TOTAL Tc** (min)	LAG TIME (min)	Q_2 (cfs)	Q_{10} (cfs)	Q_{25} (cfs)	Q_{50} (cfs)	Q_{100} (cfs)
EX-A1	68.01	0.14	0.2%	80.04	0.15	100	0.007	13.32	2413	2.1	0.016	19.51	-	-	-	0.00	32.83	19.70	88.04	181.26	252.98	330.22	386.75
EX-A2	48.27	0.00	0.0%	80.00	0.15	100	0.043	6.46	2566	1.9	0.014	22.70	-	-	-	0.00	29.15	17.49	65.50	135.13	188.72	250.05	289.09
EX-B1	58.76	0.00	0.0%	80.00	0.15	100	0.002	21.99	2464	2.1	0.016	20.00	-	-	-	0.00	41.99	25.19	67.32	138.94	194.11	248.33	297.09

INLET PEAK FLOW CALCULATIONS - RATIONAL METHOD

Formulas: **Q = CiA**

Q = Peak Runoff (cfs)
C = Weighted Runoff Coefficient
i = Rainfall intensity (in/hr)
A = Drainage Area (acres)

Hydrologic Runoff Coefficients (Table 2-1 CoRR DCM)

	2 yr	10 yr	25 yr	50 yr	100 yr
Impervious C (Concrete)	0.75	0.83	0.88	0.92	0.97
Pervious C (Developed 2-7%)	0.33	0.38	0.46	0.49	0.53

Peak Flow Calculation - Rational Method

Drainage Area	Area (sf)	Area (Acres)	Impervious Cover (Acres)	% I.C.	RUNOFF COEFFICIENT (C) C 2 YEAR	C 10 YEAR	C 25 YEAR	C 50 YEAR	C 100 YEAR	Tc (min)	RAINFALL INTENSITY (I) I (in/hr) 2 YEAR	I (in/hr) 10 YEAR	I (in/hr) 25 YEAR	I (in/hr) 50 YEAR	I (in/hr) 100 YEAR	Q (cfs) 2 YEAR	Q (cfs) 10 YEAR	Q (cfs) 25 YEAR	Q (cfs) 50 YEAR	Q (cfs) 100 YEAR
EX-DA7	484387.200	11.120	0.922	8%	0.36	0.42	0.49	0.53	0.57	22.40	3.46	5.02	6.04	6.85	7.70	14.04	23.30	33.24	40.04	48.51

EXISTING TIME OF CONCENTRATION CALCULATIONS

DRAINAGE AREA	SHEET FLOW P-2yr24hr 4.01 IN n	L (ft)	S (ft/ft)	Tt(min)	SHEET FLOW (PAVEMENT) P-2yr24hr 4.01 IN n	L (ft)	S (ft/ft)	Tt(min)	SHALLOW CONCENTRATED FLOW Grass Surface L (ft)	V (fps)	S (ft/ft)	Tt(min)	Paved Surface L (ft)	V (fps)	S (ft/ft)	Tt(min)	CHANNEL FLOW L (ft)	V (fps)	S (ft/ft)	Tt(min)	TOTAL Tc**
EX-DA7	0.150	100	0	**12.63**	0.016	0	0.000	**0.00**	1377	2.35	0.021	**9.77**	0	-	0.000	**0.00**	0	109.9	20.000	**0.00**	**22.40**

NOTES:

1. THE CURVE NUMBER (CN) HAS BEEN DETERMINED FROM TABLE 2-2A OF TECHNICAL RELEASE 55. THE COVER TYPE, HYDROLOGIC CONDITION, AND SOIL GROUP DETERMINED FOR THE PROPOSED CONDITIONS ARE OPEN SPACE ,GOOD CONDITION (GRASS COVER > 75%), AND TYPE D SOIL GROUP WITH A CN OF 80. THE COVER TYPE, HYDROLOGIC CONDITION, AND SOIL GROUP DETERMINED FOR THE EXISTING CONDITIONS ARE PASTURE, GOOD CONDITION, AND TYPE D SOIL GROUP WITH A CN OF 80.
2. EX-DA7 CALCULATED USING RATIONAL METHOD TO MAINTAIN FLOW RATE CONTINUITY WITH SIP-24-00008.

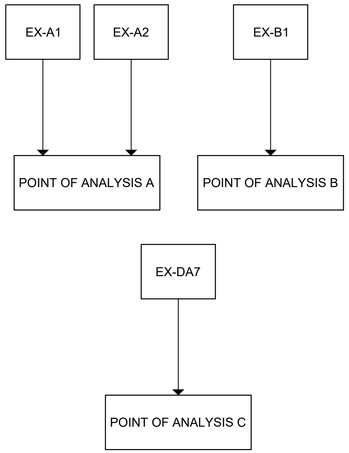

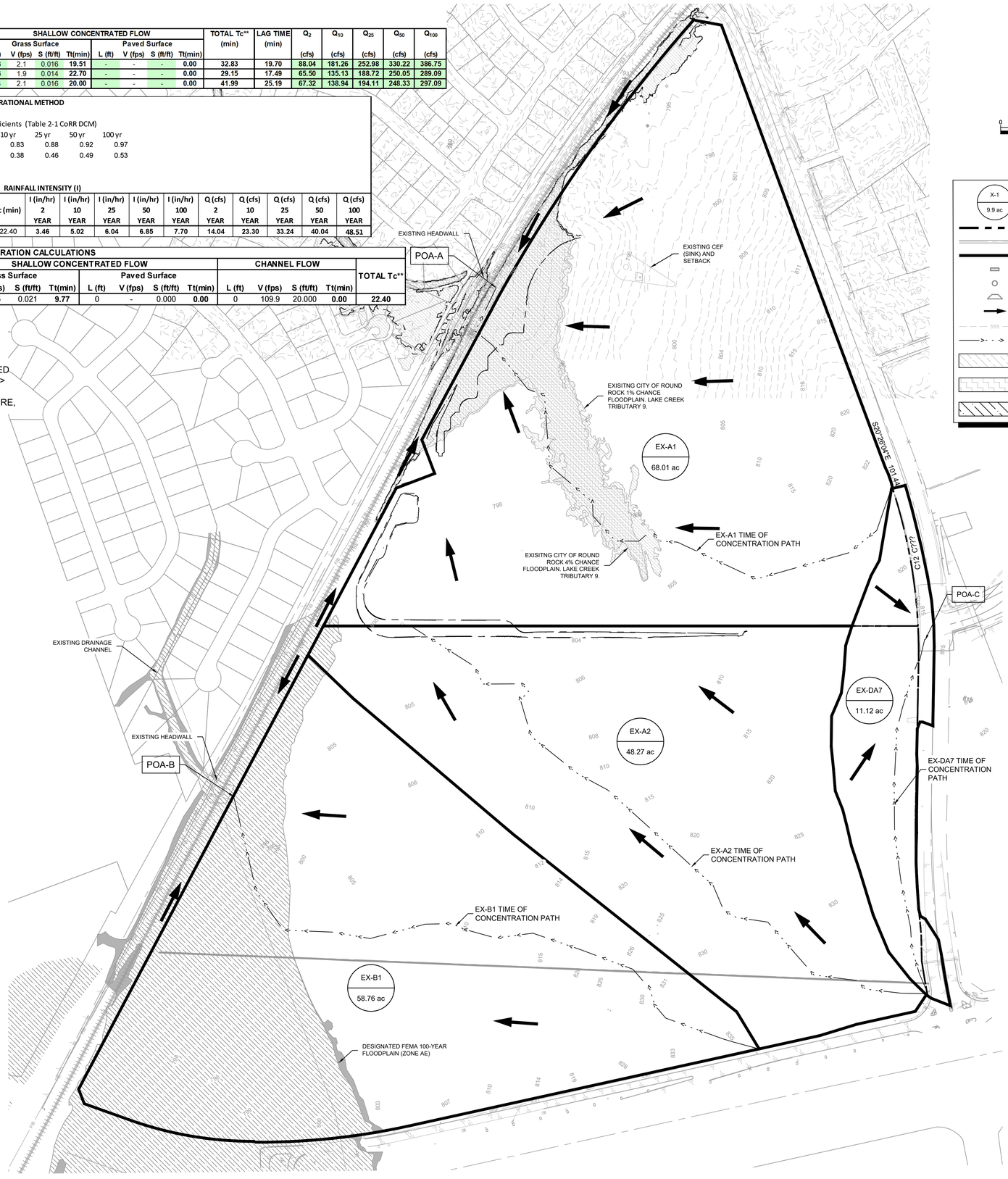

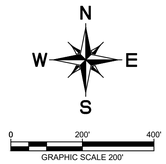

LEGEND

- X-1 / 9.9 ac — AREA DESIGNATOR / AREA IN ACRES
- PROPERTY LINE
- EXISTING STORM SEWER LINE
- EXISTING DRAINAGE DIVIDE
- EXISTING STORM SEWER INLET
- EXISTING STORM SEWER MANHOLE
- EXISTING STORM SEWER HEADWALL
- EXISTING FLOW DIRECTION
- 555 — EXISTING CONTOUR
- TIME OF CONCENTRATION FLOW PATH
- CITY OF ROUND ROCK ULTIMATE 1% CHANCE FLOODPLAIN. LAKE CREEK TRIBUTARY 9.
- CITY OF ROUND ROCK ULTIMATE 4% CHANCE FLOODPLAIN. LAKE CREEK TRIBUTARY 9.
- DESIGNATED FEMA 100-YEAR FLOODPLAIN (ZONE AE)

CONTRACTOR FIELD SET

This plan set shall remain on the site or subdivision premises for the life of the project and shall be utilized for any and all improvements contained herein.

BENCHMARKS

BM #51471 MAG NAIL SET "GCP 2"
SET AT THE NORTHEAST CORNER OF THE INTERSECTION OF STATE HIGHWAY 45 AND COUNTY ROAD 172, ±5.5' FROM "YIELD" SIGN.
N: 10147640.83
E: 3127942.60
ELEV.= 841.70'

BM #51473 MAG NAIL SET "GCP 3"
SET IN THE NORTH RIGHT-OF-WAY LINE OF HESTERS CROSSING ROAD, ±560' FROM THE INTERSECTION OF HESTERS CROSSING ROAD AND COUNTY ROAD 172, ±100 FROM CONCRETE SIGN "ENCOMPASS HEALTH".
N: 10149343.04
E: 3128315.81
ELEV.= 812.19'

No.	REVISIONS	DATE	BY

Kimley»Horn
© 2025 KIMLEY-HORN AND ASSOCIATES, INC.
10814 JOLLYVILLE ROAD, CAMPUS IV, SUITE 200, AUSTIN, TX 78759
PHONE: 512-418-1771 FAX: 512-418-1791
WWW.KIMLEY-HORN.COM
TEXAS REGISTERED ENGINEERING FIRM F-928

NICHOLAS C. BROWN 107175 LICENSED PROFESSIONAL ENGINEER
03/26/2025

KHA PROJECT 069284918	DATE MARCH 2025	SCALE: AS SHOWN	DESIGNED BY: MM	DRAWN BY: MM	CHECKED BY: NCB

EXISTING DRAINAGE AREA MAP

2525 CR 172 INDUSTRIAL

CITY OF ROUND ROCK
WILLIAMSON COUNTY, TEXAS

SHEET NUMBER
87 OF 227

SDP24-00001

Plotted By: Toraldo Knight, Paula Date: April 17, 2025 02:48:39pm File Path: K:\AUS_Civil\069284910 - DAU3 Round Rock\Cad\PlanSheets-SDP\C-Existing Drainage Area Map.dwg
This document, together with the concepts and designs presented herein, as an instrument of service, is intended only for the specific purpose and client for which it was prepared. Reuse of and improper reliance on this document without written authorization and adaptation by Kimley-Horn and Associates, Inc. shall be without liability to Kimley-Horn and Associates, Inc.
Template:KHA AUS TEMPLATE (SDP 2022) - (04.11.08.2022)

Template:KHA AUS TEMPLATE CSD 2022 - DM 11-09-2022

DAU3

Drainage Calculations - SCS Method

DRAINAGE AREA	AREA (Ac.)	IMPERVIOUS COVER (Ac.)	IMPERVIOUS COVER (%)	CN	SHEET FLOW				SHALLOW CONCENTRATED FLOW												PIPE FLOW			TOTAL Tc** (min)	LAG TIME (min)	Q_2	Q_{10}	Q_{25}	Q_{50}	Q_{100}
					P-2yr24hr 4.01 IN				Paved Surface				Grass Surface				Paved Surface				Grass Surface				Pipe Flow							
					N	L (ft)	S (ft/ft)	Tt(min)	L (ft)	V (fps)	S (ft/ft)	Tt(min)	L (ft)	V (fps)	S (ft/ft)	Tt(min)	L (ft)	V (fps)	S (ft/ft)	Tt(min)	L (ft)	V (fps)	S (ft/ft)	Tt(min)	L (ft)	V (fps)	Tt(min)			(cfs)	(cfs)	(cfs)	(cfs)	(cfs)
PR-1	49.10	32.72	66.6%	92.00	0.15	100	0.006	14.17	289	3.5067	0.0298	1.37	407	2.4126	0.022	2.81	-	-	-	0.00	0	-	-	0.00	1449	6.0	4.03	22.38	13.43	110.25	190.64	250.34	325.82	360.77
BY-1	13.31	0.00	0.0%	80.00	0.15	100	0.012	10.74	-	-	-	0.00	1665	2.2954	0.020	12.09	-	-	-	0.00	-	-	-	0.00	-	-	-	22.83	13.70	19.89	41.20	57.64	77.92	88.33
BY-2	1.49	0.00	0.0%	80.00	0.15	100	0.020	8.75	-	-	-	0.00	270	2.4995	0.024	1.80	-	-	-	0.00	-	-	-	0.00	-	-	-	10.55	6.33	2.86	5.85	8.14	11.69	12.41
BY-3	52.37	0.00	0.0%	80.00	0.15	100	0.043	6.44	737.9	1.8331	0.008	6.71	2530	2.0363	0.016	20.71	680	1.5591	0.006	7.27	65	3.0881	0.0231	0.35	220	6.0	0.61	42.09	25.25	59.47	123.18	172.58	222.49	264.91
B-1	58.76	0.00	0.0%	80.00	0.15	100	0.002	21.99	-	-	-	0.00	2464	2.0532	0.016	20.00	-	-	-	0.00	-	-	-	0.00	-	-	-	41.99	25.19	67.32	138.94	194.11	248.33	297.09

Storm Event	Existing Flows (cfs)			Developed Flows (cfs)						POA-A Delta
	EX-A1	EX-A2	POA-A	PR-1	BY-1	BY-2	BY-3	POND 1 (IN)	POND 1 (OUT)	POA-A
2	88.04	65.5	152.51	110.25	19.89	2.86	59.47	110.25	58.18	132.02	20.49
10	181.26	135.13	315.04	190.64	41.20	5.85	123.18	190.64	112.98	267.83	47.21
25	252.98	188.72	440.66	250.34	57.64	8.14	172.58	250.34	155.78	373.64	67.02
50	330.22	250.05	577.32	325.82	77.92	11.69	222.49	325.82	200.90	479.94	97.38
100	386.75	289.09	675.16	360.77	88.33	12.41	264.91	360.77	238.42	573.67	101.49

Storm Event	Existing Flows (cfs)		Developed Flows (cfs)		POA-B Delta
	EX-B1	POA-B	B-1	POA-B	
2	67.32	67.32	67.32	67.32	0
10	138.94	138.94	138.94	138.94	0
25	194.11	194.11	194.11	194.11	0
50	248.33	248.33	248.33	248.33	0
100	297.09	297.09	297.09	297.09	0

INLET PEAK FLOW CALCULATIONS - RATIONAL METHOD

Formulas: **Q = CiA**

Q = Peak Runoff (cfs)
C = Weighted Runoff Coefficient
i = Rainfall intensity (in/hr)
A = Drainage Area (acres)

Hydrologic Runoff Coefficients (Table 2-2 CoRR DCM)

	2 yr	10 yr	25 yr	50 yr	100 yr
Impervious C (Concrete)	0.75	0.83	0.88	0.92	0.97
Pervious C (Developed 2-7%)	0.33	0.38	0.46	0.49	0.53

Peak Flow Calculation - Rational Method — RUNOFF COEFFICIENT (C) — RAINFALL INTENSITY (I)

Drainage Area	Area (sf)	Area (Acres)	Impervious Cover (Acres)	% I.C.	C 2 YEAR	C 10 YEAR	C 25 YEAR	C 50 YEAR	C 100 YEAR	Tc (min)	I (in/hr) 2 YEAR	I (in/hr) 10 YEAR	I (in/hr) 25 YEAR	I (in/hr) 50 YEAR	I (in/hr) 100 YEAR	Q (cfs) 2 YEAR	Q (cfs) 10 YEAR	Q (cfs) 25 YEAR	Q (cfs) 50 YEAR	Q (cfs) 100 YEAR
PDA-7A	386416.980	8.870	7.097	80%	0.67	0.74	0.80	0.83	0.88	15.94	4.16	6.18	7.59	8.76	10.00	24.58	40.57	53.59	64.81	78.24
PDA-7B	97859.430	2.250	0.900	40%	0.50	0.56	0.63	0.66	0.71	14.72	4.29	6.39	7.85	9.07	10.40	4.81	8.05	11.09	13.51	16.52

PROPOSED TIME OF CONCENTRATION CALCULATIONS

DRAINAGE AREA	SHEET FLOW				SHEET FLOW (PAVEMENT)				SHALLOW CONCENTRATED FLOW								CHANNEL FLOW				TOTAL Tc**
	P-2yr24hr 4.01 IN				P-2yr24hr 4.01 IN				Grass Surface				Paved Surface								
	n	L (ft)	S (ft/ft)	Tt(min)	n	L (ft)	S (ft/ft)	Tt(min)	L (ft)	V (fps)	S (ft/ft)	Tt(min)	L (ft)	V (fps)	S (ft/ft)	Tt(min)	L (ft)	V (fps)	S (ft/ft)	Tt(min)	
PDA-7A	0.150	100	0.034	7.10	0.016	0	0.008	0.00	1251	2.36	0.021	8.84	0	-	0.000	0.00	0	-	0.000	0.00	15.94
PDA-7B	0.150	100	0.007	13.48	0.016	0	0.000	0.00	166	3.11	0.037	0.89	0	-	0.000	0.00	75	3.6	0.021	0.35	14.72

NOTES:

1. THE CURVE NUMBER (CN) HAS BEEN DETERMINED FROM TABLE 2-2A OF TECHNICAL RELEASE 55. THE COVER TYPE, HYDROLOGIC CONDITION, AND SOIL GROUP DETERMINED FOR THE PROPOSED CONDITIONS ARE OPEN SPACE ,GOOD CONDITION (GRASS COVER > 75%), AND TYPE D SOIL GROUP WITH A CN OF 80. THE COVER TYPE, HYDROLOGIC CONDITION, AND SOIL GROUP DETERMINED FOR THE EXISTING CONDITIONS ARE PASTURE, GOOD CONDITION, AND TYPE D SOIL GROUP WITH A CN OF 80.
2. DA-7A WAS DETERMINED WITH 80% MAXIMUM IMPERVIOUS COVER PER SIP-24-00008.
3. DA-7A AND DA-7B CALCULATED USING RATIONAL METHOD TO MAINTAIN FLOW RATE CONTINUITY WITH SIP-24-00008.
4. REFER TO SIP-24-00008 FOR CONTINUATION OF FLOW FROM DA-7A AND DA-7B.
5. REFER TO SIP-24-00016 FOR DEVELOPED CONDITIONS WITH CONSTRUCTION OF POND IN LOT 2.

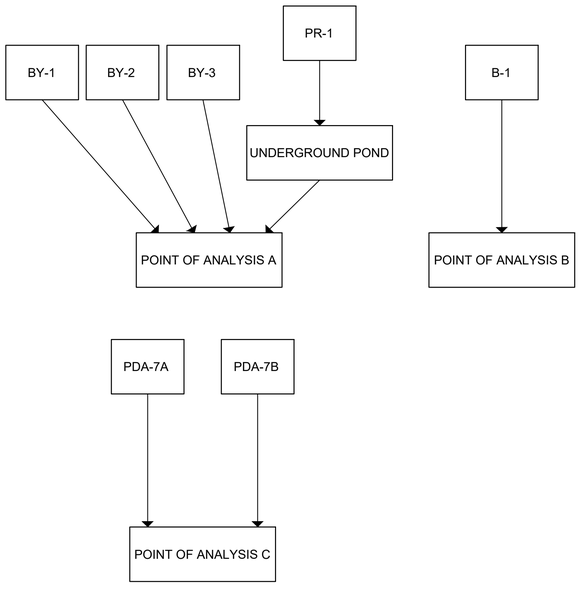

CONTRACTOR FIELD SET

This plan set shall remain on the site or subdivision premises for the life of the project and shall be utilized for any and all improvements contained herein.

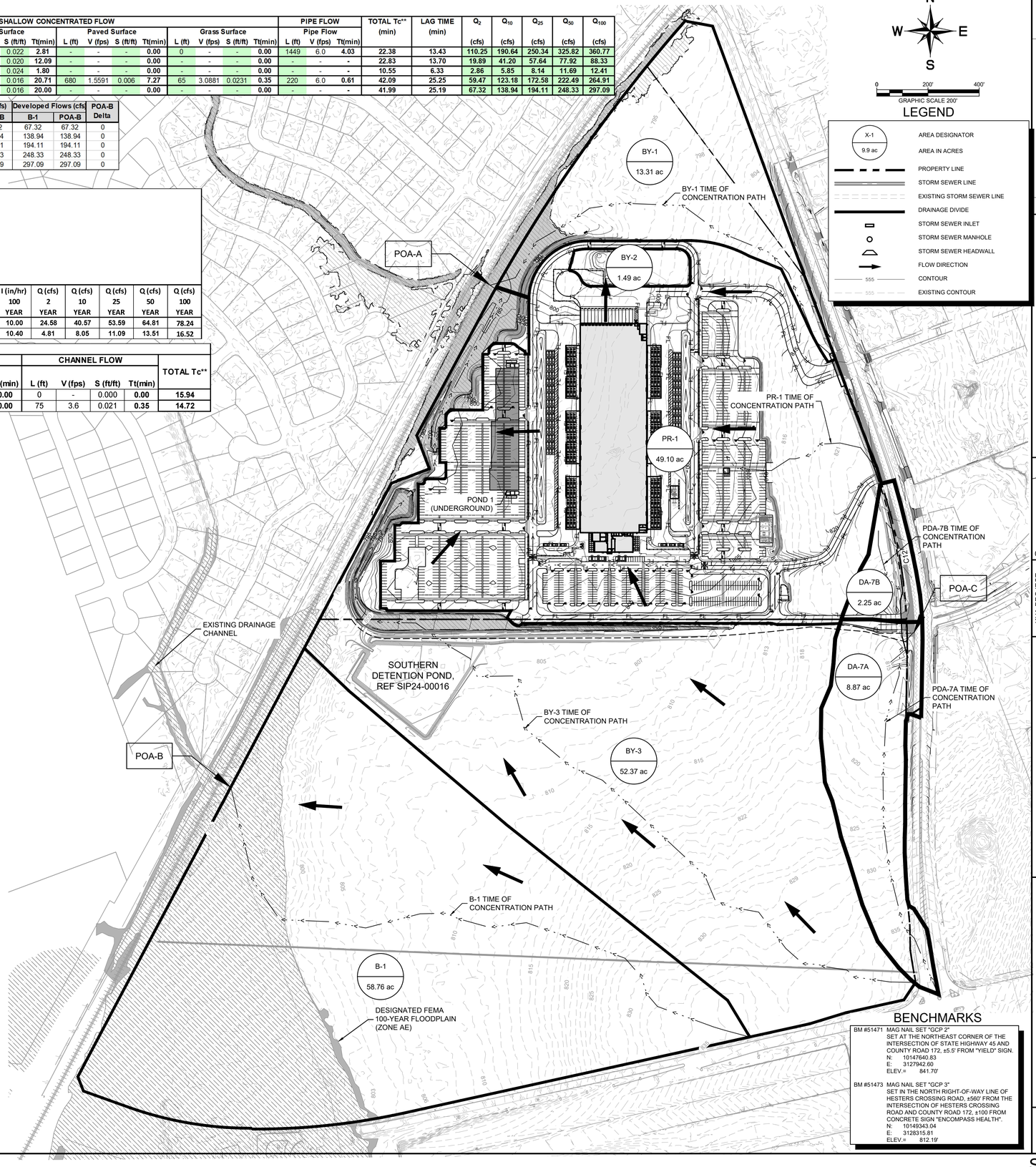

BENCHMARKS

BM #51471 MAG NAIL SET "GCP 2" SET AT THE NORTHEAST CORNER OF THE INTERSECTION OF STATE HIGHWAY 45 AND COUNTY ROAD 172, ±5.5' FROM "YIELD" SIGN.
N: 10147640.83
E: 3127942.60
ELEV.= 841.70'

BM #51473 MAG NAIL SET "GCP 3" SET IN THE NORTH RIGHT-OF-WAY LINE OF HESTERS CROSSING ROAD, ±560' FROM THE INTERSECTION OF HESTERS CROSSING ROAD AND COUNTY ROAD 172, ±100 FROM CONCRETE SIGN "ENCOMPASS HEALTH".
N: 10149343.04
E: 3128315.81
ELEV.= 812.19'

No.	REVISIONS	DATE	BY

Kimley»Horn
© 2025 KIMLEY-HORN AND ASSOCIATES, INC.
10814 JOLLYVILLE ROAD, CAMPUS IV, SUITE 200, AUSTIN, TX 78759
PHONE: 512-418-1771 FAX: 512-418-1791
WWW.KIMLEY-HORN.COM
TEXAS REGISTERED ENGINEERING FIRM F-928

NICHOLAS C. BROWN
107175
LICENSED
PROFESSIONAL ENGINEER
03/26/2025

KHA PROJECT 069284918
DATE MARCH 2025
SCALE: AS SHOWN
DESIGNED BY: MM
DRAWN BY: MM
CHECKED BY: NCB

DEVELOPED DRAINAGE AREA MAP

2525 CR 172 INDUSTRIAL

CITY OF ROUND ROCK
WILLIAMSON COUNTY, TEXAS

SHEET NUMBER
88 OF 227

SDP24-00001

Plotted By: Tordido Knight, Paula Date: April 17, 2025 02:49:09pm File Path: K:\AUS_Civil\069284910 – DAU3 Round Rock\Cad\PlanSheets–SDP\C–Proposed Drainage Area Map.dwg
This document, together with the concepts and designs presented herein, as an instrument of service, is intended only for the specific purpose and client for which it was prepared. Reuse of and improper reliance on this document without written authorization and adaptation by Kimley-Horn and Associates, Inc. shall be without liability to Kimley-Horn and Associates, Inc.

TEMPORARY SEDIMENT POND(S) PLANS AND CALCULATIONS

(NOT APPLICABLE)

INSPECTION AND MAINTENANCE FOR BMPS

The inspection and maintenance plan outlines the procedures necessary to maintain the performance of the Permanent Best Management Practices for this project. It should be noted that the plan provides guidelines that may have to be adjusted dependent on site specific and weather-related conditions.

It is the responsibility of the owner to provide the inspections and maintenance as outlined in the plan for the duration of the project. The owner will maintain this responsibility until it is assumed or transferred to another entity in writing. If the property is leased or sold, the responsibility for the maintenance will be required to be transferred through the lease agreement, binding covenants, closing documents, or other binding legal instrument.

Disposal of accumulated silt shall be accomplished following Texas Commission on Environmental Quality guidelines and specifications.

Maintenance records shall be kept on the installation, maintenance, or removal of items necessary for the proper operation of the facilities. All inspections shall be documented in the Inspection Frequency Log, attached.

An amended copy of this document will be provided to the Texas Commission on Environmental Quality within thirty (30) days of any changes in the following information.

Responsible Party: Amazon.com Services, LLC
Mailing Address: 101 Platform Way N
City, State: Nashville, TN Zip: 37203

Telephone: (901) 438-4156 Fax: _____

I, the owner, have read and understand the requirements of the attached Inspection and Maintenance Plan for the proposed Permanent Best Management Practices for my project. I acknowledge that I will maintain responsibility for the implementation and execution of the plan until the responsibility is transferred to or assumed by another party in writing through a binding legal instrument.

Signature of Responsible Party David Barnett Digitally signed by David Barnett DN: C=US, E=barnettu@amazon.com, O="Amazon ", OU=Amazon, CN=David Barnett Date: 2024.05.15 14:13:24-05'00' Date _____

This Maintenance Plan is based on City of Round Rock Standard Specifications and City of Austin Environmental Criteria Manual.

By: _____ Date: 5/15/2024
Nicholas C. Brown, P.E.

Personnel Responsible for Inspections

The agent that performs the inspections should be knowledgeable of this general permit and familiar with the construction site. The contractor is to provide an inspector with a CPESC, CESSWI, or CISEC certification. Documentation of the inspector's qualifications is to be included in the attached Inspector Qualifications Log.

Inspection Schedule
The primary operator is required to choose one of the two inspections listed below.

☐ **Option 1:** Once every seven calendar days. If this alternative schedule is developed, then the inspection must occur regardless of whether or not there has been a rainfall event since the previous inspection.
☐ **Option 2:** Once every 14 calendar days and within 24 hours of the end of a storm event of two inches or greater.

The inspections may occur on either schedule provided that documentation reflects the current schedule and that any changes to the schedule are conducted in accordance with the following provisions: the schedule may be changed a maximum of one time each month, the schedule change must be implemented at the beginning of a calendar month, and the reason for the schedule change must be documented (e.g., end of “dry” season and beginning of “wet” season).

If option 2 is the chosen frequency of inspections a rain gauge must be properly maintained on site or the storm event information from a weather station that is representative of the site location. For any day of rainfall during normal business hours that measures 0.25 inches or greater, proper documentation of the total rainfall measured for that day must be recorded.
Personnel provided by the permittee must inspect:

- disturbed areas of the construction site that have not been finally stabilized;
- areas used for storage of materials that are exposed to precipitation;
- structural controls (for evidence of, or the potential for, pollutants entering the drainage system);
- sediment and erosion control measures identified in the SWP3 (to ensure they are operating correctly); and
- locations where vehicles enter or exit the site (for evidence of off-site sediment tracking).

Reductions in Inspection Frequency
Where sites have been finally or temporarily stabilized or where runoff is unlikely due to winter conditions (e.g. site is covered with snow, ice, or frozen ground exists), inspections must be conducted at least once every month. In arid, semi-arid, or drought-stricken areas, inspections must be conducted at least once every month and within 24 hours after the end of a storm event of 0.5 inches or greater. A record of the total rainfall measured, as well as the approximate beginning and ending dates of winter or drought conditions resulting in monthly frequency of inspections in the attached Rain Gauge Log.

In the event of flooding or other uncontrollable situations which prohibit access to the inspection sites, inspections must be conducted as soon as access is practicable.

Inspection Report Forms

Use the Inspection Report Forms given as a checklist to ensure that all required areas of the construction site are addressed. There is space to document the inspector's name as well as when the inspections regularly take place. The tables will document that the required area was inspected. (If there were any areas of concern, briefly describe them in this space with a more detailed description in the narrative section. Use the last table to document any discharges found during the inspections).

Describe how effective the installed BMPs are performing. Describe any BMP failures that were noted during the investigation and describe any maintenance required due to the failure. If new BMPs are needed as the construction site changes, the inspector can use the space at the bottom of the section to list BMPs to be implemented before the next inspection.

Describe the inspector's qualifications, how the inspection was conducted, and describe any areas of non-compliance in detail. If an inspection report does not identify any incidents of non-compliance, then it must contain a certifying signature stating that the facility or site is in compliance. The report must be signed by a person and in a manner required by 30 TAC 305.128. There is space at the end of the form to allow for this certifying signature.

Whenever an inspection shows that BMP modifications are needed to better control pollutants in runoff, the changes must be completed within seven calendar days following the inspection. If existing BMPs are modified or if additional BMPs are needed, you must describe your implementation schedule, and wherever possible, make the required BMP changes before the next storm event.

The Inspection Report Form functions as the required report and must be signed in accordance with TCEQ rules at 30 TAC 305.128.

Corrective Action

Personnel Responsible for Corrective Actions

Both Primary and Secondary Operators are responsible for maintaining all necessary Corrective Actions. If an individual is specifically identified as the responsible party for modifying the contact information for that individual should be documented in the attached Inspector Qualifications Log.

Corrective Action Forms

The Temporary BMPs must be modified based on the results of inspections, as necessary, to better control pollutants in runoff. Revisions must be completed within seven (7) calendar days following the inspection. If existing BMPs are modified or if additional BMPs are necessary, an implementation schedule must be described in the attached forms and wherever possible those changes implemented before the next storm event. If implementation before the next anticipated storm event is impracticable, these changes must be implemented as soon as practicable. Actions taken as a result of inspections must be properly documented by completing the corrective action forms given.

Inspector Qualifications Log*

Inspector Name: _____

Qualifications (Check as appropriate and provide description):

- □ Training Course _____
- □ Supervised Experience _____
- □ Other _____

Inspector Name: _____

Qualifications (Check as appropriate and provide description):

- □ Training Course _____
- □ Supervised Experience _____
- □ Other _____

Inspector Name: _____

Qualifications (Check as appropriate and provide description):

- □ Training Course _____
- □ Supervised Experience _____
- □ Other _____

Inspector Name: _____

Qualifications (Check as appropriate and provide description):

- □ Training Course _____
- □ Supervised Experience _____
- □ Other _____

Inspector Name: _____

Qualifications (Check as appropriate and provide description):

- □ Training Course _____
- □ Supervised Experience _____
- □ Other _____

Inspector Name: _____

Qualifications (Check as appropriate and provide description):

- □ Training Course _____
- □ Supervised Experience _____
- □ Other _____

* The agent that performs the inspections should be knowledgeable of this general permit and familiar with the construction site. The contractor is to provide an inspector with a CPESC, CESSWI, or CISEC certification.

Kimley»Horn

Amendment Log

No.	Description of the Amendment	Date of Amendment	Amendment Prepared by [Name(s) and Title]

Construction Activity Sequence Log

Name of Operator	Projected dates Month/year	Activity Disturbing Soil clearing, excavation, etc.	Location on-site where activity will be conducted	Acreage being disturbed

*Construction activity sequences for linear projects may be conducted on a rolling basis. As a result, construction activities may be at different stages at different locations in the project area. The Contractor is required to complete and update the schedule and adjust as necessary.

Stormwater Control Installation and Removal Log

Stormwater Control	Location On-Site	Installation Date	Removal Date

Stabilization Activities Log

Date Activity Initiated	Description of Activity	Description of Stabilization Measure and Location	Date Activity Ceased (Indicate Temporary or Permanent)	Date When Stabilization Measures Initiated

Stabilization and erosion control practices may include, but are not limited to: establishing temporary or permanent vegetation, mulching, geotextiles, sod stabilization, vegetative buffer strips, and protecting existing trees and vegetation. List practices used where they are located, when they will be implemented, and whether they are temporary (interim) or permanent.

Inspection Frequency Log

Date	Frequency Schedule and Reason for Change

Kimley»Horn

Rain Gauge Log

Date	Location of Rain Gauge	Gauge Reading

General Information					
Name of Project		Tracking No.		Inspection Date	
Inspector Name, Title & Contact Information					
Present Phase of Construction					
Inspection Location (if multiple inspections are required, specify location where this inspection is being conducted)					

Inspection Frequency

Standard Frequency: ☐ Weekly ☐ Every 14 days and within 24 hours of a 0.25" rain

Increased Frequency: ☐ Every 7 days and within 24 hours of a 0.25" rain

Reduced Frequency:

- ☐ Once per month (for stabilized areas)
- ☐ Once per month and within 24 hours of a 0.25" rain (for arid, semi-arid, or drought-stricken areas during seasonally dry periods or during drought)
- ☐ Once per month (for frozen conditions where earth-disturbing activities are being conducted)

Was this inspection triggered by a 0.25" storm event? ☐ Yes ☐ No

If yes, how did you determined whether a 0.25" storm event has occurred?

☐ Rain gauge on site ☐ Weather station representative of site. Specify weather station source:

Total rainfall amount that triggered the inspection (in inches)**:**

Unsafe Conditions for Inspection

Did you determine that any portion of your site was unsafe for inspection? ☐ Yes ☐ No

If "yes", complete the following:

- Describe the conditions that prevented you from conducting the inspection in this location:

- Location(s) where conditions were found:

Condition and Effectiveness of Erosion and Sediment (E&S) Controls				
Type/Location of E&S Control	**Repairs or Other Maintenance Needed?**	**Corrective Action Required?**	**Date on Which Maintenance or Corrective Action First Identified?**	**Notes**
1.	☐Yes ☐No	☐Yes ☐No		
2.	☐Yes ☐No	☐Yes ☐No		
3.	☐Yes ☐No	☐Yes ☐No		
4.	☐Yes ☐No	☐Yes ☐No		
5.	☐Yes ☐No	☐Yes ☐No		
6.	☐Yes ☐No	☐Yes ☐No		
7.	☐Yes ☐No	☐Yes ☐No		
8.	☐Yes ☐No	☐Yes ☐No		
9.	☐Yes ☐No	☐Yes ☐No		
10.	☐Yes ☐No	☐Yes ☐No		

Condition and Effectiveness of Pollution Prevention (P2) Practices				
Type/Location of P2 Practices	**Repairs or Other Maintenance Needed?**	**Corrective Action Required?**	**Identification Date**	**Notes**
1.	☐Yes ☐No	☐Yes ☐No		
2.	☐Yes ☐No	☐Yes ☐No		
3.	☐Yes ☐No	☐Yes ☐No		
4.	☐Yes ☐No	☐Yes ☐No		
5.	☐Yes ☐No	☐Yes ☐No		
6.	☐Yes ☐No	☐Yes ☐No		
7.	☐Yes ☐No	☐Yes ☐No		
8.	☐Yes ☐No	☐Yes ☐No		
9.	☐Yes ☐No	☐Yes ☐No		
10.	☐Yes ☐No	☐Yes ☐No		

Stabilization of Exposed Soil			
Stabilization Area	**Stabilization Method**	**Have You Initiated Stabilization?**	**Notes**
1.		☐ YES ☐ NO If yes, provide date:	
2.		☐ YES ☐ NO If yes, provide date:	
3.		☐ YES ☐ NO If yes, provide date:	
4.		☐ YES ☐ NO If yes, provide date:	
5.		☐ YES ☐ NO If yes, provide date:	

Description of Discharges	
Was a stormwater discharge or other discharge occurring from any part of your site at the time of the inspection? ☐ Yes ☐ No **If "yes", provide the following information for each point of discharge:**	
Discharge Location	**Observations**
1.	Describe the discharge: At points of discharge and the channels and banks of surface waters in the immediate vicinity, are there any visible signs of erosion and/or sediment accumulation that can be attributed to your discharge? ☐ Yes ☐ No If yes, describe what you see, specify the location(s) where these conditions were found, and indicate whether modification, maintenance, or corrective action is needed to resolve the issue:
2.	Describe the discharge: At points of discharge and the channels and banks of surface waters in the immediate vicinity, are there any visible signs of erosion and/or sediment accumulation that can be attributed to your discharge? ☐ Yes ☐ No If yes, describe what you see, specify the location(s) where these conditions were found, and indicate whether modification, maintenance, or corrective action is needed to resolve the issue:
3.	Describe the discharge: At points of discharge and the channels and banks of surface waters in the immediate vicinity, are there any visible signs of erosion and/or sediment accumulation that can be attributed to your discharge? ☐ Yes ☐ No If yes, describe what you see, specify the location(s) where these conditions were found, and indicate whether modification, maintenance, or corrective action is needed to resolve the issue:

Contractor or Subcontractor Certification and Signature
"I certify under penalty of law that this document and all attachments were prepared under my direction or supervision in accordance with a system designed to assure that qualified personnel properly gathered and evaluated the information submitted. Based on my inquiry of the person or persons who manage the system, or those persons directly responsible for gathering the information, the information submitted is, to the best of my knowledge and belief, true, accurate, and complete. I am aware that there are significant penalties for submitting false information, including the possibility of fine and imprisonment for knowing violations." **Signature of Contractor or Subcontractor:** _____ **Date:** **Printed Name and Affiliation:** _____
Certification and Signature by Permittee
"I certify under penalty of law that this document and all attachments were prepared under my direction or supervision in accordance with a system designed to assure that qualified personnel properly gathered and evaluated the information submitted. Based on my inquiry of the person or persons who manage the system, or those persons directly responsible for gathering the information, the information submitted is, to the best of my knowledge and belief, true, accurate, and complete. I am aware that there are significant penalties for submitting false information, including the possibility of fine and imprisonment for knowing violations." **Signature of Permittee or "Duly Authorized Representative":** _____ **Date:** **Printed Name and Affiliation:** _____

Kimley»Horn

Section A – Initial Report (Complete this section within 24 hours of discovering the condition that triggered corrective action)					
Name of Project		Tracking No.		Today's Date	
Date Problem First Discovered			Time Problem First Discovered		
Name and Contact Information of Individual Completing this Form					

What site conditions triggered the requirement to conduct corrective action:

☐ A required stormwater control was never installed, was installed incorrectly, or not in accordance with the requirements in Part 2 and/or 3
☐ The stormwater controls that have been installed and maintained are not effective enough for the discharge to meet applicable water quality standards
☐ A prohibited discharge has occurred or is occurring

Provide a description of the problem:

Deadline for completing corrective action (*Enter date that is either: (1) no more than 7 calendar days after the date you discovered the problem, or (2) if it is infeasible to complete work within the first 7 days, enter the date that is as soon as practicable following the 7th day)*:

If your estimated date of completion falls after the 7-day deadline, explain (1) why you believe it is infeasible to complete work within 7 days, and (2) why the date you have established for making the new or modified stormwater control operational is the soonest practicable timeframe:

Section B – Corrective Action Progress (Complete this section no later than 7 calendar days after discovering the condition that triggered corrective action)	
Section B.1 – Why the Problem Occurred	
Cause(s) of Problem (Add an additional sheet if necessary)	How This Was Determined and the Date You Determined the Cause
1.	1.
2.	2.
3.	3.

Section B.2 – Stormwater Control Modifications to be Implemented to Correct the Problem			
List of Stormwater Control Modification(s) Needed to Correct Problem (Add an additional sheet if necessary)	Completion Date	Plan Updates Necessary?	Notes
1.		☐Yes ☐No Date:	
2.		☐Yes ☐No Date:	
3.		☐Yes ☐No Date:	

Section A – Initial Report
(Complete this section within 24 hours of discovering the condition that triggered corrective action)

Name of Project		Tracking No.		Today's Date	
Date Problem First Discovered			Time Problem First Discovered		
Name and Contact Information of Individual Completing this Form					

What site conditions triggered the requirement to conduct corrective action:

☐ A required stormwater control was never installed, was installed incorrectly, or not in accordance with the requirements in Part 2 and/or 3
☐ The stormwater controls that have been installed and maintained are not effective enough for the discharge to meet applicable water quality standards
☐ A prohibited discharge has occurred or is occurring

Provide a description of the problem:

Deadline for completing corrective action (*Enter date that is either: (1) no more than 7 calendar days after the date you discovered the problem, or (2) if it is infeasible to complete work within the first 7 days, enter the date that is as soon as practicable following the 7th day)*:

If your estimated date of completion falls after the 7-day deadline, explain (1) why you believe it is infeasible to complete work within 7 days, and (2) why the date you have established for making the new or modified stormwater control operational is the soonest practicable timeframe:

Section B – Corrective Action Progress

(Complete this section no later than 7 calendar days after discovering the condition that triggered corrective action)

Section B.1 – Why the Problem Occurred

Cause(s) of Problem (Add an additional sheet if necessary)	How This Was Determined and the Date You Determined the Cause
1.	1.
2.	2.
3.	3.

Section B.2 – Stormwater Control Modifications to be Implemented to Correct the Problem

List of Stormwater Control Modification(s) Needed to Correct Problem (Add an additional sheet if necessary)	Completion Date	Plan Updates Necessary?	Notes
1.		☐Yes ☐No Date:	
2.		☐Yes ☐No Date:	
3.		☐Yes ☐No Date:	

Contractor or Subcontractor Certification and Signature

“I certify under penalty of law that this document and all attachments were prepared under my direction or supervision in accordance with a system designed to assure that qualified personnel properly gathered and evaluated the information submitted. Based on my inquiry of the person or persons who manage the system, or those persons directly responsible for gathering the information, the information submitted is, to the best of my knowledge and belief, true, accurate, and complete. I am aware that there are significant penalties for submitting false information, including the possibility of fine and imprisonment for knowing violations.”

Signature of Contractor or Subcontractor: _____ **Date:**

Printed Name and Affiliation: _____

Certification and Signature by Permittee

“I certify under penalty of law that this document and all attachments were prepared under my direction or supervision in accordance with a system designed to assure that qualified personnel properly gathered and evaluated the information submitted. Based on my inquiry of the person or persons who manage the system, or those persons directly responsible for gathering the information, the information submitted is, to the best of my knowledge and belief, true, accurate, and complete. I am aware that there are significant penalties for submitting false information, including the possibility of fine and imprisonment for knowing violations.”

Signature of Permittee or
“Duly Authorized Representative”: _____ **Date:**

Printed Name and Affiliation: _____

SCHEDULE OF INTERIM AND PERMANENT SOIL STABILIZATION PRACTICES

Construction practices shall disturb the minimal amount of existing ground cover as required for land clearing, grading, and construction activity for the shortest amount of time possible to minimize the potential of erosion and sedimentation from the site. Existing vegetation shall be maintained and left in place until it is necessary to disturb for construction activity. For this project the following stabilization practices will be implemented:

1. Hydraulic Mulch and Seeding: Disturbed areas subject to erosion shall be stabilized with hydraulic mulch and/or seeded and watered to provide interim stabilization. For areas that are not to be sodded as per the project landscaping plan, vegetative cover will be established to provide permanent stabilization.
2. Sodding and Wood Mulch: As per the project landscaping plan, sodding and wood mulch will be applied to landscaped areas to provide permanent stabilization prior to project completion.

Records of the following shall be maintained:

a) The dates when major grading activities occur;

b) The dates when construction activities temporarily or permanently cease on a portion of the site; and

c) The dates when stabilization measures are initiated.

Stabilization measures must be initiated as soon as practical in portions of the site where construction activities have temporarily or permanently ceased, and except as provided in the following, must be initiated no more that fourteen (14) days after the construction activity in that portion of the site has temporarily or permanently ceased:

Where the initiation of stabilization measures by the 14th day after construction activity temporarily or permanently ceased is precluded by snow cover or frozen ground conditions, stabilization measures must be initiated as soon as practical.

Where construction activity on a portion of the site is temporarily ceased and earth disturbing activities will be resumed within twenty-one (21) days, temporary stabilization measures do not have to be initiated on that portion of the site.

In arid areas (areas with an average rainfall of 0-10 inches), semiarid areas (areas with an average annual rainfall of 10 to 20 inches), and areas experiencing droughts where the initiation of stabilization measures by the 14th day after construction activity has temporarily or permanently ceased is precluded by seasonably arid conditions, stabilization measures must be initiated as soon as practical.

Maintenance

Below are some maintenance practices to be used to maintain erosion and sediment controls:

- All measures will be maintained in good working order. The operator should correct any damage or deficiencies as soon as practicable after the inspection, but in no case later than seven (7) calendar days after the inspection.
- BMP Maintenance (as applicable)
- Sediment must be removed from sediment traps and sedimentation ponds no later than the time that design capacity has been reduced by 50%. For perimeter controls such as silt fences, berms, etc., the trapped sediment must be removed before it reaches 50% of the above-ground height.
- Silt fence will be inspected for depth of sediment, tears, to see of the fabric is securely attached to the fence posts, and to see that the fence posts are firmly in the ground.
- Drainage swale will be inspected and repaired as necessary.
- Inlet control will be inspected and repaired as necessary.
- Check dam will be inspected and repaired as necessary.
- Straw bale dike will be inspected and repaired as necessary.
- Diversion dike will be inspected and any breaches promptly repaired.
- Temporary and permanent seeding and planting will be inspected for bare spots, washouts, and healthy growth.
- If sediment escapes the site, accumulations must be removed at a frequency that minimizes off-site impacts, and prior to the next rain event, if feasible. If the permittee does not own or operate the off-site conveyance, then the permittee must to work with the owner or operator of the property to remove the sediment.
- Locations where vehicles enter or exit the site must be inspected for evidence of off-site sediment tracking.

To maintain the above practices, the following will be performed:

- Maintenance and repairs will be conducted before the next anticipated storm event or as necessary to maintain the continued effectiveness of storm water controls. Following an inspection, deficiencies should be corrected no later than seven (7) calendar days after the inspection.

SECTION 8:
ADDITIONAL FORMS

AGENT AUTHORIZATION FORM (TCEQ-0599)

Agent Authorization Form
For Required Signature
Edwards Aquifer Protection Program
Relating to 30 TAC Chapter 213
Effective June 1, 1999

I David Barnett,
Print Name

Senior Pre-Construction Manager,
Title - Owner/President/Other

of Amazon.com Services, LLC,
Corporation/Partnership/Entity Name

have authorized Nicholas C. Brown
Print Name of Agent/Engineer

of Kimley-Horn and Associates
Print Name of Firm

to represent and act on the behalf of the above named Corporation, Partnership, or Entity for the purpose of preparing and submitting this plan application to the Texas Commission on Environmental Quality (TCEQ) for the review and approval consideration of regulated activities.

I also understand that:

1. The applicant is responsible for compliance with 30 Texas Administrative Code Chapter 213 and any condition of the TCEQ's approval letter. The TCEQ is authorized to assess administrative penalties of up to $10,000 per day per violation.

2. For those submitting an application who are not the property owner, but who have the right to control and possess the property, additional authorization is required from the owner.

3. Application fees are due and payable at the time the application is submitted. The application fee must be sent to the TCEQ cashier or to the appropriate regional office. The application will not be considered until the correct fee is received by the commission.

4. A notarized copy of the Agent Authorization Form must be provided for the person preparing the application, and this form must accompany the completed application.

5. No person shall commence any regulated activity on the Edwards Aquifer Recharge Zone, Contributing Zone or Transition Zone until the appropriate application for the activity has been filed with and approved by the Executive Director.

SIGNATURE PAGE:

David Barnett
Applicant's Signature

4/25/24
Date

THE STATE OF Tennessee §

County of Shelby §

BEFORE ME, the undersigned authority, on this day personally appeared David Barnett known to me to be the person whose name is subscribed to the foregoing instrument, and acknowledged to me that (s)he executed same for the purpose and consideration therein expressed.

GIVEN under my hand and seal of office on this 25th day of April, 2024.

ELIZABETH PARR
STATE OF TENNESSEE NOTARY PUBLIC
SHELBY COUNTY

Elizabeth Parr
NOTARY PUBLIC

Elizabeth Parr
Typed or Printed Name of Notary

MY COMMISSION EXPIRES: 12/02/2025

APPLICATION FEE FORM (TCEQ-0574)

Application Fee Form

Texas Commission on Environmental Quality

Name of Proposed Regulated Entity: 2525 CR 172 Industrial

Regulated Entity Location: 2525 CR 172, Round Rock, TX 78681

Name of Customer: David Barnett

Contact Person: Nicholas C. Brown Phone: 512-418-1771

Customer Reference Number (if issued):CN 605619519

Regulated Entity Reference Number (if issued):RN N/A

Austin Regional Office (3373)

☐ Hays ☐ Travis ☒ Williamson

San Antonio Regional Office (3362)

☐ Bexar ☐ Medina ☐ Uvalde

☐ Comal ☐ Kinney

Application fees must be paid by check, certified check, or money order, payable to the **Texas Commission on Environmental Quality**. Your canceled check will serve as your receipt. **This form must be submitted with your fee payment**. This payment is being submitted to:

☒ Austin Regional Office

☐ Mailed to: TCEQ - Cashier
Revenues Section
Mail Code 214
P.O. Box 13088
Austin, TX 78711-3088

☐ San Antonio Regional Office

☐ Overnight Delivery to: TCEQ - Cashier
12100 Park 35 Circle
Building A, 3rd Floor
Austin, TX 78753
(512)239-0357

Site Location (Check All That Apply):

☒ Recharge Zone ☐ Contributing Zone ☐ Transition Zone

Type of Plan	***Size***	***Fee Due***
Water Pollution Abatement Plan, Contributing Zone Plan: One Single Family Residential Dwelling	0 Acres	$ 0
Water Pollution Abatement Plan, Contributing Zone Plan: Multiple Single Family Residential and Parks	0 Acres	$ 0
Water Pollution Abatement Plan, Contributing Zone Plan: Non-residential	0 Acres	$ 0
Sewage Collection System	494 L.F.	$ 650
Lift Stations without sewer lines	0 Acres	$ 0
Underground or Aboveground Storage Tank Facility	0 Tanks	$ 0
Piping System(s)(only)	0 Each	$ 0
Exception	0 Each	$ 0
Extension of Time	0 Each	$ 0

Signature: _____ Date: 05/15/2025

Application Fee Schedule

Texas Commission on Environmental Quality
Edwards Aquifer Protection Program 30 TAC Chapter 213 (effective 05/01/2008)

Water Pollution Abatement Plans and Modifications

Contributing Zone Plans and Modifications

Project	*Project Area in Acres*	*Fee*
One Single Family Residential Dwelling	< 5	$650
Multiple Single Family Residential and Parks	< 5 5 < 10 10 < 40 40 < 100 100 < 500 ≥ 500	$1,500 $3,000 $4,000 $6,500 $8,000 $10,000
Non-residential (Commercial, industrial, institutional, multi-family residential, schools, and other sites where regulated activities will occur)	< 1 1 < 5 5 < 10 10 < 40 40 < 100 ≥ 100	$3,000 $4,000 $5,000 $6,500 $8,000 $10,000

Organized Sewage Collection Systems and Modifications

Project	*Cost per Linear Foot*	*Minimum Fee-Maximum Fee*
Sewage Collection Systems	$0.50	$650 - $6,500

Underground and Aboveground Storage Tank System Facility Plans and Modifications

Project	*Cost per Tank or Piping System*	*Minimum Fee-Maximum Fee*
Underground and Aboveground Storage Tank Facility	$650	$650 - $6,500

Exception Requests

Project	*Fee*
Exception Request	$500

Extension of Time Requests

Project	*Fee*
Extension of Time Request	$150

CHECK PAYABLE TO THE "TEXAS COMMISSION ON ENVIRONMENTAL QUALITY"

CORE DATA FORM (TCEQ-10400)

TCEQ Use Only

TCEQ Core Data Form

For detailed instructions on completing this form, please read the Core Data Form Instructions or call 512-239-5175.

SECTION I: General Information

1. Reason for Submission (*If other is checked please describe in space provided.*)

☒ New Permit, Registration or Authorization (*Core Data Form should be submitted with the program application.*)

☐ Renewal *(Core Data Form should be submitted with the renewal form)* ☐ Other

2. Customer Reference Number *(if issued)*	Follow this link to search for CN or RN numbers in Central Registry**	**3. Regulated Entity Reference Number** *(if issued)*
CN		**RN**

SECTION II: Customer Information

4. General Customer Information | **5. Effective Date for Customer Information Updates** (mm/dd/yyyy)

☒ New Customer ☐ Update to Customer Information ☐ Change in Regulated Entity Ownership
☐ Change in Legal Name (Verifiable with the Texas Secretary of State or Texas Comptroller of Public Accounts)

The Customer Name submitted here may be updated automatically based on what is current and active with the Texas Secretary of State (SOS) or Texas Comptroller of Public Accounts (CPA).

6. Customer Legal Name *(If an individual, print last name first: eg: Doe, John)* | *If new Customer, enter previous Customer below:*

Amazon.com Services LLC

7. TX SOS/CPA Filing Number	**8. TX State Tax ID** (11 digits)	**9. Federal Tax ID** (9 digits)	**10. DUNS Number** *(if applicable)*
0802761221	32054385284	820544687	

11. Type of Customer: ☐ Corporation ☐ Individual Partnership: ☐ General ☒ Limited
Government: ☐ City ☐ County ☐ Federal ☐ Local ☐ State ☐ Other ☐ Sole Proprietorship ☐ Other:

12. Number of Employees
☐ 0-20 ☐ 21-100 ☐ 101-250 ☐ 251-500 ☒ 501 and higher

13. Independently Owned and Operated?
☐ **Yes** ☐ **No**

14. Customer Role (Proposed or Actual) – *as it relates to the Regulated Entity listed on this form. Please check one of the following*

☐ Owner ☐ Operator ☒ Owner & Operator
☐ Occupational Licensee ☐ Responsible Party ☐ VCP/BSA Applicant ☐ Other:

15. Mailing Address:	David Barnett - Sr Pre-Construction Manager						
	Amazon Tower 1, 101 Platform Way N.						
	City	Nashville	**State**	TN	**ZIP**	37203	**ZIP + 4**

16. Country Mailing Information *(if outside USA)* | **17. E-Mail Address** *(if applicable)*

barnettu@amazon.com

18. Telephone Number | **19. Extension or Code** | **20. Fax Number** *(if applicable)*

(901) 438-4156		( ) -

SECTION III: Regulated Entity Information

21. General Regulated Entity Information *(If 'New Regulated Entity" is selected, a new permit application is also required.)*

☒ New Regulated Entity ☐ Update to Regulated Entity Name ☐ Update to Regulated Entity Information

The Regulated Entity Name submitted may be updated, in order to meet TCEQ Core Data Standards (removal of organizational endings such as Inc, LP, or LLC).

22. Regulated Entity Name *(Enter name of the site where the regulated action is taking place.)*

2525 CR172 Industrial

23. Street Address of the Regulated Entity: ***(No PO Boxes)***	2525 CR 172							
	City	Round Rock	**State**	TX	**ZIP**	78681	**ZIP + 4**	
24. County	Williamson							

If no Street Address is provided, fields 25-28 are required.

25. Description to Physical Location:					
26. Nearest City			**State**		**Nearest ZIP Code**
Round Rock			TX		78581

Latitude/Longitude are required and may be added/updated to meet TCEQ Core Data Standards. (Geocoding of the Physical Address may be used to supply coordinates where none have been provided or to gain accuracy).

27. Latitude (N) In Decimal:	30.484519		**28. Longitude (W) In Decimal:**	-97.697140	
Degrees	Minutes	Seconds	Degrees	Minutes	Seconds

29. Primary SIC Code (4 digits)	**30. Secondary SIC Code** (4 digits)	**31. Primary NAICS Code** (5 or 6 digits)	**32. Secondary NAICS Code** (5 or 6 digits)
4225		23621	

33. What is the Primary Business of this entity? *(Do not repeat the SIC or NAICS description.)*

warehouse distribution

34. Mailing Address:	**David Barnett - Sr Pre-Construction Manager**							
	Amazon Tower 1, 101 Platform Way N							
	City	**Nashville**	**State**	**TN**	**ZIP**	**37203**	**ZIP + 4**	
35. E-Mail Address:	**barnettu@amazon.com**							

36. Telephone Number	**37. Extension or Code**	**38. Fax Number** *(if applicable)*
( ) -		( ) -

39. TCEQ Programs and ID Numbers Check all Programs and write in the permits/registration numbers that will be affected by the updates submitted on this form. See the Core Data Form instructions for additional guidance.

☐ Dam Safety	☐ Districts	☐ Edwards Aquifer	☐ Emissions Inventory Air	☐ Industrial Hazardous Waste
☐ Municipal Solid Waste	☐ New Source Review Air	☐ OSSF	☐ Petroleum Storage Tank	☐ PWS
☐ Sludge	☐ Storm Water	☐ Title V Air	☐ Tires	☐ Used Oil
☐ Voluntary Cleanup	☒ Wastewater	☐ Wastewater Agriculture	☐ Water Rights	☐ Other:

SECTION IV: Preparer Information

40. Name:	Nick Brown, PE	**41. Title:**	Senior Project Manager

42. Telephone Number	**43. Ext./Code**	**44. Fax Number**	**45. E-Mail Address**
(512) 418-1771		( ) -	Nick.Brown@kimley-horn.com

SECTION V: Authorized Signature

46. By my signature below, I certify, to the best of my knowledge, that the information provided in this form is true and complete, and that I have signature authority to submit this form on behalf of the entity specified in Section II, Field 6 and/or as required for the updates to the ID numbers identified in field 39.

Company:	Amazon.com Services, LLC	**Job Title:**	Sr Pre-Construction Manager
Name *(In Print):*	David Barnett	**Phone:**	(901) 438- **4156**
Signature:	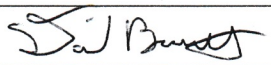	**Date:**	4/25/24