Texas Commission on Environmental Quality

Edwards Aquifer Application Cover Page

Our Review of Your Application

The Edwards Aquifer Program staff conducts an administrative and technical review of all applications. The turnaround time for administrative review can be up to 30 days as outlined in 30 TAC 213.4(e). Generally administrative completeness is determined during the intake meeting or within a few days of receipt. The turnaround time for technical review of an administratively complete Edwards Aquifer application is 90 days as outlined in 30 TAC 213.4(e). Please know that the review and approval time is directly impacted by the quality and completeness of the initial application that is received. In order to conduct a timely review, it is imperative that the information provided in an Edwards Aquifer application include final plans, be accurate, complete, and in compliance with 30 TAC 213.

Administrative Review

1. Edwards Aquifer applications must be deemed administratively complete before a technical review can begin. To be considered administratively complete, the application must contain completed forms and attachments, provide the requested information, and meet all the site plan requirements. The submitted application and plan sheets should be final plans. Please submit one full-size set of plan sheets with the original application, and half-size sets with the additional copies.

   To ensure that all applicable documents are included in the application, the program has developed tools to guide you and web pages to provide all forms, checklists, and guidance. Please visit the below website for assistance: http://www.tceq.texas.gov/field/eapp.

2. This Edwards Aquifer Application Cover Page form (certified by the applicant or agent) must be included in the application and brought to the administrative review meeting.

3. Administrative reviews are scheduled with program staff who will conduct the review. Applicants or their authorized agent should call the appropriate regional office, according to the county in which the project is located, to schedule a review. The average meeting time is one hour.

4. In the meeting, the application is examined for administrative completeness. Deficiencies will be noted by staff and emailed or faxed to the applicant and authorized agent at the end of the meeting, or shortly after. Administrative deficiencies will cause the application to be deemed incomplete and returned.

   An appointment should be made to resubmit the application. The application is re-examined to ensure all deficiencies are resolved. The application will only be deemed administratively complete when all administrative deficiencies are addressed.

5. If an application is received by mail, courier service, or otherwise submitted without a review meeting, the administrative review will be conducted within 30 days. The applicant and agent will be contacted with the results of the administrative review. If the application is found to be administratively incomplete, it can be retrieved from the regional office or returned by regular mail. If returned by mail, the regional office may require arrangements for return shipping.

6. If the geologic assessment was completed before October 1, 2004 and the site contains "possibly sensitive" features, the assessment must be updated in accordance with the *Instructions to Geologists* (TCEQ-0585 Instructions).

Technical Review

1. When an application is deemed administratively complete, the technical review period begins. The regional office will distribute copies of the application to the identified affected city, county, and groundwater conservation district whose jurisdiction includes the subject site. These entities and the public have 30 days to provide comments on the application to the regional office. All comments received are reviewed by TCEQ.

2. A site assessment is usually conducted as part of the technical review, to evaluate the geologic assessment and observe existing site conditions. The site must be accessible to our staff. The site boundaries should be

clearly marked, features identified in the geologic assessment should be flagged, roadways marked and the alignment of the Sewage Collection System and manholes should be staked at the time the application is submitted. If the site is not marked the application may be returned.

3. We evaluate the application for technical completeness and contact the applicant and agent via Notice of Deficiency (NOD) to request additional information and identify technical deficiencies. There are two deficiency response periods available to the applicant. There are 14 days to resolve deficiencies noted in the first NOD. If a second NOD is issued, there is an additional 14 days to resolve deficiencies. If the response to the second notice is not received, is incomplete or inadequate, or provides new information that is incomplete or inadequate, the application must be withdrawn or will be denied. Please note that because the technical review is underway, whether the application is withdrawn or denied **the application fee will be forfeited**.
4. The program has 90 calendar days to complete the technical review of the application. If the application is technically adequate, such that it complies with the Edwards Aquifer rules, and is protective of the Edwards Aquifer during and after construction, an approval letter will be issued. Construction or other regulated activity may not begin until an approval is issued.

Mid-Review Modifications

It is important to have final site plans prior to beginning the permitting process with TCEQ to avoid delays.

Occasionally, circumstances arise where you may have significant design and/or site plan changes after your Edwards Aquifer application has been deemed administratively complete by TCEQ. This is considered a "Mid-Review Modification". Mid-Review Modifications may require redistribution of an application that includes the proposed modifications for public comment.

If you are proposing a Mid-Review Modification, two options are available:

- If the technical review has begun your application can be denied/withdrawn, your fees will be forfeited, and the plan will have to be resubmitted.
- TCEQ can continue the technical review of the application as it was submitted, and a modification application can be submitted at a later time.

If the application is denied/withdrawn, the resubmitted application will be subject to the administrative and technical review processes and will be treated as a new application. The application will be redistributed to the affected jurisdictions.

Please contact the regional office if you have questions. If your project is located in Williamson, Travis, or Hays County, contact TCEQ's Austin Regional Office at 512-339-2929. If your project is in Comal, Bexar, Medina, Uvalde, or Kinney County, contact TCEQ's San Antonio Regional Office at 210-490-3096

Please fill out all required fields below and submit with your application.

1. Regulated Entity Name: RM 2243						**2. Regulated Entity No.: Phase 1A**			
3. Customer Name: City of Leander						**4. Customer No.:**			
5. Project Type: **(Please circle/check one)**	New		Modification			Extension		Exception	
6. Plan Type: **(Please circle/check one)**	WPAP	CZP	SCS	UST	AST	EXP	EXT	Technical Clarification	Optional Enhanced Measures
7. Land Use: **(Please circle/check one)**	Residential		Non-residential			**8. Site (acres):**			**218.07** acres
9. Application Fee:			**10. Permanent BMP(s):**			Vegetative Filter Strips			
11. SCS (Linear Ft.):			**12. AST/UST (No. Tanks):**			N/A			
13. County:	Williamson		**14. Watershed:**			Brushy Creek			

Application Distribution

Instructions: Use the table below to determine the number of applications required. One original and one copy of the application, plus additional copies (as needed) for each affected incorporated city, county, and groundwater conservation district are required. Linear projects or large projects, which cross into multiple jurisdictions, can require additional copies. Refer to the "Texas Groundwater Conservation Districts within the EAPP Boundaries" map found at:

http://www.tceq.texas.gov/assets/public/compliance/field_ops/eapp/EAPP%20GWCD%20map.pdf

For more detailed boundaries, please contact the conservation district directly.

Austin Region			
County:	**Hays**	**Travis**	**Williamson**
Original (1 req.)	___	___	_x_
Region (1 req.)	___	___	_x_
County(ies)	___	___	_x_
Groundwater Conservation District(s)	___Edwards Aquifer Authority ___Barton Springs/ Edwards Aquifer ___Hays Trinity ___Plum Creek	___Barton Springs/ Edwards Aquifer	NA
City(ies) Jurisdiction	___Austin ___Buda ___Dripping Springs ___Kyle ___Mountain City ___San Marcos ___Wimberley ___Woodcreek	___Austin ___Bee Cave ___Pflugerville ___Rollingwood ___Round Rock ___Sunset Valley ___West Lake Hills	___Austin ___Cedar Park ___Florence ___Georgetown ___Jerrell x_Leander ___Liberty Hill ___Pflugerville ___Round Rock

San Antonio Region					
County:	**Bexar**	**Comal**	**Kinney**	**Medina**	**Uvalde**
Original (1 req.)	___	___	___	___	___
Region (1 req.)	___	___	___	___	___
County(ies)	___	___	___	___	___
Groundwater Conservation District(s)	___ Edwards Aquifer Authority ___Trinity-Glen Rose	___Edwards Aquifer Authority	___Kinney	___EAA ___Medina	___EAA ___Uvalde
City(ies) Jurisdiction	___Castle Hills ___Fair Oaks Ranch ___Helotes ___Hill Country Village ___Hollywood Park ___San Antonio (SAWS) ___Shavano Park	___Bulverde ___Fair Oaks Ranch ___Garden Ridge ___New Braunfels ___Schertz	NA	___San Antonio ETJ (SAWS)	NA

I certify that to the best of my knowledge, that the application is complete and accurate. This application is hereby submitted to TCEQ for administrative review and technical review.
Alexis Woffenden, P.E.
Print Name of Customer/Authorized Agent
04/07/2025
Signature of Customer/Authorized Agent Date

FOR TCEQ INTERNAL USE ONLY				
Date(s)Reviewed:		Date Administratively Complete:		
Received From:		Correct Number of Copies:		
Received By:		Distribution Date:		
EAPP File Number:		Complex:		
Admin. Review(s) (No.):		No. AR Rounds:		
Delinquent Fees (Y/N):		Review Time Spent:		
Lat./Long. Verified:		SOS Customer Verification:		
Agent Authorization Complete/Notarized (Y/N):		Fee Check:	Payable to TCEQ (Y/N):	
Core Data Form Complete (Y/N):			Signed (Y/N):	
Core Data Form Incomplete Nos.:			Less than 90 days old (Y/N):	

EDWARDS AQUIFER WATER POLLUTION ABATEMENT PLAN

RM 2243

Prepared for

Williamson County
3151 S.E. Inner Loop, Suite B
Georgetown, Texas 78626

Prepared by

Alexis Woffenden, P.E.

04/07/2025

Edwards Aquifer Protection Program Roadway Application

Texas Commission on Environmental Quality

This application is intended only for projects which a major roadway is designed for construction, such as State highways, County roads, and City thoroughfares.

Designed for Regulated Activities on the Contributing Zone to the Edwards Aquifer in relation to 30 TAC §213.24, Regulated Activities on the Edwards Aquifer Recharge Zone, in relation to 30 TAC §213.5(b), Effective June 1, 1999.

To ensure that the application is administratively complete, confirm that all fields in the form are complete, verify that all requested information is provided, consistently reference the same site and contact person in all forms in the application, and ensure forms are signed by the appropriate party.

Note: Including all the information requested in the form and attachments contributes to more streamlined technical reviews.

Signature

To the best of my knowledge, the responses to this form accurately reflect all information requested concerning the proposed regulated activities and methods to protect the Edwards Aquifer.

The application was prepared by:

Print Name of Customer/Agent: Alexis Woffenden, P.E.

Date: 06/02/2025

Signature of Customer/Agent:

Project Information

1. Regulated Entity (Project) Name: RM 2243
2. County: Williamson County
3. Stream Basin(s): Brushy Creek
4. Groundwater Conservation District (if applicable): _____
5. Customer (Applicant):

   Contact Person: Adam Boatright, P.E.
   Entity: Williamson County
   Mailing Address: 3151 S. E. Inner Loop, Suite B
   City, State: Georgetow, TX Zip: 78626
   Telephone: 512-943-3330
   Email Address: roadadmin@wilco.org

6. Agent (Representative):

   Contact Person: Alexis Woffenden, P.E.
   Entity: BGE, Inc.
   Mailing Address: 1701 Directors Blvd Suite 1000
   City, State: Austin, TX Zip: 78744
   Telephone: 512-795-1416
   Email Address: awoffenden@bgeinc.com

7. Landowner of R.O.W. (Right of Way)
   Person or entity responsible for maintenance of water quality Best Management Practices (BMPs), if not applicant.

   Contact Person: Adam Boatright, P.E.
   Entity: Williamson County
   Mailing Address: 3151 S.E. Inner Loop, Suite B
   City, State: Georgetown, TX Zip: 78626
   Telephone: 512-943-3330
   Email Address: roadadmin@wilco.org

8. ☒ **The TCEQ must be able to inspect the project site or the application will be returned**. Sufficient survey marking is provided on the project to allow TCEQ regional staff to locate the boundaries and alignment of any regulated activities and the geologic or manmade features noted in the Geologic Assessment.

   ☐ Survey marking will be completed by this date: _____

9. ☒ **Attachment A - Road Map**. A road map showing directions to and the location of the project site is attached. The map clearly shows the boundary of the project site.

10. ☒ **Attachment B - USGS Quadrangle**. A copy of the official 7 ½ minute USGS Quadrangle Map (Scale: 1" = 2000') is attached. The map(s) clearly show:

    ☒ Project site boundaries
    ☒ USGS Quadrangle Name(s)
    ☒ All drainage paths from site to surface waters

11. ☒ **This project extends into (Check all that apply):**

    ☒ Recharge Zone (RZ)
    ☒ Contributing Zone (CZ)
    ☐ Transition Zone (TZ)
    ☐ Contributing Zone within Transition Zone (CZ/TZ)
    ☐ Zone not regulated by EAPP

12. ☒ **Attachment C - Project Description**. A detailed narrative description of the proposed project is attached. The project description is consistent throughout the application and contains, at a minimum, the following details:

    ☒ Complete site area [Acres]
    ☒ Offsite upgradient stormwater areas to be captured
    ☒ Impervious area [Acres]
    ☒ Permanent BMP(s)
    ☒ Proposed site use
    ☒ Existing roadway (paved and/or unpaved)
    ☒ Structures to be demolished [Include demo phase]
    ☒ Major interim phases

13. Existing project site conditions are noted below:

    ☒ Existing paved and/or unpaved roads
    ☐ Undeveloped (Cleared)
    ☐ Undeveloped (Undisturbed/Not cleared)
    ☒ Existing commercial site
    ☐ Existing industrial site
    ☒ Existing residential site
    ☐ Other: _____

14. ☒ **Attachment D - Factors Affecting Surface Water Quality**. A detailed description of all factors that could affect surface water quality is attached.

15. ☒ Only inert materials as defined by 30 TAC §330.3 will be used as fill material.

16. Type of pavement or road surface to be used:

    ☐ Concrete
    ☒ Asphaltic concrete pavement
    ☐ Permeable Friction Course (PFC)
    ☐ Other: _____

17. Right of Way (R.O.W.) and Pavement Area:

    R.O.W. for project: 218.07 (ac.)
    Length: 17657.42 ft.
    Width: varies from 32 ft. to 54 ft.
    Impervious cover (IC): 32.34 (ac.)
    Total of Pavement area 32.34 (ac.) ÷ R.O.W. area 218.07 (ac.) x 100 = 15% IC.

    ☒ CAD program was used to determine areas.
    ☒ Number of travel lanes: proposed: 2, existing: 2
    ☒ Typical widths of lanes: 12 (ft.)
    ☒ Are intersections also being improved? (Y/N) Y

Site Plan Requirements

Items 18 - 28 must be included on the Site Plan.

18. ☒ The Site Plan must have a minimum scale of 1" = 400'.
    Site Plan Scale: 1" = 400'

19. 100-year floodplain boundaries:

    ☐ Some part(s) of the project site is located within the 100-year floodplain. The floodplain is shown and labeled. The 100-year floodplain boundaries are based on the following specific (including date of material) source(s):FEMA FIRM panels 48491C0455F and 48491C0460F effective 12/20/2019.

    ☒ No part of the project site is located within the 100-year floodplain.

20. ☒ A layout of the development with existing and finished contours at appropriate, but not greater than ten-foot contour intervals is shown. Sensitive features, lots, wells, buildings, roads, culverts, etc. are shown on the site plan.

21. ☒ A figure (map) indicating all paths of drainage from the site to surface waters.

    ☒ Name all stream crossings: Brushy Creek
    ☒ Drainage patterns and approximate slopes.
    ☐ There will be no discharge to surface waters.

22. ☒ Distinguish between areas of soil disturbance and areas which will not be disturbed.

23. ☒ Show locations of major structural and nonstructural controls. These are the temporary and permanent best management practices. Include the following:

    ☒ Show design and location of any hazardous materials traps.
    ☒ Show design at outfalls of major control structures and conveyances.
    ☒ A description of the BMPs and measures that prevent pollutants from entering surface streams.

24. Show locations of staging areas or project specific locations (PSL). Are they:

    ☐ Onsite, within project R.O.W.
    ☐ Offsite.
    ☒ Not yet determined. (Requires future authorization)

25. ☒ Show locations where soil stabilization practices are expected to occur.

26. ☒ Show surface waters (including wetlands).

27. Temporary aboveground storage tank facilities:

    ☐ Temporary aboveground storage tank facilities will be located on this site. Show on site plan.
    ☒ Temporary aboveground storage tank facilities will not be located on this site.

28. ☒ Plan(s) also include:

    ☐ Sidewalks
    ☐ Related turn lanes
    ☒ Demolition plans
    ☒ Shared-use paths
    ☐ Off-site improvements and staging areas
    ☐ Utility relocations

☐ Other improved areas: _____

Permanent Best Management Practices (BMPs)

Description of practices and measures that will be used after construction is completed.

29. ☒ Permanent BMPs and measures have been designed, and will be constructed, operated, and maintained to ensure that 80% of the incremental increase in the annual mass loading of total suspended solids (TSS) from the site caused by the regulated activity is removed. These quantities have been calculated in accordance with technical guidance accepted by the executive director.

    ☒ The TCEQ Technical Guidance Manual (TGM) was used to design permanent BMPs and measures for this site.

    ☐ A technical guidance other than the TCEQ TGM was used to design permanent BMPs and measures for this site. The complete citation for the technical guidance that was used: _____

30. ☒ **Attachment E - BMPs for Upgradient (Offsite) Stormwater.**

    ☒ A description of the BMPs and measures that will be used to prevent pollution of surface water, groundwater, or stormwater that originates upgradient from the site and flows across the site is attached.

    ☐ No surface water, groundwater or stormwater originates upgradient from the site and flows across the site, and an explanation is attached.

    ☐ Permanent BMPs or measures are not required to prevent pollution of surface water, groundwater, or stormwater that originates upgradient from the site and flows across the site, and an explanation is attached.

31. ☒ **Attachment F - BMPs for On-site Stormwater**.

    ☒ A description of the BMPs and measures that will be used to prevent pollution of surface water or groundwater that originates on-site or flows off the site, including pollution caused by contaminated stormwater runoff from the site is attached.

    ☐ Permanent BMPs or measures are not required to prevent pollution of surface water or groundwater that originates on-site or flows off the site, including pollution caused by contaminated stormwater runoff, and an explanation is attached.

32. ☒ **Attachment G - Construction Plans**. Construction plans and design calculations for the proposed permanent BMPs and measures have been prepared by or under the direct supervision of a Texas Licensed Professional Engineer, and are signed, sealed, and dated. Construction plans for the proposed permanent BMPs and measures are attached and include all proposed structural plans and specifications, and appropriate details.

    ☒ Major bridge cross-sections, and roadway plan and profiles

    ☒ BMP plans and details

    ☒ Design calculations

    ☒ Erosion control

    ☒ TCEQ Construction Notes

    ☒ SW3P

    ☒ EPIC, as necessary

33. ☒ **Attachment H - Inspection, Maintenance, Repair and Retrofit Plan**. A site and BMP specific plan for the inspection, maintenance, repair, and, if necessary, retrofit of the permanent BMPs and measures is attached. The plan fulfills all the following:

    ☒ Prepared and certified by the engineer designing the permanent BMPs and measures.
    ☒ Signed by the owner or responsible party.
    ☒ Outlines specific procedures for documenting inspections, maintenance, repairs, and, if necessary, retrofit.
    ☒ Contains a discussion of recordkeeping procedures.

34. ☒ **Attachment I - Pilot-Scale Field Testing Plan.** Pilot studies for BMPs that are not recognized by the Executive Director require prior approval from the TCEQ. A plan for pilot-scale field testing is attached.

    ☒ N/A

35. ☒ **Attachment J - Measures for Minimizing Surface Stream Contamination.** A description of the measures that will be used to avoid or minimize surface stream contamination and changes in the way in which water enters a stream as a result of the construction and development is attached. The measures address increased stream flashing, the creation of stronger flows, and in-stream effects caused by the regulated activity which increase erosion or may result in water quality degradation.

    ☐ Include permanent spill measures used to contain hydrocarbons or hazardous substances by way of traps, or response contingencies.

36. The applicant is responsible for maintaining the permanent BMPs after construction until such time as the maintenance obligation is either assumed in writing by another entity.

    If the applicant intends to transfer responsibility, check the box below.

    ☐ Yes

    A copy of the transfer of responsibility must be filed with the executive director at the appropriate regional office within 30 days.

Stormwater to be generated by the Proposed Project

Description of practices and measures that will be used during construction.

37. ☒ The site description, controls, maintenance, and inspection requirements for the Storm Water Pollution Prevention Plan (SWPPP or SW3P) developed under the Texas Pollutant Discharge Elimination System (TPDES) general permits for stormwater discharges have been submitted to fulfill paragraphs 30 TAC §213.24(1-5) & §213.5(b) of the technical report.

    ☒ The Temporary Stormwater Section (TCEQ-0602) is included with the application.
    ☐ The SWPPP (SW3P) will serve as the Temporary Stormwater Section (TCEQ-0602).

38. ☒ **Attachment K - Volume and Character of Stormwater**. A detailed description of the volume (quantity) and character (quality) of the stormwater runoff expected to occur from the proposed project is attached. The estimates of stormwater runoff quality and quantity are based on area and type of impervious cover.

    ☒ Include the pre-construction runoff coefficient.
    ☒ Include the post-construction runoff coefficient.

Administrative Information

39. ☒ Submit one (1) original and one (1) copy of the application, plus one electronic copy as needed, for each affected incorporated city, groundwater conservation district, and county in which the project will be located. The TCEQ is required to distribute the additional copies to these jurisdictions.

40. The fee for the plan(s) is based on:

    ☒ The total R.O.W. (as in Item 17).

    ☐ TxDOT roadway project.

WILLIAMSON COUNTY

RM 2243 PHASE 1A

ROADWAY AND DRAINAGE IMPROVEMENTS

JANUARY 2025

WILCO
TEXAS

2025 Williamson County, Texas
All rights reserved.

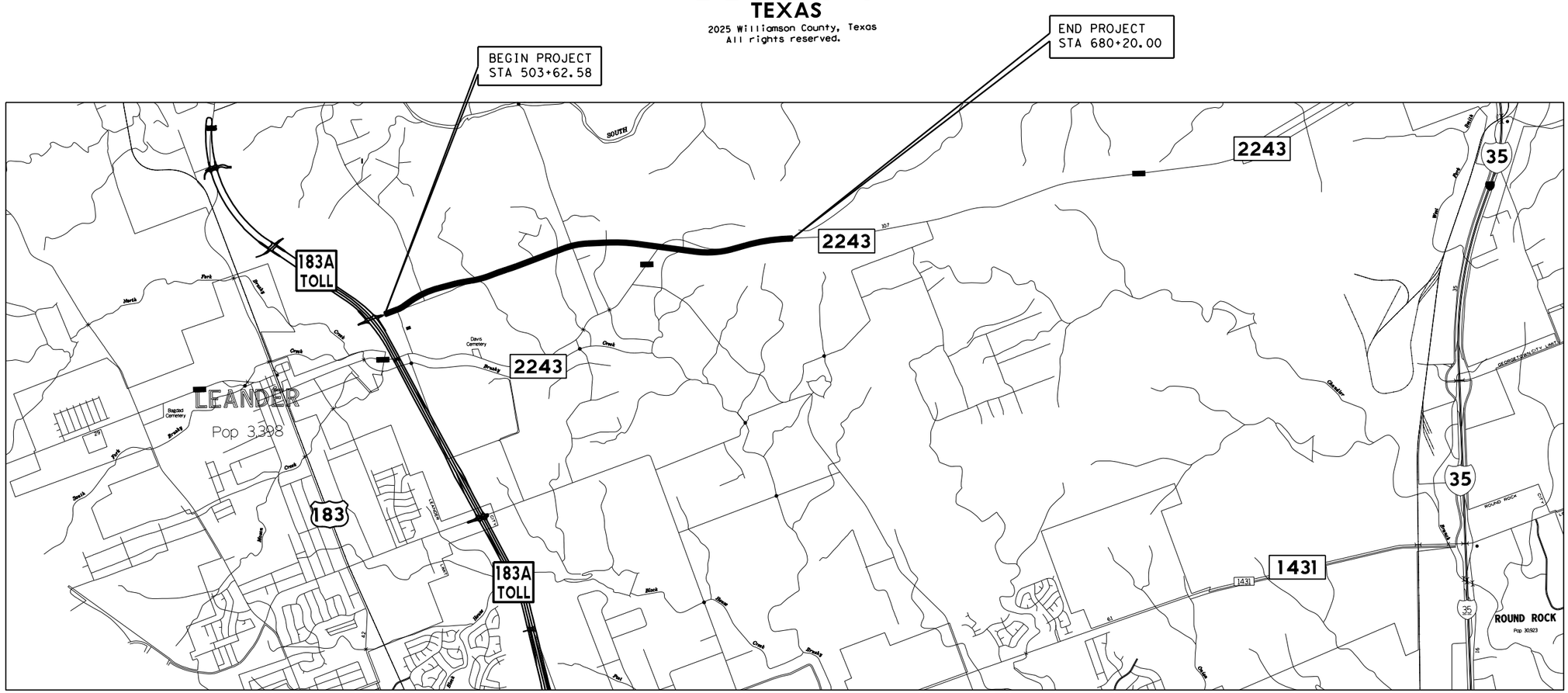

VICINITY MAP
NOT TO SCALE

BGE, Inc.
101 Louis Henna Blvd., Suite 400, Austin, TX 78728
Tel: 512-879-0400 ● www.bgeinc.com
TBPE Registration No. F-1046

Copyright 2025

WATER POLLUTION ABATEMENT PLAN APPLICATION
FOR REGULATED ACTIVITIES ON THE RECHARGE ZONE
TO THE EDWARDS AQUIFER

ATTACHMENT A
ROAD MAP

WILCO
TEXAS
2025 Williamson County, Texas
All rights reserved.

WILLIAMSON COUNTY
PRECINCT #2

FILE: G:\TX\Projects\County\Williamson\7473-02 RM 2243 Phase 1A\03*CADD\02*Bgse\RM2243*P1A*ROADMAP.dgn
DATE: 1/16/2025 11:07:37 AM

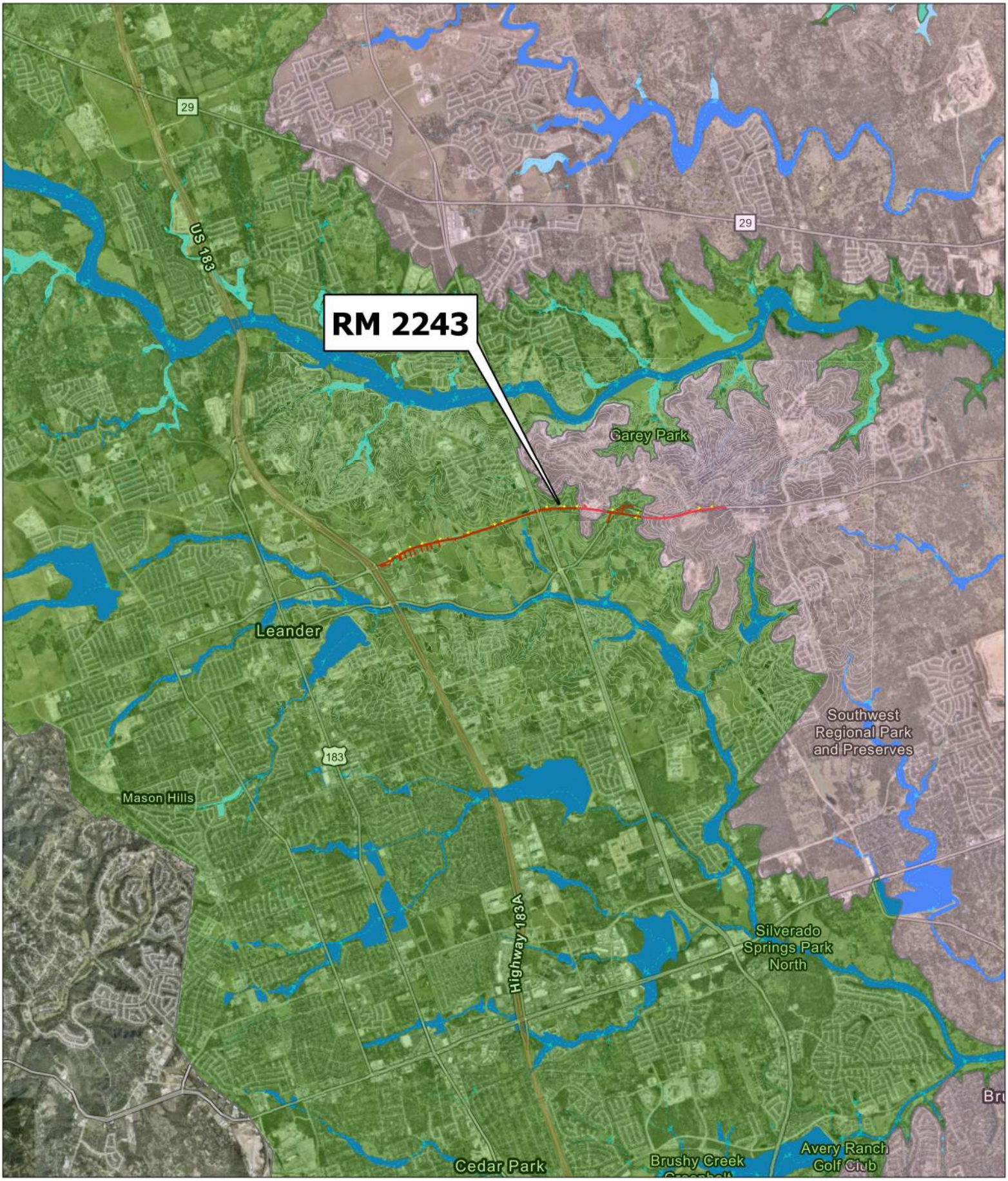

N

0 1,000 2,000 Meters

0 3,000 6,000 US Feet

Legend

- RM 2243 Project Area
- Proposed Culverts
- Creeks
- 10-ft Contours
- FEMA Zone A Floodplain
- FEMA Zone AE Floodplain
- Edwards Aquifer Contributing Zone
- Edwards Aquifer Recharge Zone

RM 2243 ROADWAY IMPROVEMENTS

BGE, Inc.
10777 Westheimer, Suite 500, Houston TX 77042
Tel: 281-558-8700 Fax: 281-558-9701
www.bgeinc.com

ATTACHMENT B
USGS QUAD MAP

February 2025	Proj. No: 7473-02	Exhibit No: 1

ATTACHMENT B.1

FIGURE MAP _ DRAINAGE FROM SITE TO SURFACE WATERS

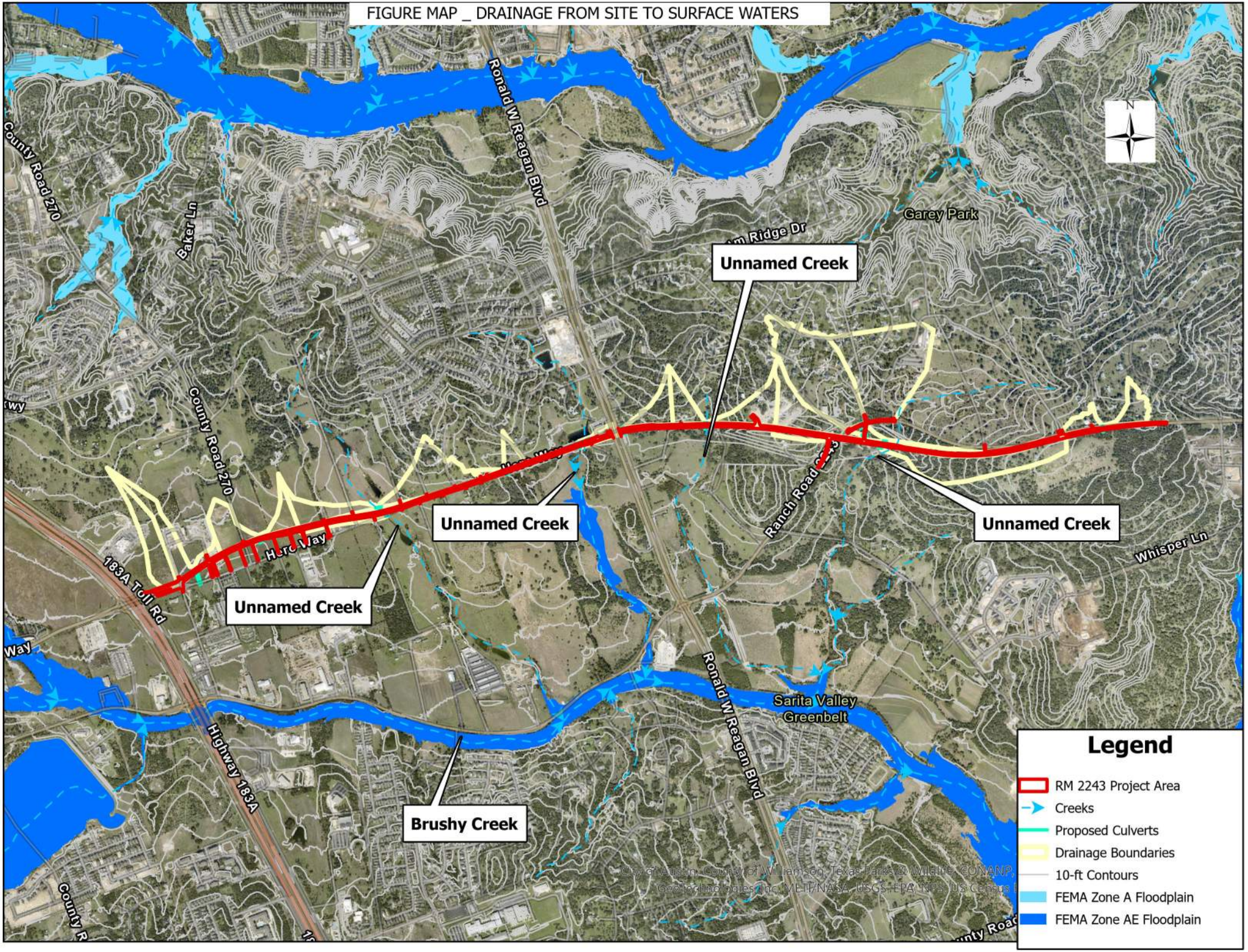

ATTACHMENT C-PROJECT DESCRIPTION

Williamson County is proposing the RM 2243 Phase 1A project to construct and realign a portion of RM 2243 from approx. 200 ft east of the intersection of CR 269 and Hero Way, continuing along Hero Way to Ronald Reagan Blvd, connecting to RM 2243 within new ROW, and ending approx. 900 ft west of Escalera Pkwy on RM 2243. The project is approximately 3.4 miles with 218.07 acres within the project area. The project is the first phase of the RM 2243 project and includes a 3-lane westbound frontage road which will have two-way traffic (1 lane in each direction) with 2-ft shoulders and a 12-ft median. The project will also include a 10-ft Shared Use Path (SUP). The project is partially located within the City of Leander city limits. The project is located within the Edwards Aquifer Recharge Zone and the Contributing Zone. The project remains outside of regulatory FEMA floodplains per FEMA FIRM maps 48491C0455F and 48491C0460F effective 12/20/2019. The offsite areas around the project are currently agricultural pasture lands and large lot single family homes that generally drain from the north to RM 2243. The runoff is conveyed via roadside ditches to culverts crossing under RM 2243.

The existing Hero Way roadway from CR 269 to Ronald Reagan Blvd consists of two traveling lanes approximately 11-feet wide. The existing RM 2243 roadway from Ronald Reagan Blvd to RM 2243 approx. 900-feet west of Escalera Pkway consists of two traveling lanes approximately 12-feet wide. The proposed roadway will consist of two (2) new 12-feet travel lanes with a 14-foot wide Two Way Left Turn Lane. The proposed pavement section consists of 12-inch subgrade lime treatment, geogrid base reinforcement fabric, 11-inch thick flexible base material, three (3) inches of asphaltic surface material (HMA Type B), bonding course, two (2) inches of asphaltic surface material (HMA Type D), and one (1) inch of thin overlay mixture (Type C). This section of roadway will have a curb and gutter along the north side of the road, cross-slope at 2% to the south side of the road where the runoff will drain across the proposed vegetative filter strip to a 2-ft wide bottom channel with 4:1 side slopes. The proposed road occasionally switches to drain from the south to the north side of the road, but continues to drain to adjacent roadside ditches.

The proposed RM 2243 roadway has profile slopes that range roughly between 0.35% and 5.0%. The cross slope is a constant 2% from the proposed curb towards the low side of the road where generally, drainage will be filtered through 15-foot wide engineered vegetated filter strips and then collected into trapezoidal grass lined ditches. The project is located within the Brushy Creek watershed and all runoff runs toward Brushy Creek.

The total existing impervious cover is 17.36 acres of which 2.95 acres are currently treated by existing permanent BMPs. The net existing impervious cover is 14.41 acres. The proposed impervious cover is 32.34 acres. Treatment for the total increase in impervious cover associated with this project is to be provided by the proposed vegetated filter strips along RM 2243. Although site constraints prevent the vegetated filter strip to extend along the entire proposed length of RM 2243, enough treatment will be provided to meet the required 80% removal of the increase in TSS created by the project.

ATTACHMENT D - FACTORS AFFECTING SURFACE WATER QUALITY

Construction Activities:

Sediment from disturbed areas from clearing and grubbing exercises, earthwork for drainage channels, paving operations, concrete flatwork construction, concrete wash out areas and stockpile runoff have the potential of mixing with storm water runoff during construction. These sediments will be contained with temporary BMPs as outlined in the SWPPP.

Operation:

After construction has been completed and the roadway is in operation, runoff from the roadway will have some amounts of total suspended solids (TSS) and oil and grease (O&G). The proposed 15-foot vegetative filter strips permanent BMPs shall treat these runoff contaminants prior to discharging to any streams or tributaries.

SITE PLAN

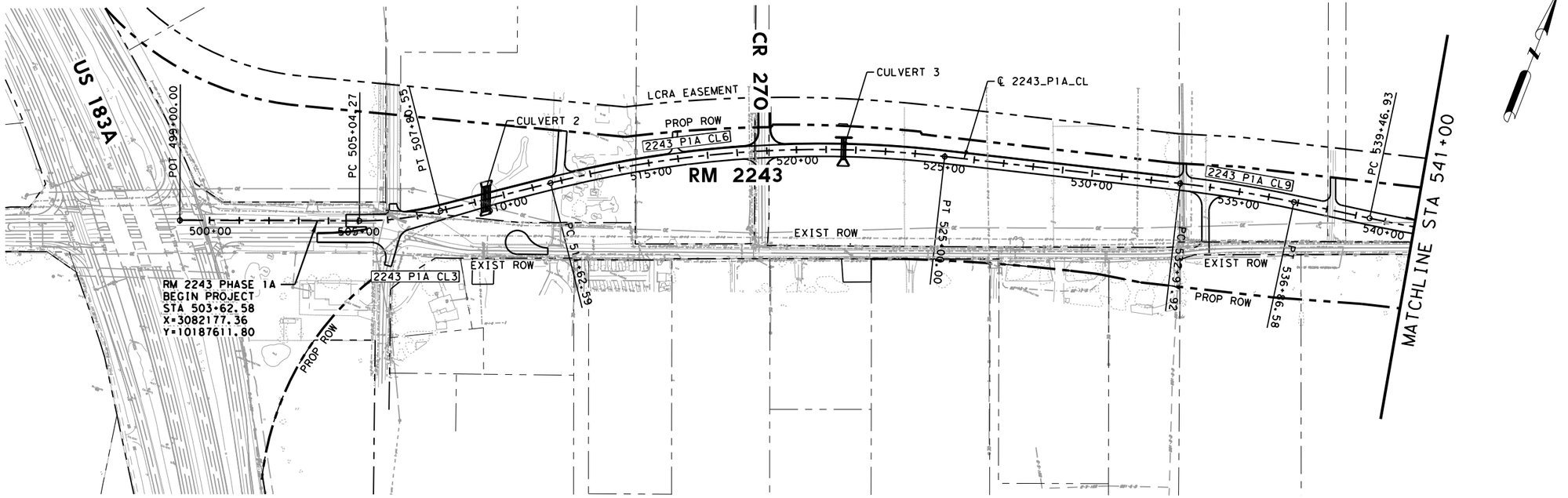

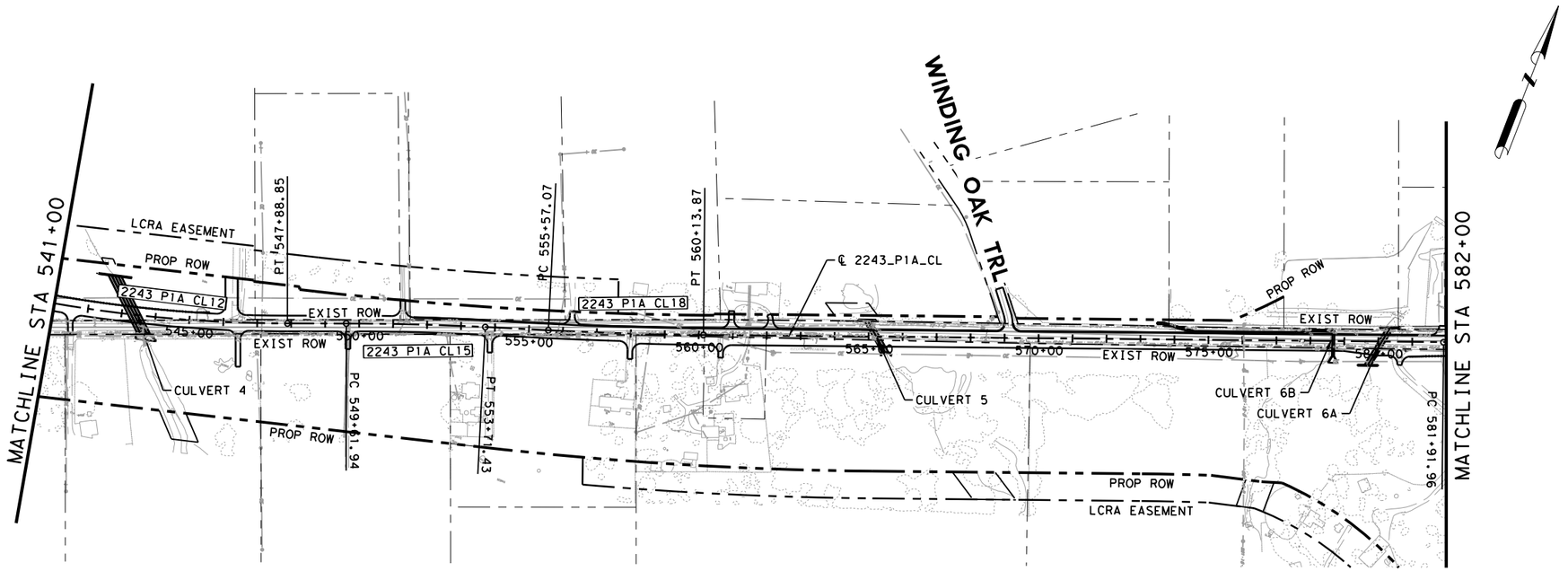

STATE OF TEXAS
JOSHUA T. RICHTER
141234
LICENSED
PROFESSIONAL ENGINEER

4/10/2025

WILCO
TEXAS

BGE, Inc.
101 W Louis Henna Blvd, Suite 400, Austin, TX 78728
Tel: 512-879-0400 • www.bgeinc.com
TBPE Registration No. F-1046

RM 2243

PROJECT LAYOUT

SHEET 1 OF 3

FED.RD. DIV.NO.	PROJECT NO.		SHEET NO.
6			3
STATE	DIST.	COUNTY	
TEXAS	AUS	WILLIAMSON	
CONT.	SECT.	JOB	HIGHWAY NO.
0914	05	222	RM 2243

4/10/2025 12:50:18 PM pdf.pltcfg
G:\TXC\Projects\County\Williamson\7473-02 RM 2243 Phase 1A\03*CADD\01*Shts\03-RDWY\RM2243*PRJLYT*01.dgn

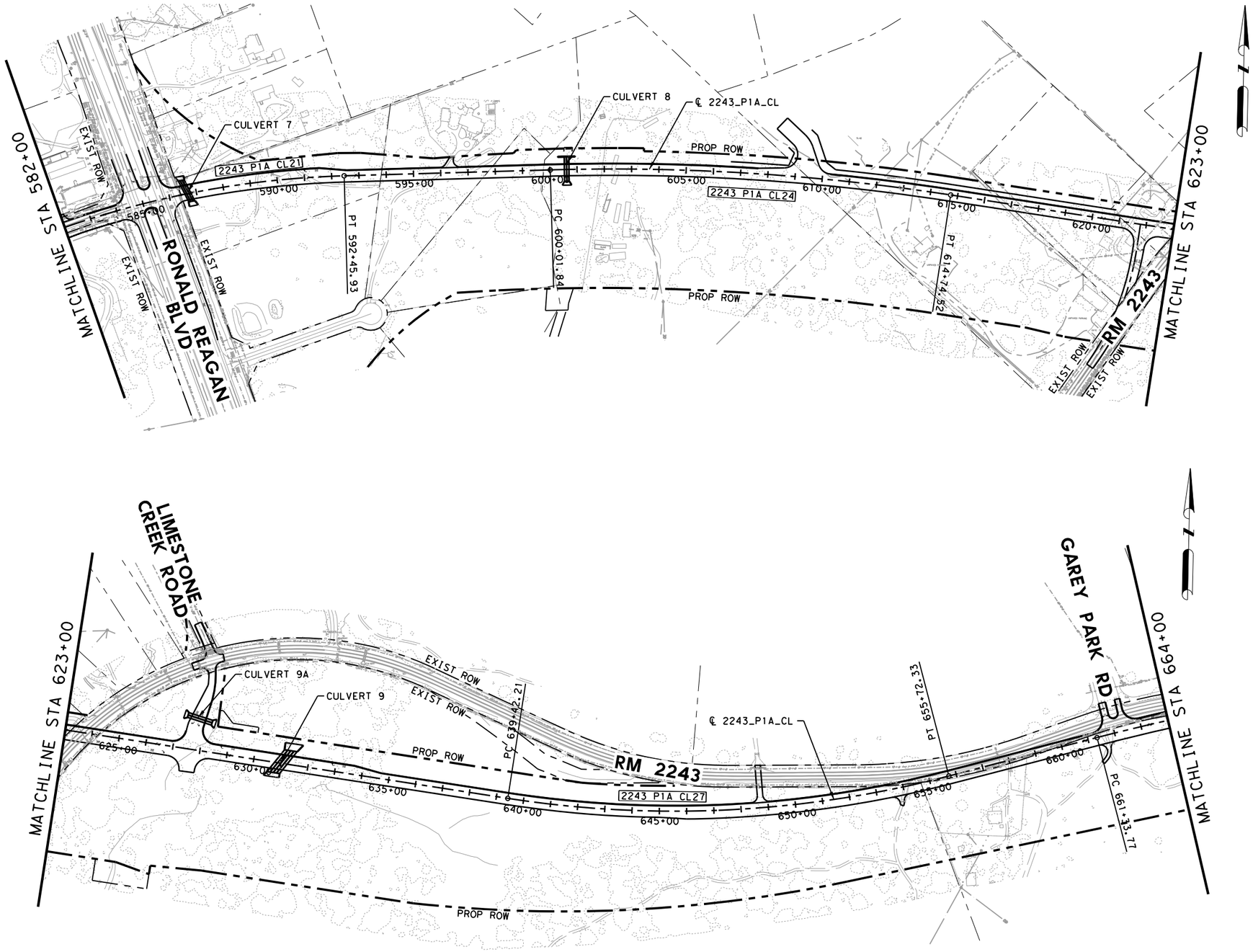

0 200 400
SCALE: 1"=400'

STATE OF TEXAS
JOSHUA T. RICHTER
141234
LICENSED
PROFESSIONAL ENGINEER

4/10/2025

WILCO TEXAS

BGE, Inc.
101 W Louis Henna Blvd, Suite 400, Austin, TX 78728
Tel: 512-879-0400 • www.bgeinc.com
TBPE Registration No. F-1046

RM 2243

PROJECT LAYOUT

SHEET 2 OF 3

FED.RD. DIV.NO.	PROJECT NO.		SHEET NO.
6			4
STATE	DIST.	COUNTY	
TEXAS	AUS	WILLIAMSON	
CONT.	SECT.	JOB	HIGHWAY NO.
0914	05	222	RM 2243

4/10/2025 12:50:20 PM pdf.pltcfg
C:\TXC\Projects\County\Williamson\7473-02 RM 2243 Phase 1A\03*CADD\01*Shts\03-ROWY\RM2243*PRJLYT*02.dgn

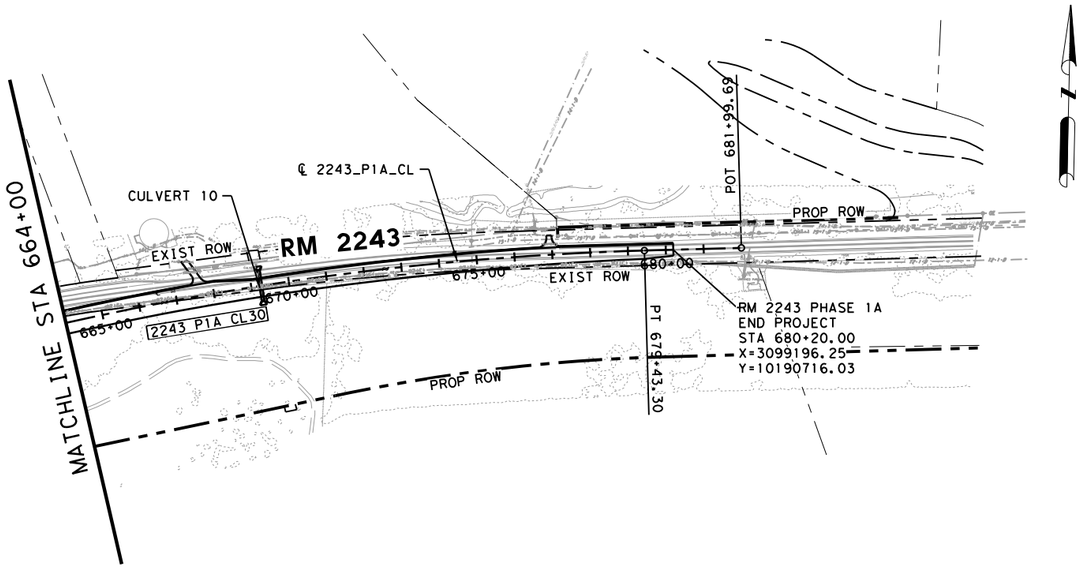

0 200 400
SCALE: 1"=400'

4/10/2025 12:50:22 PM pdf.pltcfg
G:\TXC\Projects\County\Williamson\7473-02 RM 2243 Phase 1A\03\CADD\01\Shts\03-RDWY\RM2243_PRJLYT_03.dgn

STATE OF TEXAS
JOSHUA T. RICHTER
141234
LICENSED
PROFESSIONAL ENGINEER

4/10/2025

WILCO
TEXAS

BGE, Inc.
101 W Louis Henna Blvd, Suite 400, Austin, TX 78728
Tel: 512-879-0400 • www.bgeinc.com
TBPE Registration No. F-1046

RM 2243

PROJECT LAYOUT

SHEET 3 OF 3

FED.RD. DIV.NO.	PROJECT NO.		SHEET NO.
6			5
STATE	DIST.	COUNTY	
TEXAS	AUS	WILLIAMSON	
CONT.	SECT.	JOB	HIGHWAY NO.
0914	05	222	RM 2243

PRELIMINARY
SUBJECT TO CHANGE
LEGEND
EXISTING R.O.W.
PROPOSED R.O.W.
PROPOSED LCRA EASEMENT
PROPOSED DRAINAGE EASEMENT
1"=200'
1"=200'
US 183A
CR 270
CR 269
WINDING OAK TRAIL
RONALD REAGAN BLVD
FLINTLOCK RD
RM 2243
RM 2243
PROPOSED R.O.W. LAYOUT
ROLL 1 OF 2
BGE

PRELIMINARY
SUBJECT TO CHANGE
LESALENA PKWY
PARKSIDE PKWY
GREENVIEW PKWY
CR 176
N. PKWY 1
N. PKWY 2
LEGEND
EXISTING R.O.W.
PROPOSED R.O.W.
PROPOSED LCRA EASEMENT
PROPOSED DRAINAGE EASEMENT
1"=200'
1"=200'
RM 2243
PROPOSED R.O.W. LAYOUT
ROLL 2 OF 2
BGE

ELECTRONICALLY RECORDED 2024013685
Williamson County, Texas Total Pages: 17

POSSESSION AND USE AGREEMENT FOR TRANSPORTATION PURPOSES

STATE OF TEXAS	§	
	§	Parcel No.: 312/312E
COUNTY OF WILLIAMSON	§	Project: Hero Way/RM 2243

This Possession and Use Agreement For Transportation Purposes (the "Agreement") between **WILLIAMSON COUNTY, TEXAS** (the "County"), and **JAMES G. VELCHOFF and DEBORAH K. VELCHOFF** (the "Grantor" whether one or more), grants to the County, their contractors, agents and all others deemed necessary by the County, an irrevocable right to possession and use of the Grantor's property for the purpose of constructing the Hero Way/RM 2243 roadway project and related appurtenances, drainage facility/grading and utility relocations (the "Roadway Construction Project"). The property subject to this Agreement is described more fully in field notes, plat maps, or other descriptions attached hereto as Exhibits "A" and "B" and are made a part of this Agreement by reference (the "Property").

1. For the consideration paid by the County which is set forth in Paragraph 2 below, the receipt and sufficiency of which is acknowledged, the Grantor grants, bargains, sells, and conveys to the County the right of entry and possession and use of the Property for the purpose of constructing a roadway, utility adjustments and appurtenances thereto and the right to remove any improvements. Authorized activities include surveying, inspection, environmental studies, archeological studies, clearing, demolition, construction of permanent improvements, relocating, replacing, and improving existing utility facilities, locating new utility facilities, and other work required to be performed in connection with the Roadway Construction Project. This Possession and Use Agreement will extend to the County, its contractors and assigns, owners of any existing utilities on the Property and those which may be lawfully permitted on the Property by the County in the future, and all others deemed necessary by the County for the purpose of the Roadway Construction Project. This grant will allow the construction, relocation, replacement, repair, improvement, operation, and maintenance of utilities on the Property.

2. In full consideration for this irrevocable grant of possession and use, the County will tender to the Grantor payment in the amount of **ONE MILLION SEVEN HUNDRED FORTY-FIVE THOUSAND ONE HUNDRED THIRTY-FOUR and no/100 DOLLARS ($1,745,134.00)** (the "Entry Deposit"). The County will be entitled to take possession and use of the Property upon tender of payment as set forth in paragraph 3 herein, subject to the conditions in paragraph 13 below, if any. The parties agree that the Entry Deposit tendered represents 100% payment of the County's approved value, which assumes no adverse environmental conditions affecting the value of the Property. The approved value is the County's determination of the just compensation owed to the Grantor for the real property interest to be acquired by the County in the Property, encumbered with the improvements thereon, if any, and damages to the remainder, if any, save and except all oil, gas, and sulfur. The parties agree that the Entry Deposit tendered to Grantor will be deducted from any final settlement amount, Special Commissioners' award, or court judgment. In the event the amount of the final settlement or judgment for acquisition of the Property is less than the amount of the Entry Deposit, then the

Grantor agrees that the difference between the amount of the Entry Deposit tendered and the amount of such final settlement or judgment for acquisition of the Property represents an overpayment and, upon written notice from the County, the Grantor will promptly refund the difference between the Entry Deposit and the amount of the settlement or judgment to the County.

3. The effective date of this Agreement will be the date on which payment of the Entry Deposit pursuant to Paragraph 2 above was tendered in full to the Grantor by the County or delivered to a title company acting as escrow agent for the transaction (the "Effective Date").

4. The Grantor warrants and represents by, through, and under Grantor but not otherwise, that the title to the Property is free and clear of all liens and encumbrances other than as set out in the title commitment GF No. T-158428 issued by Texas National Title and effective December 6, 2023 (and any subsequent updates prior to the Effective Date), and that proper releases will be executed for the Property prior to funds being disbursed under this Agreement. The Grantor further warrants that no other person or entity owns an interest in the fee title to the Property and further agrees to indemnify the County from all unreleased or undisclosed liens, claims, or encumbrances affecting the Property.

   The above-made warranties are made by Grantor and accepted by the County subject to the following:

   A. Visible and apparent easements not appearing of record;

   B. Any discrepancies, conflicts, or shortages in area or boundary lines or any encroachments or any overlapping of improvements which a current survey would show; and,

   C. Easements, restrictions, reservations, covenants, conditions, oil and gas leases, mineral severances, and encumbrances for taxes and assessments (other than liens and conveyances) presently of record in the Official Public Records of Williamson County, Texas, that affect the Property, but only to the extent that said items are still valid and in force and effect as of the Effective Date.

5. The parties agree that the valuation date for determining the amount of just compensation for the real property interest proposed to be acquired by the County in the Property, for negotiation or eminent domain proceeding purposes, will be January 30, 2024.

6. This Agreement is made with the understanding that the County will continue to proceed with the acquisition of a real property interest in the Property. The Grantor reserves all rights of compensation for the title and other interest in and to the Property which the Grantor holds as of the time immediately prior to the Effective Date of this Agreement. This Agreement shall in no way prejudice the Grantor's rights to receive full and just compensation as allowed by law for all of the Grantor's interests in and to the Property to be acquired by the County, encumbered with the improvements thereon, if any, and damages, if any, to the remainder of the Grantor's interest in any larger tract of which the Property is a part (the "Remainder"), all as the Property exists on the Effective Date of this Agreement. The County's removal or

construction of improvements on the Property shall in no way affect the fair market value of the Property in determining compensation due to the Grantor in the eminent domain proceedings, except as such removal or construction of improvements may impact or damage the Remainder. No beneficial project influence will impact the appraised value of the Property to be acquired. This grant will not prejudice the Grantor's rights to any relocation benefits for which Grantor may be eligible.

7. In the event the County institutes or has instituted eminent domain proceedings, the County will not be liable to the Grantor for interest upon any award or judgment as a result of such proceedings for any period of time prior to the date of the award. Payment of any interest may be deferred by the County until the entry of judgment.

8. The purpose of this Agreement is to allow the County to proceed with its Roadway Construction Project without delay and to allow the Grantor to have the use at this time of 100% of the Entry Deposit. The Grantor expressly acknowledges that the proposed Roadway Construction Project is for a valid public use and voluntarily waives any right the Grantor has or may have, known or unknown, to contest the jurisdiction of the court in any condemnation proceeding for acquisition of the Property related to the Roadway Construction Project, based upon claims that the condemning authority has no authority to acquire the Property through eminent domain, has no valid public use for the Property, or that acquisition of the Property is not necessary for the public use.

9. The undersigned Grantor agrees to pay as they become due, all unpaid ad valorem property taxes and special assessments assessed against Property as of the Effective Date.

10. Notwithstanding the acquisition of the right of possession to the Property by the County in a condemnation proceeding by depositing the Special Commissioners' award into the registry of the court, less any amounts tendered to the Grantor pursuant to Paragraph 2 above, this Agreement shall continue to remain in effect until the County acquires title to the Property either by negotiation, settlement, or final court judgment.

11. There shall be no drinking liquor, hunting, or fishing on the Property or any of Grantor's lands by the County, its officers, agents, employees, contractors, invitees, guests, or representatives at any time. No firearms or fishing equipment shall be taken on the property by the County, its officers, agents, employees, contractors, invitees, guests or representatives at any time. The County, its contractors, and any and all persons entering the Property under this Agreement shall not perform disorderly conduct and a portable sanitary facility shall be made available for the County's contractors and any and all persons entering the Property under this agreement.

12. The County shall have the right to remove any fence that now crosses the Property. Prior to cutting any fence, however, the County shall give timely notice to the Grantor to brace the existing fence to be cut adequately on both sides of the proposed cut by suitable H-braces to prevent the remainder of the fence from sagging. If applicable, the County shall take reasonable steps to ensure that cattle, horses and/or other livestock cannot stray from the fenced pastures, including but not limited to informing Grantor of any fence removal and allowing for

reasonable time to relocate said livestock. The County and its designated contractors, employees, and invitees agree to keep any and all gates and fences closed and locked at all times except when passing through same.

13. This Agreement will also extend to and bind the heirs, devisees, executors, administrators, legal representatives, successors in interest, and assigns of the parties.

14. It is agreed the County will record this document.

15. Other conditions:

(a) Should the Special Commissioners' Award (if any) be greater than the Entry Deposit paid pursuant to paragraph 2 herein, the County shall tender the difference to the registry of the court within sixty (60) days of the date that the Special Commissioners' Award is entered.

(b) At no time during the possession of the Property by County for the purposes described herein shall Grantor be denied reasonable access and/or ingress to or egress from the remainder of Grantor's land for its current uses, unless otherwise agreed to in writing in advance.

(c) Any LCRA powerlines or other high voltage powerline relocated for the project may not exceed the current powerline voltage of 138 kilovolts.

(d) LCRA may not increase the number of permanent transmission structures on the property.

(e) LCRA will locate one (1) gate in the middle of the Hero Way easement and will make reasonable efforts to use this gate for ingress and egress, however LCRA will retain its full ingress and egress rights under the easement including the right to install gates on any fences obstructing that access. Please see attached Exhibit C map for the location of the gate.

To have and to hold the Agreement herein described and conveyed, together with all the rights and appurtenances belonging to the County and its assigns forever, for the purposes and subject to the limitations set forth above.

[signature pages follow]

GRANTOR:

JAMES G. VELCHOFF

ACKNOWLEDGMENT

STATE OF TEXAS

COUNTY OF Williamson

This instrument was acknowledged before me on January 16, 2024 by James G. Velchoff, in the capacity and for the purposes and consideration recited herein.

Notary Public, State of Texas

DEBBIE L. LANDRUM
Notary Public, State of Texas
Notary ID# 12529502-7
My Commission Expires
MAY 10, 2025

GRANTOR:

DEBORAH K. VELCHOFF

ACKNOWLEDGMENT

STATE OF TEXAS

COUNTY OF Williamson

This instrument was acknowledged before me on January 16, 2024, by Deborah K. Velchoff, in the capacity and for the purposes and consideration recited herein.

Notary Public, State of Texas

DEBBIE L. LANDRUM
Notary Public, State of Texas
Notary ID# 12529502-7
My Commission Expires
MAY 10, 2025

COUNTY:

WILLIAMSON COUNTY, TEXAS

By: Bill Gravell Jr.
Bill Gravell (Jan 24, 2024 09:18 CST)

Bill Gravell, Jr.
County Judge

ACKNOWLEDGMENT

STATE OF TEXAS
COUNTY OF WILLIAMSON

This instrument was acknowledged before me on Jan 24, 2024, by Bill Gravell, Jr., County Judge of Williamson County, Texas, in the capacity and for the purposes and consideration recited herein.

ANDREA L. SCHIELE
Notary Public, State Of Texas
Notary ID# 126562040
Comm. Exp. 02-23-2025

Andrea L Schiele

Notary Public, State of Texas

EXHIBIT A

County: Williamson
Parcel: 312
Highway: FM 2243

METES & BOUNDS DESCRIPTION FOR PARCEL 312

METES & BOUNDS DESCRIPTION FOR A 3.516 ACRE TRACT OF LAND OUT OF THE TALBOT CHAMBERS SURVEY, ABSTRACT NO. 125, WILLIAMSON COUNTY, TEXAS; BEING A PORTION OF A CALLED 10.00 ACRE TRACT OF LAND AS CONVEYED TO JAMES G. VELCHOFF AND WIFE, DEBORAH K. VELCHOFF BY WARRANTY DEED RECORDED IN VOLUME 2583, PAGE 862 OF THE OFFICIAL RECORDS OF WILLIAMSON COUNTY, TEXAS, AND BY CORRECTION WARRANTY DEED RECORDED IN DOCUMENT NUMBER 9550265 OF THE OFFICIAL PUBLIC RECORDS OF WILLIAMSON COUNTY, TEXAS; SAID 3.516 ACRE TRACT OF LAND BEING MORE PARTICULARLY DESCRIBED BY METES AND BOUNDS AS FOLLOWS AND SHOWN ON THE ATTACHED SKETCH:

BEGINNING at a 1/2-inch iron rod found at the intersection of the north right-of-way line of Hero Way (f/k/a County Road 269) (width varies) (no deed of record found at this point) and the west right-of-way line of County Road 270 (width varies) (no deed of record found), at the southeast corner of the above described Velchoff Tract, for the southeast corner and **POINT OF BEGINNING** of the herein described tract;

THENCE, with the north right-of-way line of said Hero Way and the south line of said Velchoff Tract, S 66°25'53" W a distance of 28.48 feet to a calculated angle point;

THENCE, continuing with the north right-of-way line of said Hero Way and the south line of said Velchoff Tract, S 68°49'53" W a distance of 372.59 feet to a 1/2-inch iron rod found on the north right-of-way line of Hero Way as dedicated by Document Number 2009087880 of the Official Public Records of Williamson County, Texas, at the southwest corner of said Velchoff Tract, and at the southeast corner of called 1.4665 acre tract of land described as Parcel 6 as dedicated in said Document Number 2009087880 of the Official Public Records of Williamson County, Texas, for the southwest corner of the herein described tract;

THENCE, continuing with the north right-of-way line of said Hero Way and the west line of said Velchoff Tract, N 20°58'21" W a distance of 71.42 feet to a 1/2-inch iron rod found at the northeast corner of said Parcel 6, and at the southeast corner of the remainder of a called 15.783 acre tract of land as conveyed to FM 269 Investors, LLC by Special Warranty Deed with Vendor's Lien recorded in Document Number 2008015124 of the Official Public Records of Williamson County, Texas, for an angle point in the west line of the herein described tract;

THENCE, with the west line of said Velchoff Tract and the east line of said FM 269 Investors Tract, N 20°47'02" W a distance of 293.33 feet to a 1/2-inch iron rod with a cap stamped "WILCO ROW 5777" (NAD-83, Central Zone Grid Coordinates: N: 10,187,043.44, E: 3,082,704.65) set for the beginning of a non-tangent curve to the right and the northwest corner of the herein described tract, 131.51 feet left of FM 2243 baseline station 114+58.85, from which a 1/2-inch iron rod found at the common north corner of said Velchoff Tract and said FM 269 Investors Tract, bears N 20°47'02" W a distance of 721.90 feet;

THENCE, over and across said Velchoff Tract, along said curve to the right, an arc distance of 402.55 feet, having a radius of 4,347.00 feet, a central angle of 05°18'21" and a chord which bears N 64°52'57" E a distance of 402.40 feet to a 1/2-inch iron rod with a cap stamped "WILCO ROW 5777" set on the west right-of-way line of said County Road 270 and the east line of said Velchoff Tract, for the northeast corner of the herein described tract, 178.23 feet left of FM 2243 baseline station 118+54.20, from which a leaning 1/2-inch iron rod found at the northeast corner of said Velchoff Tract, bears N 20°47'11" W a distance of 693.59 feet;

THENCE, with the west right-of-way line of said County Road 270 and the east line of said Velchoff Tract, S 20°47'11" E a distance of 391.27 feet to the **POINT OF BEGINNING** and containing 3.516 acres (153,144 square feet) of land, more or less.

Bearing orientation is based on the Texas State Plane Coordinate System NAD-83, Central Zone 4203. All distances are surface and may be converted to grid by dividing by a scale factor of 1.00012.

I hereby certify that these notes were prepared by BGE from a survey made on the ground under my supervision on May 12, 2022 and are true and correct to the best of my knowledge. A sketch accompanies this description.

11/06/2023
Date

Jonathan O. Nobles RPLS Number 5777
BGE, Inc.
101 West Louis Henna Blvd., Suite 400
Austin, TX 78728
Telephone: 512-879-0400
TBPELS Licensed Surveying Firm Number 10106502

Client:	Williamson County
Date:	November 6, 2023
Project Number:	7473-00

SKETCH TO ACCOMPANY LEGAL DESCRIPTION

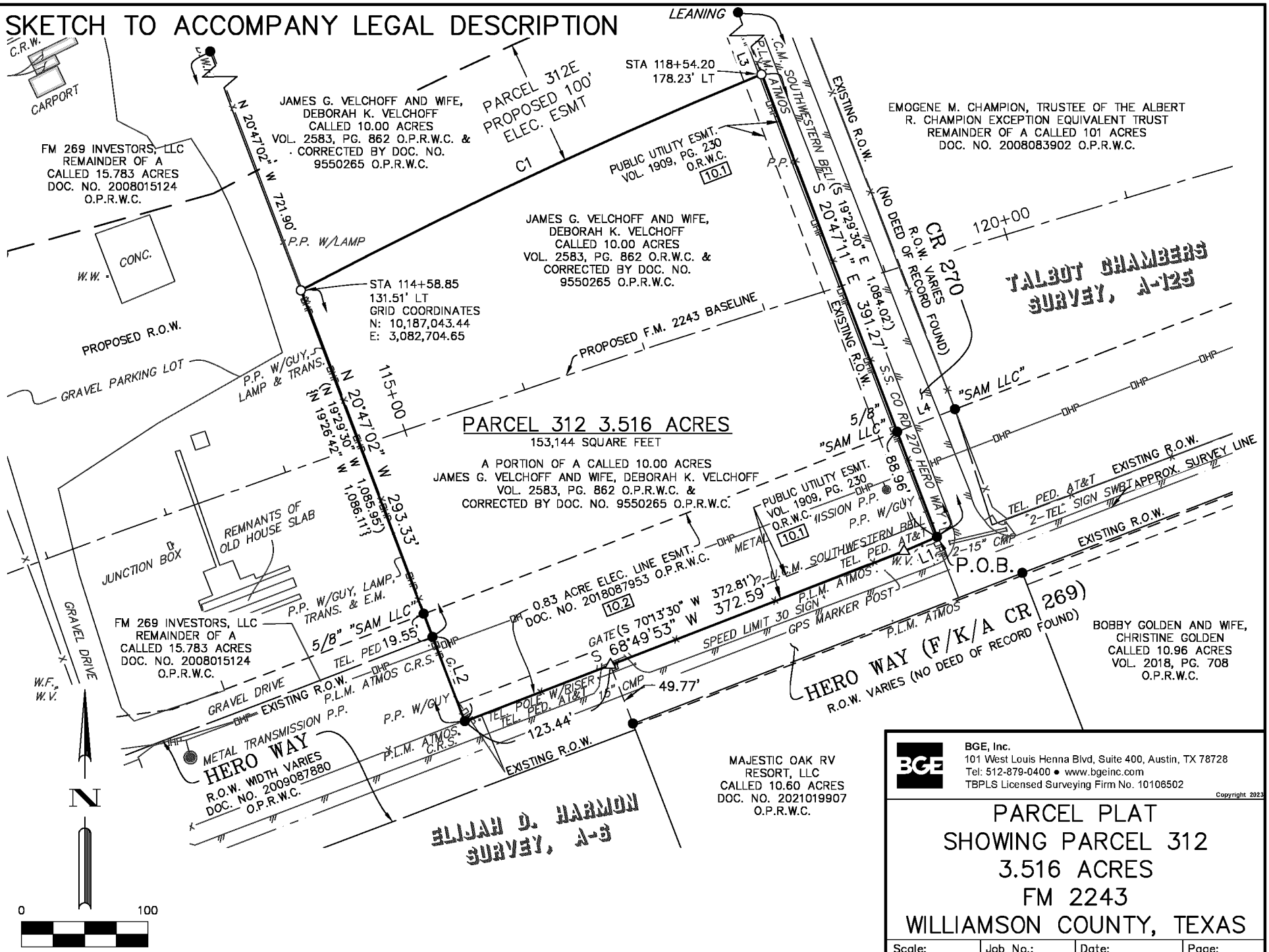

BGE, Inc.
101 West Louis Henna Blvd, Suite 400, Austin, TX 78728
Tel: 512-879-0400 • www.bgeinc.com
TBPLS Licensed Surveying Firm No. 10106502

Copyright 2023

PARCEL PLAT
SHOWING PARCEL 312
3.516 ACRES
FM 2243
WILLIAMSON COUNTY, TEXAS

Scale:	Job No.:	Date:	Page:
1"=100'	7473-00	11/06/2023	3 of 5

G:\TXC\Projects\County_Williamson\7473-00_RM 2243\06_Survey\04_Finals\Drawings\7473-00_P312_EX1.dwg, 11/6/2023 9:

G:\TXC\Projects\County_Williamson\7473-00_RM 2243\06_Survey\04_Finals\Drawings\7473-00_P312_EX1.dwg, 11/6/2023 9:[illegible] BdPage 10 of 17

LEGEND

CMP	CORRUGATED METAL PIPE
C.R.S.	CATHODIC READING STATION
DOC.	DOCUMENT
E.M.	ELECTRIC METER
ESMT.	EASEMENT
NO.	NUMBER
O.P.R.W.C.	OFFICIAL PUBLIC RECORDS OF WILLIAMSON COUNTY
O.R.W.C.	OFFICIAL RECORDS OF WILLIAMSON COUNTY
PED.	PEDESTAL
P.L.M.	PIPELINE MARKER
P.O.B.	POINT OF BEGINNING
P.P.	POWER POLE
RCP	REINFORCED CONCRETE PIPE
R.P.	REFLECTOR POST
S.S.	STOP SIGN
TEL.	TELEPHONE
TRANS.	TRANSFORMER
U.C.M.	UNDERGROUND CABLE MARKER
W.F.	WATER FAUCET
W.M.	WATER METER
W.V.	WATER VALVE
( )	RECORD INFO FOR DOC. NO. 9550265 O.P.R.W.C.
[ ]	RECORD INFO FOR DOC. NO. 2009087880 O.P.R.W.C.
{ }	RECORD INFO FOR DOC. NO. 2008015124 O.P.R.W.C.
●	FOUND 1/2" IRON ROD (UNLESS OTHERWISE NOTED)
○	SET 1/2" IRON ROD W/CAP "WILCO ROW 5777"
▲	FOUND 60D NAIL
△	CALCULATED POINT
—x—	WIRE FENCE
—OHT—	OVERHEAD TELEPHONE
—OHP—	OVERHEAD POWER
—//—	EDGE OF ASPHALT
10.2	SCHEDULE B ITEM

LINE TABLE		
NUMBER	BEARING	DISTANCE
L1	S 66°25'53" W	28.48'
L2	N 20°58'21" W	71.42'
L3	N 20°47'11" W	693.59'
L4	S 68°49'36" W	49.12'

RECORD LINE TABLE		
NUMBER	BEARING	DISTANCE
L1	(S 67°49'30" W)	(28.50')
L2	[N 20°42'50" W]	[70.66']

CURVE TABLE					
NUMBER	ARC LENGTH	RADIUS	DELTA	CHORD BEARING	CHORD DISTANCE
C1	402.55'	4,347.00'	5°18'21"	N 64°52'57" E	402.40'

BGE, Inc.
101 West Louis Henna Blvd, Suite 400, Austin, TX 78728
Tel: 512-879-0400 • www.bgeinc.com
TBPLS Licensed Surveying Firm No. 10106502
Copyright 2023

PARCEL PLAT
SHOWING PARCEL 312
3.516 ACRES
FM 2243
WILLIAMSON COUNTY, TEXAS

Scale:	Job No.:	Date:	Page:
1"=100'	7473-00	11/06/2023	4 of 5

G:\TXC\Projects\County_Williamson\7473-00_RM 2243\06_Survey\04_Finals\Drawings\7473-00_P312_EX1.dwg, 11/6/2023 9:20:10 AM, BGE, Inc.

GENERAL NOTES:

1. BEARING ORIENTATION IS BASED ON THE TEXAS STATE PLANE COORDINATE SYSTEM, CENTRAL ZONE 4203, NAD83. DISTANCES SHOWN HEREON ARE IN SURFACE AND CAN BE CONVERTED TO GRID BY DIVIDING BY THE COMBINED SCALE FACTOR = 1.00012

2. A METES AND BOUNDS DESCRIPTION OF EVEN DATE WAS PREPARED IN CONJUNCTION WITH THIS SKETCH.

3. THIS PARCEL PLAT WAS MADE IN RELIANCE UPON THAT CERTAIN COMMITMENT FOR TITLE INSURANCE ISSUED BY FIRST AMERICAN TITLE GUARANTY COMPANY AND TEXAS NATIONAL TITLE, INC. UNDER G.F. NO. T-158428, DATED EFFECTIVE OCTOBER 5, 2022 AND ISSUED ON OCTOBER 13, 2022.

RESTRICTIVE COVENANT AND EASEMENT NOTES:

1. THE RESTRICTIVE COVENANTS OF RECORD ITEMIZED IN VOLUME 2142, PAGE 942 AND VOLUME 2147, PAGE 836, OFFICIAL RECORDS, WILLIAMSON COUNTY, TEXAS, DO AFFECT THE SUBJECT TRACT.

10.1 A SEWER, WATER AND OTHER UTILITIES LINES EASEMENT GRANTED TO CITY OF LEANDER AS DESCRIBED IN VOLUME 1909, PAGE 230 OF THE OFFICIAL RECORDS OF WILLIAMSON COUNTY, TEXAS, DOES AFFECT THE SUBJECT TRACT, AS SHOWN HEREON.

10.2 AN ELECTRIC TRANSMISSION AND/OR DISTRIBUTION LINE AND/OR SYSTEM EASEMENT GRANTED TO LCRA TRANSMISSION SERVICES CORPORATION AS DESCRIBED IN DOCUMENT NO. 2018087953 OF THE OFFICIAL PUBLIC RECORDS OF WILLIAMSON COUNTY, TEXAS, DOES AFFECT THE SUBJECT TRACT, AS SHOWN HEREON.

10.4 ALL TERMS, CONDITIONS AND PROVISIONS OF THAT CERTAIN DEVELOPMENT AGREEMENT OF RECORD IN DOCUMENT NO. 2010083093 OF THE OFFICIAL PUBLIC RECORDS OF WILLIAMSON COUNTY, TEXAS, DO AFFECT THE SUBJECT TRACT.

10.5 ALL TERMS, CONDITIONS AND PROVISIONS OF THAT CERTAIN DEVELOPMENT AGREEMENT OF RECORD IN DOCUMENT NO. 2016058229 OF THE OFFICIAL PUBLIC RECORDS OF WILLIAMSON COUNTY, TEXAS, DOES NOT AFFECT THE SUBJECT TRACT.

I hereby certify that this survey was made on the ground by BGE, Inc. under my supervision on May 12, 2022 and is true and correct to the best of my knowledge. The property has access to a public roadway and there are no visible encroachments, except as shown hereon.

STATE OF TEXAS
REGISTERED
JONATHAN O. NOBLES
5777
PROFESSIONAL
LAND SURVEYOR

11/06/2023

JONATHAN O. NOBLES RPLS NO. 5777
BGE, INC.
101 WEST LOUIS HENNA BLVD., SUITE 400
AUSTIN, TEXAS 78728
TELEPHONE: (512) 879-0400

BGE, Inc.
101 West Louis Henna Blvd, Suite 400, Austin, TX 78728
Tel: 512-879-0400 • www.bgeinc.com
TBPLS Licensed Surveying Firm No. 10106502
Copyright 2023

PARCEL PLAT
SHOWING PARCEL 312
3.516 ACRES
FM 2243
WILLIAMSON COUNTY, TEXAS

Scale:	Job No.:	Date:	Page:
1"=100'	7473-00	11/06/2023	5 of 5

EXHIBIT B

County: Williamson
Parcel: 312E
Highway: FM 2243

METES & BOUNDS DESCRIPTION FOR PARCEL 312E

METES & BOUNDS DESCRIPTION FOR A 0.924 ACRE TRACT OF LAND OUT OF THE TALBOT CHAMBERS SURVEY, ABSTRACT NO. 125, WILLIAMSON COUNTY, TEXAS; BEING A PORTION OF A CALLED 10.00 ACRE TRACT OF LAND AS CONVEYED TO JAMES G. VELCHOFF AND WIFE, DEBORAH K. VELCHOFF BY WARRANTY DEED RECORDED IN VOLUME 2583, PAGE 862 OF THE OFFICIAL RECORDS OF WILLIAMSON COUNTY, TEXAS, AND BY CORRECTION WARRANTY DEED RECORDED IN DOCUMENT NUMBER 9550265 OF THE OFFICIAL PUBLIC RECORDS OF WILLIAMSON COUNTY, TEXAS; SAID 0.924 ACRE TRACT OF LAND BEING MORE PARTICULARLY DESCRIBED BY METES AND BOUNDS AS FOLLOWS AND SHOWN ON THE ATTACHED SKETCH:

COMMENCING for POINT OF REFERENCE at a 1/2-inch iron rod found on the north right-of-way line of Hero Way (width varies) as dedicated by Document Number 2009087880 of the Official Public Records of Williamson County, Texas, at the southwest corner of the above described Velchoff Tract, and at the southeast corner of called 1.4665 acre tract of land described as Parcel 6 as dedicated in said Document Number 2009087880 of the Official Public Records of Williamson County, Texas; Thence, with the north right-of-way line of said Hero Way and the west line of said Velchoff Tract, N 20°58'21" W a distance of 71.42 feet to a 1/2-inch iron rod found at the northeast corner of said Parcel 6, and at the southeast corner of the remainder of a called 15.783 acre tract of land as conveyed to FM 269 Investors, LLC by Special Warranty Deed with Vendor's Lien recorded in Document Number 2008015124 of the Official Public Records of Williamson County, Texas; Thence, with the west line of said Velchoff Tract and the east line of said FM 269 Investors Tract, N 20°47'02" W a distance of 293.33 feet to a 1/2-inch iron rod with a cap stamped "WILCO ROW 5777" (NAD-83, Central Zone Grid Coordinates: N: 10,187,043.44, E: 3,082,704.65) set for the southwest corner and **POINT OF BEGINNING** of the herein described tract, 131.51 feet left of FM 2243 baseline station 114+58.85;

THENCE, continuing with the west line of said Velchoff Tract and the east line of said FM 269 Investors Tract, N 20°47'02" W a distance of 100.73 feet to a 1/2-inch iron rod with a cap stamped "BGE Inc" set for the beginning of a non-tangent curve to the right and the northwest corner of the herein described tract, 232.21 feet left of FM 2243 baseline station 114+56.20, from which a 1/2-inch iron rod found at the common north corner of said Velchoff Tract and said FM 269 Investors Tract, bears N 20°47'02" W a distance of 621.17 feet;

THENCE, over and across said Velchoff Tract, along said curve to the right, an arc distance of 402.48 feet, having a radius of 4,447.00 feet, a central angle of 05°11'08" and a chord which bears N 64°58'50" E a distance of 402.35 feet to a 1/2-inch iron rod with a cap stamped "BGE Inc" set on the west right-of-way line of County Road 270 (width varies) (no deed of record found) and the east line of said Velchoff Tract, for the northeast corner of the herein described tract, 278.12 feet left of FM 2243 baseline station 118+48.83, from which a leaning 1/2-inch iron rod found at the northeast corner of said Velchoff Tract, bears N 20°47'11" W a distance of 593.55 feet;

THENCE, with the west right-of-way line of said County Road 270 and the east line of said Velchoff Tract, S 20°47'11" E a distance of 100.04 feet to a 1/2-inch iron rod with a cap stamped "WILCO ROW 5777" set for the beginning of a non-tangent curve to the left and for the southeast corner of the herein described tract, 178.23 feet left of FM 2243 baseline station 118+54.20, from which a 1/2-inch iron rod found at the intersection of the west right-of-way line of said County Road 270 and north right-of-way line of Hero Way (f/k/a County Road 269) (no deed of record found at the point), at the southeast corner of the said Velchoff Tract, bears S 20°47'11" E a distance of 391.27 feet;

THENCE, over and across said Velchoff Tract, along said curve to the left, an arc distance of 402.55 feet, having a radius of 4,347.00 feet, a central angle of 05°18'21" and a chord which bears S 64°52'57" W a distance of 402.40 feet to the **POINT OF BEGINNING** and containing 0.924 acre (40,251 square feet) of land, more or less.

Bearing orientation is based on the Texas State Plane Coordinate System NAD-83, Central Zone 4203. All distances are surface and may be converted to grid by dividing by a scale factor of 1.00012.

I hereby certify that these notes were prepared by BGE from a survey made on the ground under my supervision on May 12, 2022 and are true and correct to the best of my knowledge. A sketch accompanies this description.

11/06/2023
Date

Jonathan O. Nobles RPLS Number 5777
BGE, Inc.
101 West Louis Henna Blvd., Suite 400
Austin, TX 78728
Telephone: 512-879-0400
TBPELS Licensed Surveying Firm Number 10106502

Client:	Williamson County
Date:	May 27, 2022
Revised:	November 6, 2023
Project Number:	7473-00

SKETCH TO ACCOMPANY LEGAL DESCRIPTION

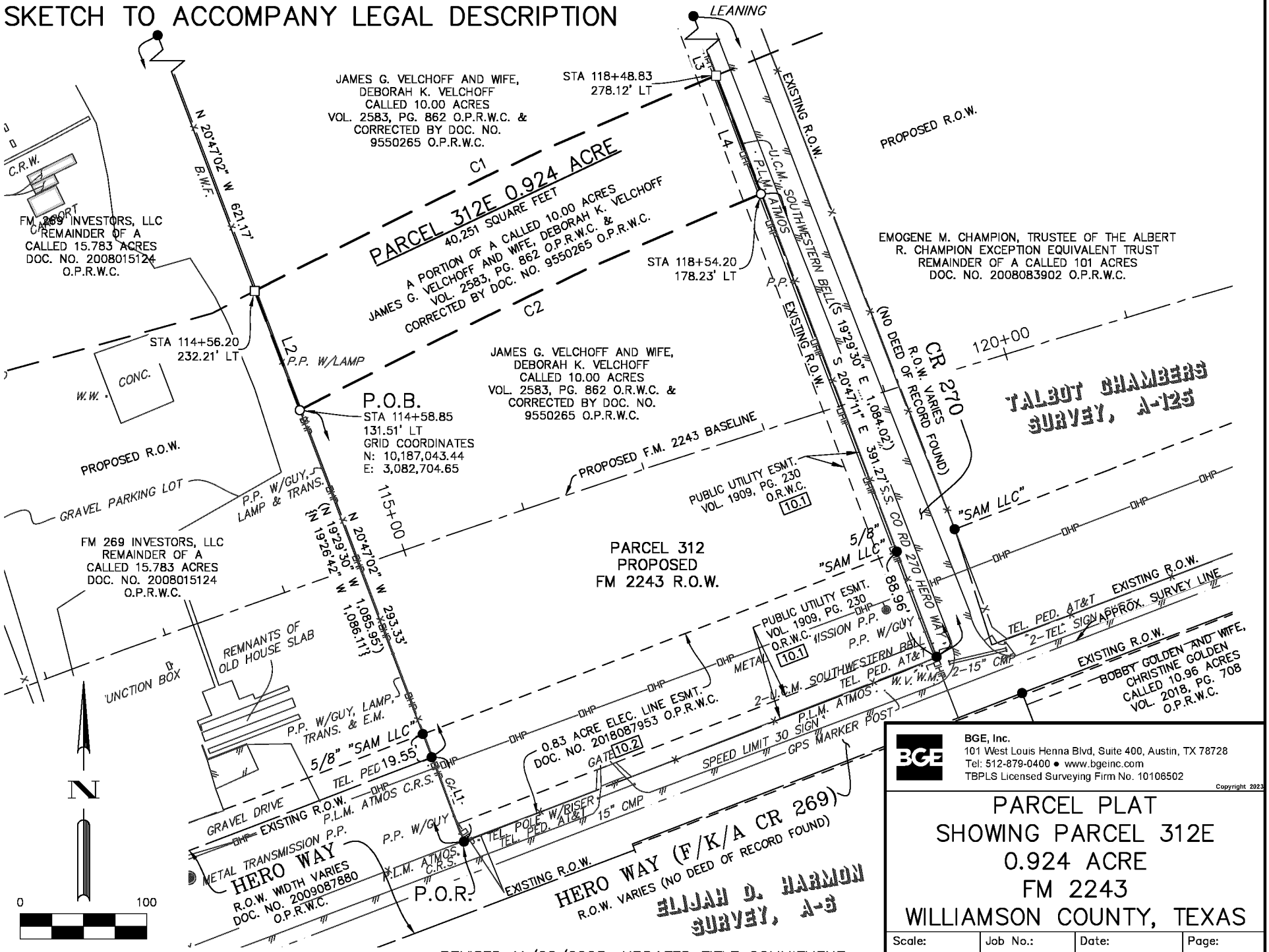

REVISED 11/06/2023: UPDATED TITLE COMMITMENT

BGE, Inc.
101 West Louis Henna Blvd, Suite 400, Austin, TX 78728
Tel: 512-879-0400 • www.bgeinc.com
TBPLS Licensed Surveying Firm No. 10106502

Copyright 2023

PARCEL PLAT SHOWING PARCEL 312E 0.924 ACRE FM 2243 WILLIAMSON COUNTY, TEXAS

Scale:	Job No.:	Date:	Page:
1"=100'	7473-00	05/27/2022	3 of 5

G:\TXC\Projects\County_Williamson\7473-00_RM 2243\06_Survey\04_Finals\Drawings\7473-00_P312E_EX1.dwg, 11/6/2023 9:27:40 AM, Ben Page

G:\TXC\Projects\County_Williamson\7473-00_RM 2243\06_Survey\04_Finals\Drawings\7473-00_P312E_EX1.dwg, 11/6/2023 9:07:41 AM, Brandon Hayden
Page 15 of 17

LEGEND

CMP	CORRUGATED METAL PIPE
C.R.S.	CATHODIC READING STATION
DOC.	DOCUMENT
E.M.	ELECTRIC METER
NO.	NUMBER
O.P.R.W.C.	OFFICIAL PUBLIC RECORDS OF WILLIAMSON COUNTY
O.R.W.C.	OFFICIAL RECORDS OF WILLIAMSON COUNTY
PED.	PEDESTAL
P.L.M.	PIPELINE MARKER
P.O.B.	POINT OF BEGINNING
P.P.	POWER POLE
RCP	REINFORCED CONCRETE PIPE
R.P.	REFLECTOR POST
S.S.	STOP SIGN
TEL.	TELEPHONE
TRANS.	TRANSFORMER
U.C.M.	UNDERGROUND CABLE MARKER
W.F.	WATER FAUCET
W.M.	WATER METER
W.V.	WATER VALVE
( )	RECORD INFO FOR DOC. NO. 9550265 O.P.R.W.C.
[ ]	RECORD INFO FOR DOC. NO. 2009087880 O.P.R.W.C.
{ }	RECORD INFO FOR DOC. NO. 2008015124 O.P.R.W.C.
●	FOUND 1/2" IRON ROD (UNLESS OTHERWISE NOTED)
○	SET 1/2" IRON ROD W/CAP "WILCO ROW 5777"
▲	FOUND 60D NAIL
△	CALCULATED POINT
——x——	WIRE FENCE
——OHT——	OVERHEAD TELEPHONE
——OHP——	OVERHEAD POWER
——//——	EDGE OF ASPHALT
10.2	SCHEDULE B ITEM

LINE TABLE		
NUMBER	BEARING	DISTANCE
L1	N 20°58'21" W	71.42'
L2	N 20°47'02" W	100.73'
L3	N 20°47'11" W	593.55'
L4	S 20°47'11" E	100.04'

RECORD LINE TABLE		
NUMBER	BEARING	DISTANCE
[L1]	[N 20°42'50" W]	[70.66']

CURVE TABLE					
NUMBER	ARC LENGTH	RADIUS	DELTA	CHORD BEARING	CHORD DISTANCE
C1	402.48'	4,447.00'	5°11'08"	N 64°58'50" E	402.35'
C2	402.55'	4,347.00'	5°18'21"	S 64°52'57" W	402.40'

REVISED 11/06/2023: UPDATED TITLE COMMITMENT

BGE, Inc.
101 West Louis Henna Blvd, Suite 400, Austin, TX 78728
Tel: 512-879-0400 • www.bgeinc.com
TBPLS Licensed Surveying Firm No. 10106502
Copyright 2023

PARCEL PLAT
SHOWING PARCEL 312E
0.924 ACRE
FM 2243
WILLIAMSON COUNTY, TEXAS

Scale:	Job No.:	Date:	Page:
1"=100'	7473-00	05/27/2022	4 of 5

G:\TXC\Projects\County_Williamson\7473-00_RM 2243\06_Survey\04_Finals\Drawings\7473-00_P312E_EX1.dwg, 11/6/2023 9:07:40 AM Page 16 of 17

GENERAL NOTES:

1. BEARING ORIENTATION IS BASED ON THE TEXAS STATE PLANE COORDINATE SYSTEM, CENTRAL ZONE 4203, NAD83. DISTANCES SHOWN HEREON ARE IN SURFACE AND CAN BE CONVERTED TO GRID BY DIVIDING BY THE COMBINED SCALE FACTOR = 1.00012

2. A METES AND BOUNDS DESCRIPTION OF EVEN DATE WAS PREPARED IN CONJUNCTION WITH THIS SKETCH.

3. THIS PARCEL PLAT WAS MADE IN RELIANCE UPON THAT CERTAIN COMMITMENT FOR TITLE INSURANCE ISSUED BY TITLE RESOURCES GUARANTY COMPANY AND TEXAS NATIONAL TITLE, INC. UNDER G.F. NO. T-158428, DATED EFFECTIVE OCTOBER 5, 2022 AND ISSUED ON OCTOBER 13, 2022.

RESTRICTIVE COVENANT AND EASEMENT NOTES:

1. THE RESTRICTIVE COVENANTS OF RECORD ITEMIZED IN VOLUME 2142, PAGE 942 AND VOLUME 2147, PAGE 836, OFFICIAL RECORDS, WILLIAMSON COUNTY, TEXAS, DO AFFECT THE SUBJECT TRACT.

10.1 A SEWER, WATER AND OTHER UTILITIES LINES EASEMENT GRANTED TO CITY OF LEANDER AS DESCRIBED IN VOLUME 1909, PAGE 230 OF THE OFFICIAL RECORDS OF WILLIAMSON COUNTY, TEXAS, DOES AFFECT THE SUBJECT TRACT, AS SHOWN HEREON.

10.2 AN ELECTRIC TRANSMISSION AND/OR DISTRIBUTION LINE AND/OR SYSTEM EASEMENT GRANTED TO LCRA TRANSMISSION SERVICES CORPORATION AS DESCRIBED IN DOCUMENT NO. 2018087953 OF THE OFFICIAL PUBLIC RECORDS OF WILLIAMSON COUNTY, TEXAS, DOES NOT AFFECT THE SUBJECT TRACT, AS SHOWN HEREON.

10.4 ALL TERMS, CONDITIONS AND PROVISIONS OF THAT CERTAIN DEVELOPMENT AGREEMENT OF RECORD IN DOCUMENT NO. 2010083093 OF THE OFFICIAL PUBLIC RECORDS OF WILLIAMSON COUNTY, TEXAS, DO AFFECT THE SUBJECT TRACT.

10.5 ALL TERMS, CONDITIONS AND PROVISIONS OF THAT CERTAIN DEVELOPMENT AGREEMENT OF RECORD IN DOCUMENT NO. 2016058229 OF THE OFFICIAL PUBLIC RECORDS OF WILLIAMSON COUNTY, TEXAS, DO AFFECT THE SUBJECT TRACT.

I hereby certify that this survey was made on the ground by BGE, Inc. under my supervision on May 12, 2022 and is true and correct to the best of my knowledge. The property has access to a public roadway and there are no visible encroachments, except as shown hereon.

STATE OF TEXAS
REGISTERED
JONATHAN O. NOBLES
5777
PROFESSIONAL
LAND SURVEYOR

11/06/2023

JONATHAN O. NOBLES RPLS NO. 5777
BGE, INC.
101 WEST LOUIS HENNA BLVD., SUITE 400
AUSTIN, TEXAS 78728
TELEPHONE: (512) 879-0400

REVISED 11/06/2023: UPDATED TITLE COMMITMENT

BGE, Inc.
101 West Louis Henna Blvd, Suite 400, Austin, TX 78728
Tel: 512-879-0400 • www.bgeinc.com
TBPLS Licensed Surveying Firm No. 10106502
Copyright 2023

PARCEL PLAT
SHOWING PARCEL 312E
0.924 ACRE
FM 2243
WILLIAMSON COUNTY, TEXAS

Scale:	Job No.:	Date:	Page:
1"=100'	7473-00	05/27/2022	5 of 5

ELECTRONICALLY RECORDED
OFFICIAL PUBLIC RECORDS

2024013685

Pages: 17 Fee: $0.00
02/22/2024 03:09 PM
CFIRESTONE

Nancy E. Rister, County Clerk
Williamson County,Texas

ELECTRONICALLY RECORDED 2023098853
Williamson County, Texas Total Pages: 17

POSSESSION AND USE AGREEMENT FOR TRANSPORTATION PURPOSES

STATE OF TEXAS	§	
	§	Parcel No.: 329
COUNTY OF WILLIAMSON	§	Project: Hero Way/RM 2243

This Possession and Use Agreement For Transportation Purposes (the "Agreement") between **WILLIAMSON COUNTY, TEXAS** (the "County"), and **CHARLES TODD HOSKINS AND TERRY HOSKINS** (the "Grantor" whether one or more), grants to the County, their contractors, agents and all others deemed necessary by the County, an irrevocable right to possession and use of the Grantor's property for the purpose of constructing the Hero Way/RM 2243 roadway project and related appurtenances, drainage facility/grading and utility relocations (the "Roadway Construction Project"). The property subject to this Agreement is described more fully in field notes, plat maps, or other descriptions attached hereto as Exhibits "A" and "B" and are made a part of this Agreement by reference (the "Property").

1. For the consideration paid by the County which is set forth in Paragraph 2 below, the receipt and sufficiency of which is acknowledged, the Grantor grants, bargains, sells, and conveys to the County the right of entry and possession and use of the Property for the purpose of constructing a roadway, utility adjustments and appurtenances thereto and the right to remove any improvements. Authorized activities include surveying, inspection, environmental studies, archeological studies, clearing, demolition, construction of permanent improvements, relocating, replacing, and improving existing utility facilities, locating new utility facilities, and other work required to be performed in connection with the Roadway Construction Project. This Possession and Use Agreement will extend to the County, its contractors and assigns, owners of any existing utilities on the Property and those which may be lawfully permitted on the Property by the County in the future, and all others deemed necessary by the County for the purpose of the Roadway Construction Project. This grant will allow the construction, relocation, replacement, repair, improvement, operation, and maintenance of utilities on the Property.

2. In full consideration for this irrevocable grant of possession and use, the County will tender to the Grantor payment in the amount of **THREE HUNDRED SEVENTY-SEVEN THOUSAND TWO HUNDRED EIGHTY-NINE and no/100 DOLLARS ($377,289.00)** (the "Entry Deposit"). The County will be entitled to take possession and use of the Property upon tender of payment as set forth in paragraph 3 herein, subject to the conditions in paragraph 13 below, if any. The parties agree that the Entry Deposit tendered represents 100% payment of the County's approved value, which assumes no adverse environmental conditions affecting the value of the Property. The approved value is the County's determination of the just compensation owed to the Grantor for the real property interest to be acquired by the County in the Property, encumbered with the improvements thereon, if any, and damages to the remainder, if any, save and except all oil, gas, and sulfur. The parties agree that the Entry Deposit tendered to Grantor will be deducted from any final settlement amount, Special Commissioners' award, or court judgment. In the event the amount of the final settlement or judgment for acquisition of the Property is less than the amount of the Entry Deposit, then the

Grantor agrees that the difference between the amount of the Entry Deposit tendered and the amount of such final settlement or judgment for acquisition of the Property represents an overpayment and, upon written notice from the County, the Grantor will promptly refund the difference between the Entry Deposit and the amount of the settlement or judgment to the County.

3. The effective date of this Agreement will be the date on which payment of the Entry Deposit pursuant to Paragraph 2 above was tendered in full to the Grantor by the County or delivered to a title company acting as escrow agent for the transaction (the "Effective Date").

4. The Grantor warrants and represents by, through, and under Grantor but not otherwise, that the title to the Property is free and clear of all liens and encumbrances (and any subsequent updates prior to the Effective Date), and that proper releases will be executed for the Property prior to funds being disbursed under this Agreement. The Grantor further warrants that no other person or entity owns an interest in the fee title to the Property and further agrees to indemnify the County from all unreleased or undisclosed liens, claims, or encumbrances affecting the Property.

   The above-made warranties are made by Grantor and accepted by the County subject to the following:

   A. Visible and apparent easements not appearing of record;

   B. Any discrepancies, conflicts, or shortages in area or boundary lines or any encroachments or any overlapping of improvements which a current survey would show; and,

   C. Easements, restrictions, reservations, covenants, conditions, oil and gas leases, mineral severances, and encumbrances for taxes and assessments (other than liens and conveyances) presently of record in the Official Public Records of Williamson County, Texas, that affect the Property, but only to the extent that said items are still valid and in force and effect as of the Effective Date.

5. The parties agree that the valuation date for determining the amount of just compensation for the real property interest proposed to be acquired by the County in the Property, for negotiation or eminent domain proceeding purposes, will be the date the Effective Date.

6. This Agreement is made with the understanding that the County will continue to proceed with the acquisition of a real property interest in the Property. The Grantor reserves all rights of compensation for the title and other interest in and to the Property which the Grantor holds as of the time immediately prior to the Effective Date of this Agreement. This Agreement shall in no way prejudice the Grantor's rights to receive full and just compensation as allowed by law for all of the Grantor's interests in and to the Property to be acquired by the County, encumbered with the improvements thereon, if any, and damages, if any, to the remainder of the Grantor's interest in any larger tract of which the Property is a part (the "Remainder"), all as the Property exists on the Effective Date of this Agreement. The County's removal or construction of improvements on the Property shall in no way affect the fair market value of

the Property in determining compensation due to the Grantor in the eminent domain proceedings, except as such removal or construction of improvements may impact or damage the Remainder. No beneficial project influence will impact the appraised value of the Property to be acquired. This grant will not prejudice the Grantor's rights to any relocation benefits for which Grantor may be eligible.

7. In the event the County institutes or has instituted eminent domain proceedings, the County will not be liable to the Grantor for interest upon any award or judgment as a result of such proceedings for any period of time prior to the date of the award. Payment of any interest may be deferred by the County until the entry of judgment.

8. The purpose of this Agreement is to allow the County to proceed with its Roadway Construction Project without delay and to allow the Grantor to have the use at this time of 100% of the Entry Deposit. The Grantor expressly acknowledges that the proposed Roadway Construction Project is for a valid public use and voluntarily waives any right the Grantor has or may have, known or unknown, to contest the jurisdiction of the court in any condemnation proceeding for acquisition of the Property related to the Roadway Construction Project, based upon claims that the condemning authority has no authority to acquire the Property through eminent domain, has no valid public use for the Property, or that acquisition of the Property is not necessary for the public use.

9. The undersigned Grantor agrees to pay as they become due, all unpaid ad valorem property taxes and special assessments assessed against Property as of the Effective Date.

10. Notwithstanding the acquisition of the right of possession to the Property by the County in a condemnation proceeding by depositing the Special Commissioners' award into the registry of the court, less any amounts tendered to the Grantor pursuant to Paragraph 2 above, this Agreement shall continue to remain in effect until the County acquires title to the Property either by negotiation, settlement, or final court judgment.

11. There shall be no drinking liquor, hunting, or fishing on the Property or any of Grantor's lands by the County, its officers, agents, employees, contractors, invitees, guests, or representatives at any time. No firearms or fishing equipment shall be taken on the property by the County, its officers, agents, employees, contractors, invitees, guests or representatives at any time. The County, its contractors, and any and all persons entering the Property under this Agreement shall not perform disorderly conduct and a portable sanitary facility shall be made available for the County's contractors and any and all persons entering the Property under this agreement.

12. The County shall have the right to remove any fence that now crosses the Property. Prior to cutting any fence, however, the County shall give timely notice to the Grantor to brace the existing fence to be cut adequately on both sides of the proposed cut by suitable H-braces to prevent the remainder of the fence from sagging. If applicable, the County shall take reasonable steps to ensure that cattle, horses and/or other livestock cannot stray from the fenced pastures, including but not limited to informing Grantor of any fence removal and allowing for reasonable time to relocate said livestock. The County and its designated contractors,

employees, and invitees agree to keep any and all gates and fences closed and locked at all times except when passing through same.

13. This Agreement will also extend to and bind the heirs, devisees, executors, administrators, legal representatives, successors in interest, and assigns of the parties.

14. It is agreed the County will record this document.

15. Other conditions: Should the Special Commissioners' Award (if any) be greater than the Entry Deposit paid pursuant to paragraph 2 herein, the County shall tender the difference to the registry of the court within sixty (60) days of the date that the Special Commissioners' Award is entered.

At no time during the possession of the Property by County for the purposes described herein shall Grantor be denied reasonable access and/or ingress to or egress from the remainder of Grantor's land for its current uses, unless otherwise agreed to in writing in advance.

To have and to hold the Agreement herein described and conveyed, together with all the rights and appurtenances belonging to the County and its assigns forever, for the purposes and subject to the limitations set forth above.

[signature pages follow]

GRANTOR:

Charles Todd Hoskins

ACKNOWLEDGMENT

STATE OF TEXAS

COUNTY OF Travis

This instrument was acknowledged before me on this the 21 day of Sept, 2023, by Charles Todd Hoskins, in the capacity and for the purposes and consideration recited herein.

BRANDY GONZALES
My Notary ID # 131785119
Expires November 14, 2026

Notary Public, State of Texas

GRANTOR:

Terry Hoskins

Terry Hoskins

ACKNOWLEDGMENT

STATE OF TEXAS

COUNTY OF Travis

This instrument was acknowledged before me on this the 21 day of Sept, 2023, by Terry Hoskins, in the capacity and for the purposes and consideration recited herein.

BRANDY GONZALES
My Notary ID # 131785119
Expires November 14, 2026

Notary Public, State of Texas

COUNTY:

WILLIAMSON COUNTY, TEXAS

By: Bill Gravell, Jr (Oct 3, 2023 11:52 CDT)
Bill Gravell, Jr.
County Judge

ACKNOWLEDGMENT

STATE OF TEXAS
COUNTY OF WILLIAMSON

This instrument was acknowledged before me on this the 3rd day of October, 2023, by Bill Gravell, Jr., County Judge of Williamson County, Texas, in the capacity and for the purposes and consideration recited herein.

ANDREA L. SCHIELE
Notary Public, State Of Texas
Notary ID# 126562040
Comm. Exp. 02-23-2025

Notary Public, State of Texas

EXHIBIT A

County: Williamson
Parcel: 329
Highway: FM 2243

METES & BOUNDS DESCRIPTION FOR PARCEL 329

METES & BOUNDS DESCRIPTION FOR A 0.809 ACRE TRACT OF LAND OUT OF THE TALBOT CHAMBERS SURVEY, ABSTRACT NO. 125, WILLIAMSON COUNTY, TEXAS; BEING A PORTION OF A CALLED 6.481 ACRE TRACT OF LAND AS CONVEYED TO CHARLES TODD HOSKINS AND WIFE, TERRY HOSKINS BY WARRANTY DEED RECORDED IN DOCUMENT NUMBER 2004000861 OF THE OFFICIAL PUBLIC RECORDS OF WILLIAMSON COUNTY, TEXAS; SAID 0.809 ACRE TRACT OF LAND BEING MORE PARTICULARLY DESCRIBED BY METES AND BOUNDS AS FOLLOWS AND SHOWN ON THE ATTACHED SKETCH:

BEGINNING at a 1/2-inch iron rod with a cap stamped "J.E. GARON RPLS 4303" found on the north right-of-way line of Hero Way (f/k/a County Road 269) (width varies) (no deed of record found), at the southeast corner of the above described 6.481 acre Hoskins Tract, and at the most southerly southwest corner of the remainder of a called 13.371 acre tract of land as conveyed to Charles Hoskins and Patricia Hoskins by Warranty Deed with Vendor's Lien recorded in Document Number 2002036263 of the Official Public Records of Williamson County, Texas, for the southeast corner and **POINT OF BEGINNING** of the herein described tract, from which a 1/2-inch iron rod with a cap stamped "J.E. GARON RPLS 4303" found on the north right-of-way line of said Hero Way, at the southeast corner of said 13.371 acre Hoskins Tract, bears N 68°46'24" E a distance of 29.93 feet;

THENCE, with the north right-of-way line of said Hero Way and the south line of said 6.481 acre Hoskins Tract, S 68°52'47" W a distance of 426.65 feet to a 5/8-inch iron rod found at the southwest corner of said 6.481 acre Hoskins Tract, and at the southeast corner of a called 27.992 acre tract of land described as Tract I as conveyed to Harmony Public Schools by Special Warranty Deed recorded in Document Number 2021088010 of the Official Public Records of Williamson County, Texas, for the southwest corner of the herein described tract, from which a 1/2-inch iron rod found on the north right-of-way line of said Hero Way, at an angle point in the south line of said 27.992 acre Harmony Tract, bears S 68°34'25" W a distance of 521.05 feet;

THENCE, with the west line of said 6.481 acre Hoskins Tract and the east line of said 27.992 acre Harmony Public Schools Tract, N 21°16'05" W a distance of 112.04 feet to a 1/2-inch iron rod with cap stamped "WILCO ROW 5777" (NAD-83, Central Zone Grid Coordinates: N: 10,187,974.13, E: 3,085,787.29) set for the northwest corner of the herein described tract, 207.22 feet left of FM 2243 baseline station 146+67.62, from which a 1/2-inch iron rod with a cap stamped "J.E. GARON RPLS 4303" found for the northwest corner of said 6.481 acre Hoskins tract bears N 21°16'05" W a distance of 552.92 feet;

THENCE, over and across said 6.481 acre Hoskins Tract, N 75°22'23" E a distance of 132.58 feet to a 1/2-inch iron rod with a cap stamped "WILCO ROW 5777" set for an exterior corner of the herein described tract, 207.22 feet left of FM 2243 baseline station 148+00.19;

THENCE, continuing over and across said 6.481 acre Hoskins Tract, S 14°37'37" E a distance of 8.22 feet to a 1/2-inch iron rod with a cap stamped "WILCO ROW 5777" set for an interior corner of the herein described tract, 199.00 feet left of FM 2243 baseline station 148+00.19;

THENCE, continuing over and across said 6.481 acre Hoskins Tract, N 75°22'23" E a distance of 44.24 feet to a 1/2-inch iron rod with a cap stamped "WILCO ROW 5777" set for a point of curvature of a curve to the left, 199.00 feet left of FM 2243 baseline station 148+44.43;

THENCE, continuing over and across said 6.481 acre Hoskins Tract, along said curve to the left, an arc distance of 252.94 feet, having a radius of 11,053.00 feet, a central angle of 01°18'40" and a chord which bears N 74°43'03" E, a distance of 252.94 feet to a 1/2-inch iron rod with a cap stamped "WILCO ROW 5777" set on the east line of said 6.481 acre Hoskins Tract and the west line of the remainder of said 13.371 acre Hoskins Tract, for the northeast corner of the herein described tract, 201.89 feet left of FM 2243 baseline station 150+97.36, from which a 1/2-inch iron rod with a cap stamped "J.E. GARON RPLS 4303" found at the northeast corner of said 6.481 acre Hoskins Tract and at an interior corner of the remainder of said 13.371 acre Hoskins Tract, bears N 21°39'55" W a distance of 607.86 feet;

THENCE, with the east line of said 6.481 acre Hoskins Tract and the west line of the remainder of said 13.371 acre Hoskins Tract, S 21°39'55" E a distance of 58.16 feet to the **POINT OF BEGINNING** and containing 0.809 acre (35,231 square feet) of land, more or less.

Bearing orientation is based on the Texas State Plane Coordinate System NAD-83, Central Zone 4203. All distances are surface and may be converted to grid by dividing by a scale factor of 1.00012.

I hereby certify that these notes were prepared by BGE from a survey made on the ground under my supervision on May 12, 2022 and are true and correct to the best of my knowledge. A sketch accompanies this description.

08/05/2022
Date

Jonathan O. Nobles RPLS Number 5777
BGE, Inc.
101 West Louis Henna Blvd., Suite 400
Austin, TX 78728
Telephone: 512-879-0400
TBPELS Licensed Surveying Firm Number 10106502

Client:	Williamson County
Date:	August 5, 2022
Project Number:	7473-00

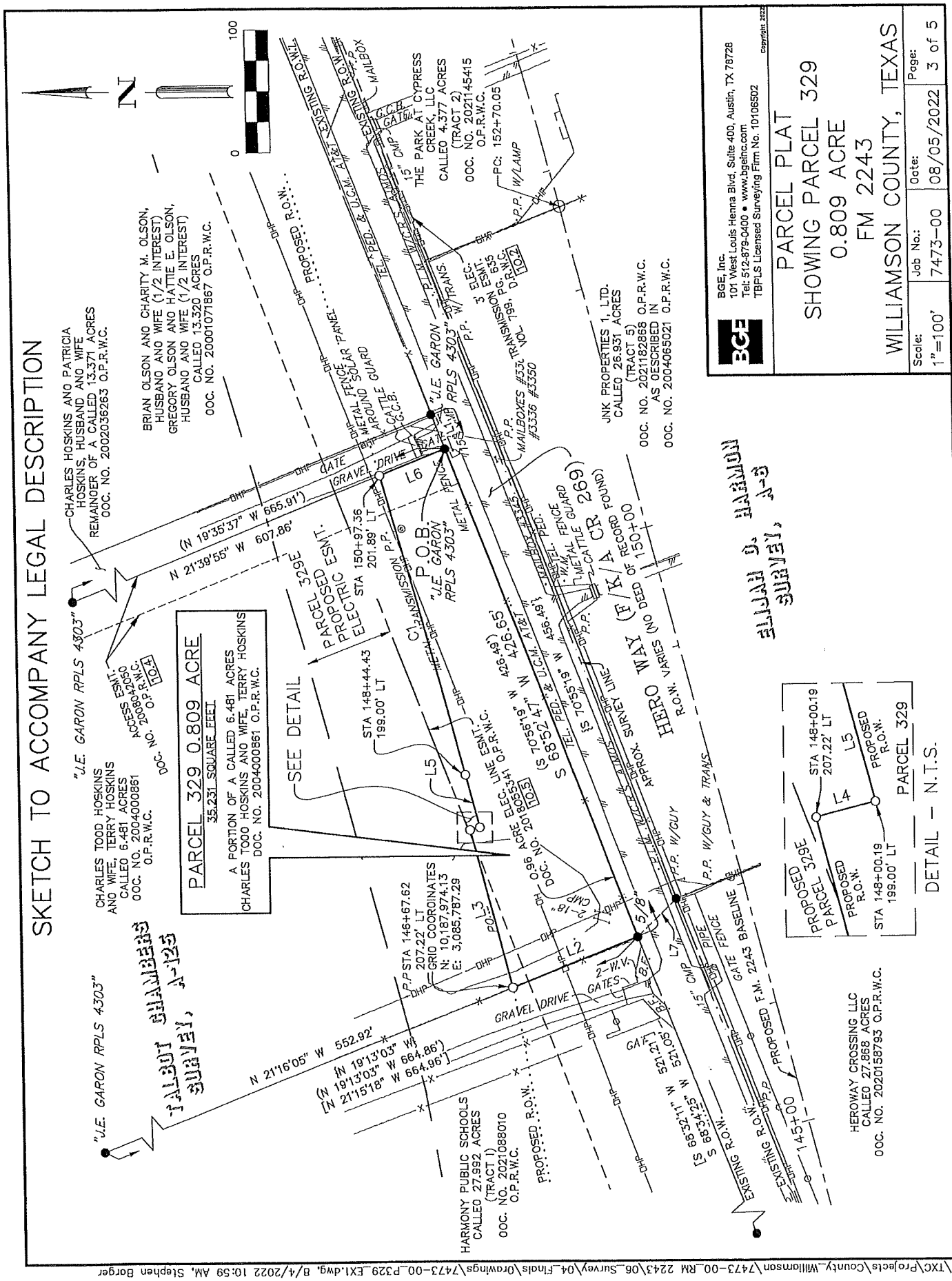
SKETCH TO ACCOMPANY LEGAL DESCRIPTION
PARCEL 329 0.809 ACRE
35,231 SQUARE FEET
A PORTION OF A CALLED 6.481 ACRES
CHARLES TODD HOSKINS AND WIFE, TERRY HOSKINS
DOC. NO. 2004000861 O.P.R.W.C.
SEE DETAIL
P.O.B. "J.E. GARON RPLS 4303"
"J.E. GARON RPLS 4303"
CHARLES HOSKINS AND PATRICIA HOSKINS, HUSBAND AND WIFE
REMAINDER OF A CALLED 13.371 ACRES
OOC. NO. 2002036263 O.P.R.W.C.
CHARLES TODD HOSKINS AND WIFE, TERRY HOSKINS
CALLED 6.481 ACRES
OOC. NO. 2004000861 O.P.R.W.C.
BRIAN OLSON AND CHARITY M. OLSON, HUSBAND AND WIFE (1/2 INTEREST)
GREGORY OLSON AND HATTIE E. OLSON, HUSBAND AND WIFE (1/2 INTEREST)
CALLED 13.320 ACRES
OOC. NO. 20001071867 O.P.R.W.C.
THE PARK AT CYPRESS CREEK, LLC
CALLED 4.377 ACRES
(TRACT 2)
OOC. NO. 2021145415
O.P.R.W.C.
JNK PROPERTIES 1, LTD.
CALLED 26.931 ACRES
(TRACT 5)
OOC. NO. 2021182868 O.P.R.W.C.
AS DESCRIBED IN
OOC. NO. 2004065021 O.P.R.W.C.
HARMONY PUBLIC SCHOOLS
CALLED 27.992 ACRES
(TRACT 1)
OOC. NO. 2021088010
O.P.R.W.C.
HEROWAY CROSSING LLC
CALLED 27.868 ACRES
OOC. NO. 2020158793 O.P.R.W.C.
HERO WAY (F/K/A CR 269)
R.O.W. VARIES (NO DEED OF RECORD FOUND)
PROPOSED F.M. 2243 BASELINE
PROPOSED R.O.W.
EXISTING R.O.W.
PROPOSED PARCEL 329E
PROPOSED R.O.W.
PARCEL 329
DETAIL – N.T.S.
BGE, Inc.
101 West Louis Henna Blvd, Suite 400, Austin, TX 78728
Tel: 512-879-0400 • www.bgeinc.com
TBPLS Licensed Surveying Firm No. 10106502
Copyright 2022
PARCEL PLAT
SHOWING PARCEL 329
0.809 ACRE
FM 2243
WILLIAMSON COUNTY, TEXAS
Scale: 1"=100'
Job No.: 7473-00
Date: 08/05/2022
Page: 3 of 5
G:\TXC\Projects\County_Williamson\7473-00_RM 2243\06_Survey\04_Finals\Drawings\7473-00_P329_EX1.dwg, 8/4/2022 10:59 AM, Stephen Bergen

LEGEND

B.F.	BOARD FENCE
CMP	CORRUGATED METAL PIPE
C.R.S.	CATHODIC READING STATION
DOC.	DOCUMENT
ELEC.	ELECTRIC
ESMT.	EASEMENT
F.P.	FENCE POST
G.C.B.	GATE CONTROL BOX
G.P.	GATE POST
NO.	NUMBER
O.P.R.W.C.	OFFICIAL PUBLIC RECORDS OF WILLIAMSON COUNTY
PED.	PEDESTAL
P.L.M.	PIPELINE MARKER
P.O.B.	POINT OF BEGINNING
P.P.	POWER POLE
R.P.	REFLECTOR POST
R.O.W.	RIGHT-OF-WAY
TEL.	TELEPHONE
TRANS.	TRANSFORMER
U.C.M.	UNDERGROUND CABLE MARKER
W.M.	WATER METER
W.V.	WATER VALVE
( )	RECORD INFO FOR DOC. NO. 2004000861 O.P.R.W.C.
[ ]	RECORD INFO FOR DOC. NO. 2021088010 O.P.R.W.C.
{ }	RECORD INFO FOR DOC. NO. 2002036263 O.P.R.W.C.
●	FOUND 1/2" IRON ROD (UNLESS OTHERWISE NOTED)
O	SET 1/2" IRON ROD W/CAP "WILCO ROW 5777"
——x——	WIRE FENCE
——o——	METAL FENCE
——OHT——	OVERHEAD TELEPHONE
——OHP——	OVERHEAD POWER
——//——	EDGE OF ASPHALT
10.3	SCHEDULE B ITEM

LINE TABLE		
NUMBER	BEARING	DISTANCE
L1	N 68°46'24" E	29.93'
L2	N 21°16'05" W	112.04'
L3	N 75°22'23" E	132.58'
L4	S 14°37'37" E	8.22'
L5	S 75°22'23" W	44.24'
L6	S 21°39'55" E	58.16'
L7	S 43°32'37" E	44.78'

CURVE TABLE					
NUMBER	ARC LENGTH	RADIUS	DELTA	CHORD BEARING	CHORD DISTANCE
C1	252.94'	11,053.00'	1°18'40"	N 74°43'03" E	252.94'

BGE, Inc.
101 West Louis Henna Blvd, Suite 400, Austin, TX 78728
Tel: 512-879-0400 • www.bgeinc.com
TBPLS Licensed Surveying Firm No. 10106502
Copyright 2022

PARCEL PLAT
SHOWING PARCEL 329
0.809 ACRE
FM 2243
WILLIAMSON COUNTY, TEXAS

Scale:	Job No.:	Date:	Page:
1"=100'	7473-00	08/05/2022	4 of 5

G:\TXC\Projects\County_Williamson\7473-00_RM 2243\06_Survey\04_Finals\Drawings\7473-00_P329_EX1.dwg, 8/4/2022 10:59 AM, Stephen Barger

G:\TXC\Projects\County_Williamson\7473-00_RM 2243\06_Survey\04_Finals\Drawings\7473-00_P329_EX1.dwg, 8/4/2022 10:59 AM, Stephen Barger

GENERAL NOTES:

1. BEARING ORIENTATION IS BASED ON THE TEXAS STATE PLANE COORDINATE SYSTEM, CENTRAL ZONE 4203, NAD83. OISTANCES SHOWN HEREON ARE IN SURFACE AND CAN BE CONVERTED TO GRIO BY OIVIDING BY THE COMBINEO SCALE FACTOR = 1.00012

2. A METES ANO BOUNDS OESCRIPTION OF EVEN DATE WAS PREPARED IN CONJUNCTION WITH THIS SKETCH.

3. THIS PARCEL PLAT WAS MAOE IN RELIANCE UPON THAT CERTAIN COMMITMENT FOR TITLE INSURANCE ISSUED BY TITLE RESOURCES GUARANTY COMPANY AND TEXAS NATIONAL TITLE, INC. UNDER G.F. NO. T-164932, DATED EFFECTIVE JULY 1, 2022 AND ISSUEO ON JULY 12, 2022.

RESTRICTIVE COVENANT AND EASEMENT NOTES:

1. RESTRICTIVE COVENANTS OF RECORO ITEMIZED IN VOLUME 625, PAGE 5, DEEO RECOROS, WILLIAMSON COUNTY, TEXAS, DO AFFECT THE SUBJECT TRACT.

10.2 AN ELECTRIC TRANSMISSION AND/OR DISTRIBUTION LINE EASEMENT GRANTED TO PEDERNALES ELECTRIC COOPERATIVE, INC. AS DESCRIBEO IN VOLUME 799, PAGE 635, DEEO RECOROS, WILLIAMSON COUNTY, TEXAS, DOES NOT AFFECT THE SUBJECT TRACT, AS SHOWN HEREON.

10.3 AN ELECTRIC TRANSMISSION LINE EASEMENT GRANTEO TO PEDERNALES ELECTRIC COOPERATIVE, INC. AS DESCRIBED IN VOLUME 799, PAGE 641, DEED RECORDS, WILLIAMSON COUNTY, TEXAS, OOES NOT AFFECT THE SUBJECT TRACT.

10.4 AN ACCESS EASEMENT AS DESCRIBED IN DOCUMENT NO. 2008042050, OFFICIAL PUBLIC RECORDS, WILLIAMSON COUNTY, TEXAS, DOES AFFECT THE SUBJECT TRACT, AS SHOWN HEREON.

10.5 AN ELECTRIC LINE EASEMENT GRANTED TO LCRA TRANSMISSION SERVICES CORPORATION AS DESCRIBEO IN DOCUMENT NO. 2018055341, OFFICIAL PUBLIC RECORDS, WILLIAMSON COUNTY, TEXAS, DOES AFFECT THE SUBJECT TRACT, AS SHOWN HEREON.

10.7 ALL TERMS, CONDITIONS AND PROVISIONS OF THAT CERTAIN DEVELOPMENT AGREEMENT OF RECORD IN OOCUMENT NO. 2010083087, OFFICIAL PUBLIC RECORDS, WILLIAMSON COUNTY, TEXAS, DO AFFECT THE SUBJECT TRACT.

10.8 ALL TERMS, CONDITIONS AND PROVISIONS OF THAT CERTAIN ORDINANCE NO. 16-051-00 OF RECORD IN OOCUMENT NO. 2017011292, OFFICIAL PUBLIC RECORDS, WILLIAMSON COUNTY, TEXAS, DOES NOT AFFECT THE SUBJECT TRACT.

I hereby certify that this survey was made on the graund by BGE, Inc. under my supervision on May 12, 2022 and is true and correct ta the best af my knowledge. The property has access ta a public raadway and there are no visible encraachments, except as shown hereon.

STATE OF TEXAS
REGISTERED
JONATHAN O. NOBLES
5777
PROFESSIONAL
LAND SURVEYOR

08/05/2022

JONATHAN O. NOBLES RPLS NO. 5777
BGE, INC.
101 WEST LOUIS HENNA BLVD., SUITE 400
AUSTIN, TEXAS 78728
TELEPHONE: (512) 879-0400

BGE, Inc.
101 West Louis Henna Blvd, Suite 400, Austin, TX 78728
Tel: 512-879-0400 • www.bgeinc.com
TBPLS Licensed Surveying Firm No. 10106502

Copyright 2022

PARCEL PLAT
SHOWING PARCEL 329
0.809 ACRE
FM 2243
WILLIAMSON COUNTY, TEXAS

Scale:	Job No.:	Date:	Page:
1"=100'	7473-00	08/05/2022	5 of 5

EXHIBIT B

County: Williamson
Parcel: 329E
Highway: FM 2243

METES & BOUNDS DESCRIPTION FOR EASEMENT PARCEL 329E

METES & BOUNDS DESCRIPTION FOR A 0.789 ACRE TRACT OF LAND OUT OF THE TALBOT CHAMBERS SURVEY, ABSTRACT NO. 125, WILLIAMSON COUNTY, TEXAS; BEING A PORTION OF A CALLED 6.481 ACRE TRACT OF LAND AS CONVEYED TO CHARLES TODD HOSKINS AND WIFE, TERRY HOSKINS BY WARRANTY DEED RECORDED IN DOCUMENT NUMBER 2004000861 OF THE OFFICIAL PUBLIC RECORDS OF WILLIAMSON COUNTY, TEXAS; SAID 0.789 ACRE TRACT OF LAND BEING MORE PARTICULARLY DESCRIBED BY METES AND BOUNDS AS FOLLOWS AND SHOWN ON THE ATTACHED SKETCH:

COMMENCING for POINT OF REFERENCE at a 1/2-inch iron rod with a cap stamped "J.E. GARON RPLS 4303" found on the north right-of-way line of Hero Way (f/k/a County Road 269) (width varies) (no deed of record found), at the southeast corner of the above described 6.481 acre Hoskins Tract, and at the most southerly southwest corner of the remainder of a called 13.371 acre tract of land as conveyed to Charles Hoskins and Patricia Hoskins by Warranty Deed with Vendor's Lien recorded in Document Number 2002036263 of the Official Public Records of Williamson County, Texas, from which a 1/2-inch iron rod with a cap stamped "J.E. GARON RPLS 4303" found on the north right-of-way line of said Hero Way, at the southeast corner of said 13.371 acre Hoskins Tract, bears N 68°46'24" E a distance of 29.93 feet; Thence, with the east line of said 6.481 acre Hoskins Tract and the west line of the remainder of said 13.371 acre Hoskins Tract, N 21°39'55" W a distance of 97.45 feet to a calculated point (NAD-83, Central Zone Grid Coordinates: N: 10,188,113.99, E: 3,086,189.89) at the northeast corner of a called 0.96 acre electric line easement recorded in Document Number 2018055341 of the Official Public Records of Williamson County, Texas, for the southeast corner and **POINT OF BEGINNING** of the herein described tract, 240.89 feet left of FM 2243 baseline station 150+92.54, from which a 5/8-inch iron rod with cap stamped "SAM LLC" bears N 68°20'05" E a distance of 0.17 feet;

THENCE, with the north line of said electric line easement and over and across said 6.481 acre Hoskins Tract, S 69°02'55" W, a distance of 305.66 feet to a 1/2-inch iron rod with a cap stamped "BGE Inc" set for an angle point, 207.22 feet left of FM 2243 baseline station 147+88.74;

THENCE, continuing over and across said 6.481 acre Hoskins Tract, S 75°22'23" W a distance of 121.13 feet to a 1/2-inch iron rod with a cap stamped "WILCO ROW 5777" set on the west line of said 6.481 acre Hoskins Tract and the east line of a called 27.992 acre tract of land described as Tract I as conveyed to Harmony Public Schools by Special Warranty Deed recorded in Document Number 2021088010 of the Official Public Records of Williamson County, Texas, for the southwest corner of the herein described tract, 207.22 feet left of FM 2243 baseline station 146+67.62, from which a 5/8-inch iron rod found on the north right-of-way line of said Hero Way, at the southwest corner of said 6.481 acre Hoskins Tract, and at the southeast corner of said Harmony Public Schools Tract, bears S 21°16'05" E a distance of 112.04 feet;

THENCE, with the west line of said 6.481 acre Hoskins Tract and the east line of said Harmony Public Schools Tract, N 21°16'05" W a distance of 92.40 feet to a 1/2-inch iron rod with cap stamped "BGE Inc" set for the northwest corner of the herein described tract, 299.00 feet left of FM 2243 baseline station 146+56.93, from which a 1/2-inch iron rod with a cap stamped "J.E. GARON RPLS 4303" found for the northwest corner of said 6.481 acre Hoskins Tract, bears N 21°16'05" W a distance of 460.52 feet;

THENCE, over and across said 6.481 acre Hoskins Tract, N 75°22'23" E a distance of 187.51 feet to a 1/2-inch iron rod with cap stamped "BGE Inc" set for a point of curvature of a curve to the left, 299.00 feet left of FM 2243 baseline station 148+44.43;

THENCE, continuing over and across said 6.481 acre Hoskins Tract, along said curve to the left, an arc distance of 240.63 feet, having a radius of 10,953.00 feet, a central angle of 01°15'31" and a chord which bears N 74°44'37" E a distance of 240.62 feet to a 1/2-inch iron rod with cap stamped "BGE Inc" set on the east line of said 6.481 acre Hoskins Tract and the west line of the remainder of said 13.371 acre Hoskins Tract, for the northeast corner of the herein described tract, 301.64 feet left of FM 2243 baseline station 150+85.04, from which a 1/2-inch iron rod with a cap stamped "J.E. GARON RPLS 4303" found at the northeast corner of said 6.481 acre Hoskins Tract and at an interior corner of the remainder of said 13.371 acre Hoskins Tract, bears N 21°39'55" W a distance of 507.35 feet;

THENCE, with the east line of said 6.481 acre Hoskins Tract and the west line of the remainder of said 13.371 acre Hoskins Tract, S 21°39'55" E a distance of 61.22 feet to the **POINT OF BEGINNING** and containing 0.789 acre (34,381 square feet) of land, more or less.

Bearing orientation is based on the Texas State Plane Coordinate System NAD-83, Central Zone 4203. All distances are surface and may be converted to grid by dividing by a scale factor of 1.00012.

I hereby certify that these notes were prepared by BGE from a survey made on the ground under my supervision on May 12, 2022 and are true and correct to the best of my knowledge. A sketch accompanies this description.

08/05/2022
Date

Jonathan O. Nobles RPLS Number 5777
BGE, Inc.
101 West Louis Henna Blvd., Suite 400
Austin, TX 78728
Telephone: 512-879-0400
TBPELS Licensed Surveying Firm Number 10106502

Client:	Williamson County
Date:	August 5, 2022
Project Number:	7473-00

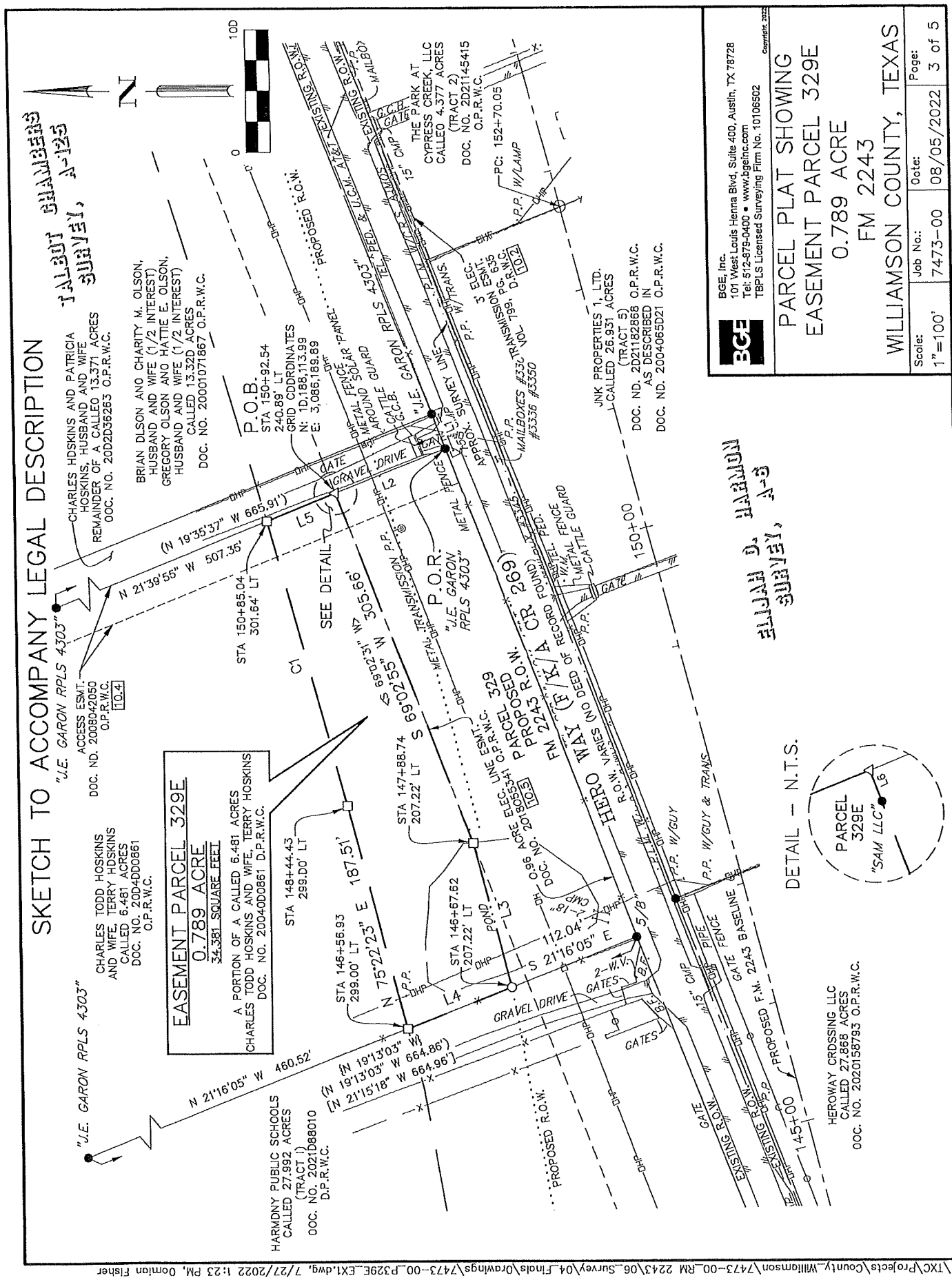
SKETCH TO ACCOMPANY LEGAL DESCRIPTION
"J.E. GARON RPLS 4303"
EASEMENT PARCEL 329E
0.789 ACRE
34,381 SQUARE FEET
A PORTION OF A CALLED 6.461 ACRES
CHARLES TODD HOSKINS AND WIFE, TERRY HOSKINS
DOC. NO. 2004DD0861 D.P.R.W.C.
P.O.B.
STA 150+92.54
240.89' LT
GRID COORDINATES
N: 10,188,113.99
E: 3,086,189.89
P.O.R.
"J.E. GARON
RPLS 4303"
PROPOSED PARCEL 329
0.96 ACRE ELEC. LINE ESMT.
DOC. NO. 20180534 O.P.R.W.C.
FM 2243 (F/K/A CR 269)
HERO WAY
(NO DEED OF RECORD FOUND)
VARIES R.O.W.
PROPOSED R.O.W.
EXISTING R.O.W.
PROPOSED F.M. 2243 BASELINE
SEE DETAIL
DETAIL - N.T.S.
PARCEL 329E
"SAM LLC"
CHARLES HDSKINS AND PATRICIA HOSKINS, HUSBAND AND WIFE
REMAINDER OF A CALLED 13.371 ACRES
DOC. NO. 20D2D36263 O.P.R.W.C.
BRIAN DLSON AND CHARITY M. OLSON, HUSBAND AND WIFE (1/2 INTEREST)
GREGORY OLSON AND HATTIE E. OLSON, HUSBAND AND WIFE (1/2 INTEREST)
CALLED 13.32D ACRES
DOC. NO. 2000107867 O.P.R.W.C.
CHARLES TODD HOSKINS AND WIFE, TERRY HOSKINS
CALLED 6.461 ACRES
DOC. NO. 20D4DD0861
O.P.R.W.C.
ACCESS ESMT.
DOC. ND. 20080420S0
O.P.R.W.C.
10.4
HARMDNY PUBLIC SCHOOLS
CALLED 27.992 ACRES
(TRACT 1)
DOC. NO. 2021D88010
D.P.R.W.C.
HEROWAY CRDSSING LLC
CALLED 27.868 ACRES
DOC. NO. 2020158793 O.P.R.W.C.
JNK PROPERTIES 1, LTD.
CALLED 26.931 ACRES
(TRACT 5)
DOC. ND. 2D21182868 O.P.R.W.C.
AS DESCRIBED IN
DOC. ND. 2004065D21 O.P.R.W.C.
THE PARK AT
CYPRESS CREEK, LLC
CALLED 4.377 ACRES
(TRACT 2)
DOC. NO. 2D21145415
O.P.R.W.C.
BGE, Inc.
101 West Louis Henna Blvd, Suite 400, Austin, TX 78728
Tel: 512-879-0400 • www.bgeinc.com
TBPLS Licensed Surveying Firm No. 10106502
PARCEL PLAT SHOWING
EASEMENT PARCEL 329E
0.789 ACRE
FM 2243
WILLIAMSON COUNTY, TEXAS
Scale: 1"=100'
Job No.: 7473-00
Date: 08/05/2022
Page: 3 of 5
G:\TXC\Projects\County_Williamson\7473-00_RM 2243\06_Survey\04_Finals\Drawings\7473-00_P329E_EX1.dwg, 7/27/2022 1:23 PM, Domian Fisher

G:\TXC\Projects\County_Williamson\7473-00_RM 2243\06_Survey\04_Finals\Drawings\7473-00_P329E_EX1.dwg, 7/27/2022 1:23 PM, Damian Fisher

LEGEND

B.F.	BOARD FENCE
CMP	CORRUGATED METAL PIPE
C.R.S.	CATHODIC READING STATION
DOC.	DOCUMENT
ELEC.	ELECTRIC
ESMT.	EASEMENT
F.P.	FENCE POST
G.C.B.	GATE CONTROL BOX
G.P.	GATE POST
NO.	NUMBER
O.P.R.W.C.	OFFICIAL PUBLIC RECORDS OF WILLIAMSON COUNTY
PED.	PEDESTAL
P.L.M.	PIPELINE MARKER
P.O.B.	POINT OF BEGINNING
P.O.R.	POINT OF REFERENCE
P.P.	POWER POLE
R.P.	REFLECTOR POST
R.O.W.	RIGHT-OF-WAY
TEL.	TELEPHONE
TRANS.	TRANSFORMER
U.C.M.	UNDERGROUND CABLE MARKER
W.M.	WATER METER
W.V.	WATER VALVE
( )	RECORD INFO FOR DOC. NO. 2004000861 O.P.R.W.C.
[ ]	RECORD INFO FOR DOC. NO. 2021088010 O.P.R.W.C.
{ }	RECORD INFO FOR DOC. NO. 2002036263 O.P.R.W.C.
< >	RECORD INFO FOR DOC. NO. 2018055341 O.P.R.W.C.
●	FOUND 1/2" IRON ROD (UNLESS OTHERWISE NOTED)
○	SET 1/2" IRON ROD W/CAP "WILCO ROW 5777"
□	SET 1/2" IRON ROD W/CAP "BGE INC"
△	CALCULATED POINT
—x—	WIRE FENCE
—o—	METAL FENCE
—OHT—	OVERHEAD TELEPHONE
—OHP—	OVERHEAD POWER
—//—	EDGE OF ASPHALT

LINE TABLE		
NUMBER	BEARING	DISTANCE
L1	N 68°46'24" E	29.93'
L2	S 21°39'55" E	97.45'
L3	S 75°22'23" W	121.13'
L4	N 21°16'05" W	92.40'
L5	S 21°39'55" E	61.22'
L6	N 68°20'05" E	0.17'

RECORD LINE TABLE		
NUMBER	BEARING	DISTANCE
{L1}	{N 70°55'19" E}	
<L2>	<S 21°39'13" E>	<97.43'>

CURVE TABLE					
NUMBER	ARC LENGTH	RADIUS	DELTA	CHORD BEARING	CHORD DISTANCE
C1	240.63'	10,953.00'	1°15'31"	N 74°44'37" E	240.62'

BGE, Inc.
101 West Louis Henna Blvd, Suite 400, Austin, TX 78728
Tel: 512-879-0400 • www.bgeinc.com
TBPLS Licensed Surveying Firm No. 10106502
Copyright 2022

PARCEL PLAT SHOWING
EASEMENT PARCEL 329E
0.789 ACRE
FM 2243
WILLIAMSON COUNTY, TEXAS

Scale:	Job No.:	Date:	Page:
1"=100'	7473-00	08/05/2022	4 of 5

GENERAL NOTES:

1. BEARING ORIENTATION IS BASED ON THE TEXAS STATE PLANE COORDINATE SYSTEM, CENTRAL ZONE 4203, NAD83. DISTANCES SHOWN HEREON ARE IN SURFACE AND CAN BE CONVERTED TO GRID BY DIVIDING BY THE COMBINED SCALE FACTOR = 1.00012

2. A METES AND BOUNDS DESCRIPTION OF EVEN DATE WAS PREPARED IN CONJUNCTION WITH THIS SKETCH.

3. THIS PARCEL PLAT WAS MADE IN RELIANCE UPON THAT CERTAIN COMMITMENT FOR TITLE INSURANCE ISSUED BY TITLE RESOURCES GUARANTY COMPANY AND TEXAS NATIONAL TITLE, INC. UNDER G.F. NO. T-164932, DATED EFFECTIVE JULY 1, 2022 AND ISSUED ON JULY 12, 2022.

RESTRICTIVE COVENANT AND EASEMENT NOTES:

1. RESTRICTIVE COVENANTS OF RECORD ITEMIZED IN VOLUME 625, PAGE 5, DEED RECORDS, WILLIAMSON COUNTY, TEXAS, DO AFFECT THE SUBJECT TRACT.

10.2 AN ELECTRIC TRANSMISSION AND/OR DISTRIBUTION LINE EASEMENT GRANTED TO PEDERNALES ELECTRIC COOPERATIVE, INC. AS DESCRIBED IN VOLUME 799, PAGE 635, DEED RECORDS, WILLIAMSON COUNTY, TEXAS, DOES NOT AFFECT THE SUBJECT TRACT, AS SHOWN HEREON.

10.3 AN ELECTRIC TRANSMISSION LINE EASEMENT GRANTED TO PEDERNALES ELECTRIC COOPERATIVE, INC. AS DESCRIBED IN VOLUME 799, PAGE 641, DEED RECORDS, WILLIAMSON COUNTY, TEXAS, DOES NOT AFFECT THE SUBJECT TRACT.

10.4 AN ACCESS EASEMENT AS DESCRIBED IN DOCUMENT NO. 2008042050, OFFICIAL PUBLIC RECORDS, WILLIAMSON COUNTY, TEXAS, DOES AFFECT THE SUBJECT TRACT, AS SHOWN HEREON.

10.5 AN ELECTRIC LINE EASEMENT GRANTED TO LCRA TRANSMISSION SERVICES CORPORATION AS DESCRIBED IN DOCUMENT NO. 2018055341, OFFICIAL PUBLIC RECORDS, WILLIAMSON COUNTY, TEXAS, DOES NOT AFFECT THE SUBJECT TRACT, AS SHOWN HEREON.

10.7 ALL TERMS, CONDITIONS AND PROVISIONS OF THAT CERTAIN DEVELOPMENT AGREEMENT OF RECORD IN DOCUMENT NO. 2010083087, OFFICIAL PUBLIC RECORDS, WILLIAMSON COUNTY, TEXAS, DO AFFECT THE SUBJECT TRACT.

10.8 ALL TERMS, CONDITIONS AND PROVISIONS OF THAT CERTAIN ORDINANCE NO. 16-051-00 OF RECORD IN DOCUMENT NO. 2017011292, OFFICIAL PUBLIC RECORDS, WILLIAMSON COUNTY, TEXAS, DOES NOT AFFECT THE SUBJECT TRACT.

I hereby certify thot this survey wos mode on the ground by BGE, Inc. under my supervision on May 12, 2022 ond is true ond correct to the best of my knowledge. The property hos occess to o public roodwoy ond there ore no visible encroachments, except os shown hereon.

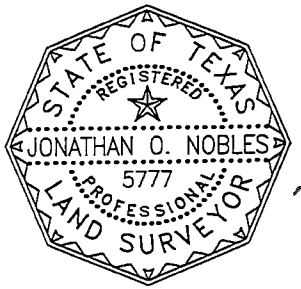

08/05/2022

JONATHAN O. NOBLES RPLS NO. 5777
BGE, INC.
101 WEST LOUIS HENNA BLVD., SUITE 400
AUSTIN, TEXAS 78728
TELEPHONE: (512) 879-0400

BGE, Inc.
101 West Louis Henna Blvd, Suite 400, Austin, TX 78728
Tel: 512-879-0400 • www.bgeinc.com
TBPLS Licensed Surveying Firm No. 10106502
Copyright 2022

PARCEL PLAT SHOWING
EASEMENT PARCEL 329E
0.789 ACRE
FM 2243
WILLIAMSON COUNTY, TEXAS

Scale:	Job No.:	Date:	Page:
1"=100'	7473-00	08/05/2022	5 of 5

G:\TXC\Projects\County_Williamson\7473-00_RM 2243\06_Survey\04_Finals\Drawings\7473-00_P329E_EX1.dwg, 7/27/2022 1:23 PM, Damian Fisher

ELECTRONICALLY RECORDED
OFFICIAL PUBLIC RECORDS

2023098853

Pages: 17 Fee: $86.00
12/01/2023 10:03 AM
ATAYLOR

Nancy E. Rister, County Clerk
Williamson County,Texas

ELECTRONICALLY RECORDED 2024038220
Williamson County, Texas Total Pages: 18

POSSESSION AND USE AGREEMENT FOR TRANSPORTATION PURPOSES

STATE OF TEXAS	§	
	§	Parcel No.: 332/332E
COUNTY OF WILLIAMSON	§	Project: Hero Way/RM 2243

This Possession and Use Agreement For Transportation Purposes (the "Agreement") between **WILLIAMSON COUNTY, TEXAS** (the "County"), and **BRIAN OLSON, CHARITY M. OLSON, GREGORY OLSON AND HATTIE E. OLSON** (the "Grantor" whether one or more), grants to the County, their contractors, agents and all others deemed necessary by the County, an irrevocable right to possession and use of the Grantor's property for the purpose of constructing the Hero Way/RM 2243 roadway project and related appurtenances, drainage facility/grading and utility relocations (the "Roadway Construction Project"). The property subject to this Agreement is described more fully in field notes, plat maps, or other descriptions attached hereto as Exhibits "A" and "B" and are made a part of this Agreement by reference (the "Property").

1. For the consideration paid by the County which is set forth in Paragraph 2 below, the receipt and sufficiency of which is acknowledged, the Grantor grants, bargains, sells, and conveys to the County the right of entry and possession and use of the Property for the purpose of constructing a roadway, utility adjustments and appurtenances thereto and the right to remove any improvements. Authorized activities include surveying, inspection, environmental studies, archeological studies, clearing, demolition, construction of permanent improvements, relocating, replacing, and improving existing utility facilities, locating new utility facilities, and other work required to be performed in connection with the Roadway Construction Project. This Possession and Use Agreement will extend to the County, its contractors and assigns, owners of any existing utilities on the Property and those which may be lawfully permitted on the Property by the County in the future, and all others deemed necessary by the County for the purpose of the Roadway Construction Project. This grant will allow the construction, relocation, replacement, repair, improvement, operation, and maintenance of utilities on the Property.

2. In full consideration for this irrevocable grant of possession and use, the County will tender to the Grantor payment in the amount of **TWO HUNDRED TWELVE THOUSAND EIGHT HUNDRED SIXTY and no/100 DOLLARS ($212,860.00)** (the "Entry Deposit"). The County will be entitled to take possession and use of the Property upon tender of payment as set forth in paragraph 3 herein, subject to the conditions in paragraph 13 below, if any. The parties agree that the Entry Deposit tendered represents 100% payment of the County's approved value, which assumes no adverse environmental conditions affecting the value of the Property. The approved value is the County's determination of the just compensation owed to the Grantor for the real property interest to be acquired by the County in the Property, encumbered with the improvements thereon, if any, and damages to the remainder, if any, save and except all oil, gas, and sulfur. The parties agree that the Entry Deposit tendered to Grantor will be deducted from any final settlement amount, Special Commissioners' award, or court judgment. In the event the amount of the final settlement or judgment for acquisition of the Property is less than the amount of the Entry Deposit, then the Grantor agrees that the

difference between the amount of the Entry Deposit tendered and the amount of such final settlement or judgment for acquisition of the Property represents an overpayment and, upon written notice from the County, the Grantor will promptly refund the difference between the Entry Deposit and the amount of the settlement or judgment to the County.

3. The effective date of this Agreement will be the date on which payment of the Entry Deposit pursuant to Paragraph 2 above was tendered in full to the Grantor by the County or delivered to a title company acting as escrow agent for the transaction (the "Effective Date").

4. The Grantor warrants and represents by, through, and under Grantor but not otherwise, that the title to the Property is free and clear of all liens and encumbrances (and any subsequent updates prior to the Effective Date), and that proper releases will be executed for the Property prior to funds being disbursed under this Agreement. The Grantor further warrants that no other person or entity owns an interest in the fee title to the Property and further agrees to indemnify the County from all unreleased or undisclosed liens, claims, or encumbrances affecting the Property.

   The above-made warranties are made by Grantor and accepted by the County subject to the following:

   A. Visible and apparent easements not appearing of record;

   B. Any discrepancies, conflicts, or shortages in area or boundary lines or any encroachments or any overlapping of improvements which a current survey would show; and,

   C. Easements, restrictions, reservations, covenants, conditions, oil and gas leases, mineral severances, and encumbrances for taxes and assessments (other than liens and conveyances) presently of record in the Official Public Records of Williamson County, Texas, that affect the Property, but only to the extent that said items are still valid and in force and effect as of the Effective Date.

5. The parties agree that the valuation date for determining the amount of just compensation for the real property interest proposed to be acquired by the County in the Property, for negotiation or eminent domain proceeding purposes, will be January 17, 2024.

6. This Agreement is made with the understanding that the County will continue to proceed with the acquisition of a real property interest in the Property. The Grantor reserves all rights of compensation for the title and other interest in and to the Property which the Grantor holds as of the time immediately prior to the Effective Date of this Agreement. This Agreement shall in no way prejudice the Grantor's rights to receive full and just compensation as allowed by law for all of the Grantor's interests in and to the Property to be acquired by the County, encumbered with the improvements thereon, if any, and damages, if any, to the remainder of the Grantor's interest in any larger tract of which the Property is a part (the "Remainder"), all as the Property exists on the Effective Date of this Agreement. The County's removal or construction of improvements on the Property shall in no way affect the fair market value of the Property in determining compensation due to the Grantor in the eminent domain

proceedings, except as such removal or construction of improvements may impact or damage the Remainder. No beneficial project influence will impact the appraised value of the Property to be acquired. This grant will not prejudice the Grantor's rights to any relocation benefits for which Grantor may be eligible.

7. In the event the County institutes or has instituted eminent domain proceedings, the County will not be liable to the Grantor for interest upon any award or judgment as a result of such proceedings for any period of time prior to the date of the award. Payment of any interest may be deferred by the County until the entry of judgment.

8. The purpose of this Agreement is to allow the County to proceed with its Roadway Construction Project without delay and to allow the Grantor to have the use at this time of 100% of the Entry Deposit. The Grantor expressly acknowledges that the proposed Roadway Construction Project is for a valid public use and voluntarily waives any right the Grantor has or may have, known or unknown, to contest the jurisdiction of the court in any condemnation proceeding for acquisition of the Property related to the Roadway Construction Project, based upon claims that the condemning authority has no authority to acquire the Property through eminent domain, has no valid public use for the Property, or that acquisition of the Property is not necessary for the public use.

9. The undersigned Grantor agrees to pay as they become due, all unpaid ad valorem property taxes and special assessments assessed against Property as of the Effective Date.

10. Notwithstanding the acquisition of the right of possession to the Property by the County in a condemnation proceeding by depositing the Special Commissioners' award into the registry of the court, less any amounts tendered to the Grantor pursuant to Paragraph 2 above, this Agreement shall continue to remain in effect until the County acquires title to the Property either by negotiation, settlement, or final court judgment.

11. There shall be no drinking liquor, hunting, or fishing on the Property or any of Grantor's lands by the County, its officers, agents, employees, contractors, invitees, guests, or representatives at any time. No firearms or fishing equipment shall be taken on the property by the County, its officers, agents, employees, contractors, invitees, guests or representatives at any time. The County, its contractors, and any and all persons entering the Property under this Agreement shall not perform disorderly conduct and a portable sanitary facility shall be made available for the County's contractors and any and all persons entering the Property under this agreement.

12. The County shall have the right to remove any fence that now crosses the Property. Prior to cutting any fence, however, the County shall give timely notice to the Grantor to brace the existing fence to be cut adequately on both sides of the proposed cut by suitable H-braces to prevent the remainder of the fence from sagging. If applicable, the County shall take reasonable steps to ensure that cattle, horses and/or other livestock cannot stray from the fenced pastures, including but not limited to informing Grantor of any fence removal and allowing for reasonable time to relocate said livestock. The County and its designated contractors, employees, and invitees agree to keep any and all gates and fences closed and locked at all

times except when passing through same.

13. This Agreement will also extend to and bind the heirs, devisees, executors, administrators, legal representatives, successors in interest, and assigns of the parties.

14. It is agreed the County will record this document.

15. Other conditions: Should the Special Commissioners' Award (if any) be greater than the Entry Deposit paid pursuant to paragraph 2 herein, the County shall tender the difference to the registry of the court within sixty (60) days of the date that the Special Commissioners' Award is entered.

At no time during the possession of the Property by County for the purposes described herein shall Grantor be denied reasonable access and/or ingress to or egress from the remainder of Grantor's land for its current uses, unless otherwise agreed to in writing in advance.

To have and to hold the Agreement herein described and conveyed, together with all the rights and appurtenances belonging to the County and its assigns forever, for the purposes and subject to the limitations set forth above.

[signature pages follow]

GRANTOR:

BRIAN OLSON

ACKNOWLEDGMENT

STATE OF TEXAS

COUNTY OF Williamson

This instrument was acknowledged before me on this the 5TH day of November, 2023, by Brian Olson, in the capacity and for the purposes and consideration recited herein.

CRISTINA HOLMES
Notary ID #132202463
My Commission Expires
October 8, 2027

Cristina Holmes
Notary Public, State of Texas

GRANTOR:

Charity M. Olson

ACKNOWLEDGMENT

STATE OF TEXAS

COUNTY OF Williamson

This instrument was acknowledged before me on this the 5TH day of November, 2023, by Charity M. Olson, in the capacity and for the purposes and consideration recited herein.

CRISTINA HOLMES
Notary ID #132202463
My Commission Expires
October 8, 2027

Cristina Holmes
Notary Public, State of Texas

GRANTOR:

Gregory Olson

ACKNOWLEDGMENT

STATE OF TEXAS

COUNTY OF Williamson

This instrument was acknowledged before me on this the 5TH day of November, 2023, by Gregory Olson, in the capacity and for the purposes and consideration recited herein.

CRISTINA HOLMES
Notary ID #132202463
My Commission Expires
October 8, 2027

Cristina Holmes
Notary Public, State of Texas

GRANTOR:

Hattie E. Olson

ACKNOWLEDGMENT

STATE OF TEXAS

COUNTY OF Williamson

This instrument was acknowledged before me on this the 5TH day of November, 2023, by Hattie Olson, in the capacity and for the purposes and consideration recited herein.

CRISTINA HOLMES
Notary ID #132202463
My Commission Expires
October 8, 2027

Cristina Holmes
Notary Public, State of Texas

COUNTY:

WILLIAMSON COUNTY, TEXAS

By: Bill Gravell, Jr. (Nov 22, 2023 13:03 CST)
Bill Gravell, Jr.
County Judge

ACKNOWLEDGMENT

STATE OF TEXAS
COUNTY OF WILLIAMSON

This instrument was acknowledged before me on this the 24th day of November, 2023, by Bill Gravell, Jr., County Judge of Williamson County, Texas, in the capacity and for the purposes and consideration recited herein.

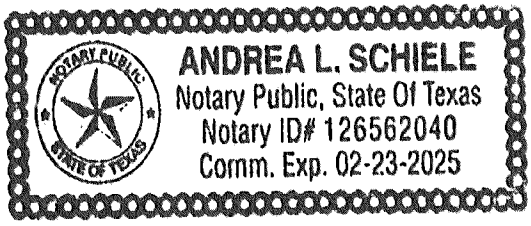

Andrea L Schiele
Notary Public, State of Texas

EXHIBIT A

County: Williamson
Parcel: 332
Highway: FM 2243

METES & BOUNDS DESCRIPTION FOR PARCEL 332

METES & BOUNDS DESCRIPTION FOR A 0.403 ACRE TRACT OF LAND OUT OF THE TALBOT CHAMBERS SURVEY, ABSTRACT NO. 125, WILLIAMSON COUNTY, TEXAS; BEING A PORTION OF A CALLED 13.320 ACRE TRACT OF LAND AS CONVEYED TO BRIAN OLSON AND CHARITY M. OLSON (1/2 INTEREST) AND GREGORY OLSON AND HATTIE E. OLSON (1/2 INTEREST) BY WARRANTY DEED WITH VENDOR'S LIEN RECORDED IN DOCUMENT NUMBER 2001071867 OF THE OFFICIAL PUBLIC RECORDS OF WILLIAMSON COUNTY, TEXAS; SAID 0.403 ACRE TRACT OF LAND BEING MORE PARTICULARLY DESCRIBED BY METES AND BOUNDS AS FOLLOWS AND SHOWN ON THE ATTACHED SKETCH:

BEGINNING at a 1/2-inch iron rod with a cap stamped "J.E. GARON RPLS 4303" found on the north right-of-way line of Hero Way (f/k/a County Road 269) (width varies) (no deed of record found), at the southeast corner of the above described Olson Tract, and the southwest corner of a called 13.320 acre tract of land as conveyed to Jack Scott Bradley, Amy L. Bradley and Brian Gregory Holmes by Warranty Deed with Vendor's Lien recorded in Document Number 2000068029 of the Official Public Records of Williamson County, Texas, for the southeast corner and **POINT OF BEGINNING** of the herein described tract, from which a 1/2-inch iron rod found on the north right-of-way line of said Hero Way, at the southeast corner of said Bradley and Holmes Tract, bears N 68°48'59" E a distance of 456.49 feet;

THENCE, with the north right-of-way line of said Hero Way and the south line of said Olson Tract, S 68°52'28" W a distance of 456.22 feet to a 1/2-inch iron rod with a cap stamped "J.E. GARON RPLS 4303" found at the southwest corner of said Olson Tract and the southeast corner of the remainder of a called 13.371 acre tract of land as conveyed to Charles Hoskins and Patricia Hoskins by Warranty Deed with Vendor's Lien recorded in Document Number 2002036263 of the Official Public Records of Williamson County, Texas, for the southwest corner of the herein described tract, from which a 1/2-inch iron rod with a cap stamped "J.E. GARON RPLS 4303" found at the southwest corner of the remainder of said 13.371 acre Hoskins Tract and the southeast corner of a called 6.481 acre tract of land as conveyed to Charles Todd Hoskins and wife, Terry Hoskins by Warranty Deed recorded in Document Number 2004000861 of the Official Public Records of Williamson County, Texas, bears S 68°46'24" W a distance of 29.93 feet;

THENCE, with the west line of said Olson Tract and the east line of the remainder of said 13.371 acre Hoskins Tract, N 21°39'01" W a distance of 55.43 feet to a 1/2-inch iron rod with cap stamped "WILCO ROW 5777" (NAD-83, Central Zone Grid Coordinates: N: 10,188,085.78, E: 3,086,233.31) set at the beginning of a non-tangent curve to the left, for the northwest corner of the herein described tract, 202.62 feet left of FM 2243 baseline station 151+27.44;

THENCE, over and across said Olson Tract, along said curve to the left, an arc distance of 457.31 feet, having a radius of 11,053.00 feet, a central angle of 02°22'14" and a chord which bears N 72°43'14" E a distance of 457.28 feet to a 1/2-inch iron rod with a cap stamped "WILCO ROW 5777" set on the east line of said Olson Tract and on the west line of said Bradley and Holmes Tract, for the northeast corner of the herein described tract, 218.89 feet left of FM 2243 baseline station 155+91.10, from which a 1/2-inch iron rod with a cap stamped "J.E. GARON RPLS 4303" found at the northeast corner of said Olson Tract and the northwest corner of said Bradley and Holmes Tract, bears N 22°13'25" W a distance of 1,262.81 feet;

THENCE, with the east line of said Olson Tract and the west line of said Bradley and Holmes Tract, S 22°13'25" E a distance of 24.76 feet to the **POINT OF BEGINNING** and containing 0.403 acre (17,561 square feet) of land, more or less.

Bearing orientation is based on the Texas State Plane Coordinate System NAD-83, Central Zone 4203. All distances are surface and may be converted to grid by dividing by a scale factor of 1.00012.

I hereby certify that these notes were prepared by BGE from a survey made on the ground under my supervision on May 12, 2022 and are true and correct to the best of my knowledge. A sketch accompanies this description.

08/09/2023
Date

Jonathan O. Nobles RPLS Number 5777
BGE, Inc.
101 West Louis Henna Blvd., Suite 400
Austin, TX 78728
Telephone: 512-879-0400
TBPELS Licensed Surveying Firm Number 10106502

Client:	Williamson County
Date:	June 3, 2022
Revised:	August 9, 2023
Project Number:	7473-00

SKETCH TO ACCOMPANY LEGAL DESCRIPTION

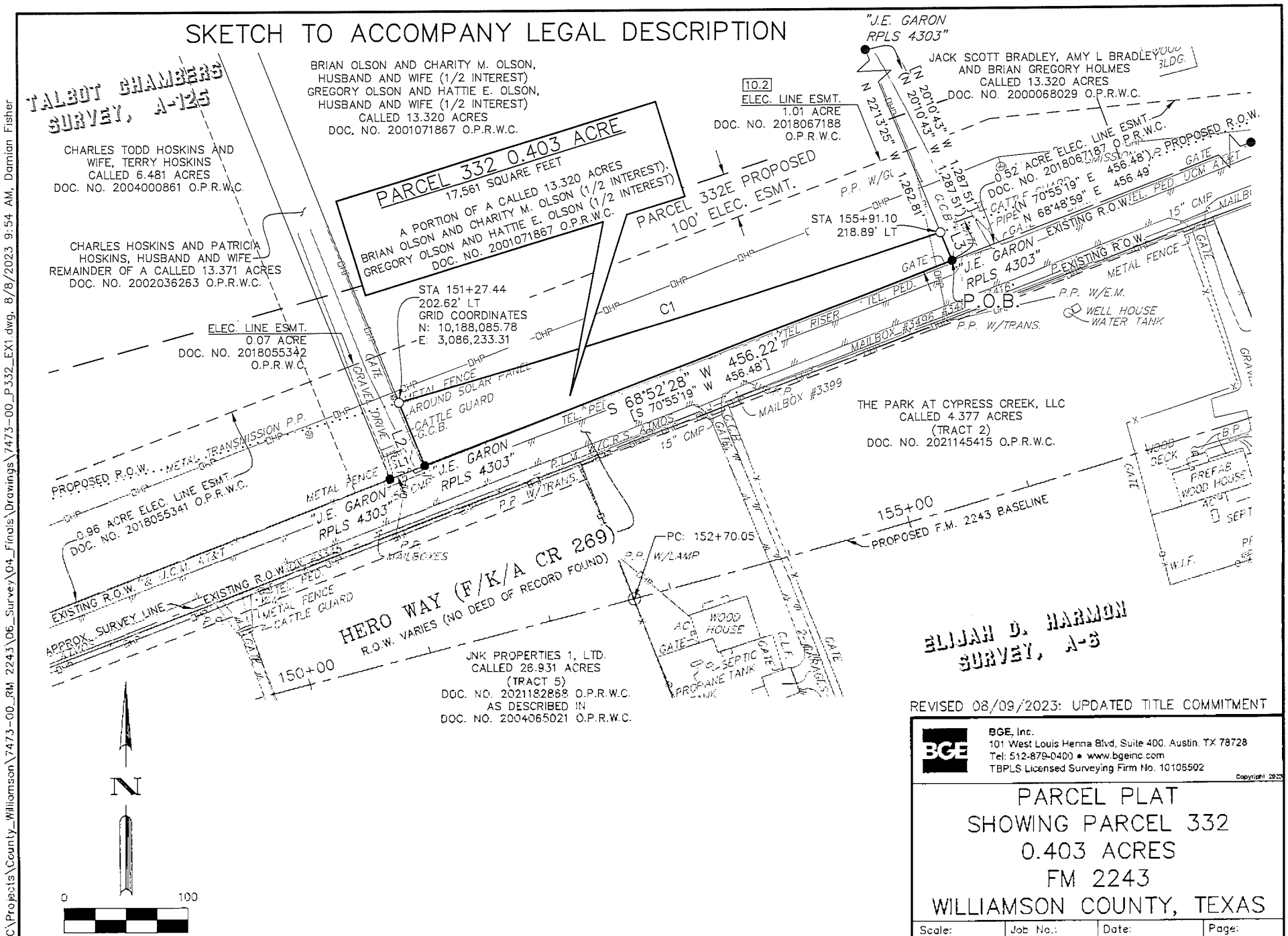
TALBOT CHAMBERS SURVEY, A-125
ELIJAH D. HARMON SURVEY, A-6
BRIAN OLSON AND CHARITY M. OLSON, HUSBAND AND WIFE (1/2 INTEREST) GREGORY OLSON AND HATTIE E. OLSON, HUSBAND AND WIFE (1/2 INTEREST) CALLED 13.320 ACRES DOC. NO. 2001071867 O.P.R.W.C.
PARCEL 332 0.403 ACRE
17,561 SQUARE FEET
A PORTION OF A CALLED 13.320 ACRES BRIAN OLSON AND CHARITY M. OLSON (1/2 INTEREST), GREGORY OLSON AND HATTIE E. OLSON (1/2 INTEREST) DOC. NO. 2001071867 O.P.R.W.C.
PARCEL 332E PROPOSED 100' ELEC. ESMT.
10.2 ELEC. LINE ESMT. 1.01 ACRE DOC. NO. 2018067188 O.P.R.W.C.
"J.E. GARON RPLS 4303"
JACK SCOTT BRADLEY, AMY L BRADLEY AND BRIAN GREGORY HOLMES CALLED 13.320 ACRES DOC. NO. 2000068029 O.P.R.W.C.
CHARLES TODD HOSKINS AND WIFE, TERRY HOSKINS CALLED 6.481 ACRES DOC. NO. 2004000861 O.P.R.W.C.
CHARLES HOSKINS AND PATRICIA HOSKINS, HUSBAND AND WIFE REMAINDER OF A CALLED 13.371 ACRES DOC. NO. 2002036263 O.P.R.W.C.
ELEC. LINE ESMT. 0.07 ACRE DOC. NO. 2018055342 O.P.R.W.C.
0.96 ACRE ELEC. LINE ESMT. DOC. NO. 2018055341 O.P.R.W.C.
0.52 ACRE ELEC. LINE ESMT. DOC. NO. 2018067187 O.P.R.W.C.
STA 151+27.44 202.62' LT GRID COORDINATES N: 10,188,085.78 E: 3,086,233.31
STA 155+91.10 218.89' LT
P.O.B.
C1
L1
L2
L3
L4
L5
L6
L7
L8
L9
L10
L11
L12
L13
L14
L15
L16
L17
L18
L19
L20
L21
L22
L23
L24
L25
L26
L27
L28
L29
L30
L31
L32
L33
L34
L35
L36
L37
L38
L39
L40

LEGEND

B.P.	BRICK PAVERS
C.L.F.	CHAIN LINK FENCE
CMP	CORRUGATED METAL PIPE
C.R.S.	CATHODIC READING STATION
DOC.	DOCUMENT
ESMT.	EASEMENT
E.M.	ELECTRIC METER
ELEC.	ELECTRIC
ESMT.	EASEMENT
G.C.B.	GATE CONTROL BOX
G.P.	GATE POST
H.W.F.	HOG WIRE FENCE
NO.	NUMBER
O.P.R.W.C.	OFFICIAL PUBLIC RECORDS OF WILLIAMSON COUNTY
P.O.B.	POINT OF BEGINNING
PED.	PEDESTAL
P.L.M.	PIPELINE MARKER
P.O.B.	POINT OF BEGINNING
P.P.	POWER POLE
R.O.W.	RIGHT-OF-WAY
TEL.	TELEPHONE
TRANS.	TRANSFORMER
U.C.M.	UNDERGROUND CABLE MARKER
W.I.F.	WROUGHT IRON FENCE
W.M.	WATER METER
( )	RECORD INFO FOR DOC. NO. 2000068029 O.P.R.W.C.
[ ]	RECORD INFO FOR DOC. NO. 2001071867 O.P.R.W.C.
{ }	RECORD INFO FOR DOC. NO. 2002036263 O.P.R.W.C.
●	FOUND 1/2" IRON ROD (UNLESS OTHERWISE NOTED)
○	SET 1/2" IRON ROD W/CAP "WILCO ROW 5777"
△	CALCULATED POINT
—x—	WIRE FENCE
—o—	METAL FENCE
—OHT—	OVERHEAD TELEPHONE
—OHP—	OVERHEAD POWER
//	EDGE OF ASPHALT
10.3	SCHEDULE B ITEM

LINE TABLE		
NUMBER	BEARING	DISTANCE
L1	S 68°46'24" W	29.93'
L2	N 21°39'01" W	55.43'
L3	S 22°13'25" E	24.76'

RECORD LINE TABLE		
NUMBER	BEARING	DISTANCE
L1	{S 70°55'19" W}	
L2	{S 19°35'37" E}	
	[S 19°35'37" E]	

CURVE TABLE					
NUMBER	ARC LENGTH	RADIUS	DELTA	CHORD BEARING	CHORD DISTANCE
C1	457.31'	11,053.00'	2°22'14"	N 72°43'14" E	457.28'

REVISED 08/09/2023: UPDATED TITLE COMMITMENT

BGE, Inc.
101 West Louis Henna Blvd, Suite 400, Austin, TX 78728
Tel: 512-879-0400 • www.bgeinc.com
TBPLS Licensed Surveying Firm No. 10106502
Copyright 2023

PARCEL PLAT
SHOWING PARCEL 332
0.403 ACRES
FM 2243
WILLIAMSON COUNTY, TEXAS

Scale:	Job No.:	Date:	Page:
1"=100'	7473-00	06/03/2022	4 of 5

G:\TXC\Projects\County_Williamson\7473-00_RM 2243\06_Survey\04_Finals\Drawings\7473-00_P332_EX1.dwg, 8/8/2023 9:54 AM, Damian Fisher

GENERAL NOTES:

1. BEARING ORIENTATION IS BASED ON THE TEXAS STATE PLANE COORDINATE SYSTEM, CENTRAL ZONE 4203, NAD83. DISTANCES SHOWN HEREON ARE IN SURFACE AND CAN BE CONVERTED TO GRID BY DIVIDING BY THE COMBINED SCALE FACTOR = 1.00012

2. A METES AND BOUNDS DESCRIPTION OF EVEN DATE WAS PREPARED IN CONJUNCTION WITH THIS SKETCH.

3. THIS PARCEL PLAT WAS MADE IN RELIANCE UPON THAT CERTAIN COMMITMENT FOR TITLE INSURANCE ISSUED BY FIRST AMERICAN TITLE GUARANTY COMPANY AND TEXAS NATIONAL TITLE, INC. UNDER G.F. NO. T-159112, DATED EFFECTIVE SEPTEMBER 12, 2022 AND ISSUED ON OCTOBER 20, 2022.

RESTRICTIVE COVENANT AND EASEMENT NOTES:

1. RESTRICTIVE COVENANTS OF RECORD ITEMIZED IN VOLUME 625, PAGE 5, DEED RECORDS, WILLIAMSON COUNTY, TEXAS, DO AFFECT THE SUBJECT TRACT.

10.2 AN ELECTRIC LINE AERIAL EASEMENT AND RIGHT OF WAY GRANTED TO LCRA TRANSMISSION SERVICES CORPORATION AS DESCRIBED IN DOCUMENT NO. 2018067188 OF THE OFFICIAL PUBLIC RECORDS OF WILLIAMSON COUNTY, TEXAS, DOES AFFECT THE SUBJECT TRACT, AS SHOWN HEREON.

10.4 ALL TERMS, CONDITIONS AND PROVISIONS OF THAT CERTAIN DEVELOPMENT AGREEMENT OF RECORD IN DOCUMENT NO. 2010083083 OF THE OFFICIAL PUBLIC RECORDS OF WILLIAMSON COUNTY, TEXAS, DO AFFECT THE SUBJECT TRACT.

I hereby certify that this survey was mode on the ground by BGE, Inc. under my supervision on May 12, 2022 and is true and correct to the best of my knowledge. The property has access to a public roodwoy and there are no visible encroachments, except as shown hereon.

STATE OF TEXAS
REGISTERED
JONATHAN O. NOBLES
5777
PROFESSIONAL
LAND SURVEYOR

8/9/2023

JONATHAN O. NOBLES RPLS NO. 5777
BGE, INC.
101 WEST LOUIS HENNA BLVD., SUITE 400
AUSTIN, TEXAS 78728
TELEPHONE: (512) 879-0400

REVISED 08/09/2023: UPDATED TITLE COMMITMENT

BGE, Inc.
101 West Louis Henna Blvd, Suite 400. Austin, TX 78728
Tel: 512-879-0400 • www.bgeinc.com
TBPLS Licensed Surveying Firm No. 10106502
Copyright 2022

PARCEL PLAT
SHOWING PARCEL 332
0.403 ACRES
FM 2243
WILLIAMSON COUNTY, TEXAS

Scale:	Job No.:	Date:	Page:
1"=100'	7473-00	06/03/2022	5 of 5

G:\TXC\Projects\County_Williamson\7473-00_RM 2243\06_Survey\04_Finals\Drawings\7473-00_P332_EX1.dwg, 8/8/2023 9:54 AM, Damian Fisher

EXHIBIT B

County: Williamson
Parcel: 332E
Highway: FM 2243

METES & BOUNDS DESCRIPTION FOR PARCEL 332E

METES & BOUNDS DESCRIPTION FOR A 0.441 ACRE TRACT OF LAND OUT OF THE TALBOT CHAMBERS SURVEY, ABSTRACT NO. 125, WILLIAMSON COUNTY, TEXAS; BEING A PORTION OF A CALLED 13.320 ACRE TRACT OF LAND AS CONVEYED TO BRIAN OLSON AND CHARITY M. OLSON (1/2 INTEREST) AND GREGORY OLSON AND HATTIE E. OLSON (1/2 INTEREST) BY WARRANTY DEED WITH VENDOR'S LIEN RECORDED IN DOCUMENT NUMBER 2001071867 OF THE OFFICIAL PUBLIC RECORDS OF WILLIAMSON COUNTY, TEXAS; SAID 0.441 ACRE TRACT OF LAND BEING MORE PARTICULARLY DESCRIBED BY METES AND BOUNDS AS FOLLOWS AND SHOWN ON THE ATTACHED SKETCH:

COMMENCING for POINT OF REFERENCE at a 1/2-inch iron rod with a cap stamped "J.E. GARON RPLS 4303" found on the north right-of-way line of Hero Way (f/k/a County Road 269) (width varies) (no deed of record found), at the southeast corner of the above described Olson Tract, and the southwest corner of a called 13.320 acre tract of land as conveyed to Jack Scott Bradley, Amy L. Bradley and Brian Gregory Holmes by Warranty Deed with Vendor's Lien recorded in Document Number 2000068029 of the Official Public Records of Williamson County, Texas, from which a 1/2-inch iron rod found on the north right-of-way line of said Hero Way, at the southeast corner of said Bradley and Holmes Tract, bears N 68°48'59" E a distance of 456.49 feet; Thence, with the east line of said Olson Tract and the west line of said Bradley and Holmes Tract, N 22°13'25" W a distance of 95.99 feet to a 5/8-inch iron rod with a cap stamped "SAM INC" (NAD-83, Central Zone Grid Coordinates: N: 10,188,287.53, E: 3,086,642.96) found at the northeast corner of a called 1.01 acre electric line easement recorded in Document Number 2018067188 of the Official Public Records of Williamson County, Texas, for the southeast corner and **POINT OF BEGINNING** of the herein described tract, 289.75 feet left of FM 2243 baseline station 155+83.68;

THENCE, with the north line of said electric line easement and over and across said Olson Tract, S 69°02'53" W a distance of 455.27 feet to a calculated point on the west line of said Olson Tract and the east line of the remainder of a called 13.371 acre tract of land as conveyed to Charles Hoskins and Patricia Hoskins by Warranty Deed with Vendor's Lien recorded in Document Number 2002036263 of the Official Public Records of Williamson County, Texas, at the northwest corner of said electric line easement, for the southwest corner of the herein described tract, 244.24 feet left of FM 2243 baseline station 151+22.31, from which a found 5/8-inch iron rod with cap stamped "SAM INC" bears S 68°20'59" W a distance of 0.19 feet, and from which a 1/2-inch iron rod with a cap stamped "J.E. GARON RPLS 4303" found on the north right-of-way line of said Hero Way, at the southwest corner of said Olson Tract and the southeast corner of the remainder of said Hoskins Tract, bears S 21°39'01" E a distance of 97.36 feet;

THENCE, with the west line of said Olson Tract and the east line of the remainder of said Hoskins Tract, N 21°39'01" W a distance of 58.55 feet to a 1/2-inch iron rod with cap stamped "BGE, Inc" set at the beginning of a non-tangent curve to the left, for the northwest corner of the herein described tract, 302.35 feet left of FM 2243 baseline station 151+15.15;

THENCE, over and across said Olson Tract, along said curve to the left, an arc distance of 456.33 feet, having a radius of 10,953.00 feet, a central angle of 02°23'14" and a chord which bears N 72°45'47" E a distance of 456.30 feet to a 1/2-inch iron rod with cap stamped "BGE, Inc" set on the east line of said Olson Tract and the west line of said Bradley and Holmes Tract, for the northeast corner of the herein described tract, 318.59 feet left of FM 2243 baseline station 155+80.63, from which a 1/2-inch iron rod with a cap stamped "J.E. GARON RPLS 4303" found at the northeast corner of said Olson Tract and the northwest corner of said Bradley and Holmes Tract, bears N 22°13'25" W a distance of 1,162.59 feet;

THENCE, with the east line of said Olson Tract and the west line of said Bradley and Holmes Tract, S 22°13'25" E a distance of 28.98 feet to the **POINT OF BEGINNING** and containing 0.441 acre (19,192 square feet) of land, more or less.

Bearing orientation is based on the Texas State Plane Coordinate System NAD-83, Central Zone 4203. All distances are surface and may be converted to grid by dividing by a scale factor of 1.00012.

I hereby certify that these notes were prepared by BGE from a survey made on the ground under my supervision on May 12, 2022 and are true and correct to the best of my knowledge. A sketch accompanies this description.

08/09/2023
Date

Jonathan O. Nobles RPLS Number 5777
BGE, Inc.
101 West Louis Henna Blvd., Suite 400
Austin, TX 78728
Telephone: 512-879-0400
TBPELS Licensed Surveying Firm Number 10106502

Client:	Williamson County
Date:	August 9, 2023
Project Number:	7473-00

SKETCH TO ACCOMPANY LEGAL DESCRIPTION

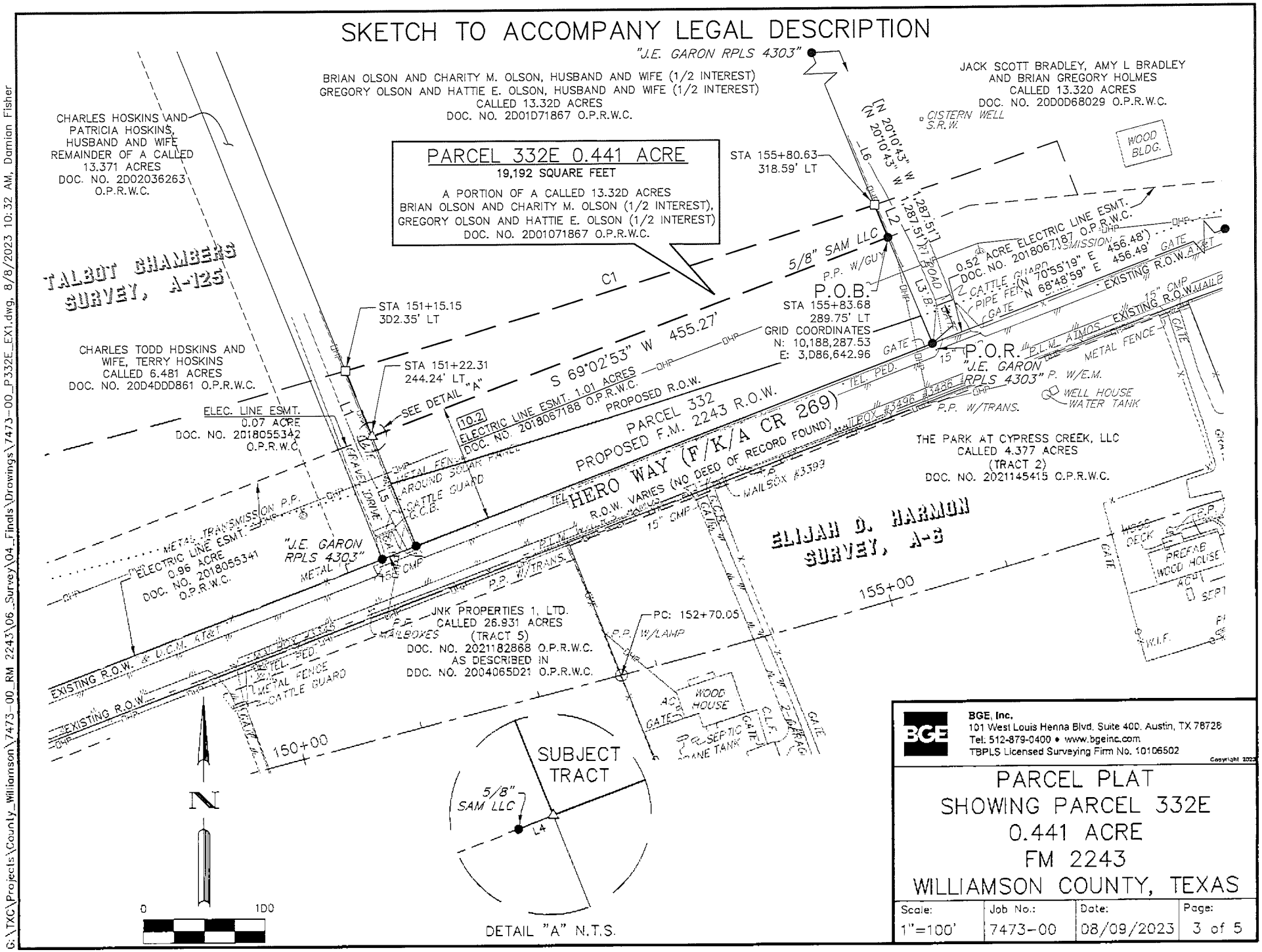

RECORDERS MEMORANDUM
All or parts of the text on this page was not clearly legible for satisfactory recordation.

BGE, Inc.
101 West Louis Henna Blvd. Suite 400. Austin, TX 78728
Tel: 512-879-0400 • www.bgeinc.com
TBPLS Licensed Surveying Firm No. 10106502

Copyright 2023

PARCEL PLAT
SHOWING PARCEL 332E
0.441 ACRE
FM 2243
WILLIAMSON COUNTY, TEXAS

Scale:	Job No.:	Date:	Page:
1"=100'	7473-00	08/09/2023	3 of 5

G:\TXC\Projects\County_Williamson\7473-00_RM 2243\06_Survey\04_Finals\Drawings\7473-00_P332E_EX1.dwg, 8/8/2023 10:32 AM, Damian Fisher

LEGEND

B.P.	BRICK PAVERS
C.L.F.	CHAIN LINK FENCE
CMP	CORRUGATED METAL PIPE
C.R.S.	CATHODIC READING STATION
DOC.	DOCUMENT
ESMT.	EASEMENT
E.M.	ELECTRIC METER
ELEC.	ELECTRIC
ESMT.	EASEMENT
G.C.B.	GATE CONTROL BOX
G.P.	GATE POST
H.W.F.	HOG WIRE FENCE
NO.	NUMBER
O.P.R.W.C.	OFFICIAL PUBLIC RECORDS OF WILLIAMSON COUNTY
P.O.B.	POINT OF BEGINNING
PED.	PEDESTAL
P.L.M.	PIPELINE MARKER
P.O.B.	POINT OF BEGINNING
P.O.R.	POINT OF REFERENCE
P.P.	POWER POLE
R.O.W.	RIGHT-OF-WAY
S.R.W.	STONE RETAINING WALL
TEL.	TELEPHONE
TRANS.	TRANSFORMER
U.C.M.	UNDERGROUND CABLE MARKER
W.I.F.	WROUGHT IRON FENCE
W.M.	WATER METER
( )	RECORD INFO FOR DOC. NO. 2000068029 O.P.R.W.C.
[ ]	RECORD INFO FOR DOC. NO. 2001071867 O.P.R.W.C.
{ }	RECORD INFO FOR DOC. NO. 2002036263 O.P.R.W.C.
●	FOUND 1/2" IRON ROD (UNLESS OTHERWISE NOTED)
○	SET 1/2" IRON ROD W/CAP "WILCO ROW 5777"
□	SET 1/2" IRON ROD W/CAP "BGE INC"
△	CALCULATED POINT
—X—	WIRE FENCE
—o—	METAL FENCE
—OHT—	OVERHEAD TELEPHONE
—OHP—	OVERHEAD POWER
—//—	EDGE OF ASPHALT
10.3	SCHEDULE B ITEM

LINE TABLE		
NUMBER	BEARING	DISTANCE
L1	N 21°39'01" W	58.55'
L2	S 22°13'25" E	28.98'
L3	N 22°13'25" W	95.99'
L4	S 68°20'59" W	0.19'
L5	S 21°39'01" E	97.36'
L6	N 22°13'25" W	1,162.59'

RECORD LINE TABLE		
NUMBER	BEARING	DISTANCE
L1	{N 19°35'37" W}	
	[N 19°35'37" W]	
L5	{S 19°35'37" E}	
	[S 19°35'37" E]	

CURVE TABLE					
NUMBER	ARC LENGTH	RADIUS	DELTA	CHORD BEARING	CHORD DISTANCE
C1	456.33'	10,953.00'	2°23'14"	N 72°45'47" E	456.30'

BGE, Inc.
101 West Louis Henna Blvd, Suite 400, Austin, TX 78728
Tel: 512-879-0400 • www.bgeinc.com
TBPLS Licensed Surveying Firm No. 10106502
Copyright 2023

PARCEL PLAT
SHOWING PARCEL 332E
0.441 ACRE
FM 2243
WILLIAMSON COUNTY, TEXAS

Scale:	Job No.:	Date:	Page:
1"=100'	7473-00	08/09/2023	4 of 5

G:\TXC\Projects\County_Williamson\7473-00_RM 2243\06_Survey\04_Finals\Drawings\7473-00_P332E_EX1.dwg, 8/8/2023 10:32 AM, Damian Fisher

GENERAL NOTES:

1. BEARING ORIENTATION IS BASED ON THE TEXAS STATE PLANE COORDINATE SYSTEM, CENTRAL ZONE 4203, NAD83. DISTANCES SHOWN HEREON ARE IN SURFACE AND CAN BE CONVERTED TO GRID BY DIVIDING BY THE COMBINED SCALE FACTOR = 1.00012

2. A METES AND BOUNDS DESCRIPTION OF EVEN DATE WAS PREPARED IN CONJUNCTION WITH THIS SKETCH.

3. THIS PARCEL PLAT WAS MADE IN RELIANCE UPON THAT CERTAIN COMMITMENT FOR TITLE INSURANCE ISSUED BY FIRST AMERICAN TITLE GUARANTY COMPANY AND TEXAS NATIONAL TITLE, INC. UNDER G.F. NO. T-159112, DATED EFFECTIVE SEPTEMBER 12, 2022 AND ISSUED ON OCTOBER 20, 2022.

RESTRICTIVE COVENANT AND EASEMENT NOTES:

1. RESTRICTIVE COVENANTS OF RECORD ITEMIZED IN VOLUME 625, PAGE 5, DEED RECORDS, WILLIAMSON COUNTY, TEXAS, DO AFFECT THE SUBJECT TRACT.

10.2 AN ELECTRIC LINE AERIAL EASEMENT AND RIGHT OF WAY GRANTED TO LCRA TRANSMISSION SERVICES CORPORATION AS DESCRIBED IN DOCUMENT NO. 2018067188 OF THE OFFICIAL PUBLIC RECORDS OF WILLIAMSON COUNTY, TEXAS, DOES NOT AFFECT THE SUBJECT TRACT OTHER THAN BEING IMMEDIATELY ADJACENT, AS SHOWN HEREON.

10.4 ALL TERMS, CONDITIONS AND PROVISIONS OF THAT CERTAIN DEVELOPMENT AGREEMENT OF RECORD IN DOCUMENT NO. 2010083083 OF THE OFFICIAL PUBLIC RECORDS OF WILLIAMSON COUNTY, TEXAS, DO AFFECT THE SUBJECT TRACT.

I hereby certify that this survey was made on the ground by BGE, Inc. under my supervision on Moy 12, 2022 and is true and correct to the best of my knowledge. The property has access to a public roadway and there are no visible encroachments, except as shown hereon.

STATE OF TEXAS
REGISTERED
JONATHAN O. NOBLES
5777
PROFESSIONAL
LAND SURVEYOR

8/9/2023

JONATHAN O. NOBLES RPLS NO. 5777
BGE, INC.
101 WEST LOUIS HENNA BLVD., SUITE 400
AUSTIN, TEXAS 78728
TELEPHONE: (512) 879-0400

BGE, Inc.
101 West Louis Henna Blvd, Suite 400, Austin, TX 78728
Tel: 512-879-0400 • www.bgeinc.com
TBPLS Licensed Surveying Firm No. 10106502
Copyright 2023

PARCEL PLAT
SHOWING PARCEL 332E
0.441 ACRE
FM 2243
WILLIAMSON COUNTY, TEXAS

Scale:	Job No.:	Date:	Page:
1"=100'	7473-00	08/09/2023	5 of 5

G:\TXC\Projects\County_Williamson\7473-00_RM 2243\06_Survey\04_Finals\Drawings\7473-00_P332E_EX1.dwg, 8/8/2023 10:32 AM, Damian Fisher

ELECTRONICALLY RECORDED
OFFICIAL PUBLIC RECORDS

2024038220

Pages: 18 Fee: $0.00
05/14/2024 04:17 PM
AFAULKNER

Nancy E. Rister, County Clerk
Williamson County,Texas

ELECTRONICALLY RECORDED 2024044767
Williamson County, Texas Total Pages: 17

POSSESSION AND USE AGREEMENT FOR TRANSPORTATION PURPOSES

STATE OF TEXAS	§	
	§	Parcel No.: 334/334E
COUNTY OF WILLIAMSON	§	Project: Hero Way/RM 2243

This Possession and Use Agreement For Transportation Purposes (the "Agreement") between **WILLIAMSON COUNTY, TEXAS** (the "County"), and **JACK SCOTT BRADLEY, AMY L. BRADLEY N/K/A AMY LOUISE HOLMES, AND BRIAN GREGORY HOLMES** (the "Grantor" whether one or more), grants to the County, their contractors, agents and all others deemed necessary by the County, an irrevocable right to possession and use of the Grantor's property for the purpose of constructing the Hero Way/RM 2243 roadway project and related appurtenances, drainage facility/grading and utility relocations (the "Roadway Construction Project"). The property subject to this Agreement is described more fully in field notes, plat maps, or other descriptions attached hereto as Exhibits "A" and "B" and are made a part of this Agreement by reference (the "Property").

1. For the consideration paid by the County which is set forth in Paragraph 2 below, the receipt and sufficiency of which is acknowledged, the Grantor grants, bargains, sells, and conveys to the County the right of entry and possession and use of the Property for the purpose of constructing a roadway, utility adjustments and appurtenances thereto and the right to remove any improvements. Authorized activities include surveying, inspection, environmental studies, archeological studies, clearing, demolition, construction of permanent improvements, relocating, replacing, and improving existing utility facilities, locating new utility facilities, and other work required to be performed in connection with the Roadway Construction Project. This Possession and Use Agreement will extend to the County, its contractors and assigns, owners of any existing utilities on the Property and those which may be lawfully permitted on the Property by the County in the future, and all others deemed necessary by the County for the purpose of the Roadway Construction Project. This grant will allow the construction, relocation, replacement, repair, improvement, operation, and maintenance of utilities on the Property.

2. In full consideration for this irrevocable grant of possession and use, the County will tender to the Grantor payment in the amount of **NINETY-SEVEN THOUSAND ONE HUNDRED FOURTEEN and no/100 DOLLARS ($97,114.00)** (the "Entry Deposit"). The County will be entitled to take possession and use of the Property upon tender of payment as set forth in paragraph 3 herein, subject to the conditions in paragraph 13 below, if any. The parties agree that the Entry Deposit tendered represents 100% payment of the County's approved value, which assumes no adverse environmental conditions affecting the value of the Property. The approved value is the County's determination of the just compensation owed to the Grantor for the real property interest to be acquired by the County in the Property, encumbered with the improvements thereon, if any, and damages to the remainder, if any, save and except all oil, gas, and sulfur. The parties agree that the Entry Deposit tendered to Grantor will be deducted from any final settlement amount, Special Commissioners' award, or court judgment. In the event the amount of the final settlement or judgment for acquisition of the Property is less than

the amount of the Entry Deposit, then the Grantor agrees that the difference between the amount of the Entry Deposit tendered and the amount of such final settlement or judgment for acquisition of the Property represents an overpayment and, upon written notice from the County, the Grantor will promptly refund the difference between the Entry Deposit and the amount of the settlement or judgment to the County.

3. The effective date of this Agreement will be the date on which payment of the Entry Deposit pursuant to Paragraph 2 above was tendered in full to the Grantor by the County or delivered to a title company acting as escrow agent for the transaction (the "Effective Date").

4. The Grantor warrants and represents by, through, and under Grantor but not otherwise, that the title to the Property is free and clear of all liens and encumbrances (and any subsequent updates prior to the Effective Date), and that proper releases will be executed for the Property prior to funds being disbursed under this Agreement. The Grantor further warrants that no other person or entity owns an interest in the fee title to the Property and further agrees to indemnify the County from all unreleased or undisclosed liens, claims, or encumbrances affecting the Property.

   The above-made warranties are made by Grantor and accepted by the County subject to the following:

   A. Visible and apparent easements not appearing of record;

   B. Any discrepancies, conflicts, or shortages in area or boundary lines or any encroachments or any overlapping of improvements which a current survey would show; and,

   C. Easements, restrictions, reservations, covenants, conditions, oil and gas leases, mineral severances, and encumbrances for taxes and assessments (other than liens and conveyances) presently of record in the Official Public Records of Williamson County, Texas, that affect the Property, but only to the extent that said items are still valid and in force and effect as of the Effective Date.

5. The parties agree that the valuation date for determining the amount of just compensation for the real property interest proposed to be acquired by the County in the Property, for negotiation or eminent domain proceeding purposes, will be the Effective Date.

6. This Agreement is made with the understanding that the County will continue to proceed with the acquisition of a real property interest in the Property. The Grantor reserves all rights of compensation for the title and other interest in and to the Property which the Grantor holds as of the time immediately prior to the Effective Date of this Agreement. This Agreement shall in no way prejudice the Grantor's rights to receive full and just compensation as allowed by law for all of the Grantor's interests in and to the Property to be acquired by the County, encumbered with the improvements thereon, if any, and damages, if any, to the remainder of the Grantor's interest in any larger tract of which the Property is a part (the "Remainder"), all as the Property exists on the Effective Date of this Agreement. The County's removal or construction of improvements on the Property shall in no way affect the fair market value of

the Property in determining compensation due to the Grantor in the eminent domain proceedings, except as such removal or construction of improvements may impact or damage the Remainder. No beneficial project influence will impact the appraised value of the Property to be acquired. This grant will not prejudice the Grantor's rights to any relocation benefits for which Grantor may be eligible.

7. In the event the County institutes or has instituted eminent domain proceedings, the County will not be liable to the Grantor for interest upon any award or judgment as a result of such proceedings for any period of time prior to the date of the award. Payment of any interest may be deferred by the County until the entry of judgment.

8. The purpose of this Agreement is to allow the County to proceed with its Roadway Construction Project without delay and to allow the Grantor to have the use at this time of 100% of the Entry Deposit. The Grantor expressly acknowledges that the proposed Roadway Construction Project is for a valid public use and voluntarily waives any right the Grantor has or may have, known or unknown, to contest the jurisdiction of the court in any condemnation proceeding for acquisition of the Property related to the Roadway Construction Project, based upon claims that the condemning authority has no authority to acquire the Property through eminent domain, has no valid public use for the Property, or that acquisition of the Property is not necessary for the public use.

9. The undersigned Grantor agrees to pay as they become due, all unpaid ad valorem property taxes and special assessments assessed against Property as of the Effective Date.

10. Notwithstanding the acquisition of the right of possession to the Property by the County in a condemnation proceeding by depositing the Special Commissioners' award into the registry of the court, less any amounts tendered to the Grantor pursuant to Paragraph 2 above, this Agreement shall continue to remain in effect until the County acquires title to the Property either by negotiation, settlement, or final court judgment.

11. There shall be no drinking liquor, hunting, or fishing on the Property or any of Grantor's lands by the County, its officers, agents, employees, contractors, invitees, guests, or representatives at any time. No firearms or fishing equipment shall be taken on the property by the County, its officers, agents, employees, contractors, invitees, guests or representatives at any time. The County, its contractors, and any and all persons entering the Property under this Agreement shall not perform disorderly conduct and a portable sanitary facility shall be made available for the County's contractors and any and all persons entering the Property under this agreement.

12. The County shall have the right to remove any fence that now crosses the Property. Prior to cutting any fence, however, the County shall give timely notice to the Grantor to brace the existing fence to be cut adequately on both sides of the proposed cut by suitable H-braces to prevent the remainder of the fence from sagging. If applicable, the County shall take reasonable steps to ensure that cattle, horses and/or other livestock cannot stray from the fenced pastures, including but not limited to informing Grantor of any fence removal and allowing for reasonable time to relocate said livestock. The County and its designated contractors,

employees, and invitees agree to keep any and all gates and fences closed and locked at all times except when passing through same.

13. This Agreement will also extend to and bind the heirs, devisees, executors, administrators, legal representatives, successors in interest, and assigns of the parties.

14. It is agreed the County will record this document.

15. Other conditions: Should the Special Commissioners' Award (if any) be greater than the Entry Deposit paid pursuant to paragraph 2 herein, the County shall tender the difference to the registry of the court within sixty (60) days of the date that the Special Commissioners' Award is entered.

At no time during the possession of the Property by County for the purposes described herein shall Grantor be denied reasonable access and/or ingress to or egress from the remainder of Grantor's land for its current uses, unless otherwise agreed to in writing in advance.

To have and to hold the Agreement herein described and conveyed, together with all the rights and appurtenances belonging to the County and its assigns forever, for the purposes and subject to the limitations set forth above.

[signature pages follow]

GRANTOR:

Jack Scott Bradley

ACKNOWLEDGMENT

STATE OF TEXAS

COUNTY OF WILLIAMSON

This instrument was acknowledged before me on this the 12th day of OCTOBER, 2023, by Jack Scott Bradley, in the capacity and for the purposes and consideration recited herein.

Notary Public, State of Texas

GRANTOR:

Amy L. Bradley n/k/a Amy Louise Holmes

JIGNESH AMIN
Notary Public, State of Texas
Comm. Expires 09-04-2024
Notary ID 132661145

ACKNOWLEDGMENT

STATE OF TEXAS

COUNTY OF WILLIAMSON

This instrument was acknowledged before me on this the 12th day of OCTOBER, 2023, by Amy L. Bradley n/k/a Amy Louise Holmes, in the capacity and for the purposes and consideration recited herein.

Notary Public, State of Texas

JIGNESH AMIN
Notary Public, State of Texas
Comm. Expires 09-04-2024
Notary ID 132661145

Form ROW-N-PUA
(12/12)
Replaces Form ROW-N-7
Page 6 of 6

GRANTOR:

Brian Gregory Holmes

ACKNOWLEDGMENT

STATE OF TEXAS

COUNTY OF Williamson

This instrument was acknowledged before me on this the 13th day of October, 2023, by Brian Gregory Holmes, in the capacity and for the purposes and consideration recited herein.

Ivan M Diaz
My Commission Expires
6/26/2026
Notary ID
131621155

Notary Public, State of Texas

COUNTY:

WILLIAMSON COUNTY, TEXAS

By: Bill Gravell Jr.
Bill Gravell, Jr (Nov 2, 2023 11:22 CDT)
Bill Gravell, Jr.
County Judge

ACKNOWLEDGMENT

STATE OF TEXAS
COUNTY OF WILLIAMSON

This instrument was acknowledged before me on this the 2nd day of November, 2023, by Bill Gravell, Jr., County Judge of Williamson County, Texas, in the capacity and for the purposes and consideration recited herein.

ANDREA L. SCHIELE
Notary Public, State Of Texas
Notary ID# 126562040
Comm. Exp. 02-23-2025

Notary Public, State of Texas

EXHIBIT A

County: Williamson
Parcel: 334
Highway: FM 2243

METES & BOUNDS DESCRIPTION FOR PARCEL 334

METES & BOUNDS DESCRIPTION FOR A 0.180 ACRE TRACT OF LAND OUT OF THE TALBOT CHAMBERS SURVEY, ABSTRACT NO. 125, WILLIAMSON COUNTY, TEXAS; BEING A PORTION OF A CALLED 13.320 ACRE TRACT OF LAND AS CONVEYED TO JACK SCOTT BRADLEY, AMY L. BRADLEY AND BRIAN GREGORY HOLMES BY WARRANTY DEED WITH VENDOR'S LIEN RECORDED IN DOCUMENT NUMBER 2000068029 OF THE OFFICIAL PUBLIC RECORDS OF WILLIAMSON COUNTY, TEXAS; SAID 0.180 ACRE TRACT OF LAND BEING MORE PARTICULARLY DESCRIBED BY METES AND BOUNDS AS FOLLOWS AND SHOWN ON THE ATTACHED SKETCH:

BEGINNING at a 1/2-inch iron rod with cap stamped "J.E. GARON RPLS 4303" found on the north right-of-way line of Hero Way (f/k/a County Road 269) (width varies) (no deed of reference found), at the southwest corner of the above described Bradley and Holmes Tract, and the southeast corner of a called 13.320 acre tract of land as conveyed to Brian Olson and Charity M. Olson (1/2 interest) and Gregory Olson and Hattie E. Olson (1/2 interest) by Warranty Deed with Vendor's Lien recorded in Document Number 2001071867 of the Official Public Records of Williamson County, Texas, for the southwest corner and **POINT OF BEGINNING** of the herein described tract, from which a 1/2-inch iron rod with cap stamped "J.E. GARON RPLS 4303" found on the north right-of-way line of said Hero Way, at the southwest corner of said Olson Tract, and the southeast corner of the remainder of a called 13.371 acre tract of land as conveyed to Charles Hoskins and Patricia Hoskins by Warranty Deed with Vendor's Lien recorded in Document Number 2002036263 of the Official Public Records of Williamson County, Texas, bears S 68°52'28" W a distance of 456.22 feet;

THENCE, with the west line of said Bradley and Holmes Tract and the east line of said Olson Tract, N 22°13'25" W a distance of 24.76 feet to a 1/2-inch iron rod with cap stamped "WILCO ROW 5777" (NAD-83, Central Zone Grid Coordinates: N: 10,188,221.60, E: 3,086,669.90) set at the beginning of a non-tangent curve to the left, for the northwest corner of the herein described tract, 218.89 feet left of FM 2243 baseline station 155+91.10, from which a 1/2-inch iron rod with cap stamped "J.E. GARON RPLS 4303" found at the northwest corner of said Bradley and Holmes Tract and the northeast corner of said Olson Tract, bears N 22°13'25" W a distance of 1,262.81 feet;

THENCE, over and across said Bradley and Holmes Tract, along said curve to the left, an arc distance of 407.76 feet, having a radius of 11,053.00 feet, a central angle of 02°06'49" and a chord which bears N 70°28'42" E a distance of 407.73 feet to a 1/2-inch iron rod with a cap stamped "WILCO ROW 5777" set for a point of tangency, 232.76 feet left of FM 2243 baseline station 160+07.76;

THENCE, continuing over and across said Bradley and Holmes Tract, N 69°25'18" E a distance of 30.65 feet to a 1/2-inch iron rod with a cap stamped "WILCO ROW 5777" set for an interior corner of the herein described tract, 233.71 feet left of FM 2243 baseline station 160+39.11;

THENCE, continuing over and across said Bradley and Holmes Tract, N 22°31'56" W a distance of 4.00 feet to a 1/2-inch iron rod with a cap stamped "WILCO ROW 5777" set for an exterior corner of the herein described tract, 237.70 feet left of FM 2243 baseline station 160+38.85;

THENCE, continuing over and across said Bradley and Holmes Tract, N 69°25'18" E a distance of 18.38 feet to a 1/2-inch iron rod with a cap stamped "WILCO ROW 5777" set on the east line of said Bradley and Holmes Tract and on the west line of Tract 4 of Kittie Hill Acres, a subdivision as recorded in Cabinet F, Slides 45-46 of the Plat Records of Williamson County, Texas, for the northeast corner of the herein described tract, 238.22 feet left of FM 2243 baseline station 160+57.66, from which a 1/2-inch iron rod found on the east line of said Bradley and Homes Tract, at the northwest corner of said Tract 4, bears N 22°42'00" W a distance of 340.76 feet;

THENCE, with the east line of said Bradley and Holmes Tract and the west line of said Tract 4, S 22°42'00" E a distance of 16.41 feet to a 1/2-inch iron rod found on the north right-of-way line of said Hero Way, at the southeast corner of said Bradley and Holmes Tract and the southwest corner of said Tract 4, from which a 1/2-inch iron rod found at the southeast corner of said Tract 4, bears N 69°38'27" E a distance of 823.08 feet;

THENCE, with the north right-of-way line of said Hero Way and the south line of said Bradley and Holmes Tract, S 68°48'59" W a distance of 456.49 feet to the **POINT OF BEGINNING** and containing 0.180 acre (7,858 square feet) of land, more or less.

Bearing orientation is based on the Texas State Plane Coordinate System NAD-83, Central Zone 4203. All distances are surface and may be converted to grid by dividing by a scale factor of 1.00012.

I hereby certify that these notes were prepared by BGE from a survey made on the ground under my supervision on May 12, 2022 and are true and correct to the best of my knowledge. A sketch accompanies this description.

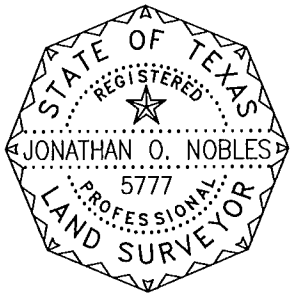

08/12/2022
Date

Jonathan O. Nobles RPLS Number 5777
BGE, Inc.
101 West Louis Henna Blvd., Suite 400
Austin, TX 78728
Telephone: 512-879-0400
TBPELS Licensed Surveying Firm Number 10106502

Client:	Williamson County
Date:	June 17, 2022
Revised:	August 12, 2022
Project Number:	7473-00

RECORDERS MEMORANDUM

All or parts of the text on this page was not clearly legible for satisfactory recordation

SKETCH TO ACCOMPANY LEGAL DESCRIPTION

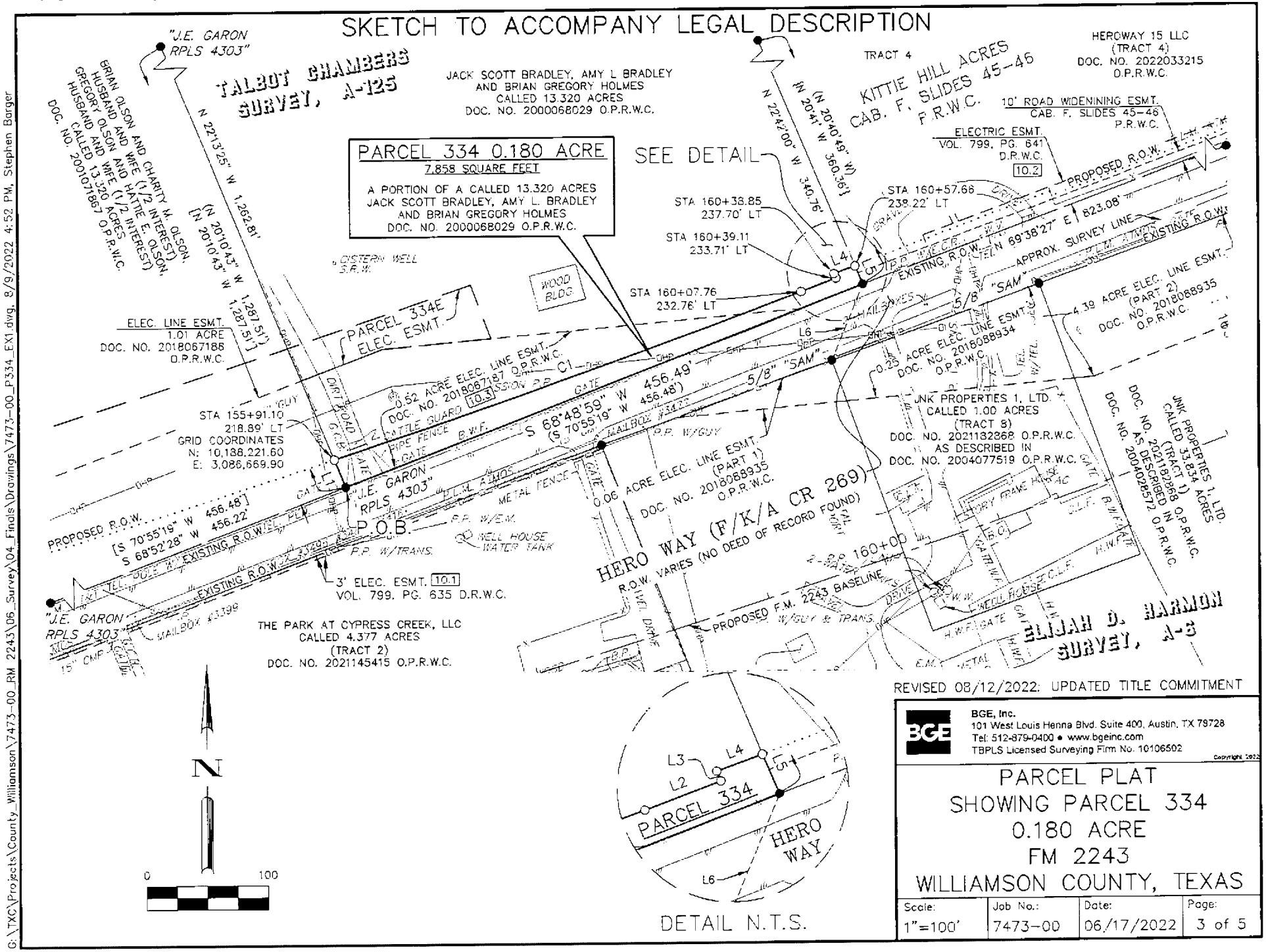

REVISED 08/12/2022: UPDATED TITLE COMMITMENT

BGE, Inc.
101 West Louis Henna Blvd. Suite 400, Austin, TX 78728
Tel: 512-879-0400 • www.bgeinc.com
TBPLS Licensed Surveying Firm No. 10106502

Copyright 2022

PARCEL PLAT SHOWING PARCEL 334 0.180 ACRE FM 2243 WILLIAMSON COUNTY, TEXAS

Scale:	Job No.:	Date:	Page:
1"=100'	7473-00	06/17/2022	3 of 5

G:\TXC\Projects\County_Williamson\7473-00_RM 2243\06_Survey\04_Finals\Drawings\7473-00_P334_EX1.dwg, 8/9/2022 4:52 PM, Stephen Barger

LEGEND

B.P.	BRICK PAVERS
CAB.	CABINET
C.L.F.	CHAIN LINK FENCE
CMP	CORRUGATED METAL PIPE
C.R.S.	CATHODIC READING STATION
DOC.	DOCUMENT
E.C.R.	ELECTRIC CONDUIT RISER
ESMT.	EASEMENT
E.M.	ELECTRIC METER
ELEC.	ELECTRIC
ESMT.	EASEMENT
G.C.B.	GATE CONTROL BOX
G.P.	GATE POST
NO.	NUMBER
N.T.S.	NOT TO SCALE
O.P.R.W.C.	OFFICIAL PUBLIC RECORDS OF WILLIAMSON COUNTY
P.O.B.	POINT OF BEGINNING
PED.	PEDESTAL
P.L.M.	PIPELINE MARKER
P.O.B.	POINT OF BEGINNING
P.O.R.	POINT OF REFERENCE
P.P.	POWER POLE
R.O.W.	RIGHT-OF-WAY
S.R.W.	STONE RETAINING WALL
TEL.	TELEPHONE
TRANS.	TRANSFORMER
U.C.M.	UNDERGROUND CABLE MARKER
W.I.F.	WROUGHT IRON FENCE
W.M.	WATER METER
( )	RECORD INFO FOR DOC. NO. 2000068029 O.P.R.W.C.
[ ]	RECORD INFO FOR DOC. NO. 2001071867 O.P.R.W.C.
{ }	RECORD INFO FOR CAB. F, SLIDES 45-46 P.R.W.C.
●	FOUND 1/2" IRON ROD (UNLESS OTHERWISE NOTED)
○	SET 1/2" IRON ROD W/CAP "WILCO ROW 5777"
△	CALCULATED POINT
—x—	WIRE FENCE
—o—	METAL FENCE
—OHT—	OVERHEAD TELEPHONE
—OHP—	OVERHEAD POWER
—//—	EDGE OF ASPHALT
10.3	SCHEDULE B ITEM

LINE TABLE		
NUMBER	BEARING	DISTANCE
L1	N 22°13'25" W	24.76'
L2	N 69°25'18" E	30.65'
L3	N 22°31'56" W	4.00'
L4	N 69°25'18" E	18.38'
L5	S 22°42'00" E	16.41'
L6	S 22°13'48" W	67.81'

CURVE TABLE					
NUMBER	ARC LENGTH	RADIUS	DELTA	CHORD BEARING	CHORD DISTANCE
C1	407.76'	11,053.00'	2°06'49"	N 70°28'42" E	407.73'

REVISED 08/12/2022: UPDATED TITLE COMMITMENT

BGE, Inc.
101 West Louis Henna Blvd, Suite 400, Austin, TX 78728
Tel: 512-879-0400 • www.bgeinc.com
TBPLS Licensed Surveying Firm No. 10106502
Copyright 2022

PARCEL PLAT
SHOWING PARCEL 334
0.180 ACRE
FM 2243
WILLIAMSON COUNTY, TEXAS

Scale:	Job No.:	Date:	Page:
1"=100'	7473-00	06/17/2022	4 of 5

G:\TXC\Projects\County_Williamson\7473-00_RM 2243\06_Survey\04_Finals\Drawings\7473-00_P334_EX1.dwg, 8/9/2022 4:52 PM, Stephen Barger

GENERAL NOTES:

1. BEARING ORIENTATION IS BASED ON THE TEXAS STATE PLANE COORDINATE SYSTEM, CENTRAL ZONE 4203, NAD83. DISTANCES SHOWN HEREON ARE IN SURFACE AND CAN BE CONVERTED TO GRID BY DIVIDING BY THE COMBINED SCALE FACTOR = 1.00012

2. A METES AND BOUNDS DESCRIPTION OF EVEN DATE WAS PREPARED IN CONJUNCTION WITH THIS SKETCH.

3. THIS PARCEL PLAT WAS MADE IN RELIANCE UPON THAT CERTAIN COMMITMENT FOR TITLE INSURANCE ISSUED BY TITLE RESOURCES GUARANTY COMPANY AND TEXAS NATIONAL TITLE, INC. UNDER G.F. NO. T-159118, DATED EFFECTIVE JUNE 23, 2022 AND ISSUED ON JULY 1, 2022.

RESTRICTIVE COVENANT AND EASEMENT NOTES:

1. RESTRICTIVE COVENANTS OF RECORD ITEMIZED IN VOLUME 625, PAGE 5, DEED RECORDS, WILLIAMSON COUNTY, TEXAS, DO AFFECT THE SUBJECT TRACT.

10.1 AN ELECTRIC TRANSMISSION AND/OR DISTRIBUTION LINE AND/OR SYSTEM EASEMENT GRANTED TO PEDERNALES ELECTRIC COOPERATIVE INC. AS DESCRIBED IN VOLUME 799, PAGE 635 OF THE DEED RECORDS OF WILLIAMSON COUNTY, TEXAS, DOES NOT AFFECT THE SUBJECT TRACT, AS SHOWN HEREON.

10.2 AN ELECTRIC TRANSMISSION LINE GRANTED TO PEDERNALES ELECTRIC COOPERATIVE INC. AS DESCRIBED IN VOLUME 799, PAGE 641 OF THE DEED RECORDS OF WILLIAMSON COUNTY, TEXAS, DOES NOT AFFECT THE SUBJECT TRACT, AS SHOWN HEREON.

10.3 AN ELECTRIC LINE AERIAL EASEMENT GRANTED TO LCRA TRANSMISSION SERVICES CORPORATION AS DESCRIBED IN DOCUMENT NO. 2018067187 OF THE OFFICIAL PUBLIC RECORDS OF WILLIAMSON COUNTY, TEXAS, DOES AFFECT THE SUBJECT TRACT, AS SHOWN HEREON.

10.5 ALL TERMS, CONDITIONS AND PROVISIONS OF THAT CERTAIN DEVELOPMENT AGREEMENT OF RECORD IN DOCUMENT NO. 2010083081 OF THE OFFICIAL PUBLIC RECORDS OF WILLIAMSON COUNTY, TEXAS, DO AFFECT THE SUBJECT TRACT.

I hereby certify that this survey was made on the ground by BGE, Inc. under my supervision on May 12, 2022 and is true and correct to the best of my knowledge. The property has access to a public roadway and there are no visible encroachments, except as shown hereon.

STATE OF TEXAS
REGISTERED
JONATHAN O. NOBLES
5777
PROFESSIONAL
LAND SURVEYOR

08/12/2022

JONATHAN O. NOBLES RPLS NO. 5777
BGE, INC.
101 WEST LOUIS HENNA BLVD., SUITE 400
AUSTIN, TEXAS 78728
TELEPHONE: (512) 879-0400

REVISED 08/12/2022: UPDATED TITLE COMMITMENT

BGE, Inc.
101 West Louis Henna Blvd, Suite 400, Austin, TX 78728
Tel: 512-879-0400 • www.bgeinc.com
TBPLS Licensed Surveying Firm No. 10106502
Copyright 2022

PARCEL PLAT
SHOWING PARCEL 334
0.180 ACRE
FM 2243
WILLIAMSON COUNTY, TEXAS

Scale:	Job No.:	Date:	Page:
1"=100'	7473-00	06/17/2022	5 of 5

G:\TXC\Projects\County_Williamson\7473-00_RM 2243\06_Survey\04_Finals\Drawings\7473-00_P334_EX1.dwg, 8/9/2022 4:52 PM, Stephen Barger

EXHIBIT B

County: Williamson
Parcel: 334E
Highway: FM 2243

METES & BOUNDS DESCRIPTION FOR EASEMENT PARCEL 334E

METES & BOUNDS DESCRIPTION FOR A 0.118 ACRE TRACT OF LAND OUT OF THE TALBOT CHAMBERS SURVEY, ABSTRACT NO. 125, WILLIAMSON COUNTY, TEXAS; BEING A PORTION OF A CALLED 13.320 ACRE TRACT OF LAND AS CONVEYED JACK SCOTT BRADLEY, AMY L. BRADLEY AND BRIAN GREGORY HOLMES BY WARRANTY DEED WITH VENDOR'S LIEN RECORDED IN DOCUMENT NUMBER 2000068029 OF THE OFFICIAL PUBLIC RECORDS OF WILLIAMSON COUNTY, TEXAS; SAID 0.118 ACRE TRACT OF LAND BEING MORE PARTICULARLY DESCRIBED BY METES AND BOUNDS AS FOLLOWS AND SHOWN ON THE ATTACHED SKETCH:

COMMENCING for POINT OF REFERENCE at a 1/2-inch iron rod with cap stamped "J.E. GARON RPLS 4303" found on the north right-of-way line of Hero Way (f/k/a County Road 269) (width varies) (no deed of reference found), at the southwest corner of the above described Bradley and Holmes Tract, and the southeast corner of a called 13.320 acre tract of land as conveyed to Brian Olson and Charity Olson by Warranty Deed with Vendor's Lien recorded in Document Number 2001071867 of the Official Public Records of Williamson County, Texas, from which a 1/2-inch iron rod with cap stamped "J.E. GARON RPLS 4303" found on the north right-of-way line of said Hero Way, at the southwest corner of said Olson Tract, and at the southeast corner of the remainder of a called 13.371 acre tract of land as conveyed to Charles Hoskins and Patricia Hoskins by Warranty Deed with Vendor's Lien recorded in Document Number 2002036263 of the Official Public Records of Williamson County, Texas, bears S 68°52'28" W a distance of 456.22 feet, and also from which a 1/2-inch iron rod found on the north right-of-way line of said Hero Way, at the southeast corner of said Bradley and Holmes Tract and the southwest corner of Tract 4 of Kittie Hill Acres, a subdivision as recorded in Cabinet F, Slides 45-46 of the Plat Records of Williamson County, Texas, bears N 68°48'59" E a distance of 456.49 feet; Thence, with the west line of said Bradley and Holmes Tract and the east line of said Olson Tract, N 22°13'25" W a distance of 95.99 feet to a 5/8-inch iron rod with cap stamped "SAM LLC" (NAD-83, Central Zone Grid Coordinates: N: 10,188,287.53, E: 3,086,642.96) found at the northwest corner of a called 0.52 acre electric line easement recorded in Document Number 2018067187 of the Official Public Records of Williamson County, Texas, for the southwest corner and **POINT OF BEGINNING** of the herein described tract, 289.75 feet left of FM 2243 baseline station 155+83.68;

THENCE, with the west line of said Bradley and Holmes Tract and the east line of said Olson Tract, N 22°13'25" W a distance of 28.98 feet to a 1/2-inch iron rod with cap stamped "BGE Inc" set at the beginning of a non-tangent curve to the left, for the northwest corner of the herein described tract, 318.59 feet left of FM 2243 baseline station 155+80.63, from which a 1/2-inch iron rod with cap stamped "J.E. GARON RPLS 4303" found at the northwest corner of said Bradley and Holmes Tract and the northeast corner of said Olson Tract, bears N 22°13'25" W a distance of 1,162.59 feet;

THENCE, over and across said Bradley and Holmes Tract, along said curve to the left, an arc distance of 158.92 feet, having a radius of 10,953.00 feet, a central angle of 00°49'53" and a chord which bears N 71°09'14" E a distance of 158.92 feet to a 1/2-inch iron rod with a cap stamped "BGE Inc" set for the northeast corner of the herein described tract, 324.23 feet left of FM 2243 baseline station 157+44.57;

THENCE, continuing over and across said Bradley and Holmes Tract, S 20°34'42" E a distance of 47.58 feet to a 1/2-inch iron rod with a cap stamped "BGE Inc" set on the north line of said electric easement, for the southeast corner of the herein described tract, 276.73 feet left of FM 2243 baseline station 157+47.39, from which a 5/8-inch iron rod with cap stamped "SAM INC" found on the north right-of-way line of said Hero Way, at the most easterly corner of said electric easement, bears N 84°51'46" E a distance of 256.47 feet;

THENCE, with the north line of said electric easement, continuing over and across said Bradley and Holmes Tract, S 84°51'46" W a distance of 89.63 feet to a 1/2-inch iron rod found for an angle point;

THENCE, with the north line of said electric easement, continuing over and across said Bradley and Holmes Tract, S 69°03'38" W a distance of 71.62 feet to the **POINT OF BEGINNING** and containing 0.118 acres (5,154 square feet) of land, more or less.

Bearing orientation is based on the Texas State Plane Coordinate System NAD-83, Central Zone 4203. All distances are surface and may be converted to grid by dividing by a scale factor of 1.00012.

I hereby certify that these notes were prepared by BGE from a survey made on the ground under my supervision on May 12, 2022 and are true and correct to the best of my knowledge. A sketch accompanies this description.

08/16/2022
Date

Jonathan O. Nobles RPLS Number 5777
BGE, Inc.
101 West Louis Henna Blvd., Suite 400
Austin, TX 78728
Telephone: 512-879-0400
TBPELS Licensed Surveying Firm Number 10106502

Client:	Williamson County
Date:	August 16, 2022
Project Number:	7473-00

RECORDERS MEMORANDUM
All or parts of the text on this page was not clearly legible for satisfactory recordation

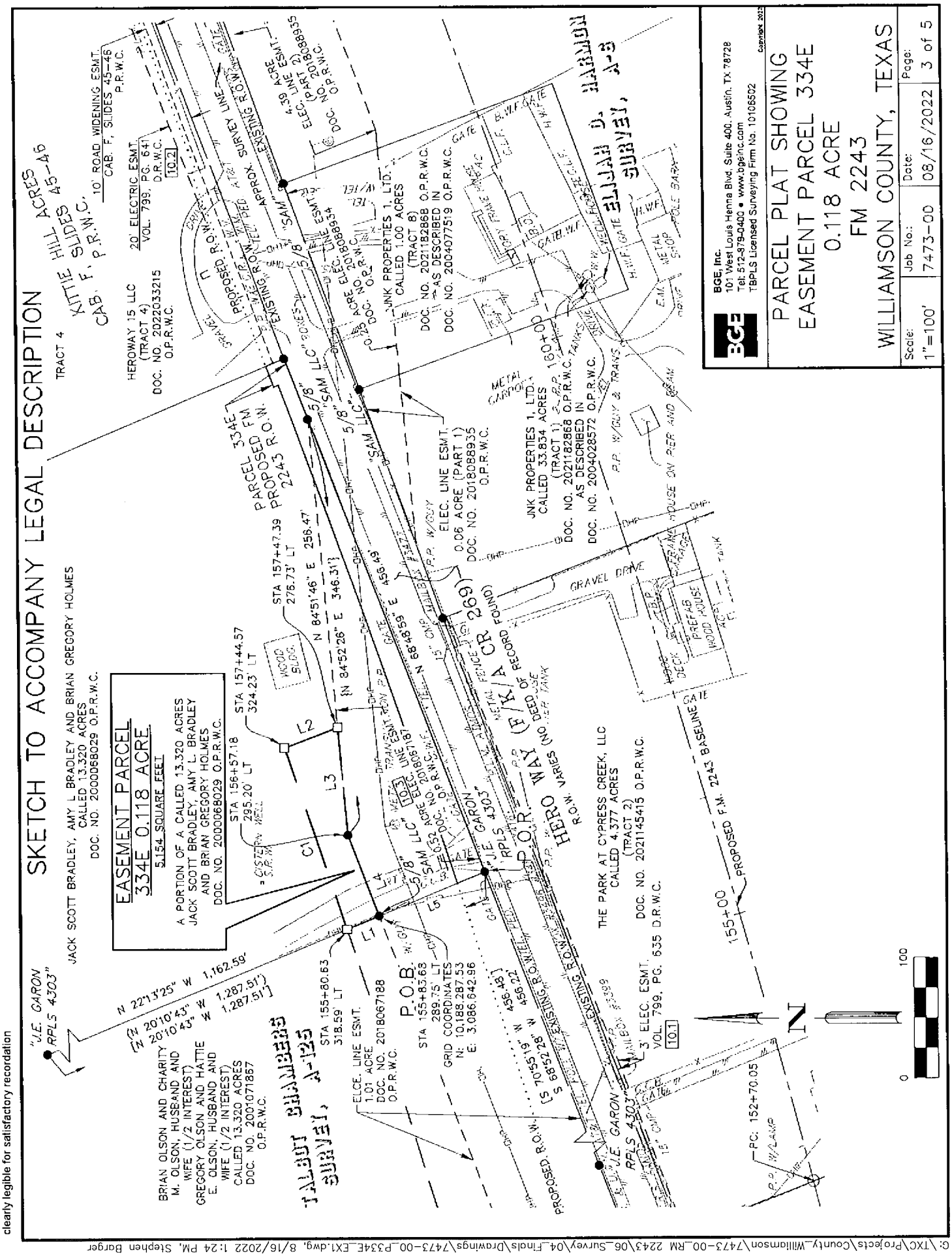

G:\TXC\Projects\County_Williamson\7473-00_RM 2243\06_Survey\04_Finals\Drawings\7473-00_P334E_EX1.dwg, 8/16/2022 1:24 PM, Stephen Barger

LEGEND

B.	BOLLARD
BLDG.	BUILDING
B.P.	BRICK PAVERS
B.W.F.	BARBED WIRE FENCE
CAB.	CABINET
C.L.F.	CHAIN LINK FENCE
CMP	CORRUGATED METAL PIPE
C.R.S.	CATHODIC READING STATION
DOC.	DOCUMENT
E.C.R.	ELECTRIC CONDUIT RISER
ELEC.	ELECTRIC
E.M.	ELECTRIC METER
ESMT.	EASEMENT
G.C.B.	GATE CONTROL BOX
G.P.	GATE POST
H.W.F.	HOW WIRE FENCE
NO.	NUMBER
N.T.S.	NOT TO SCALE
O.P.R.W.C.	OFFICIAL PUBLIC RECORDS OF WILLIAMSON COUNTY
P.O.B.	POINT OF BEGINNING
PED.	PEDESTAL
P.L.M.	PIPELINE MARKER
P.O.B.	POINT OF BEGINNING
P.O.R.	POINT OF REFERENCE
P.P.	POWER POLE
R.O.W.	RIGHT-OF-WAY
S.R.W.	STONE RETAINING WALL
TEL.	TELEPHONE
TRANS.	TRANSFORMER
U.C.M.	UNDERGROUND CABLE MARKER
W.M.	WATER METER
W.V.	WATER VALVE
W.W.	WATER WELL
( )	RECORD INFO FOR DOC. NO. 2000068029 O.P.R.W.C.
[ ]	RECORD INFO FOR DOC. NO. 2001071867 O.P.R.W.C.
{ }	RECORD INFO FOR DOC. NO. 2018067187 O.P.R.W.C.
●	FOUND 1/2" IRON ROD (UNLESS OTHERWISE NOTED)
○	SET 1/2" IRON ROD W/CAP "WILCO ROW 5777"
□	SET 1/2" IRON ROD W/CAP "BGE INC"
—x—	WIRE FENCE
—⊖—	METAL FENCE
—OHT—	OVERHEAD TELEPHONE
—OHP—	OVERHEAD POWER
—//—	EDGE OF ASPHALT
10.3	SCHEDULE B ITEM

LINE TABLE		
NUMBER	BEARING	DISTANCE
L1	N 22°13'25" W	28.98'
L2	S 20°34'42" E	47.58'
L3	S 84°51'46" W	89.63'
L4	S 69°03'38" W	71.62'
L5	N 22°13'25" W	95.99'

LINE TABLE		
NUMBER	BEARING	DISTANCE
{L4}	{S 69°02'31" W}	{71.50'}

CURVE TABLE					
NUMBER	ARC LENGTH	RADIUS	DELTA	CHORD BEARING	CHORD DISTANCE
C1	158.92'	10,953.00'	0°49'53"	N 71°09'14" E	158.92'

BGE, Inc.
101 West Louis Henna Blvd. Suite 400. Austin, TX 78728
Tel: 512-879-0400 • www.bgeinc.com
TBPLS Licensed Surveying Firm No. 10106502
Copyright 2022

PARCEL PLAT SHOWING
EASEMENT PARCEL 334E
0.118 ACRE
FM 2243
WILLIAMSON COUNTY, TEXAS

Scale:	Job No.:	Date:	Page:
1"=100'	7473-00	08/16/2022	4 of 5

G:\TXC\Projects\County_Williamson\7473-00_RM 2243\06_Survey\04_Finals\Drawings\7473-00_P334E_EX1.dwg, 8/16/2022 1:24 PM, Stephen Barger

GENERAL NOTES:

1. BEARING ORIENTATION IS BASED ON THE TEXAS STATE PLANE COORDINATE SYSTEM, CENTRAL ZONE 4203, NAD83. DISTANCES SHOWN HEREON ARE IN SURFACE AND CAN BE CONVERTED TO GRID BY DIVIDING BY THE COMBINED SCALE FACTOR = 1.00012

2. A METES AND BOUNDS DESCRIPTION OF EVEN DATE WAS PREPARED IN CONJUNCTION WITH THIS SKETCH.

3. THIS PARCEL PLAT WAS MADE IN RELIANCE UPON THAT CERTAIN COMMITMENT FOR TITLE INSURANCE ISSUED BY TITLE RESOURCES GUARANTY COMPANY AND TEXAS NATIONAL TITLE, INC. UNDER G.F. NO. T-159118, DATED EFFECTIVE JUNE 23, 2022 AND ISSUED ON JULY 1, 2022.

RESTRICTIVE COVENANT AND EASEMENT NOTES:

1. RESTRICTIVE COVENANTS OF RECORD ITEMIZED IN VOLUME 625, PAGE 5, DEED RECORDS, WILLIAMSON COUNTY, TEXAS, DO AFFECT THE SUBJECT TRACT.

10.1 AN ELECTRIC TRANSMISSION AND/OR DISTRIBUTION LINE AND/OR SYSTEM EASEMENT GRANTED TO PEDERNALES ELECTRIC COOPERATIVE INC. AS DESCRIBED IN VOLUME 799, PAGE 635 OF THE DEED RECORDS OF WILLIAMSON COUNTY, TEXAS, DOES NOT AFFECT THE SUBJECT TRACT, AS SHOWN HEREON.

10.2 AN ELECTRIC TRANSMISSION LINE GRANTED TO PEDERNALES ELECTRIC COOPERATIVE INC. AS DESCRIBED IN VOLUME 799, PAGE 641 OF THE DEED RECORDS OF WILLIAMSON COUNTY, TEXAS, DOES NOT AFFECT THE SUBJECT TRACT, AS SHOWN HEREON.

10.3 AN ELECTRIC LINE AERIAL EASEMENT GRANTED TO LCRA TRANSMISSION SERVICES CORPORATION AS DESCRIBED IN DOCUMENT NO. 2018067187 OF THE OFFICIAL PUBLIC RECORDS OF WILLIAMSON COUNTY, TEXAS, DOES NOT AFFECT THE SUBJECT TRACT, AS SHOWN HEREON.

10.5 ALL TERMS, CONDITIONS AND PROVISIONS OF THAT CERTAIN DEVELOPMENT AGREEMENT OF RECORD IN DOCUMENT NO. 2010083081 OF THE OFFICIAL PUBLIC RECORDS OF WILLIAMSON COUNTY, TEXAS, DO AFFECT THE SUBJECT TRACT.

I hereby certify that this survey was made on the ground by BGE, Inc. under my supervision on May 12, 2022 and is true and correct to the best of my knowledge. The property has access to a public roadway and there are no visible encroachments, except as shown hereon.

08/16/2022

JONATHAN O. NOBLES RPLS NO. 5777
BGE, INC.
101 WEST LOUIS HENNA BLVD., SUITE 400
AUSTIN, TEXAS 78728
TELEPHONE: (512) 879-0400

BGE, Inc.
101 West Louis Henna Blvd, Suite 400, Austin, TX 78728
Tel: 512-879-0400 • www.bgeinc.com
TBPLS Licensed Surveying Firm No. 10106502
Copyright 2022

PARCEL PLAT SHOWING
EASEMENT PARCEL 334E
0.118 ACRE
FM 2243
WILLIAMSON COUNTY, TEXAS

Scale:	Job No.:	Date:	Page:
1"=100'	7473-00	08/16/2022	5 of 5

G:\TXC\Projects\County_Williamson\7473-00_RM 2243\06_Survey\04_Finals\Drawings\7473-00_P334E_EX1.dwg, 8/16/2022 1:24 PM, Stephen Barger

ELECTRONICALLY RECORDED
OFFICIAL PUBLIC RECORDS

2024044767

Pages: 17 Fee: $0.00
06/05/2024 03:26 PM
MBARRICK

Nancy E. Rister, County Clerk
Williamson County,Texas

POSSESSION AND USE AGREEMENT FOR TRANSPORTATION PURPOSES

STATE OF TEXAS	§	
	§	Parcel No.: 339P1
COUNTY OF WILLIAMSON	§	Project: Hero Way/RM 2243

This Possession and Use Agreement For Transportation Purposes (the "Agreement") between **WILLIAMSON COUNTY, TEXAS** (the "County"), and **TDW DEVELOPMENT, LLC** (the "Grantor" whether one or more), grants to the County, their contractors, agents and all others deemed necessary by the County, an irrevocable right to possession and use of the Grantor's property for the purpose of constructing the Hero Way/RM 2243 roadway project and related appurtenances, drainage facility/grading and utility relocations (the "Roadway Construction Project"). The property subject to this Agreement is described more fully in field notes, plat maps, or other descriptions attached hereto as Exhibits "A" and are made a part of this Agreement by reference (the "Property").

1. For the consideration paid by the County which is set forth in Paragraph 2 below, the receipt and sufficiency of which is acknowledged, the Grantor grants, bargains, sells, and conveys to the County the right of entry and possession and use of the Property for the purpose of constructing a roadway, utility adjustments and appurtenances thereto and the right to remove any improvements. Authorized activities include surveying, inspection, environmental studies, archeological studies, clearing, demolition, construction of permanent improvements, relocating, replacing, and improving existing utility facilities, locating new utility facilities, and other work required to be performed in connection with the Roadway Construction Project. This Possession and Use Agreement will extend to the County, its contractors and assigns, owners of any existing utilities on the Property and those which may be lawfully permitted on the Property by the County in the future, and all others deemed necessary by the County for the purpose of the Roadway Construction Project. This grant will allow the construction, relocation, replacement, repair, improvement, operation, and maintenance of utilities on the Property.

2. In full consideration for this irrevocable grant of possession and use, the County will tender to the Grantor payment in the amount of **ONE HUNDRED NINE THOUSAND SEVEN HUNDRED FIFTY-NINE and no/100 DOLLARS ($109,759.00)** (the "Entry Deposit"). The County will be entitled to take possession and use of the Property upon tender of payment as set forth in paragraph 3 herein, subject to the conditions in paragraph 13 below, if any. The parties agree that the Entry Deposit tendered represents 100% payment of the County's approved value for Parcel 339 Part 1, which assumes no adverse environmental conditions affecting the value of the Property. The approved value is the County's determination of the just compensation owed to the Grantor for the real property interest to be acquired by the County in the Property, encumbered with the improvements thereon, if any, and damages to the remainder, if any, save and except all oil, gas, and sulfur. The parties agree that the Entry Deposit tendered to Grantor will be deducted from any final settlement amount, Special Commissioners' award, or court judgment. In the event the amount of the final settlement or judgment for acquisition of the Property is less than the amount of the Entry Deposit, then the

Grantor agrees that the difference between the amount of the Entry Deposit tendered and the amount of such final settlement or judgment for acquisition of the Property represents an overpayment and, upon written notice from the County, the Grantor will promptly refund the difference between the Entry Deposit and the amount of the settlement or judgment to the County.

3. The effective date of this Agreement will be the date on which payment of the Entry Deposit pursuant to Paragraph 2 above was tendered in full to the Grantor by the County or delivered to a title company acting as escrow agent for the transaction (the "Effective Date").

4. The Grantor warrants and represents by, through, and under Grantor but not otherwise, that the title to the Property is free and clear of all liens and encumbrances other than identified in the title commitment T-166261 effective September 22, 2023 issued by Texas National Title (and any subsequent updates prior to the Effective Date), and that proper releases will be executed for the Property prior to funds being disbursed under this Agreement. The Grantor further warrants that no other person or entity owns an interest in the fee title to the Property and further agrees to indemnify the County from all unreleased or undisclosed liens, claims, or encumbrances affecting the Property.

   The above-made warranties are made by Grantor and accepted by the County subject to the following:

   A. Visible and apparent easements not appearing of record;

   B. Any discrepancies, conflicts, or shortages in area or boundary lines or any encroachments or any overlapping of improvements which a current survey would show; and,

   C. Easements, restrictions, reservations, covenants, conditions, oil and gas leases, mineral severances, and encumbrances for taxes and assessments (other than liens and conveyances) presently of record in the Official Public Records of Williamson County, Texas, that affect the Property, but only to the extent that said items are still valid and in force and effect as of the Effective Date.

5. The parties agree that the valuation date for determining the amount of just compensation for the real property interest proposed to be acquired by the County in the Property, for negotiation or eminent domain proceeding purposes, will be January 17, 2024.

6. This Agreement is made with the understanding that the County will continue to proceed with the acquisition of a real property interest in the Property. The Grantor reserves all rights of compensation for the title and other interest in and to the Property which the Grantor holds as of the time immediately prior to the Effective Date of this Agreement. This Agreement shall in no way prejudice the Grantor's rights to receive full and just compensation as allowed by law for all of the Grantor's interests in and to the Property to be acquired by the County, encumbered with the improvements thereon, if any, and damages, if any, to the remainder of the Grantor's interest in any larger tract of which the Property is a part (the "Remainder"), all as the Property exists on the Effective Date of this Agreement. The County's removal or

construction of improvements on the Property shall in no way affect the fair market value of the Property in determining compensation due to the Grantor in the eminent domain proceedings, except as such removal or construction of improvements may impact or damage the Remainder. No beneficial project influence will impact the appraised value of the Property to be acquired. This grant will not prejudice the Grantor's rights to any relocation benefits for which Grantor may be eligible.

7. In the event the County institutes or has instituted eminent domain proceedings, the County will not be liable to the Grantor for interest upon any award or judgment as a result of such proceedings for any period of time prior to the date of the award. Payment of any interest may be deferred by the County until the entry of judgment.

8. The purpose of this Agreement is to allow the County to proceed with its Roadway Construction Project without delay and to allow the Grantor to have the use at this time of 100% of the Entry Deposit. The Grantor expressly acknowledges that the proposed Roadway Construction Project is for a valid public use and voluntarily waives any right the Grantor has or may have, known or unknown, to contest the jurisdiction of the court in any condemnation proceeding for acquisition of the Property related to the Roadway Construction Project, based upon claims that the condemning authority has no authority to acquire the Property through eminent domain, has no valid public use for the Property, or that acquisition of the Property is not necessary for the public use.

9. The undersigned Grantor agrees to pay as they become due, all unpaid ad valorem property taxes and special assessments assessed against Property as of the Effective Date.

10. Notwithstanding the acquisition of the right of possession to the Property by the County in a condemnation proceeding by depositing the Special Commissioners' award into the registry of the court, less any amounts tendered to the Grantor pursuant to Paragraph 2 above, this Agreement shall continue to remain in effect until the County acquires title to the Property either by negotiation, settlement, or final court judgment.

11. There shall be no drinking liquor, hunting, or fishing on the Property or any of Grantor's lands by the County, its officers, agents, employees, contractors, invitees, guests, or representatives at any time. No firearms or fishing equipment shall be taken on the property by the County, its officers, agents, employees, contractors, invitees, guests or representatives at any time. The County, its contractors, and any and all persons entering the Property under this Agreement shall not perform disorderly conduct and a portable sanitary facility shall be made available for the County's contractors and any and all persons entering the Property under this agreement.

12. The County shall have the right to remove any fence that now crosses the Property. Prior to cutting any fence, however, the County shall give timely notice to the Grantor to brace the existing fence to be cut adequately on both sides of the proposed cut by suitable H-braces to prevent the remainder of the fence from sagging. If applicable, the County shall take reasonable steps to ensure that cattle, horses and/or other livestock cannot stray from the fenced pastures, including but not limited to informing Grantor of any fence removal and allowing for

reasonable time to relocate said livestock. The County and its designated contractors, employees, and invitees agree to keep any and all gates and fences closed and locked at all times except when passing through same.

13. This Agreement will also extend to and bind the heirs, devisees, executors, administrators, legal representatives, successors in interest, and assigns of the parties.

14. It is agreed the County will record this document.

15. Other conditions:

    (a) Any condemnation petition filed by County to acquire the Property shall provide that the existing detention pond facilities shall be permitted to remain on the Property in the currently approved and permitted capacity according to standard TxDoT utility joint use agreement terms, and that any modifications to the pond design and capacity shall be allowed in the future only after permit application, plan review and approval by the necessary city, governmental agencies and approval of the applicable regulatory entity operating the roadway facilities which approval shall not be unreasonably withheld or delayed. All parties acknowledge that the existing detention pond will have to be modified to accommodate the drainage from the future adjacent approximately 32-acre mixed use development. Allowable modifications of the detention facilities include enlargement of the facilities, landscape improvements, and maintenance of the detention area. All modifications, improvements, and maintenance by the Grantor will be at the sole expense of Grantor.

    (b) Upon written request from either party to the Agreement, any final prerequisites to and including filing a condemnation suit shall be completed by County within (90) ninety days following such request, and the parties shall use best efforts to schedule a special commissioners' hearing at on a mutually agreeable date within ninety (90) days after filing of the condemnation petition.

    (c) Should the Special Commissioners' Award (if any) be greater than the Entry Deposit paid pursuant to paragraph 2 herein, the County shall tender the difference to the registry of the court within sixty (60) days of the date that the Special Commissioners' Award is entered.

At no time during the possession of the Property by County for the purposes described herein shall Grantor be denied reasonable access and/or ingress to or egress from the remainder of Grantor's land for its current uses, unless otherwise agreed to in writing in advance.

To have and to hold the Agreement herein described and conveyed, together with all the rights and appurtenances belonging to the County and its assigns forever, for the purposes and subject to the limitations set forth above.

[signature pages follow]

GRANTOR:

TDW DEVELOPMENT, LLC

By: Tempa D. Herman

Name: Tempa D. Herman

Its: Manager

ACKNOWLEDGMENT

STATE OF TEXAS

COUNTY OF WILLIAMSON

This instrument was acknowledged before me on this the 15th day of January, 2024, by Tempa D. Herman, in the capacity and for the purposes and consideration recited herein.

CINDY SOLORIO
My Notary ID # 10542656
Expires November 2, 2026

Cindy Solorio
Notary Public, State of Texas

COUNTY:

WILLIAMSON COUNTY, TEXAS

By: Bill Gravell Jr.
Bill Gravell (Jan 24, 2024 09:19 CST)
Bill Gravell, Jr.
County Judge

ACKNOWLEDGMENT

STATE OF TEXAS
COUNTY OF WILLIAMSON

This instrument was acknowledged before me on this the 24th day of January, 2024, by Bill Gravell, Jr., County Judge of Williamson County, Texas, in the capacity and for the purposes and consideration recited herein.

ANDREA L. SCHIELE
Notary Public, State Of Texas
Notary ID# 126562040
Comm. Exp. 02-23-2025

Andrea L Schiele

Notary Public, State of Texas

EXHIBIT A

County: Williamson
Parcel: 339 Part 1
Highway: FM 2243

METES & BOUNDS DESCRIPTION FOR PARCEL 339 PART 1

METES & BOUNDS DESCRIPTION FOR A 0.278 ACRE TRACT OF LAND OUT OF THE TALBOT CHAMBERS SURVEY, ABSTRACT NO. 125, WILLIAMSON COUNTY, TEXAS; BEING A PORTION OF TRACT 9, KITTIE HILL ACRES, A SUBDIVISION AS RECORDED IN CABINET F, SLIDES 45 AND 46 OF THE PLAT RECORDS OF WILLIAMSON COUNTY, TEXAS, AND BEING A PORTION OF A REMAINDER OF A CALLED 27.07 ACRE TRACT OF LAND AS CONVEYED TO JGHTDH #1, LLC, BY GENERAL WARRANTY DEED WITH VENDOR'S LIEN RECORDED IN DOCUMENT NUMBER 2016075658 OF THE OFFICIAL PUBLIC RECORDS OF WILLIAMSON COUNTY, TEXAS; SAID 0.278 ACRE TRACT OF LAND BEING MORE PARTICULARLY DESCRIBED BY METES AND BOUNDS AS FOLLOWS AND SHOWN ON THE ATTACHED SKETCH:

BEGINNING at a 1/2-inch iron rod found on the north right-of-way line of Hero Way (f/k/a County Road 269) (width varies) (no deed of reference found), at the southwest corner of the above described Tract 9 and the southeast corner of Tract 5 of AMENDED PLAT KITTIE HILL ACRES TRACT 5 AND TRACT 6, a subdivision as recorded in Cabinet X, Slides 378 and 379 of the Plat Records of Williamson County, Texas, as conveyed to Zoomers Investment Group LLC by Special Warranty Deed with Vendor's Lien recorded in Document Number 2021055330 of the Official Public Records of Williamson County, Texas, for the southwest corner and **POINT OF BEGINNING** of the herein described tract, from which a cotton spindle found at an angle point in the north right-of-way line of said Hero Way, bears S 70°03'21" W a distance of 213.57 feet;

THENCE, with the west line of said Tract 9 and the east line of said Tract 5, N 21°01'05" W a distance of 19.19 feet to a 1/2-inch iron rod with cap stamped "WILCO ROW 5777" (NAD-83, Central Zone Grid Coordinates: N: 10,188,839.05, E: 3,088,335.88) set for the northwest corner of the herein described tract, 238.00 feet left of FM 2243 baseline station 173+84.58, from which a 1/2-inch iron rod found on the west line of said Tract 9, at the northeast corner of original Tract 5 of said KITTIE HILL ACRES, bears N 21°01'05" W a distance of 405.61 feet;

THENCE, over and across said Tract 9, N 69°25'18" E a distance of 106.10 feet to a 1/2-inch iron rod with cap stamped "WILCO ROW 5777" set at the beginning of a non-tangent curve to the right, 238.00 feet left of FM 2243 baseline station 174+90.68;

THENCE, continuing over and across said Tract 9, along said curve to the right, an arc distance of 78.15 feet, having a radius of 8,147.00 feet, a central angle of 00°32'59" and a chord which bears N 69°43'20" E a distance of 78.15 feet to a 1/2-inch iron rod with cap stamped "WILCO ROW 5777" set at the beginning of a non-tangent curve to the left, 237.59 feet left of FM 2243 baseline station 175+68.82;

THENCE, continuing over and across said Tract 9, along said curve to the left, an arc distance of 169.78 feet, having a radius of 1,320.00 feet, a central angle of 07°22'10" and a chord which bears N 44°15'01" E a distance of 169.66 feet to a 1/2-inch iron rod with cap stamped "WILCO ROW 5777" set on the east line of said Tract 9 and the west line of Tract 10 of said KITTIE HILL ACRES, as conveyed to TDW Development LLC by Special Warranty Deed recorded in Document Number 2022013182 of the Official Public Records of Williamson County, Texas, for the northeast corner of the herein described tract, 310.58 feet left of FM 2243 baseline station 177+17.80, from which a 1/2-inch iron rod found at the northeast corner of said Tract 9 and the northwest corner of said Tract 10, bears N 20°59'56" W a distance of 552.35 feet;

THENCE, with the east line of said Tract 9 and the west line of said Tract 10, S 20°59'56" E a distance of 93.08 feet to a calculated point on the north right-of-way line of said Hero Way, at the southeast corner of said Tract 9 and the southwest corner of said Tract 10, for the southeast corner of the herein described tract, from which a 1/2-inch iron rod with cap stamped "FOREST RPLS 1847" found at the southeast corner of said Tract 10 and the southwest corner of the remaining portion of Tract 13 of said KITTIE HILL ACRES, bears N 69°40'48" E a distance of 336.56 feet;

THENCE, with the north right-of-way line of said Hero Way, and the south line of said Tract 9, S 69°40'48" W a distance of 218.68 feet to a 1/2-inch iron rod with cap stamped "FOREST RPLS 1847" found for an angle point;

THENCE, continuing with the north right-of-way line of said Hero Way and the south line of said Tract 9, S 69°58'26" W a distance of 119.66 feet to the **POINT OF BEGINNING** and containing 0.278 acre (12,097 square feet) of land, more or less.

Bearing orientation is based on the Texas State Plane Coordinate System NAD-83, Central Zone 4203. All distances are surface and may be converted to grid by dividing by a scale factor of 1.00012.

I hereby certify that these notes were prepared by BGE from a survey made on the ground under my supervision on May 12, 2022 and are true a knowledge. A sketch accompanies this description.

09/08/2023
Date

Jonathan O. Nobles RPLS Number 5777
BGE, Inc.
101 West Louis Henna Blvd., Suite 400
Austin, TX 78728
Telephone: 512-879-0400
TBPELS Licensed Surveying Firm Number 10106502

Client: Williamson County
Date: September 8, 2023
Project Number: 7473-00

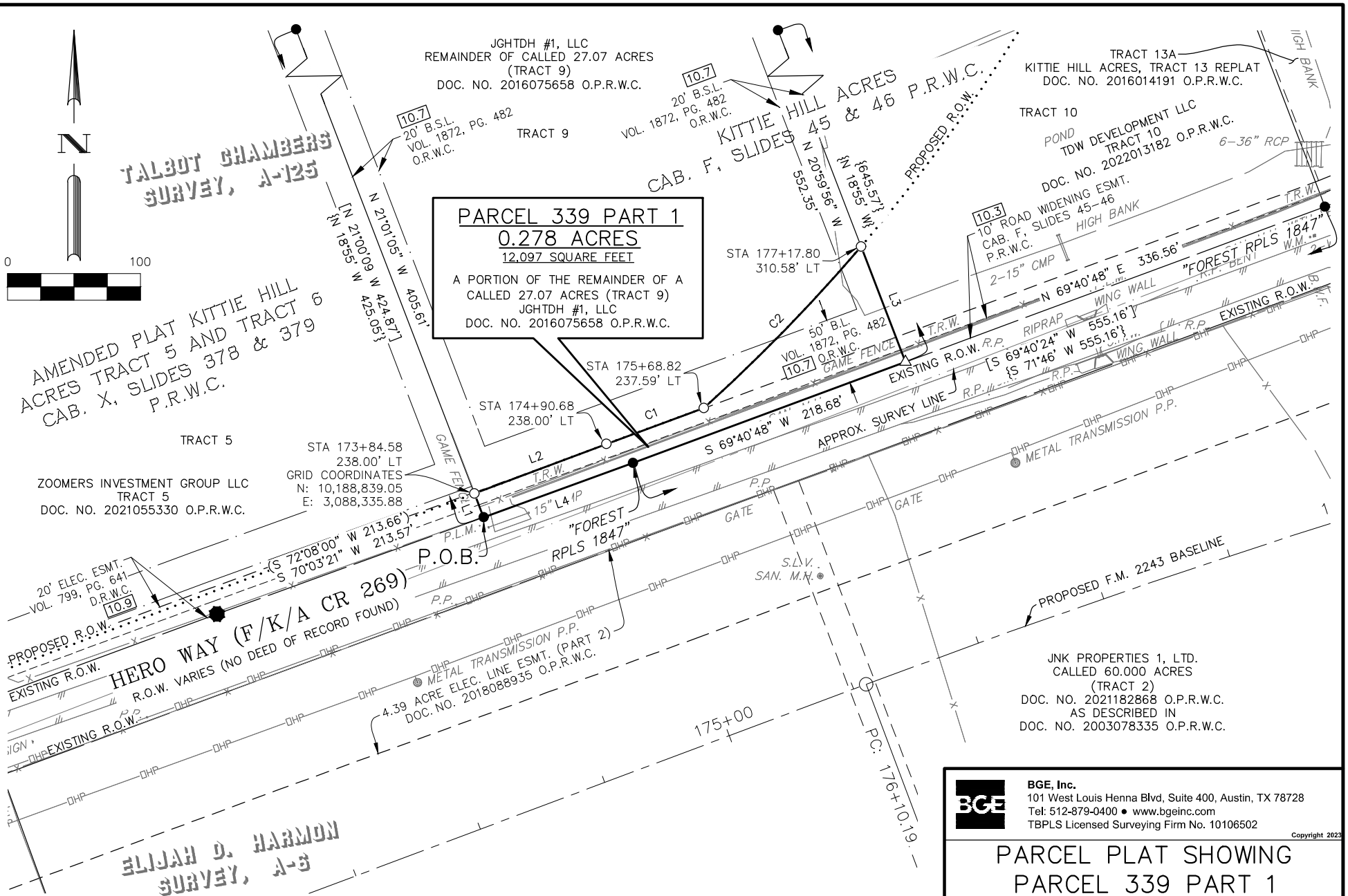

BGE, Inc.
101 West Louis Henna Blvd, Suite 400, Austin, TX 78728
Tel: 512-879-0400 • www.bgeinc.com
TBPLS Licensed Surveying Firm No. 10106502

Copyright 2023

PARCEL PLAT SHOWING
PARCEL 339 PART 1
0.278 ACRE
FM 2243
WILLIAMSON COUNTY, TEXAS

Scale:	Job No.:	Date:	Page:
1"=100'	7473-00	09/08/2023	3 of 5

G:\TXC\Projects\County_Williamson\7473-00_RM 2243\06_Survey\04_Finals\Drawings\7473-00_P339-P1_EX1.dwg, 9/8/2023 2:02 PM, Stephen Barger

LEGEND

B.W.F.	BARBED WIRE FENCE
CAB.	CABINET
C.H.W.	CONCRETE HEADWALL
CMP	CORRUGATED METAL PIPE
DOC.	DOCUMENT
D.R.W.C.	DEED RECORDS OF WILLIAMSON COUNTY
ELEC.	ELECTRIC
ESMT.	EASEMENT
G.R.	GUARD RAIL
M.H.	MANHOLE
NO.	NUMBER
O.P.R.W.C.	OFFICIAL PUBLIC RECORDS OF WILLIAMSON COUNTY
O.R.W.C.	OFFICIAL RECORDS OF WILLIAMSON COUNTY
PG.	PAGE
P.L.M.	PIPELINE MARKER
P.O.B.	POINT OF BEGINNING
P.P.	POWER POLE
P.R.W.C.	PLAT RECORDS OF WILLIAMSON COUNTY
RCP	REINFORCED CONCRETE PIPE
R.O.W.	RIGHT-OF-WAY
R.P.	REFLECTOR POST
SAN.	SANITARY
S.L.V.	SANITARY LINE VENT
T.R.W.	TIMBER RETAINING WALL
VOL.	VOLUME
W.M.	WATER METER
W.V.	WATER VALVE
( )	RECORD INFO FOR CAB. X, SLIDES 378-379 P.R.W.C.
{ }	RECORD INFO FOR CAB. F, SLIDES 45-46 P.R.W.C.
[ ]	RECORD INFO FOR DOC. NO. 2016075658 O.P.R.W.C.
●	FOUND 1/2" IRON ROD (UNLESS OTHERWISE NOTED)
○	SET 1/2" IRON ROD W/CAP "WILCO ROW 5777"
⬢	COTTON SPINDLE FOUND
△	CALCULATED POINT
——X——	WIRE FENCE
——OHT——	OVERHEAD TELEPHONE
——OHP——	OVERHEAD POWER
———///	EDGE OF ASPHALT
10.9	SCHEDULE B ITEM

CURVE TABLE					
NUMBER	ARC LENGTH	RADIUS	DELTA	CHORD BEARING	CHORD DISTANCE
C1	78.15'	8,147.04'	0°32'59"	N 69°43'20" E	78.15'
C2	169.78'	1,320.00'	7°22'10"	N 44°15'01" E	169.66'

LINE TABLE		
NUMBER	BEARING	DISTANCE
L1	N 21°01'05" W	19.19'
L2	N 69°25'18" E	106.10'
L3	S 20°59'56" E	93.08'
L4	S 69°58'26" W	119.66'

RECORD LINE TABLE		
NUMBER	BEARING	DISTANCE
{L4}	{N 72°08' W}	
[L4]	[S 70°02'24" W]	[119.74']

BGE, Inc.
101 West Louis Henna Blvd, Suite 400, Austin, TX 78728
Tel: 512-879-0400 • www.bgeinc.com
TBPLS Licensed Surveying Firm No. 10106502
Copyright 2023

PARCEL PLAT SHOWING
PARCEL 339 PART 1
0.278 ACRE
FM 2243
WILLIAMSON COUNTY, TEXAS

Scale:	Job No.:	Date:	Page:
1"=100'	7473-00	09/08/2023	4 of 5

G:\TXC\Projects\County_Williamson\7473-00_RM 2243\06_Survey\04_Finals\Drawings\7473-00_P339-P1_EX1.dwg, 9/8/2023 2:02 PM, Stephen Barger

GENERAL NOTES:

1. BEARING ORIENTATION IS BASED ON THE TEXAS STATE PLANE COORDINATE SYSTEM, CENTRAL ZONE 4203, NAD83. DISTANCES SHOWN HEREON ARE IN SURFACE AND CAN BE CONVERTED TO GRID BY DIVIDING BY THE COMBINED SCALE FACTOR = 1.00012

2. A METES AND BOUNDS DESCRIPTION OF EVEN DATE WAS PREPARED IN CONJUNCTION WITH THIS SKETCH.

3. THIS PARCEL PLAT WAS MADE IN RELIANCE UPON THAT CERTAIN COMMITMENT FOR TITLE INSURANCE ISSUED BY FIRST AMERICAN TITLE GUARANTY COMPANY AND TEXAS NATIONAL TITLE, INC. UNDER G.F. NO. T-166261, DATED EFFECTIVE MAY 5, 2023 AND ISSUED ON JULY 31, 2023.

RESTRICTIVE COVENANT AND EASEMENT NOTES:

1. RESTRICTIVE COVENANTS OF RECORD ITEMIZED IN CABINET F, SLIDE 45, PLAT RECORDS, AND VOLUME 1872, PAGE 482, OFFICIAL RECORDS, WILLIAMSON COUNTY, TEXAS, DO AFFECT THE SUBJECT TRACT.

10.2 ANY AND ALL EASEMENTS, BUILDING LINES AND CONDITIONS, COVENANTS AND RESTRICTIONS AS SET FORTH IN PLAT RECORDED IN CABINET F, SLIDE 45, PLAT RECORDS, WILLIAMSON COUNTY, TEXAS, DO AFFECT THE SUBJECT TRACT, AS SHOWN HEREON.

10.3 A 10 FOOT ROAD WIDENING EASEMENT RESERVED ALONG THE SOUTHERLY PROPERTY LINE, AS SHOWN ON THE PLAT OF RECORD IN CABINET F, SLIDE 45 OF THE PLAT RECORDS OF WILLIAMSON COUNTY, TEXAS, DOES AFFECT THE SUBJECT TRACT, AS SHOWN HEREON.

10.5 AIR SPACE EASEMENT AS SET FORTH IN INSTRUMENT RECORDED IN VOLUME 1872, PAGE 482 OF THE OFFICIAL RECORDS OF WILLIAMSON COUNTY, TEXAS, DOES AFFECT THE SUBJECT TRACT. (BLANKET)

10.7 BUILDING SETBACK LINE(S) AS PROVIDED IN RESTRICTIONS OF RECORD IN VOLUME 1872, PAGE 482 OF THE OFFICIAL RECORDS OF WILLIAMSON COUNTY, TEXAS, DO AFFECT THE SUBJECT TRACT, AS SHOWN HEREON.

10.9 AN ELECTRIC TRANSMISSION EASEMENT GRANTED TO PEDERNALES ELECTRIC COOPERATIVE, INC. AS DESCRIBED IN VOLUME 799, PAGE 641, DEED RECORDS, WILLIAMSON COUNTY, TEXAS, DOES AFFECT THE SUBJECT TRACT, AS SHOWN HEREON.

10.14 ALL TERMS, CONDITIONS AND PROVISIONS OF THAT CERTAIN DEVELOPMENT AGREEMENT OF RECORD IN DOCUMENT NO. 2010083086 OF THE OFFICIAL PUBLIC RECORDS OF WILLIAMSON COUNTY, TEXAS, DO AFFECT THE SUBJECT TRACT.

I hereby certify that this survey was made on the ground by BGE, Inc. under my supervision on May 12, 2022 and is true and correct to the best of my knowledge. The property has access to a public roadway and there are no visible encroachments, except as shown hereon.

STATE OF TEXAS
REGISTERED
JONATHAN O. NOBLES
5777
PROFESSIONAL
LAND SURVEYOR

09/08/2023

JONATHAN O. NOBLES RPLS NO. 5777
BGE, INC.
101 WEST LOUIS HENNA BLVD., SUITE 400
AUSTIN, TEXAS 78728
TELEPHONE: (512) 879-0400

BGE, Inc.
101 West Louis Henna Blvd, Suite 400, Austin, TX 78728
Tel: 512-879-0400 • www.bgeinc.com
TBPLS Licensed Surveying Firm No. 10106502
Copyright 2023

PARCEL PLAT SHOWING
PARCEL 339 PART 1
0.278 ACRE
FM 2243
WILLIAMSON COUNTY, TEXAS

Scale:	Job No.:	Date:	Page:
1"=100'	7473-00	09/08/2023	5 of 5

G:\TXC\Projects\County_Williamson\7473-00_RM 2243\06_Survey\04_Finals\Drawings\7473-00_P339-P1_EX1.dwg, 9/8/2023 2:02 PM, Stephen Barger

1/23/24 Agenda Item #61

Final Audit Report 2024-01-24

Created:	2024-01-24
By:	Lisa Dworaczyk (lisad@scrrlaw.com)
Status:	Signed
Transaction ID:	CBJCHBCAABAAjfBQIX-5krLtrCEYBJaX-_Db1fYl_TLD

"1/23/24 Agenda Item #61" History

Document created by Lisa Dworaczyk (lisad@scrrlaw.com)
2024-01-24 - 0:03:59 AM GMT- IP address: 24.27.59.20

Document emailed to Rebecca Pruitt (becky.pruitt@wilco.org) for signature
2024-01-24 - 0:04:36 AM GMT

Email viewed by Rebecca Pruitt (becky.pruitt@wilco.org)
2024-01-24 - 1:02:52 AM GMT- IP address: 104.47.65.254

Document signing delegated to Bill Gravell (Bgravell@wilco.org) by Rebecca Pruitt (becky.pruitt@wilco.org)
2024-01-24 - 1:03:52 AM GMT- IP address: 23.114.63.111

Document emailed to Bill Gravell (Bgravell@wilco.org) for signature
2024-01-24 - 1:03:52 AM GMT

Email viewed by Bill Gravell (Bgravell@wilco.org)
2024-01-24 - 3:19:12 PM GMT- IP address: 104.47.65.254

Document e-signed by Bill Gravell (Bgravell@wilco.org)
Signature Date: 2024-01-24 - 3:19:26 PM GMT - Time Source: server- IP address: 173.219.39.210

Document emailed to Andrea Schiele (aschiele@wilco.org) for signature
2024-01-24 - 3:19:28 PM GMT

Email viewed by Andrea Schiele (aschiele@wilco.org)
2024-01-24 - 3:27:21 PM GMT- IP address: 104.47.64.254

Document e-signed by Andrea Schiele (aschiele@wilco.org)
Signature Date: 2024-01-24 - 3:30:11 PM GMT - Time Source: server- IP address: 66.76.4.65

Agreement completed.
2024-01-24 - 3:30:11 PM GMT

Adobe Acrobat Sign

Filed: 10/24/2023 9:54 AM
Nancy E. Rister, County Clerk
Williamson County, Texas
By: Kelly Phillips, Deputy Clerk

CAUSE NO. 23-1032-CC2

WILLIAMSON COUNTY, TEXAS **Condemnor**	§ IN THE COUNTY COURT § §
V.	§ AT LAW NO. TWO §
CAROL STIPANOVIC MIZE AND MICHAEL ROBERT MIZE A/K/A MICHAEL R. MIZE **Condemnee** Condemnees	§ § § § WILLIAMSON COUNTY, TEXAS

NOTICE OF DEPOSIT OF COMMISSIONERS' AWARD

TO THE HONORABLE JUDGE OF SAID COURT:

COMES NOW, Williamson County, Texas, Condemnor in the above-styled proceedings, and respectfully shows the Court:

I.

That the written Award of Special Commissioners has been filed with the Judge in these proceedings, whereby the amount of compensation awarded or adjudged against Condemnor by the Special Commissioners is EIGHT HUNDRED SIX THOUSAND NINE HUNDRED THIRTEEN and No/100 Dollars ($806,913.00).

II.

Condemnor desires to enter upon and take possession of the property sought to be acquired in these proceedings pending litigation and, in order that it may do so, Condemnor herewith deposits the said amount into the Registry of the Court, by herewith delivering to the clerk of this Court Condemnor's check in said amount.

III.

That by reason of these premises, Condemnor is now entitled to enter upon and take possession of said property.

WHEREFORE PREMISES CONSIDERED, Condemnor prays that this honorable Court issue such order as may appear necessary and proper for the enforcement of Condemnor's said right to enter upon and take possession of said property.

Respectfully submitted,

SHEETS & CROSSFIELD, PLLC
Attorneys at Law
309 E. Main St.
Round Rock, TX 78664
(512) 255-8877
(512) 255-8986 Telecopier

By: /s/ Erik Cardinell
Erik Cardinell
SBN: 00796304
erik@scrrlaw.com
Don Childs
SBN: 00795056
don@scrrlaw.com
Attorneys For Plaintiff

CERTIFICATE OF SERVICE

I certify that a true and correct copy of the foregoing document was served on all parties of record by delivering same to the parties' last known address via certified mail, return receipt requested, or by facsimile or hand delivery, or by other method authorized by the Texas Rules of Civil Procedure on this the 24th day of October 2023.

/s/ Erik Cardinell
Erik Cardinell

Automated Certificate of eService

This automated certificate of service was created by the efiling system. The filer served this document via email generated by the efiling system on the date and to the persons listed below. The rules governing certificates of service have not changed. Filers must still provide a certificate of service that complies with all applicable rules.

Meghan Drone on behalf of Mylan Shaunfield
Bar No. 24090680
Meghan@scrrlaw.com
Envelope ID: 80898072
Filing Code Description: Notice
Filing Description: Notice of Deposit
Status as of 10/24/2023 10:54 AM CST

Case Contacts

Name	BarNumber	Email	TimestampSubmitted	Status
Roy R. Brandys	2883550	brandys@barronadler.com	10/24/2023 9:54:08 AM	SENT
Nicholas Laurent	24065591	laurent@barronadler.com	10/24/2023 9:54:08 AM	SENT
Meghan Drone		Meghan@scrrlaw.com	10/24/2023 9:54:08 AM	SENT
Terri Woodmancy		Terri@scrrlaw.com	10/24/2023 9:54:08 AM	SENT
Erik Cardinell		Erik@scrrlaw.com	10/24/2023 9:54:08 AM	SENT

ELECTRONICALLY RECORDED 2023057525
Williamson County, Texas Total Pages: 13

Hero Way – Parcel 219

CAUSE NO. 23-1032-CC2

WILLIAMSON COUNTY, TEXAS **Condemnor**	§	IN THE COUNTY COURT
V.	§	AT LAW NO. TWO
CAROL STIPANOVIC MIZE AND MICHAEL ROBERT MIZE A/K/A MICHAEL R. MIZE **Condemnee**	§	WILLIAMSON COUNTY, TEXAS

NOTICE OF LIS PENDENS

STATE OF TEXAS §
§
COUNTY OF WILLIAMSON §

Notice is hereby given that in the County Court at Law No. Two of Williamson County, Texas, there is pending a certain suit entitled Williamson County, Texas v. Carol Stipanovic Mize and Michael Robert Mize, a/k/a Michael R. Mize, wherein Williamson County, Texas is Plaintiff and Carol Stipanovic Mize and Michael Robert Mize, a/k/a Michael R. Mize, are Defendants. That such suit is a condemnation proceeding and involves the title or a portion of the title to all of that certain real property situated in Williamson County, Texas and described as follows:

SEE EXHIBITS "A" & "B"

The undersigned are seeking affirmative relief in said cause, in that they are suing to condemn fee simple title for the purpose of constructing, reconstructing, widening, and/or maintaining of improvements to Hero Way/RM 2243, and to perform associated public use and purposes, in all or a designated portion of such real estate as shown from the description contained in the pleadings in the above numbered and styled cause of action, under the authority of the Constitution and the laws of the State of Texas.

Unofficial Document

WITNESS OUR HAND on this the 12 day of July, 2023.

Respectfully submitted,

SHEETS & CROSSFIELD, PLLC
309 East Main Street
Round Rock, Texas 78664
(512) 255-8877
Fax: (512) 255-8986

By: _____
Erik Cardinell
SBN: 00796304
erik@scrrlaw.com
Don Childs
SBN: 00795056
don@scrrlaw.com
Attorneys For Plaintiff

STATE OF TEXAS §
§
COUNTY OF WILLIAMSON §

BEFORE ME, the undersigned authority, on this day personally appeared, Erik Cardinell, Attorney for Williamson County, Texas, known personally to me to be the person whose name is subscribed to the foregoing instrument and acknowledged to me that he executed the same for the purposes and consideration therein stated, as the act and deed of Williamson County, Texas.

Given under my hand and seal of office, on this the 12 day of July, 2023.

TERRI WOODMANCY
My Notary ID # 7042185
Expires March 27, 2025

_____
Notary Public, State of Texas

Unofficial Document

EXHIBIT A

County: Williamson
Parcel: 219 Part 1
Highway: FM 2243

METES & BOUNDS DESCRIPTION FOR PARCEL 219 PART 1

METES & BOUNDS DESCRIPTION FOR A 2.977 ACRE TRACT OF LAND OUT OF THE MILTON HICKS SURVEY, ABSTRACT NO. 287, WILLIAMSON COUNTY, TEXAS; BEING A PORTION OF LOT 3, HIGHLAND ESTATES PHASE ONE, A SUBDIVISION AS RECORDED IN CABINET K, SLIDES 297-299 OF THE PLAT RECORDS OF WILLIAMSON COUNTY, TEXAS, AS CONVEYED TO CAROL STIPANOVIC MIZE AND MICHAEL ROBERT MIZE A/K/A MICHAEL R. MIZE BY GENERAL WARRANTY DEED RECORDED IN DOCUMENT NUMBER 2001057234 OF THE OFFICIAL PUBLIC RECORDS OF WILLIAMSON COUNTY, TEXAS; SAID 2.977 ACRE TRACT OF LAND BEING MORE PARTICULARLY DESCRIBED BY METES AND BOUNDS AS FOLLOWS AND SHOWN ON THE ATTACHED SKETCH:

BEGINNING at a 1/2-inch iron rod found on the curving north right-of-way line of Creekview Circle (60 feet wide) as dedicated by said HIGHMEADOW ESTATES PHASE ONE, at the southwest corner of the above described Lot 3 and the most easterly southeast corner of Lot 2 of said HIGHMEADOW ESTATES PHASE ONE, as conveyed to Jimmy Moore and Elsa Moore by General Warranty Deed recorded in Volume 2643, Page 185 of the Official Records of Williamson County, Texas, for the southwest corner and **POINT OF BEGINNING** of the herein described tract, from which a 1/2-inch iron rod found on the north right-of-way of said Creekview Circle at a point of reverse curvature, bears along a curve to the left, an arc distance of 49.61 feet, having a radius of 60.00 feet, a central angle of 47°22'34" and a chord which bears S 43°14'04" W a distance of 48.21 feet;

THENCE, with the west line of said Lot 3 and east line of said Lot 2, N 06°18'54" E, pass a 1/2-inch iron rod found at the northeast corner of said Lot 2 and the southeast corner of Lot 1 of said HIGHMEADOW ESTATES PHASE ONE, as conveyed to Jimmy Moore and wife, Elsa Moore by Special Warranty Deed with Vendor's Lien recorded in Volume 2605, Page 550 of the Official Records of Williamson County, Texas, at a distance of 392.17 feet, and continuing on with the west line of said Lot 3 and the east line of said Lot 1, for a total distance of 532.70 feet to a 1/2-inch iron rod with cap stamped "WILCO ROW 5777" (NAD-83, Central Zone Grid Coordinates: N: 10,189362.48, E: 3,090,284.83) set for the northwest corner of the herein described tract, 256.39 feet left of FM 2243 baseline station 193+49.29;

THENCE, over and across said Lot 3, S 86°55'12" E a distance of 182.74 feet to a 1/2-inch iron rod with cap stamped "WILCO ROW 5777" set at the beginning of a non-tangent curve to the right, 226.78 feet left of FM 2243 baseline station 195+23.85;

Unofficial Document

EXHIBIT A

THENCE, continuing over and across said Lot 3, along said curve to the right, an arc distance of 255.55 feet, having a radius of 8,147.00 feet, a central angle of 01°47'50" and a chord which bears N 85°04'01" E a distance of 255.54 feet to a 1/2-inch iron rod with cap stamped "WILCO ROW 5777" set on the southeast line of said Lot 3 and the northwest line of Lot 4 of said HIGHMEADOW ESTATES PHASE ONE as conveyed to Jay Harvey and wife, Michelle Harvey by General Warranty Deed recorded in Document Number 9503320 of the Official Records of Williamson County, Texas, for the northeast corner of the herein described tract, 228.33 feet left of FM 2243 baseline station 197+71.67, from which a 1/2-inch iron rod found at an interior corner of said Lot 3 and an exterior corner of said Lot 4, bears N 38°30'44" E a distance of 120.83 feet;

THENCE, with the southeast line of said Lot 3 and the northwest line of said Lot 4, S 38°30'44" W a distance of 701.03 feet to a 1/2-inch iron rod found on the curving north right-of-way line of said Creekview Circle, at the southeast corner of said Lot 3 and the most westerly corner of said Lot 4, for the beginning of a non-tangent curve to the left and the southeast corner of the herein described tract, from which a 1/2-inch iron rod found at the southwest corner of said Lot 4 bears along a curve to the right, an arc distance of 49.34 feet, having a radius of 60.00 feet, a central angle of 47°06'59" and a chord which bears S 30°00'57" E a distance of 47.96 feet;

THENCE, with the curving north right-of-way line of said Creekview Circle and south line of said Lot 3, along said curve to the left, an arc distance of 62.31 feet, having a radius of 60.00 feet, a central angle of 59°30'13" and a chord which bears N 83°19'32" W a distance of 59.55 feet to the **POINT OF BEGINNING** and containing 2.977 acres of land, more or less.

Bearing orientation is based on the Texas State Plane Coordinate System NAD-83, Central Zone 4203. All distances are surface and may be converted to grid by dividing by a scale factor of 1.00012.

I hereby certify that these notes were prepared by BGE from a survey made on the ground under my supervision on October 12, 2021 and are true and correct to the best of my knowledge. A sketch accompanies this description.

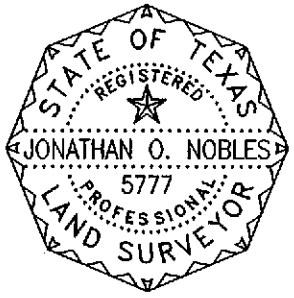

05/08/2023
Date

Jonathan O. Nobles RPLS Number 5777
BGE, Inc.
101 West Louis Henna Blvd., Suite 400
Austin, TX 78728
Telephone: 512-879-0400
TBPELS Licensed Surveying Firm Number 10106502

Client: Williamson County
Date: May 8, 2023
Project Number: 7473-00

Unofficial Document

EXHIBIT A

G:\TXC\Projects\County_Williamson\7473-00_RM 2243\06_Survey\04_Finals\Drawings\7473-00_P219-P1_EX1.dwg, 5/8/2023 1:49 PM, Stephen Barger

SKETCH TO ACCOMPANY LEGAL DESCRIPTION

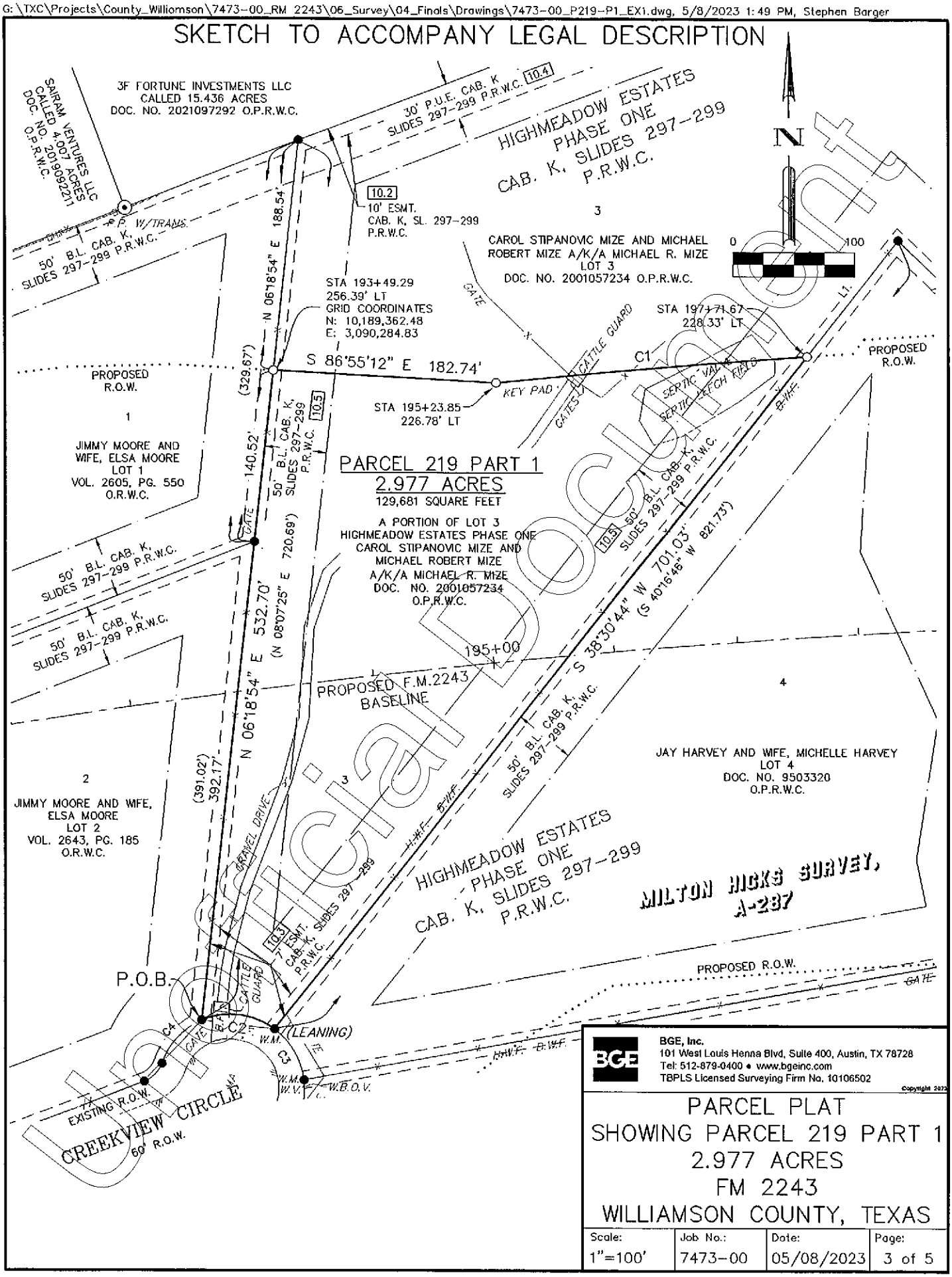

Official Document

BGE, Inc.
101 West Louis Henna Blvd, Suite 400, Austin, TX 78728
Tel: 512-879-0400 • www.bgeinc.com
TBPLS Licensed Surveying Firm No. 10106502

Copyright 2023

PARCEL PLAT
SHOWING PARCEL 219 PART 1
2.977 ACRES
FM 2243
WILLIAMSON COUNTY, TEXAS

Scale:	Job No.:	Date:	Page:
1"=100'	7473-00	05/08/2023	3 of 5

EXHIBIT A

G:\TXC\Projects\County_Williamson\7473-00_RM 2243\06_Survey\04_Finals\Drawings\7473-00_P219-P1_EX1.dwg, 5/8/2023 1:48 PM, Stephen Barger

SKETCH TO ACCOMPANY LEGAL DESCRIPTION

LEGEND

B.F.	BOARD FENCE
B.L.	BUILDING LINE
B.W.F.	BARBED WIRE FENCE
CAB.	CABINET
DOC.	DOCUMENT
E.C.R.	ELECTRIC CONDUIT RISER
G.P.	GATE POST
H.W.F.	HOG WIRE FENCE
NO.	NUMBER
O.P.R.W.C.	OFFICIAL PUBLIC RECORDS OF WILLIAMSON COUNTY
O.R.W.C.	OFFICIAL RECORDS OF WILLIAMSON COUNTY
PG.	PAGE
P.O.B.	POINT OF BEGINNING
P.P.	POWER POLE
P.U.E.	PUBLIC UTILITY EASEMENT
P.R.W.C.	PLAT RECORDS OF WILLIAMSON COUNTY
R.O.W.	RIGHT-OF-WAY
TRANS.	TRANSFORMER
VOL.	VOLUME
W.B.O.V.	WATER BLOW-OFF VALVE
W.M.	WATER METER
W.V.	WATER VALVE
( )	RECORD INFO. FOR CAB. K, SLIDES 297-299 P.R.W.C.
●	FOUND 1/2" IRON ROD (UNLESS OTHERWISE NOTED)
⊙	FOUND 1" IRON PIPE
○	SET 1/2" IRON ROD W/CAP "WILCO ROW 5777"
△	CALCULATED POINT
——x——	WIRE FENCE
——//——	BOARD FENCE
——//——	EDGE OF ASPHALT
——OHT——	OVERHEAD TELEPHONE
——OHP——	OVERHEAD POWER

LINE TABLE		
NUMBER	BEARING	DISTANCE
L1	N 38°30'44" E	120.83'

CURVE TABLE					
NUMBER	ARC LENGTH	RADIUS	DELTA	CHORD BEARING	CHORD DISTANCE
C1	255.55'	8,147.00'	1°47'50"	N 85°04'01" E	255.54'
C2	62.31'	60.00'	59°30'13"	N 83°19'32" W	59.55'
C3	49.34'	60.00'	47°06'58"	S 30°00'57" E	47.96'
C4	49.61'	60.00'	47°22'34"	S 43°14'04" W	48.21'

RECORD CURVE TABLE					
NUMBER	ARC LENGTH	RADIUS	DELTA	CHORD BEARING	CHORD DISTANCE
(C2)	(62.41')	(60.00')	(59°36'07")	(N 81°26'03.2" W)	(59.64')
(C3)	(49.34')	(60.00')	(47°07'03")	(S 28°04'28.3" E)	(47.96')
(C4)	(49.63')	(60.00')	(47°23'34")	(S 45°04'06" W)	(48.23')

GENERAL NOTES:

1. BEARING ORIENTATION IS BASED ON THE TEXAS STATE PLANE COORDINATE SYSTEM, CENTRAL ZONE 4203, NAD83. DISTANCES SHOWN HEREON ARE IN SURFACE AND CAN BE CONVERTED TO GRID BY DIVIDING BY THE COMBINED SCALE FACTOR = 1.00012
2. A METES AND BOUNDS DESCRIPTION OF EVEN DATE WAS PREPARED IN CONJUNCTION WITH THIS SKETCH.
3. THIS PARCEL PLAT WAS MADE IN RELIANCE UPON THAT CERTAIN COMMITMENT FOR TITLE INSURANCE ISSUED BY TITLE RESOURCES GUARANTY COMPANY AND TEXAS NATIONAL TITLE, INC. UNDER G.F. NO. T-165368, DATED EFFECTIVE JULY 13, 2022 AND ISSUED ON JULY 28, 2022.

Unofficial Document

BGE, Inc.
101 West Louis Henna Blvd, Suite 400, Austin, TX 78728
Tel: 512-879-0400 • www.bgeinc.com
TBPLS Licensed Surveying Firm No. 10106502

Copyright 2023

PARCEL PLAT
SHOWING PARCEL 219 PART 1
2.977 ACRES
FM 2243
WILLIAMSON COUNTY, TEXAS

Scale:	Job No.:	Date:	Page:
1"=100'	7473-00	05/08/2023	4 of 5

EXHIBIT A

G:\TXC\Projects\County_Williamson\7473-00_RM 2243\06_Survey\04_Finals\Drawings\7473-00_P219-P1_EX1.dwg, 5/8/2023 1:49 PM, Stephen Barger

SKETCH TO ACCOMPANY LEGAL DESCRIPTION

RESTRICTIVE COVENANT AND EASEMENT NOTES:

1. RESTRICTIVE COVENANTS OF RECORD ITEMIZED IN CABINET K, SLIDES 297-299, PLAT RECORDS, VOLUME 2378, PAGE 823, OFFICIAL RECORDS, DOCUMENT NO(S) 2015081209 AND 2016021909, OFFICIAL PUBLIC RECORDS, WILLIAMSON COUNTY, TEXAS, DO AFFECT THE SUBJECT TRACT; VOLUME 703, PAGE 200, VOLUME 709, PAGE 702, VOLUME 714, PAGE 690, DEED RECORDS, WILLIAMSON COUNTY, TEXAS, DO NOT AFFECT THE SUBJECT TRACT.

10.2. A 10 FOOT WIDE EASEMENT OF UNDETERMINED USE RESERVED ALONG EACH SIDE OF ALL REAR LOT LINES, AS STATED ON THE PLAT OF RECORD IN CABINET K, SLIDE 297 OF THE PLAT RECORDS OF WILLIAMSON COUNTY, TEXAS, DOES NOT AFFECT THE SUBJECT TRACT, AS SHOWN HEREON.

10.3. A 7 FOOT WIDE EASEMENT OF UNDETERMINED USE RESERVED ALONG EACH SIDE OF ALL SIDE LOT LINES, AS STATED ON THE PLAT OF RECORD IN CABINET K, SLIDE 297 OF THE PLAT RECORDS OF WILLIAMSON COUNTY, TEXAS, DOES AFFECT THE SUBJECT TRACT, AS SHOWN HEREON.

10.4. A 30 FOOT PUBLIC UTILITY EASEMENT RESERVED ALONG THE REAR PROPERTY LINE, AS SHOWN ON THE PLAT OF RECORD IN CABINET K, SLIDE 297 OF THE PLAT RECORDS OF WILLIAMSON COUNTY, TEXAS, DOES NOT AFFECT THE SUBJECT TRACT, AS SHOWN HEREON.

10.5. BUILDING SETBACK LINE(S) AS SHOWN AND/OR DESCRIBED ON PLAT OF RECORD IN CABINET K, SLIDE 297 OF THE PLAT RECORDS OF WILLIAMSON COUNTY, TEXAS, DOES AFFECT THE SUBJECT TRACT, AS SHOWN HEREON.

10.6. A PRIVATE ROADWAY EASEMENT GRANTED TO OWNER OF SUBJECT PROPERTY AS DESCRIBED IN VOLUME 703, PAGE 206, DEED RECORDS, WILLIAMSON COUNTY, TEXAS, DOES NOT AFFECT THE SUBJECT TRACT.

10.7. AN UNDERGROUND TELECOMMUNICATIONS EASEMENT GRANTED TO SOUTHWESTERN BELL TELEPHONE COMPANY AS DESCRIBED IN VOLUME 570, PAGE 702, DEED RECORDS, WILLIAMSON COUNTY, TEXAS, DOES NOT AFFECT THE SUBJECT TRACT.

10.8. A PUBLIC UTILITY EASEMENT GRANTED TO WILLIAMSON COUNTY, TEXAS AS DESCRIBED IN DOCUMENT NO. 2003114402, OFFICIAL PUBLIC RECORDS, WILLIAMSON COUNTY, TEXAS, DOES NOT AFFECT THE SUBJECT TRACT.

10.10. ALL TERMS, CONDITIONS AND PROVISIONS OF THAT CERTAIN DEVELOPMENT AGREEMENT OF RECORD IN DOCUMENT NO. 2016058225 OF THE OFFICIAL PUBLIC RECORDS OF WILLIAMSON COUNTY, TEXAS, DO AFFECT THE SUBJECT TRACT.

10.11. ALL TERMS, CONDITIONS AND PROVISIONS OF THAT CERTAIN ORDINANCE NO. 16-042-00 OF RECORD IN DOCUMENT NO. 2017011287, OFFICIAL PUBLIC RECORDS, WILLIAMSON COUNTY, TEXAS, DO NOT AFFECT THE SUBJECT TRACT.

I hereby certify that this survey was made on the ground by BGE, Inc. under my supervision on May 12, 2022 and is true and correct to the best of my knowledge. The property has access to a public roadway and there are no visible encroachments, except as shown hereon.

STATE OF TEXAS
REGISTERED
JONATHAN O. NOBLES
5777
PROFESSIONAL
LAND SURVEYOR

05/08/2023

JONATHAN O. NOBLES RPLS NO. 5777
BGE, INC.
101 WEST LOUIS HENNA BLVD., SUITE 400
AUSTIN, TEXAS 78728
TELEPHONE: (512) 879-0400

BGE, Inc.
101 West Louis Henna Blvd, Suite 400, Austin, TX 78728
Tel: 512-879-0400 • www.bgeinc.com
TBPLS Licensed Surveying Firm No. 10106502

Copyright 2023

PARCEL PLAT
SHOWING PARCEL 219 PART 1
2.977 ACRES
FM 2243
WILLIAMSON COUNTY, TEXAS

Scale:	Job No.:	Date:	Page:
1"=100'	7473-00	05/08/2023	5 of 5

Unofficial Document

EXHIBIT _B_

County: Williamson
Parcel: 219 Part 2
Highway: FM 2243

METES & BOUNDS DESCRIPTION FOR PARCEL 219 PART 2

METES & BOUNDS DESCRIPTION FOR A 0.008 ACRE TRACT OF LAND OUT OF THE MILTON HICKS SURVEY, ABSTRACT NO. 287, WILLIAMSON COUNTY, TEXAS; BEING A PORTION OF LOT 3, HIGHLAND ESTATES PHASE ONE, A SUBDIVISION AS RECORDED IN CABINET K, SLIDES 297-299 OF THE PLAT RECORDS OF WILLIAMSON COUNTY, TEXAS, AS CONVEYED TO CAROL STIPANOVIC MIZE AND MICHAEL ROBERT MIZE A/K/A MICHAEL R. MIZE BY GENERAL WARRANTY DEED RECORDED IN DOCUMENT NUMBER 2001057234 OF THE OFFICIAL PUBLIC RECORDS OF WILLIAMSON COUNTY, TEXAS; SAID 0.008 ACRE TRACT OF LAND BEING MORE PARTICULARLY DESCRIBED BY METES AND BOUNDS AS FOLLOWS AND SHOWN ON THE ATTACHED SKETCH:

COMMENCING for POINT OF REFERENCE at a 1/2-inch iron rod found at the most easterly corner of the above described Lot 3, at an interior corner on the west line of a called 95.096 acre tract of land as conveyed to Roy Kuchera and wife, Alice Kuchera by General Warranty Deed recorded in Volume 2640, Page 64 of the Official Records of Williamson County, Texas, from which a 1/2-inch iron rod found at the northeast corner of said Lot 3, bears N 04°20'09" W a distance of 314.54 feet; Thence, with the east line of said Lot 3 and west line of said Kuchera Tract, S 43°06'36" W a distance of 131.55 feet to a 1/2-inch iron rod with cap stamped "WILCO ROW 5777" (NAD-83, Central Zone Grid Coordinates: N: 10,189,396.92, E: 3,090,914.03) set for the northeast corner and **POINT OF BEGINNING** of the herein described tract, 240.94 feet left of FM 2243 baseline station 199+58.74;

THENCE, continuing with the east line of said Lot 3 and west line of said Kuchera Tract, S 43°06'36" W a distance of 27.39 feet to a calculated point at the most easterly common corner of said Lot 3 and Lot 4 of said HIGHMEADOW ESTATES PHASE ONE, as conveyed to Jay Harvey and wife, Michelle Harvey by General Warranty Deed recorded in Document Number 9503320 of the Official Records of Williamson County, Texas, for the south corner of the herein described tract, from which a 1/2-inch iron rod found at a common angle point of said Kuchera Tract and said Lot 4, bears S 43°06'36" W a distance of 29.68 feet;

THENCE, with the southwest line of said Lot 3 and the northeast line of said Lot 4, N 46°48'12" W a distance of 26.48 feet to a 1/2-inch iron rod with cap stamped "WILCO ROW 5777" set for the beginning of a non-tangent curve to the right and the northwest corner of the herein described tract, 240.59 feet left of FM 2243 baseline station 199+21.89, from which a 1/2-inch iron rod found at an interior corner of said Lot 3 and at the most northerly corner of said Lot 4, bears N 46°48'12" W a distance of 108.29 feet;

Unofficial Document

EXHIBIT B

THENCE, over and across said Lot 3, along said curve to the right, an arc distance of 38.07 feet, having a radius of 8,158.00 feet, a central angle of 00°16'02" and a chord which bears N 87°11'22" E a distance of 38.06 feet to the **POINT OF BEGINNING** and containing 0.008 acre (363 square feet) of land, more or less.

Bearing orientation is based on the Texas State Plane Coordinate System NAD-83, Central Zone 4203. All distances are surface and may be converted to grid by dividing by a scale factor of 1.00012.

I hereby certify that these notes were prepared by BGE from a survey made on the ground under my supervision on October 12, 2021 and are true and correct to the best of my knowledge. A sketch accompanies this description.

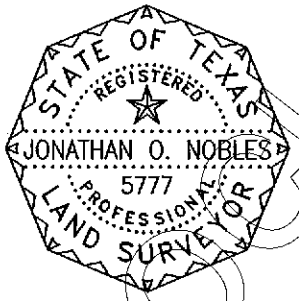

Jonathan O. Nobles RPLS Number 5777 — 05/08/2023 Date

Jonathan O. Nobles RPLS Number 5777
BGE, Inc.
101 West Louis Henna Blvd., Suite 400
Austin, TX 78728
Telephone: 512-879-0400
TBPELS Licensed Surveying Firm Number 10106502

Client:	Williamson County
Date:	May 8, 2023
Project Number:	7473-00

Unofficial Document

EXHIBIT B

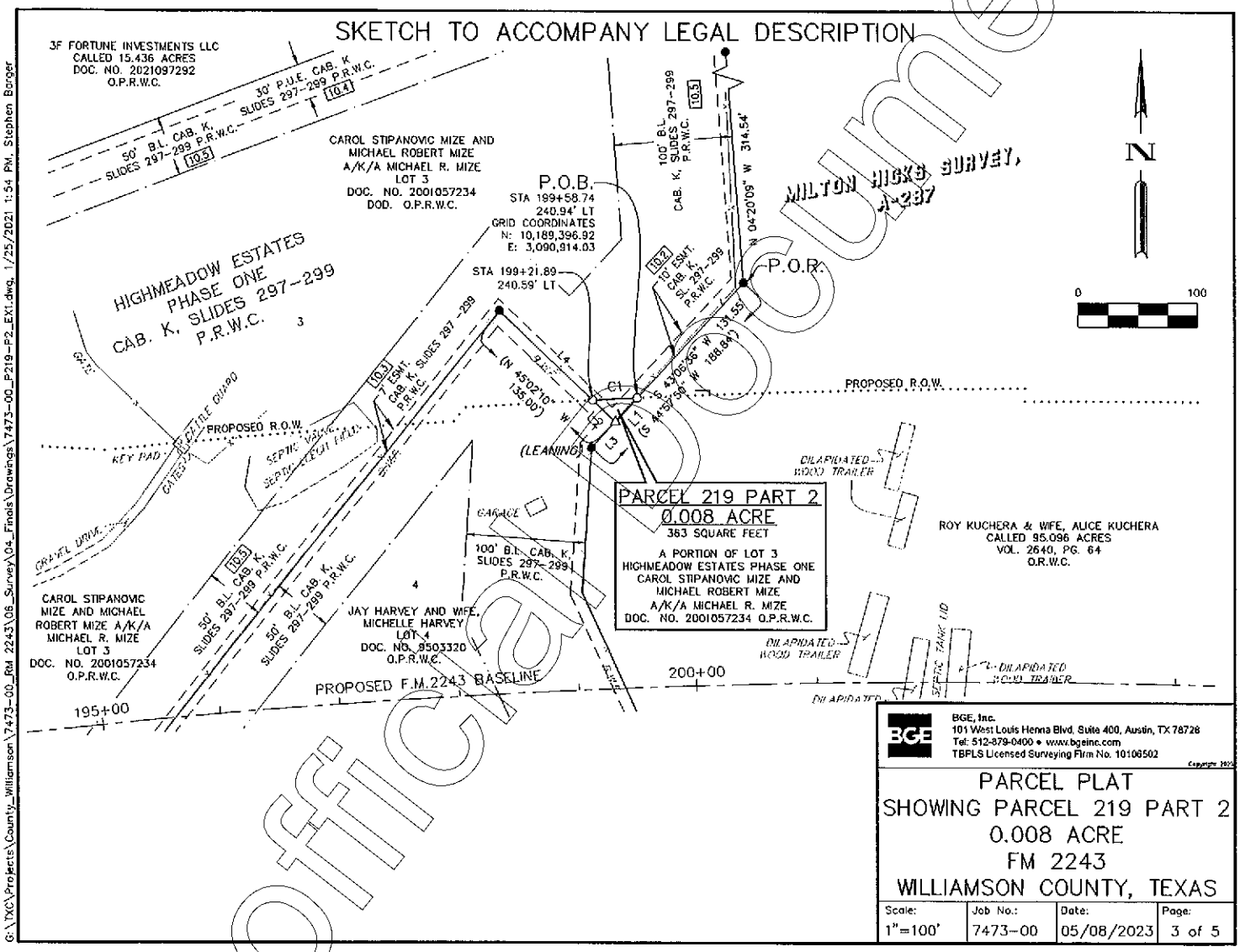

Unofficial Document

EXHIBIT B

SKETCH TO ACCOMPANY LEGAL DESCRIPTION

LEGEND

B.L.	BUILDING LINE
B.W.F.	BARBED WIRE FENCE
CAB.	CABINET
DOC.	DOCUMENT
H.W.F.	HOG WIRE FENCE
NO.	NUMBER
O.P.R.W.C.	OFFICIAL PUBLIC RECORDS OF WILLIAMSON COUNTY
O.R.W.C.	OFFICIAL RECORDS OF WILLIAMSON COUNTY
PG.	PAGE
P.O.B.	POINT OF BEGINNING
P.O.R.	POINT OF REFERENCE
P.R.W.C.	PLAT RECORDS OF WILLIAMSON COUNTY
R.O.W.	RIGHT-OF-WAY
VOL.	VOLUME
( )	RECORD INFO FOR CAB. K, SLIDES 297-299 P.R.W.C.
●	FOUND 1/2" IRON ROD (UNLESS OTHERWISE NOTED)
O	SET 1/2" IRON ROD W/CAP "WILCO ROW 5777"
△	CALCULATED POINT
----x----	WIRE FENCE

LINE TABLE		
NUMBER	BEARING	DISTANCE
L1	S 43°06'36" W	27.39'
L2	N 46°48'12" W	26.48'
L3	S 43°06'36" W	29.68'
L4	N 46°48'12" W	108.29'

CURVE TABLE					
NUMBER	ARC LENGTH	RADIUS	DELTA	CHORD BEARING	CHORD DISTANCE
C1	38.07'	8,158.00'	0°16'02"	N 87°11'22" E	38.06'

GENERAL NOTES:

1. BEARING ORIENTATION IS BASED ON THE TEXAS STATE PLANE COORDINATE SYSTEM, CENTRAL ZONE 4203, NAD83. DISTANCES SHOWN HEREON ARE IN SURFACE AND CAN BE CONVERTED TO GRID BY DIVIDING BY THE COMBINED SCALE FACTOR = 1.00012
2. A METES AND BOUNDS DESCRIPTION OF EVEN DATE WAS PREPARED IN CONJUNCTION WITH THIS SKETCH.
3. THIS PARCEL PLAT WAS MADE IN RELIANCE UPON THAT CERTAIN COMMITMENT FOR TITLE INSURANCE ISSUED BY TITLE RESOURCES GUARANTY COMPANY AND TEXAS NATIONAL TITLE, INC. UNDER G.F. NO. T-165368, DATED EFFECTIVE JULY 13, 2022 AND ISSUED ON JULY 28, 2022.

BGE, Inc.
101 West Louis Henna Blvd, Suite 400, Austin, TX 78728
Tel: 512-879-0400 • www.bgeinc.com
TBPLS Licensed Surveying Firm No. 10106502

Copyright 2021

PARCEL PLAT
SHOWING PARCEL 219 PART 2
0.008 ACRE
FM 2243
WILLIAMSON COUNTY, TEXAS

Scale:	Job No.:	Date:	Page:
1"=100'	7473-00	05/08/2023	4 of 5

G:\TXC\Projects\County_Williamson\7473-00_RM 2243\06_Survey\04_Finals\Drawings\7473-00_P219-P2_EX1.dwg, 1/25/2021 1:54 PM, Stephen Barger

Unofficial Document

EXHIBIT B

SKETCH TO ACCOMPANY LEGAL DESCRIPTION

RESTRICTIVE COVENANT AND EASEMENT NOTES:

1. RESTRICTIVE COVENANTS OF RECORD ITEMIZED IN CABINET K, SLIDES 297-299, PLAT RECORDS, VOLUME 2378, PAGE 823, OFFICIAL RECORDS, DOCUMENT NO(S) 2015081209 AND 2016021909, OFFICIAL PUBLIC RECORDS, WILLIAMSON COUNTY, TEXAS, DO AFFECT THE SUBJECT TRACT; VOLUME 703, PAGE 200, VOLUME 709, PAGE 702, VOLUME 714, PAGE 690, DEED RECORDS, WILLIAMSON COUNTY, TEXAS, DO NOT AFFECT THE SUBJECT TRACT.

10.2. A 10 FOOT WIDE EASEMENT OF UNDETERMINED USE RESERVED ALONG EACH SIDE OF ALL REAR LOT LINES, AS STATED ON THE PLAT OF RECORD IN CABINET K, SLIDE 297 OF THE PLAT RECORDS OF WILLIAMSON COUNTY, TEXAS, DOES AFFECT THE SUBJECT TRACT, AS SHOWN HEREON.

10.3. A 7 FOOT WIDE EASEMENT OF UNDETERMINED USE RESERVED ALONG EACH SIDE OF ALL SIDE LOT LINES, AS STATED ON THE PLAT OF RECORD IN CABINET K, SLIDE 297 OF THE PLAT RECORDS OF WILLIAMSON COUNTY, TEXAS, DOES AFFECT THE SUBJECT TRACT, AS SHOWN HEREON.

10.4. A 30 FOOT PUBLIC UTILITY EASEMENT RESERVED ALONG THE REAR PROPERTY LINE, AS SHOWN ON THE PLAT OF RECORD IN CABINET K, SLIDE 297 OF THE PLAT RECORDS OF WILLIAMSON COUNTY, TEXAS, DOES NOT AFFECT THE SUBJECT TRACT, AS SHOWN HEREON.

10.5. BUILDING SETBACK LINE(S) AS SHOWN AND/OR DESCRIBED ON PLAT OF RECORD IN CABINET K, SLIDE 297 OF THE PLAT RECORDS OF WILLIAMSON COUNTY, TEXAS, DOES AFFECT THE SUBJECT TRACT, AS SHOWN HEREON.

10.6. A PRIVATE ROADWAY EASEMENT GRANTED TO OWNER OF SUBJECT PROPERTY AS DESCRIBED IN VOLUME 703, PAGE 206, DEED RECORDS, WILLIAMSON COUNTY, TEXAS, DOES NOT AFFECT THE SUBJECT TRACT.

10.7. AN UNDERGROUND TELECOMMUNICATIONS EASEMENT GRANTED TO SOUTHWESTERN BELL TELEPHONE COMPANY AS DESCRIBED IN VOLUME 570, PAGE 702, DEED RECORDS, WILLIAMSON COUNTY, TEXAS, DOES NOT AFFECT THE SUBJECT TRACT.

10.8. A PUBLIC UTILITY EASEMENT GRANTED TO WILLIAMSON COUNTY, TEXAS AS DESCRIBED IN DOCUMENT NO. 2003114402, OFFICIAL PUBLIC RECORDS, WILLIAMSON COUNTY, TEXAS, DOES NOT AFFECT THE SUBJECT TRACT.

10.10. ALL TERMS, CONDITIONS AND PROVISIONS OF THAT CERTAIN DEVELOPMENT AGREEMENT OF RECORD IN DOCUMENT NO. 2016058225 OF THE OFFICIAL PUBLIC RECORDS OF WILLIAMSON COUNTY, TEXAS, DO AFFECT THE SUBJECT TRACT.

10.11. ALL TERMS, CONDITIONS AND PROVISIONS OF THAT CERTAIN ORDINANCE NO. 16-042-00 OF RECORD IN DOCUMENT NO. 2017011287, OFFICIAL PUBLIC RECORDS, WILLIAMSON COUNTY, TEXAS, DO NOT AFFECT THE SUBJECT TRACT.

I hereby certify that this survey was made on the ground by BGE, Inc. under my supervision on May 12, 2022 and is true and correct to the best of my knowledge. The property has access to a public roadway and there are no visible encroachments, except as shown hereon.

STATE OF TEXAS
REGISTERED
JONATHAN O. NOBLES
5777
PROFESSIONAL
LAND SURVEYOR

05/08/2023

JONATHAN O. NOBLES RPLS NO. 5777
BGE, INC.
101 WEST LOUIS HENNA BLVD., SUITE 400
AUSTIN, TEXAS 78728
TELEPHONE: (512) 879-0400

BGE, Inc.
101 West Louis Henna Blvd, Suite 400, Austin, TX 78728
Tel: 512-879-0400 • www.bgeinc.com
TBPLS Licensed Surveying Firm No. 10106502

Copyright 2023

PARCEL PLAT
SHOWING PARCEL 219 PART 2
0.008 ACRE
FM 2243
WILLIAMSON COUNTY, TEXAS

Scale:	Job No.:	Date:	Page:
1"=100'	7473-00	05/08/2023	5 of 5

G:\TX\Projects\County_Williamson\7473-00_RM 2243\06_Survey\04_Finals\Drawings\7473-00_P219-P2_EX1.dwg, 1/25/2021 1:54 PM, Stephen Borger

Unofficial Document

ELECTRONICALLY RECORDED
OFFICIAL PUBLIC RECORDS

2023057525

Pages: 13 Fee: $70.00
07/12/2023 04:24 PM
LMUELLER

Nancy E. Rister, County Clerk
Williamson County,Texas

Unofficial Document

ELECTRONICALLY RECORDED 2023087651
Williamson County, Texas Total Pages: 14

POSSESSION AND USE AGREEMENT FOR TRANSPORTATION PURPOSES

STATE OF TEXAS	§	
	§	Parcel No.: 220
COUNTY OF WILLIAMSON	§	Project: Hero Way/EM 2243

This Possession and Use Agreement For Transportation Purposes (the "Agreement") between **WILLIAMSON COUNTY, TEXAS** (the "County"), and **JAY HARVEY, AKA JAY CRAIG HARVEY** (the "Grantor" whether one or more), grants to the County, their contractors, agents and all others deemed necessary by the County, an irrevocable right to possession and use of the Grantor's property for the purpose of constructing the Southeast Loop Segment 2 roadway project and related appurtenances, drainage facility/grading and utility relocations (the "Roadway Construction Project"). The property subject to this Agreement is described more fully in field notes, plat maps, or other descriptions attached hereto as Exhibit "A" and is made a part of this Agreement by reference (the "Property").

1. For the consideration paid by the County which is set forth in Paragraph 2 below, the receipt and sufficiency of which is acknowledged, the Grantor grants, bargains, sells, and conveys to the County the right of entry and possession and use of the Property for the purpose of constructing a roadway, utility adjustments and appurtenances thereto and the right to remove any improvements. Authorized activities include surveying, inspection, environmental studies, archeological studies, clearing, demolition, construction of permanent improvements, relocating, replacing, and improving existing utility facilities, locating new utility facilities, and other work required to be performed in conneetion with the Roadway Construction Project. This Possession and Use Agreement will extend to the County, its contractors and assigns, owners of any existing utilities on the Property and those which may be lawfully permitted on the Property by the County in the future, and all others deemed necessary by the County for the purpose of the Roadway Construction Project. This grant will allow the construction, relocation, replacement, repair, improvement, operation, and maintenance of utilities on the Property.

2. In full consideration for this irrevocable grant of possession and use, the County will tender to the Grantor payment in the amount of **ONE MILLION ONE HUNDRED NINETY-NINE THOUSAND ONE HUNDRED FIVE and no/100 DOLLARS ($1,199,105.00)** (the "Entry Deposit"). The County will be entitled to take possession and use of the Property upon tender of payment as set forth in paragraph 3 herein, subject to the conditions in paragraph 13 below, if any. The parties agree that the Entry Deposit tendered represents 100% payment of the County's approved value, which assumes no adverse environmental conditions affecting the value of the Property. The approved value is the County's determination of the just compensation owed to the Grantor for the real property interest to be acquired by the County in the Property, encumbered with the improvements thereon, if any, and damages to the remainder, if any, save and except all oil, gas, and sulfur. The parties agree that the Entry Deposit tendered to Grantor will be deducted from any final settlement amount, Special Commissioners' award, or court judgment. In the event the amount of the final settlement or judgment for acquisition of the Property is less than the amount of the Entry Deposit, then the

Grantor agrees that the difference between the amount of the Entry Deposit tendered and the amount of such final settlement or judgment for acquisition of the Property represents an overpayment and, upon written notice from the County, the Grantor will promptly refund the difference between the Entry Deposit and the amount of the settlement or judgment to the County.

3. The effective date of this Agreement will be the date on which payment of the Entry Deposit pursuant to Paragraph 2 above was tendered in full to the Grantor by the County or delivered to a title company acting as escrow agent for the transaction (the "Effective Date").

4. The Grantor warrants and represents by, through, and under Grantor but not otherwise, that the title to the Property is free and clear of all liens and encumbrances (and any subsequent updates prior to the Effective Date), and that proper releases will be executed for the Property prior to funds being disbursed under this Agreement. The Grantor further warrants that no other person or entity owns an interest in the fee title to the Property and further agrees to indemnify the County from all unreleased or undisclosed liens, claims, or encumbrances affecting the Property.

   The above-made warranties are made by Grantor and accepted by the County subject to the following:

   A. Visible and apparent easements not appearing of record;

   B. Any discrepancies, conflicts, or shortages in area or boundary lines or any encroachments or any overlapping of improvements which a current survey would show; and,

   C. Easements, restrictions, reservations, covenants, conditions, oil and gas leases, mineral severances, and encumbrances for taxes and assessments (other than liens and conveyanees) presently of record in the Official Public Records of Williamson County, Texas, that affect the Property, but only to the extent that said items are still valid and in force and effect as of the Effeetive Date.

5. The parties agree that the valuation date for determining the amount of just compensation for the real property interest proposed to be acquired by the County in the Property, for negotiation or eminent domain proceeding purposes, will be the Effective Date of this Agreement.

6. This Agreement is made with the understanding that the County will continue to proceed with the acquisition of a real property interest in the Property. The Grantor reserves all rights of compensation for the title and other interest in and to the Property which the Grantor holds as of the time immediately prior to the Effective Date of this Agreement. This Agreement shall in no way prejudice the Grantor's rights to receive full and just compensation as allowed by law for all of the Grantor's interests in and to the Property to be acquired by the County, encumbered with the improvements thereon, if any, and damages, if any, to the remainder of the Grantor's interest in any larger tract of which the Property is a part (the "Remainder"), all as the Property exists on the Effective Date of this Agreement. The County's removal or construction of improvemcnts on the Property shall in no way affect the fair market value of

the Property in determining compensation due to the Grantor in the eminent domain proceedings, except as such removal or construction of improvements may impact or damage the Remainder. No beneficial project influence will impact the appraised value of the Property to be acquired. This grant will not prejudice the Grantor's rights to any relocation benefits for which Grantor may be eligible.

7. In the event the County institutes or has instituted eminent domain proceedings, the County will not be liable to the Grantor for interest upon any award or judgment as a result of such proceedings for any period of time prior to the date of the award. Payment of any interest may be deferred by the County until the entry of judgment.

8. The purpose of this Agreement is to allow the County to proceed with its Roadway Construction Project without delay and to allow the Grantor to have the use at this time of 100% of the Entry Deposit. The Grantor expressly acknowledges that the proposed Roadway Construction Project is for a valid public use and voluntarily waives any right the Grantor has or may have, known or unknown, to contest the jurisdiction of the court in any condemnation proceeding for acquisition of the Property related to the Roadway Construction Project, based upon claims that the condemning authority has no authority to acquire the Property through eminent domain, has no valid public use for the Property, or that acquisition of the Property is not necessary for the public use.

9. The undersigned Grantor agrees to pay as they become due, all unpaid ad valorem property taxes and special assessments assessed against Property as of the Effective Date.

10. Notwithstanding the acquisition of the right of possession to the Property by the County in a condemnation proeeeding by depositing the Special Commissioners' award into the registry of the court, less any amounts tendered to the Grantor pursuant to Paragraph 2 above, this Agreement shall continue to remain in effect until the County acquires title to the Property either by negotiation, settlement, or final court judgment.

11. There shall be no drinking liquor, hunting, or fishing on the Property or any of Grantor's lands by the County, its officers, agents, employees, contractors, invitees, guests, or representatives at any time. No firearms or fishing equipment shall be taken on the property by the County, its officers, agents, employees, contractors, invitees, guests or representatives at any time. The County, its contractors, and any and all persons entering the Property under this Agreement shall not perform disorderly conduct and a portable sanitary facility shall be made available for the County's contractors and any and all persons entering the Property under this agreement.

12. The County shall have the right to remove any fence that now crosses the Property. Prior to cutting any fence, however, the County shall give timely notice to the Grantor to brace the existing fence to be cut adequately on both sides of the proposed cut by suitable H-braces to prevent the remainder of the fence from sagging. If applicable, the County shall take reasonable steps to ensure that cattle, horses and/or other livestock cannot stray from the fenced pastures, including but not limited to informing Grantor of any fenee removal and allowing for reasonable time to relocate said livestock. The County and its designated contractors,

employees, and invitees agree to keep any and all gates and fences closed and locked at all times except when passing through same.

13. This Agreement will also extend to and bind the heirs, devisees, executors, administrators, legal representatives, successors in interest, and assigns of the parties.

14. It is agreed the County will reeord this document.

15. Other conditions: Should the Special Commissioners' Award (if any) be greater than the Entry Deposit paid pursuant to paragraph 2 herein, the County shall tender the difference to the registry of the court within sixty (60) days of the date that the Special Commissioners' Award is entered.

At no time during the possession of the Property by County for the purposes described herein shall Grantor be denied reasonable access and/or ingress to or egress from the remainder of Grantor's land for its current uses, unless otherwise agreed to in writing in advance.

To have and to hold the Agreement herein described and conveyed, together with all the rights and appurtenances belonging to the County and its assigns forever, for the purposes and subject to the limitations set forth above.

[signature pages follow]

GRANTOR:

Jay Harvey, aka Jay Craig Harvey

ACKNOWLEDGMENT

STATE OF TEXAS

COUNTY OF Williamson

This instrument was acknowledged before me on this the 25th day of August, 2023, by Jay Harvey, aka Jay Craig Harvey, in the capacity and for the purposes and consideration recited herein.

Notary Public, State of Texas

LAURIE GRAFELD
Notary ID #129654998
My Commission Expires
March 28, 2026

COUNTY:

WILLIAMSON COUNTY, TEXAS

By: Valerie Covey
Valerie Covey County Commissioner

ACKNOWLEDGMENT

STATE OF TEXAS
COUNTY OF WILLIAMSON

This instrument was acknowledged before me on this the 13th day of September, 2023, by Valerie Covey Commisioner of Williamson County, Texas, in the capacity and for the purposes and consideration recited herein.

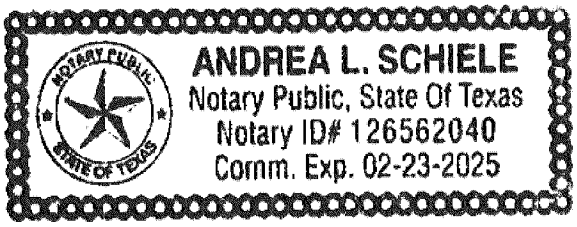

Andrea L Schiele
Notary Public, State of Texas

EXHIBIT A

County: Williamson
Parcel: 220
Highway: FM 2243

METES & BOUNDS DESCRIPTION FOR PARCEL 220

METES & BOUNDS DESCRIPTION FOR A 4.773 ACRE TRACT OF LAND OUT OF THE MILTON HICKS SURVEY, ABSTRACT NO. 287, WILLIAMSON COUNTY, TEXAS; BEING A PORTION OF LOT 4, HIGHMEADOW ESTATES PHASE ONE, A SUBDIVISION AS RECORDED IN CABINET K, SLIDES 297-299 OF THE PLAT RECORDS OF WILLIAMSON COUNTY, TEXAS, AS CONVEYED TO JAY HARVEY AND WIFE, MICHELLE HARVEY BY GENERAL WARRANTY DEED RECORDED IN DOCUMENT NUMBER 9503320 OF THE OFFICIAL RECORDS OF WILLIAMSON COUNTY, TEXAS; SAID 4.773 ACRE TRACT OF LAND BEING MORE PARTICULARLY DESCRIBED BY METES AND BOUNDS AS FOLLOWS AND SHOWN ON THE ATTACHED SKETCH:

BEGINNING at a 1/2-inch iron rod found on the curving east right-of-way line of Creekview Circle (60 feet wide) as dedicated by said HIGHMEADOW ESTATES PHASE ONE, at the southwest corner of the above described Lot 4 and the northwest corner of Lot 5 of said HIGHMEADOW ESTATE PHASE ONE, as conveyed to Roy L. Kuchera and Alice F. Kuchera by General Warranty Deed recorded in Document Number 9731852 of the Official Records of Williamson County, Texas, for the southwest corner and **POINT OF BEGINNING** of the herein described tract;

THENCE, with the east right-of-way line of said Creekiew Circle and the west line of said Lot 4, along a curve to the left, an arc distance of 49.34 feet, having a radius of 60.00 feet, a central angle of 47°06'58" and a chord which bears N 30°00'57" W a distance of 47.96 feet to a 1/2-inch iron rod found at the most westerly corner of said Lot 4 and the southeast corner of Lot 3 of said HIGHMEADOW ESTATES PHASE ONE, for the most westerly corner of the herein described tract, from which a 1/2-inch iron rod found on the north right-of-way line of said Creekview Circle, at the southwest corner of said Lot 3 and the southeast corner of Lot 2 of said HIGHMEADOW ESTATES PHASE ONE, bears along a curve to the left, an arc distance of 62.31 feet, having a radius of 60.00 feet, a central angle of 59°30'13" and a chord which bears N 83°19'32" W a distance of 59.55 feet;

THENCE, departing the east right-of-way line of said Creekview Circle, with the northwest line of said Lot 4 and the southeast line of said Lot 3, N 38°30'44" E a distance of 701.03 feet to a 1/2-inch iron rod with cap stamped "WILCO ROW 5777" (NAD-83, Central Zone Grid Coordinates: N: 10,189,374.64, E: 3,090,721.85) set at the beginning of a non-tangent curve to the right, for the northwest corner of the herein described tract, 228.33 feet left of FM 2243 baseline station 197+71.67, from which a 1/2-inch iron rod found at the most northerly corner of said Lot 4, and at an interior corner of said Lot 3, bears N 38°30'44" E a distance of 120.83 feet;

THENCE, departing the southeast line of said Lot 3, over and across said Lot 4, along said curve to the right, an arc distance of 37.92 feet, having a radius of 8,147.00 feet, a central angle of 00°16'00" and a chord which bears N 86°05'56" E a distance of 37.92 feet to a 1/2-inch iron rod with cap stamped "WILCO ROW 5777" set for an interior corner of the herein described tract, 228.62 feet left of FM 2243 baseline station 198+08.44;

THENCE, continuing over and across said Lot 4, N 39°58'40" E a distance of 15.22 feet to a 1/2-inch iron rod with cap stamped "WILCO ROW 5777" set at the beginning of a non-tangent curve to the right, for an exterior corner of the herein described tract, 239.70 feet left of FM 2243 baseline station 198+18.55;

THENCE, continuing over and across said Lot 4, along said curve to the right, an arc distance of 106.75 feet, having a radius of 8,158.00 feet, a central angle of 00°44'59" and a chord which bears N 86°40'51" E a distance of 106.75 feet to a 1/2-inch iron rod with cap stamped "WILCO ROW 5777" set on the northeast line of said Lot 4 and the southwest line of said Lot 3, for an exterior corner of the herein described tract, 240.59 feet left of FM 2243 baseline station 199+21.89;

THENCE, with the northeast line of said Lot 4 and the southwest line of said Lot 3, S 46°48'12" E a distance of 26.48 feet to a calculated point on the west line of a called 95.096 acre tract of land as conveyed to Roy Kuchera and wife, Alice Kuchera by General Warranty Deed recorded in Volume 2640, Page 64 of the Official Records of Williamson County, Texas, at the most easterly common corner of said Lot 4 and said Lot 3, for an exterior corner of the herein described tract;

THENCE, with the east line of said Lot 4 and the west line of said Kuchera 95.096 acre Tract, the following five (5) courses:

1) S 43°06'36" W a distance of 29.68 feet to a 1/2-inch iron rod found for an angle point;

2) S 03°49'08" W a distance of 120.28 feet to a 1/2-inch iron rod found for an angle point;

3) S 25°01'14" E a distance of 156.53 feet to a 1/2-inch iron rod found for an angle point;

4) S 08°58'40" W a distance of 126.85 feet to a 1/2-inch iron rod found for an angle point; and

5) S 11°43'38" E a distance of 73.82 feet to a calculated point at the southeast corner of said Lot 4, and at the northeast corner of said Lot 5, for the southeast corner of the herein described tract;

THENCE, with the south line of said Lot 4 and the north line of said Lot 5, S 79°48'37" W a distance of 80.56 feet to a 1/2-inch iron rod with cap stamped "WILCO ROW 5777" set for the beginning of a non-tangent curve to the left, 271.09 feet right of FM 2243 baseline station 198+71.36;

THENCE, departing the north line of said Lot 5, over and across said Lot 4, along said curve to the left, an arc distance of 286.65 feet, having a radius of 8,053.00 feet, a central angle of 02°02'22" and a chord which bears S 86°03'50" W a distance of 286.64 feet to a 1/2-inch iron rod with cap stamped "WILCO ROW 5777" set for the beginning of a non-tangent curve to the left, 270.78 feet right of FM 2243 baseline station 195+73.65;

THENCE, continuing over and across said Lot 4, along said curve to the left, an arc distance of 86.57 feet, having a radius of 1,011.00 feet, a central angle of 04°54'22" and a chord which bears S 58°39'42" W a distance of 86.54 feet to a 1/2-inch iron rod with cap stamped "WILCO ROW 5777" set on the south line of said Lot 4 and the north line of said Lot 5, for an angle point, 308.51 feet right of FM 2243 baseline station 194+92.55;

THENCE, with the south line of said Lot 4 and the north line of said Lot 5, S 79°48'37" W a distance of 182.85 feet to the **POINT OF BEGINNING** and containing 4.773 acres (207,912 square feet) of land, more or less.

Bearing orientation is based on the Texas State Plane Coordinate System NAD-83, Central Zone 4203. All distances are surface and may be converted to grid by dividing by a scale factor of 1.00012.

I hereby certify that these notes were prepared by BGE from a survey made on the ground under my supervision on May 12, 2022 and are true and correct to the best of my knowledge. A sketch accompanies this description.

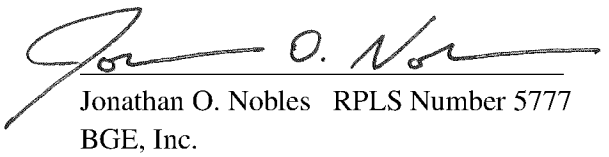

07/12/2023
Date

Jonathan O. Nobles RPLS Number 5777
BGE, Inc.
101 West Louis Henna Blvd., Suite 400
Austin, TX 78728
Telephone: 512-879-0400
TBPELS Licensed Surveying Firm Number 10106502

Client:	Williamson County
Date:	July 12, 2023
Revised:	July 12, 2023
Project Number:	7473-00

SKETCH TO ACCOMPANY LEGAL DESCRIPTION

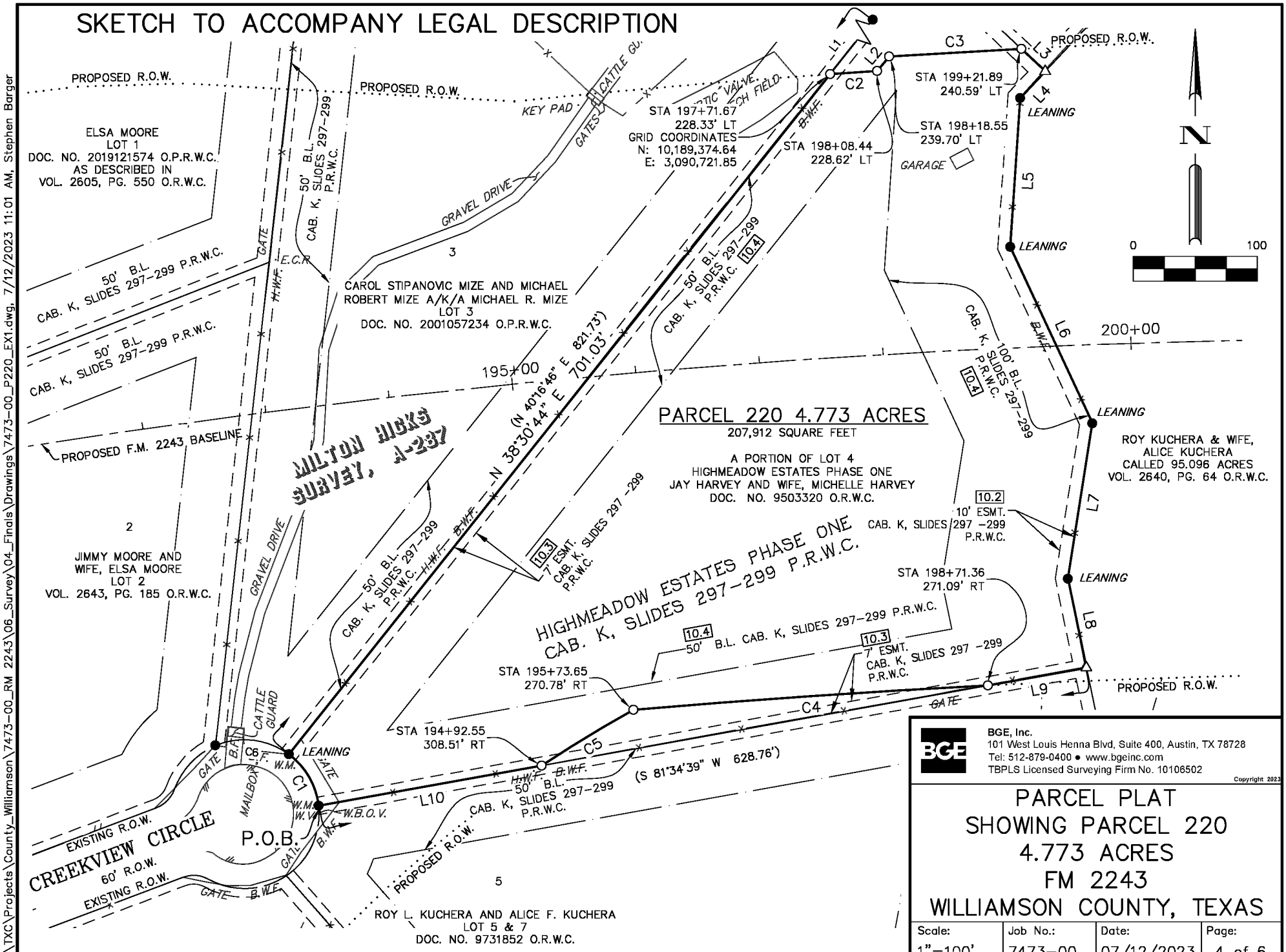

BGE, Inc.
101 West Louis Henna Blvd, Suite 400, Austin, TX 78728
Tel: 512-879-0400 • www.bgeinc.com
TBPLS Licensed Surveying Firm No. 10106502

Copyright 2023

PARCEL PLAT
SHOWING PARCEL 220
4.773 ACRES
FM 2243
WILLIAMSON COUNTY, TEXAS

Scale:	Job No.:	Date:	Page:
1"=100'	7473-00	07/12/2023	4 of 6

G:\TXC\Projects\County_Williamson\7473-00_RM 2243\06_Survey\04_Finals\Drawings\7473-00_P220_EX1.dwg, 7/12/2023 11:01 AM, Stephen Barger

LINE TABLE		
NUMBER	BEARING	DISTANCE
L1	N 38°30'44" E	120.83'
L2	N 39°58'40" E	15.22'
L3	S 46°48'12" E	26.48'
L4	S 43°06'36" W	29.68'
L5	S 03°49'08" W	120.28'
L6	S 25°01'14" E	156.53'
L7	S 08°58'40" W	126.85'
L8	S 11°43'38" E	73.82'
L9	S 79°48'37" W	80.56'
L10	S 79°48'37" W	182.85'

RECORD LINE TABLE		
NUMBER	BEARING	DISTANCE
(L3)	(S 45°02'10" E)	
(L4)	(S 44°57'50" W)	(30.00')
[L4]	[S 44°57'50" W]	
(L5)	(S 05°33'44" W)	(120.18')
[L5]	[S 05°33'44" W]	[120.18']
(L6)	(S 23°00'10" E)	(156.65')
[L6]	[S 23°00'10" E]	[156.65']
(L7)	(S 10°35'27" W)	(126.48')
[L7]	[S 10°35'27" W]	[126.48']
(L8)	(S 09°55'02" E)	(73.47')
[L8]	[S 09°55'02" E]	

CURVE TABLE					
NUMBER	ARC LENGTH	RADIUS	DELTA	CHORD BEARING	CHORD DISTANCE
C1	49.34'	60.00'	47°06'58"	N 30°00'57" W	47.96'
C2	37.92'	8,147.00'	0°16'00"	N 86°05'56" E	37.92'
C3	106.75'	8,158.00'	0°44'59"	N 86°40'51" E	106.75'
C4	286.65'	8,053.00'	2°02'22"	S 86°03'50" W	286.64'
C5	86.57'	1,011.00'	4°54'22"	S 58°39'42" W	86.54'
C6	62.31'	60.00'	59°30'13"	N 83°19'32" W	59.55'

RECORD CURVE TABLE					
NUMBER	ARC LENGTH	RADIUS	DELTA	CHORD BEARING	CHORD DISTANCE
(C1)	(49.34')	(60.00')	(47°07'03")	(N 28°04'28.3" W)	(47.96')
(C6)	(62.41')	(60.00')	(59°36'07")	(N 81°26'03.2" W)	(59.64')

LEGEND

B.F.	BOARD FENCE
B.W.F.	BARBED WIRE FENCE
DOC.	DOCUMENT
D.R.W.C.	DEED RECORDS OF WILLIAMSON COUNTY
E.C.R.	ELECTRIC CONDUIT RISER
ELEC.	ELECTRIC
ESMT.	EASEMENT
G.P.	GATE POST
H.W.F.	HOG WIRE FENCE
NO.	NUMBER
O.P.R.W.C.	OFFICIAL PUBLIC RECORDS OF WILLIAMSON COUNTY
O.R.W.C.	OFFICIAL RECORDS OF WILLIAMSON COUNTY
PG.	PAGE
P.O.B.	POINT OF BEGINNING
R.O.W.	RIGHT-OF-WAY
VOL.	VOLUME
W.B.O.V.	WATER BLOW-OFF VALVE
W.M.	WATER METER
W.V.	WATER VALVE
( )	RECORD INFO FOR CAB. K, SLIDES 297-299 P.R.W.C.
[ ]	RECORD INFO FOR VOL. 2640, PG. 64 O.R.W.C.
●	FOUND 1/2" IRON ROD (UNLESS OTHERWISE NOTED)
○	SET 1/2" IRON ROD W/CAP "WILCO ROW 5777"
△	CALCULATED POINT
——x——	WIRE FENCE
——//——	BOARD FENCE
——/// ——	EDGE OF ASPHALT

BGE, Inc.
101 West Louis Henna Blvd, Suite 400, Austin, TX 78728
Tel: 512-879-0400 • www.bgeinc.com
TBPLS Licensed Surveying Firm No. 10106502
Copyright 2023

PARCEL PLAT
SHOWING PARCEL 220
4.773 ACRES
FM 2243
WILLIAMSON COUNTY, TEXAS

Scale:	Job No.:	Date:	Page:
1"=100'	7473-00	07/12/2023	5 of 6

G:\TXC\Projects\County_Williamson\7473-00_RM 2243\06_Survey\04_Finals\Drawings\7473-00_P220_EX1.dwg, 7/12/2023 11:01 AM, Stephen Barger

G:\TXC\Projects\County_Williamson\7473-00_RM 2243\06_Survey\04_Finals\Drawings\7473-00_P220_EX1.dwg, 7/12/2023 11:01 AM, Stephen Barger

GENERAL NOTES:

1. BEARING ORIENTATION IS BASED ON THE TEXAS STATE PLANE COORDINATE SYSTEM, CENTRAL ZONE 4203, NAD83. DISTANCES SHOWN HEREON ARE IN SURFACE AND CAN BE CONVERTED TO GRID BY DIVIDING BY THE COMBINED SCALE FACTOR = 1.00012

2. A METES AND BOUNDS DESCRIPTION OF EVEN DATE WAS PREPARED IN CONJUNCTION WITH THIS SKETCH.

3. THIS PARCEL PLAT WAS MADE IN RELIANCE UPON THAT CERTAIN COMMITMENT FOR TITLE INSURANCE ISSUED BY FIRST AMERICAN TITLE GUARANTY COMPANY AND TEXAS NATIONAL TITLE, INC. UNDER G.F. NO. T-166320, DATED EFFECTIVE JUNE 26, 2023 AND ISSUED ON JULY 3, 2023.

RESTRICTIVE COVENANT AND EASEMENT NOTES:

1. RESTRICTIVE COVENANTS OF RECORD ITEMIZED IN CABINET K, SLIDES 297-299, PLAT RECORDS, VOLUME 2378, PAGE 823, OFFICIAL RECORDS, DOCUMENT NO(S) 2015081209 AND 2016021909, OFFICIAL PUBLIC RECORDS, WILLIAMSON COUNTY, TEXAS, DO AFFECT THE SUBJECT TRACT, VOLUME 703, PAGE 200, VOLUME 709, PAGE 702, VOLUME 714, PAGE 690, DEED RECORDS, WILLIAMSON COUNTY, TEXAS, DO NOT AFFECT THE SUBJECT TRACT.

10.2 A 10 FOOT WIDE EASEMENT OF UNDETERMINED USE RESERVED ALONG EACH SIDE OF ALL REAR LOT LINES, AS STATED ON THE PLAT OF RECORD IN CABINET K, SLIDE 297 OF THE PLAT RECORDS OF WILLIAMSON COUNTY, TEXAS, DOES AFFECT THE SUBJECT TRACT, AS SHOWN HEREON.

10.3 A 7 FOOT WIDE EASEMENT OF UNDETERMINED USE RESERVED ALONG EACH SIDE OF ALL REAR LOT LINES, AS STATED ON THE PLAT OF RECORD IN CABINET K, SLIDE 297 OF THE PLAT RECORDS OF WILLIAMSON COUNTY, TEXAS, DOES AFFECT THE SUBJECT TRACT, AS SHOWN HEREON.

10.4 BUILDING SETBACK LINE(S) AS SHOWN AND/OR DESCRIBED ON PLAT OF RECORD IN CABINET K, SLIDE 297 OF THE PLAT RECORDS OF WILLIAMSON COUNTY, TEXAS, DOES AFFECT THE SUBJECT TRACT, AS SHOWN HEREON.

10.5 A PRIVATE ROADWAY EASEMENT GRANTED TO OWNER OF SUBJECT PROPERTY AS DESCRIBED IN VOLUME 703, PAGE 206, DEED RECORDS, WILLIAMSON COUNTY, TEXAS, DOES NOT AFFECT THE SUBJECT TRACT.

10.6 AN UNDERGROUND TELECOMMUNICATIONS EASEMENT GRANTED TO SOUTHWESTERN BELL TELEPHONE COMPANY AS DESCRIBED IN VOLUME 570, PAGE 702, DEED RECORDS, WILLIAMSON COUNTY, TEXAS, DOES NOT AFFECT THE SUBJECT TRACT.

10.7 A PUBLIC UTILITY EASEMENT GRANTED TO WILLIAMSON COUNTY, TEXAS AS DESCRIBED IN DOCUMENT NO. 2003114402, OFFICIAL PUBLIC RECORDS, WILLIAMSON COUNTY, TEXAS, DOES NOT AFFECT THE SUBJECT TRACT.

10.9 ALL TERMS, CONDITIONS AND PROVISIONS OF THAT CERTAIN ORDINANCE NO. 16-042-00 OF RECORD IN DOCUMENT NO. 2017011287, OFFICIAL PUBLIC RECORDS, WILLIAMSON COUNTY, TEXAS, DO AFFECT THE SUBJECT TRACT.

I hereby certify that this survey was made on the ground by BGE, Inc. under my supervision on May 12, 2022 and is true and correct to the best of my knowledge. The property has access to a public roadway and there are no visible encroachments, except as shown hereon.

07/12/2023

JONATHAN O. NOBLES RPLS NO. 5777
BGE, INC.
101 WEST LOUIS HENNA BLVD., SUITE 400
AUSTIN, TEXAS 78728
TELEPHONE: (512) 879-0400

BGE, Inc.
101 West Louis Henna Blvd, Suite 400, Austin, TX 78728
Tel: 512-879-0400 • www.bgeinc.com
TBPLS Licensed Surveying Firm No. 10106502
Copyright 2023

PARCEL PLAT
SHOWING PARCEL 220
4.773 ACRES
FM 2243
WILLIAMSON COUNTY, TEXAS

Scale:	Job No.:	Date:	Page:
1"=100'	7473-00	07/12/2023	6 of 6

9/12/23 Agenda Item # 88

Final Audit Report 2023-09-13

Created:	2023-09-12
By:	Lisa Dworaczyk (lisad@scrrlaw.com)
Status:	Signed
Transaction ID:	CBJCHBCAABAAo-VPHxUvU0sgDGU8CCb46eW3RNVzCJGr

"9/12/23 Agenda Item # 88" History

Document created by Lisa Dworaczyk (lisad@scrrlaw.com)
2023-09-12 - 7:41:06 PM GMT- IP address: 24.27.59.20

Document emailed to Rebecca Pruitt (becky.pruitt@wilco.org) for signature
2023-09-12 - 7:41:47 PM GMT

Email viewed by Rebecca Pruitt (becky.pruitt@wilco.org)
2023-09-12 - 7:43:50 PM GMT- IP address: 104.47.65.254

Document signing delegated to Valerie Covey (vcovey@wilco.org) by Rebecca Pruitt (becky.pruitt@wilco.org)
2023-09-12 - 7:44:14 PM GMT- IP address: 66.76.4.65

Document emailed to Valerie Covey (vcovey@wilco.org) for signature
2023-09-12 - 7:44:14 PM GMT

Email viewed by Valerie Covey (vcovey@wilco.org)
2023-09-12 - 9:57:40 PM GMT- IP address: 104.47.65.254

Document e-signed by Valerie Covey (vcovey@wilco.org)
Signature Date: 2023-09-12 - 9:58:00 PM GMT - Time Source: server- IP address: 74.193.121.96

Document emailed to Andrea Schiele (aschiele@wilco.org) for signature
2023-09-12 - 9:58:01 PM GMT

Email viewed by Andrea Schiele (aschiele@wilco.org)
2023-09-13 - 6:42:55 PM GMT- IP address: 104.47.64.254

Document e-signed by Andrea Schiele (aschiele@wilco.org)
Signature Date: 2023-09-13 - 6:43:34 PM GMT - Time Source: server- IP address: 66.76.4.65

Agreement completed.
2023-09-13 - 6:43:34 PM GMT

ELECTRONICALLY RECORDED
OFFICIAL PUBLIC RECORDS

2023087651

Pages: 14 Fee: $0.00
10/20/2023 12:01 PM
MBARRICK

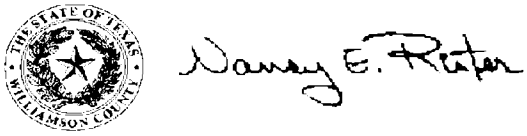

Nancy E. Rister, County Clerk
Williamson County,Texas

2025035173 JD Total Pages: 40

CAUSE NO. 23-1256-CC5

WILLIAMSON COUNTY, TEXAS **Condemnor**	§ IN THE COUNTY COURT § §
V.	§ AT LAW NO. FIVE §
CSM-MASON FAMILY, LP **Condemnee**	§ § WILLIAMSON COUNTY, TEXAS

AGREED FINAL JUDGMENT

The parties to this lawsuit have agreed to compromise and settle the issues in this lawsuit and request the entry of this Agreed Final Judgment by the Court. It appears to the Court that it has jurisdiction of this matter, the parties have agreed to all provisions contained within this Agreed Final Judgment, and the parties desire to resolve this lawsuit,

IT IS THEREFORE **ORDERED, ADJUDGED, AND DECREED** that fee simple interest in approximately 36.029 acres of land in Williamson County, Texas, said property being more particularly described by metes and bounds in Exhibit "A" which exhibit is attached hereto and incorporated herein for all purposes, be and hereby is vested in and to **WILLIAMSON COUNTY, TEXAS** for constructing, reconstructing, realigning, widening, and/or maintaining improvements to the Hero Way roadway improvement project, and to perform associated public use and purposes.

It is further **ORDERED, ADJUDGED, AND DECREED** that drainage easement interests in approximately 0.334 acres (Parcel 209D pt 1) and 0.099 acres (Parcel 209D pt 2) of land in Williamson County, Texas, said property being more particularly described by metes and bounds in Exhibits "B-1" and "B-2" (which exhibits are attached hereto and incorporated herein for all purposes), be and hereby is vested in and to **WILLIAMSON COUNTY, TEXAS**, on the terms described in Exhibit "C" (which exhibit is attached hereto and incorporated herein for all purposes)

CERTIFIED TO BE A TRUE AND CORRECT COPY
NANCY E. RISTER, County Clerk
Williamson County
Page 1 of 38

for constructing, reconstructing, realigning, widening, and/or maintaining improvements to the drainage easement interest rights described in Exhibit C.

It is further **ORDERED, ADJUDGED, AND DECREED** that in complete satisfaction of any and all claims which have been made, or which could have been made in this litigation, including claims for compensation for both the property interests to be acquired and damages (if any) to any remaining property of **CSM-MASON FAMILY, LP** ("CSM"), that CSM shall recover from **WILLIAMSON COUNTY, TEXAS** the total sum of **SEVEN MILLION SIX HUNDRED THREE THOUSAND TWO HUNDRED AND THIRTY-NINE AND NO/100 DOLLARS ($7,603,239.00).**

It is further **ORDERED, ADJUDGED, AND DECREED** that on November 17, 2023, an Award of Special Commissioners was filed with the court in the amount of **THREE MILLION TWO HUNDRED SEVENTY-FIVE THOUSAND FIFTY-FIVE and No/100** Dollars **($3,275,055.00)** and the parties agree that the additional sum of **FOUR MILLION THREE HUNDRED TWENTY-EIGHT THOUSAND ONE HUNDRED EIGHTY-FOUR AND NO/100 DOLLARS ($4,328,184.00)** has **NOT** been deposited with the court pursuant to the written Award of Special Commissioners, leaving a total balance due from **WILLIAMSON COUNTY, TEXAS** to **CSM** of **FOUR MILLION THREE HUNDRED TWENTY-EIGHT THOUSAND ONE HUNDRED EIGHTY-FOUR AND NO/100 DOLLARS ($4,328,184.00)**, and such remaining balance shall be paid by **WILLIAMSON COUNTY, TEXAS** to **CSM-MASON FAMILY, LP** by check or warrant made payable to **CSM-MASON FAMILY, LP** and made available for pick-up by **CSM-MASON FAMILY, LP** or its attorney of record in this case no later than sixty (60) days of execution and entry of this Final Agreed Judgment to avoid paying interest. If the remaining balance of **FOUR MILLION THREE HUNDRED TWENTY-EIGHT**

(RMM) EC

CERTIFIED TO BE A TRUE AND CORRECT COPY
NANCY E. RISTER, County Clerk
Williamson County
Page 2 of 38

THOUSAND ONE HUNDRED EIGHTY-FOUR AND NO/100 DOLLARS ($4,328,184.00) is not paid within (60) days of execution and entry of this Agreed Final Judgment, then the post-judgment interest at the statutory rate will accrue on the unpaid balance until paid.

It is further **ORDERED, ADJUDGED, AND DECREED** that the Clerk of the Court shall immediately remit to **CSM-MASON FAMILY, LP** the funds deposited into the registry of the Court in this case by Williamson County, Texas in the sum of **THREE MILLION TWO HUNDRED SEVENTY-FIVE THOUSAND FIFTY-FIVE and No/100 Dollars ($3,275,055.00), plus any interest earned on that amount, and less any administrative fee charge by the Clerk in connection with the distribution of such funds,** by making a check in the foregoing amount available for pick-up by **CSM-MASON FAMILY, LP** or its attorney of record in this case. (CMM) EC

Williamson County, Texas discloses that CSM, or CSM's successors, or assigns, may in the future have the repurchase rights provided for in Texas Property Code Chapter 21, Subchapter E.

It is further **ORDERED, ADJUDGED, AND DECREED** that all costs be assessed against Condemnor.

This Agreed Final Judgment fully and finally disposes of all claims, parties, and issues in this lawsuit.

SIGNED this _____ day of April 2025.

Filed: April 16, 2025 4:14:23 PM
Nancy E. Rister, County Clerk
Williamson County, Texas
By: Asher, Julia
Deputy Clerk

4/16/2025 2:08:51 PM

William Lee Woody

Judge Presiding

CERTIFIED TO BE A TRUE AND CORRECT COPY
NANCY E. RISTER, County Clerk
Williamson County
Page 3 of 38

PREPARED BY AND APPROVED AS TO SUBSTANCE AND FORM:

/s/ Erik L. Cardinell
Adam H. Hill
State Bar No. 24115847
adam@scrrlaw.com
Erik Cardinell
State Bar No. 00796304
erik@scrrlaw.com
(512) 255-8877
(512) 255-8986 (fax)
Sheets & Crossfield, P.L.L.C.
309 East Main Street
Round Rock, Texas 78664
Attorneys for Condemnor

AGREED AS TO SUBSTANCE AND FORM:

/s/ R Matthew Molash
R. Matthew Molash
State Bar No. 14255300
T: 817-405-9939
E: Matt.molash@svlandlaw.com
of SHUPE VENTURA, PLLC
9406 Biscayne Blvd.
Dallas, Texas 75218
Attorney for CSM-Mason Family, LP

WILLIAMSON COUNTY

Valerie Covey

Williamson County Presiding Officer

CERTIFIED TO BE A TRUE AND CORRECT COPY
NANCY E. RISTER, County Clerk
Williamson County
Page 4 of 38

AGREED JUDGMENT
EXHIBIT A

CERTIFIED TO BE A TRUE AND
CORRECT COPY
NANCY E. RISTER, County Clerk
Williamson County
Page 5 of 38

EXHIBIT ____

County: Williamson
Parcel: 209
Highway: FM 2243

METES & BOUNDS DESCRIPTION FOR PARCEL 209

METES & BOUNDS DESCRIPTION FOR A 36.029 ACRE TRACT OF LAND OUT OF THE MILTON HICKS SURVEY, ABSTRACT NO. 287, WILLIAMSON COUNTY, TEXAS; BEING A PORTION OF THE REMAINDER OF A CALLED 168.4 ACRE TRACT OF LAND AS CONVEYED TO CSM-MASON FAMILY, LP BY SPECIAL WARRANTY DEED RECORDED IN DOCUMENT NUMBER 2011086909 OF THE OFFICIAL PUBLIC RECORDS OF WILLIAMSON COUNTY, TEXAS; SAID 36.029 ACRE TRACT OF LAND BEING MORE PARTICULARLY DESCRIBED BY METES AND BOUNDS AS FOLLOWS AND SHOWN ON THE ATTACHED SKETCH:

BEGINNING at a 5/8-inch iron rod found on the curving south right-of-way line of FM 2243 (80 feet wide right-of-way) as dedicated by instruments recorded in Volume 409, Page 78 and Volume 409, Page 377, both of the Deed Records of Williamson County, Texas, at the northeast corner of said CSM-Mason remainder Tract and at the northwest corner of a called 89.41 acre tract of land as conveyed to Amelia Valdez, Anita Martinez and Irene Torrez by Probate Orders recorded in Document Numbers 2012066513 and 2012067088, both of the Official Public Records of Williamson County, Texas, and described in Volume 457, Page 595 of the Deed Records of Williamson County, Texas, for the northeast corner and **POINT OF BEGINNING** of the herein described tract, from which a TXDOT Type I concrete monument found on the south right-of-way line of said FM 2243, bears along a curve to the left, an arc distance of 412.62 feet, having a radius of 1,949.86 feet, a central angle of 12°07'29" and a chord which bears N 75°35'18" E a distance of 411.86 feet;

THENCE, with the east line of said CSM-Mason Tract and the west line of said Valdez, Martinez and Torrez Tract, S 21°40'36" E a distance of 303.21 feet to a 1/2-inch iron rod with cap stamped "WILCO ROW 5777" (NAD-83, Central Zone Grid Coordinates: N: 10,188,739.06, E: 3,096,434.97) set for the southeast corner of the herein described tract, 175.00 feet right of FM 2243 baseline station 254+70.53, from which a 1/2-inch iron rod with cap stamped "RJ Surveying" found on the east line of said CSM-Mason Tract, at the southwest corner of said Valdez, Martinez and Torrez Tract, bears S 21°40'36" E a distance of 1,347.02 feet;

THENCE, departing the west line of said Valdez, Martinez and Torrez Tract, over and across said CSM-Mason Tract, S 76°53'04" W a distance of 384.25 feet to a 1/2-inch iron rod with cap stamped "WILCO ROW 5777" set for a point of curvature of a curve to the right, 180.62 feet right of FM 2243 baseline station 250+94.60;

THENCE, continuing over and across said CSM-Mason Tract, along said curve to the right, an arc distance of 1,600.05 feet, having a radius of 5,047.00 feet, a central angle of 18°09'52" and a chord which bears S 85°58'01" W a distance of 1,593.36 feet to a 1/2-inch iron rod with cap stamped "WILCO ROW 5777" set for an angle point, 247.19 feet right of FM 2243 baseline station 235+61.91;

THENCE, continuing over and across said CSM-Mason Tract, N 82°24'00" W a distance of 785.42 feet to a 1/2-inch iron rod with cap stamped "WILCO ROW 5777" set for an angle point, 247.00 feet right of FM 2243 baseline station 227+78.58;

THENCE, continuing over and across said CSM-Mason Tract, N 85°48'08" W a distance of 187.82 feet to a 1/2-inch iron rod with cap stamped "WILCO ROW 5777" set for an interior corner of the herein described tract, 258.15 feet right of FM 2243 baseline station 225+91.09;

CERTIFIED TO BE A TRUE AND CORRECT COPY
NANCY E. RISTER, County Clerk
Williamson County
Page 6 of 10

THENCE, continuing over and across said CSM-Mason Tract, S 07°36'00" W a distance of 31.36 feet to a 1/2-inch iron rod with cap stamped "WILCO ROW 5777" set for an exterior corner of the herein described tract, 289.51 feet right of FM 2243 baseline station 225+91.09;

THENCE, continuing over and across said CSM-Mason Tract, N 71°05'21" W a distance of 130.07 feet to a 1/2-inch iron rod with cap stamped "WILCO ROW 5777" set for an angle point, 264.00 feet right of FM 2243 baseline station 224+63.55;

THENCE, continuing over and across said CSM-Mason Tract, N 82°24'00" W a distance of 392.21 feet to a 1/2-inch iron rod with cap stamped "WILCO ROW 5777" set on the southeast right-of-way line of said FM 2243 and the northwest line of said CSM-Mason remainder tract, for the southwest corner of the herein described tract, 264.00 feet right of FM 2243 baseline station 220+71.34, from which a TXDOT Type I concrete monument found on the southeast right-of-way of said FM 2243, bears S 34°00'38" W a distance of 1,317.81 feet;

THENCE, with the southeast right-of-way line of said FM 2243 and the northwest line of said CSM-Mason remainder Tract, N 34°00'38" E a distance of 260.65 feet to a calculated point at the beginning of a non-tangent curve to the right;

THENCE, continuing with the southeast right-of-way line of said FM 2243 and the northwest line of said CSM-Mason remainder Tract, along said curve to the right, an arc distance of 792.49 feet, having a radius of 1,105.92 feet, a central angle of 41°03'27" and a chord which bears N 54°31'52" E a distance of 775.64 feet to a 1/2-inch iron rod with cap stamped "WILCO ROW 5777" set for the most northerly corner of the herein described tract, 499.12 feet left of FM 2243 baseline station 227+53.92, from which a TXDOT Type I concrete monument found on the south right-of-way line of said FM 2243, bears along a curve to the right an arc distance of 750.78 feet, having a radius of 1,105.92 feet, a central angle of 38°53'48" and a chord which bears S 85°29'31" E a distance of 736.45 feet;

THENCE, departing the southeast right-of-way line of said FM 2243, over and across said CSM-Mason Tract, S 06°29'15" W a distance of 215.29 feet to a 1/2-inch iron rod with cap stamped "WILCO ROW 5777" set for an interior corner of the herein described tract, 283.86 feet left of FM 2243 baseline station 227+58.10;

THENCE, continuing over and across said CSM-Mason Tract, S 82°24'01" E a distance of 1,288.63 feet to a 1/2-inch iron rod with cap stamped "WILCO ROW 5777" set on the fenced and occupied north line of said CSM-Mason remainder Tract and the south right-of-way line of Georgetown and Leander Public Road (right-of-way varies) (unimproved) (no deed of record found) as referenced in Deed recorded in Volume 147, Page 112 of the Deed Records of Williamson County, Texas, for an angle point, 254.49 feet left of FM 2243 baseline station 240+76.14;

THENCE, with the fenced and occupied north line of said CSM-Mason remainder Tract and the south right-of-way line of said Georgetown and Leander Public Road, S 68°45'06" E a distance of 11.60 feet to an 18-inch cedar fence post found for an angle point, 250.51 feet left of FM 2243 baseline station 240+87.62;

THENCE, continuing with the fenced and occupied north line of said CSM-Mason remainder Tract and the south right-of-way line of said Georgetown and Leander Public Road, S 82°27'50" E a distance of 23.43 feet to a 10-inch cedar fence post found for an angle point, 247.82 feet left of FM 2243 baseline station 241+12.12;

CERTIFIED TO BE A TRUE AND CORRECT COPY
NANCY E. RISTER, County Clerk
Williamson County
Page 7 of 38

THENCE, continuing with the fenced and occupied north line of said CSM-Mason remainder Tract and the south right-of-way line of said Georgetown and Leander Public Road, S 87°48'47" E a distance of 41.95 feet to a 1/2-inch iron rod with cap stamped "WILCO ROW 5777" set for the beginning of a non-tangent curve to the left, 246.63 feet left of FM 2243 baseline station 241+56.28;

THENCE, departing the south right-of-way line of said Georgetown and Leander Public Road, over and across said CSM-Mason Tract, along said curve to the left, an arc distance of 380.49 feet, having a radius of 3,933.00 feet, a central angle of 05°32'35" and a chord which bears S 89°51'04" E a distance of 380.34 feet to a 1/2-inch iron rod with cap stamped "WILCO ROW 5777" set on the north line of said CSM-Mason remainder Tract and the south right-of-way line of said FM 2243, for the beginning of a non-tangent curve to the left, 232.47 feet left of FM 2243 baseline station 245+55.54;

THENCE, with the north line of said CSM-Mason remainder Tract and the south right-of-way line of said FM 2243, along said curve to the left, an arc distance of 139.48 feet, having a radius of 1,472.39 feet, a central angle of 05°25'39" and a chord which bears S 88°43'50" E a distance of 139.42 feet to a TXDOT Type I concrete monument found for an angle point;

THENCE, continuing with the north line of said CSM-Mason remainder Tract and the south right-of-way line of said FM 2243, N 88°35'53" E a distance of 472.90 feet to a TXDOT Type I concrete monument found for the beginning of a non-tangent curve to the left;

THENCE, continuing with the north line of said CSM-Mason remainder Tract and the south right-of-way line of said FM 2243, along said curve to the left, an arc distance of 235.50 feet, having a radius of 1,949.86 feet, a central angle of 06°55'13" and a chord which bears N 85°06'39" E a distance of 235.36 feet to the **POINT OF BEGINNING** and containing 36.029 acres of land, more or less.

Bearing orientation is based on the Texas State Plane Coordinate System NAD-83, Central Zone 4203. All distances are surface and may be converted to grid by dividing by a scale factor of 1.00012.

I hereby certify that these notes were prepared by BGE from a survey made on the ground under my supervision on May 12, 2022 and are true and correct to the best of my knowledge. A sketch accompanies this description.

02/14/2025
Date

Jonathan O. Nobles RPLS Number 5777
BGE, Inc.
101 West Louis Henna Blvd., Suite 400
Austin, TX 78728
Telephone: 512-879-0400
TBPELS Licensed Surveying Firm Number 10106500

Client:	Williamson County
Date:	September 20, 2022
Revised	February 14, 2025
Project Number:	7473-00

CERTIFIED TO BE A TRUE AND CORRECT COPY
NANCY E. RISTER, County Clerk
Williamson County
Page 8 of 38

\\bgeinc\data\TXC\Projects\County_Williamson\7473-00_RM 2243\08_Survey\04_Finals\Drawings\7473-00_P209_EX1.dwg, 2/14/2025 2:44 PM, Andrea Hlavac

SKETCH TO ACCOMPANY LEGAL DESCRIPTION

MATCHLINE PAGE 5 OF 9

CITY OF GEORGETOWN
CALLED 100.00 ACRES
DOC. NO. 2016105284 O.P.R.W.C.

AGA M. BROWN SURVEY, A-85

APPROXIMATE SURVEY LINE

EXISTING R.O.W.

"FOREST 1847"

EXISTING R.O.W.

FM 2243
80' R.O.W.
VOL. 409, PG. 78 D.R.W.C.
VOL. 409, PG. 377 D.R.W.C.

A-85
A-140

APPROXIMATE U. SURVEY LINE SW BELL

TEL. POLE

[N 89°55' E 473.33']

N 88°35'53" E 472.90'

EXISTING R.O.W.

C5

18" CMP

A-251

A-85

A-140

TEL. POLE

TEL. POLE

P.O.B. 5/8"

GATE

JOHN T. CHURCH SURVEY, A-140

PT: 253+27.35

PARCEL 209 36.029 ACRES
1,569,422 SQUARE FEET

A PORTION OF A CALLED 168.4 ACRES
(TRACT ONE)
CSM-MASON FAMILY, LP
DOC. NO. 2011086909 O.P.R.W.C.

255+00

S 21°40'36" E 303.21'

[S 20° E 1,650']

(S 19° E)

250+00

PROPOSED FM 2243 BASELINE

DILAPIDATED METAL BL

DILAPI WOOD

AMELIA VALDEZ, ANITA MARTINEZ & IRENE TORREZ CALLED 89.41 ACRES
DOC. NOS. 2012066513 & 2012067088 O.P.R.W.C.
AS DESCRIBED IN VOL. 457, PG. 595 D.R.W.C.

MILTON HICKS SURVEY, A-237

PROPOSED R.O.W.

S 76°53'04" W 384.25'

C7

STA 254+70.63
175.00' RT
GRID COORDINATES
N: 10,188,739.08
E: 3,098,434.97

"RJ SURVEYING"

PROPOSED R.O.W.

C1

STA 250+94.60
180.62' RT

CSM-MASON FAMILY, LP
REMAINDER OF A CALLED 168.4 ACRES
(TRACT ONE)
DOC. NO. 2011086909 O.P.R.W.C.

N

0 100

REVISED 7/20/2023 – UPDATED PARCEL BOUNDARY AND UPDATED TITLE COMMITMENT
REVISED 2/14/2025 – UPDATED PARCEL BOUNDARY

BGE, Inc.
101 West Louis Henna Blvd, Suite 400, Austin, TX 78728
Tel: 512-879-0400 • www.bgeinc.com
TBPLS Licensed Surveying Firm No. 10106502

Copyright 2023

PARCEL PLAT
SHOWING PARCEL 209
36.029 ACRES
FM 2243
WILLIAMSON COUNTY, TEXAS

Scale:	Job No.:	Date:	Page:
1"=100'	7473-00	09/20/2022	4 of 10

CERTIFIED TO BE A TRUE AND CORRECT COPY
NANCY E. RISTER, County Clerk
Williamson County
Page 9 of 38

RECORDERS MEMORANDUM
All or parts of the text on this page was not clearly legible for satisfactory recordation.

\\bgeinc\data\TXC\Projects\County_Williamson\7473-00_RM 2243\06_Survey\04_Finals\Drawings\7473-00_P209_EX1.dwg, 2/14/2025 2:44 PM, Andrea Hlavac

SKETCH TO ACCOMPANY LEGAL DESCRIPTION

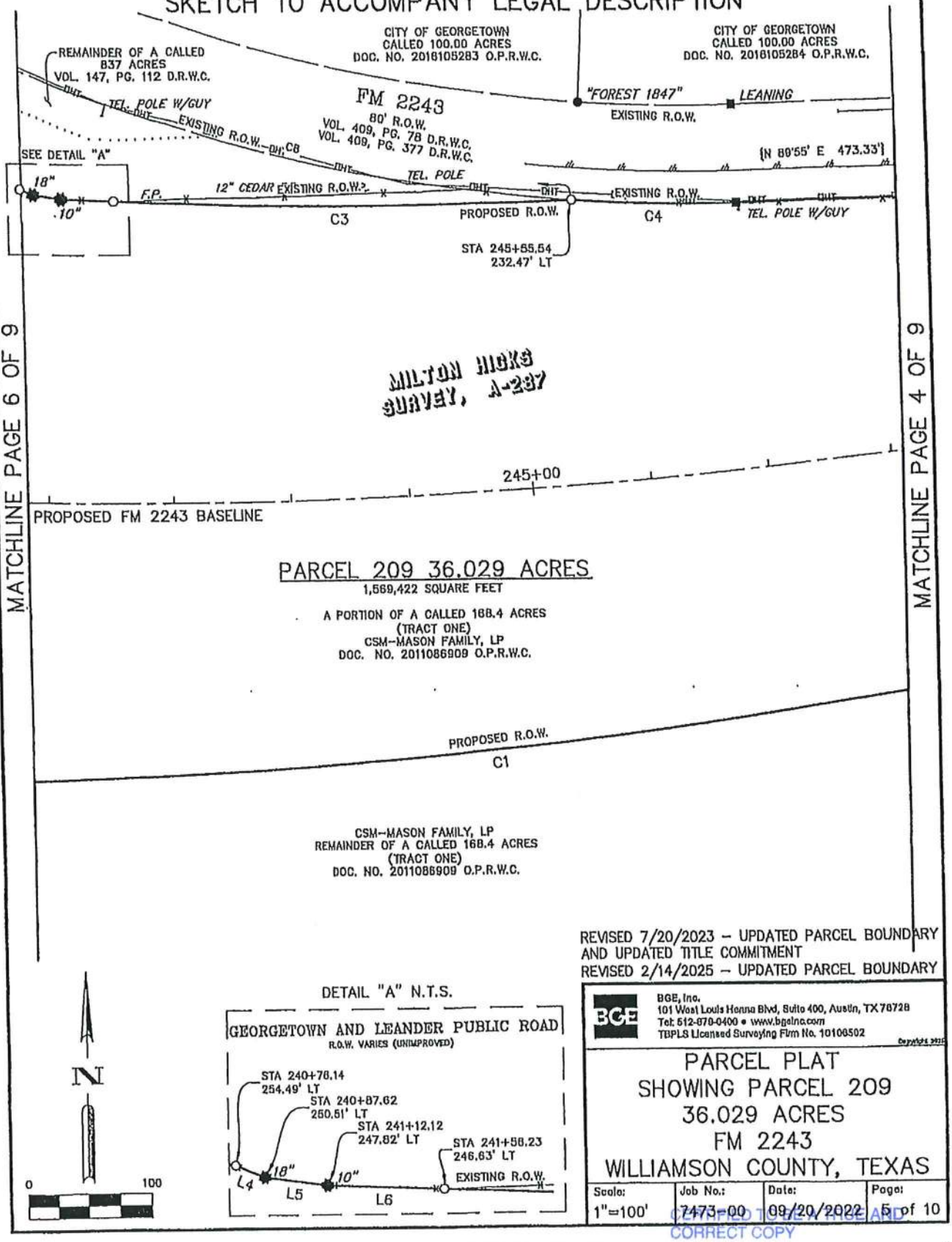

REVISED 7/20/2023 – UPDATED PARCEL BOUNDARY AND UPDATED TITLE COMMITMENT
REVISED 2/14/2025 – UPDATED PARCEL BOUNDARY

BGE, Inc.
101 West Louis Henna Blvd, Suite 400, Austin, TX 78728
Tel: 512-879-0400 • www.bgeinc.com
TBPLS Licensed Surveying Firm No. 10106502

Copyright 2025

PARCEL PLAT SHOWING PARCEL 209 36.029 ACRES FM 2243 WILLIAMSON COUNTY, TEXAS

Scale:	Job No.:	Date:	Page:
1"=100'	7473-00	09/20/2022	5 of 10

CERTIFIED TO BE A TRUE AND CORRECT COPY
NANCY E. RISTER, County Clerk
Williamson County
Page 10 of 38

RECORDERS MEMORANDUM
All or parts of the text on this page was not clearly legible for satisfactory recordation.

\\bgeinc\data\TXC\Projects\County_Williamson\7473-00_RM 2243\08_Survey\04_Finals\Drawings\7473-00_P209_EXI.dwg, 2/14/2025 2:44 PM, Andrea Hiener

SKETCH TO ACCOMPANY LEGAL DESCRIPTION

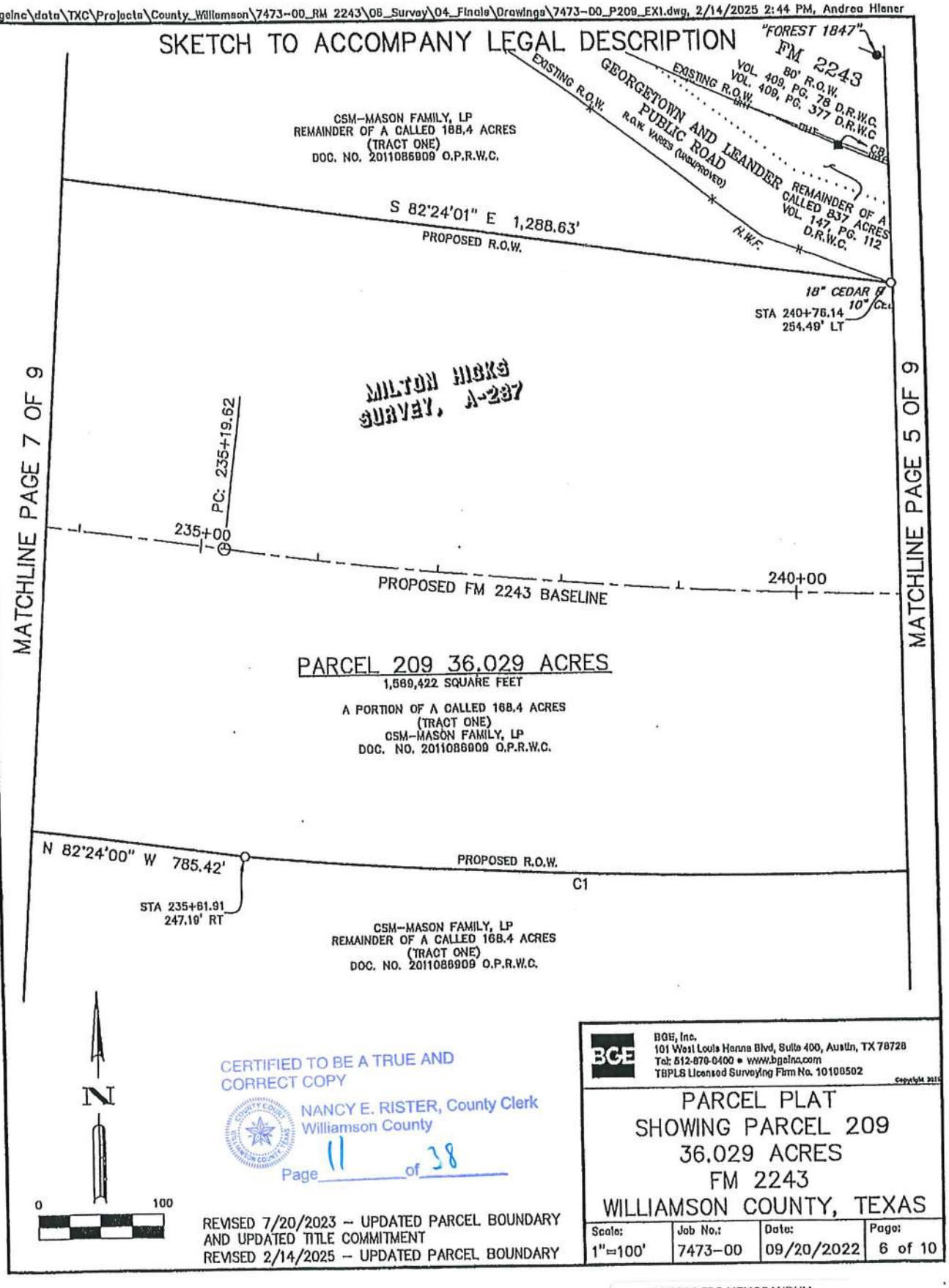

CERTIFIED TO BE A TRUE AND CORRECT COPY
NANCY E. RISTER, County Clerk
Williamson County
Page 11 of 38

REVISED 7/20/2023 -- UPDATED PARCEL BOUNDARY AND UPDATED TITLE COMMITMENT
REVISED 2/14/2025 -- UPDATED PARCEL BOUNDARY

BGE, Inc.
101 West Louis Henna Blvd, Suite 400, Austin, TX 78728
Tel: 512-879-0400 • www.bgeinc.com
TBPLS Licensed Surveying Firm No. 10106502

Copyright 2015

PARCEL PLAT SHOWING PARCEL 209 36.029 ACRES FM 2243 WILLIAMSON COUNTY, TEXAS

Scale:	Job No.:	Date:	Page:
1"=100'	7473-00	09/20/2022	6 of 10

RECORDERS MEMORANDUM
All or parts of the text on this page was not clearly legible for satisfactory recordation.

\\bgeinc\data\TXC\Projects\County_Williamson\7473-00_RM 2243\05_Survey\04_Finals\Drawings\7473-00_P209_EX1.dwg, 2/14/2025 2:44 PM, Andrea Hiener

SKETCH TO ACCOMPANY LEGAL DESCRIPTION

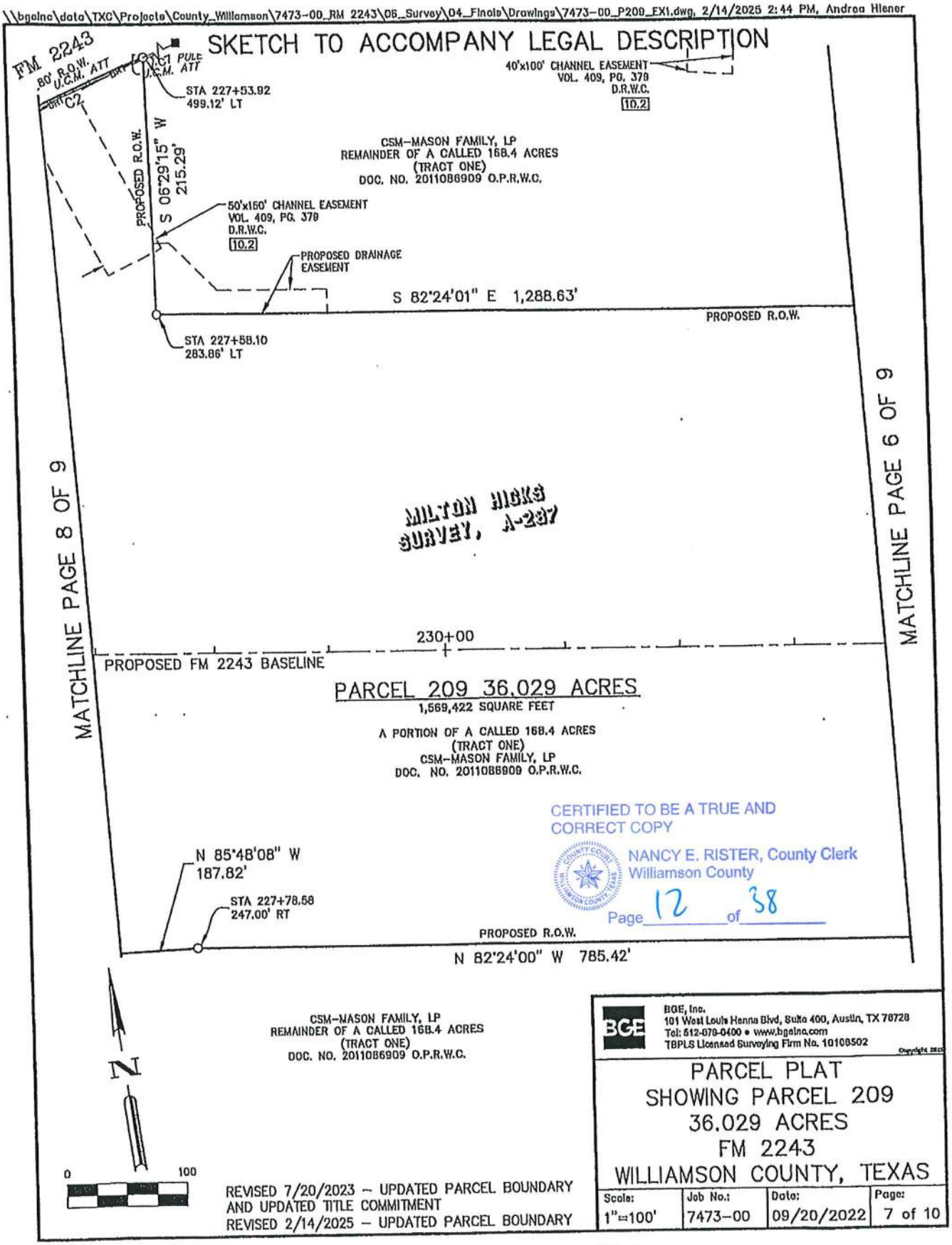

CERTIFIED TO BE A TRUE AND CORRECT COPY
NANCY E. RISTER, County Clerk
Williamson County
Page 12 of 38

REVISED 7/20/2023 – UPDATED PARCEL BOUNDARY AND UPDATED TITLE COMMITMENT
REVISED 2/14/2025 – UPDATED PARCEL BOUNDARY

BGE, Inc.
101 West Louis Henna Blvd, Suite 400, Austin, TX 78728
Tel: 512-879-0400 • www.bgeinc.com
TBPLS Licensed Surveying Firm No. 10106502

PARCEL PLAT SHOWING PARCEL 209 36.029 ACRES FM 2243 WILLIAMSON COUNTY, TEXAS

Scale:	Job No.:	Date:	Page:
1"=100'	7473-00	09/20/2022	7 of 10

RECORDERS MEMORANDUM
All or parts of the text on this page was not clearly legible for satisfactory recordation.

\\bgeinc\data\TXC\Projects\County_Williamson\7473-00_RM 2243\05_Survey\04_Finals\Drawings\7473-00_P209_EX1.dwg, 2/14/2025 2:44 PM, Andrea Hiener

SKETCH TO ACCOMPANY LEGAL DESCRIPTION

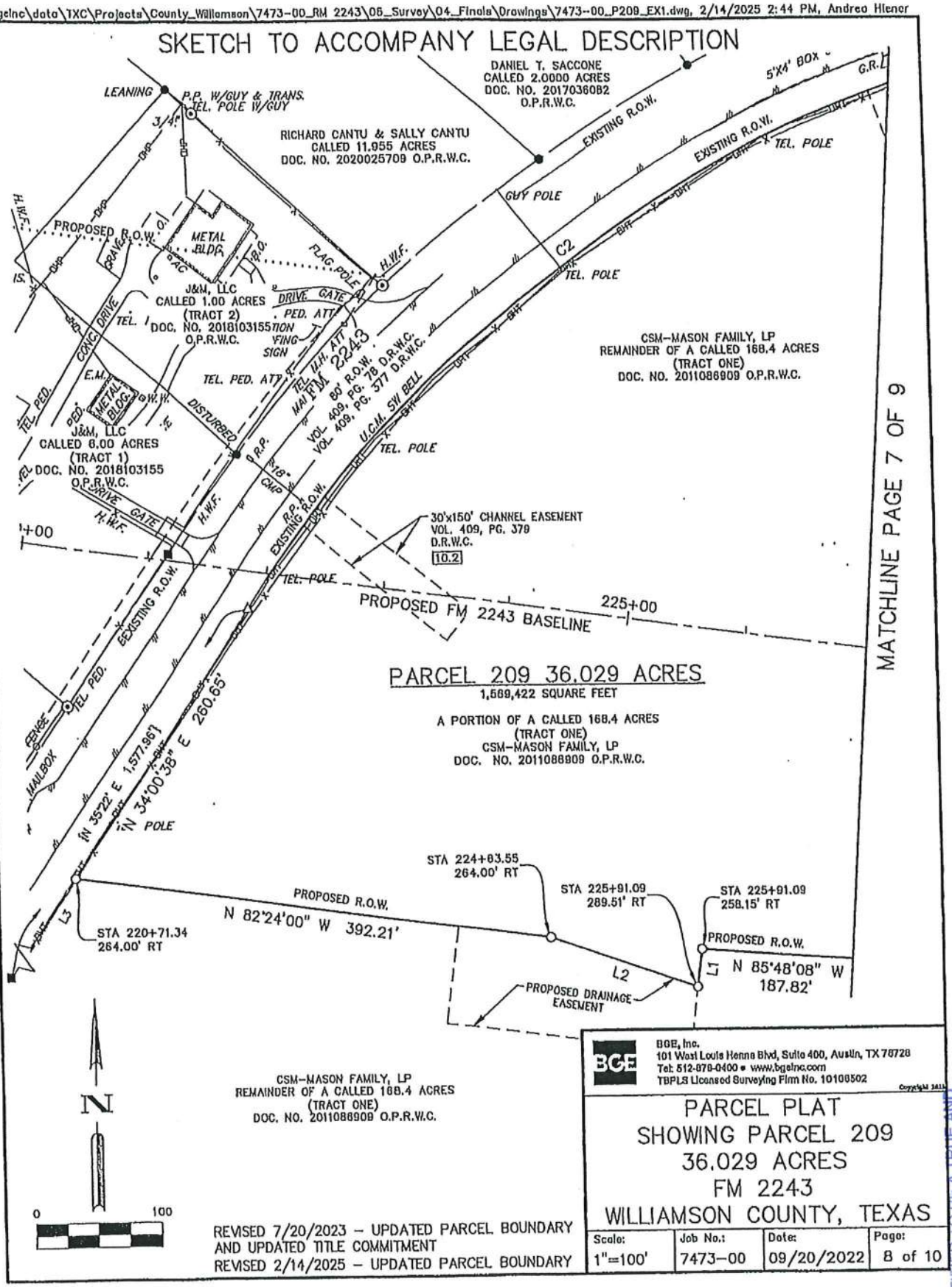

REVISED 7/20/2023 – UPDATED PARCEL BOUNDARY AND UPDATED TITLE COMMITMENT
REVISED 2/14/2025 – UPDATED PARCEL BOUNDARY

BGE, Inc.
101 West Louis Henna Blvd, Suite 400, Austin, TX 78728
Tel: 512-879-0400 • www.bgeinc.com
TBPLS Licensed Surveying Firm No. 10106502

Copyright 2021

PARCEL PLAT
SHOWING PARCEL 209
36.029 ACRES
FM 2243
WILLIAMSON COUNTY, TEXAS

Scale:	Job No.:	Date:	Page:
1"=100'	7473-00	09/20/2022	8 of 10

CERTIFIED TO BE A TRUE AND CORRECT COPY
NANCY E. RISTER, County Clerk
Williamson County
Page 13 of 38

RECORDERS MEMORANDUM
All or parts of the text on this page was not clearly legible for satisfactory recordation.

LEGEND

CMP	CORRUGATED METAL PIPE
C.O.	CLEAN OUT
DOC.	DOCUMENT
D.R.W.C.	DEED RECORDS OF WILLIAMSON COUNTY
E.M.	ELECTRIC METER
F.P.	FENCE POST
M.H.	MANHOLE
NO.	NUMBER
NOS.	NUMBERS
O.P.R.W.C.	OFFICIAL PUBLIC RECORDS OF WILLIAMSON COUNTY
PED.	PEDESTAL
PG.	PAGE
P.O.B.	POINT OF BEGINNING
P.P.	POWER POLE
R.P.	REFLECTOR POST
R.W.	RETAINING WALL
R.O.W.	RIGHT-OF-WAY
TEL.	TELEPHONE
TRANS.	TRANSFORMER
U.C.M.	UNDERGROUND CABLE MARKER
VOL.	VOLUME
W.W.	WATER WELL
( )	RECORD INFO FOR DOC. NO. 2011086909 O.P.R.W.C.
[ ]	RECORD INFO FOR DOC. VOL. 457, PG. 595 D.R.W.C.
{ }	RECORD INFO FOR TXDOT FM 2243 R.O.W. MAP DATED MAY 1955 & VOL. 409, PG. 377 D.R.W.C.
●	FOUND 1/2" IRON ROD (UNLESS OTHERWISE NOTED)
■	FOUND TDDOT TYPE I CONCRETE MONUMENT
○	SET 1/2" IRON ROD W/CAP "WILCO ROW 5777"
✸	CEDAR FENCE POST
⊙	FOUND 3/8" IRON PIPE (UNLESS OTHERWISE NOTED)
—x—	WIRE FENCE
—o—	METAL FENCE
—OHT—	OVERHEAD TELEPHONE
—OHP—	OVERHEAD POWER
—M—	EDGE OF ASPHALT
10.2	SCHEDULE B ITEM

LINE TABLE		
NUMBER	BEARING	DISTANCE
L1	S 07°36'00" W	31.36'
L2	N 71°05'21" W	130.07'
L3	S 34°00'38" W	1,317.81'
L4	S 68°45'06" E	11.60'
L5	S 82°27'50" E	23.43'
L6	S 87°48'47" E	41.95'
L7	S 21°40'36" E	1,347.02'

RECORD LINE TABLE		
NUMBER	BEARING	DISTANCE
(L6)	(EAST)	

CURVE TABLE					
NUMBER	ARC LENGTH	RADIUS	DELTA	CHORD BEARING	CHORD DISTANCE
C1	1,600.05'	5,047.00'	18°09'52"	S 85°58'01" W	1,593.36'
C2	792.49'	1,105.92'	41°03'27"	N 54°31'52" E	775.64'
C3	380.49'	3,933.00'	5°32'35"	S 89°51'04" E	380.34'
C4	139.48'	1,472.39'	5°25'39"	S 88°43'50" E	139.42'
C5	235.50'	1,949.86'	6°55'13"	N 85°06'39" E	235.36'
C6	412.62'	1,949.86'	12°07'29"	N 75°35'18" E	411.86'
C7	750.78'	1,105.92'	38°53'48"	S 85°29'31" E	736.45'
C8	511.99'	1,472.39'	19°55'24"	S 76°03'19" E	509.41'

RECORD CURVE TABLE					
NUMBER	ARC LENGTH	RADIUS	DELTA	CHORD BEARING	CHORD DISTANCE
{C2}		{1,105.92'}			
{C4}		{1,472.39'}			
{C5}		{1,949.86'}			
{C6}		{1,949.86'}			
{C7}		{1,105.92'}			
{C8}		{1,472.39'}			

REVISED 7/20/2023 – UPDATED PARCEL BOUNDARY AND UPDATED TITLE COMMITMENT
REVISED 2/14/2025 – UPDATED PARCEL BOUNDARY

BGE, Inc.
101 West Louis Henna Blvd, Suite 400, Austin, TX 78728
Tel: 512-879-0400 • www.bgeinc.com
TBPLS Licensed Surveying Firm No. 10106502

Copyright 2025

PARCEL PLAT
SHOWING PARCEL 209
36.029 ACRES
FM 2243
WILLIAMSON COUNTY, TEXAS

Scale:	Job No.:	Date:	Page:
1"=100'	7473-00	09/20/2022	9 of 10

CERTIFIED TO BE A TRUE AND CORRECT COPY
NANCY E. RISTER, County Clerk
Williamson County
Page 14 of 38

GENERAL NOTES:

1. BEARING ORIENTATION IS BASED ON THE TEXAS STATE PLANE COORDINATE SYSTEM, CENTRAL ZONE 4203, NAD83. DISTANCES SHOWN HEREON ARE IN SURFACE AND CAN BE CONVERTED TO GRID BY DIVIDING BY THE COMBINED SCALE FACTOR = 1.00012
2. A METES AND BOUNDS DESCRIPTION OF EVEN DATE WAS PREPARED IN CONJUNCTION WITH THIS SKETCH.
3. THIS PARCEL PLAT WAS MADE IN RELIANCE UPON THAT CERTAIN COMMITMENT FOR TITLE INSURANCE ISSUED BY FIRST AMERICAN TITLE GUARANTY COMPANY AND TEXAS NATIONAL TITLE, INC. UNDER G.F. NO. T-163580, DATED EFFECTIVE JULY 13, 2023 AND ISSUED ON JULY 20, 2023.

RESTRICTIVE COVENANT AND EASEMENT NOTES:

10.2 A CHANNEL EASEMENT GRANTED TO STATE OF TEXAS ACTING THROUGH THE STATE HIGHWAY COMMISSION AS DESCRIBED IN VOLUME 409, PAGE 379 OF THE DEED RECORDS OF WILLIAMSON COUNTY, TEXAS, DOES AFFECT THE SUBJECT TRACT, AS SHOWN HEREON.

10.3 ALL TERMS, CONDITIONS AND PROVISIONS OF THAT CERTAIN DEVELOPMENT AGREEMENT OF RECORD IN DOCUMENT NO. 2017015559 OF THE OFFICIAL PUBLIC RECORDS OF WILLIAMSON COUNTY, TEXAS, DO AFFECT THE SUBJECT TRACT.

I hereby certify that this survey was made on the ground by BGE, Inc. under my supervision on May 12, 2022 and is true and correct to the best of my knowledge. The property has access to a public roadway and there are no visible encroachments, except as shown hereon.

STATE OF TEXAS
REGISTERED
JONATHAN O. NOBLES
5777
PROFESSIONAL
LAND SURVEYOR

02/14/2025

JONATHAN O. NOBLES RPLS NO. 5777
BGE, INC.
101 WEST LOUIS HENNA BLVD., SUITE 400
AUSTIN, TEXAS 78728
TELEPHONE: (512) 879-0400

REVISED 7/20/2023 – UPDATED PARCEL BOUNDARY AND UPDATED TITLE COMMITMENT
REVISED 2/14/2025 – UPDATED PARCEL BOUNDARY

BGE, Inc.
101 West Louis Henna Blvd, Suite 400, Austin, TX 78728
Tel: 512-879-0400 • www.bgeinc.com
TBPLS Licensed Surveying Firm No. 10106502

Copyright 2022

PARCEL PLAT
SHOWING PARCEL 209
36.029 ACRES
FM 2243
WILLIAMSON COUNTY, TEXAS

Scale:	Job No.:	Date:	Page:
1"=100'	7473-00	09/20/2022	10 of 10

CERTIFIED TO BE A TRUE AND CORRECT COPY
NANCY E. RISTER, County Clerk
Williamson County
Page 15 of 38

AGREED JUDGMENT
EXHIBIT B-1

CERTIFIED TO BE A TRUE AND
CORRECT COPY
NANCY E. RISTER, County Clerk
Williamson County
Page 10 of 38

EXHIBIT ____

County: Williamson
Parcel: 209D Part 1
Highway: FM 2243

METES & BOUNDS DESCRIPTION FOR EASEMENT PARCEL 209D PART 1

METES & BOUNDS DESCRIPTION FOR A 0.334 ACRE TRACT OF LAND OUT OF THE MILTON HICKS SURVEY, ABSTRACT NO. 287, WILLIAMSON COUNTY, TEXAS; BEING A PORTION OF THE REMAINDER OF A CALLED 168.4 ACRE TRACT OF LAND AS CONVEYED TO CSM-MASON FAMILY, LP BY SPECIAL WARRANTY DEED RECORDED IN DOCUMENT NUMBER 2011086909 OF THE OFFICIAL PUBLIC RECORDS OF WILLIAMSON COUNTY, TEXAS; SAID 0.334 ACRE TRACT OF LAND BEING MORE PARTICULARLY DESCRIBED BY METES AND BOUNDS AS FOLLOWS AND SHOWN ON THE ATTACHED SKETCH:

COMMENCING for POINT OF REFERENCE at a TXDOT Type I concrete monument found on the southeast right-of-way line of FM 2243 (80 feet wide right-of-way) as dedicated by instruments recorded in Volume 409, Page 78 and Volume 409, Page 377, both of the Deed Records of Williamson County, Texas, and the northwest line of the above described CSM-Mason remainder Tract, from which a 1/2-inch iron rod with cap stamped "Stanley Consultants" found on the southeast right-of-way line of said FM 2243, bears along a curve to the right, an arc distance of 224.86 feet, having a radius of 5,769.58 feet, a central angle of 02°13'59" and a chord which bears S 35°16'39" W a distance of 224.85 feet; Thence, with the southeast right-of-way line of said FM 2243 and the northwest line of said CSM-Mason remainder Tract, N 34°00'38" E a distance of 1,317.81 feet to a calculated point; Thence, departing the southeast right-of-way line of said FM 2243, over and across said CSM-Mason Tract, S 82°24'00" E a distance of 317.59 feet to a calculated point (NAD-83, Central Zone Grid Coordinates: N: 10,188,678.36, E: 3,093,304.70) for the northwest corner and **POINT OF BEGINNING** of the herein described tract, 264.00 feet right of FM 2243 baseline station 223+88.93;

THENCE, continuing over and across said CSM-Mason Tract, S 82°24'00" E a distance of 74.62 feet to a 1/2-inch iron rod with cap stamped "WILCO ROW 5777" set for an angle point, 264.00 feet right of FM 2243 baseline station 224+63.55;

THENCE, continuing over and across said CSM-Mason Tract, S 71°05'21" E a distance of 130.07 feet to a 1/2-inch iron rod with cap stamped "WILCO ROW 5777" set for the northeast corner of the herein described tract, 289.51 feet right of FM 2243 baseline station 225+91.09;

THENCE, continuing over and across said CSM-Mason Tract, S 07°36'00" W a distance of 54.49 feet to a calculated point for the southeast corner of the herein described tract;

THENCE, continuing over and across said CSM-Mason Tract, N 82°24'00" W a distance of 202.16 feet to a calculated point for the southwest corner of the herein described tract;

CERTIFIED TO BE A TRUE AND CORRECT COPY
NANCY E. RISTER, County Clerk
Williamson County
Page 17 of 38

THENCE, continuing over and across said CSM-Mason Tract, N 07°36'00" E a distance of 80.00 feet to the **POINT OF BEGINNING** and containing 0.334 acre (14,546 square feet) of land, more or less.

Bearing orientation is based on the Texas State Plane Coordinate System NAD-83, Central Zone 4203. All distances are surface and may be converted to grid by dividing by a scale factor of 1.00012.

I hereby certify that these notes were prepared by BGE from a survey made on the ground under my supervision on May 12, 2022 and are true and correct to the best of my knowledge. A sketch accompanies this description.

07/20/2023
Date

Jonathan O. Nobles RPLS Number 5777
BGE, Inc.
101 West Louis Henna Blvd., Suite 400
Austin, TX 78728
Telephone: 512-879-0400
TBPELS Licensed Surveying Firm Number 10106502

Client:	Williamson County
Date:	September 20, 2022
Revised:	July 20, 2023
Project Number:	7473-00

CERTIFIED TO BE A TRUE AND CORRECT COPY
NANCY E. RISTER, County Clerk
Williamson County
Page 18 of 38

G:\TXC\Projects\County_Williamson\7473-00_RM 2243\06_Survey\04_Final\Drawings\7473-00_P209D P1_EXI.dwg, 7/20/2023 2:36 PM, Stephen Barger

SKETCH TO ACCOMPANY LEGAL DESCRIPTION

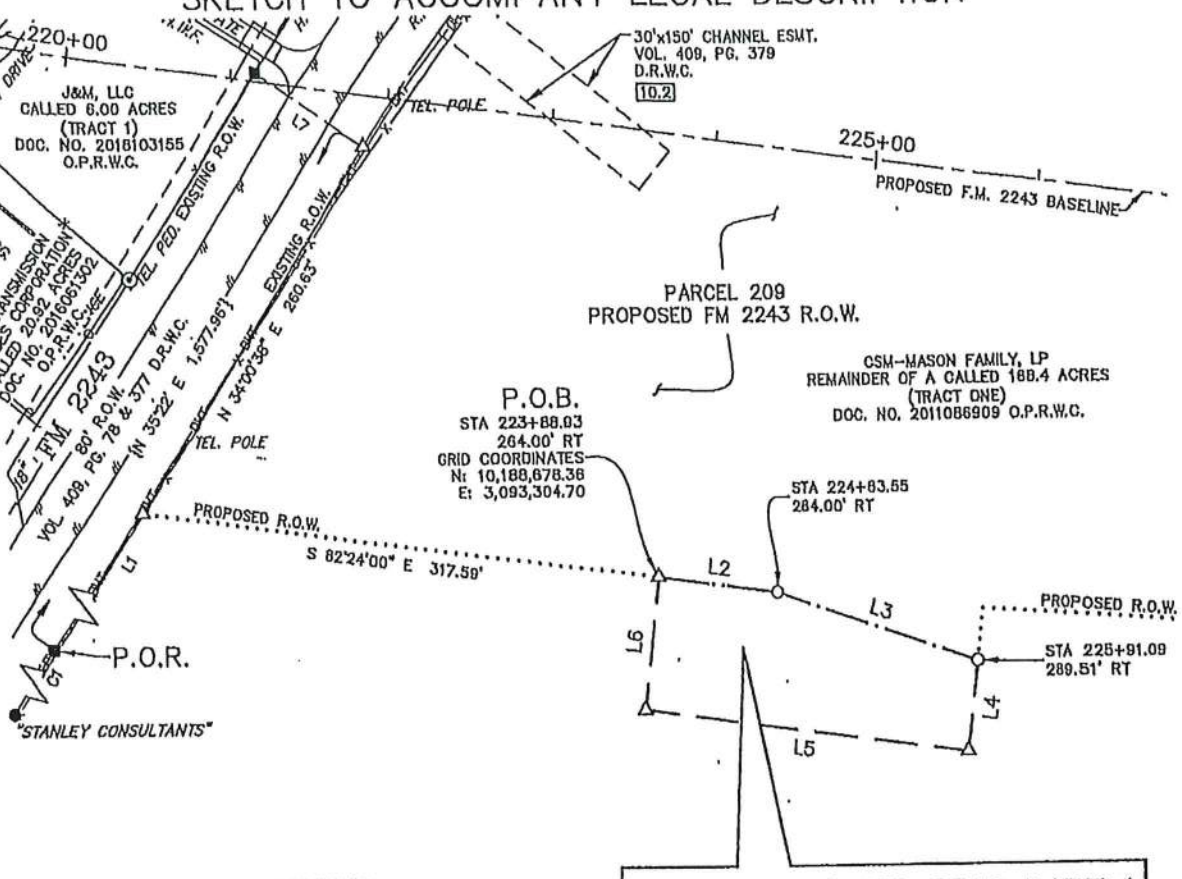

CSM-MASON FAMILY, LP
REMAINDER OF A CALLED 168.4 ACRES
(TRACT ONE)
DOC. NO. 2011086909 O.P.R.W.C.

EASEMENT PARCEL 209D PART 1
0.334 ACRE
14,548 SQUARE FEET
A PORTION OF THE REMAINDER OF A CALLED 168.4 ACRES
(TRACT ONE)
CSM-MASON FAMILY, LP
DOC. NO. 2011086909 O.P.R.W.C.

MILTON HICKS SURVEY, A-237

N

0 100

REVISED 7/20/2023 – UPDATED PARCEL BOUNDARY & ADDED TITLE COMMITMENT INFORMATION

BGE, Inc.
101 West Louis Henna Blvd, Suite 400, Austin, TX 78728
Tel: 512-879-0400 • www.bgeinc.com
TBPLS Licensed Surveying Firm No. 10106502

PARCEL PLAT SHOWING
EASEMENT PARCEL 209D P1
0.334 ACRE
FM 2243
WILLIAMSON COUNTY, TEXAS

Scale:	Job No.:	Date:	Page:
1"=100'	7473-00	09/20/2022	3 of 4

CERTIFIED TO BE A TRUE AND CORRECT COPY
NANCY E. RISTER, County Clerk
Williamson County
Page 19 of 38

RECORDERS MEMORANDUM
All or parts of the text on this page was not clearly legible for satisfactory recordation.

G:\TXC\Projects\County_Williamson\7473-00_RM 2243\06_Survey\04_Finals\Drawings\7473-00_P209D P1_EX1.dwg, 7/20/2023 2:36 PM, Stephen Barger

LEGEND

B.W.F.	BARBED WIRE FENCE
CMP	CORRUGATED METAL PIPE
DOC.	DOCUMENT
D.R.W.C.	DEED RECORDS OF WILLIAMSON COUNTY
ESMT.	EASEMENT
H.W.F.	HOG WIRE FENCE
N.T.S.	NOT TO SCALE
O.P.R.W.C.	OFFICIAL PUBLIC RECORDS OF WILLIAMSON COUNTY
PED.	PEDESTAL
PG.	PAGE
P.O.B.	POINT OF BEGINNING
P.O.R.	POINT OF REFERENCE
R.O.W.	RIGHT-OF-WAY
R.P.	REFLECTOR POST
TEL.	TELEPHONE
VOL.	VOLUME
{ }	RECORD INFO FOR TXDOT FM 2243 R.O.W. MAP DATED MAY 1955 & VOL. 409, PG. 377 D.R.W.C.
■	FOUND TYPE I TXDOT CONCRETE MONUMENT
⊙	FOUND 3/8" IRON PIPE
●	FOUND 1/2" IRON ROD
O	SET 1/2" IRON ROD W/CAP "WILCO ROW 5777"
△	CALCULATED POINT
—x—	WIRE FENCE
—o—	METAL FENCE
—OHT—	OVERHEAD TELEPHONE
—OHP—	OVERHEAD POWER
—/\/\—	EDGE OF ASPHALT

GENERAL NOTES:

1. BEARING ORIENTATION IS BASED ON THE TEXAS STATE PLANE COORDINATE SYSTEM, CENTRAL ZONE 4203, NAD83. DISTANCES SHOWN HEREON ARE IN SURFACE AND CAN BE CONVERTED TO GRID BY DIVIDING BY THE COMBINED SCALE FACTOR = 1.00012
2. A METES AND BOUNDS DESCRIPTION OF EVEN DATE WAS PREPARED IN CONJUNCTION WITH THIS SKETCH.
3. THIS PARCEL PLAT WAS MADE IN RELIANCE UPON THAT CERTAIN COMMITMENT FOR TITLE INSURANCE ISSUED BY FIRST AMERICAN TITLE GUARANTY COMPANY AND TEXAS NATIONAL TITLE, INC. UNDER G.F. NO. T-163580, DATED EFFECTIVE JULY 13, 2023 AND ISSUED ON JULY 20, 2023.

RESTRICTIVE COVENANT AND EASEMENT NOTES:

10.2 A CHANNEL EASEMENT GRANTED TO STATE OF TEXAS ACTING THROUGH THE STATE HIGHWAY COMMISSION AS DESCRIBED IN VOLUME 409, PAGE 379 OF THE DEED RECORDS OF WILLIAMSON COUNTY, TEXAS, DOES NOT AFFECT THE SUBJECT TRACT, AS SHOWN HEREON.

10.3 ALL TERMS, CONDITIONS AND PROVISIONS OF THAT CERTAIN DEVELOPMENT AGREEMENT OF RECORD IN DOCUMENT NO. 2017015559 OF THE OFFICIAL PUBLIC RECORDS OF WILLIAMSON COUNTY, TEXAS, DO AFFECT THE SUBJECT TRACT.

I hereby certify that this survey was made on the ground by BGE, Inc. under my supervision on May 12, 2022 and is true and correct to the best of my knowledge. The property has access to a public roadway and there are no visible encroachments, except as shown hereon.

STATE OF TEXAS
REGISTERED
JONATHAN O. NOBLES
5777
PROFESSIONAL
LAND SURVEYOR

07/20/2023

JONATHAN O. NOBLES RPLS NO. 5777
BGE, INC.
101 WEST LOUIS HENNA BLVD., SUITE 400
AUSTIN, TEXAS 78728
TELEPHONE: (512) 879-0400

LINE TABLE		
NUMBER	BEARING	DISTANCE
L1	N 34°00'38" E	1,317.81'
L2	S 82°24'00" E	74.62'
L3	S 71°05'21" E	130.07'
L4	S 07°36'00" W	54.49'
L5	N 82°24'00" W	202.16'
L6	N 07°36'00" E	80.00'
L7	N 55°59'22" W	80.00'

CURVE TABLE					
NUMBER	ARC LENGTH	RADIUS	DELTA	CHORD BEARING	CHORD DISTANCE
C1	224.86'	5,769.58'	2°13'59"	S 35°16'39" W	224.85'

RECORD CURVE TABLE					
NUMBER	ARC LENGTH	RADIUS	DELTA	CHORD BEARING	CHORD DISTANCE
{C1}		{5,769.58'}			

REVISED 7/20/2023 – UPDATED PARCEL BOUNDARY & ADDED TITLE COMMITMENT INFORMATION

BGE, Inc.
101 West Louis Henna Blvd, Suite 400, Austin, TX 78728
Tel: 512-879-0400 • www.bgeinc.com
TBPLS Licensed Surveying Firm No. 10106502
Copyright 2023

PARCEL PLAT SHOWING EASEMENT PARCEL 209D P1 0.334 ACRE FM 2243 WILLIAMSON COUNTY, TEXAS

Scale:	Job No.:	Date:	Page:
1"=100'	7473-00	09/20/2022	4 of 4

CERTIFIED TO BE A TRUE AND CORRECT COPY
NANCY E. RISTER, County Clerk
Williamson County
Page 20 of 39

AGREED JUDGMENT
EXHIBIT B-2

CERTIFIED TO BE A TRUE AND
CORRECT COPY
NANCY E. RISTER, County Clerk
Williamson County
Page 21 of 38

EXHIBIT ____

County: Williamson
Parcel: 209D Part 2
Highway: FM 2243

METES & BOUNDS DESCRIPTION FOR EASEMENT PARCEL 209D PART 2

METES & BOUNDS DESCRIPTION FOR A 0.099 ACRE TRACT OF LAND OUT OF THE MILTON HICKS SURVEY, ABSTRACT NO. 287, WILLIAMSON COUNTY, TEXAS; BEING A PORTION OF THE REMAINDER OF A CALLED 168.4 ACRE TRACT OF LAND AS CONVEYED TO CSM-MASON FAMILY, LP BY SPECIAL WARRANTY DEED RECORDED IN DOCUMENT NUMBER 2011086909 OF THE OFFICIAL PUBLIC RECORDS OF WILLIAMSON COUNTY, TEXAS; SAID 0.099 ACRE TRACT OF LAND BEING MORE PARTICULARLY DESCRIBED BY METES AND BOUNDS AS FOLLOWS AND SHOWN ON THE ATTACHED SKETCH:

COMMENCING for POINT OF REFERENCE at a TXDOT Type I concrete monument found on the south right-of-way line of said FM 2243 (80 feet wide right-of-way) as dedicated by instruments recorded in Volume 409, Page 78 and Volume 409, Page 377, both of the Deed Records of Williamson County, Texas, and on the north line of the above described CSM-Mason remainder Tract; Thence, with the south right-of-way line of said FM 2243 and the north line of said CSM-Mason remainder Tract, along a curve to the left, an arc distance of 750.78 feet, having a radius of 1,105.92 feet, a central angle of 38°53'48" and a chord which bears N 85°29'31" W a distance of 736.45 feet to a set 1/2-inch iron rod with cap stamped "WILCO ROW 5777"; Thence, departing the south right-of-way line of said FM 2243, over and across said CSM-Mason Tract, S 06°29'15" W a distance of 155.54 feet to a calculated point (NAD-83, Central Zone Grid Coordinates: N: 10,189,231.89, E: 3,093,749.77) for the northwest corner and **POINT OF BEGINNING** of the herein described tract, 343.60 feet left of FM 2243 baseline station 227+56.94;

THENCE, continuing over and across said CSM-Mason Tract, S 83°30'45" E a distance of 13.00 feet to a calculated angle point;

THENCE, continuing over and across said CSM-Mason Tract, S 37°57'23" E a distance of 57.11 feet to a calculated angle point;

THENCE, continuing over and across said CSM-Mason Tract, S 82°24'01" E a distance of 96.29 feet to a calculated point for the northeast corner of the herein described tract;

THENCE, continuing over and across said CSM-Mason Tract, S 07°35'59" W a distance of 20.00 feet to a calculated point for the southeast corner of the herein described tract, 283.86 feet left of FM 2243 baseline station 229+07.00;

THENCE, continuing over and across said CSM-Mason Tract, N 82°24'01" W a distance of 148.90 feet to a 1/2-inch iron rod with cap stamped "WILCO ROW 5777" set for the southwest corner of the herein described tract, 283.86 feet left of FM 2243 baseline station 227+58.10;

CERTIFIED TO BE A TRUE AND CORRECT COPY
NANCY E. RISTER, County Clerk
Williamson County
Page 22 of 38

THENCE, continuing over and across said CSM-Mason Tract, N 06°29'15" E a distance of 59.75 feet to the **POINT OF BEGINNING** and containing 0.099 acre (4,300 square feet) of land, more or less.

Bearing orientation is based on the Texas State Plane Coordinate System NAD-83, Central Zone 4203. All distances are surface and may be converted to grid by dividing by a scale factor of 1.00012.

I hereby certify that these notes were prepared by BGE from a survey made on the ground under my supervision on May 12, 2022 and are true and correct to the best of my knowledge. A sketch accompanies this description.

02/14/2025
Date

Jonathan O. Nobles RPLS Number 5777
BGE, Inc.
101 West Louis Henna Blvd., Suite 400
Austin, TX 78728
Telephone: 512-879-0400
TBPELS Licensed Surveying Firm Number 10106500

Client:	Williamson County
Date:	September 20, 2022
Revised:	February 14, 2025
Project Number:	7473-00

CERTIFIED TO BE A TRUE AND CORRECT COPY
NANCY E. RISTER, County Clerk
Williamson County
Page 23 of 38

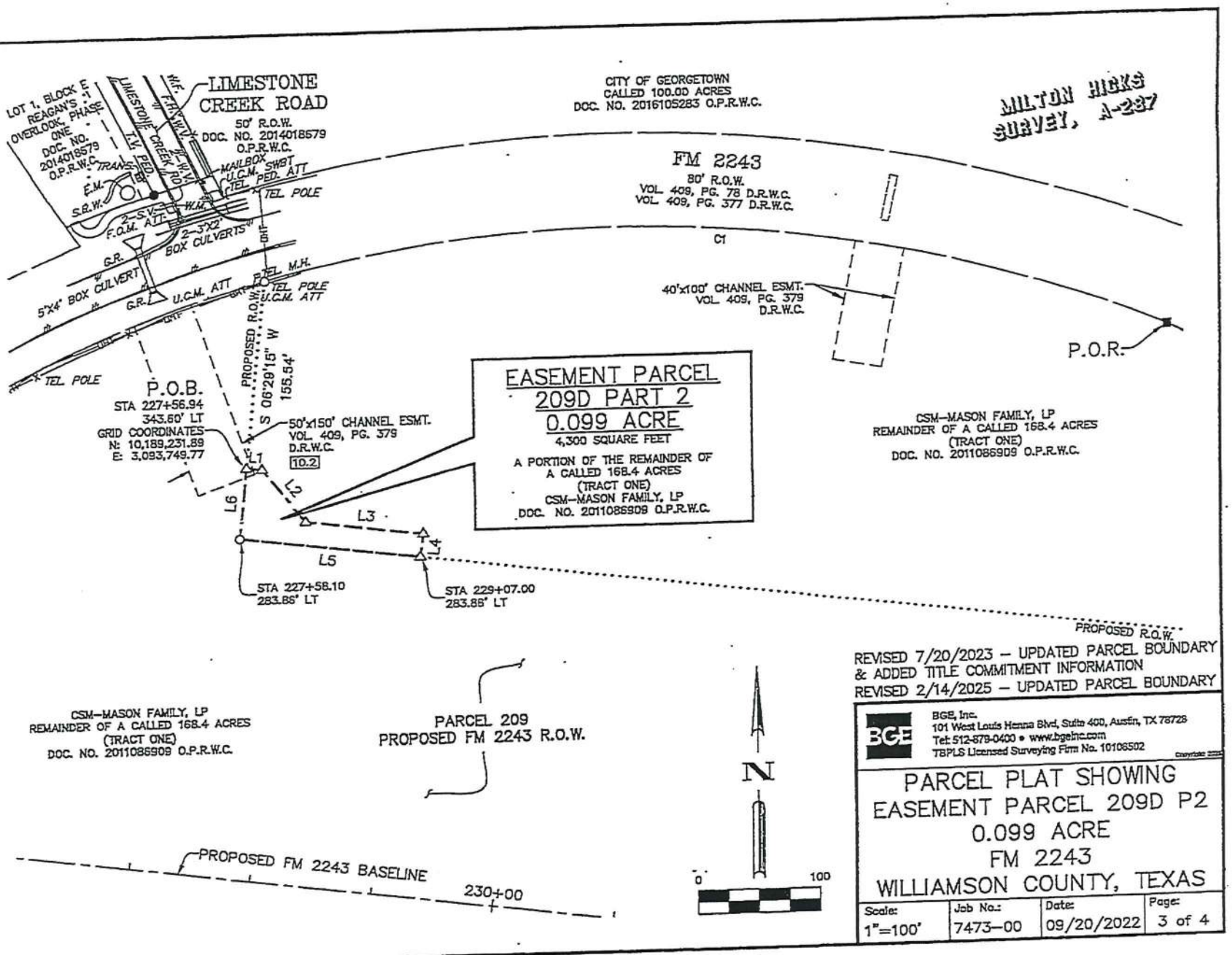

REVISED 7/20/2023 – UPDATED PARCEL BOUNDARY & ADDED TITLE COMMITMENT INFORMATION
REVISED 2/14/2025 – UPDATED PARCEL BOUNDARY

BGE, Inc.
101 West Louis Henna Blvd, Suite 400, Austin, TX 78728
Tel: 512-879-0400 • www.bgeinc.com
TBPLS Licensed Surveying Firm No. 10106502

PARCEL PLAT SHOWING
EASEMENT PARCEL 209D P2
0.099 ACRE
FM 2243
WILLIAMSON COUNTY, TEXAS

Scale:	Job No.:	Date:	Page:
1"=100'	7473-00	09/20/2022	3 of 4

\\bgeinc\data\TX0\Projects\County_Williamson\7473-00_RM 2243\08_Survey\04_Finals\Drawings\7473-00_P209D P2_EX1.dwg, 2/14/2025 2:47 PM, Andrea Hlenar

CERTIFIED TO BE A TRUE AND CORRECT COPY
NANCY E. RISTER, County Clerk
Williamson County
Page 24 of 38

RECORDERS MEMORANDUM
All or parts of the text on this page was not clearly legible for satisfactory recordation.

bgeinc\data\TXC Projects\County_Williamson\7473-00_RM 2243\08_Survey\04_Finals\Drawings\7473-00_P209D P2_EX1.dwg, 2/14/2025 2:47 PM, Andrea Hiener

LEGEND

DOC.	DOCUMENT
D.R.W.C.	DEED RECORDS OF WILLIAMSON COUNTY
E.M.	ELECTRIC METER
ESMT.	EASEMENT
F.H.	FIRE HYDRANT
F.O.M.	FIBER OPTIC MARKER
G.R.	GUARD RAIL
M.H.	MANHOLE
NO.	NUMBER
O.P.R.W.C.	OFFICIAL PUBLIC RECORDS OF WILLIAMSON COUNTY
PED.	PEDESTAL
PG.	PAGE
P.O.B.	POINT OF BEGINNING
P.O.R.	POINT OF REFERENCE
R.O.W.	RIGHT-OF-WAY
S.R.W.	STONE RETAINING WALL
S.V.	SPRINKLER VALVE
TEL.	TELEPHONE
TRANS.	TRANSFORMER
T.V.	TELEVISION
U.C.M.	UNDERGROUND CABLE MARKER
VOL.	VOLUME
W.M.	WATER METER
W.W.	WATER WELL
{ }	RECORD INFO FOR TXDOT FM 2243 R.O.W. MAP DATED MAY 1955 & VOL. 409, PG. 377 D.R.W.C.
●	FOUND 1/2" IRON ROD (UNLESS OTHERWISE NOTED)
▣	FOUND TYPE I TXDOT CONCRETE MONUMENT
O	SET 1/2-INCH IRON ROD W/CAP "WILCO ROW 5777"
△	CALCULATED POINT
—x—	WIRE FENCE
—OHT—	OVERHEAD TELEPHONE
—⌀—	EDGE OF ASPHALT

GENERAL NOTES:

1. BEARING ORIENTATION IS BASED ON THE TEXAS STATE PLANE COORDINATE SYSTEM, CENTRAL ZONE 4203, NAD83. DISTANCES SHOWN HEREON ARE IN SURFACE AND CAN BE CONVERTED TO GRID BY DIVIDING BY THE COMBINED SCALE FACTOR = 1.00012
2. A METES AND BOUNDS DESCRIPTION OF EVEN DATE WAS PREPARED IN CONJUNCTION WITH THIS SKETCH.
3. THIS PARCEL PLAT WAS MADE IN RELIANCE UPON THAT CERTAIN COMMITMENT FOR TITLE INSURANCE ISSUED BY FIRST AMERICAN TITLE GUARANTY COMPANY AND TEXAS NATIONAL TITLE, INC. UNDER G.F. NO. T-163580, DATED EFFECTIVE JULY 13, 2023 AND ISSUED ON JULY 20 2023.

RESTRICTIVE COVENANT AND EASEMENT NOTES:

10.2 A CHANNEL EASEMENT GRANTED TO STATE OF TEXAS ACTING THROUGH THE STATE HIGHWAY COMMISSION AS DESCRIBED IN VOLUME 409, PAGE 379 OF THE DEED RECORDS OF WILLIAMSON COUNTY, TEXAS, DOES AFFECT THE SUBJECT TRACT, AS SHOWN HEREON.

10.3 ALL TERMS, CONDITIONS AND PROVISIONS OF THAT CERTAIN DEVELOPMENT AGREEMENT OF RECORD IN DOCUMENT NO. 2017015559 OF THE OFFICIAL PUBLIC RECORDS OF WILLIAMSON COUNTY, TEXAS, DO AFFECT THE SUBJECT TRACT.

CURVE TABLE

NUMBER	ARC LENGTH	RADIUS	DELTA	CHORD BEARING	CHORD DISTANCE
C1	750.78'	1,105.92'	38°53'48"	N 85°29'31" W	736.45'

RECORD CURVE TABLE

NUMBER	ARC LENGTH	RADIUS	DELTA	CHORD BEARING	CHORD DISTANCE
{C1}		{1,105.92'}			

LINE TABLE

NUMBER	BEARING	DISTANCE
L1	S 83°30'45" E	13.00'
L2	S 37°57'23" E	57.11'
L3	S 82°24'01" E	96.29'
L4	S 07°35'59" W	20.00'
L5	N 82°24'01" W	148.90'
L6	N 06°29'15" E	59.75'

I hereby certify that this survey was made on the ground by BGE, Inc. under my supervision on May 12, 2022 and is true and correct to the best of my knowledge. There are no visible encroachments, except as shown hereon.

STATE OF TEXAS
REGISTERED
JONATHAN O. NOBLES
5777
PROFESSIONAL
LAND SURVEYOR

02/14/2025

JONATHAN O. NOBLES RPLS NO. 5777
BGE, INC.
101 WEST LOUIS HENNA BLVD., SUITE 400
AUSTIN, TEXAS 78728
TELEPHONE: (512) 879-0400

REVISED 7/20/2023 – UPDATED PARCEL BOUNDARY & ADDED TITLE COMMITMENT INFORMATION
REVISED 2/14/2025 – UPDATED PARCEL BOUNDARY

BGE, Inc.
101 West Louis Henna Blvd, Suite 400, Austin, TX 78728
Tel: 512-879-0400 • www.bgeinc.com
TBPLS Licensed Surveying Firm No. 10108502

PARCEL PLAT SHOWING
EASEMENT PARCEL 209D P2
0.099 ACRE
FM 2243
WILLIAMSON COUNTY, TEXAS

Scale:	Job No.:	Date:	Page:
1"=100'	7473-00	09/20/2022	4 of 4

CERTIFIED TO BE A TRUE AND CORRECT COPY
NANCY E. RISTER, County Clerk
Williamson County
Page 25 of 38

AGREED JUDGMENT
EXHIBIT C

CERTIFIED TO BE A TRUE AND
CORRECT COPY
NANCY E. RISTER, County Clerk
Williamson County
Page 26 of 38

NONEXCLUSIVE DRAINAGE EASEMENT
Hero Way

THE STATE OF TEXAS §
§ KNOW ALL BY THESE PRESENTS:
COUNTY OF WILLIAMSON §

That **CSM-MASON FAMILY, LP** ("Grantor"), under threat of a pending condemnation proceeding and in partial settlement of such proceeding, without warranty of title, and subject to the exceptions, reservations, and limitations herein, for and in consideration of the sum of Ten and No/100 ($10.00) Dollars cash in hand paid and other good and valuable consideration paid to Grantor, receipt of which consideration is hereby acknowledged, grants and conveys to **WILLIAMSON COUNTY, TEXAS** ("Grantee") and its Permitted Assigns (as defined below) a nonexclusive, perpetual easement interest in, on, over, upon and across the following property (the "Easement Areas"):

Part One
All of that certain 0.334-acre tract of land out of the Milton Hicks Survey, Abstract No. 287, Williamson County, Texas, being further described by metes and bounds in Exhibit "B-1" attached hereto and incorporated herein (Parcel 209D1); and

Part Two
All of that certain 0.099-acre tract of land out of the Milton Hicks Survey, Abstract No. 287, Williamson County, Texas, being further described by metes and bounds in Exhibit "B-2" attached hereto and incorporated herein (Parcel 209D2); and

The easement rights herein granted shall be used solely for the purposes of: (i) opening, constructing, and maintaining a permanent drainage way and/or channel, along with any related structures, pipes and grading which may be necessary to facilitate the proper drainage of the adjacent property and roadway facilities across, upon, in, and along the Easement Areas; and (ii) the right and privilege at all times of the Grantee and Grantee's agents, employees, and representatives of ingress and egress across the Easement Areas for the purpose of making any improvements, modifications or repairs which Grantee deems necessary and related to the purposes set forth in (i) above.

The easement rights herein granted shall also include the right of Grantee to trim, cut, fell and remove from the Easement Areas all trees, underbrush, vegetation, and obstructions, structures or obstacles within the limits of the Easement Areas, but only such as necessary to carry out the purposes of the easement rights set out above.

Grantor reserves to itself and its successors and assigns all rights to make use of the Easement Areas that do not unreasonably interfere with the easement rights and purposes granted to Grantee herein. Without limiting the foregoing, Grantor can cross the Easement Areas with

CERTIFIED TO BE A TRUE AND
CORRECT COPY
NANCY E. RISTER, County Clerk
Williamson County
Page 27 of 38

driveways, roads, sidewalks, alleys, trails and utilities and install other improvements that do not unreasonably interfere with the easement rights and purposes granted to Grantee herein, all subject to Grantee's approval, which approval will not be unreasonably conditioned, delayed, or denied.

GRANTEE REPRESENTS AND AGREES THAT GRANTEE IS TAKING ITS RIGHTS IN THE EASEMENT AREAS "AS IS, WHERE IS AND WITH ALL FAULTS" AND WITHOUT ANY WARRANTIES OR REPRESENTATIONS OF ANY KIND OR CHARACTER, EXPRESS OR IMPLIED, WITH RESPECT TO THE EASEMENT PROPERTY, GRANTOR'S REMAINING PROPERTY, OR ACCESS THERETO, WHETHER EXPRESS, STATUTORY, IMPLIED OR OTHERWISE. GRANTEE DISCLAIMS ANY WARRANTIES AND REPRESENTATIONS, EXPRESS, STATUTORY, IMPLIED, OR OTHERWISE, REGARDING THE SUITABILITY OF THE EASEMENT PROPERTY FOR GRANTEE'S INTENDED USES, AND GRANTEE REPRESENTS AND WARRANTS TO GRANTOR THAT GRANTEE IS RELYING SOLELY ON ITS OWN INDEPENDENT INSPECTIONS TO DETERMINE SUCH SUITABILITY. Grantee expressly acknowledges and agrees that: (i) dangerous conditions, risks and hazards may exist on the Easement Areas, including, but not limited to uneven terrain, holes, snakes, dangerous wildlife, trespassers, and livestock; and (ii) entry on to the Easement Areas exposes Grantee and Grantee's agents, representatives, employees, contractors, and subcontractors and property, to the dangers and perils associated thereon including personal injury, property damage, and even death. Prior to commencing any work on, in, under, and/or through the Easement Areas, Grantee shall complete a proper inspection and survey to locate all existing pipelines, oil and gas infrastructure, utilities, and all other surface and subsurface improvements (collectively "Other Facilities") in or near the Easement Areas and to avoid any interference with such Other Facilities. Without limiting the foregoing, Grantee waives all claims against Grantor for any unknown or subsurface conditions and assumes liability therefor.

To the extent allowed by law, Grantee shall indemnify Grantor, and Grantor's partners, representatives, successors, and assigns, against any loss and damage which shall be caused by the exercise of the easement rights herein granted and for any wrongful or negligent act or omission of Grantee's agents or Grantee's employees acting in the course of their employment with Grantee. Grantee shall be responsible for the correction of, or compensation for, any damage to Grantor's property which is the result of actions outside the granted scope of this easement.

Grantee may assign this easement agreement to the State of Texas or to any other governmental entity that will operate and maintain the drainage improvements permitted by this Easement Agreement ("Permitted Assigns"), provided, however, any such assignment will not relieve Grantee of any responsibility for acts or omissions occurring before such assignment. By accepting an assignment of this Easement Agreement, the assignees agree to be bound by the terms of this Easement Agreement.

This grant is made without warranty of title of any kind (express, implied, statutory, or arising by use of any word or phrase) and is made subject to: (i) any easements, restrictions,

CERTIFIED TO BE A TRUE AND CORRECT COPY
NANCY E. RISTER, County Clerk
Williamson County
Page 28 of 38

reservations, covenants, conditions, oil and gas leases, mineral severances, and encumbrances for taxes and assessments (other than liens and conveyances) presently of record in the Official Public Records of Williamson County, Texas, that affect the Easement Areas; and (ii) visible and apparent encumbrances whether or not of record. The easement rights granted to Grantee herein are non-exclusive, however Grantor covenants not to convey any other easement or conflicting rights within the Easement Areas that unreasonably interfere with the purpose or function of any improvements or modifications placed in the Easement Areas in accordance with the terms of this Easement Agreement or the maintenance of the surface of the Easement Areas by Grantor for the conveyance of stormwater drainage in accordance with the terms of this Easement Agreement, without the express written consent of Grantee, which consent shall not be unreasonably withheld, delayed, or conditioned.

EXECUTED on this the ___ day of _____, 2025.

GRANTOR CSM-MASON FAMILY, LP

By: _____

Its: _____

ACKNOWLEDGMENT

STATE OF TEXAS §
§
COUNTY OF WILLIAMSON §

This instrument was acknowledged before me on this the ____ day of _____, 202___ by {name}, in the capacity and for the purposes and consideration recited herein.

_____
Notary Public, State of Texas

CERTIFIED TO BE A TRUE AND CORRECT COPY
NANCY E. RISTER, County Clerk
Williamson County
Page 29 of 38

GRANTEE WILLIAMSON COUNTY, TEXAS

By: _____

Its: _____

ACKNOWLEDGMENT

STATE OF TEXAS §
§
COUNTY OF WILLIAMSON §

This instrument was acknowledged before me on this the ____ day of _____, 202___ by {name}, in the capacity and for the purposes and consideration recited herein.

_____
Notary Public, State of Texas

CERTIFIED TO BE A TRUE AND CORRECT COPY
NANCY E. RISTER, County Clerk
Williamson County
Page 30 of 38

EXHIBIT ____

County: Williamson
Parcel: 209D Part 1
Highway: FM 2243

METES & BOUNDS DESCRIPTION FOR EASEMENT PARCEL 209D PART 1

METES & BOUNDS DESCRIPTION FOR A 0.334 ACRE TRACT OF LAND OUT OF THE MILTON HICKS SURVEY, ABSTRACT NO. 287, WILLIAMSON COUNTY, TEXAS; BEING A PORTION OF THE REMAINDER OF A CALLED 168.4 ACRE TRACT OF LAND AS CONVEYED TO CSM-MASON FAMILY, LP BY SPECIAL WARRANTY DEED RECORDED IN DOCUMENT NUMBER 2011086909 OF THE OFFICIAL PUBLIC RECORDS OF WILLIAMSON COUNTY, TEXAS; SAID 0.334 ACRE TRACT OF LAND BEING MORE PARTICULARLY DESCRIBED BY METES AND BOUNDS AS FOLLOWS AND SHOWN ON THE ATTACHED SKETCH:

COMMENCING for POINT OF REFERENCE at a TXDOT Type I concrete monument found on the southeast right-of-way line of FM 2243 (80 feet wide right-of-way) as dedicated by instruments recorded in Volume 409, Page 78 and Volume 409, Page 377, both of the Deed Records of Williamson County, Texas, and the northwest line of the above described CSM-Mason remainder Tract, from which a 1/2-inch iron rod with cap stamped "Stanley Consultants" found on the southeast right-of-way line of said FM 2243, bears along a curve to the right, an arc distance of 224.86 feet, having a radius of 5,769.58 feet, a central angle of 02°13'59" and a chord which bears S 35°16'39" W a distance of 224.85 feet; Thence, with the southeast right-of-way line of said FM 2243 and the northwest line of said CSM-Mason remainder Tract, N 34°00'38" E a distance of 1,317.81 feet to a calculated point; Thence, departing the southeast right-of-way line of said FM 2243, over and across said CSM-Mason Tract, S 82°24'00" E a distance of 317.59 feet to a calculated point (NAD-83, Central Zone Grid Coordinates: N: 10,188,678.36, E: 3,093,304.70) for the northwest corner and **POINT OF BEGINNING** of the herein described tract, 264.00 feet right of FM 2243 baseline station 223+88.93;

THENCE, continuing over and across said CSM-Mason Tract, S 82°24'00" E a distance of 74.62 feet to a 1/2-inch iron rod with cap stamped "WILCO ROW 5777" set for an angle point, 264.00 feet right of FM 2243 baseline station 224+63.55;

THENCE, continuing over and across said CSM-Mason Tract, S 71°05'21" E a distance of 130.07 feet to a 1/2-inch iron rod with cap stamped "WILCO ROW 5777" set for the northeast corner of the herein described tract, 289.51 feet right of FM 2243 baseline station 225+91.09;

THENCE, continuing over and across said CSM-Mason Tract, S 07°36'00" W a distance of 54.49 feet to a calculated point for the southeast corner of the herein described tract;

THENCE, continuing over and across said CSM-Mason Tract, N 82°24'00" W a distance of 202.16 feet to a calculated point for the southwest corner of the herein described tract;

CERTIFIED TO BE A TRUE AND CORRECT COPY
NANCY E. RISTER, County Clerk
Williamson County
Page 31 of 38

THENCE, continuing over and across said CSM-Mason Tract, N 07°36'00" E a distance of 80.00 feet to the **POINT OF BEGINNING** and containing 0.334 acre (14,546 square feet) of land, more or less.

Bearing orientation is based on the Texas State Plane Coordinate System NAD-83, Central Zone 4203. All distances are surface and may be converted to grid by dividing by a scale factor of 1.00012.

I hereby certify that these notes were prepared by BGE from a survey made on the ground under my supervision on May 12, 2022 and are true and correct to the best of my knowledge. A sketch accompanies this description.

07/20/2023
Date

Jonathan O. Nobles RPLS Number 5777
BGE, Inc.
101 West Louis Henna Blvd., Suite 400
Austin, TX 78728
Telephone: 512-879-0400
TBPELS Licensed Surveying Firm Number 10106502

Client:	Williamson County
Date:	September 20, 2022
Revised:	July 20, 2023
Project Number:	7473-00

CERTIFIED TO BE A TRUE AND CORRECT COPY
NANCY E. RISTER, County Clerk
Williamson County
Page 32 of 38

G:\TXC\Projects\County_Williamson\7473-00_RM 2243\08_Survey\04_Finals\Drawings\7473-00_P209D P1_EXI.dwg, 7/20/2023 2:36 PM, Stephen Berger

SKETCH TO ACCOMPANY LEGAL DESCRIPTION

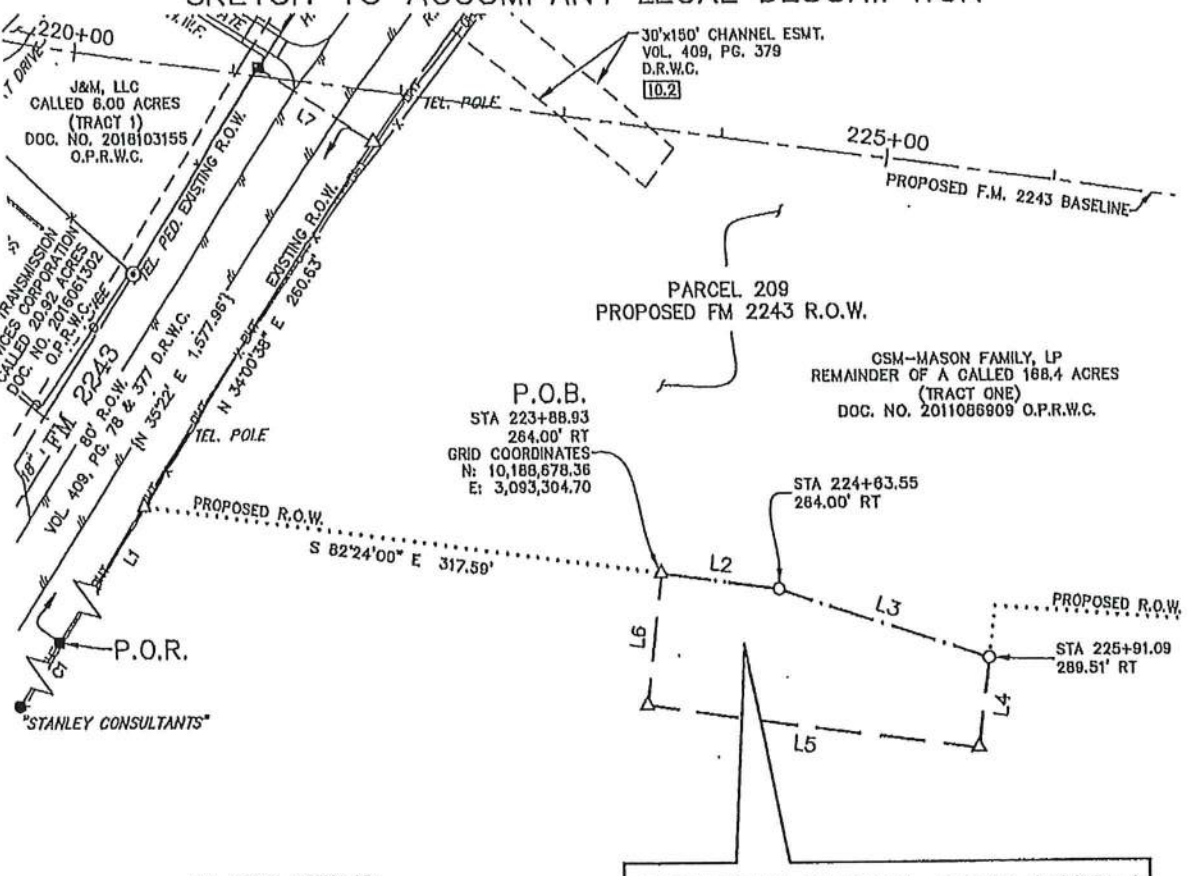

EASEMENT PARCEL 209D PART 1
0.334 ACRE
14,546 SQUARE FEET

A PORTION OF THE REMAINDER OF A CALLED 168.4 ACRES
(TRACT ONE)
CSM-MASON FAMILY, LP
DOC. NO. 2011086909 O.P.R.W.C.

MILTON HICKS SURVEY, A-237

REVISED 7/20/2023 – UPDATED PARCEL BOUNDARY & ADDED TITLE COMMITMENT INFORMATION

N

0 100

CERTIFIED TO BE A TRUE AND CORRECT COPY
NANCY E. RISTER, County Clerk
Williamson County
Page 33 of 38

BGE, Inc.
101 West Louis Henna Blvd, Suite 400, Austin, TX 78728
Tel: 512-879-0400 • www.bgeinc.com
TBPLS Licensed Surveying Firm No. 10106502

Copyright 2021

PARCEL PLAT SHOWING
EASEMENT PARCEL 209D P1
0.334 ACRE
FM 2243
WILLIAMSON COUNTY, TEXAS

Scale:	Job No.:	Date:	Page:
1"=100'	7473-00	09/20/2022	3 of 4

RECORDERS MEMORANDUM
All or parts of the text on this page was not clearly legible for satisfactory recordation.

G:\TXC\Projects\County_Williamson\7473-00_RM 2243\06_Survey\04_Finals\Drawings\7473-00_P209D P1_EX1.dwg, 7/20/2023 2:36 PM, Stephen Borger

LEGEND

B.W.F.	BARBED WIRE FENCE
CMP	CORRUGATED METAL PIPE
DOC.	DOCUMENT
D.R.W.C.	DEED RECORDS OF WILLIAMSON COUNTY
ESMT.	EASEMENT
H.W.F.	HOG WIRE FENCE
N.T.S.	NOT TO SCALE
O.P.R.W.C.	OFFICIAL PUBLIC RECORDS OF WILLIAMSON COUNTY
PED.	PEDESTAL
PG.	PAGE
P.O.B.	POINT OF BEGINNING
P.O.R.	POINT OF REFERENCE
R.O.W.	RIGHT-OF-WAY
R.P.	REFLECTOR POST
TEL.	TELEPHONE
VOL.	VOLUME
{ }	RECORD INFO FOR TXDOT FM 2243 R.O.W. MAP DATED MAY 1955 & VOL. 409, PG. 377 D.R.W.C.
■	FOUND TYPE I TXDOT CONCRETE MONUMENT
⊙	FOUND 3/8" IRON PIPE
●	FOUND 1/2" IRON ROD
○	SET 1/2" IRON ROD W/CAP "WILCO ROW 5777"
△	CALCULATED POINT
—x—	WIRE FENCE
—o—	METAL FENCE
—OHT—	OVERHEAD TELEPHONE
—OHP—	OVERHEAD POWER
—/\—	EDGE OF ASPHALT

GENERAL NOTES:

1. BEARING ORIENTATION IS BASED ON THE TEXAS STATE PLANE COORDINATE SYSTEM, CENTRAL ZONE 4203, NAD83. DISTANCES SHOWN HEREON ARE IN SURFACE AND CAN BE CONVERTED TO GRID BY DIVIDING BY THE COMBINED SCALE FACTOR = 1.00012
2. A METES AND BOUNDS DESCRIPTION OF EVEN DATE WAS PREPARED IN CONJUNCTION WITH THIS SKETCH.
3. THIS PARCEL PLAT WAS MADE IN RELIANCE UPON THAT CERTAIN COMMITMENT FOR TITLE INSURANCE ISSUED BY FIRST AMERICAN TITLE GUARANTY COMPANY AND TEXAS NATIONAL TITLE, INC. UNDER G.F. NO. T-163580, DATED EFFECTIVE JULY 13, 2023 AND ISSUED ON JULY 20, 2023.

RESTRICTIVE COVENANT AND EASEMENT NOTES:

10.2 A CHANNEL EASEMENT GRANTED TO STATE OF TEXAS ACTING THROUGH THE STATE HIGHWAY COMMISSION AS DESCRIBED IN VOLUME 409, PAGE 379 OF THE DEED RECORDS OF WILLIAMSON COUNTY, TEXAS, DOES NOT AFFECT THE SUBJECT TRACT, AS SHOWN HEREON.

10.3 ALL TERMS, CONDITIONS AND PROVISIONS OF THAT CERTAIN DEVELOPMENT AGREEMENT OF RECORD IN DOCUMENT NO. 2017015559 OF THE OFFICIAL PUBLIC RECORDS OF WILLIAMSON COUNTY, TEXAS, DO AFFECT THE SUBJECT TRACT.

I hereby certify that this survey was made on the ground by BGE, Inc. under my supervision on May 12, 2022 and is true and correct to the best of my knowledge. The property has access to a public roadway and there are no visible encroachments, except as shown hereon.

STATE OF TEXAS
REGISTERED
JONATHAN O. NOBLES
5777
PROFESSIONAL
LAND SURVEYOR

07/20/2023

JONATHAN O. NOBLES RPLS NO. 5777
BGE, INC.
101 WEST LOUIS HENNA BLVD., SUITE 400
AUSTIN, TEXAS 78728
TELEPHONE: (512) 879-0400

LINE TABLE		
NUMBER	BEARING	DISTANCE
L1	N 34°00'38" E	1,317.81'
L2	S 82°24'00" E	74.62'
L3	S 71°05'21" E	130.07'
L4	S 07°36'00" W	54.49'
L5	N 82°24'00" W	202.16'
L6	N 07°36'00" E	80.00'
L7	N 55°59'22" W	80.00'

REVISED 7/20/2023 – UPDATED PARCEL BOUNDARY & ADDED TITLE COMMITMENT INFORMATION

CURVE TABLE					
NUMBER	ARC LENGTH	RADIUS	DELTA	CHORD BEARING	CHORD DISTANCE
C1	224.86'	5,769.58'	2°13'59"	S 35°16'39" W	224.85'

RECORD CURVE TABLE					
NUMBER	ARC LENGTH	RADIUS	DELTA	CHORD BEARING	CHORD DISTANCE
{C1}		{5,769.58'}			

BGE, Inc.
101 West Louis Henna Blvd, Suite 400, Austin, TX 78728
Tel: 512-879-0400 • www.bgeinc.com
TBPLS Licensed Surveying Firm No. 10108502
Copyright 2021

PARCEL PLAT SHOWING EASEMENT PARCEL 209D P1 0.334 ACRE FM 2243 WILLIAMSON COUNTY, TEXAS

Scale:	Job No.:	Date:	Page:
1"=100'	7473-00	09/20/2022	4 of 4

CERTIFIED TO BE A TRUE AND CORRECT COPY
NANCY E. RISTER, County Clerk
Williamson County
Page 34 of 38

EXHIBIT ____

County: Williamson
Parcel: 209D Part 2
Highway: FM 2243

METES & BOUNDS DESCRIPTION FOR EASEMENT PARCEL 209D PART 2

METES & BOUNDS DESCRIPTION FOR A 0.099 ACRE TRACT OF LAND OUT OF THE MILTON HICKS SURVEY, ABSTRACT NO. 287, WILLIAMSON COUNTY, TEXAS; BEING A PORTION OF THE REMAINDER OF A CALLED 168.4 ACRE TRACT OF LAND AS CONVEYED TO CSM-MASON FAMILY, LP BY SPECIAL WARRANTY DEED RECORDED IN DOCUMENT NUMBER 2011086909 OF THE OFFICIAL PUBLIC RECORDS OF WILLIAMSON COUNTY, TEXAS; SAID 0.099 ACRE TRACT OF LAND BEING MORE PARTICULARLY DESCRIBED BY METES AND BOUNDS AS FOLLOWS AND SHOWN ON THE ATTACHED SKETCH:

COMMENCING for POINT OF REFERENCE at a TXDOT Type I concrete monument found on the south right-of-way line of said FM 2243 (80 feet wide right-of-way) as dedicated by instruments recorded in Volume 409, Page 78 and Volume 409, Page 377, both of the Deed Records of Williamson County, Texas, and on the north line of the above described CSM-Mason remainder Tract; Thence, with the south right-of-way line of said FM 2243 and the north line of said CSM-Mason remainder Tract, along a curve to the left, an arc distance of 750.78 feet, having a radius of 1,105.92 feet, a central angle of 38°53'48" and a chord which bears N 85°29'31" W a distance of 736.45 feet to a set 1/2-inch iron rod with cap stamped "WILCO ROW 5777"; Thence, departing the south right-of-way line of said FM 2243, over and across said CSM-Mason Tract, S 06°29'15" W a distance of 155.54 feet to a calculated point (NAD-83, Central Zone Grid Coordinates: N: 10,189,231.89, E: 3,093,749.77) for the northwest corner and **POINT OF BEGINNING** of the herein described tract, 343.60 feet left of FM 2243 baseline station 227+56.94;

THENCE, continuing over and across said CSM-Mason Tract, S 83°30'45" E a distance of 13.00 feet to a calculated angle point;

THENCE, continuing over and across said CSM-Mason Tract, S 37°57'23" E a distance of 57.11 feet to a calculated angle point;

THENCE, continuing over and across said CSM-Mason Tract, S 82°24'01" E a distance of 96.29 feet to a calculated point for the northeast corner of the herein described tract;

THENCE, continuing over and across said CSM-Mason Tract, S 07°35'59" W a distance of 20.00 feet to a calculated point for the southeast corner of the herein described tract, 283.86 feet left of FM 2243 baseline station 229+07.00;

THENCE, continuing over and across said CSM-Mason Tract, N 82°24'01" W a distance of 148.90 feet to a 1/2-inch iron rod with cap stamped "WILCO ROW 5777" set for the southwest corner of the herein described tract, 283.86 feet left of FM 2243 baseline station 227+58.10;

CERTIFIED TO BE A TRUE AND CORRECT COPY
NANCY E. RISTER, County Clerk
Williamson County

THENCE, continuing over and across said CSM-Mason Tract, N 06°29'15" E a distance of 59.75 feet to the **POINT OF BEGINNING** and containing 0.099 acre (4,300 square feet) of land, more or less.

Bearing orientation is based on the Texas State Plane Coordinate System NAD-83, Central Zone 4203. All distances are surface and may be converted to grid by dividing by a scale factor of 1.00012.

I hereby certify that these notes were prepared by BGE from a survey made on the ground under my supervision on May 12, 2022 and are true and correct to the best of my knowledge. A sketch accompanies this description.

02/14/2025
Date

Jonathan O. Nobles RPLS Number 5777
BGE, Inc.
101 West Louis Henna Blvd., Suite 400
Austin, TX 78728
Telephone: 512-879-0400
TBPELS Licensed Surveying Firm Number 10106500

Client:	Williamson County
Date:	September 20, 2022
Revised:	February 14, 2025
Project Number:	7473-00

CERTIFIED TO BE A TRUE AND CORRECT COPY
NANCY E. RISTER, County Clerk
Williamson County
Page 36 of 38

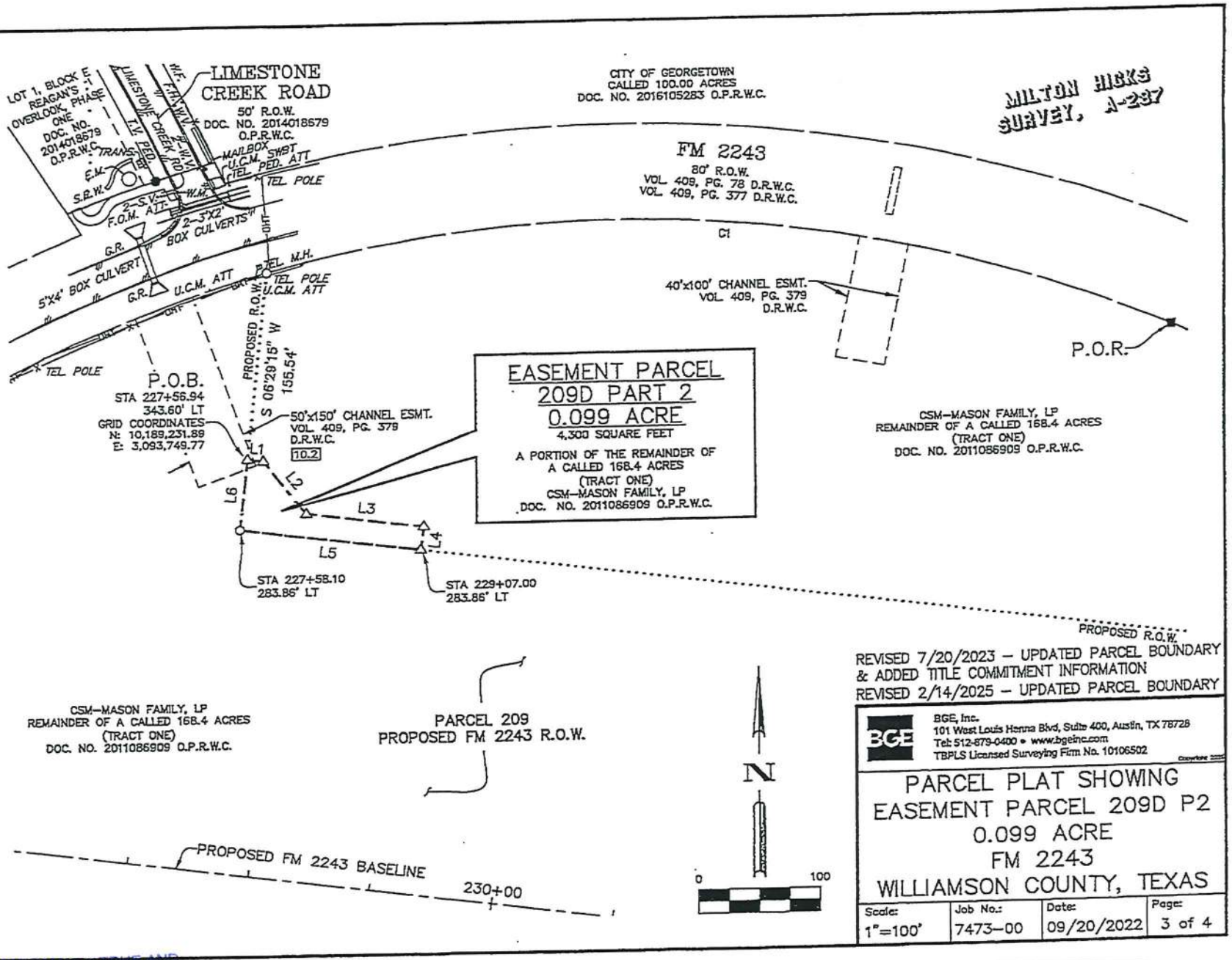

REVISED 7/20/2023 – UPDATED PARCEL BOUNDARY & ADDED TITLE COMMITMENT INFORMATION
REVISED 2/14/2025 – UPDATED PARCEL BOUNDARY

BGE, Inc.
101 West Louis Henna Blvd, Suite 400, Austin, TX 78728
Tel: 512-879-0400 • www.bgeinc.com
TBPLS Licensed Surveying Firm No. 10106502

PARCEL PLAT SHOWING EASEMENT PARCEL 209D P2 0.099 ACRE FM 2243 WILLIAMSON COUNTY, TEXAS

Scale:	Job No.:	Date:	Page:
1"=100'	7473-00	09/20/2022	3 of 4

\\bgeinc\data\TXC\Projects\County_Williamson\7473-00_RM 2243\08_Survey\04_Finals\Drawings\7473-00_P209D P2_EXI.dwg, 2/14/2025 2:47 PM, Andrea Hlenar

CERTIFIED TO BE A TRUE AND CORRECT COPY
NANCY E. RISTER, County Clerk
Williamson County
Page 37 of 38

RECORDERS MEMORANDUM
All or parts of the text on this page was not clearly legible for satisfactory recordation.

\\bgeinc\data\TXC\Projects\County_Williamson\7473-00_RM 2243\06_Survey\04_Finals\Drawings\7473-00_P209D P2_EX1.dwg, 2/14/2025 2:47 PM, Andrea Hilmer

LEGEND

DOC.	DOCUMENT
D.R.W.C.	DEED RECORDS OF WILLIAMSON COUNTY
E.M.	ELECTRIC METER
ESMT.	EASEMENT
F.H.	FIRE HYDRANT
F.O.M.	FIBER OPTIC MARKER
G.R.	GUARD RAIL
M.H.	MANHOLE
NO.	NUMBER
O.P.R.W.C.	OFFICIAL PUBLIC RECORDS OF WILLIAMSON COUNTY
PED.	PEDESTAL
PG.	PAGE
P.O.B.	POINT OF BEGINNING
P.O.R.	POINT OF REFERENCE
R.O.W.	RIGHT-OF-WAY
S.R.W.	STONE RETAINING WALL
S.V.	SPRINKLER VALVE
TEL.	TELEPHONE
TRANS.	TRANSFORMER
T.V.	TELEVISION
U.C.M.	UNDERGROUND CABLE MARKER
VOL.	VOLUME
W.M.	WATER METER
W.W.	WATER WELL
{ }	RECORD INFO FOR TXDOT FM 2243 R.O.W. MAP DATED MAY 1955 & VOL. 409, PG. 377 D.R.W.C.
●	FOUND 1/2" IRON ROD (UNLESS OTHERWISE NOTED)
■	FOUND TYPE I TXDOT CONCRETE MONUMENT
o	SET 1/2-INCH IRON ROD W/CAP "WILCO ROW 5777"
△	CALCULATED POINT
—x—	WIRE FENCE
—OHT—	OVERHEAD TELEPHONE
—⌀—	EDGE OF ASPHALT

GENERAL NOTES:

1. BEARING ORIENTATION IS BASED ON THE TEXAS STATE PLANE COORDINATE SYSTEM, CENTRAL ZONE 4203, NAD83. DISTANCES SHOWN HEREON ARE IN SURFACE AND CAN BE CONVERTED TO GRID BY DIVIDING BY THE COMBINED SCALE FACTOR = 1.00012
2. A METES AND BOUNDS DESCRIPTION OF EVEN DATE WAS PREPARED IN CONJUNCTION WITH THIS SKETCH.
3. THIS PARCEL PLAT WAS MADE IN RELIANCE UPON THAT CERTAIN COMMITMENT FOR TITLE INSURANCE ISSUED BY FIRST AMERICAN TITLE GUARANTY COMPANY AND TEXAS NATIONAL TITLE, INC. UNDER G.F. NO. T-163580, DATED EFFECTIVE JULY 13, 2023 AND ISSUED ON JULY 20 2023.

RESTRICTIVE COVENANT AND EASEMENT NOTES:

10.2 A CHANNEL EASEMENT GRANTED TO STATE OF TEXAS ACTING THROUGH THE STATE HIGHWAY COMMISSION AS DESCRIBED IN VOLUME 409, PAGE 379 OF THE DEED RECORDS OF WILLIAMSON COUNTY, TEXAS, DOES AFFECT THE SUBJECT TRACT, AS SHOWN HEREON.

10.3 ALL TERMS, CONDITIONS AND PROVISIONS OF THAT CERTAIN DEVELOPMENT AGREEMENT OF RECORD IN DOCUMENT NO. 2017015559 OF THE OFFICIAL PUBLIC RECORDS OF WILLIAMSON COUNTY, TEXAS, DO AFFECT THE SUBJECT TRACT.

CURVE TABLE					
NUMBER	ARC LENGTH	RADIUS	DELTA	CHORD BEARING	CHORD DISTANCE
C1	750.78'	1,105.92'	38°53'48"	N 85°29'31" W	736.45'

RECORD CURVE TABLE					
NUMBER	ARC LENGTH	RADIUS	DELTA	CHORD BEARING	CHORD DISTANCE
{C1}		{1,105.92'}			

LINE TABLE		
NUMBER	BEARING	DISTANCE
L1	S 83°30'45" E	13.00'
L2	S 37°57'23" E	57.11'
L3	S 82°24'01" E	96.29'
L4	S 07°35'59" W	20.00'
L5	N 82°24'01" W	148.90'
L6	N 06°29'15" E	59.75'

I hereby certify that this survey was made on the ground by BGE, Inc. under my supervision on May 12, 2022 and is true and correct to the best of my knowledge. There are no visible encroachments, except as shown hereon.

STATE OF TEXAS
REGISTERED
JONATHAN O. NOBLES
5777
PROFESSIONAL
LAND SURVEYOR

02/14/2025

JONATHAN O. NOBLES RPLS NO. 5777
BGE, INC.
101 WEST LOUIS HENNA BLVD., SUITE 400
AUSTIN, TEXAS 78728
TELEPHONE: (512) 879-0400

REVISED 7/20/2023 – UPDATED PARCEL BOUNDARY & ADDED TITLE COMMITMENT INFORMATION
REVISED 2/14/2025 – UPDATED PARCEL BOUNDARY

BGE, Inc.
101 West Louis Henna Blvd, Suite 400, Austin, TX 78728
Tel: 512-879-0400 • www.bgeinc.com
TBPLS Licensed Surveying Firm No. 10106502

PARCEL PLAT SHOWING EASEMENT PARCEL 209D P2 0.099 ACRE FM 2243 WILLIAMSON COUNTY, TEXAS

Scale:	Job No.:	Date:	Page:
1"=100'	7473-00	09/20/2022	4 of 4

CERTIFIED TO BE A TRUE AND CORRECT COPY
NANCY E. RISTER, County Clerk
Williamson County
Page 38 of 38

SHEETS & CROSSFIELD
309 EAST MAIN ST
ROUND ROCK, TX 78664

FILED AND RECORDED
OFFICIAL PUBLIC RECORDS 2025035173

JD Fee: $0.00
05/08/2025 01:33 PM KOROURKE

Nancy E. Rister, County Clerk
Williamson County, Texas

ATTACHMENT E – BMPS FOR UPGRADIENT STORMWATER

Areas where upgradient storm water flows into the right-of-way will be intercepted and conveyed by roadway ditches to low point discharge areas. Similarly, during construction, a temporary swale is proposed along the low side of the right-of-way to intercept and convey upgradient and onsite flows within the proposed right-of-way to where they can be treated. Silt fencing or biodegradable erosion control longs placed along the right-of-way boundary will serve to filter any runoff that discharges outside of the right-of-way. The retained flows within the right-of-way will be filtered through a series of rock berms and biodegradable erosion control logs prior to discharging to streams. The proposed silt fencing, biodegradable erosion control logs and rock berm locations are shown on the SWPPP sheets of the Construction Plans.

After construction has been completed, all areas from the proposed edge of paving to the proposed right-of-way, shall be stabilized. Fifteen-foot vegetated filter strips will run parallel and adjacent to the west side of the roadway to filter runoff generated from the roadway surface.

ATTACHMENT F – BMPS FOR ONSITE STORMWATER

During roadway construction, the contractor shall install permanent seeding and Vegetated Filter Strips along the length of the proposed roadway. Permanent BMPs are to be installed per TCEQ and local requirements and prior to the removal of temporary BMPs.

As surface water flows from and through the project areas, the proposed permanent BMPs will prevent pollution by preventing additional sediment runoff and filtering the pollutants (listed in "Attachment B – Potential Sources of Contamination") prior to any runoff leaving the site. As shown in the attached SWPPP plans, vegetated filter strips will be utilized downstream of the proposed roadway to mitigate pollutant runoff, debris, and sediment from that area. Permanent seeding will minimize soil runoff from disturbed areas.

Vegetative filter strips were designed according to TCEQ technical guidance as the BMP for on-site stormwater. Removal of 18,914 lbs of TSS shall be accomplished to obtain the desired level of water quality treatment based on the TCEQ guidelines. The table below provides existing impervious cover amounts (Existing), existing previously treated impervious cover by TCEQ approved water quality BMPs (Existing Previously Treated), net existing impervious cover subtracting the existing previously treated impervious cover (Net Existing), proposed impervious cover amounts (Proposed), required TSS amount to be removed (L_M), and TSS amount to be removed by vegetative filter strip (L_R).

Table 1. Vegetative Filter Strip Treatment Calculations.

	Proposed ROW Area	Existing Impervious Cover	Existing Previously Treated Cover	Net Existing Impervious Cover	Proposed Impervious Cover	L_M	L_R
	Acres	SF	SF	Acres	Acres	lbs	lbs
OFF_02	13.49	66688	37144	0.68	2.18	1305.49	958.02
OFF_03	13.99	41155		0.94	2.81	1624.74	1535.78
OFF_04	31.20	111347		2.56	4.85	1996.63	3456.83
OFF_05	8.32	19959		0.46	1.14	597.52	843.18
OFF_06	31.64	134320		3.08	4.18	951.19	1516.51
OFF_07	22.55	121873		2.80	3.92	978.66	1117.87
OFF_08	19.43	1513		0.03	2.40	2055.43	2254.11
OFF_09A	19.26	89444		2.05	2.97	800.58	2192.64
OFF_09	42.61	108962	42952	1.52	5.43	3406.33	2737.76
OFF_10	15.57	60732	48365	0.28	2.46	1892.46	2301.76
TOTAL	218.07			14.41	32.34	15,609	18,914

In using the aforementioned treatment methods and maintaining natural drainage patterns downgradient of the proposed site, any flow to natural occurring sensitive features, both known and unknown, will be maintained.

Protective Measures for Sensitive Features

Lozano's Mine is identified as Feature LR-05 in the Geologic Assessment as a sensitive feature per TCEQ guidelines. The local drainage pattern to this feature is from the north. The drainage from RM 2243 roadway flows across the proposed vegetative filter strip and drains to a proposed ditch along the south side of the road which conveys flows to Culvert 10. The sensitive feature is located outside of the proposed project area. The Geologic Assessment recommends a buffer from the feature that extends 200-ft upslope. The project area's limits of construction (defined by the extent of the Silt Control Fence on the SWPPP Layout Sheet) is greater than 250-ft upslope of the feature. For temporary erosion controls, a silt control fence along the limits of construction will also provide protection for this sensitive feature.

WATER QUALITY CALCULATIONS

Texas Commission on Environmental Quality

TSS Removal Calculations 04-20-2009

Project Name: RM 2243
Date Prepared: 5/30/2025

Additional information is provided for cells with a red triangle in the upper right corner. Place the cursor over the cell.
Text shown in blue indicate location of instructions in the Technical Guidance Manual - RG-348.
Characters shown in red are data entry fields.
Characters shown in black (Bold) are calculated fields. Changes to these fields will remove the equations used in the spreadsheet.

1. The Required Load Reduction for the total project: Calculations from RG-348 Pages 3-27 to 3-30

Page 3-29 Equation 3.3: $L_M = 27.2(A_N \times P)$

where:

$L_{M\ TOTAL\ PROJECT}$ = Required TSS removal resulting from the proposed development = 80% of increased load
A_N = Net increase in impervious area for the project
P = Average annual precipitation, inches

Site Data: Determine Required Load Removal Based on the Entire Project

County =	Williamson	
Total project area included in plan * =	218.07	acres
Predevelopment impervious area within the limits of the plan* =	14.41	acres
Total post-development impervious area within the limits of the plan* =	32.34	acres
Total post-development impervious cover fraction * =	0.15	
P =	32	inches
$L_{M\ TOTAL\ PROJECT}$ =	15609	lbs.

* The values entered in these fields should be for the total project area.

Number of drainage basins / outfalls areas leaving the plan area = 11

06/02/2025

2. Drainage Basin Parameters (This information should be provided for each basin):

Drainage Basin/Outfall Area No. = 2

Total drainage basin/outfall area=	13.49	acres
Predevelopment impervious area within drainage basin/outfall area=	0.68	acres
Post-development impervious area within drainage basin/outfall area=	2.18	acres
Post-development impervious fraction within drainage basin/outfall area=	0.16	
$L_{M\ THIS\ BASIN}$ =	1305	lbs.

3. Indicate the proposed BMP Code for this basin.

Proposed BMP = Vegetated Filter Strips
Removal efficiency = 85 percent

4. Calculate Maximum TSS Load Removed (L_R) for this Drainage Basin by the selected BMP Type.

RG-348 Page 3-33 Equation 3.7: $L_R = (\text{BMP efficiency}) \times P \times (A_I \times 34.6 + A_P \times 0.54)$

where:

A_C = Total On-Site drainage area in the BMP catchment area
A_I = Impervious area proposed in the BMP catchment area
A_P = Pervious area remaining in the BMP catchment area
L_R = TSS Load removed from this catchment area by the proposed BMP

A_C =	1.52	acres
A_I =	1.01	acres
A_P =	0.51	acres
L_R =	958	lbs

5. Calculate Fraction of Annual Runoff to Treat the drainage basin / outfall area

Desired $L_{M\ THIS\ BASIN}$ = 1305 lbs.

F = 1.36

6. Calculate Capture Volume required by the BMP Type for this drainage basin / outfall area. Calculations from RG-348 Pages 3-34 to 3-36

Rainfall Depth = 4.00 inches
Post Development Runoff Coefficient = 0.47

On-site Water Quality Volume =	**10420**	cubic feet

Calculations from RG-348 Pages 3-36 to 3-37

Off-site area draining to BMP =	**0.00**	acres
Off-site Impervious cover draining to BMP =	**0.00**	acres
Impervious fraction of off-site area =	**0**	
Off-site Runoff Coefficient =	**0.00**	
Off-site Water Quality Volume =	**0**	cubic feet
Storage for Sediment =	**2084**	
Total Capture Volume (required water quality volume(s) x 1.20) =	**12504**	cubic feet

06/02/2025

Texas Commission on Environmental Quality

TSS Removal Calculations 04-20-2009

Project Name: RM 2243
Date Prepared: 5/30/2025

Additional information is provided for cells with a red triangle in the upper right corner. Place the cursor over the cell.
Text shown in blue indicate location of instructions in the Technical Guidance Manual - RG-348.
Characters shown in red are data entry fields.
Characters shown in black (Bold) are calculated fields. Changes to these fields will remove the equations used in the spreadsheet.

1. The Required Load Reduction for the total project: Calculations from RG-348 Pages 3-27 to 3-30

Page 3-29 Equation 3.3: $L_M = 27.2(A_N \times P)$

where:

$L_{M\ TOTAL\ PROJECT}$ = Required TSS removal resulting from the proposed development = 80% of increased load
A_N = Net increase in impervious area for the project
P = Average annual precipitation, inches

Site Data: Determine Required Load Removal Based on the Entire Project

County =	Williamson	
Total project area included in plan * =	218.07	acres
Predevelopment impervious area within the limits of the plan* =	14.41	acres
Total post-development impervious area within the limits of the plan* =	32.34	acres
Total post-development impervious cover fraction * =	0.15	
P =	32	inches
$L_{M\ TOTAL\ PROJECT}$ =	15609	lbs.

* **The values entered in these fields should be for the total project area.**

Number of drainage basins / outfalls areas leaving the plan area = 11

2. Drainage Basin Parameters (This information should be provided for each basin):

Drainage Basin/Outfall Area No. = 3

Total drainage basin/outfall area=	13.99	acres
Predevelopment impervious area within drainage basin/outfall area=	0.94	acres
Post-development impervious area within drainage basin/outfall area=	2.81	acres
Post-development impervious fraction within drainage basin/outfall area=	0.20	
$L_{M\ THIS\ BASIN}$ =	1625	lbs.

3. Indicate the proposed BMP Code for this basin.

Proposed BMP = Vegetated Filter Strips
Removal efficiency = 85 percent

4. Calculate Maximum TSS Load Removed (L_R) for this Drainage Basin by the selected BMP Type.

RG-348 Page 3-33 Equation 3.7: $L_R = (\text{BMP efficiency}) \times P \times (A_I \times 34.6 + A_P \times 0.54)$

where:

A_C = Total On-Site drainage area in the BMP catchment area
A_I = Impervious area proposed in the BMP catchment area
A_P = Pervious area remaining in the BMP catchment area
L_R = TSS Load removed from this catchment area by the proposed BMP

A_C =	2.38	acres
A_I =	1.62	acres
A_P =	0.76	acres
L_R =	1536	lbs

5. Calculate Fraction of Annual Runoff to Treat the drainage basin / outfall area

Desired $L_{M\ THIS\ BASIN}$ = 1625 lbs.

F = 1.06

6. Calculate Capture Volume required by the BMP Type for this drainage basin / outfall area. Calculations from RG-348 Pages 3-34 to 3-36

Rainfall Depth = 4.00 inches
Post Development Runoff Coefficient = 0.49

On-site Water Quality Volume =	**16827**	cubic feet

Calculations from RG-348 Pages 3-36 to 3-37

Off-site area draining to BMP =	**0.00**	acres
Off-site Impervious cover draining to BMP =	**0.00**	acres
Impervious fraction of off-site area =	**0**	
Off-site Runoff Coefficient =	**0.00**	
Off-site Water Quality Volume =	**0**	cubic feet
Storage for Sediment =	**3365**	
Total Capture Volume (required water quality volume(s) x 1.20) =	**20192**	cubic feet

06/02/2025

Texas Commission on Environmental Quality

TSS Removal Calculations 04-20-2009

Project Name: RM 2243
Date Prepared: 5/30/2025

Additional information is provided for cells with a red triangle in the upper right corner. Place the cursor over the cell.
Text shown in blue indicate location of instructions in the Technical Guidance Manual - RG-348.
Characters shown in red are data entry fields.
Characters shown in black (Bold) are calculated fields. Changes to these fields will remove the equations used in the spreadsheet.

1. The Required Load Reduction for the total project: Calculations from RG-348 Pages 3-27 to 3-30

Page 3-29 Equation 3.3: $L_M = 27.2(A_N \times P)$

where:

$L_{M\ TOTAL\ PROJECT}$ = Required TSS removal resulting from the proposed development = 80% of increased load
A_N = Net increase in impervious area for the project
P = Average annual precipitation, inches

Site Data: Determine Required Load Removal Based on the Entire Project

County =	Williamson	
Total project area included in plan * =	218.07	acres
Predevelopment impervious area within the limits of the plan* =	14.41	acres
Total post-development impervious area within the limits of the plan* =	32.34	acres
Total post-development impervious cover fraction * =	0.15	
P =	32	inches

$L_{M\ TOTAL\ PROJECT}$ = **15609** lbs.

* **The values entered in these fields should be for the total project area.**

Number of drainage basins / outfalls areas leaving the plan area = 11

2. Drainage Basin Parameters (This information should be provided for each basin):

Drainage Basin/Outfall Area No. = 4

Total drainage basin/outfall area=	31.20	acres
Predevelopment impervious area within drainage basin/outfall area=	2.56	acres
Post-development impervious area within drainage basin/outfall area=	4.85	acres
Post-development impervious fraction within drainage basin/outfall area=	0.16	
$L_{M\ THIS\ BASIN}$ =	1997	lbs.

3. Indicate the proposed BMP Code for this basin.

Proposed BMP = Vegetated Filter Strips
Removal efficiency = 85 percent

4. Calculate Maximum TSS Load Removed (L_R) for this Drainage Basin by the selected BMP Type.

RG-348 Page 3-33 Equation 3.7: $L_R = (\text{BMP efficiency}) \times P \times (A_I \times 34.6 + A_P \times 0.54)$

where:

A_C = Total On-Site drainage area in the BMP catchment area
A_I = Impervious area proposed in the BMP catchment area
A_P = Pervious area remaining in the BMP catchment area
L_R = TSS Load removed from this catchment area by the proposed BMP

A_C =	5.13	acres
A_I =	3.65	acres
A_P =	1.48	acres
L_R =	3457	lbs

5. Calculate Fraction of Annual Runoff to Treat the drainage basin / outfall area

Desired $L_{M\ THIS\ BASIN}$ = 1997 lbs.

F = **0.58**

6. Calculate Capture Volume required by the BMP Type for this drainage basin / outfall area. Calculations from RG-348 Pages 3-34 to 3-36

Rainfall Depth =	0.54	inches
Post Development Runoff Coefficient =	0.52	

On-site Water Quality Volume =	**5212**	cubic feet

Calculations from RG-348 Pages 3-36 to 3-37

Off-site area draining to BMP =	**0.00**	acres
Off-site Impervious cover draining to BMP =	**0.00**	acres
Impervious fraction of off-site area =	**0**	
Off-site Runoff Coefficient =	**0.00**	
Off-site Water Quality Volume =	**0**	cubic feet
Storage for Sediment =	**1042**	
Total Capture Volume (required water quality volume(s) x 1.20) =	**6255**	cubic feet

06/02/2025

Texas Commission on Environmental Quality

TSS Removal Calculations 04-20-2009

Project Name: RM 2243
Date Prepared: 5/30/2025

Additional information is provided for cells with a red triangle in the upper right corner. Place the cursor over the cell.
Text shown in blue indicate location of instructions in the Technical Guidance Manual - RG-348.
Characters shown in red are data entry fields.
Characters shown in black (Bold) are calculated fields. Changes to these fields will remove the equations used in the spreadsheet.

1. The Required Load Reduction for the total project: Calculations from RG-348 Pages 3-27 to 3-30

Page 3-29 Equation 3.3: $L_M = 27.2(A_N \times P)$

where:

$L_{M\ TOTAL\ PROJECT}$ = Required TSS removal resulting from the proposed development = 80% of increased load
A_N = Net increase in impervious area for the project
P = Average annual precipitation, inches

Site Data: Determine Required Load Removal Based on the Entire Project

County =	Williamson	
Total project area included in plan * =	218.07	acres
Predevelopment impervious area within the limits of the plan* =	14.41	acres
Total post-development impervious area within the limits of the plan* =	32.34	acres
Total post-development impervious cover fraction * =	0.15	
P =	32	inches
$L_{M\ TOTAL\ PROJECT}$ =	15609	lbs.

* The values entered in these fields should be for the total project area.

Number of drainage basins / outfalls areas leaving the plan area = 11

2. Drainage Basin Parameters (This information should be provided for each basin):

Drainage Basin/Outfall Area No. = 5

Total drainage basin/outfall area=	8.32	acres
Predevelopment impervious area within drainage basin/outfall area=	0.46	acres
Post-development impervious area within drainage basin/outfall area=	1.14	acres
Post-development impervious fraction within drainage basin/outfall area=	0.14	
$L_{M\ THIS\ BASIN}$ =	598	lbs.

3. Indicate the proposed BMP Code for this basin.

Proposed BMP = Vegetated Filter Strips
Removal efficiency = 85 percent

4. Calculate Maximum TSS Load Removed (L_R) for this Drainage Basin by the selected BMP Type.

RG-348 Page 3-33 Equation 3.7: $L_R = (\text{BMP efficiency}) \times P \times (A_I \times 34.6 + A_P \times 0.54)$

where:

A_C = Total On-Site drainage area in the BMP catchment area
A_I = Impervious area proposed in the BMP catchment area
A_P = Pervious area remaining in the BMP catchment area
L_R = TSS Load removed from this catchment area by the proposed BMP

A_C =	1.27	acres
A_I =	0.89	acres
A_P =	0.38	acres
L_R =	843	lbs

5. Calculate Fraction of Annual Runoff to Treat the drainage basin / outfall area

Desired $L_{M\ THIS\ BASIN}$ = 598 lbs.

F = 0.71

6. Calculate Capture Volume required by the BMP Type for this drainage basin / outfall area. Calculations from RG-348 Pages 3-34 to 3-36

Rainfall Depth = 0.80 inches
Post Development Runoff Coefficient = 0.51

On-site Water Quality Volume =	**1877**	cubic feet

Calculations from RG-348 Pages 3-36 to 3-37

Off-site area draining to BMP =	**0.00**	acres
Off-site Impervious cover draining to BMP =	**0.00**	acres
Impervious fraction of off-site area =	**0**	
Off-site Runoff Coefficient =	**0.00**	
Off-site Water Quality Volume =	**0**	cubic feet
Storage for Sediment =	**375**	
Total Capture Volume (required water quality volume(s) x 1.20) =	**2253**	cubic feet

06/02/2025

Texas Commission on Environmental Quality

TSS Removal Calculations 04-20-2009

Project Name: RM 2243
Date Prepared: 5/30/2025

Additional information is provided for cells with a red triangle in the upper right corner. Place the cursor over the cell.
Text shown in blue indicate location of instructions in the Technical Guidance Manual - RG-348.
Characters shown in red are data entry fields.
Characters shown in black (Bold) are calculated fields. Changes to these fields will remove the equations used in the spreadsheet.

1. The Required Load Reduction for the total project: Calculations from RG-348 Pages 3-27 to 3-30

Page 3-29 Equation 3.3: $L_M = 27.2(A_N \times P)$

where:

$L_{M\ TOTAL\ PROJECT}$ = Required TSS removal resulting from the proposed development = 80% of increased load
A_N = Net increase in impervious area for the project
P = Average annual precipitation, inches

Site Data: Determine Required Load Removal Based on the Entire Project

County =	Williamson	
Total project area included in plan * =	218.07	acres
Predevelopment impervious area within the limits of the plan* =	14.41	acres
Total post-development impervious area within the limits of the plan* =	32.34	acres
Total post-development impervious cover fraction * =	0.15	
P =	32	inches
$L_{M\ TOTAL\ PROJECT}$ =	15609	lbs.

* The values entered in these fields should be for the total project area.

Number of drainage basins / outfalls areas leaving the plan area = 11

06/02/2025

2. Drainage Basin Parameters (This information should be provided for each basin):

Drainage Basin/Outfall Area No. = 6

Total drainage basin/outfall area=	31.64	acres
Predevelopment impervious area within drainage basin/outfall area=	3.08	acres
Post-development impervious area within drainage basin/outfall area=	4.18	acres
Post-development impervious fraction within drainage basin/outfall area=	0.13	
$L_{M\ THIS\ BASIN}$ =	951	lbs.

3. Indicate the proposed BMP Code for this basin.

Proposed BMP = Vegetated Filter Strips
Removal efficiency = 85 percent

4. Calculate Maximum TSS Load Removed (L_R) for this Drainage Basin by the selected BMP Type.

RG-348 Page 3-33 Equation 3.7: $L_R = (\text{BMP efficiency}) \times P \times (A_I \times 34.6 + A_P \times 0.54)$

where:

A_C = Total On-Site drainage area in the BMP catchment area
A_I = Impervious area proposed in the BMP catchment area
A_P = Pervious area remaining in the BMP catchment area
L_R = TSS Load removed from this catchment area by the proposed BMP

A_C =	2.33	acres
A_I =	1.60	acres
A_P =	0.73	acres
L_R =	1517	lbs

5. Calculate Fraction of Annual Runoff to Treat the drainage basin / outfall area

Desired $L_{M\ THIS\ BASIN}$ = 951 lbs.

F = 0.63

6. Calculate Capture Volume required by the BMP Type for this drainage basin / outfall area. Calculations from RG-348 Pages 3-34 to 3-36

Rainfall Depth = 0.64 inches
Post Development Runoff Coefficient = 0.49

On-site Water Quality Volume =	**2650**	cubic feet

Calculations from RG-348 Pages 3-36 to 3-37

Off-site area draining to BMP =	**0.00**	acres
Off-site Impervious cover draining to BMP =	**0.00**	acres
Impervious fraction of off-site area =	**0**	
Off-site Runoff Coefficient =	**0.00**	
Off-site Water Quality Volume =	**0**	cubic feet
Storage for Sediment =	**530**	
Total Capture Volume (required water quality volume(s) x 1.20) =	**3180**	cubic feet

06/02/2025

Texas Commission on Environmental Quality

TSS Removal Calculations 04-20-2009

Project Name: RM 2243
Date Prepared: 5/30/2025

Additional information is provided for cells with a red triangle in the upper right corner. Place the cursor over the cell.
Text shown in blue indicate location of instructions in the Technical Guidance Manual - RG-348.
Characters shown in red are data entry fields.
Characters shown in black (Bold) are calculated fields. Changes to these fields will remove the equations used in the spreadsheet.

1. The Required Load Reduction for the total project: Calculations from RG-348 Pages 3-27 to 3-30

Page 3-29 Equation 3.3: $L_M = 27.2(A_N \times P)$

where:

$L_{M\ TOTAL\ PROJECT}$ = Required TSS removal resulting from the proposed development = 80% of increased load
A_N = Net increase in impervious area for the project
P = Average annual precipitation, inches

Site Data: Determine Required Load Removal Based on the Entire Project

County =	Williamson	
Total project area included in plan * =	218.07	acres
Predevelopment impervious area within the limits of the plan* =	14.41	acres
Total post-development impervious area within the limits of the plan* =	32.34	acres
Total post-development impervious cover fraction * =	0.15	
P =	32	inches
$L_{M\ TOTAL\ PROJECT}$ =	15609	lbs.

* The values entered in these fields should be for the total project area.

Number of drainage basins / outfalls areas leaving the plan area = 11

06/02/2025

2. Drainage Basin Parameters (This information should be provided for each basin):

Drainage Basin/Outfall Area No. = 7

Total drainage basin/outfall area=	22.55	acres
Predevelopment impervious area within drainage basin/outfall area=	2.80	acres
Post-development impervious area within drainage basin/outfall area=	3.92	acres
Post-development impervious fraction within drainage basin/outfall area=	0.17	
$L_{M\ THIS\ BASIN}$ =	979	lbs.

3. Indicate the proposed BMP Code for this basin.

Proposed BMP = Vegetated Filter Strips
Removal efficiency = 85 percent

4. Calculate Maximum TSS Load Removed (L_R) for this Drainage Basin by the selected BMP Type.

RG-348 Page 3-33 Equation 3.7: $L_R = (\text{BMP efficiency}) \times P \times (A_I \times 34.6 + A_P \times 0.54)$

where:

A_C = Total On-Site drainage area in the BMP catchment area
A_I = Impervious area proposed in the BMP catchment area
A_P = Pervious area remaining in the BMP catchment area
L_R = TSS Load removed from this catchment area by the proposed BMP

A_C =	1.68	acres
A_I =	1.18	acres
A_P =	0.50	acres
L_R =	1118	lbs

5. Calculate Fraction of Annual Runoff to Treat the drainage basin / outfall area

Desired $L_{M\ THIS\ BASIN}$ = 979 lbs.

F = 0.88

6. Calculate Capture Volume required by the BMP Type for this drainage basin / outfall area. Calculations from RG-348 Pages 3-34 to 3-36

Rainfall Depth = 1.50 inches
Post Development Runoff Coefficient = 0.51

On-site Water Quality Volume =	**4647**	cubic feet

Calculations from RG-348 Pages 3-36 to 3-37

Off-site area draining to BMP =	**0.00**	acres
Off-site Impervious cover draining to BMP =	**0.00**	acres
Impervious fraction of off-site area =	**0**	
Off-site Runoff Coefficient =	**0.00**	
Off-site Water Quality Volume =	**0**	cubic feet
Storage for Sediment =	**929**	
Total Capture Volume (required water quality volume(s) x 1.20) =	**5577**	cubic feet

06/02/2025

Texas Commission on Environmental Quality

TSS Removal Calculations 04-20-2009

Project Name: RM 2243
Date Prepared: 5/30/2025

Additional information is provided for cells with a red triangle in the upper right corner. Place the cursor over the cell.
Text shown in blue indicate location of instructions in the Technical Guidance Manual - RG-348.
Characters shown in red are data entry fields.
Characters shown in black (Bold) are calculated fields. Changes to these fields will remove the equations used in the spreadsheet.

1. The Required Load Reduction for the total project: Calculations from RG-348 Pages 3-27 to 3-30

Page 3-29 Equation 3.3: $L_M = 27.2(A_N \times P)$

where:
$L_{M\ TOTAL\ PROJECT}$ = Required TSS removal resulting from the proposed development = 80% of increased load
A_N = Net increase in impervious area for the project
P = Average annual precipitation, inches

Site Data: Determine Required Load Removal Based on the Entire Project

County =	Williamson	
Total project area included in plan * =	218.07	acres
Predevelopment impervious area within the limits of the plan* =	14.41	acres
Total post-development impervious area within the limits of the plan* =	32.34	acres
Total post-development impervious cover fraction * =	0.15	
P =	32	inches
$L_{M\ TOTAL\ PROJECT}$ =	15609	lbs.

* The values entered in these fields should be for the total project area.

Number of drainage basins / outfalls areas leaving the plan area = 11

2. Drainage Basin Parameters (This information should be provided for each basin):

Drainage Basin/Outfall Area No. = 8

Total drainage basin/outfall area=	19.43	acres
Predevelopment impervious area within drainage basin/outfall area=	0.03	acres
Post-development impervious area within drainage basin/outfall area=	2.40	acres
Post-development impervious fraction within drainage basin/outfall area=	0.12	
$L_{M\ THIS\ BASIN}$ =	2055	lbs.

3. Indicate the proposed BMP Code for this basin.

Proposed BMP = Vegetated Filter Strips
Removal efficiency = 85 percent

4. Calculate Maximum TSS Load Removed (L_R) for this Drainage Basin by the selected BMP Type.

RG-348 Page 3-33 Equation 3.7: $L_R = (\text{BMP efficiency}) \times P \times (A_I \times 34.6 + A_P \times 0.54)$

where:
A_C = Total On-Site drainage area in the BMP catchment area
A_I = Impervious area proposed in the BMP catchment area
A_P = Pervious area remaining in the BMP catchment area
L_R = TSS Load removed from this catchment area by the proposed BMP

A_C =	3.35	acres
A_I =	2.38	acres
A_P =	0.97	acres
L_R =	2254	lbs

5. Calculate Fraction of Annual Runoff to Treat the drainage basin / outfall area

Desired $L_{M\ THIS\ BASIN}$ = 2055 lbs.

F = 0.91

6. Calculate Capture Volume required by the BMP Type for this drainage basin / outfall area. Calculations from RG-348 Pages 3-34 to 3-36

Rainfall Depth = 1.80 inches
Post Development Runoff Coefficient = 0.52

On-site Water Quality Volume =	**11301**	cubic feet

Calculations from RG-348 Pages 3-36 to 3-37

Off-site area draining to BMP =	**0.00**	acres
Off-site Impervious cover draining to BMP =	**0.00**	acres
Impervious fraction of off-site area =	**0**	
Off-site Runoff Coefficient =	**0.00**	
Off-site Water Quality Volume =	**0**	cubic feet
Storage for Sediment =	**2260**	
Total Capture Volume (required water quality volume(s) x 1.20) =	**13561**	cubic feet

06/02/2025

Texas Commission on Environmental Quality

TSS Removal Calculations 04-20-2009

Project Name: RM 2243
Date Prepared: 5/30/2025

Additional information is provided for cells with a red triangle in the upper right corner. Place the cursor over the cell.
Text shown in blue indicate location of instructions in the Technical Guidance Manual - RG-348.
Characters shown in red are data entry fields.
Characters shown in black (Bold) are calculated fields. Changes to these fields will remove the equations used in the spreadsheet.

1. The Required Load Reduction for the total project: Calculations from RG-348 Pages 3-27 to 3-30

Page 3-29 Equation 3.3: $L_M = 27.2(A_N \times P)$

where:

$L_{M\ TOTAL\ PROJECT}$ = Required TSS removal resulting from the proposed development = 80% of increased load
A_N = Net increase in impervious area for the project
P = Average annual precipitation, inches

Site Data: Determine Required Load Removal Based on the Entire Project

County =	Williamson	
Total project area included in plan * =	218.07	acres
Predevelopment impervious area within the limits of the plan* =	14.41	acres
Total post-development impervious area within the limits of the plan* =	32.34	acres
Total post-development impervious cover fraction * =	0.15	
P =	32	inches
$L_{M\ TOTAL\ PROJECT}$ =	15609	lbs.

* **The values entered in these fields should be for the total project area.**

Number of drainage basins / outfalls areas leaving the plan area = 11

2. Drainage Basin Parameters (This information should be provided for each basin):

Drainage Basin/Outfall Area No. = 9

Total drainage basin/outfall area=	42.61	acres
Predevelopment impervious area within drainage basin/outfall area=	1.52	acres
Post-development impervious area within drainage basin/outfall area=	5.43	acres
Post-development impervious fraction within drainage basin/outfall area=	0.13	
$L_{M\ THIS\ BASIN}$ =	3406	lbs.

3. Indicate the proposed BMP Code for this basin.

Proposed BMP = Vegetated Filter Strips
Removal efficiency = 85 percent

4. Calculate Maximum TSS Load Removed (L_R) for this Drainage Basin by the selected BMP Type.

RG-348 Page 3-33 Equation 3.7: L_R = (BMP efficiency) x P x (A_I x 34.6 + A_P x 0.54)

where:

A_C = Total On-Site drainage area in the BMP catchment area
A_I = Impervious area proposed in the BMP catchment area
A_P = Pervious area remaining in the BMP catchment area
L_R = TSS Load removed from this catchment area by the proposed BMP

A_C =	4.11	acres
A_I =	2.89	acres
A_P =	1.22	acres
L_R =	2738	lbs

5. Calculate Fraction of Annual Runoff to Treat the drainage basin / outfall area

Desired $L_{M\ THIS\ BASIN}$ = 3406 lbs.

F = 1.24

6. Calculate Capture Volume required by the BMP Type for this drainage basin / outfall area. Calculations from RG-348 Pages 3-34 to 3-36

Rainfall Depth = 4.00 inches
Post Development Runoff Coefficient = 0.51

On-site Water Quality Volume =	**30366**	cubic feet

Calculations from RG-348 Pages 3-36 to 3-37

Off-site area draining to BMP =	**0.00**	acres
Off-site Impervious cover draining to BMP =	**0.00**	acres
Impervious fraction of off-site area =	**0**	
Off-site Runoff Coefficient =	**0.00**	
Off-site Water Quality Volume =	**0**	cubic feet
Storage for Sediment =	**6073**	
Total Capture Volume (required water quality volume(s) x 1.20) =	**36439**	cubic feet

06/02/2025

Texas Commission on Environmental Quality

TSS Removal Calculations 04-20-2009

Project Name: RM 2243
Date Prepared: 5/30/2025

Additional information is provided for cells with a red triangle in the upper right corner. Place the cursor over the cell.
Text shown in blue indicate location of instructions in the Technical Guidance Manual - RG-348.
Characters shown in red are data entry fields.
Characters shown in black (Bold) are calculated fields. Changes to these fields will remove the equations used in the spreadsheet.

1. The Required Load Reduction for the total project: Calculations from RG-348 Pages 3-27 to 3-30

Page 3-29 Equation 3.3: $L_M = 27.2(A_N \times P)$

where:
$L_{M\ TOTAL\ PROJECT}$ = Required TSS removal resulting from the proposed development = 80% of increased load
A_N = Net increase in impervious area for the project
P = Average annual precipitation, inches

Site Data: Determine Required Load Removal Based on the Entire Project

County =	Williamson	
Total project area included in plan * =	218.07	acres
Predevelopment impervious area within the limits of the plan* =	14.41	acres
Total post-development impervious area within the limits of the plan* =	32.34	acres
Total post-development impervious cover fraction * =	0.15	
P =	32	inches
$L_{M\ TOTAL\ PROJECT}$ =	15609	lbs.

* The values entered in these fields should be for the total project area.

Number of drainage basins / outfalls areas leaving the plan area = 11

06/02/2025

2. Drainage Basin Parameters (This information should be provided for each basin):

Drainage Basin/Outfall Area No. = 9A

Total drainage basin/outfall area=	19.26	acres
Predevelopment impervious area within drainage basin/outfall area=	2.05	acres
Post-development impervious area within drainage basin/outfall area=	2.97	acres
Post-development impervious fraction within drainage basin/outfall area=	0.15	
$L_{M\ THIS\ BASIN}$ =	801	lbs.

3. Indicate the proposed BMP Code for this basin.

Proposed BMP = Vegetated Filter Strips
Removal efficiency = 85 percent

4. Calculate Maximum TSS Load Removed (L_R) for this Drainage Basin by the selected BMP Type.

RG-348 Page 3-33 Equation 3.7: L_R = (BMP efficiency) x P x (A_I x 34.6 + A_P x 0.54)

where:
A_C = Total On-Site drainage area in the BMP catchment area
A_I = Impervious area proposed in the BMP catchment area
A_P = Pervious area remaining in the BMP catchment area
L_R = TSS Load removed from this catchment area by the proposed BMP

A_C =	3.58	acres
A_I =	2.31	acres
A_P =	1.27	acres
L_R =	2193	lbs

5. Calculate Fraction of Annual Runoff to Treat the drainage basin / outfall area

Desired $L_{M\ THIS\ BASIN}$ = 801 lbs.

F = 0.37

6. Calculate Capture Volume required by the BMP Type for this drainage basin / outfall area. Calculations from RG-348 Pages 3-34 to 3-36

Rainfall Depth = 0.25 inches
Post Development Runoff Coefficient = 0.46

On-site Water Quality Volume =	**1480**	cubic feet

Calculations from RG-348 Pages 3-36 to 3-37

Off-site area draining to BMP =	**0.00**	acres
Off-site Impervious cover draining to BMP =	**0.00**	acres
Impervious fraction of off-site area =	**0**	
Off-site Runoff Coefficient =	**0.00**	
Off-site Water Quality Volume =	**0**	cubic feet
Storage for Sediment =	**296**	
Total Capture Volume (required water quality volume(s) x 1.20) =	**1776**	cubic feet

06/02/2025

Texas Commission on Environmental Quality

TSS Removal Calculations 04-20-2009

Project Name: RM 2243
Date Prepared: 5/30/2025

Additional information is provided for cells with a red triangle in the upper right corner. Place the cursor over the cell.
Text shown in blue indicate location of instructions in the Technical Guidance Manual - RG-348.
Characters shown in red are data entry fields.
Characters shown in black (Bold) are calculated fields. Changes to these fields will remove the equations used in the spreadsheet.

1. The Required Load Reduction for the total project: Calculations from RG-348 Pages 3-27 to 3-30

Page 3-29 Equation 3.3: $L_M = 27.2(A_N \times P)$

where:

$L_{M\ TOTAL\ PROJECT}$ = Required TSS removal resulting from the proposed development = 80% of increased load
A_N = Net increase in impervious area for the project
P = Average annual precipitation, inches

Site Data: Determine Required Load Removal Based on the Entire Project

County =		Williamson	
Total project area included in plan * =		218.07	acres
Predevelopment impervious area within the limits of the plan * =		14.41	acres
Total post-development impervious area within the limits of the plan * =		32.34	acres
Total post-development impervious cover fraction * =		0.15	
P =		32	inches
$L_{M\ TOTAL\ PROJECT}$ =		15609	lbs.

* The values entered in these fields should be for the total project area.

Number of drainage basins / outfalls areas leaving the plan area = 11

STATE OF TEXAS
ALEXIS WOFFENDEN
117162
LICENSED PROFESSIONAL ENGINEER

06/02/2025

2. Drainage Basin Parameters (This information should be provided for each basin):

Drainage Basin/Outfall Area No. = 10

Total drainage basin/outfall area =	15.57	acres
Predevelopment impervious area within drainage basin/outfall area =	0.28	acres
Post-development impervious area within drainage basin/outfall area =	2.46	acres
Post-development impervious fraction within drainage basin/outfall area =	0.16	
$L_{M\ THIS\ BASIN}$ =	1892	lbs.

3. Indicate the proposed BMP Code for this basin.

Proposed BMP = Vegetated Filter Strips
Removal efficiency = 85 percent

4. Calculate Maximum TSS Load Removed (L_R) for this Drainage Basin by the selected BMP Type.

RG-348 Page 3-33 Equation 3.7: $L_R = (\text{BMP efficiency}) \times P \times (A_I \times 34.6 + A_P \times 0.54)$

where:

A_C = Total On-Site drainage area in the BMP catchment area
A_I = Impervious area proposed in the BMP catchment area
A_P = Pervious area remaining in the BMP catchment area
L_R = TSS Load removed from this catchment area by the proposed BMP

A_C =	3.44	acres
A_I =	2.43	acres
A_P =	1.01	acres
L_R =	2302	lbs

5. Calculate Fraction of Annual Runoff to Treat the drainage basin / outfall area

Desired $L_{M\ THIS\ BASIN}$ = 1892 lbs.

F = 0.82

6. Calculate Capture Volume required by the BMP Type for this drainage basin / outfall area. Calculations from RG-348 Pages 3-34 to 3-36

Rainfall Depth =	1.16	inches
Post Development Runoff Coefficient =	0.51	
On-site Water Quality Volume =	7418	cubic feet

Calculations from RG-348 Pages 3-36 to 3-37

Off-site area draining to BMP =	0.00	acres
Off-site Impervious cover draining to BMP =	0.00	acres
Impervious fraction of off-site area =	0	
Off-site Runoff Coefficient =	0.00	
Off-site Water Quality Volume =	0	cubic feet
Storage for Sediment =	1484	
Total Capture Volume (required water quality volume(s) x 1.20) =	8902	cubic feet

IMPERVIOUS COVER AND VFS LAYOUT

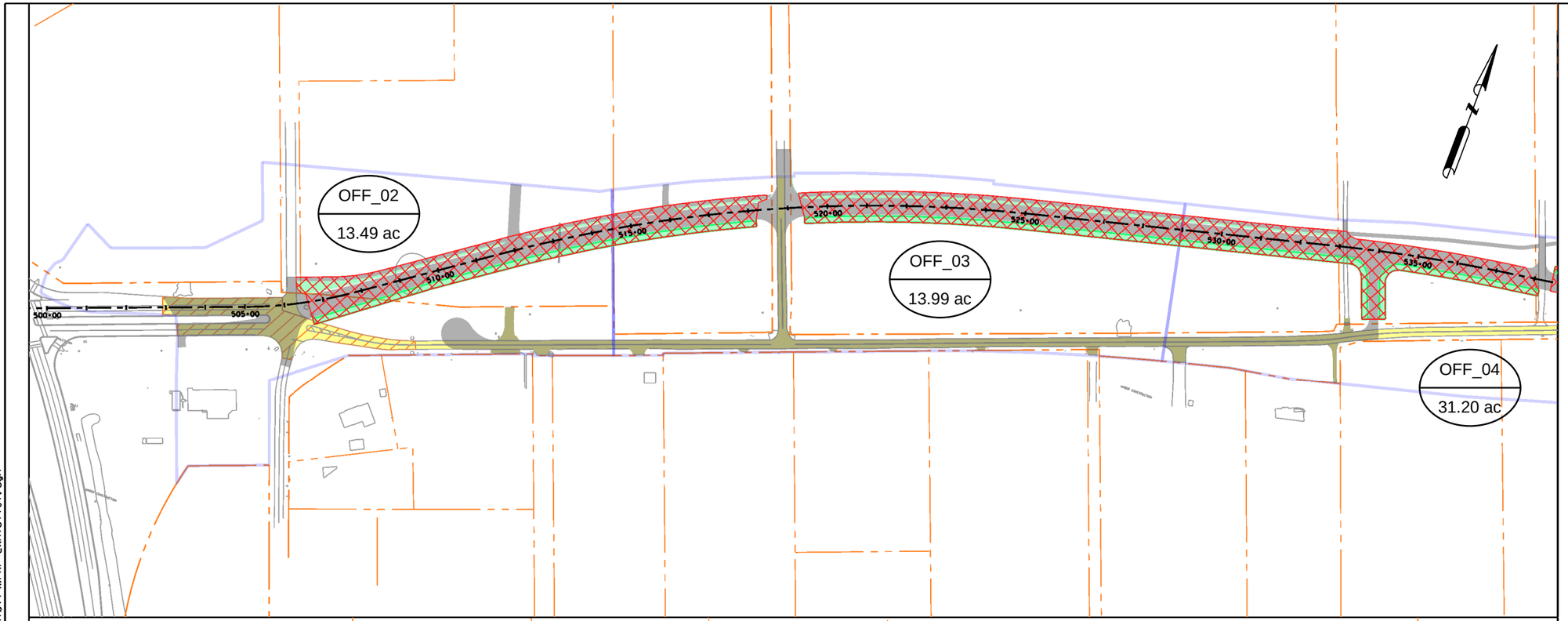

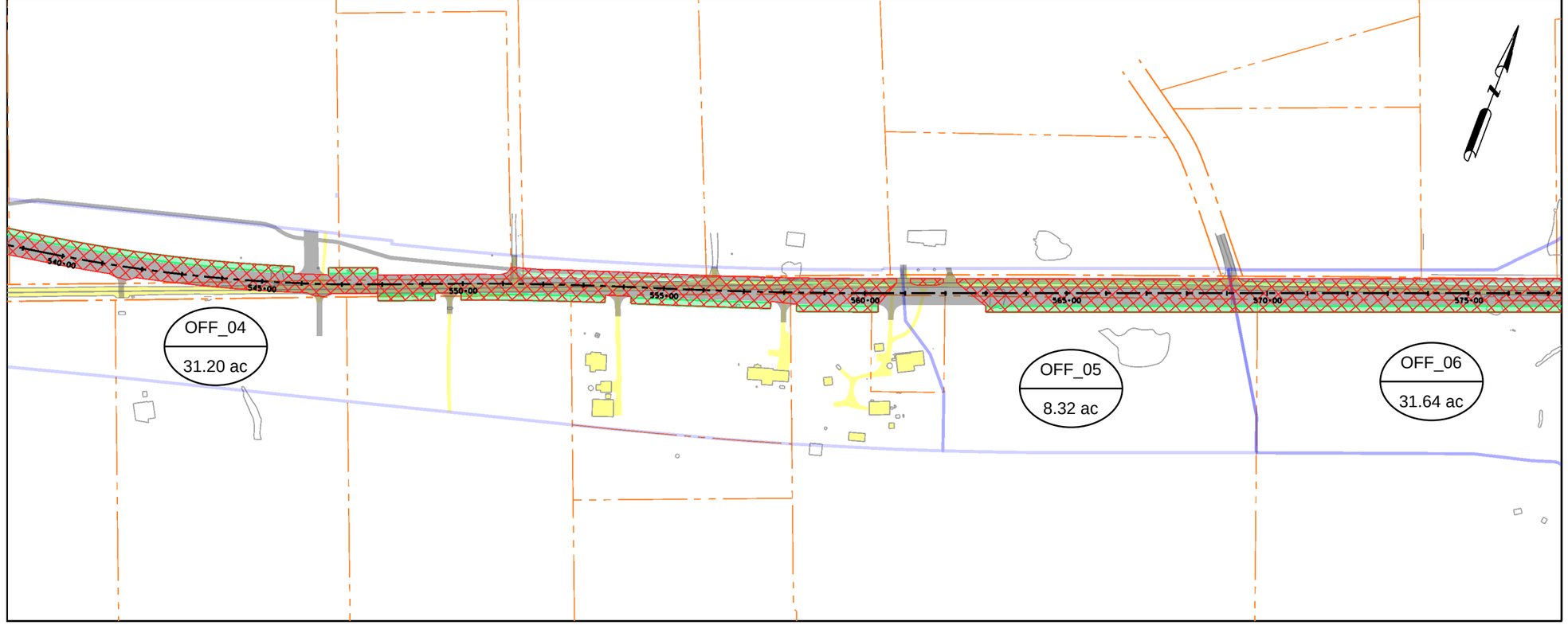

Legend

- Existing Impervious Cover
- Proposed Impervious Cover
- Vegetated Filter Strips
- Previously Treated Impervious Cover
- BMP Catchment Area

0 150 300

Scale: 1"=300'

6/2/2025

WILCO TEXAS

BGE, Inc.
101 W Louis Henna Blvd, Suite 400, Austin, TX 78728
Tel: 512-879-0400 • www.bgeinc.com
TBPE Registration No. F-1046

RM 2243 Phase 1A WPAP Exhibit

FED. RD. DIV. NO.	PROJECT NO.		SHEET NO.
6			1
STATE	DIST.	COUNTY	
TEXAS	AUS	WILLIAMSON	
CONT.	SECT.	JOB	HIGHWAY NO.
0914	05	222	RM 2243

6/2/2025 2:33:05 PM pdf*color*new orange.pltcfg
G:\TXC\Projects\County*Williamson\7473-02 RM 2243 Phase 1A\03*CADD\02*Base\Working\Alex G\WPAP Exhibit*01.dgn

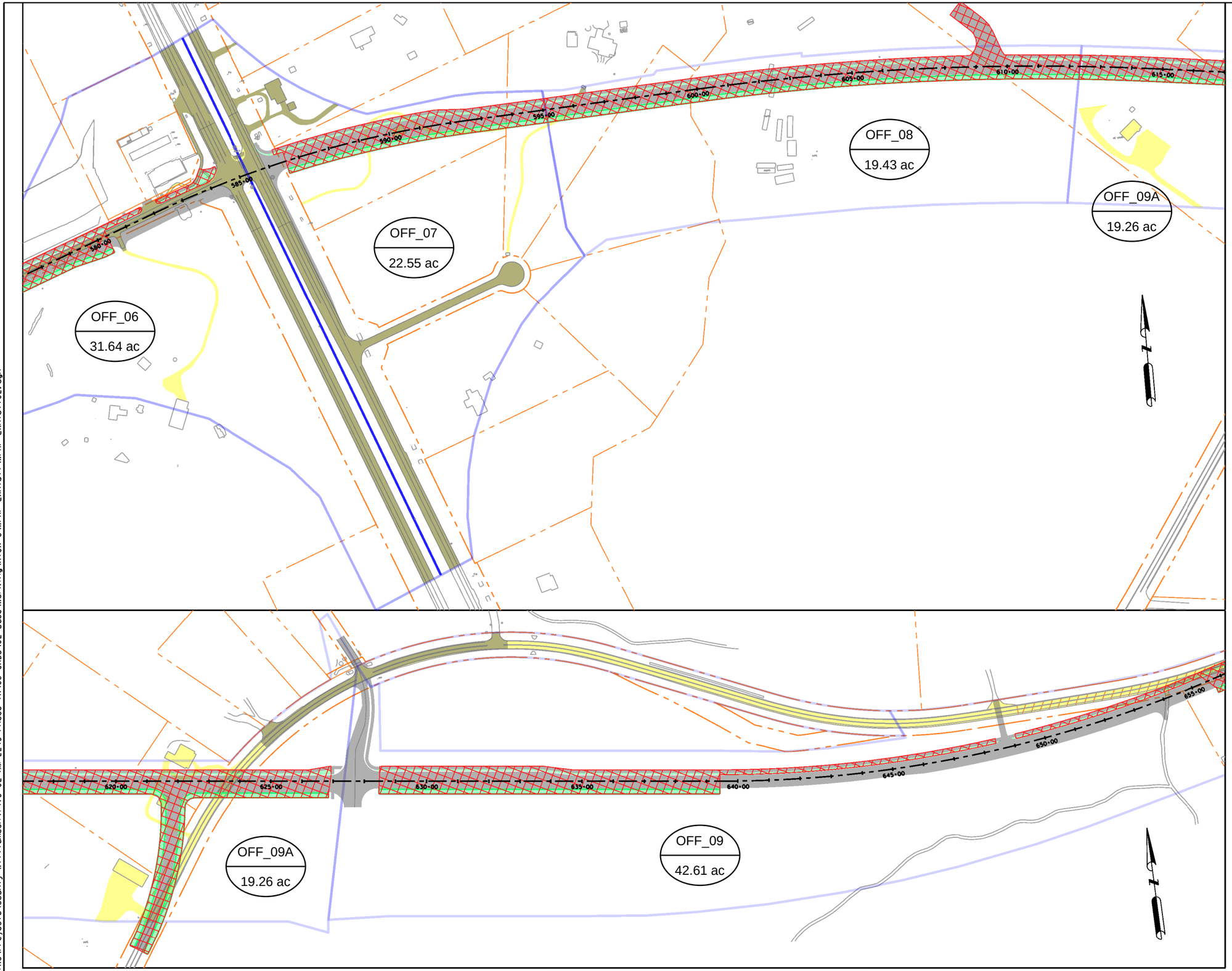

Legend

- Existing Impervious Cover
- Proposed Impervious Cover
- Vegetated Filter Strips
- Previously Treated Impervious Cover
- BMP Catchment Area

0 150 300

Scale: 1"=300'

6/2/2025

WILCO TEXAS

BGE, Inc.
101 W Louis Henna Blvd, Suite 400, Austin, TX 78728
Tel: 512-879-0400 ● www.bgeinc.com
TBPE Registration No. F-1046

RM 2243 Phase 1A WPAP Exhibit

FED. RD. DIV. NO.	PROJECT NO.		SHEET NO.
6			2
STATE	DIST.	COUNTY	
TEXAS	AUS	WILLIAMSON	
CONT.	SECT.	JOB	HIGHWAY NO.
0914	05	222	RM 2243

6/2/2025 2:34:02 PM pdf*color*new orange.pltcfg
G:\TXC\Projects\County*Williamson\7473-02 RM 2243 Phase 1A\03*CADD\02*Base\Working\Alex G\WPAP Exhibit*WPAP*Exhibit02.dgn

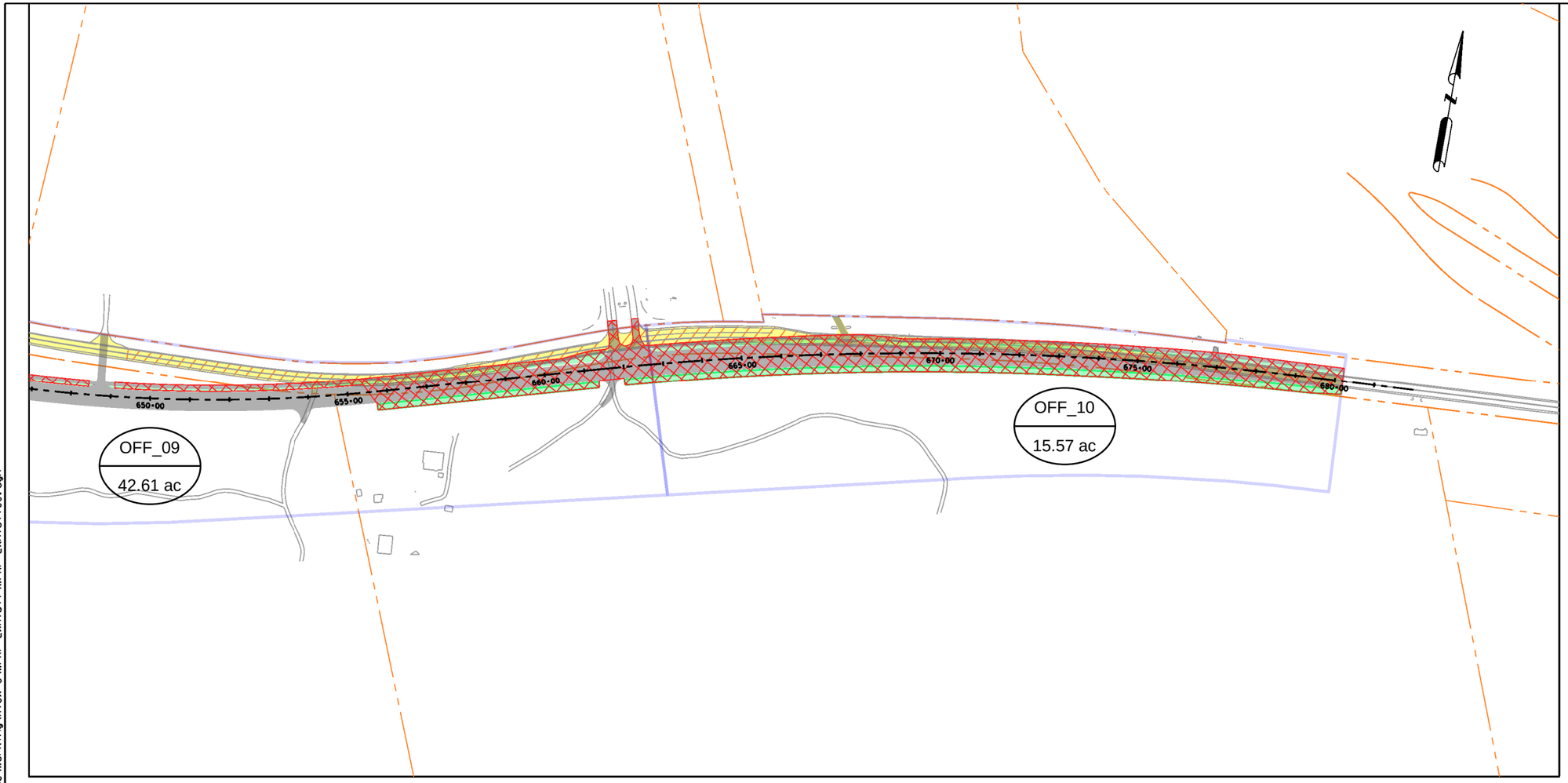

Legend

- Existing Impervious Cover
- Proposed Impervious Cover
- Vegetated Filter Strips
- Previously Treated Impervious Cover
- BMP Catchment Area

0 150 300

Scale: 1"=300'

6/2/2025

WILCO TEXAS

BGE, Inc.
101 W Louis Henna Blvd, Suite 400, Austin, TX 78728
Tel: 512-879-0400 ● www.bgeinc.com
TBPE Registration No. F-1046

RM 2243 Phase 1A WPAP Exhibit

FED. RD. DIV. NO.	PROJECT NO.		SHEET NO.
6			3
STATE	DIST.	COUNTY	
TEXAS	AUS	WILLIAMSON	
CONT.	SECT.	JOB	HIGHWAY NO.
0914	05	222	RM 2243

6/2/2025 2:35:01 PM pdf*color*new orange.pltcfg
G:\TXCV\Projects\County*Williamson\7473-02 RM 2243 Phase 1A\03*CADD\02*Base\Working\Alex G\WPAP Exhibit\WPAP*Exhibit03.dgn

ATTACHMENT G – CONSTRUCTION PLANS

STORMWATER POLLUTION PREVENTION PLAN

STORMWATER POLLUTION PREVENTION PLAN (SWP3):

This SWP3 has been developed in accordance with the TPDES Construction General Permit TXR150000 (CGP). The Texas Department of Transportation (TxDOT) ensures that project specifications include adequate best management practices (BMPs) for this project.

For all projects with soil disturbing activity and for projects that have Environmental, Permits, Issues, and Commitments (EPICs) dependent on stormwater controls and water quality measures TxDOT will maintain a SWP3 with all pertinent records, correspondence, environmental documents, etc. at the project field office, Area Office, or electronically.

This SWP3 is consistent with requirements specified in applicable stormwater plans and the projects environmental permits, issues, and commitments (EPICs). A copy of the CGP is included in Attachment 2.12 of the SWP3 binder.

1.0 SITE/PROJECT DESCRIPTION

1.1 PROJECT CONTROL SECTION JOB (CSJ):
0914-05-222

1.2 PROJECT LIMITS:
From: 183A

To: 980 FT WEST OF ESCALERA PARKWAY

1.3 PROJECT COORDINATES:
BEGIN: (Lat) 30.58744722° ,(Long) 97.83857778°

END: (Lat) 30.59545278° ,(Long) 97.78323056°

1.4 TOTAL PROJECT AREA (Acres): 222.73

1.5 TOTAL AREA TO BE DISTURBED (Acres): 50.10

1.6 NATURE OF CONSTRUCTION ACTIVITY:
CONSTRUCTION OF ROADWAY CONSISTING OF GRADING, BASE, HMAC SURFACING, EROSION CONTROL, AND DRAINAGE STRUCTURES.

1.7 MAJOR SOIL TYPES:

Soil Type	Description
EaD	Eckrant cobbly clay, 1 to 8 percent slopes
EeB	Eckrant stony clay, 0 to 3 percent slopes, stony
DoC	Doss silty clay, moist, 1 to 5 percent slopes
FaB	Fairlie clay, 1 to 2 percent slopes
DnB	Denton silty clay, 1 to 3 percent slopes
GsB	Georgetown stony clay loam, 1 to 3 percent slopes
CfB	Crawford clay, 1 to 3 percent slopes
DnC	Denton silty clay, 3 to 5 percent slopes

1.8 PROJECT SPECIFIC LOCATIONS (PSLs):
PSLs must be depicted on the Environmental Layout Sheets in Attachment 1.2 of this SWP3. PSLs may be identified during preconstruction meetings or during the construction process. Please choose from the options below:

☐ PSLs determined during preconstruction meeting
☐ PSLs determined during construction
☐ No PSLs planned for construction

Type	Sheet #s

All off-ROW PSLs required by the Contractor are the Contractor's responsibility. The Contractor shall secure all permits required by local, state, federal laws for off-ROW PSLs. The contractor shall provide diagrams, areas of disturbance, acreage, and BMPs for all off-ROW PSLs within one mile of the project.

1.9 CONSTRUCTION ACTIVITIES:
(Use the following list as a starting point when developing the Construction Activity Schedule and Ceasing Record in Attachment 2.5.)

☒ Mobilization
☒ Install sediment and erosion controls
☒ Blade existing topsoil into windrows, prep ROW, clear and grub
☒ Remove existing pavement
☒ Grading operations, excavation, and embankment
☒ Excavate and prepare subgrade for proposed pavement widening
☒ Remove existing culverts, safety end treatments (SETs)
☒ Remove existing metal beam guard fence (MBGF), bridge rail
☒ Install proposed pavement per plans
☒ Install culverts, culvert extensions, SETs
☒ Install mow strip, MBGF, bridge rail
☒ Place flex base
☒ Rework slopes, grade ditches
☒ Blade windrowed material back across slopes
☒ Revegetation of unpaved areas
☒ Achieve site stabilization and remove sediment and erosion control measures
☐ Other: _____
☐ Other: _____
☐ Other: _____

1.10 POTENTIAL POLLUTANTS AND SOURCES:

☒ Sediment laden stormwater from stormwater conveyance over disturbed area
☒ Fuels, oils, and lubricants from construction vehicles, equipment, and storage
☒ Solvents, paints, adhesives, etc. from various construction activities
☒ Transported soils from offsite vehicle tracking
☒ Construction debris and waste from various construction activities
☒ Contaminated water from excavation or dewatering pump-out water
☒ Sanitary waste from onsite restroom facilities
☒ Trash from various construction activities/receptacles
☒ Long-term stockpiles of material and waste
☒
☐ Other: _____
☐ Other: _____
☐ Other: _____

1.11 RECEIVING WATERS:
Receiving waters must be depicted on the Environmental Layout Sheets in Attachment 1.2 of this SWP3. Include Segment # for receiving waters.

Tributaries	Classified Waterbody
UNNAMED TRIBUTARY AND PONDS OF BRUSHY CREEK	BRUSHY CREEK (1244); IMPAIRED FOR BACTERIAL

* Add (*) for impaired waterbodies with pollutant in ().

1.12 ROLES AND RESPONSIBILITIES: TxDOT

☒ Development of plans and specifications
☒ Submit Notice of Intent (NOI) to TCEQ (≥5 acres)
☒ Post Construction Site Notice
☒ Submit NOI/CSN to local MS4
☒ Perform SWP3 inspections
☒ Maintain SWP3 records and update to reflect daily operations
☒ Complete and submit Notice of Termination to TCEQ
☒ Maintain SWP3 records for 3 years
☐ Other: _____
☐ Other: _____
☐ Other: _____

1.13 ROLES AND RESPONSIBILITIES: CONTRACTOR

☒ Day To Day Operational Control
☒ Submit Notice of Intent (NOI) to TCEQ (≥5 acres)
☒ Post Construction Site Notice
☒ Submit NOI/CSN to local MS4
☒ Maintain schedule of major construction activities
☒ Install, maintain and modify BMPs
☒ Complete and submit Notice of Termination to TCEQ
☒ Maintain SWP3 records for 3 years
☐ Other: _____
☐ Other: _____
☐ Other: _____

1.14 LOCAL MUNICIPAL SEPARATE STORM SEWER SYSTEM (MS4) OPERATOR COORDINATION:

MS4 Entity
LEANDER, CEDAR PARK, GEORGETOWN, ROUND ROCK

STORMWATER POLLUTION PREVENTION PLAN (SWP3)

© 2023

July 2023 Sheet 1 of 2

Texas Department of Transportation

FED. RD. DIV. NO.	PROJECT NO.		SHEET NO.
			389
STATE	STATE DIST.	COUNTY	
TEXAS	AUS	WILLIAMSON	
CONT.	SECT.	JOB	HIGHWAY NO.
			RM 2243

STORMWATER POLLUTION PREVENTION PLAN (SWP3):

2.0 BEST MANAGEMENT PRACTICES (BMPs) AND CONTROLS, INSPECTION, AND MAINTENANCE

The Contractor shall be the responsible party for implementing the BMPs described herein and for complying with the SWP3 for control of erosion and sedimentation during day-to-day operations. The Contractor shall implement changes to this SWP3 approved by TxDOT within the times specified in this SWP3 or the CGP.

2.1 EROSION CONTROL AND SOIL STABILIZATION BMPs:

T / P

- ☐ ☐ Protection of Existing Vegetation
- ☐ ☐ Vegetated Buffer Zones
- ☐ ☐ Soil Retention Blankets
- ☐ ☐ Geotextiles
- ☐ ☐ Mulching/ Hydromulching
- ☐ ☐ Soil Surface Treatments
- ☒ ☐ Temporary Seeding
- ☐ ☒ Permanent Planting, Sodding or Seeding
- ☒ ☐ Biodegradable Erosion Control Logs
- ☒ ☐ Rock Filter Dams/ Rock Check Dams
- ☒ ☐ Vertical Tracking
- ☐ ☐ Interceptor Swale
- ☐ ☒ Riprap
- ☐ ☐ Diversion Dike
- ☐ ☐ Temporary Pipe Slope Drain
- ☐ ☐ Embankment for Erosion Control
- ☐ ☐ Paved Flumes
- ☐ ☐ Other: _____
- ☐ ☐ Other: _____
- ☐ ☐ Other: _____
- ☐ ☐ Other: _____

2.2 SEDIMENT CONTROL BMPs:

T / P

- ☒ ☐ Biodegradable Erosion Control Logs
- ☒ ☐ Dewatering Controls
- ☒ ☐ Inlet Protection
- ☒ ☐ Rock Filter Dams/ Rock Check Dams
- ☐ ☐ Sandbag Berms
- ☒ ☐ Sediment Control Fence
- ☒ ☐ Stabilized Construction Exit
- ☐ ☐ Floating Turbidity Barrier
- ☐ ☐ Vegetated Buffer Zones
- ☐ ☒ Vegetated Filter Strips
- ☐ ☐ Other: _____
- ☐ ☐ Other: _____
- ☐ ☐ Other: _____
- ☐ ☐ Other: _____

Refer to the Environmental Layout Sheets/ SWP3 Layout Sheets located in Attachment 1.2 of this SWP3

Sediment control BMPs requiring design capacity calculations (See SWP3 Attachment 1.3.):

T / P

- ☐ ☐ Sediment Trap
  - ☐ Calculated volume runoff from 2-year, 24-hour storm for each acre of disturbed area
  - ☐ 3,600 cubic feet of storage per acre drained
- ☐ ☐ Sedimentation Basin
  - ☐ Not required (<10 acres disturbed)
  - ☐ Required (>10 acres) and implemented.
    - ☐ Calculated volume runoff from 2-year, 24-hour storm for each acre of disturbed area
    - ☐ 3,600 cubic feet of storage per acre drained
  - ☐ Required (>10 acres), but not feasible due to:
    - ☐ Available area/Site geometry
    - ☐ Site slope/Drainage patterns
    - ☐ Site soils/Geotechnical factors
    - ☐ Public safety
    - ☐ Other: _____

2.3 PERMANENT CONTROLS:

(Coordinate post-construction BMPs with appropriate TxDOT maintenance sections.)

BMPs To Be Left In Place Post Construction:

Type	Stationing	
	From	To

Refer to the Environmental Layout Sheets/ SWP3 Layout Sheets located in Attachment 1.2 of this SWP3

2.4 OFFSITE VEHICLE TRACKING CONTROLS:

- ☒ Excess dirt/mud on road removed daily
- ☒ Haul roads dampened for dust control
- ☒ Loaded haul trucks to be covered with tarpaulin
- ☒ Stabilized construction exit
- ☒ Daily street sweeping
- ☐ Other: _____
- ☐ Other: _____
- ☐ Other: _____
- ☐ Other: _____

2.5 POLLUTION PREVENTION MEASURES:

- ☒ Chemical Management
- ☒ Concrete and Materials Waste Management
- ☒ Debris and Trash Management
- ☒ Dust Control
- ☒ Sanitary Facilities
- ☐ Other: _____
- ☐ Other: _____
- ☐ Other: _____
- ☐ Other: _____
- ☐ Other: _____

2.6 VEGETATED BUFFER ZONES:

Natural vegetated buffers shall be maintained as feasible to protect adjacent surface waters. If vegetated natural buffer zones are not feasible due to site geometry, the appropriate additional sediment control measures have been incorporated into this SWP3.

Type	Stationing	
	From	To

Refer to the Environmental Layout Sheets/ SWP3 Layout Sheets located in Attachment 1.2 of this SWP3

2.7 ALLOWABLE NON-STORMWATER DISCHARGES:

- ☒ Fire hydrant flushings
- ☒ Irrigation drainage
- ☒ Pavement washwater (where spills or leaks have not occurred, and detergents are not used)
- ☒ Potable water sources
- ☒ Springs
- ☒ Uncontaminated groundwater
- ☒ Water used to wash vehicles or control dust
- ☒ Other allowable non-stormwater discharges as allowed by TPDES GP TXR150000.

2.8 DEWATERING:

Dewatering discharges of accumulated stormwater, groundwater, and surface water including discharges from dewatering of trenches, excavations, foundations, vaults, and other points of accumulation are prohibited unless managed by appropriate controls to prevent and minimize the offsite discharge of sediment and other pollutants.

2.9 INSPECTIONS:

All disturbed areas and erosion and sediment control devices shall be inspected at least once every seven (7) days. Inspections shall be performed by TxDOT as indicated on the Field Inspection and Maintenance Report Form 2118 and retained in Attachment 2.5 of this SWP3.

When dewatering activities are present, a daily inspection will be conducted once per day during those activities and documented in accordance with CGP and TxDOT requirements.

2.10 MAINTENANCE:

Control measures shall be properly installed according to specifications. If it is determined that a BMP or control measure is not operating effectively, maintenance must be accomplished as soon as possible and before the next anticipated rain event, but in no case later than 7 calendar days after being able to access the site. Maintenance shall be performed by the Contractor as indicated on the Field Inspection and Maintenance Report Form 2118 and retained in Attachment 2.5 of this SWP3.

STORMWATER POLLUTION PREVENTION PLAN (SWP3)

© 2023

July 2023 Sheet 2 of 2

Texas Department of Transportation

FED. RD. DIV. NO.	PROJECT NO.		SHEET NO.
			390
STATE	STATE DIST.	COUNTY	
TEXAS	AUS	WILLIAMSON	
CONT.	SECT.	JOB	HIGHWAY NO.
			RM 2243

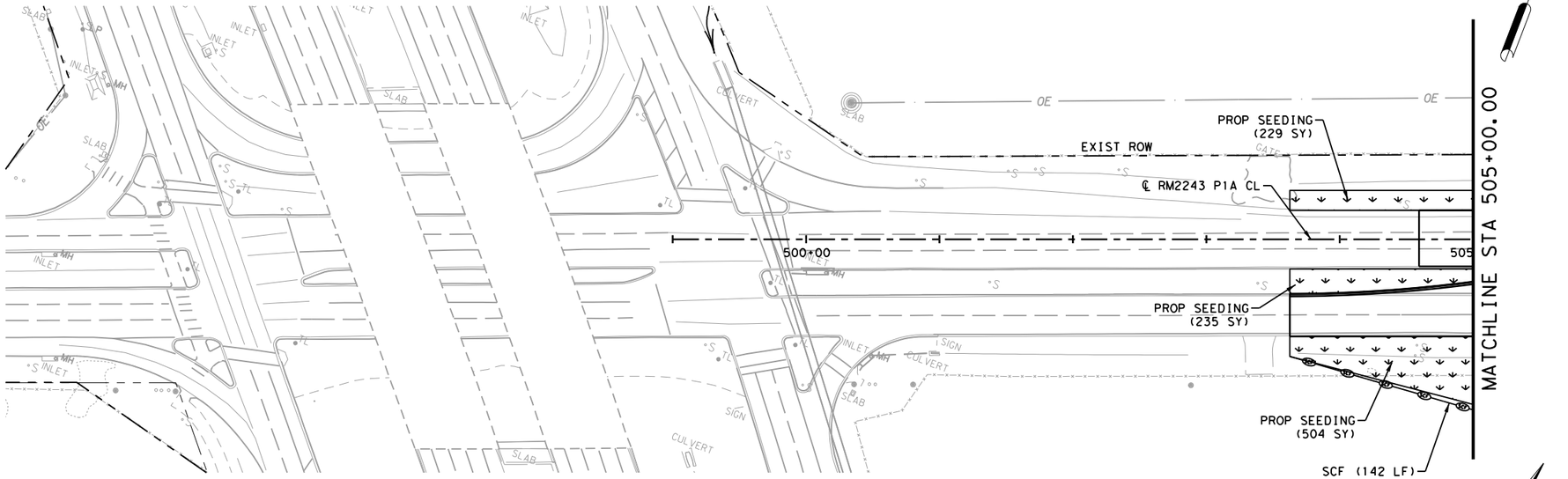

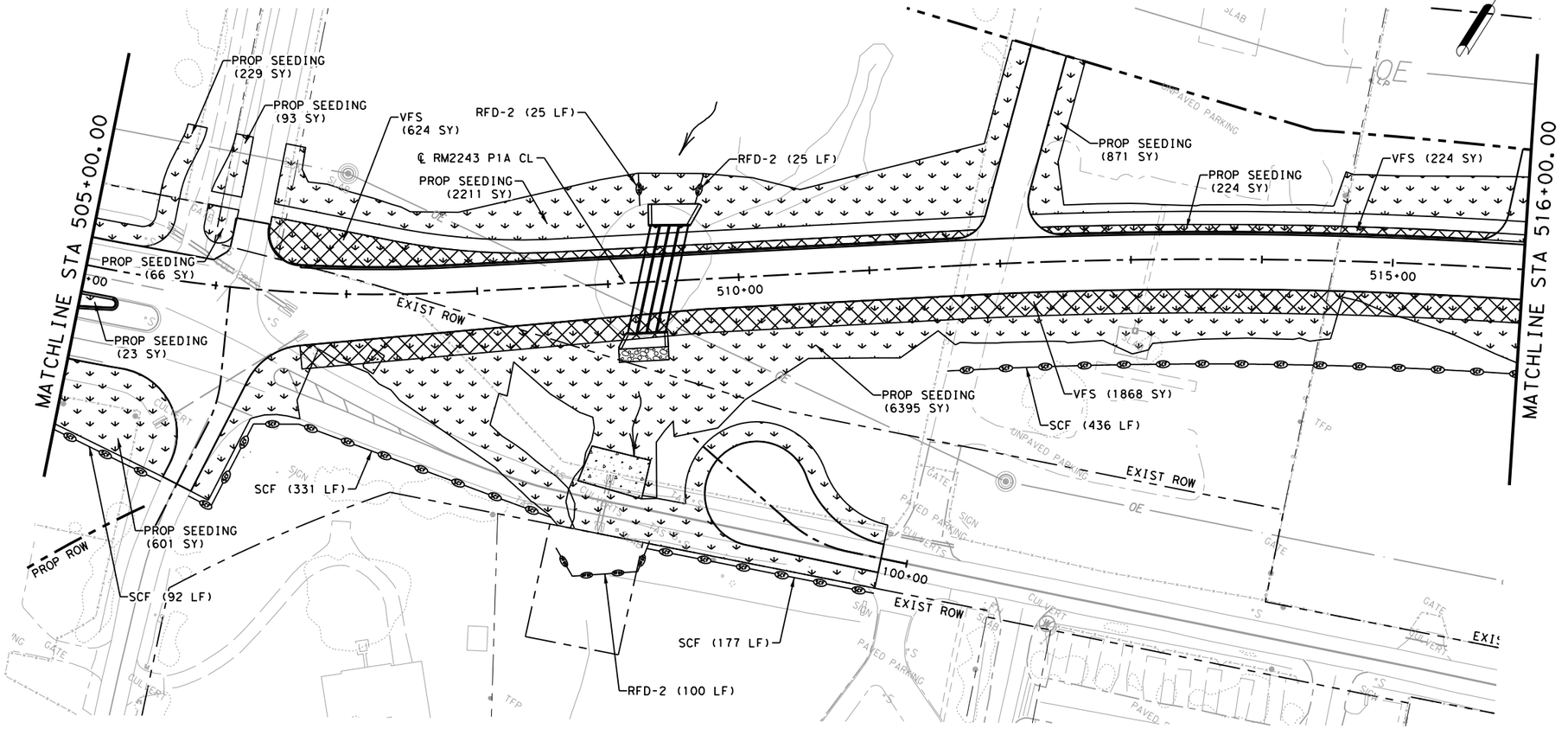

LEGEND

- SCF — SILT CONTROL FENCE
- CONSTRUCTION AREA
- CULVERT FLOW DIRECTION
- RFD2 — ROCK FILTER DAM
- ECL — EROSION CONTROL LOG
- TOPSOIL, SEEDING, & SOIL RETENTION BLANKET
- VEGETATIVE FILTER STRIP

NOTES:

1. ALL EROSION CONTROL MEASURES SHALL BE PLACED WITHIN COUNTY RIGHT-OF-WAY DURING CONSTRUCTION.
2. CONTRACTOR SHALL MAINTAIN EROSION CONTROL MEASURES.
3. CONSTRUCTION ENTRANCE / EXIT TO BE DETERMINED IN THE FIELD, AND APPROVED BY THE ENGINEER.
4. CONCRETE TRUCK CLEAN OUT LOCATIONS TO BE DETERMINED IN THE FIELD, AND APPROVED BY THE ENGINEER.
5. ALL EROSION CONTROL ELEMENTS SHALL BE IN PLACE PRIOR TO COMMENCING ANY SOIL DISTURBING ACTIVITIES.

0 50 100

SCALE: 1"=100'

STATE OF TEXAS
JOSHUA T. RICHTER
141234
LICENSED
PROFESSIONAL ENGINEER

4/10/2025

WILCO TEXAS

BGE, Inc.
101 W Louis Henna Blvd, Suite 400, Austin, TX 78728
Tel: 512-879-0400 ● www.bgeinc.com
TBPE Registration No. F-1046

RM 2243

SW3P LAYOUT

SHEET 1 OF 10

FED.RD. DIV.NO.	PROJECT NO.		SHEET NO.
6			391
STATE	DIST.	COUNTY	
TEXAS	AUS	WILLIAMSON	
CONT.	SECT.	JOB	HIGHWAY NO.
0914	05	222	RM 2243

4/10/2025 1:08:14 PM pdf.pltcfg
G:\TXC\Projects\County*Williamson\7473-02 RM 2243 Phase 1A\03*CADD\01*Shts\14-ENV\RM2243*P1A*SW3P*01.dgn

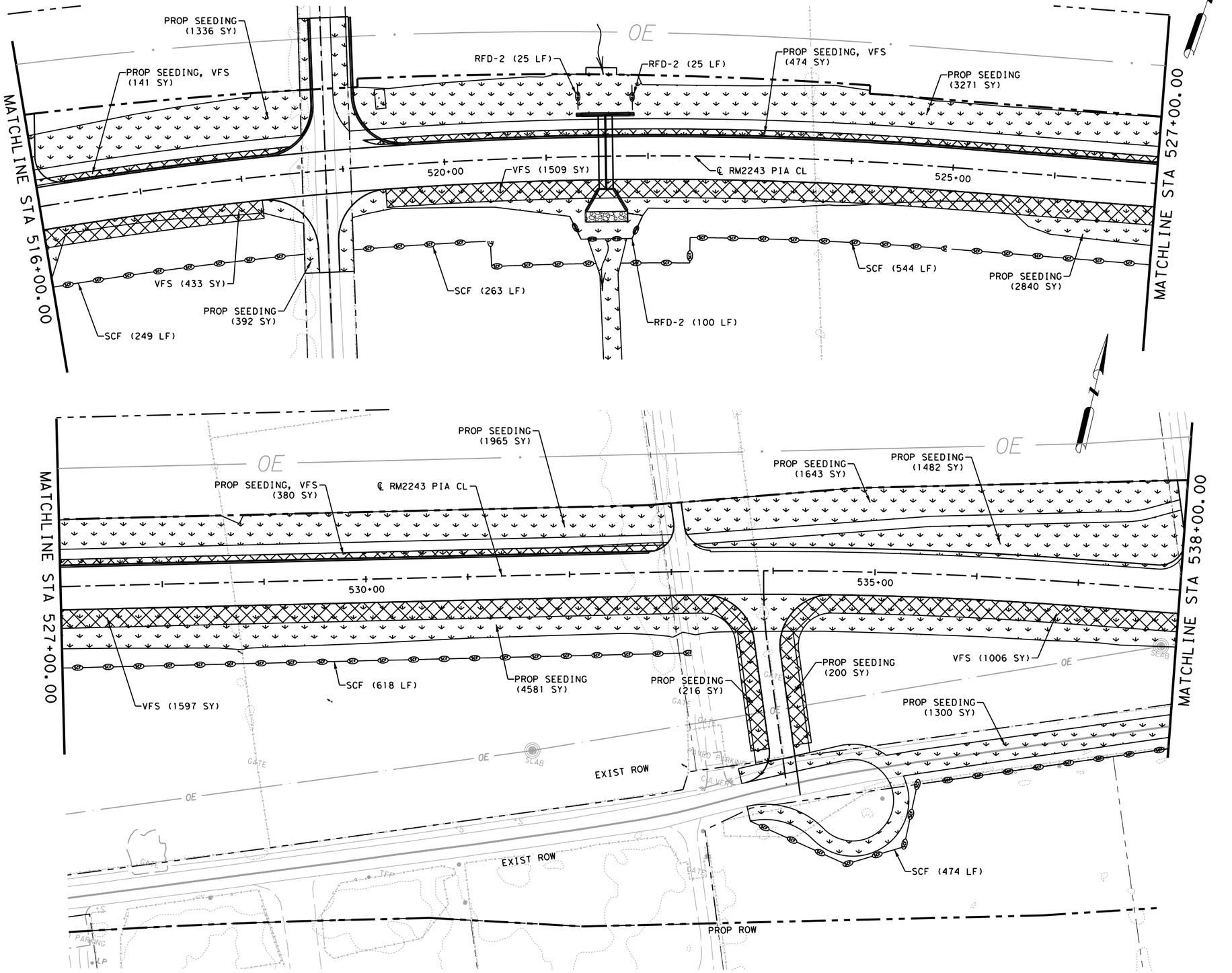

LEGEND

- SCF — SILT CONTROL FENCE
- CONSTRUCTION AREA
- CULVERT FLOW DIRECTION
- RFD2 — ROCK FILTER DAM
- ECL — EROSION CONTROL LOG
- TOPSOIL, SEEDING, & SOIL RETENTION BLANKET
- VEGETATIVE FILTER STRIP

NOTES:

1. ALL EROSION CONTROL MEASURES SHALL BE PLACED WITHIN COUNTY RIGHT-OF-WAY DURING CONSTRUCTION.
2. CONTRACTOR SHALL MAINTAIN EROSION CONTROL MEASURES.
3. CONSTRUCTION ENTRANCE / EXIT TO BE DETERMINED IN THE FIELD, AND APPROVED BY THE ENGINEER.
4. CONCRETE TRUCK CLEAN OUT LOCATIONS TO BE DETERMINED IN THE FIELD, AND APPROVED BY THE ENGINEER.
5. ALL EROSION CONTROL ELEMENTS SHALL BE IN PLACE PRIOR TO COMMENCING ANY SOIL DISTURBING ACTIVITIES.

0 50 100

SCALE: 1"=100'

STATE OF TEXAS
JOSHUA T. RICHTER
141234
LICENSED
PROFESSIONAL ENGINEER

4/10/2025

WILCO
TEXAS

BGE, Inc.
101 W Louis Henna Blvd, Suite 400, Austin, TX 78728
Tel: 512-879-0400 • www.bgeinc.com
TBPE Registration No. F-1046

RM 2243

SW3P LAYOUT

SHEET 2 OF 10

FED.RD. DIV.NO.	PROJECT NO.		SHEET NO.
6			392
STATE	DIST.	COUNTY	
TEXAS	AUS	WILLIAMSON	
CONT.	SECT.	JOB	HIGHWAY NO.
0914	05	222	RM 2243

4/10/2025 1:08:16 PM pdf.pltcfg
C:\TXC\Projects\County\Williamson\7473-02 RM 2243 Phase 1A\03\CADD\01\Shts\14-ENV\RM2243_P1A_SW3P_02.dgn

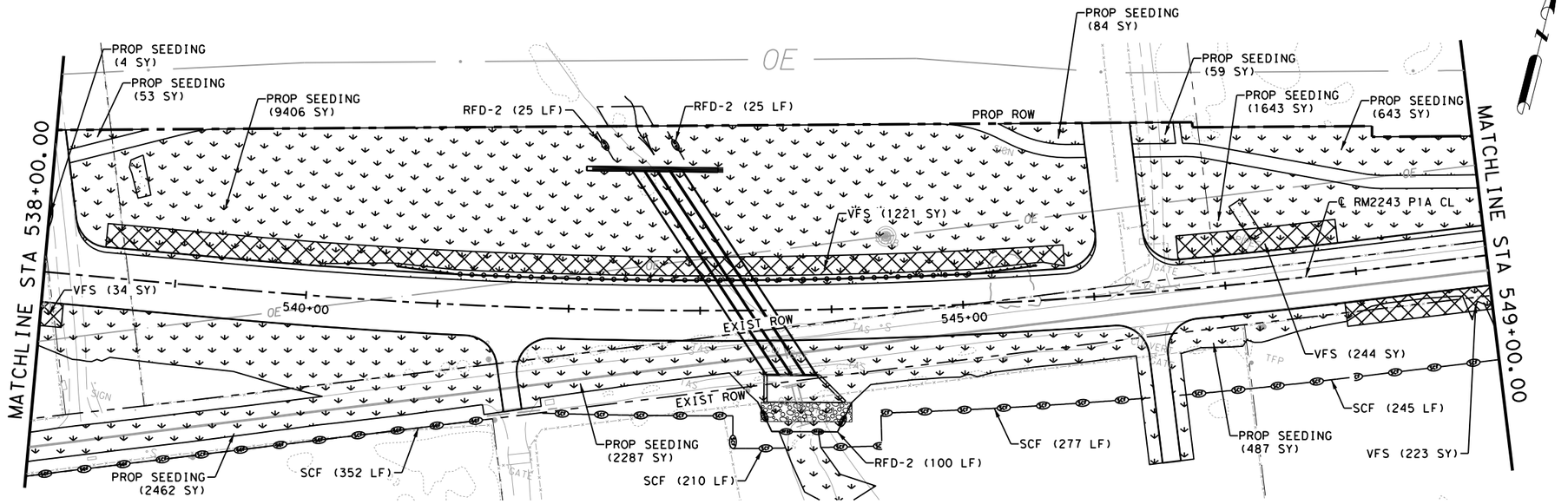

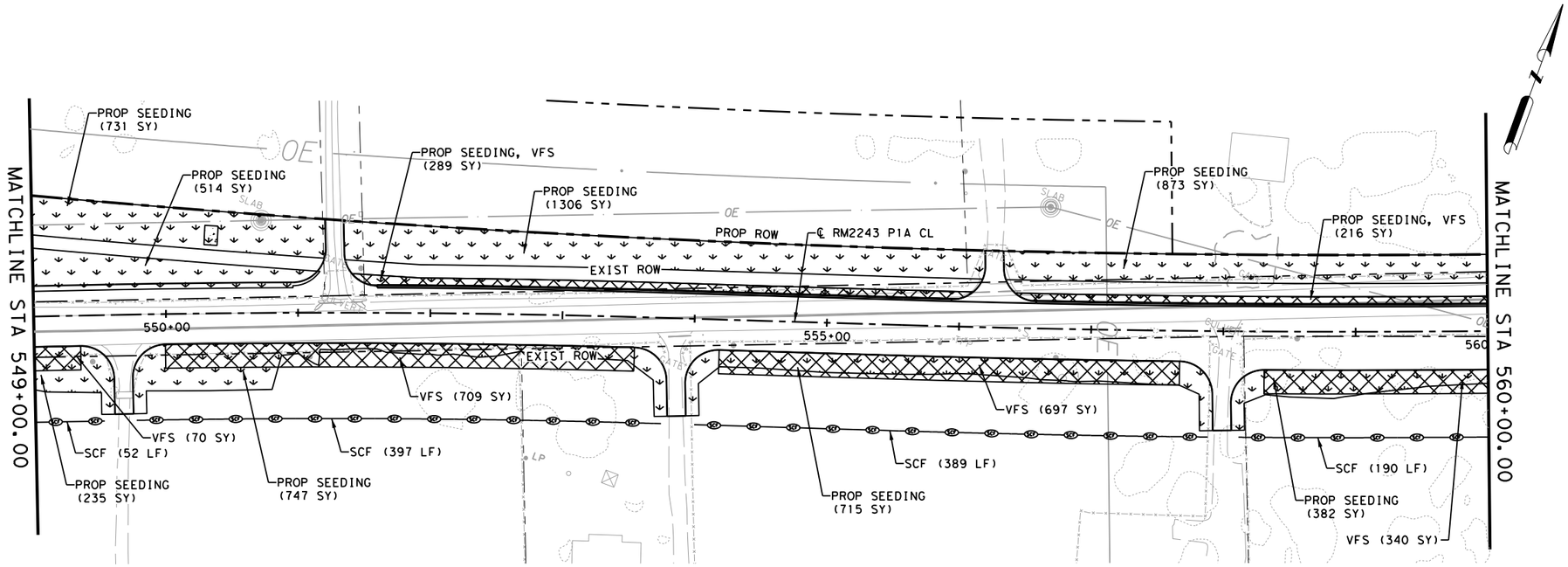

LEGEND

- SCF — SILT CONTROL FENCE
- CONSTRUCTION AREA
- CULVERT FLOW DIRECTION
- RFD2 — ROCK FILTER DAM
- ECL — EROSION CONTROL LOG
- TOPSOIL, SEEDING, & SOIL RETENTION BLANKET
- VEGETATIVE FILTER STRIP

NOTES:

1. ALL EROSION CONTROL MEASURES SHALL BE PLACED WITHIN COUNTY RIGHT-OF-WAY DURING CONSTRUCTION.
2. CONTRACTOR SHALL MAINTAIN EROSION CONTROL MEASURES.
3. CONSTRUCTION ENTRANCE / EXIT TO BE DETERMINED IN THE FIELD, AND APPROVED BY THE ENGINEER.
4. CONCRETE TRUCK CLEAN OUT LOCATIONS TO BE DETERMINED IN THE FIELD, AND APPROVED BY THE ENGINEER.
5. ALL EROSION CONTROL ELEMENTS SHALL BE IN PLACE PRIOR TO COMMENCING ANY SOIL DISTURBING ACTIVITIES.

0 50 100

SCALE: 1"=100'

STATE OF TEXAS
JOSHUA T. RICHTER
141234
LICENSED
PROFESSIONAL ENGINEER

Joshua T. Richter

4/10/2025

WILCO TEXAS

BGE, Inc.
101 W Louis Henna Blvd, Suite 400, Austin, TX 78728
Tel: 512-879-0400 ● www.bgeinc.com
TBPE Registration No. F-1046

RM 2243

SW3P LAYOUT

SHEET 3 OF 10

FED.RD. DIV.NO.	PROJECT NO.		SHEET NO.
6			393
STATE	DIST.	COUNTY	
TEXAS	AUS	WILLIAMSON	
CONT.	SECT.	JOB	HIGHWAY NO.
0914	05	222	RM 2243

4/10/2025 1:08:17 PM pdf.pltcfg
G:\TXC\Projects\County\Williamson\7473-02 RM 2243 Phase 1A\03*CADD\01*Shts\14-ENV\RM2243*P1A*SW3P*03.dgn

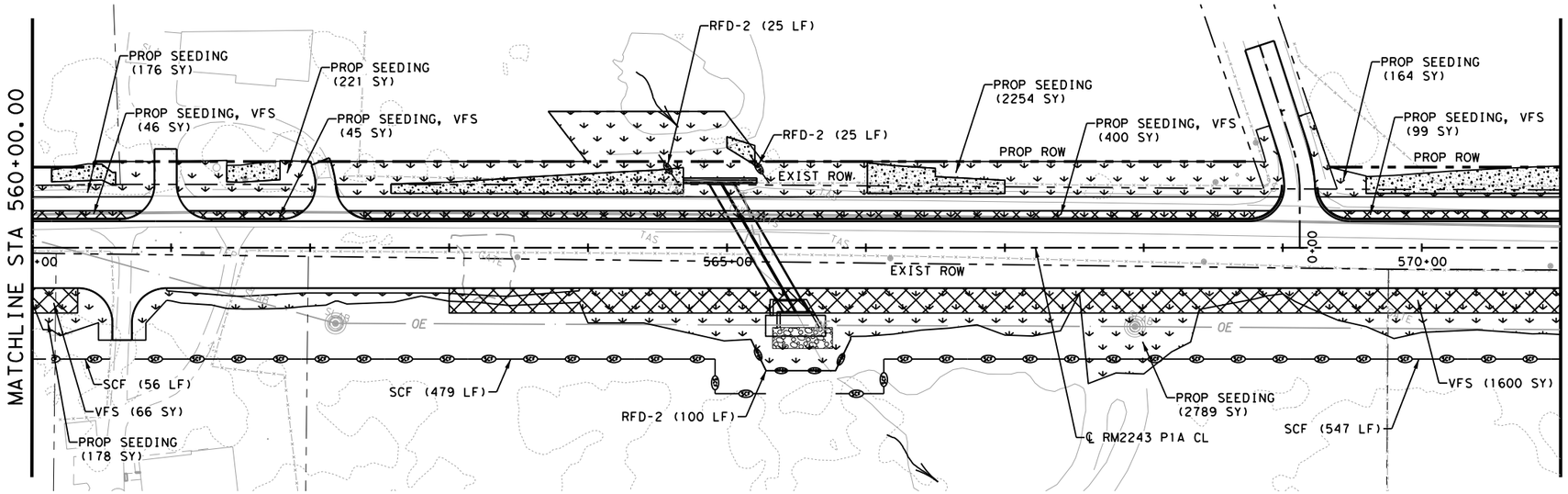

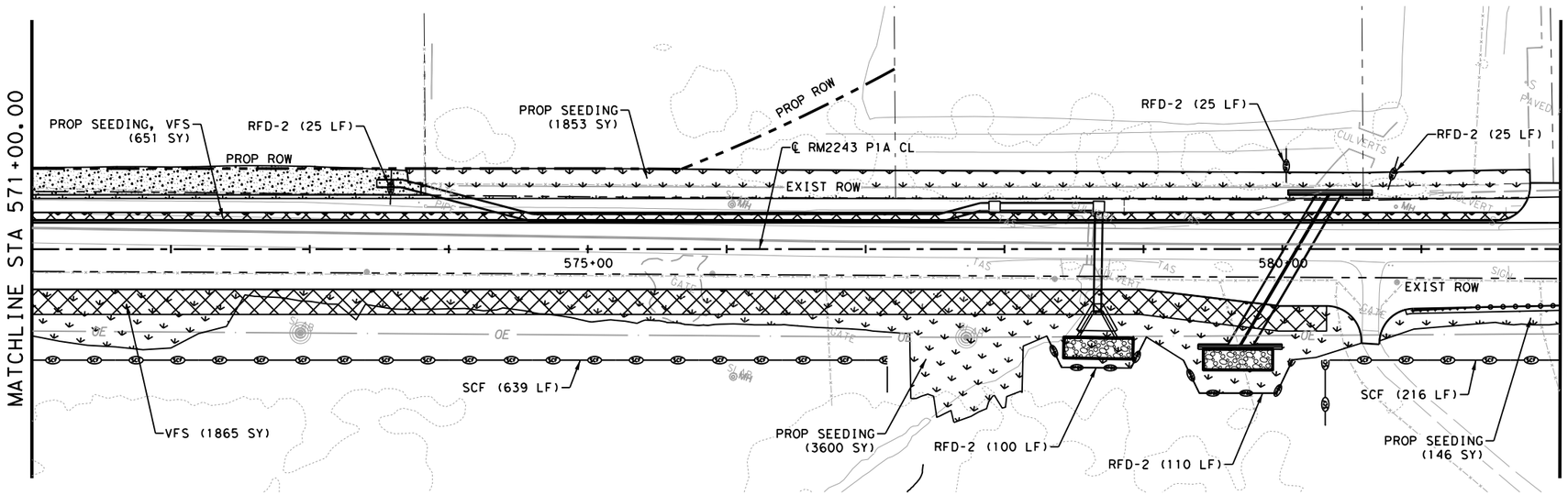

LEGEND

- SCF — SILT CONTROL FENCE
- CONSTRUCTION AREA
- CULVERT FLOW DIRECTION
- RFD2 — ROCK FILTER DAM
- ECL — EROSION CONTROL LOG
- TOPSOIL, SEEDING, & SOIL RETENTION BLANKET
- VEGETATIVE FILTER STRIP

NOTES:

1. ALL EROSION CONTROL MEASURES SHALL BE PLACED WITHIN COUNTY RIGHT-OF-WAY DURING CONSTRUCTION.
2. CONTRACTOR SHALL MAINTAIN EROSION CONTROL MEASURES.
3. CONSTRUCTION ENTRANCE / EXIT TO BE DETERMINED IN THE FIELD, AND APPROVED BY THE ENGINEER.
4. CONCRETE TRUCK CLEAN OUT LOCATIONS TO BE DETERMINED IN THE FIELD, AND APPROVED BY THE ENGINEER.
5. ALL EROSION CONTROL ELEMENTS SHALL BE IN PLACE PRIOR TO COMMENCING ANY SOIL DISTURBING ACTIVITIES.

0 50 100

SCALE: 1"=100'

STATE OF TEXAS
JOSHUA T. RICHTER
141234
LICENSED PROFESSIONAL ENGINEER

4/10/2025

WILCO TEXAS

BGE, Inc.
101 W Louis Henna Blvd, Suite 400, Austin, TX 78728
Tel: 512-879-0400 ● www.bgeinc.com
TBPE Registration No. F-1046

RM 2243

SW3P LAYOUT

SHEET 4 OF 10

FED.RD. DIV.NO.	PROJECT NO.	SHEET NO.
6		394

STATE	DIST.	COUNTY	
TEXAS	AUS	WILLIAMSON	
CONT.	SECT.	JOB	HIGHWAY NO.
0914	05	222	RM 2243

4/10/2025 1:08:19 PM pdf.pltcfg
G:\TXC\Projects\County\Williamson\7473-02 RM 2243 Phase 1A\03*CADD\01*Shts\14-ENV\RM2243*P1A*SW3P*04.dgn

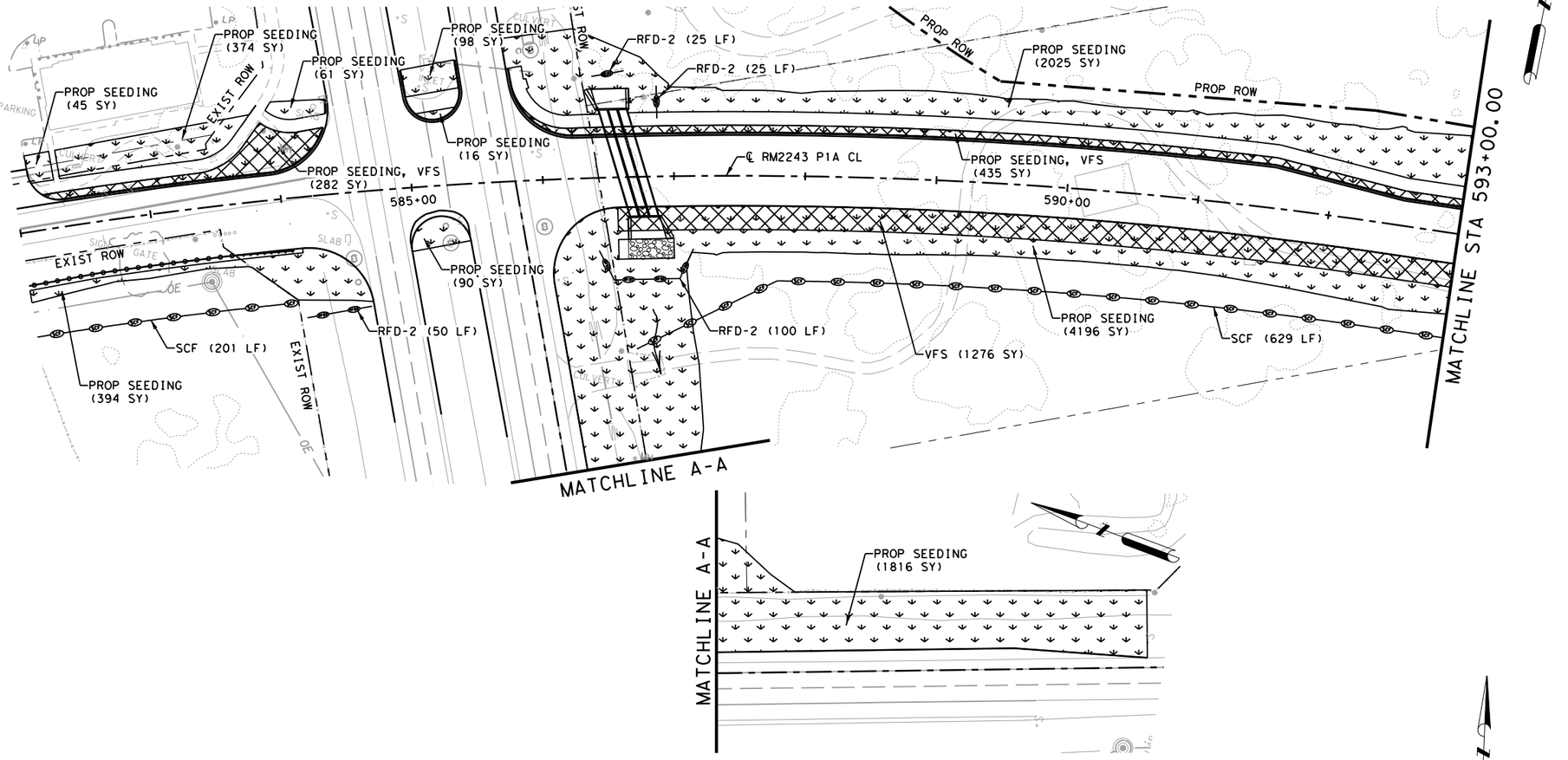

LEGEND

- SCF — SILT CONTROL FENCE
- CONSTRUCTION AREA
- CULVERT FLOW DIRECTION
- RFD2 — ROCK FILTER DAM
- ECL — EROSION CONTROL LOG
- TOPSOIL, SEEDING, & SOIL RETENTION BLANKET
- VEGETATIVE FILTER STRIP

NOTES:

1. ALL EROSION CONTROL MEASURES SHALL BE PLACED WITHIN COUNTY RIGHT-OF-WAY DURING CONSTRUCTION.
2. CONTRACTOR SHALL MAINTAIN EROSION CONTROL MEASURES.
3. CONSTRUCTION ENTRANCE / EXIT TO BE DETERMINED IN THE FIELD, AND APPROVED BY THE ENGINEER.
4. CONCRETE TRUCK CLEAN OUT LOCATIONS TO BE DETERMINED IN THE FIELD, AND APPROVED BY THE ENGINEER.
5. ALL EROSION CONTROL ELEMENTS SHALL BE IN PLACE PRIOR TO COMMENCING ANY SOIL DISTURBING ACTIVITIES.

0 50 100

SCALE: 1"=100'

STATE OF TEXAS
JOSHUA T. RICHTER
141234
LICENSED
PROFESSIONAL ENGINEER

4/10/2025

WILCO TEXAS

BGE, Inc.
101 W Louis Henna Blvd, Suite 400, Austin, TX 78728
Tel: 512-879-0400 • www.bgeinc.com
TBPE Registration No. F-1046

RM 2243

SW3P LAYOUT

SHEET 5 OF 10

FED.RD. DIV.NO.	PROJECT NO.		SHEET NO.
6			395
STATE	DIST.	COUNTY	
TEXAS	AUS	WILLIAMSON	
CONT.	SECT.	JOB	HIGHWAY NO.
0914	05	222	RM 2243

4/10/2025 1:08:21 PM pdf.pltcfg
G:\TXC\Projects\County\Williamson\7473-02 RM 2243 Phase 1A\03*CADD\01*Shts\14-ENV\RM2243*P1A*SW3P*05.dgn

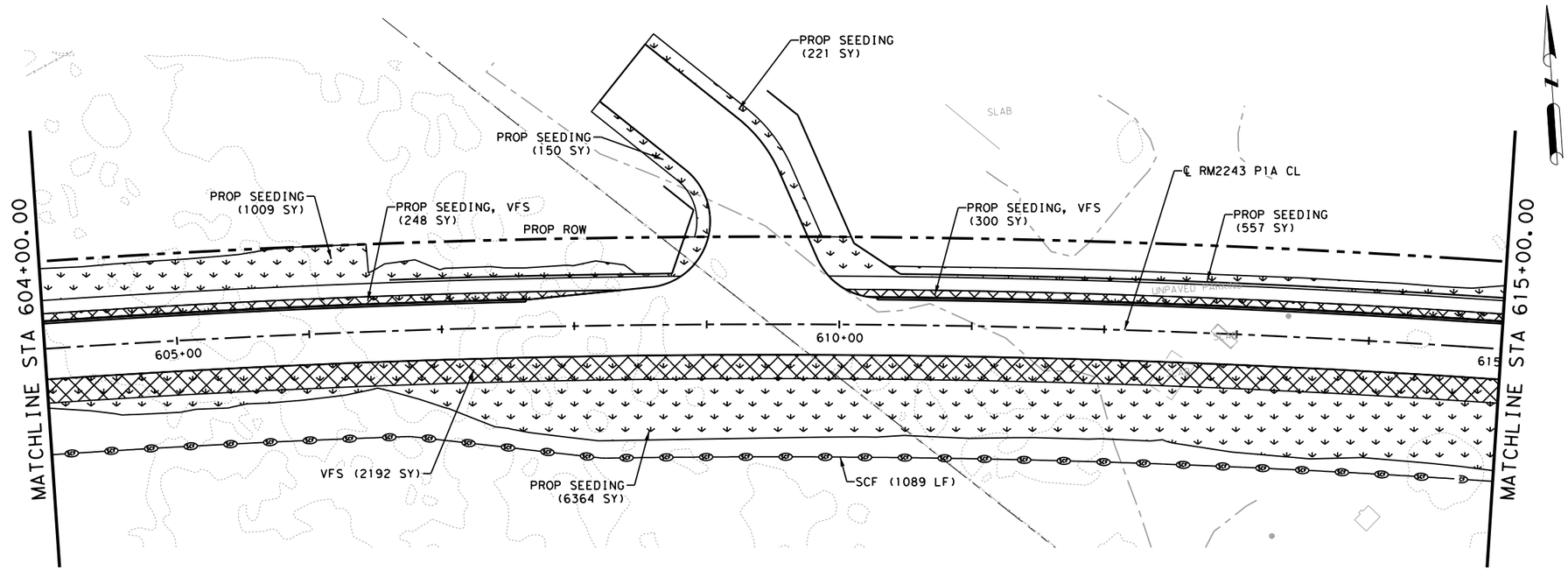

LEGEND

- SCF — SILT CONTROL FENCE
- CONSTRUCTION AREA
- CULVERT FLOW DIRECTION
- RFDZ — ROCK FILTER DAM
- ECL — EROSION CONTROL LOG
- TOPSOIL, SEEDING, & SOIL RETENTION BLANKET
- VEGETATIVE FILTER STRIP

NOTES:

1. ALL EROSION CONTROL MEASURES SHALL BE PLACED WITHIN COUNTY RIGHT-OF-WAY DURING CONSTRUCTION.
2. CONTRACTOR SHALL MAINTAIN EROSION CONTROL MEASURES.
3. CONSTRUCTION ENTRANCE / EXIT TO BE DETERMINED IN THE FIELD, AND APPROVED BY THE ENGINEER.
4. CONCRETE TRUCK CLEAN OUT LOCATIONS TO BE DETERMINED IN THE FIELD, AND APPROVED BY THE ENGINEER.
5. ALL EROSION CONTROL ELEMENTS SHALL BE IN PLACE PRIOR TO COMMENCING ANY SOIL DISTURBING ACTIVITIES.

0 50 100

SCALE: 1"=100'

STATE OF TEXAS
JOSHUA T. RICHTER
141234
LICENSED
PROFESSIONAL ENGINEER

4/10/2025

WILCO
TEXAS

BGE, Inc.
101 W Louis Henna Blvd, Suite 400, Austin, TX 78728
Tel: 512-879-0400 ● www.bgeinc.com
TBPE Registration No. F-1046

RM 2243

SW3P LAYOUT

SHEET 6 OF 10

FED.RD. DIV.NO.	PROJECT NO.		SHEET NO.
6			396
STATE	DIST.	COUNTY	
TEXAS	AUS	WILLIAMSON	
CONT.	SECT.	JOB	HIGHWAY NO.
0914	05	222	RM 2243

4/10/2025 1:08:22 PM pdf.pltcfg
G:\TXC\Projects\County\Williamson\7473-02 RM 2243 Phase 1A\03*CADD\01*Shts\14-ENV\RM2243*P1A*SW3P*06.dgn

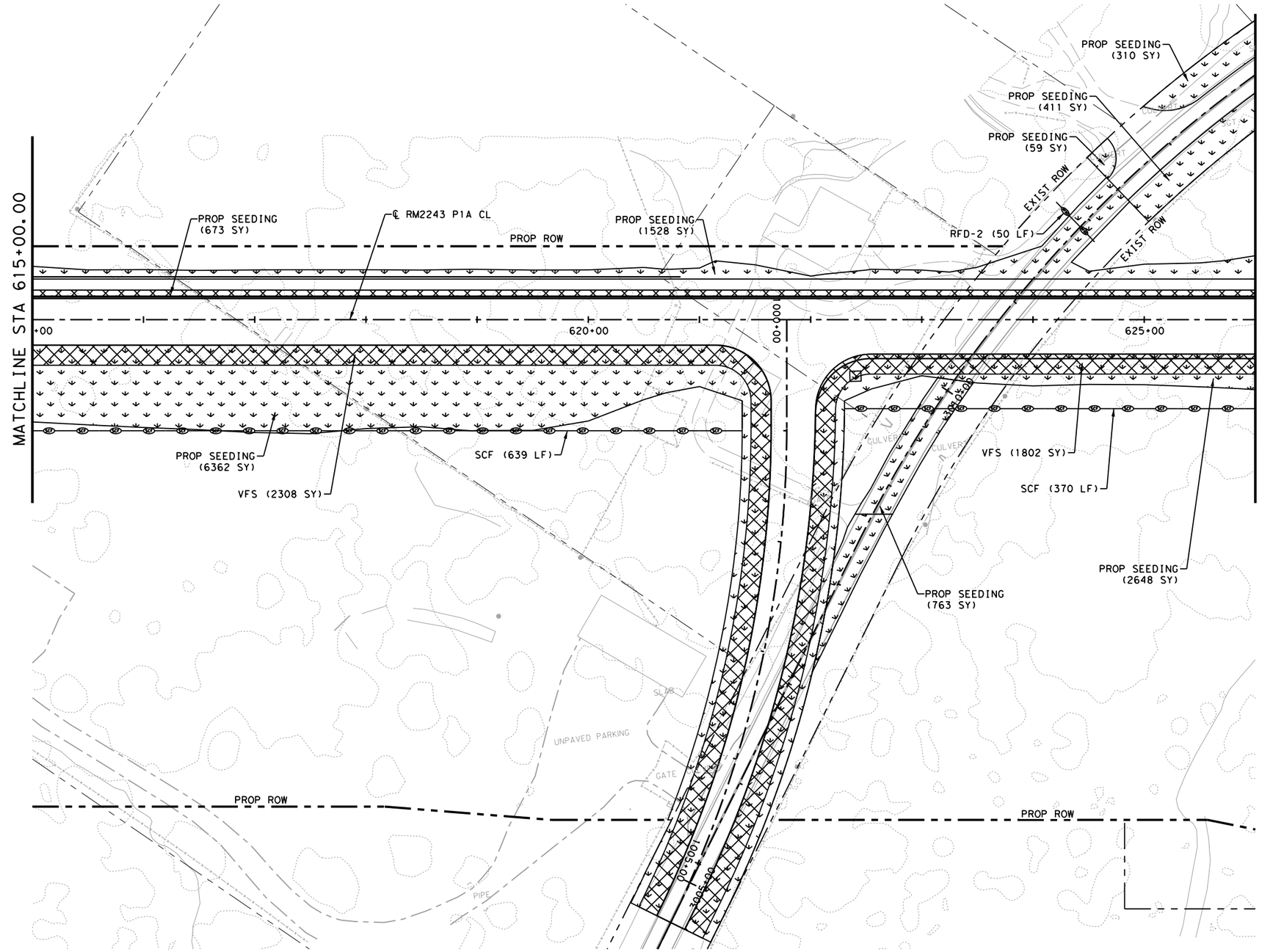

LEGEND

- SCF — SILT CONTROL FENCE
- CONSTRUCTION AREA
- CULVERT FLOW DIRECTION
- RFD2 — ROCK FILTER DAM
- ECL — EROSION CONTROL LOG
- TOPSOIL, SEEDING, & SOIL RETENTION BLANKET
- VEGETATIVE FILTER STRIP

NOTES:

1. ALL EROSION CONTROL MEASURES SHALL BE PLACED WITHIN COUNTY RIGHT-OF-WAY DURING CONSTRUCTION.
2. CONTRACTOR SHALL MAINTAIN EROSION CONTROL MEASURES.
3. CONSTRUCTION ENTRANCE / EXIT TO BE DETERMINED IN THE FIELD, AND APPROVED BY THE ENGINEER.
4. CONCRETE TRUCK CLEAN OUT LOCATIONS TO BE DETERMINED IN THE FIELD, AND APPROVED BY THE ENGINEER.
5. ALL EROSION CONTROL ELEMENTS SHALL BE IN PLACE PRIOR TO COMMENCING ANY SOIL DISTURBING ACTIVITIES.

0 50 100

SCALE: 1"=100'

STATE OF TEXAS
JOSHUA T. RICHTER
141234
LICENSED PROFESSIONAL ENGINEER

4/10/2025

WILCO TEXAS

BGE, Inc.
101 W Louis Henna Blvd, Suite 400, Austin, TX 78728
Tel: 512-879-0400 • www.bgeinc.com
TBPE Registration No. F-1046

RM 2243

SW3P LAYOUT

SHEET 7 OF 10

FED.RD. DIV.NO.	PROJECT NO.		SHEET NO.
6			397
STATE	DIST.	COUNTY	
TEXAS	AUS	WILLIAMSON	
CONT.	SECT.	JOB	HIGHWAY NO.
0914	05	222	RM 2243

4/10/2025 1:08:23 PM pdf.pltcfg
G:\TXC\Projects\County\Williamson\7473-02 RM 2243 Phase 1A\03*CADD\01*Shts\14-ENV\RM2243*P1A*SW3P*07.dgn

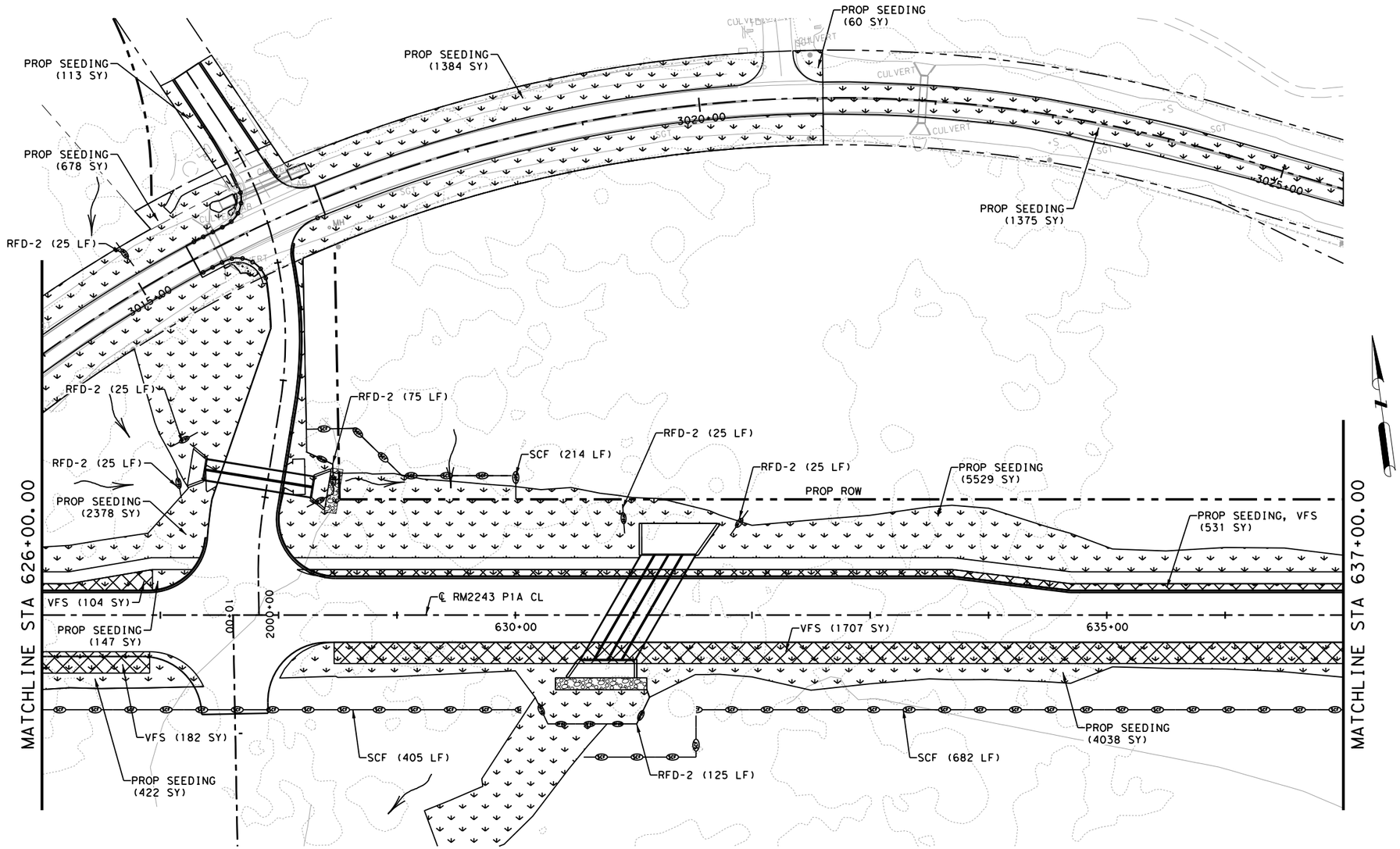

LEGEND

- SCF — SILT CONTROL FENCE
- CONSTRUCTION AREA
- CULVERT FLOW DIRECTION
- RFD2 — ROCK FILTER DAM
- ECL — EROSION CONTROL LOG
- TOPSOIL, SEEDING, & SOIL RETENTION BLANKET
- VEGETATIVE FILTER STRIP

NOTES:

1. ALL EROSION CONTROL MEASURES SHALL BE PLACED WITHIN COUNTY RIGHT-OF-WAY DURING CONSTRUCTION.
2. CONTRACTOR SHALL MAINTAIN EROSION CONTROL MEASURES.
3. CONSTRUCTION ENTRANCE / EXIT TO BE DETERMINED IN THE FIELD, AND APPROVED BY THE ENGINEER.
4. CONCRETE TRUCK CLEAN OUT LOCATIONS TO BE DETERMINED IN THE FIELD, AND APPROVED BY THE ENGINEER.
5. ALL EROSION CONTROL ELEMENTS SHALL BE IN PLACE PRIOR TO COMMENCING ANY SOIL DISTURBING ACTIVITIES.

0 50 100

SCALE: 1"=100'

STATE OF TEXAS
JOSHUA T. RICHTER
141234
LICENSED
PROFESSIONAL ENGINEER

4/10/2025

WILCO TEXAS

BGE, Inc.
101 W Louis Henna Blvd, Suite 400, Austin, TX 78728
Tel: 512-879-0400 ● www.bgeinc.com
TBPE Registration No. F-1046

RM 2243

SW3P LAYOUT

SHEET 8 OF 10

FED.RD. DIV.NO.	PROJECT NO.		SHEET NO.
6			398
STATE	DIST.	COUNTY	
TEXAS	AUS	WILLIAMSON	
CONT.	SECT.	JOB	HIGHWAY NO.
0914	05	222	RM 2243

4/10/2025 1:08:24 PM pdf.pltcfg
G:\TXC\Projects\County*Williamson\7473-02 RM 2243 Phase 1A\03*CADD\01*Shts\14-ENV\RM2243*P1A*SW3P*08.dgn

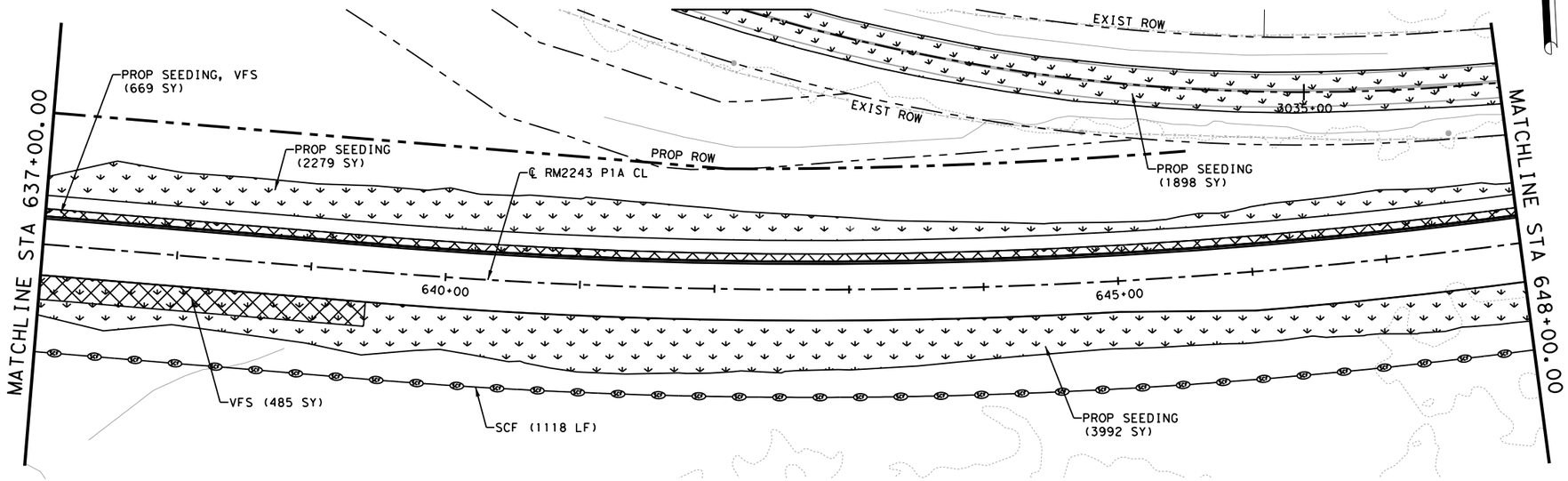

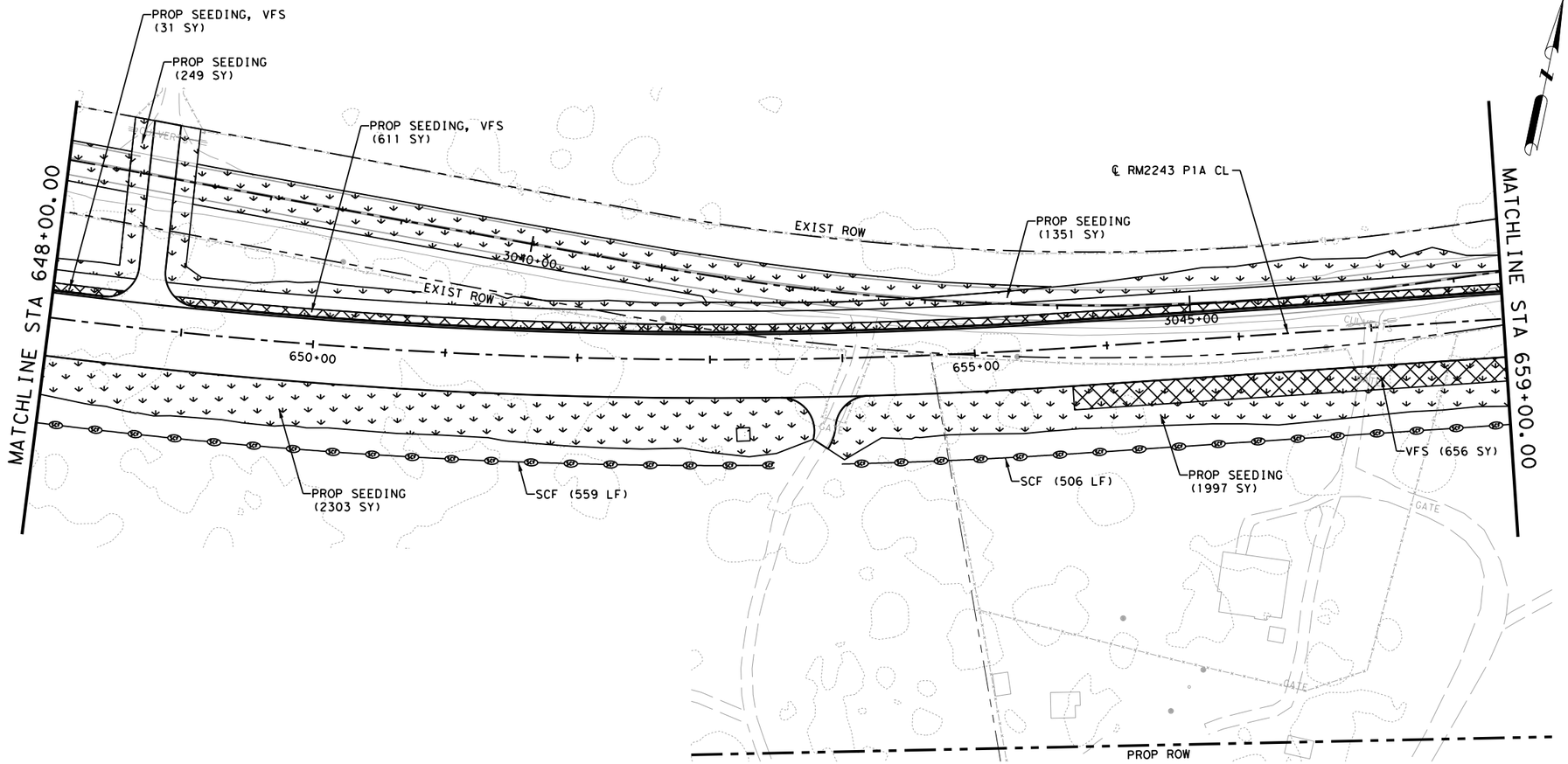

LEGEND

- SCF — SILT CONTROL FENCE
- CONSTRUCTION AREA
- CULVERT FLOW DIRECTION
- RFD2 — ROCK FILTER DAM
- ECL — EROSION CONTROL LOG
- TOPSOIL, SEEDING, & SOIL RETENTION BLANKET
- VEGETATIVE FILTER STRIP

NOTES:

1. ALL EROSION CONTROL MEASURES SHALL BE PLACED WITHIN COUNTY RIGHT-OF-WAY DURING CONSTRUCTION.
2. CONTRACTOR SHALL MAINTAIN EROSION CONTROL MEASURES.
3. CONSTRUCTION ENTRANCE / EXIT TO BE DETERMINED IN THE FIELD, AND APPROVED BY THE ENGINEER.
4. CONCRETE TRUCK CLEAN OUT LOCATIONS TO BE DETERMINED IN THE FIELD, AND APPROVED BY THE ENGINEER.
5. ALL EROSION CONTROL ELEMENTS SHALL BE IN PLACE PRIOR TO COMMENCING ANY SOIL DISTURBING ACTIVITIES.

0 50 100

SCALE: 1"=100'

STATE OF TEXAS
JOSHUA T. RICHTER
141234
LICENSED
PROFESSIONAL ENGINEER

4/10/2025

WILCO
TEXAS

BGE, Inc.
101 W Louis Henna Blvd, Suite 400, Austin, TX 78728
Tel: 512-879-0400 • www.bgeinc.com
TBPE Registration No. F-1046

RM 2243

SW3P LAYOUT

SHEET 9 OF 10

FED.RD. DIV.NO.	PROJECT NO.		SHEET NO.
6			399
STATE	DIST.	COUNTY	
TEXAS	AUS	WILLIAMSON	
CONT.	SECT.	JOB	HIGHWAY NO.
0914	05	222	RM 2243

4/10/2025 1:08:26 PM pdf.pltcfg
C:\TXC\Projects\County*Williamson\7473-02 RM 2243 Phase 1A\03*CADD\01*Shts\14-ENV\RM2243*P1A*SW3P*09.dgn

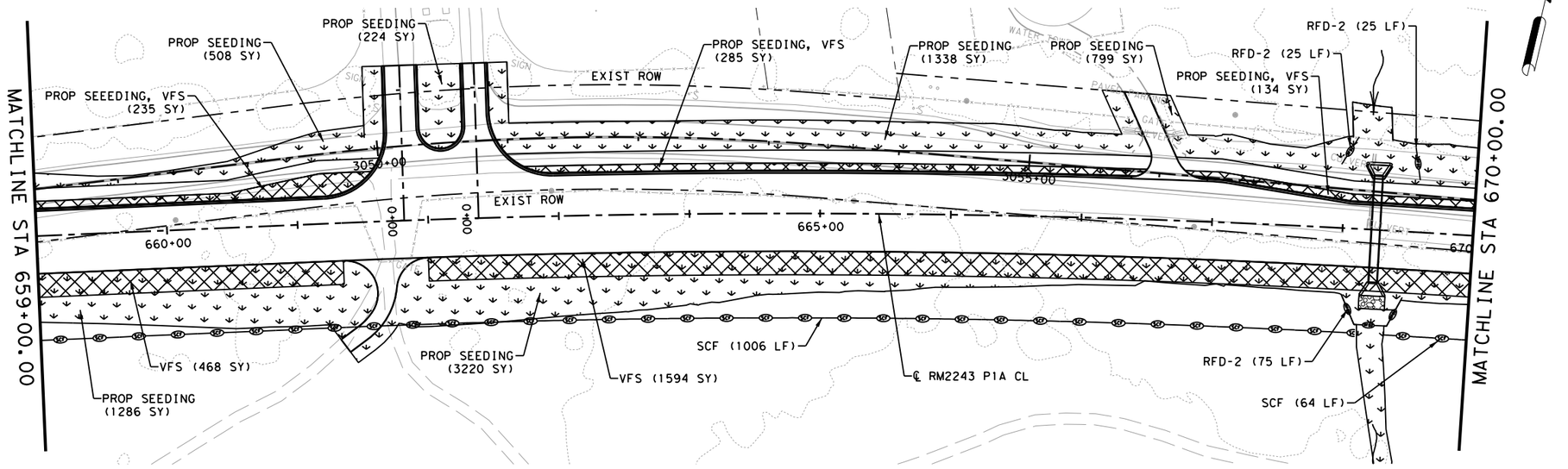

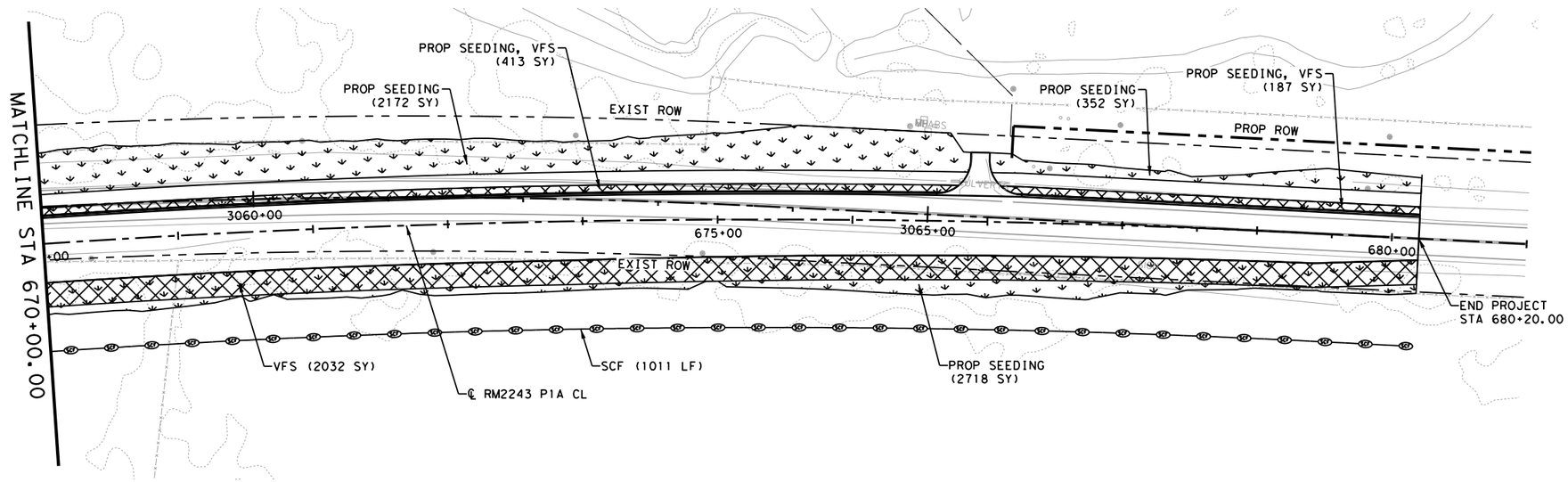

LEGEND

- SCF — SILT CONTROL FENCE
- CONSTRUCTION AREA
- CULVERT FLOW DIRECTION
- RFD2 — ROCK FILTER DAM
- ECL — EROSION CONTROL LOG
- TOPSOIL, SEEDING, & SOIL RETENTION BLANKET
- VEGETATIVE FILTER STRIP

NOTES:

1. ALL EROSION CONTROL MEASURES SHALL BE PLACED WITHIN COUNTY RIGHT-OF-WAY DURING CONSTRUCTION.
2. CONTRACTOR SHALL MAINTAIN EROSION CONTROL MEASURES.
3. CONSTRUCTION ENTRANCE / EXIT TO BE DETERMINED IN THE FIELD, AND APPROVED BY THE ENGINEER.
4. CONCRETE TRUCK CLEAN OUT LOCATIONS TO BE DETERMINED IN THE FIELD, AND APPROVED BY THE ENGINEER.
5. ALL EROSION CONTROL ELEMENTS SHALL BE IN PLACE PRIOR TO COMMENCING ANY SOIL DISTURBING ACTIVITIES.

0 50 100

SCALE: 1"=100'

STATE OF TEXAS
JOSHUA T. RICHTER
141234
LICENSED
PROFESSIONAL ENGINEER

4/10/2025

WILCO
TEXAS

BGE, Inc.
101 W Louis Henna Blvd, Suite 400, Austin, TX 78728
Tel: 512-879-0400 ● www.bgeinc.com
TBPE Registration No. F-1046

RM 2243

SW3P LAYOUT

SHEET 10 OF 10

FED.RD. DIV.NO.	PROJECT NO.		SHEET NO.
6			400
STATE	DIST.	COUNTY	
TEXAS	AUS	WILLIAMSON	
CONT.	SECT.	JOB	HIGHWAY NO.
0914	05	222	RM 2243

4/10/2025 1:08:28 PM pdf.pltcfg
G:\TXC\Projects\County\Williamson\7473-02 RM 2243 Phase 1A\03*CADD\01*Shts\14-ENV\RM2243*P1A*SW3P*10.dgn

ATTACHMENT H – INSPECTION, MAINTENANCE, REPAIR, AND RETROFIT PLAN

Maintenance Plan and Schedule for Permanent Erosion Controls

Vegetative Filter Strips

Project Name: RM 2243 from 183A to Garey Park (Phase 1a)

Location: Williamson County

VEGETATIVE FILTER STRIPS

Pest Management

An Integrated Pest Management (IPM) Plan should be developed for vegetated areas. This plan should specify how problem insects and weeds will be controlled with minimal or no use of insecticides and herbicides.

Seasonal Mowing and Lawn Care

If the filter strip is made of turf grass, it should be mowed as needed to limit vegetation height to 18-inches, using a mulching mower (or removal of clippings). If native grasses are used, the filter may require less frequent mowing, but a minimum of twice annually. Grass clippings and brush debris should not be deposited on vegetated filter strip areas. Regular mowing should also include weed control practices; however, herbicide use should be kept to a minimum. Healthy grass can be maintained without using fertilizers because runoff usually contains sufficient nutrients. Irrigation of the site can help assure a dense and healthy vegetative cover.

Debris and Litter Removal

Trash tends to accumulate in vegetated areas, particularly along highways. Any filter strip structures (i.e. level spreaders) should be kept free of obstructions to reduce floatables being flushed downstream, and for aesthetic reasons. The need for this practice is determined through periodic inspection but should be performed no less than 4 times per year.

Sediment Removal

Sediment removal is not normally required in filter strips, since the vegetation normally grows through it and binds it to the soil. However sediment may accumulate along the upstream boundary of the strip preventing uniform overland flow. Excess sediment should be removed by hand or with flat-bottomed shovels.

Grass Reseeding and Mulching

A health dense grass should be maintained on the filter strip. If areas are eroded, they should be filled, compacted, and reseeded so that the final grade is level. Grass damaged during the sediment removal process should be promptly replaced using the same seed mix used during filter strip establishment. If possible, flow should be diverted from the damaged areas until the grass is firmly established. Bare spots and areas of erosion identified during semi-annual inspections must be replanted and restored to meet specifications. Corrective maintenance, such as weeding or replanting should be done more frequently in the first two to three years

after installation to ensure stabilization. Dense vegetation may require irrigation immediately after planting, and during particularly dry periods, particularly as the vegetation is initially established.

Inspection and Record Keeping

Inspect filter strips at least twice annually for erosion or damage to vegetation; however, additional inspection after periods of heavy runoff is most desirable. The strip should be checked for uniformity of grass cover, debris and litter, and areas of sediment accumulation. More frequent inspections of the grass cover during the first few years after establishment will help to determine if any problems are developing, and to plan for long-term restorative maintenance needs. Bare spots and areas of erosion identified during semi-annual inspections must be replanted and restored to meet specifications. Construction of a level spreader device may be necessary to reestablish shallow overland flow.

All activity performed on the vegetative filter strips shall be maintained in one consolidated file which indicates, at minimum:

- Inspection/maintenance date
- Indication that all items presented above have been checked
- Description of any maintenance items provided
- Expected date of next inspection

An amended copy of this document will be provided to TCEQ within thirty (30) days of any changes in the following information.

Responsible Party for Maintenance:	Williamson County Department of Infrastructure
Contact Person:	Adam Boatright, P.E.
Address:	3151 S.E. Inner Loop, Suite B
City, State Zip:	Georgetown, TX 78626
Telephone Number:	(512) 943-3330

Signature of Responsible Party:

ATTACHMENT J – MEASURES FOR MINIMIZING SURFACE STREAM CONTAMINATION

Surface stream contamination will be minimized through the use of vegetated filter strips designed to capture pollutants in runoff from roadway infrastructure along the entire length of the project contributing drainage area, excluding a small portion of the proposed roadway. The vegetated filter strips are designed to capture pollutants before the runoff reaches any down gradient streams. Where cross drainage structures convey concentrated flow to receiving swales or channels, energy dissipation devices, rock rip rap, shallow slopes, and other soil stabilization measures will be used to reduce erosive forces. These measures have been placed downstream of all culverts to minimize erosion and stream degradation.

ATTACHMENT K - VOLUME AND CHARACTER OF STORM WATER

Volume

The project is within the Brushy Creek watershed. The existing roadway drains to roadside ditches and then to unnamed tributaries of Brushy Creek. Table 1 provides the existing runoff coefficients of each drainage basin that would drain towards the proposed RM 2243.

The drainage from the proposed roadway will be conveyed to a roadside ditch and then to unnamed tributaries of Brushy Creek. Table 2 provides the proposed runoff coefficients for each drainage basin draining toward the proposed RM 2243.

Runoff from the roadway combines with off-site drainage north of Hero Way and RM 2243. Culverts under RM 2243 are proposed along the project alignment to convey drainage under RM 2243. The culverts were designed with capacity to accommodate ultimate flows, which were determined using Rational Method for Culverts 02, 03, 05, 06, 07, 08, and 10 (see Table 3 below). SCS method for Culverts 04, 09, 09A (see Table 4 below).

Table 1. Pre-project Conditions Runoff Coefficients for Rational Method.

RATIONAL METHOD - RUNOFF COMPUTATIONS (EXISTING)

				DISCHARGE CALCULATION											
DRAINAGE BASIN	AREA (AC)	TC (MIN)	C	I - 2 YR (IN/HR)	Q2 (CFS)	I - 5 YR (IN/HR)	Q5 (CFS)	I - 10 yr (in/hr)	Q10 (cfs)	I - 25 yr (in/hr)	Q25 (cfs)	I - 50 yr (in/hr)	Q50 (cfs)	I - 100 yr (in/hr)	Q100 (cfs)
OFF_02	85.71	25.30	0.48	2.98	121.66	3.98	162.34	4.76	194.34	5.85	238.69	6.72	274.01	7.64	311.58
OFF_03	80.61	34.82	0.29	2.48	58.62	3.32	78.59	3.99	94.37	4.92	116.39	5.66	134.00	6.46	152.95
OFF_04	325.69	62.83	0.43	1.69	238.79	2.28	322.90	2.75	389.95	3.42	484.33	3.96	560.45	4.55	643.76
OFF_05	61.32	11.51	0.42	4.35	113.01	5.74	149.19	6.82	177.23	8.29	215.48	9.45	245.53	10.64	276.52
OFF_06	164.21	43.57	0.47	2.15	166.34	2.89	223.73	3.48	269.26	4.31	332.99	4.97	384.14	5.69	439.57
OFF_07	74.22	28.78	0.30	2.77	62.70	3.71	83.83	4.44	100.48	5.46	123.61	6.28	142.07	7.15	161.80
OFF_08	112.66	27.52	0.43	2.84	138.86	3.80	185.52	4.55	222.27	5.60	273.30	6.43	313.98	7.32	357.39
OFF_09	135.40	35.04	0.51	2.47	170.02	3.31	227.96	3.97	273.77	4.90	337.65	5.64	388.78	6.44	443.79
OFF_09A	97.88	21.81	0.26	3.23	81.37	4.30	108.36	5.14	129.52	6.30	158.77	7.23	182.01	8.20	206.59
OFF_10	27.24	22.00	0.29	3.22	25.54	4.28	34.01	5.12	40.66	6.28	49.84	7.20	57.14	8.17	64.87

Table 2. Post-project Conditions Runoff Coefficients for Rational Method.

RATIONAL METHOD - RUNOFF COMPUTATIONS (PROPOSED)

				DISCHARGE CALCULATION											
DRAINAGE BASIN	AREA (AC)	TC (MIN)	C	I - 2 YR (IN/HR)	Q2 (CFS)	I - 5 YR (IN/HR)	Q5 (CFS)	I - 10 yr (in/hr)	Q10 (cfs)	I - 25 yr (in/hr)	Q25 (cfs)	I - 50 yr (in/hr)	Q50 (cfs)	I - 100 yr (in/hr)	Q100 (cfs)
OFF_02	85.71	25.30	0.52	2.98	133.02	3.98	177.51	4.76	212.50	5.85	261.00	6.72	299.61	7.64	340.69
OFF_03	80.61	34.82	0.33	2.48	65.68	3.32	88.06	3.99	105.74	4.92	130.41	5.66	150.15	6.46	171.38
OFF_04	325.69	62.83	0.45	1.69	248.05	2.28	335.43	2.75	405.08	3.42	503.12	3.96	582.19	4.55	668.73
OFF_05	61.32	11.51	0.43	4.35	114.72	5.74	151.44	6.82	179.90	8.29	218.72	9.45	249.23	10.64	280.69
OFF_06	164.21	43.57	0.50	2.15	178.19	2.89	239.68	3.48	288.45	4.31	356.72	4.97	411.53	5.69	470.91
OFF_07	74.22	28.78	0.31	2.77	62.99	3.71	84.21	4.44	100.94	5.46	124.19	6.28	142.73	7.15	162.55
OFF_08	112.66	27.52	0.45	2.84	143.66	3.80	191.94	4.55	229.96	5.60	282.75	6.43	324.84	7.32	369.76
OFF_09	135.40	35.04	0.53	2.47	175.56	3.31	235.38	3.97	282.68	4.90	348.65	5.64	401.43	6.44	458.24
OFF_09A	97.88	21.81	0.27	3.23	86.08	4.30	114.62	5.14	137.01	6.30	167.95	7.23	192.53	8.20	218.53
OFF_10	27.24	22.00	0.31	3.22	27.45	4.28	36.56	5.12	43.71	6.28	53.58	7.20	61.43	8.17	69.73

Table 3. Pre-project Condition Flows assuming Fully-developed Landuse using SCS Method.

NRCS UNIT HYDROGRAPH METHOD (EXISTING CONDITIONS)													
CULVERT NAME	DRAINAGE AREA NAME	AREA		CN	% IC	TC (MIN.)	LAG (MIN.)	FLOW (CFS)					
		(AC)	(SQ. MI.)					Q2 (CFS)	Q5 (CFS)	Q10 (CFS)	Q25 (CFS)	Q50 (CFS)	Q100 (CFS)
Culvert 04	OFF_04	325.69	0.509	84	63%	63	37.70	487	691	853	1087	1276	1480
Culvert 09	OFF_09	135.40	0.212	77	77%	39	23.37	449	635	784	998	1171	1359
Culvert 09A	OFF_09A	97.88	0.153	77	60%	36	21.80	181	261	325	417	492	574

Table 4. Post-project Condition Flows assuming Fully-developed Landuse using SCS Method.

NRCS UNIT HYDROGRAPH METHOD (PHASE 1A CONDITIONS)													
CULVERT NAME	DRAINAGE AREA NAME	AREA		CN	% IC	TC (MIN.)	LAG (MIN.)	FLOW (CFS)					
		(AC)	(SQ. MI.)					Q2 (CFS)	Q5 (CFS)	Q10 (CFS)	Q25 (CFS)	Q50 (CFS)	Q100 (CFS)
Culvert 04	OFF_04	325.69	0.509	84	64%	63	37.70	489	693	855	1088	1276	1482
Culvert 09	OFF_09	135.40	0.212	77	77%	39	23.37	449	635	784	998	1171	1359
Culvert 09A	OFF_09A	97.88	0.153	77	60%	36	21.80	181	261	325	417	492	574

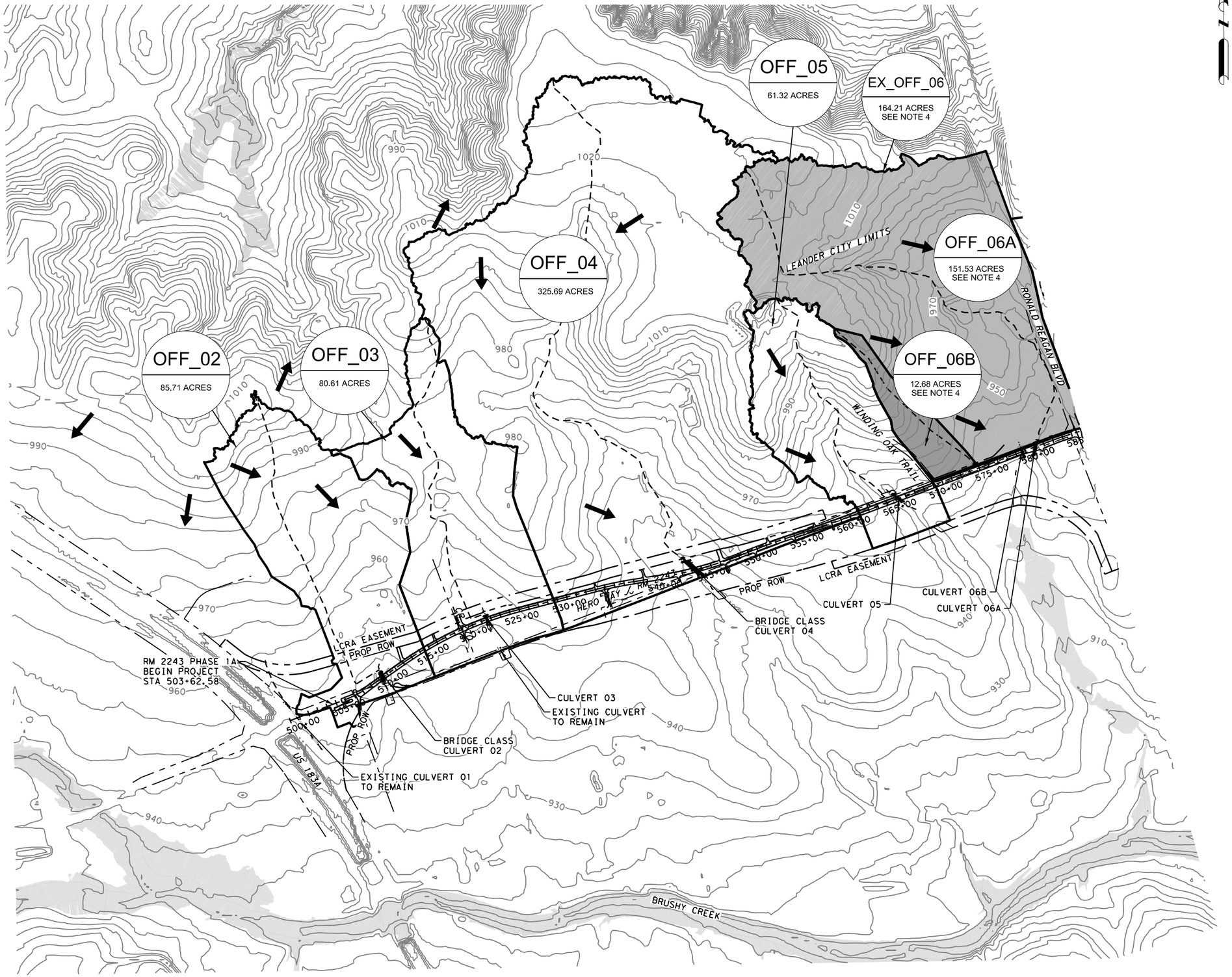

LEGEND

- # / 77.0 ac — CULVERT DRAINAGE AREA / DRAINAGE AREA (ACRES)
- FLOW DIRECTION
- 690 — 5-FOOT CONTOURS
- DRAINAGE AREA BOUNDARY
- TC PATH
- FEMA FLOODPLAIN

NOTES:
1. SEE HYDROLOGIC DATA SHEET FOR ADDITIONAL INFORMATION.

2. TERRAIN DATA OBTAINED FROM USGS 2024 LIDAR DATA.

3. EXISTING CONDITIONS DRAINAGE AREA DELINEATIONS AND PROPOSED DRAINAGE AREA DELINEATIONS ARE THE SAME EXCEPT FOR EXISTING OFF_06.

4. FOR PROPOSED CONDITIONS, EX_OFF_06 WAS SPLIT INTO OFF_06_A AND OFF_06_B.

5. CONTRIBUTING DRAINAGE AREAS ARE IN THE SOUTH BRUSHY CREEK-BRUSHY CREEK WATERHSHED.

0 500 1000
SCALE: 1"=1000'

STATE OF TEXAS
VANESSA MOLINA
141173
PROFESSIONAL LICENSED ENGINEER

WILCO TEXAS

BGE, Inc.
101 W Louis Henna Blvd, Suite 400, Austin, TX 78728
Tel: 512-879-0400 • www.bgeinc.com
TBPE Registration No. F-1046

RM 2243

EXTERNAL DRAINAGE AREA MAP

SHEET 1 OF 2

FED.RD. DIV.NO.	PROJECT NO.		SHEET NO.
6			203
STATE	DIST.	COUNTY	
TEXAS	AUS	WILLIAMSON	
CONT.	SECT.	JOB	HIGHWAY NO.
0914	05	222	RM 2243

4/10/2025 12:57:00 PM pdf.pltcfg
G:\TXC\Projects\County\Williamson\7473-02 RM 2243 Phase 1A\03*CADD\01*Shts\06-DRNG\RM2243*P1A*DA*01.dgn

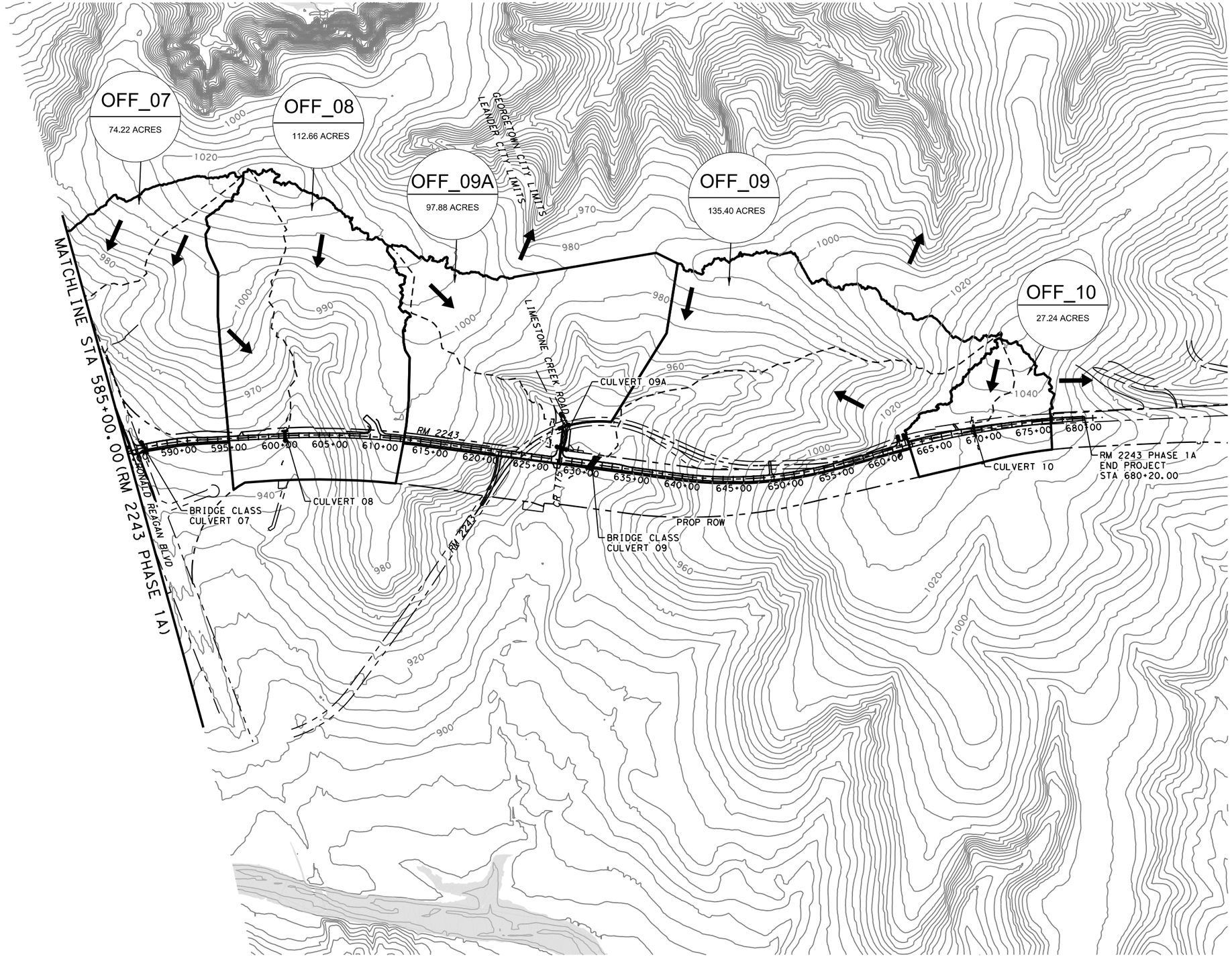

LEGEND

- # / 77.0 ac — CULVERT DRAINAGE AREA / DRAINAGE AREA (ACRES)
- FLOW DIRECTION
- 690 — 5-FOOT CONTOURS
- DRAINAGE AREA BOUNDARY
- TC PATH
- FEMA FLOODPLAIN

NOTES:
1. SEE HYDROLOGIC DATA SHEET FOR ADDITIONAL INFORMATION.

2. TERRAIN DATA OBTAINED FROM USGS 2024 LIDAR DATA.

3. EXISTING CONDITIONS DRAINAGE AREA DELINEATIONS AND PROPOSED DRAINAGE AREA DELINEATIONS ARE THE SAME EXCEPT FOR EXISTING OFF_06.

4. FOR PROPOSED CONDITIONS, EX_OFF_06 WAS SPLIT INTO OFF_06_A AND OFF_06_B.

5. CONTRIBUTING DRAINAGE AREAS ARE IN THE SOUTH BRUSHY CREEK-BRUSHY CREEK WATERHSHED.

0 500 1000

SCALE: 1"=1000'

STATE OF TEXAS
VANESSA MOLINA
141173
PROFESSIONAL ENGINEER
LICENSED

WILCO TEXAS

BGE, Inc.
101 W Louis Henna Blvd, Suite 400, Austin, TX 78728
Tel: 512-879-0400 • www.bgeinc.com
TBPE Registration No. F-1046

RM 2243

EXTERNAL DRAINAGE AREA MAP

SHEET 2 OF 2

FED.RD. DIV.NO.	PROJECT NO.		SHEET NO.
6			204
STATE	DIST.	COUNTY	
TEXAS	AUS	WILLIAMSON	
CONT.	SECT.	JOB	HIGHWAY NO.
0914	05	222	RM 2243

4/10/2025 12:57:04 PM pdf.pltcfg
G:\TXC\Projects\County\Williamson\7473-02 RM 2243 Phase 1A\03*CADD\01*Shts\06-DRNG\RM2243*P1A*DA*02.dgn

Temporary Stormwater Section

Texas Commission on Environmental Quality

for Regulated Activities on the Edwards Aquifer Recharge Zone and Relating to 30 TAC §213.5(b)(4)(A), (B), (D)(I) and (G); Effective June 1, 1999

To ensure that the application is administratively complete, confirm that all fields in the form are complete, verify that all requested information is provided, consistently reference the same site and contact person in all forms in the application, and ensure forms are signed by the appropriate party.

Note: Including all the information requested in the form and attachments contributes to more streamlined technical reviews.

Signature

To the best of my knowledge, the responses to this form accurately reflect all information requested concerning the proposed regulated activities and methods to protect the Edwards Aquifer. This **Temporary Stormwater Section** is hereby submitted for TCEQ review and executive director approval. The application was prepared by:

Print Name of Customer/Agent: Alexis Woffenden, P.E.

Date: 02/25/2025

Signature of Customer/Agent:

Regulated Entity Name: RM 2243

Project Information

Potential Sources of Contamination

Examples: Fuel storage and use, chemical storage and use, use of asphaltic products, construction vehicles tracking onto public roads, and existing solid waste.

1. Fuels for construction equipment and hazardous substances which will be used during construction:

   ☐ The following fuels and/or hazardous substances will be stored on the site: _____

   These fuels and/or hazardous substances will be stored in:

   ☐ Aboveground storage tanks with a cumulative storage capacity of less than 250 gallons will be stored on the site for less than one (1) year.

☐ Aboveground storage tanks with a cumulative storage capacity between 250 gallons and 499 gallons will be stored on the site for less than one (1) year.

☐ Aboveground storage tanks with a cumulative storage capacity of 500 gallons or more will be stored on the site. An Aboveground Storage Tank Facility Plan application must be submitted to the appropriate regional office of the TCEQ prior to moving the tanks onto the project.

☒ Fuels and hazardous substances will not be stored on the site.

2. ☒ **Attachment A - Spill Response Actions**. A site specific description of the measures to be taken to contain any spill of hydrocarbons or hazardous substances is attached.

3. ☐ Temporary aboveground storage tank systems of 250 gallons or more cumulative storage capacity must be located a minimum horizontal distance of 150 feet from any domestic, industrial, irrigation, or public water supply well, or other sensitive feature.

4. ☒ **Attachment B - Potential Sources of Contamination**. A description of any activities or processes which may be a potential source of contamination affecting surface water quality is attached.

Sequence of Construction

5. ☒ **Attachment C - Sequence of Major Activities**. A description of the sequence of major activities which will disturb soils for major portions of the site (grubbing, excavation, grading, utilities, and infrastructure installation) is attached.

   ☐ For each activity described, an estimate (in acres) of the total area of the site to be disturbed by each activity is given.

   ☐ For each activity described, include a description of appropriate temporary control measures and the general timing (or sequence) during the construction process that the measures will be implemented.

6. ☐ Name the receiving water(s) at or near the site which will be disturbed or which will receive discharges from disturbed areas of the project: _____.

Temporary Best Management Practices (TBMPs)

Erosion control examples: tree protection, interceptor swales, level spreaders, outlet stabilization, blankets or matting, mulch, and sod. Sediment control examples: stabilized construction exit, silt fence, filter dikes, rock berms, buffer strips, sediment traps, and sediment basins. Please refer to the Technical Guidance Manual for guidelines and specifications. All structural BMPs must be shown on the site plan.

7. ☒ **Attachment D – Temporary Best Management Practices and Measures**. TBMPs and measures will prevent pollution of surface water, groundwater, and stormwater. The construction-phase BMPs for erosion and sediment controls have been designed to retain sediment on site to the extent practicable. The following information is attached:

☒ A description of how BMPs and measures will prevent pollution of surface water, groundwater or stormwater that originates upgradient from the site and flows across the site.

☒ A description of how BMPs and measures will prevent pollution of surface water or groundwater that originates on-site or flows off site, including pollution caused by contaminated stormwater runoff from the site.

☒ A description of how BMPs and measures will prevent pollutants from entering surface streams, sensitive features, or the aquifer.

☒ A description of how, to the maximum extent practicable, BMPs and measures will maintain flow to naturally-occurring sensitive features identified in either the geologic assessment, TCEQ inspections, or during excavation, blasting, or construction.

8. ☐ The temporary sealing of a naturally-occurring sensitive feature which accepts recharge to the Edwards Aquifer as a temporary pollution abatement measure during active construction should be avoided.

   ☐ **Attachment E - Request to Temporarily Seal a Feature**. A request to temporarily seal a feature is attached. The request includes justification as to why no reasonable and practicable alternative exists for each feature.

   ☒ There will be no temporary sealing of naturally-occurring sensitive features on the site.

9. ☒ **Attachment F - Structural Practices**. A description of the structural practices that will be used to divert flows away from exposed soils, to store flows, or to otherwise limit runoff discharge of pollutants from exposed areas of the site is attached. Placement of structural practices in floodplains has been avoided.

10. ☒ **Attachment G - Drainage Area Map**. A drainage area map supporting the following requirements is attached:

    ☐ For areas that will have more than 10 acres within a common drainage area disturbed at one time, a sediment basin will be provided.

    ☐ For areas that will have more than 10 acres within a common drainage area disturbed at one time, a smaller sediment basin and/or sediment trap(s) will be used.

    ☐ For areas that will have more than 10 acres within a common drainage area disturbed at one time, a sediment basin or other equivalent controls are not attainable, but other TBMPs and measures will be used in combination to protect down slope and side slope boundaries of the construction area.

    ☐ There are no areas greater than 10 acres within a common drainage area that will be disturbed at one time. A smaller sediment basin and/or sediment trap(s) will be used in combination with other erosion and sediment controls within each disturbed drainage area.

☒ There are no areas greater than 10 acres within a common drainage area that will be disturbed at one time. Erosion and sediment controls other than sediment basins or sediment traps within each disturbed drainage area will be used.

11. ☐ **Attachment H - Temporary Sediment Pond(s) Plans and Calculations**. Temporary sediment pond or basin construction plans and design calculations for a proposed temporary BMP or measure have been prepared by or under the direct supervision of a Texas Licensed Professional Engineer. All construction plans and design information must be signed, sealed, and dated by the Texas Licensed Professional Engineer. Construction plans for the proposed temporary BMPs and measures are attached.

☒ N/A

12. ☒ **Attachment I - Inspection and Maintenance for BMPs.** A plan for the inspection of each temporary BMP(s) and measure(s) and for their timely maintenance, repairs, and, if necessary, retrofit is attached. A description of the documentation procedures, recordkeeping practices, and inspection frequency are included in the plan and are specific to the site and/or BMP.

13. ☒ All control measures must be properly selected, installed, and maintained in accordance with the manufacturer's specifications and good engineering practices. If periodic inspections by the applicant or the executive director, or other information indicate a control has been used inappropriately, or incorrectly, the applicant must replace or modify the control for site situations.

14. ☒ If sediment escapes the construction site, off-site accumulations of sediment must be removed at a frequency sufficient to minimize offsite impacts to water quality (e.g., fugitive sediment in street being washed into surface streams or sensitive features by the next rain).

15. ☒ Sediment must be removed from sediment traps or sedimentation ponds not later than when design capacity has been reduced by 50%. A permanent stake will be provided that can indicate when the sediment occupies 50% of the basin volume.

16. ☒ Litter, construction debris, and construction chemicals exposed to stormwater shall be prevented from becoming a pollutant source for stormwater discharges (e.g., screening outfalls, picked up daily).

Soil Stabilization Practices

Examples: establishment of temporary vegetation, establishment of permanent vegetation, mulching, geotextiles, sod stabilization, vegetative buffer strips, protection of trees, or preservation of mature vegetation.

17. ☒ **Attachment J - Schedule of Interim and Permanent Soil Stabilization Practices**. A schedule of the interim and permanent soil stabilization practices for the site is attached.

18. ☒ Records must be kept at the site of the dates when major grading activities occur, the dates when construction activities temporarily or permanently cease on a portion of the site, and the dates when stabilization measures are initiated.

19. ☒ Stabilization practices must be initiated as soon as practicable where construction activities have temporarily or permanently ceased.

Administrative Information

20. ☒ All structural controls will be inspected and maintained according to the submitted and approved operation and maintenance plan for the project.

21. ☒ If any geologic or manmade features, such as caves, faults, sinkholes, etc., are discovered, all regulated activities near the feature will be immediately suspended. The appropriate TCEQ Regional Office shall be immediately notified. Regulated activities must cease and not continue until the TCEQ has reviewed and approved the methods proposed to protect the aquifer from any adverse impacts.

22. ☒ Silt fences, diversion berms, and other temporary erosion and sediment controls will be constructed and maintained as appropriate to prevent pollutants from entering sensitive features discovered during construction.

TEMPORARY STORMWATER SECTION
ATTACHMENT A – SPILL RESPONSE ACTIONS

As a minimum, any products in the following categories are considered to be hazardous: paints, acids, solvents, fuels, asphalt products, chemical additives for soil stabilization, and concrete curing compounds or additives. When storing hazardous material on the project site, or at a project specific location, take all practicable precaution to prevent and/or contain any spillage of these materials. In the event of a spill, contact the spill coordinator immediately.

Cleanup

1. Clean up leaks and spills immediately.
2. Use a rag for small spills on paved surfaces, a damp mop for general cleanup, and absorbent material for larger spills. If the spilled material is hazardous, then the used cleanup materials are also hazardous and must be disposed of as hazardous waste.
3. Never hose down or bury dry material spills. Clean up as much of the material as possible and dispose of properly.

Minor Spills

1. Minor spills typically involve small quantities of oil, gasoline, paint, etc. which can be controlled by the first responder at the discovery of the spill.
2. Use absorbent materials on small spills rather than hosing down or burying the spill.
3. Absorbent materials should be promptly removed and disposed of properly.
4. Follow the practice below for a minor spill:
   - o Contain the spread of the spill.
   - o Recover spilled materials.
   - o Clean the contaminated area and properly dispose of Contaminated materials.

Semi-Significant Spills

Semi-significant spills still can be controlled by the first responder along with the aid of other personnel such as laborers and the foreman, etc. This response may require the cessation of all other activities. Spills should be cleaned up immediately:

1. Contain spread of the spill.
2. Notify the project foreman immediately.
3. If the spill occurs on paved or impermeable surfaces, clean up using "dry" methods (absorbent

materials, cat litter and/or rags). Contain the spill by encircling with absorbent materials and do not let the spill spread widely.

4. If the spill occurs in dirt areas, immediately contain the spill by constructing an earthen dike. Dig up and properly dispose of contaminated soil.
5. If the spill occurs during rain, cover spill with tarps or other material to prevent contaminating runoff.

Significant/Hazardous Spills

From any event, the Reportable quantity (RQ) = for highly toxic materials the RQ>25 gals. For petroleum/hydrocarbon liquids, spills the RQ>250 gallons (on land) or that which creates sheen" on water. Only certified Hazmat teams will be responsible for handling the material at the site.

For significant or hazardous spills that are in reportable quantities:

1. Notify the TCEQ by telephone as soon as possible and within 24 hours at 512- 339-2929 (Austin) between 8 AM and 5 PM. After hours, contact the Environmental Release Hotline at 1-800-832-8224. It is the contractor's responsibility to have all emergency phone numbers at the construction site. Additionally, in the event of a hazardous material spill, local Williamson county and/or police, fire and potentially EMS should be contacted in order to initiate the hazardous material response team.
2. For spills of federal reportable quantities, in conformance with the requirements in 40 CFR parts 110, 119, and 302, the contractor should notify the National Response Center at (800) 424-8802.
3. Notification should first be made by telephone and followed up with a written report.
4. The services of a spills contractor or a Haz-Mat team should be obtained immediately. Construction personnel should not attempt to clean up until the appropriate and qualified staffs have arrived at the job site.
5. Other agencies which may need to be consulted include, but are not limited to, the City Police Department, County Sheriff Office, Fire Departments, etc.

More information on spill rules and appropriate responses is available on the TCEQ website at:

http://mvw.tceq.state.tx.us/response/spills.html

TEMPORARY STORMWATER SECTION
ATTACHMENT B – POTENTIAL SOURCES OF CONTAMINATION

During Construction Activities

No particular activity or process during construction of the project is anticipated to present a significant risk of being a potential source of contamination. However, during regular construction operations, several common and minor risks of contamination are anticipated. Should any unforeseen mishaps occur during construction, the contractor shall follow the guidelines set forth in "Attachment A – Spill Response Plan".

Potential sources of sediment to stormwater runoff:

- Clearing and grubbing
- Grading and excavation
- Vehicle tracking
- Landscaping

Potential pollutants and sources, other than sediment, to stormwater runoff:

- Combined Staging Area – small fueling, minor equipment maintenance, sanitary facility.
- Materials Storage Area – solvents, adhesives, paving materials, aggregates, trash, etc.
- Construction Activities – paving, concrete pouring

Potential on-site pollutants:

- Fertilizer
- Concrete
- Glue, adhesives
- Gasoline, diesel fuel, hydraulic fluids, antifreeze
- Sanitary toilets

These materials will be contained with Temporary BMPs as outlined in the SWPPP.

TEMPORARY STORMWATER SECTION
ATTACHMENT C – SEQUENCE OF MAJOR ACTIVITIES

1. Temporary erosion and sedimentation controls are to be installed as indicated on the Traffic Control Plan (TCP) Narrative and in accordance with the stormwater pollution prevention plan (SWPPP) that is required to be posted on the site.
2. The environmental project manager, and/or site supervisor, and/or designated responsible party, and the general contractor will follow the storm water pollution prevention plan (SWPP) posted on the site. Temporary erosion and sedimentation controls will be revised, if needed, to comply with city inspectors' directives and revised construction schedule relative to the water quality plan requirements and the erosion and sedimentation plan.
3. Construct roadway and culverts placed or extended as proposed. Activities include excavation, embankment, concrete pavement, riprap, storm drain placement, culvert construction, and curb and gutter.
4. Temporary erosion and sedimentation controls will be inspected and maintained in accordance with the storm water pollution prevention plan (SWPPP) posted on the site.
5. Stabilize disturbed areas with seeding.
6. Structural practices on grassed slopes will remain in place until seeding is effective. Inlet protection controls may be removed upon completion of pavement construction activities.

TEMPORARY STORMWATER SECTION

ATTACHMENT D – TEMPORARY BEST MANAGEMENT PRACTICES AND MEASURES

Prior to the commencement of any construction activity, the contractor shall install silt fence, rock filter dam, rock bedding at construction exit, and temporary seeding, per the SW3P plan. All temporary BMPs are to be installed per TCEQ and local requirements.

As surface water flows from and through disturbed areas, the proposed temporary BMPs will prevent pollution by filtering the increased sediment loads and other pollutants (listed in "Attachment B – Potential Sources of Contamination") prior to any runoff leaving the site. As shown in the attached SW3P plans, silt fence will be utilized downstream of any grading and construction activities to remove debris and sediment from run-off in that area. Temporary seeding will minimize soil runoff from disturbed areas. Rock filter dams will prevent excessive erosion from the storm sewer outfalls and stabilized construction exits will prevent the transport of sediment off-site.

Other best management measures during construction include:

1. Constructing disposal areas, stockpiles, haul roads and PSL's in a manner that will minimize and control the amount of sediment that may enter receiving waters. Disposal areas shall not be located near any wetland, waterbody or streambed.

2. Locating construction staging areas, vehicle maintenance and PSL's areas such that the runoff of pollutants is minimized.

3. Ensuring that when working in or near an environmentally sensitive feature, operating soil erosion and sediment controls are maintained always during construction and that all work is isolated from the sensitive feature. BMPs should be place such that the natural drainage patterns towards sensitive features are not altered.

4. Ensuring that all waterways are cleared as soon as practicable of temporary embankment, temporary bridges, matting, falsework, piling, debris or other obstructions placed during construction operations that are not a part of the finished work.

5. Removing all sediment from roadways daily or when work begins after construction activities have ceased due to weather event.

6. Requiring the Contractor to contain wash water from concrete trucks in a manner that will prevent some from entering any waterway, and to be responsible for ensuring that all the Subcontractors are aware and comply with all components of the Temporary Erosion Control Plans.

TEMPORARY STORMWATER SECTION

ATTACHMENT E – REQUEST TO TEMPORARILY SEAL A FEATURE, IF SEALING A FEATURE

Not Applicable.

TEMPORARY STORMWATER SECTION
ATTACHMENT F – STRUCTURAL PRACTICES

The following temporary BMP structural practices will be employed on the site:

A. Silt Fence – Used for sediment filtration along the downslope perimeter of portions of the project, as well as to prevent runoff from storage of excavated materials during utility construction. The fence retains sediment primarily by retarding flow and promoting deposition of sediment on the uphill side of the slope. Runoff is filtered as it passes through the geotextile.
B. Rock Filter Dam – Used to reduce the velocities of concentrated flows, provide a sediment barrier, and reduce erosion is channels and ditches. The rock filter dam will be provided for the outfall of Storm Sewer System B.
C. Rock Bedding at Construction Exit – Stone pads will be constructed at the entrance and exits to the project to prevent off-site transport of sediment by construction vehicles. The pads are a minimum of 50’ long and 20’ wide. They will be graded to prevent runoff from leaving the site.
D. Temporary Seeding – To be provided around all storm sewer inlets during construction. Locations are indicated in SW3P plans. The measures will minimize sediment runoff from disturbed soils.

The placement of structural practices in the floodplain has been avoided, as the project limit.

TEMPORARY STORMWATER SECTION
ATTACHMENT G – DRAINAGE AREA MAP

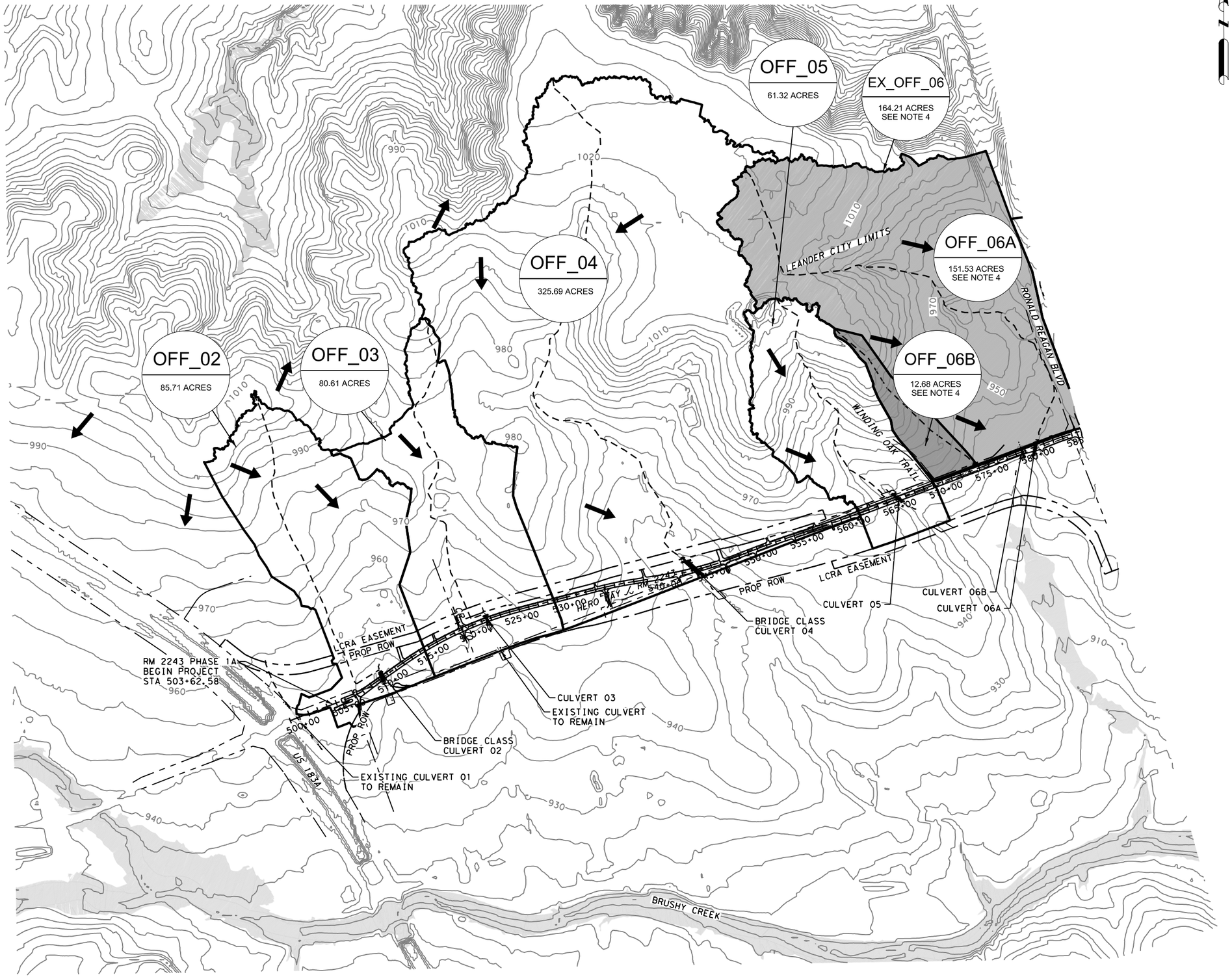

LEGEND

- # / 77.0 ac — CULVERT DRAINAGE AREA / DRAINAGE AREA (ACRES)
- FLOW DIRECTION
- 690 — 5-FOOT CONTOURS
- DRAINAGE AREA BOUNDARY
- TC PATH
- FEMA FLOODPLAIN

NOTES:
1. SEE HYDROLOGIC DATA SHEET FOR ADDITIONAL INFORMATION.

2. TERRAIN DATA OBTAINED FROM USGS 2024 LIDAR DATA.

3. EXISTING CONDITIONS DRAINAGE AREA DELINEATIONS AND PROPOSED DRAINAGE AREA DELINEATIONS ARE THE SAME EXCEPT FOR EXISTING OFF_06.

4. FOR PROPOSED CONDITIONS, EX_OFF_06 WAS SPLIT INTO OFF_06_A AND OFF_06_B.

5. CONTRIBUTING DRAINAGE AREAS ARE IN THE SOUTH BRUSHY CREEK-BRUSHY CREEK WATERHSHED.

0 500 1000
SCALE: 1"=1000'

STATE OF TEXAS
VANESSA MOLINA
141173
PROFESSIONAL LICENSED ENGINEER

WILCO TEXAS

BGE, Inc.
101 W Louis Henna Blvd, Suite 400, Austin, TX 78728
Tel: 512-879-0400 • www.bgeinc.com
TBPE Registration No. F-1046

RM 2243

EXTERNAL DRAINAGE AREA MAP

SHEET 1 OF 2

FED.RD. DIV.NO.	PROJECT NO.		SHEET NO.
6			203
STATE	DIST.	COUNTY	
TEXAS	AUS	WILLIAMSON	
CONT.	SECT.	JOB	HIGHWAY NO.
0914	05	222	RM 2243

4/10/2025 12:57:00 PM pdf.pltcfg
G:\TXC\Projects\County\Williamson\7473-02 RM 2243 Phase 1A\03*CADD\01*Shts\06-DRNG\RM2243*P1A*DA*01.dgn

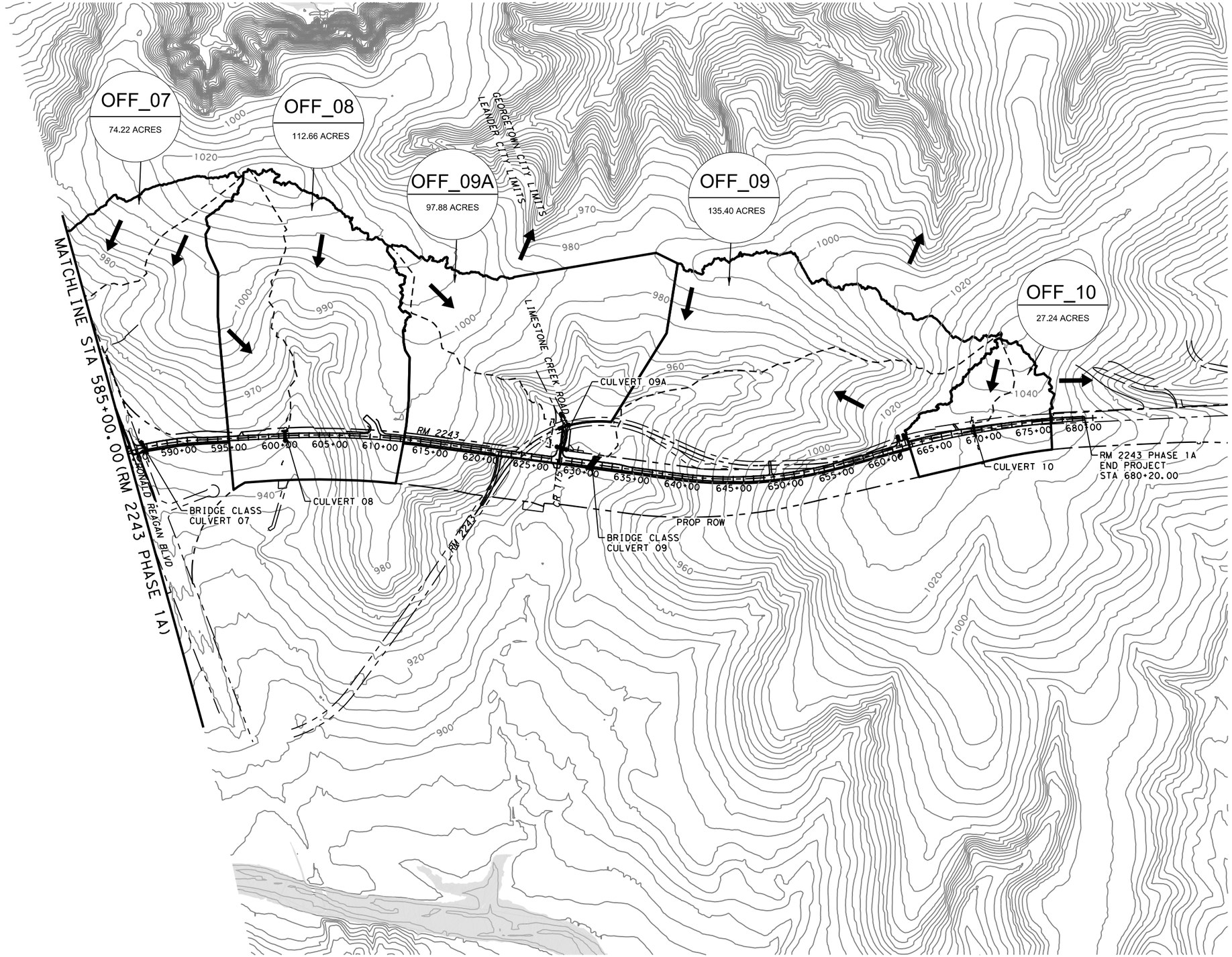

LEGEND

- # / 77.0 ac — CULVERT DRAINAGE AREA / DRAINAGE AREA (ACRES)
- FLOW DIRECTION
- 690 — 5-FOOT CONTOURS
- DRAINAGE AREA BOUNDARY
- TC PATH
- FEMA FLOODPLAIN

NOTES:
1. SEE HYDROLOGIC DATA SHEET FOR ADDITIONAL INFORMATION.

2. TERRAIN DATA OBTAINED FROM USGS 2024 LIDAR DATA.

3. EXISTING CONDITIONS DRAINAGE AREA DELINEATIONS AND PROPOSED DRAINAGE AREA DELINEATIONS ARE THE SAME EXCEPT FOR EXISTING OFF_06.

4. FOR PROPOSED CONDITIONS, EX_OFF_06 WAS SPLIT INTO OFF_06_A AND OFF_06_B.

5. CONTRIBUTING DRAINAGE AREAS ARE IN THE SOUTH BRUSHY CREEK-BRUSHY CREEK WATERHSHED.

0 500 1000

SCALE: 1"=1000'

STATE OF TEXAS
VANESSA MOLINA
141173
PROFESSIONAL ENGINEER
LICENSED

WILCO TEXAS

BGE, Inc.
101 W Louis Henna Blvd, Suite 400, Austin, TX 78728
Tel: 512-879-0400 • www.bgeinc.com
TBPE Registration No. F-1046

RM 2243

EXTERNAL DRAINAGE AREA MAP

SHEET 2 OF 2

FED.RD. DIV.NO.	PROJECT NO.		SHEET NO.
6			204
STATE	DIST.	COUNTY	
TEXAS	AUS	WILLIAMSON	
CONT.	SECT.	JOB	HIGHWAY NO.
0914	05	222	RM 2243

4/10/2025 12:57:04 PM pdf.pltcfg
G:\TXC\Projects\County\Williamson\7473-02 RM 2243 Phase 1A\03*CADD\01*Shts\06-DRNG\RM2243*P1A*DA*02.dgn

TEMPORARY STORMWATER SECTION
ATTACHMENT H – TEMPORARY SEDIMENT POND(S) PLANS AND CALCULATIONS

Not Applicable.

TEMPORARY STORMWATER SECTION
ATTACHMENT I – INSPECTION AND MAINTENANCE FOR BMPS

The contractor will be required to maintain, repair, or retrofit all stabilized construction exits, silt fences, erosion control logs, and temporary seeding, as it is required through the duration of the project until the permanent BMPs are constructed and established. The contractor will be required to inspect the BMPs on at least a bi-monthly basis and after every rainfall event. A log of the inspections will be maintained and kept on site identifying each individual BMP area and its condition. The project inspector, from Williamson County, will also inspect the BMPs to ensure they are in proper working condition. If any BMP is found to be unacceptable, the inspector will notify the contractor to remedy the problem immediately.

TEMPORARY STORMWATER SECTION
ATTACHMENT J – SCHEDULE OF INTERIM AND PERMANENT SOIL STABILIZATION PRACTICES

With the nature of this project, the disturbance of topsoil will be limited to the areas where the road will be constructed. The permanent soil stabilization practices of seeding, sodding, and preservation of natural resources will be utilized in order to maintain the topsoil put in place until the grasses are established. Bare soils should be seeded or otherwise stabilized within 14 calendar days after final grading or where construction activity has temporarily ceased for more than 21 days.

Before construction, the ROW shall be prepared and cleared minimizing soil disturbances by exposing only the smallest practical area of land required for clearing and grading activities as well as for construction activities for the shortest time possible. The use of natural vegetation such grass, weeds, shrubs, trees, etc… shall be maximized and preserved in place until necessary for continuance of construction.

During construction, dust will be controlled with temporary seeding and soil retention blankets. Temporary seeding should reduce runoff and erosion until permanent vegetation or other erosion control practices can be established. Erosion control longs and silt fencing along the downgradient side of the roadway are proposed to intercept upgradient and onsite flows within the proposed right-of-way. Rock filter dams are proposed in areas of concentrated flow to treat discharge prior to entering natural features. The proposed temporary BMP are shown on the SWPPP sheets of the Construction Plans. As soon as subgrade compaction is acceptable, the exposed soil in the roadway will be covered with flexible base material, compacted and stabilized as quickly as possible prior to the placement of the finished pavement surface.

After construction has been completed, all of the areas from the proposed edge of paving to the proposed right-of-way, on each side of the roadway, including roadway ditches, shall be treated with topsoil, vegetated and watered. Fifteen-foot vegetated filter strips will run parallel and adjacent to the roadway to filter runoff generated from the roadway surface. BMPs shall remain in place until the soil has been stabilized with vegetation.

Geologic Assessment for the Leander Road Project — Southwest Bypass to US 183, Georgetown, Texas

JANUARY 2022

PREPARED FOR

BGE, Inc.

PREPARED BY

SWCA Environmental Consultants

Texas Board of Professional Geoscientists, Firm Registration No. 50159

GEOLOGIC ASSESSMENT FOR THE LEANDER ROAD PROJECT — SOUTHWEST BYPASS TO US 183, GEORGETOWN, TEXAS

Prepared for

BGE, Inc.
101 West Louis Henna Boulevard
Suite 400
Austin, Texas 78728

Prepared by

SWCA Environmental Consultants
Texas Board of Professional Geoscientists, Firm Registration No. 50159
4407 Monterey Oaks Boulevard
Building 1, Suite 110
Austin, Texas 78749
(512) 476-0891
www.swca.com

SWCA Project No. 61197

January 2022

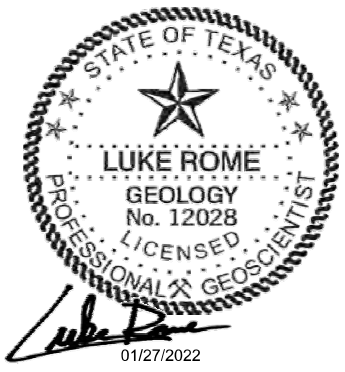

CONTENTS

1 Introduction 1
2 Methodology 1
3 Results 3
3.1 Project and Survey Area Overview 3
3.2 Soils 3
3.3 Geology 6
3.4 Hydrogeologic Assessment 8
3.5 Feature Descriptions 8
4 Conclusion 15
5 Literature Cited 16

Appendices

Appendix A Texas Commission on Environmental Quality (TCEQ) Forms
Appendix B Photographic Log

Figures

Figure 1. Project location map. 2
Figure 2. Right-of-Entry map 4
Figure 3. Soils map. 5
Figure 4. Regional trend map. 7
Figure 5. Lozano's Mine (LR-05) Cave Footprint 11
Figure 6. Tinnel Cave (LR-11) Cave Footprint 13
Figure 7. LR-15 Cave Footprint 14

Tables

Table 1. Soil Units within the Project Area 3

1 INTRODUCTION

This narrative geologic assessment accompanies Texas Commission on Environmental Quality (TCEQ) Geologic Assessment Form TCEQ-0585 completed for the proposed expansion of Ranch-to-Market Road (RM) 2243 (Leander Road) (project). The project proposes approximately 408.0 acres of new roadway between Southwest Bypass and US 183 in the City of Georgetown extraterritorial jurisdiction (ETJ), Williamson County, Texas (Figure 1). The project area is approximately 7.75 miles long and up to 1,500 feet wide, covering approximately 510.53 acres. Due to limited access within the project area, SWCA Environmental Consultants (SWCA) only surveyed 166.56 acres of the project area within the Edwards Aquifer Recharge Zone (EARZ), this area is referred to as the "survey area" for the remainder of this report.

2 METHODOLOGY

Prior to conducting fieldwork, SWCA scientists studied records pertaining to all reputed caves in the project area and gathered information related to documented caves in the project vicinity. SWCA has conducted previous environmental surveys in this area related to the existing Leander Road, Southwest Bypass, and US 183. Relevant information sources include:

- Internal SWCA data;
- Unpublished data related to SWCA et al. (2008);
- ESRI® ArcGIS® Online Basemap Map Services;
- U.S. Geological Survey (2019a, 2019b) 7.5-minute quadrangles;
- Geologic maps (Barnes 1974; Collins 1997a, 1997b); and
- Mapped fault lines (Collins 1997a, 1997b).

SWCA staff, including Texas Licensed Professional Geoscientist (PG), a geoscientist-in-training, and karst technicians, conducted field surveys and excavations. The field surveys occurred over the following dates in 2020: June 15, 16, 22, 23, and 25, October 5 and 6; and in 2021: March 30. The pedestrian survey was completed by walking parallel transects spaced approximately 30 to 50 feet apart, as directed by the TCEQ (2004) in the *Instructions to Geologists for Geologic Assessments on the Edwards Aquifer Recharge/Transition Zones* (Rev. 10-01-04). Closer spacing was used where vegetation inhibited clear observation. SWCA scientists carefully examined all potential karst features, including depressions, holes, and animal burrows, for subsurface extent evidence. SWCA used several techniques for this effort, including probing with a digging implement to determine the thickness and consistency of fill material and feeling for air flow, which may indicate the presence of a sub-surface void space. Other techniques included recording notable features and site characteristics, such as vegetation types or semi-circular burrow mounds produced by small mammal activity.

Subsequent to preliminary field surveys, SWCA scientists visited the site on October 6 and November 3, 5, 11, 2020, to hand-excavate and further evaluate features LR-03, LR-05, LR-09, and LR-12.

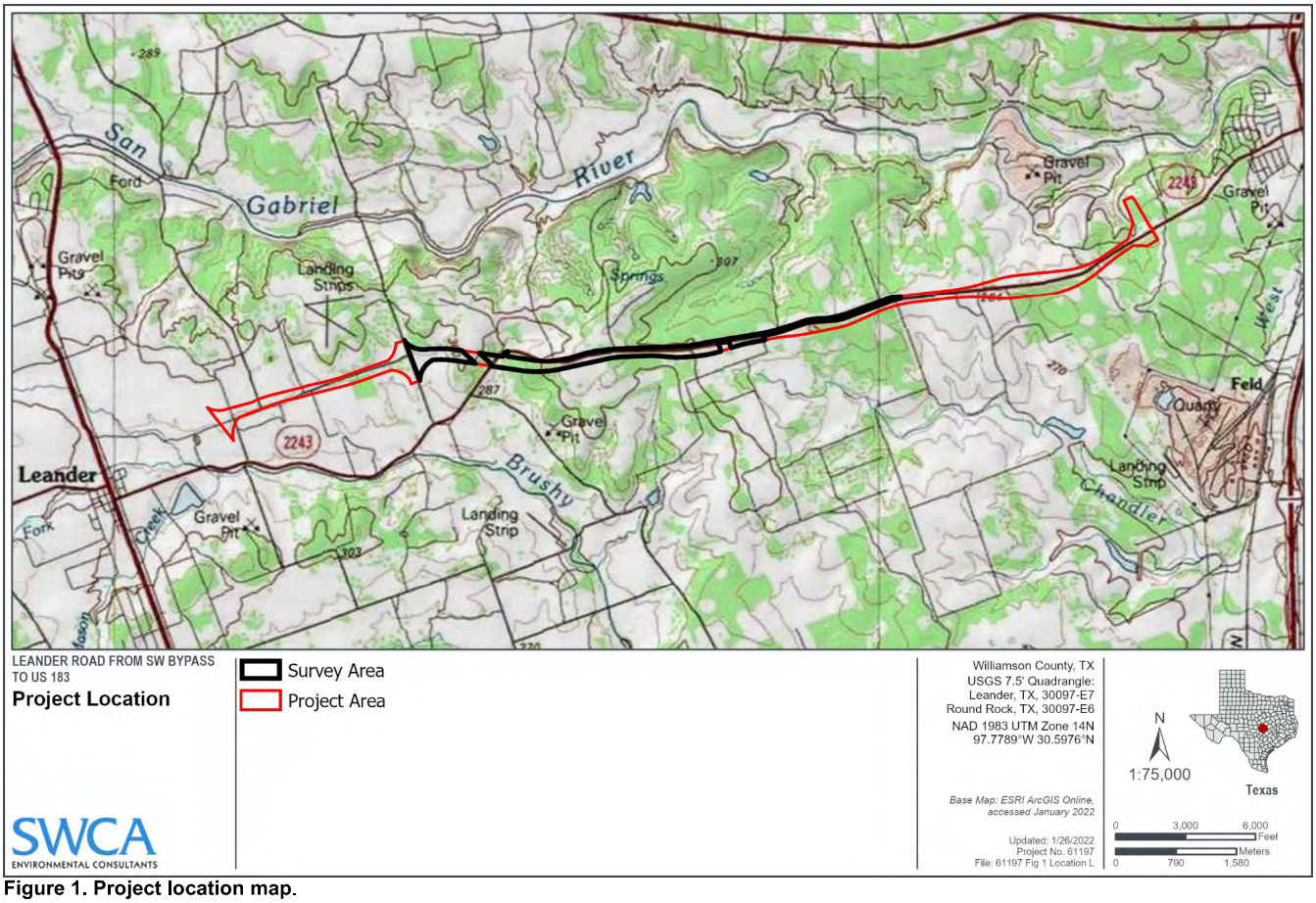

Figure 1. Project location map.

3 RESULTS

3.1 Project and Survey Area Overview

The project area occurs within the northern segment of the Edwards Aquifer (TCEQ 2021). The eastern portion of the project area overlies the EARZ and the western portion overlies the Edwards Aquifer Contributing Zone (TCEQ 2021). The project area appears to intersect a drainage divide where topography generally slopes to the north towards the South Fork San Gabriel River and to the south towards Brushy Creek and tributaries of Brushy Creek. The elevation of the project area ranges from approximately 815 feet above mean sea level (amsl) to 1040 feet amsl.

Much of the project area within the EARZ contains and runs parallel to the existing Leander Road right-of-way (ROW). West of Ronald Reagan Boulevard, the majority of the project area within the EARZ exists primarily as undisturbed land utilized for cattle grazing. The land use within the project area ranges from single-family residential, commercial, agricultural, and industrial.

As mentioned in the introduction, right-of-entry (ROE) was only obtained for portions of the project area. The area where ROE was obtained and surveyed by SWCA is defined as the survey area in this report. **The findings of this geologic assessment only pertain to the survey area**. Figure 2 depicts the parcels where ROE for the project was received as of March 30, 2021.

3.2 Soils

The Natural Resources Conservation Service (2021) identified 10 soil units within the project area (Figure 3). Table 1 provides additional details for these soil units.

Table 1. Soil Units within the Project Area

Soil Unit	Hydric	Hydrologic Soil Group*	Drainage Class	Frequency of Flooding/ Ponding	Depth to Water Table (inches)
CfB: Crawford clay, 1 to 3 percent slopes	No	D	Well Drained	None / None	80+ inches
DnB: Denton Silty clay, 1 to 3 percent slopes	No	D	Well Drained	None / None	80+ inches
DnC: Denton Silty clay, 3 to 5 percent slopes	No	D	Well Drained	None / None	80+ inches
DoC: Doss silty clay, moist, 1 to 5 percent slopes	No	D	Well Drained	None / None	80+ inches
EaD: Eckrant cobbly clay, 1 to 8 percent slopes	No	D	Well Drained	None / None	80+ inches
EeB: Eckrant stony clay, 0 to 3 percent slopes	No	D	Well Drained	None / None	80+ inches
ErE: Eckrant-Rock outcrop association, 1 to 10 percent slopes	No	D	Well Drained	None / None	80+ inches
FaB: Fairlie clay, 1 to 2 percent slopes	No	D	Well Drained	None / None	80+ inches
GsB: Georgetown stony clay loam, 1 to 3 percent slopes	No	D	Well Drained	None / None	80+ inches
PITQ: Pits, quarries, 0 to 45 percent slopes	No	D	Well Drained	None / None	80+ inches

Data Source: Natural Resources Conservation Service (2021).

* Group D – Soils had very slow infiltration rates when thoroughly wetted and exhibit the highest potential for runoff.

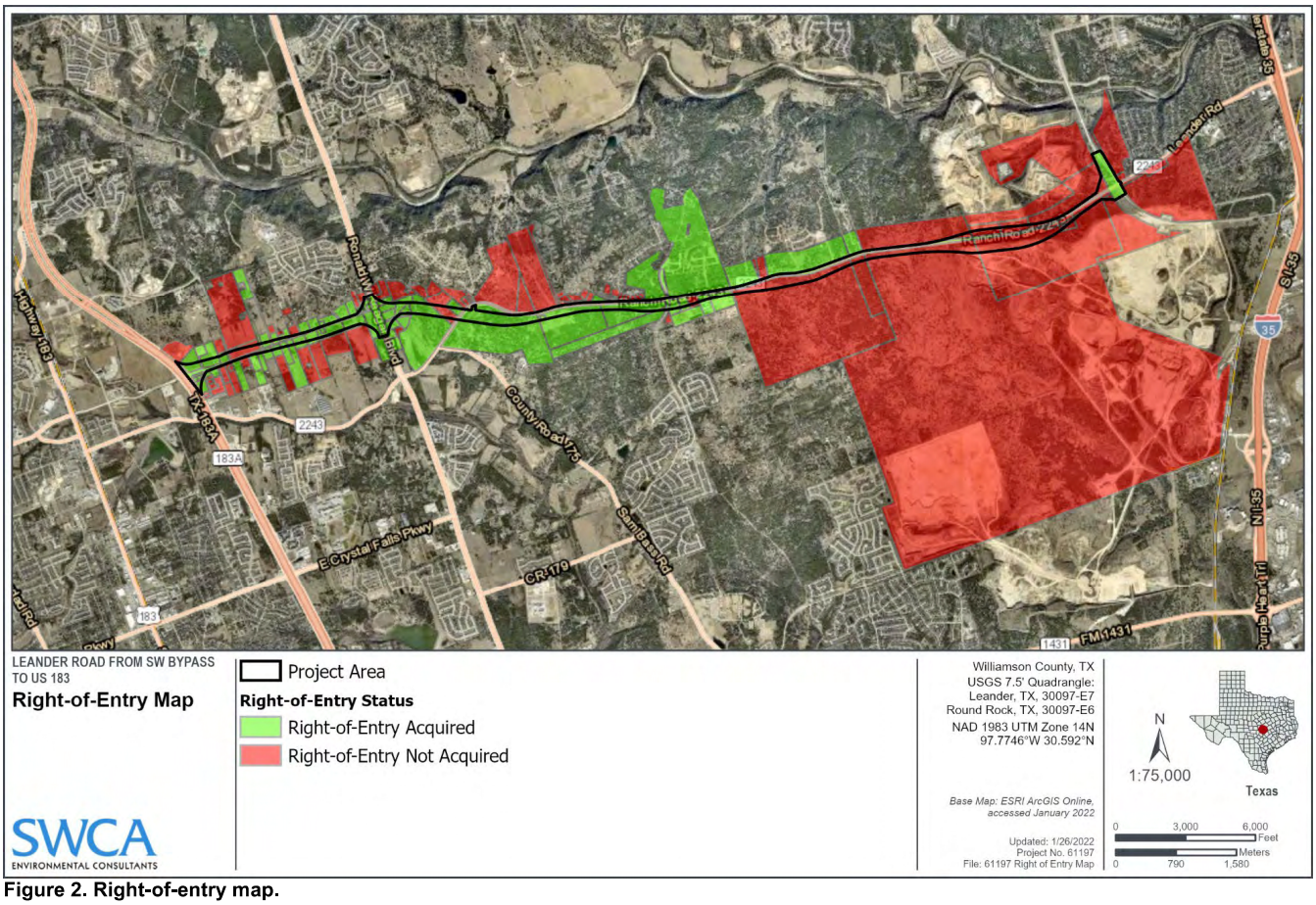

Figure 2. Right-of-entry map.

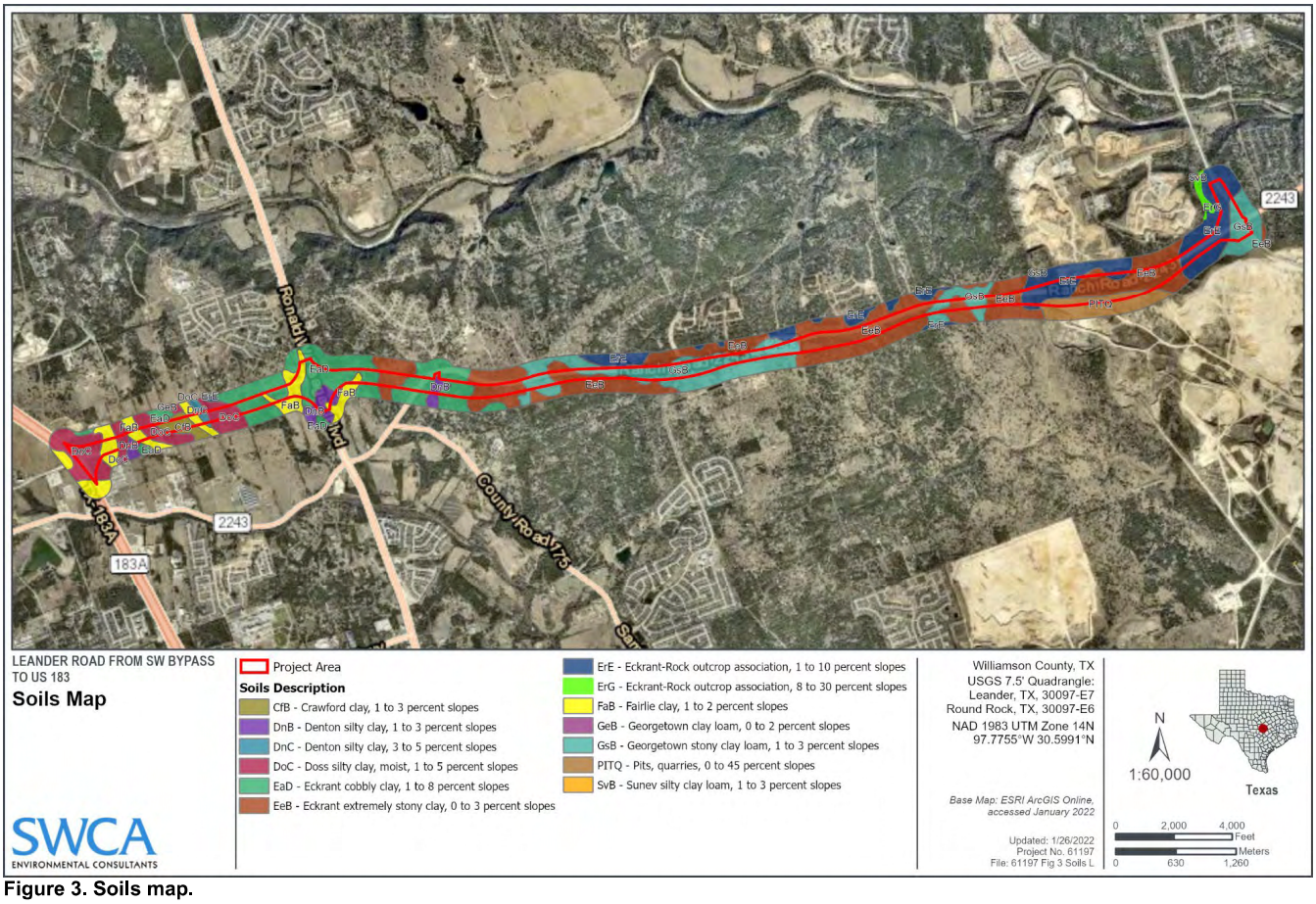

Figure 3. Soils map.

3.3 Geology

The Project Area occurs along the Balcones Fault Zone (BFZ) within the Edwards Aquifer Contributing and Recharge Zones (TCEQ 2021). Structural down-warping occurred with the Gulf of Mexico's ancestral formation during the middle Tertiary. The earth's crust was stretched in response, and the BFZ formed along a zone of weakness, which currently marks the boundary between the Edwards Plateau and the Gulf Coastal Plain in central Texas. The BFZ is characterized by a series of northeast-trending, predominantly normal, nearly vertical, en echelon faults.

No faults are mapped within the project area (Collins 1997a and 1997b); as shown in Figure 4. The regional trend of the mapped faults within the area is approximately 20 degrees; therefore, any geologic features within 15 degrees (5 to 35 degrees) will be awarded an additional 10 points on the geologic assessment table presented in Appendix A, Attachment A.

Collins (1997a and 1997b) indicates the project area is underlain by Cretaceous-age Edwards Limestone (Ked) and Comanche Peak (Kc) and the Keys Valley Marl (Kkv) (Appendix A, Attachment D). SWCA finds Collins' (1997a and 1997b) interpretation of the geology to be generally accurate. The underlying Comanche Peak Formation is mapped on the western portion of the project area. The Stratigraphic Column is included in Appendix A, Attachment B.

Edwards Limestone is described by Collins (1997a and 1997b) as:

> …limestone, dolomitic limestone, and marl, massive to thin beds, chert, and fossiliferous; fossils include rustids. Shallow subtidal-flat cycles. Honeycomb textures, voids in collapse breccias, and cavern systems accounts for most of the Edwards aquifer strata. Thickness is between 100 and 300 ft; thins northward.

Comanche Peak Limestone is described by Barnes (1974) as:

> …fine to very fine grained, fairly hard, nodular, light gray, weathers white, extensively burrowed, burrow fillings slightly coarser and darker, typically crops out in scarp face beneath Edwards Limestone; thickness up to 80 feet, feathers out southward near Williamson-Travis County line.

Keys Valley Marl is described by Collins (1997a and 1997b) as:

> ….Marl, argillaceous limestone, and some limestone, Thickness as much as ~50ft. Walnut formation.

Recharge into the Edwards Aquifer primarily occurs in areas where the Edwards Group and Georgetown Formation are exposed at the surface. Most recharge is from direct infiltration via precipitation and streamflow loss (USGS 1987). Recharge occurs predominantly along secondary porosity features such as faults, fractures, and karst features (caves, solution cavities, sinkholes, etc.). Karst features are commonly formed along joints, fractures, and within bedding plane surfaces in the Edwards Group and Georgetown Formation. Water that recharges the Edwards Aquifer in the vicinity of the project area commonly discharges near the contact between Edwards Limestone and underlying Comanche Peak Formation; however, SWCA staff did not observe seeps or springs during the geologic assessment.

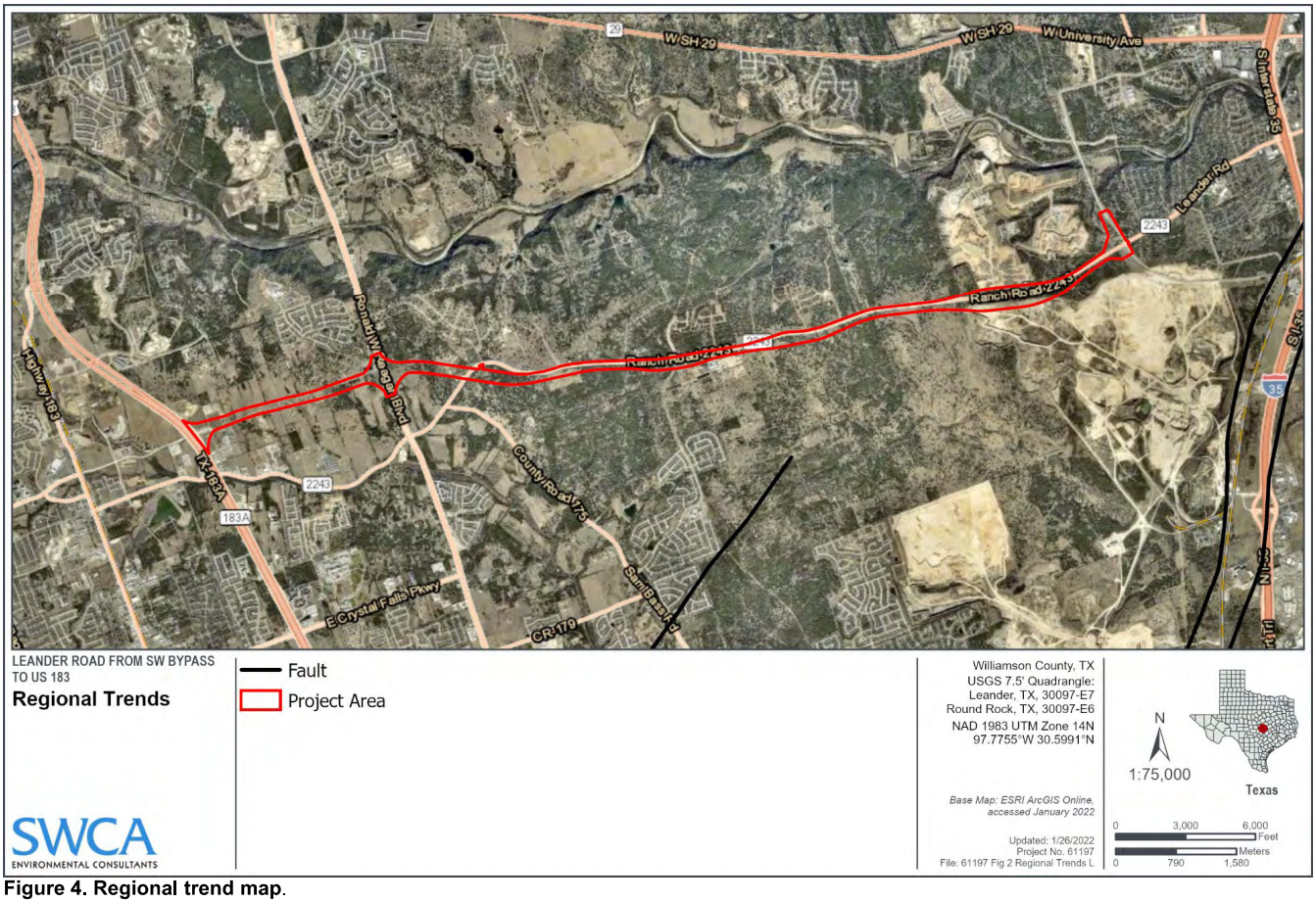

Figure 4. Regional trend map.

3.4 Hydrogeologic Assessment

The overall potential for fluid migration to the Edwards Aquifer within the project area appears relatively high compared to background infiltration rates due to the presence of three sensitive features (three caves). The depth to water in the vicinity of the project area has been measured between 80 and 295 feet below ground surface in nearby monitoring wells (State ID Nos. 5827102 and 5826203) (Texas Water Development Board [TWDB] 2021). No groundwater was observed in the three caves identified in this report.

The gentle contours shown on Appendix A, Attachment D suggest that runoff from rainfall reaching the undisturbed portions of the project area will continue downslope in the form of sheet flow until collected in drainages outside the project area that eventually feed the South Fork San Gabriel River to the north and Brushy Creek to the south.

3.5 Feature Descriptions

SWCA identified 10 geologic features within the project area or 50 feet of the project area. Three of these features are considered sensitive (three caves). Geologic features identified within the project area are described below and a photographic log for these features is provided as Appendix B.

LR-01 Feature LR-01 is classified as an "other natural bedrock feature" and is mapped within the Comanche Peak Limestone. The feature is 3 feet long, 2 feet wide, and 1 foot deep. LR-01 is positioned on a gently sloping hillside and consists of a small depression within limestone boulders suspended in soil. The depression is believed to be a result of a decomposing tree stump (*Juniperus asheir*). The infill material consists of loose leaf litter and organic-rich soil overlying compacted clay-rich sediment. The infiltration rate is low (5 points) as a result of the clay lining. Due to the low infiltration rate and lack of connection to the subsurface, this feature is not considered to be a sensitive recharge feature.

LR-02 Feature LR-02 is a closed depression on a hillside mapped within the Comanche Peak Limestone. The feature is 6 feet long, 5 feet wide, and 2.5 feet deep. LR-02 was excavated by hand to reveal a shallow bedding under limestone float rock. The infill material overlying solid bedrock consisted of weathered limestone cobbles within a matrix of dark-colored, moderately compacted clay and organic-rich sediment. The infiltration rate is considered to be low (10 points) as a result of the clay-rich sediment and bedrock lining. Due to the low infiltration rate and lack of portals or mesocavernous voids to the subsurface, this feature is not considered to be a sensitive recharge feature.

LR-03 Feature LR-03 is a sinkhole mapped in the Edwards Limestone and is positioned on a gently sloping hillside. The feature is 3 feet long, 2.5 feet wide, and 6 feet deep. The sinkhole was excavated by hand to further assess the feature's sensitivity. Approximately 3 feet of infill material was removed from the base of the feature to reveal a hardpacked clay floor along with several large roots (*Quercus fusiformis*) and a potential portal or lead infilled with lesser compacted clay-rich sediments. The infill within the potential lead was removed until a change of soil color from dark brown to gray was encountered. It is apparent that the potential lead was influenced by the live oak root development. The infiltration rate is considered to be low (15 points) as a result of the clay-rich sediment and bedrock lining. Due to the low infiltration rate and lack of portals or mesocavernous voids to the subsurface, this feature is not considered to be a sensitive recharge feature.

LR-04 Feature LR-04 is a closed depression on a hillside mapped within the Edwards Limestone. The feature is 8 feet in diameter and has a depth of 2 feet. LR-04 has a catchment area of less than 1.6 acres and no evidence of infiltration was observed. The infill material within the depression consisted of vegetation, leaf litter, and sticks overlying compacted clay-rich sediment. The infiltration rate is considered to be low (5 points) as a result of the clay-rich sediment. Due to the low infiltration rate and lack of portals or mesocavernous voids to the subsurface, this feature is not considered to be a sensitive recharge feature.

LR-05 Feature LR-05, also known as Lozano's Mine, is a cave mapped in the Edwards Limestone. On December 8, 2020, an SWCA PG and karst biologist conducted a survey of the cave. The cave has two open cave entrances, with the northernmost entrance located approximately 100 feet south of the project area. The northern cave entrance is approximately 8 feet by 5 feet and the southern cave entrance is approximately 6 feet by 5 feet. Lozano's Mine has a subsurface footprint that is approximately 62 feet by 31 feet and reaches a depth of approximately 18 feet below the surface (Figure 5). Signs of previous excavations were noted by the presence of large piles of soil and fragmented limestone adjacent (upslope) of the feature. These piles were fully vegetated with shrubs and canopy forming trees, which indicate that the excavation occurred a significant time ago. The northern portion of the cave appears to be unaltered by the previous excavation efforts. The majority of the northern portion was clean-washed limestone. In this portion of the cave, multiple speleothems, rim pools, and other secondary calcite deposits were observed. The southern portion of the cave appeared to have endured mechanical alteration, evidenced by angular limestone and chippings. The floor below both entrances and throughout the southern portion consisted of significant amounts of leaf litter overlying soft organic-rich soils. The catchment area of this feature appears to be less than 1.6 acres. The upslope gradient of the feature is capable of contributing sheet flow towards the feature. This gradient is gentle and underlies a full canopy of Ashe juniper and live oak.

This cave meets the TCEQ's definition of a sensitive feature and, therefore, needs a protective buffer. SWCA recommends that the feature receives a buffer that extends from the cave footprint and extends 200 feet upslope. Since this feature is located outside of the project area, only the portion of the buffer that intersects the project area is depicted on the geologic map in Appendix A, Attachment D.

LR-09 Feature LR-09 is a non-karst closed depression mapped in the Edwards Limestone. The feature is 3 feet long, 1 foot wide, and 2.75 feet deep. LR-09 is positioned on a hillside with a catchment area of less than 1.6 acres. The trend of the feature is 70°, which is not within 15° of the regional faulting. The feature was excavated with hand tools to better understand the feature's origin, infill materials, and infill rate. Infill materials consisted of organics (leaf litter, twigs, and other breakdown), roots, limestone cobbles, and moderately compacted clay-rich sediment. During excavation it was revealed that several large limestone boulders (float) were displaced by roots (live oak). The infiltration rate is considered to be low due to the compacted clay-rich sediment along the base of the feature. Due to the low infiltration rate and non-karst origin, this feature is not considered to be a sensitive feature.

LR-10 Feature LR-10 is a manmade feature in bedrock, mapped in the Edwards Limestone, that may have once served as a water well. The feature appears to be a 4-inch steel pipe protruding from bedrock approximately 1 foot into the air and at least 6 feet into the subsurface. The TWDB public water well viewer does not show any registered water wells within the project area (TWDB 2021). LR-10 is not considered to be a sensitive recharge feature because the steel casing is surrounded by an intact concrete foundation and the top of the casing is above

surface grade. This feature does not warrant protective buffering but should be brought to the attention of the project engineer.

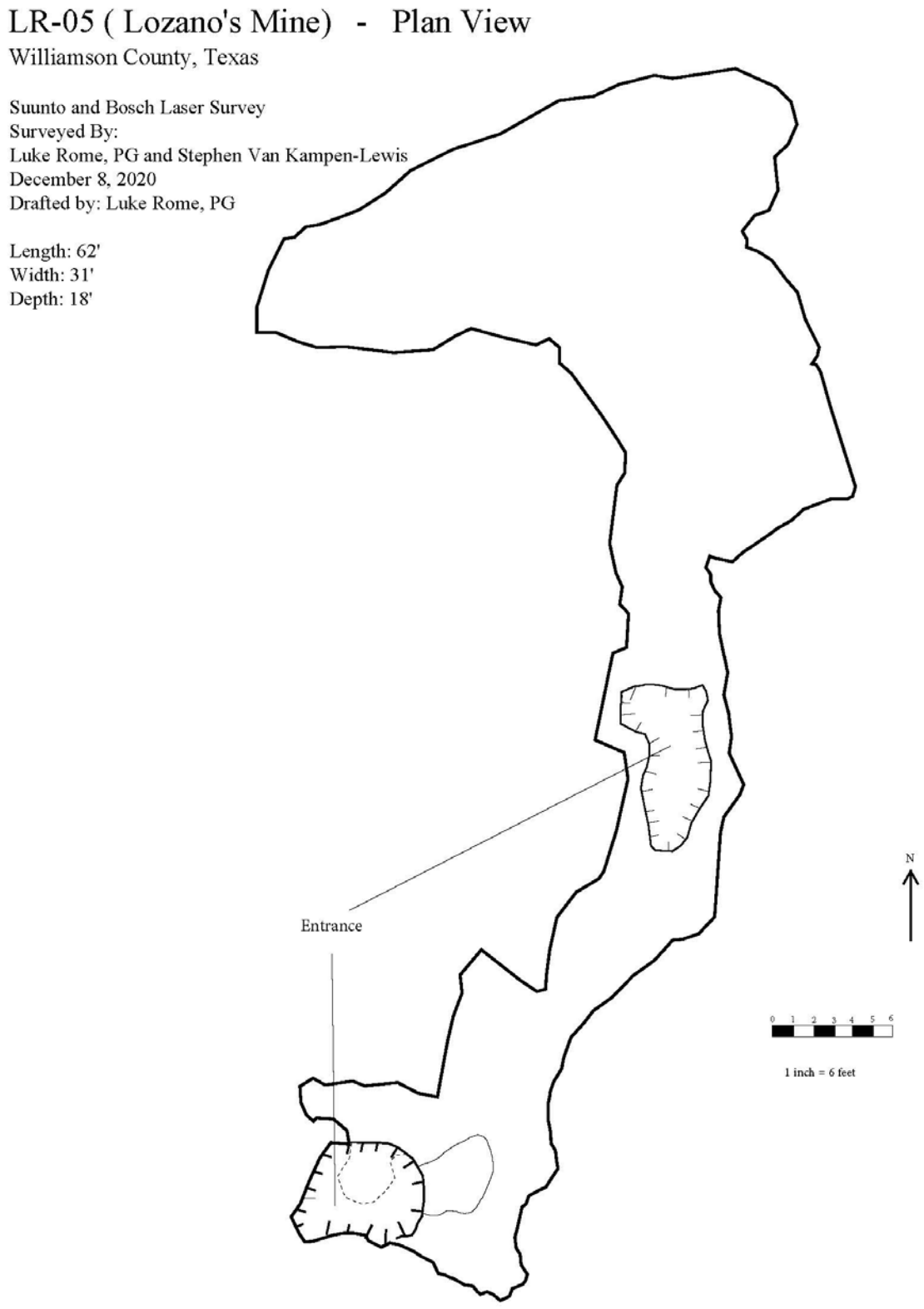

Figure 5. Lozano's Mine (LR-05) Cave Footprint

LR-11 Feature LR-11 is a cave at the base of a sinkhole mapped within the Edwards Limestone. This cave is thought to be Tinnel Cave. On October 6, 2020, an SWCA PG and karst biologist surveyed the cave to measure the subsurface footprint (Figure 6). The sinkhole is approximately 12 feet by 11 feet and the cave entrance is approximately 8 feet by 4 feet. The feature's footprint is approximately 25 feet long, 12 feet wide, and 10 feet deep. The feature is positioned on a hilltop that is relatively flat. Infill materials within the cave consist of small amounts of organic debris, fines (silt), and secondary calcite deposits. The infiltration rate of the feature is considered to be high (30 points). Since the area surrounding the feature is a flat ridgeline the catchment area is small. It appears that infiltration into the feature would only occur as a result of direct precipitation over the feature entrance and footprint.

Feature LR-11 meets the TCEQ's definition of a sensitive feature and, therefore, needs a protective buffer. SWCA recommends that the feature receives a buffer that extends from the cave footprint and extends 75 feet in all directions. The cave footprint and recommended buffer of LR-11 is depicted on the Geologic Map (Appendix A, Attachment D).

LR-12 Feature LR-12 is a sinkhole mapped within the Edwards limestone. The feature is positioned on a hillside with a catchment area of less than 1.6 acres. Evidence that this feature had been previously excavated was observed in the form of soil mounding and stacked rocks around the rim of the sinkhole. The feature is 15 feet long, 12 feet wide, and 3 feet deep. SWCA conducted additional hand excavations to better evaluate subsurface and infill conditions. The additional excavations revealed a shallow bedding plane under limestone float rock that extended approximately 3 feet to the west before terminating. The infill material overlying solid bedrock consisted of weathered limestone cobbles within a matrix of dark-colored, moderately compacted clay and organic-rich sediment. The infiltration rate is considered to be low (12 points) as a result of the clay-rich sediment and bedrock lining. Due to the low infiltration rate and lack of portals or mesocavernous voids to the subsurface, this feature is not considered to be a sensitive recharge feature.

LR-15 Feature LR-15 is a cave within a small sinkhole that is mapped in the Edwards Limestone, approximately 25 feet north of the project area. On October 6, 2020, an SWCA PG and karst biologist surveyed the cave to measure the subsurface footprint (Figure 7). This feature is just large enough to fit an average-sized human. The rim of the sinkhole is approximately 5 feet in diameter. The total depth of the feature from the top of the sinkhole rim is also 5 feet. The dimensions of the cave within the sinkhole are approximately 3 feet by 3 feet by 4 feet. The cave is cylindrical in shape and the walls are clean washed, with the exception of green moss and algal growth. The floor of the feature is mostly compacted clay and organic-rich sediments. Some potential mesocaverns were observed along the base of the cave where the floor and walls meet; therefore, the infiltration rate is considered to be moderate (20 points). The original catchment area of this feature has been reduced due to the presence of a maintained utility easement approximately 25 feet upslope (south) and the maintained ROW of the existing Leander Road approximately 60 feet upslope (south) of the feature.

Feature LR-15 is considered a sensitive recharge feature due to its classification as a cave and its infiltration rate. This feature warrants a protective buffer because of its sensitivity. SWCA recommends a radial buffer that extends 75 feet from the feature, within the project area. The cave footprint and recommended buffer of LR-15 is depicted on the Geologic Map (Appendix A, Attachment D).

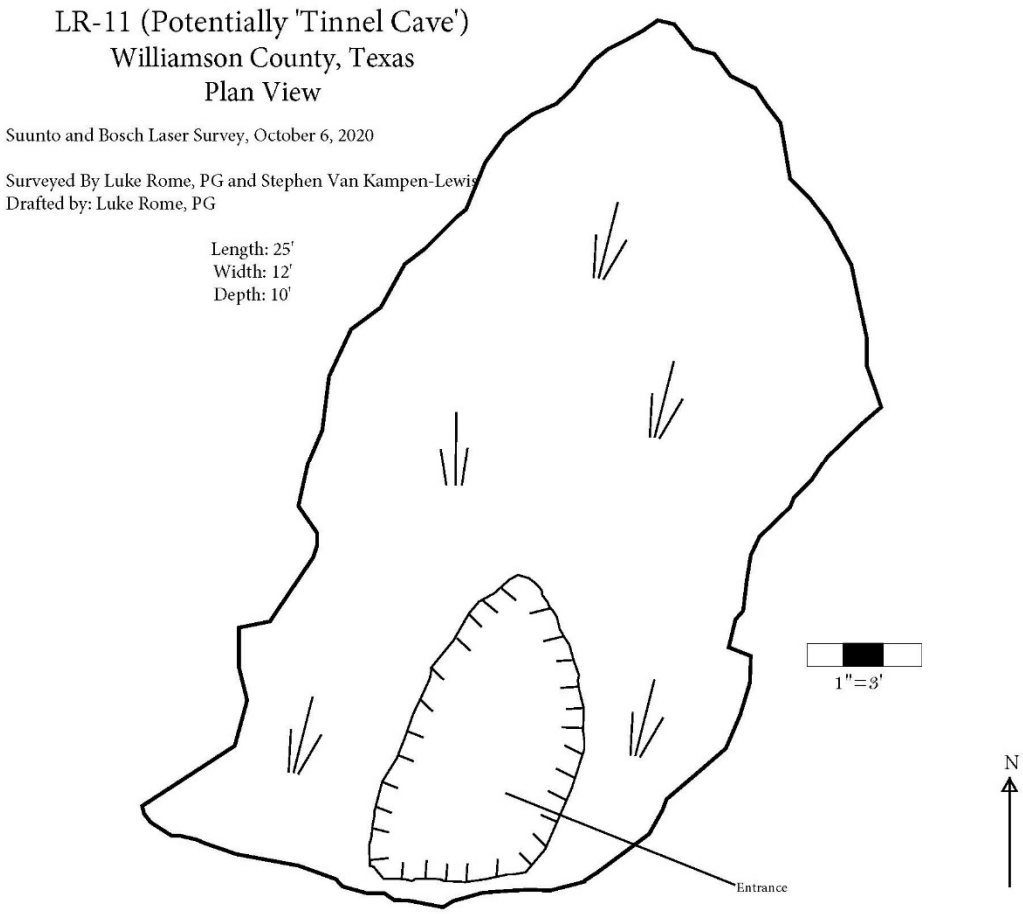

Figure 6. Tinnel Cave (LR-11) Footprint

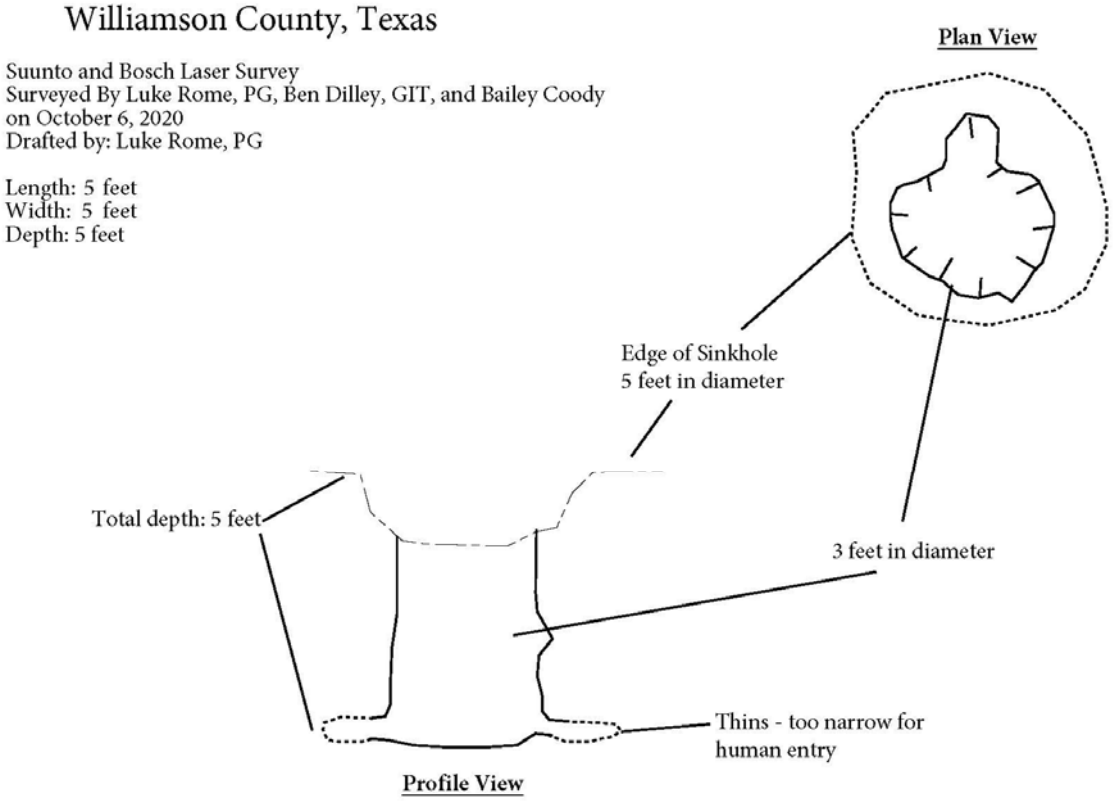

Figure 7. LR-15 Cave Footprint

4 CONCLUSION

SWCA identified three caves (LR-05, LR-11, and LR-15) ranked as sensitive features within the survey area. SWCA recommends implementing natural protective buffers for all three caves as described in the previous section to comply with TCEQ Edwards Aquifer rules.

5 LITERATURE CITED

Barnes, V.E. 1974. Geologic Atlas of Texas, Austin Sheet. University of Texas at Austin, Bureau of Economic Geology. Scale 1:250,000.

Collins, E.W. 1997a. Geologic map of the Round Rock quadrangle, Texas: University of Texas at Austin, Bureau of Economic Geology, Open-File Map OFM0013D, scale 1:24,000.

———. 1997b. Geologic map of the Georgetown quadrangle, Texas: University of Texas at Austin, Bureau of Economic Geology, Open-File Map, scale 1:24,000.

Natural Resources Conservation Service (NRCS). 2021. U.S. Department of Agriculture. Soil Survey Geographic (SSURGO) Database. Available at: http://websoilsurvey.sc.egov.usda.gov/App/HomePage.htm. Accessed June 2021.

SWCA Environmental Consultants (SWCA), Smith, Robertson, Elliott, Glen, Klein, & Bell, LLP, Prime Strategies, Inc., Texas Perspectives, Inc. 2008. *Williamson County Regional Habitat Conservation Plan.* Prepared for Williamson County Conservation Foundation and The Honorable Lisa Birkman.

Texas Commission on Environmental Quality (TCEQ). 2004. *Instructions to Geologists for Geologic Assessments on the Edwards Aquifer Recharge/Transition Zones* (Rev. 10-01-04). Austin, Texas. 34 pp.

———. 2021. Edwards Aquifer Viewer v4.1. Available at: https://www.tceq.texas.gov/gis/edwards-viewer.html. Accessed June 2021.

Texas Water Development Board (TWDB). 2021 Groundwater data viewer. Available online at: https://www2.twdb.texas.gov/apps/WaterDataInteractive/GroundwaterDataViewer/?map=sdr Accessed June 2021.

U.S. Geological Survey (USGS). 1987 Hydrologic and geologic data for the Edwards Aquifer Recharge Zone near Georgetown, Williamson County, Texas, Open File report 87-691

———. 2019a. USGS 1:24000-scale Quadrangle for Round Rock, Texas, 2019: U.S. Geological Survey.

———. 2019b. USGS U.S. Topographic 7.5-minute map for Leander, Texas, 2019: USGS - National Geospatial Technical Operations Center (NGTOC).

APPENDIX A

TEXAS COMMISSION ON ENVIRONMENTAL QUALITY (TCEQ) FORMS

Geologic Assessment

Texas Commission on Environmental Quality

For Regulated Activities on The Edwards Aquifer Recharge/transition Zones and Relating to 30 TAC §213.5(b)(3), Effective June 1, 1999

To ensure that the application is administratively complete, confirm that all fields in the form are complete, verify that all requested information is provided, consistently reference the same site and contact person in all forms in the application, and ensure forms are signed by the appropriate party.

Note: Including all the information requested in the form and attachments contributes to more streamlined technical reviews.

Signature

To the best of my knowledge, the responses to this form accurately reflect all information requested concerning the proposed regulated activities and methods to protect the Edwards Aquifer. My signature certifies that I am qualified as a geologist as defined by 30 TAC Chapter 213.

Print Name of Geologist: Luke Rome, P.G. Telephone: 737.236.4480

Date: January 27, 2021 Fax: 512-476-0893

Representing: SWCA Environmental Consultants; TBPG Firm Registration No. 50159 (Name of Company and TBPG or TBPE registration number)

Signature of Geologist:

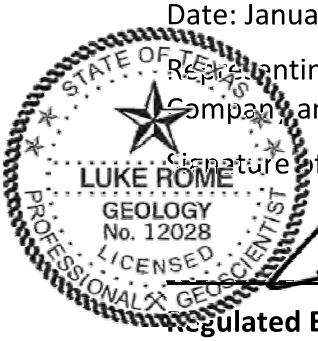

Regulated Entity Name: Leander Road Project — Southwest Bypass to US 183

Project Information

1. Date(s) Geologic Assessment was performed: June 15, 16, 22, 23, & 25, 2020, October 5 & 6, 2020, December 8, 2020, and March 30, 2021
2. Type of Project:

   ☒ WPAP ☐ AST
   ☐ SCS ☐ UST
3. Location of Project:

   ☒ Recharge Zone
   ☐ Transition Zone
   ☐ Contributing Zone within the Transition Zone

4. ☒ **Attachment A - Geologic Assessment Table**. Completed Geologic Assessment Table (Form TCEQ-0585-Table) is attached.

5. ☒ Soil cover on the project site is summarized in the table below and uses the SCS Hydrologic Soil Groups* (Urban Hydrology for Small Watersheds, Technical Release No. 55, Appendix A, Soil Conservation Service, 1986). If there is more than one soil type on the project site, show each soil type on the site Geologic Map or a separate soils map.

Table 1 - Soil Units, Infiltration Characteristics and Thickness

Soil Name	Group*	Thickness(feet)
see section	3.2	

** Soil Group Definitions (Abbreviated)*

A. Soils having a high infiltration rate when thoroughly wetted.
B. Soils having a moderate infiltration rate when thoroughly wetted.
C. Soils having a slow infiltration rate when thoroughly wetted.
D. Soils having a very slow infiltration rate when thoroughly wetted.

6. ☒ **Attachment B – Stratigraphic Column**. A stratigraphic column showing formations, members, and thicknesses is attached. The outcropping unit, if present, should be at the top of the stratigraphic column. Otherwise, the uppermost unit should be at the top of the stratigraphic column.

7. ☒ **Attachment C – Site Geology**. A narrative description of the site specific geology including any features identified in the Geologic Assessment Table, a discussion of the potential for fluid movement to the Edwards Aquifer, stratigraphy, structure(s), and karst characteristics is attached.

8. ☒ **Attachment D – Site Geologic Map(s)**. The Site Geologic Map must be the same scale as the applicant's Site Plan. The minimum scale is 1": 400'

   Applicant's Site Plan Scale: 1" = 400'
   Site Geologic Map Scale: 1" = 400'
   Site Soils Map Scale (if more than 1 soil type): 1" = 2000'

9. Method of collecting positional data:

   ☒ Global Positioning System (GPS) technology.
   ☐ Other method(s). Please describe method of data collection: _____

10. ☒ The project site and boundaries are clearly shown and labeled on the Site Geologic Map.

11. ☒ Surface geologic units are shown and labeled on the Site Geologic Map.

12. ☒ Geologic or manmade features were discovered on the project site during the field investigation. They are shown and labeled on the Site Geologic Map and are described in the attached Geologic Assessment Table.

    ☐ Geologic or manmade features were not discovered on the project site during the field investigation.

13. ☒ The Recharge Zone boundary is shown and labeled, if appropriate.

14. All known wells (test holes, water, oil, unplugged, capped and/or abandoned, etc.): If applicable, the information must agree with Item No. 20 of the WPAP Application Section.

    ☒ There are 1 (#) wells present on the project site and the locations are shown and labeled. (Check all of the following that apply.)
    - ☐ The wells are not in use and have been properly abandoned.
    - ☒ The wells are not in use and will be properly abandoned.
    - ☐ The wells are in use and comply with 16 TAC Chapter 76.

    ☐ There are no wells or test holes of any kind known to exist on the project site.

Administrative Information

15. ☒ Submit one (1) original and one (1) copy of the application, plus additional copies as needed for each affected incorporated city, groundwater conservation district, and county in which the project will be located. The TCEQ will distribute the additional copies to these jurisdictions. The copies must be submitted to the appropriate regional office.

Attachment A

Geologic Assessment Table

GEOLOGIC ASSESSMENT TABLE

PROJECT NAME: Leander Road - SW Bypass to US 183

LOCATION			FEATURE CHARACTERISTICS												EVALUATION			PHYSICAL SETTING		
1A	1B *	1C*	2A	2B	3	4			5	5A	6	7	8A	8B	9	10		11		12
FEATURE ID	LATITUDE	LONGITUDE	FEATURE TYPE	POINTS	FORMATION	DIMENSIONS (FEET)			TREND (DEGREES)	DIP/DIP DIRECTION	DENSITY (NO/FT)	APERTURE (FEET)	INFILL	RELATIVE INFILTRATION RATE	TOTAL	SENSITIVITY		CATCHMENT AREA (ACRES)		TOPOGRAPHY
						X	Y	Z		10						<40	≥40	<1.6	≥1.6	
LR-01	30.593176	-97.796275	O	5	Ked	3	2	1	-	0	-		O, F	5	10	X		X		Hillside
LR-02	30.593096	-97.796536	CD	5	Ked	6	5	2.5	68	0	-	-	O, C, F	10	15	X		X		Hillside
LR-03	30.593946	-97.793168	SH	20	Ked	3	2.5	6	-	0	-	-	V, O, C, F	15	35	X		X		Hillside
LR-04	30.594126	-97.79216	CD	5	Ked	8	8	2	-	0	-	-	V, O, F	5	10	X		X		Hillside
LR-05	**30.594181**	**-97.78503**	**C**	**30**	**Ked**	**62**	**31**	**18**	**10**	**0**			**V, C, FS**	**35**	**65**		**X**	X		Hillside
LR-09	30.595193	-97.77726	CD	20	Ked	3	1	2.75	70	0	-	-	O, C, F	10	15	X		X		Hillside
LR-10	30.595112	-97.773822	MB	30	Ked	0.25	0.25	-	-	0	-	-	N	5	35	X		X		Hillside
LR-11	**30.596196**	**-97.768159**	**C**	**30**	**Ked**	**25**	**12**	**10**	**-**	**0**	**-**	**-**	**C, O, Fs**	**35**	**65**		**X**	X		Hilltop
LR-12	30.596067	-97.773816	SH	20	Ked	15	12	3	-	0	-	-	C, O, F	12	32	X		X		Hillside
LR-15	**30.595944**	**-97.774954**	**C**	**30**	**Ked**	**5**	**5**	**5**	**-**	**0**	**-**	**-**	**C, O, F**	**20**	**50**		**X**	X		Hillside

* DATUM: Geographic Latitude Longitude Decimal Degrees NAD83

2A TYPE	TYPE	2B POINTS
C	Cave	30
SC	Solution cavity	20
SF	Solution-enlarged fracture(s)	20
F	Fault	20
O	Other natural bedrock features	5
MB	Manmade feature in bedrock	30
SW	Swallow hole	30
SH	Sinkhole	20
CD	Non-karst closed depression	5
Z	Zone, clustered or aligned features	30

8A INFILLING	
N	None, exposed bedrock
C	Coarse - cobbles, breakdown, sand, gravel
O	Loose or soft mud or soil, organics, leaves, sticks, dark colors
F	Fines, compacted clay-rich sediment, soil profile, gray or red colors
V	Vegetation. Give details in narrative description
FS	Flowstone, cements, cave deposits
X	Other materials

12 TOPOGRAPHY
Cliff, Hilltop, Hillside, Drainage, Floodplain, Streambed

I have read, I understood, and I have followed the Texas Commission on Environmental Quality's Instructions to Geologists. The information presented here complies with that document and is a true representation of the conditions observed in the field.

My signature certifies that I am qualified as a geologist as defined by 30 TAC Chapter 213.

Date 01/27/2022

Sheet 1 of 1

TCEQ-0585-Table (Rev. 10-01-04)

Attachment B

Stratigraphic Column

Stratigraphic Column

Upper Cretaceous	Upper Confining Units	Navarro and Taylor Groups, undivided; 600 feet thick
		Austin Group; 325–420 feet thick
		Eagle Ford Group; 25–65 feet thick
		Buda Limestone; 40–50 feet thick
		Del Rio Clay; 40–70 feet thick
Lower Cretaceous	Edwards Aquifer	Georgetown Formation; 30–80 feet thick
		Edwards Limestone; Up to 200 feet thick
		Comanche Peak Formation; 80 feet thick
	Lower Confining Units	Walnut Formation; Up to 120 feet thick
		Upper member of Glen Rose Limestone; 500 feet thick

Note: The shaded area represents the lithology that outcrops in the project area.

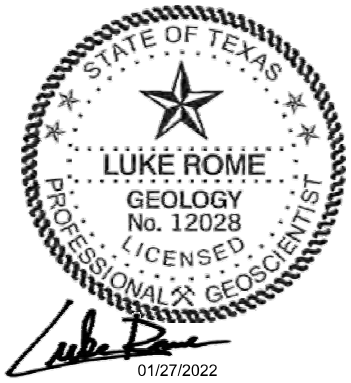

Attachment C

Narrative Description of Site Geology

REFER TO SECTION 3.3 OF THIS REPORT FOR GEOLOGIC NARRATIVE DESCRIPTION.

Attachment D

Site Geologic Map

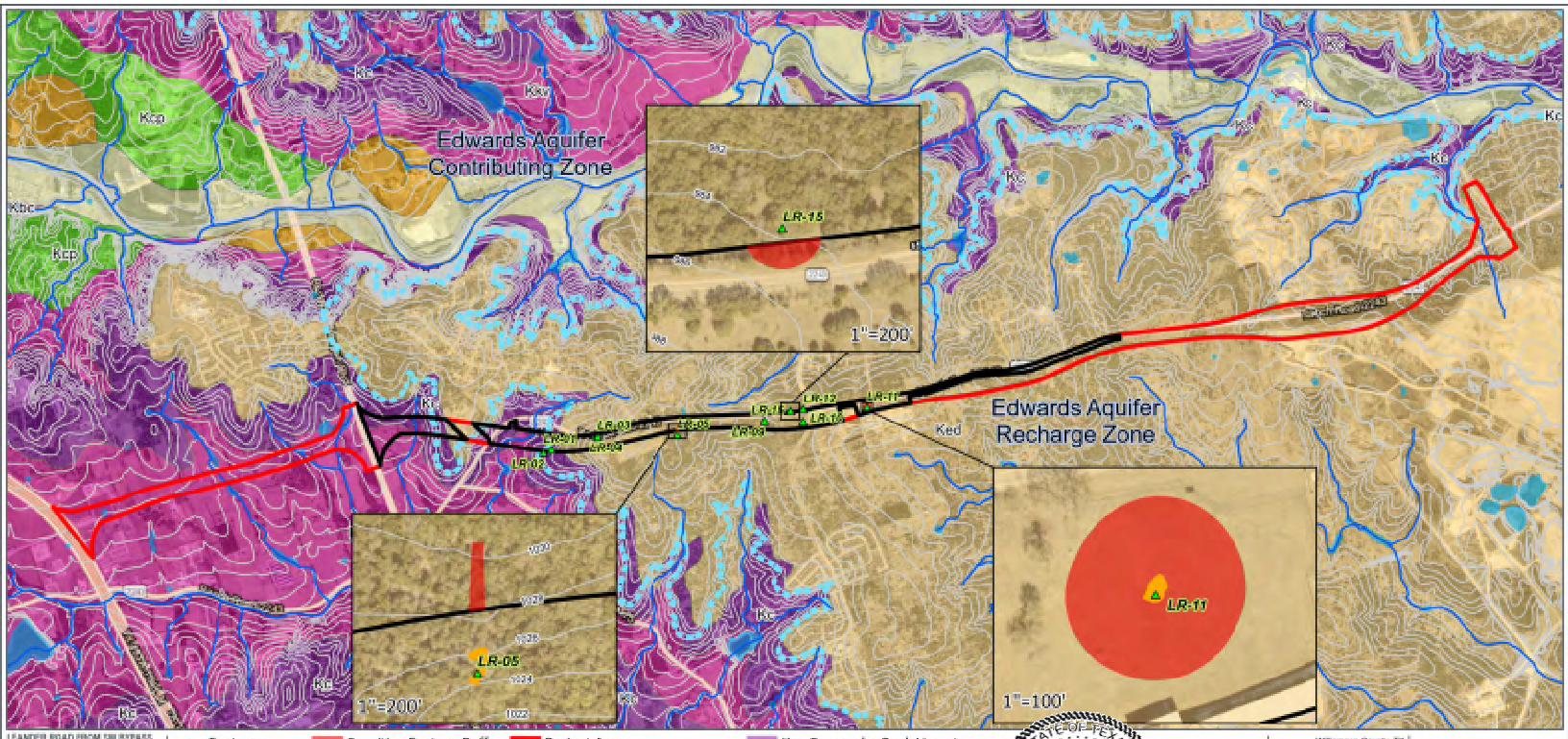

LEANDER ROAD FROM SH BYPASS TO US 183

Geologic Assessment

- Feature
- Contour Line
- NHD Flowline
- Cave Footprint
- Sensitive Feature Buffer
- NHD Waterbody
- Aquifer Boundary
- Survey Area
- Project Area

Geologic Unit

- Qt - Fluviatile terrace deposits
- Kbc - Bee Cave Marl
- Kc - Comanche Peak Limestone
- Kcp - Cedar Park
- Ked - Edwards Limestone
- Kkv - Keys Valley Marl
- Qal - Alluvium

STATE OF TEXAS
LUKE ROME
GEOLOGY
No. 12028
LICENSED
PROFESSIONAL GEOSCIENTIST

01/27/2022

Williamson County, TX
USGS 7.5' Quadrangle
Leander, TX, 30097-E7
Round Rock, TX, 30097-E6
NAD 1983 UTM Zone 14N

Base Map: ESRI ArcGIS Online, accessed January 2022

Updated: 1/28/2022
Project No. 61187

N

1:35,000

0 1,000 2,000 Feet

0 250 500 Meters

SWCA
ENVIRONMENTAL CONSULTANTS

APPENDIX B

PHOTOGRAPHIC LOG

Photo 1. View of LR-01.

Photo 2. View of LR-01.

Photo 3. View of LR-02 post excavation (facing north).

Photo 4. Photo of LR-03 prior to excavation.

Photo 5. View of LR-03 after excavation (facing west).

Photo 6. View of LR-04.

Photo 7. View of south entrance of LR-05 .

Photo 8. View of LR-05 (south entrance). Top of photo is to the west.

Photo 9. View of LR-09.

Photo 10. View of LR-10 facing east.

Photo 11. View of LR-11, view facing north.

Photo 12. Interior view of LR-11 (facing south).

Photo 13. View of LR-12 facing north.

Photo 14. Interior view of LR-15 (top of the phot is to the southwest).

Agent Authorization Form
For Required Signature
Edwards Aquifer Protection Program
Relating to 30 TAC Chapter 213
Effective June 1, 1999

I Steven Snell,
Print Name

Williamson County Judge,
Title - Owner/President/Other

of Williamson County,
Corporation/Partnership/Entity Name

have authorized Alexis Woffenden, P.E.
Print Name of Agent/Engineer

of BGE, Inc.
Print Name of Firm

to represent and act on the behalf of the above named Corporation, Partnership, or Entity for the purpose of preparing and submitting this plan application to the Texas Commission on Environmental Quality (TCEQ) for the review and approval consideration of regulated activities.

I also understand that:

1. The applicant is responsible for compliance with 30 Texas Administrative Code Chapter 213 and any condition of the TCEQ's approval letter. The TCEQ is authorized to assess administrative penalties of up to $10,000 per day per violation.

2. For those submitting an application who are not the property owner, but who have the right to control and possess the property, additional authorization is required from the owner.

3. Application fees are due and payable at the time the application is submitted. The application fee must be sent to the TCEQ cashier or to the appropriate regional office. The application will not be considered until the correct fee is received by the commission.

4. A notarized copy of the Agent Authorization Form must be provided for the person preparing the application, and this form must accompany the completed application.

5. No person shall commence any regulated activity on the Edwards Aquifer Recharge Zone, Contributing Zone or Transition Zone until the appropriate application for the activity has been filed with and approved by the Executive Director.

SIGNATURE PAGE:

Steven Snell
Applicant's Signature

May 6, 2025
Date

THE STATE OF Texas §

County of Williamson §

BEFORE ME, the undersigned authority, on this day personally appeared Steven Snell known to me to be the person whose name is subscribed to the foregoing instrument, and acknowledged to me that (s)he executed same for the purpose and consideration therein expressed.

GIVEN under my hand and seal of office on this 14th day of May, 2025.

Rebecca Lynn Pruitt
NOTARY PUBLIC

REBECCA LYNN PRUITT
Notary Public, State of Texas
Comm. Expires 08-31-2028
Notary ID 132650479

Rebecca Pruitt
Typed or Printed Name of Notary

MY COMMISSION EXPIRES: 08-31-2028

Agent Authorization Form
For Required Signature
Edwards Aquifer Protection Program
Relating to 30 TAC Chapter 213
Effective June 1, 1999

I Shane Rotter,
Print Name

Environmental Project Planner,
Title - Owner/President/Other

of Texas Department of Transportation,
Corporation/Partnership/Entity Name

have authorized Alexis Woffenden, P.E.
Print Name of Agent/Engineer

of BGE, Inc.
Print Name of Firm

to represent and act on the behalf of the above named Corporation, Partnership, or Entity for the purpose of preparing and submitting this plan application to the Texas Commission on Environmental Quality (TCEQ) for the review and approval consideration of regulated activities.

I also understand that:

1. The applicant is responsible for compliance with 30 Texas Administrative Code Chapter 213 and any condition of the TCEQ's approval letter. The TCEQ is authorized to assess administrative penalties of up to $10,000 per day per violation.

2. For those submitting an application who are not the property owner, but who have the right to control and possess the property, additional authorization is required from the owner.

3. Application fees are due and payable at the time the application is submitted. The application fee must be sent to the TCEQ cashier or to the appropriate regional office. The application will not be considered until the correct fee is received by the commission.

4. A notarized copy of the Agent Authorization Form must be provided for the person preparing the application, and this form must accompany the completed application.

5. No person shall commence any regulated activity on the Edwards Aquifer Recharge Zone, Contributing Zone or Transition Zone until the appropriate application for the activity has been filed with and approved by the Executive Director.

SIGNATURE PAGE:

Applicant's Signature

4/28/25
Date

THE STATE OF _____ §

County of _____ §

BEFORE ME, the undersigned authority, on this day personally appeared _____ known to me to be the person whose name is subscribed to the foregoing instrument, and acknowledged to me that (s)he executed same for the purpose and consideration therein expressed.

GIVEN under my hand and seal of office on this ____ day of _____, ____.

NOTARY PUBLIC

Typed or Printed Name of Notary

MY COMMISSION EXPIRES: _____

Agent Authorization Form
For Required Signature
Edwards Aquifer Protection Program
Relating to 30 TAC Chapter 213
Effective June 1, 1999

I Emily Truman,
Print Name

City Engineer,
Title - Owner/President/Other

of City of Leander,
Corporation/Partnership/Entity Name

have authorized Alexis Woffenden, P.E.
Print Name of Agent/Engineer

of BGE, Inc.
Print Name of Firm

to represent and act on the behalf of the above named Corporation, Partnership, or Entity for the purpose of preparing and submitting this plan application to the Texas Commission on Environmental Quality (TCEQ) for the review and approval consideration of regulated activities.

I also understand that:

1. The applicant is responsible for compliance with 30 Texas Administrative Code Chapter 213 and any condition of the TCEQ's approval letter. The TCEQ is authorized to assess administrative penalties of up to $10,000 per day per violation.

2. For those submitting an application who are not the property owner, but who have the right to control and possess the property, additional authorization is required from the owner.

3. Application fees are due and payable at the time the application is submitted. The application fee must be sent to the TCEQ cashier or to the appropriate regional office. The application will not be considered until the correct fee is received by the commission.

4. A notarized copy of the Agent Authorization Form must be provided for the person preparing the application, and this form must accompany the completed application.

5. No person shall commence any regulated activity on the Edwards Aquifer Recharge Zone, Contributing Zone or Transition Zone until the appropriate application for the activity has been filed with and approved by the Executive Director.

SIGNATURE PAGE:

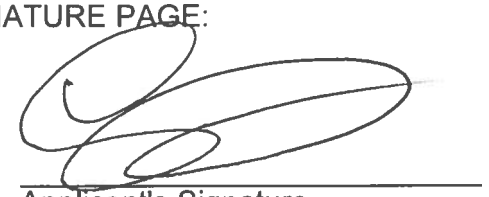

Applicant's Signature

4/22/2025
Date

THE STATE OF Texas §

County of Williamson §

BEFORE ME, the undersigned authority, on this day personally appeared Emily Truman known to me to be the person whose name is subscribed to the foregoing instrument, and acknowledged to me that (s)he executed same for the purpose and consideration therein expressed.

GIVEN under my hand and seal of office on this 22 day of April, 2025.

Lorraine B Eldred
NOTARY PUBLIC

LORRAINE B. ELDRED
My Notary ID # 124552760
Expires July 23, 2028

Lorraine B. Eldred
Typed or Printed Name of Notary

MY COMMISSION EXPIRES: July 23, 2028

Application Fee Form

Texas Commission on Environmental Quality
Name of Proposed Regulated Entity: RM 2243
Regulated Entity Location: Williamson County
Name of Customer: Williamson County
Contact Person: Adam Boatright, P.E. Phone: 512-943-3330
Customer Reference Number (if issued):CN 600897888
Regulated Entity Reference Number (if issued):RN _____

Austin Regional Office (3373)

☐ Hays ☐ Travis ☒ Williamson

San Antonio Regional Office (3362)

☐ Bexar ☐ Medina ☐ Uvalde
☐ Comal ☐ Kinney

Application fees must be paid by check, certified check, or money order, payable to the **Texas Commission on Environmental Quality**. Your canceled check will serve as your receipt. **This form must be submitted with your fee payment**. This payment is being submitted to:

☐ Austin Regional Office
☐ Mailed to: TCEQ - Cashier
Revenues Section
Mail Code 214
P.O. Box 13088
Austin, TX 78711-3088

☐ San Antonio Regional Office
☐ Overnight Delivery to: TCEQ - Cashier
12100 Park 35 Circle
Building A, 3rd Floor
Austin, TX 78753
(512)239-0357

Site Location (Check All That Apply):

☒ Recharge Zone ☒ Contributing Zone ☐ Transition Zone

Type of Plan	***Size***	***Fee Due***
Water Pollution Abatement Plan, Contributing Zone Plan: One Single Family Residential Dwelling	Acres	$
Water Pollution Abatement Plan, Contributing Zone Plan: Multiple Single Family Residential and Parks	Acres	$
Water Pollution Abatement Plan, Contributing Zone Plan: Non-residential	218.07 Acres	$ 10,000
Sewage Collection System	L.F.	$
Lift Stations without sewer lines	Acres	$
Underground or Aboveground Storage Tank Facility	Tanks	$
Piping System(s)(only)	Each	$
Exception	Each	$
Extension of Time	Each	$

Signature: _____ Date: _____

Application Fee Schedule

Texas Commission on Environmental Quality
Edwards Aquifer Protection Program 30 TAC Chapter 213 (effective 05/01/2008)

Water Pollution Abatement Plans and Modifications

Contributing Zone Plans and Modifications

Project	*Project Area in Acres*	*Fee*
One Single Family Residential Dwelling	< 5	$650
Multiple Single Family Residential and Parks	< 5 5 < 10 10 < 40 40 < 100 100 < 500 ≥ 500	$1,500 $3,000 $4,000 $6,500 $8,000 $10,000
Non-residential (Commercial, industrial, institutional, multi-family residential, schools, and other sites where regulated activities will occur)	< 1 1 < 5 5 < 10 10 < 40 40 < 100 ≥ 100	$3,000 $4,000 $5,000 $6,500 $8,000 $10,000

Organized Sewage Collection Systems and Modifications

Project	*Cost per Linear Foot*	*Minimum Fee-Maximum Fee*
Sewage Collection Systems	$0.50	$650 - $6,500

Underground and Aboveground Storage Tank System Facility Plans and Modifications

Project	*Cost per Tank or Piping System*	*Minimum Fee-Maximum Fee*
Underground and Aboveground Storage Tank Facility	$650	$650 - $6,500

Exception Requests

Project	*Fee*
Exception Request	$500

Extension of Time Requests

Project	*Fee*
Extension of Time Request	$150

TCEQ Use Only

TCEQ Core Data Form

For detailed instructions on completing this form, please read the Core Data Form Instructions or call 512-239-5175.

SECTION I: General Information

1. Reason for Submission (*If other is checked please describe in space provided.*)

☒ New Permit, Registration or Authorization (*Core Data Form should be submitted with the program application.*)

☐ Renewal *(Core Data Form should be submitted with the renewal form)* ☐ Other

2. Customer Reference Number *(if issued)*	Follow this link to search for CN or RN numbers in Central Registry**	**3. Regulated Entity Reference Number** *(if issued)*
CN 600897888		**RN**

SECTION II: Customer Information

4. General Customer Information | **5. Effective Date for Customer Information Updates** (mm/dd/yyyy)

☐ New Customer ☐ Update to Customer Information ☐ Change in Regulated Entity Ownership
☐ Change in Legal Name (Verifiable with the Texas Secretary of State or Texas Comptroller of Public Accounts)

The Customer Name submitted here may be updated automatically based on what is current and active with the Texas Secretary of State (SOS) or Texas Comptroller of Public Accounts (CPA).

6. Customer Legal Name *(If an individual, print last name first: eg: Doe, John)* | *If new Customer, enter previous Customer below:*

Williamson County

7. TX SOS/CPA Filing Number	**8. TX State Tax ID** (11 digits)	**9. Federal Tax ID** (9 digits)	**10. DUNS Number** *(if applicable)*

11. Type of Customer: ☐ Corporation ☐ Individual Partnership: ☐ General ☐ Limited
Government: ☐ City ☒ County ☐ Federal ☐ Local ☐ State ☐ Other ☐ Sole Proprietorship ☐ Other:

12. Number of Employees
☐ 0-20 ☒ 21-100 ☐ 101-250 ☐ 251-500 ☒ 501 and higher

13. Independently Owned and Operated?
☐ **Yes** ☒ **No**

14. Customer Role (Proposed or Actual) – *as it relates to the Regulated Entity listed on this form. Please check one of the following*

☐ Owner ☐ Operator ☒ Owner & Operator
☐ Occupational Licensee ☐ Responsible Party ☐ VCP/BSA Applicant ☐ Other:

15. Mailing Address:	Williamson County						
	3151 S.E. Inner Loop, Suite B						
	City	Georgetown	**State**	TX	**ZIP**	78626	**ZIP + 4**

16. Country Mailing Information *(if outside USA)*	**17. E-Mail Address** *(if applicable)*
	roadadmin@wilco.org

18. Telephone Number	**19. Extension or Code**	**20. Fax Number** *(if applicable)*

(512) 943-3330		(512) 943-3335

SECTION III: Regulated Entity Information

21. General Regulated Entity Information *(If 'New Regulated Entity" is selected, a new permit application is also required.)*

☒ New Regulated Entity ☐ Update to Regulated Entity Name ☐ Update to Regulated Entity Information

The Regulated Entity Name submitted may be updated, in order to meet TCEQ Core Data Standards (removal of organizational endings such as Inc, LP, or LLC).

22. Regulated Entity Name *(Enter name of the site where the regulated action is taking place.)*

RM 2243

23. Street Address of the Regulated Entity: ***(No PO Boxes)***								
	City		**State**		**ZIP**		**ZIP + 4**	
24. County	Williamson County							

If no Street Address is provided, fields 25-28 are required.

25. Description to Physical Location:	3.4 mi of proposed road from approx. 200-ft east of the intersection of CR 269 and Hero Way to approx 900 ft west of Escalera Pkwy on RM 2243.				
26. Nearest City			**State**	**Nearest ZIP Code**	
Leander			TX	78641	

Latitude/Longitude are required and may be added/updated to meet TCEQ Core Data Standards. (Geocoding of the Physical Address may be used to supply coordinates where none have been provided or to gain accuracy).

27. Latitude (N) In Decimal:	30.58744722		**28. Longitude (W) In Decimal:**	97.83857778	
Degrees	Minutes	Seconds	Degrees	Minutes	Seconds
30	35	15.97	97	50	14.7

29. Primary SIC Code (4 digits)	**30. Secondary SIC Code** (4 digits)	**31. Primary NAICS Code** (5 or 6 digits)	**32. Secondary NAICS Code** (5 or 6 digits)
1611		237310	

33. What is the Primary Business of this entity? *(Do not repeat the SIC or NAICS description.)*

Roadway

34. Mailing Address:	**Williamson County**							
	3151 S.E. Inner Loop, Suite B							
	City	**Georgetown**	**State**	**TX**	**ZIP**	**78626**	**ZIP + 4**	
35. E-Mail Address:	**roadadmin@wilco.org**							

36. Telephone Number	**37. Extension or Code**	**38. Fax Number** *(if applicable)*
(512) 943-3330		**(512) 943-3335**

39. TCEQ Programs and ID Numbers Check all Programs and write in the permits/registration numbers that will be affected by the updates submitted on this form. See the Core Data Form instructions for additional guidance.

☐ Dam Safety	☐ Districts	☒ Edwards Aquifer	☐ Emissions Inventory Air	☐ Industrial Hazardous Waste
☐ Municipal Solid Waste	☐ New Source Review Air	☐ OSSF	☐ Petroleum Storage Tank	☐ PWS
☐ Sludge	☐ Storm Water	☐ Title V Air	☐ Tires	☐ Used Oil
☐ Voluntary Cleanup	☐ Wastewater	☐ Wastewater Agriculture	☐ Water Rights	☐ Other:

SECTION IV: Preparer Information

40. Name:	Alexis Woffenden, P.E.	**41. Title:**	Senior Project Manager

42. Telephone Number	**43. Ext./Code**	**44. Fax Number**	**45. E-Mail Address**
(512 **)** 795-1416		**( ) -**	awoffenden@bgeinc.com

SECTION V: Authorized Signature

46. By my signature below, I certify, to the best of my knowledge, that the information provided in this form is true and complete, and that I have signature authority to submit this form on behalf of the entity specified in Section II, Field 6 and/or as required for the updates to the ID numbers identified in field 39.

Company:	BGE, Inc.	**Job Title:**	Senior Project Manager
Name *(In Print):*	Alexis Woffenden, P.E.	**Phone:**	**(**512 **)**795-1416
Signature:		**Date:**	06/02/2025

Geologic Assessment for the Leander Road Project — Southwest Bypass to US 183, Georgetown, Texas

JANUARY 2022

PREPARED FOR

BGE, Inc.

PREPARED BY

SWCA Environmental Consultants

Texas Board of Professional Geoscientists, Firm Registration No. 50159

GEOLOGIC ASSESSMENT FOR THE LEANDER ROAD PROJECT — SOUTHWEST BYPASS TO US 183, GEORGETOWN, TEXAS

Prepared for

BGE, Inc.
101 West Louis Henna Boulevard
Suite 400
Austin, Texas 78728

Prepared by

SWCA Environmental Consultants
Texas Board of Professional Geoscientists, Firm Registration No. 50159
4407 Monterey Oaks Boulevard
Building 1, Suite 110
Austin, Texas 78749
(512) 476-0891
www.swca.com

SWCA Project No. 61197

January 2022

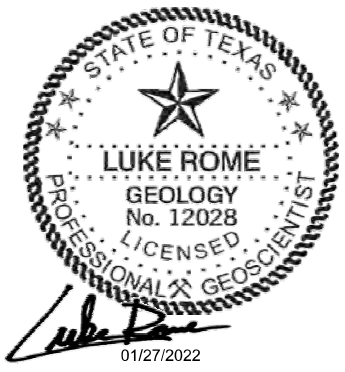

CONTENTS

1 Introduction 1
2 Methodology 1
3 Results 3
3.1 Project and Survey Area Overview 3
3.2 Soils 3
3.3 Geology 6
3.4 Hydrogeologic Assessment 8
3.5 Feature Descriptions 8
4 Conclusion 15
5 Literature Cited 16

Appendices

Appendix A Texas Commission on Environmental Quality (TCEQ) Forms
Appendix B Photographic Log

Figures

Figure 1. Project location map. 2
Figure 2. Right-of-Entry map 4
Figure 3. Soils map. 5
Figure 4. Regional trend map. 7
Figure 5. Lozano's Mine (LR-05) Cave Footprint 11
Figure 6. Tinnel Cave (LR-11) Cave Footprint 13
Figure 7. LR-15 Cave Footprint 14

Tables

Table 1. Soil Units within the Project Area 3

1 INTRODUCTION

This narrative geologic assessment accompanies Texas Commission on Environmental Quality (TCEQ) Geologic Assessment Form TCEQ-0585 completed for the proposed expansion of Ranch-to-Market Road (RM) 2243 (Leander Road) (project). The project proposes approximately 408.0 acres of new roadway between Southwest Bypass and US 183 in the City of Georgetown extraterritorial jurisdiction (ETJ), Williamson County, Texas (Figure 1). The project area is approximately 7.75 miles long and up to 1,500 feet wide, covering approximately 510.53 acres. Due to limited access within the project area, SWCA Environmental Consultants (SWCA) only surveyed 166.56 acres of the project area within the Edwards Aquifer Recharge Zone (EARZ), this area is referred to as the "survey area" for the remainder of this report.

2 METHODOLOGY

Prior to conducting fieldwork, SWCA scientists studied records pertaining to all reputed caves in the project area and gathered information related to documented caves in the project vicinity. SWCA has conducted previous environmental surveys in this area related to the existing Leander Road, Southwest Bypass, and US 183. Relevant information sources include:

- Internal SWCA data;
- Unpublished data related to SWCA et al. (2008);
- ESRI® ArcGIS® Online Basemap Map Services;
- U.S. Geological Survey (2019a, 2019b) 7.5-minute quadrangles;
- Geologic maps (Barnes 1974; Collins 1997a, 1997b); and
- Mapped fault lines (Collins 1997a, 1997b).

SWCA staff, including Texas Licensed Professional Geoscientist (PG), a geoscientist-in-training, and karst technicians, conducted field surveys and excavations. The field surveys occurred over the following dates in 2020: June 15, 16, 22, 23, and 25, October 5 and 6; and in 2021: March 30. The pedestrian survey was completed by walking parallel transects spaced approximately 30 to 50 feet apart, as directed by the TCEQ (2004) in the *Instructions to Geologists for Geologic Assessments on the Edwards Aquifer Recharge/Transition Zones* (Rev. 10-01-04). Closer spacing was used where vegetation inhibited clear observation. SWCA scientists carefully examined all potential karst features, including depressions, holes, and animal burrows, for subsurface extent evidence. SWCA used several techniques for this effort, including probing with a digging implement to determine the thickness and consistency of fill material and feeling for air flow, which may indicate the presence of a sub-surface void space. Other techniques included recording notable features and site characteristics, such as vegetation types or semi-circular burrow mounds produced by small mammal activity.

Subsequent to preliminary field surveys, SWCA scientists visited the site on October 6 and November 3, 5, 11, 2020, to hand-excavate and further evaluate features LR-03, LR-05, LR-09, and LR-12.

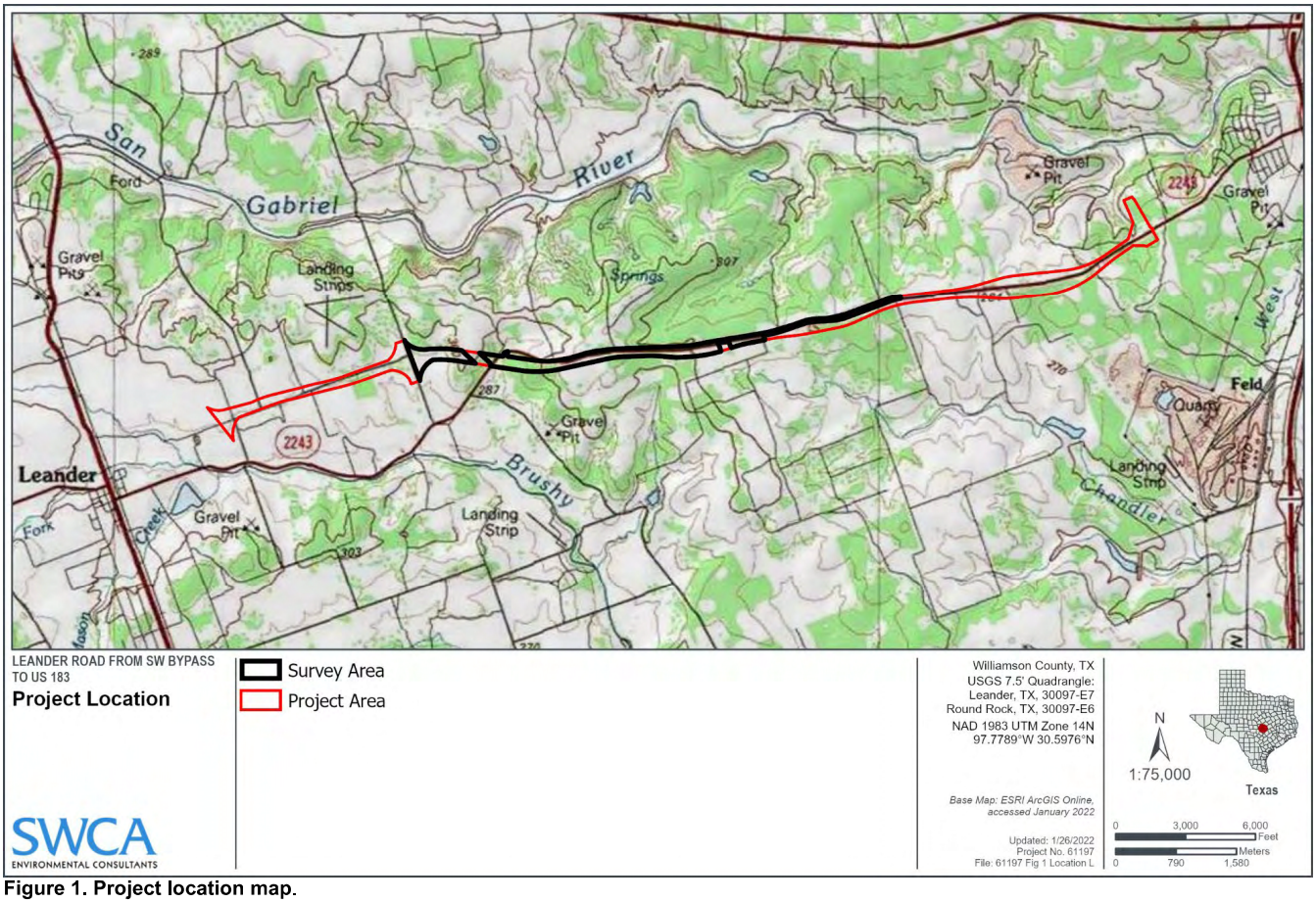

Figure 1. Project location map.

3 RESULTS

3.1 Project and Survey Area Overview

The project area occurs within the northern segment of the Edwards Aquifer (TCEQ 2021). The eastern portion of the project area overlies the EARZ and the western portion overlies the Edwards Aquifer Contributing Zone (TCEQ 2021). The project area appears to intersect a drainage divide where topography generally slopes to the north towards the South Fork San Gabriel River and to the south towards Brushy Creek and tributaries of Brushy Creek. The elevation of the project area ranges from approximately 815 feet above mean sea level (amsl) to 1040 feet amsl.

Much of the project area within the EARZ contains and runs parallel to the existing Leander Road right-of-way (ROW). West of Ronald Reagan Boulevard, the majority of the project area within the EARZ exists primarily as undisturbed land utilized for cattle grazing. The land use within the project area ranges from single-family residential, commercial, agricultural, and industrial.

As mentioned in the introduction, right-of-entry (ROE) was only obtained for portions of the project area. The area where ROE was obtained and surveyed by SWCA is defined as the survey area in this report. **The findings of this geologic assessment only pertain to the survey area**. Figure 2 depicts the parcels where ROE for the project was received as of March 30, 2021.

3.2 Soils

The Natural Resources Conservation Service (2021) identified 10 soil units within the project area (Figure 3). Table 1 provides additional details for these soil units.

Table 1. Soil Units within the Project Area

Soil Unit	Hydric	Hydrologic Soil Group*	Drainage Class	Frequency of Flooding/ Ponding	Depth to Water Table (inches)
CfB: Crawford clay, 1 to 3 percent slopes	No	D	Well Drained	None / None	80+ inches
DnB: Denton Silty clay, 1 to 3 percent slopes	No	D	Well Drained	None / None	80+ inches
DnC: Denton Silty clay, 3 to 5 percent slopes	No	D	Well Drained	None / None	80+ inches
DoC: Doss silty clay, moist, 1 to 5 percent slopes	No	D	Well Drained	None / None	80+ inches
EaD: Eckrant cobbly clay, 1 to 8 percent slopes	No	D	Well Drained	None / None	80+ inches
EeB: Eckrant stony clay, 0 to 3 percent slopes	No	D	Well Drained	None / None	80+ inches
ErE: Eckrant-Rock outcrop association, 1 to 10 percent slopes	No	D	Well Drained	None / None	80+ inches
FaB: Fairlie clay, 1 to 2 percent slopes	No	D	Well Drained	None / None	80+ inches
GsB: Georgetown stony clay loam, 1 to 3 percent slopes	No	D	Well Drained	None / None	80+ inches
PITQ: Pits, quarries, 0 to 45 percent slopes	No	D	Well Drained	None / None	80+ inches

Data Source: Natural Resources Conservation Service (2021).

* Group D – Soils had very slow infiltration rates when thoroughly wetted and exhibit the highest potential for runoff.

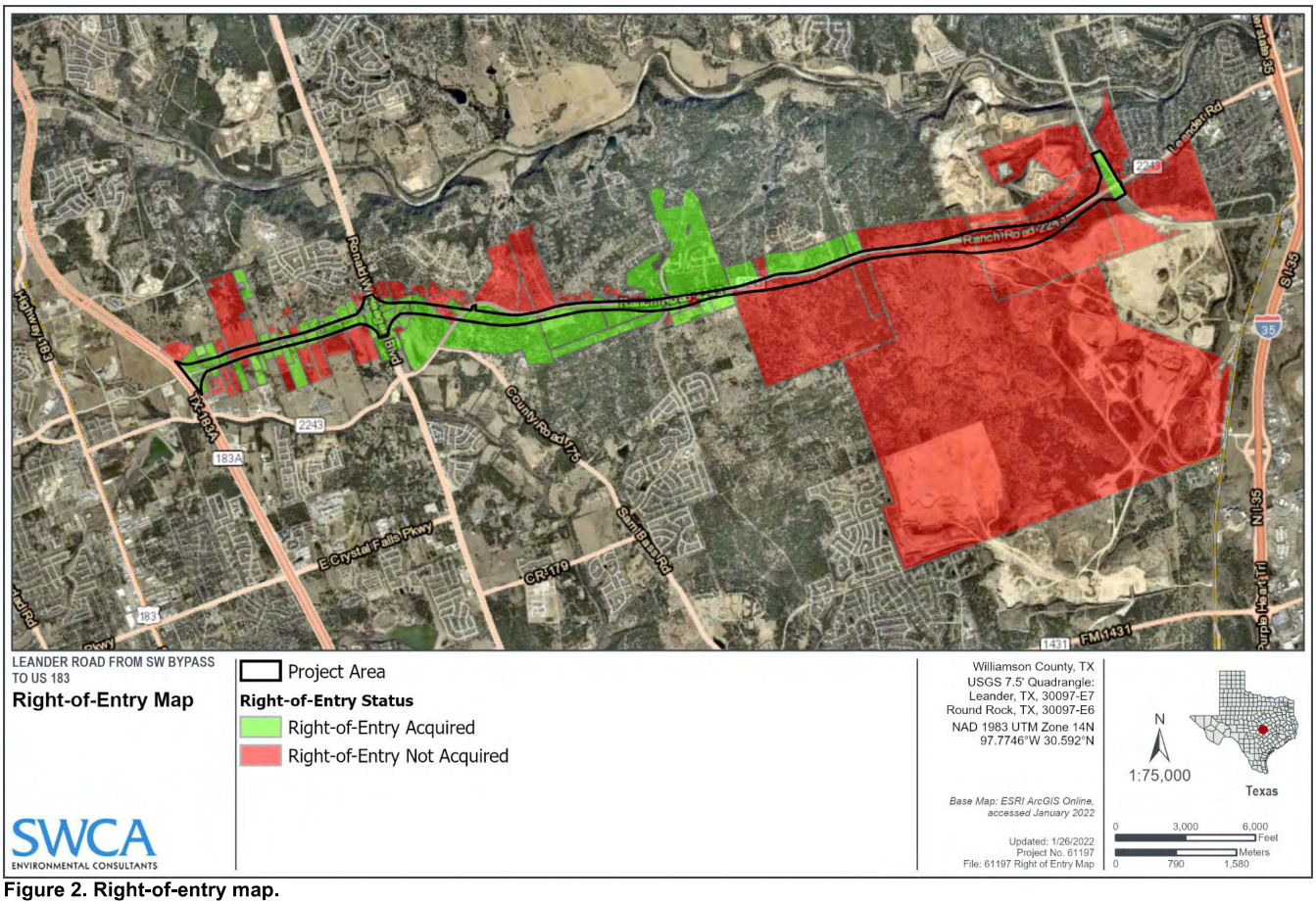

Figure 2. Right-of-entry map.

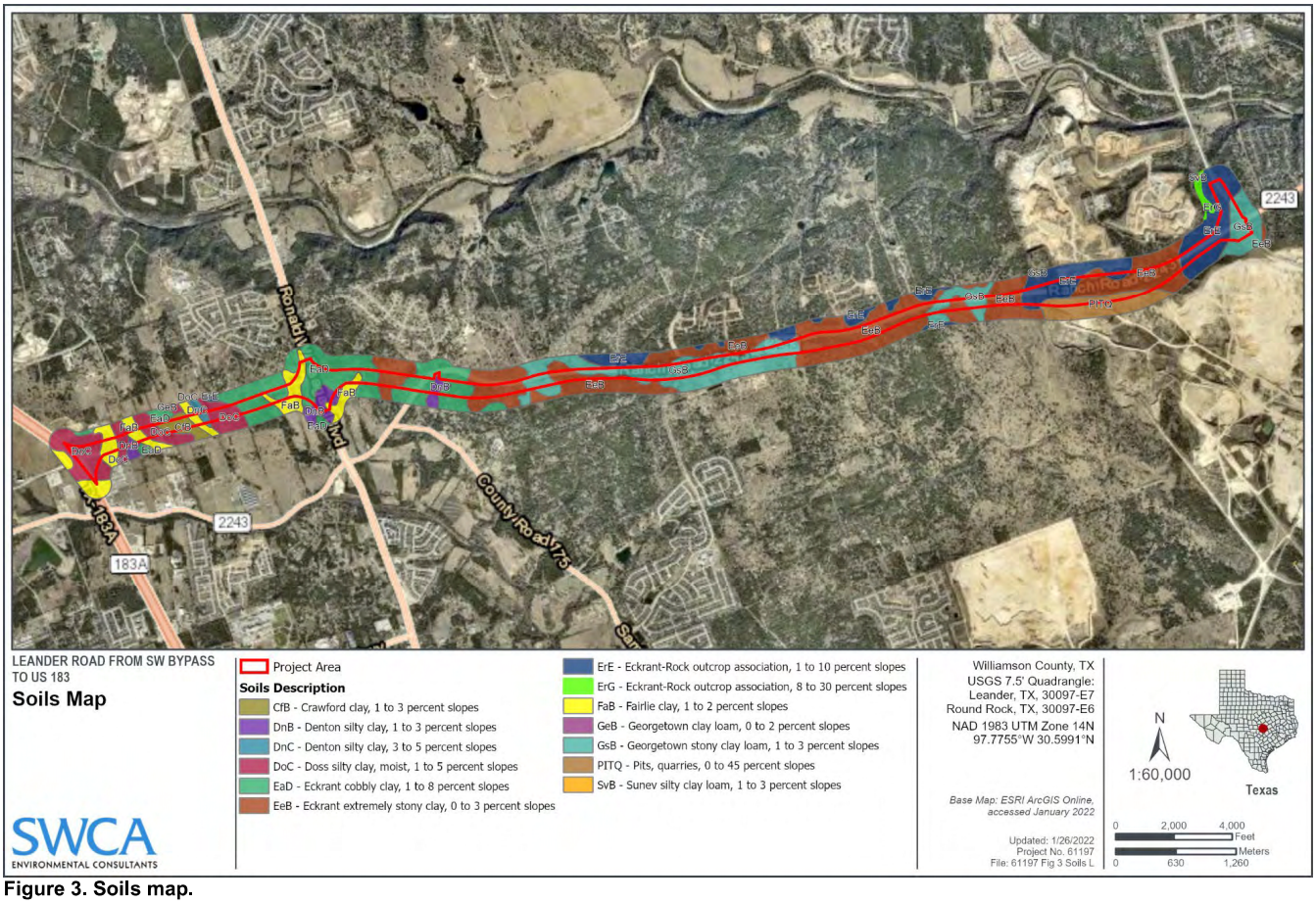

Figure 3. Soils map.

3.3 Geology

The Project Area occurs along the Balcones Fault Zone (BFZ) within the Edwards Aquifer Contributing and Recharge Zones (TCEQ 2021). Structural down-warping occurred with the Gulf of Mexico's ancestral formation during the middle Tertiary. The earth's crust was stretched in response, and the BFZ formed along a zone of weakness, which currently marks the boundary between the Edwards Plateau and the Gulf Coastal Plain in central Texas. The BFZ is characterized by a series of northeast-trending, predominantly normal, nearly vertical, en echelon faults.

No faults are mapped within the project area (Collins 1997a and 1997b); as shown in Figure 4. The regional trend of the mapped faults within the area is approximately 20 degrees; therefore, any geologic features within 15 degrees (5 to 35 degrees) will be awarded an additional 10 points on the geologic assessment table presented in Appendix A, Attachment A.

Collins (1997a and 1997b) indicates the project area is underlain by Cretaceous-age Edwards Limestone (Ked) and Comanche Peak (Kc) and the Keys Valley Marl (Kkv) (Appendix A, Attachment D). SWCA finds Collins' (1997a and 1997b) interpretation of the geology to be generally accurate. The underlying Comanche Peak Formation is mapped on the western portion of the project area. The Stratigraphic Column is included in Appendix A, Attachment B.

Edwards Limestone is described by Collins (1997a and 1997b) as:

> …limestone, dolomitic limestone, and marl, massive to thin beds, chert, and fossiliferous; fossils include rustids. Shallow subtidal-flat cycles. Honeycomb textures, voids in collapse breccias, and cavern systems accounts for most of the Edwards aquifer strata. Thickness is between 100 and 300 ft; thins northward.

Comanche Peak Limestone is described by Barnes (1974) as:

> …fine to very fine grained, fairly hard, nodular, light gray, weathers white, extensively burrowed, burrow fillings slightly coarser and darker, typically crops out in scarp face beneath Edwards Limestone; thickness up to 80 feet, feathers out southward near Williamson-Travis County line.

Keys Valley Marl is described by Collins (1997a and 1997b) as:

> ….Marl, argillaceous limestone, and some limestone, Thickness as much as ~50ft. Walnut formation.

Recharge into the Edwards Aquifer primarily occurs in areas where the Edwards Group and Georgetown Formation are exposed at the surface. Most recharge is from direct infiltration via precipitation and streamflow loss (USGS 1987). Recharge occurs predominantly along secondary porosity features such as faults, fractures, and karst features (caves, solution cavities, sinkholes, etc.). Karst features are commonly formed along joints, fractures, and within bedding plane surfaces in the Edwards Group and Georgetown Formation. Water that recharges the Edwards Aquifer in the vicinity of the project area commonly discharges near the contact between Edwards Limestone and underlying Comanche Peak Formation; however, SWCA staff did not observe seeps or springs during the geologic assessment.

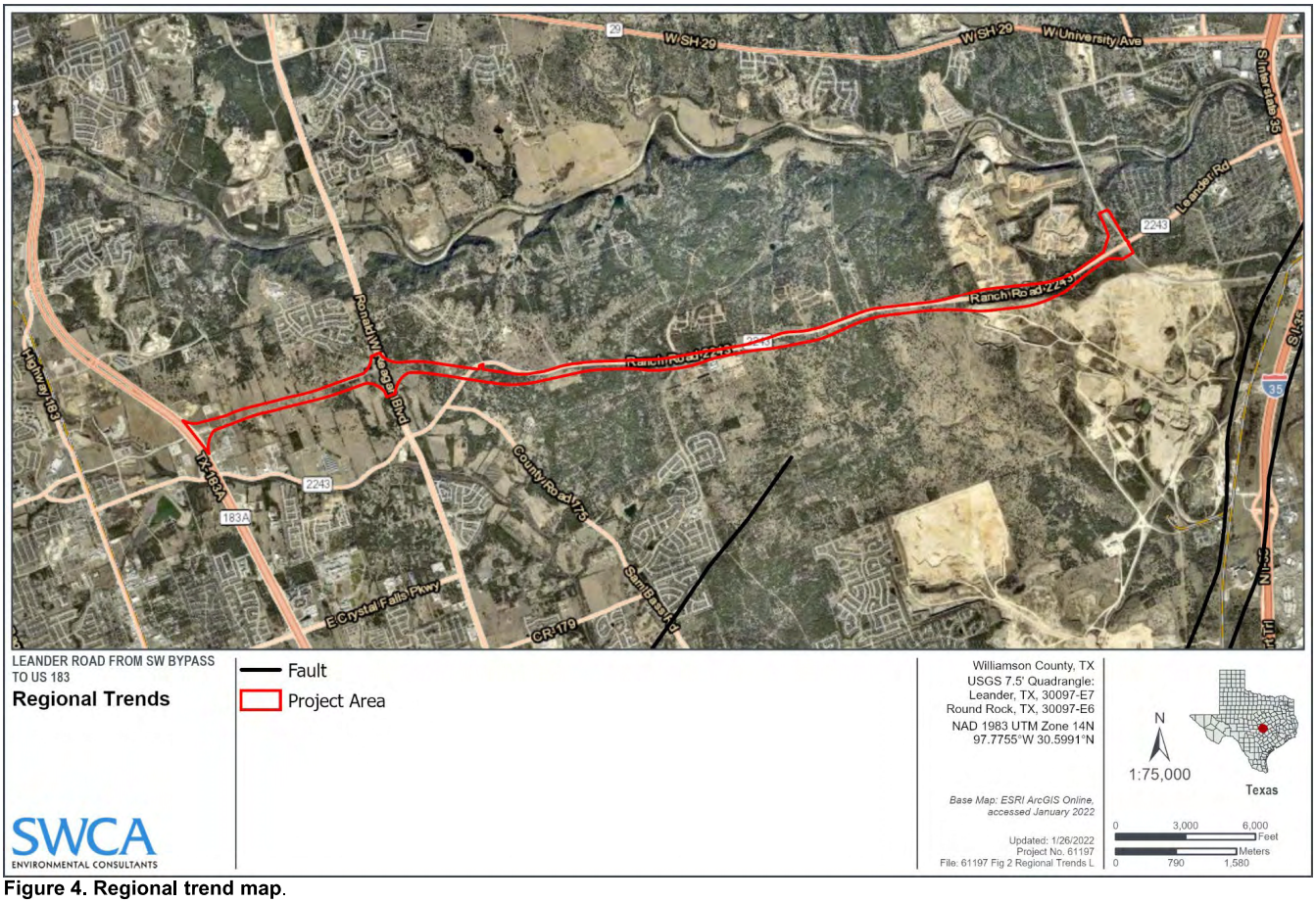

Figure 4. Regional trend map.

3.4 Hydrogeologic Assessment

The overall potential for fluid migration to the Edwards Aquifer within the project area appears relatively high compared to background infiltration rates due to the presence of three sensitive features (three caves). The depth to water in the vicinity of the project area has been measured between 80 and 295 feet below ground surface in nearby monitoring wells (State ID Nos. 5827102 and 5826203) (Texas Water Development Board [TWDB] 2021). No groundwater was observed in the three caves identified in this report.

The gentle contours shown on Appendix A, Attachment D suggest that runoff from rainfall reaching the undisturbed portions of the project area will continue downslope in the form of sheet flow until collected in drainages outside the project area that eventually feed the South Fork San Gabriel River to the north and Brushy Creek to the south.

3.5 Feature Descriptions

SWCA identified 10 geologic features within the project area or 50 feet of the project area. Three of these features are considered sensitive (three caves). Geologic features identified within the project area are described below and a photographic log for these features is provided as Appendix B.

LR-01 Feature LR-01 is classified as an "other natural bedrock feature" and is mapped within the Comanche Peak Limestone. The feature is 3 feet long, 2 feet wide, and 1 foot deep. LR-01 is positioned on a gently sloping hillside and consists of a small depression within limestone boulders suspended in soil. The depression is believed to be a result of a decomposing tree stump (*Juniperus asheir*). The infill material consists of loose leaf litter and organic-rich soil overlying compacted clay-rich sediment. The infiltration rate is low (5 points) as a result of the clay lining. Due to the low infiltration rate and lack of connection to the subsurface, this feature is not considered to be a sensitive recharge feature.

LR-02 Feature LR-02 is a closed depression on a hillside mapped within the Comanche Peak Limestone. The feature is 6 feet long, 5 feet wide, and 2.5 feet deep. LR-02 was excavated by hand to reveal a shallow bedding under limestone float rock. The infill material overlying solid bedrock consisted of weathered limestone cobbles within a matrix of dark-colored, moderately compacted clay and organic-rich sediment. The infiltration rate is considered to be low (10 points) as a result of the clay-rich sediment and bedrock lining. Due to the low infiltration rate and lack of portals or mesocavernous voids to the subsurface, this feature is not considered to be a sensitive recharge feature.

LR-03 Feature LR-03 is a sinkhole mapped in the Edwards Limestone and is positioned on a gently sloping hillside. The feature is 3 feet long, 2.5 feet wide, and 6 feet deep. The sinkhole was excavated by hand to further assess the feature's sensitivity. Approximately 3 feet of infill material was removed from the base of the feature to reveal a hardpacked clay floor along with several large roots (*Quercus fusiformis*) and a potential portal or lead infilled with lesser compacted clay-rich sediments. The infill within the potential lead was removed until a change of soil color from dark brown to gray was encountered. It is apparent that the potential lead was influenced by the live oak root development. The infiltration rate is considered to be low (15 points) as a result of the clay-rich sediment and bedrock lining. Due to the low infiltration rate and lack of portals or mesocavernous voids to the subsurface, this feature is not considered to be a sensitive recharge feature.

LR-04 Feature LR-04 is a closed depression on a hillside mapped within the Edwards Limestone. The feature is 8 feet in diameter and has a depth of 2 feet. LR-04 has a catchment area of less than 1.6 acres and no evidence of infiltration was observed. The infill material within the depression consisted of vegetation, leaf litter, and sticks overlying compacted clay-rich sediment. The infiltration rate is considered to be low (5 points) as a result of the clay-rich sediment. Due to the low infiltration rate and lack of portals or mesocavernous voids to the subsurface, this feature is not considered to be a sensitive recharge feature.

LR-05 Feature LR-05, also known as Lozano's Mine, is a cave mapped in the Edwards Limestone. On December 8, 2020, an SWCA PG and karst biologist conducted a survey of the cave. The cave has two open cave entrances, with the northernmost entrance located approximately 100 feet south of the project area. The northern cave entrance is approximately 8 feet by 5 feet and the southern cave entrance is approximately 6 feet by 5 feet. Lozano's Mine has a subsurface footprint that is approximately 62 feet by 31 feet and reaches a depth of approximately 18 feet below the surface (Figure 5). Signs of previous excavations were noted by the presence of large piles of soil and fragmented limestone adjacent (upslope) of the feature. These piles were fully vegetated with shrubs and canopy forming trees, which indicate that the excavation occurred a significant time ago. The northern portion of the cave appears to be unaltered by the previous excavation efforts. The majority of the northern portion was clean-washed limestone. In this portion of the cave, multiple speleothems, rim pools, and other secondary calcite deposits were observed. The southern portion of the cave appeared to have endured mechanical alteration, evidenced by angular limestone and chippings. The floor below both entrances and throughout the southern portion consisted of significant amounts of leaf litter overlying soft organic-rich soils. The catchment area of this feature appears to be less than 1.6 acres. The upslope gradient of the feature is capable of contributing sheet flow towards the feature. This gradient is gentle and underlies a full canopy of Ashe juniper and live oak.

This cave meets the TCEQ's definition of a sensitive feature and, therefore, needs a protective buffer. SWCA recommends that the feature receives a buffer that extends from the cave footprint and extends 200 feet upslope. Since this feature is located outside of the project area, only the portion of the buffer that intersects the project area is depicted on the geologic map in Appendix A, Attachment D.

LR-09 Feature LR-09 is a non-karst closed depression mapped in the Edwards Limestone. The feature is 3 feet long, 1 foot wide, and 2.75 feet deep. LR-09 is positioned on a hillside with a catchment area of less than 1.6 acres. The trend of the feature is 70°, which is not within 15° of the regional faulting. The feature was excavated with hand tools to better understand the feature's origin, infill materials, and infill rate. Infill materials consisted of organics (leaf litter, twigs, and other breakdown), roots, limestone cobbles, and moderately compacted clay-rich sediment. During excavation it was revealed that several large limestone boulders (float) were displaced by roots (live oak). The infiltration rate is considered to be low due to the compacted clay-rich sediment along the base of the feature. Due to the low infiltration rate and non-karst origin, this feature is not considered to be a sensitive feature.

LR-10 Feature LR-10 is a manmade feature in bedrock, mapped in the Edwards Limestone, that may have once served as a water well. The feature appears to be a 4-inch steel pipe protruding from bedrock approximately 1 foot into the air and at least 6 feet into the subsurface. The TWDB public water well viewer does not show any registered water wells within the project area (TWDB 2021). LR-10 is not considered to be a sensitive recharge feature because the steel casing is surrounded by an intact concrete foundation and the top of the casing is above

surface grade. This feature does not warrant protective buffering but should be brought to the attention of the project engineer.

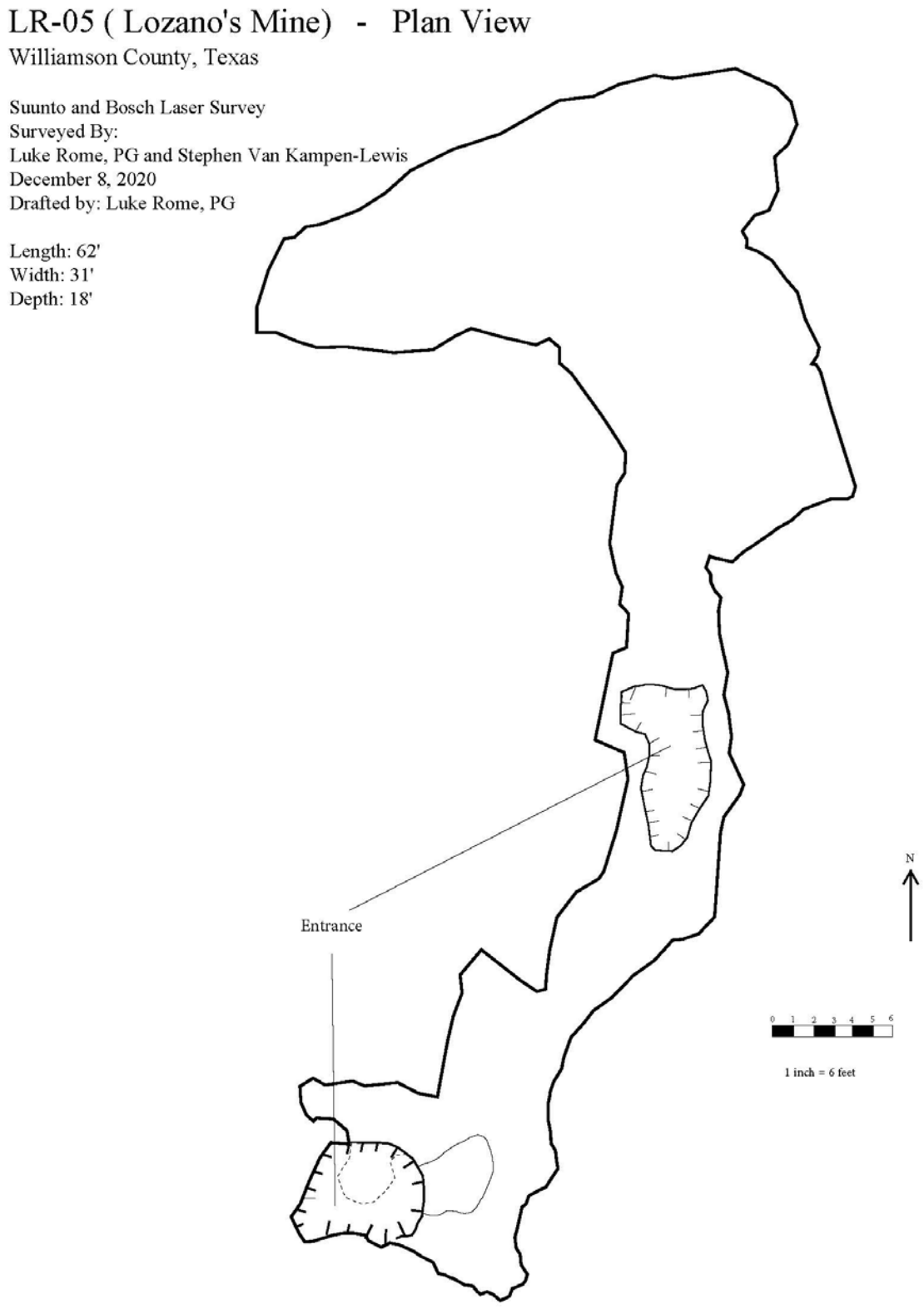

Figure 5. Lozano's Mine (LR-05) Cave Footprint

LR-11 Feature LR-11 is a cave at the base of a sinkhole mapped within the Edwards Limestone. This cave is thought to be Tinnel Cave. On October 6, 2020, an SWCA PG and karst biologist surveyed the cave to measure the subsurface footprint (Figure 6). The sinkhole is approximately 12 feet by 11 feet and the cave entrance is approximately 8 feet by 4 feet. The feature's footprint is approximately 25 feet long, 12 feet wide, and 10 feet deep. The feature is positioned on a hilltop that is relatively flat. Infill materials within the cave consist of small amounts of organic debris, fines (silt), and secondary calcite deposits. The infiltration rate of the feature is considered to be high (30 points). Since the area surrounding the feature is a flat ridgeline the catchment area is small. It appears that infiltration into the feature would only occur as a result of direct precipitation over the feature entrance and footprint.

Feature LR-11 meets the TCEQ's definition of a sensitive feature and, therefore, needs a protective buffer. SWCA recommends that the feature receives a buffer that extends from the cave footprint and extends 75 feet in all directions. The cave footprint and recommended buffer of LR-11 is depicted on the Geologic Map (Appendix A, Attachment D).

LR-12 Feature LR-12 is a sinkhole mapped within the Edwards limestone. The feature is positioned on a hillside with a catchment area of less than 1.6 acres. Evidence that this feature had been previously excavated was observed in the form of soil mounding and stacked rocks around the rim of the sinkhole. The feature is 15 feet long, 12 feet wide, and 3 feet deep. SWCA conducted additional hand excavations to better evaluate subsurface and infill conditions. The additional excavations revealed a shallow bedding plane under limestone float rock that extended approximately 3 feet to the west before terminating. The infill material overlying solid bedrock consisted of weathered limestone cobbles within a matrix of dark-colored, moderately compacted clay and organic-rich sediment. The infiltration rate is considered to be low (12 points) as a result of the clay-rich sediment and bedrock lining. Due to the low infiltration rate and lack of portals or mesocavernous voids to the subsurface, this feature is not considered to be a sensitive recharge feature.

LR-15 Feature LR-15 is a cave within a small sinkhole that is mapped in the Edwards Limestone, approximately 25 feet north of the project area. On October 6, 2020, an SWCA PG and karst biologist surveyed the cave to measure the subsurface footprint (Figure 7). This feature is just large enough to fit an average-sized human. The rim of the sinkhole is approximately 5 feet in diameter. The total depth of the feature from the top of the sinkhole rim is also 5 feet. The dimensions of the cave within the sinkhole are approximately 3 feet by 3 feet by 4 feet. The cave is cylindrical in shape and the walls are clean washed, with the exception of green moss and algal growth. The floor of the feature is mostly compacted clay and organic-rich sediments. Some potential mesocaverns were observed along the base of the cave where the floor and walls meet; therefore, the infiltration rate is considered to be moderate (20 points). The original catchment area of this feature has been reduced due to the presence of a maintained utility easement approximately 25 feet upslope (south) and the maintained ROW of the existing Leander Road approximately 60 feet upslope (south) of the feature.

Feature LR-15 is considered a sensitive recharge feature due to its classification as a cave and its infiltration rate. This feature warrants a protective buffer because of its sensitivity. SWCA recommends a radial buffer that extends 75 feet from the feature, within the project area. The cave footprint and recommended buffer of LR-15 is depicted on the Geologic Map (Appendix A, Attachment D).

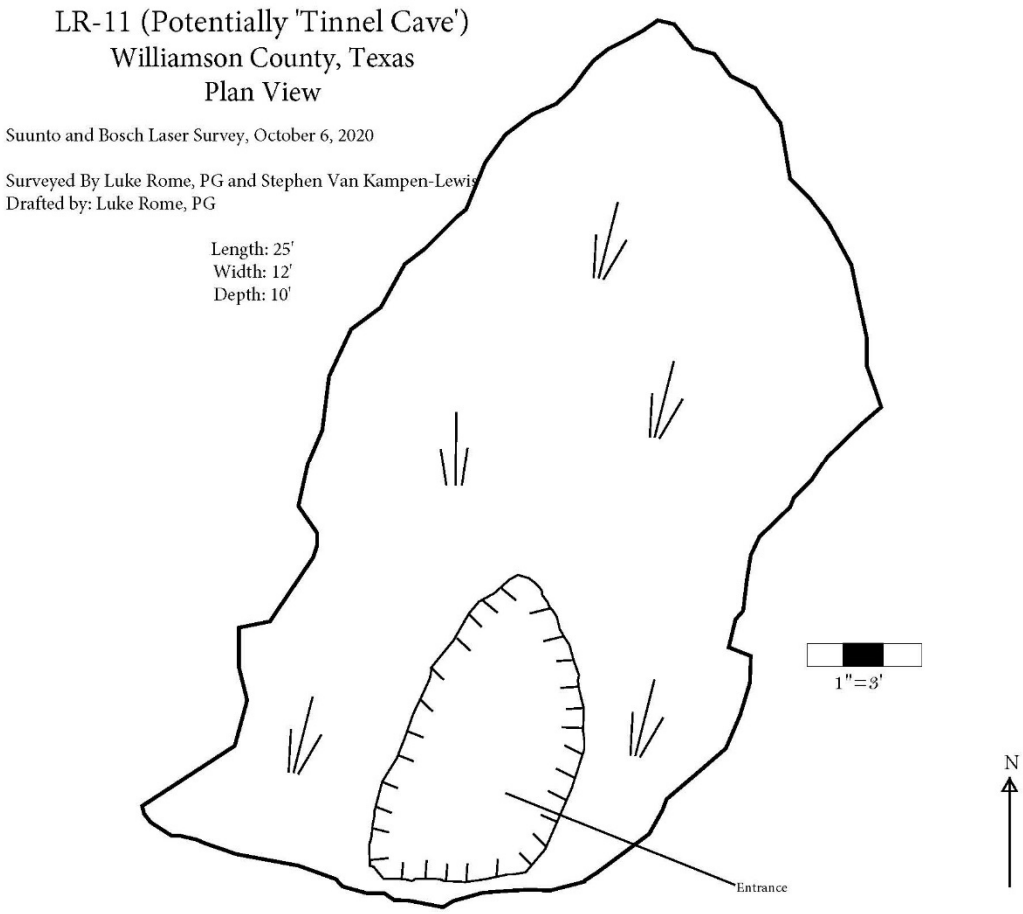

Figure 6. Tinnel Cave (LR-11) Footprint

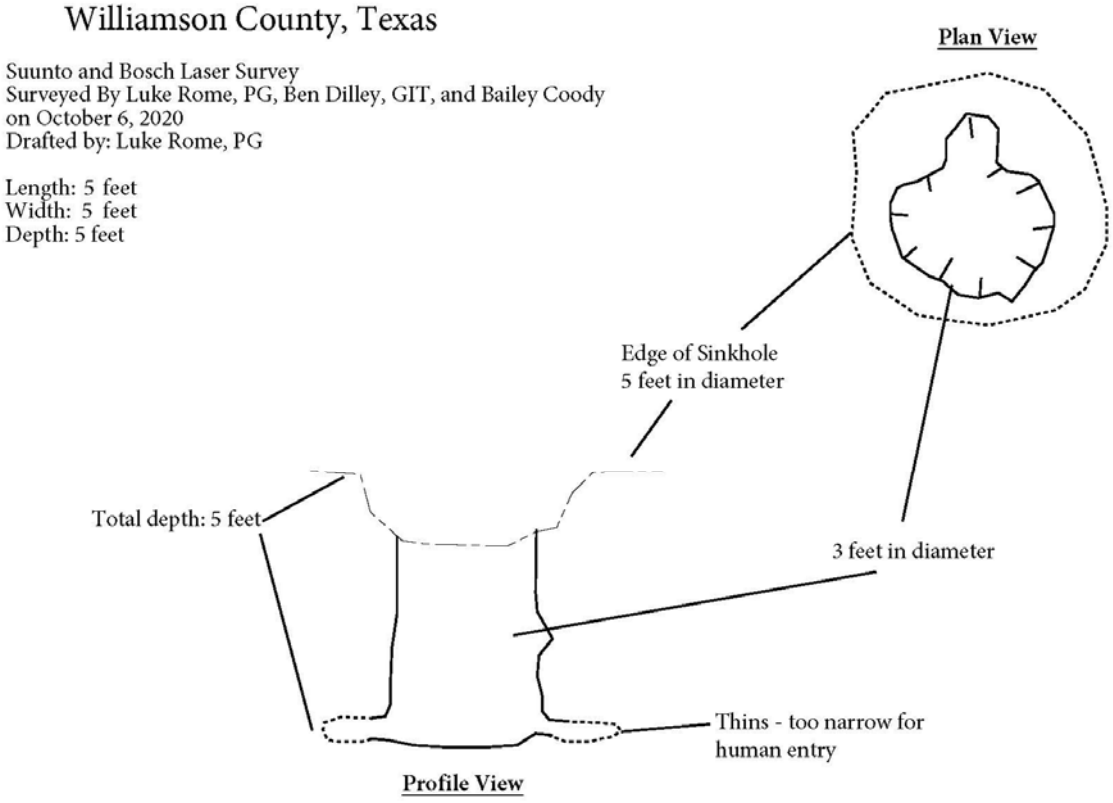

Figure 7. LR-15 Cave Footprint

4 CONCLUSION

SWCA identified three caves (LR-05, LR-11, and LR-15) ranked as sensitive features within the survey area. SWCA recommends implementing natural protective buffers for all three caves as described in the previous section to comply with TCEQ Edwards Aquifer rules.

5 LITERATURE CITED

Barnes, V.E. 1974. Geologic Atlas of Texas, Austin Sheet. University of Texas at Austin, Bureau of Economic Geology. Scale 1:250,000.

Collins, E.W. 1997a. Geologic map of the Round Rock quadrangle, Texas: University of Texas at Austin, Bureau of Economic Geology, Open-File Map OFM0013D, scale 1:24,000.

———. 1997b. Geologic map of the Georgetown quadrangle, Texas: University of Texas at Austin, Bureau of Economic Geology, Open-File Map, scale 1:24,000.

Natural Resources Conservation Service (NRCS). 2021. U.S. Department of Agriculture. Soil Survey Geographic (SSURGO) Database. Available at: http://websoilsurvey.sc.egov.usda.gov/App/HomePage.htm. Accessed June 2021.

SWCA Environmental Consultants (SWCA), Smith, Robertson, Elliott, Glen, Klein, & Bell, LLP, Prime Strategies, Inc., Texas Perspectives, Inc. 2008. *Williamson County Regional Habitat Conservation Plan.* Prepared for Williamson County Conservation Foundation and The Honorable Lisa Birkman.

Texas Commission on Environmental Quality (TCEQ). 2004. *Instructions to Geologists for Geologic Assessments on the Edwards Aquifer Recharge/Transition Zones* (Rev. 10-01-04). Austin, Texas. 34 pp.

———. 2021. Edwards Aquifer Viewer v4.1. Available at: https://www.tceq.texas.gov/gis/edwards-viewer.html. Accessed June 2021.

Texas Water Development Board (TWDB). 2021 Groundwater data viewer. Available online at: https://www2.twdb.texas.gov/apps/WaterDataInteractive/GroundwaterDataViewer/?map=sdr Accessed June 2021.

U.S. Geological Survey (USGS). 1987 Hydrologic and geologic data for the Edwards Aquifer Recharge Zone near Georgetown, Williamson County, Texas, Open File report 87-691

———. 2019a. USGS 1:24000-scale Quadrangle for Round Rock, Texas, 2019: U.S. Geological Survey.

———. 2019b. USGS U.S. Topographic 7.5-minute map for Leander, Texas, 2019: USGS - National Geospatial Technical Operations Center (NGTOC).

APPENDIX A

TEXAS COMMISSION ON ENVIRONMENTAL QUALITY (TCEQ) FORMS

Geologic Assessment

Texas Commission on Environmental Quality

For Regulated Activities on The Edwards Aquifer Recharge/transition Zones and Relating to 30 TAC §213.5(b)(3), Effective June 1, 1999

To ensure that the application is administratively complete, confirm that all fields in the form are complete, verify that all requested information is provided, consistently reference the same site and contact person in all forms in the application, and ensure forms are signed by the appropriate party.

Note: Including all the information requested in the form and attachments contributes to more streamlined technical reviews.

Signature

To the best of my knowledge, the responses to this form accurately reflect all information requested concerning the proposed regulated activities and methods to protect the Edwards Aquifer. My signature certifies that I am qualified as a geologist as defined by 30 TAC Chapter 213.

Print Name of Geologist: Luke Rome, P.G. Telephone: 737.236.4480

Date: January 27, 2021 Fax: 512-476-0893

Representing: SWCA Environmental Consultants; TBPG Firm Registration No. 50159 (Name of Company and TBPG or TBPE registration number)

Signature of Geologist:

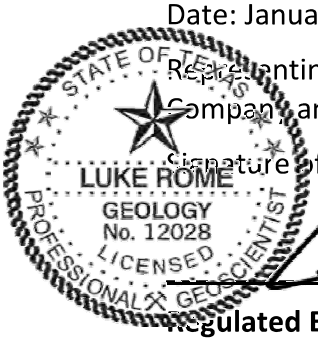

Regulated Entity Name: Leander Road Project — Southwest Bypass to US 183

Project Information

1. Date(s) Geologic Assessment was performed: June 15, 16, 22, 23, & 25, 2020, October 5 & 6, 2020, December 8, 2020, and March 30, 2021
2. Type of Project:

   ☒ WPAP ☐ AST
   ☐ SCS ☐ UST
3. Location of Project:

   ☒ Recharge Zone
   ☐ Transition Zone
   ☐ Contributing Zone within the Transition Zone

4. ☒ **Attachment A - Geologic Assessment Table**. Completed Geologic Assessment Table (Form TCEQ-0585-Table) is attached.

5. ☒ Soil cover on the project site is summarized in the table below and uses the SCS Hydrologic Soil Groups* (Urban Hydrology for Small Watersheds, Technical Release No. 55, Appendix A, Soil Conservation Service, 1986). If there is more than one soil type on the project site, show each soil type on the site Geologic Map or a separate soils map.

Table 1 - Soil Units, Infiltration Characteristics and Thickness

Soil Name	Group*	Thickness(feet)
see section	3.2	

** Soil Group Definitions (Abbreviated)*

A. Soils having a high infiltration rate when thoroughly wetted.
B. Soils having a moderate infiltration rate when thoroughly wetted.
C. Soils having a slow infiltration rate when thoroughly wetted.
D. Soils having a very slow infiltration rate when thoroughly wetted.

6. ☒ **Attachment B – Stratigraphic Column**. A stratigraphic column showing formations, members, and thicknesses is attached. The outcropping unit, if present, should be at the top of the stratigraphic column. Otherwise, the uppermost unit should be at the top of the stratigraphic column.

7. ☒ **Attachment C – Site Geology**. A narrative description of the site specific geology including any features identified in the Geologic Assessment Table, a discussion of the potential for fluid movement to the Edwards Aquifer, stratigraphy, structure(s), and karst characteristics is attached.

8. ☒ **Attachment D – Site Geologic Map(s)**. The Site Geologic Map must be the same scale as the applicant's Site Plan. The minimum scale is 1": 400'

   Applicant's Site Plan Scale: 1" = 400'
   Site Geologic Map Scale: 1" = 400'
   Site Soils Map Scale (if more than 1 soil type): 1" = 2000'

9. Method of collecting positional data:

   ☒ Global Positioning System (GPS) technology.
   ☐ Other method(s). Please describe method of data collection: _____

10. ☒ The project site and boundaries are clearly shown and labeled on the Site Geologic Map.

11. ☒ Surface geologic units are shown and labeled on the Site Geologic Map.

12. ☒ Geologic or manmade features were discovered on the project site during the field investigation. They are shown and labeled on the Site Geologic Map and are described in the attached Geologic Assessment Table.

    ☐ Geologic or manmade features were not discovered on the project site during the field investigation.

13. ☒ The Recharge Zone boundary is shown and labeled, if appropriate.

14. All known wells (test holes, water, oil, unplugged, capped and/or abandoned, etc.): If applicable, the information must agree with Item No. 20 of the WPAP Application Section.

    ☒ There are 1 (#) wells present on the project site and the locations are shown and labeled. (Check all of the following that apply.)
    - ☐ The wells are not in use and have been properly abandoned.
    - ☒ The wells are not in use and will be properly abandoned.
    - ☐ The wells are in use and comply with 16 TAC Chapter 76.

    ☐ There are no wells or test holes of any kind known to exist on the project site.

Administrative Information

15. ☒ Submit one (1) original and one (1) copy of the application, plus additional copies as needed for each affected incorporated city, groundwater conservation district, and county in which the project will be located. The TCEQ will distribute the additional copies to these jurisdictions. The copies must be submitted to the appropriate regional office.

Attachment A

Geologic Assessment Table

GEOLOGIC ASSESSMENT TABLE

PROJECT NAME: Leander Road - SW Bypass to US 183

LOCATION			FEATURE CHARACTERISTICS												EVALUATION			PHYSICAL SETTING		
1A	1B *	1C*	2A	2B	3	4			5	5A	6	7	8A	8B	9	10		11		12
FEATURE ID	LATITUDE	LONGITUDE	FEATURE TYPE	POINTS	FORMATION	DIMENSIONS (FEET)			TREND (DEGREES)	DIP/DIP DIRECTION	DENSITY (NO/FT)	APERTURE (FEET)	INFILL	RELATIVE INFILTRATION RATE	TOTAL	SENSITIVITY		CATCHMENT AREA (ACRES)		TOPOGRAPHY
						X	Y	Z		10						<40	≥40	<1.6	≥1.6	
LR-01	30.593176	-97.796275	O	5	Ked	3	2	1	-	0	-		O, F	5	10	X		X		Hillside
LR-02	30.593096	-97.796536	CD	5	Ked	6	5	2.5	68	0	-	-	O, C, F	10	15	X		X		Hillside
LR-03	30.593946	-97.793168	SH	20	Ked	3	2.5	6	-	0	-	-	V, O, C, F	15	35	X		X		Hillside
LR-04	30.594126	-97.79216	CD	5	Ked	8	8	2	-	0	-	-	V, O, F	5	10	X		X		Hillside
LR-05	**30.594181**	**-97.78503**	**C**	**30**	**Ked**	**62**	**31**	**18**	**10**	**0**			**V, C, FS**	**35**	**65**		**X**	X		Hillside
LR-09	30.595193	-97.77726	CD	20	Ked	3	1	2.75	70	0	-	-	O, C, F	10	15	X		X		Hillside
LR-10	30.595112	-97.773822	MB	30	Ked	0.25	0.25	-	-	0	-	-	N	5	35	X		X		Hillside
LR-11	**30.596196**	**-97.768159**	**C**	**30**	**Ked**	**25**	**12**	**10**	**-**	**0**	**-**	**-**	**C, O, Fs**	**35**	**65**		**X**	X		Hilltop
LR-12	30.596067	-97.773816	SH	20	Ked	15	12	3	-	0	-	-	C, O, F	12	32	X		X		Hillside
LR-15	**30.595944**	**-97.774954**	**C**	**30**	**Ked**	**5**	**5**	**5**	**-**	**0**	**-**	**-**	**C, O, F**	**20**	**50**		**X**	X		Hillside

* DATUM: Geographic Latitude Longitude Decimal Degrees NAD83

2A TYPE	TYPE	2B POINTS
C	Cave	30
SC	Solution cavity	20
SF	Solution-enlarged fracture(s)	20
F	Fault	20
O	Other natural bedrock features	5
MB	Manmade feature in bedrock	30
SW	Swallow hole	30
SH	Sinkhole	20
CD	Non-karst closed depression	5
Z	Zone, clustered or aligned features	30

8A INFILLING	
N	None, exposed bedrock
C	Coarse - cobbles, breakdown, sand, gravel
O	Loose or soft mud or soil, organics, leaves, sticks, dark colors
F	Fines, compacted clay-rich sediment, soil profile, gray or red colors
V	Vegetation. Give details in narrative description
FS	Flowstone, cements, cave deposits
X	Other materials

12 TOPOGRAPHY
Cliff, Hilltop, Hillside, Drainage, Floodplain, Streambed

I have read, I understood, and I have followed the Texas Commission on Environmental Quality's Instructions to Geologists. The information presented here complies with that document and is a true representation of the conditions observed in the field.

My signature certifies that I am qualified as a geologist as defined by 30 TAC Chapter 213.

Date 01/27/2022

Sheet 1 of 1

TCEQ-0585-Table (Rev. 10-01-04)

Attachment B

Stratigraphic Column

Stratigraphic Column

Upper Cretaceous	Upper Confining Units	Navarro and Taylor Groups, undivided; 600 feet thick
		Austin Group; 325–420 feet thick
		Eagle Ford Group; 25–65 feet thick
		Buda Limestone; 40–50 feet thick
		Del Rio Clay; 40–70 feet thick
Lower Cretaceous	Edwards Aquifer	Georgetown Formation; 30–80 feet thick
		Edwards Limestone; Up to 200 feet thick
		Comanche Peak Formation; 80 feet thick
	Lower Confining Units	Walnut Formation; Up to 120 feet thick
		Upper member of Glen Rose Limestone; 500 feet thick

Note: The shaded area represents the lithology that outcrops in the project area.

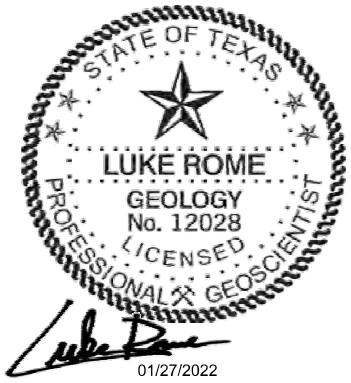

Attachment C

Narrative Description of Site Geology

REFER TO SECTION 3.3 OF THIS REPORT FOR GEOLOGIC NARRATIVE DESCRIPTION.

Attachment D

Site Geologic Map

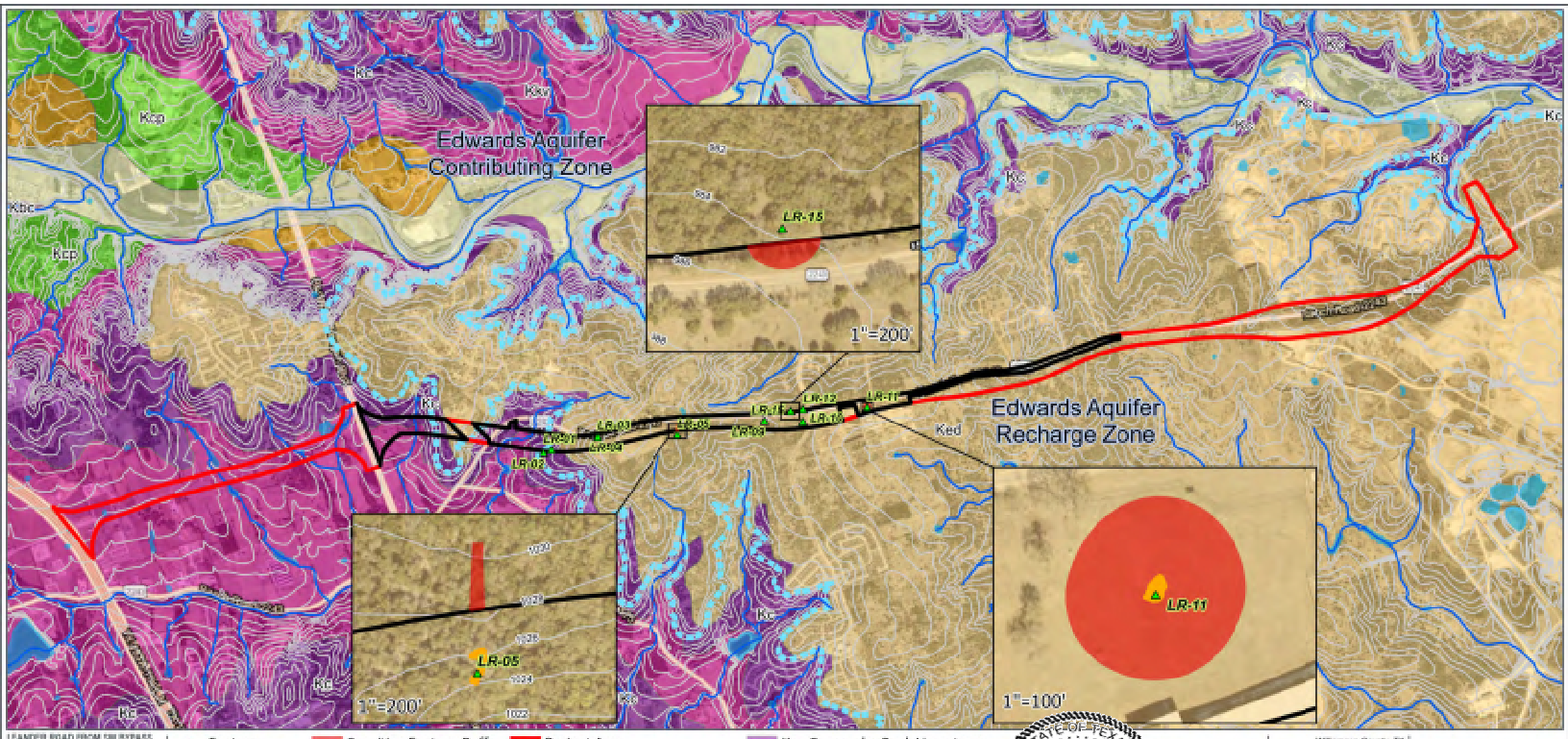

LEANDER ROAD FROM SH BYPASS TO US 183

Geologic Assessment

- Feature
- Contour Line
- NHD Flowline
- Cave Footprint
- Sensitive Feature Buffer
- NHD Waterbody
- Aquifer Boundary
- Survey Area
- Project Area

Geologic Unit

- Qt - Fluviatile terrace deposits
- Kbc - Bee Cave Marl
- Kc - Comanche Peak Limestone
- Kcp - Cedar Park
- Ked - Edwards Limestone
- Kkv - Keys Valley Marl
- Qal - Alluvium

STATE OF TEXAS
LUKE ROME
GEOLOGY
No. 12028
LICENSED
PROFESSIONAL GEOSCIENTIST

01/27/2022

Williamson County, TX
USGS 7.5' Quadrangle
Leander, TX, 30097-E7
Round Rock, TX, 30097-E6
NAD 1983 UTM Zone 14N

Base Map: ESRI ArcGIS Online, accessed January 2022

Updated: 1/28/2022
Project No. 61187

N

1:35,000

0 1,000 2,000 Feet

0 250 500 Meters

SWCA
ENVIRONMENTAL CONSULTANTS

APPENDIX B

PHOTOGRAPHIC LOG

Photo 1. View of LR-01.

Photo 2. View of LR-01.

Photo 3. View of LR-02 post excavation (facing north).

Photo 4. Photo of LR-03 prior to excavation.

Photo 5. View of LR-03 after excavation (facing west).

Photo 6. View of LR-04.

Photo 7. View of south entrance of LR-05 .

Photo 8. View of LR-05 (south entrance). Top of photo is to the west.

Photo 9. View of LR-09.

Photo 10. View of LR-10 facing east.

Photo 11. View of LR-11, view facing north.

Photo 12. Interior view of LR-11 (facing south).

Photo 13. View of LR-12 facing north.

Photo 14. Interior view of LR-15 (top of the phot is to the southwest).

© 2024

DIST.	SECT	JOB	HIGHWAY
0914	05	222	RM 2243
DIST.	COUNTY		SHEET NO.
AUS	WILLIAMSON		1

WILLIAMSON COUNTY

PLANS OF PROPOSED
COUNTY ROADWAY IMPROVEMENT
RM 2243 PHASE 1A
PRECINCT NUMBER 2

RM 2243
DESIGN SPEED: 45 MPH (BEGIN PROJECT TO STA 592+45.93)
60 MPH (STA 592+45.93 TO END PROJECT)
ADT = 14,990 (YR 2020)
PROJECTED ADT = 44,600 (YR 2040)
ROAD CLASSIFICATION = SUBURBAN ARTERIAL

NET LENGTH OF ROADWAY = 17,993.58 FT (3.408 MILES)
NET LENGTH OF BRIDGE = 000.00 FT (0.000 MILES)
NET LENGTH OF PROJECT = 17,993.58 FT (3.408 MILES)

FEDERAL AID PROJECT NUMBER DMO 2025(202)
CSJ: 0914-05-222
LIMITS: FROM 183A TO RM 2243

FOR THE CONSTRUCTION OF ROADWAY
CONSISTING OF GRADING, BASE, HMAC SURFACING,
EROSION CONTROL, AND DRAINAGE STRUCTURES

END PROJECT
STA 680+20.00
X=3099196.25
Y=10190716.03

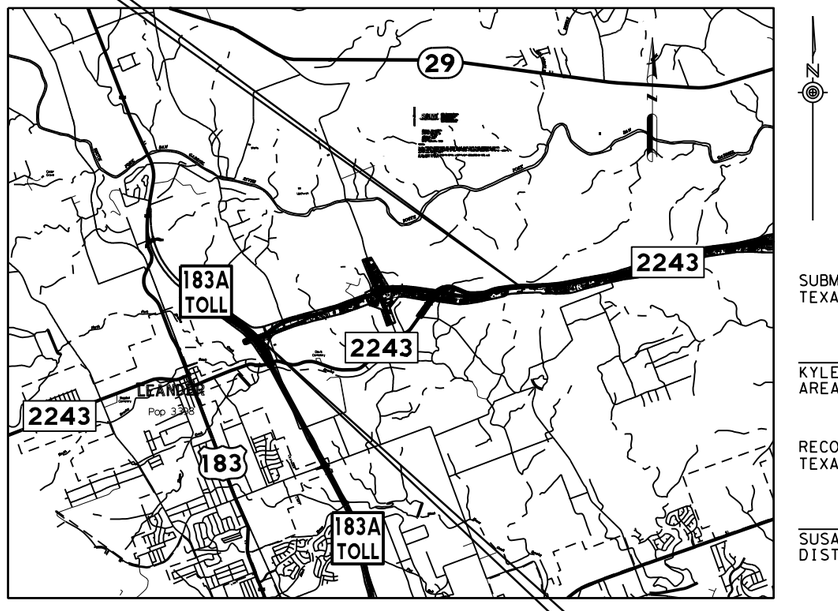

VICINITY MAP
NOT TO SCALE

BEGIN PROJECT
STA 503+62.58
X=3082177.36
Y=10187611.80

REGISTERED ACCESSIBILITY SPECIALIST (RAS) INSPECTION REQUIRED
TDLR NO: TABS2025011607

REQUIRED SIGNS SHALL BE PLACED IN ACCORDANCE WITH STANDARD SHEETS BC(1)-21 THRU BC(12)-21 AND THE "TEXAS MANUAL ON UNIFORM TRAFFIC CONTROL DEVICES.

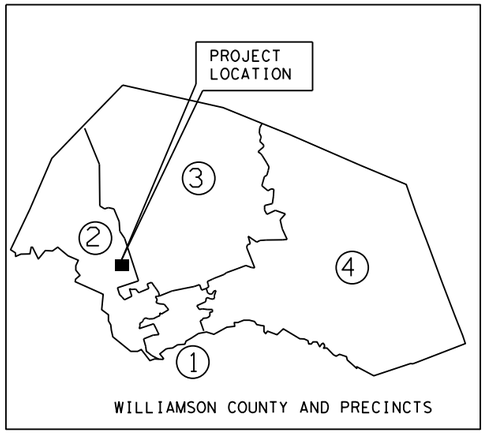

WILLIAMSON COUNTY AND PRECINCTS

SPECIFICATIONS ADOPTED BY THE TEXAS DEPARTMENT OF TRANSPORTATION ON SEPTEMBER 1, 2024 AND SPECIFICATION ITEMS LISTED AND DATED AS FOLLOWS, SHALL GOVERN ON THIS PROJECT: REQUIRED CONTRACT PROVISIONS FOR ALL FEDERAL-AID CONSTRUCTION CONTRACTS (FORM FHWA 1273, OCTOBER 23, 2023).

EXCEPTIONS: NONE
EQUATIONS: NONE
RAILROAD CROSSINGS: NONE
WATERSHED: SAN GABRIEL
AREA OF DISTURBANCE: 50.10 ACRES

WILCO TEXAS
2024 Williamson County, Texas
All rights reserved.

SUBMITTED FOR LETTING:
TEXAS DEPARTMENT OF TRANSPORTATION

KYLE RUSSELL, P.E. — DATE
AREA ENGINEER

RECOMMENDED FOR LETTING:
TEXAS DEPARTMENT OF TRANSPORTATION

SUSANA CEBALLOS, P.E. — DATE
DISTRICT DESIGN ENGINEER

APPROVED FOR LETTING:
TEXAS DEPARTMENT OF TRANSPORTATION

HEATHER ASHLEY-NGUYEN, P.E. — DATE
DIRECTOR OF TRANSPORTATION
PLANNING & DEVELOPMENT

APPROVED BY:
CITY OF LEANDER

DATE

APPROVED BY:
WILLIAMSON COUNTY

BILL GRAVELL, JR. — DATE
WILLIAMSON COUNTY JUDGE

APPROVED BY:
WILLIAMSON COUNTY

CYNTHIA LONG — DATE
WILLIAMSON COUNTY COMMISSIONER, PRECINCT 2

APPROVED BY:
HNTB CORPORATION

CHRISTEN ESCHBERGER, P.E. — DATE
ROAD BOND MANAGEMENT TEAM

BGE, Inc.
101 Louis Henna Blvd., Suite 400, Austin, TX 78728
Tel: 512-879-0400 • www.bgeinc.com
TBPE Registration No. F-1046
Copyright 2024

PREPARED BY:
BGE, INC.

ERIC BUSKER, P.E. — 4/10/2025 DATE
PROJECT MANAGER

STATE OF TEXAS
ERIC BUSKER
123341
LICENSED
PROFESSIONAL ENGINEER

4/10/2025

FILE: G:\TXC\Projects\County\Williamson\7473-02 RM 2243 Phase 1A\03*CADD\01*Shts\00-GEN\RM2243*P1A*Title.dgn
DATE: 4/10/2025 12:50:13 PM

INDEX OF SHEETS

SHEET	GENERAL
1	TITLE SHEET
2	INDEX OF SHEETS
3 - 5	PROJECT LAYOUT
6, 6A-6P	GENERAL NOTES
7	EXISTING TYPICAL SECTIONS
8 - 10	PROPOSED TYPICAL SECTIONS
11	SUMMARY OF TRAFFIC CONTROL QUANTITIES
12 - 13	SUMMARY OF ROADWAY QUANTITIES
14	SUMMARY OF DRAINAGE QUANTITIES
15	SUMMARY OF SIGNING & PAVEMENT MARKING QUANTITIES
16	SUMMARY OF SIGNAL QUANTITIES
17	SUMMARY OF EROSION CONTROL QUANTITIES
18 - 20	SUMMARY OF SMALL SIGNS

TRAFFIC CONTROL PLAN

21 - 23	TRAFFIC CONTROL PLAN ADVANCE WARNING SIGNS
24	TRAFFIC CONTROL PLAN NOTES
25 - 27	TRAFFIC CONTROL PLAN NARRATIVE
28	TRAFFIC CONTROL PLAN TYPICAL SECTIONS PHASE 1A & 1B
29 - 30	TRAFFIC CONTROL PLAN PHASE 1A LAYOUTS
31 - 32	TRAFFIC CONTROL PLAN PHASE 1B LAYOUTS
33	TRAFFIC CONTROL PLAN TYPICAL SECTIONS PHASE 2A
34 - 37	TRAFFIC CONTROL PLAN PHASE 2A LAYOUTS
38	TRAFFIC CONTROL PLAN TYPICAL SECTIONS PHASE 2B
39 - 42	TRAFFIC CONTROL PLAN PHASE 2B LAYOUTS
43	TRAFFIC CONTROL PLAN TYPICAL SECTIONS PHASE 2C
44	TRAFFIC CONTROL PLAN PHASE 2C STEP 1 LAYOUT
45	TRAFFIC CONTROL PLAN PHASE 2C STEP 2 LAYOUT
46 - 47	TRAFFIC CONTROL PLAN TYPICAL SECTIONS PHASE 3
48 - 52	TRAFFIC CONTROL PLAN PHASE 3 LAYOUTS
53	TRAFFIC CONTROL PLAN TYPICAL SECTIONS PHASE 4
54 - 58	TRAFFIC CONTROL PLAN PHASE 4 LAYOUTS
59	TRAFFIC CONTROL PLAN TYPICAL SECTIONS PHASE 5
60 - 64	TRAFFIC CONTROL PLAN PHASE 5 LAYOUTS
65 - 67	TRAFFIC CONTROL PLAN DRIVEWAY DETAILS
68	TRAFFIC CONTROL PLAN INTERSECTION DETAILS
69	CRASH CUSHION SUMMARY SHEET

STANDARDS (TCP)

70 - 81	*BC(1)-21 THRU BC(12)-21
82 - 83	*LPCB-13
84 - 85	*SSCB(2)-10
86	*ABSORB(M)-19
87	*SLED-19
88	*TCP(2-1)-18
89	*TCP(2-2)-18
90	*TCP(2-3)-23
91	*TCP(2-4)-18
92 - 93	*TCP(3-1)-13, TCP(3-3)-14
94	*TREATMENT FOR VARIOUS EDGE CONDITIONS
95	*WZ(RCD)-13
96	*WZ(RS)-22
97	*WZ(STPM)-23
98	*WZ(TD)-17
99	*WZ(UL)-13

ROADWAY

100 - 103	CONTROL LAYOUT MAP
104 - 109	HORIZONTAL ALIGNMENT DATA
110	SUPERELEVATION DATA
111 - 121	REMOVAL LAYOUTS
122 - 147	ROADWAY PLAN & PROFILE
148 - 156	INTERSECTION GRADING LAYOUT
157	CUL-DE-SAC LAYOUT
158 - 159	DRIVEWAY AND INTERSECTION DETAILS
160 - 164	DRIVEWAY PLAN & PROFILE
165	GENERAL NOTES
166	GEOTECHNICAL AND SOIL NAIL TESTING NOTES
167 - 168	RETAINING WALL RW-1 LAYOUT
169 - 174	RETAINING WALL RW-2 LAYOUT
175 - 176	SOIL NAIL WALL LAYOUT RW-1
177 - 182	SOIL NAIL WALL LAYOUT RW-2
183 - 184	SOIL NAIL WALL DETAILS

SHEET	STANDARDS (ROADWAY)
185	*TE(HMAC) - 11
186	*CCCG-22
187	*GF(31)MS-19
188	*GF(31)-19
189	*GF(31)DAT-19
190 - 193	*MB(1)-21 THRU MB(4)-21
194	*SGT(10S)31-16
195	*SGT(11S)31-18
196 - 199	*PED-18
200 - 202	*PRD-13

DRAINAGE

203 - 204	EXTERNAL DRAINAGE AREA MAP
205	CROSS DRAINAGE HYDROLOGIC DATA
206 - 221	CULVERT HYDRAULIC DATA
222 - 232	CULVERT LAYOUT
233 - 243	CULVERT GRADING LAYOUT
244	STOCK POND GRADING LAYOUT
245 - 253	INTERNAL DRAINAGE AREA MAP
254	PARALLEL DRAINAGE HYDROLOGIC DATA
255 - 256	DITCH CAPACITY
257 - 267	DRIVEWAY CULVERTS HYDRAULIC DATA
268	DRIVEWAY CULVERT DETAIL
269 - 270	STORM SEWER HYDRAULIC DATA
271 - 276	STORM SEWER PLAN & PROFILE
277 - 278	ENERGY DISSIPATION DETAILS
279	MISCELLANEOUS DETAIL
280	BCS

STANDARDS (DRAINAGE)

281	**SCC-MD
282 - 283	**SCC-5&6
284 - 285	**SCC-7
286 - 287	**SCC-8
288 - 289	**SCC-9
290	**SCP-MD
291	**SCP-5
292	**SCP-6
293	**SCP-7
294	**SCP-8
295	**SCP-9
296	**MC-MD
297 - 298	**MC-5-20
299 - 300	**MC-6-16
301 - 302	**MC-7-10
303 - 304	**MC-8-13
305 - 306	**MC-9-10
307	**ECD
308	**PW
309 - 311	**SETB-FW-0
312 - 314	**SETB-FW-S
315	**SETP-PD
316	**PB
317	**PJB
318	**PDD
319 - 320	**PCU
321	**CGT-PCU
322 - 323	**PSL
324 - 325	**IRWF-FTW

TRAFFIC

SPMD

326 - 335	SIGNING AND PAVEMENT MARKING
336 - 337	SMALL SIGN DETAILS

STANDARDS (SPMD)

338	*D & OM(1)-20
339	*D & OM(2)-20
340	*D & OM(3)-20

SHEET	STANDARDS (SPMD) (CONT.)
341	*D & OM(4)-20
342	*D & OM(5)-20
343	*D & OM(VIA)-20
344	*PM(1)-22
345	*PM(2)-22
346	*PM(3)-22
347	*PM(4)-22A
348	*SMD(GEN)-08
349	*SMD(SLIP-1)-08
350	*SMD(SLIP-2)-08
351	*SMD(SLIP-3)-08
352	*SMD(TWT)-08
353	*TSR(3)-13
354	*TSR(4)-13

SIGNAL

355	EXISTING SIGNAL LAYOUT - RM 2243 @ RONALD REAGAN
356	PROPOSED SIGNAL LAYOUT - RM 2243 @ RONALD REAGAN
357	PROPOSED SIGNAL ELEVATIONS - RM 2243 @ RONALD REAGAN
358	PROPOSED SIGNAL SCHEDULE & PHASING - RM 2243 @ RONALD REAGAN
359	PROPOSED SIGNAL LAYOUT - RM 2243 @ LIMESTONE CREEK
360	PROPOSED SIGNAL ELEVATIONS - RM 2243 @ LIMESTONE CREEK
361	PROPOSED SIGNAL SCHEDULE & PHASING - RM 2243 @ LIMESTONE CREEK
362	PROPOSED SIGNAL SMALL SIGN DETAILS

STANDARDS (SIGNAL)

363	***WV&IZ-14
364 - 375	***ED(1)-14 THRU ED(12)-14
376 - 377	***SMA-80(1)-12 THRU SMA-80(2)-12
378	***MA-C-12
379	***MA-D-12
380	***TS-FD-12
381	***LUM-A-12
382 - 386	***LMA(1)-12 THRU LMA(5)-12
387	***MA-DPD-20
388	***TS-BP-20

ENVIRONMENTAL

389 - 390	STORMWATER POLLUTION PREVENTION PLAN (SW3P)
391 - 400	SWP3 LAYOUTS
401	ENVIRONMENTAL PERMITS, ISSUES, AND COMMITMENTS (EPIC)

STANDARDS (ENVIRONMENTAL)

402	EC(1)-16
403	EC(2)-16
404	EC(3)-16
405 - 407	EC(9)-16

CROSS SECTIONS

408 - 577	XS SHEETS

UTILITIES

578 - 620	UTILITY PLANS

THE STANDARD SHEETS SPECIFICALLY IDENTIFIED BY * HERE HAVE BEEN SELECTED BY ME OR UNDER MY RESPONSIBLE SUPERVISION AS BEING APPLICABLE TO THIS PROJECT.

JOSHUA T. RICHTER, PE No 141234 — 4/10/2025 DATE

THE STANDARD SHEETS SPECIFICALLY IDENTIFIED BY ** HERE HAVE BEEN SELECTED BY ME OR UNDER MY RESPONSIBLE SUPERVISION AS BEING APPLICABLE TO THIS PROJECT.

VANESSA MOLINA, PE No 141173 — 4/10/2025 DATE

THE STANDARD SHEETS SPECIFICALLY IDENTIFIED HERE BY *** HAVE BEEN SELECTED BY ME OR UNDER MY RESPONSIBLE SUPERVISION AS BEING APPLICABLE TO THIS PROJECT.

MORGAN M. KELLEY, PE No 150127 — 4/10/2025 DATE

STATE OF TEXAS
JOSHUA T. RICHTER
141234
LICENSED
PROFESSIONAL ENGINEER

4/10/2025

WILCO TEXAS

BGE, Inc.
101 W Louis Henna Blvd, Suite 400, Austin, TX 78728
Tel: 512-879-0400 • www.bgeinc.com
TBPE Registration No. F-1046

RM 2243

INDEX OF SHEETS

SHEET 1 OF 1

FED.RD. DIV.NO.	PROJECT NO.		SHEET NO.
6			2
STATE	DIST.	COUNTY	
TEXAS	AUS	WILLIAMSON	
CONT.	SECT.	JOB	HIGHWAY NO.
0914	05	222	RM 2243

4/10/2025 12:50:15 PM pdf.pltcfg
G:\TXC\Projects\County\Williamson\7473-02 RM 2243 Phase 1A\03*CADD\01*Shts\00-GEN\RM2243*P1A*INDEX.dgn

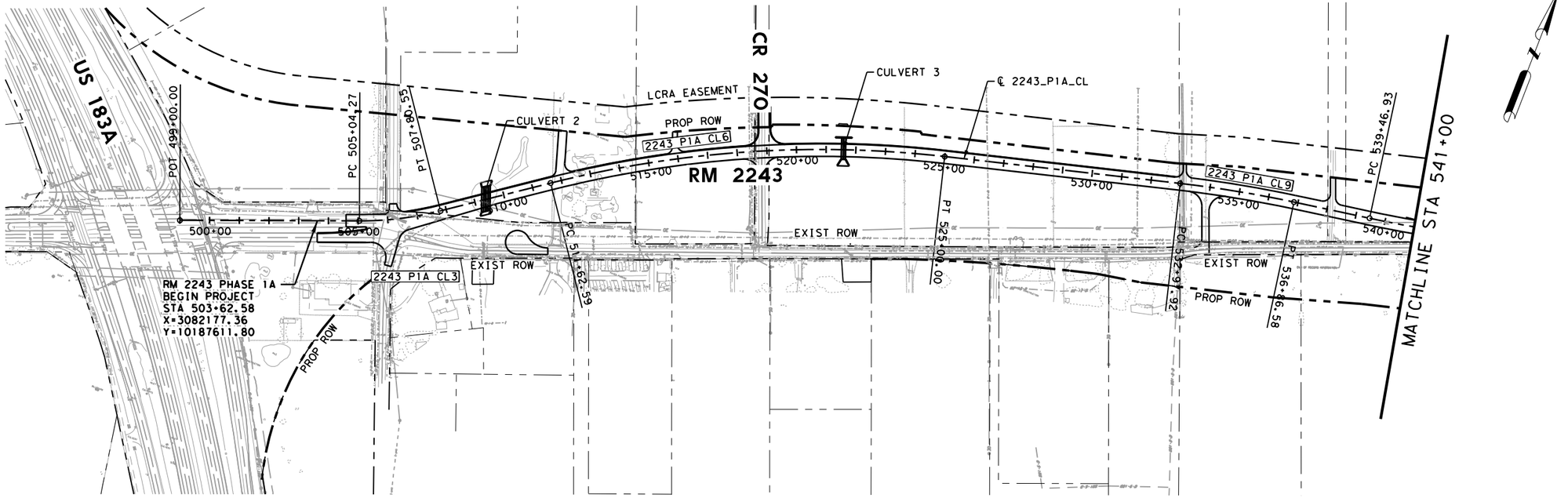

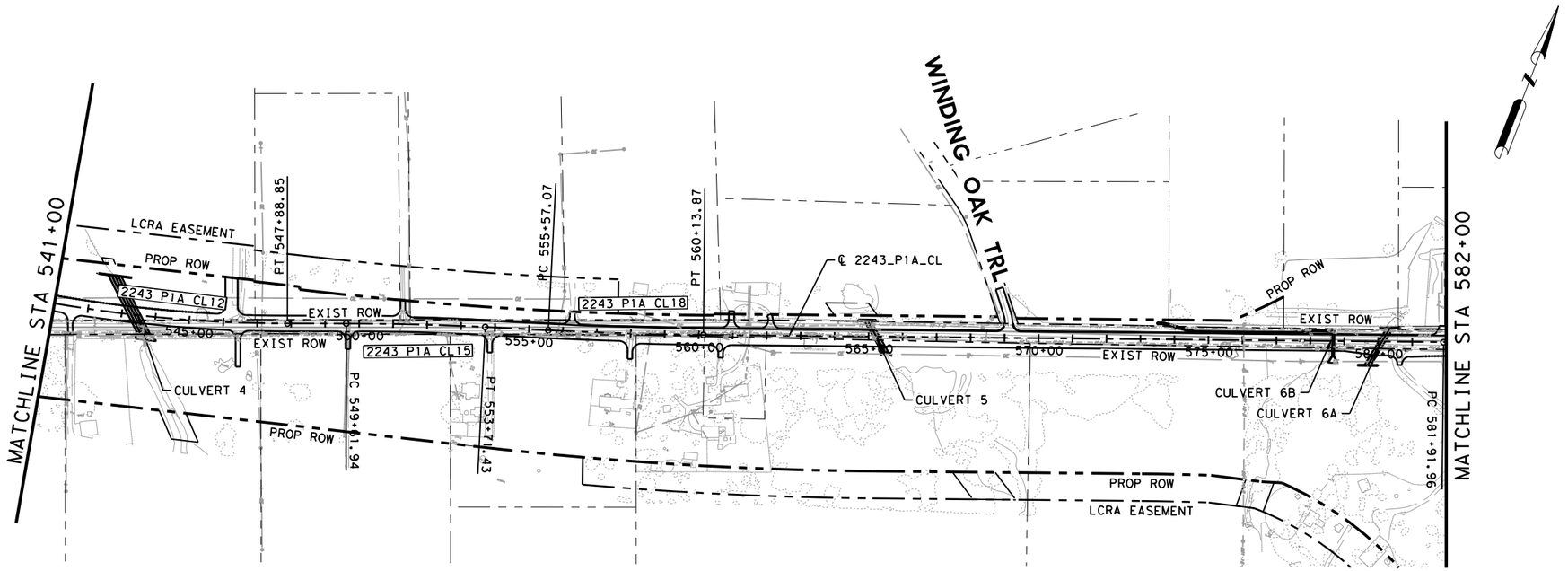

STATE OF TEXAS
JOSHUA T. RICHTER
141234
LICENSED
PROFESSIONAL ENGINEER

4/10/2025

WILCO
TEXAS

BGE, Inc.
101 W Louis Henna Blvd, Suite 400, Austin, TX 78728
Tel: 512-879-0400 • www.bgeinc.com
TBPE Registration No. F-1046

RM 2243

PROJECT LAYOUT

SHEET 1 OF 3

FED.RD. DIV.NO.	PROJECT NO.		SHEET NO.
6			3
STATE	DIST.	COUNTY	
TEXAS	AUS	WILLIAMSON	
CONT.	SECT.	JOB	HIGHWAY NO.
0914	05	222	RM 2243

4/10/2025 12:50:18 PM pdf.pltcfg
G:\TXC\Projects\County\Williamson\7473-02 RM 2243 Phase 1A\03*CADD\01*Shts\03-RDWY\RM2243*PRJLYT*01.dgn

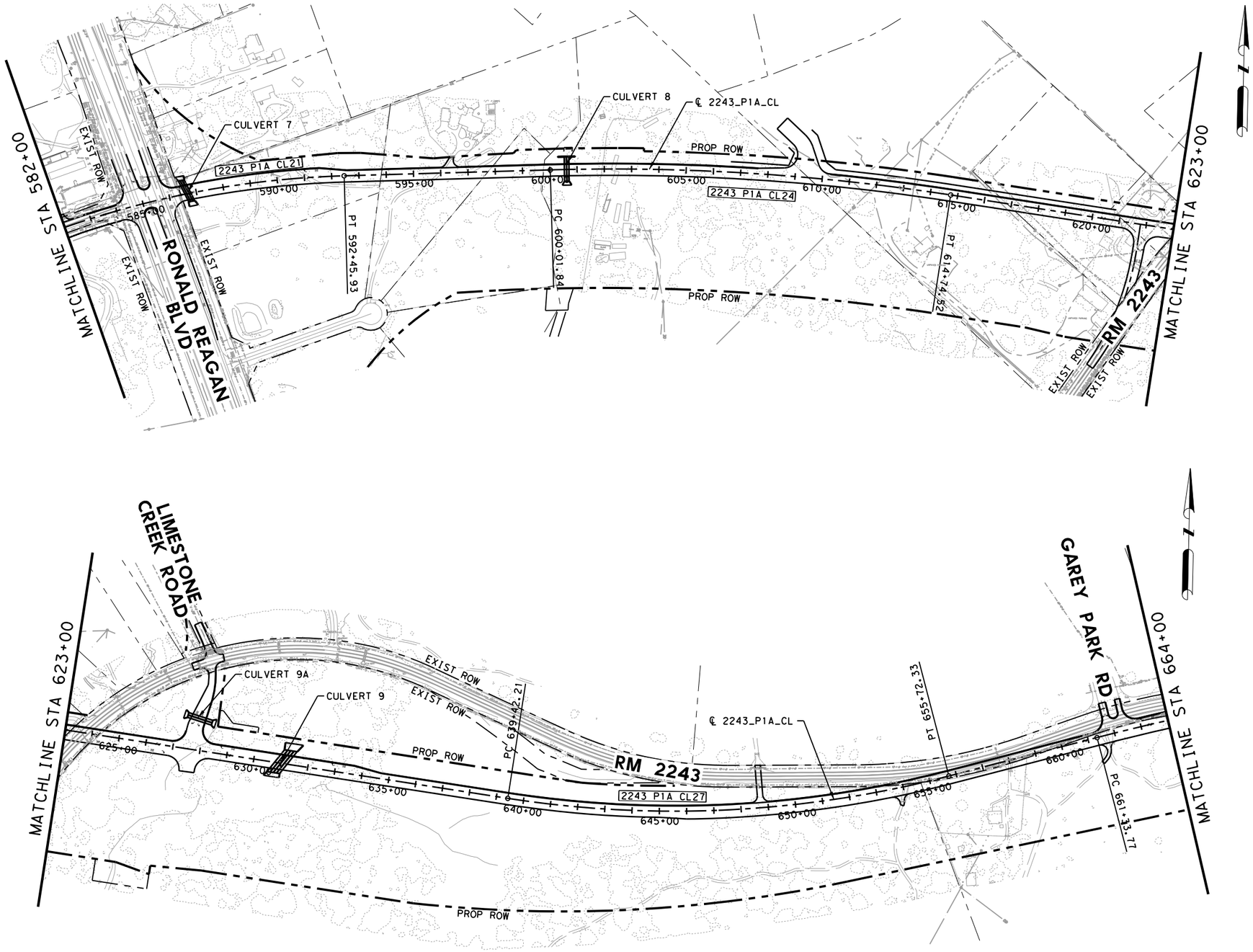

0 200 400
SCALE: 1"=400'

STATE OF TEXAS
JOSHUA T. RICHTER
141234
LICENSED
PROFESSIONAL ENGINEER

4/10/2025

WILCO TEXAS

BGE, Inc.
101 W Louis Henna Blvd, Suite 400, Austin, TX 78728
Tel: 512-879-0400 • www.bgeinc.com
TBPE Registration No. F-1046

RM 2243

PROJECT LAYOUT

SHEET 2 OF 3

FED.RD. DIV.NO.	PROJECT NO.		SHEET NO.
6			4
STATE	DIST.	COUNTY	
TEXAS	AUS	WILLIAMSON	
CONT.	SECT.	JOB	HIGHWAY NO.
0914	05	222	RM 2243

4/10/2025 12:50:20 PM pdf.pltcfg
C:\TXC\Projects\County\Williamson\7473-02 RM 2243 Phase 1A\03*CADD\01*Shts\03-ROWY\RM2243*PRJLYT*02.dgn

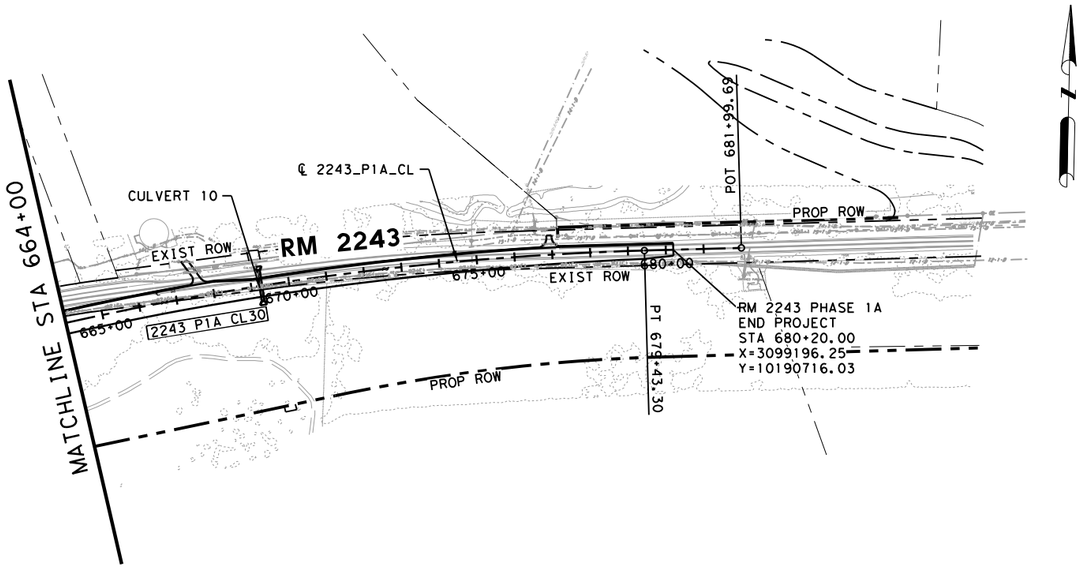

0 200 400
SCALE: 1"=400'

4/10/2025 12:50:22 PM pdf.pltcfg
G:\TXC\Projects\County\Williamson\7473-02 RM 2243 Phase 1A\03\CADD\01\Shts\03-RDWY\RM2243_PRJLYT_03.dgn

STATE OF TEXAS
JOSHUA T. RICHTER
141234
LICENSED
PROFESSIONAL ENGINEER

4/10/2025

WILCO
TEXAS

BGE, Inc.
101 W Louis Henna Blvd, Suite 400, Austin, TX 78728
Tel: 512-879-0400 • www.bgeinc.com
TBPE Registration No. F-1046

RM 2243

PROJECT LAYOUT

SHEET 3 OF 3

FED.RD. DIV.NO.	PROJECT NO.		SHEET NO.
6			5
STATE	DIST.	COUNTY	
TEXAS	AUS	WILLIAMSON	
CONT.	SECT.	JOB	HIGHWAY NO.
0914	05	222	RM 2243

GENERAL NOTES: Version: March 10, 2025

Item	Description	**Rate
**204	**Sprinkling**	
	(Dust)	30 GAL/CY
	(Item 132)	30 GAL/CY
	(Item 247)	30 GAL/CY
**210	**Rolling (Flat Wheel)**	
	(Item 247)	1 HR/200 TON
	(Item 316)	1 HR/6000 SY
**210	**Rolling (Tamping and Heavy Tamping)**	1 HR/200 CY
**210	**Rolling (Lt Pneumatic Tire)**	
	(Item 132)	1 HR/500 CY
	(Item 247)	1 HR/200 TON
	(Item 316 - Seal Coat)	1 HR/6000 SY
	(Item 316 - Two Course)	1 HR/3000 SY
247	**Flexible Base (CMP IN PLC)**	132 LB/CF
310	**Prime Coat**	0.20 GAL/SY
314	**Emulsified Asphalt Treatment (SS-1 or MS-2)**	0.30 GAL/SY
316	**Underseals Asphalts (Multi Option)**	0.20 GAL/SY
	Surface Treatments	
	Seal Coat	
	Grade 4	
	Asphalt	0.38 GAL/SY
	Aggregate	1 CY/120 SY
	Grade 5	
	Asphalt	0.32 GAL/SY
	Aggregate	1 CY/150 SY
	Two Course Surface Treatment	
	Asphalt 1st Application	0.28 GAL/SY
	Asphalt 2nd Application	0.24 GAL/SY
	Aggregate 1st Application Grade 4	1 CY/110 SY
	Aggregate 2nd Application Grade 4	1 CY/130 SY
341, 344	**Dense-Graded Hot-Mix Asphalt and Superpave**	110 LB/SY/IN
342	**Permeable Friction Course (PFC)**	90.0 LB/SY/IN
346	**Stone-Matrix Asphalt**	113 LB/SY/IN
347	**Thin Overlay Mixtures (TOM)**	
	SAC B	113.0 LB/SY/IN
	SAC A	116.0LB/SY/IN
350	**Microsurfacing**	25 LB/SY
3006	**Underseal Course**	0.20 GAL/SY
3007	**Bonding Course**	0.09 GAL/SY
	Tack Coat	0.08 GAL/SY

** For Informational Purposes Only

County: Williamson
Highway: RM 2243 Phase 1A

CSJ: 0914-05-222

GENERAL - TxDOT
Contractor questions will be accepted through email, phone, and in person by the Construction Observer or Engineer.

All contractor questions will be reviewed by the Engineer and posted as shown in the Instructions to Bidders.

References to manufacturer's trade name or catalog numbers are for the purpose of identification only. Similar materials from other manufacturers are permitted if they are of equal quality, comply with the specifications for this project, and are approved.

If work is performed at Contractor's option, when inclement weather is impending, and the work is damaged by subsequent precipitation, the Contractor is responsible for all costs associated with replacing the work, if required.

The roadbed will be free of organic material prior to placing any section of the pavement structure.

Equip all construction equipment used in roadway work with highly visible omnidirectional flashing warning lights.

Intelligent Transportation Systems (ITS) Infrastructure may exist within the limits of this project and that the system must remain operational throughout construction. The exact location of ITS Infrastructure is not known. Contact the TxDOT Area Engineer's or Inspection Team's Office for the location(s) at least 72 hours before commencing any work that might affect present ITS Infrastructure. In the event of system damage, notify TxDOT/CTECC at (512) 974-0883 within one hour of occurrence. Refer to Item 6000 for additional details.

Provide a smooth, clean sawcut along the existing asphalt or concrete pavement structure, as directed. Consider subsidiary to the pertinent Items.

Construct all manholes/valves to final pavement elevations prior to the placement of final surface. If the manholes/valves are going to be exposed to traffic, place temporary asphalt around the manhole/valve to provide a 50:1 taper. The asphalt taper is subsidiary to the ACP work.

Supply litter barrels in enough numbers at locations as directed to control litter within the project. Consider subsidiary to pertinent Items.

Keep the roadway free of debris and sediment caused by construction activities. Dispose of all material in accordance with federal, state, and local regulations. This work is subsidiary.

Damage to existing pipes and SET's due to Contractor operations will be repaired at Contractor's expense.

WILCO TEXAS

BGE, Inc.
101 W Louis Henna Blvd, Suite 400, Austin, TX 78728
Tel: 512-879-0400 • www.bgeinc.com
TBPE Registration No. F-1046

RM 2243

GENERAL NOTES

SHEET 1 OF 17

FED.RD. DIV.NO.	PROJECT NO.	SHEET NO.
6		6

STATE	DIST.	COUNTY	
TEXAS	AUS	WILLIAMSON	
CONT.	SECT.	JOB	HIGHWAY NO.
			RM 2243

4/10/2025 12:50:23 PM pdf.pltcfg
G:\TXC\Projects\County\Williamson\7473-02 RM 2243 Phase 1A\03\CADD\01\Shts\00-GEN\RM2243_P1A_GN_01.dgn

All locations used for storing construction equipment, materials, and stockpiles of any type, within the right of way, will be as directed. Use of right of way for these purposes will be restricted to those locations where driver sight distance to businesses and side street intersections is not obstructed and at other locations where an unsightly appearance will not exist. The Contractor will not have exclusive use of right of way but will cooperate in the use of the right of way with the city/county and various public utility companies as required.

Coordinate and obtain approval for all bridgework over existing roadways.

GENERAL – Williamson County
References to manufacturer's trade name or catalog numbers are for the purpose of identification only. Similar materials from other manufacturers are permitted if they are of equal quality, comply with the specifications for this project, and are approved.

If work is performed at Contractor's option, when inclement weather is impending, and the work is damaged by subsequent precipitation, the Contractor is responsible for all costs associated with replacing the work, if required.

The roadbed shall be free of organic material prior to placing any section of the pavement structure.

Equip all construction equipment used in roadway work with highly visible omnidirectional flashing warning lights.

Provide a smooth, clean saw-cut along the existing asphalt pavement structure, as directed. Consider subsidiary to the pertinent Items.

Supply litter barrels in enough numbers at locations as directed to control litter within the project. Consider subsidiary to pertinent Items.

Use a self-contained vacuum broom to sweep the roadway and keep it free of sediment as directed. The contractor will be responsible for any sweeping beyond the normal maintenance required to keep fugitive sediment off the roadway as directed by the Construction Observer. This work is subsidiary.

Protect all areas of the right of way, which are not included in the actual limits of the proposed construction areas, from disturbance. Restore any area disturbed because of the Contractor's operations to a condition as good as, or better than, before the beginning of work at no cost to the County.

Damage to existing pipes and SETs due to Contractor operations shall be repaired at Contractor's expense.

All locations used for storing construction equipment, materials, and stockpiles of any type, within the right of way, will be as directed. Use of right of way for these purposes will be restricted to those locations where driver sight distance to businesses and side street intersections

County: Williamson **CSJ:** 0914-05-222
Highway: RM 2243 Phase 1A

is not obstructed and at other locations where an unsightly appearance will not exist. The Contractor will not have exclusive use of right of way but will cooperate in the use of the right of way with the city/county and various public utility companies as required.

The Project Superintendent will be capable of speaking English and will be available to contact at all times when work is being performed, including subcontractor work. The Superintendent will be available and on-call 24 hours a day.

Coordinate and obtain approval from the Construction Observer for all bridgework over existing roadways.

Measure all minimum vertical clearances for all structures (including, but not limited to, signal mast arms, span wires, and overhead sign bridge structures) within the limits of the project for all roadway alignments in all directions of travel. Coordinate with the Construction Observer to take these measurements and obtain prior to opening roadways to traffic unless otherwise approved. The Construction Observer will report all minimum vertical clearance information on State maintained roadways to the local bridge engineer at AUS_BRG_notify@txdot.gov.

Use materials from prequalified material producers list as shown on the Texas Department of Transportation (TxDOT) – Construction Division's (CST) materials producers list. Refer to TxDOT's website for list of pre-qualified manufacturers. No substitutions will be allowed for materials found on the list. Submit list of approved suppliers/materials from TxDOT website to show items are TxDOT approved. Submit this list with request for material approval.

When any abandoned well is encountered, cease construction operations in this area and notify the Construction Observer who will coordinate the proper plugging procedures. A water well driller licensed in the State of Texas must be used to plug a well.

Erosion control and stabilization measures must be initiated immediately in portions of the site where construction activities have temporarily ceased and will not resume for a period exceeding 14 calendar days. Track all exposed soil, stockpiles, and slopes. Tracking consists of operating a tracked vehicle or equipment up and down the slope, leaving track marks perpendicular to the direction of the slope. Re-track slopes and stockpiles after each rain event or every 14 days, whichever occurs first. This work is subsidiary.

Perform maintenance of vehicles or equipment at designated maintenance sites. Keep a spill kit on-site during fueling and maintenance. This work is subsidiary.

Maintain positive drainage for permanent and temporary work for the duration of the project. Be responsible for any items associated with the temporary or interim drainage and all related maintenance. This work is subsidiary.

Suspend all activities near any significant recharge features, such as sinkholes, caves, or any other subterranean openings that are discovered during construction or core sampling. Do not proceed until the designated Geologist or TCEQ representative is present to evaluate and approve remedial action.

WILCO TEXAS
BGE, Inc.
101 W Louis Henna Blvd, Suite 400, Austin, TX 78728
Tel: 512-879-0400 • www.bgeinc.com
TBPE Registration No. F-1046

RM 2243

GENERAL NOTES

SHEET 2 OF 17

FED.RD. DIV.NO.	PROJECT NO.		SHEET NO.
6			6A
STATE	DIST.	COUNTY	
TEXAS	AUS	WILLIAMSON	
CONT.	SECT.	JOB	HIGHWAY NO.
			RM 2243

4/10/2025 12:50:25 PM pdf.pltcfg
G:\TXC\Projects\County*Williamson\7473-02 RM 2243 Phase 1A\03*CADD\01*Shts\00-GEN\RM2243*P1A*GN*01.dgn

No above ground storage tanks will be allowed.
Project Specific Location (PSL) in Edwards Aquifer Recharge and Contributing Zone.
Obtain written approval from the Construction Observer for all on or off right of way PSLs not specifically addressed in the plans. Provide a signed sketch of the location 30 business days prior to use of the PSL. Include a list of materials, equipment and portable facilities that will be stored at the PSL. County will coordinate with the necessary agencies. Approval of the PSL is not guaranteed. Unapproved PSL is not a compensable impact.

Project Specific Location (PSL) in USACE Jurisdictional Area.
Do not initiate activities in a PSL associated with a U.S. Army Corps of Engineers (USACE) jurisdictional area that have not been previously evaluated by the USACE as part of the permit review of this project. Such activities include, but are not limited to, haul roads, equipment staging areas, borrow and disposal sites. Associated defined here means materials are delivered to or from the PSL. The jurisdictional area includes all waters of the U.S. including wetlands or associated wetlands affected by activities associated with this project. Special restrictions may be required for such work. Consult with the USACE regarding activities, including PSLs that have not been previously evaluated by the USACE. Provide the Construction Observer with a copy of all USACE coordination and approvals before initiating activities.

Proceed with activities in PSLs that do not affect a USACE jurisdictional area if self-determination has been made that the PSL is non jurisdictional or proper clearances have been obtained in USACE jurisdictional areas or have been previously evaluated by the USACE as part of the permit review of this project. Document any determinations that PSL activities do not affect a USACE jurisdictional area. Maintain copies of PSL determinations for review by the County or any regulatory agency. The Contractor must document and coordinate with the USACE, if required, before any excavation material hauled from or embankment material hauled into a USACE jurisdictional area by either (1) or (2) below.

1. Restricted Use of Materials for the Previously Evaluated Permit Areas. When an area within the project limits has been evaluated by the USACE as part of the permit process for this project:

a. suitable excavation of required material in the areas shown on the plans and cross sections as specified in Standard Specification Item 110, Excavation is used for permanent or temporary fill within a USACE jurisdictional area;

b. suitable embankment from within the USACE jurisdictional area is used as fill within a USACE evaluated area;

c. Unsuitable excavation or excess excavation that is disposed of at an approved location within a USACE evaluated area.

2. Contractor Materials from Areas Other than Previously Evaluated Areas. Provide the Construction Observer with a copy of all USACE coordination and approvals before initiating any activities in a jurisdictional area within the project limits that has not been evaluated by the USACE or for any off right of way locations used for the following, but not limited to, haul roads, equipment staging areas, borrow and disposal sites:

a. Standard Specification Item 132, Embankment is used for temporary or permanent fill within a USACE jurisdictional area;

County: Williamson **CSJ:** 0914-05-222
Highway: RM 2243 Phase 1A

b. Unsuitable excavation or excess excavation that is disposed of outside a USACE evaluated area.

Work over or near Bodies of Water (Lakes, Rivers, Ponds, Creeks, Dry Waterways, etc.).
Keep on site a universal spill kit adequate for the body of water and the work being performed. Debris is not allowed to fall into the ordinary high-water level (OHWL). Debris that falls into the OHWL must be removed at the end of each work day. Debris that falls into the floodway must be removed at the end of each work week or prior to a rain event. Install and maintain traffic control devices to maintain a navigable corridor for water traffic, except during bridge demo and beam placement. When not in use and at the end of each work shift, all material and equipment must be stored more than 100 ft. away from the ordinary high-water mark. This work is subsidiary.

Obtain written approval from the Engineer for temporary fill or crossings not specifically addressed in the plans. Provide a signed sketch of the location 60 business days prior to begin work at the location. Approval of the work is not guaranteed. Unapproved work is not a compensable impact.

DSHS Asbestos and Demolition Notification.
Complete and provide the Texas Department of State Health Services (DSHS) notification form to the Construction Observer at least 30 calendar days prior to bridge or bridge class culvert removal or renovation. Notify the Construction Observer via email of any changes to the work start date.

Migratory Birds and Bats.
Migratory birds may be nesting within the project limits and concentrated on roadway structures such as bridges and culverts. Remove all old and unoccupied migratory bird nests from any structures, trees, etc. between September 16th and February 28th. Prevent migratory birds from re-nesting between March 1st and September 15th.

All methods used for the removal of unoccupied bird nests and the prevention of re-nesting must be submitted to the Construction Observer for approval thirty days prior to begin work.

In the event that any active nests are encountered on-site during construction, all construction activity within 50 feet radius of the nest must cease immediately. Contact the Construction Observer to determine how to proceed.

Bats may roost within the project limits under bridges, in culverts, in large hollow trees, in dead standing trees, and in trees with shaggy bark. Maternity colonies may occur from April 1st through August 31st. If bats are present, ensure bats are not harmed. Exclusion protocols for known colonies should be followed well in advance of commencement of construction activities. Exclusion measures by qualified individuals are used to relocate existing colonies, except from April 1st through August 31st when such measures may separate mothers and pups. Exclusion measures are also the means of preventing establishment of new colonies and re-establishment of relocated colonies.

WILCO TEXAS

BGE, Inc.
101 W Louis Henna Blvd, Suite 400, Austin, TX 78728
Tel: 512-879-0400 • www.bgeinc.com
TBPE Registration No. F-1046

RM 2243

GENERAL NOTES

SHEET 3 OF 17

FED.RD. DIV.NO.	PROJECT NO.		SHEET NO.
6			6B
STATE	DIST.	COUNTY	
TEXAS	AUS	WILLIAMSON	
CONT.	SECT.	JOB	HIGHWAY NO.
			RM 2243

4/10/2025 12:50:27 PM pdf.pltcfg
C:\TXC\Projects\County*Williamson\7473-02 RM 2243 Phase 1A\03*CADD\01*Shts\00-GEN\RM2243*P1A*GN*01.dgn

No extension of time or compensation payment will be granted for a delay or suspension of work caused by migratory birds or bats. This work is subsidiary.

Law Enforcement Personnel. If a law enforcement officer is required, patrol vehicles must be clearly marked to correspond with the officer's agency and equipped with appropriate lights to identify them as law enforcement. Preference will be given to Williamson County officers or officers in local jurisdiction. No payment will be made for law enforcement used for moving contractor equipment.

A maximum combined rate of $70 per hour for the law enforcement personnel and the patrol vehicle will be allowed. Any scheduling fee is subsidiary per Standard 502.4.2.

Cancel law enforcement personnel when the event is canceled. Cancellation, minimums or ""show up"" fees will not be paid when cancellation is made 12 hours prior to beginning of the event. Failure to cancel within 12 hours will not be cause for payment for cancellation, minimums, or ""show up"" time. Payment of actual ""show up"" time to the event site due to cancellation will be on a case by case basis at a maximum of 2 hours per officer.

Alterations to the cancellation and maximum rate must be approved by the Engineer or pre-determined by official policy of the governing authority.

The sequence of work shown on the plans demonstrates a volume of work available in each phase of construction that will ensure the Contractor is not impacted by the unapproved environmental permits, outstanding inter-agency agreements, right-of-way (ROW), railroad permits and utility conflicts. Contractor is to work on simultaneous phases or deviate from the sequence of work shown on the plans, as directed by the Engineer to keep progressing the work and minimize impacts to the project schedule.

ITEM 5 – CONTROL OF THE WORK
Place construction stakes at intervals of no more than 100 ft. This work is subsidiary.

Provide a 72 hour advance email notice to AUS_Locate@TxDOT.gov to request illumination, traffic signal, ITS, or toll equipment utility locates. Provide AUS_Locate@TxDOT.gov an electronic pdf of as-builts within 21 calendar days of illumination, traffic signal, ITS, or toll equipment being placed into operation. As-built shall include GPS coordinates of manholes and junction boxes. Include final version of RFI's and revised plan sheets.

Precast Alternate Proposals.
When a precast or cast-in-place concrete element is included in the plans, a precast concrete alternate may be submitted in accordance with the latest version of the Department's details, PCA-SUP and PCA-SUB found at
https://www.dot.state.tx.us/insdtdot/orgchart/cmd/cserve/standard/bridge-e.htm

Thermoplastic Pipe Alternate Proposals
When a reinforced concrete or corrugated metal pipe is included in the plans, a thermoplastic polypropylene pipe alternate may be submitted in a 2-phase process. Acceptance or denial of an

alternate is at the sole discretion of the Engineer. Impacts to the project schedule and any additional costs resulting from the use of alternates are the sole responsibility of the Contractor.

Phase 1 submit an official request to TxDOT PM with a summary of proposed locations, max depth of placement for each location, cover depth, and pipe diameters. TxDOT goal is to review and respond within 10 days. Phase 1 approval does not guarantee Phase 2 approval.

Phase 2 submit the following documents with all documents signed and sealed by a licensed Engineer in the state of Texas. 1-Provide a redline or revised set of drainage plans reflecting the revised locations. 2-Provide certification that the use of the alternate pipe and proposed bedding are adequate for the proposed application, depth, etc. 3-Provide a completed thermoplastic pipe installation drawing using the following,

https://ftp.txdot.gov/pub/txdot/brg/thermoplastic-pipe-installation-drawing.pdf
https://ftp.txdot.gov/pub/txdot/brg/thermoplastic-pipe-installation-drawing.dgn

For all uses of thermoplastic pipe as an alternate, furnish, install, and inspect the thermoplastic pipe in accordance with Item 468 or latest thermoplastic pipe special specification at time of letting. Minimum values, such as cover depth, required by the specification, installation drawing, etc. will not be waived. Use granular backfill unless flowable fill or CSB is required by the alternate design. Backfill locations shown in the bid plans using flowable fill or CSB must use the backfill per the bid plans.

Electronic Shop Drawing Submittals.
Submit electronic shop drawing submittals according to the current Guide to Electronic Shop Drawing Submittal which can be found online at,
https://www.txdot.gov/business/resources/highway/bridge/shop-drawing-submittal-cycle.html.

Pre-approved producers can be found online at,
https://www.txdot.gov/business/resources/materials/material-producer-list.html.

Use the following contact list for all submittals that are not required to be sent to Bridge Division and to copy the Engineer for all submittals to the Bridge Division.

Submittal Contact List

Burnet Area	Joe.Muck@txdot.gov	AUS_BU-ShopReview@txdot.gov
Bastrop Area	Shane.Swimm@txdot.gov	AUS_BA-ShopReview@txdot.gov
Georgetown	Jeremy.Mikes@txdot.gov	AUS_GE-ShopReview@txdot.gov
North Austin	Matthew.Kelly@txdot.gov	AUS_NA-ShopReview@txdot.gov
South Austin	Ivan.Baker@txdot.gov	AUS_SA-ShopReview@txdot.gov
Traffic Operations	Cory.Jucius@txdot.gov	
Traffic Operations	Dave.Henry@txdot.gov	
Traffic Operations	David.Goldstein@txdot.gov	

WILCO TEXAS

BGE, Inc.
101 W Louis Henna Blvd, Suite 400, Austin, TX 78728
Tel: 512-879-0400 • www.bgeinc.com
TBPE Registration No. F-1046

RM 2243

GENERAL NOTES

SHEET 4 OF 17

FED.RD. DIV.NO.	PROJECT NO.		SHEET NO.
6			6C
STATE	DIST.	COUNTY	
TEXAS	AUS	WILLIAMSON	
CONT.	SECT.	JOB	HIGHWAY NO.
			RM 2243

4/10/2025 12:50:30 PM pdf.pltcfg
G:\TXC\Projects\County*Williamson\7473-02 RM 2243 Phase 1A\03*CADD\01*Shts\00-GEN\RM2243*P1A*GN*01.dgn

Cooperating with Joint Bid Utilities.
The Engineer will designate a utility inspector at the pre-construction meeting. Attend a utility preconstruction meeting with the utility owner. All designated safety points of contact, including traffic control, shall be present at the utility preconstruction meeting.

Utility contractors must provide, for information purposes only unless stated otherwise, the following information 60 calendar days prior to beginning utility work:

- If available, a copy of the contractor's safety handbook.
- Designate a safety point of contact with OSHA 30-hour certification card.
- Designate and provide written summary of qualifications for an excavation safety point of contact meeting requirements for a trench and excavation competent person per OSHA, https://www.osha.gov/etools/construction/trenching/competent-person
- Temporary special shoring design in accordance with Item 403 for excavations 5ft. or greater in depth, including bore pits (Department reserves the right to reject designs).
- Trench excavation protection plans, bearing the seal of a licensed professional engineer, in accordance with Item 402.

All durations exclude utility owner holidays.

Provide a complete package of information for all resubmittals. Submit each item and individual components of that item under separate cover.

Prior to submitting a RFI, meet and discuss with TxDOT and the utility inspector. Include a proposed solution, existing and proposed line elevations, and redline of proposed changes with the RFI. Make note of adjacent utilities in the RFI if it includes relocation of a line. Submit RFIs via email to TxDOT and the utility inspector.

Complete pre-testing and have the utility inspector verify prior to formal testing and inspection. Submit email to TxDOT and the utility inspector requesting a formal test and inspection 14 calendar days before the test date. Pay retest fees directly to utility owner at current rates.

Submit an email to the utility inspector identifying the lines, manholes, valves, location, and date of shut offs or limited service 20 calendar days before for all lines. Submit an email 60 calendar days before for water lines 16 in. or greater or electrical transmission lines. The utility owner will conduct a test shut off before actual shut off. Do not shut off power or water lines 16 in. or greater during peak season between May 1 and September 30. Provide a verbal notification 7calendar days and written notification 72 hours before impact to service to all customers.

Removal of trees and brush within 15 feet of proposed power lines is required and subsidiary.

Alignment and Profile.
Unless shown in the plans, profile and alignment data for roadways being overlaid or widened are for design verification only. Provide survey and construct the roadway in accordance with

County: Williamson **CSJ:** 0914-05-222
Highway: RM 2243 Phase 1A

the typical section. Bid items and data may be provided to adjust cross slope and super elevations.

ITEM 100 - PREPARING RIGHT OF WAY
Prep ROW must not begin until accessible trees designated for preservation have been protected, items listed in the EPIC have been addressed, and SW3P controls installed in accessible areas.

Backfill material will be Type B Embankment using ordinary compaction.

Follow Item 752.4 Work Methods and Item 752 general notes when removing or working on or near trees and brush.

Unless shown otherwise in the plans or a designated non-mow area, perform trimming or removal for areas within 30 ft. of edge of pavement under construction. Trim or remove to provide minimum of 5 ft. of horizontal clearance and 7 ft. of vertical clearance for the following: sidewalks, paths, guard fence, rails, signs, object markers, and structures. Trim to provide a minimum of 14 ft. vertical clearance under all trees. This work is subsidiary.

ITEM 105 – REMOVING TREATED AND UNTREATED BASE AND ASPHALT PAVEMENT
Existing typical is based on information available. This typical may not account for all maintenance work such as overlays or pavement repairs. A change in material type or thickness does not warrant additional payment. Payment is full compensation for removing all material to the depth specified.

ITEM 110 – EXCAVATION
The Engineer will define unsuitable material.

Excavate the drained pond to a depth of 5ft beneath the existing bottom for the limits shown. Select fill shall be utilized within these limits and compacted to ordinary compaction. All material removed from the pond is unsuitable for use as subgrade embankment within the roadway section.

ITEM 132 – ALL EMBANKMENT
At no time will the retaining wall backfill material exceed the adjacent embankment operation by more than one lift. At no time will the embankment adjacent to the retaining wall backfill exceed the wall backfill by any elevation. Embankment placed over the area of MSE backfill must meet the same backfill requirements for the type specified under Item 423.

Unsuitable material encountered in a cut or fill section will be considered waste. Replacement of unsuitable material will be paid for using excavation and embankment bid items. The Construction Observer will define unsuitable material. Material, which the Contractor might deem to be unsatisfactory or unsuitable, due to moisture content, will not be considered unsuitable material, unless otherwise approved.

WILCO TEXAS
BGE, Inc.
101 W Louis Henna Blvd, Suite 400, Austin, TX 78728
Tel: 512-879-0400 • www.bgeinc.com
TBPE Registration No. F-1046

RM 2243

GENERAL NOTES

SHEET 5 OF 17

FED.RD. DIV.NO.	PROJECT NO.		SHEET NO.
6			6D
STATE	DIST.	COUNTY	
TEXAS	AUS	WILLIAMSON	
CONT.	SECT.	JOB	HIGHWAY NO.
			RM 2243

4/10/2025 12:50:32 PM pdf.pltcfg
G:\TXC\Projects\County*Williamson\7473-02 RM 2243 Phase 1A\03*CADD\01*Shts\00-GEN\RM2243*P1A*GN*01.dgn

Prior to begin embankment of existing area, correct or replace unstable material to a depth of 6 in. below existing grade. Embankment areas will be inspected prior to beginning work.

Rock or broken concrete produced by the project is allowed in earth embankments. The size of the rock or broken concrete will not exceed the layer thickness requirements in Section 132.3.4., "Compaction Methods." The material will not be placed vertically within 5 ft. of the finished subgrade elevation.

Embankment placed vertically within 5 ft. of the finished subgrade elevation or within the edges of the subgrade and treated with lime, cement, or other calcium-based additives must have a sulfate content less than 3000 ppm. Allow 5 business days for testing. Treatment of sulfate material 3000 ppm to 7000 ppm requires 7 days of mellowing and continuous water curing, in accordance TxDOT guidelines for Treatment of Sulfate-Rich Soils and Bases in Pavement Structures (9/2005). Material over 7000 ppm is not allowed.

ITEM 160 - TOPSOIL
Off-site topsoil will have a minimum PI of 25.

No Sandy Loam allowed.

Obtain approval of the actual depth of the topsoil sources for both on-site and off-site sources.

Construct topsoil stockpiles of no more than five (5) feet in height.

It is permissible to use topsoil dikes for erosion control berms within the right of way, as directed.

Seed or track slopes within 14 days of placement.

Salvage topsoil from sites of excavation and embankment. Maximum salvage depth is 6 inches.

Windrowing of topsoil obtained from the Right of Way (ROW) is not allowed.

ITEM 162 – SODDING FOR EROSION CONTROL
Provide common Bermuda. Provide St. Augustine if the adjacent grass is St. Augustine.

ITEM 164 – SEEDING FOR EROSION CONTROL
Hydro mulch seeding will be allowed as a substitute for drill seeding if placed October 1 thru January 31. It may only be substituted in areas with a slope less than 1 in. vertical to 12 in. horizontal. It may not be used in the bottom of a ditch or channel. Payment will be made using the existing drill seed item.

ITEM 168 – VEGETATIVE WATERING
Water all areas of project to be seeded or sodded.

Maintain the seedbed in a condition favorable for the growth of grass. Watering can be postponed immediately after a rainfall on the site of ½ inch or greater, but will be resumed before the soil dries out. Continue watering until final acceptance.

Vegetative watering rates and quantities are based on ¼ inch of watering per week over a 3-month watering cycle. The actual rates used and paid for will be as directed and will be based on prevailing weather conditions to maintain the seedbed.

Obtain water at a source that is metered (furnish a current certification of the meter being used) or furnish the manufacturer's specifications showing the tank capacity for each truck used. Notify the Engineer, each day that watering takes place, before watering, so that meter readings or truck counts can be verified.

ITEM 169 – SOIL RETENTION BLANKETS
Type A blankets containing straw fibers are not allowed. Type B and D blankets shall be a spray type blanket.

ITEM 247 - FLEXIBLE BASE
The layer thickness will be 4 in. to 6 in. unless shown on the plans. Placing in a single layer is allowed when total thickness of base is 8 in. or less. When placed in multiple layers, compact the bottom and middle layers to at least 95% and 98% of the maximum dry density, respectively. When placed in a single layer or the final layer, compact to at least 100%.

Correction of subgrade soft spots is subsidiary.

Complete per plans the subgrade, ditches, slopes, and drainage structures prior to the placement of base.

Do not use a vibratory roller to compact base placed directly on top of a drainage structure.

Grade 4 will have the same material requirements as Grade 5 except minimum compressive strength at lateral pressure 3 psi will be 70 psi and at lateral pressure 15 psi will be 150 psi. Grade 4 does not have a minimum compressive strength at lateral pressure 0 psi.

ITEMS 260 THRU 276 – SUBGRADE TREATMENTS AND BASE
Use ordinary compaction for subgrade treatment.

Provide soil and base samples 5 business days prior to perform treatment work to allow time to test soil and confirm treatment rate.

ITEM 260 - LIME TREATMENT (ROAD-MIXED)
Unless shown on the plans, apply **6.00** pounds per square yard per inch of depth.

Lime treatment shall be applied to the existing soil prior to any embankment being placed.

WILCO TEXAS
BGE, Inc.
101 W Louis Henna Blvd, Suite 400, Austin, TX 78728
Tel: 512-879-0400 • www.bgeinc.com
TBPE Registration No. F-1046

RM 2243

GENERAL NOTES

SHEET 6 OF 17

FED.RD. DIV.NO.	PROJECT NO.	SHEET NO.
6		6E

STATE	DIST.	COUNTY	
TEXAS	AUS	WILLIAMSON	
CONT.	SECT.	JOB	HIGHWAY NO.
			RM 2243

4/10/2025 12:50:34 PM pdf.pltcfg
G:\TXC\Projects\County\Williamson\7473-02 RM 2243 Phase 1A\03*CADD\01*Shts\00-GEN\RM2243*P1A*GN*01.dgn

For sulfate content greater than 3000 ppm, mix in an additional 4.0% points above optimum moisture after initial mixing and prior to mellow.

If the sulfate content is greater than 7000 ppm, do not treat. Undercut the unsuitable material to the depth per bid item for lime treatment and replace unsuitable material in accordance with Item 110. Payment will be made in accordance with Item 110.

ITEM 300s – SURFACE COURSES AND PAVEMENTS
For seal coat applications: Asphalt cements, cutback, performance-graded asphalt season is May 1 thru September 15. Emulsified asphalt season is April 1 thru October 15.

The latest work start date for asphalt season is August 1 when a date is required per special provision to Item 8.1.

Overlay and seal coat projects must include placement of surface material on the existing mailbox turnouts, including turnouts that are worn paths without a pavement structure. Apply a new surface and material as necessary to create a mailbox turnout with a cross slope that matches the adjacent pavement. Payment of work will be in accordance with the item for the type of material placed. If no bid item for payment is provided in the Contract, the work will be measured and paid for in accordance with Article 9.7., "Payment for Extra Work and Force Account Method."

ITEM 310 – PRIME COAT
Apply blotter material to all driveways and intersections. This work is subsidiary.

When Multi Option is allowed, provide MC 30, EC 30 or AE-P. MC 30 is not allowed in Travis County.

Rolling to ensure penetration is required.

ITEMS 341 THRU 348 - HOT-MIX ASPHALT PAVEMENT
Core holes may be filled with an Asphaltic patching material meeting the requirements of DMS-9203 or with SCM meeting requirements of DMS-9202.

Remove and dispose of off the ROW the audible/profile markings, reflectorized markings, and raised markers.

Install transverse butt joints with 50 ft. H: 1 in. V transition from the new ACP to the existing surface. Install a butt joint with 24 in. H: 1 in. V transition from the new ACP to a driveway, pullout or intersection. Saw cut the existing pavement at the butt joints. This work is subsidiary.

Use a device to create a maximum 3H:1V notched wedge joint on all longitudinal joints of 2 in. or greater. This work is subsidiary.
Prior to milling, core the existing pavement to verify thickness. This work is subsidiary.

County: Williamson **CSJ:** 0914-05-222
Highway: RM 2243 Phase 1A

Ensure placement sequence to avoid excess distance of longitudinal joint lap back not to exceed one day's production rates.

Submit any proposed adjustments or changes to a JMF before production of the new JMF.
Tack every layer. Do not dilute tack coat. Apply it evenly through a distributor spray bar.

Provide a minimum transition of 10-ft for intersections, 10-ft for commercial driveways, and 6-ft for residential driveways unless otherwise shown on the plans.

Irregularities will require the replacement of a full lane width using an asphalt paver. Replace the entire sublot if the irregularities are greater than 40% of the sublot area.

Lime or an approved anti-stripping agent must be used when crushed gravel is utilized to meet a SAC "A" requirement.

When using RAP or RAS, include the management methods of processing, stockpiling, and testing the material in the QCP submitted for the project. If RAP and RAS are used in the same mix, the QCP must document that both of these materials have dedicated feeder bins for each recycled material. Blending of RAP and RAS in one feeder bin or in a stockpile is not permitted.

Asphalt content and binder properties of RAP and RAS stockpiles must be documented when recycled asphalt content greater than 20% is utilized.

No RAS is allowed in surface courses.

Department approved warm-mix additives is required for all surface mix application when RAP is used. Dosage rates will be approved during JMF approval.

The Hamburg Wheel Test will have a minimum rut depth of 3mm except for SMA with HPG or PG 76.

ITEMS 341 - DENSE-GRADED HOT-MIX ASPHALT
Design all Type D mixtures as a surface mix, maximum 15% RAP, and without RAS.

For all mix types, contractor may not use a substitute PG binder for 76-22. When using substitute binders, mold specimens for mix design and production at the temperature required for the substitute binder used to produce the HMA.

The Hamburg Wheel minimum number of passes for PG 64 or lower is reduced to 7,000. The Engineer may accept Hamburg Wheel test results for production and placement if no more than 1 of the 5 most recent tests is below the specified number of passes and the failing test is no more than 2,000 passes below the specified number of passes.

ITEMS 347 - THIN OVERLAY MIXTURES (TOM)
Provide informational shear bond strength testing in accordance with Item 341.

WILCO TEXAS

BGE, Inc.
101 W Louis Henna Blvd, Suite 400, Austin, TX 78728
Tel: 512-879-0400 • www.bgeinc.com
TBPE Registration No. F-1046

RM 2243

GENERAL NOTES

SHEET 7 OF 17

FED.RD. DIV.NO.	PROJECT NO.		SHEET NO.
6			6F
STATE	DIST.	COUNTY	
TEXAS	AUS	WILLIAMSON	
CONT.	SECT.	JOB	HIGHWAY NO.
			RM 2243

4/10/2025 12:50:36 PM pdf.pltcfg
G:\TXC\Projects\County*Williamson\7473-02 RM 2243 Phase 1A\03*CADD\01*Shts\00-GEN\RM2243*P1A*GN*01.dgn

For SAC A, blending SAC B aggregate with an RSSM greater than the SAC A rating or 10, whichever is greater, is prohibited.

Produce mixture with a Department approved WMA additive or process to facilitate compaction when the haul distance is greater than 40 miles or when the air temperature is 70°F and falling. WMA processes such as water or foaming processes are not allowed under these circumstances.

ITEM 400 - EXCAVATION AND BACKFILL FOR STRUCTURES
Unless otherwise shown on the plans, for cutting and restoring pavement use the AUS District Flexible Pavement Details found at https://www.txdot.gov/about/districts/austin-district/district-standards.html .

Saw-cut the pavement at the edge of the excavation. This work is subsidiary.

Backfill the bridge ends in accordance with the limits shown on Option 2 of the TxDOT "CSAB" Standard. If the bridge includes an approach slab, extend the limits of the backfill to 10 ft. beyond the end of the approach slab. This work is subsidiary.

ITEM 416 - DRILLED SHAFT FOUNDATIONS
Concrete shall be Class "C".

Stake all Foundations, for approval, before beginning drilling operations.

Calculate the vertical signal head clearance before placing any signal pole foundation.
For mast-arm signal and strain pole anchor bolts, set two in tension and two in compression.

Obtain approval of placement prior to placing concrete.

Remove spoils from a flood plain at the end of each workday.

ITEMS 420, 425, 441, & 462 - STRUCTURES
Bridge Vertical Clearance and Traffic Handling.
Notify TxDOT project staff and the local bridge engineer 10 business days prior to the following: change in vertical clearance, placing beams/girders over traffic, opening, or removing traffic from a bridge or portion of a bridge, and completion of bridge work. This requirement includes bridge class culverts. Provide vertical clearance for all structures (including signal mast arms, span wires, and overhead sign bridge structures) within the project limit. Submit information and notices to local bridge engineer at AUS_BRG_Notify@txdot.gov.

ITEM 423 - RETAINING WALLS
Mow strip shall be 2 ft. wide unless otherwise shown on the plans. Immediately backfill the face of the retaining wall after the wall height gets above the finish grade in front of the wall. Retaining wall coping gap from the face of the wall panel to the inside face of coping shall not be more than 1.5 in.

County: Williamson **CSJ:** 0914-05-222
Highway: RM 2243 Phase 1A

Provide a sample for approval of the surface finish prior to beginning fascia work and precast operations. Unless otherwise shown on the plans, the wall fascia shall receive an ashlar stone finish. Color coatings may be applied using concrete paint or opaque sealer. See Item 427 for more information. This work is subsidiary.

Type BS backfill will use modified gradation limits as shown below.

Type	Sieve Size	Percent Retained
BS MOD	3 in.	0
	No. 4	85-100

ITEM 432 - RIPRAP
Mow strip riprap will be 4 in. and all other riprap will be 5 in. unless otherwise shown on the plans. Mow strip for cable barrier may be placed monolithically with the barrier foundations if using concrete in accordance with Item 543. Fiber reinforcement is not allowed except in mow strip for cable barrier if foundation and mow strip are placed monolithically. GFRP is allowed reinforcement for all applications.

Saw-cut existing riprap then epoxy 12 in. long No. 3 or No. 4 bars 6 in. deep at a maximum spacing of 18 in. in each direction to tie new riprap to existing riprap. This work is subsidiary.
Provide Type A Grade 3 or 5 flexible base for cement stabilized riprap. Compressive strengths for flexible base are waived.

SGT approach taper, paid for using mow strip item, will be installed using concrete, flexible base coated with SS-1 at a rate of 0.12 GAL/SY, or HMA Type B/C/D. Placement will be ordinary compaction and does not require placement using an asphalt paver.

ITEM 450 - RAILING
Use the elliptical tube option for rails T401, T402, and C402.

ITEM 465 – JUNCTION BOXES, MANHOLES, AND INLETS
Maintain drainage at curb inlets until the final roadway surface is placed.

For inlets not placed in roadway, construct cast-in-place reinforced concrete apron as shown in the standards. This work is subsidiary.

Backfill shall use cohesionless material per Item 400 or flowable fill if width between structure and extent of excavation is 2 ft. or less. This is subsidiary.

ITEM 466 - HEADWALLS AND WINGWALLS
Remove all loose formwork and materials from the waterway at the end of each work week or prior to a rain event. Debris that falls into the waterway must be removed at the end of each work day. Upon completion of the structure, stencil the National Bridge Inventory (NBI) number (structure number) using black paint and 4 in. tall numbers at 4 locations designated by TxDOT. This work is subsidiary.

WILCO TEXAS
BGE, Inc.
101 W Louis Henna Blvd, Suite 400, Austin, TX 78728
Tel: 512-879-0400 • www.bgeinc.com
TBPE Registration No. F-1046

RM 2243

GENERAL NOTES

SHEET 8 OF 17

FED.RD. DIV.NO.	PROJECT NO.		SHEET NO.
6			6G
STATE	DIST.	COUNTY	
TEXAS	AUS	WILLIAMSON	
CONT.	SECT.	JOB	HIGHWAY NO.
			RM 2243

4/10/2025 12:50:38 PM pdf.pltcfg
G:\TXC\Projects\County\Williamson\7473-02 RM 2243 Phase 1A\03*CADD\01*Shts\00-GEN\RM2243*P1A*GN*01.dgn

ITEM 467 - SAFETY END TREATMENT
Field adjust pipe end to maintain the necessary slope. Field cutting of pipe end is allowed. Coat all metal field cuts or exposed reinforcement with asphalt paint.

For all Type II SETs, provide riprap apron shown in the cast-in-place standards and precast riprap detail standard. This work is subsidiary.
Cast-in-place or precast will be allowed unless stated otherwise.

ITEM 496 - REMOVING STRUCTURES
Submit a demolition plan to the Engineer. Have the plan signed and sealed by a licensed professional engineer when the structure will continue to accommodate traffic after removal has begun and the removal impacts any part of the structure below the deck or riding surface. If applicable, the plan must detail requirements for meeting the U.S. Army Corps of Engineers' Section 404 Permit. The demolition plan must detail handling of roadway and waterway traffic. Waterway traffic must be maintained at all times unless a closure is approved by the Engineer.

No debris is allowed to fall into a body of water. Debris that falls into the water must be removed at the end of each workday. Debris that falls into the floodway must be removed at the end of each work week or prior to a rain event.

No debris is allowed to fall directly onto existing pavement. Existing pavement must be protected from damage by debris with a minimum of 1 ft. sand cushion. Submit an alternate roadway protection or cushion material to Engineer for approval. If existing pavement is PFC, use a vacuum truck to remove embedded sand after removal of sand cushion and debris. This work is subsidiary.

ITEM 502 - BARRICADES, SIGNS, AND TRAFFIC HANDLING

Table 1

Roadway	Limits	Allowable Closure Time
IH 35	All (1 lane closed)	9 P to 5 A
IH 35	All (2 lanes closed, see allowable work below)	9 P to 5 A
IH 35	All (2 lanes closed, all work)	11 P to 5 A
SH 45	US 183 to SH130	8 P to 5 A
LP 1	William Cannon to Parmer Lane	8 P to 5 A
US 183	SH 29 to FM 1327	8 P to 5 A
SH 71	SH 130 to IH 35	8 P to 5 A
SH 71	SH 304 to Tahitian Drive	8 P to 5 A
SH 71	US 290 W to RM 3238	8 P to 5 A
US 290 W	IH 35 to Nutty Brown Rd	8 P to 5 A
US 290 E	IH 35 to SH 95	8 P to 5 A
FM 734	FM 1431 to US 290 E	8 P to 5 A
US 79	IH 35 to Bus 79 in Taylor	8 P to 5 A
RM 1431	Lohmans Ford Rd to IH 35	8 P to 5 A
SH 29	LP 332 western terminus to SH 130	8 P to 5 A
SH 80	Charles Austin to River Road	8 P to 5 A
RM 2222	All	8 P to 5 A

RM 620	All	8 P to 5 A
RM 2244	All	8 P to 5 A
SPUR 69	All	8 P to 5 A
LP 360	All	8 P to 5 A
LP 343	All	8 P to 5 A
LP 275	All	8 P to 5 A
FM 1325	All	8 P to 5 A
All	Within 200' of a signalized intersection	9 P to 5 A
All	All (Full Closure, see allowable work below)	11 P to 4 A

Table 3 (Mobile Operations)

Roadway	Allowable Sun Night thru Fri Noon	Allowable Sat thru Sun Morn
Within Austin City Limits	10 A to 2 P and 7 P to 6 A	7 P to 10 A
Outside Austin City Limits	9 A to 3 P and 7 P to 7 A	6 P to 11 A
IH 35 main lanes	10 P to 5 A	9 P to 9 A
AADT over 50,000	8 P to 6 A	8 P to 10 A

For roadways without defined allowable closure times, nighttime lane closures will be allowed from 8 P to 6 A.

Daytime or Friday night lane closures will not be allowed unless otherwise shown on the plans. One lane in each direction will remain open at all times for all roadways unless otherwise shown on the plans.

Two lanes closed on IH 35 allowed to begin at 9 P.M. for main lane (shoulder work not included) hotmix overlay or pavement repair operations (does not include bridge joint work).

Full closures only allowed Friday night thru Monday morning for bridge beam installation, bridge demolition, or OSB truss removal/installation. Full closures only allowed for roadways with frontage roads or if a designated detour route is provided in the plans.

No closures will be allowed on the weekends, business day prior, and business day after the National Holidays defined in the Standard Specifications, Good Friday, and Easter weekend.

No closures will be allowed 1 P.M. to 11 P.M. the Sunday of the Super Bowl.
Time charges will not be suspended during the large and special events listed below. These events are provided in the contract to allow scheduling of work around these lane closure restrictions.

All lanes will be open by noon of the day before the large events listed in below table. No closures will be allowed on Friday and the weekends for projects within 20 miles of these large events:

WILCO TEXAS
BGE, Inc.
101 W Louis Henna Blvd, Suite 400, Austin, TX 78728
Tel: 512-879-0400 • www.bgeinc.com
TBPE Registration No. F-1046

RM 2243

GENERAL NOTES

SHEET 9 OF 17

FED.RD. DIV.NO.	PROJECT NO.		SHEET NO.
6			6H
STATE	DIST.	COUNTY	
TEXAS	AUS	WILLIAMSON	
CONT.	SECT.	JOB	HIGHWAY NO.
			RM 2243

4/10/2025 12:50:40 PM pdf.pltcfg
G:\TXC\Projects\County*Williamson\7473-02 RM 2243 Phase 1A\03*CADD\01*Shts\00-GEN\RM2243*P1A*GN*01.dgn

Table 4 (Large Events)

Event	City	Dates
Formula 1 @ COTA	Austin	Annually (See Website) Event
Moto GP @ COTA	Austin	Annually (See Website) Event
ACL Fest	Austin	Annually (See Website) Event
SXSW	Austin	Annually (See Website) Event
ROT Rally	Bastrop	Annually (See Website) Event
UT Football Games	Austin	Annually (See Website) Event
Sales Tax Holiday	All	Annually (See Website) Event
Rodeo Austin	Austin	Annually (See Website) Event

Due to FIFA World Cup 2026, closures will be restricted for the following dates and roadways. Closure restriction period begins 8 PM the day before and ends at 8 AM the day after.

FIFA Houston Roadways: SH 71 east of IH 35 and US 290 east of IH 35.
FIFA Houston Dates: 6/14/26, 6/17/26, 6/20/26, 6/23/26, 6/26/26, 6/29/26, 7/4/26

FIFA Dallas Roadways: IH 35 north of RM 620
FIFA Dallas Dates: 6/14/26, 6/17/26, 6/22/26, 6/25/16, 6/27/26, 6/30/26, 7/3/26, 7/6/26, 7/14/26

All lanes will be open by noon of the day before the special events listed in below table. No closures will be allowed on Friday and the weekends for projects within 10 miles of these special events:

Table 5 (Special Events)

Event	City	Dates
Eaker BBQ Competition	Fredericksburg	March 10, 2024
Sherwood Forest Faire	McDade / Paige	Weekends in March and April
Smithville Jamboree	Smithville	April 4-6, 2024
Two Step Inn	Georgetown	April 20-24, 2024
Wiener Dog Races	Buda	April 27-28, 2024
Founders Day Festival	Dripping Springs	April 26-28, 2024
Red Poppy Festival	Georgetown	April 26-28, 2024
Crawfish Open	Llano	3rd Friday and Saturday in April
Fair and Rodeo	Liberty Hill	May 18, 2023
Founders Day Ceremony	Fredericksburg	2nd Weekend in May
Crawfish Festival	Fredericksburg	Saturday before Memorial Day
Lakefest Boat Races	Marble Falls	June 10-11, 2023
Watermelon Thump	Luling	Last Full Weekend in June

Pie in the Sky	Kyle	Sept 1-2, 2023
Wine and Music Festival	Georgetown	Last Saturday of September
Deer Season Opening Weekend	All Counties in Burnet Area Office	1st Friday and Saturday of Season
Christmas Nights of FBG Lights	Fredericksburg	Nov 21, 2023
Christmas on Mercer	Dripping Springs	Dec 2, 2023
Lady of Guadalupe Procession	Fredericksburg	Dec 12, 2023
Texas State Graduation Fall	San Marcos	TBD
Texas State Graduation Spring	San Marcos	TBD

All the large and special events listed in the above tables occur annually. Coordinate with the Department and review the city/event website to plan around the future events.

To account for directional traffic volumes, begin and end times of closures may be shifted equally by the Engineer. The closure duration will remain. Added compensation is not allowed.

One-way traffic control, including work performed under Item 510, must be set up to provide a maximum of 20 minutes of delay to the traveling public.

Submit an emailed request for a lane closure (LCN) to TxDOT. The email will be submitted in the format provided. Receive concurrence prior to implementation. Submit a cancellation of lane closures a minimum of 18 hours prior to implementation. Blanket requests for extended periods are not allowed. Max duration of a request is 2 weeks prior to requiring resubmittal.

Provide 2-hour notice prior to implementation and immediately upon removal of the closure.

For roadways listed in Table 1: Submit the request 96 hours prior to implementation.

For roadways not listed in Table 1: Submit the request a minimum of 48 hours prior to the closure and by the following deadline immediately prior to the closure: 11A on Tuesday or 11A on Friday.

For all roadways: Submit request for traffic detours and full roadway closures 168 hours prior to implementation. Submit request for nighttime work 96 hours to implementation date.

Cancellations of accepted closures (not applicable to full closures or detours) due to weather will not require resubmission in accordance with the above restrictions if the work is completed during the next allowable closure time.
Closures that conflict with adjacent contractor will be prioritized according to critical path work per latest schedule. Conflicting critical path or non-critical work will be approved for first LCN submitted. Denial of a closure due to prioritization or other reasons will not be reason for time suspension, delay, overhead, etc.

Meet with the Engineer prior to lane closures to ensure that sufficient equipment, materials, devices, and workers will be used. Take immediate action to modify current and future traffic control, if at any time the queue becomes greater than 20 minutes.

Consider inclement weather prior to implementing the lane closures. Do not set up traffic control when the pavement is wet.

WILCO TEXAS

BGE, Inc.
101 W Louis Henna Blvd, Suite 400, Austin, TX 78728
Tel: 512-879-0400 • www.bgeinc.com
TBPE Registration No. F-1046

RM 2243

GENERAL NOTES

SHEET 10 OF 17

FED.RD. DIV.NO.	PROJECT NO.		SHEET NO.
6			61
STATE	DIST.	COUNTY	
TEXAS	AUS	WILLIAMSON	
CONT.	SECT.	JOB	HIGHWAY NO.
			RM 2243

4/10/2025 12:50:42 PM pdf.pltcfg
G:\TXC\Projects\County*Williamson\7473-02 RM 2243 Phase 1A\03*CADD\01*Shts\00-GEN\RM2243*P1A*GN*01.dgn

Cover, relocate, or remove existing small, large, and overhead signs that conflict with traffic control. Cover large and overhead signs to remain using latest standard TS-CD. This work is subsidiary.

Install all permanent signs, delineation, and object markers required for the operation of the roadway before opening to traffic. Use of temporary mounts is allowed or may be required until the permanent mounts are installed or not impacted by construction. Maintain the temporary mounts. This work is subsidiary.

Place a 28-inch cone, meeting requirements of BC (10) and Ty III barricades, on top of foundations that have protruding studs. This work is subsidiary.

Vertical panels used on roadways with speed limit 55 mph or greater must be round in shape or have a self-righting mechanism. The "flat" or "oblong" shaped vertical panels are not allowed.

A series of sequential flashing warning lights, per BC(7), must be installed in a merging taper for long term stationary TCP. This includes all TCP setups, such as those shown on the plans or TCP setups per the standards.

Edge condition treatment types must be in accordance with the TxDOT standard. Installation and removal of a safety slope is subsidiary.

To determine a speed limit or an advisory speed limit, submit a request to TxDOT 60 business days prior to manufacture of the sign.

For non-site-specific signal projects, 2 months of barricades will be paid per work order location.

The Contractor Force Account "Safety Contingency" that has been established for this project is intended to be utilized for work zone enhancements, to improve the effectiveness of the Traffic Control Plan, that could not be foreseen in the project planning and design stage. These enhancements will be mutually agreed upon by the Engineer and the Contractor's Responsible Person based on weekly or more frequent traffic management reviews on the project. The Engineer may choose to use existing bid items if it does not slow the implementation of enhancement.

Business access signs will be paid using safety contingency. Install as directed by the Engineer. Company logos will not be permitted on the signs. Maintenance of the signs will be subsidiary to Item 502.

ITEM 503 – PORTABLE CHANGEABLE MESSAGE SIGN
Place PCMS 10 calendar days prior to begin work stating "Road Work Begin Soon, Contact 512-943-3330 For Info".

Place PCMS at time of LCN request. Place the PCMS at the expected end of queue caused by the closure. When the closure is active, revise the message to reflect the actual condition during the closure, such as "RIGHT LN CLOSED XXX FT".

ITEM 505 – TRUCK MOUNTED ATTENUATOR AND TRAILER ATTENUATOR
The TMA/TA used for installation/removal of traffic control for a work area will be subsidiary to the TMA/TA used to perform the work.

The contractor will be responsible for determining if one or more operations will be ongoing at the same time to determine the total number of TMA/TA required for the work. TMA/TAs paid by the day is full compensation for all worksite locations during an entire day.

TMA/TAs used to protect damaged attenuators will be paid by the day using the force account item for the repair.

ITEM 506 - TEMPORARY EROSION, SEDIMENTATION, AND ENV CONTROLS
If SW3P plan sheets are not provided, place the control measures as directed.

Install, maintain, remove control measures in areas of the right of way utilized by the Contractor that are outside the limits of disturbance required for construction. Permanently stabilize the area. This work is subsidiary.
Erosion control measures must be initiated immediately in areas where construction activities have ceased and will not resume for a period exceeding 14 calendar days. Vertical track all exposed soil, stockpiles, and slopes. Re-track after each rain event or every 14 days, whichever occurs first. Sheep foot roller is allowed for vertical tracking. This work is subsidiary.

For routine or anticipated dewatering, notify the engineer 72 hours before beginning dewatering. Notify the Engineer within 1 hour of beginning emergency or recent rainfall dewatering. Water located within the ROW that will leave the ROW must appear free of pollutants such as suspended sediment, oil sheen, floating solids, etc. Dirty water must pass thru adequate BMPs prior to leaving the ROW to prevent discharge of dirty water. Bypass pumping of water found in a navigable waterway that enters from outside the ROW and is discharged downstream of the ROW will not require the use of BMPs. Dewatering BMPs will be paid for in conformance with the applicable bid items. However, if the necessary BMP item is not included in the Contract, payment for the BMP will be in accordance with Article 9.7., "Payment for Extra Work and Force Account Method." The act of dewatering and the equipment used to dewater will not be paid for directly but will be subsidiary to pertinent bid items.

Unless a specific pay item is provided in the plans, the installation of the 6:1 or flatter for RFD side slopes in the safety zone will be subsidiary to pertinent bid items.

Cover small waste containers (100 gallons or less) at all times. This work is subsidiary. Large waste containers (more than 100 gallons) must have a secondary discharge containment system around the container using erosion control logs. Installation of the log for each container location will be paid using existing bid items. Repair, remove, or replace of the log will not be

WILCO TEXAS
BGE, Inc.
101 W Louis Henna Blvd, Suite 400, Austin, TX 78728
Tel: 512-879-0400 • www.bgeinc.com
TBPE Registration No. F-1046

RM 2243

GENERAL NOTES

SHEET 11 OF 17

FED.RD. DIV.NO.	PROJECT NO.		SHEET NO.
6			6J
STATE	DIST.	COUNTY	
TEXAS	AUS	WILLIAMSON	
CONT.	SECT.	JOB	HIGHWAY NO.
			RM 2243

4/10/2025 12:50:44 PM pdf.pltcfg
G:\TXC\Projects\County*Williamson\7473-02 RM 2243 Phase 1A\03*CADD\01*Shts\00-GEN\RM2243*P1A*GN*01.dgn

paid. Revisions, repairs, remove or replace of the log during exchange of empty/full containers at the same location will not be paid.

Portable restrooms must be located more than 50 ft. from a waterway. Tie or stake down portable restrooms to prevent tipping due to vandalism or weather. This work is subsidiary.

Provide a designated location for disposal when excess and waste, including waste generated from cleaning of all equipment used for mixing, hauling, and transfer concrete is disposed in the ROW or PSL. Manufactured disposal containers must be metal or a plastic material with minimum 10 mil thickness. Paper, earthen berms, or pits must be lined with minimum 10 mill thickness polyethylene sheeting. Disposal locations must be located a minimum of 50 ft. from a waterway, tree, or sensitive feature. The disposal location must have a minimum height of 6 in. Maintain a minimum 4 in. of freeboard at all times. Disposal locations are not required for cleaning of small hand tools. Hardened concrete waste may be used as embankment if placed in accordance with Item 132.

Dust Control
Stockpiles that will be inactive for greater than 14 days must be treated to contain dust by covering with chemical dust suppressant, soil blanket, vertical tracking, or method other than sprinkling with water. Stockpiles that are actively being used must be treated to contain dust by vertical tracking or a method determined by the Contractor. This work is subsidiary.

Provide designated construction traffic routes when feasible. Construction site traffic must be directed to use designated routes.

ITEM 508 – CONSTRUCTING DETOURS
Detour typical section must match the adjacent roadway section, unless shown on the plans. Provide a ride quality meeting Item 585 Surface Test Type A. Ride quality corrective action is subsidiary.

Type B ACP use PG 64-22 and Type C or D ACP use PG 76-22, unless shown on the plans.

Flexible base will be Type A Grade 5 placed using ordinary compaction. Base compressive strengths are waived for roadways with AADT less than 50,000.

ITEM 512 – PORTABLE TRAFFIC BARRIER
If bid item allows concrete or steel, the steel barrier must provide a maximum deflection of 2 ft. 3 in. Pinning and other work to obtain the required deflection is subsidiary.

Any increase in temporary barrier quantities that occur due to Contractor changes in the sequence of work or the traffic control plan will not be paid.

ITEMS 528, 529, 530, 531, & 536 – MISCELLANEOUS CONSTRUCTION
Reinforcement will be in accordance with Section 432.3.1 unless shown on the plans. Fiber reinforcement is not allowed. GFRP is allowed reinforcement for all applications. Class A and B Concrete are allowed to use Coarse Aggregate Grades 1-8.

Unless shown on the plans, all concrete will be 5 in. thick and have 2 in. sand, base, or RAP bedding. Furnish base meeting the requirement for any type or grade in accordance with Item 247. Compressive strengths for flexible base are waived. RAP must be 100% passing a 1 in. sieve. Bedding and flexible base must be placed using ordinary compaction.

Expansion joints will be placed every 40 ft. Expansion joints must be 1 in. wide asphalt board and flush with the surface. The bottom of the asphalt board will be at half the depth of the concrete. The reinforcement will be continuous thru the expansion joint.

Sidewalk cross slope must not exceed 1.5%.

If roots are encountered verify with the Engineer before accommodating or removing 2 in. diameter or larger roots. Root removal must be in accordance with Section 752.4.2. Roots may remain in the bedding or base. For improvements within 6 in. of a root, the concrete thickness may be reduced by 1 in. and the bedding increased by 1 in. to minimize impacts to the roots. Adjust bedding and surface profile to provide a 1 in. bedding cushion around the roots. The surface profile may be adjusted to the extent allowed by ADA. This work is subsidiary.

ITEM 530 – INTERSECTIONS, DRIVEWAYS, AND TURNOUTS
Notify property owners at least 48 hr. before beginning work on their driveway. Use a means and methods to construct the driveway while maintaining access to the property at all times. Full closure of a driveway is allowed for reconstruction if duration and alternate access are approved by Engineer. Install and maintain material across a work zone as temporary access. This work is subsidiary.

Unless otherwise shown on the plans, use the AUS District Driveway and Mailbox Turnout standard found at www.txdot.gov/about/districts/austin-district/district-standards.html.

Driveways that are public county roads or city streets the pavement structure will match the adjacent roadway.

ITEMS 540, 542, & 544 - METAL BEAM GUARD FENCE AND GUARDRAIL END TREATMENTS
Furnish round timber posts for guard fence. Steel posts for low fill culvert applications is subsidiary including use of low fill culvert application due to other concrete structures such as inlets. Long span application at inlets may be used as an alternate to low fill culvert. Unless otherwise specified on the plans, use of low fill culvert or long span at inlets will be subsidiary to pertinent items. Stake the locations for approval before installation. Adjust the limits of the fence to meet field conditions. Install delineators before opening the road to traffic.

Retain all materials. Existing materials that are structurally sound and dent free may be reused. All reused material will be from this project and in compliance with current standards. Structurally sound rust spots with the largest dimension of 4 in. may be cleaned and repaired in accordance with Section 540.3.5. Punch or field drill holes in the metal rail element to accommodate post spacing. Additional holes for splice or connections are not allowed. Space

WILCO TEXAS
BGE, Inc.
101 W Louis Henna Blvd, Suite 400, Austin, TX 78728
Tel: 512-879-0400 • www.bgeinc.com
TBPE Registration No. F-1046

RM 2243

GENERAL NOTES

SHEET 12 OF 17

FED.RD. DIV.NO.	PROJECT NO.		SHEET NO.
6			6K
STATE	DIST.	COUNTY	
TEXAS	AUS	WILLIAMSON	
CONT.	SECT.	JOB	HIGHWAY NO.
			RM 2243

4/10/2025 12:50:46 PM pdf.pltcfg
C:\TXC\Projects\County*Williamson\7473-02 RM 2243 Phase 1A\03*CADD\01*Shts\00-GEN\RM2243*P1A*GN*01.dgn

the field holes in accordance with the latest standard but no closer than the minimum spacing shown on the current standard.

Remove, replace, and install mow strip block out material. Construct new block outs and backfill unused block outs with class B concrete. This work is subsidiary.

Repair of mow strip damage, not caused by contractor negligence, and installation of new mow strip will be paid with appropriate bid items. Backfill and shoulder up of area around fence and mow strip will be paid using embankment item.

ITEM 545 - CRASH CUSHION ATTENUATORS
Use a coring machine or saw cut to remove the mounting hardware/bolts from the existing pavement. Cutting the hardware flush with the surface is not allowed. Refill voids in accordance with the pavement specification. This work is subsidiary.

Install and maintain three 42 in. cones, vertical panels, or plastic drums in advance of the attenuator. Place at spacing per channelizing devices on BC (9). This work is subsidiary.

ITEMS 600s & 6000s – ITS, TOLLING, LIGHTING, SIGNING, MARKINGS, AND SIGNALS
Meet the requirements of the NEC, Texas MUTCD, TxDOT standards, and TxDOT Standard Specifications. Notify the Engineer if existing elements to remain do not meet code or specification.

Provide all service, equipment and material required to provide a functional item and interface with existing equipment and software.

For signals and illumination contact Dave Henry (Dave.Henry@txdot.gov) and Gabriela Perales (Gabriela.Perales@txdot.gov).

For ITS contact Doug Turner (Douglas.L.Turner@txdot.gov) and Gabriela Perales (Gabriela.Perales@txdot.gov).

Use the TxDOT provided form to submit an electrical, illumination, and signal checklist prior to request for signal activation or a punch list.

Provide a 14-day advance email notice to the Engineer to request illumination or traffic signal punch list inspection.

All items must be completed per the plans prior to traffic signal activation including deficiencies found in the punch list.

Provide a 14-day advance notice prior to planned traffic signal activation. Send notice by email to Meisu.Pan@txdot.gov, Robert.Bolin@txdot.gov, Rick.Thomas@txdot.gov, Gabriela.Perales@txdot.gov, and the Project Engineer.

County: Williamson **CSJ:** 0914-05-222
Highway: RM 2243 Phase 1A

The contractor must have a qualified technician and a representative from the controller and detection supplier on the project site to place the traffic signals in operation.

For existing traffic signals, provide a 14-day advance email notice to the Engineer with Contractor signal technician contact information and signal locations prior to working or assuming operations of illumination or traffic signal.

Provide a 60-day advance email notice to the Engineer to request signal timing if timing is not provided in the plans.

Provide a 180-day advance email notice to the Engineer for equipment to be provided by TxDOT.

Provide equipment that requires TxDOT programming, etc. to TxDOT 180 days in advance.

Prior to relief of maintenance, a Test Period is required for signals and ITS equipment in accordance with Item 680.3.1.7. Response time to reported trouble calls shall be less than 2 hours.

Complete repairs within 24 hours. Notify the Engineer and maintain a logbook in the controller cabinet of each trouble call. Do not clear the error log in the conflict monitor without approval.

Maintain the existing ITS equipment and keep HUB buildings operational during construction. ITS downtime is allowed from 12A to 4A and must be approved in advance by the Engineer. Submit the request 7 days prior to planned outage. Downtime is restricted to one time per HUB or equipment.

Definitions of abbreviations used to designate ITS equipment, material, etc. can be provided by the Engineer.

Provide email notice to TxDOT and toll road owner 60 business days prior to begin work that impacts tolling equipment. Attend a pre-construction meeting with TxDOT and toll road owner prior to begin work.

Coordinate with toll road owner during construction that impacts or installs tolling equipment. Toll owner will assist with inspection to ensure tolling equipment will operate correctly. Provide email notice to TxDOT and toll road owner 30 business days in advance of completion of toll equipment work. Once toll equipment work is complete, allow 60 calendar days for toll road owner to complete their portion of the work and testing.

Stakes or other physical method shall be installed to hold down conduit prior to placement of concrete/flow fill encasement.

Minimum distance between HDPE joints will be 200 ft.

WILCO TEXAS

BGE, Inc.
101 W Louis Henna Blvd, Suite 400, Austin, TX 78728
Tel: 512-879-0400 • www.bgeinc.com
TBPE Registration No. F-1046

RM 2243

GENERAL NOTES

SHEET 13 OF 17

FED.RD. DIV.NO.	PROJECT NO.		SHEET NO.
6			6L
STATE	DIST.	COUNTY	
TEXAS	AUS	WILLIAMSON	
CONT.	SECT.	JOB	HIGHWAY NO.
			RM 2243

4/10/2025 12:50:48 PM pdf.pltcfg
G:\TXC\Projects\County\Williamson\7473-02 RM 2243 Phase 1A\03\CADD\01\Shts\00-GEN\RM2243_P1A_GN_01.dgn

ITEM 618 - CONDUIT
Shift the locations of conduit and ground boxes to accommodate field conditions. Install conduit not exceeding 2 feet in any direction from a straight line. Install conduit at a minimum depth of 2 ft. below finished grade. Installation of the conduit by jacking or boring method will be at a depth of at least 1 ft. below bottom of subgrade.

Install a high tension, non-metallic pull rope in all empty conduit runs. This work is subsidiary. Use a coring device, not a hammer drill, when drilling holes through concrete structures.

Structurally mounted junction boxes will be as shown on the plans. When used for traffic signal installations, these boxes will be 12" x 12" x 8". This work is subsidiary.

For underground conduit, smooth wall schedule 40 equivalent HDPE can be substituted for schedule 40 PVC. Minimum distance between HDPE joints will be 200 ft. HDPE must transition to RMC/PVC per ED (11)-14.

For SCH 80 bore conduits, a schedule 40 equivalent HDPE carrier pipe of adequate size to carry the proposed conduits can be used as substitute.

When using existing conduit, ensure that all conduits have bushings and cleaned of dirt, mud, grease, and other debris. Re-strap existing or relocated conduit per the latest specification. This work is subsidiary.

Abandoned underground conduit must have all conductors removed. This work is subsidiary.

Stakes or other physical method shall be installed to hold down conduit prior to placement of concrete/flow fill encasement.

For conduit mounted to bridges in hangers, fiberglass can be substituted for RMC. Furnish and install per 2014 Special Specification 6390 or the 2024 specification when available.

ITEM 620 - ELECTRICAL CONDUCTORS
Provide 10-amp time delay fuses.

For Flashing Beacons (Item 685) and Pedestal Poles (Item 687), provide single-pole breakaway disconnects.

Install a minimum size 8 AWG equipment grounding conductor (EGC) in all conduits including loop detectors and traffic signal cables. Payment and the size of the EGC will be in accordance with standard ED (3)-14 note 12.

Permanently mark "Illumination" on the luminaire conductors installed inside a traffic signal pole. Make the marks easily visible from the hand hole.

County: Williamson **CSJ:** 0914-05-222
Highway: RM 2243 Phase 1A

ITEM 624 – GROUND BOXES
Aggregate for fill under the box will be crushed, have a maximum size of 2 in., minimum size of ½ in., and requirements per Item 302 are waived.

ITEM 644 – SMALL ROADSIDE SIGN ASSEMBLIES
Triangular slip base must be the clamp style to secure the post to the slip base. Set screw style slip base will not be allowed.

Contact https://lonestarlogos.com/contact/ to request removal of lone star logo signs (business directional signs typically blue background with white letters or logo). If lone star logo is unable to remove in a timely manner, remove and store signs for lone star logo pick up. This work is subsidiary.

ITEM 658 – DELINEATOR AND OBJECT MARKER ASSEMBLIES
All delineator, reflector, and object marker posts and supports, excluding metal components, must be manufactured in the same color that matches the color of the reflector. Field painting is not allowed.

Flexible posts YFLX and WFLX must be tubular in shape. The "flat" flexible posts are not allowed.

Installation and maintenance of portable CTB reflectors will be subsidiary to the barrier.

CTB delineators must be placed on top of the CTB.

ITEM 662 - WORK ZONE PAVEMENT MARKINGS
Notify the Engineer at least 24 hours in advance of work for this item.

Broken line markings must use solid line markings in lane shifts.

Maintain removable and short-term markings daily. Remove within 48 hours after permanent striping has been completed.

Item 668 is not allowed for use as Item 662.

Roadways with existing profile pavement markings or rumble strips must supplement work zone solid lines with traffic buttons spaced at 12 in. Traffic buttons used to supplement the work zone markings will be paid by the each in addition to the work zone item.

Short term removable markings designated by bid item description "SHT TERM RMV" will require the use of removable prefabricated pavement markings. Tabs will not be allowed as a substitute for prefabricated pavement markings.

ITEM 666 - RETROREFLECTORIZED PAVEMENT MARKINGS
Notify the Engineer at least 24 hr. before beginning work.

WILCO TEXAS
BGE, Inc.
101 W Louis Henna Blvd, Suite 400, Austin, TX 78728
Tel: 512-879-0400 • www.bgeinc.com
TBPE Registration No. F-1046

RM 2243

GENERAL NOTES

SHEET 14 OF 17

FED.RD. DIV.NO.	PROJECT NO.		SHEET NO.
6			6M
STATE	DIST.	COUNTY	
TEXAS	AUS	WILLIAMSON	
CONT.	SECT.	JOB	HIGHWAY NO.
			RM 2243

4/10/2025 12:50:50 PM pdf.pltcfg
G:\TXC\Projects\County*Williamson\7473-02 RM 2243 Phase 1A\03*CADD\01*Shts\00-GEN\RM2243*P1A*GN*01.dgn

All projects, including resurfacing, must increase center-to-center width for center line markings to 18 in. unless the plans or existing is greater than 18 in.

Place longitudinal markings nightly for IH 35 main lanes or roadways with AADT greater than 100,000. Use of temporary flexible reflective roadway marker tabs is subsidiary and at the Contractor's option. Replace missing or damaged tabs nightly. If using tabs, place longitudinal markings weekly by 5 AM Friday for all weekday work and by 5 AM Monday for all weekend work. Failure to maintain tabs or place longitudinal markings by deadline will require nightly placement of longitudinal markings.

Place longitudinal markings no later than 7 calendar days after placement of the surface for roadways with AADT greater than 20,000.

When the raised portion of a profile marking is placed as a separate operation from the pavement marking, the raised portion must be placed first then covered with TY I.

When using black shadow to cover existing stripe apply a non-retroreflective angular abrasive bead drop. The marking color shall be adjusted to resemble the pavement color. If Item 677 is not used prior to placement of black shadow, scrape the top of the marking with a blade or large piece of equipment unless surface is a seal coat. The scraping of the marking is subsidiary.

ITEM 672 – RAISED PAVEMENT MARKERS
Place Type I-C and II-C-R markers at 40 ft. spacing for all lane lines.

ITEM 677 - ELIMINATING EXISTING PAVEMENT MARKINGS AND MARKERS
Dispose of removed materials and debris at locations off the right of way.

Elimination using a pavement marking will not be allowed in lieu of methods listed in specification.

Remove pavement markings on concrete surfaces by a blasting method. Flail milling will be allowed when total quantity of removal on concrete surfaces is less than 1000 ft.

Strip seal is only method allowed on seal coat surface unless project includes placement of a new surface. If total quantity of removal on a seal coat surface is less than 2000 ft., elimination using a pavement marking is allowed if a test section is approved by the Engineer. Test section shall demonstrate the thermo marking color matches the existing pavement color.

Remove pavement markings outside the limits of the new surface by a blasting method.

Use a TRAIL or a non-retroreflective paint to cover stripe remnants that remain after elimination.

The test requirements for these materials are waived. The paint color shall be adjusted to resemble the existing pavement color. Installation and maintenance is subsidiary.

County: Williamson **CSJ:** 0914-05-222
Highway: RM 2243 Phase 1A

ITEM 680 - HIGHWAY TRAFFIC SIGNALS
For traffic signal head installation use Austin District MAD-14 detail.

Testing is required for all traffic signal cabinets including when the plans specify a signal cabinet to be used as an overhead flashing beacon cabinet.

Provide a minimum of 48 working hour's notice prior to dropping off a cabinet. Notice should be sent by email to Robert.Bolin@txdot.gov, Rick.Thomas@txdot.gov, and the TxDOT engineer. The signal plan sheets must be included in the email.

After providing the required notice, deliveries are accepted Monday through Thursday 6:30am to 5:00pm. Delivery address is 7901 N IH 35 Austin, Tx 78753. All cabinet components (other than detection) must be included in the delivery.

The signal shop will complete testing within 72 hours and provide notice of the test results.

Provide a minimum of 48 working hours' notice prior to picking up a cabinet. Upon pickup the contractor will be provided documentation that the cabinet passed inspection.

Luminaire arms shall be aligned with the signal head support. If multiple signal head supports, the luminaire arm shall be aligned with the support over the higher volume roadway.

All signal head housing components must be aluminum. Polycarbonate is not permitted.

Illumination assemblies must be 250W EQ LED unless shown on the plans. Illumination assemblies used for roadways listed in Item 610 Table Dark Sky must have a color temperature less than 3000k. Test in accordance with Item 616. This work is subsidiary.

Furnish all materials and install signs mounted on the traffic signal wire, traffic signal poles, mast arms, and pedestal pole assemblies. Remove all conflicting signs and sign foundations when signal is placed into operation. This work is subsidiary.

Use a Vulcan swinger sign mounting bracket or equivalent for all signs mounted on span wires.

Upon removal of existing signal, illumination, and ITS components, contact the signal shop to deliver materials to the Austin District Headquarters located at 7901 North IH 35, 78753. If signal shop declines receipt of material, Contractor will be responsible for disposal.

All signal poles/arms will be stripped of heads, signs, brackets, wire, and banding and must include all hardware including nuts and bolts. Contact signal shop 48 hours before delivery. Deliveries are only accepted Monday thru Thursday between 6:30am and 5:00pm. The Contractor must supply equipment to unload poles/arms at the TxDOT facility.

For city operated signals, the city may assist in determining how the detector loop lead-in cables are to be connected, and will also program the controller for operation, the video detection, hook up the conflict monitor, detector units and other equipment, and turn on the controller.

WILCO TEXAS

BGE, Inc.
101 W Louis Henna Blvd, Suite 400, Austin, TX 78728
Tel: 512-879-0400 • www.bgeinc.com
TBPE Registration No. F-1046

RM 2243

GENERAL NOTES

SHEET 15 OF 17

FED.RD. DIV.NO.	PROJECT NO.		SHEET NO.
6			6N
STATE	DIST.	COUNTY	
TEXAS	AUS	WILLIAMSON	
CONT.	SECT.	JOB	HIGHWAY NO.
			RM 2243

4/10/2025 12:50:53 PM pdf.pltcfg
G:\TXC\Projects\County*Williamson\7473-02 RM 2243 Phase 1A\03*CADD\01*Shts\00-GEN\RM2243*P1A*GN*01.dgn

If shown on the plans, install the Emergency Response Detection equipment supplied by the City.

ITEM 682 – VEHICLE AND PEDESTRIAN SIGNAL HEADS
Install signal head attachments so the wiring to each passes from the signal pole through the attachment hardware to the signal head. Use UV rated tie wraps.

Traffic signal heads will be aluminum unless otherwise shown on the plans. Back plates will be black aluminum with reflective borders.

Provide louvers, which have five vanes with a black finish on inside surfaces when required.

Fasten a hardware cloth screen, securely, with **⅝"** or smaller mesh size to the front face of each louver to prevent bird nesting.

Use the four-point mounting system (TY A) for signal heads, except in cases of skewed or vertical heads when (TY B) will be used.

ITEM 684 – TRAFFIC SIGNAL CABLES
For Type A cables, cables meeting the requirements of IMSA 19-1 can be substituted for IMSA 20-1. For all types of cables, an increase of one size larger wire diameter and thickness can be substituted for plan size without additional cost to the Department. For example, 12 AWG can be substituted for 14 AWG.

For each cable run, coil an extra 2 ft. of cable in each steel pole and 5 ft. in the controller cabinet. Provide a separate multi-conductor signal cable (14 AWG) inside pedestal poles and mast-arm signal poles from the terminal strip to each signal head as shown on the plans.

ITEM 686 - TRAFFIC SIGNAL POLE ASSEMBLIES (STEEL)
Provide and install damping plates on all mast arms 40 ft. or greater. For mast arms less than 40 ft., refer to SMA and DMA vibration notes for guidance. This work is subsidiary.

When luminaires are installed on mast arm poles, install a separate terminal strip in the signal pole access compartment. Provide a 10-amp time-delay fuse for traffic signal poles with luminaires.

ITEM 687 – PEDESTAL POLE ASSEMBLIES
Verify the required pole height prior to ordering material.

ITEM 688 - PEDESTRIAN DETECTORS AND VEHICLE LOOP DETECTORS
Test all loops in accordance with the FHWA loop detector handbook.

Install vehicle loops prior to placement of roadway surface.

For work within the city limits of Austin, notify COA (512) 974-4099 and TxDOT 21 days prior to loop installation. Install quadrapole layout for presence detectors within city limits of Austin.

County: Williamson **CSJ:** 0914-05-222
Highway: RM 2243 Phase 1A

For replacement of existing loops, replacement of damaged or missing conduit from the vehicle loop detector to the ground box will be measured and paid by overrun of loop detector bid item.

Removal of damaged ground boxes at end of lead in cable is subsidiary to the new ground box. Test period for the pedestrian detectors shall be in accordance with item 680.3.1.8.

Pedestrian push buttons will be mounted at 42 in. above the walking surface and have permanent type signs within the detector unit (9 in. x 12 in. sign and push button station on signal poles and 5 in. x 7 in. sign and push button station on pedestrian poles), which explains their purpose and indicates which crosswalk signal is actuated. Provide speech walk message as shown in the plans or per Engineer.

ITEM 6000s – ITS
Coordinate with the Department at least 120 hours (5 days) in advance of interrupting existing Department ITS communication devices that will result in the elements being non-operational or offline. Network downtime may be no more than 4 hours and may only be scheduled for the weekend between the hours of 10:00 PM and 5:00 AM on Saturday and Sunday. The schedule must be coordinated and approved by the Department. If more than 4 hours of downtime is needed, use alternative communication routes via wireless communication or temporary duct bank. Refer to table below for contact information.

Name	Organization	Email
Douglas Turner	TxDOT	Douglas.L.Turner@txdot.gov
Gabriela Perales	TxDOT	Gabriela.Perales@txdot.gov

Every effort must be made to protect the duct bank during construction. Repair or replace any damages to the duct bank/cable/conduit caused by the Contractor to its original condition at no additional cost to the Department. Failure of the Contractor to repair damage to any infrastructure that conveys any corridor information to TxDOT/CTECC will result in the Contractor being billed for the full cost of emergency repairs.

Acceptable response time for repair of communication trunklines:

- Major or backbone fiber optic cables, radios, and/or power supply.
  - Four hours.
- Minor fiber optic cables (CCTV, DMS, & RVSD).
  - Twelve hours.

Protect and preserve the existing Department infrastructure not affected by the construction.

ITEM 6008 – RADAR VEHICLE DETECTION SYSTEM (RVDS) FOR SIGNALIZED INTERSECTION CONTROL
Provide and install Radar Vehicle Detection System (RVDS) and communication cable as directed by the Engineer. Place the radar detector communication cable in continuous and separate runs from each RVDS to the controller. For each cable terminating at the controller cabinet, provide an extra 5-ft length when installing the cable into the controller. Provide a Serial

WILCO TEXAS
BGE, Inc.
101 W Louis Henna Blvd, Suite 400, Austin, TX 78728
Tel: 512-879-0400 • www.bgeinc.com
TBPE Registration No. F-1046

RM 2243

GENERAL NOTES

SHEET 16 OF 17

FED.RD. DIV.NO.	PROJECT NO.		SHEET NO.
6			60
STATE	DIST.	COUNTY	
TEXAS	AUS	WILLIAMSON	
CONT.	SECT.	JOB	HIGHWAY NO.
			RM 2243

4/10/2025 12:50:55 PM pdf.pltcfg
G:\TXC\Projects\County\Williamson\7473-02 RM 2243 Phase 1A\03\CADD\01\Shts\00-GEN\RM2243_P1A_GN_01.dgn

to Ethernet convertor for each RVDS system. Consider the costs associated with the above work subsidiary to the pertinent Items.

Install the RVDS detection zones as directed. Have qualified personnel on site at the time of the signal turn-on to assist with the installation of detection zones.

Provide a set-up system. Load required set-up software for up to 15 of the District Signal Shop's computers and provide all necessary licensing or provide two setups (or upload/download) devices per contract.

If the RVDS locations shown in the plans do not allow for proper sight of the proposed detection zones, relocate the devices as needed and as directed. This labor and material cost will not be paid separately but is subsidiary to this Item.

ITEM 680 - HIGHWAY TRAFFIC SIGNALS
See "Summary of Traffic Signal Quantities" for a list of subsidiary traffic signal materials. It is the responsibility of the Contractor to verify all items and quantities listed in the "Summary of Traffic Signal Quantities". Any additional materials not listed that are required shall be subsidiary to pertinent bid items.

4/10/2025 12:50:57 PM pdf.pltcfg
G:\TXC\Projects\County*Williamson\7473-02 RM 2243 Phase 1A\03*CADD\01*Shts\00-GEN\RM2243*P1A*GN*01.dgn

WILCO TEXAS
BGE, Inc.
101 W Louis Henna Blvd, Suite 400, Austin, TX 78728
Tel: 512-879-0400 • www.bgeinc.com
TBPE Registration No. F-1046

RM 2243

GENERAL NOTES

SHEET 17 OF 17

FED.RD. DIV.NO.	PROJECT NO.		SHEET NO.
6			6P
STATE	DIST.	COUNTY	
TEXAS	AUS	WILLIAMSON	
CONT.	SECT.	JOB	HIGHWAY NO.
			RM 2243

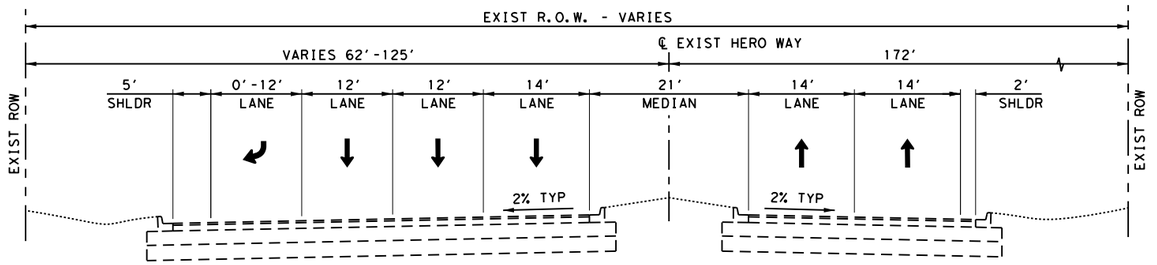

EXISTING HERO WAY TYPICAL SECTION

US 183A TO CR 269

N.T.S.

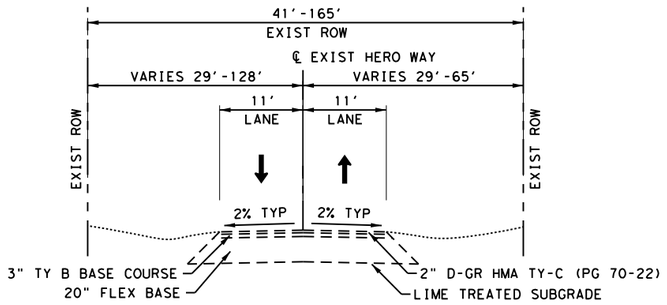

EXISTING HERO WAY TYPICAL SECTION

US 183A TO RONALD REAGAN BLVD

N.T.S.

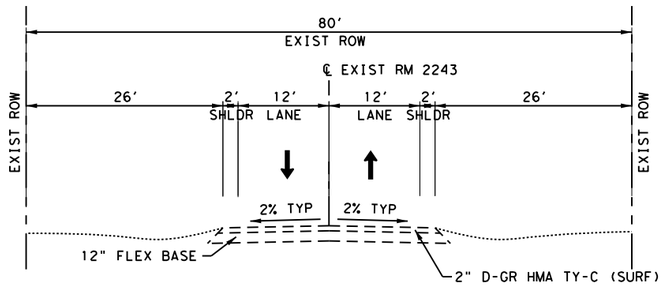

EXISTING RM 2243 TYPICAL SECTION

RONALD REAGAN BLVD TO EAST OF GAREY PARK

N.T.S.

NOTE:

EXISTING PAVEMENT SECTION SHOWN IS BASED ON PAVEMENT CORES FROM THE GEOTECHNICAL INVESTIGATION. ACTUAL EXISTING PAVEMENT SECTION THICKNESSES MAY VARY AS A RESULT OF VARIOUS MAINTENANCE OPERATIONS PERFORMED ON THE ROADWAY. NO ADDITIONAL COMPENSATION WILL BE MADE TO THE CONTRACTOR DUE TO VARYING EXISTING PAVEMENT THICKNESSES.

STATE OF TEXAS
JOSHUA T. RICHTER
141234
LICENSED
PROFESSIONAL ENGINEER

4/10/2025

WILCO TEXAS

BGE, Inc.
101 W Louis Henna Blvd, Suite 400, Austin, TX 78728
Tel: 512-879-0400 • www.bgeinc.com
TBPE Registration No. F-1046

RM 2243

EXISTING TYPICAL SECTIONS

SHEET 1 OF 1

FED.RD. DIV.NO.	PROJECT NO.		SHEET NO.
6			7
STATE	DIST.	COUNTY	
TEXAS	AUS	WILLIAMSON	
CONT.	SECT.	JOB	HIGHWAY NO.
0914	05	222	RM 2243

4/10/2025 12:51:00 PM pdf.pltcfg
G:\TXC\Projects\County\Williamson\7473-02 RM 2243 Phase 1A\03*CADD\01*Shts\01-TYP\RM2241*P1A*EXIST TYP*01.dgn

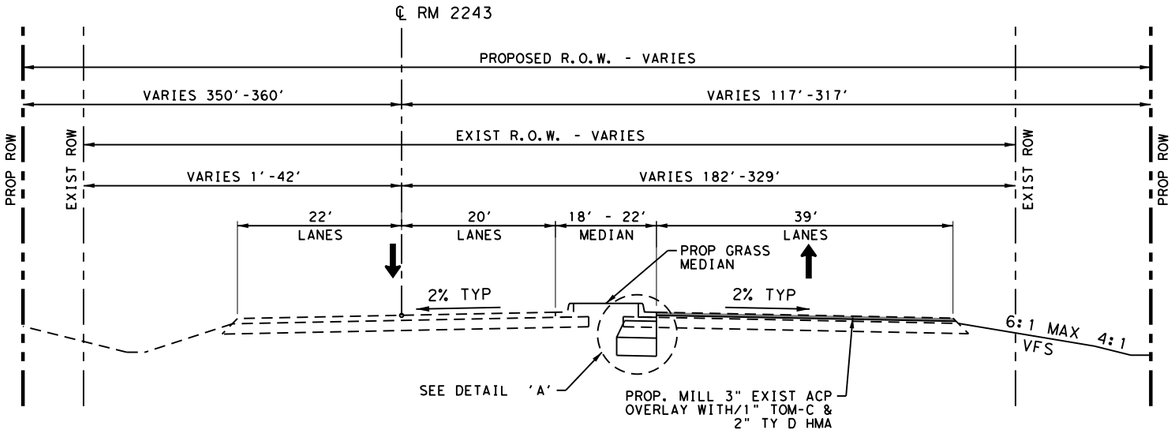

PROPOSED RM 2243 PHASE 1A TYPICAL SECTION

STA 503+62.58 TO STA 504+59.50

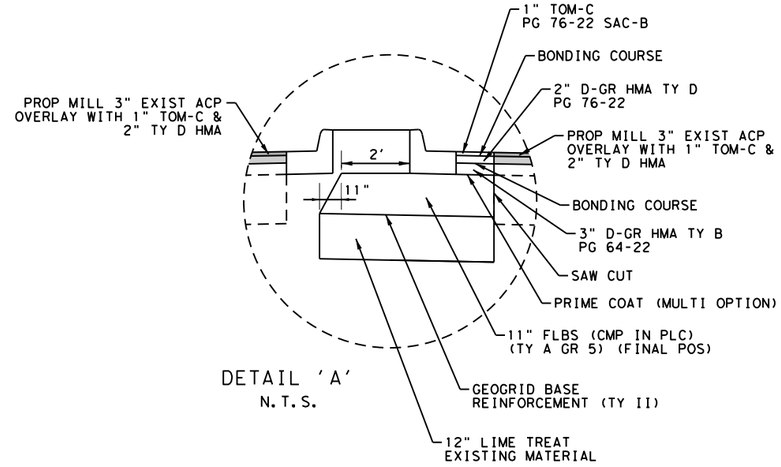

DETAIL 'A'
N.T.S.

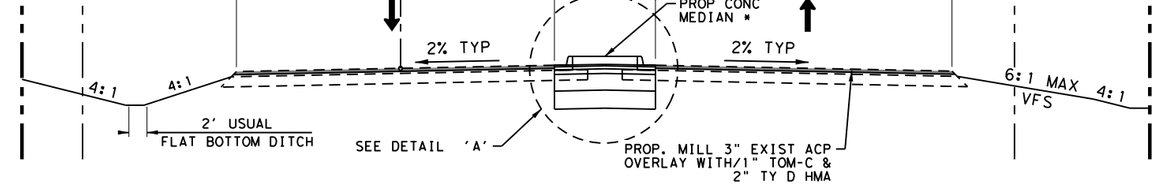

PROPOSED RM 2243 PHASE 1A TYPICAL SECTION

STA 504+59.50 TO STA 506+66.51

* PROPOSED GRASS MEDIAN FROM STA 504+59.50 TO STA 505+00.00
PROPOSED CONCRETE MEDIAN FROM STA 505+00.00 TO STA 505+27.38

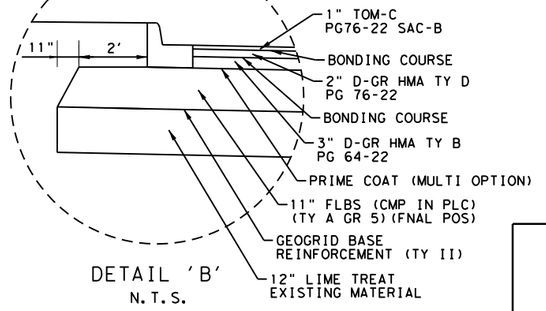

DETAIL 'B'
N.T.S.

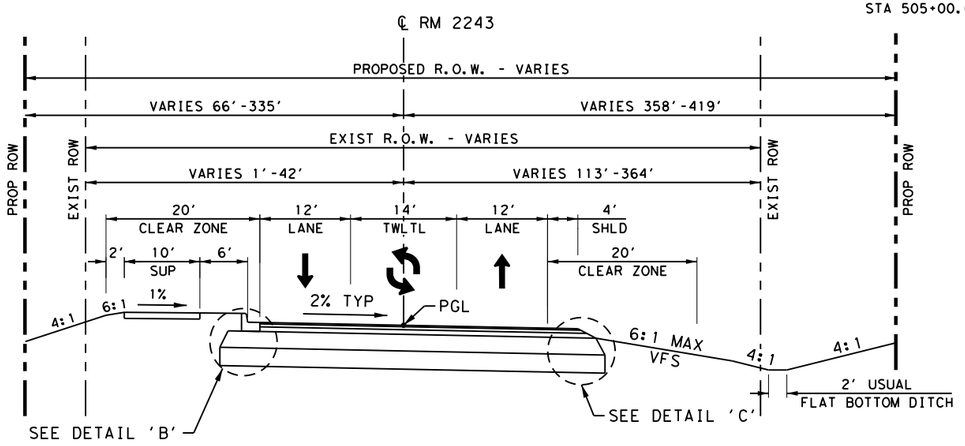

PROPOSED RM 2243 PHASE 1A TYPICAL SECTION

STA 506+66.51 TO STA 539+96.00
STA 547+40.00 TO RONALD REAGAN BLVD

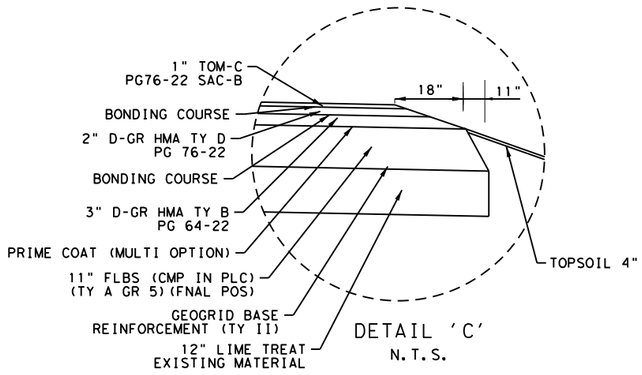

DETAIL 'C'
N.T.S.

4/10/2025

WILCO TEXAS

BGE, Inc.
101 W Louis Henna Blvd, Suite 400, Austin, TX 78728
Tel: 512-879-0400 • www.bgeinc.com
TBPE Registration No. F-1046

RM 2243

PROPOSED TYPICAL SECTIONS

SHEET 1 OF 3

FED.RD. DIV.NO.	PROJECT NO.		SHEET NO.
6			8
STATE	DIST.	COUNTY	
TEXAS	AUS	WILLIAMSON	
CONT.	SECT.	JOB	HIGHWAY NO.
0914	05	222	RM 2243

4/10/2025 12:51:01 PM pdf.pltcfg
G:\TXC\Projects\County\Williamson\7473-02 RM 2243 Phase 1A\03*CADD\01*Shts\01-TYP\RM2241*P1A*TYP*01.dgn

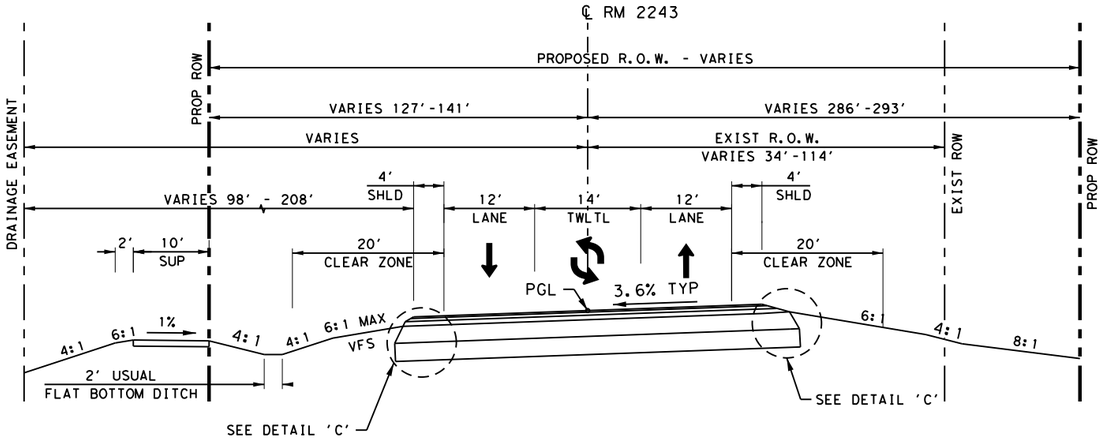

PROPOSED RM 2243 PHASE 1A TYPICAL SECTION

STA 539+96.00 TO STA 547+40.00

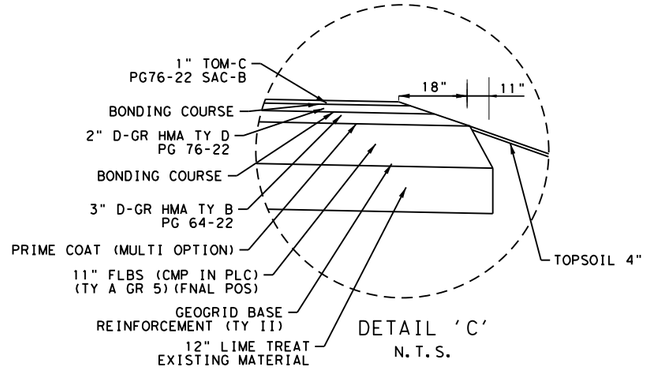

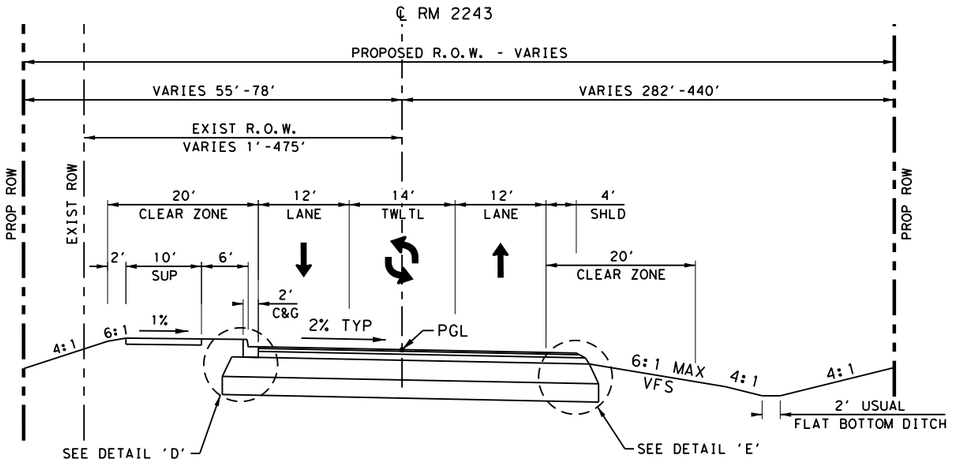

PROPOSED RM 2243 PHASE 1A TYPICAL SECTION

RONALD REAGAN BLVD TO STA 639+91.00
STA 655+23.00 TO STA 680+20.00

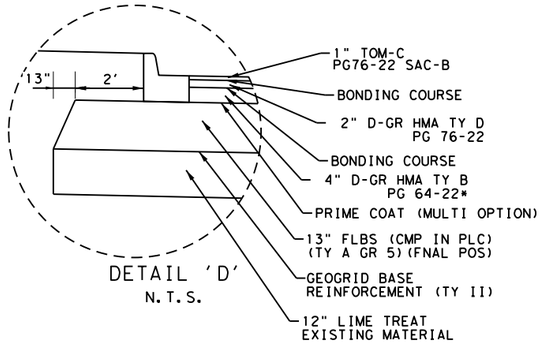

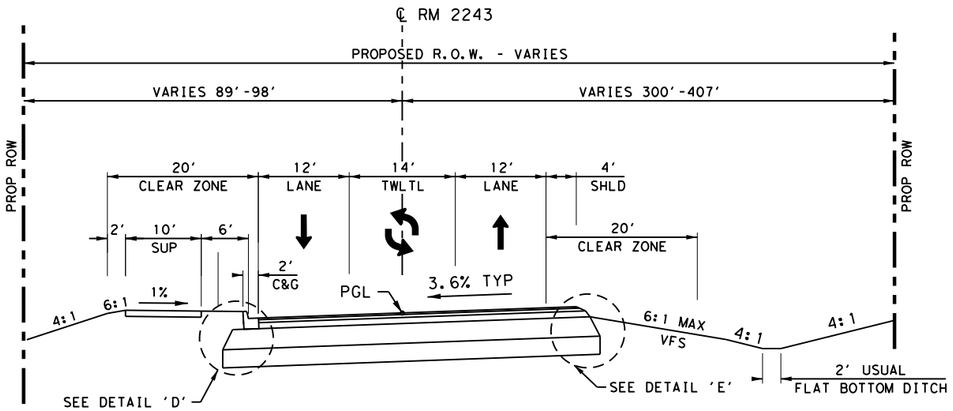

PROPOSED RM 2243 PHASE 1A TYPICAL SECTION

STA 639+91.00 TO STA 655+23.00

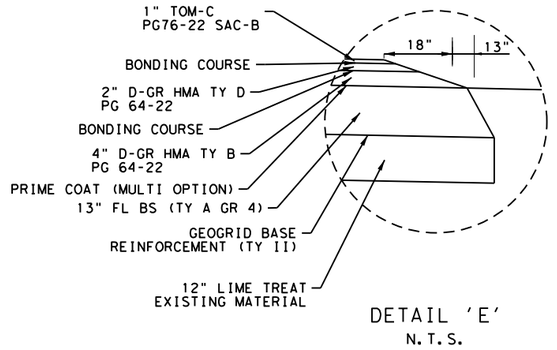

STATE OF TEXAS
JOSHUA T. RICHTER
141234
LICENSED
PROFESSIONAL ENGINEER

4/10/2025

WILCO
TEXAS

BGE, Inc.
101 W Louis Henna Blvd, Suite 400, Austin, TX 78728
Tel: 512-879-0400 • www.bgeinc.com
TBPE Registration No. F-1046

RM 2243

PROPOSED TYPICAL SECTIONS

SHEET 2 OF 3

FED.RD. DIV.NO.	PROJECT NO.		SHEET NO.
6			9
STATE	DIST.	COUNTY	
TEXAS	AUS	WILLIAMSON	
CONT.	SECT.	JOB	HIGHWAY NO.
0914	05	222	RM 2243

4/10/2025 12:51:02 PM pdf.pltcfg
G:\TXC\Projects\County*Williamson\7473-02 RM 2243 Phase 1A\03*CADD\01*Shts\01-TYP\RM2241*P1A*TYP*02.dgn

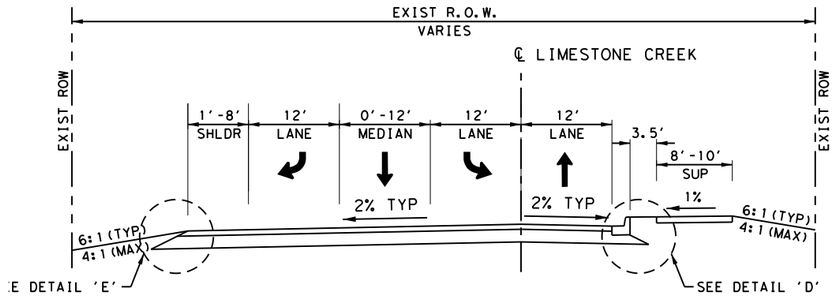

PROPOSED LIMESTONE CREEK ROAD TYPICAL SECTION

STA 2000+20.81 TO STA 2003+21.42

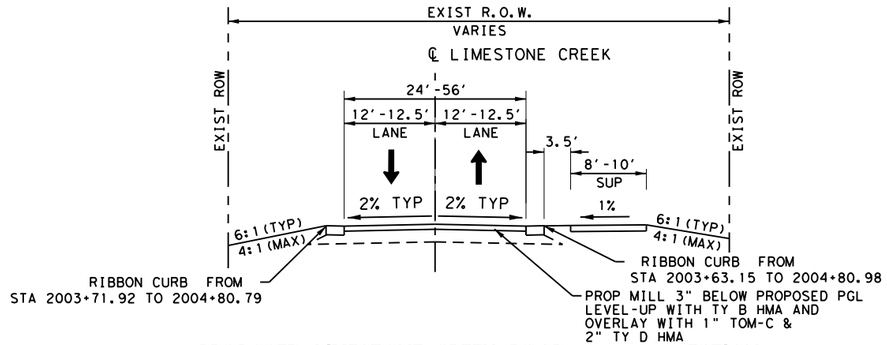

PROPOSED LIMESTONE CREEK ROAD TYPICAL SECTION

STA 2003+21.42 TO STA 2004+80.86

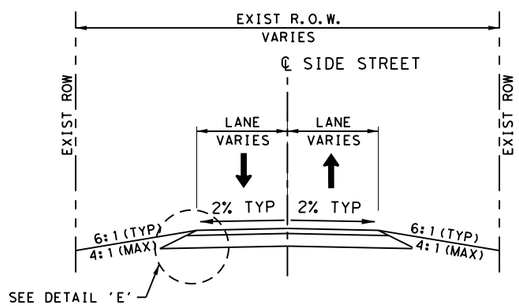

PROPOSED SIDE STREET TYPICAL SECTION

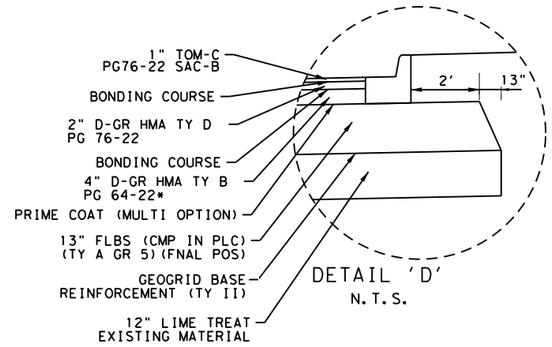

DETAIL 'D'
N.T.S.

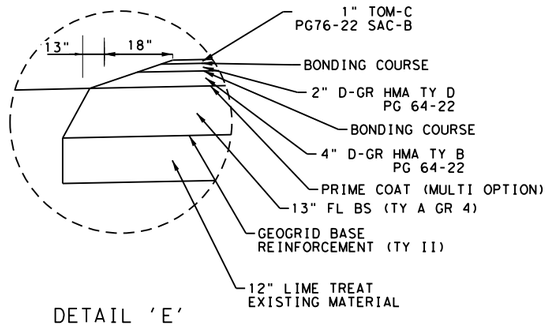

DETAIL 'E'
N.T.S.

4/10/2025

WILCO TEXAS

BGE, Inc.
101 W Louis Henna Blvd, Suite 400, Austin, TX 78728
Tel: 512-879-0400 • www.bgeinc.com
TBPE Registration No. F-1046

RM 2243

PROPOSED TYPICAL SECTIONS

SHEET 3 OF 3

FED.RD. DIV.NO.	PROJECT NO.	SHEET NO.
6		10

STATE	DIST.	COUNTY
TEXAS	AUS	WILLIAMSON

CONT.	SECT.	JOB	HIGHWAY NO.
0914	05	222	RM 2243

4/10/2025 8:27:09 PM pdf.pltcfg
G:\TXC\Projects\County*Williamson\7473-02 RM 2243 Phase 1A\03*CADD\01*Shts\01-TYP\RM2241*P1A*TYP*03.dgn

SUMMARY OF WORKZONE TRAFFIC CONTROL ITEMS

LOCATION	* 400 7006	401 7001	403 7001	502 7001	503 7002	505 7001	505 7003	** 508 7001	512 7001	512 7025	512 7049	512 7009	512 7010	512 7033	512 7034	512 7057	512 7058	545 7014
	CUT & RESTORING PAV	FLOWABLE BACKFILL	TEMPORARY SPL SHORING	BARRICADES, SIGNS AND TRAFFIC HANDLING	PORTABLE CHANGEABLE MESSAGE SIGN	TMA (STATIONARY)	TMA (MOBILE OPERATION)	CONSTRUCTING DETOURS	PORT CTB (FUR & INST) (SGL SLOPE) (TY 1)	PORT CTB (MOVE) (SGL SLP) (TY 1)	PORT CTB (REMOVE) (SGL SLP) (TY 1)	PORT CTB (FUR & INST) (LOW PROF) (TY 1)	PORT CTB (FUR & INST) (LOW PROF) (TY 2)	PORT CTB (MOVE) (LOW PROF) (TY 1)	PORT CTB (MOVE) (LOW PROF) (TY 2)	PORT CTB (REMOVE) (LOW PROF) (TY 1)	PORT CTB (REMOVE) (LOW PROF) (TY 2)	CRASH CUSH ATTEN (INSTL) (S) (N) (TL3)
	SY	CY	SF	MO	EA	DAY	DAY	SY	LF	LF	LF	LF	LF	LF	LF	LF	LF	EA
PHASE 1B - WATERLINE																		
STEP 1						1	2	2920				440	80					
STEP 2	920					1	2							440	80			
PHASE 2A - ROADWAY																		
STEP 1					4	10			3000									4
STEP 3								2450										
STEP 4						5	5			3000								
PHASE 2B - ROADWAY																		
STEP 1											3000							
PHASE 2C - ROADWAY																		
STEP 1						1	1	590						400	80			
STEP 2						1		550				220	40	400	80			
STEP 3						1								620	120			
PHASE 3 - ROADWAY																		
STEP 1						1	5					2600	120	660	120			
STEP 2			2000															
STEP 4								2680										
STEP 5						2	5					1620	40	3260	240			
PHASE 4 - ROADWAY																		
STEP 3		6				2	5						40	3820	280	1060	40	
PHASE 5 - ROADWAY																		
STEP 3						10	5									3820	280	
PROJECT TOTALS	**920**	**6**	**2000**	**34**	**4**	**35**	**30**	**9190**	**3000**	**3000**	**3000**	**4880**	**320**	**9600**	**1000**	**4880**	**320**	**4**

SUMMARY OF WORKZONE TRAFFIC CONTROL ITEMS

LOCATION	545 7002	545 7004	662 7005	662 7006	662 7008	662 7012	662 7017	662 7018	662 7030	662 7036	662 7038	662 7112	662 7114	677 7001
	CRASH CUSH ATTEN (MOVE & RESET)	CRASH CUSH ATTEN (REMOVE)	WK ZN PAV MRK NON-REMOV (W) 6" (BRK)	WK ZN PAV MRK NON-REMOV (W) 6" (DOT)	WK ZN PAV MRK NON-REMOV (W) 6" (SLD)	WK ZN PAV MRK NON-REMOV (W) 8" (SLD)	WK ZN PAV MRK NON-REMOV (W) 24" (SLD)	WK ZN PAV MRK NON-REMOV (W) (ARROW)	WK ZN PAV MRK NON-REMOV (W) (WORD)	WK ZN PAV MRK NON-REMOV (Y) 6" (BRK)	WK ZN PAV MRK NON-REMOV (Y) 6" (SLD)	WK ZN PAV MRK SHT TERM (TAB) TY W	WK ZN PAV MRK SHT TERM (TAB) TY Y-2	ELIM EXT PM & MRKS (4")
	EA	EA	LF	LF	LF	LF	LF	EA	EA	LF	LF	EA	EA	LF
PHASE 1B - WATERLINE														
STEP 1					5748						5748		288	
STEP 2					5748						5748		288	
PHASE 2A - ROADWAY														
STEP 1														
STEP 3														
STEP 4	4				12800		20				12800			5300
PHASE 2B - ROADWAY														
STEP 1		4												
PHASE 2C - ROADWAY														
STEP 1					1240		20				1240			
STEP 2												210	1885	
STEP 3				30	7820	100	40	2	2		8296	10	375	3710
PHASE 3 - ROADWAY														
STEP 1														
STEP 2														
STEP 4														
STEP 5					7910						7910			
PHASE 4 - ROADWAY														
STEP 3			95	46	8064	100	36	1	1	1640	16340			
PHASE 5 - ROADWAY														
STEP 3												160	1860	
PROJECT TOTALS	**4**	**4**	**95**	**76**	**49330**	**200**	**116**	**3**	**3**	**1640**	**58082**	**380**	**4696**	**9010**

* ITEM 400 - CUT & RESTORE PAVEMENT (SY)
CUT AND RESTORE EXISITNG ROADWAY PAVEMENT OVER PROPOSED WATERLINES.

INSTALL PROPOSED WATERLINES.
CEMENT-STABILIZED BACKFILL
TRENCH 4" FROM EXISTING SURFACE & PLACE 4" OF HMCL ACP. CEMENT-STABILED BACKFILL SHALL BE IN ACCORDANCE WITH ITEM 400 SECTION 3.3.4.
HMCL ACP SHALL CONFORM TO ITEM 334 SPECIFICATIONS.

** ITEM 508 - CONSTRUCTING DETOURS (SY)
TEMPORARY PAVEMENT WIDENING SHALL CONSIST OF THE FOLLOWING:
D-GR HMA TY-D PG 70-22 (2")(TOP LAYER)
D-GR HMA TY-B PG 64-22 (10")(BOTTOM LAYER)
(EMBANKMENT INCLUDED IN ITEM 508)

TEMPORARY CULVERTS & EXTENSIONS OF EXISTING & PROPOSED CULVERTS 05 & 06 ARE SUBSIDIARY TO ITEM 508.
SEE TRAFFIC CONTROL PLAN SHEETS FOR ADDITIONAL INFORMATION.

WILCO TEXAS

BGE, Inc.
101 W Louis Henna Blvd, Suite 400, Austin, TX 78728
Tel: 512-879-0400 • www.bgeinc.com
TBPE Registration No. F-1046

RM 2243
SUMMARY OF TRAFFIC CONTROL QUANTITIES

SHEET 1 OF 1

FED.RD. DIV.NO.	PROJECT NO.	SHEET NO.
6		11

STATE	DIST.	COUNTY	
TEXAS	AUS	WILLIAMSON	
CONT.	SECT.	JOB	HIGHWAY NO.
0914	05	222	RM 2243

4/10/2025 5:41:15 PM pdf.pltcfg
G:\TXC\Projects\County*Williamson\7473-02 RM 2243 Phase 1A\03*CADD\01*Shts\00-GEN\RM2241*P1A*TCP*SUMMARY.dgn

SUMMARY OF ROADWAY ITEMS

LOCATION	100 7002 PREPARING ROW	110 7001 EXCAV (ROADWAY)	132 7003 EMBANK (FNL) (OC) (TY B)	216 7001 PROOF ROLLING	247 7178 FL BS (CMP IN PLC) (TY A GR 4) (FNAL POS)	250 7002 GEOGRID BASE REINFORCEMENT (TYPE 2)	260 7003 LIME (QUICKLIME (SLURRY))	260 7009 LIME TRT (EXIST MATL) (12")	310 7015 PRIME COAT (MULTI OPTION)	341 7001 D-GR HMA TY-B PG64-22	341 7065 D-GR HMA TY-D PG 76-22 (EXEMPT)	347 7002 TOM-C PG76-22 SAC-B	354 7038 PLANE ASPH CONC PAV (0" TO 12")	354 7052 PLANE ASPH CONC PAV (3")	400 7006 CUT & RESTORING PAV	432 7001 RIPRAP (CONC) (4 IN)	432 7002 RIPRAP (CONC) (5 IN)	432 7013 RIPRAP (MOW STRIP) (4 IN)	450 7063 RAIL (HANDRAIL) (TY F)
	STA *	CY	CY	HR	CY	SY	TON	SY	GAL	TON	TON	TON	SY	SY	SY	CY	CY	CY	LF
PP Sheet 1 of 17	5.00				185	604	9	230	41	88	58	28		323					
PP Sheet 2 of 17	11.00	7934	6205		1675	5480	82	2082	393	848	557	272		1644	116		3		65
PP Sheet 3 of 17	11.00	1377	7835		1808	5916	89	2248	421	909	597	291					3		80
PP Sheet 4 of 17	11.00	7473	645		1833	6000	90	2280	444	957	626	304							
PP Sheet 5 of 17	11.00	5113	4900		1865	6103	92	2319	472	1018	661	319					10		
PP Sheet 6 of 17	11.00	3609	1251		1861	6090	92	2314	443	955	626	304					2		
PP Sheet 7 of 17	11.00	4424	7275		2032	6651	100	2528	480	1036	682	332				62			340
PP Sheet 8 of 17	11.00	2610	5697		2139	7001	105	2661	508	1096	722	352				70		5	510
PP Sheet 9 of 17	11.00	7414	1153		2392	6930	104	2634	504	1344	716	349						10	55
PP Sheet 10 of 17	11.00	4791	8503		2155	5968	90	2268	423	1216	597	291					3		95
PP Sheet 11 of 17	11.00	30483	3042		2155	5968	90	2268	423	1216	597	291							
PP Sheet 12 of 17	11.00	34714	4215		2354	6520	98	2478	467	1343	661	322					1		
PP Sheet 13 of 17	11.00	1536	20508		2518	6973	105	2650	510	1465	722	352							80
PP Sheet 14 of 17	11.00	18598	216		2215	6135	92	2331	436	1254	617	300							
PP Sheet 15 of 17	11.00	11165	552		2020	5595	84	2126	482	1386	682	333					2		
PP Sheet 16 of 17	11.00	12437	1568		2419	6699	101	2546	481	1384	681	332							
PP Sheet 17 of 17	10.00	2679	1961		2109	5840	88	2219	416	1197	589	287							
OLD RM 2243					869	2406	36	914	184	528	254	123							
LIMESTONE CREEK RD					634	1757	26	668	124	356	176	86	790						20
CR 269	QUANTITIES INCLUDED IN PERTINENT PP SHEETS																		
CR 270					326	1067	16	405	76	164	110	54							
RAIDER WAY					229	750	11	285	58	125	81	39							
WINDING OAK TRAIL																			
CR 175	QUANTITIES INCLUDED IN PERTINENT PP SHEETS																		
GAREY PARK RD																			
PROJECT TOTALS	**180**	**156357**	**75526**	**80**	**35793**	**106453**	**1600**	**40454**	**7786**	**19885**	**11012**	**5361**		**1967**	**116**	**132**	**24**	**15**	**1245**

SUMMARY OF ROADWAY ITEMS

LOCATION	529 7009 CONC CURB & GUTTER (TY II)	529 7028 CONC CURB (RIBBON)	530 7002 INTERSECTIONS (ACP)	530 7006 DRIVEWAYS (CONC)	530 7010 DRIVEWAYS (ACP)	531 7002 CONC SIDEWALKS (5")	531 7006 CURB RAMPS (TY 2)	531 7010 CURB RAMPS (TY 7)	531 7013 CURB RAMPS (TY 21)	540 7001 MTL W-BEAM GD FEN (TIM POST)	540 7015 DOWNSTREAM ANCHOR TERMINAL SECTION	544 7001 GUARDRAIL END TREATMENT (INSTALL)	552 7001 WIRE FENCE (TY A)	3007 7001 BONDING COURSE
	LF	LF	SY	SY	SY	SY	EA	EA	EA	LF	EA	EA	LF	GAL
PP Sheet 1 of 17	276													45
PP Sheet 2 of 17	929		1336		787	1004								436
PP Sheet 3 of 17	1001		719		60	1077		2						467
PP Sheet 4 of 17	584		688		128	1210								490
PP Sheet 5 of 17					937	555								517
PP Sheet 6 of 17	786				537	1162								490
PP Sheet 7 of 17	991		350		326	1080		2						534
PP Sheet 8 of 17	1059			89	68	1193				63		1		565
PP Sheet 9 of 17	1099		4065	58		1047	1	1	1	162	1			560
PP Sheet 10 of 17	1036				134	1186								467
PP Sheet 11 of 17	845				1709	1082							672	467
PP Sheet 12 of 17	1100					1223							583	517
PP Sheet 13 of 17	1098		469			1096		2						565
PP Sheet 14 of 17	1096					1215								483
PP Sheet 15 of 17	1036				436	1183								534
PP Sheet 16 of 17	1265		669	157	144	1024		2						533
PP Sheet 17 of 17	969				88	1112								461
OLD RM 2243			2166											199
LIMESTONE CREEK RD		213	4788			291		4						137
CR 269														
CR 270														86
RAIDER WAY														63
WINDING OAK TRAIL														
CR 175														
GAREY PARK RD														
PROJECT TOTALS	**15170**	**213**	**15250**	**304**	**5354**	**17740**	**1**	**13**	**1**	**225**	**1**	**1**	**1255**	

* ITEM 100 - TREE REMOVALS TO BE INCLUDED WITH PREP ROW.
HEAVILY WOODED AREAS INCLUDE:
LEFT SIDE OF ℄ RM2243_P1A_CL: STA 586+80 TO 653+00
RIGHT SIDE OF ℄ RM2243_P1A_CL: STA 562+80 TO 584+00, 586+80 TO 655+00, 663+00 TO 680+20

WILCO TEXAS

BGE, Inc.
101 W Louis Henna Blvd, Suite 400, Austin, TX 78728
Tel: 512-879-0400 • www.bgeinc.com
TBPE Registration No. F-1046

RM 2243

SUMMARY OF ROADWAY QUANTITIES

SHEET 1 OF 2

FED.RD. DIV.NO.	PROJECT NO.	SHEET NO.
6		12

STATE	DIST.	COUNTY	
TEXAS	AUS	WILLIAMSON	
CONT.	SECT.	JOB	HIGHWAY NO.
0914	05	222	RM 2243

4/10/2025 5:41:30 PM pdf.pltcfg
G:\TXC\Projects\County\Williamson\7473-02 RM 2243 Phase 1A\03*CADD\01*Shts\00-GEN\RM2241*P1A*RDWY*SUMMARY*01.dgn

SUMMARY OF REMOVAL ITEMS													
LOCATION	104 7017	104 7019	105 XXXX	106 7002	496 7004	496 7006	496 7007	496 7038	542 7001	644 7073	677 7001	677 7008	677 7012
	REMOV CONC (CURB & GUTTER)	REMOV CONC (GUTTER)	RMV (14"-25") TRT/UNTRT BASE & ASPH PAV *	OBLITERATING ABANDONED ROAD	REMOV STR (SET)	REMOV STR (HEADWALL)	REMOV STR (PIPE)	REMOVE STR (DRIVEWAY CULVERT)	REMOVE METAL BEAM GUARD FENCE	REMOVE SM RD SN SUP&AM	ELIM EXT PM & MRKS (4")	ELIM EXT PM & MRKS (24")	ELIM EXT PM & MRKS (UTURN ARROW)
	LF	LF	SY	SY	EA	EA	LF	EA	EA	LF	LF	LF	EA
SHEET 1 OF 11	256		843	1307	2		68	1	200	18			
SHEET 2 OF 11			994	919				1		8			
SHEET 3 OF 11			4708	1653		4	90	6	251	6			
SHEET 4 OF 11			7309			4	90		467	3			
SHEET 5 OF 11			1562							12	259	154	2
SHEET 6 OF 11			240										
SHEET 7 OF 11			1823	1619						1			
SHEET 8 OF 11		230	411	1375				1	1345	5			
SHEET 9 OF 11				3605									
SHEET 10 OF 11			8877	208	2		43	3		5			
SHEET 11 OF 11			3584					1		1			
PROJECT TOTALS	**256**	**230**	**30351**	**10686**	**4**	**8**	**291**	**13**	**2263**	**59**	**259**	**154**	**2**

* FOR INFORMATIONAL PURPOSES ONLY, WORK INCLUDED IN ITEM 106 AND 110.

SUMMARY OF RETAINING WALL ITEMS			
LOCATION	410 7001	423 7023	432 7012
	SOIL NAIL ANCHORS	RETAINING WALL (SOIL NAIL) (FASCIA)	RIPRAP (CONC) (FLUME)
	LF	SF	CY
RETAINING WALL RW-1 SHEET 1 OF 2	1051	673	18
RETAINING WALL RW-1 SHEET 2 OF 2	1250	781	19
RETAINING WALL RW-2 SHEET 1 OF 6	1262	296	15
RETAINING WALL RW-2 SHEET 2 OF 6	1503	1203	28
RETAINING WALL RW-2 SHEET 3 OF 6	2133	1539	28
RETAINING WALL RW-2 SHEET 4 OF 6	3560	2027	28
RETAINING WALL RW-2 SHEET 5 OF 6	6752	2940	28
RETAINING WALL RW-2 SHEET 6 OF 6	5027	2363	27
PROJECT TOTALS	**22538**	**11822**	**191**

WILCO TEXAS

BGE, Inc.
101 W Louis Henna Blvd, Suite 400, Austin, TX 78728
Tel: 512-879-0400 • www.bgeinc.com
TBPE Registration No. F-1046

RM 2243

SUMMARY OF ROADWAY QUANTITIES

SHEET 2 OF 2

FED.RD. DIV.NO.	PROJECT NO.		SHEET NO.
6			13
STATE	DIST.	COUNTY	
TEXAS	AUS	WILLIAMSON	
CONT.	SECT.	JOB	HIGHWAY NO.
0914	05	222	RM 2243

4/10/2025 5:44:54 PM pdf.pltcfg
G:\TXC\Projects\County\Williamson\7473-02 RM 2243 Phase 1A\03*CADD\01*Shts\00-GEN\RM2241*P1A*RDWY*SUMMARY*02.dgn

SUMMARY OF DRAINAGE ITEMS

LOCATION	402 7001	420 7147	432 7002	432 7041	462 7006	462 7010	462 7011	462 7015	462 7016	462 7020	462 7021	462 7026	464 7003	464 7005	464 7007	464 7021	464 7032	464 7034	464 7036	465 7012	465 7039	465 7069	465 7128	466 7175
	TRENCH EXCAVATION PROTECTION	CL S CONC (CULV)	RIPRAP (CONC) (5 IN)	RIPRAP (STONE PROTECTION) (12 IN)	CONC BOX CULV (5 FT X 2 FT)	CONC BOX CULV (6 FT X 2 FT)	CONC BOX CULV (6 FT X 3 FT)	CONC BOX CULV (7 FT X 3 FT)	CONC BOX CULV (7 FT X 4 FT)	CONC BOX CULV (8 FT X 3 FT)	CONC BOX CULV (8 FT X 4 FT)	CONC BOX CULV (9 FT X 4 FT)	RC PIPE (CL III) (18 IN)	RC PIPE (CL III) (24 IN)	RC PIPE (CL III) (30 IN)	RC PIPE (CL IV) (24 IN)	RC PIPE (CL V) (18 IN)	RC PIPE (CL V) (24 IN)	RC PIPE (CL V) (30 IN)	JCTBOX (COMPL) (PJB) (8FTX8FT)	INLET (COMPL) (PCU) (5FT) (RIGHT)	INLET (COMPL) (PSL) (RH) (8FTX8FT)	INLET (COMPL) (PSL) (FG) (4FTX4FT-4FTX4FT)	WINGWALL (PW - 1) (HW=5 FT)
	LF	CY	CY	LF	LF	LF	LF	LF	LF	LF	LF	LF	LF	LF	LF	LF	LF	LF	LF	EA	EA	EA	EA	EA
CULVERT LAYOUT SHEETS																								
SHEET 1 OF 11			22	22		340																		
SHEET 2 OF 11				24			150																	
SHEET 3 OF 11	75			58					752															1
SHEET 4 OF 11				36				224																
SHEET 5 OF 11	44			42	72																			
SHEET 6 OF 11	55			42					260															
SHEET 7 OF 11	120			29		261																		
SHEET 8 OF 11				53							188													
SHEET 9 OF 11				43								416												
SHEET 10 OF 11		5	2	21						186														
SHEET 11 OF 11	30			11			81																	
DRIVEWAY CULVERT DETAIL																								
SHEET 1 OF 1													445	979	160		80	150	218					
STORM SEWER PLAN & PROFILE																								
SHEET 1					438																	1		
SHEET 2					72															1				
SHEET 3														68									1	
SHEET 4														255		382					3			
SHEET 5														438							4			
SHEET 6														391							2			
PROJECT TOTALS	**324**	**5**	**24**	**381**	**582**	**601**	**231**	**224**	**1012**	**186**	**188**	**416**	**445**	**2131**	**160**	**382**	**80**	**150**	**218**	**1**	**9**	**1**	**1**	**1**

SUMMARY OF DRAINAGE ITEMS

LOCATION	466 7176	466 7177	466 7179	467 7098	467 7108	467 7125	467 7129	467 7130	467 7133	467 7136	467 7157	467 7162	467 7179	467 7183	467 7209	467 7218	467 7308	467 7328	467 7348
	WINGWALL (PW - 1) (HW=6 FT)	WINGWALL (PW - 1) (HW=7 FT)	WINGWALL (PW - 1) (HW=9 FT)	SET (TY I) (S= 5 FT) (HW= 3 FT) (6:1) (P)	SET (TY I) (S= 5 FT) (HW= 6 FT) (4:1) (C)	SET (TY I) (S= 6 FT) (HW= 3 FT) (4:1) (C)	SET (TY I) (S= 6 FT) (HW= 4 FT) (4:1) (C)	SET (TY I) (S= 6 FT) (HW= 4 FT) (6:1) (C)	SET (TY I) (S= 6 FT) (HW= 5 FT) (4:1) (C)	SET (TY I) (S= 6 FT) (HW= 6 FT) (3:1) (C)	SET (TY I) (S= 7 FT) (HW= 5 FT) (3:1) (C)	SET (TY I) (S= 7 FT) (HW= 6 FT) (4:1) (C)	SET (TY I) (S= 8 FT) (HW= 4 FT) (3:1) (C)	SET (TY I) (S= 8 FT) (HW= 5 FT) (3:1) (C)	SET (TY I) (S= 9 FT) (HW= 6 FT) (3:1) (C)	SET (TY I) (S= 9 FT) (HW= 9 FT) (3:1) (C)	SET (TY II) (18 IN) (RCP) (6:1) (P)	SET (TY II) (24 IN) (RCP) (6:1) (P)	SET (TY II) (30 IN) (RCP) (6:1) (P)
	EA	EA	EA	EA	EA	EA	EA	EA	EA	EA	EA	EA	EA	EA	EA	EA	EA	EA	EA
CULVERT LAYOUT SHEETS																			
SHEET 1 OF 11						1			1										
SHEET 2 OF 11	1							1											
SHEET 3 OF 11												1							
SHEET 4 OF 11			1								1								
SHEET 5 OF 11					1														
SHEET 6 OF 11	1	1																	
SHEET 7 OF 11								1		1									
SHEET 8 OF 11	1													1					
SHEET 9 OF 11															1	1			
SHEET 10 OF 11													2						
SHEET 11 OF 11							1		1										
DRIVEWAY CULVERT DETAIL																			
SHEET 1 OF 1																	10	29	4
STORM SEWER PLAN & PROFILE																			
SHEET 1				1															
SHEET 2																			
SHEET 3																		1	
SHEET 4																		1	
SHEET 5																			
SHEET 6																			
PROJECT TOTALS	**3**	**1**	**1**	**1**	**1**	**1**	**1**	**2**	**2**	**1**	**1**	**1**	**2**	**1**	**1**	**1**	**10**	**31**	**4**

WILCO TEXAS

BGE, Inc.
101 W Louis Henna Blvd, Suite 400, Austin, TX 78728
Tel: 512-879-0400 • www.bgeinc.com
TBPE Registration No. F-1046

RM 2243

SUMMARY OF DRAINAGE QUANTITIES

SHEET 1 OF 1

FED.RD. DIV.NO.	PROJECT NO.		SHEET NO.
6			14
STATE	DIST.	COUNTY	
TEXAS	AUS	WILLIAMSON	
CONT.	SECT.	JOB	HIGHWAY NO.
0914	05	222	RM 2243

4/10/2025 5:41:57 PM pdf.pltcfg
G:\TX\Projects\County*Williamson\7473-02 RM 2243 Phase 1A\03*CADD\01*Shts\00-GEN\RM2241*P1A*DRN*SUMMARY*01.dgn

SUMMARY OF PAVEMENT MARKING ITEMS

LOCATION	658 7019	658 7055	666 7018	666 7024	666 7036	666 7042	666 7066	666 7090	666 7111	666 7123	666 7172	666 7175	666 7177	666 7179	666 7184	666 7186	666 7194	666 7201	666 7211
	INSTL DEL ASSM(D-SW) SZ 1(BRF) GF2(BI)	INSTL OM ASSM (OM-2X) (WC)GND	REFL PAV MRK TY I (W)8" (DOT)(100MIL)	REFL PAV MRK TY I (W)8" (SLD)(100MIL)	REFL PAV MRK TY I (W)24" (SLD)(100MIL)	REFL PAV MRK TY I (W) (ARROW) (100MIL)	REFL PAV MRK TY I (W) (WORD) (100MIL)	REF PAV MRK TY I(W)36" (YLD TRI) (100MIL)	REFL PAV MRK TY I (Y)6" (DOT)(100MIL)	REFL PAV MRK TY I (Y)24" (SLD)(100MIL)	RE PM TY II (W) 6" (BRK)	RE PM TY II (W) 6" (SLD)	RE PM TY II (W) 8" (DOT)	RE PM TY II (W) 8" (SLD)	RE PM TY II (W) 24" (SLD)	RE PM TY II (W) (ARROW)	RE PM TY II (W) (WORD)	RE PM TY II (W) 36" (YLD TRI)	RE PM TY II (Y) 6" (BRK)
	EA	EA	LF	LF	LF	EA	EA	EA	LF	LF	LF	LF	LF	LF	LF	EA	EA	EA	LF
S&PM SHEET 1 OF 10		1	0	365	81	2	2	0	39	155	83	1298		365	81	2	2		315
S&PM SHEET 2 OF 10		2	0	0	160	0	0	0	0	0		2530			160				1038
S&PM SHEET 3 OF 10			0	0	0	2	0	0	0	0		3496				2			1100
S&PM SHEET 4 OF 10	1	4	0	501	61	4	2	0	0	0		2201		501	61	4	2		864
S&PM SHEET 5 OF 10	2	2	25	2297	293	13	11	3	0	0	120	1648	25	2297	293	13	11	3	15
S&PM SHEET 6 OF 10			0	0	0	0	0	0	0	0		2196							1100
S&PM SHEET 7 OF 10			0	459	33	6	2	0	0	0		960		459	33	6	2		480
S&PM SHEET 8 OF 10		2	0	928	326	9	5	0	0	0		1354		928	326	9	5		469
S&PM SHEET 9 OF 10			0	0	0	0	0	0	0	0		2208							1100
S&PM SHEET 10 OF 10			0	441	190	8	0	0	0	551		2412		441	190	8			623
PROJECT TOTALS	**3**	**11**	**25**	**4991**	**1144**	**44**	**22**	**3**	**39**	**706**	**203**	**20303**	**25**	**4991**	**1144**	**44**	**22**	**3**	**7104**

SUMMARY OF PAVEMENT MARKING ITEMS

LOCATION	666 7212	666 7213	666 7217	666 7408	666 7411	666 7420	666 7423	672 7002	672 7004	672 7006
	RE PM TY II (Y) 6" (DOT)	RE PM TY II (Y) 6" (SLD)	RE PM TY II (Y) 24" (SLD)	REFL PAV MRK TY I (W)6" (BRK)(100MIL)	REFL PAV MRK TY I (W)6" (SLD)(100MIL)	REFL PAV MRK TY I (Y)6" (BRK)(100MIL)	REFL PAV MRK TY I (Y)6" (SLD)(100MIL)	REFL PAV MRKR TY I-C	REFL PAV MRKR TY II-A-A	REFL PAV MRKR TY II-C-R
	LF	LF	LF	LF	LF	LF	LF	EA	EA	EA
S&PM SHEET 1 OF 10	39	2674	155	83	1298	315	2674	19	96	12
S&PM SHEET 2 OF 10		4152		0	2530	1038	4152		104	
S&PM SHEET 3 OF 10		4400		0	3496	1100	4400		110	
S&PM SHEET 4 OF 10		4254		0	2201	864	4254	26	106	
S&PM SHEET 5 OF 10		2239		120	1648	15	2239	116	87	6
S&PM SHEET 6 OF 10		4400		0	2196	1100	4400		110	
S&PM SHEET 7 OF 10		2932		0	960	480	2932	24	48	
S&PM SHEET 8 OF 10		2568		0	1354	469	2568	47	82	
S&PM SHEET 9 OF 10		4400		0	2208	1100	4400		110	
S&PM SHEET 10 OF 10		5130	551	0	2412	623	5130	23	194	
PROJECT TOTALS	**39**	**37149**	**706**	**203**	**20303**	**7104**	**37149**	**255**	**1047**	**18**

SUMMARY OF SIGNING ITEMS

LOCATION	644 7001	644 7004	644 7028	644 7057
	IN SM RD SN SUP&AM TY10BWG(1) SA(P)	IN SM RD SN SUP&AM TY10BWG(1) SA(T)	IN SM RD SN SUP&AM TYS80(1)SA (T)	IN SM RD SN SUP&AM TYTWT(1)WS (P)
	EA	EA	EA	EA
S&PM SHEET 1 OF 10	2	1		7
S&PM SHEET 2 OF 10	2			
S&PM SHEET 3 OF 10				
S&PM SHEET 4 OF 10		2	1	3
S&PM SHEET 5 OF 10	1	5		7
S&PM SHEET 6 OF 10				
S&PM SHEET 7 OF 10	1	1	1	2
S&PM SHEET 8 OF 10		2	1	4
S&PM SHEET 9 OF 10				
S&PM SHEET 10 OF 10		1	1	4
PROJECT TOTALS	**6**	**12**	**4**	**27**

* FOR CONTRACTOR INFORMATION ONLY

WILCO TEXAS

BGE, Inc.
101 W Louis Henna Blvd, Suite 400, Austin, TX 78728
Tel: 512-879-0400 • www.bgeinc.com
TBPE Registration No. F-1046

RM 2243

SUMMARY OF SIGNING AND PAVEMENT MARKING QUANTITIES

SHEET 1 OF 1

FED.RD. DIV.NO.	PROJECT NO.	SHEET NO.
6		15

STATE	DIST.	COUNTY	
TEXAS	AUS	WILLIAMSON	
CONT.	SECT.	JOB	HIGHWAY NO.
0914	05	222	RM 2243

4/10/2025 5:41:58 PM pdf.pltcfg
G:\TXC\Projects\County*Williamson\7473-02 RM 2243 Phase 1A\03*CADD\01*Shts\00-GEN\RM2241*P1A*SPMD*SUMMARY.dgn

SUMMARY OF TRAFFIC SIGNAL ITEMS

LOCATION	416 7044	416 7046	618 7030	618 7036	618 7037	620 7007	620 7008	620 7010	624 7008	624 7013	628 7122	636 7001	680 7002	682 7001	682 7002	682 7003	682 7004	682 7005	682 7006	682 7018	682 7042	682 7043
	DRILL SHAFT (TRF SIG POLE) (36 IN)	DRILL SHAFT (TRF SIG POLE) (48 IN)	CONDT (PVC) (SCH 40) (2")	CONDT (PVC) (SCH 40) (3")	CONDT (PVC) (SCH 40) (3") (BORE)	ELEC CONDR (NO. 8) BARE	ELEC CONDR (NO. 8) INSULATED	ELEC CONDR (NO. 6) INSULATED	GROUND BOX TY D (162922) W/APRON	REMOVE GROUND BOX	ELC SRV TY D 120/240 060 (NS) AL (E) SP (U)	ALUMINUM SIGNS (TY A)	INSTALL HWY TRF SIG (ISOLATED)	VEH SIG SEC (12")LED (GRN)	VEH SIG SEC (12")LED (GRN ARW)	VEH SIG SEC (12")LED (YEL)	VEH SIG SEC (12")LED (YEL ARW)	VEH SIG SEC (12")LED (RED)	VEH SIG SEC (12")LED (RED ARW)	PED SIG SEC (LED) (COUNTDOWN)	BACKPLATE W/REF BRDR (3 SEC) (VENT) ALUM	BACKPLATE W/REF BRDR (4 SEC) ALUM
	LF	LF	LF	LF	LF	LF	LF	LF	EA	EA	EA	SF	EA	EA	EA	EA	EA	EA	EA	EA	EA	EA
RM 2243 @ RONALD REAGAN		22	35	620	1140	1850	1510		4	2		71		4	3	4	3	4	3	4	7	
RM 2243 @ LIMESTONE CREEK	28	44	150	1265		1415	1760	30	4		1	55	1									
**RM 2243 @ LIMESTONE CREEK (FOR STORAGE)												25		8	4	8	8	8	4	4	8	4
PROJECT TOTALS	**28**	**66**	**185**	**1885**	**1140**	**3265**	**3270**	**30**	**8**	**2**	**1**	**151**	**1**	**12**	**7**	**12**	**11**	**12**	**7**	**8**	**15**	**4**

SUMMARY OF TRAFFIC SIGNAL ITEMS

LOCATION	684 7007	684 7033	684 7042	686 7039	686 7043	686 7059	686 7067	686 7313	687 7001	688 7001	690 7131	6008 7003											
	TRF SIG CBL (TY A) (12 AWG) (2 CONDR)	TRF SIG CBL (TY A) (14 AWG) (7 CONDR)	TRF SIG CBL (TY A) (14 AWG) (16 CONDR)	INS TRF SIG PL AM(S)1 ARM(36') LUM	INS TRF SIG PL AM(S)1 ARM(40') LUM	INS TRF SIG PL AM(S)1 ARM(55') LUM	INS TRF SIG PL AM(S)1 ARM(65') LUM	REMOVE TRF SIG PL	PED POLE ASSEMBLY	PED DETECT PUSH BUTTON (APS)	INSTALL BBU SYSTEM	RVDS (PRESENCE AND ADVANCE DETECTION)	RADAR CABLE *	WIND DAMPENER *	LUMINAIRE ARM (8') *	250W EQ LED LUMINAIRE *	TRAFFIC SIGNAL CONTROLLER (INSTALL ONLY) *	TRAFFIC SIGNAL CABINET (INSTALL ONLY) *	CABINET FOUNDATION *	REMOVE TRAFFIC SIGNAL HEADS *	REMOVE TRAFFIC SIGNAL SIGNS *	INSTALL RED-LIGHT CONFIRMATION LIGHT *	RED-LIGHT CONFIRMATION CABLE *
	LF	LF	LF	EA	EA	EA	EA	EA	EA	EA	EA	EA	LF	EA	EA	EA	EA	EA	EA	EA	EA	EA	LF
RM 2243 @ RONALD REAGAN	555	805	945				1	1	4	4		2	1125	1	1	1				3	2	2	1020
RM 2243 @ LIMESTONE CREEK	620	195	660	1	1	2			2		1		660		4	4	1	1	1				
**RM 2243 @ LIMESTONE CREEK (FOR STORAGE)	20	285								4		4	190	3									
PROJECT TOTALS	**1195**	**1285**	**1605**	**1**	**1**	**2**	**1**	**1**	**6**	**8**	**1**	**6**	**1975**	**4**	**5**	**5**	**1**	**1**	**1**	**3**	**2**	**2**	**1020**

* FOR CONTRACTOR INFORMATION ONLY. NO SEPARATE PAY. ANY ADDITIONAL MATERIALS NOT LISTED THAT ARE REQUIRED SHALL BE SUBSIDIARY TO PERTINENT BID ITEMS.

** EQUIPMENT TO BE DELIVERED TO WILLIAMSON COUNTY AND PUT IN STORAGE AND INSTALLED BY OTHERS ONCE TRAFFIC SIGNAL WARRANTS ARE MET.

WILCO TEXAS

BGE, Inc.
101 W Louis Henna Blvd, Suite 400, Austin, TX 78728
Tel: 512-879-0400 • www.bgeinc.com
TBPE Registration No. F-1046

RM 2243 SUMMARY OF TRAFFIC SIGNAL QUANTITIES

SHEET 1 OF 1

FED.RD. DIV.NO.	PROJECT NO.		SHEET NO.
6			16
STATE	DIST.	COUNTY	
TEXAS	AUS	WILLIAMSON	
CONT.	SECT.	JOB	HIGHWAY NO.
0914	05	222	RM 2243

4/10/2025 5:42:03 PM pdf.pltcfg
C:\TXC\Projects\County*Williamson\7473-02 RM 2243 Phase 1A\03*CADD\01*Shts\00-GEN\RM2241*P1A*SIGNAL*SUMMARY.dgn

SUMMARY OF EROSION CONTROL ITEMS													
LOCATION	160 WC02	161 7006	162 WC04	164 WC04	164 WC05	164 WC06	166 7002	168 WC01	169 XXXX	506 7002	506 7011	506 7039	506 7041
	FURN & PLACE TOPSOIL (4")	EROSION CONTROL COMPOST (4")	MULCH SODDING	BROADCAST SEED (PERM_URBAN_CLAY)	BROADCAST SEED (TEMP_WARM)	BROADCAST SEED (TEMP_COOL)	FERTILIZER *	VEGETATIVE WATERING	SOIL RETENTION BLANKETS (CL 1) (TY A)	ROCK FILTER DAMS (INSTALL) (TY 2)	ROCK FILTER DAMS (REMOVE)	TEMP SEDMT CONT FENCE (INSTALL)	TEMP SEDMT CONT FENCE (REMOVE)
	SY	SY	SY	SY	SY	SY	TON	MG	SY	LF	LF	LF	LF
SHEET 1 OF 10	11681	2921	2921	11681	5841	5841	0.8	234	11681	150	150	1178	1178
SHEET 2 OF 10	20221	5056	5056	20221	10111	10111	1.4	405	20221	150	150	2148	2148
SHEET 3 OF 10	23136	5784	5784	23136	11568	11568	1.5	463	23136	150	150	2112	2112
SHEET 4 OF 10	12622	3156	3156	12622	6311	6311	0.9	253	12622	435	435	1937	1937
SHEET 5 OF 10	17565	4392	4392	17565	8783	8783	1.2	352	17565	350	350	1956	1956
SHEET 6 OF 10	8849	2213	2213	8849	4425	4425	0.6	177	8849			1089	1089
SHEET 7 OF 10	12754	3189	3189	12754	6377	6377	0.9	256	12754	50	50	1009	1009
SHEET 8 OF 10	16655	4164	4164	16655	8328	8328	1.1	334	16655	325	325	1301	1301
SHEET 9 OF 10	15380	3845	3845	15380	7690	7690	1	308	15380			2183	2183
SHEET 10 OF 10	13871	3468	3468	13871	6936	6936	0.9	278	13871	125	125	2081	2081
PROJECT TOTALS	**152734**	**38188**	**38188**	**152734**	**76370**	**76370**	**10.3**	**3060**	**152734**	**1735**	**1735**	**16994**	**16994**

* FOR CONTRACTOR INFORMATION ONLY

4/10/2025 5:42:09 PM pdf.pltcfg
C:\TXC\Projects\County*Williamson\7473-02 RM 2243 Phase 1A\03*CADD\01*Shts\00-GEN\RM2241*P1A*EROSION*SUMMARY.dgn

WILCO
TEXAS

BGE, Inc.
101 W Louis Henna Blvd, Suite 400, Austin, TX 78728
Tel: 512-879-0400 • www.bgeinc.com
TBPE Registration No. F-1046

RM 2243

SUMMARY OF EROSION CONTROL QUANTITIES

SHEET 1 OF 1

FED.RD. DIV.NO.	PROJECT NO.		SHEET NO.
6			17
STATE	DIST.	COUNTY	
TEXAS	AUS	WILLIAMSON	
CONT.	SECT.	JOB	HIGHWAY NO.
0914	05	222	RM 2243

SUMMARY OF EROSION CONTROL ITEMS													
LOCATION	160 WC02	161 7006	162 WC04	164 WC04	164 WC05	164 WC06	166 7002	168 WC01	169 XXXX	506 7002	506 7011	506 7039	506 7041
	FURN & PLACE TOPSOIL (4")	EROSION CONTROL COMPOST (4")	MULCH SODDING	BROADCAST SEED (PERM_URBAN_CLAY)	BROADCAST SEED (TEMP_WARM)	BROADCAST SEED (TEMP_COOL)	FERTILIZER *	VEGETATIVE WATERING	SOIL RETENTION BLANKETS (CL 1) (TY A)	ROCK FILTER DAMS (INSTALL) (TY 2)	ROCK FILTER DAMS (REMOVE)	TEMP SEDMT CONT FENCE (INSTALL)	TEMP SEDMT CONT FENCE (REMOVE)
	SY	SY	SY	SY	SY	SY	TON	MG	SY	LF	LF	LF	LF
SHEET 1 OF 10	11681	2921	2921	11681	5841	5841	0.8	234	11681	150	150	1178	1178
SHEET 2 OF 10	20221	5056	5056	20221	10111	10111	1.4	405	20221	150	150	2148	2148
SHEET 3 OF 10	23136	5784	5784	23136	11568	11568	1.5	463	23136	150	150	2112	2112
SHEET 4 OF 10	12622	3156	3156	12622	6311	6311	0.9	253	12622	435	435	1937	1937
SHEET 5 OF 10	17565	4392	4392	17565	8783	8783	1.2	352	17565	350	350	1956	1956
SHEET 6 OF 10	8849	2213	2213	8849	4425	4425	0.6	177	8849			1089	1089
SHEET 7 OF 10	12754	3189	3189	12754	6377	6377	0.9	256	12754	50	50	1009	1009
SHEET 8 OF 10	16655	4164	4164	16655	8328	8328	1.1	334	16655	325	325	1301	1301
SHEET 9 OF 10	15380	3845	3845	15380	7690	7690	1	308	15380			2183	2183
SHEET 10 OF 10	13871	3468	3468	13871	6936	6936	0.9	278	13871	125	125	2081	2081
PROJECT TOTALS	**152734**	**38188**	**38188**	**152734**	**76370**	**76370**	**10.3**	**3060**	**152734**	**1735**	**1735**	**16994**	**16994**

* FOR CONTRACTOR INFORMATION ONLY

4/10/2025 12:54:06 PM pdf.pltcfg
C:\TXC\Projects\County*Williamson\7473-02 RM 2243 Phase 1A\03*CADD\01*Shts\00-GEN\RM2241*P1A*EROSION*SUMMARY.dgn

WILCO
TEXAS

BGE, Inc.
101 W Louis Henna Blvd, Suite 400, Austin, TX 78728
Tel: 512-879-0400 • www.bgeinc.com
TBPE Registration No. F-1046

RM 2243

SUMMARY OF EROSION CONTROL QUANTITIES

SHEET 1 OF 1

FED.RD. DIV.NO.	PROJECT NO.		SHEET NO.
6			17
STATE	DIST.	COUNTY	
TEXAS	AUS	WILLIAMSON	
CONT.	SECT.	JOB	HIGHWAY NO.
0914	05	222	RM 2243

SUMMARY OF SMALL SIGNS

SM RD SGN ASSM TY XXXXX (X) XX (X-XXXX)

PLAN SHEET NO.	SIGN NO.	SIGN NOMENCLATURE	SIGN	DIMENSIONS	FLAT ALUMINUM (TYPE A)	EXAL ALUMINUM (TYPE G)	POST TYPE FRP = Fiberglass TWT = Thin-Wall 10BWG = 10 BWG S80 = Sch 80	POSTS 1 or 2	ANCHOR TYPE UA=Universal Conc UB=Universal Bolt SA=Slipbase-Conc SB=Slipbase-Bolt WS=Wedge Steel WP=Wedge Plastic	MOUNTING DESIGNATION PREFABRICATED P = "Plain" T = "T" U = "U"	1EXT or 2EXT = # of Ext BM = Extruded Wind Beam WC = 1.12 #/ft Wing Channel EXAL= Extruded Alum Sign Panels	BRIDGE MOUNT CLEARANCE SIGNS (See Note 2) TYPE N	BRIDGE MOUNT CLEARANCE SIGNS (See Note 2) TYPE S
1	1	R3-8 LK	ADVANCE INTERSECTION LANE CONTROL	36X30	X		TWT	1	WS	P			
1	2	R3-7L	LEFT LANE MUST TURN RIGHT	30X30	X		TWT	1	WS	P			
1	3	R3-5L	LEFT ONLY	30X36	X		10BWG	1	SA	P			
		R4-7	KEEP RIGHT	24X30	X								
1	4	R3-6R	THRU RIGHT	30X36	X		TWT	1	WS	P			
1	5	D3-1G	HERO WAY	36X8	X		10BWG	1	SA	P			
		D3-1G	CR 269	24X8	X								
		R1-1	STOP	36X36	X								
		R1-5b	CROSS TRAFFIC DOES NOT STOP	24X12	X								
1	6	D3-1G	HERO WAY	36X8	X		10BWG	1	SA	P			
		D3-1G	CR 269	24X8	X								
		R1-1	STOP	36X36	X								
		R1-5b	CROSS TRAFFIC DOES NOT STOP	24X12	X								
1	7	D1-2	HERO WAY CO RD 269	84X30	X		10BWG	1	SA	T			
1	8	R3-8 LK	ADVANCE INTERSECTION LANE CONTROL	36X30	X		TWT	1	WS	P			
1	9	R3-9cP	BEGIN	30X12	X		TWT	1	WS	P			
		R3-9b	CENTER LANE ONLY	24X36	X								
1	10	R3-9dP	END	30X12	X		TWT	1	WS	P			
		R3-9b	CENTER LANE ONLY	24X36	X								
1	11	D21-1TR	OLD HERO WAY	84X12	X		TWT	1	WS	P			
1	12	R3-8 LK	ADVANCE INTERSECTION LANE CONTROL	36X30	X		TWT	1	WS	P			
2	1	D3-1G	HERO WAY	36X8	X		10BWG	1	SA	P			
		D3-1G	CR 270	24X8	X								
		R1-1	STOP	36X36	X								
2	2	D3-1G	HERO WAY	36X8	X		10BWG	1	SA	P			
		D3-1G	CR 270	24X8	X								
		R1-1	STOP	36X36	X								
2	3	D21-1TL	OLD HERO WAY	84X12	X		10BWG	1	SA	P			
2	4	D21-1TL	OLD HERO WAY	84X12	X		10BWG	1	SA	P			
2	5	W1-7T	CHEVRON/TWO DIRECTION LARGE ARROW	96X36	X		SCH 80	1	SA	T			
2	6	D3-1G	HERO WAY	36X8	X		10BWG	1	SA	P			
		D3-1G	RAIDER WAY	42X8	X								
		R1-1	STOP	36X36	X								
2	7	D21-1TL	OLD HERO WAY	84X12	X		10BWG	1	SA	P			
4	1	D3-1G	HERO WAY	36X8	X		10BWG	1	SA	T			
		D3-1G	WINDING OAK TRAIL	66X8	X								
		R1-1	STOP	36X36	X								
4	2	W1-7T	CHEVRON/TWO DIRECTION LARGE ARROW	96X36	X		SCH 80	1	SA	T			

ALUMINUM SIGN BLANKS THICKNESS	
Square Feet	Minimum Thickness
Less than 7.5	0.080"
7.5 to 15	0.100"
Greater than 15	0.125"

The Standard Highway Sign Designs for Texas (SHSD) can be found at the following website.

http://www.txdot.gov/

NOTE:

1. Sign supports shall be located as shown on the plans, except that the Engineer may shift the sign supports, within design guidelines, where necessary to secure a more desirable location or to avoid conflict with utilities. Unless otherwise shown on the plans, the Contractor shall stake and the Engineer will verify all sign support locations.
2. For installation of bridge mount clearance signs, see Bridge Mounted Clearance Sign Assembly (BMCS)Standard Sheet.
3. For Sign Support Descriptive Codes, see Sign Mounting Details Small Roadside Signs General Notes & Details SMD(GEN).

Texas Department of Transportation

Traffic Operations Division Standard

SUMMARY OF SMALL SIGNS

SOSS

SHEET 1 OF 3

FILE: sums16.dgn	DN: TxDOT	CK: TxDOT	DW: TxDOT	CK: TxDOT
©TxDOT May 1987	CONT	SECT	JOB	HIGHWAY
REVISIONS	0914	05	222	RM 2243
	DIST	COUNTY		SHEET NO.
	AUS	WILLIAMSON		18

18

DISCLAIMER:
The use of this standard is governed by the "Texas Engineering Practice Act". No warranty of any kind is made by TxDOT for any purpose whatsoever. TxDOT assumes no responsibility for the conversion of this standard to other formats or for incorrect results or damages resulting from its use.

DATE: 4/10/2025 12:54:07 PM
FILE: G:\TXC\Projects\County_Williamson\7473-02 RM 2243 Phase 1A\03_CADD\01_Plans\07-GEN\SUMMARY OF SMALL SIGNS.dgn

SUMMARY OF SMALL SIGNS

SM RD SGN ASSM TY XXXXX (X) XX (X-XXXX)

PLAN SHEET NO.	SIGN NO.	SIGN NOMENCLATURE	SIGN	DIMENSIONS	FLAT ALUMINUM (TYPE A)	EXAL ALUMINUM (TYPE G)	POST TYPE FRP = Fiberglass TWT = Thin-Wall 10BWG = 10 BWG S80 = Sch 80	POSTS 1 or 2	ANCHOR TYPE UA=Universal Conc UB=Universal Bolt SA=Slipbase-Conc SB=Slipbase-Bolt WS=Wedge Steel WP=Wedge Plastic	MOUNTING DESIGNATION PREFABRICATED P = "Plain" T = "T" U = "U" 1EXT or 2EXT = # of Ext BM = Extruded Wind Beam WC = 1.12 #/ft Wing Channel EXAL= Extruded Alum Sign Panels	BRIDGE MOUNT CLEARANCE SIGNS (See Note 2) TYPE N	BRIDGE MOUNT CLEARANCE SIGNS (See Note 2) TYPE S
4	3	D21-1TDBL	RONALD REAGAN BLVD	120X12	X		SCH 80	1	SA	P		
4	4	R3-9cP	BEGIN	24X36	X		TWT	1	WS	P		
		R3-9b	CENTER LANE ONLY	24X36	X							
4	5	R3-8b	ADVANCE INTERSECTION LANE CONTROL	48X30	X		10BWG	1	SA	T		
4	6	R3-7R	RIGHT LANE MUST TURN RIGHT	30X30	X		TWT	1	WS	P		
4	7	R2-1	SPEED LIMIT 45	24X30	X		TWT	1	WS	P		
5	1	W3-5	SPEED REDUCED AHEAD	36X36	X		10BWG	1	SA	P		
5	2	R3-5L	LEFT ONLY	30X36	X		TWT	1	WS	P		
5	3	R1-2	YIELD	36X36	X		TWT	1	WS	P		
5	4	R2-1	SPEED LIMIT 60	24X30	X		TWT	1	WS	P		
5	5	R3-7R	RIGHT LANE MUST TURN RIGHT	30X30	X		TWT	1	WS	P		
5	6	R3-8b	ADVANCE INTERSECTION LANE CONTROL	48X30	X		10BWG	1	SA	T		
5	7	R3-9cP	BEGIN	30X12	X		TWT	1	WS	P		
		R3-9b	CENTER LANE ONLY	24X36	X							
5	8	R3-5R	RIGHT ONLY	30X36	X		TWT	1	WS	P		
5	9	R3-7R	RIGHT LANE MUST TURN RIGHT	30X30	X		TWT	1	WS	P		
5	10	D1-2	HERO WAY	72X12	X		10BWG	1	SA	T		
5	11	R3-8	ADVANCE INTERSECTION LANE CONTROL	72X30	X		10BWG	1	SA	T		
5	12	D1-2	HERO WAY	72X12	X		10BWG	1	SA	T		
5	13	R3-8	ADVANCE INTERSECTION LANE CONTROL	72X30	X		10BWG	1	SA	T		
6	1	D21-1TDBL	RONALD REAGAN BLVD	120X12	X		SCH 80	1	SA	P		
7	1	D21-1TL	OLD RM 2243	78X12	X		10BWG	1	SA	P		
7	2	W1-7T	CHEVRON/TWO DIRECTION LARGE ARROW	96X36	X		SCH 80	1	SA	T		
7	3	D3-1G	HERO WAY	36X8	X		10BWG	1	SA	P		
		D3-1G	OLD RM 2243	42X8	X							
		R1-1	STOP	36X36	X							
7	4	R3-8 LR	ADVANCE INTERSECTION LANE CONTROL	36X30	X		TWT	1	WS	P		
7	5	R3-7R	RIGHT LANE MUST TURN RIGHT	30X30	X		TWT	1	WS	P		
7	6	D1-2	HERO WAY	72X12	X		10BWG	1	SA	T		
7	7	D21-1TL	OLD RM 2243	78X12	X		10BWG	1	SA	P		
8	1	R3-5R	RIGHT ONLY	30X36	X		TWT	1	WS	P		

ALUMINUM SIGN BLANKS THICKNESS	
Square Feet	Minimum Thickness
Less than 7.5	0.080"
7.5 to 15	0.100"
Greater than 15	0.125"

The Standard Highway Sign Designs for Texas (SHSD) can be found at the following website.

http://www.txdot.gov/

NOTE:

1. Sign supports shall be located as shown on the plans, except that the Engineer may shift the sign supports, within design guidelines, where necessary to secure a more desirable location or to avoid conflict with utilities. Unless otherwise shown on the plans, the Contractor shall stake and the Engineer will verify all sign support locations.
2. For installation of bridge mount clearance signs, see Bridge Mounted Clearance Sign Assembly (BMCS)Standard Sheet.
3. For Sign Support Descriptive Codes, see Sign Mounting Details Small Roadside Signs General Notes & Details SMD(GEN).

Texas Department of Transportation

Traffic Operations Division Standard

SUMMARY OF SMALL SIGNS

SOSS

SHEET 2 OF 3

FILE:	sums16.dgn	DN: TxDOT	CK: TxDOT	DW: TxDOT	CK: TxDOT
©TxDOT	May 1987	CONT	SECT	JOB	HIGHWAY
REVISIONS		0914	05	222	RM 2243
		DIST	COUNTY		SHEET NO.
		AUS	WILLIAMSON		19

18

DISCLAIMER:
The use of this standard is governed by the "Texas Engineering Practice Act". No warranty of any kind is made by TxDOT for any purpose whatsoever. TxDOT assumes no responsibility for the conversion of this standard to other formats or for incorrect results or damages resulting from its use.

DATE: 4/10/2025 12:54:07 PM
FILE: G:\TXC\Projects\County_Williamson\7473-02 RM 2243 Phase 1A\03_CADD\01_Plans\07-GEN\SMALL\SUMMARY OF SMALL SIGNS.dgn

SUMMARY OF SMALL SIGNS

SM RD SGN ASSM TY XXXXX (X) XX (X-XXXX)

PLAN SHEET NO.	SIGN NO.	SIGN NOMENCLATURE	SIGN	DIMENSIONS	FLAT ALUMINUM (TYPE A)	EXAL ALUMINUM (TYPE G)	POST TYPE FRP = Fiberglass TWT = Thin-Wall 10BWG = 10 BWG S80 = Sch 80	POSTS 1 or 2	ANCHOR TYPE UA=Universal Conc UB=Universal Bolt SA=Slipbase-Conc SB=Slipbase-Bolt WS=Wedge Steel WP=Wedge Plastic	MOUNTING DESIGNATION PREFABRICATED P = "Plain" T = "T" U = "U" 1EXT or 2EXT = # of Ext BM = Extruded Wind Beam WC = 1.12 #/ft Wing Channel EXAL= Extruded Alum Sign Panels	BRIDGE MOUNT CLEARANCE SIGNS (See Note 2) TYPE N	BRIDGE MOUNT CLEARANCE SIGNS (See Note 2) TYPE S
8	2	D3-1G	LIMESTONE CREEK RD	66X8	X		10BWG	1	SA	T		
		R1-1	STOP	36X36	X							
8	3	W1-7T	CHEVRON/TWO DIRECTION LARGE ARROW	96X36	X		SCH 80	1	SA	T		
8	4	R3-7R	RIGHT LANE MUST TURN RIGHT	30X30	X		TWT	1	WS	P		
8	5	D3-1G	LIMESTONE CREEK RD	66X8	X		10BWG	1	SA	T		
		R1-1	STOP	36X36	X							
8	6	R3-5R	RIGHT ONLY	30X36	X		TWT	1	WS	P		
8	7	D3-1G	RM 2243	30X8	X		TWT	1	WS	P		
		D3-1G	LIMESTONE CREEK RD	66X8	X							
		R1-1	STOP	36X36	X							
10	1	D3-1G	RM 2243	30X8	X		10BWG	1	SA	T		
		D3-1G	GAREY PARK RD	48X8	X							
		R1-1	STOP	36X36	X							
10	2	W1-7T	CHEVRON/TWO DIRECTION LARGE ARROW	96X36	X		SCH 80	1	SA	T		
10	3	R3-5R	RIGHT ONLY	30X36	X		TWT	1	WS	P		
10	4	R3-7R	RIGHT LANE MUST TURN RIGHT	30X30	X		TWT	1	WS	P		
10	5	R3-9cP	BEGIN	30X12	X		TWT	1	WS	P		
		R3-9b	CENTER LANE ONLY	24X36	X							
10	6	R3-9dP	END	30X12	X		TWT	1	WS	P		
		R3-9b	CENTER LANE ONLY	24X36	X							
357	S5	R10-5L	LEFT ON GREEN ARROW ONLY	30X36	X		MAST ARM SIGN					
	S6	D3-1G	OVERHEAD STREET NAME (RONALD W REAGAN)	18X162	X		MAST ARM SIGN					
	S8	R10-5L	LEFT ON GREEN ARROW ONLY	30X36	X		MAST ARM SIGN					
	S10	R10-5L	LEFT ON GREEN ARROW ONLY	30X36	X		MAST ARM SIGN					
	S11	D3-1G	OVERHEAD STREET NAME (RONALD W REAGAN)	18X162	X		MAST ARM SIGN					
	S12	R10-5L	LEFT ON GREEN ARROW ONLY	30X36	X		MAST ARM SIGN					
360	S1	R10-17T	LEFT TURN YIELD ON FLASHING YELLOW ARROW	30X30	X		MAST ARM SIGN					
	S2	D3-1G	OVERHEAD STREET NAME (CR 175 / LIMESTONE CREEK)	114X24	X		MAST ARM SIGN					
	S3	R10-17T	LEFT TURN YIELD ON FLASHING YELLOW ARROW	30X30	X		MAST ARM SIGN					
	S4	D3-1G	OVERHEAD STREET NAME (RM 2243)	66X18	X		MAST ARM SIGN					
	S5	R10-17T	LEFT TURN YIELD ON FLASHING YELLOW ARROW	30X30	X		MAST ARM SIGN					
	S6	D3-1G	OVERHEAD STREET NAME (LIMESTONE CREEK / CR 175)	114X24	X		MAST ARM SIGN					
	S7	R10-17T	LEFT TURN YIELD ON FLASHING YELLOW ARROW	30X30	X		MAST ARM SIGN					
	S8	D3-1G	OVERHEAD STREET NAME (RM 2243)	66X18	X		MAST ARM SIGN					

ALUMINUM SIGN BLANKS THICKNESS	
Square Feet	Minimum Thickness
Less than 7.5	0.080"
7.5 to 15	0.100"
Greater than 15	0.125"

The Standard Highway Sign Designs for Texas (SHSD) can be found at the following website.

http://www.txdot.gov/

NOTE:

1. Sign supports shall be located as shown on the plans, except that the Engineer may shift the sign supports, within design guidelines, where necessary to secure a more desirable location or to avoid conflict with utilities. Unless otherwise shown on the plans, the Contractor shall stake and the Engineer will verify all sign support locations.
2. For installation of bridge mount clearance signs, see Bridge Mounted Clearance Sign Assembly (BMCS)Standard Sheet.
3. For Sign Support Descriptive Codes, see Sign Mounting Details Small Roadside Signs General Notes & Details SMD(GEN).

Texas Department of Transportation

Traffic Operations Division Standard

SUMMARY OF SMALL SIGNS

SOSS

SHEET 3 OF 3

FILE:	sums16.dgn	DN: TxDOT	CK: TxDOT	DW: TxDOT	CK: TxDOT
©TxDOT	May 1987	CONT	SECT	JOB	HIGHWAY
REVISIONS		0914	05	222	RM 2243
		DIST	COUNTY		SHEET NO.
		AUS	WILLIAMSON		20

18

DISCLAIMER:
The use of this standard is governed by the "Texas Engineering Practice Act". No warranty of any kind is made by TxDOT for any purpose whatsoever. TxDOT assumes no responsibility for the conversion of this standard to other formats or for incorrect results or damages resulting from its use.

DATE: 4/10/2025 2:43:49 PM
FILE: G:\TXC\Projects\County_Williamson\7473-02 RM 2243 Phase 1A\03_CADD\OP\Sheets\07-GEN\SMR_LOSSUMARY_OF_SMALL_SIGNS.dgn

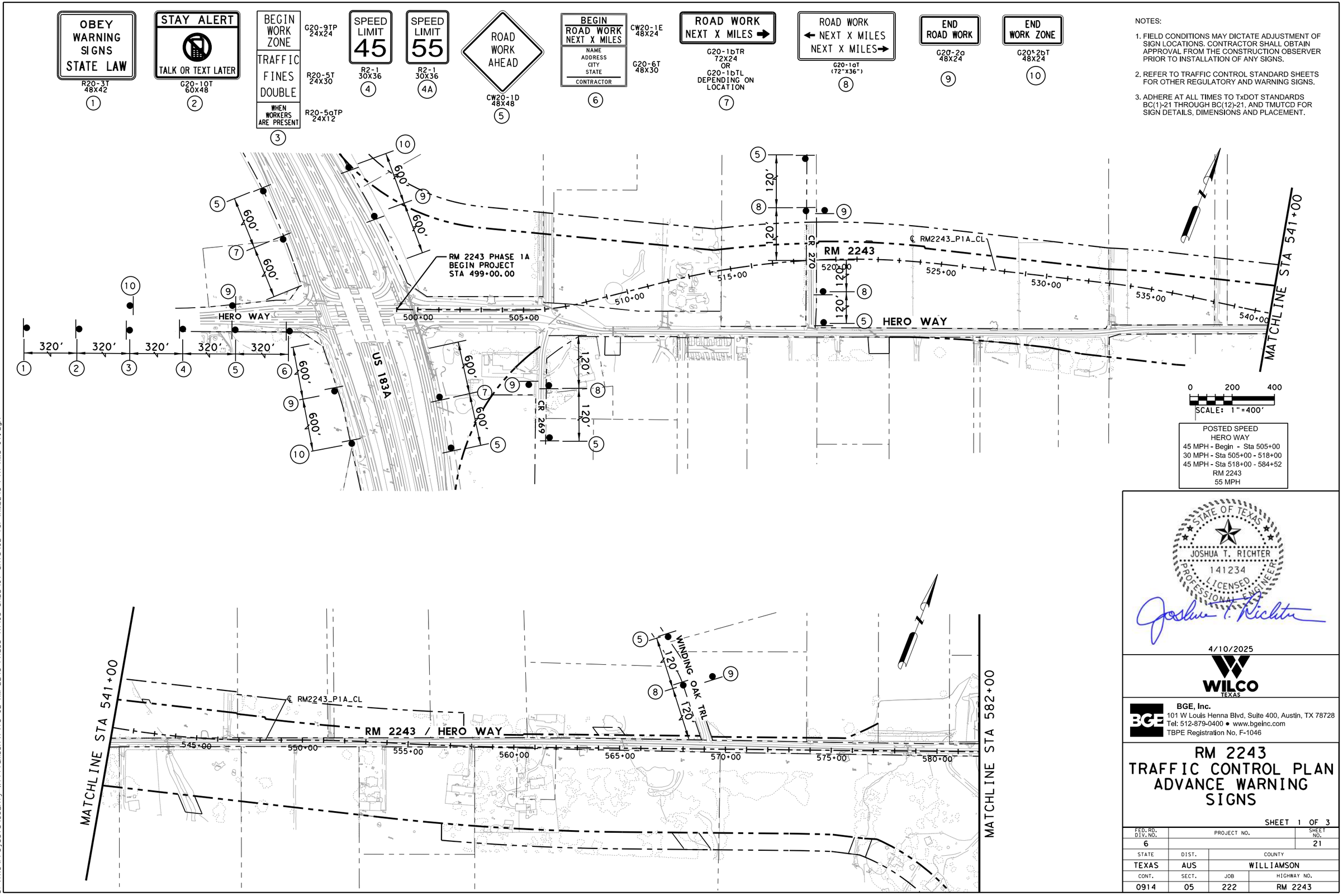

STATE OF TEXAS
JOSHUA T. RICHTER
141234
LICENSED PROFESSIONAL ENGINEER

4/10/2025

WILCO TEXAS

BGE, Inc.
101 W Louis Henna Blvd, Suite 400, Austin, TX 78728
Tel: 512-879-0400 • www.bgeinc.com
TBPE Registration No. F-1046

RM 2243
TRAFFIC CONTROL PLAN
ADVANCE WARNING SIGNS

SHEET 1 OF 3

FED.RD. DIV.NO.	PROJECT NO.		SHEET NO.
6			21
STATE	DIST.	COUNTY	
TEXAS	AUS	WILLIAMSON	
CONT.	SECT.	JOB	HIGHWAY NO.
0914	05	222	RM 2243

4/10/2025 1:09:40 PM pdf.pltcfg
G:\TXC\Projects\County\Williamson\7473-02 RM 2243 Phase 1A\03*CADD\01*Shts\02-TCP\RM2243*P1A*AWS*01.dgn

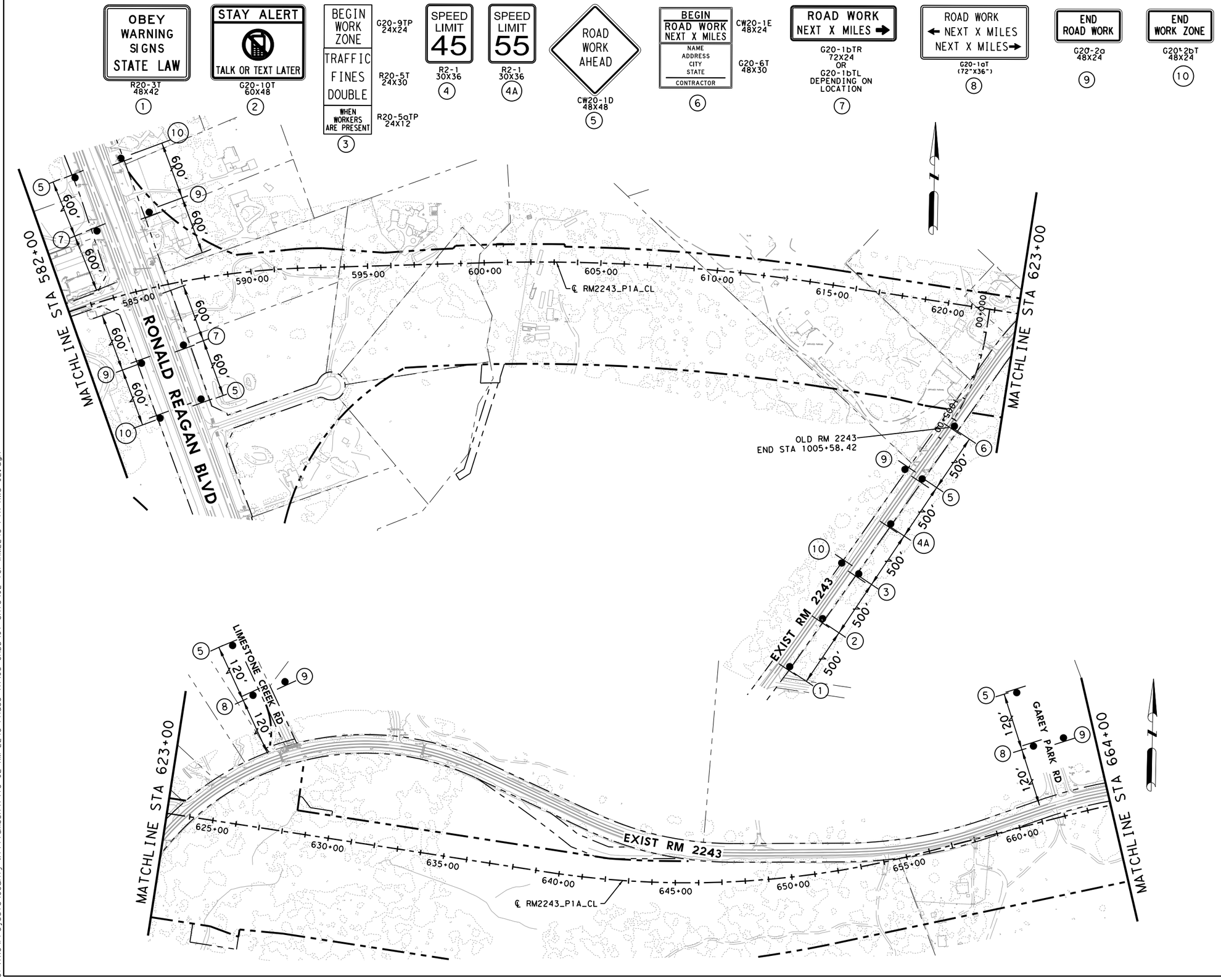

NOTES:

1. FIELD CONDITIONS MAY DICTATE ADJUSTMENT OF SIGN LOCATIONS. CONTRACTOR SHALL OBTAIN APPROVAL FROM THE CONSTRUCTION OBSERVER PRIOR TO INSTALLATION OF ANY SIGNS.
2. REFER TO TRAFFIC CONTROL STANDARD SHEETS FOR OTHER REGULATORY AND WARNING SIGNS.
3. ADHERE AT ALL TIMES TO TxDOT STANDARDS BC(1)-21 THROUGH BC(12)-21, AND TMUTCD FOR SIGN DETAILS, DIMENSIONS AND PLACEMENT.

0 200 400
SCALE: 1"=400'

POSTED SPEED
HERO WAY
45 MPH - Begin - Sta 505+00
30 MPH - Sta 505+00 - 518+00
45 MPH - Sta 518+00 - 584+52
RM 2243
55 MPH

STATE OF TEXAS
JOSHUA T. RICHTER
141234
LICENSED PROFESSIONAL ENGINEER

4/10/2025

WILCO TEXAS

BGE, Inc.
101 W Louis Henna Blvd, Suite 400, Austin, TX 78728
Tel: 512-879-0400 • www.bgeinc.com
TBPE Registration No. F-1046

RM 2243
TRAFFIC CONTROL PLAN
ADVANCE WARNING SIGNS

SHEET 2 OF 3

FED.RD. DIV.NO.	PROJECT NO.		SHEET NO.
6			22
STATE	DIST.	COUNTY	
TEXAS	AUS	WILLIAMSON	
CONT.	SECT.	JOB	HIGHWAY NO.
0914	05	222	RM 2243

4/10/2025 1:09:42 PM pdf.pltcfg
G:\TXC\Projects\County\Williamson\7473-02 RM 2243 Phase 1A\03*CADD\01*Shts\02-TCP\RM2243*P1A*AWS*02.dgn

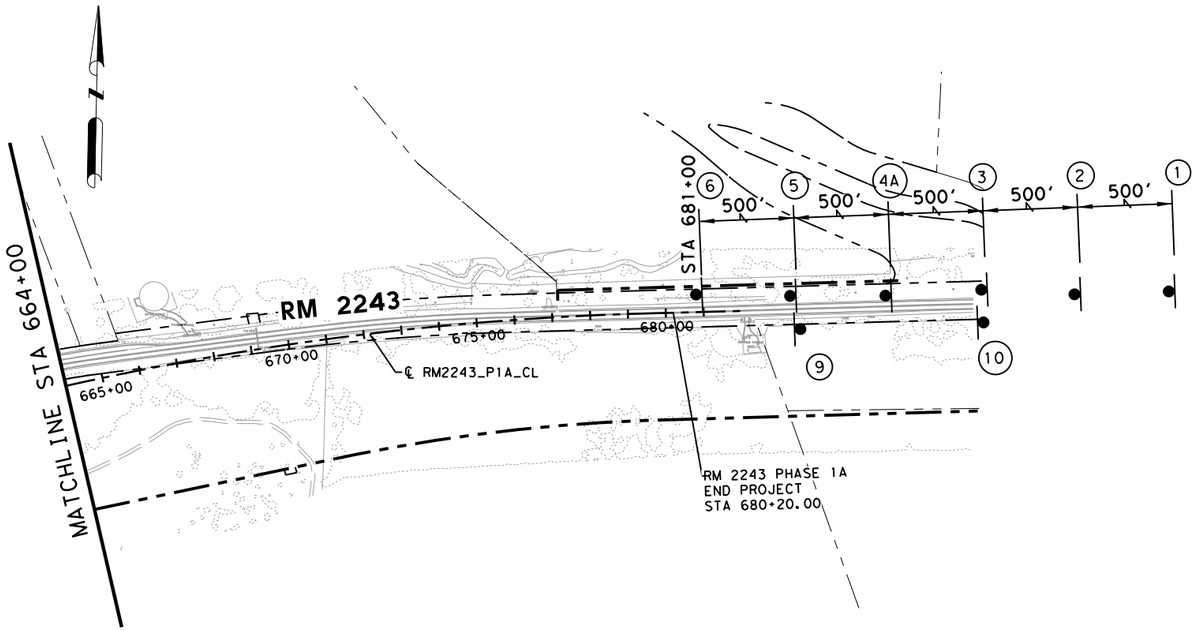

NOTES:

1. FIELD CONDITIONS MAY DICTATE ADJUSTMENT OF SIGN LOCATIONS. CONTRACTOR SHALL OBTAIN APPROVAL FROM THE CONSTRUCTION OBSERVER PRIOR TO INSTALLATION OF ANY SIGNS.
2. REFER TO TRAFFIC CONTROL STANDARD SHEETS FOR OTHER REGULATORY AND WARNING SIGNS.
3. ADHERE AT ALL TIMES TO TxDOT STANDARDS BC(1)-21 THROUGH BC(12)-21, AND TMUTCD FOR SIGN DETAILS, DIMENSIONS AND PLACEMENT.

0 200 400
SCALE: 1"=400'

POSTED SPEED
HERO WAY
45 MPH - Begin - Sta 505+00
30 MPH - Sta 505+00 - 518+00
45 MPH - Sta 518+00 - 584+52
RM 2243
55 MPH

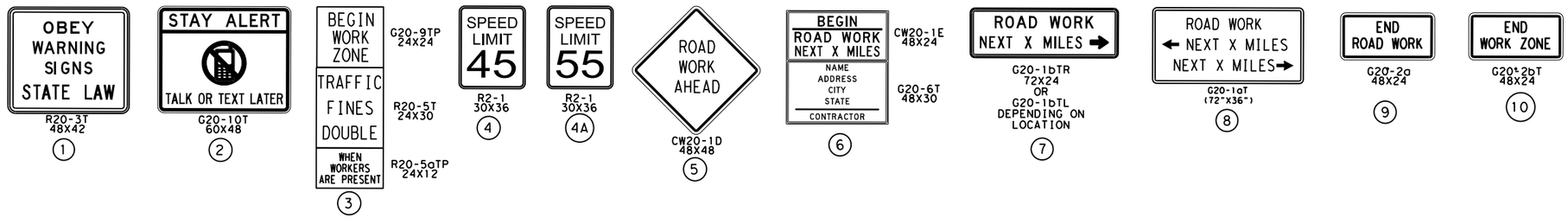

STATE OF TEXAS
JOSHUA T. RICHTER
141234
LICENSED
PROFESSIONAL ENGINEER

4/10/2025

WILCO TEXAS

BGE, Inc.
101 W Louis Henna Blvd, Suite 400, Austin, TX 78728
Tel: 512-879-0400 • www.bgeinc.com
TBPE Registration No. F-1046

RM 2243
TRAFFIC CONTROL PLAN
ADVANCE WARNING SIGNS

SHEET 3 OF 3

FED.RD. DIV.NO.	PROJECT NO.		SHEET NO.
6			23
STATE	DIST.	COUNTY	
TEXAS	AUS	WILLIAMSON	
CONT.	SECT.	JOB	HIGHWAY NO.
0914	05	222	RM 2243

4/10/2025 1:09:43 PM pdf.pltcfg
G:\TxC\Projects\County\Williamson\7473-02 RM 2243 Phase 1A\03*CADD\01*Shts\02-TCP\RM2243*P1A*AWS*03.dgn

GENERAL

THE CONTRACTOR'S ATTENTION IS DIRECTED TO THE REQUIREMENTS OF ITEM 7, "LEGAL RELATIONS AND RESPONSIBILITIES TO THE PUBLIC", OF THE STANDARD SPECIFICATIONS. IN ADDITION TO THESE REQUIREMENTS, THE FOLLOWING PROVISIONS SHALL ALSO GOVERN ON THIS CONTRACT.

1. THIS IS A SUGGESTED TRAFFIC CONTROL PLAN (TCP). THE CONTRACTOR MAY SUBMIT AN ALTERNATE TRAFFIC CONTROL PLAN, SIGNED AND SEALED BY A LICENSED PROFESSIONAL ENGINEER IN TEXAS, FOR APPROVAL BY THE COUNTY OR CONSTRUCTION OBSERVER. WHEN MUTUALLY BENEFICIAL CHANGES ARE PROPOSED TO THE EXISTING TRAFFIC CONTROL PLAN AND ARE AGREED UPON BY THE CONTRACTOR AND THE COUNTY OR CONSTRUCTION OBSERVER, THE PLAN SHEETS MAY BE DEVELOPED AND SIGNED AND SEALED BY THE ENGINEER.

2. FURNISH AND INSTALL ALL TRAFFIC CONTROL PLANS DEVICES, INCLUDING BUT NOT LIMITED TO BARRICADES, SIGNS, AND WORK ZONE MARKINGS, IN COMPLIANCE WITH THE LATEST VERSION OF THE TEXAS MANUAL ON UNIFORM TRAFFIC CONTROL DEVICES (TXMUTCD), THE STATE STANDARD TRAFFIC CONTROL PLANS (TCP) SHEETS, AND THE BARRICADES AND CONSTRUCTION (BC) SHEETS. REFER TO THE PROJECT GENERAL NOTES FOR ADDITIONAL INFORMATION REGARDING THE TRAFFIC CONTROL PLAN. ALL WORK & MATERIALS ARE PAID WITH ITEM 502 BARRICADES, SIGNS AND TRAFFIC HANDLING.

3. ALL TRAFFIC CONTROL DEVICES SHALL BE KEPT IN THEIR PROPER POSITION AND IN GOOD CONDITION AT ALL TIMES. DEVICES SHALL BE REPAIRED, REPLACED OR CLEANED AS NECESSARY TO PRESERVE THEIR APPEARANCE AND CONTINUITY.

4. VERIFY THE LOCATION AND SPACING OF SIGNS, BARRICADES, AND CHANNELIZING DEVICES PRIOR TO THEIR PLACEMENT ALONG VERTICAL CURVES, HORIZONTAL CURVES, AND OTHER GEOMETRIC CONSTRAINTS TO ENSURE VISIBILITY TO ALL MOTORISTS.

5. COVER ALL EXISTING SIGNS THAT CONFLICT WITH THE TRAFFIC CONTROL PLAN AND UNCOVER DURING NON-WORKING HOURS OR AS DIRECTED BY THE CONSTRUCTION OBSERVER. PARTIAL COVERAGE OF THE SIGN OR COVERAGE BY MATERIAL THAT WILL NOT COVER THE ENTIRE SIGN ALL THE TIME IS NOT PERMITTED.

6. VARY THE SPACING OF SIGNS TO MEET TRAFFIC CONDITIONS OR AS DIRECTED BY THE CONSTRUCTION OBSERVER AND ENSURE THAT ALL TRAFFIC CONTROL DEVICES AND WORK ZONE PAVEMENT MARKINGS ARE KEPT IN A HIGHLY VISIBLE CONDITION (CLEAN, UPRIGHT AND AT PROPER LOCATION).

7. CONDUCT CONSTRUCTION OPERATIONS SO AS TO PROVIDE THE LEAST POSSIBLE INTERFERENCE TO TRAFFIC AND TO PERMIT THE CONTINUOUS MOVEMENT OF TRAFFIC IN ALL ALLOWABLE DIRECTIONS AT ALL TIMES OR AS PERMITTED BY THE SEQUENCE OF CONSTRUCTION. PROVIDE FOR SAFE AND CONVENIENT ACCESS TO ABUTTING PROPERTY, HIGHWAYS, PUBLIC ROADS, AND STREET CROSSINGS EXCEPT AS OTHERWISE SHOWN ON THE SEQUENCE OF CONSTRUCTION.

8. REGULATE ALL CONSTRUCTION TRAFFIC SO AS TO CAUSE A MINIMAL INCONVENIENCE TO THE TRAVELING PUBLIC. AT THE TIMES WHEN IT IS NECESSARY FOR TRUCKS TO STOP, UNLOAD OR CROSS ROADWAYS UNDER TRAFFIC, PROVIDE WARNING SIGNS AND FLAGGERS AS NEEDED TO ADEQUATELY PROTECT THE TRAVELING PUBLIC.

9. NOTIFY THE COUNTY OR CONSTRUCTION OBSERVER IN WRITING TWO WEEKS PRIOR TO SHIFTING OF TRAFFIC WITHIN EACH PHASE OF THE TRAFFIC CONTROL PLAN.

10. MOVING AN EXISTING SIGN TO A TEMPORARY LOCATION IS SUBSIDIARY TO ITEM 502. INSTALLATIONS WITH PERMANENT SUPPORTS AT PERMANENT LOCATIONS WILL BE PAID FOR UNDER THE APPLICABLE BID ITEM(S).

11. USE OF PORTABLE CHANGEABLE MESSAGE SIGNS AS ADVANCE NOTICE OF LANE CLOSURES WILL BE REQUIRED, AS DIRECTED BY THE CONSTRUCTION OBSERVER. FOR LOCATIONS THAT ARE ADJACENT TO EACH OTHER, A SINGLE SIGN IN ADVANCE OF THE ENTIRE WORK AREA IS ACCEPTABLE.

12. PLACE PORTABLE CHANGEABLE MESSAGE SIGNS AT LOCATIONS REQUIRING LANE CLOSURES FOR TWO WEEKS BEFORE THE CLOSURES OR AS DIRECTED BY THE CONSTRUCTION OBSERVER.

13. ADDITIONAL SIGNS, BARRICADES AND CHANNELIZING DEVICES MAY BE REQUIRED TO MAINTAIN TRAFFIC DURING CONSTRUCTION, AS SHOWN ON TCP STANDARDS. ADDITIONAL SIGNS, BARRICADES, ETC. (IF ANY), WILL BE SUBSIDIARY TO ITEMS 502 "BARRICADES, SIGNS AND TRAFFIC HANDLING".

14. PROVIDE LIGHTS TO ILLUMINATE THE FLAGGERS AND WORK AREA DURING NIGHTTIME OPERATIONS. CLASS 3 GARMENTS WILL BE REQUIRED FOR ALL WORKERS AND FLAGGERS DURING NIGHTTIME WORK.

15. CONTRACTOR SHALL COORDINATE THE TRAFFIC CONTROL PLAN AND THE VARIOUS SEQUENCES OF CONSTRUCTION WITH ADJACENT CONSTRUCTION PROJECTS, IF APPLICABLE, TO ENSURE THE UNINTERRUPTED AND SAFE FLOW OF TRAFFIC.

STATE OF TEXAS
JOSHUA T. RICHTER
141234
LICENSED
PROFESSIONAL ENGINEER

4/10/2025

WILCO
TEXAS

BGE, Inc.
101 W Louis Henna Blvd, Suite 400, Austin, TX 78728
Tel: 512-879-0400 • www.bgeinc.com
TBPE Registration No. F-1046

RM 2243

TRAFFIC CONTROL PLAN NOTES

SHEET 1 OF 1

FED.RD. DIV.NO.	PROJECT NO.		SHEET NO.
6			24
STATE	DIST.	COUNTY	
TEXAS	AUS	WILLIAMSON	
CONT.	SECT.	JOB	HIGHWAY NO.
0914	05	222	RM 2243

4/10/2025 1:09:44 PM pdf.pltcfg
G:\TXC\Projects\County\Williamson\7473-02 RM 2243 Phase 1A\03*CADD\01*Shts\02-TCP\RM2243*P1A*TCP*NOTES.dgn

TRAFFIC CONTROL PLAN NARRATIVE

GENERAL:
FOLLOW THE CONSTRUCTION SEQUENCING UNLESS OTHERWISE APPROVED.

THE CONTRACTOR MAY PROPOSE MODIFICATIONS TO THE SEQUENCE OF WORK FOR CONSIDERATION BY THE CONSTRUCTION OBSERVER. ANY RECOMMENDATION RESULTING IN MAJOR MODIFICATIONS TO THE SEQUENCE OF WORK BY THE CONTRACTOR SHALL INCLUDE ANY CHANGES TO THE VARIOUS PAY ITEMS, IMPACT TO TRAFFIC, AND EFFECT TO OVERALL PROJECT TIME, COST, ETC. DO NOT PROCEED WITH ANY CONSTRUCTION OPERATIONS BASED ON A REVISED SEQUENCE OF WORK WITHOUT WRITTEN APPROVAL FROM THE COUNTY OR CONSTRUCTION OBSERVER.

TWO WEEKS PRIOR TO BEGINNING ANY CONSTRUCTION, PORTABLE CHANGEABLE MESSAGE SIGNS SHALL BE PLACED ON BOTH ENDS OF THE PROJECT. MESSAGE AS DIRECTED BY THE CONSTRUCTION OBSERVER.

IT IS THE CONTRACTOR'S RESPONSIBILTY TO DETERMINE EXACT LOCATION OF UTILITIES PRIOR TO STARTING CONSTRUCTION WITHIN A WORK AREA.

CONTRACTOR WILL MAINTAIN ACCESS TO DRIVEWAYS AND SIDE STREETS AT ALL TIMES UNLESS APPROVED BY THE CONSTRUCTION OBSERVER OR SHOWN OTHERWISE IN THE PLANS.

SIDE STREETS AND DRIVEWAYS CAN BE CONSTRUCTED UTILIZING DAILY/TEMPORARY ONE WAY TRAFFIC CONTROL AND BE OPENED TO FULL WIDTH AT THE END OF THE WORKDAY MAINTAINING ACCESS AT ALL TIMES UNLESS APPROVED BY THE CONSTRUCTION OBSERVER.

FOR ALL PHASES THE CONTRACTOR WILL PROVIDE TEMPORARY PIPE DRAINS OR CULVERTS AND TAKE SUCH MEASURES AS DIRECTED TO PROVIDE FOR CONTINUED DRAINAGE FROM ALL ABUTTING PROPERTY, THE RIGHT OF WAY AND THE ROADWAY DURING CONSTRUCTION OPERATIONS. LABOR AND MATERIALS INVOLVED IN THIS WORK WILL NOT BE PAID FOR DIRECTLY, BUT WILL BE CONSIDERED SUBSIDIARY TO THE VARIOUS BID ITEMS OF THE CONTRACT.

WORK ZONE PAVEMENT MARKINGS AND CONCRETE BARRIERS FOR ALL PHASES ARE OFFSET FROM PROPOSED ALIGNMENTS OF THE PROJECT. SEE TRAFFIC CONTROL PLAN TYPICAL SECTIONS AND LAYOUTS FOR DIMENSIONS AND DETAILS.

BEFORE BEGINNING ANY WORK, PLACE ALL APPLICABLE BARRICADES IN ACCORDANCE WITH TXDOT STANDARDS BC (1-12)-21.

PHASE 1A - ROADWAY CONSTRUCTION:

STA 585+86 - STA 623+20 (RM2243_P1A)

PHASE 1A CONSISTS OF PARTIAL CONSTRUCTION OF RM 2243
FROM STA 585+86 (RONALD REAGAN) TO STA 623+20.

STEP 1:
INSTALL TEMPORARY EROSION CONTROL DEVICES FOR CONSTRUCTION ACTIVITIES AS SHOWN ON SW3P LAYOUTS FOR ENTIRE PROJECT. TEMPORARY EROSION CONTROL DEVICES WILL REQUIRE ADJUSTMENTS AS PHASES PROGRESS.

STEP 2:
BEGIN CONSTRUCTION OF PROPOSED CROSS CULVERTS 07 & 08 AND PROPOSED STORM SEWER SYSTEM. SEE CULVERT LAYOUTS & STORM SEWER PLAN PROFILE PLAN SHEETS FOR DETAILS.

BEGIN CONSTRUCTION OF RETAINING WALLS. SEE RETAINING WALL LAYOUT PLAN SHEETS FOR LOCATIONS & DETAILS

BEGIN ROADWAY CONSTRUCTION FOR PHASE 1A .
EXCAVATE AND REMOVE EXISTING MATERIALS. CONSTRUCT PROPOSED PAVEMENT SECTION IN ACCORDANCE WITH ROADWAY TYPICAL SECTIONS. CONSTRUCT PROPOSED PAVEMENT SECTION THROUGH HMA, CURB & GUTTER, SHARED USE PATH, DITCHES, RETAINING WALLS AND SEEDING ALL SLOPES FROM STA 585+86 TO 623+20.

BEGIN PARTIAL CONSTRUCTION OF OLD RM 2243 FROM STA 1000+00 TO 1002+30

CONSTRUCT PROPOSED DRAINAGE STRUCTURES ACROSS SIDE ROADS AND DRIVEWAYS. CONTRACTOR TO PROVIDE SAFE AND EFFICIENT PASSAGE OF TRAFFIC TO SIDE ROADS AND DRIVEWAYS AT ALL TIMES.

CONSTRUCT RIGHT TURN LANE AT RONALD REAGAN USING TCP (2-1)-18 FOR SHOULDER CLOSURE.
ALSO CONSTRUCT PROPOSED PAVEMENT AND TRAFFIC SIGNAL IMPROVEMENTS IN RONALD REAGAN MEDIAN USING TCP (2-4)-18 FOR DAILY LANE CLOSURES. ALL LANES ON RONALD REAGAN TO BE OPEN DURING NON WORKING HOURS.

FINAL SURFACE AND PAVEMENT MARKINGS FROM STA 585+86 TO 688+60 ON RM 2243 TO BE DONE AT THE END OF PHASE 2C STEP2 .

STEP 3:
AFTER COMPLETION OF ALL STEPS PROCEED TO PHASE 1B CONSTRUCTION.

THE FOLLOWING PHASE 1B MAY BE CONSTRUCTED AS SOON AS THE PEC OVERHEAD ELECTRICAL LINES AND POLES HAVE BEEN REMOVED FROM STA 554+00 TO 583+30.

PHASE 1B - WATERLINE CONSTRUCTION:

STA 506+35 - 586+40

PHASE 1B CONSTRUCTION CONSISTS OF CONSTRUCTING
TEMPORARY PAVEMENT & WATERLINES (WEST OF RONALD REAGAN BLVD)

STEP 1:
REMOVE CULVERT ENDS FOR EXISTING CULVERTS 05 & 06. TEMPORARY EXTEND CULVERTS. TEMPORARY EXTENSIONS WILL BE SUBSIDIARY TO ITEM 508.

CONSTRUCT TEMPORARY PAVEMENT USING TCP (2-2)-18 FROM STA 555+55 TO 569+88 AND STA 574+49 TO 584+26 TO THE SAME CROSS SLOPE AS THE EXISTING ROADWAY AND SET-UP LOW PROFILE CONCRETE BARRIER. SEE PHASE 1B PLAN SHEET LAYOUTS FOR DETAILS.

THEN CONSTRUCT WORK ZONE PAVEMENT MARKINGS IN ACCORDANCE WITH PHASE 1B LANE CONFIGURATION.

STEP 2:
THEN MOVE TRAFFIC TO PHASE 1B STEP 2 LANES AND CONSTRUCT PROPOSED WATERLINES FROM STA 555+00 TO 580+70. SEE WATERLINE PLAN SHEETS FOR ADDITIONAL INFORMATION AND DETAILS. AFTER COMPLETION OF PROPOSED WATERLINES RESTORE EXISTING PAVEMENT IN ACCORDANCE WITH ITEM 400. SEE SUMMARY OF TRAFFIC CONTROL QUANTITIES FOR ADDITIONAL INFORMATION.

THEN MOVE LOW PROFILE CONCRETE BARRIER & CONSTRUCT WORK ZONE PAVEMENT MARKINGS TO ORIGINAL LOCATION OF EXISTING PAVEMENT MARKINGS.

STEP 3:
AFTER COMPLETION OF ALL STEPS PROCEED TO PHASE 2 CONSTRUCTION.

PHASE 2A - ROADWAY CONSTRUCTION:

STA 624+20 - 680+20 (RM2243_P1A)
STA 2000+00 - 2003+20 (LCR)

PHASE 2A CONSTRUCTION CONSISTS OF PARTIAL CONSTRUCTION OF RM 2243, SIDE ROADS, DRIVEWAYS AND DRAINAGE STRUCTURES.

STEP 1:
SET-UP SINGLE SLOPE CONCRETE BARRIER, TRAFFIC CONTROL CHANNELIZING DEVICES AND APPICABLE TRAFFIC CONTROL SIGNS ALONG PHASE 2A WORK ZONES.

STEP 2:
BEGIN CONSTRUCTION OF PROPOSED CROSS CULVERTS 09, 09A, & 10. AND PROPOSED STORM SEWER SYSTEMS. SEE CULVERT LAYOUTS & STORM SEWER PLAN PROFILE PLAN SHEETS FOR DETAILS.

CONSTRUCT PROPOSED DRAINAGE STRUCTURES ACROSS SIDE ROADS AND DRIVEWAYS. CONTRACTOR TO PROVIDE SAFE AND EFFICIENT PASSAGE OF TRAFFIC TO SIDE ROADS AND DRIVEWAYS AT ALL TIMES. SEE TRAFFIC CONTROL PLAN DRIVEWAY AND INTERSECTION DETAIL PLAN SHEETS FOR ADDITIONAL INFORMATION.

STEP 3:
BEGIN ROADWAY CONSTRUCTION FOR PHASE 2A FROM STA 624+20 TO 680+20
EXISTING TRAFFIC TO REMAIN ON RM 2243 ROADWAY FOR PHASE 2A CONSTRUCTION.
CONSTRUCT PROPOSED PAVEMENT SECTION IN ACCORDANCE WITH ROADWAY TYPICAL SECTIONS.
CONSTRUCT PROPOSED PAVEMENT SECTION THROUGH HMA, CURB & GUTTER, SHARED USE PATH, DITCHES AND SEEDING ALL SLOPES.
FINAL SURFACE TO BE CONSTRUCTED AT THE END OF PHASE 2C FROM STA 585+86 (RONALD REAGAN) TO STA 688+60 (END OF PROJECT).

CONSTRUCT TEMPORARY PAVEMENT FOR PHASE 2B TCP LANES AT LOCATIONS SHOWN ON TRAFFIC CONTROL PLAN PHASE 2A LAYOUT SHEETS. TEMPORARY PAVEMENT WILL BE DONE IN ACCORDANCE WITH ITEM 508. SEE SUMMARY OF TRAFFIC CONTROL QUANTITIES FOR ITEM 508 PAVEMENT TYPES.

STEP 4:
AFTER COMPLETION OF STEP 3, CONSTRUCT WORK ZONE PAVEMENT MARKINGS IN ACCORDANCE WITH PHASE 2B LANE CONFIGURATION. MOVE SINGLE SLOPE CONCRETE BARRIER AND CHANNELIZERS AS SHOWN ON PHASE 2B LAYOUT SHEETS.

CONSTRUCT TEMPORARY PAVEMENT OVERLAY TRANSITION FROM STA 3004+00 TO 3006+00 (EXIST2243) USING STANDARD TCP (2-2)-18 FOR LANE CLOSURES AND THEN SHIFT TRAFFIC TO PHASE 2B LANES.

AFTER COMPLETION OF ALL STEPS PROCEED TO PHASE 2B CONSTRUCTION.

STATE OF TEXAS
JOSHUA T. RICHTER
141234
LICENSED
PROFESSIONAL ENGINEER

4/10/2025

WILCO TEXAS

BGE, Inc.
101 W Louis Henna Blvd, Suite 400, Austin, TX 78728
Tel: 512-879-0400 • www.bgeinc.com
TBPE Registration No. F-1046

RM 2243

TRAFFIC CONTROL PLAN NARRATIVE

SHEET 1 OF 3

FED.RD. DIV.NO.	PROJECT NO.		SHEET NO.
6			25
STATE	DIST.	COUNTY	
TEXAS	AUS	WILLIAMSON	
CONT.	SECT.	JOB	HIGHWAY NO.
0914	05	222	RM 2243

4/10/2025 1:09:45 PM pdf.pltcfg
G:\TXC\Projects\County\Williamson\7473-02 RM 2243 Phase 1A\03*CADD\01*Shts\02-TCP\RM2243*P1A*TCP*SEQ1.dgn

PHASE 2B - ROADWAY CONSTRUCTION:

STA 623+20 - 624+20 (RM2243_P1A)
STA 651+20 - 680+20 (RM2243_P1A)
STA 2003+20 - 2004+81 (LCR)

PHASE 2B CONSTRUCTION CONSISTS OF COMPLETING RM 2243,
SIDE ROADS, DRIVEWAYS AND DRAINAGE STRUCTURES.

STEP 1:
COMPLETE CONSTRUCTION OF PROPOSED CROSS CULVERT 10 AND PROPOSED STORM SEWER SYSTEM.
SEE CULVERT LAYOUTS & STORM SEWER PLAN PROFILE PLAN SHEETS FOR DETAILS.

BEGIN ROADWAY CONSTRUCTION PHASE 2B FROM STA 623+20 TO 624+20 AND STA 651+20 TO 680+20
CONSTRUCT PROPOSED PAVEMENT SECTION IN ACCORDANCE WITH ROADWAY TYPICAL SECTIONS
CONSTRUCT PROPOSED PAVEMENT SECTION THROUGH HMA, CURB & GUTTER, SHARED USE PATH,
DITCHES AND SEEDING ALL SLOPES

COMPLETE LIMESTONE CREEK ROAD FROM STA 2003+20 TO 2004+81, GAREY PARK ENTRANCE AND DRIVEWAYS.
CONTRACTOR TO PROVIDE SAFE AND EFFICIENT PASSAGE OF TRAFFIC TO SIDE ROADS AND DRIVEWAYS AT ALL TIMES.
SEE TRAFFIC CONTROL PLAN DRIVEWAY AND INTERSECTION DETAIL PLAN SHEETS FOR ADDITIONAL INFORMATION.

CONSTRUCT OLD RM 2243 FROM STA 1002+30 TO 1004+00. COMPLETE THE REMAINDER IN PHASE 2C STEP 2.

THEN CONSTRUCT FINAL SURFACE AND FINAL PAVEMENT MARKINGS FROM STA 3012+38 TO 3021+05 ON EXIST RM 2243,
AND LIMESTONE CREEK ROAD FROM STA 2000+30 TO 2004+81.
REMOVE EXISTING RM 2243 ROADWAY IN LOCATIONS AS SHOWN ON PHASE 2B LAYOUT PLAN SHEETS
REMOVE SINGLE SLOPE CONCRETE BARRIER FROM STA 649+20 TO 681+00.

TRAFFIC TO REMAIN ON PHASE 2B LANES UNTIL COMPLETION OF PHASE 2C

STEP 2:
AFTER COMPLETION OF ALL STEPS PROCEED TO PHASE 2C CONSTRUCTION.

PHASE 2C - ROADWAY CONSTRUCTION:

STA 579+00 - STA 584+52 (RM2243_P1A)

PHASE 2C CONSTRUCTION CONSISTS OF PARTIAL CONSTRUCTION OF RM 2243
FROM STA 579+00 TO STA 584+52. (WEST OF RONALD REAGAN) AND
FINAL SURFACE & PAVEMENT MARKINGS FROM STA 585+86 TO STA 688+70 (EAST OF RONALD REAGAN)

STEP 1:
TRAFFIC TO REMAIN ON EXISTING HERO WAY LANES FOR PHASE 2C STEP 1.

SET-UP LOW PROFILE CONCRETE BARRIER, TRAFFIC CONTROL CHANNELIZING DEVICES AND APPICABLE TRAFFIC CONTROL
SIGNS ALONG PHASE 2C STEP 1 WORK ZONE.

BEGIN ROADWAY CONSTRUCTION FOR PHASE 2C STEP 1 .
EXCAVATE AND REMOVE EXISTING MATERIALS. CONSTRUCT PROPOSED PAVEMENT SECTION IN ACCORDANCE WITH
ROADWAY TYPICAL SECTIONS. CONSTRUCT PROPOSED PAVEMENT SECTION THROUGH HMA, DITCHES AND SEEDING
ALL SLOPES FROM STA 581+92 TO 584+52.

THE FINAL SURFACE AND PAVEMENT MARKINGS FROM STA 581+92 TO 584+52 TO BE CONSTRUCTED IN PHASE 5.

CONSTRUCT TEMPORARY PAVEMENT FROM STA 579+00 TO 581+92 TO SAME CROSS SLOPE AS THE EXISTING ROADWAY
AT STA 579+00 AND TRANSITION TO CROSS SLOPE OF PROPOSED ROADWAY AT STA 581+92.

THEN CONSTRUCT WORK ZONE PAVEMENT MARKINGS IN ACCORDANCE WITH PHASE 2C STEP 2 LANE CONFIGURATION

STEP 2:
EXISTING TRAFFIC SIGNAL HEADS FOR HERO WAY AT RONALD REAGAN TO BE ADJUSTED FOR PHASE 2C STEP 2 TRAFFIC.

MOVE LOW PROFILE CONCRETE BARRIER, TRAFFIC CONTROL CHANNELIZING DEVICES AND APPICABLE TRAFFIC CONTROL
SIGNS ALONG PHASE 2C STEP 2 WORK ZONE.

BEGIN ROADWAY CONSTRUCTION FOR PHASE 2C STEP 2 .
EXCAVATE AND REMOVE EXISTING MATERIALS. CONSTRUCT PROPOSED PAVEMENT SECTION IN ACCORDANCE WITH
ROADWAY TYPICAL SECTIONS. CONSTRUCT PROPOSED PAVEMENT SECTION THROUGH HMA, CURB & GUTTER, DITCHES
AND SEEDING ALL SLOPES FROM STA 581+92 TO 584+52.

THE FINAL SURFACE AND PAVEMENT MARKINGS FROM STA 581+92 TO 584+52 TO BE CONSTRUCTED IN PHASE 5.

CONSTRUCT TEMPORARY PAVEMENT FROM STA 580+30 TO 581+92 TO SAME CROSS SLOPE AS THE EXISTING ROADWAY
AT STA 580+30 AND TRANSITION TO CROSS SLOPE OF PROPOSED ROADWAY AT STA 581+92.

PLACE TEMPORARY FLEXIBLE REFLECTIVE ROADWAY MARKERS (TABS) IN ACCORDANCE WITH FINAL LANE
CONFIGURATION FROM STA 585+86 TO 688+70. THEN SHIFT TRAFFIC TO NEW RM 2243 FROM STA 585+86 TO 688+70.
CONSTRUCT AND COMPLETE CR 175 STUB-OUT AND FINAL SURFACE WITH PAVEMENT MARKINGS FROM STA 585+86 TO
688+70 USING TCP (2-2) -18 FOR DAILY LANE CLOSURES. ALL LANES TO BE OPEN DURING NON-WORKING HOURS.
ALSO CONSTRUCT & COMPLETE OLD RM 2243 FROM STA 1004+00 TO 1005+60 AS SHOWN ON PHASE 2B LAYOUT PLAN SHEET

STEP 3:
AFTER COMPLETION OF STEP 2, ELIMINATE EXISTING PAVEMENT MARKINGS FROM STA 542+90 TO 580+00,
MOVE LOW PROFILE CONCRETE BARRIER AND CONSTRUCT WORK ZONE PAVEMENT MARKINGS IN ACCORDANCE WITH
PHASE 3 LANE CONFIGURATION AS SHOWN ON PHASE 3 LAYOUT PLAN SHEETS.
ALL TRAFFIC SIGNALS AT RM 2243 AND RONALD REAGAN TO BE OPERATING TO FINAL LANE CONFIGURATION FOR PHASE 3.

THE NEW RM 2243 FROM STA 585+86 (RONALD REAGAN) TO 688+70 (END OF PROJECT) TO BE COMPLETELY OPEN
TO TRAFFIC BEFORE PROCEEDING TO PHASE 3.

STEP 4:
AFTER COMPLETION OF ALL STEPS PROCEED TO PHASE 3 CONSTRUCTION.

PHASE 3 - ROADWAY CONSTRUCTION:

STA 503+60 - 542+94, STA 555+97 - 581+92 (RM2243_P1A)

PHASE 3 CONSTRUCTION CONSISTS OF PARTIAL CONSTRUCTION OF RM 2243,
SIDE ROADS, DRIVEWAYS AND DRAINAGE STRUCTURES.

STEP 1:
SET-UP LOW PROFILE CONCRETE BARRIER, TRAFFIC CONTROL CHANNELIZING DEVICES
AND APPICABLE TRAFFIC CONTROL SIGNS ALONG PHASE 3 WORK ZONES.

STEP 2:
BEGIN CONSTRUCTION AND COMPLETE CROSS CULVERTS 02 & 03.

BEGIN CONSTRUCTION OF CULVERTS 05, 06A & 06B. CONSTRUCT PORTIONS OF CULVERTS 05, 06A & 06B
IN PHASE 3 AND REMAINDER OF THE CULVERTS IN PHASE 4. SEE PHASE 3 LAYOUT PLAN SHEETS
FOR ADDITIONAL INFORMATION & DETAILS. CONTRACTOR TO MAINTAIN DRAINAGE BETWEEN
EXISTING AND PROPOSED CULVERT 05 UNTIL COMPLETION OF CULVERT IN PHASE 4.

CONSTRUCT PROPOSED DRAINAGE STRUCTURES ACROSS SIDE ROADS AND DRIVEWAYS.
CONTRACTOR TO PROVIDE SAFE AND EFFICIENT PASSAGE OF TRAFFIC TO SIDE ROADS
AND DRIVEWAYS AT ALL TIMES. SEE TCP DRIVEWAY AND INTERSECTION DETAIL PLAN SHEETS.

STEP 3:
BEGIN ROADWAY CONSTRUCTION FOR PHASE 3 FROM STA 503+60 TO 542+94 AND STA 555+97 TO 581+92.
EXISTING TRAFFIC TO REMAIN ON HERO WAY ROADWAY FOR PHASE 3 CONSTRUCTION.
CONSTRUCT PROPOSED PAVEMENT SECTION IN ACCORDANCE WITH ROADWAY TYPICAL SECTIONS.
CONSTRUCT PROPOSED PAVEMENT SECTION THROUGH HMA, CURB & GUTTER, SHARED USE PATH,
DITCHES AND SEEDING ALL SLOPES.
FINAL SURFACE TO BE CONSTRUCTED AT THE END OF PHASE 5 FROM STA 500+25 (US 183A) TO STA 584+52
(RONALD REAGAN).

STEP 4:
CONSTRUCT TEMPORARY PAVEMENT FOR PHASE 4 TCP LANES AT LOCATIONS SHOWN ON TRAFFIC CONTROL
PLAN PHASE 3 LAYOUT SHEETS. TEMPORARY PAVEMENT WILL BE DONE IN ACCORDANCE WITH ITEM 508.
SEE SUMMARY OF TRAFFIC CONTROL QUANTITIES FOR ITEM 508 PAVEMENT TYPES.

STEP 5:
AFTER COMPLETION OF STEP 4, CONSTRUCT WORK ZONE PAVEMENT MARKINGS IN ACCORDANCE WITH
PHASE 4 LANE CONFIGURATION.

THEN MOVE LOW PROFILE BARRIER AND CHANNELIZERS TO LOCATIONS AS SHOWN ON PHASE 4 LAYOUT SHEETS.

THEN SHIFT TRAFFIC TO PHASE 4 LANES.

AFTER COMPLETION OF ALL STEPS PROCEED TO PHASE 4 CONSTRUCTION.

PHASE 4 - ROADWAY CONSTRUCTION:

STA 542+94 - 581+92

PHASE 4 CONSTRUCTION CONSISTS OF PARTIAL CONSTRUCTION OF RM 2243,
SIDE ROADS, DRIVEWAYS AND DRAINAGE STRUCTURES.

STEP 1:
CONSTRUCT CULVERT 04 TO EDGE OF EXISTING HERO WAY. COMPLETE REMAINDER OF CULVERT WITH PHASE 5 CONSTRUCTION.
MAINTAIN DRAINAGE BETWEEN PROPOSED CULVERT 4 AND EXISTING CULVERT UNTIL COMPLETION.

COMPLETE CONSTRUCTION OF CULVERTS 05 & 06A AND CULVERT 06B WITH STORM SEWER.

CONSTRUCT PROPOSED DRAINAGE STRUCTURES ACROSS SIDE ROADS AND DRIVEWAYS. CONTRACTOR TO PROVIDE
SAFE AND EFFICIENT PASSAGE OF TRAFFIC TO SIDE ROADS AND DRIVEWAYS AT ALL TIMES.
SEE TCP DRIVEWAY AND INTERSECTIONS DETAIL PLAN SHEETS

STEP 2:
BEGIN ROADWAY CONSTRUCTION FOR PHASE 4. EXCAVATE AND REMOVE EXISTING MATERIALS. CONSTRUCT PROPOSED
PAVEMENT SECTION IN ACCORDANCE WITH ROADWAY TYPICAL SECTIONS. CONSTRUCT PROPOSED PAVEMENT SECTION
THROUGH HMA, CURB & GUTTER, SHARED USE PATH, DITCHES AND SEEDING ALL SLOPES.
FINAL SURFACE TO BE CONSTRUCTED AT THE END OF PHASE 5 FROM STA 500+25 (US 183A) TO STA 584+52 (RONALD REAGAN).

STEP 3:
AFTER COMPLETION OF STEP 2, CONSTRUCT WORK ZONE PAVEMENT MARKINGS IN ACCORDANCE WITH PHASE 5 LANE
CONFIGURATION.

THEN MOVE & REMOVE LOW PROFILE CONCRETE BARRIER AND CHANNELIZERS AS SHOWN ON TRAFFIC CONTROL PLAN
PHASE 5 LAYOUT SHEETS.

THEN SHIFT TRAFFIC TO PHASE 5 LANES

AFTER COMPLETION OF ALL STEPS PROCEED TO PHASE 5 CONSTRUCTION.

STATE OF TEXAS
JOSHUA T. RICHTER
141234
LICENSED
PROFESSIONAL ENGINEER

4/10/2025

WILCO
TEXAS

BGE, Inc.
101 W Louis Henna Blvd, Suite 400, Austin, TX 78728
Tel: 512-879-0400 ● www.bgeinc.com
TBPE Registration No. F-1046

RM 2243

TRAFFIC CONTROL PLAN NARRATIVE

FED.RD. DIV.NO.	PROJECT NO.		SHEET NO.
6			26
STATE	DIST.	COUNTY	
TEXAS	AUS	WILLIAMSON	
CONT.	SECT.	JOB	HIGHWAY NO.
0914	05	222	RM 2243

4/10/2025 1:09:47 PM pdf.pltcfg
G:\TXC\Projects\County\Williamson\7473-02 RM 2243 Phase 1A\03*CADD\01*Shts\02-TCP\RM2243*P1A*TCP*SE02.dgn

PHASE 5 - ROADWAY CONSTRUCTION:

STA 503+60 - 584+52

PHASE 5 CONSTRUCTION CONSISTS OF COMPLETION OF RM 2243
FROM STA 503+60 (US 183A) TO 584+52 (RONALD REAGAN).

STEP 1:
COMPLETE CONSTRUCTION OF PROPOSED CROSS CULVERT 04 ACROSS EXISTING HERO WAY ROAD AND CONSTRUCT END TREATMENT.

CONSTRUCT PROPOSED DRAINAGE STRUCTURES ACROSS SIDE ROADS AND DRIVEWAYS. CONTRACTOR TO PROVIDE SAFE AND EFFICIENT PASSAGE OF TRAFFIC TO SIDE ROADS AND DRIVEWAYS AT ALL TIMES. SEE TCP DRIVEWAY AND INTERSECTION DETAIL PLAN SHEETS

STEP 2:
BEGIN ROADWAY CONSTRUCTION FOR PHASE 5.
EXCAVATE AND REMOVE EXISTING MATERIALS. CONSTRUCT PROPOSED PAVEMENT SECTION IN ACCORDANCE WITH ROADWAY TYPICAL SECTIONS. CONSTRUCT PROPOSED PAVEMENT SECTION THROUGH HMA, DITCHES AND SEEDING ALL SLOPES FROM STA 542+94 TO 555+97. REMOVE TEMPORARY PAVEMENT FROM STA 544+37 TO 557+86 AND STA 573+00 TO 580+42 WITH PHASE 5 CONSTRUCTION, PAID FOR UNDER ITEM 508.

CONSTRUCT PROPOSED CONCRETE MOW STRIP WITH METAL BEAM GUARD FENCE AT LOCATIONS SHOWN ON TRAFFIC CONTROL PLAN PHASE 5 LAYOUT SHEETS.

CONSTRUCT PROPOSED CUL-DE-SAC AND RAIDER WAY AT THE ENDS OF EXISTING HERO WAY AS SHOWN ON TRAFFIC CONTROL PLAN PHASE 5 LAYOUT SHEETS.

STEP 3:
AFTER COMPLETION OF STEPS 1 AND 2, REMOVE ALL LOCATIONS OF LOW PROFILE CONCRETE BARRIER AND WORK ZONE PAVEMENT MARKINGS.
THEN PLACE TEMPORARY FLEXIBLE REFLECTIVE ROADWAY MARKER TABS TO FINAL LANE CONFIGURATION.

MILL EXISTING SURFACE OF RM 2243 & INTERSECTION FROM STA 503+60 TO 506+35.
CONSTRUCT FINAL SURFACE FROM STA 503+60 (US 183A) TO STA 584+52 (RONALD REAGAN) USING TCP (2-2)-18 FOR DAILY LANE CLOSURES. THEN PLACE TABS AGAIN TO FINAL LANE CONFIGURATION.

PLACE FINAL PAVEMENT MARKINGS & SIGNS AND OPEN ALL LANES TO TRAFFIC FROM 503+60 (US 183A) TO 584+52 (RONALD REAGAN).

STEP 4:
UPON COMPLETION OF ALL WORK AND BEFORE FINAL ACCEPTANCE IS MADE, THE CONTRACTOR SHALL CLEAR AND REMOVE ALL SURPLUS AND DISCARDED MATERIALS OR DEBRIS FROM THE ENTIRE PROJECT.

STATE OF TEXAS
JOSHUA T. RICHTER
141234
LICENSED
PROFESSIONAL ENGINEER

4/10/2025

WILCO
TEXAS

BGE, Inc.
101 W Louis Henna Blvd, Suite 400, Austin, TX 78728
Tel: 512-879-0400 • www.bgeinc.com
TBPE Registration No. F-1046

RM 2243

TRAFFIC CONTROL PLAN NARRATIVE

FED.RD. DIV.NO.	PROJECT NO.		SHEET NO.
6			27

STATE	DIST.	COUNTY	
TEXAS	AUS	WILLIAMSON	
CONT.	SECT.	JOB	HIGHWAY NO.
0914	05	222	RM 2243

4/10/2025 1:09:48 PM pdf.pltcfg
G:\TXC\Projects\County\Williamson\7473-02 RM 2243 Phase 1A\03*CADD\01*Shts\02-TCP\RM2243*P1A*TCP*SE03.dgn

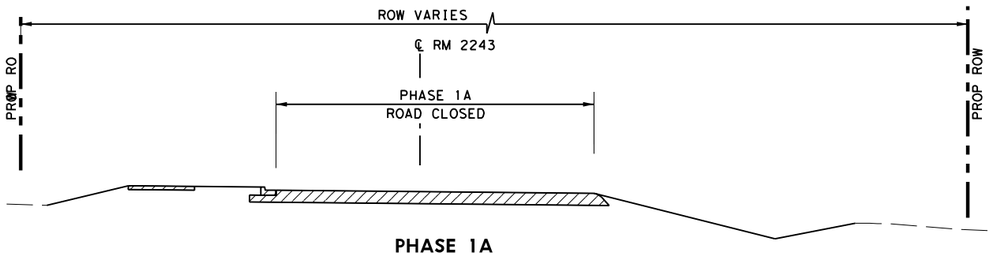

PHASE 1A

STA 585+87 TO STA 606+62
STA 620+83 TO STA 623+20

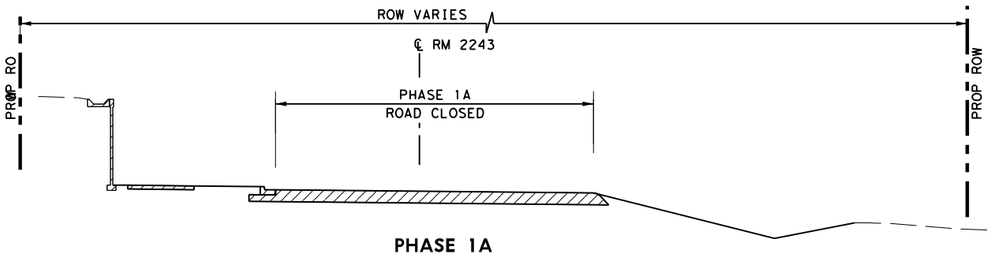

PHASE 1A

STA 606+62 TO STA 620+83

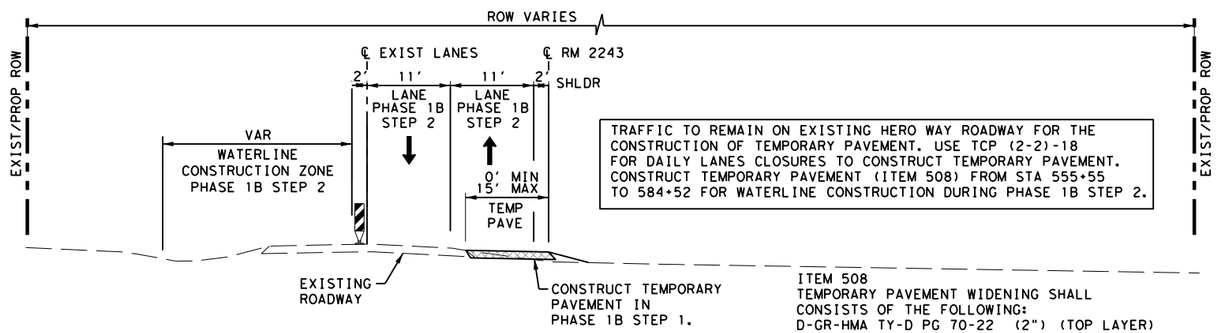

TRAFFIC TO REMAIN ON EXISTING HERO WAY ROADWAY FOR THE CONSTRUCTION OF TEMPORARY PAVEMENT. USE TCP (2-2)-18 FOR DAILY LANES CLOSURES TO CONSTRUCT TEMPORARY PAVEMENT. CONSTRUCT TEMPORARY PAVEMENT (ITEM 508) FROM STA 555+55 TO 584+52 FOR WATERLINE CONSTRUCTION DURING PHASE 1B STEP 2.

ITEM 508
TEMPORARY PAVEMENT WIDENING SHALL CONSISTS OF THE FOLLOWING:
D-GR-HMA TY-D PG 70-22 (2") (TOP LAYER)
D-GR HMA TY-B PG 64-22 (10") (BOTTOM LAYER)
(EMBANKMENT INCLUDED IN ITEM 508)

PHASE 1B
(WEST OF RONALD REAGAN)

STA 555+55 TO STA 584+52

CONSTRUCT TEMPORARY PAVEMENT FOR WATERLINE CONSTRUCTION.

LEGEND

- SIGN
- TYPE 3 BARRICADE
- DIRECTION OF TRAFFIC
- CONSTRUCTION THIS PHASE
- BUILT PREVIOUSLY
- TEMPORARY PAVEMENT
- TEMPORARY PAVEMENT BUILT PREVIOUSLY

NOTES:
1. MAINTAIN ACCESS TO ALL INTERSECTIONS AND DRIVEWAYS AT ALL TIME UNLESS OTHERWISE NOTED.
2. SEE TRAFFIC CONTROL PLAN NARRATIVE.
3. SEE BC, TCP, AND WZ STANDARDS FOR TEMPORARY SIGNING AND PAVEMENT MARKING DETAILS.
4. SEE P&P SHEETS AND INTERSECTION LAYOUTS FOR ADDITIONAL INFORMATION.
5. ALL CHANNELIZING DEVICES AND SIGN PLACEMENT MUST CONFORM TO THE TEXAS MANUAL ON UNIFORM TRAFFIC CONTROL DEVICES (TMUTCD) AND TXDOT STANDARDS.
6. WARNING SIGN PLACEMENT SHALL NOT CONFLICT WITH EXISTING PERMANENT SIGNAGE.
7. EXISTING GROUND MOUNTED SIGNS SHALL BE TEMPORARILY REINSTALLED ON SKIDS WHERE NEEDED FOR TCP.

0 10 20
SCALE: 1"=20'

STATE OF TEXAS
JOSHUA T. RICHTER
141234
LICENSED
PROFESSIONAL ENGINEER

4/10/2025

WILCO TEXAS

BGE, Inc.
101 W Louis Henna Blvd, Suite 400, Austin, TX 78728
Tel: 512-879-0400 • www.bgeinc.com
TBPE Registration No. F-1046

RM 2243
TRAFFIC CONTROL PLAN TYPICAL SECTIONS PHASES 1A & 1B

SHEET 1 OF 1

FED.RD. DIV.NO.	PROJECT NO.		SHEET NO.
6			28
STATE	DIST.	COUNTY	
TEXAS	AUS	WILLIAMSON	
CONT.	SECT.	JOB	HIGHWAY NO.
0914	05	222	RM 2243

4/10/2025 1:09:49 PM pdf.pltcfg
G:\TXC\Projects\County\Williamson\7473-02 RM 2243 Phase 1A\03\CADD\01\Shts\02-TCP\RM2243_P1A_TCP1A_TYP_01.dgn

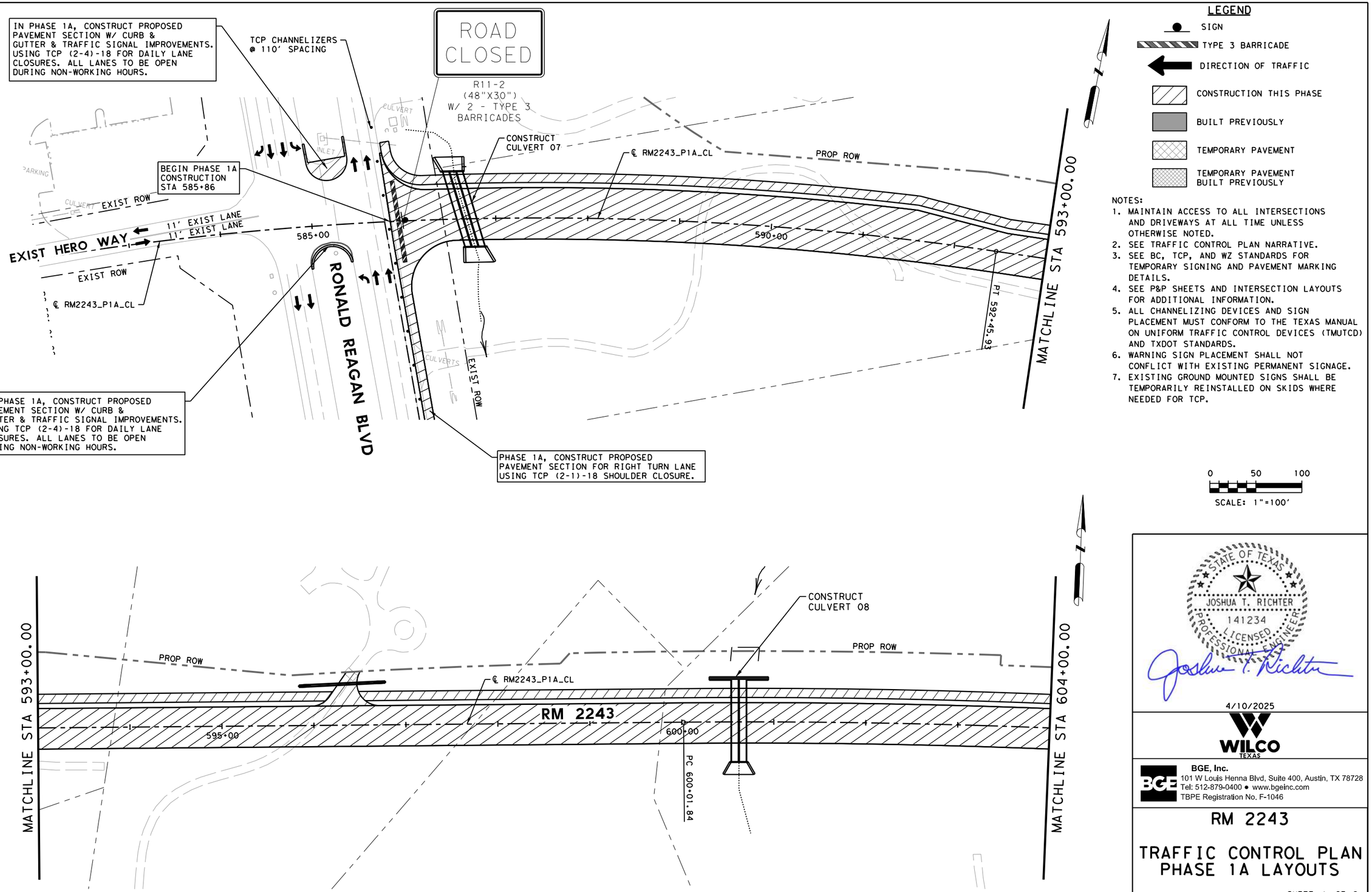

LEGEND

- SIGN
- TYPE 3 BARRICADE
- DIRECTION OF TRAFFIC
- CONSTRUCTION THIS PHASE
- BUILT PREVIOUSLY
- TEMPORARY PAVEMENT
- TEMPORARY PAVEMENT BUILT PREVIOUSLY

NOTES:

1. MAINTAIN ACCESS TO ALL INTERSECTIONS AND DRIVEWAYS AT ALL TIME UNLESS OTHERWISE NOTED.
2. SEE TRAFFIC CONTROL PLAN NARRATIVE.
3. SEE BC, TCP, AND WZ STANDARDS FOR TEMPORARY SIGNING AND PAVEMENT MARKING DETAILS.
4. SEE P&P SHEETS AND INTERSECTION LAYOUTS FOR ADDITIONAL INFORMATION.
5. ALL CHANNELIZING DEVICES AND SIGN PLACEMENT MUST CONFORM TO THE TEXAS MANUAL ON UNIFORM TRAFFIC CONTROL DEVICES (TMUTCD) AND TXDOT STANDARDS.
6. WARNING SIGN PLACEMENT SHALL NOT CONFLICT WITH EXISTING PERMANENT SIGNAGE.
7. EXISTING GROUND MOUNTED SIGNS SHALL BE TEMPORARILY REINSTALLED ON SKIDS WHERE NEEDED FOR TCP.

0 50 100

SCALE: 1"=100'

STATE OF TEXAS
JOSHUA T. RICHTER
141234
LICENSED PROFESSIONAL ENGINEER

4/10/2025

WILCO TEXAS

BGE, Inc.
101 W Louis Henna Blvd, Suite 400, Austin, TX 78728
Tel: 512-879-0400 ● www.bgeinc.com
TBPE Registration No. F-1046

RM 2243

TRAFFIC CONTROL PLAN PHASE 1A LAYOUTS

SHEET 1 OF 2

FED.RD. DIV.NO.	PROJECT NO.		SHEET NO.
6			29
STATE	DIST.	COUNTY	
TEXAS	AUS	WILLIAMSON	
CONT.	SECT.	JOB	HIGHWAY NO.
0914	05	222	RM 2243

4/10/2025 1:09:51 PM pdf.pltcfg
G:\TXC\Projects\County\Williamson\7473-02 RM 2243 Phase 1A\03*CADD\01*Shts\02-TCP\RM2243*P1A*TCP1A*01.dgn

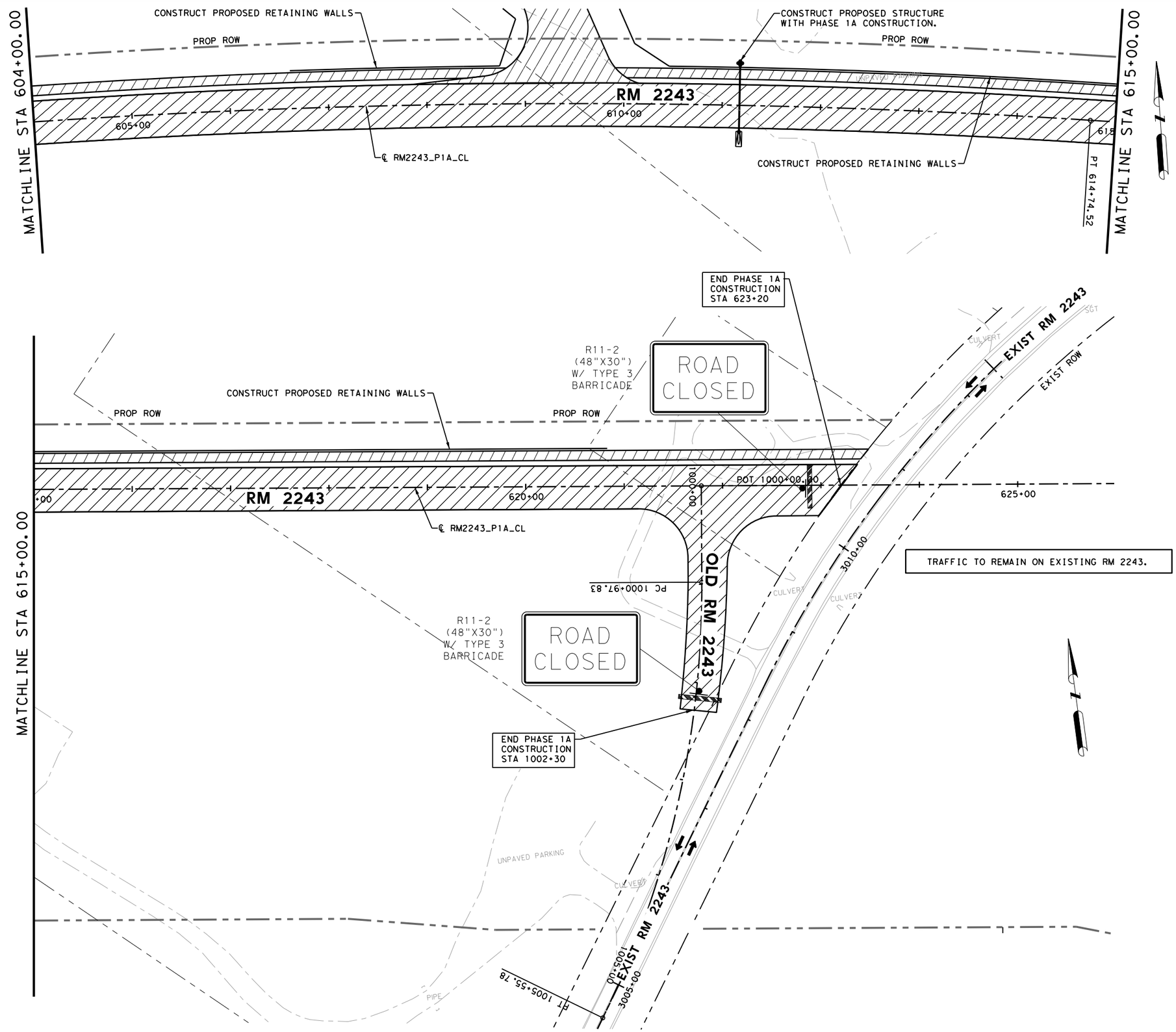

LEGEND

- SIGN
- TYPE 3 BARRICADE
- DIRECTION OF TRAFFIC
- CONSTRUCTION THIS PHASE
- BUILT PREVIOUSLY
- TEMPORARY PAVEMENT
- TEMPORARY PAVEMENT BUILT PREVIOUSLY

NOTES:

1. MAINTAIN ACCESS TO ALL INTERSECTIONS AND DRIVEWAYS AT ALL TIME UNLESS OTHERWISE NOTED.
2. SEE TRAFFIC CONTROL PLAN NARRATIVE.
3. SEE BC, TCP, AND WZ STANDARDS FOR TEMPORARY SIGNING AND PAVEMENT MARKING DETAILS.
4. SEE P&P SHEETS AND INTERSECTION LAYOUTS FOR ADDITIONAL INFORMATION.
5. ALL CHANNELIZING DEVICES AND SIGN PLACEMENT MUST CONFORM TO THE TEXAS MANUAL ON UNIFORM TRAFFIC CONTROL DEVICES (TMUTCD) AND TXDOT STANDARDS.
6. WARNING SIGN PLACEMENT SHALL NOT CONFLICT WITH EXISTING PERMANENT SIGNAGE.
7. EXISTING GROUND MOUNTED SIGNS SHALL BE TEMPORARILY REINSTALLED ON SKIDS WHERE NEEDED FOR TCP.

0 50 100

SCALE: 1"=100'

STATE OF TEXAS
JOSHUA T. RICHTER
141234
LICENSED
PROFESSIONAL ENGINEER

4/10/2025

WILCO TEXAS

BGE, Inc.
101 W Louis Henna Blvd, Suite 400, Austin, TX 78728
Tel: 512-879-0400 • www.bgeinc.com
TBPE Registration No. F-1046

RM 2243

TRAFFIC CONTROL PLAN PHASE 1A LAYOUTS

SHEET 2 OF 2

FED.RD. DIV.NO.	PROJECT NO.	SHEET NO.
6		30

STATE	DIST.	COUNTY	
TEXAS	AUS	WILLIAMSON	
CONT.	SECT.	JOB	HIGHWAY NO.
0914	05	222	RM 2243

4/10/2025 1:09:53 PM pdf.pltcfg
G:\TXC\Projects\County*Williamson\7473-02 RM 2243 Phase 1A\03*CADD\01*Shts\02-TCP\RM2243*P1A*TCP1A*02.dgn

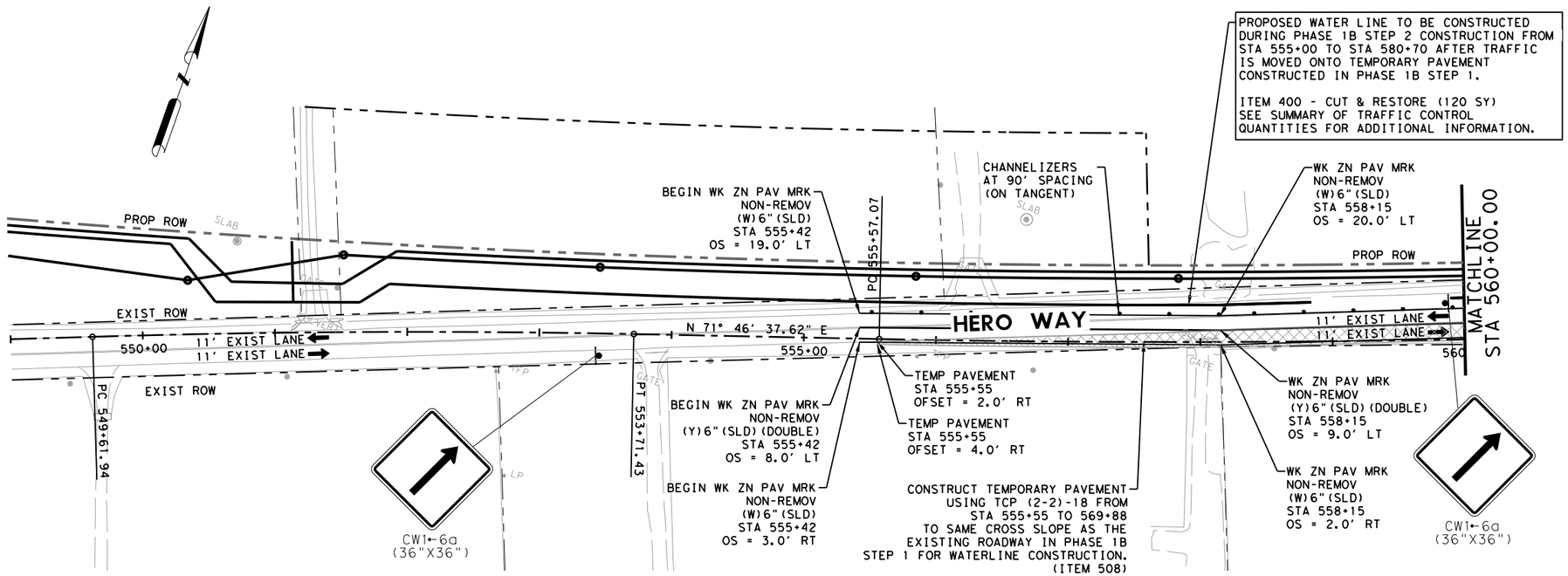

LEGEND

- SIGN
- TYPE 3 BARRICADE
- DIRECTION OF TRAFFIC
- CONSTRUCTION THIS PHASE
- BUILT PREVIOUSLY
- TEMPORARY PAVEMENT
- TEMPORARY PAVEMENT BUILT PREVIOUSLY

NOTES:

1. MAINTAIN ACCESS TO ALL INTERSECTIONS AND DRIVEWAYS AT ALL TIME UNLESS OTHERWISE NOTED.
2. SEE TRAFFIC CONTROL PLAN NARRATIVE.
3. SEE BC, TCP, AND WZ STANDARDS FOR TEMPORARY SIGNING AND PAVEMENT MARKING DETAILS.
4. SEE P&P SHEETS AND INTERSECTION LAYOUTS FOR ADDITIONAL INFORMATION.
5. ALL CHANNELIZING DEVICES AND SIGN PLACEMENT MUST CONFORM TO THE TEXAS MANUAL ON UNIFORM TRAFFIC CONTROL DEVICES (TMUTCD) AND TXDOT STANDARDS.
6. WARNING SIGN PLACEMENT SHALL NOT CONFLICT WITH EXISTING PERMANENT SIGNAGE.
7. EXISTING GROUND MOUNTED SIGNS SHALL BE TEMPORARILY REINSTALLED ON SKIDS WHERE NEEDED FOR TCP.

0 50 100

SCALE: 1"=100'

STATE OF TEXAS
JOSHUA T. RICHTER
141234
LICENSED
PROFESSIONAL ENGINEER

4/10/2025

WILCO TEXAS

BGE, Inc.
101 W Louis Henna Blvd, Suite 400, Austin, TX 78728
Tel: 512-879-0400 ● www.bgeinc.com
TBPE Registration No. F-1046

RM 2243

TRAFFIC CONTROL PLAN PHASE 1B LAYOUT

SHEET 1 OF 2

FED.RD. DIV.NO.	PROJECT NO.	SHEET NO.
6		31

STATE	DIST.	COUNTY	
TEXAS	AUS	WILLIAMSON	
CONT.	SECT.	JOB	HIGHWAY NO.
0914	05	222	RM 2243

4/10/2025 1:09:54 PM pdf.pltcfg
G:\TXC\Projects\County\Williamson\7473-02 RM 2243 Phase 1A\03*CADD\01*Shts\02-TCP\RM2243*P1A*TCP1B*01.dgn

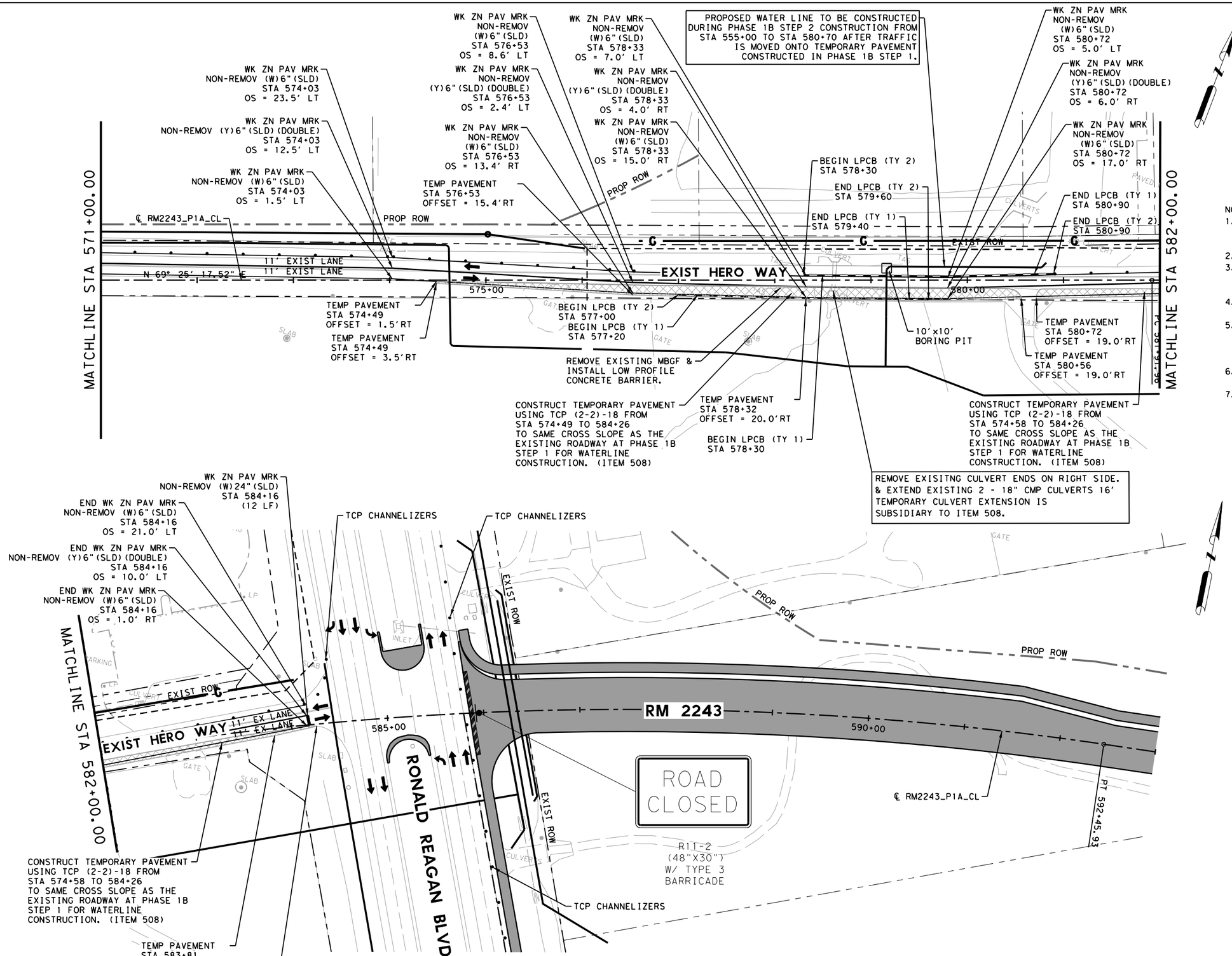

NOTES:

1. MAINTAIN ACCESS TO ALL INTERSECTIONS AND DRIVEWAYS AT ALL TIME UNLESS OTHERWISE NOTED.
2. SEE TRAFFIC CONTROL PLAN NARRATIVE.
3. SEE BC, TCP, AND WZ STANDARDS FOR TEMPORARY SIGNING AND PAVEMENT MARKING DETAILS.
4. SEE P&P SHEETS AND INTERSECTION LAYOUTS FOR ADDITIONAL INFORMATION.
5. ALL CHANNELIZING DEVICES AND SIGN PLACEMENT MUST CONFORM TO THE TEXAS MANUAL ON UNIFORM TRAFFIC CONTROL DEVICES (TMUTCD) AND TXDOT STANDARDS.
6. WARNING SIGN PLACEMENT SHALL NOT CONFLICT WITH EXISTING PERMANENT SIGNAGE.
7. EXISTING GROUND MOUNTED SIGNS SHALL BE TEMPORARILY REINSTALLED ON SKIDS WHERE NEEDED FOR TCP.

STATE OF TEXAS
JOSHUA T. RICHTER
141234
LICENSED
PROFESSIONAL ENGINEER

4/10/2025

WILCO TEXAS

BGE, Inc.
101 W Louis Henna Blvd, Suite 400, Austin, TX 78728
Tel: 512-879-0400 • www.bgeinc.com
TBPE Registration No. F-1046

RM 2243

TRAFFIC CONTROL PLAN PHASE 1B LAYOUT

SHEET 2 OF 2

FED.RD. DIV.NO.	PROJECT NO.	SHEET NO.
6		32

STATE	DIST.	COUNTY	
TEXAS	AUS	WILLIAMSON	
CONT.	SECT.	JOB	HIGHWAY NO.
0914	05	222	RM 2243

4/10/2025 1:09:55 PM pdf.pltcfg
G:\TXC\Projects\County\Williamson\7473-02 RM 2243 Phase 1A\03*CADD\01*Shts\02-TCP\RM2243*P1A*TCP1B*02.dgn

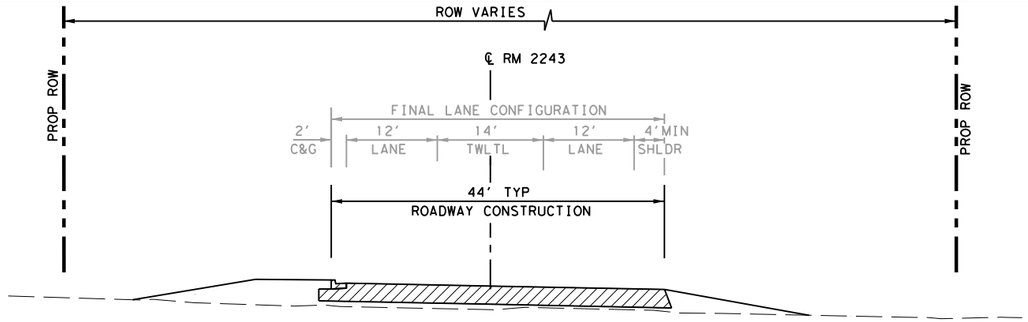

PHASE 2A

STA 624+20 TO STA 651+20

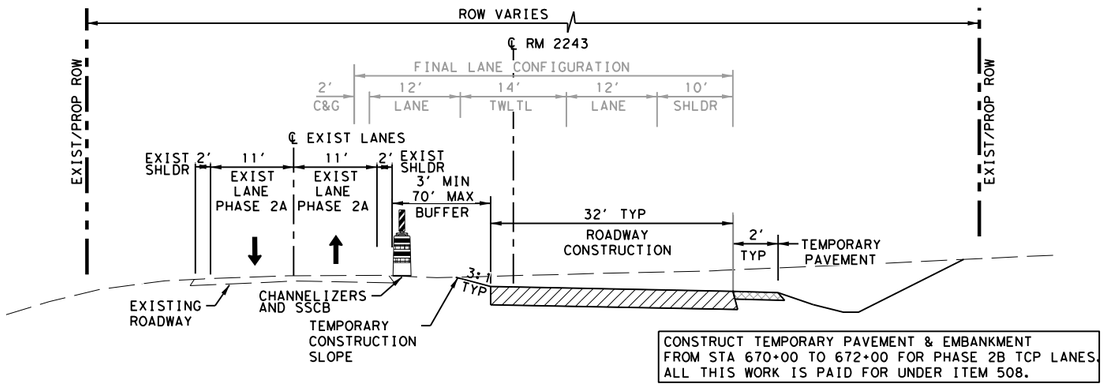

CONSTRUCT TEMPORARY PAVEMENT & EMBANKMENT FROM STA 670+00 TO 672+00 FOR PHASE 2B TCP LANES. ALL THIS WORK IS PAID FOR UNDER ITEM 508.

ITEM 508
TEMPORARY PAVEMENT WIDENING SHALL CONSISTS OF THE FOLLOWING:
D-GR-HMA TY-D PG 70-22 (2") (TOP LAYER)
D-GR HMA TY-B PG 64-22 (10") (BOTTOM LAYER)
(EMBANKMENT INCLUDED IN ITEM 508)

PHASE 2A

STA 651+20 TO STA 672+00

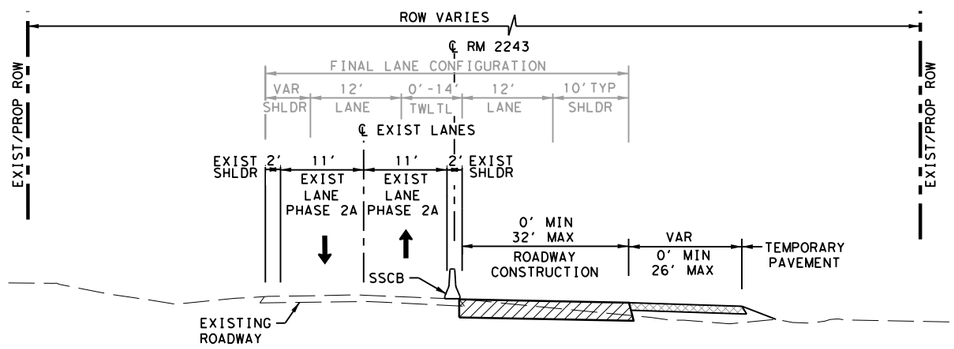

CONSTRUCT TEMPORARY PAVEMENT & EMBANKMENT FROM STA 672+00 TO 688+60 FOR PHASE 2B TCP LANES. ALL THIS WORK IS PAID FOR UNDER ITEM 508.

ITEM 508
TEMPORARY PAVEMENT WIDENING SHALL CONSISTS OF THE FOLLOWING:
D-GR-HMA TY-D PG 70-22 (2") (TOP LAYER)
D-GR HMA TY-B PG 64-22 (10") (BOTTOM LAYER)
(EMBANKMENT INCLUDED IN ITEM 508)

PHASE 2A

STA 672+00 TO STA 688+60

LEGEND

- SIGN
- TYPE 3 BARRICADE
- DIRECTION OF TRAFFIC
- CONSTRUCTION THIS PHASE
- BUILT PREVIOUSLY
- TEMPORARY PAVEMENT
- TEMPORARY PAVEMENT BUILT PREVIOUSLY

NOTES:
1. MAINTAIN ACCESS TO ALL INTERSECTIONS AND DRIVEWAYS AT ALL TIME UNLESS OTHERWISE NOTED.
2. SEE TRAFFIC CONTROL PLAN NARRATIVE.
3. SEE BC, TCP, AND WZ STANDARDS FOR TEMPORARY SIGNING AND PAVEMENT MARKING DETAILS.
4. SEE P&P SHEETS AND INTERSECTION LAYOUTS FOR ADDITIONAL INFORMATION.
5. ALL CHANNELIZING DEVICES AND SIGN PLACEMENT MUST CONFORM TO THE TEXAS MANUAL ON UNIFORM TRAFFIC CONTROL DEVICES (TMUTCD) AND TXDOT STANDARDS.
6. WARNING SIGN PLACEMENT SHALL NOT CONFLICT WITH EXISTING PERMANENT SIGNAGE.
7. EXISTING GROUND MOUNTED SIGNS SHALL BE TEMPORARILY REINSTALLED ON SKIDS WHERE NEEDED FOR TCP.

0 10 20
SCALE: 1"=20'

STATE OF TEXAS
JOSHUA T. RICHTER
141234
LICENSED
PROFESSIONAL ENGINEER

4/10/2025

WILCO TEXAS

BGE, Inc.
101 W Louis Henna Blvd, Suite 400, Austin, TX 78728
Tel: 512-879-0400 • www.bgeinc.com
TBPE Registration No. F-1046

RM 2243
TRAFFIC CONTROL PLAN TYPICAL SECTIONS PHASE 2A

SHEET 1 OF 1

FED.RD. DIV.NO.	PROJECT NO.		SHEET NO.
6			33
STATE	DIST.	COUNTY	
TEXAS	AUS	WILLIAMSON	
CONT.	SECT.	JOB	HIGHWAY NO.
0914	05	222	RM 2243

4/10/2025 1:09:57 PM pdf.pltcfg
G:\TXC\Projects\County*Williamson\7473-02 RM 2243 Phase 1A\03*CADD\01*Shts\02-TCP\RM2243*P1A*TCP2A*TYP*01.dgn

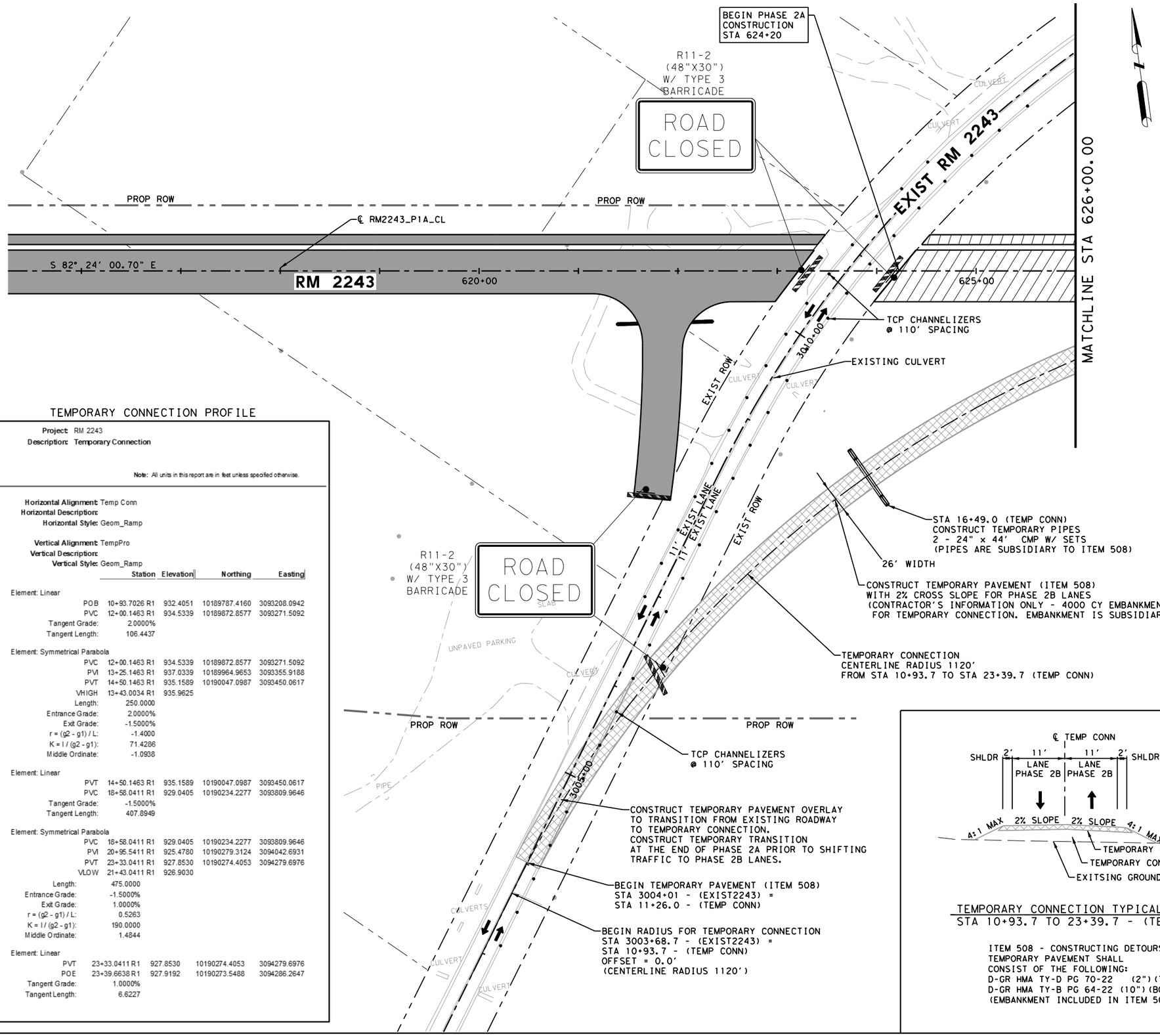

LEGEND

- SIGN
- TYPE 3 BARRICADE
- DIRECTION OF TRAFFIC
- CONSTRUCTION THIS PHASE
- BUILT PREVIOUSLY
- TEMPORARY PAVEMENT
- TEMPORARY PAVEMENT BUILT PREVIOUSLY

NOTES:

1. MAINTAIN ACCESS TO ALL INTERSECTIONS AND DRIVEWAYS AT ALL TIME UNLESS OTHERWISE NOTED.
2. SEE TRAFFIC CONTROL PLAN NARRATIVE.
3. SEE BC, TCP, AND WZ STANDARDS FOR TEMPORARY SIGNING AND PAVEMENT MARKING DETAILS.
4. SEE P&P SHEETS AND INTERSECTION LAYOUTS FOR ADDITIONAL INFORMATION.
5. ALL CHANNELIZING DEVICES AND SIGN PLACEMENT MUST CONFORM TO THE TEXAS MANUAL ON UNIFORM TRAFFIC CONTROL DEVICES (TMUTCD) AND TXDOT STANDARDS.
6. WARNING SIGN PLACEMENT SHALL NOT CONFLICT WITH EXISTING PERMANENT SIGNAGE.
7. EXISTING GROUND MOUNTED SIGNS SHALL BE TEMPORARILY REINSTALLED ON SKIDS WHERE NEEDED FOR TCP.

0 50 100

SCALE: 1"=100'

TEMPORARY CONNECTION PROFILE

Project: RM 2243
Description: Temporary Connection

Note: All units in this report are in feet unless specified otherwise.

Horizontal Alignment: Temp Conn
Horizontal Description:
Horizontal Style: Geom_Ramp

Vertical Alignment: TempPro
Vertical Description:
Vertical Style: Geom_Ramp

	Station	Elevation	Northing	Easting
Element: Linear				
POB	10+93.7026 R1	932.4051	10189787.4160	3093208.0942
PVC	12+00.1463 R1	934.5339	10189872.8577	3093271.5092
Tangent Grade:	2.0000%			
Tangent Length:	106.4437			
Element: Symmetrical Parabola				
PVC	12+00.1463 R1	934.5339	10189872.8577	3093271.5092
PVI	13+25.1463 R1	937.0339	10189964.9653	3093355.9188
PVT	14+50.1463 R1	935.1589	10190047.0987	3093450.0617
VHIGH	13+43.0034 R1	935.9625		
Length:	250.0000			
Entrance Grade:	2.0000%			
Exit Grade:	-1.5000%			
r = (g2 - g1) / L:	-1.4000			
K = l / (g2 - g1):	71.4286			
Middle Ordinate:	-1.0938			
Element: Linear				
PVT	14+50.1463 R1	935.1589	10190047.0987	3093450.0617
PVC	18+58.0411 R1	929.0405	10190234.2277	3093809.9646
Tangent Grade:	-1.5000%			
Tangent Length:	407.8949			
Element: Symmetrical Parabola				
PVC	18+58.0411 R1	929.0405	10190234.2277	3093809.9646
PVI	20+95.5411 R1	925.4780	10190279.3124	3094042.6931
PVT	23+33.0411 R1	927.8530	10190274.4053	3094279.6976
VLOW	21+43.0411 R1	926.9030		
Length:	475.0000			
Entrance Grade:	-1.5000%			
Exit Grade:	1.0000%			
r = (g2 - g1) / L:	0.5263			
K = l / (g2 - g1):	190.0000			
Middle Ordinate:	1.4844			
Element: Linear				
PVT	23+33.0411 R1	927.8530	10190274.4053	3094279.6976
POE	23+39.6638 R1	927.9192	10190273.5488	3094286.2647
Tangent Grade:	1.0000%			
Tangent Length:	6.6227			

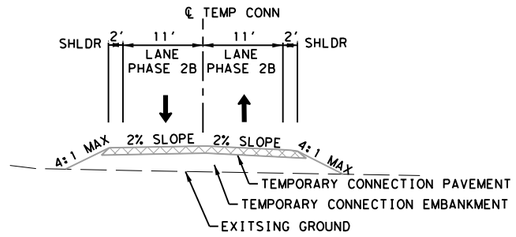

TEMPORARY CONNECTION TYPICAL SECTION
STA 10+93.7 TO 23+39.7 - (TEMP CONN)

ITEM 508 - CONSTRUCTING DETOURS (SY)
TEMPORARY PAVEMENT SHALL
CONSIST OF THE FOLLOWING:
D-GR HMA TY-D PG 70-22 (2")(TOP LAYER)
D-GR HMA TY-B PG 64-22 (10")(BOTTOM LAYER)
(EMBANKMENT INCLUDED IN ITEM 508)

STATE OF TEXAS
JOSHUA T. RICHTER
141234
LICENSED
PROFESSIONAL ENGINEER

4/10/2025

WILCO TEXAS

BGE, Inc.
101 W Louis Henna Blvd, Suite 400, Austin, TX 78728
Tel: 512-879-0400 • www.bgeinc.com
TBPE Registration No. F-1046

RM 2243

TRAFFIC CONTROL PLAN PHASE 2A LAYOUTS

SHEET 1 OF 4

FED.RD. DIV.NO.	PROJECT NO.		SHEET NO.
6			34
STATE	DIST.	COUNTY	
TEXAS	AUS	WILLIAMSON	
CONT.	SECT.	JOB	HIGHWAY NO.
0914	05	222	RM 2243

4/10/2025 1:09:59 PM pdf.pltcfg
G:\TXC\Projects\County\Williamson\7473-02 RM 2243 Phase 1A\03\CADD\01\Shts\02-TCP\RM2243_P1A_TCP2A_01.dgn

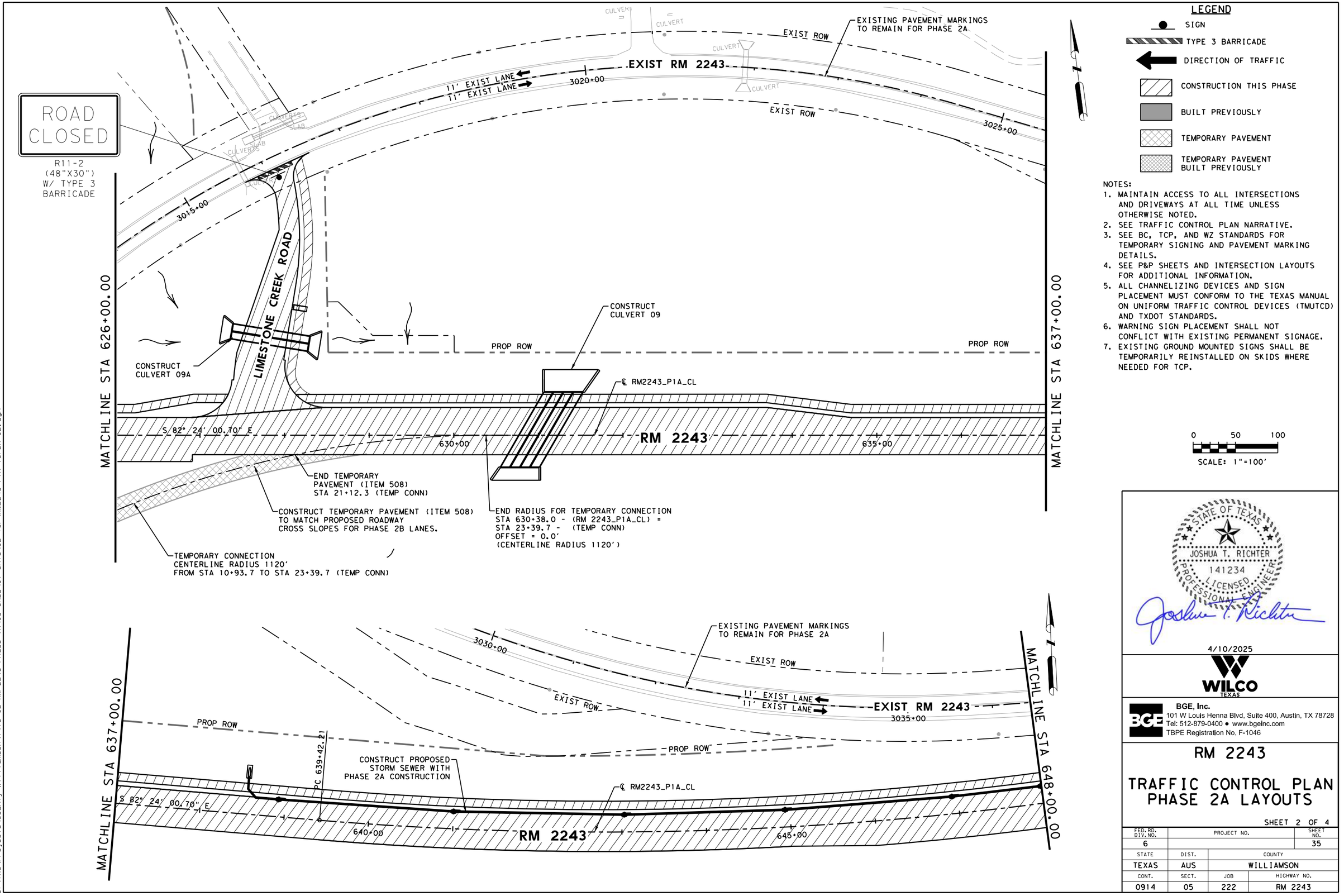

LEGEND

- SIGN
- TYPE 3 BARRICADE
- DIRECTION OF TRAFFIC
- CONSTRUCTION THIS PHASE
- BUILT PREVIOUSLY
- TEMPORARY PAVEMENT
- TEMPORARY PAVEMENT BUILT PREVIOUSLY

NOTES:

1. MAINTAIN ACCESS TO ALL INTERSECTIONS AND DRIVEWAYS AT ALL TIME UNLESS OTHERWISE NOTED.
2. SEE TRAFFIC CONTROL PLAN NARRATIVE.
3. SEE BC, TCP, AND WZ STANDARDS FOR TEMPORARY SIGNING AND PAVEMENT MARKING DETAILS.
4. SEE P&P SHEETS AND INTERSECTION LAYOUTS FOR ADDITIONAL INFORMATION.
5. ALL CHANNELIZING DEVICES AND SIGN PLACEMENT MUST CONFORM TO THE TEXAS MANUAL ON UNIFORM TRAFFIC CONTROL DEVICES (TMUTCD) AND TXDOT STANDARDS.
6. WARNING SIGN PLACEMENT SHALL NOT CONFLICT WITH EXISTING PERMANENT SIGNAGE.
7. EXISTING GROUND MOUNTED SIGNS SHALL BE TEMPORARILY REINSTALLED ON SKIDS WHERE NEEDED FOR TCP.

STATE OF TEXAS
JOSHUA T. RICHTER
141234
LICENSED PROFESSIONAL ENGINEER

4/10/2025

WILCO TEXAS

BGE, Inc.
101 W Louis Henna Blvd, Suite 400, Austin, TX 78728
Tel: 512-879-0400 • www.bgeinc.com
TBPE Registration No. F-1046

RM 2243

TRAFFIC CONTROL PLAN PHASE 2A LAYOUTS

SHEET 2 OF 4

FED.RD. DIV.NO.	PROJECT NO.		SHEET NO.
6			35
STATE	DIST.	COUNTY	
TEXAS	AUS	WILLIAMSON	
CONT.	SECT.	JOB	HIGHWAY NO.
0914	05	222	RM 2243

4/10/2025 1:10:00 PM pdf.pltcfg
G:\TXC\Projects\County\Williamson\7473-02 RM 2243 Phase 1A\03*CADD\01*Shts\02-TCP\RM2243*P1A*TCP2A*02.dgn

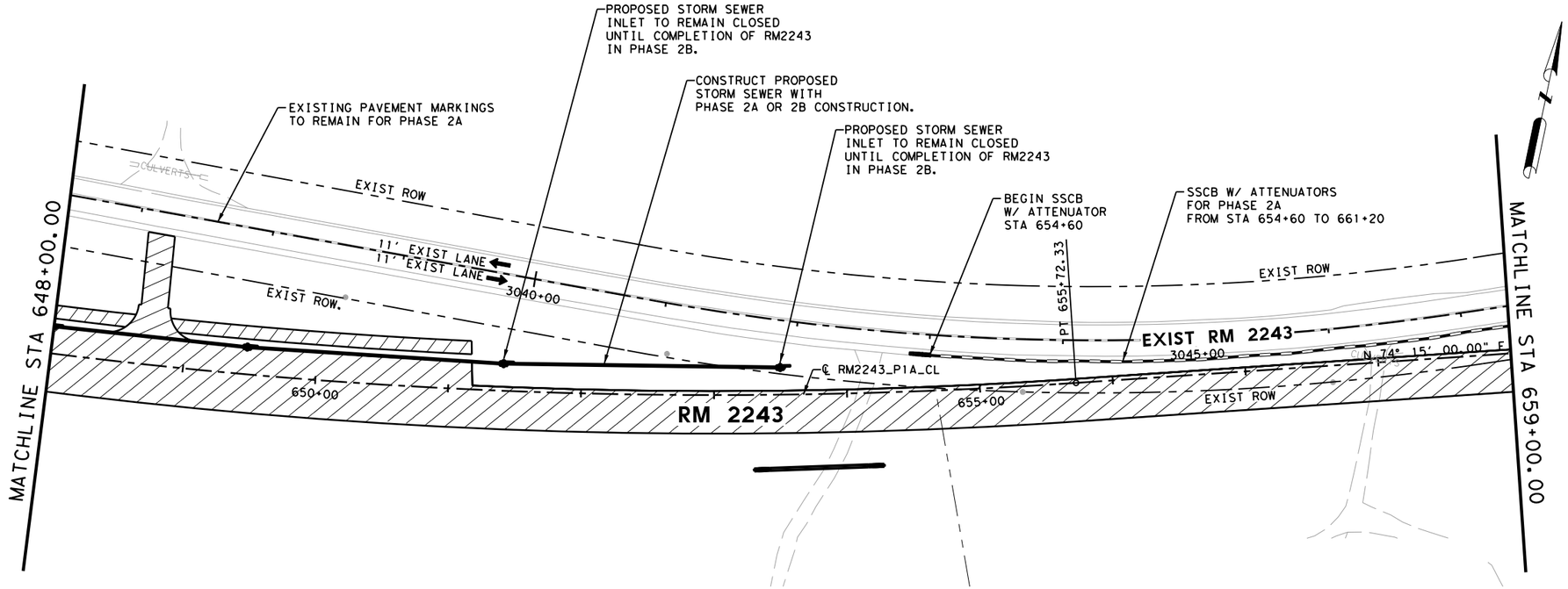

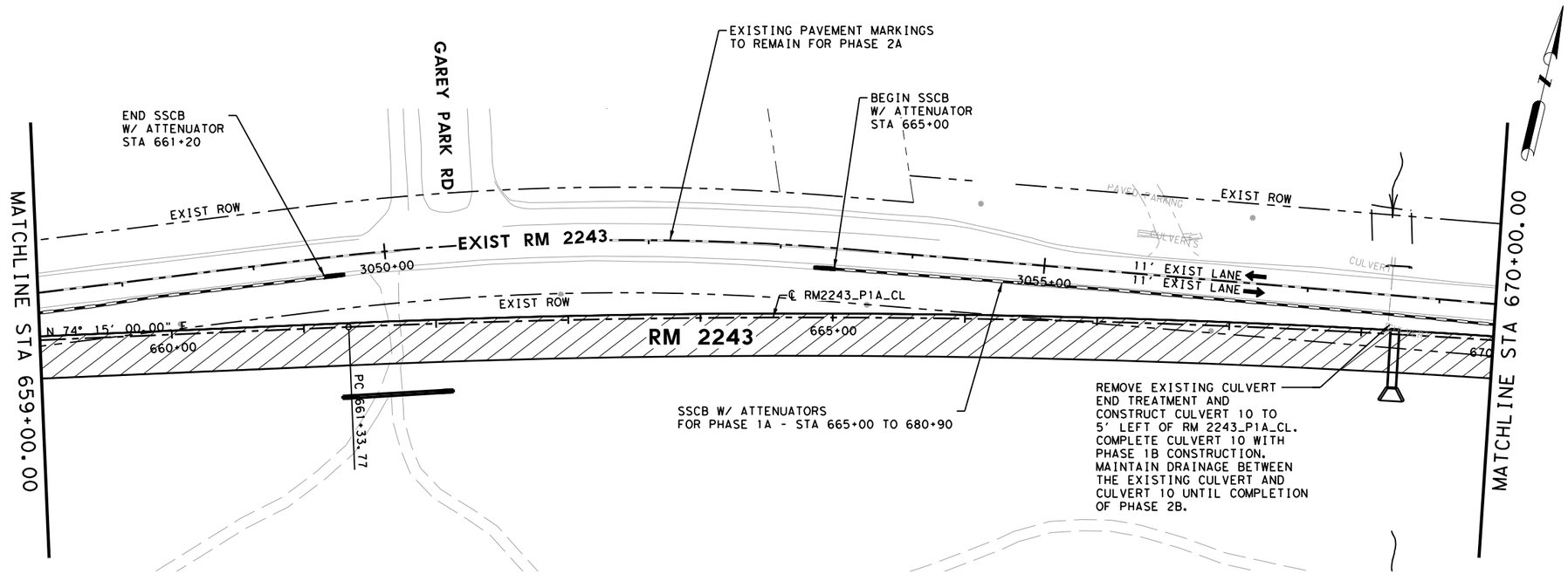

LEGEND

- SIGN
- TYPE 3 BARRICADE
- DIRECTION OF TRAFFIC
- CONSTRUCTION THIS PHASE
- BUILT PREVIOUSLY
- TEMPORARY PAVEMENT
- TEMPORARY PAVEMENT BUILT PREVIOUSLY

NOTES:

1. MAINTAIN ACCESS TO ALL INTERSECTIONS AND DRIVEWAYS AT ALL TIME UNLESS OTHERWISE NOTED.
2. SEE TRAFFIC CONTROL PLAN NARRATIVE.
3. SEE BC, TCP, AND WZ STANDARDS FOR TEMPORARY SIGNING AND PAVEMENT MARKING DETAILS.
4. SEE P&P SHEETS AND INTERSECTION LAYOUTS FOR ADDITIONAL INFORMATION.
5. ALL CHANNELIZING DEVICES AND SIGN PLACEMENT MUST CONFORM TO THE TEXAS MANUAL ON UNIFORM TRAFFIC CONTROL DEVICES (TMUTCD) AND TXDOT STANDARDS.
6. WARNING SIGN PLACEMENT SHALL NOT CONFLICT WITH EXISTING PERMANENT SIGNAGE.
7. EXISTING GROUND MOUNTED SIGNS SHALL BE TEMPORARILY REINSTALLED ON SKIDS WHERE NEEDED FOR TCP.

0 50 100

SCALE: 1"=100'

STATE OF TEXAS
JOSHUA T. RICHTER
141234
LICENSED
PROFESSIONAL ENGINEER

4/10/2025

WILCO TEXAS

BGE, Inc.
101 W Louis Henna Blvd, Suite 400, Austin, TX 78728
Tel: 512-879-0400 • www.bgeinc.com
TBPE Registration No. F-1046

RM 2243

TRAFFIC CONTROL PLAN PHASE 2A LAYOUTS

SHEET 3 OF 4

FED.RD. DIV.NO.	PROJECT NO.		SHEET NO.
6			36
STATE	DIST.	COUNTY	
TEXAS	AUS	WILLIAMSON	
CONT.	SECT.	JOB	HIGHWAY NO.
0914	05	222	RM 2243

4/10/2025 1:10:01 PM pdf.pltcfg
G:\TXC\Projects\County\Williamson\7473-02 RM 2243 Phase 1A\03*CADD\01*Shts\02-TCP\RM2243*P1A*TCP2A*03.dgn

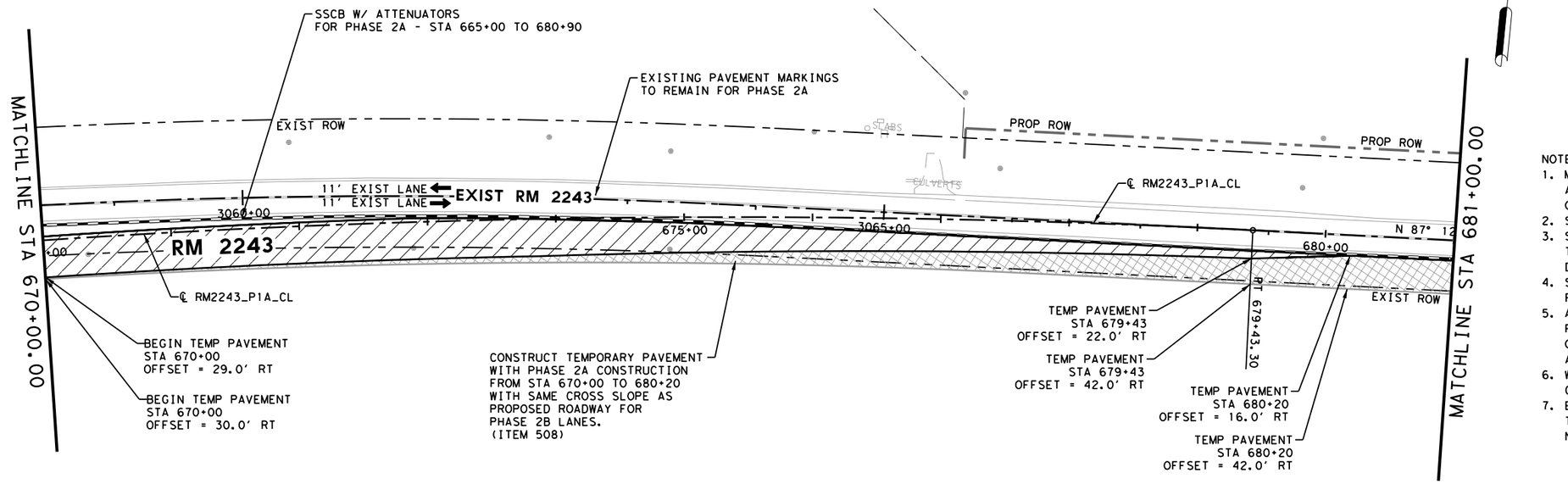

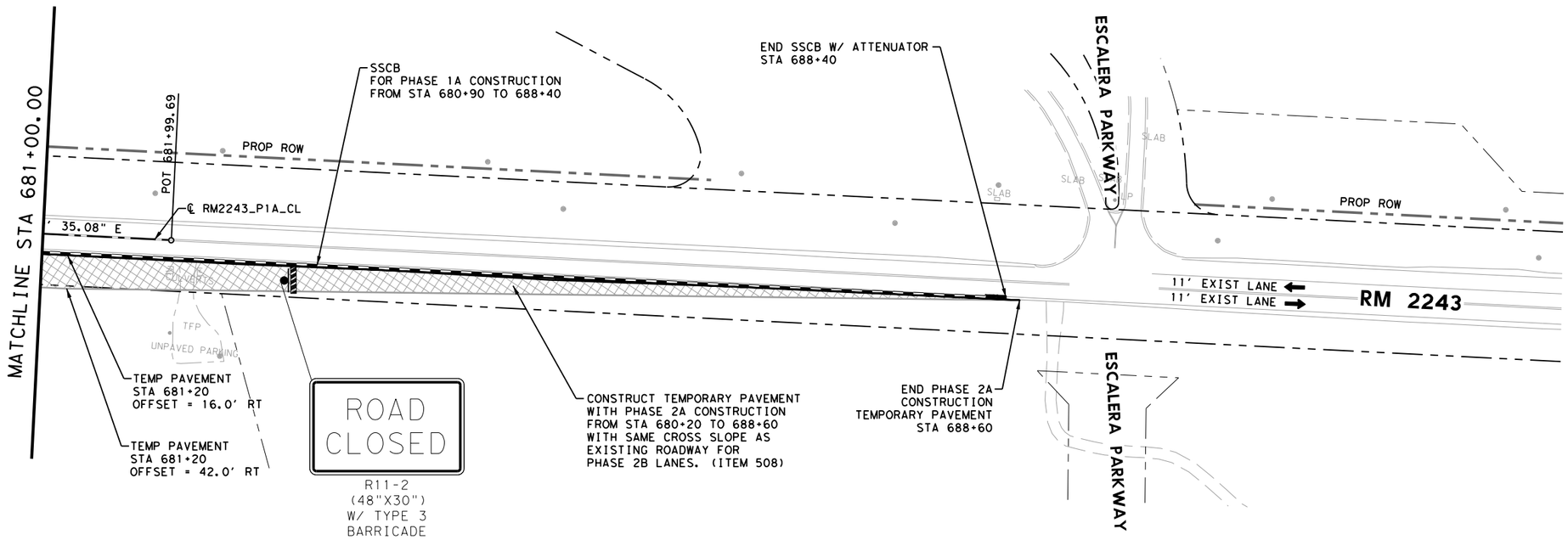

LEGEND

- SIGN
- TYPE 3 BARRICADE
- DIRECTION OF TRAFFIC
- CONSTRUCTION THIS PHASE
- BUILT PREVIOUSLY
- TEMPORARY PAVEMENT
- TEMPORARY PAVEMENT BUILT PREVIOUSLY

NOTES:

1. MAINTAIN ACCESS TO ALL INTERSECTIONS AND DRIVEWAYS AT ALL TIME UNLESS OTHERWISE NOTED.
2. SEE TRAFFIC CONTROL PLAN NARRATIVE.
3. SEE BC, TCP, AND WZ STANDARDS FOR TEMPORARY SIGNING AND PAVEMENT MARKING DETAILS.
4. SEE P&P SHEETS AND INTERSECTION LAYOUTS FOR ADDITIONAL INFORMATION.
5. ALL CHANNELIZING DEVICES AND SIGN PLACEMENT MUST CONFORM TO THE TEXAS MANUAL ON UNIFORM TRAFFIC CONTROL DEVICES (TMUTCD) AND TXDOT STANDARDS.
6. WARNING SIGN PLACEMENT SHALL NOT CONFLICT WITH EXISTING PERMANENT SIGNAGE.
7. EXISTING GROUND MOUNTED SIGNS SHALL BE TEMPORARILY REINSTALLED ON SKIDS WHERE NEEDED FOR TCP.

0 50 100

SCALE: 1"=100'

STATE OF TEXAS
JOSHUA T. RICHTER
141234
LICENSED
PROFESSIONAL ENGINEER

4/10/2025

WILCO TEXAS

BGE, Inc.
101 W Louis Henna Blvd, Suite 400, Austin, TX 78728
Tel: 512-879-0400 • www.bgeinc.com
TBPE Registration No. F-1046

RM 2243

TRAFFIC CONTROL PLAN PHASE 2A LAYOUTS

SHEET 4 OF 4

FED.RD. DIV.NO.	PROJECT NO.		SHEET NO.
6			37
STATE	DIST.	COUNTY	
TEXAS	AUS	WILLIAMSON	
CONT.	SECT.	JOB	HIGHWAY NO.
0914	05	222	RM 2243

4/10/2025 1:10:03 PM pdf.pltcfg
G:\TXC\Projects\County\Williamson\7473-02 RM 2243 Phase 1A\03*CADD\01*Shts\02-TCP\RM2243*P1A*TCP2A*04.dgn

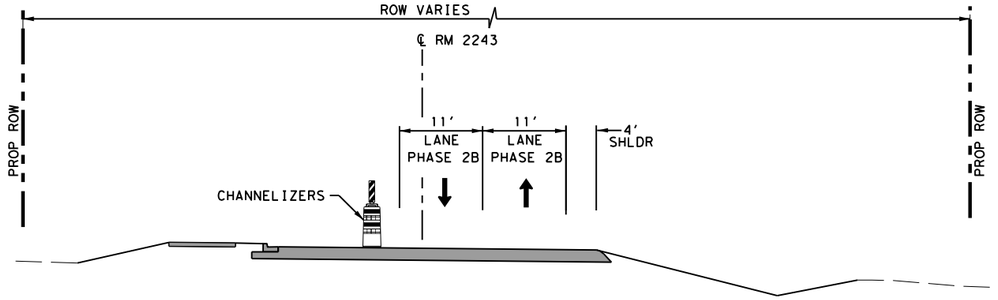

PHASE 2B

STA 624+20 TO STA 651+20

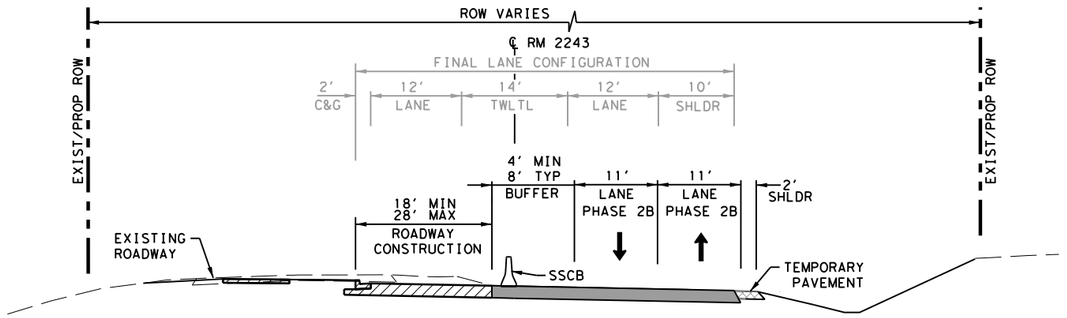

REMOVE TEMPORARY PAVEMENT & EMBANKMENT FROM STA 670+00 TO 672+00 (ITEM 508). AFTER COMPLETION OF PHASE 2B CONSTRUCTION.

PHASE 2B

STA 651+20 TO STA 672+00

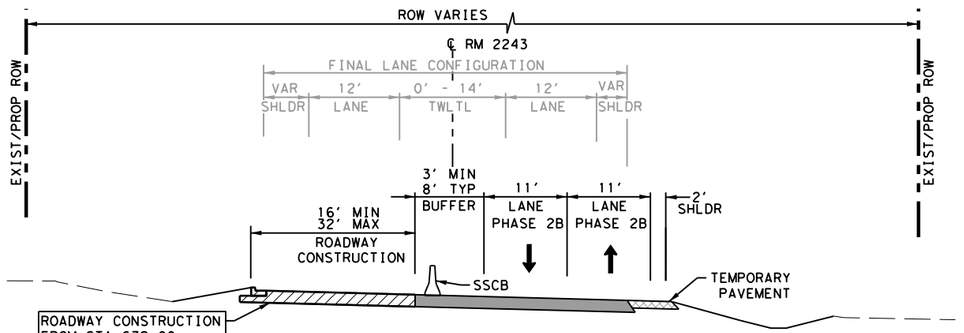

ROADWAY CONSTRUCTION FROM STA 672+00 TO STA 680+20

REMOVE TEMPORARY PAVEMENT & EMBANKMENT FROM STA 672+00 TO 688+60 (ITEM 508). AFTER COMPLETION OF PHASE 2B CONSTRUCTION.

PHASE 2B

STA 672+00 TO STA 688+60

LEGEND

- SIGN
- TYPE 3 BARRICADE
- DIRECTION OF TRAFFIC
- CONSTRUCTION THIS PHASE
- BUILT PREVIOUSLY
- TEMPORARY PAVEMENT
- TEMPORARY PAVEMENT BUILT PREVIOUSLY

NOTES:

1. MAINTAIN ACCESS TO ALL INTERSECTIONS AND DRIVEWAYS AT ALL TIME UNLESS OTHERWISE NOTED.
2. SEE TRAFFIC CONTROL PLAN NARRATIVE.
3. SEE BC, TCP, AND WZ STANDARDS FOR TEMPORARY SIGNING AND PAVEMENT MARKING DETAILS.
4. SEE P&P SHEETS AND INTERSECTION LAYOUTS FOR ADDITIONAL INFORMATION.
5. ALL CHANNELIZING DEVICES AND SIGN PLACEMENT MUST CONFORM TO THE TEXAS MANUAL ON UNIFORM TRAFFIC CONTROL DEVICES (TMUTCD) AND TXDOT STANDARDS.
6. WARNING SIGN PLACEMENT SHALL NOT CONFLICT WITH EXISTING PERMANENT SIGNAGE.
7. EXISTING GROUND MOUNTED SIGNS SHALL BE TEMPORARILY REINSTALLED ON SKIDS WHERE NEEDED FOR TCP.

0 10 20

SCALE: 1"=20'

STATE OF TEXAS
JOSHUA T. RICHTER
141234
LICENSED
PROFESSIONAL ENGINEER

4/10/2025

WILCO TEXAS

BGE, Inc.
101 W Louis Henna Blvd, Suite 400, Austin, TX 78728
Tel: 512-879-0400 • www.bgeinc.com
TBPE Registration No. F-1046

RM 2243
TRAFFIC CONTROL PLAN TYPICAL SECTIONS PHASE 2B

SHEET 1 OF 1

FED.RD. DIV.NO.	PROJECT NO.		SHEET NO.
6			38
STATE	DIST.	COUNTY	
TEXAS	AUS	WILLIAMSON	
CONT.	SECT.	JOB	HIGHWAY NO.
0914	05	222	RM 2243

4/10/2025 1:10:04 PM pdf.pltcfg
G:\TXC\Projects\County*Williamson\7473-02 RM 2243 Phase 1A\03*CADD\01*Shts\02-TCP\RM2243*P1A*TCP2B*TYP*01.dgn

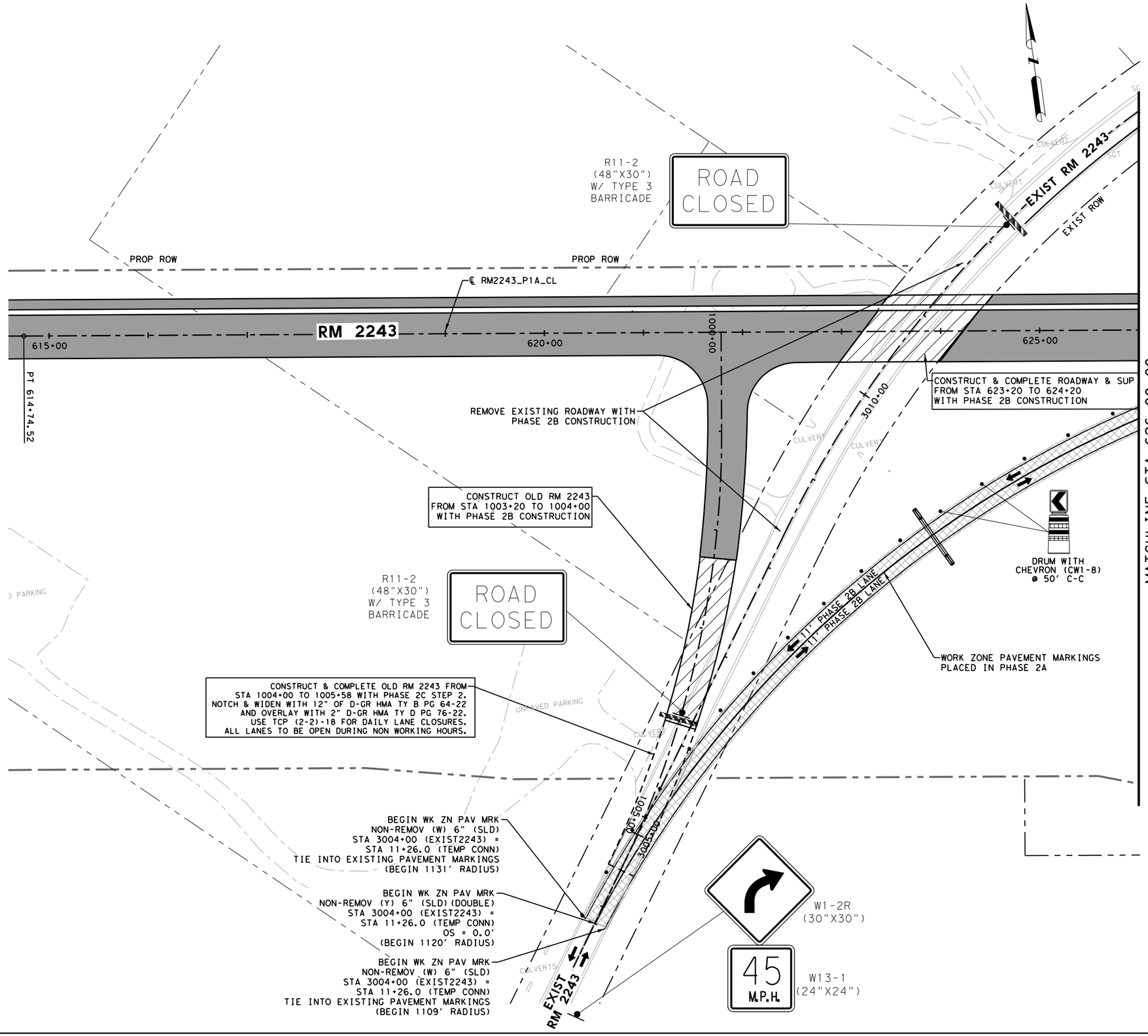

LEGEND

- SIGN
- TYPE 3 BARRICADE
- DIRECTION OF TRAFFIC
- CONSTRUCTION THIS PHASE
- BUILT PREVIOUSLY
- TEMPORARY PAVEMENT
- TEMPORARY PAVEMENT BUILT PREVIOUSLY

NOTES:

1. MAINTAIN ACCESS TO ALL INTERSECTIONS AND DRIVEWAYS AT ALL TIME UNLESS OTHERWISE NOTED.
2. SEE TRAFFIC CONTROL PLAN NARRATIVE.
3. SEE BC, TCP, AND WZ STANDARDS FOR TEMPORARY SIGNING AND PAVEMENT MARKING DETAILS.
4. SEE P&P SHEETS AND INTERSECTION LAYOUTS FOR ADDITIONAL INFORMATION.
5. ALL CHANNELIZING DEVICES AND SIGN PLACEMENT MUST CONFORM TO THE TEXAS MANUAL ON UNIFORM TRAFFIC CONTROL DEVICES (TMUTCD) AND TXDOT STANDARDS.
6. WARNING SIGN PLACEMENT SHALL NOT CONFLICT WITH EXISTING PERMANENT SIGNAGE.
7. EXISTING GROUND MOUNTED SIGNS SHALL BE TEMPORARILY REINSTALLED ON SKIDS WHERE NEEDED FOR TCP.

0 50 100

SCALE: 1"=100'

STATE OF TEXAS
JOSHUA T. RICHTER
141234
LICENSED
PROFESSIONAL ENGINEER

4/10/2025

WILCO
TEXAS

BGE, Inc.
101 W Louis Henna Blvd, Suite 400, Austin, TX 78728
Tel: 512-879-0400 • www.bgeinc.com
TBPE Registration No. F-1046

RM 2243

TRAFFIC CONTROL PLAN PHASE 2B LAYOUTS

SHEET 1 OF 4

FED.RD. DIV.NO.	PROJECT NO.		SHEET NO.
6			39
STATE	DIST.	COUNTY	
TEXAS	AUS	WILLIAMSON	
CONT.	SECT.	JOB	HIGHWAY NO.
0914	05	222	RM 2243

4/10/2025 1:10:06 PM pdf.pltcfg
G:\TXC\Projects\County\Williamson\7473-02 RM 2243 Phase 1A\03*CADD\01*Shts\02-TCP\RM2243*P1A*TCP2B*01.dgn

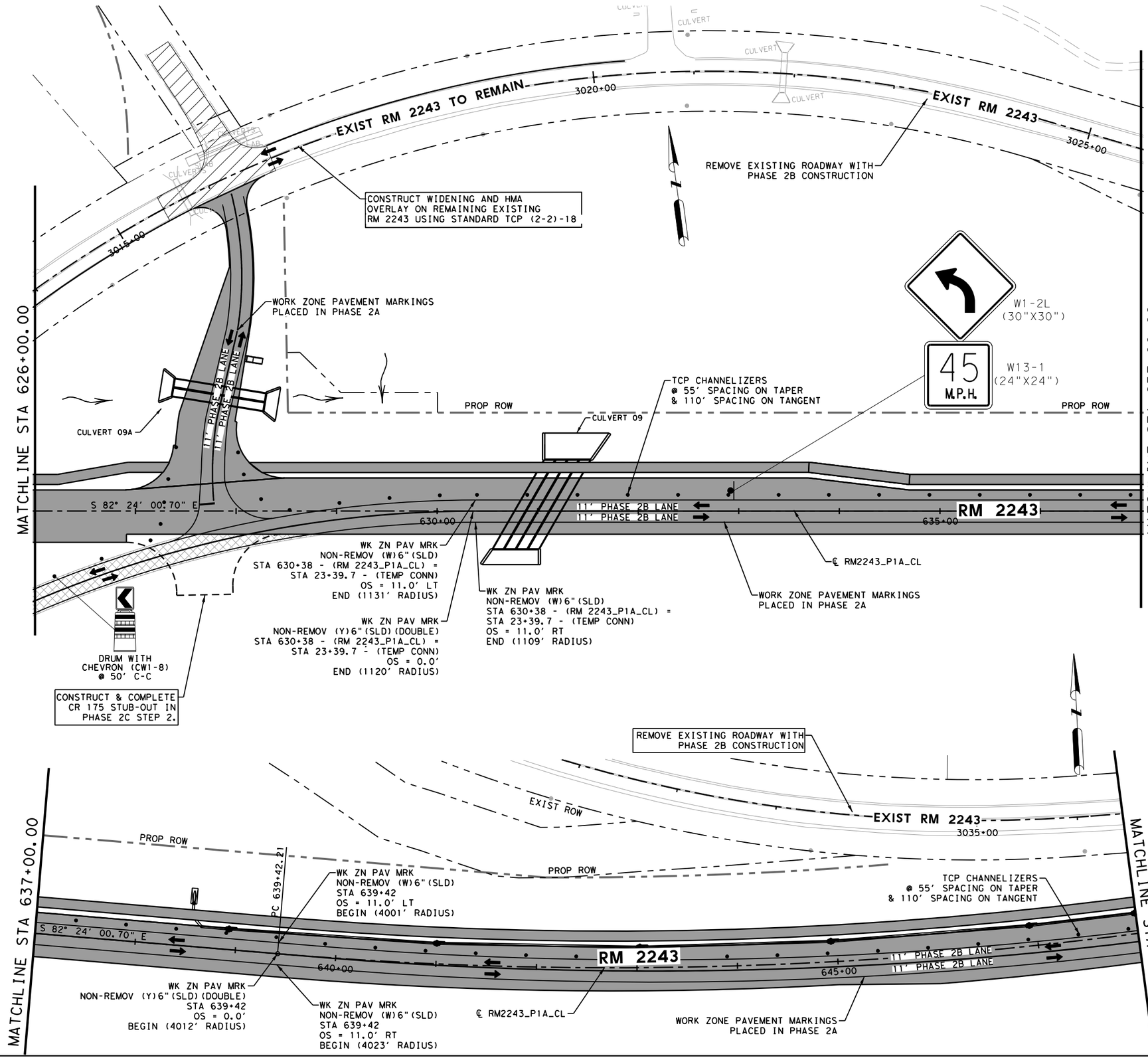

LEGEND

- SIGN
- TYPE 3 BARRICADE
- DIRECTION OF TRAFFIC
- CONSTRUCTION THIS PHASE
- BUILT PREVIOUSLY
- TEMPORARY PAVEMENT
- TEMPORARY PAVEMENT BUILT PREVIOUSLY

NOTES:

1. MAINTAIN ACCESS TO ALL INTERSECTIONS AND DRIVEWAYS AT ALL TIME UNLESS OTHERWISE NOTED.
2. SEE TRAFFIC CONTROL PLAN NARRATIVE.
3. SEE BC, TCP, AND WZ STANDARDS FOR TEMPORARY SIGNING AND PAVEMENT MARKING DETAILS.
4. SEE P&P SHEETS AND INTERSECTION LAYOUTS FOR ADDITIONAL INFORMATION.
5. ALL CHANNELIZING DEVICES AND SIGN PLACEMENT MUST CONFORM TO THE TEXAS MANUAL ON UNIFORM TRAFFIC CONTROL DEVICES (TMUTCD) AND TXDOT STANDARDS.
6. WARNING SIGN PLACEMENT SHALL NOT CONFLICT WITH EXISTING PERMANENT SIGNAGE.
7. EXISTING GROUND MOUNTED SIGNS SHALL BE TEMPORARILY REINSTALLED ON SKIDS WHERE NEEDED FOR TCP.

0 50 100

SCALE: 1"=100'

STATE OF TEXAS
JOSHUA T. RICHTER
141234
LICENSED
PROFESSIONAL ENGINEER

4/10/2025

WILCO TEXAS

BGE, Inc.
101 W Louis Henna Blvd, Suite 400, Austin, TX 78728
Tel: 512-879-0400 • www.bgeinc.com
TBPE Registration No. F-1046

RM 2243

TRAFFIC CONTROL PLAN PHASE 2B LAYOUTS

SHEET 2 OF 4

FED.RD. DIV.NO.	PROJECT NO.	SHEET NO.
6		40

STATE	DIST.	COUNTY	
TEXAS	AUS	WILLIAMSON	
CONT.	SECT.	JOB	HIGHWAY NO.
0914	05	222	RM 2243

4/10/2025 1:10:07 PM pdf.pltcfg
G:\TXC\Projects\County\Williamson\7473-02 RM 2243 Phase 1A\03*CADD\01*Shts\02-TCP\RM2243*P1A*TCP2B*02.dgn

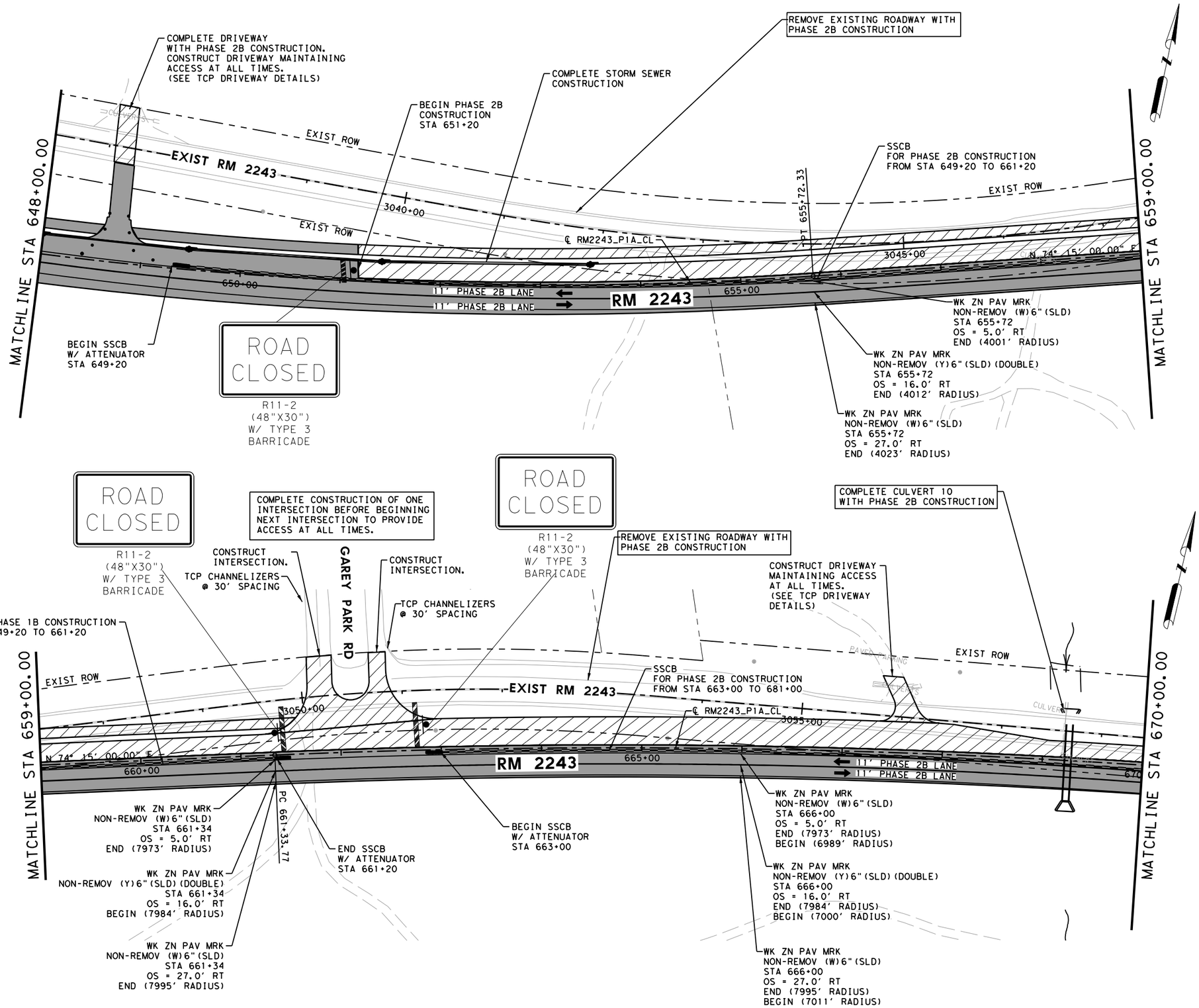

LEGEND

- SIGN
- TYPE 3 BARRICADE
- DIRECTION OF TRAFFIC
- CONSTRUCTION THIS PHASE
- BUILT PREVIOUSLY
- TEMPORARY PAVEMENT
- TEMPORARY PAVEMENT BUILT PREVIOUSLY

NOTES:

1. MAINTAIN ACCESS TO ALL INTERSECTIONS AND DRIVEWAYS AT ALL TIME UNLESS OTHERWISE NOTED.
2. SEE TRAFFIC CONTROL PLAN NARRATIVE.
3. SEE BC, TCP, AND WZ STANDARDS FOR TEMPORARY SIGNING AND PAVEMENT MARKING DETAILS.
4. SEE P&P SHEETS AND INTERSECTION LAYOUTS FOR ADDITIONAL INFORMATION.
5. ALL CHANNELIZING DEVICES AND SIGN PLACEMENT MUST CONFORM TO THE TEXAS MANUAL ON UNIFORM TRAFFIC CONTROL DEVICES (TMUTCD) AND TXDOT STANDARDS.
6. WARNING SIGN PLACEMENT SHALL NOT CONFLICT WITH EXISTING PERMANENT SIGNAGE.
7. EXISTING GROUND MOUNTED SIGNS SHALL BE TEMPORARILY REINSTALLED ON SKIDS WHERE NEEDED FOR TCP.

0 50 100

SCALE: 1"=100'

STATE OF TEXAS
JOSHUA T. RICHTER
141234
LICENSED
PROFESSIONAL ENGINEER

4/10/2025

WILCO TEXAS

BGE, Inc.
101 W Louis Henna Blvd, Suite 400, Austin, TX 78728
Tel: 512-879-0400 • www.bgeinc.com
TBPE Registration No. F-1046

RM 2243

TRAFFIC CONTROL PLAN PHASE 2B LAYOUTS

SHEET 3 OF 4

FED.RD. DIV.NO.	PROJECT NO.		SHEET NO.
6			41
STATE	DIST.	COUNTY	
TEXAS	AUS	WILLIAMSON	
CONT.	SECT.	JOB	HIGHWAY NO.
0914	05	222	RM 2243

4/10/2025 1:10:09 PM pdf.pltcfg
G:\TXC\Projects\County\Williamson\7473-02 RM 2243 Phase 1A\03*CADD\01*Shts\02-TCP\RM2243*P1A*TCP2B*03.dgn

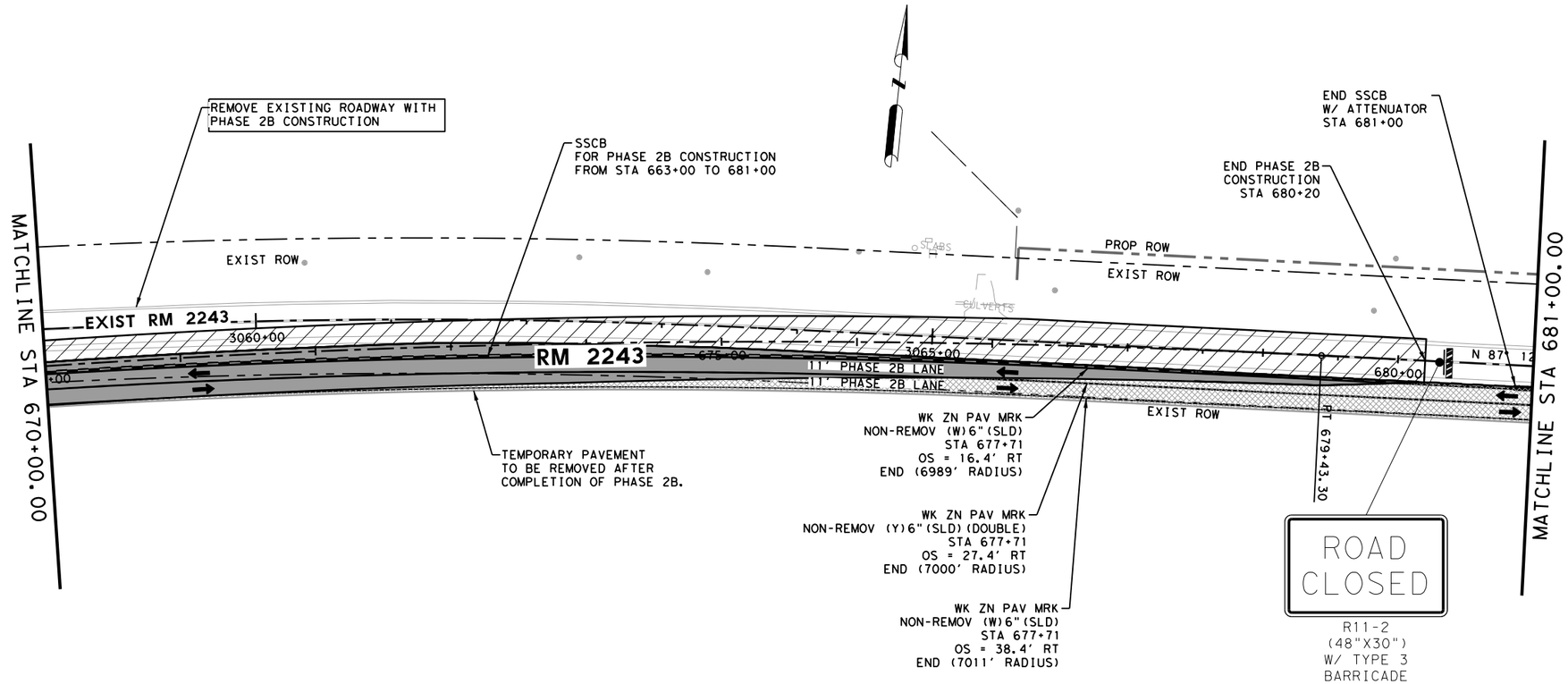

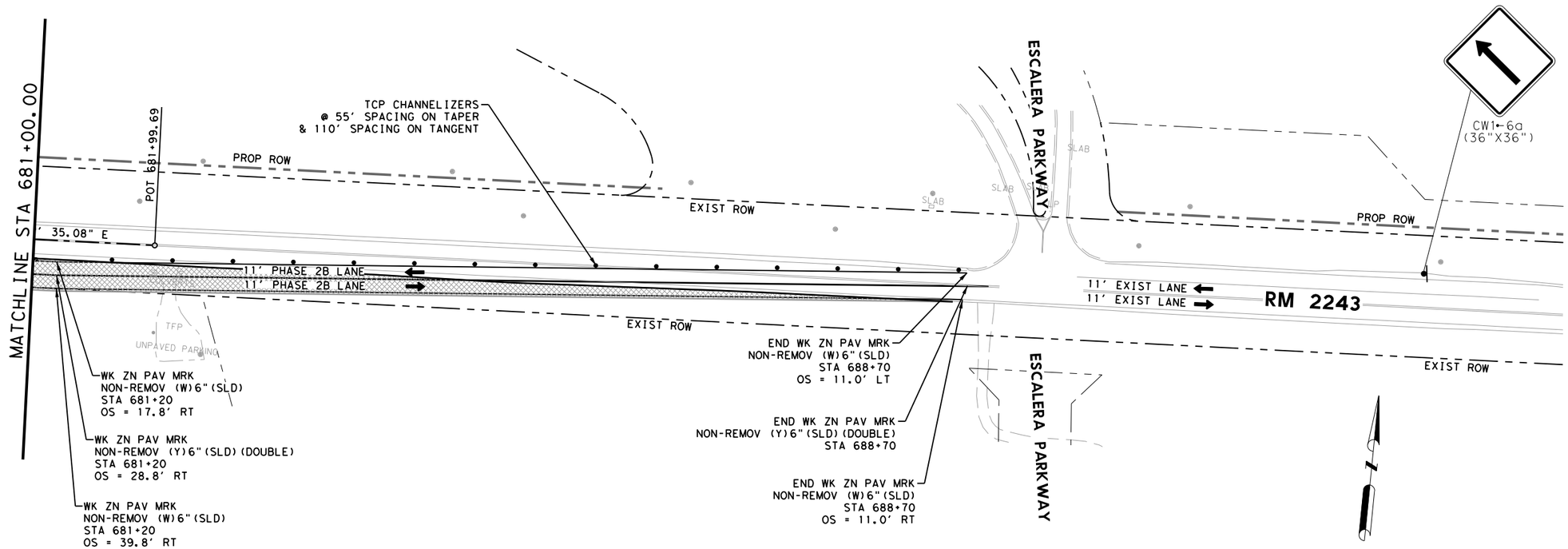

LEGEND

- SIGN
- TYPE 3 BARRICADE
- DIRECTION OF TRAFFIC
- CONSTRUCTION THIS PHASE
- BUILT PREVIOUSLY
- TEMPORARY PAVEMENT
- TEMPORARY PAVEMENT BUILT PREVIOUSLY

NOTES:

1. MAINTAIN ACCESS TO ALL INTERSECTIONS AND DRIVEWAYS AT ALL TIME UNLESS OTHERWISE NOTED.
2. SEE TRAFFIC CONTROL PLAN NARRATIVE.
3. SEE BC, TCP, AND WZ STANDARDS FOR TEMPORARY SIGNING AND PAVEMENT MARKING DETAILS.
4. SEE P&P SHEETS AND INTERSECTION LAYOUTS FOR ADDITIONAL INFORMATION.
5. ALL CHANNELIZING DEVICES AND SIGN PLACEMENT MUST CONFORM TO THE TEXAS MANUAL ON UNIFORM TRAFFIC CONTROL DEVICES (TMUTCD) AND TXDOT STANDARDS.
6. WARNING SIGN PLACEMENT SHALL NOT CONFLICT WITH EXISTING PERMANENT SIGNAGE.
7. EXISTING GROUND MOUNTED SIGNS SHALL BE TEMPORARILY REINSTALLED ON SKIDS WHERE NEEDED FOR TCP.

0 50 100

SCALE: 1"=100'

STATE OF TEXAS
JOSHUA T. RICHTER
141234
LICENSED
PROFESSIONAL ENGINEER

4/10/2025

WILCO TEXAS

BGE, Inc.
101 W Louis Henna Blvd, Suite 400, Austin, TX 78728
Tel: 512-879-0400 • www.bgeinc.com
TBPE Registration No. F-1046

RM 2243

TRAFFIC CONTROL PLAN PHASE 2B LAYOUTS

SHEET 4 OF 4

FED.RD. DIV.NO.	PROJECT NO.	SHEET NO.
6		42

STATE	DIST.	COUNTY	
TEXAS	AUS	WILLIAMSON	
CONT.	SECT.	JOB	HIGHWAY NO.
0914	05	222	RM 2243

4/10/2025 1:10:10 PM pdf.pltcfg
G:\TXC\Projects\County\Williamson\7473-02 RM 2243 Phase 1A\03*CADD\01*Shts\02-TCP\RM2243*P1A*TCP2B*04.dgn

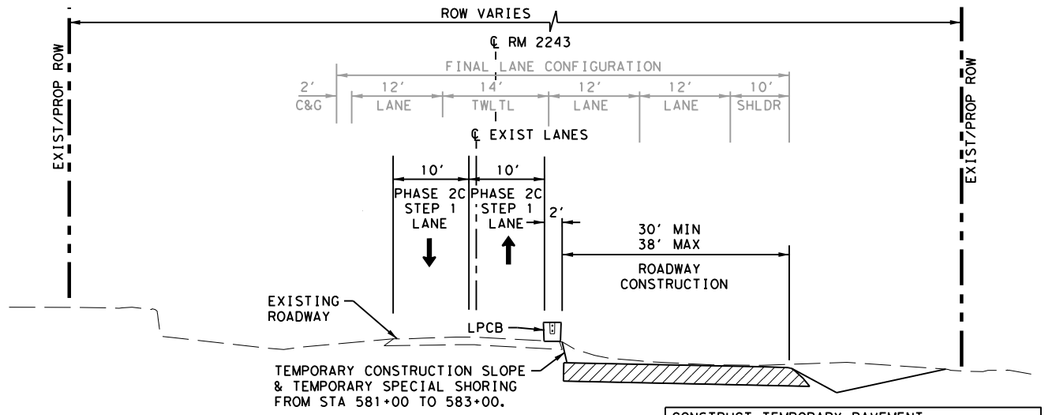

REMOVE TEMPORARY PAVEMENT & EMBANKMENT FROM STA 579+00 TO 584+26 WITH PHASE 2C CONSTRUCTION AFTER COMPLETION OF WATERLINE CONSTRUCTION (ITEM 508).

CONSTRUCT TEMPORARY PAVEMENT FROM STA 579+00 TO 581+92 FOR PHASE 2C STEP 2 TCP LANES. ALL THIS WORK IS PAID FOR UNDER ITEM 508.

ITEM 508
TEMPORARY PAVEMENT WIDENING SHALL CONSISTS OF THE FOLLOWING:
D-GR-HMA TY-D PG 70-22 (2") (TOP LAYER)
D-GR HMA TY-B PG 64-22 (10") (BOTTOM LAYER)
(EMBANKMENT INCLUDED IN ITEM 508)

PHASE 2C STEP 1

STA 579+00 TO STA 584+52

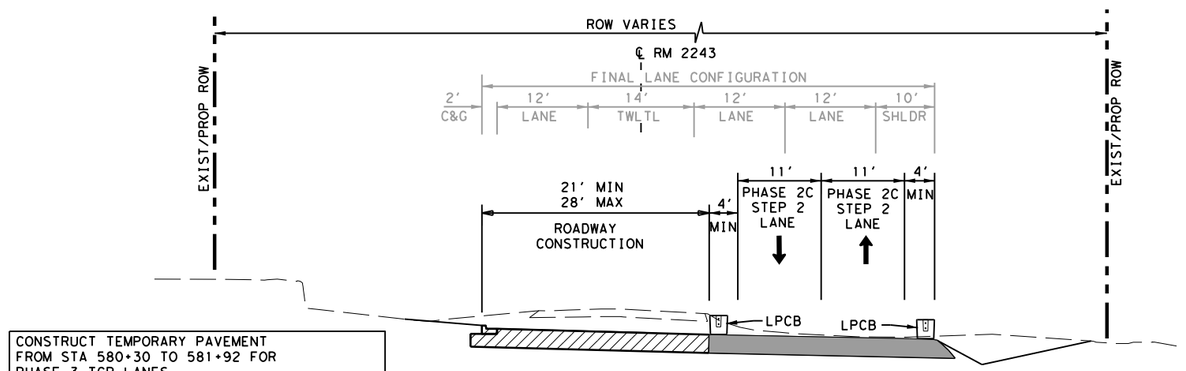

CONSTRUCT TEMPORARY PAVEMENT FROM STA 580+30 TO 581+92 FOR PHASE 3 TCP LANES. ALL THIS WORK IS PAID FOR UNDER ITEM 508.

ITEM 508
TEMPORARY PAVEMENT WIDENING SHALL CONSISTS OF THE FOLLOWING:
D-GR-HMA TY-D PG 70-22 (2") (TOP LAYER)
D-GR HMA TY-B PG 64-22 (10") (BOTTOM LAYER)
(EMBANKMENT INCLUDED IN ITEM 508)

PHASE 2C STEP 2

STA 579+00 TO STA 584+52

LEGEND

- SIGN
- TYPE 3 BARRICADE
- DIRECTION OF TRAFFIC
- CONSTRUCTION THIS PHASE
- BUILT PREVIOUSLY
- TEMPORARY PAVEMENT
- TEMPORARY PAVEMENT BUILT PREVIOUSLY

NOTES:
1. MAINTAIN ACCESS TO ALL INTERSECTIONS AND DRIVEWAYS AT ALL TIME UNLESS OTHERWISE NOTED.
2. SEE TRAFFIC CONTROL PLAN NARRATIVE.
3. SEE BC, TCP, AND WZ STANDARDS FOR TEMPORARY SIGNING AND PAVEMENT MARKING DETAILS.
4. SEE P&P SHEETS AND INTERSECTION LAYOUTS FOR ADDITIONAL INFORMATION.
5. ALL CHANNELIZING DEVICES AND SIGN PLACEMENT MUST CONFORM TO THE TEXAS MANUAL ON UNIFORM TRAFFIC CONTROL DEVICES (TMUTCD) AND TXDOT STANDARDS.
6. WARNING SIGN PLACEMENT SHALL NOT CONFLICT WITH EXISTING PERMANENT SIGNAGE.
7. EXISTING GROUND MOUNTED SIGNS SHALL BE TEMPORARILY REINSTALLED ON SKIDS WHERE NEEDED FOR TCP.

0 10 20
SCALE: 1"=20'

STATE OF TEXAS
JOSHUA T. RICHTER
141234
LICENSED
PROFESSIONAL ENGINEER

4/10/2025

WILCO TEXAS

BGE, Inc.
101 W Louis Henna Blvd, Suite 400, Austin, TX 78728
Tel: 512-879-0400 • www.bgeinc.com
TBPE Registration No. F-1046

RM 2243
TRAFFIC CONTROL PLAN TYPICAL SECTIONS PHASE 2C

SHEET 1 OF 1

FED.RD. DIV.NO.	PROJECT NO.		SHEET NO.
6			43
STATE	DIST.	COUNTY	
TEXAS	AUS	WILLIAMSON	
CONT.	SECT.	JOB	HIGHWAY NO.
0914	05	222	RM 2243

4/10/2025 1:10:11 PM pdf.pltcfg
G:\TXC\Projects\County*Williamson\7473-02 RM 2243 Phase 1A\03*CADD\01*Shts\02-TCP\RM2243*P1A*TCP2C*TYP*01.dgn

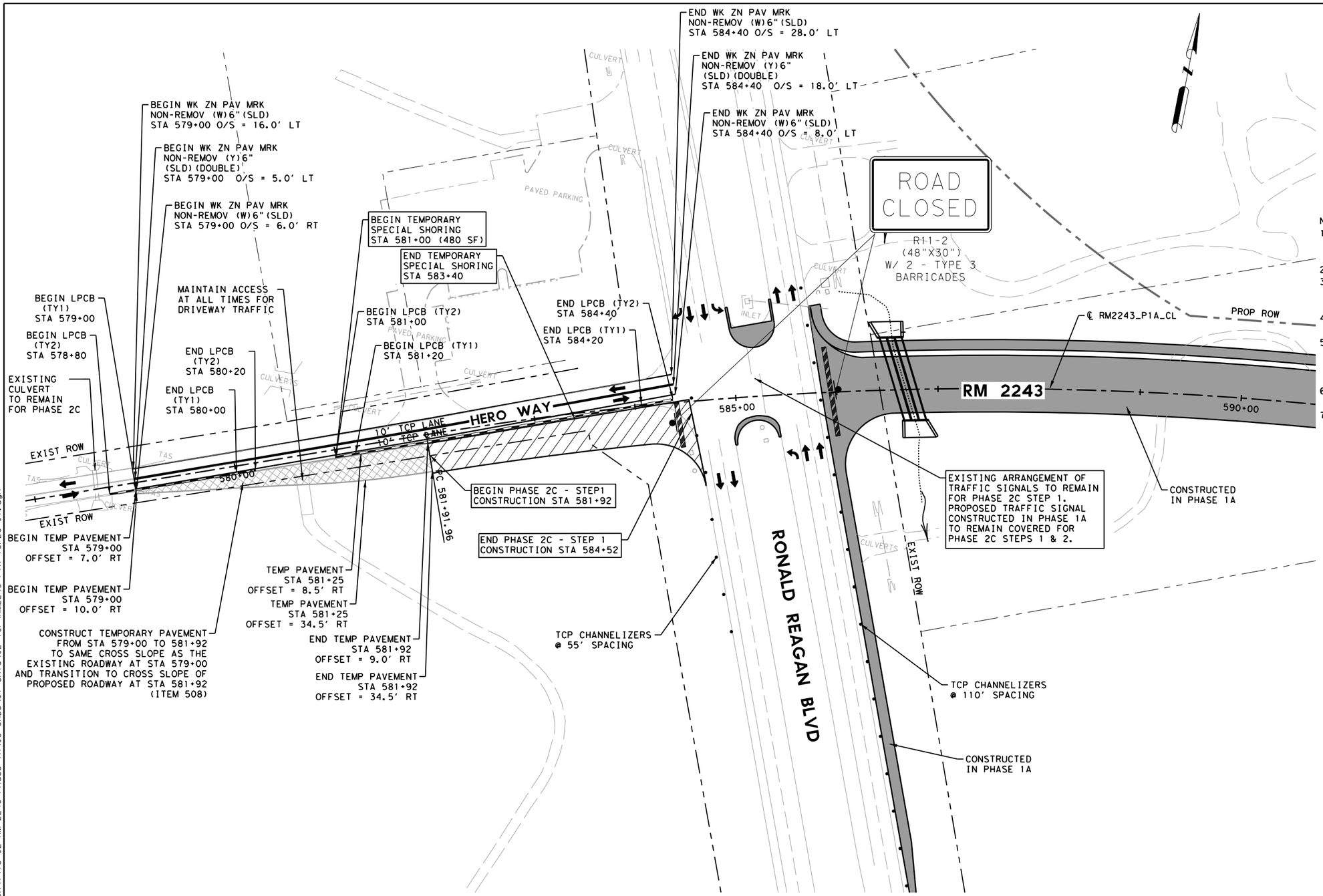

LEGEND

- SIGN
- TYPE 3 BARRICADE
- DIRECTION OF TRAFFIC
- CONSTRUCTION THIS PHASE
- BUILT PREVIOUSLY
- TEMPORARY PAVEMENT
- TEMPORARY PAVEMENT BUILT PREVIOUSLY

NOTES:

1. MAINTAIN ACCESS TO ALL INTERSECTIONS AND DRIVEWAYS AT ALL TIME UNLESS OTHERWISE NOTED.
2. SEE TRAFFIC CONTROL PLAN NARRATIVE.
3. SEE BC, TCP, AND WZ STANDARDS FOR TEMPORARY SIGNING AND PAVEMENT MARKING DETAILS.
4. SEE P&P SHEETS AND INTERSECTION LAYOUTS FOR ADDITIONAL INFORMATION.
5. ALL CHANNELIZING DEVICES AND SIGN PLACEMENT MUST CONFORM TO THE TEXAS MANUAL ON UNIFORM TRAFFIC CONTROL DEVICES (TMUTCD) AND TXDOT STANDARDS.
6. WARNING SIGN PLACEMENT SHALL NOT CONFLICT WITH EXISTING PERMANENT SIGNAGE.
7. EXISTING GROUND MOUNTED SIGNS SHALL BE TEMPORARILY REINSTALLED ON SKIDS WHERE NEEDED FOR TCP.

0 50 100

SCALE: 1"=100'

STATE OF TEXAS
JOSHUA T. RICHTER
141234
LICENSED
PROFESSIONAL ENGINEER

4/10/2025

WILCO TEXAS

BGE, Inc.
101 W Louis Henna Blvd, Suite 400, Austin, TX 78728
Tel: 512-879-0400 • www.bgeinc.com
TBPE Registration No. F-1046

RM 2243

TRAFFIC CONTROL PLAN PHASE 2C STEP 1 LAYOUT

SHEET 1 OF 1

FED.RD. DIV.NO.	PROJECT NO.		SHEET NO.
6			44
STATE	DIST.	COUNTY	
TEXAS	AUS	WILLIAMSON	
CONT.	SECT.	JOB	HIGHWAY NO.
0914	05	222	RM 2243

4/10/2025 1:10:13 PM pdf.pltcfg
G:\TXC\Projects\County\Williamson\7473-02 RM 2243 Phase 1A\03*CADD\01*Shts\02-TCP\RM2243*P1A*TCP2C*01.dgn

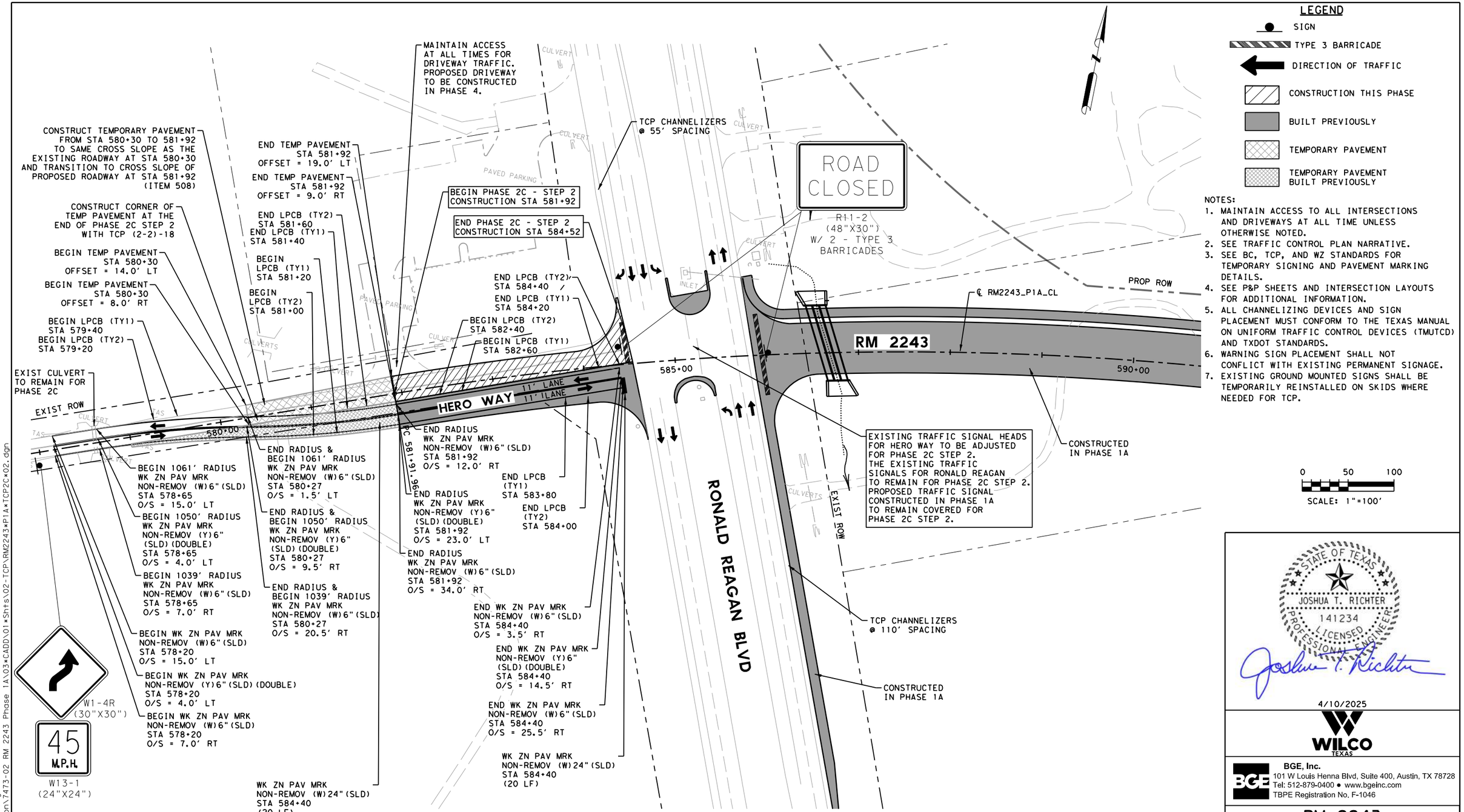

4/10/2025

WILCO TEXAS

BGE, Inc.
101 W Louis Henna Blvd, Suite 400, Austin, TX 78728
Tel: 512-879-0400 • www.bgeinc.com
TBPE Registration No. F-1046

RM 2243

TRAFFIC CONTROL PLAN PHASE 2C STEP 2 LAYOUT

SHEET 1 OF 1

FED.RD. DIV.NO.	PROJECT NO.		SHEET NO.
6			45
STATE	DIST.	COUNTY	
TEXAS	AUS	WILLIAMSON	
CONT.	SECT.	JOB	HIGHWAY NO.
0914	05	222	RM 2243

4/10/2025 1:10:14 PM pdf.pltcfg
G:\TXC\Projects\County*Williamson\7473-02 RM 2243 Phase 1A\03*CADD\01*Shts\02-TCP\RM2243*P1A*TCP2C*02.dgn

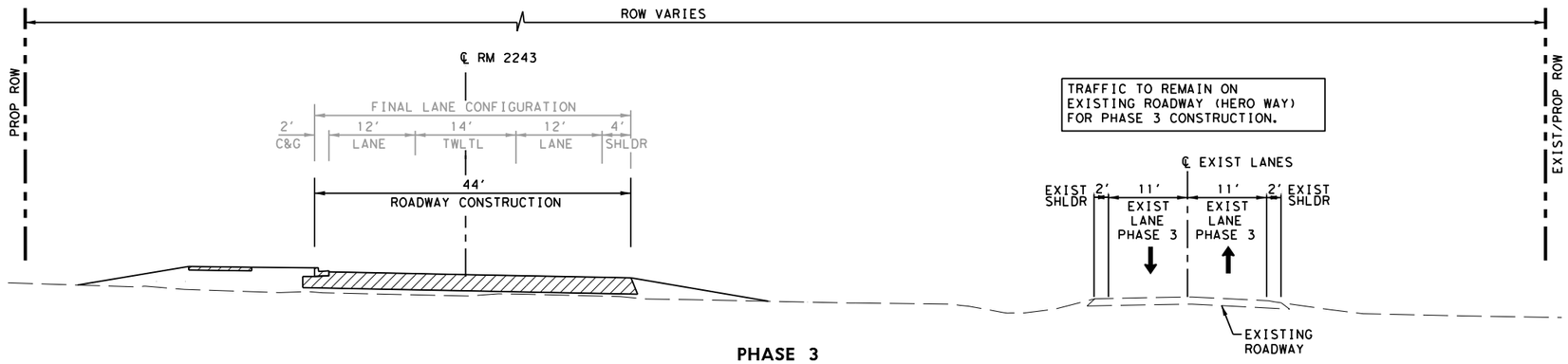

PHASE 3

STA 503+60 TO STA 542+94

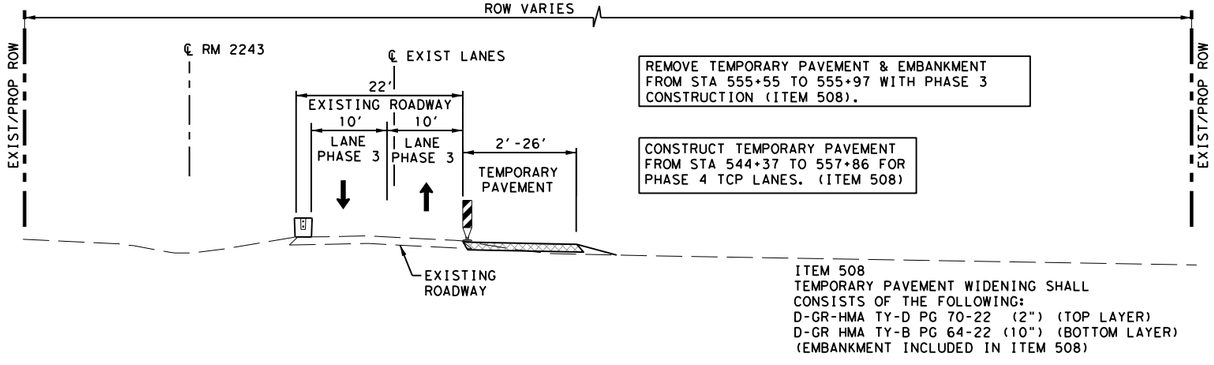

PHASE 3

STA 542+94 TO STA 555+97

LEGEND

- SIGN
- TYPE 3 BARRICADE
- DIRECTION OF TRAFFIC
- CONSTRUCTION THIS PHASE
- BUILT PREVIOUSLY
- TEMPORARY PAVEMENT
- TEMPORARY PAVEMENT BUILT PREVIOUSLY

NOTES:

1. MAINTAIN ACCESS TO ALL INTERSECTIONS AND DRIVEWAYS AT ALL TIME UNLESS OTHERWISE NOTED.
2. SEE TRAFFIC CONTROL PLAN NARRATIVE.
3. SEE BC, TCP, AND WZ STANDARDS FOR TEMPORARY SIGNING AND PAVEMENT MARKING DETAILS.
4. SEE P&P SHEETS AND INTERSECTION LAYOUTS FOR ADDITIONAL INFORMATION.
5. ALL CHANNELIZING DEVICES AND SIGN PLACEMENT MUST CONFORM TO THE TEXAS MANUAL ON UNIFORM TRAFFIC CONTROL DEVICES (TMUTCD) AND TXDOT STANDARDS.
6. WARNING SIGN PLACEMENT SHALL NOT CONFLICT WITH EXISTING PERMANENT SIGNAGE.
7. EXISTING GROUND MOUNTED SIGNS SHALL BE TEMPORARILY REINSTALLED ON SKIDS WHERE NEEDED FOR TCP.

0 10 20
SCALE: 1"=20′

STATE OF TEXAS
JOSHUA T. RICHTER
141234
LICENSED
PROFESSIONAL ENGINEER

4/10/2025

WILCO TEXAS

BGE, Inc.
101 W Louis Henna Blvd, Suite 400, Austin, TX 78728
Tel: 512-879-0400 • www.bgeinc.com
TBPE Registration No. F-1046

RM 2243
TRAFFIC CONTROL PLAN
TYPICAL SECTIONS
PHASE 3

SHEET 1 OF 2

FED.RD. DIV.NO.	PROJECT NO.		SHEET NO.
6			46
STATE	DIST.	COUNTY	
TEXAS	AUS	WILLIAMSON	
CONT.	SECT.	JOB	HIGHWAY NO.
0914	05	222	RM 2243

4/10/2025 1:10:15 PM pdf.pltcfg
G:\TXC\Projects\County*Williamson\7473-02 RM 2243 Phase 1A\03*CADD\01*Shts\02-TCP\RM2243*P1A*TCP3*TYP*01.dgn

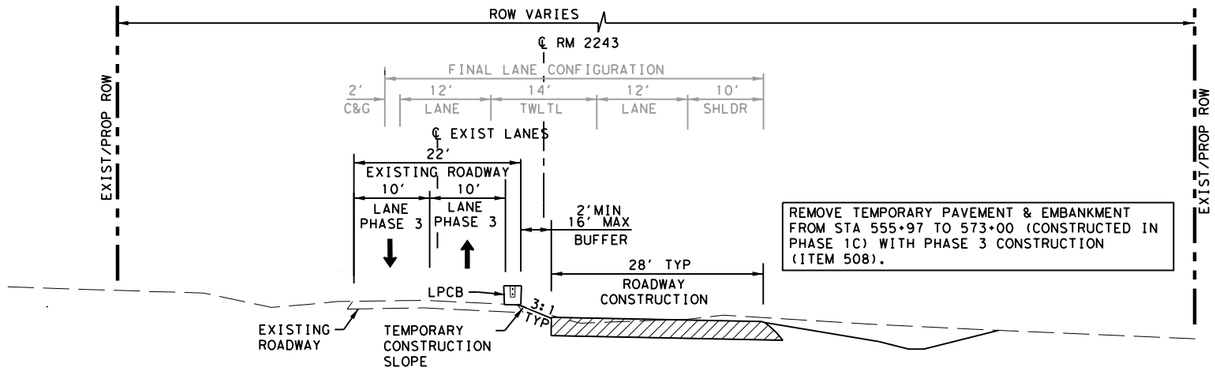

PHASE 3

STA 555+97 TO STA 573+00

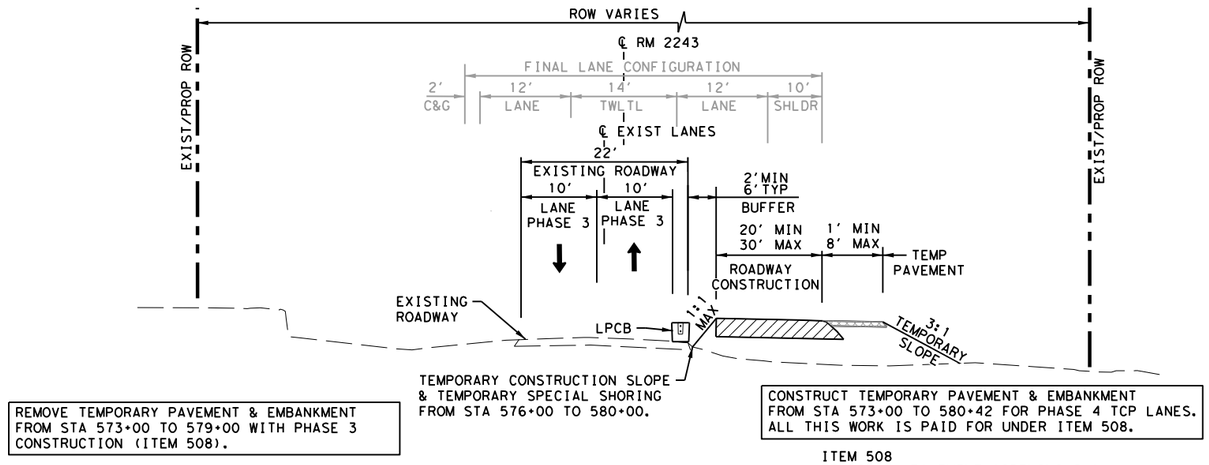

ITEM 508
TEMPORARY PAVEMENT WIDENING SHALL CONSISTS OF THE FOLLOWING:
D-GR-HMA TY-D PG 70-22 (2") (TOP LAYER)
D-GR HMA TY-B PG 64-22 (10") (BOTTOM LAYER)
(EMBANKMENT INCLUDED IN ITEM 508)

PHASE 3

STA 573+00 TO STA 581+92

LEGEND

- SIGN
- TYPE 3 BARRICADE
- DIRECTION OF TRAFFIC
- CONSTRUCTION THIS PHASE
- BUILT PREVIOUSLY
- TEMPORARY PAVEMENT
- TEMPORARY PAVEMENT BUILT PREVIOUSLY

NOTES:
1. MAINTAIN ACCESS TO ALL INTERSECTIONS AND DRIVEWAYS AT ALL TIME UNLESS OTHERWISE NOTED.
2. SEE TRAFFIC CONTROL PLAN NARRATIVE.
3. SEE BC, TCP, AND WZ STANDARDS FOR TEMPORARY SIGNING AND PAVEMENT MARKING DETAILS.
4. SEE P&P SHEETS AND INTERSECTION LAYOUTS FOR ADDITIONAL INFORMATION.
5. ALL CHANNELIZING DEVICES AND SIGN PLACEMENT MUST CONFORM TO THE TEXAS MANUAL ON UNIFORM TRAFFIC CONTROL DEVICES (TMUTCD) AND TXDOT STANDARDS.
6. WARNING SIGN PLACEMENT SHALL NOT CONFLICT WITH EXISTING PERMANENT SIGNAGE.
7. EXISTING GROUND MOUNTED SIGNS SHALL BE TEMPORARILY REINSTALLED ON SKIDS WHERE NEEDED FOR TCP.

0 10 20
SCALE: 1"=20'

STATE OF TEXAS
JOSHUA T. RICHTER
141234
LICENSED
PROFESSIONAL ENGINEER

4/10/2025

WILCO TEXAS

BGE, Inc.
101 W Louis Henna Blvd, Suite 400, Austin, TX 78728
Tel: 512-879-0400 • www.bgeinc.com
TBPE Registration No. F-1046

RM 2243
TRAFFIC CONTROL PLAN TYPICAL SECTIONS PHASE 3

SHEET 2 OF 2

FED.RD. DIV.NO.	PROJECT NO.		SHEET NO.
6			47
STATE	DIST.	COUNTY	
TEXAS	AUS	WILLIAMSON	
CONT.	SECT.	JOB	HIGHWAY NO.
0914	05	222	RM 2243

4/10/2025 1:10:17 PM pdf.pltcfg
G:\TXC\Projects\County*Williamson\7473-02 RM 2243 Phase 1A\03*CADD\01*Shts\02-TCP\RM2243*P1A*TCP3*TYP*02.dgn

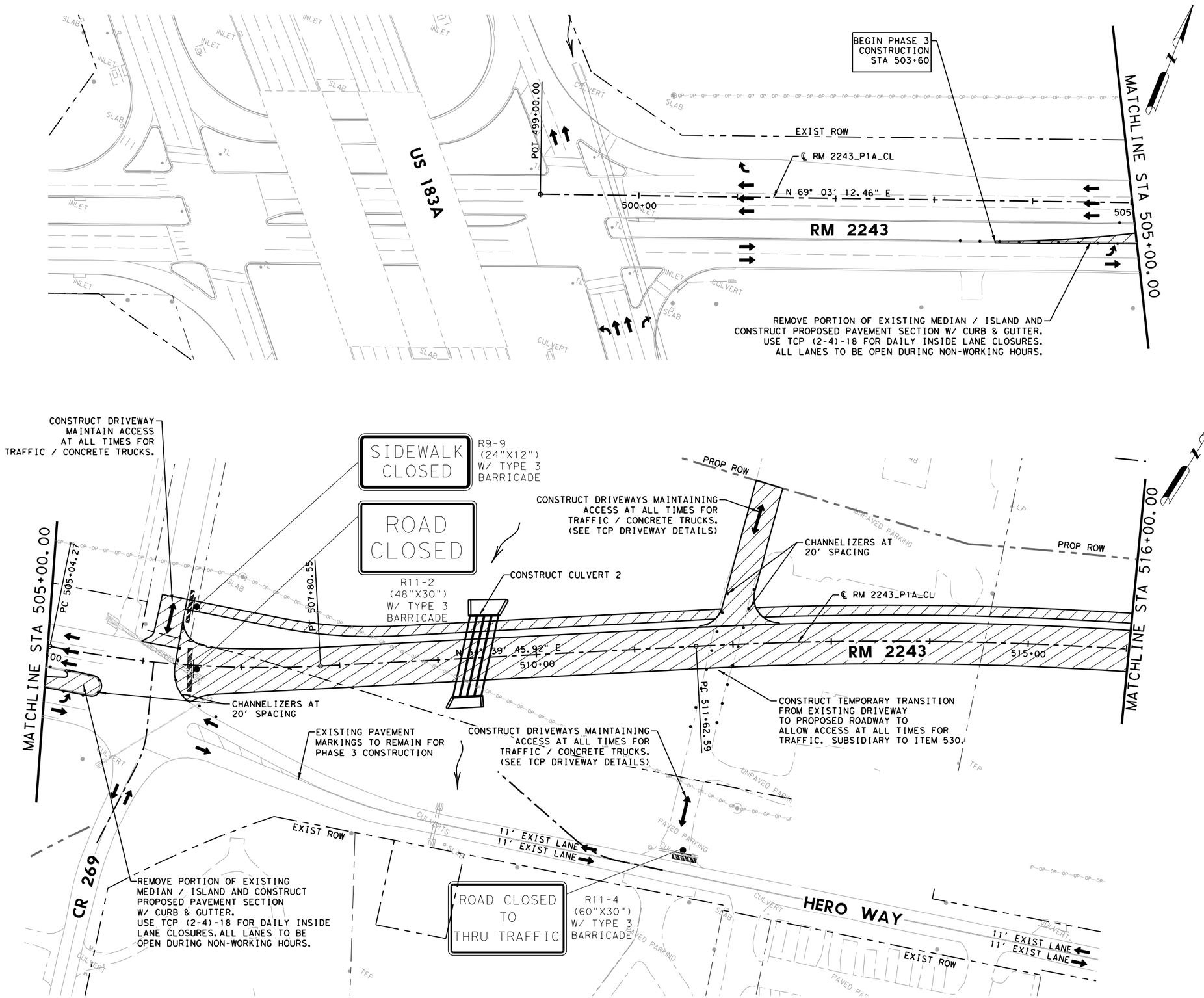

LEGEND

- SIGN
- TYPE 3 BARRICADE
- DIRECTION OF TRAFFIC
- CONSTRUCTION THIS PHASE
- BUILT PREVIOUSLY
- TEMPORARY PAVEMENT
- TEMPORARY PAVEMENT BUILT PREVIOUSLY

NOTES:

1. MAINTAIN ACCESS TO ALL INTERSECTIONS AND DRIVEWAYS AT ALL TIME UNLESS OTHERWISE NOTED.
2. SEE TRAFFIC CONTROL PLAN NARRATIVE.
3. SEE BC, TCP, AND WZ STANDARDS FOR TEMPORARY SIGNING AND PAVEMENT MARKING DETAILS.
4. SEE P&P SHEETS AND INTERSECTION LAYOUTS FOR ADDITIONAL INFORMATION.
5. ALL CHANNELIZING DEVICES AND SIGN PLACEMENT MUST CONFORM TO THE TEXAS MANUAL ON UNIFORM TRAFFIC CONTROL DEVICES (TMUTCD) AND TXDOT STANDARDS.
6. WARNING SIGN PLACEMENT SHALL NOT CONFLICT WITH EXISTING PERMANENT SIGNAGE.
7. EXISTING GROUND MOUNTED SIGNS SHALL BE TEMPORARILY REINSTALLED ON SKIDS WHERE NEEDED FOR TCP.

0 50 100
SCALE: 1"=100' H
1"=10' V

STATE OF TEXAS
JOSHUA T. RICHTER
141234
LICENSED
PROFESSIONAL ENGINEER

4/10/2025

WILCO TEXAS

BGE, Inc.
101 W Louis Henna Blvd, Suite 400, Austin, TX 78728
Tel: 512-879-0400 • www.bgeinc.com
TBPE Registration No. F-1046

RM 2243

TRAFFIC CONTROL PLAN PHASE 3 LAYOUTS

SHEET 1 OF 5

FED.RD. DIV.NO.	PROJECT NO.		SHEET NO.
6			48
STATE	DIST.	COUNTY	
TEXAS	AUS	WILLIAMSON	
CONT.	SECT.	JOB	HIGHWAY NO.
0914	05	222	RM 2243

4/10/2025 1:10:19 PM pdf.pltcfg
G:\TXC\Projects\County*Williamson\7473-02 RM 2243 Phase 1A\03*CADD\01*Shts\02-TCP\RM2243*P1A*TCP3*01.dgn

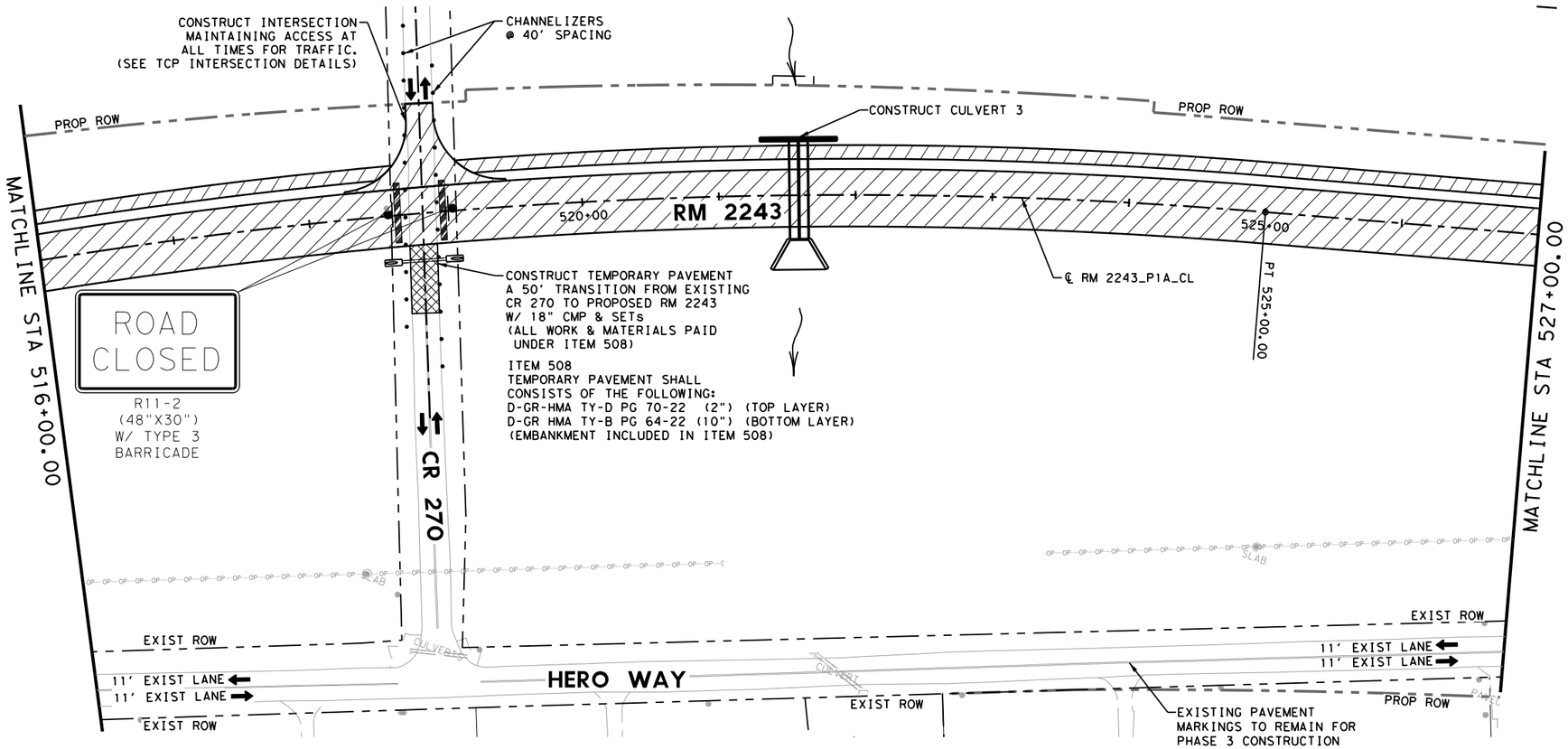

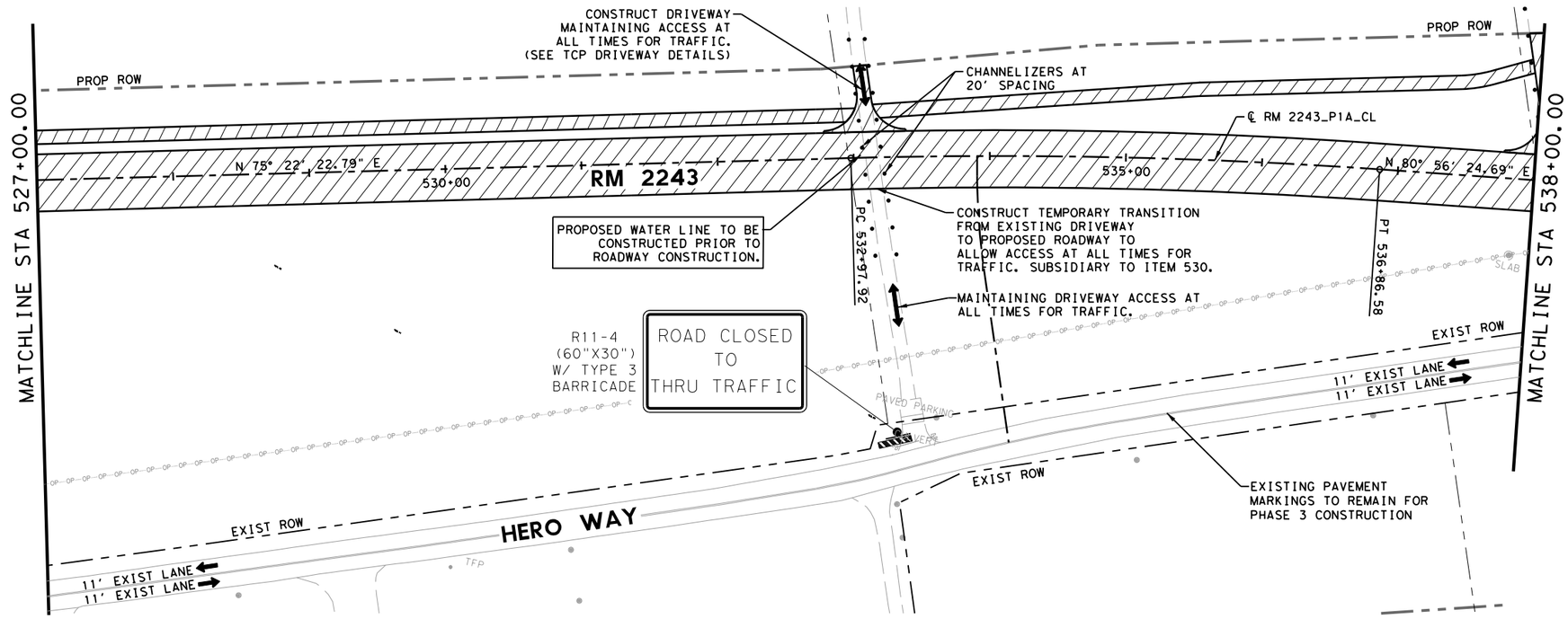

LEGEND

- SIGN
- TYPE 3 BARRICADE
- DIRECTION OF TRAFFIC
- CONSTRUCTION THIS PHASE
- BUILT PREVIOUSLY
- TEMPORARY PAVEMENT
- TEMPORARY PAVEMENT BUILT PREVIOUSLY

NOTES:

1. MAINTAIN ACCESS TO ALL INTERSECTIONS AND DRIVEWAYS AT ALL TIME UNLESS OTHERWISE NOTED.
2. SEE TRAFFIC CONTROL PLAN NARRATIVE.
3. SEE BC, TCP, AND WZ STANDARDS FOR TEMPORARY SIGNING AND PAVEMENT MARKING DETAILS.
4. SEE P&P SHEETS AND INTERSECTION LAYOUTS FOR ADDITIONAL INFORMATION.
5. ALL CHANNELIZING DEVICES AND SIGN PLACEMENT MUST CONFORM TO THE TEXAS MANUAL ON UNIFORM TRAFFIC CONTROL DEVICES (TMUTCD) AND TXDOT STANDARDS.
6. WARNING SIGN PLACEMENT SHALL NOT CONFLICT WITH EXISTING PERMANENT SIGNAGE.
7. EXISTING GROUND MOUNTED SIGNS SHALL BE TEMPORARILY REINSTALLED ON SKIDS WHERE NEEDED FOR TCP.

0 50 100
SCALE: 1"=100' H
1"=10' V

STATE OF TEXAS
JOSHUA T. RICHTER
141234
LICENSED
PROFESSIONAL ENGINEER

4/10/2025

WILCO TEXAS

BGE, Inc.
101 W Louis Henna Blvd, Suite 400, Austin, TX 78728
Tel: 512-879-0400 • www.bgeinc.com
TBPE Registration No. F-1046

RM 2243

TRAFFIC CONTROL PLAN PHASE 3 LAYOUTS

SHEET 2 OF 5

FED.RD. DIV.NO.	PROJECT NO.		SHEET NO.
6			49
STATE	DIST.	COUNTY	
TEXAS	AUS	WILLIAMSON	
CONT.	SECT.	JOB	HIGHWAY NO.
0914	05	222	RM 2243

4/10/2025 1:10:20 PM pdf.pltcfg
C:\TXC\Projects\County\Williamson\7473-02 RM 2243 Phase 1A\03*CADD\01*Shts\02-TCP\RM2243*P1A*TCP3*02.dgn

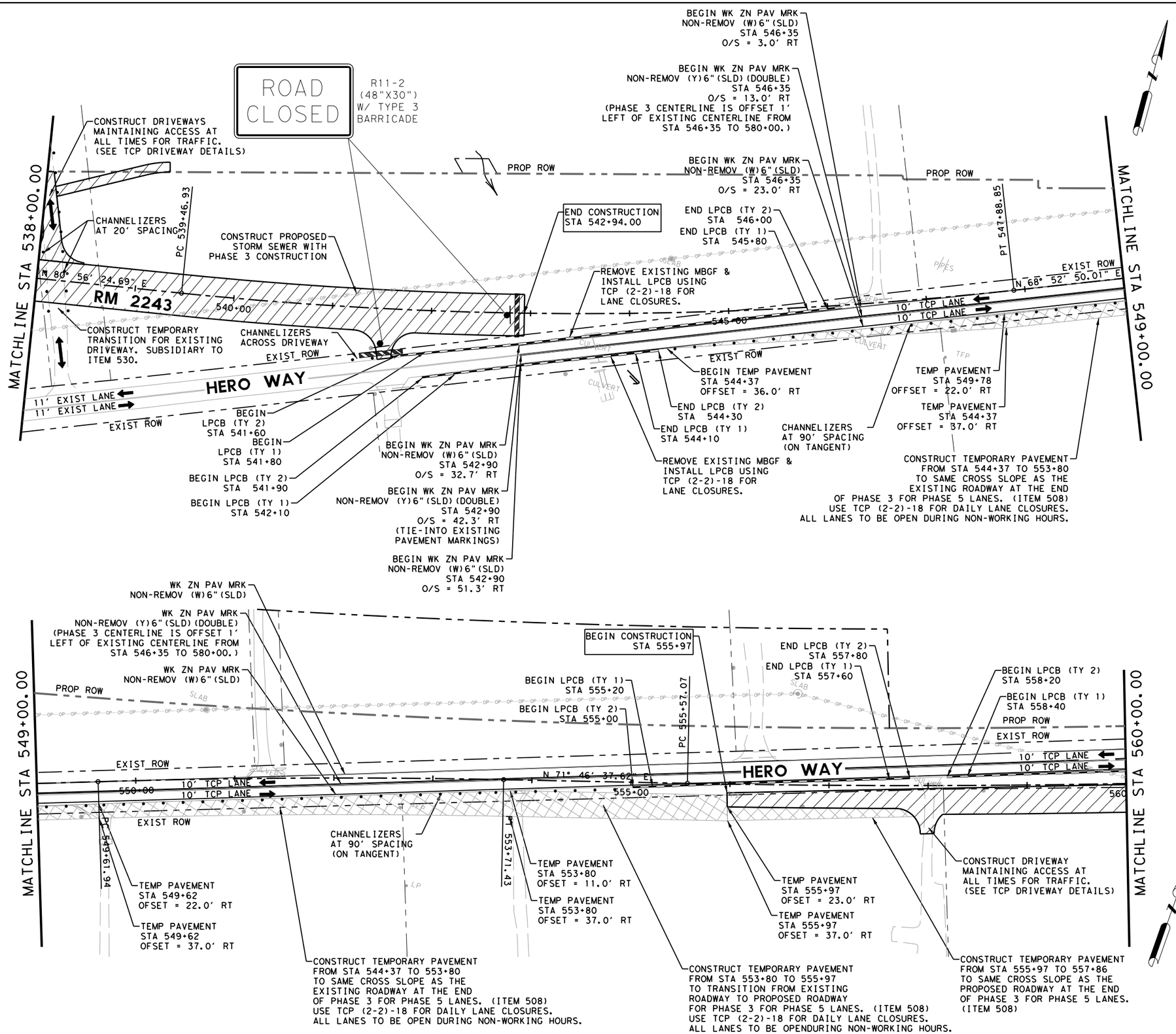

LEGEND

- SIGN
- TYPE 3 BARRICADE
- DIRECTION OF TRAFFIC
- CONSTRUCTION THIS PHASE
- BUILT PREVIOUSLY
- TEMPORARY PAVEMENT
- TEMPORARY PAVEMENT BUILT PREVIOUSLY

NOTES:

1. MAINTAIN ACCESS TO ALL INTERSECTIONS AND DRIVEWAYS AT ALL TIME UNLESS OTHERWISE NOTED.
2. SEE TRAFFIC CONTROL PLAN NARRATIVE.
3. SEE BC, TCP, AND WZ STANDARDS FOR TEMPORARY SIGNING AND PAVEMENT MARKING DETAILS.
4. SEE P&P SHEETS AND INTERSECTION LAYOUTS FOR ADDITIONAL INFORMATION.
5. ALL CHANNELIZING DEVICES AND SIGN PLACEMENT MUST CONFORM TO THE TEXAS MANUAL ON UNIFORM TRAFFIC CONTROL DEVICES (TMUTCD) AND TXDOT STANDARDS.
6. WARNING SIGN PLACEMENT SHALL NOT CONFLICT WITH EXISTING PERMANENT SIGNAGE.
7. EXISTING GROUND MOUNTED SIGNS SHALL BE TEMPORARILY REINSTALLED ON SKIDS WHERE NEEDED FOR TCP.

0 50 100
SCALE: 1"=100' H
1"=10' V

STATE OF TEXAS
JOSHUA T. RICHTER
141234
LICENSED
PROFESSIONAL ENGINEER

4/10/2025

WILCO TEXAS

BGE, Inc.
101 W Louis Henna Blvd, Suite 400, Austin, TX 78728
Tel: 512-879-0400 • www.bgeinc.com
TBPE Registration No. F-1046

RM 2243

TRAFFIC CONTROL PLAN PHASE 3 LAYOUTS

SHEET 3 OF 5

FED.RD. DIV.NO.	PROJECT NO.		SHEET NO.
6			50
STATE	DIST.	COUNTY	
TEXAS	AUS	WILLIAMSON	
CONT.	SECT.	JOB	HIGHWAY NO.
0914	05	222	RM 2243

4/10/2025 1:10:21 PM pdf.pltcfg
G:\TXC\Projects\County\Williamson\7473-02 RM 2243 Phase 1A\03*CADD\01*Shts\02-TCP\RM2243*P1A*TCP3*03.dgn

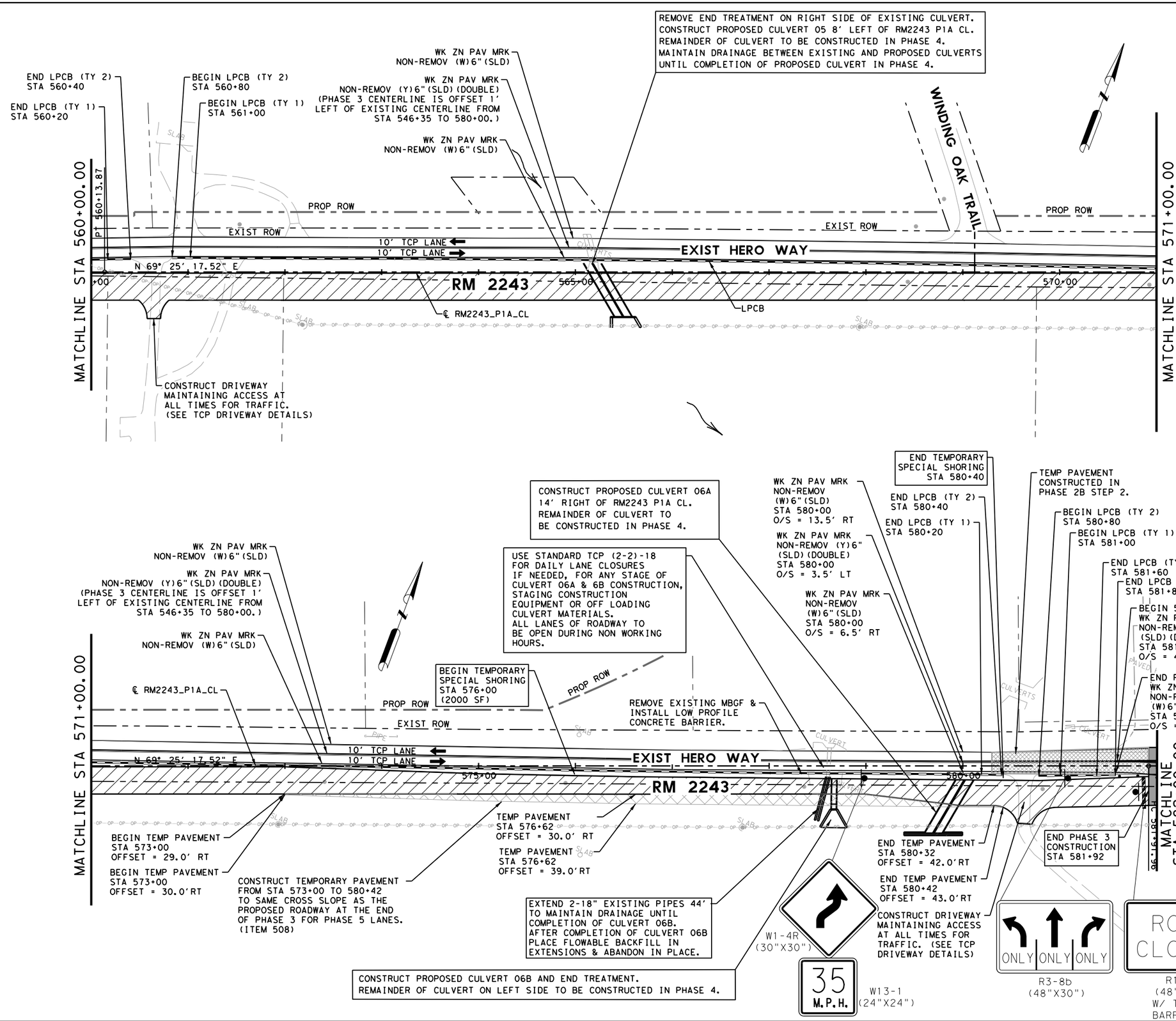

LEGEND

- SIGN
- TYPE 3 BARRICADE
- DIRECTION OF TRAFFIC
- CONSTRUCTION THIS PHASE
- BUILT PREVIOUSLY
- TEMPORARY PAVEMENT
- TEMPORARY PAVEMENT BUILT PREVIOUSLY

NOTES:

1. MAINTAIN ACCESS TO ALL INTERSECTIONS AND DRIVEWAYS AT ALL TIME UNLESS OTHERWISE NOTED.
2. SEE TRAFFIC CONTROL PLAN NARRATIVE.
3. SEE BC, TCP, AND WZ STANDARDS FOR TEMPORARY SIGNING AND PAVEMENT MARKING DETAILS.
4. SEE P&P SHEETS AND INTERSECTION LAYOUTS FOR ADDITIONAL INFORMATION.
5. ALL CHANNELIZING DEVICES AND SIGN PLACEMENT MUST CONFORM TO THE TEXAS MANUAL ON UNIFORM TRAFFIC CONTROL DEVICES (TMUTCD) AND TXDOT STANDARDS.
6. WARNING SIGN PLACEMENT SHALL NOT CONFLICT WITH EXISTING PERMANENT SIGNAGE.
7. EXISTING GROUND MOUNTED SIGNS SHALL BE TEMPORARILY REINSTALLED ON SKIDS WHERE NEEDED FOR TCP.

0 50 100

SCALE: 1"=100'

STATE OF TEXAS
JOSHUA T. RICHTER
141234
LICENSED
PROFESSIONAL ENGINEER

4/10/2025

WILCO TEXAS

BGE, Inc.
101 W Louis Henna Blvd, Suite 400, Austin, TX 78728
Tel: 512-879-0400 ● www.bgeinc.com
TBPE Registration No. F-1046

RM 2243

TRAFFIC CONTROL PLAN PHASE 3 LAYOUTS

SHEET 4 OF 5

FED.RD. DIV.NO.	PROJECT NO.		SHEET NO.
6			51
STATE	DIST.	COUNTY	
TEXAS	AUS	WILLIAMSON	
CONT.	SECT.	JOB	HIGHWAY NO.
0914	05	222	RM 2243

4/10/2025 1:10:22 PM pdf.pltcfg
G:\TXC\Projects\County\Williamson\7473-02 RM 2243 Phase 1A\03-CADD\01-Shts\02-TCP\RM2243-P1A-TCP3-04.dgn

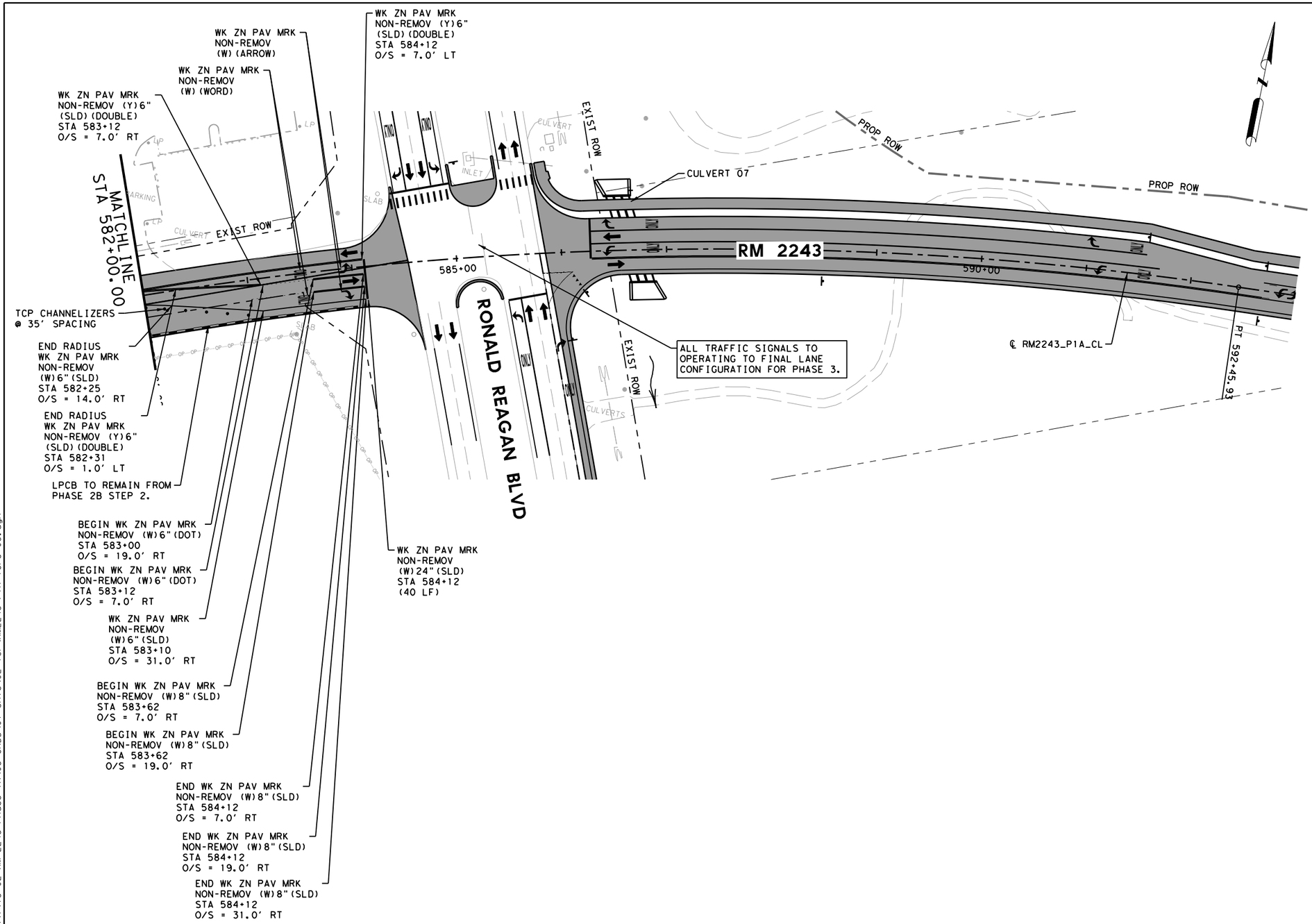

LEGEND

- SIGN
- TYPE 3 BARRICADE
- DIRECTION OF TRAFFIC
- CONSTRUCTION THIS PHASE
- BUILT PREVIOUSLY
- TEMPORARY PAVEMENT
- TEMPORARY PAVEMENT BUILT PREVIOUSLY

NOTES:

1. MAINTAIN ACCESS TO ALL INTERSECTIONS AND DRIVEWAYS AT ALL TIME UNLESS OTHERWISE NOTED.
2. SEE TRAFFIC CONTROL PLAN NARRATIVE.
3. SEE BC, TCP, AND WZ STANDARDS FOR TEMPORARY SIGNING AND PAVEMENT MARKING DETAILS.
4. SEE P&P SHEETS AND INTERSECTION LAYOUTS FOR ADDITIONAL INFORMATION.
5. ALL CHANNELIZING DEVICES AND SIGN PLACEMENT MUST CONFORM TO THE TEXAS MANUAL ON UNIFORM TRAFFIC CONTROL DEVICES (TMUTCD) AND TXDOT STANDARDS.
6. WARNING SIGN PLACEMENT SHALL NOT CONFLICT WITH EXISTING PERMANENT SIGNAGE.
7. EXISTING GROUND MOUNTED SIGNS SHALL BE TEMPORARILY REINSTALLED ON SKIDS WHERE NEEDED FOR TCP.

0 50 100

SCALE: 1"=100'

STATE OF TEXAS
JOSHUA T. RICHTER
141234
LICENSED
PROFESSIONAL ENGINEER

4/10/2025

WILCO TEXAS

BGE, Inc.
101 W Louis Henna Blvd, Suite 400, Austin, TX 78728
Tel: 512-879-0400 • www.bgeinc.com
TBPE Registration No. F-1046

RM 2243

TRAFFIC CONTROL PLAN PHASE 3 LAYOUTS

SHEET 5 OF 5

FED.RD. DIV.NO.	PROJECT NO.		SHEET NO.
6			52
STATE	DIST.	COUNTY	
TEXAS	AUS	WILLIAMSON	
CONT.	SECT.	JOB	HIGHWAY NO.
0914	05	222	RM 2243

4/10/2025 1:10:23 PM pdf.pltcfg
G:\TXC\Projects\County\Williamson\7473-02 RM 2243 Phase 1A\03*CADD\01*Shts\02-TCP\RM2243*P1A*TCP3*05.dgn

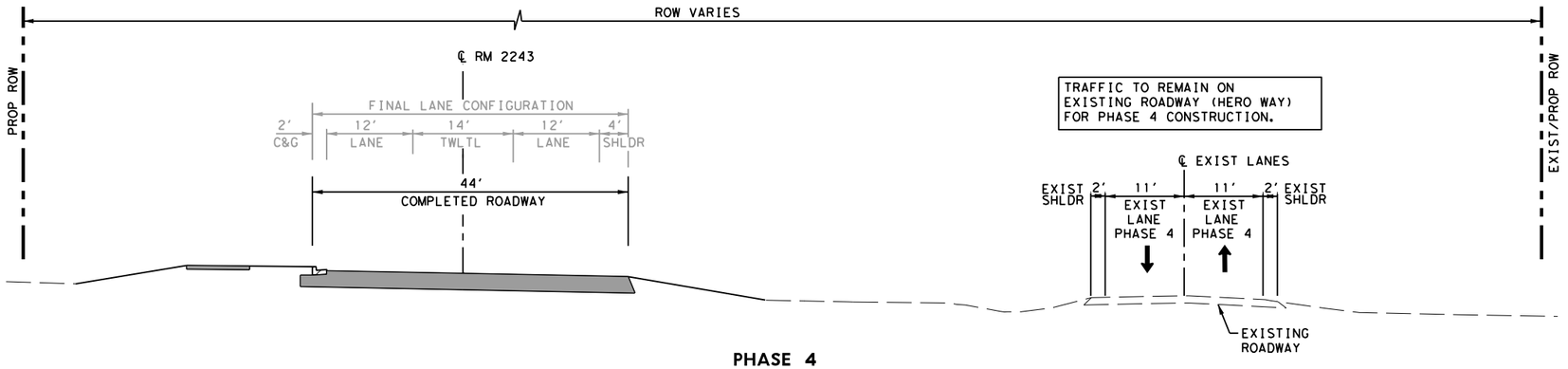

PHASE 4

STA 503+60 TO STA 542+94

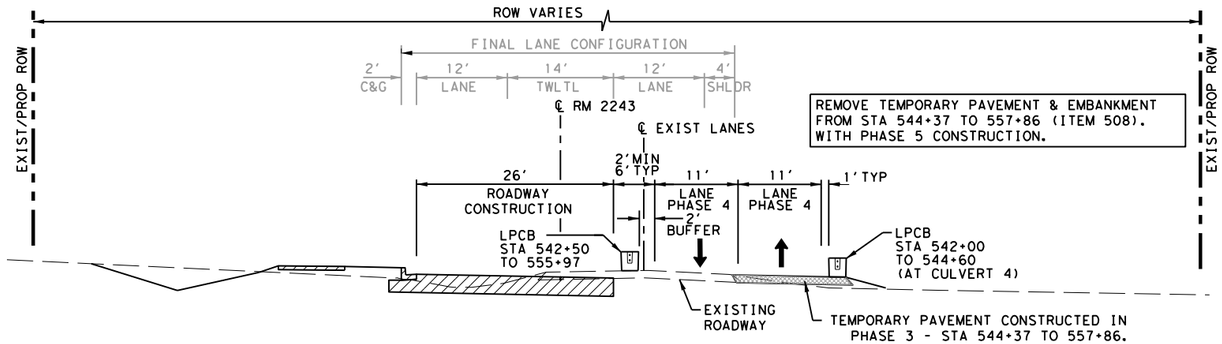

PHASE 4

STA 542+94 TO STA 555+97

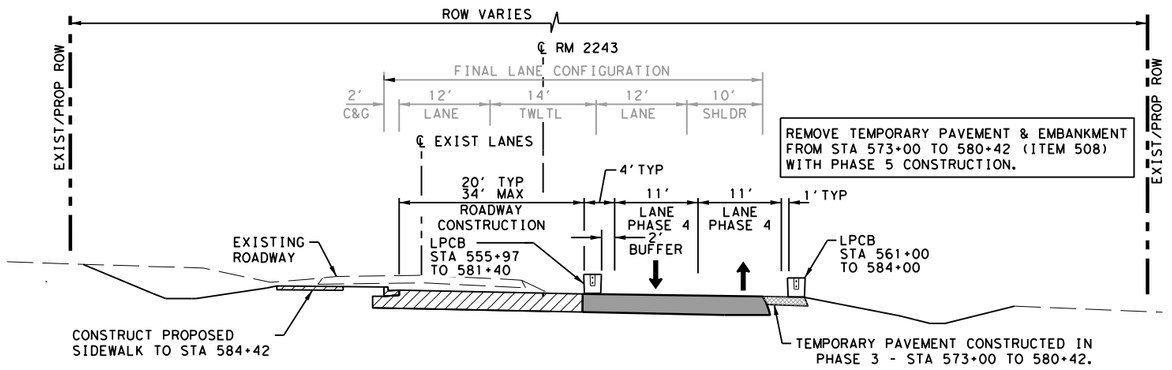

PHASE 4

STA 555+97 TO STA 581+92

LEGEND

- SIGN
- TYPE 3 BARRICADE
- DIRECTION OF TRAFFIC
- CONSTRUCTION THIS PHASE
- BUILT PREVIOUSLY
- TEMPORARY PAVEMENT
- TEMPORARY PAVEMENT BUILT PREVIOUSLY

NOTES:

1. MAINTAIN ACCESS TO ALL INTERSECTIONS AND DRIVEWAYS AT ALL TIME UNLESS OTHERWISE NOTED.
2. SEE TRAFFIC CONTROL PLAN NARRATIVE.
3. SEE BC, TCP, AND WZ STANDARDS FOR TEMPORARY SIGNING AND PAVEMENT MARKING DETAILS.
4. SEE P&P SHEETS AND INTERSECTION LAYOUTS FOR ADDITIONAL INFORMATION.
5. ALL CHANNELIZING DEVICES AND SIGN PLACEMENT MUST CONFORM TO THE TEXAS MANUAL ON UNIFORM TRAFFIC CONTROL DEVICES (TMUTCD) AND TXDOT STANDARDS.
6. WARNING SIGN PLACEMENT SHALL NOT CONFLICT WITH EXISTING PERMANENT SIGNAGE.
7. EXISTING GROUND MOUNTED SIGNS SHALL BE TEMPORARILY REINSTALLED ON SKIDS WHERE NEEDED FOR TCP.

0 10 20
SCALE: 1"=20'

STATE OF TEXAS
JOSHUA T. RICHTER
141234
LICENSED
PROFESSIONAL ENGINEER

4/10/2025

WILCO TEXAS

BGE, Inc.
101 W Louis Henna Blvd, Suite 400, Austin, TX 78728
Tel: 512-879-0400 • www.bgeinc.com
TBPE Registration No. F-1046

RM 2243
TRAFFIC CONTROL PLAN TYPICAL SECTIONS PHASE 4

SHEET 1 OF 1

FED.RD. DIV.NO.	PROJECT NO.		SHEET NO.
6			53
STATE	DIST.	COUNTY	
TEXAS	AUS	WILLIAMSON	
CONT.	SECT.	JOB	HIGHWAY NO.
0914	05	222	RM 2243

4/10/2025 1:10:25 PM pdf.pltcfg
G:\TXC\Projects\County*Williamson\7473-02 RM 2243 Phase 1A\03*CADD\01*Shts\02-TCP\RM2243*P1A*TCP4*TYP*01.dgn

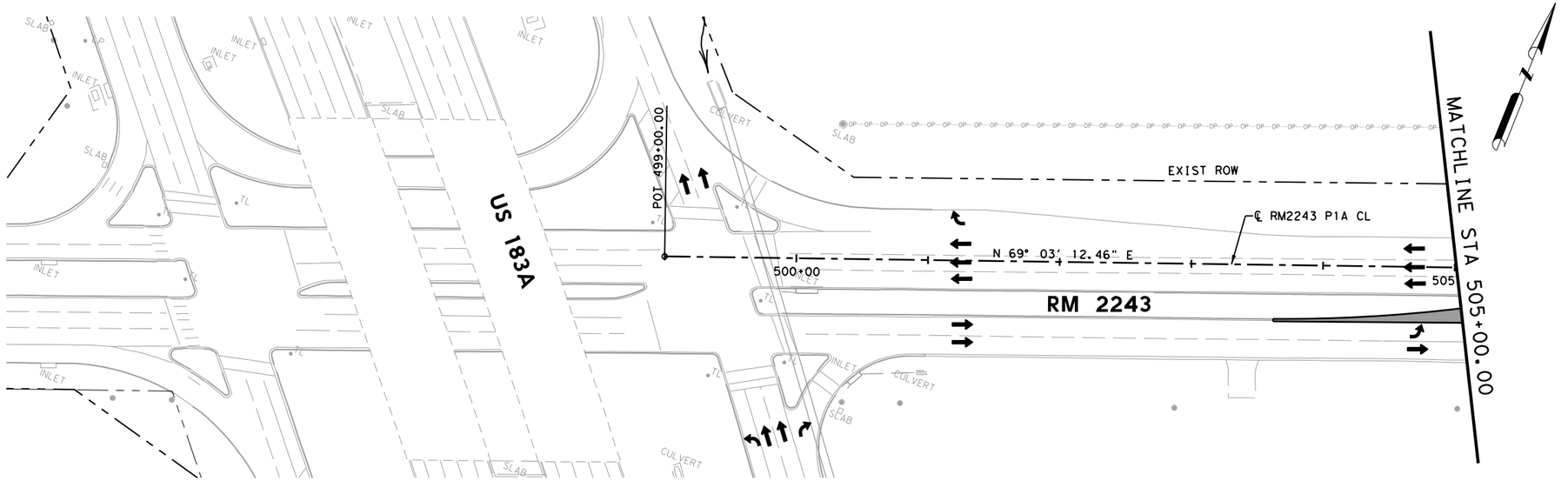

LEGEND

- SIGN
- TYPE 3 BARRICADE
- DIRECTION OF TRAFFIC
- CONSTRUCTION THIS PHASE
- BUILT PREVIOUSLY
- TEMPORARY PAVEMENT
- TEMPORARY PAVEMENT BUILT PREVIOUSLY

NOTES:

1. MAINTAIN ACCESS TO ALL INTERSECTIONS AND DRIVEWAYS AT ALL TIME UNLESS OTHERWISE NOTED.
2. SEE TRAFFIC CONTROL PLAN NARRATIVE.
3. SEE BC, TCP, AND WZ STANDARDS FOR TEMPORARY SIGNING AND PAVEMENT MARKING DETAILS.
4. SEE P&P SHEETS AND INTERSECTION LAYOUTS FOR ADDITIONAL INFORMATION.
5. ALL CHANNELIZING DEVICES AND SIGN PLACEMENT MUST CONFORM TO THE TEXAS MANUAL ON UNIFORM TRAFFIC CONTROL DEVICES (TMUTCD) AND TXDOT STANDARDS.
6. WARNING SIGN PLACEMENT SHALL NOT CONFLICT WITH EXISTING PERMANENT SIGNAGE.
7. EXISTING GROUND MOUNTED SIGNS SHALL BE TEMPORARILY REINSTALLED ON SKIDS WHERE NEEDED FOR TCP.

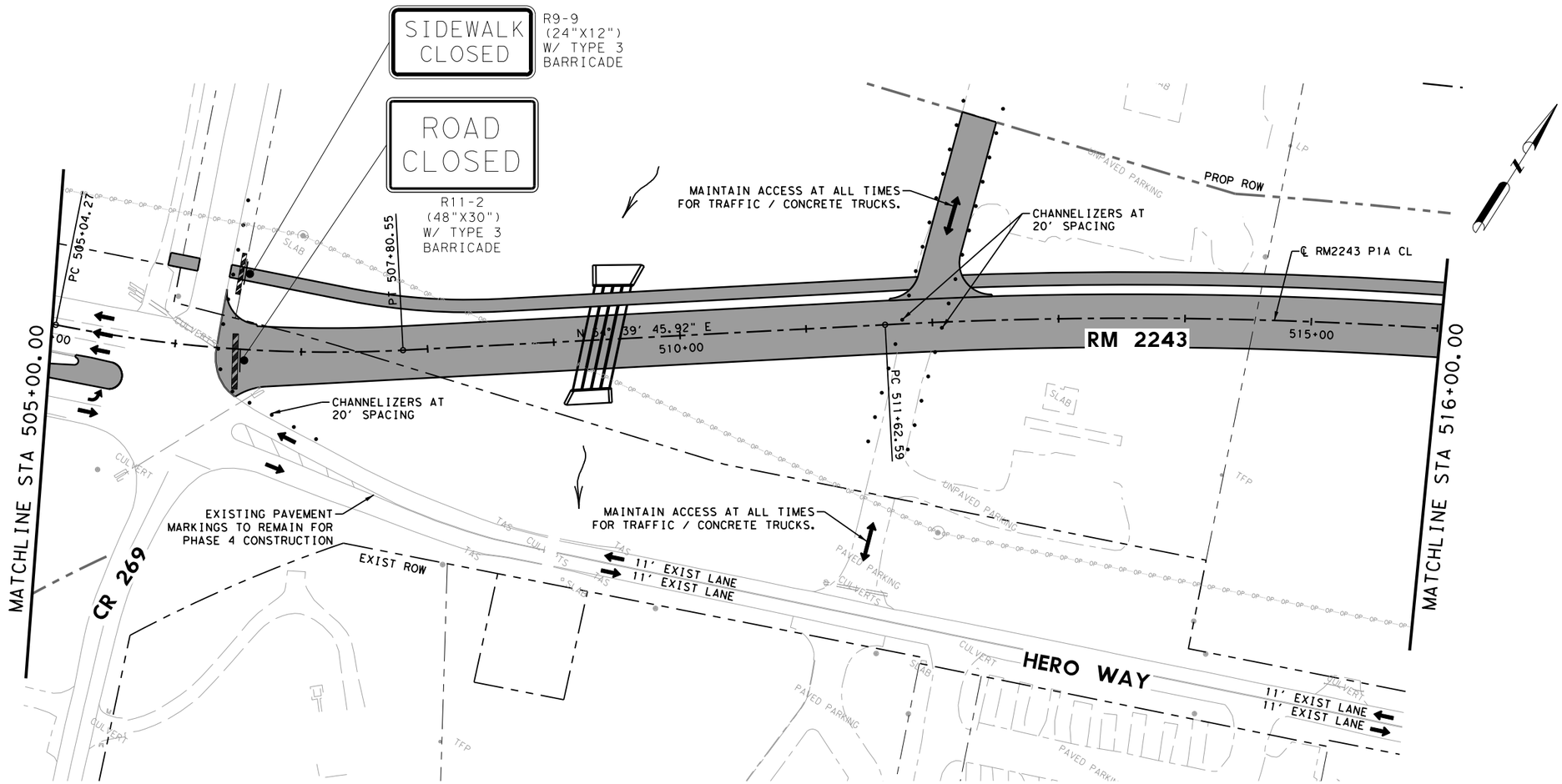

0 50 100
SCALE: 1"=100' H
1"=10' V

4/10/2025

WILCO TEXAS

BGE, Inc.
101 W Louis Henna Blvd, Suite 400, Austin, TX 78728
Tel: 512-879-0400 • www.bgeinc.com
TBPE Registration No. F-1046

RM 2243

TRAFFIC CONTROL PLAN PHASE 4 LAYOUTS

SHEET 1 OF 5

FED.RD. DIV.NO.	PROJECT NO.		SHEET NO.
6			54
STATE	DIST.	COUNTY	
TEXAS	AUS	WILLIAMSON	
CONT.	SECT.	JOB	HIGHWAY NO.
0914	05	222	RM 2243

4/10/2025 1:10:27 PM pdf.pltcfg
G:\TXC\Projects\County\Williamson\7473-02 RM 2243 Phase 1A\03*CADD\01*Shts\02-TCP\RM2243*P1A*TCP4*01.dgn

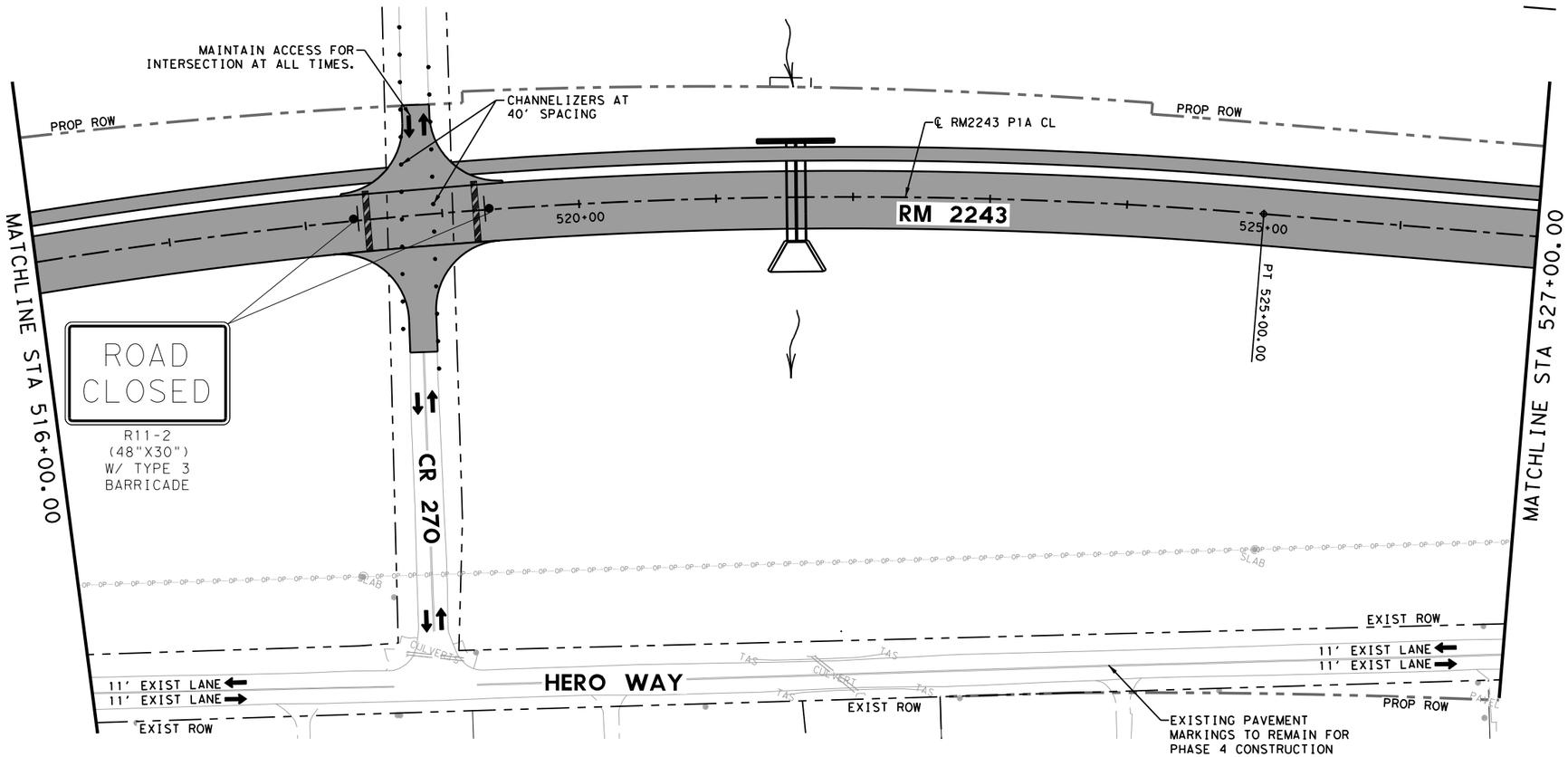

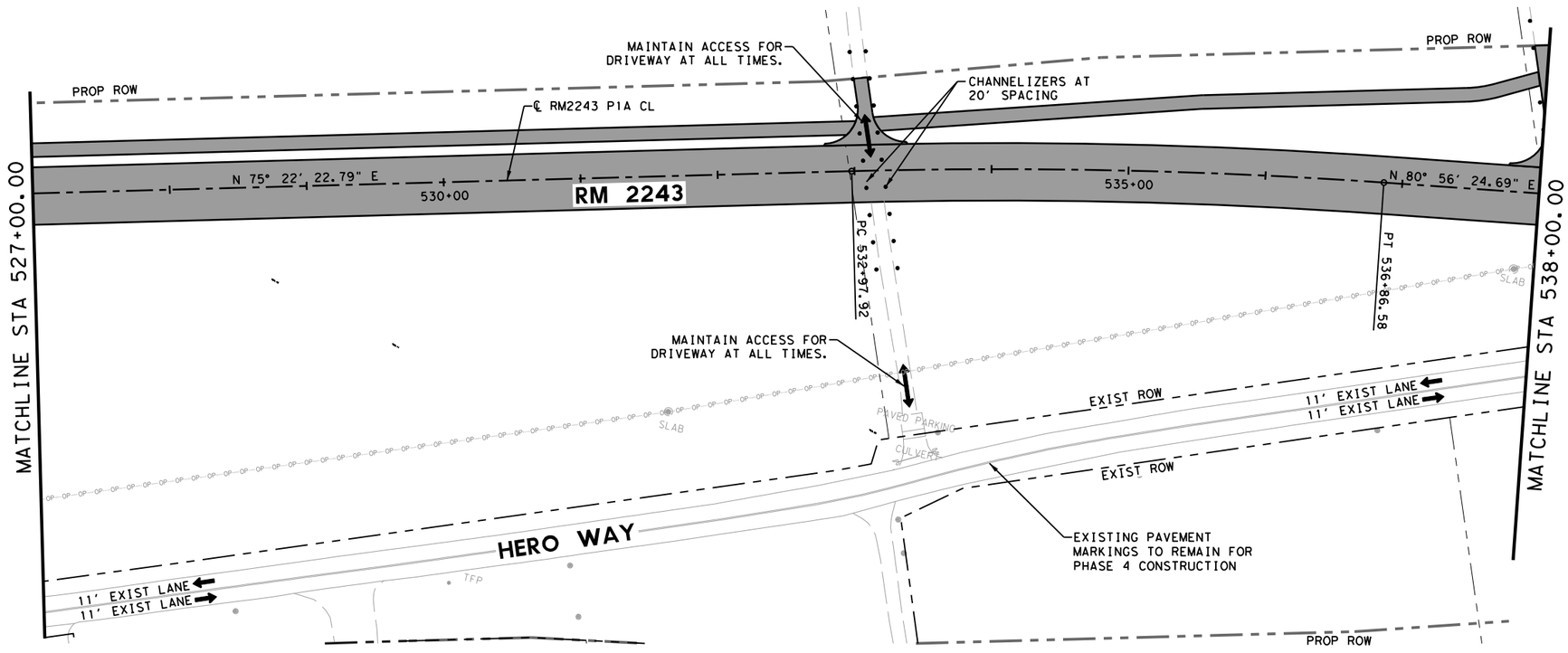

LEGEND

- SIGN
- TYPE 3 BARRICADE
- DIRECTION OF TRAFFIC
- CONSTRUCTION THIS PHASE
- BUILT PREVIOUSLY
- TEMPORARY PAVEMENT
- TEMPORARY PAVEMENT BUILT PREVIOUSLY

NOTES:

1. MAINTAIN ACCESS TO ALL INTERSECTIONS AND DRIVEWAYS AT ALL TIME UNLESS OTHERWISE NOTED.
2. SEE TRAFFIC CONTROL PLAN NARRATIVE.
3. SEE BC, TCP, AND WZ STANDARDS FOR TEMPORARY SIGNING AND PAVEMENT MARKING DETAILS.
4. SEE P&P SHEETS AND INTERSECTION LAYOUTS FOR ADDITIONAL INFORMATION.
5. ALL CHANNELIZING DEVICES AND SIGN PLACEMENT MUST CONFORM TO THE TEXAS MANUAL ON UNIFORM TRAFFIC CONTROL DEVICES (TMUTCD) AND TXDOT STANDARDS.
6. WARNING SIGN PLACEMENT SHALL NOT CONFLICT WITH EXISTING PERMANENT SIGNAGE.
7. EXISTING GROUND MOUNTED SIGNS SHALL BE TEMPORARILY REINSTALLED ON SKIDS WHERE NEEDED FOR TCP.

0 50 100

SCALE: 1"=100' H
1"=10' V

STATE OF TEXAS
JOSHUA T. RICHTER
141234
LICENSED
PROFESSIONAL ENGINEER

4/10/2025

WILCO TEXAS

BGE, Inc.
101 W Louis Henna Blvd, Suite 400, Austin, TX 78728
Tel: 512-879-0400 • www.bgeinc.com
TBPE Registration No. F-1046

RM 2243

TRAFFIC CONTROL PLAN PHASE 4 LAYOUTS

SHEET 2 OF 5

FED.RD. DIV.NO.	PROJECT NO.		SHEET NO.
6			55
STATE	DIST.	COUNTY	
TEXAS	AUS	WILLIAMSON	
CONT.	SECT.	JOB	HIGHWAY NO.
0914	05	222	RM 2243

4/10/2025 1:10:28 PM pdf.pltcfg
C:\TXC\Projects\County\Williamson\7473-02 RM 2243 Phase 1A\03*CADD\01*Shts\02-TCP\RM2243*P1A*TCP4*02.dgn

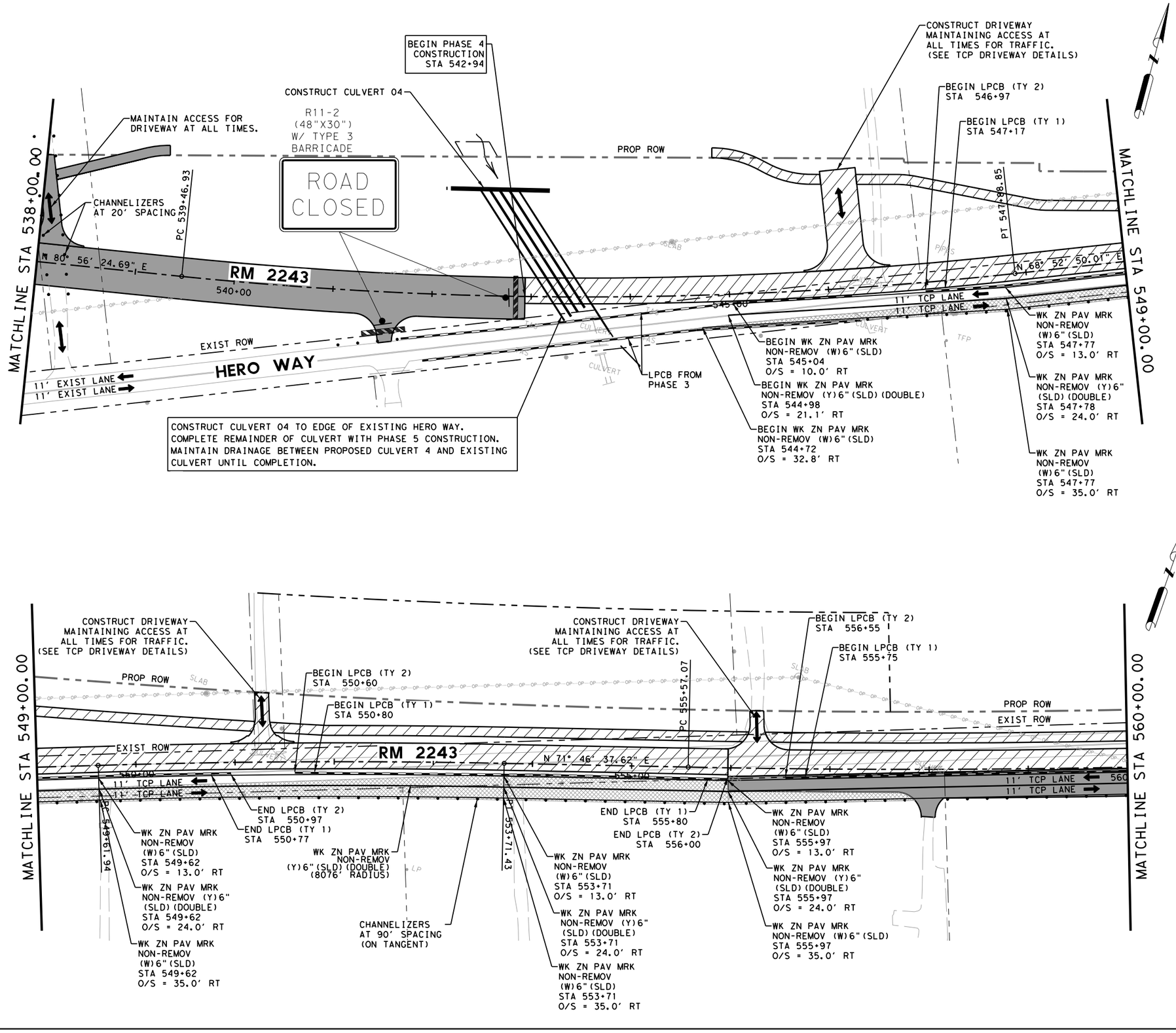

LEGEND

- SIGN
- TYPE 3 BARRICADE
- DIRECTION OF TRAFFIC
- CONSTRUCTION THIS PHASE
- BUILT PREVIOUSLY
- TEMPORARY PAVEMENT
- TEMPORARY PAVEMENT BUILT PREVIOUSLY

NOTES:

1. MAINTAIN ACCESS TO ALL INTERSECTIONS AND DRIVEWAYS AT ALL TIME UNLESS OTHERWISE NOTED.
2. SEE TRAFFIC CONTROL PLAN NARRATIVE.
3. SEE BC, TCP, AND WZ STANDARDS FOR TEMPORARY SIGNING AND PAVEMENT MARKING DETAILS.
4. SEE P&P SHEETS AND INTERSECTION LAYOUTS FOR ADDITIONAL INFORMATION.
5. ALL CHANNELIZING DEVICES AND SIGN PLACEMENT MUST CONFORM TO THE TEXAS MANUAL ON UNIFORM TRAFFIC CONTROL DEVICES (TMUTCD) AND TXDOT STANDARDS.
6. WARNING SIGN PLACEMENT SHALL NOT CONFLICT WITH EXISTING PERMANENT SIGNAGE.
7. EXISTING GROUND MOUNTED SIGNS SHALL BE TEMPORARILY REINSTALLED ON SKIDS WHERE NEEDED FOR TCP.

0 50 100
SCALE: 1"=100' H
1"=10' V

STATE OF TEXAS
JOSHUA T. RICHTER
141234
LICENSED
PROFESSIONAL ENGINEER

4/10/2025

WILCO TEXAS

BGE, Inc.
101 W Louis Henna Blvd, Suite 400, Austin, TX 78728
Tel: 512-879-0400 • www.bgeinc.com
TBPE Registration No. F-1046

RM 2243

TRAFFIC CONTROL PLAN PHASE 4 LAYOUTS

SHEET 3 OF 5

FED.RD. DIV.NO.	PROJECT NO.		SHEET NO.
6			56
STATE	DIST.	COUNTY	
TEXAS	AUS	WILLIAMSON	
CONT.	SECT.	JOB	HIGHWAY NO.
0914	05	222	RM 2243

4/10/2025 1:10:29 PM pdf.pltcfg
G:\TXC\Projects\County\Williamson\7473-02 RM 2243 Phase 1A\03*CADD\01*Shts\02-TCP\RM2243*P1A*TCP4*03.dgn

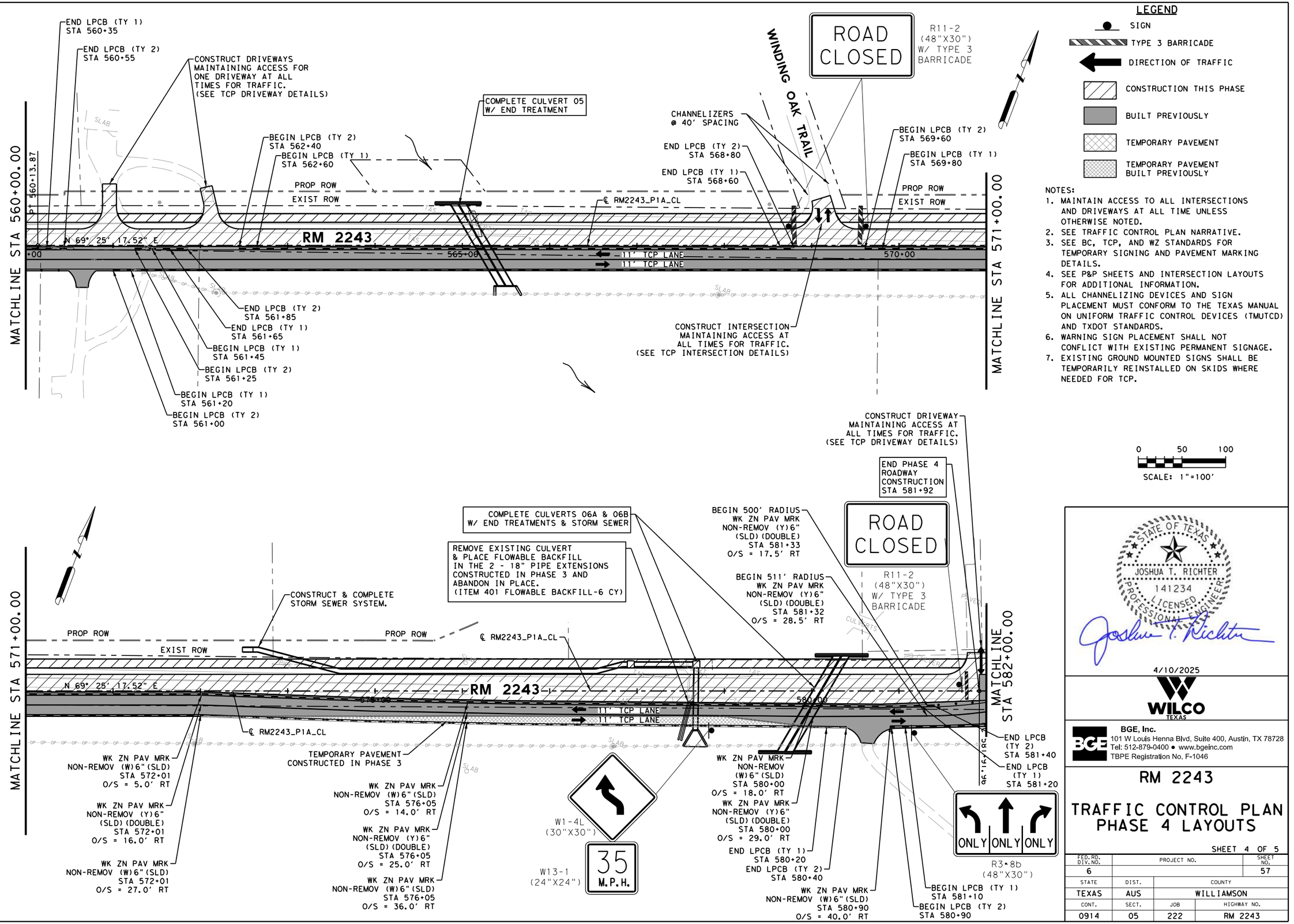

4/10/2025 1:10:30 PM pdf.pltcfg
G:\TXC\Projects\County*Williamson\7473-02 RM 2243 Phase 1A\03*CADD\01*Shts\02-TCP\RM2243*P1A*TCP4*04.dgn

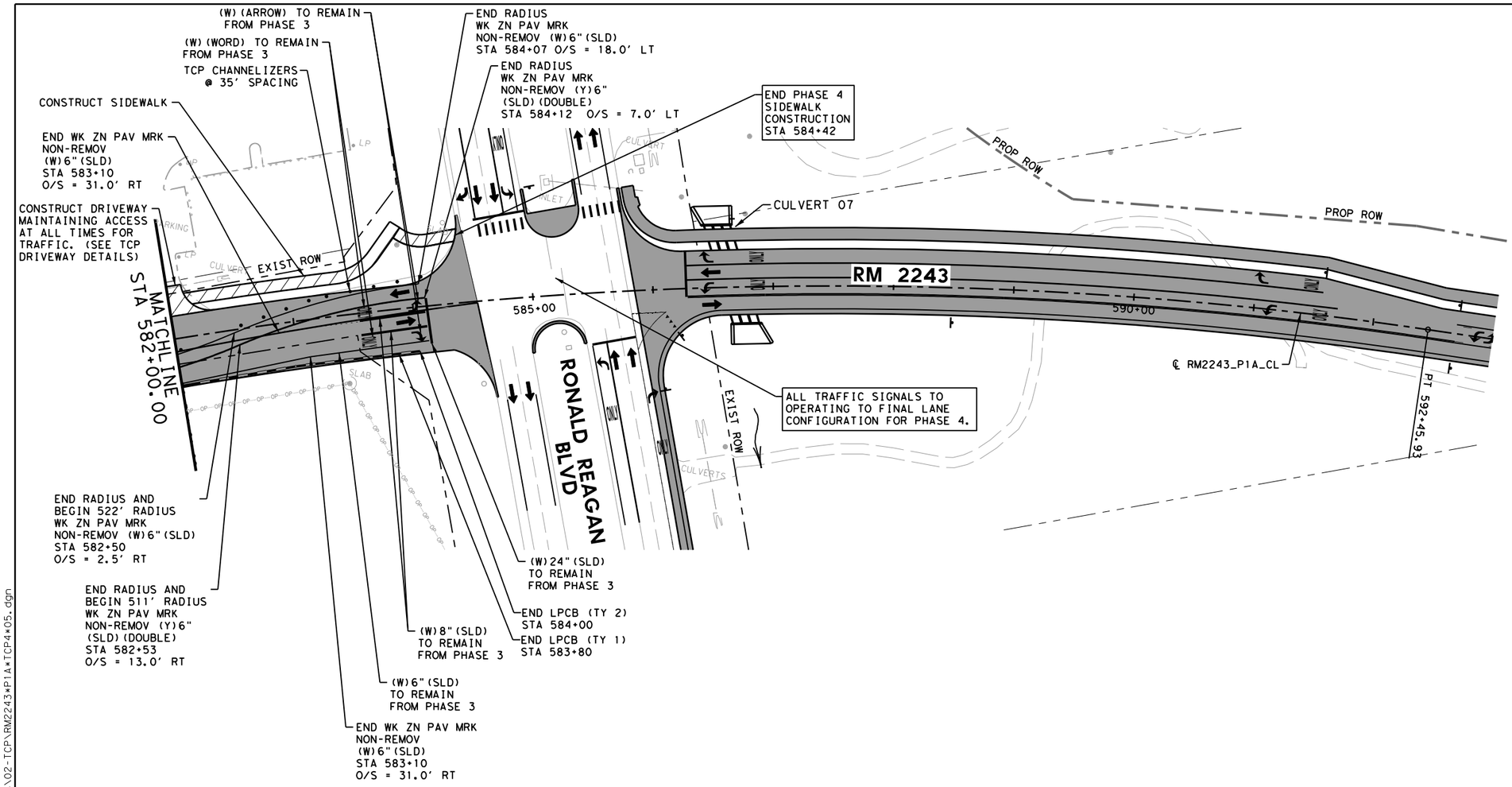

LEGEND

- SIGN
- TYPE 3 BARRICADE
- DIRECTION OF TRAFFIC
- CONSTRUCTION THIS PHASE
- BUILT PREVIOUSLY
- TEMPORARY PAVEMENT
- TEMPORARY PAVEMENT BUILT PREVIOUSLY

NOTES:

1. MAINTAIN ACCESS TO ALL INTERSECTIONS AND DRIVEWAYS AT ALL TIME UNLESS OTHERWISE NOTED.
2. SEE TRAFFIC CONTROL PLAN NARRATIVE.
3. SEE BC, TCP, AND WZ STANDARDS FOR TEMPORARY SIGNING AND PAVEMENT MARKING DETAILS.
4. SEE P&P SHEETS AND INTERSECTION LAYOUTS FOR ADDITIONAL INFORMATION.
5. ALL CHANNELIZING DEVICES AND SIGN PLACEMENT MUST CONFORM TO THE TEXAS MANUAL ON UNIFORM TRAFFIC CONTROL DEVICES (TMUTCD) AND TXDOT STANDARDS.
6. WARNING SIGN PLACEMENT SHALL NOT CONFLICT WITH EXISTING PERMANENT SIGNAGE.
7. EXISTING GROUND MOUNTED SIGNS SHALL BE TEMPORARILY REINSTALLED ON SKIDS WHERE NEEDED FOR TCP.

0 50 100

SCALE: 1"=100'

STATE OF TEXAS
JOSHUA T. RICHTER
141234
LICENSED
PROFESSIONAL ENGINEER

4/10/2025

WILCO TEXAS

BGE, Inc.
101 W Louis Henna Blvd, Suite 400, Austin, TX 78728
Tel: 512-879-0400 • www.bgeinc.com
TBPE Registration No. F-1046

RM 2243

TRAFFIC CONTROL PLAN PHASE 4 LAYOUTS

SHEET 5 OF 5

FED.RD. DIV.NO.	PROJECT NO.		SHEET NO.
6			58
STATE	DIST.	COUNTY	
TEXAS	AUS	WILLIAMSON	
CONT.	SECT.	JOB	HIGHWAY NO.
0914	05	222	RM 2243

4/10/2025 1:10:32 PM pdf.pltcfg
G:\TXC\Projects\County*Williamson\7473-02 RM 2243 Phase 1A\03*CADD\01*Shts\02-TCP\RM2243*P1A*TCP4*05.dgn

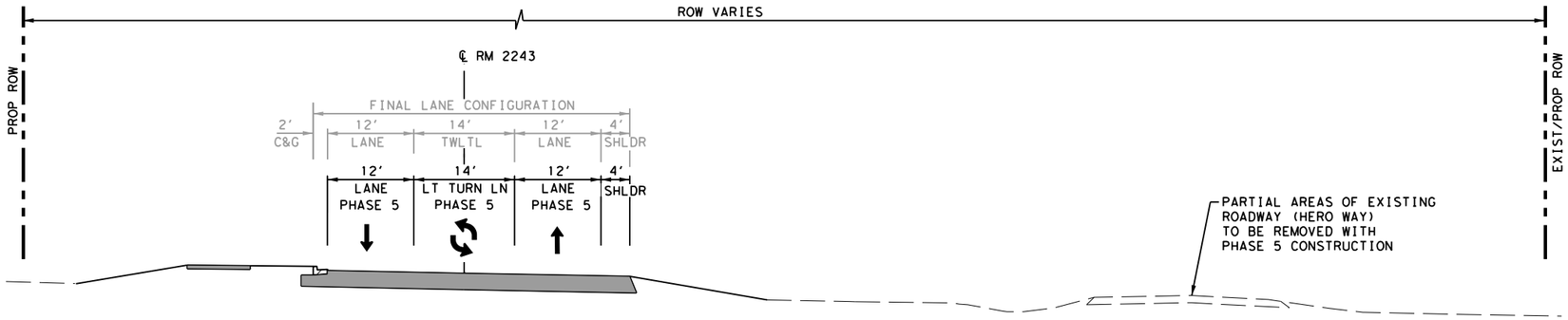

PHASE 5

STA 503+60 TO STA 542+94

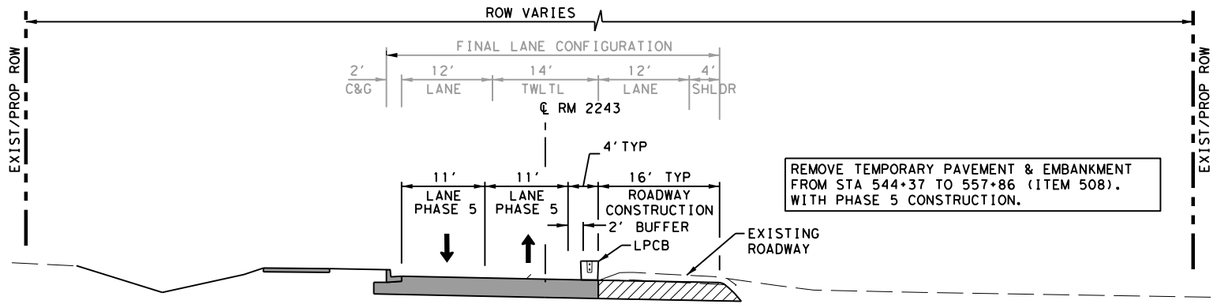

PHASE 5

STA 542+94 TO STA 555+97

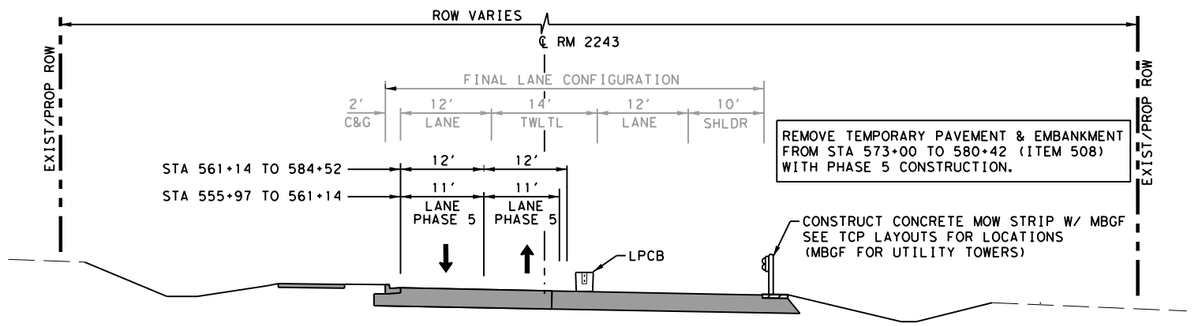

PHASE 5

STA 555+97 TO STA 584+52

LEGEND

- SIGN
- TYPE 3 BARRICADE
- DIRECTION OF TRAFFIC
- CONSTRUCTION THIS PHASE
- BUILT PREVIOUSLY
- TEMPORARY PAVEMENT
- TEMPORARY PAVEMENT BUILT PREVIOUSLY

NOTES:

1. MAINTAIN ACCESS TO ALL INTERSECTIONS AND DRIVEWAYS AT ALL TIME UNLESS OTHERWISE NOTED.
2. SEE TRAFFIC CONTROL PLAN NARRATIVE.
3. SEE BC, TCP, AND WZ STANDARDS FOR TEMPORARY SIGNING AND PAVEMENT MARKING DETAILS.
4. SEE P&P SHEETS AND INTERSECTION LAYOUTS FOR ADDITIONAL INFORMATION.
5. ALL CHANNELIZING DEVICES AND SIGN PLACEMENT MUST CONFORM TO THE TEXAS MANUAL ON UNIFORM TRAFFIC CONTROL DEVICES (TMUTCD) AND TXDOT STANDARDS.
6. WARNING SIGN PLACEMENT SHALL NOT CONFLICT WITH EXISTING PERMANENT SIGNAGE.
7. EXISTING GROUND MOUNTED SIGNS SHALL BE TEMPORARILY REINSTALLED ON SKIDS WHERE NEEDED FOR TCP.

0 10 20

SCALE: 1"=20'

STATE OF TEXAS
JOSHUA T. RICHTER
141234
LICENSED
PROFESSIONAL ENGINEER

4/10/2025

WILCO TEXAS

BGE, Inc.
101 W Louis Henna Blvd, Suite 400, Austin, TX 78728
Tel: 512-879-0400 • www.bgeinc.com
TBPE Registration No. F-1046

RM 2243
TRAFFIC CONTROL PLAN TYPICAL SECTIONS PHASE 5

SHEET 1 OF 1

FED.RD. DIV.NO.	PROJECT NO.		SHEET NO.
6			59
STATE	DIST.	COUNTY	
TEXAS	AUS	WILLIAMSON	
CONT.	SECT.	JOB	HIGHWAY NO.
0914	05	222	RM 2243

4/10/2025 1:10:34 PM pdf.pltcfg
G:\TXC\Projects\County*Williamson\7473-02 RM 2243 Phase 1A\03*CADD\01*Shts\02-TCP\RM2243*P1A*TCP5*TYP*01.dgn

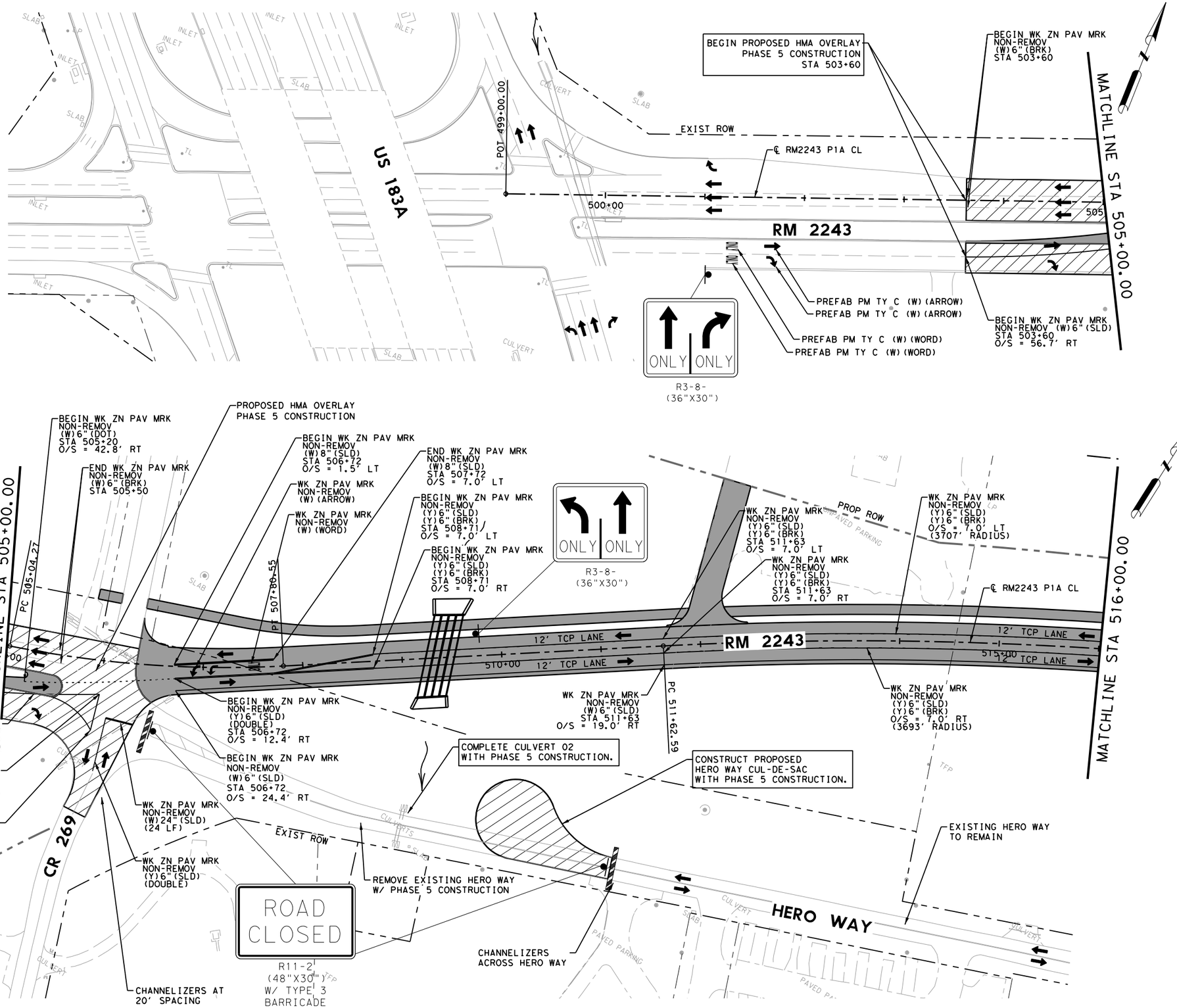

LEGEND

- SIGN
- TYPE 3 BARRICADE
- DIRECTION OF TRAFFIC
- CONSTRUCTION THIS PHASE
- BUILT PREVIOUSLY
- TEMPORARY PAVEMENT
- TEMPORARY PAVEMENT BUILT PREVIOUSLY

NOTES:

1. MAINTAIN ACCESS TO ALL INTERSECTIONS AND DRIVEWAYS AT ALL TIME UNLESS OTHERWISE NOTED.
2. SEE TRAFFIC CONTROL PLAN NARRATIVE.
3. SEE BC, TCP, AND WZ STANDARDS FOR TEMPORARY SIGNING AND PAVEMENT MARKING DETAILS.
4. SEE P&P SHEETS AND INTERSECTION LAYOUTS FOR ADDITIONAL INFORMATION.
5. ALL CHANNELIZING DEVICES AND SIGN PLACEMENT MUST CONFORM TO THE TEXAS MANUAL ON UNIFORM TRAFFIC CONTROL DEVICES (TMUTCD) AND TXDOT STANDARDS.
6. WARNING SIGN PLACEMENT SHALL NOT CONFLICT WITH EXISTING PERMANENT SIGNAGE.
7. EXISTING GROUND MOUNTED SIGNS SHALL BE TEMPORARILY REINSTALLED ON SKIDS WHERE NEEDED FOR TCP.

0 50 100
SCALE: 1"=100' H
1"=10' V

STATE OF TEXAS
JOSHUA T. RICHTER
141234
LICENSED
PROFESSIONAL ENGINEER

4/10/2025

WILCO
TEXAS

BGE, Inc.
101 W Louis Henna Blvd, Suite 400, Austin, TX 78728
Tel: 512-879-0400 • www.bgeinc.com
TBPE Registration No. F-1046

RM 2243

TRAFFIC CONTROL PLAN PHASE 5 LAYOUTS

SHEET 1 OF 5

FED.RD. DIV.NO.	PROJECT NO.		SHEET NO.
6			60
STATE	DIST.	COUNTY	
TEXAS	AUS	WILLIAMSON	
CONT.	SECT.	JOB	HIGHWAY NO.
0914	05	222	RM 2243

4/10/2025 1:10:38 PM pdf.pltcfg
G:\TXC\Projects\County\Williamson\7473-02 RM 2243 Phase 1A\03-CADD\01-Shts\02-TCP\RM2243-P1A-TCP5-01.dgn

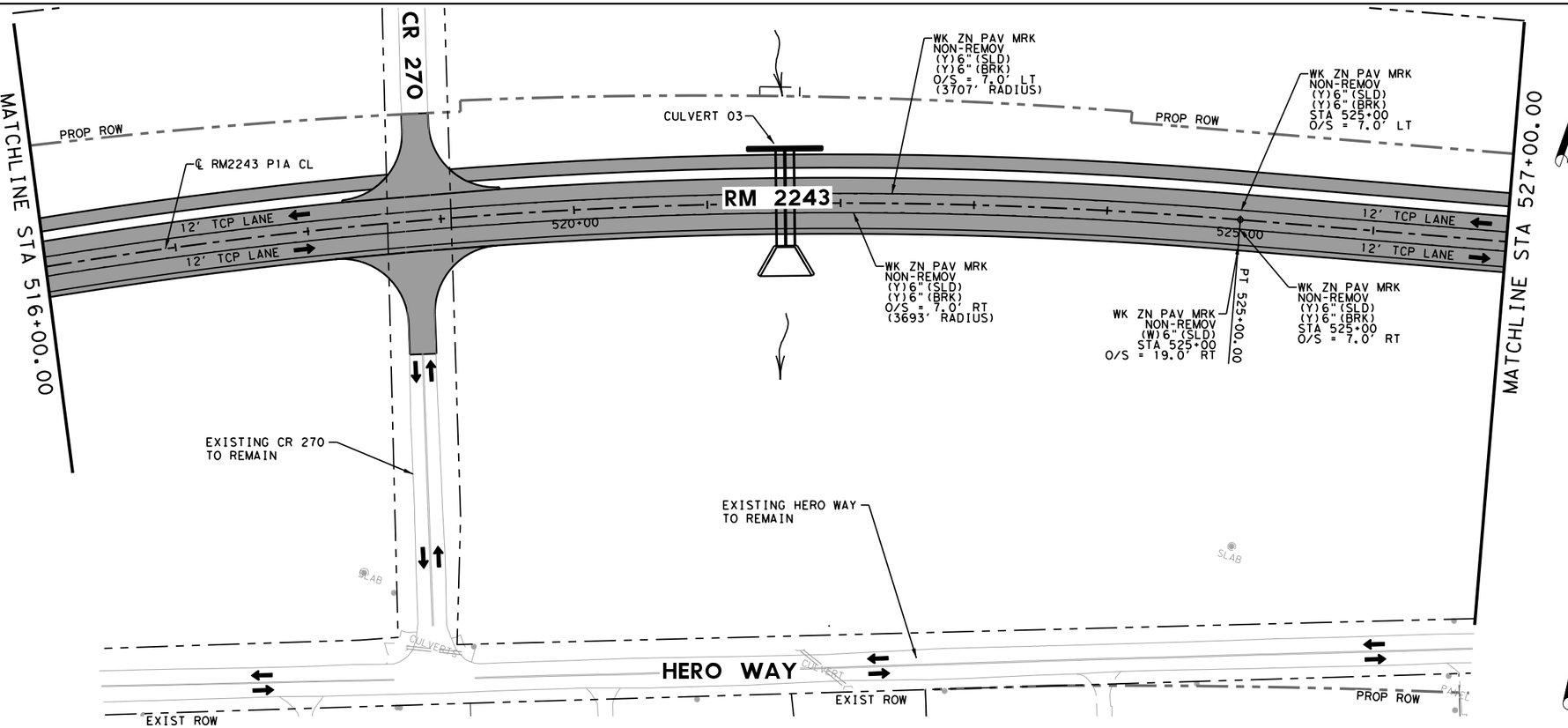

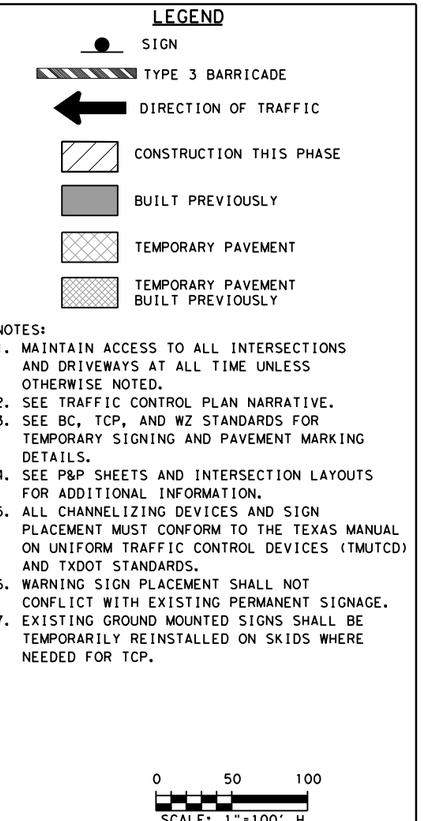

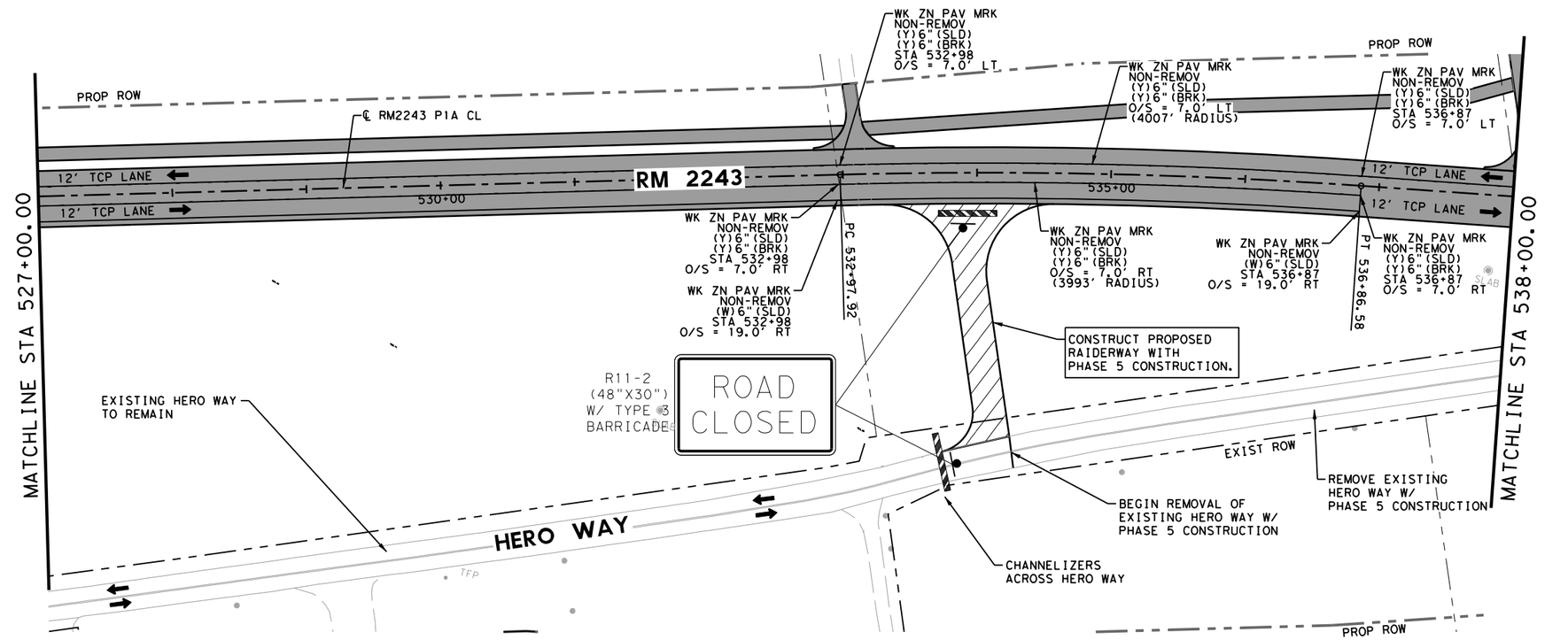

4/10/2025

WILCO TEXAS

BGE, Inc.
101 W Louis Henna Blvd, Suite 400, Austin, TX 78728
Tel: 512-879-0400 • www.bgeinc.com
TBPE Registration No. F-1046

RM 2243

TRAFFIC CONTROL PLAN PHASE 5 LAYOUTS

SHEET 2 OF 5

FED.RD. DIV.NO.	PROJECT NO.		SHEET NO.
6			61
STATE	DIST.	COUNTY	
TEXAS	AUS	WILLIAMSON	
CONT.	SECT.	JOB	HIGHWAY NO.
0914	05	222	RM 2243

4/10/2025 1:10:41 PM pdf.pltcfg
G:\TXC\Projects\County\Williamson\7473-02 RM 2243 Phase 1A\03*CADD\01*Shts\02-TCP\RM2243*P1A*TCP5*02.dgn

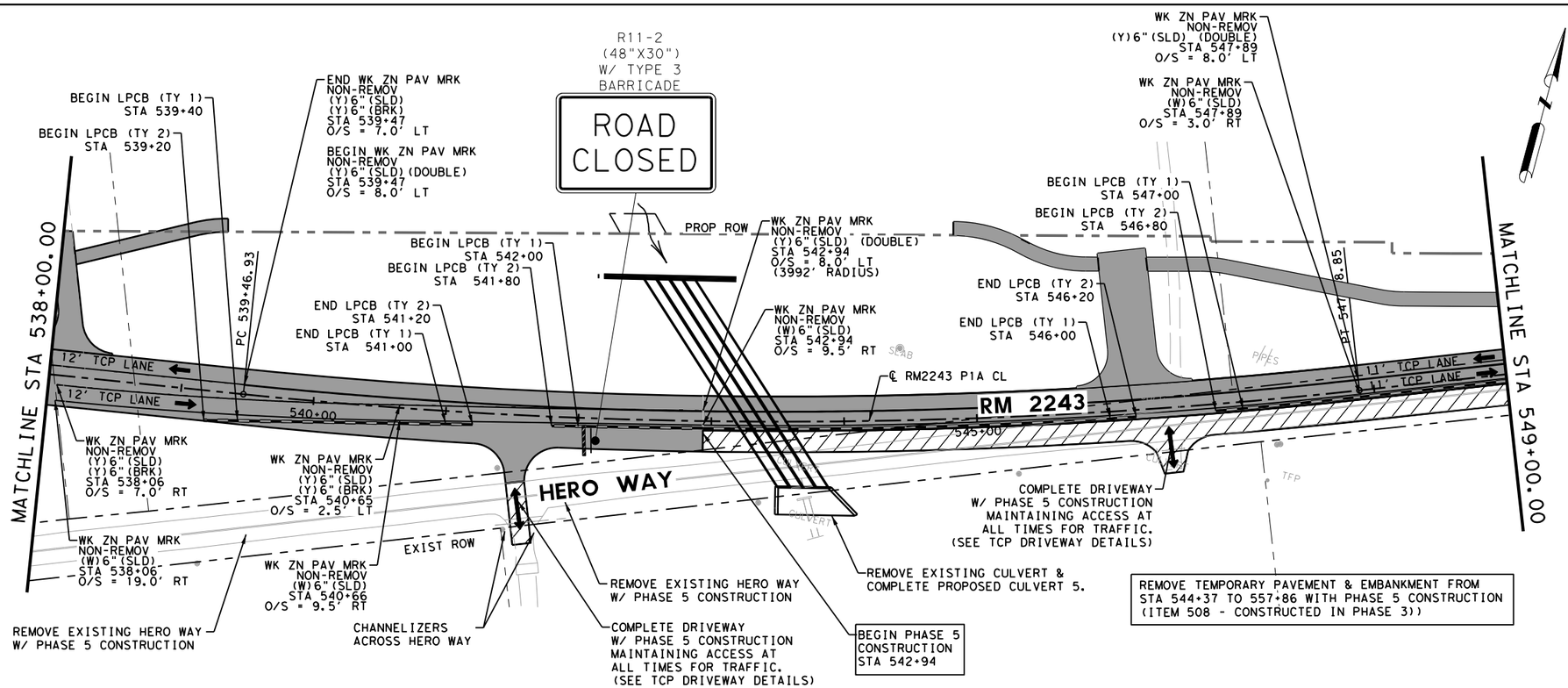

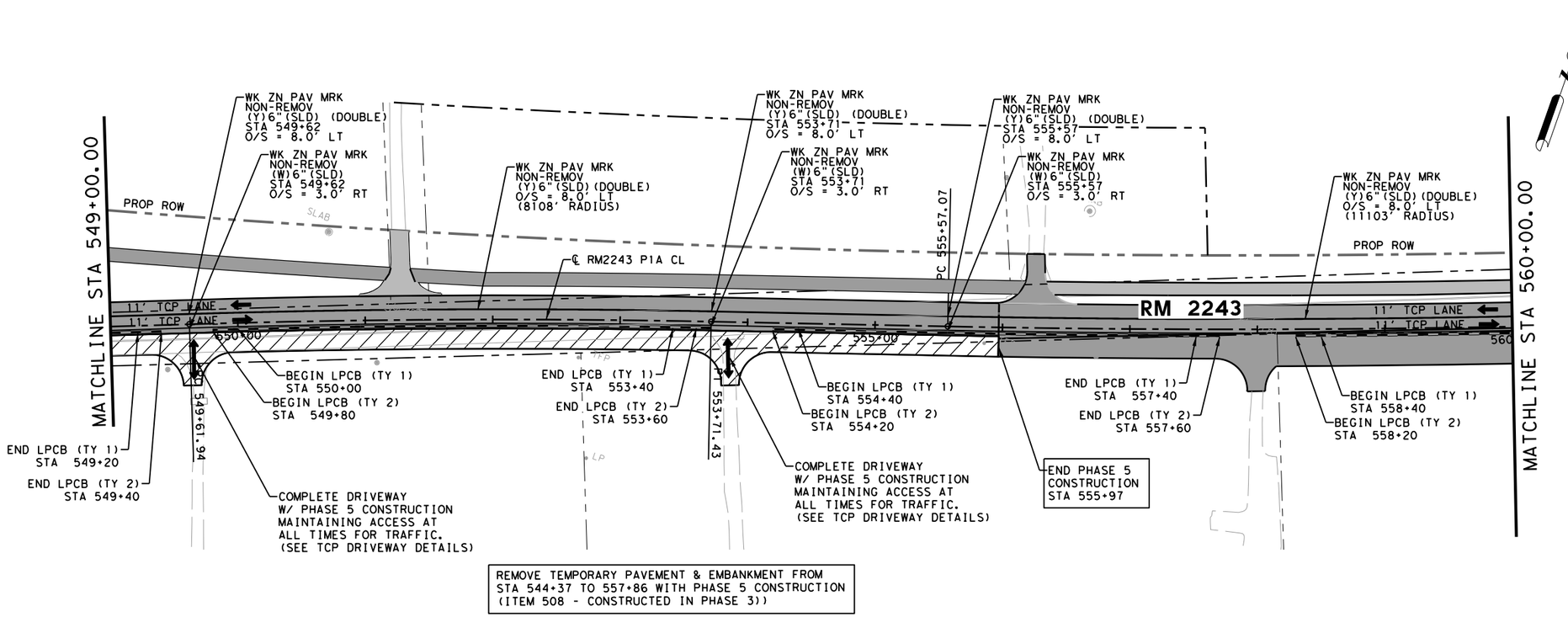

STATE OF TEXAS
JOSHUA T. RICHTER
141234
LICENSED
PROFESSIONAL ENGINEER
4/10/2025

WILCO
TEXAS

BGE, Inc.
101 W Louis Henna Blvd, Suite 400, Austin, TX 78728
Tel: 512-879-0400 ● www.bgeinc.com
TBPE Registration No. F-1046

RM 2243

TRAFFIC CONTROL PLAN PHASE 5 LAYOUTS

SHEET 3 OF 5

FED.RD. DIV.NO.	PROJECT NO.		SHEET NO.
6			62
STATE	DIST.	COUNTY	
TEXAS	AUS	WILLIAMSON	
CONT.	SECT.	JOB	HIGHWAY NO.
0914	05	222	RM 2243

4/10/2025 1:10:43 PM pdf.pltcfg
G:\TXC\Projects\County\Williamson\7473-02 RM 2243 Phase 1A\03*CADD\01*Shts\02-TCP\RM2243*P1A*TCP5*03.dgn

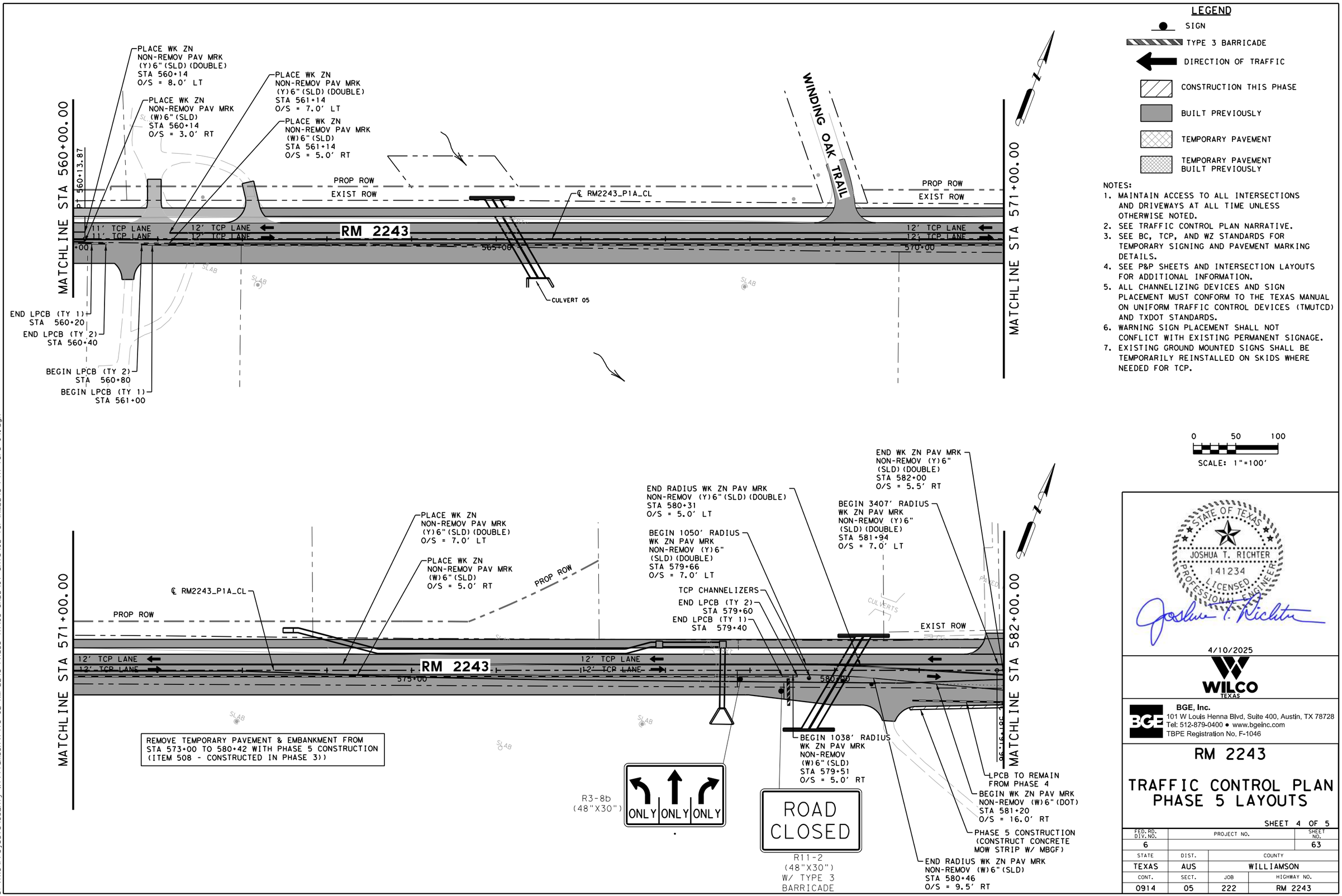

STATE OF TEXAS
JOSHUA T. RICHTER
141234
LICENSED
PROFESSIONAL ENGINEER

4/10/2025

WILCO TEXAS

BGE, Inc.
101 W Louis Henna Blvd, Suite 400, Austin, TX 78728
Tel: 512-879-0400 ● www.bgeinc.com
TBPE Registration No. F-1046

RM 2243

TRAFFIC CONTROL PLAN PHASE 5 LAYOUTS

SHEET 4 OF 5

FED.RD. DIV.NO.	PROJECT NO.		SHEET NO.
6			63
STATE	DIST.	COUNTY	
TEXAS	AUS	WILLIAMSON	
CONT.	SECT.	JOB	HIGHWAY NO.
0914	05	222	RM 2243

4/10/2025 1:10:44 PM pdf.pltcfg
G:\TXC\Projects\County\Williamson\7473-02 RM 2243 Phase 1A\03*CADD\01*Shts\02-TCP\RM2243*P1A*TCP5*04.dgn

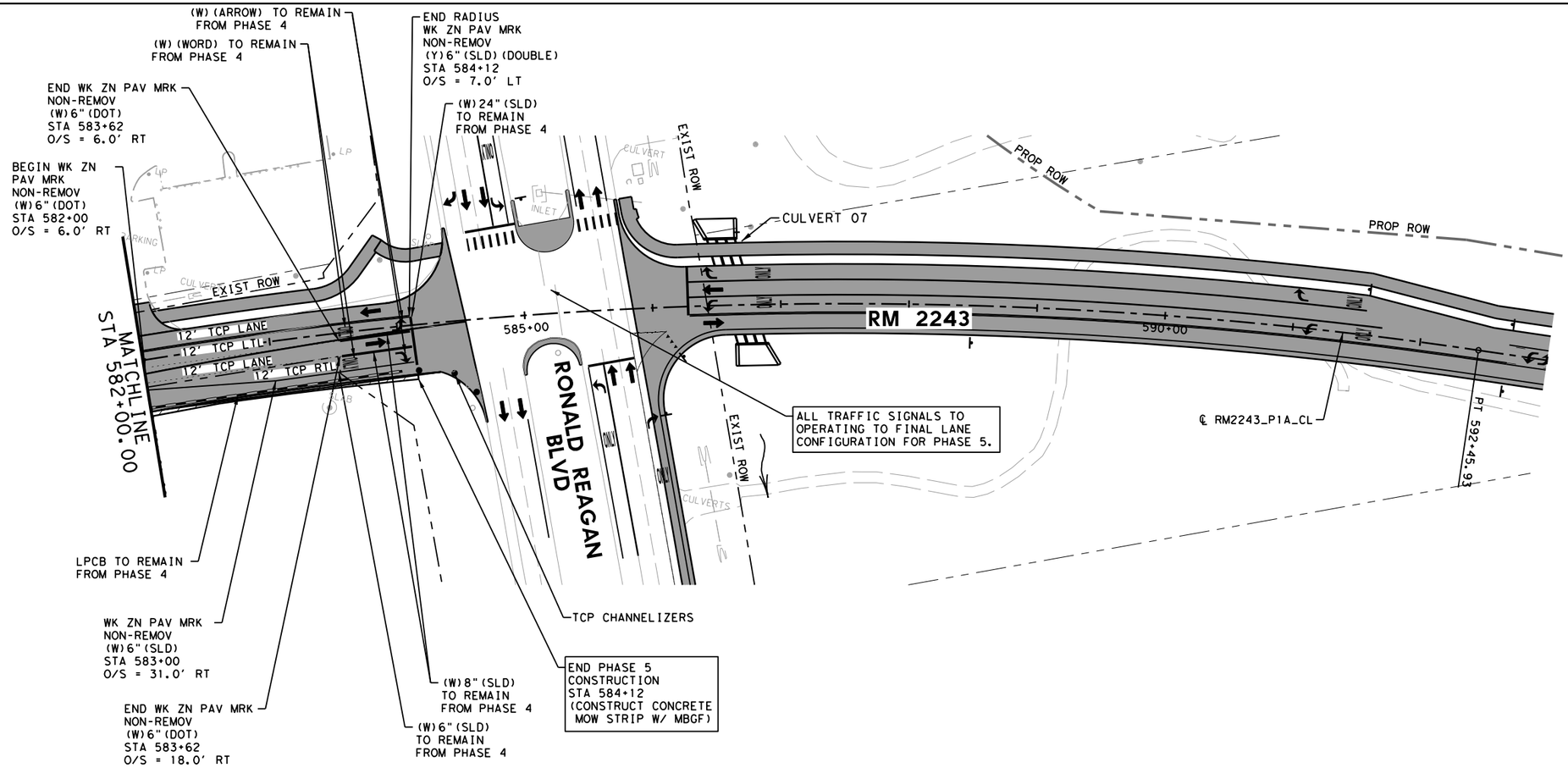

LEGEND

- SIGN
- TYPE 3 BARRICADE
- DIRECTION OF TRAFFIC
- CONSTRUCTION THIS PHASE
- BUILT PREVIOUSLY
- TEMPORARY PAVEMENT
- TEMPORARY PAVEMENT BUILT PREVIOUSLY

NOTES:

1. MAINTAIN ACCESS TO ALL INTERSECTIONS AND DRIVEWAYS AT ALL TIME UNLESS OTHERWISE NOTED.
2. SEE TRAFFIC CONTROL PLAN NARRATIVE.
3. SEE BC, TCP, AND WZ STANDARDS FOR TEMPORARY SIGNING AND PAVEMENT MARKING DETAILS.
4. SEE P&P SHEETS AND INTERSECTION LAYOUTS FOR ADDITIONAL INFORMATION.
5. ALL CHANNELIZING DEVICES AND SIGN PLACEMENT MUST CONFORM TO THE TEXAS MANUAL ON UNIFORM TRAFFIC CONTROL DEVICES (TMUTCD) AND TXDOT STANDARDS.
6. WARNING SIGN PLACEMENT SHALL NOT CONFLICT WITH EXISTING PERMANENT SIGNAGE.
7. EXISTING GROUND MOUNTED SIGNS SHALL BE TEMPORARILY REINSTALLED ON SKIDS WHERE NEEDED FOR TCP.

0 50 100

SCALE: 1"=100'

STATE OF TEXAS
JOSHUA T. RICHTER
141234
LICENSED
PROFESSIONAL ENGINEER

4/10/2025

WILCO TEXAS

BGE, Inc.
101 W Louis Henna Blvd, Suite 400, Austin, TX 78728
Tel: 512-879-0400 • www.bgeinc.com
TBPE Registration No. F-1046

RM 2243

TRAFFIC CONTROL PLAN PHASE 5 LAYOUTS

SHEET 5 OF 5

FED.RD. DIV.NO.	PROJECT NO.		SHEET NO.
6			64
STATE	DIST.	COUNTY	
TEXAS	AUS	WILLIAMSON	
CONT.	SECT.	JOB	HIGHWAY NO.
0914	05	222	RM 2243

4/10/2025 1:10:45 PM pdf.pltcfg
G:\TXC\Projects\County\Williamson\7473-02 RM 2243 Phase 1A\03*CADD\01*Shts\02-TCP\RM2243*P1A*TCP5*05.dgn

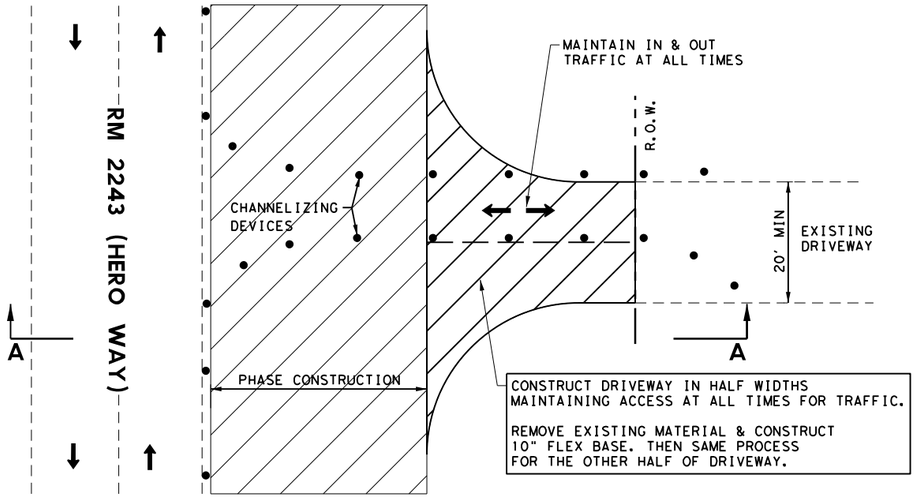

STEP 1 - DRIVEWAY (ACP)
PLAN VIEW
(DRIVEWAYS OVER 20' WIDTH)

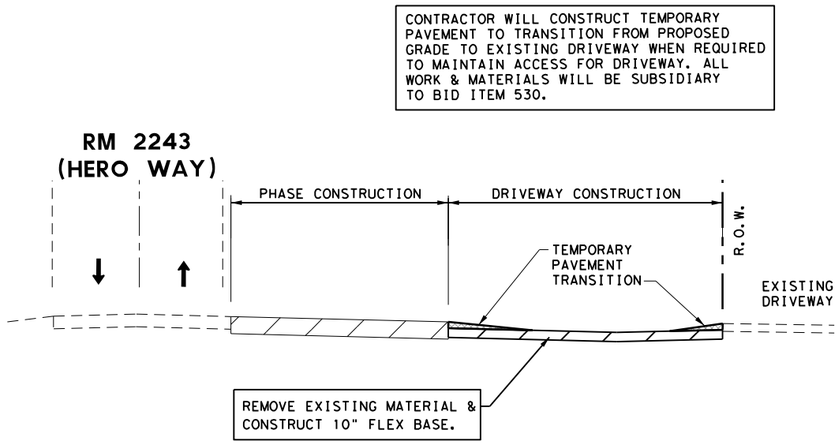

STEP 1 - DRIVEWAY (ACP)
SECTION A-A
(DRIVEWAYS OVER 20' WIDTH)

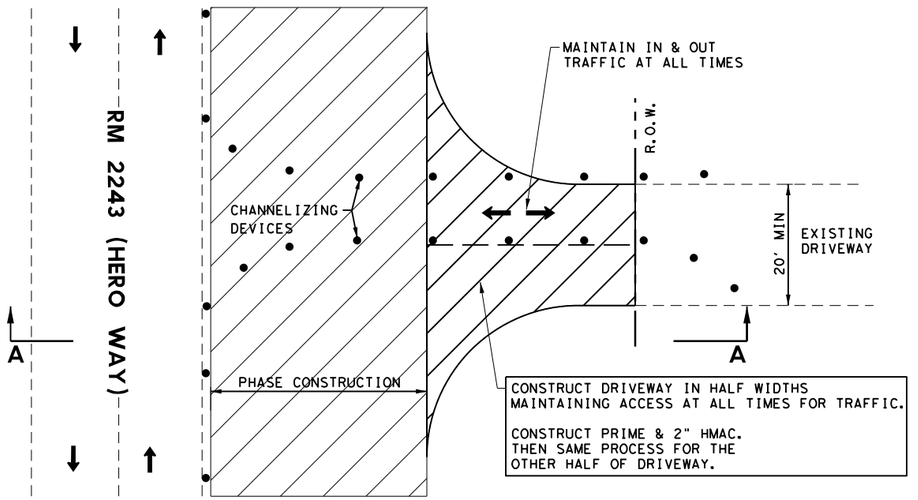

STEP 2 - DRIVEWAY (ACP)
PLAN VIEW
(DRIVEWAYS OVER 20' WIDTH)

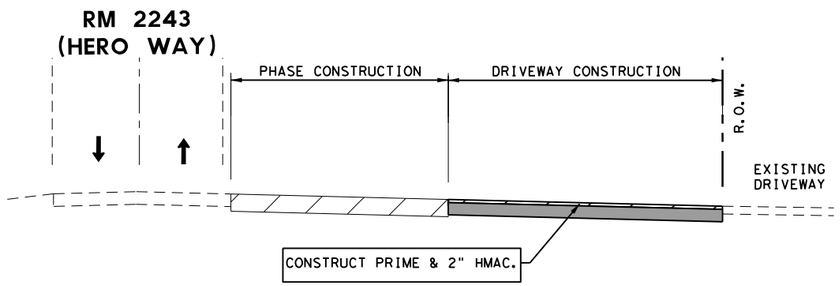

STEP 2 - DRIVEWAY (ACP)
SECTION A-A
(DRIVEWAYS OVER 20' WIDTH)

LEGEND

- SIGN
- TYPE 3 BARRICADE
- DIRECTION OF TRAFFIC
- CONSTRUCTION THIS PHASE
- BUILT PREVIOUSLY
- TEMPORARY PAVEMENT
- TEMPORARY PAVEMENT BUILT PREVIOUSLY

NOTES:
1. MAINTAIN ACCESS TO ALL INTERSECTIONS AND DRIVEWAYS AT ALL TIME UNLESS OTHERWISE NOTED.
2. SEE TRAFFIC CONTROL PLAN NARRATIVE.
3. SEE BC, TCP, AND WZ STANDARDS FOR TEMPORARY SIGNING AND PAVEMENT MARKING DETAILS.
4. SEE P&P SHEETS AND INTERSECTION LAYOUTS FOR ADDITIONAL INFORMATION.
5. ALL CHANNELIZING DEVICES AND SIGN PLACEMENT MUST CONFORM TO THE TEXAS MANUAL ON UNIFORM TRAFFIC CONTROL DEVICES (TMUTCD) AND TXDOT STANDARDS.
6. WARNING SIGN PLACEMENT SHALL NOT CONFLICT WITH EXISTING PERMANENT SIGNAGE.
7. EXISTING GROUND MOUNTED SIGNS SHALL BE TEMPORARILY REINSTALLED ON SKIDS WHERE NEEDED FOR TCP.

4/10/2025

WILCO TEXAS

BGE, Inc.
101 W Louis Henna Blvd, Suite 400, Austin, TX 78728
Tel: 512-879-0400 • www.bgeinc.com
TBPE Registration No. F-1046

RM 2243

TRAFFIC CONTROL PLAN DRIVEWAY DETAILS

SHEET 1 OF 3

FED.RD. DIV.NO.	PROJECT NO.		SHEET NO.
6			65
STATE	DIST.	COUNTY	
TEXAS	AUS	WILLIAMSON	
CONT.	SECT.	JOB	HIGHWAY NO.
0914	05	222	RM 2243

4/10/2025 1:10:47 PM pdf.pltcfg
G:\TXC\Projects\County\Williamson\7473-02 RM 2243 Phase 1A\03*CADD\01*Shts\02-TCP\RM2243*P1A*TCP*DRIVEWAY*DETAILS.dgn

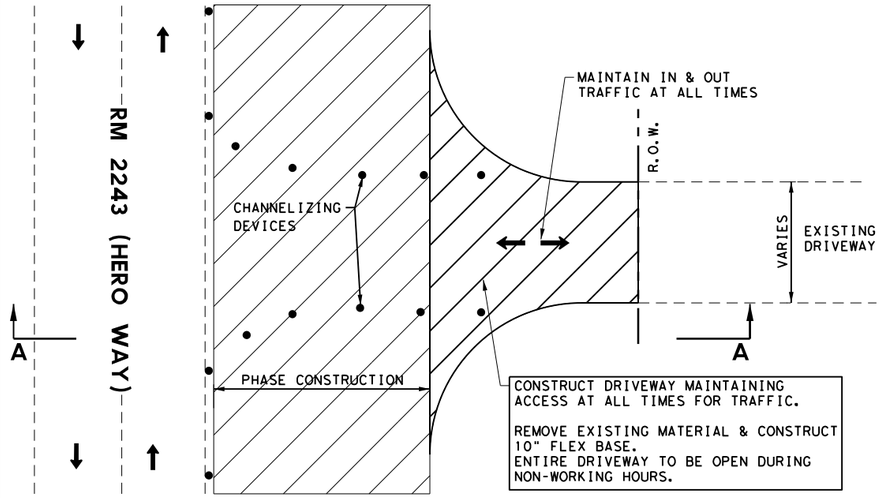

STEP 1 - DRIVEWAY (ACP)
PLAN VIEW
(DRIVEWAYS UNDER 20' WIDTH)

CONTRACTOR WILL CONSTRUCT TEMPORARY PAVEMENT TO TRANSITION FROM PROPOSED GRADE TO EXISTING DRIVEWAY WHEN REQUIRED TO MAINTAIN ACCESS FOR DRIVEWAY. ALL WORK & MATERIALS WILL BE SUBSIDIARY TO BID ITEM 530.

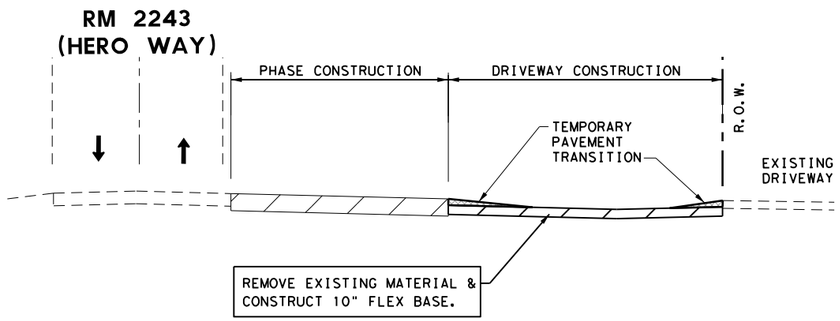

STEP 1 - DRIVEWAY (ACP)
SECTION A-A
(DRIVEWAYS UNDER 20' WIDTH)

LEGEND

- SIGN
- TYPE 3 BARRICADE
- DIRECTION OF TRAFFIC
- CONSTRUCTION THIS PHASE
- BUILT PREVIOUSLY
- TEMPORARY PAVEMENT
- TEMPORARY PAVEMENT BUILT PREVIOUSLY

NOTES:
1. MAINTAIN ACCESS TO ALL INTERSECTIONS AND DRIVEWAYS AT ALL TIME UNLESS OTHERWISE NOTED.
2. SEE TRAFFIC CONTROL PLAN NARRATIVE.
3. SEE BC, TCP, AND WZ STANDARDS FOR TEMPORARY SIGNING AND PAVEMENT MARKING DETAILS.
4. SEE P&P SHEETS AND INTERSECTION LAYOUTS FOR ADDITIONAL INFORMATION.
5. ALL CHANNELIZING DEVICES AND SIGN PLACEMENT MUST CONFORM TO THE TEXAS MANUAL ON UNIFORM TRAFFIC CONTROL DEVICES (TMUTCD) AND TXDOT STANDARDS.
6. WARNING SIGN PLACEMENT SHALL NOT CONFLICT WITH EXISTING PERMANENT SIGNAGE.
7. EXISTING GROUND MOUNTED SIGNS SHALL BE TEMPORARILY REINSTALLED ON SKIDS WHERE NEEDED FOR TCP.

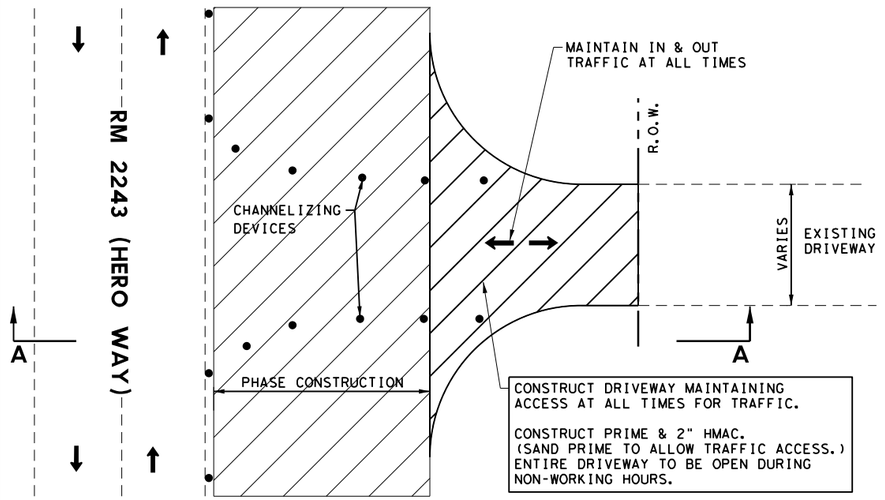

STEP 2 - DRIVEWAY (ACP)
PLAN VIEW
(DRIVEWAYS UNDER 20' WIDTH)

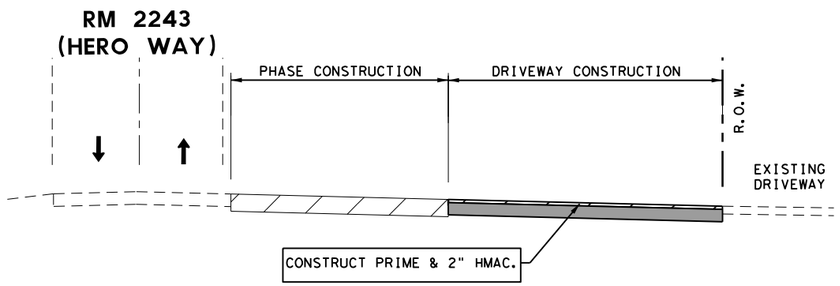

STEP 2 - DRIVEWAY (ACP)
SECTION A-A
(DRIVEWAYS UNDER 20' WIDTH)

STATE OF TEXAS
JOSHUA T. RICHTER
141234
LICENSED
PROFESSIONAL ENGINEER

4/10/2025

WILCO TEXAS

BGE, Inc.
101 W Louis Henna Blvd, Suite 400, Austin, TX 78728
Tel: 512-879-0400 • www.bgeinc.com
TBPE Registration No. F-1046

RM 2243

TRAFFIC CONTROL PLAN DRIVEWAY DETAILS

SHEET 2 OF 3

FED.RD. DIV.NO.	PROJECT NO.		SHEET NO.
6			66
STATE	DIST.	COUNTY	
TEXAS	AUS	WILLIAMSON	
CONT.	SECT.	JOB	HIGHWAY NO.
0914	05	222	RM 2243

4/10/2025 1:10:48 PM pdf.pltcfg
G:\TXC\Projects\County\Williamson\7473-02 RM 2243 Phase 1A\03*CADD\01*Shts\02-TCP\RM2243*P1A*TCP*DRIVEWAY*DETAILS*2.dgn

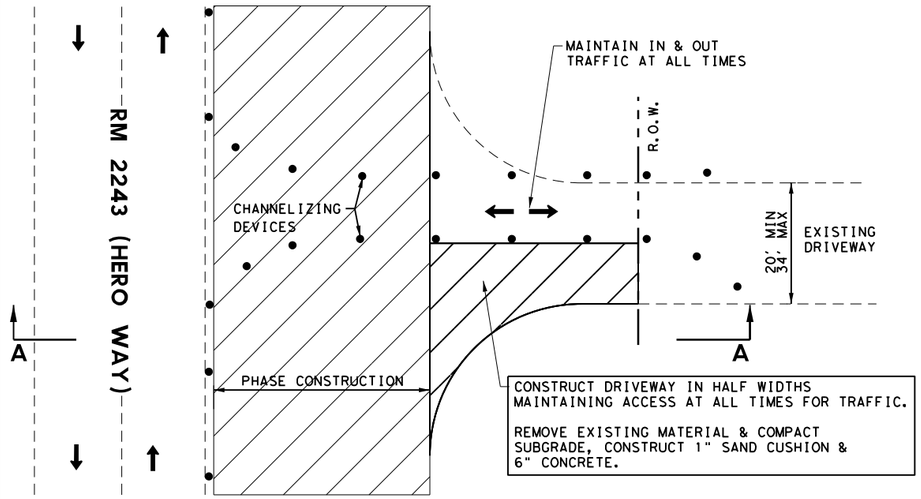

STEP 1 - DRIVEWAY (CONCRETE)
PLAN VIEW

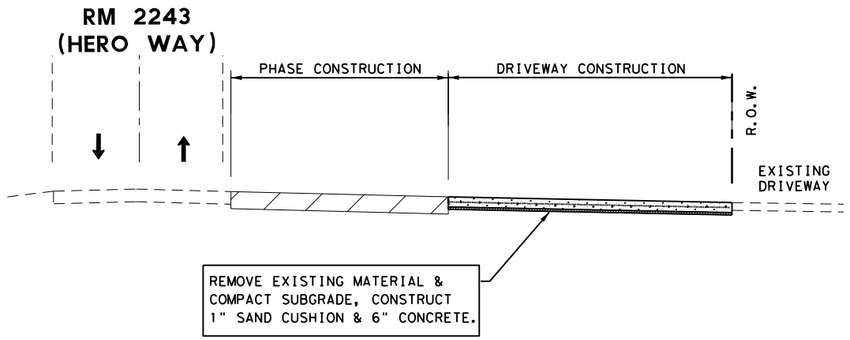

STEP 1 - DRIVEWAY (CONCRETE)
SECTION A-A

LEGEND

- SIGN
- TYPE 3 BARRICADE
- DIRECTION OF TRAFFIC
- CONSTRUCTION THIS PHASE
- BUILT PREVIOUSLY
- TEMPORARY PAVEMENT
- TEMPORARY PAVEMENT BUILT PREVIOUSLY

NOTES:
1. MAINTAIN ACCESS TO ALL INTERSECTIONS AND DRIVEWAYS AT ALL TIME UNLESS OTHERWISE NOTED.
2. SEE TRAFFIC CONTROL PLAN NARRATIVE.
3. SEE BC, TCP, AND WZ STANDARDS FOR TEMPORARY SIGNING AND PAVEMENT MARKING DETAILS.
4. SEE P&P SHEETS AND INTERSECTION LAYOUTS FOR ADDITIONAL INFORMATION.
5. ALL CHANNELIZING DEVICES AND SIGN PLACEMENT MUST CONFORM TO THE TEXAS MANUAL ON UNIFORM TRAFFIC CONTROL DEVICES (TMUTCD) AND TXDOT STANDARDS.
6. WARNING SIGN PLACEMENT SHALL NOT CONFLICT WITH EXISTING PERMANENT SIGNAGE.
7. EXISTING GROUND MOUNTED SIGNS SHALL BE TEMPORARILY REINSTALLED ON SKIDS WHERE NEEDED FOR TCP.

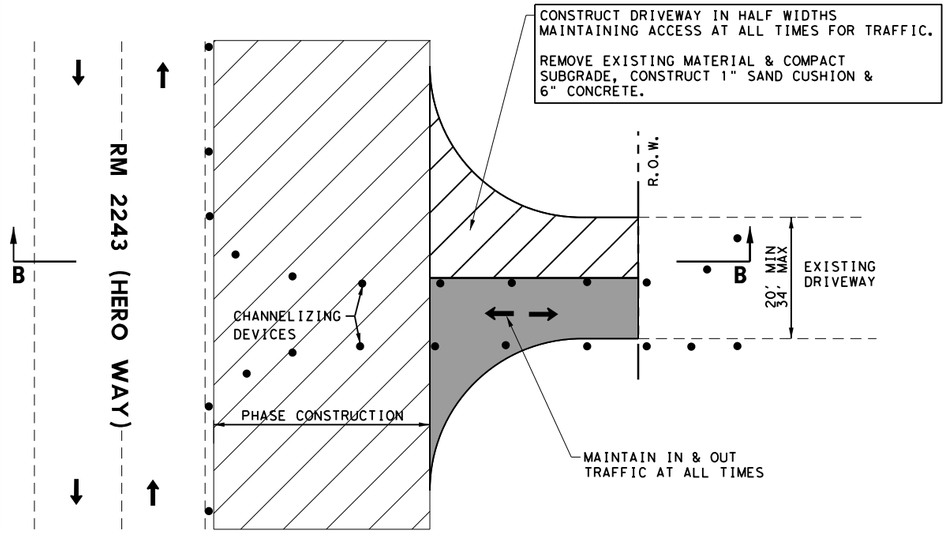

STEP 2 - DRIVEWAY (CONCRETE)
PLAN VIEW

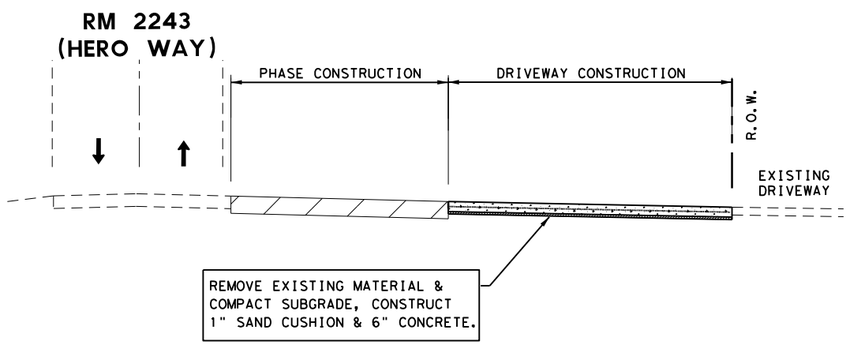

STEP 2 - DRIVEWAY (CONCRETE)
SECTION B-B

STATE OF TEXAS
JOSHUA T. RICHTER
141234
LICENSED
PROFESSIONAL ENGINEER

4/10/2025

WILCO TEXAS

BGE, Inc.
101 W Louis Henna Blvd, Suite 400, Austin, TX 78728
Tel: 512-879-0400 • www.bgeinc.com
TBPE Registration No. F-1046

RM 2243

TRAFFIC CONTROL PLAN DRIVEWAY DETAILS

SHEET 3 OF 3

FED.RD. DIV.NO.	PROJECT NO.		SHEET NO.
6			67
STATE	DIST.	COUNTY	
TEXAS	AUS	WILLIAMSON	
CONT.	SECT.	JOB	HIGHWAY NO.
0914	05	222	RM 2243

4/10/2025 1:10:49 PM pdf.pltcfg
G:\TXC\Projects\County\Williamson\7473-02 RM 2243 Phase 1A\03*CADD\01*Shts\02-TCP\RM2243*P1A*TCP*DRIVEWAY*DETAILS*3.dgn

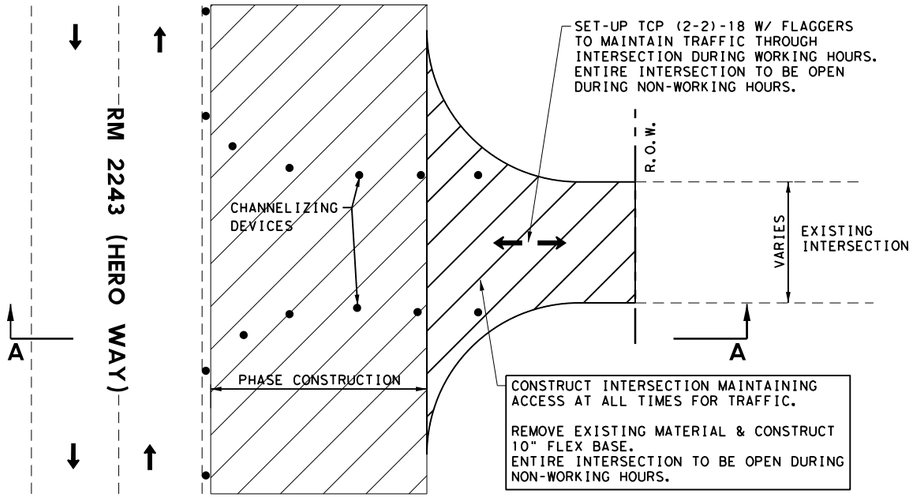

STEP 1 - INTERSECTION
PLAN VIEW
CR 269
CR 270
WINDING OAK TRAIL
GAREY PARK ROAD (SB & NB)

CONSTRUCT GAREY PARK ROAD (SB) THROUGH COMPLETION BEFORE BEGINNING CONSTRUCTION ON (NB) TO ALLOW TRAFFIC ACCESS AT ALL TIMES.

CONTRACTOR WILL CONSTRUCT TEMPORARY PAVEMENT TO TRANSITION FROM PROPOSED GRADE TO EXISTING INTERSECTION WHEN REQUIRED TO MAINTAIN ACCESS FOR INTERSECTION. ALL WORK & MATERIALS WILL BE SUBSIDIARY TO BID ITEM 530.

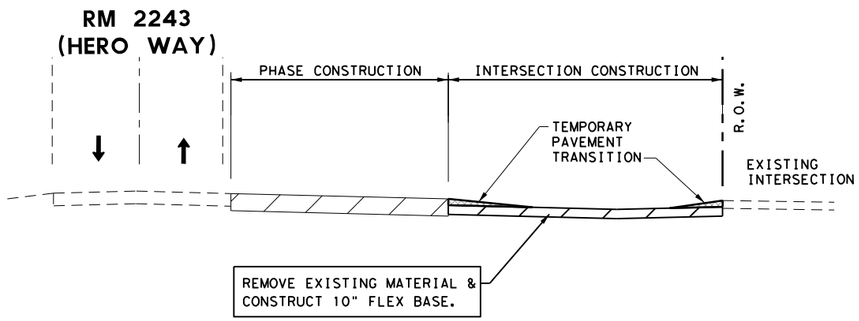

STEP 1 - INTERSECTION
TYPICAL SECTION
CR 269
CR 270
WINDING OAK TRAIL
GAREY PARK ROAD (SB & NB)

CONSTRUCT GAREY PARK ROAD (SB) THROUGH COMPLETION BEFORE BEGINNING CONSTRUCTION ON (NB) TO ALLOW TRAFFIC ACCESS AT ALL TIMES.

LEGEND

- SIGN
- TYPE 3 BARRICADE
- DIRECTION OF TRAFFIC
- CONSTRUCTION THIS PHASE
- BUILT PREVIOUSLY
- TEMPORARY PAVEMENT
- TEMPORARY PAVEMENT BUILT PREVIOUSLY

NOTES:
1. MAINTAIN ACCESS TO ALL INTERSECTIONS AND DRIVEWAYS AT ALL TIME UNLESS OTHERWISE NOTED.
2. SEE TRAFFIC CONTROL PLAN NARRATIVE.
3. SEE BC, TCP, AND WZ STANDARDS FOR TEMPORARY SIGNING AND PAVEMENT MARKING DETAILS.
4. SEE P&P SHEETS AND INTERSECTION LAYOUTS FOR ADDITIONAL INFORMATION.
5. ALL CHANNELIZING DEVICES AND SIGN PLACEMENT MUST CONFORM TO THE TEXAS MANUAL ON UNIFORM TRAFFIC CONTROL DEVICES (TMUTCD) AND TXDOT STANDARDS.
6. WARNING SIGN PLACEMENT SHALL NOT CONFLICT WITH EXISTING PERMANENT SIGNAGE.
7. EXISTING GROUND MOUNTED SIGNS SHALL BE TEMPORARILY REINSTALLED ON SKIDS WHERE NEEDED FOR TCP.

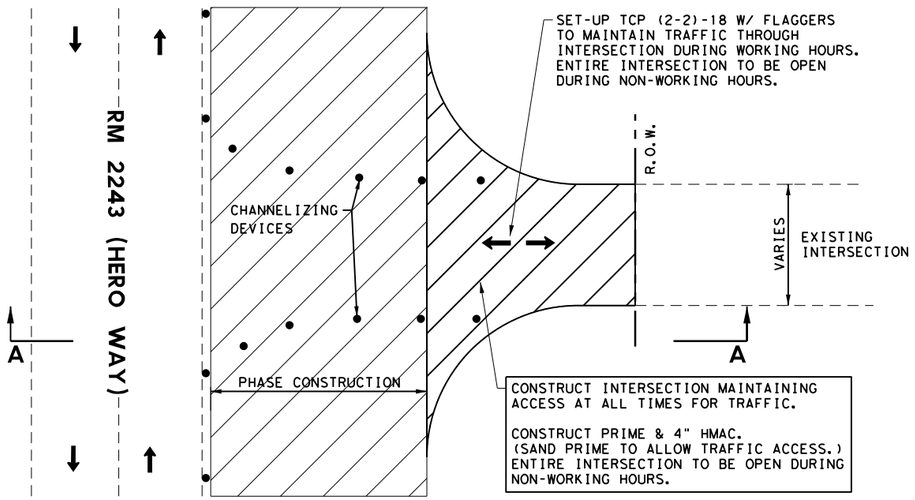

STEP 2 - INTERSECTION
PLAN VIEW
CR 269
CR 270
WINDING OAK TRAIL
GAREY PARK ROAD (SB & NB)

CONSTRUCT GAREY PARK ROAD (SB) THROUGH COMPLETION BEFORE BEGINNING CONSTRUCTION ON (NB) TO ALLOW TRAFFIC ACCESS AT ALL TIMES.

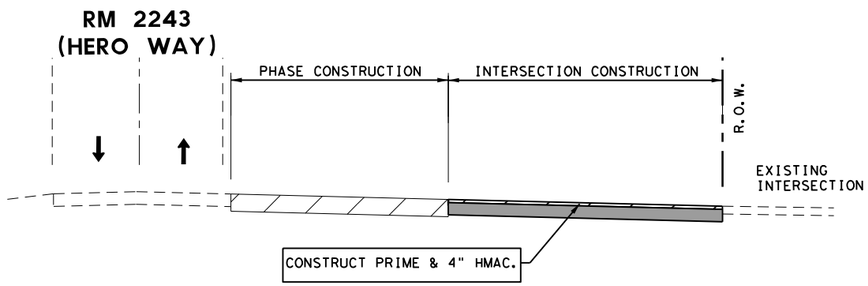

STEP 2 - INTERSECTION
TYPICAL SECTION
CR 269
CR 270
WINDING OAK TRAIL
GAREY PARK ROAD (SB & NB)

CONSTRUCT GAREY PARK ROAD (SB) THROUGH COMPLETION BEFORE BEGINNING CONSTRUCTION ON (NB) TO ALLOW TRAFFIC ACCESS AT ALL TIMES.

STATE OF TEXAS
JOSHUA T. RICHTER
141234
LICENSED
PROFESSIONAL ENGINEER

4/10/2025

WILCO TEXAS

BGE, Inc.
101 W Louis Henna Blvd, Suite 400, Austin, TX 78728
Tel: 512-879-0400 • www.bgeinc.com
TBPE Registration No. F-1046

RM 2243

TRAFFIC CONTROL PLAN INTERSECTION DETAILS

SHEET 1 OF 1

FED.RD. DIV.NO.	PROJECT NO.		SHEET NO.
6			68
STATE	DIST.	COUNTY	
TEXAS	AUS	WILLIAMSON	
CONT.	SECT.	JOB	HIGHWAY NO.
0914	05	222	RM 2243

4/10/2025 11:10:51 AM
G:\TXC\Projects\County*Williamson\7473-02 RM 2243 Phase 1A\03*CADD\01*Shts\02-TCP\RM2243*P1A*TCP*INTERSECTION*DETAILS.dgn
pdf.pltcfg

DISCLAIMER:
The use of this standard is governed by the "Texas Engineering Practice Act". No warranty of any kind is made by TxDOT for any purpose whatsoever. TxDOT assumes no responsibility for the conversion of this standard to other formats or for incorrect results or damages resulting from its use.

LOC NO.	TCP PHASE	PLAN SHEET NUMBER (optional)	LOCATION DESCRIPTION OF LOCATION. (CROSS STREET, GORE, LEFT OR RIGHT, ETC)	STA APPROX. STATION NUMBER OF CC	TEST LEVEL TL2=<=45MPH TL3=ALL SPEEDS	DIRECTION OF TRAFFIC (UNI/BI)	FOUNDATION PAD			BACKUP SUPPORT (OBJECT BEING SHIELDED)			AVAILABLE SITE LENGTH	CRASH CUSHION										ENTER REF# FOR EACH STANDARD TO BE CONSIDERED AT EACH INSTALL LOCATION
							PROPOSED MATERIAL	PROPOSED THICKNESS	IS THE EXISTING SURFACE SUFFICIENT TO ANCHOR THE CRASH CUSHION? (YES/NO)	DESCRIPTION	WIDTH	HEIGHT		INSTALL	REMOVE	MOVE / RESET		L	L	R	R	S	S	
							WHAT MATERIAL WILL THE CRASH CUSHION BE ANCHORED TO? CONCRETE , ASPHALT, ETC			SINGLE SLOPE, F-SHAPE, BRIDGE RAIL TYPE	WIDEST WIDTH OF OBJECT BEING SHIELDED	HEIGHT OF OBJECT BEING SHIELDED	LONGITUDINAL SPACE AVAILABLE TO INSTALL CRASH CUSHION			MOVE/ RESET	FROM LOC. #	N	W	N	W	N	W	SEE TABLE
1	PHASE 1A		APPROX. 750' WEST OF GAREY PK RD	654+60	TL3	UNI	ASPH	4"	YES	SINGLE SLOPE	24"	42"	>50'	X							X		22, 24
2	PHASE 1A		RM 2243 & GAREY PK RD	661+20	TL3	UNI	ASPH	4"	YES	SINGLE SLOPE	24"	42"	>50'	X							X		22, 24
3	PHASE 1A		APPROX. 300' EAST OF GAREY PK RD	665+00	TL3	UNI	ASPH	4"	YES	SINGLE SLOPE	24"	42"	>50'	X							X		22, 24
4	PHASE 1A		APPROX. 100' WEST OF ESCALERA PKWY	688+00	TL3	UNI	ASPH	4"	YES	SINGLE SLOPE	24"	42"	>50'	X							X		22, 24
5	PHASE 1B		APPROX. 1280' WEST OF GAREY PK RD	649+20	TL3	UNI	ASPH	6"	YES	SINGLE SLOPE	24"	42"	>50'			X	1				X		
6	PHASE 1B		RM 2243 & GAREY PK RD	661+20	TL3	UNI	ASPH	6"	YES	SINGLE SLOPE	24"	42"	>50'			X	2				X		
7	PHASE 1B		RM 2243 & GAREY PK RD	663+00	TL3	UNI	ASPH	6"	YES	SINGLE SLOPE	24"	42"	>50'			X	3				X		
8	PHASE 1B		APPROX. 840' WEST OF ESCALERA PKWY	681+00	TL3	UNI	ASPH	6"	YES	SINGLE SLOPE	24"	42"	>50'			X	4				X		
	PHASE 1B		APPROX. 1280' WEST OF GAREY PK RD	649+20											X		5				X		
	PHASE 1B		RM 2243 & GAREY PK RD	661+20											X		6				X		
	PHASE 1B		RM 2243 & GAREY PK RD	663+00											X		7				X		
	PHASE 1B		APPROX. 840' WEST OF ESCALERA PKWY	681+00											X		8				X		

DISCLAIMER:
The use of this standard is governed by the "Texas Engineering Practice Act". No warranty of any kind is made by TxDOT for any purpose whatsoever. TxDOT assumes no responsibility for the conversion of this standard to other formats or for incorrect results or damages resulting from its use.

DATE: 4/10/2025 12:54:10 PM
FILE: G:\TxC\Projects\County_Williamson\7473-02 RM 2243 Phase 1A\03_CADD\01_Shts\02-TCP\Std\bc-21.dgn

BARRICADE AND CONSTRUCTION (BC) STANDARD SHEETS GENERAL NOTES:

1. The Barricade and Construction Standard Sheets (BC sheets) are intended to show typical examples for placement of temporary traffic control devices, construction pavement markings, and typical work zone signs. The information contained in these sheets meet or exceed the requirements shown in the "Texas Manual on Uniform Traffic Control Devices" (TMUTCD).

2. The development and design of the Traffic Control Plan (TCP)is the responsibility of the Engineer.

3. The Contractor may propose changes to the TCP that are signed and sealed by a licensed professional engineer for approval. The Engineer may develop, sign and seal Contractor proposed changes.

4. The Contractor is responsible for installing and maintaining the traffic control devices as shown in the plans. The Contractor may not move or change the approximate location of any device without the approval of the Engineer.

5. Geometric design of lane shifts and detours should, when possible, meet the applicable design criteria contained in manuals such as the American Association of State Highway and Transportation Officials (AASHTO), "A Policy on Geometric Design of Highways and Streets," the TxDOT "Roadway Design Manual" or engineering judgment.

6. When projects abut, the Engineer(s) may omit the END ROAD WORK, TRAFFIC FINES DOUBLE, and other advance warning signs if the signing would be redundant and the work areas appear continuous to the motorists. If the adjacent project is completed first, the Contractor shall erect the necessary warning signs as shown on these sheets, the TCP sheets or as directed by the Engineer. The BEGIN ROAD WORK NEXT X MILES sign shall be revised to show appropriate work zone distance.

7. The Engineer may require duplicate warning signs on the median side of divided highways where median width will permit and traffic volumes justify the signing.

8. All signs shall be constructed in accordance with the details found in the "Standard Highway Sign Designs for Texas," latest edition. Sign details not shown in this manual shall be shown in the plans or the Engineer shall provide a detail to the Contractor before the sign is manufactured.

9. The temporary traffic control devices shown in the illustrations of the BC sheets are examples. As necessary, the Engineer will determine the most appropriate traffic control devices to be used.

10. Where highway construction or maintenance work is being undertaken, other than mobile operations as defined by the Texas Manual on Uniform Traffic Control Devices, CSJ limit signs are required. CSJ limit signs are shown on BC(2). The OBEY WARNING SIGNS STATE LAW sign, STAY ALERT TALK OR TEXT LATER and the WORK ZONE TRAFFIC FINES DOUBLE sign with plaque shall be erected in advance of the CSJ limits. The BEGIN ROAD WORK NEXT X MILES, CONTRACTOR and END ROAD WORK signs shall be erected at or near the CSJ limits. For mobile operations, CSJ limit signs are not required.

11. Traffic control devices should be in place only while work is actually in progress or a definite need exists.

12. The Engineer has the final decision on the location of all traffic control devices.

13. Inactive equipment and work vehicles, including workers' private vehicles must be parked away from travel lanes. They should be as close to the right-of-way line as possible, or located behind a barrier or guardrail, or as approved by the Engineer.

WORKER SAFETY NOTES:

1. Workers on foot who are exposed to traffic or to construction equipment within the right-of-way shall wear high-visibility safety apparel meeting the requirements of ISEA "American National Standard for High-Visibility Apparel," or equivalent revisions, and labeled as ANSI 107-2004 standard performance for Class 2 or 3 risk exposure. Class 3 garments should be considered for high traffic volume work areas or night time work.

2. Except in emergency situations, flagger stations shall be illuminated when flagging is used at night.

COMPLIANT WORKZONE TRAFFIC CONTROL DEVICES

1. Only pre-qualified products shall be used. The "Compliant Work Zone Traffic Control Devices List" (CWZTCD) describes pre-qualified products and their sources.

2. Work zone traffic control devices shall be compliant with the Manual for Assessing safety Hardware (MASH).

THE DOCUMENTS BELOW CAN BE FOUND ON-LINE AT http://www.txdot.gov
COMPLIANT WORK ZONE TRAFFIC CONTROL DEVICES LIST (CWZTCD)
DEPARTMENTAL MATERIAL SPECIFICATIONS (DMS)
MATERIAL PRODUCER LIST (MPL)
ROADWAY DESIGN MANUAL - SEE "MANUALS (ONLINE MANUALS)"
STANDARD HIGHWAY SIGN DESIGNS FOR TEXAS (SHSD)
TEXAS MANUAL ON UNIFORM TRAFFIC CONTROL DEVICES (TMUTCD)
TRAFFIC ENGINEERING STANDARD SHEETS

Texas Department of Transportation

Traffic Safety Division Standard

BARRICADE AND CONSTRUCTION GENERAL NOTES AND REQUIREMENTS

BC(1)-21

FILE: bc-21.dgn	DN: TxDOT	CK: TxDOT	DW: TxDOT	CK: TxDOT
©TxDOT November 2002	CONT	SECT	JOB	HIGHWAY
REVISIONS	0914	05	222	RM 2243
4-03 7-13	DIST	COUNTY		SHEET NO.
9-07 8-14	AUS	WILLIAMSON		70
5-10 5-21				

DISCLAIMER:
The use of this standard is governed by the "Texas Engineering Practice Act". No warranty of any kind is made by TxDOT for any purpose whatsoever. TxDOT assumes no responsibility for the conversion of this standard to other formats or for incorrect results or damages resulting from its use.

DATE: 4/10/2025 12:54:10 PM
FILE: G:\TXC\Projects\County_Williamson\7473-02 RM 2243 Phase 1A\03_CADD\01_Shts\02-TCP(1-5)-18-21\bc-21.dgn

TYPICAL LOCATION OF CROSSROAD SIGNS

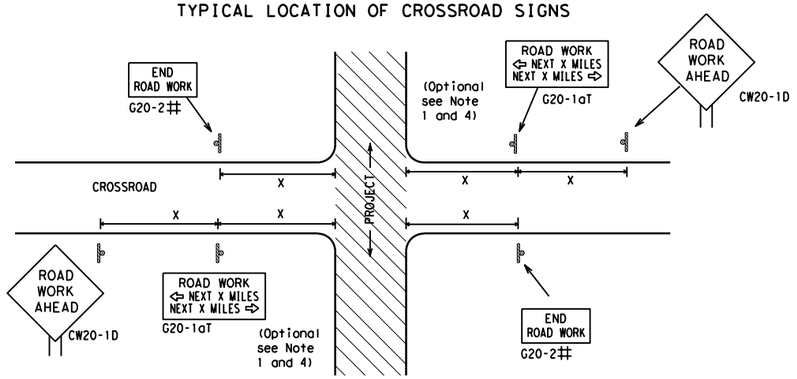

May be mounted on back of "ROAD WORK AHEAD"(CW20-1D) sign with approval of Engineer. (See note 2 below)

1. The typical minimum signing on a crossroad approach should be a "ROAD WORK AHEAD" (CW20-1D)sign and a (G20-2) "END ROAD WORK" sign, unless noted otherwise in plans.
2. The Engineer may use the reduced size 36" x 36" ROAD WORK AHEAD (CW20-1D) sign mounted back to back with the reduced size 36" x 18" "END ROAD WORK"(G20-2) sign on low volume crossroads (see Note 4 under "Typical Construction Warning Sign Size and Spacing"). See the "Standard Highway Sign Designs for Texas" manual for sign details. The Engineer may omit the advance warning signs on low volume crossroads. The Engineer will determine whether a road is low volume as per TMUTCD Part 5. This information shall be shown in the plans.
3. Based on existing field conditions, the Engineer/Inspector may require additional signs such as FLAGGER AHEAD, LOOSE GRAVEL, or other appropriate signs. When additional signs are required, these signs will be considered part of the minimum requirements. The Engineer/Inspector will determine the proper location and spacing of any sign not shown on the BC sheets, Traffic Control Plan sheets or the Work Zone Standard Sheets.
4. The "ROAD WORK NEXT X MILES"(G20-1aT)sign shall be required at high volume crossroads to advise motorists of the length of construction in either direction from the intersection. The Engineer will determine whether a roadway is considered high volume.
5. Additional traffic control devices may be shown elsewhere in the plans for higher volume crossroads.
6. When work occurs in the intersection area, appropriate traffic control devices, as shown elsewhere in the plans or as determined by the Engineer/Inspector, shall be in place.

T-INTERSECTION

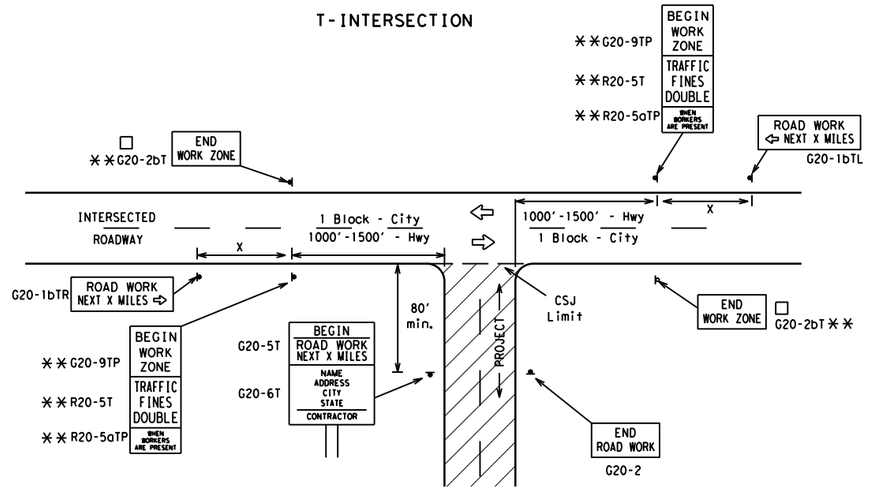

CSJ LIMITS AT T-INTERSECTION

1. The Engineer will determine the types and location of any additional traffic control devices, such as a flagger and accompanying signs, or other signs, that should be used when work is being performed at or near an intersection.
2. If construction closes the road at a T-intersection, the Contractor shall place the "CONTRACTOR NAME"(G20-6T) sign behind the Type 3 Barricades for the road closure (see BC(10) also). The "ROAD WORK NEXT X MILES" left arrow(G20-1bTL) and "ROAD WORK NEXT X MILES" right arrow (G20-1bTR)" signs shall be replaced by the detour signing called for in the plans.

TYPICAL CONSTRUCTION WARNING SIGN SIZE AND SPACING[1,5,6]

SIZE

Sign Number or Series	Conventional Road	Expressway/ Freeway
CW20[4] CW21 CW22 CW23 CW25	48" x 48"	48" x 48"
CW1, CW2, CW7, CW8, CW9, CW11, CW14	36" x 36"	48" x 48"
CW3, CW4, CW5, CW6, CW8-3, CW10, CW12	48" x 48"	48" x 48"

SPACING

Posted Speed	Sign △ Spacing "X"
MPH	Feet (Apprx.)
30	120
35	160
40	240
45	320
50	400
55	500[2]
60	600[2]
65	700[2]
70	800[2]
75	900[2]
80	1000[2]
*	*[3]

* For typical sign spacings on divided highways, expressways and freeways, see Part 6 of the "Texas Manual on Uniform Traffic Control Devices" (TMUTCD) typical application diagrams or TCP Standard Sheets.

△ Minimum distance from work area to first Advance Warning sign nearest the work area and/or distance between each additional sign.

GENERAL NOTES

1. Special or larger size signs may be used as necessary.
2. Distance between signs should be increased as required to have 1500 feet advance warning.
3. Distance between signs should be increased as required to have 1/2 mile or more advance warning.
4. 36" x 36" "ROAD WORK AHEAD" (CW20-1D)signs may be used on low volume crossroads at the discretion of the Engineer as per TMUTCD Part 5. See Note 2 under "Typical Location of Crossroad Signs".
5. Only diamond shaped warning sign sizes are indicated.
6. See sign size listing in "TMUTCD", Sign Appendix or the "Standard Highway Sign Designs for Texas" manual for complete list of available sign design sizes.

WORK AREAS IN MULTIPLE LOCATIONS WITHIN CSJ LIMITS

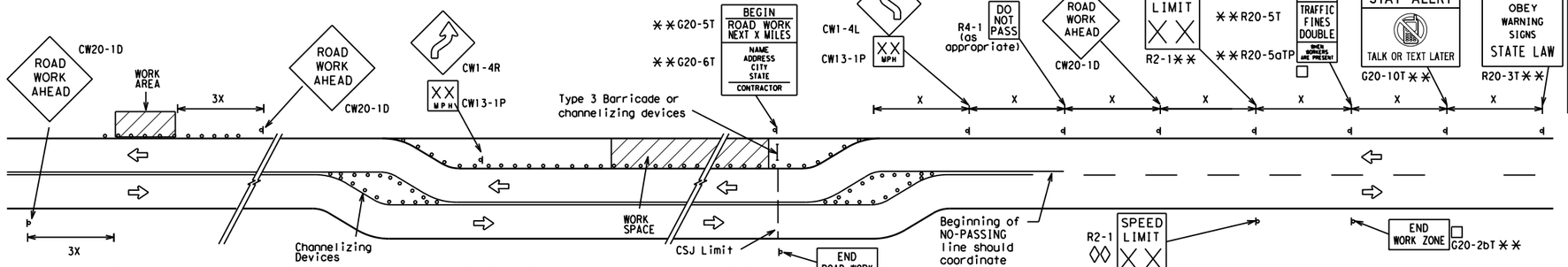

When extended distances occur between minimal work spaces, the Engineer/Inspector should ensure additional "ROAD WORK AHEAD"(CW20-1D)signs are placed in advance of these work areas to remind drivers they are still within the project limits. See the applicable TCP sheets for exact location and spacing of signs and channelizing devices.

SAMPLE LAYOUT OF SIGNING FOR WORK BEGINNING AT THE CSJ LIMITS

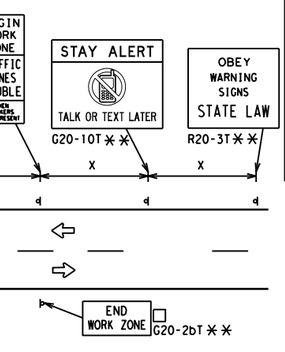

SAMPLE LAYOUT OF SIGNING FOR WORK BEGINNING DOWNSTREAM OF THE CSJ LIMITS

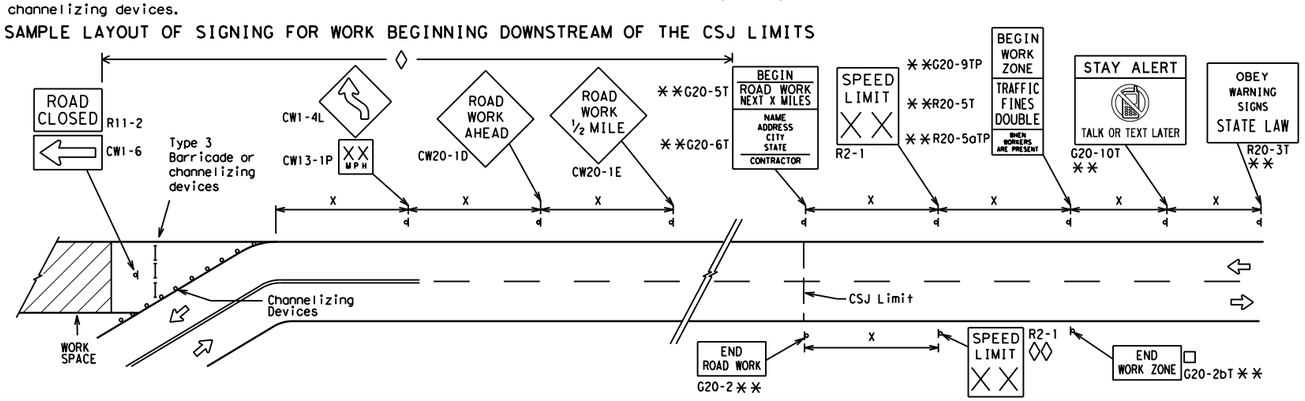

NOTES

The Contractor shall determine the appropriate distance to be placed on the G20-1 series signs and "BEGIN ROAD WORK NEXT X MILES"(G20-5T)sign for each specific project. This distance shall replace the "X" and shall be rounded to the nearest whole mile with the approval of the Engineer. No decimals shall be used.

□ The "BEGIN WORK ZONE"(G20-9TP) and "END WORK ZONE" (G20-2bT) shall be used as shown on the sample layout when advance signs are required outside the CSJ Limits. They inform the motorist of entering or leaving a part of the work zone lying outside the CSJ Limits where traffic fines may double if workers are present.

** CSJ limit signing is required for highway construction and maintenance work, with the exception of mobile operations.

◊ Area for placement of "ROAD WORK AHEAD" (CW20-1D)sign and other signs or devices as called for on the Traffic Control Plan.

◊◊ Contractor will install a regulatory speed limit sign at the end of the work zone.

LEGEND	
⊢⊣	Type 3 Barricade
○ ○ ○	Channelizing Devices
▬	Sign
X	See Typical Construction Warning Sign Size and Spacing chart or the TMUTCD for sign spacing requirements.

Texas Department of Transportation

Traffic Safety Division Standard

BARRICADE AND CONSTRUCTION PROJECT LIMIT

BC(2)-21

FILE: bc-21.dgn	DN: TxDOT	CK: TxDOT	DW: TxDOT	CK: TxDOT
©TxDOT November 2002	CONT	SECT	JOB	HIGHWAY
REVISIONS	0914	05	222	RM 2243
9-07 8-14	DIST	COUNTY		SHEET NO.
7-13 5-21	AUS	WILLIAMSON		71

DISCLAIMER:
The use of this standard is governed by the "Texas Engineering Practice Act". No warranty of any kind is made by TxDOT for any purpose whatsoever. TxDOT assumes no responsibility for the conversion of this standard to other formats or for incorrect results or damages resulting from its use.

DATE: 4/10/2025 12:54:11 PM
FILE: G:\TXC\Projects\County_Williamson\7473-02 RM 2243 Phase 1A\03_CADD\0f_shts\02-TCP\bc-21.dgn

TYPICAL APPLICATION OF WORK ZONE SPEED LIMIT SIGNS

Work zone speed limits shall be regulatory, established in accordance with the "Procedures for Establishing Speed Zones," and approved by the Texas Transportation Commission, or by City Ordinance when within Incorporated City Limits.

Reduced speeds should only be posted in the vicinity of work activity and not throughout the entire project.

Regulatory work zone speed signs (R2-1) shall be removed or covered during periods when they are not needed.

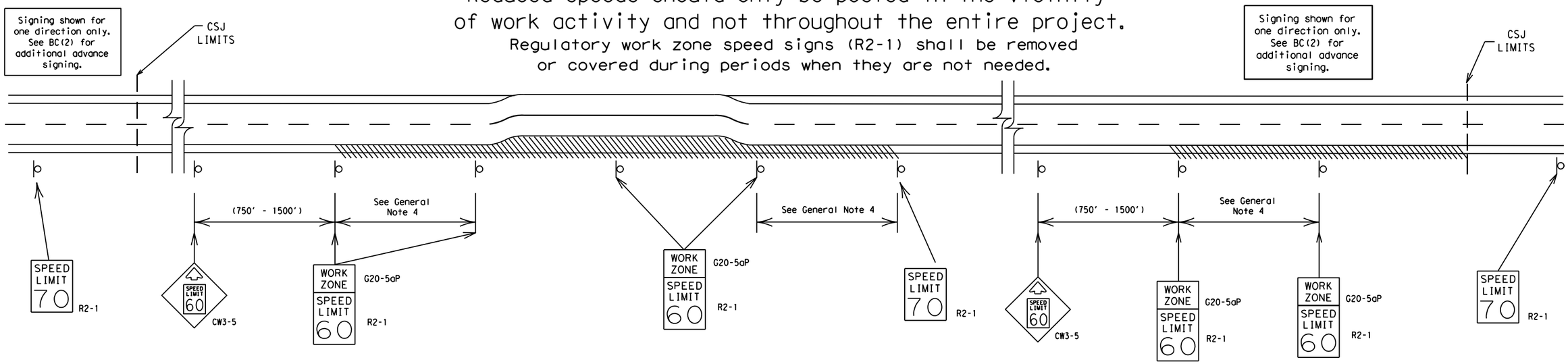

GUIDANCE FOR USE:

LONG/INTERMEDIATE TERM WORK ZONE SPEED LIMITS

This type of work zone speed limit should be included on the design of the traffic control plans when restricted geometrics with a lower design speed are present in the work zone and modification of the geometrics to a higher design speed is not feasible.

Long/Intermediate Term Work Zone Speed Limit signs, when approved as described above, should be posted and visible to the motorist when work activity is present. Work activity may also be defined as a change in the roadway that requires a reduced speed for motorists to safely negotiate the work area, including:

a) rough road or damaged pavement surface
b) substantial alteration of roadway geometrics (diversions)
c) construction detours
d) grade
e) width
f) other conditions readily apparent to the driver

As long as any of these conditions exist, the work zone speed limit signs should remain in place.

SHORT TERM WORK ZONE SPEED LIMITS

This type of work zone speed limit may be included on the design of the traffic control plans when workers or equipment are not behind concrete barrier, when work activity is within 10 feet of the traveled way or actually in the traveled way.

Short Term Work Zone Speed Limit signs should be posted and visible to the motorists only when work activity is present. When work activity is not present, signs shall be removed or covered.
(See Removing or Covering on BC(4)).

GENERAL NOTES

1. Regulatory work zone speed limits should be used only for sections of construction projects where speed control is of major importance.
2. Regulatory work zone speed limit signs shall be placed on supports at a 7 foot minimum mounting height.
3. Speed zone signs are illustrated for one direction of travel and are normally posted for each direction of travel.
4. Frequency of work zone speed limit signs should be:
   40 mph and greater 0.2 to 2 miles
   35 mph and less 0.2 to 1 mile
5. Regulatory speed limit signs shall have black legend and border on a white reflective background (See "Reflective Sheeting" on BC(4)).
6. Fabrication, erection and maintenance of the"ADVANCE SPEED LIMIT"(CW3-5)sign, "WORK ZONE"(G20-5aP) plaque and the "SPEED LIMIT"(R2-1)signs shall not be paid for directly, but shall be considered subsidiary to Item 502.
7. Turning signs from view, laying signs over or down will not be allowed, unless as otherwise noted under "REMOVING OR COVERING" on BC(4).
8. Techniques that may help reduce traffic speeds include but are not limited to:
   A. Law enforcement.
   B. Flagger stationed next to sign.
   C. Portable changeable message sign (PCMS).
   D. Low-power (drone) radar transmitter.
   E. Speed monitor trailers or signs.
9. Speeds shown on details above are for illustration only. Work Zone Speed Limits should only be posted as approved for each project.
10. For more specific guidance concerning the type of work, work zone conditions and factors impacting allowable regulatory construction speed zone reduction see TxDOT form #1204 in the TxDOT e-form system.

Texas Department of Transportation | Traffic Safety Division Standard

BARRICADE AND CONSTRUCTION WORK ZONE SPEED LIMIT

BC(3)-21

FILE: bc-21.dgn	DN: TxDOT	CK: TxDOT	DW: TxDOT	CK: TxDOT
©TxDOT November 2002	CONT	SECT	JOB	HIGHWAY
REVISIONS	0914	05	222	RM 2243
9-07 8-14	DIST	COUNTY		SHEET NO.
7-13 5-21	AUS	WILLIAMSON		72

DISCLAIMER:
The use of this standard is governed by the "Texas Engineering Practice Act". No warranty of any kind is made by TxDOT for any purpose whatsoever. TxDOT assumes no responsibility for the conversion of this standard to other formats or for incorrect results or damages resulting from its use.

DATE: 4/10/2025 12:54:11 PM
FILE: G:\TXC\Projects\County_Williamson\7473-02 RM 2243 Phase 1A\03_CADD\01_Shts\02-TCP\Stds\bc-21.dgn

TYPICAL MINIMUM CLEARANCES FOR LONG TERM AND INTERMEDIATE TERM SIGNS

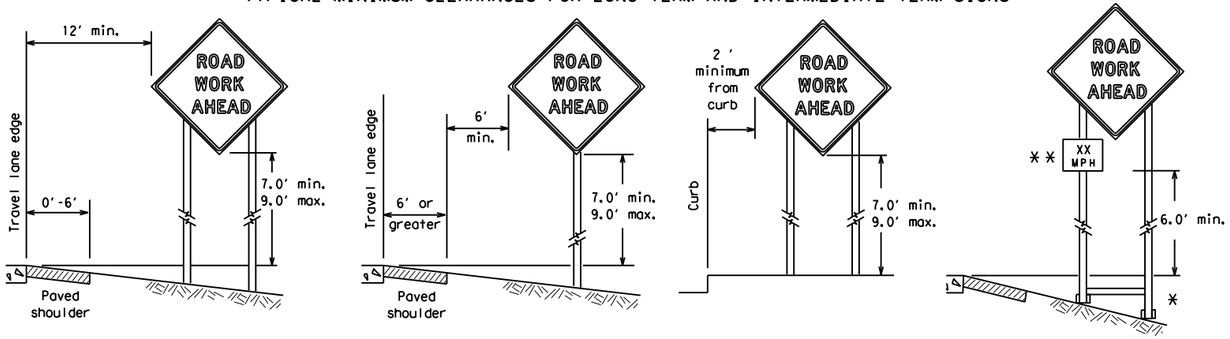

* When placing skid supports on unlevel ground, the leg post lengths must be adjusted so the sign appears straight and plumb. Objects shall NOT be placed under skids as a means of leveling.

** When plaques are placed on dual-leg supports, they should be attached to the upright nearest the travel lane. Supplemental plaques (advisory or distance) should not cover the surface of the parent sign.

ATTACHMENT FOR SIGN SUPPORTS

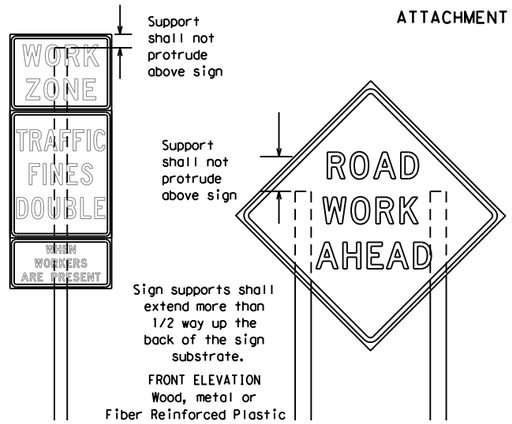

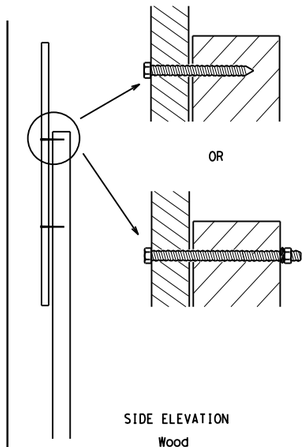

Attachment to wooden supports will be by bolts and nuts or screws. Use TxDOT's or manufacturer's recommended procedures for attaching sign substrates to other types of sign supports

Nails shall NOT be allowed. Each sign shall be attached directly to the sign support. Multiple signs shall not be joined or spliced by any means. Wood supports shall not be extended or repaired by splicing or other means.

Splicing embedded perforated square metal tubing in order to extend post height will only be allowed when the splice is made using four bolts, two above and two below the spice point. Splice must be located entirely behind the sign substrate, not near the base of the support. Splice insert lengths should be at least 5 times nominal post size, centered on the splice and of at least the same gauge material.

STOP/SLOW PADDLES

1. STOP/SLOW paddles are the primary method to control traffic by flaggers. The STOP/SLOW paddle size should be 24" x 24".
2. STOP/SLOW paddles shall be retroreflectorized when used at night.
3. STOP/SLOW paddles may be attached to a staff with a minimum length of 6' to the bottom of the sign.
4. Any lights incorporated into the STOP or SLOW paddle faces shall only be as specifically described in Section 6E.03 Hand Signaling Devices in the TMUTCD.

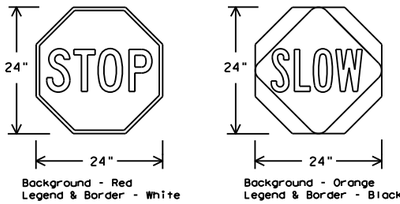

Background - Red
Legend & Border - White

Background - Orange
Legend & Border - Black

SHEETING REQUIREMENTS (WHEN USED AT NIGHT)		
USAGE	COLOR	SIGN FACE MATERIAL
BACKGROUND	RED	TYPE B OR C SHEETING
BACKGROUND	ORANGE	TYPE B_{FL} OR C_{FL} SHEETING
LEGEND & BORDER	WHITE	TYPE B OR C SHEETING
LEGEND & BORDER	BLACK	ACRYLIC NON-REFLECTIVE FILM

CONTRACTOR REQUIREMENTS FOR MAINTAINING PERMANENT SIGNS WITHIN THE PROJECT LIMITS

1. Permanent signs are used to give notice of traffic laws or regulations, call attention to conditions that are potentially hazardous to traffic operations, show route designations, destinations, directions, distances, services, points of interest, and other geographical, recreational, specific service (LOGO), or cultural information. Drivers proceeding through a work zone need the same, if not better route guidance as normally installed on a roadway without construction.
2. When permanent regulatory or warning signs conflict with work zone conditions, remove or cover the permanent signs until the permanent sign message matches the roadway condition. For details for covering large guide signs see the TS-CD standard.
3. When existing permanent signs are moved and relocated due to construction purposes, they shall be visible to motorists at all times.
4. If existing signs are to be relocated on their original supports, they shall be installed on crashworthy bases as shown on the SMD Standard sheets. The signs shall meet the required mounting heights shown on the BC Sheets or the SMD Standards. This work should be paid for under the appropriate pay item for relocating existing signs.
5. If permanent signs are to be removed and relocated using temporary supports, the Contractor shall use crashworthy supports as shown on the BC standard sheets, TLRS standard sheets or the CWZTCD list. The signs shall meet the required mounting heights shown on the BC, or the SMD standard sheets during construction. This work should be paid for under the appropriate pay item for relocating existing signs.
6. Any sign or traffic control device that is struck or damaged by the Contractor or his/her construction equipment shall be replaced as soon as possible by the Contractor to ensure proper guidance for the motorists. This will be subsidiary to Item 502.

GENERAL NOTES FOR WORK ZONE SIGNS

1. Contractor shall install and maintain signs in a straight and plumb condition and/or as directed by the Engineer.
2. Wooden sign posts shall be painted white.
3. Barricades shall NOT be used as sign supports.
4. All signs shall be installed in accordance with the plans or as directed by the Engineer. Signs shall be used to regulate, warn, and guide the traveling public safely through the work zone.
5. The Contractor may furnish either the sign design shown in the plans or in the "Standard Highway Sign Designs for Texas" (SHSD). The Engineer/Inspector may require the Contractor to furnish other work zone signs that are shown in the TMUTCD but may have been omitted from the plans. Any variation in the plans shall be documented by written agreement between the Engineer and the Contractor's Responsible Person. All changes must be documented in writing before being implemented. This can include documenting the changes in the Inspector's TxDOT diary and having both the Inspector and Contractor initial and date the agreed upon changes.
6. The Contractor shall furnish sign supports listed in the "Compliant Work Zone Traffic Control Device List" (CWZTCD) for small roadside signs. Supports for temporary large roadside signs shall meet the requirements detailed on the Temporary Large Roadside Signs (TLRS) standard sheets. The Contractor shall install the sign support in accordance with the manufacturer's recommendations. If there is a question regarding installation procedures, the Contractor shall furnish the Engineer a copy of the manufacturer's installation recommendations so the Engineer can verify the correct procedures are being followed.
7. The Contractor is responsible for installing signs on approved supports and replacing signs with damaged or cracked substrates and/or damaged or marred reflective sheeting as directed by the Engineer/Inspector.
8. Identification markings may be shown only on the back of the sign substrate. The maximum height of letters and/or company logos used for identification shall be 1 inch.
9. The Contractor shall replace damaged wood posts. New or damaged wood sign posts shall not be spliced.

DURATION OF WORK (as defined by the "Texas Manual on Uniform Traffic Control Devices" Part 6)

1. The types of sign supports, sign mounting height, the size of signs, and the type of sign substrates can vary based on the type of work being performed. The Engineer is responsible for selecting the appropriate size sign for the type of work being performed. The Contractor is responsible for ensuring the sign support, sign mounting height and substrate meets manufacturer's recommendations in regard to crashworthiness and duration of work requirements.
   a. Long-term stationary - work that occupies a location more than 3 days.
   b. Intermediate-term stationary - work that occupies a location more than one daylight period up to 3 days, or nighttime work lasting more than one hour.
   c. Short-term stationary - daytime work that occupies a location for more than 1 hour in a single daylight period.
   d. Short, duration - work that occupies a location up to 1 hour.
   e. Mobile - work that moves continuously or intermittently (stopping for up to approximately 15 minutes.)

SIGN MOUNTING HEIGHT

1. The bottom of Long-term/Intermediate-term signs shall be at least 7 feet, but not more than 9 feet, above the paved surface, except as shown for supplemental plaques mounted below other signs.
2. The bottom of Short-term/Short Duration signs shall be a minimum of 1 foot above the pavement surface but no more than 2 feet above the ground.
3. Long-term/Intermediate-term Signs may be used in lieu of Short-term/Short Duration signing.
4. Short-term/Short Duration signs shall be used only during daylight and shall be removed at the end of the workday or raised to appropriate Long-term/Intermediate sign height.
5. Regulatory signs shall be mounted at least 7 feet, but not more than 9 feet, above the paved surface regardless of work duration.

SIZE OF SIGNS

1. The Contractor shall furnish the sign sizes shown on BC (2) unless otherwise shown in the plans or as directed by the Engineer.

SIGN SUBSTRATES

1. The Contractor shall ensure the sign substrate is installed in accordance with the manufacturer's recommendations for the type of sign support that is being used. The CWZTCD lists each substrate that can be used on the different types and models of sign supports.
2. "Mesh" type materials are NOT an approved sign substrate, regardless of the tightness of the weave.
3. All wooden individual sign panels fabricated from 2 or more pieces shall have one or more plywood cleat, 1/2" thick by 6" wide, fastened to the back of the sign and extending fully across the sign. The cleat shall be attached to the back of the sign using wood screws that do not penetrate the face of the sign panel. The screws shall be placed on both sides of the splice and spaced at 6" centers. The Engineer may approve other methods of splicing the sign face.

REFLECTIVE SHEETING

1. All signs shall be retroreflective and constructed of sheeting meeting the color and retro-reflectivity requirements of DMS-8300 for rigid signs or DMS-8310 for roll-up signs. The web address for DMS specifications is shown on BC(1).
2. White sheeting, meeting the requirements of DMS-8300 Type A, shall be used for signs with a white background.
3. Orange sheeting, meeting the requirements of DMS-8300 Type B_{FL} or Type C_{FL}, shall be used for rigid signs with orange backgrounds.

SIGN LETTERS

1. All sign letters and numbers shall be clear, and open rounded type uppercase alphabet letters as approved by the Federal Highway Administration (FHWA) and as published in the "Standard Highway Sign Design for Texas" manual. Signs, letters and numbers shall be of first class workmanship in accordance with Department Standards and Specifications.

REMOVING OR COVERING

1. When sign messages may be confusing or do not apply, the signs shall be removed or completely covered.
2. Long-term stationary or intermediate stationary signs installed on square metal tubing may be turned away from traffic 90 degrees when the sign message is not applicable. This technique may not be used for signs installed in the median of divided highways or near any intersections where the sign may be seen from approaching traffic.
3. Signs installed on wooden skids shall not be turned at 90 degree angles to the roadway. These signs should be removed or completely covered when not required.
4. When signs are covered, the material used shall be opaque, such as heavy mil black plastic, or other materials which will cover the entire sign face and maintain their opaque properties under automobile headlights at night, without damaging the sign sheeting.
5. Burlap shall NOT be used to cover signs.
6. Duct tape or other adhesive material shall NOT be affixed to a sign face.
7. Signs and anchor stubs shall be removed and holes backfilled upon completion of work.

SIGN SUPPORT WEIGHTS

1. Where sign supports require the use of weights to keep from turning over, the use of sandbags with dry, cohesionless sand should be used.
2. The sandbags will be tied shut to keep the sand from spilling and to maintain a constant weight.
3. Rock, concrete, iron, steel or other solid objects shall not be permitted for use as sign support weights.
4. Sandbags should weigh a minimum of 35 lbs and a maximum of 50 lbs.
5. Sandbags shall be made of a durable material that tears upon vehicular impact. Rubber (such as tire inner tubes) shall NOT be used.
6. Rubber ballasts designed for channelizing devices should not be used for ballast on portable sign supports. Sign supports designed and manufactured with rubber bases may be used when shown on the CWZTCD list.
7. Sandbags shall only be placed along or laid over the base supports of the traffic control device and shall not be suspended above ground level or hung with rope, wire, chains or other fasteners. Sandbags shall be placed along the length of the skids to weigh down the sign support.
8. Sandbags shall NOT be placed under the skid and shall not be used to level sign supports placed on slopes.

FLAGS ON SIGNS

1. Flags may be used to draw attention to warning signs. When used, the flag shall be 16 inches square or larger and shall be orange or fluorescent red-orange in color. Flags shall not be allowed to cover any portion of the sign face.

Texas Department of Transportation | Traffic Safety Division Standard

BARRICADE AND CONSTRUCTION TEMPORARY SIGN NOTES

BC(4)-21

FILE: bc-21.dgn	DN: TxDOT	CK: TxDOT	DW: TxDOT	CK: TxDOT
©TxDOT November 2002	CONT	SECT	JOB	HIGHWAY
REVISIONS	0914	05	222	RM 2243
9-07 8-14	DIST	COUNTY		SHEET NO.
7-13 5-21	AUS	WILLIAMSON		73

DISCLAIMER:
The use of this standard is governed by the "Texas Engineering Practice Act". No warranty of any kind is made by TxDOT for any purpose whatsoever. TxDOT assumes no responsibility for the conversion of this standard to other formats or for incorrect results or damages resulting from its use.

DATE: 4/10/2025 12:54:12 PM
FILE: G:\TXC\Projects\County_Williamson\7473-02 RM 2243 Phase 1A\03_CADD\01_Shts\02-TCP\Stds\bc-21.dgn

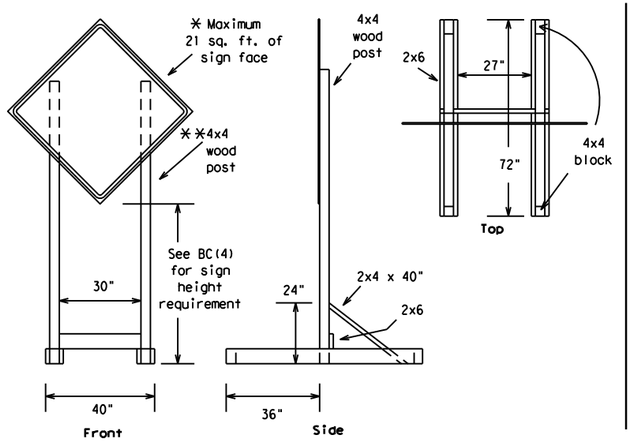

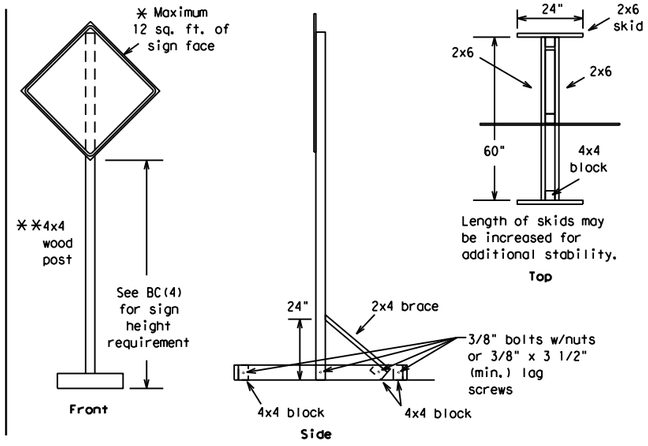

SKID MOUNTED WOOD SIGN SUPPORTS

* LONG/INTERMEDIATE TERM STATIONARY - PORTABLE SKID MOUNTED SIGN SUPPORTS

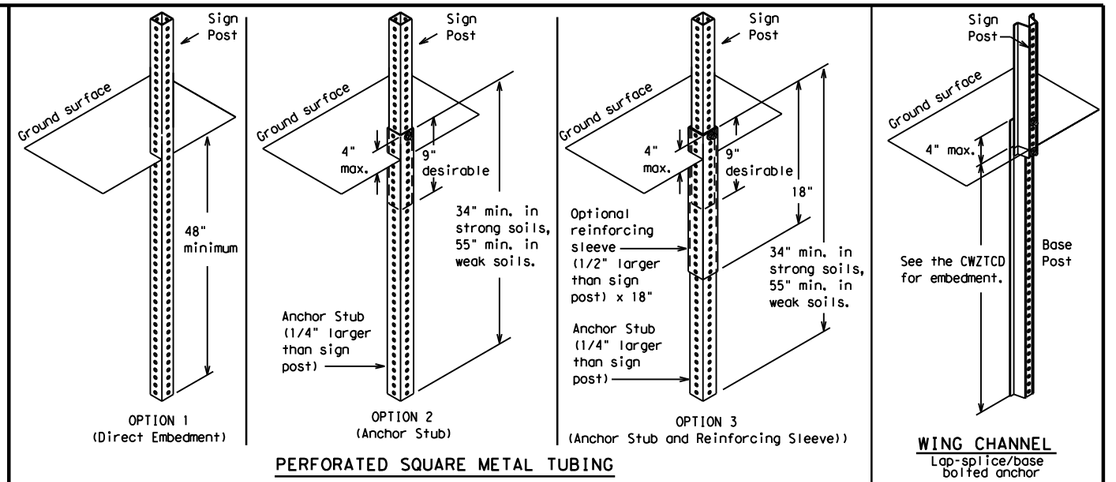

GROUND MOUNTED SIGN SUPPORTS

Refer to the CWZTCD and the manufacturer's installation procedure for each type sign support.
The maximum sign square footage shall adhere to the manufacturer's recommendation.
Two post installations can be used for larger signs.

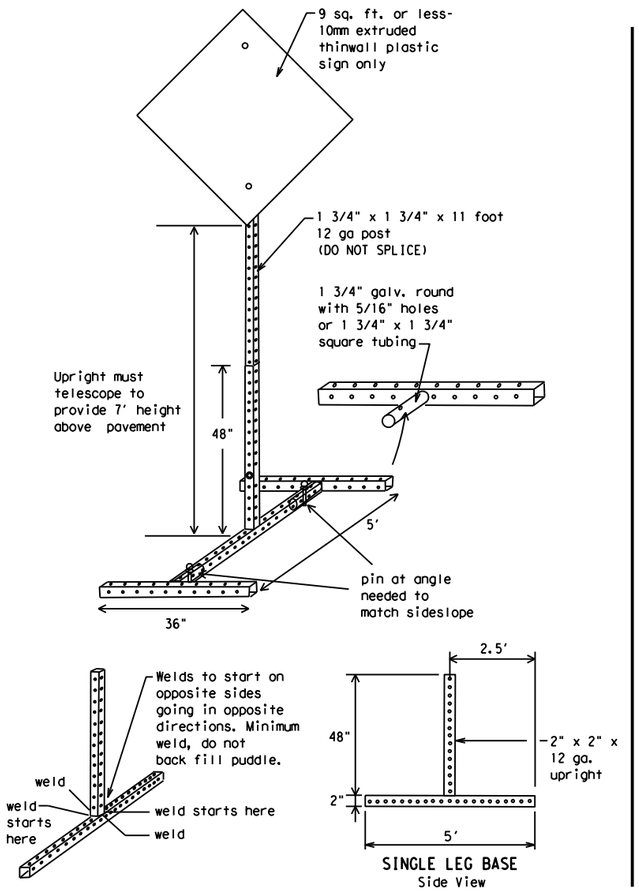

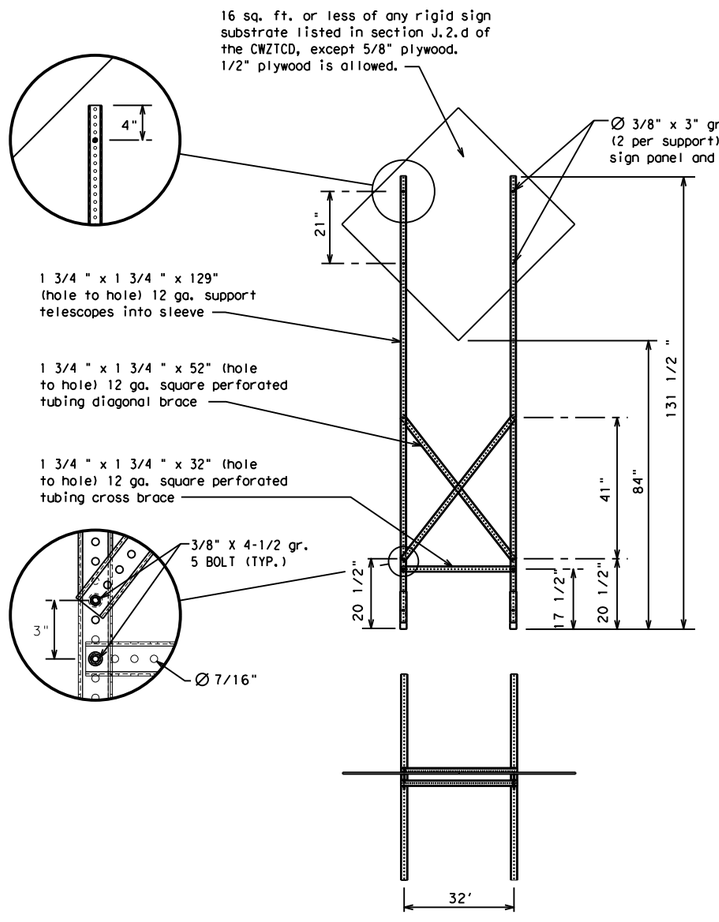

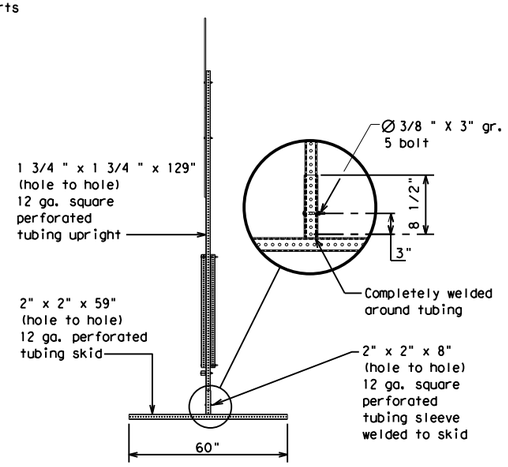

SKID MOUNTED PERFORATED SQUARE STEEL TUBING SIGN SUPPORTS

* LONG/INTERMEDIATE TERM STATIONARY - PORTABLE SKID MOUNTED SIGN SUPPORTS

WEDGE ANCHORS

Both steel and plastic Wedge Anchor Systems as shown on the SMD Standard Sheets may be used as temporary sign supports for signs up to 10 square feet of sign face. They may be set in concrete or in sturdy soils if approved by the Engineer. (See web address for "Traffic Engineering Standard Sheets" on BC(1)).

OTHER DESIGNS

MORE DETAILS OF APPROVED LONG/INTERMEDIATE AND SHORT TERM SUPPORTS CAN BE FOUND ON THE CWZTCD LIST. SEE BC(1) FOR WEBSITE LOCATION.

GENERAL NOTES

1. Nails may be used in the assembly of wooden sign supports, but 3/8" bolts with nuts or 3/8" x 3 1/2" lag screws must be used on every joint for final connection.
2. No more than 2 sign posts shall be placed within a 7 ft. circle, except for specific materials noted on the CWZTCD List.
3. When project is completed, all sign supports and foundations shall be removed from the project site. This will be considered subsidiary to Item 502.

* See BC(4) for definition of "Work Duration."

** Wood sign posts MUST be one piece. Splicing will NOT be allowed. Posts shall be painted white.

☐ See the CWZTCD for the type of sign substrate that can be used for each approved sign support.

Texas Department of Transportation

Traffic Safety Division Standard

BARRICADE AND CONSTRUCTION TYPICAL SIGN SUPPORT

BC(5)-21

FILE: bc-21.dgn	DN: TxDOT	CK: TxDOT	DW: TxDOT	CK: TxDOT
©TxDOT November 2002	CONT	SECT	JOB	HIGHWAY
REVISIONS	0914	05	222	RM 2243
9-07 8-14	DIST	COUNTY		SHEET NO.
7-13 5-21	AUS	WILLIAMSON		74

DISCLAIMER:
The use of this standard is governed by the "Texas Engineering Practice Act". No warranty of any kind is made by TxDOT for any purpose whatsoever. TxDOT assumes no responsibility for the conversion of this standard to other formats or for incorrect results or damages resulting from its use.

DATE: 4/10/2025 12:54:13 PM
FILE: G:\TxCV\Projects\County_Williamson\7473-02 RM 2243 Phase 1A\03_CADD\01_Shts\02-TCPL\Stds\bc-21.dgn

WHEN NOT IN USE, REMOVE THE PCMS FROM THE RIGHT-OF-WAY OR PLACE THE PCMS BEHIND BARRIER OR GUARDRAIL WITH SIGN PANEL TURNED PARALLEL TO TRAFFIC

PORTABLE CHANGEABLE MESSAGE SIGNS

1. The Engineer/Inspector shall approve all messages used on portable changeable message signs (PCMS).
2. Messages on PCMS should contain no more than 8 words (about four to eight characters per word), not including simple words such as "TO," "FOR," "AT," etc.
3. Messages should consist of a single phase, or two phases that alternate. Three-phase messages are not allowed. Each phase of the message should convey a single thought, and must be understood by itself.
4. Use the word "EXIT" to refer to an exit ramp on a freeway; i.e., "EXIT CLOSED." Do not use the term "RAMP."
5. Always use the route or interstate designation (IH, US, SH, FM) along with the number when referring to a roadway.
6. When in use, the bottom of a stationary PCMS message panel should be a minimum 7 feet above the roadway, where possible.
7. The message term "WEEKEND" should be used only if the work is to start on Saturday morning and end by Sunday evening at midnight. Actual days and hours of work should be displayed on the PCMS if work is to begin on Friday evening and/or continue into Monday morning.
8. The Engineer/Inspector may select one of two options which are available for displaying a two-phase message on a PCMS. Each phase may be displayed for either four seconds each or for three seconds each.
9. Do not "flash" messages or words included in a message. The message should be steady burn or continuous while displayed.
10. Do not present redundant information on a two-phase message; i.e., keeping two lines of the message the same and changing the third line.
11. Do not use the word "Danger" in message.
12. Do not display the message "LANES SHIFT LEFT" or "LANES SHIFT RIGHT" on a PCMS. Drivers do not understand the message.
13. Do not display messages that scroll horizontally or vertically across the face of the sign.
14. The following table lists abbreviated words and two-word phrases that are acceptable for use on a PCMS. Both words in a phrase must be displayed together. Words or phrases not on this list should not be abbreviated, unless shown in the TMUTCD.
15. PCMS character height should be at least 18 inches for trailer mounted units. They should be visible from at least 1/2 (.5) mile and the text should be legible from at least 600 feet at night and 800 feet in daylight. Truck mounted units must have a character height of 10 inches and must be legible from at least 400 feet.
16. Each line of text should be centered on the message board rather than left or right justified.
17. If disabled, the PCMS should default to an illegible display that will not alarm motorists and will only be used to alert workers that the PCMS has malfunctioned. A pattern such as a series of horizontal solid bars is appropriate.

WORD OR PHRASE	ABBREVIATION
Access Road	ACCS RD
Alternate	ALT
Avenue	AVE
Best Route	BEST RTE
Boulevard	BLVD
Bridge	BRDG
Cannot	CANT
Center	CTR
Construction Ahead	CONST AHD
CROSSING	XING
Detour Route	DETOUR RTE
Do Not	DONT
East	E
Eastbound	(route) E
Emergency	EMER
Emergency Vehicle	EMER VEH
Entrance, Enter	ENT
Express Lane	EXP LN
Expressway	EXPWY
XXXX Feet	XXXX FT
Fog Ahead	FOG AHD
Freeway	FRWY, FWY
Freeway Blocked	FWY BLKD
Friday	FRI
Hazardous Driving	HAZ DRIVING
Hazardous Material	HAZMAT
High-Occupancy	HOV
Vehicle Highway	HWY
Hour(s)	HR, HRS
Information	INFO
It Is	ITS
Junction	JCT
Left	LFT
Left Lane	LFT LN
Lane Closed	LN CLOSED
Lower Level	LWR LEVEL
Maintenance	MAINT

WORD OR PHRASE	ABBREVIATION
Major	MAJ
Miles	MI
Miles Per Hour	MPH
Minor	MNR
Monday	MON
Normal	NORM
North	N
Northbound	(route) N
Parking	PKING
Road	RD
Right Lane	RT LN
Saturday	SAT
Service Road	SERV RD
Shoulder	SHLDR
Slippery	SLIP
South	S
Southbound	(route) S
Speed	SPD
Street	ST
Sunday	SUN
Telephone	PHONE
Temporary	TEMP
Thursday	THURS
To Downtown	TO DWNTN
Traffic	TRAF
Travelers	TRVLRS
Tuesday	TUES
Time Minutes	TIME MIN
Upper Level	UPR LEVEL
Vehicles (s)	VEH, VEHS
Warning	WARN
Wednesday	WED
Weight Limit	WT LIMIT
West	W
Westbound	(route) W
Wet Pavement	WET PVMT
Will Not	WONT

Roadway designation # IH-number, US-number, SH-number, FM-number

RECOMMENDED PHASES AND FORMATS FOR PCMS MESSAGES DURING ROADWORK ACTIVITIES

(The Engineer may approve other messages not specifically covered here.)

Phase 1: Condition Lists

Road/Lane/Ramp Closure List

FREEWAY CLOSED X MILE	FRONTAGE ROAD CLOSED
ROAD CLOSED AT SH XXX	SHOULDER CLOSED XXX FT
ROAD CLSD AT FM XXXX	RIGHT LN CLOSED XXX FT
RIGHT X LANES CLOSED	RIGHT X LANES OPEN
CENTER LANE CLOSED	DAYTIME LANE CLOSURES
NIGHT LANE CLOSURES	I-XX SOUTH EXIT CLOSED
VARIOUS LANES CLOSED	EXIT XXX CLOSED X MILE
EXIT CLOSED	RIGHT LN TO BE CLOSED
MALL DRIVEWAY CLOSED	X LANES CLOSED TUE - FRI
XXXXXXXX BLVD CLOSED	

Other Condition List

ROADWORK XXX FT	ROAD REPAIRS XXXX FT
FLAGGER XXXX FT	LANE NARROWS XXXX FT
RIGHT LN NARROWS XXXX FT	TWO-WAY TRAFFIC XX MILE
MERGING TRAFFIC XXXX FT	CONST TRAFFIC XXX FT
LOOSE GRAVEL XXXX FT	UNEVEN LANES XXXX FT
DETOUR X MILE	ROUGH ROAD XXXX FT
ROADWORK PAST SH XXXX	ROADWORK NEXT FRI-SUN
BUMP XXXX FT	US XXX EXIT X MILES
TRAFFIC SIGNAL XXXX FT	LANES SHIFT *

* LANES SHIFT in Phase 1 must be used with STAY IN LANE in Phase 2.

Phase 2: Possible Component Lists

Action to Take/Effect on Travel List

MERGE RIGHT	FORM X LINES RIGHT
DETOUR NEXT X EXITS	USE XXXXX RD EXIT
USE EXIT XXX	USE EXIT I-XX NORTH
STAY ON US XXX SOUTH	USE I-XX E TO I-XX N
TRUCKS USE US XXX N	WATCH FOR TRUCKS
WATCH FOR TRUCKS	EXPECT DELAYS
EXPECT DELAYS	PREPARE TO STOP
REDUCE SPEED XXX FT	END SHOULDER USE
USE OTHER ROUTES	WATCH FOR WORKERS
STAY IN LANE *	

Location List

AT FM XXXX
BEFORE RAILROAD CROSSING
NEXT X MILES
PAST US XXX EXIT
XXXXXXX TO XXXXXXX
US XXX TO FM XXXX

Warning List

SPEED LIMIT XX MPH
MAXIMUM SPEED XX MPH
MINIMUM SPEED XX MPH
ADVISORY SPEED XX MPH
RIGHT LANE EXIT
USE CAUTION
DRIVE SAFELY
DRIVE WITH CARE

** Advance Notice List

TUE-FRI XX AM- X PM
APR XX-XX X PM-X AM
BEGINS MONDAY
BEGINS MAY XX
MAY X-X XX PM - XX AM
NEXT FRI-SUN
XX AM TO XX PM
NEXT TUE AUG XX
TONIGHT XX PM- XX AM

* LANES SHIFT in Phase 1 must be used with STAY IN LANE in Phase 2.

** See Application Guidelines Note 6.

APPLICATION GUIDELINES

1. Only 1 or 2 phases are to be used on a PCMS.
2. The 1st phase (or both) should be selected from the "Road/Lane/Ramp Closure List" and the "Other Condition List".
3. A 2nd phase can be selected from the "Action to Take/Effect on Travel, Location, General Warning, or Advance Notice Phase Lists".
4. A Location Phase is necessary only if a distance or location is not included in the first phase selected.
5. If two PCMS are used in sequence, they must be separated by a minimum of 1000 ft. Each PCMS shall be limited to two phases, and should be understandable by themselves.
6. For advance notice, when the current date is within seven days of the actual work date, calendar days should be replaced with days of the week. Advance notification should typically be for no more than one week prior to the work.

WORDING ALTERNATIVES

1. The words RIGHT, LEFT and ALL can be interchanged as appropriate.
2. Roadway designations IH, US, SH, FM and LP can be interchanged as appropriate.
3. EAST, WEST, NORTH and SOUTH (or abbreviations E, W, N and S) can be interchanged as appropriate.
4. Highway names and numbers replaced as appropriate.
5. ROAD, HIGHWAY and FREEWAY can be interchanged as needed.
6. AHEAD may be used instead of distances if necessary.
7. FT and MI, MILE and MILES interchanged as appropriate.
8. AT, BEFORE and PAST interchanged as needed.
9. Distances or AHEAD can be eliminated from the message if a location phase is used.

PCMS SIGNS WITHIN THE R.O.W. SHALL BE BEHIND GUARDRAIL OR CONCRETE BARRIER OR SHALL HAVE A MINIMUM OF FOUR (4) PLASTIC DRUMS PLACED PERPENDICULAR TO TRAFFIC ON THE UPSTREAM SIDE OF THE PCMS, WHEN EXPOSED TO ONE DIRECTION OF TRAFFIC. WHEN EXPOSED TO TWO WAY TRAFFIC, THE FOUR DRUMS SHOULD BE PLACED WITH ONE DRUM AT EACH OF THE FOUR CORNERS OF THE UNIT.

FULL MATRIX PCMS SIGNS

1. When Full Matrix PCMS signs are used, the character height and legibility/visibility requirements shall be maintained as listed in Note 15 under "PORTABLE CHANGEABLE MESSAGE SIGNS" above.
2. When symbol signs, such as the "Flagger Symbol"(CW20-7) are represented graphically on the Full Matrix PCMS sign and, with the approval of the Engineer, it shall maintain the legibility/visibility requirement listed above.
3. When symbol signs are represented graphically on the Full Matrix PCMS, they shall only supplement the use of the static sign represented, and shall not substitute for, or replace that sign.
4. A full matrix PCMS may be used to simulate a flashing arrow board provided it meets the visibility, flash rate and dimming requirements on BC(7), for the same size arrow.

Texas Department of Transportation

Traffic Safety Division Standard

BARRICADE AND CONSTRUCTION PORTABLE CHANGEABLE MESSAGE SIGN (PCMS)

BC(6)-21

FILE: bc-21.dgn	DN: TxDOT	CK: TxDOT	DW: TxDOT	CK: TxDOT
©TxDOT November 2002	CONT	SECT	JOB	HIGHWAY
REVISIONS	0914	05	222	RM 2243
9-07 8-14	DIST	COUNTY		SHEET NO.
7-13 5-21	AUS	WILLIAMSON		75

100

DISCLAIMER:
The use of this standard is governed by the "Texas Engineering Practice Act". No warranty of any kind is made by TxDOT for any purpose whatsoever. TxDOT assumes no responsibility for the conversion of this standard to other formats or for incorrect results or damages resulting from its use.

DATE: 4/10/2025 12:54:13 PM
FILE: G:\TXC\Projects\County_Williamson\7473-02 RM 2243 Phase 1A\03_CADD\01_Shts\02-TCP\Stds\bc-21.dgn

1. Barrier Reflectors shall be pre-qualified, and conform to the color and reflectivity requirements of DMS-8600. A list of prequalified Barrier Reflectors can be found at the Material Producer List web address shown on BC(1).
2. Color of Barrier Reflectors shall be as specified in the TMUTCD. The cost of the reflectors shall be considered subsidiary to Item 512.

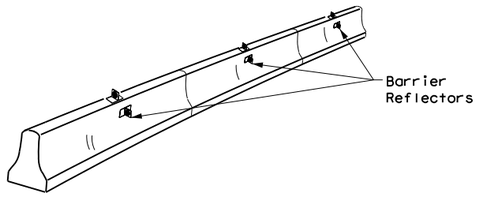

CONCRETE TRAFFIC BARRIER (CTB)

3. Where traffic is on one side of the CTB, two (2) Barrier Reflectors shall be mounted in approximately the midsection of each section of CTB. An alternate mounting location is uniformly spaced at one end of each CTB. This will allow for attachment of a barrier grapple without damaging the reflector. The Barrier Reflector mounted on the side of the CTB shall be located directly below the reflector mounted on top of the barrier, as shown in the detail above.
4. Where CTB separates two-way traffic, three barrier reflectors shall be mounted on each section of CTB. The reflector unit on top shall have two yellow reflective faces (Bi-Directional)while the reflectors on each side of the barrier shall have one yellow reflective face, as shown in the detail above.
5. When CTB separates traffic traveling in the same direction, no barrier reflectors will be required on top of the CTB.
6. Barrier Reflector units shall be yellow or white in color to match the edgeline being supplemented.
7. Maximum spacing of Barrier Reflectors is forty (40) feet.
8. Pavement markers or temporary flexible-reflective roadway marker tabs shall NOT be used as CTB delineation.
9. Attachment of Barrier Reflectors to CTB shall be per manufacturer's recommendations.
10. Missing or damaged Barrier Reflectors shall be replaced as directed by the Engineer.
11. Single slope barriers shall be delineated as shown on the above detail.

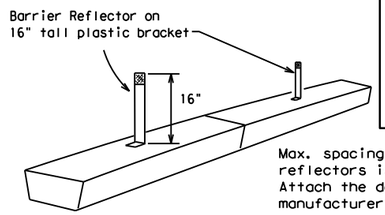

Max. spacing of barrier reflectors is 20 feet. Attach the delineators as per manufacturer's recommendations.

LOW PROFILE CONCRETE BARRIER (LPCB)

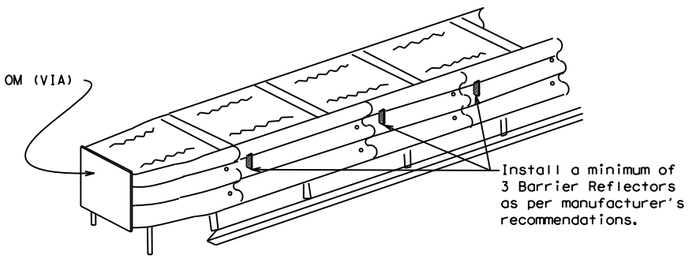

DELINEATION OF END TREATMENTS

LOW PROFILE CONCRETE BARRIER (LPCB) USED IN WORK ZONES

LPCB is approved for use in work zone locations, where the posted speed is 45mph, or less. See Roadway Standard Sheet LPCB.

END TREATMENTS FOR CTB'S USED IN WORK ZONES

End treatments used on CTB's in work zones shall meet the apppropriate crashworthy standards as defined in the Manual for Assessing Safety Hardware (MASH). Refer to the CWZTCD List for approved end treatments and manufacturers.

BARRIER REFLECTORS FOR CONCRETE TRAFFIC BARRIER AND ATTENUATORS

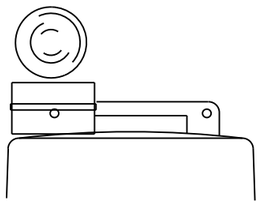

Type C Warning Light or approved substitute mounted on a drum adjacent to the travel way.

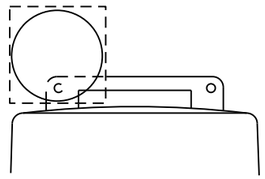

Warning reflector may be round or square.Must have a yellow reflective surface area of at least 30 square inches

WARNING LIGHTS

1. Warning lights shall meet the requirements of the TMUTCD.
2. Warning lights shall NOT be installed on barricades.
3. Type A-Low Intensity Flashing Warning Lights are commonly used with drums. They are intended to warn of or mark a potentially hazardous area. Their use shall be as indicated on this sheet and/or other sheets of the plans by the designation "FL". The Type A Warning Lights shall not be used with signs manufactured with Type B_{FL} or C_{FL} Sheeting meeting the requirements of Departmental Material Specification DMS-8300.
4. Type-C and Type D 360 degree Steady Burn Lights are intended to be used in a series for delineation to supplement other traffic control devices. Their use shall be as indicated on this sheet and/or other sheets of the plans by the designation "SB".
5. The Engineer/Inspector or the plans shall specify the location and type of warning lights to be installed on the traffic control devices.
6. When required by the Engineer, the Contractor shall furnish a copy of the warning lights certification. The warning light manufacturer will certify the warning lights meet the requirements of the latest ITE Purchase Specifications for Flashing and Steady-Burn Warning Lights.
7. When used to delineate curves, Type-C and Type D Steady Burn Lights should only be placed on the outside of the curve, not the inside.
8. The location of warning lights and warning reflectors on drums shall be as shown elsewhere in the plans.

WARNING LIGHTS MOUNTED ON PLASTIC DRUMS

1. Type A flashing warning lights are intended to warn drivers that they are approaching or are in a potentially hazardous area.
2. Type A random flashing warning lights are not intended for delineation and shall not be used in a series.
3. A series of sequential flashing warning lights placed on channelizing devices to form a merging taper may be used for delineation. If used, the successive flashing of the sequential warning lights should occur from the beginning of the taper to the end of the merging taper in order to identify the desired vehicle path. The rate of flashing for each light shall be 65 flashes per minute, plus or minus 10 flashes.
4. Type C and D steady-burn warning lights are intended to be used in a series to delineate the edge of the travel lane on detours, on lane changes, on lane closures, and on other similar conditions.
5. Type A, Type C and Type D warning lights shall be installed at locations as detailed on other sheets in the plans.
6. Warning lights shall not be installed on a drum that has a sign, chevron or vertical panel.
7. The maximum spacing for warning lights on drums should be identical to the channelizing device spacing.

WARNING REFLECTORS MOUNTED ON PLASTIC DRUMS AS A SUBSTITUTE FOR TYPE C (STEADY BURN) WARNING LIGHTS

1. A warning reflector or approved substitute may be mounted on a plastic drum as a substitute for a Type C, steady burn warning light at the discretion of the Contractor unless otherwise noted in the plans.
2. The warning reflector shall be yellow in color and shall be manufactured using a sign substrate approved for use with plastic drums listed on the CWZTCD.
3. The warning reflector shall have a minimum retroreflective surface area (one-side) of 30 square inches.
4. Round reflectors shall be fully reflectorized, including the area where attached to the drum.
5. Square substrates must have a minimum of 30 square inches of reflectorized sheeting. They do not have to be reflectorized where it attaches to the drum.
6. The side of the warning reflector facing approaching traffic shall have sheeting meeting the color and retroreflectivity requirements for DMS 8300-Type B or Type C.
7. When used near two-way traffic, both sides of the warning reflector shall be reflectorized.
8. The warning reflector should be mounted on the side of the handle nearest approaching traffic.
9. The maximum spacing for warning reflectors should be identical to the channelizing device spacing requirements.

Arrow Boards may be located behind channelizing devices in place for a shoulder taper or merging taper, otherwise they shall be delineated with four (4) channelizing devices placed perpendicular to traffic on the upstream side of traffic.

1. The Flashing Arrow Board should be used for all lane closures on multi-lane roadways, or slow moving maintenance or construction activities on the travel lanes.
2. Flashing Arrow Boards should not be used on two-lane, two-way roadways, detours, diversions or work on shoulders unless the "CAUTION" display (see detail below) is used.
3. The Engineer/Inspector shall choose all appropriate signs, barricades and/or other traffic control devices that should be used in conjunction with the Flashing Arrow Board.
4. The Flashing Arrow Board should be able to display the following symbols:

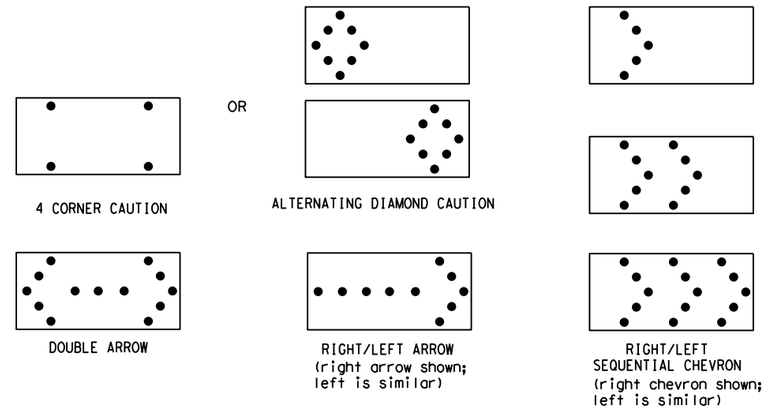

5. The "CAUTION" display consists of four corner lamps flashing simultaneously, or the Alternating Diamond Caution mode as shown.
6. The straight line caution display is NOT ALLOWED.
7. The Flashing Arrow Board shall be capable of minimum 50 percent dimming from rated lamp voltage. The flashing rate of the lamps shall not be less than 25 nor more than 40 flashes per minute.
8. Minimum lamp "on time" shall be approximately 50 percent for the flashing arrow and equal intervals of 25 percent for each sequential phase of the flashing chevron.
9. The sequential arrow display is NOT ALLOWED.
10. The flashing arrow display is the TxDOT standard; however, the sequential chevron display may be used during daylight operations.
11. The Flashing Arrow Board shall be mounted on a vehicle, trailer or other suitable support.
12. A Flashing Arrow Board SHALL NOT BE USED to laterally shift traffic.
13. A full matrix PCMS may be used to simulate a Flashing Arrow Board provided it meets visibility, flash rate and dimming requirements on this sheet for the same size arrow.
14. Minimum mounting height of trailer mounted Arrow Boards should be 7 feet from roadway to bottom of panel.

REQUIREMENTS			
TYPE	MINIMUM SIZE	MINIMUM NUMBER OF PANEL LAMPS	MINIMUM VISIBILITY DISTANCE
B	30 x 60	13	3/4 mile
C	48 x 96	15	1 mile

ATTENTION
Flashing Arrow Boards shall be equipped with automatic dimming devices.

WHEN NOT IN USE, REMOVE THE ARROW BOARD FROM THE RIGHT-OF-WAY OR PLACE THE ARROW BOARD BEHIND CONCRETE TRAFFIC BARRIER OR GUARDRAIL.

FLASHING ARROW BOARDS

TRUCK-MOUNTED ATTENUATORS

1. Truck-mounted attenuators (TMA) used on TxDOT facilities must meet the requirements outlined in the Manual for Assessing Safety Hardware (MASH).
2. Refer to the CWZTCD for the requirements of Level 2 or Level 3 TMAs.
3. Refer to the CWZTCD for a list of approved TMAs.
4. TMAs are required on freeways unless otherwise noted in the plans.
5. A TMA should be used anytime that it can be positioned 30 to 100 feet in advance of the area of crew exposure without adversely affecting the work performance.
6. The only reason a TMA should not be required is when a work area is spread down the roadway and the work crew is an extended distance from the TMA.

Texas Department of Transportation — Traffic Safety Division Standard

BARRICADE AND CONSTRUCTION ARROW PANEL, REFLECTORS, WARNING LIGHTS & ATTENUATOR

BC(7)-21

FILE: bc-21.dgn	DN: TxDOT	CK: TxDOT	DW: TxDOT	CK: TxDOT
© TxDOT November 2002	CONT	SECT	JOB	HIGHWAY
REVISIONS	0914	05	222	RM 2243
9-07 8-14	DIST	COUNTY		SHEET NO.
7-13 5-21	AUS	WILLIAMSON		76

DISCLAIMER:
The use of this standard is governed by the "Texas Engineering Practice Act". No warranty of any kind is made by TxDOT for any purpose whatsoever. TxDOT assumes no responsibility for the conversion of this standard to other formats or for incorrect results or damages resulting from its use.

DATE: 4/10/2025 12:54:14 PM
FILE: G:\TXC\Projects\County_Williamson\7473-02 RM 2243 Phase 1A\03_CADD\01_Shts\02-TCP\Srds\bc-21.dgn

GENERAL NOTES

1. For long term stationary work zones on freeways, drums shall be used as the primary channelizing device.
2. For intermediate term stationary work zones on freeways, drums should be used as the primary channelizing device but may be replaced in tangent sections by vertical panels, or 42" two-piece cones. In tangent sections, one-piece cones may be used with the approval of the Engineer but only if personnel are present on the project at all times to maintain the cones in proper position and location.
3. For short term stationary work zones on freeways, drums are the preferred channelizing device but may be replaced in tapers, transitions and tangent sections by vertical panels, two-piece cones or one-piece cones as approved by the Engineer.
4. Drums and all related items shall comply with the requirements of the current version of the "Texas Manual on Uniform Traffic Control Devices" (TMUTCD) and the "Compliant Work Zone Traffic Control Devices List" (CWZTCD).
5. Drums, bases, and related materials shall exhibit good workmanship and shall be free from objectionable marks or defects that would adversely affect their appearance or serviceability.
6. The Contractor shall have a maximum of 24 hours to replace any plastic drums identified for replacement by the Engineer/Inspector. The replacement device must be an approved device.

GENERAL DESIGN REQUIREMENTS

Pre-qualified plastic drums shall meet the following requirements:

1. Plastic drums shall be a two-piece design; the "body" of the drum shall be the top portion and the "base" shall be the bottom.
2. The body and base shall lock together in such a manner that the body separates from the base when impacted by a vehicle traveling at a speed of 20 MPH or greater but prevents accidental separation due to normal handling and/or air turbulence created by passing vehicles.
3. Plastic drums shall be constructed of lightweight flexible, and deformable materials. The Contractor shall NOT use metal drums or single piece plastic drums as channelization devices or sign supports.
4. Drums shall present a profile that is a minimum of 18 inches in width at the 36 inch height when viewed from any direction. The height of drum unit (body installed on base) shall be a minimum of 36 inches and a maximum of 42 inches.
5. The top of the drum shall have a built-in handle for easy pickup and shall be designed to drain water and not collect debris. The handle shall have a minimum of two widely spaced 9/16 inch diameter holes to allow attachment of a warning light, warning reflector unit or approved compliant sign.
6. The exterior of the drum body shall have a minimum of four alternating orange and white retroreflective circumferential stripes not less than 4 inches nor greater than 8 inches in width. Any non-reflectorized space between any two adjacent stripes shall not exceed 2 inches in width.
7. Bases shall have a maximum width of 36 inches, a maximum height of 4 inches, and a minimum of two footholds of sufficient size to allow base to be held down while separating the drum body from the base.
8. Plastic drums shall be constructed of ultra-violet stabilized, orange, high-density polyethylene (HDPE) or other approved material.
9. Drum body shall have a maximum unballasted weight of 11 lbs.
10. Drum and base shall be marked with manufacturer's name and model number.

RETROREFLECTIVE SHEETING

1. The stripes used on drums shall be constructed of sheeting meeting the color and retroreflectivity requirements of Departmental Materials Specification DMS-8300, "Sign Face Materials," Type A or Type B reflective sheeting shall be supplied unless otherwise specified in the plans.
2. The sheeting shall be suitable for use on and shall adhere to the drum surface such that, upon vehicular impact, the sheeting shall remain adhered in-place and exhibit no delaminating, cracking, or loss of retroreflectivity other than that loss due to abrasion of the sheeting surface.

BALLAST

1. Unballasted bases shall be large enough to hold up to 50 lbs. of sand. This base, when filled with the ballast material, should weigh between 35 lbs (minimum) and 50 lbs (maximum). The ballast may be sand in one to three sandbags separate from the base, sand in a sand-filled plastic base, or other ballasting devices as approved by the Engineer. Stacking of sandbags will be allowed, however height of sandbags above pavement surface may not exceed 12 inches.
2. Bases with built-in ballast shall weigh between 40 lbs. and 50 lbs. Built-in ballast can be constructed of an integral crumb rubber base or a solid rubber base.
3. Recycled truck tire sidewalls may be used for ballast on drums approved for this type of ballast on the CWZTCD list.
4. The ballast shall not be heavy objects, water, or any material that would become hazardous to motorists, pedestrians, or workers when the drum is struck by a vehicle.
5. When used in regions susceptible to freezing, drums shall have drainage holes in the bottoms so that water will not collect and freeze becoming a hazard when struck by a vehicle.
6. Ballast shall not be placed on top of drums.
7. Adhesives may be used to secure base of drums to pavement.

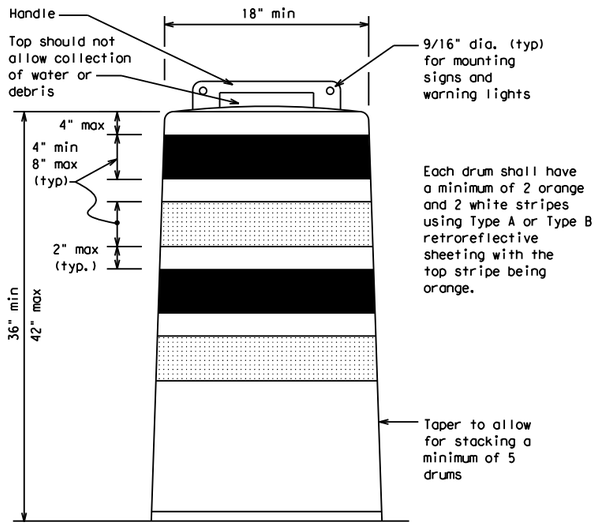

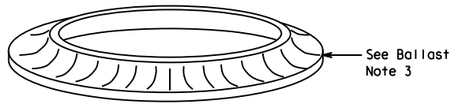

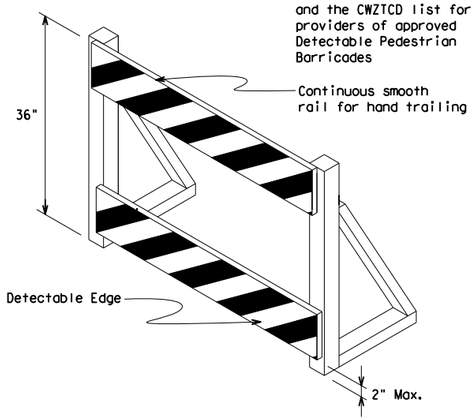

DETECTABLE PEDESTRIAN BARRICADES

1. When existing pedestrian facilities are disrupted, closed, or relocated in a TTC zone, the temporary facilities shall be detectable and include accessibility features consistent with the features present in the existing pedestrian facility. Refer to WZ(BTS-2) for Pedestrian Control requirements for Sidewalk Diversions, Sidewalk Detours and Crosswalk Closures.
2. Where pedestrians with visual disabilities normally use the closed sidewalk, a Detectable Pedestrian Barricade shall be placed across the full width of the closed sidewalk instead of a Type 3 Barricade.
3. Detectable pedestrian barricades similar to the one pictured above, longitudinal channelizing devices, some concrete barriers, and wood or chain link fencing with a continuous detectable edging can satisfactorily delineate a pedestrian path.
4. Tape, rope, or plastic chain strung between devices are not detectable, do not comply with the design standards in the "Americans with Disabilities Act Accessibility Guidelines (ADAAG)" and should not be used as a control for pedestrian movements.
5. Warning lights shall not be attached to detectable pedestrian barricades.
6. Detectable pedestrian barricades should use 8" nominal barricade rails as shown on BC(10) provided that the top rail provides a smooth continuous rail suitable for hand trailing with no splinters, burrs, or sharp edges.

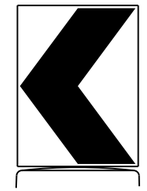

18" x 24" Sign
(Maximum Sign Dimension)
Chevron CW1-8, Opposing Traffic Lane Divider, Driveway sign D70a, Keep Right R4 series or other signs as approved by Engineer

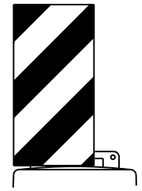

12" x 24"
Vertical Panel
mount with diagonals sloping down towards travel way

Plywood, Aluminum or Metal sign substrates shall NOT be used on plastic drums

SIGNS, CHEVRONS, AND VERTICAL PANELS MOUNTED ON PLASTIC DRUMS

1. Signs used on plastic drums shall be manufactured using substrates listed on the CWZTCD.
2. Chevrons and other work zone signs with an orange background shall be manufactured with Type B_{FL} or Type C_{FL} Orange sheeting meeting the color and retroreflectivity requirements of DMS-8300, "Sign Face Material," unless otherwise specified in the plans.
3. Vertical Panels shall be manufactured with orange and white sheeting meeting the requirements of DMS-8300 Type A or Type B. Diagonal stripes on Vertical Panels shall slope down toward the intended traveled lane.
4. Other sign messages (text or symbolic) may be used as approved by the Engineer. Sign dimensions shall not exceed 18 inches in width or 24 inches in height, except for the R9 series signs discussed in note 8 below.
5. Signs shall be installed using a 1/2 inch bolt (nominal) and nut, two washers, and one locking washer for each connection.
6. Mounting bolts and nuts shall be fully engaged and adequately torqued. Bolts should not extend more than 1/2 inch beyond nuts.
7. Chevrons may be placed on drums on the outside of curves, on merging tapers or on shifting tapers. When used in these locations, they may be placed on every drum or spaced not more than on every third drum. A minimum of three (3) should be used at each location called for in the plans.
8. R9-9, R9-10, R9-11 and R9-11a Sidewalk Closed signs which are 24 inches wide may be mounted on plastic drums, with approval of the Engineer.

Texas Department of Transportation | Traffic Safety Division Standard

BARRICADE AND CONSTRUCTION CHANNELIZING DEVICES

BC(8)-21

FILE: bc-21.dgn	DN: TxDOT	CK: TxDOT	DW: TxDOT	CK: TxDOT
©TxDOT November 2002	CONT	SECT	JOB	HIGHWAY
REVISIONS	0914	05	222	RM 2243
4-03 8-14	DIST	COUNTY		SHEET NO.
9-07 5-21	AUS	WILLIAMSON		77
7-13				

102

DISCLAIMER:
The use of this standard is governed by the "Texas Engineering Practice Act". No warranty of any kind is made by TxDOT for any purpose whatsoever. TxDOT assumes no responsibility for the conversion of this standard to other formats or for incorrect results or damages resulting from its use.

DATE: 4/10/2025 12:54:15 PM
FILE: G:\TXC\Projects\County_Williamson\7473-02 RM 2243 Phase 1A\03_CADD\01_Shts\02-TCP\Stds\bc-21.dgn

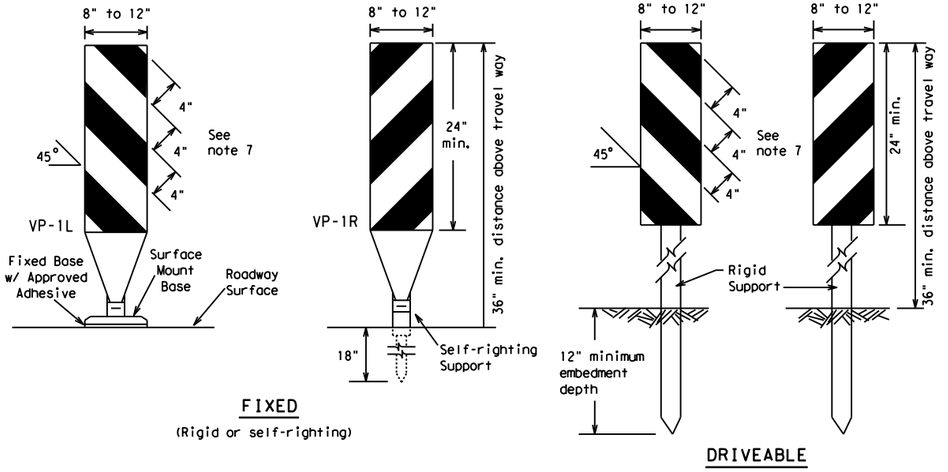

FIXED
(Rigid or self-righting)

DRIVEABLE

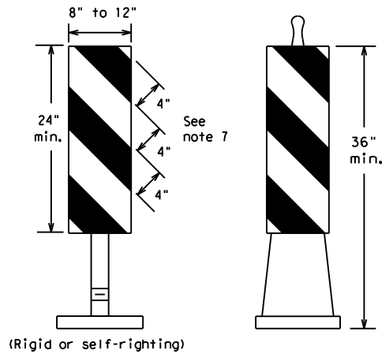

(Rigid or self-righting)

PORTABLE

1. Vertical Panels (VP's) are normally used to channelize traffic or divide opposing lanes of traffic.
2. VP's may be used in daytime or nighttime situations. They may be used at the edge of shoulder drop-offs and other areas such as lane transitions where positive daytime and nighttime delineation is required. The Engineer/Inspector shall refer to the Roadway Design Manual for additional requirements on the use VP's for drop-offs.
3. VP's should be mounted back to back if used at the edge of cuts adjacent to two-way two lane roadways. Stripes are to be reflective orange and reflective white and should always slope downward toward the travel lane.
4. VP's used on expressways and freeways or other high speed roadways, may have more than 270 square inches of retroreflective area facing traffic.
5. Self-righting supports are available with portable base. See "Compliant Work Zone Traffic Control Devices List" (CWZTCD).
6. Sheeting for the VP's shall be retroreflective Type A or Type B conforming to Departmental Material Specification DMS-8300, unless noted otherwise.
7. Where the height of reflective material on the vertical panel is 36 inches or greater, a panel stripe of 6 inches shall be used.

VERTICAL PANELS (VPs)

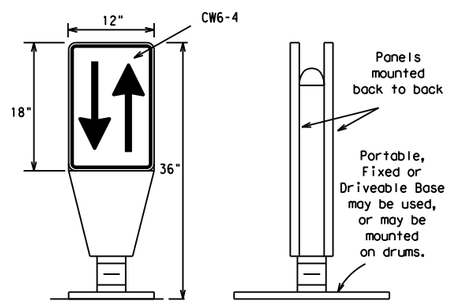

1. Opposing Traffic Lane Dividers (OTLD) are delineation devices designed to convert a normal one-way roadway section to two-way operation. OTLD's are used on temporary centerlines. The upward and downward arrows on the sign's face indicate the direction of traffic on either side of the divider. The base is secured to the pavement with an adhesive or rubber weight to minimize movement caused by a vehicle impact or wind gust.
2. The OTLD may be used in combination with 42" cones or VPs.
3. Spacing between the OTLD shall not exceed 500 feet. 42" cones or VPs placed between the OTLD's should not exceed 100 foot spacing.
4. The OTLD shall be orange with a black non-reflective legend. Sheeting for the OTLD shall be retroreflective Type B_{FL} or Type C_{FL} conforming to Departmental Material Specification DMS-8300, unless noted otherwise. The legend shall meet the requirements of DMS-8300.

OPPOSING TRAFFIC LANE DIVIDERS (OTLD)

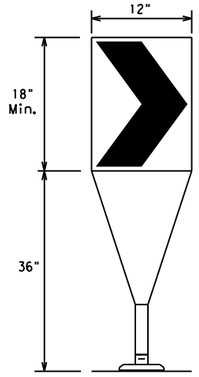

Fixed Base w/ Approved Adhesive (Driveable Base, or Flexible Support can be used)

1. The chevron shall be a vertical rectangle with a minimum size of 12 by 18 inches.
2. Chevrons are intended to give notice of a sharp change of alignment with the direction of travel and provide additional emphasis and guidance for vehicle operators with regard to changes in horizontal alignment of the roadway.
3. Chevrons, when used, shall be erected on the outside of a sharp curve or turn, or on the far side of an intersection. They shall be in line with and at right angles to approaching traffic. Spacing should be such that the motorist always has three in view, until the change in alignment eliminates its need.
4. To be effective, the chevron should be visible for at least 500 feet.
5. Chevrons shall be orange with a black nonreflective legend. Sheeting for the chevron shall be retroreflective Type B_{FL} or Type C_{FL} conforming to Departmental Material Specification DMS-8300, unless noted otherwise. The legend shall meet the requirements of DMS-8300.
6. For Long Term Stationary use on tapers or transitions on freeways and divided highways, self-righting chevrons may be used to supplement plastic drums but not to replace plastic drums.

CHEVRONS

GENERAL NOTES

1. Work Zone channelizing devices illustrated on this sheet may be installed in close proximity to traffic and are suitable for use on high or low speed roadways. The Engineer/Inspector shall ensure that spacing and placement is uniform and in accordance with the "Texas Manual on Uniform Traffic Control Devices" (TMUTCD).
2. Channelizing devices shown on this sheet may have a driveable, fixed or portable base. The requirement for self-righting channelizing devices must be specified in the General Notes or other plan sheets.
3. Channelizing devices on self-righting supports should be used in work zone areas where channelizing devices are frequently impacted by errant vehicles or vehicle related wind gusts making alignment of the channelizing devices difficult to maintain. Locations of these devices shall be detailed elsewhere in the plans. These devices shall conform to the TMUTCD and the "Compliant Work Zone Traffic Control Devices List" (CWZTCD).
4. The Contractor shall maintain devices in a clean condition and replace damaged, nonreflective, faded, or broken devices and bases as required by the Engineer/Inspector. The Contractor shall be required to maintain proper device spacing and alignment.
5. Portable bases shall be fabricated from virgin and/or recycled rubber. The portable bases shall weigh a minimum of 30 lbs.
6. Pavement surfaces shall be prepared in a manner that ensures proper bonding between the adhesives, the fixed mount bases and the pavement surface. Adhesives shall be prepared and applied according to the manufacturer's recommendations.
7. The installation and removal of channelizing devices shall not cause detrimental effects to the final pavement surfaces, including pavement surface discoloration or surface integrity. Driveable bases shall not be permitted on final pavement surfaces. The Engineer/Inspector shall approve all application and removal procedures of fixed bases.

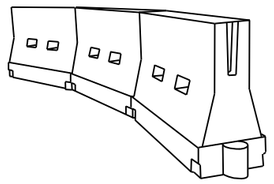

LONGITUDINAL CHANNELIZING DEVICES (LCD)

1. LCDs are crashworthy, lightweight, deformable devices that are highly visible, have good target value and can be connected together. They are not designed to contain or redirect a vehicle on impact.
2. LCDs may be used instead of a line of cones or drums.
3. LCDs shall be placed in accordance to application and installation requirements specific to the device, and used only when shown on the CWZTCD list.
4. LCDs should not be used to provide positive protection for obstacles, pedestrians or workers.
5. LCDs shall be supplemented with retroreflective delineation as required for temporary barriers on BC(7) when placed roughly parallel to the travel lanes.
6. LCDs used as barricades placed perpendicular to traffic should have at least one row of reflective sheeting meeting the requirements for barricade rails as shown on BC(10). Place reflective sheeting near the top of the LCD along the full length of the device.

WATER BALLASTED SYSTEMS USED AS BARRIERS

1. Water ballasted systems used as barriers shall not be used solely to channelize road users, but also to protect the work space per the appropriate Manual for Assessing Safety Hardware (MASH) crashworthiness requirements based on roadway speed and barrier application.
2. Water ballasted systems used to channelize vehicular traffic shall be supplemented with retroreflective delineation or channelizing devices to improve daytime/nighttime visibility. They may also be supplemented with pavement markings.
3. Water ballasted systems used as barriers shall be placed in accordance to application and installation requirements specific to the device, and used only when shown on the CWZTCD list.
4. Water ballasted systems used as barriers should not be used for a merging taper except in low speed (less than 45 MPH) urban areas. When used on a taper in a low speed urban area, the taper shall be delineated and the taper length should be designed to optimize road user operations considering the available geometric conditions.
5. When water ballasted systems used as barriers have blunt ends exposed to traffic, they should be attenuated as per manufacturer recommendations or flared to a point outside the clear zone.

If used to channelize pedestrians, longitudinal channelizing devices or water ballasted systems must have a continuous detectable bottom for users of long canes and the top of the unit shall not be less than 32 inches in height.

HOLLOW OR WATER BALLASTED SYSTEMS USED AS LONGITUDINAL CHANNELIZING DEVICES OR BARRIERS

Posted Speed	Formula	Minimum Desirable Taper Lengths ** 10' Offset	11' Offset	12' Offset	Suggested Maximum Spacing of Channelizing Devices On a Taper	On a Tangent
30	$L = \frac{WS^2}{60}$	150'	165'	180'	30'	60'
35		205'	225'	245'	35'	70'
40		265'	295'	320'	40'	80'
45	L = WS	450'	495'	540'	45'	90'
50		500'	550'	600'	50'	100'
55		550'	605'	660'	55'	110'
60		600'	660'	720'	60'	120'
65		650'	715'	780'	65'	130'
70		700'	770'	840'	70'	140'
75		750'	825'	900'	75'	150'
80		800'	880'	960'	80'	160'

** Taper lengths have been rounded off.
L=Length of Taper (FT.) W=Width of Offset (FT.)
S=Posted Speed (MPH)

SUGGESTED MAXIMUM SPACING OF CHANNELIZING DEVICES AND MINIMUM DESIRABLE TAPER LENGTHS

Texas Department of Transportation | Traffic Safety Division Standard

BARRICADE AND CONSTRUCTION CHANNELIZING DEVICES

BC(9)-21

FILE: bc-21.dgn	DN: TxDOT	CK: TxDOT	DW: TxDOT	CK: TxDOT
© TxDOT November 2002	CONT	SECT	JOB	HIGHWAY
REVISIONS	0914	05	222	RM 2243
9-07 8-14	DIST	COUNTY		SHEET NO.
7-13 5-21	AUS	WILLIAMSON		78

DISCLAIMER:
The use of this standard is governed by the "Texas Engineering Practice Act". No warranty of any kind is made by TxDOT for any purpose whatsoever. TxDOT assumes no responsibility for the conversion of this standard to other formats or for incorrect results or damages resulting from its use.

DATE: 4/10/2025 12:54:15 PM
FILE: G:\TxC\Projects\County_Williamson\7473-02 RM 2243 Phase 1A\03_CADD\01_Shts\02-TCP\Stds\bc-21.dgn

TYPE 3 BARRICADES

1. Refer to the Compliant Work Zone Traffic Control Devices List (CWZTCD) for details of the Type 3 Barricades and a list of all materials used in the construction of Type 3 Barricades.
2. Type 3 Barricades shall be used at each end of construction projects closed to all traffic.
3. Barricades extending across a roadway should have stripes that slope downward in the direction toward which traffic must turn in detouring. When both right and left turns are provided, the chevron striping may slope downward in both directions from the center of the barricade. Where no turns are provided at a closed road, striping should slope downward in both directions toward the center of roadway.
4. Striping of rails, for the right side of the roadway, should slope downward to the left. For the left side of the roadway, striping should slope downward to the right.
5. Identification markings may be shown only on the back of the barricade rails. The maximum height of letters and/or company logos used for identification shall be 1".
6. Barricades shall not be placed parallel to traffic unless an adequate clear zone is provided.
7. Warning lights shall NOT be installed on barricades.
8. Where barricades require the use of weights to keep from turning over, the use of sandbags with dry, cohesionless sand is recommended. The sandbags will be tied shut to keep the sand from spilling and to maintain a constant weight. Sand bags shall not be stacked in a manner that covers any portion of a barricade rails reflective sheeting. Rock, concrete, iron, steel or other solid objects will NOT be permitted. Sandbags should weigh a minimum of 35 lbs and a maximum of 50 lbs. Sandbags shall be made of a durable material that tears upon vehicular impact. Rubber (such as tire inner tubes) shall not be used for sandbags. Sandbags shall only be placed along or upon the base supports of the device and shall not be suspended above ground level or hung with rope, wire, chains or other fasteners.
9. Sheeting for barricades shall be retroreflective Type A or Type B conforming to Departmental Material Specification DMS-8300 unless otherwise noted.

Barricades shall NOT be used as a sign support.

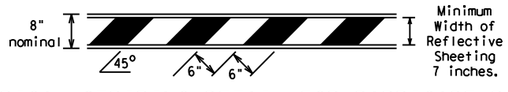

TYPICAL STRIPING DETAIL FOR BARRICADE RAIL

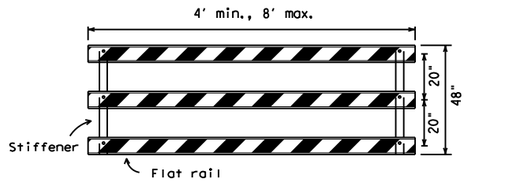

Stiffener may be inside or outside of support, but no more than 2 stiffeners shall be allowed on one barricade.

TYPICAL PANEL DETAIL FOR SKID OR POST TYPE BARRICADES

Each roadway of a divided highway shall be barricaded in the same manner.

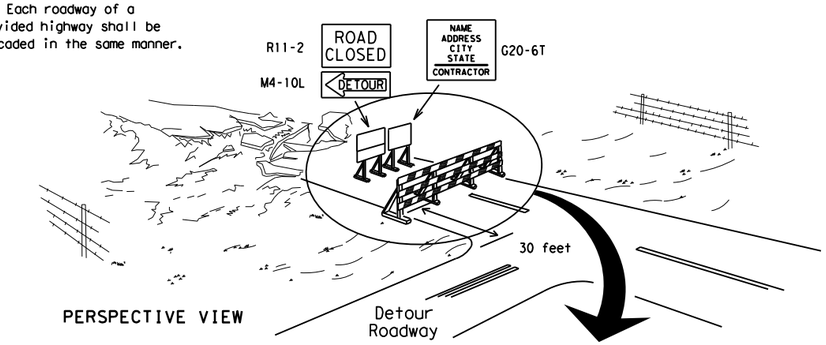

PERSPECTIVE VIEW

The three rails on Type 3 barricades shall be reflectorized orange and reflective white stripes on one side facing one-way traffic and both sides for two-way traffic.
Barricade striping should slant downward in the direction of detour.

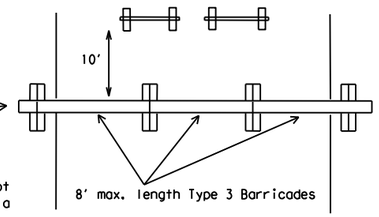

PLAN VIEW

1. Signs should be mounted on independent supports at a 7 foot mounting height in center of roadway. The signs should be a minimum of 10 feet behind Type 3 Barricades.
2. Advance signing shall be as specified elsewhere in the plans.

TYPE 3 BARRICADE (POST AND SKID) TYPICAL APPLICATION

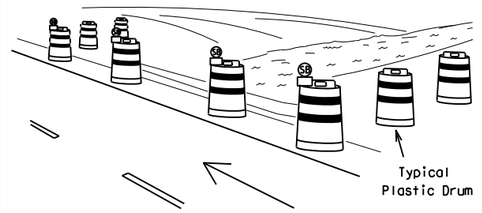

PERSPECTIVE VIEW

1. Where positive redirectional capability is provided, drums may be omitted.
2. Plastic construction fencing may be used with drums for safety as required in the plans.
3. Vertical Panels on flexible support may be substituted for drums when the shoulder width is less than 4 feet.
4. When the shoulder width is greater than 12 feet, steady-burn lights may be omitted if drums are used.
5. Drums must extend the length of the culvert widening.

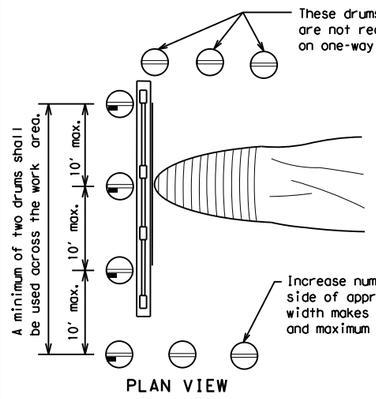

PLAN VIEW

LEGEND	
	Plastic drum
	Plastic drum with steady burn light or yellow warning reflector
SB	Steady burn warning light or yellow warning reflector

CULVERT WIDENING OR OTHER ISOLATED WORK WITHIN THE PROJECT LIMITS

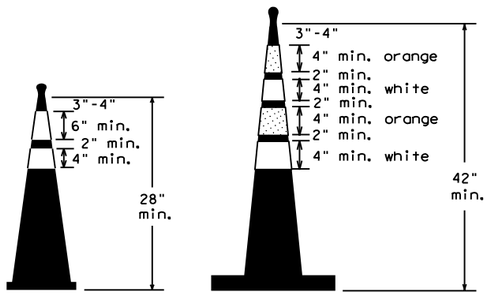

Two-Piece cones

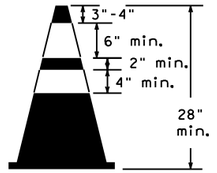

One-Piece cones

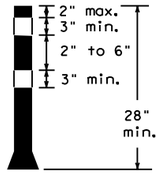

Tubular Marker

28" Cones shall have a minimum weight of 9 1/2 lbs.

42" 2-piece cones shall have a minimum weight of 30 lbs. including base.

1. Traffic cones and tubular markers shall be predominantly orange, and meet the height and weight requirements shown above.
2. One-piece cones have the body and base of the cone molded in one consolidated unit. Two-piece cones have a cone shaped body and a separate rubber base, or ballast, that is added to keep the device upright and in place.
3. Two-piece cones may have a handle or loop extending up to 8" above the minimum height shown, in order to aid in retrieving the device.
4. Cones or tubular markers shall have white or white and orange reflective bands as shown above. The reflective bands shall have a smooth, sealed outer surface and meet the requirements of Departmental Material Specification DMS-8300 Type A or Type B.
5. 28" cones and tubular markers are generally suitable for short duration and short-term stationary work as defined on BC(4). These should not be used for intermediate-term or long-term stationary work unless personnel is on-site to maintain them in their proper upright position.
6. 42" two-piece cones, vertical panels or drums are suitable for all work zone durations.
7. Cones or tubular markers used on each project should be of the same size and shape.

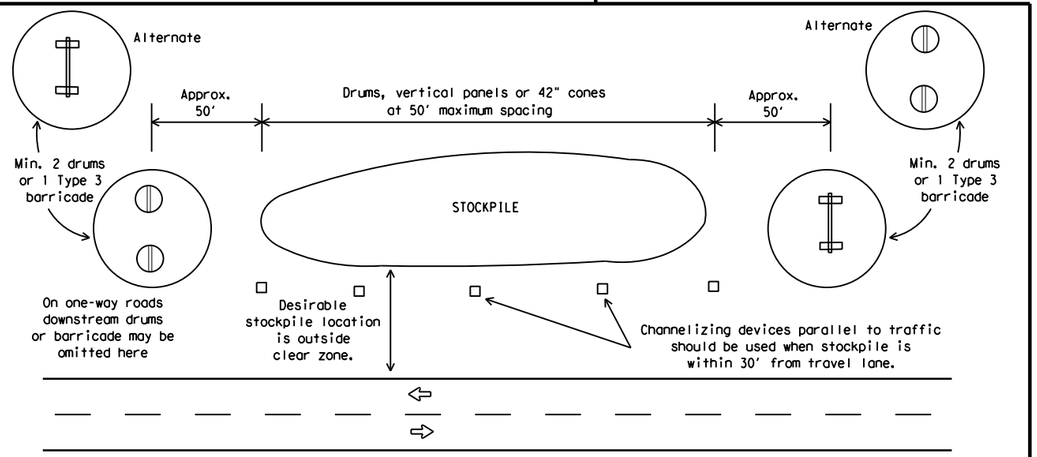

TRAFFIC CONTROL FOR MATERIAL STOCKPILES

SHEET 10 OF 12

Texas Department of Transportation

Traffic Safety Division Standard

BARRICADE AND CONSTRUCTION CHANNELIZING DEVICES

BC(10)-21

FILE: bc-21.dgn	DN: TxDOT	CK: TxDOT	DW: TxDOT	CK: TxDOT
© TxDOT November 2002	CONT	SECT	JOB	HIGHWAY
REVISIONS	0914	05	222	RM 2243
9-07 8-14	DIST	COUNTY		SHEET NO.
7-13 5-21	AUS	WILLIAMSON		79

104

DISCLAIMER:
The use of this standard is governed by the "Texas Engineering Practice Act". No warranty of any kind is made by TxDOT for any purpose whatsoever. TxDOT assumes no responsibility for the conversion of this standard to other formats or for incorrect results or damages resulting from its use.

DATE: 4/10/2025 12:54:16 PM
FILE: G:\TXC\Projects\County_Williamson\7473-02 RM 2243 Phase 1A\03_CADD\01_Shts\02-TCP\Stds\bc-21.dgn

WORK ZONE PAVEMENT MARKINGS

GENERAL

1. The Contractor shall be responsible for maintaining work zone and existing pavement markings, in accordance with the standard specifications and special provisions, on all roadways open to traffic within the CSJ limits unless otherwise stated in the plans.
2. Color, patterns and dimensions shall be in conformance with the "Texas Manual on Uniform Traffic Control Devices" (TMUTCD).
3. Additional supplemental pavement marking details may be found in the plans or specifications.
4. Pavement markings shall be installed in accordance with the TMUTCD and as shown on the plans.
5. When short term markings are required on the plans, short term markings shall conform with the TMUTCD, the plans and details as shown on the Standard Plan Sheet WZ(STPM).
6. When standard pavement markings are not in place and the roadway is opened to traffic, DO NOT PASS signs shall be erected to mark the beginning of the sections where passing is prohibited and PASS WITH CARE signs at the beginning of sections where passing is permitted.
7. All work zone pavement markings shall be installed in accordance with Item 662, "Work Zone Pavement Markings."

RAISED PAVEMENT MARKERS

1. Raised pavement markers are to be placed according to the patterns on BC(12).
2. All raised pavement markers used for work zone markings shall meet the requirements of Item 672, "RAISED PAVEMENT MARKERS" and Departmental Material Specification DMS-4200 or DMS-4300.

PREFABRICATED PAVEMENT MARKINGS

1. Removable prefabricated pavement markings shall meet the requirements of DMS-8241.
2. Non-removable prefabricated pavement markings (foil back) shall meet the requirements of DMS-8240.

MAINTAINING WORK ZONE PAVEMENT MARKINGS

1. The Contractor will be responsible for maintaining work zone pavement markings within the work limits.
2. Work zone pavement markings shall be inspected in accordance with the frequency and reporting requirements of work zone traffic control device inspections as required by Form 599.
3. The markings should provide a visible reference for a minimum distance of 300 feet during normal daylight hours and 160 feet when illuminated by automobile low-beam headlights at night, unless sight distance is restricted by roadway geometrics.
4. Markings failing to meet this criteria within the first 30 days after placement shall be replaced at the expense of the Contractor as per Specification Item 662.

REMOVAL OF PAVEMENT MARKINGS

1. Pavement markings that are no longer applicable, could create confusion or direct a motorist toward or into the closed portion of the roadway shall be removed or obliterated before the roadway is opened to traffic.
2. The above shall not apply to detours in place for less than three days, where flaggers and/or sufficient channelizing devices are used in lieu of markings to outline the detour route.
3. Pavement markings shall be removed to the fullest extent possible, so as not to leave a discernable marking. This shall be by any method approved by TxDOT Specification Item 677 for "Eliminating Existing Pavement Markings and Markers".
4. The removal of pavement markings may require resurfacing or seal coating portions of the roadway as described in Item 677.
5. Subject to the approval of the Engineer, any method that proves to be successful on a particular type pavement may be used.
6. Blast cleaning may be used but will not be required unless specifically shown in the plans.
7. Over-painting of the markings SHALL NOT BE permitted.
8. Removal of raised pavement markers shall be as directed by the Engineer.
9. Removal of existing pavement markings and markers will be paid for directly in accordance with Item 677, "ELIMINATING EXISTING PAVEMENT MARKINGS AND MARKERS," unless otherwise stated in the plans.
10. Black-out marking tape may be used to cover conflicting existing markings for periods less than two weeks when approved by the Engineer.

Temporary Flexible-Reflective Roadway Marker Tabs

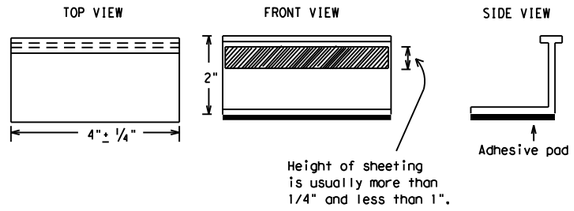

STAPLES OR NAILS SHALL NOT BE USED TO SECURE TEMPORARY FLEXIBLE-REFLECTIVE ROADWAY MARKER TABS TO THE PAVEMENT SURFACE

1. Temporary flexible-reflective roadway marker tabs used as guidemarks shall meet the requirements of DMS-8242.
2. Tabs detailed on this sheet are to be inspected and accepted by the Engineer or designated representative. Sampling and testing is not normally required, however at the option of the Engineer, either "A" or "B" below may be imposed to assure quality before placement on the roadway.
   A. Select five (5) or more tabs at random from each lot or shipment and submit to the Construction Division, Materials and Pavement Section to determine specification compliance.
   B. Select five (5) tabs and perform the following test. Affix five (5) tabs at 24 inch intervals on an asphaltic pavement in a straight line. Using a medium size passenger vehicle or pickup, run over the markers with the front and rear tires at a speed of 35 to 40 miles per hour, four (4) times in each direction. No more than one (1) out of the five (5) reflective surfaces shall be lost or displaced as a result of this test.
3. Small design variances may be noted between tab manufacturers.
4. See Standard Sheet WZ(STPM) for tab placement on new pavements. See Standard Sheet TCP(7-1) for tab placement on seal coat work.

RAISED PAVEMENT MARKERS USED AS GUIDEMARKS

1. Raised pavement markers used as guidemarks shall be from the approved product list, and meet the requirements of DMS-4200.
2. All temporary construction raised pavement markers provided on a project shall be of the same manufacturer.
3. Adhesive for guidemarks shall be bituminous material hot applied or butyl rubber pad for all surfaces, or thermoplastic for concrete surfaces.

Guidemarks shall be designated as:
YELLOW - (two amber reflective surfaces with yellow body).
WHITE - (one silver reflective surface with white body).

DEPARTMENTAL MATERIAL SPECIFICATIONS	
PAVEMENT MARKERS (REFLECTORIZED)	DMS-4200
TRAFFIC BUTTONS	DMS-4300
EPOXY AND ADHESIVES	DMS-6100
BITUMINOUS ADHESIVE FOR PAVEMENT MARKERS	DMS-6130
PERMANENT PREFABRICATED PAVEMENT MARKINGS	DMS-8240
TEMPORARY REMOVABLE, PREFABRICATED PAVEMENT MARKINGS	DMS-8241
TEMPORARY FLEXIBLE, REFLECTIVE ROADWAY MARKER TABS	DMS-8242

A list of prequalified reflective raised pavement markers, non-reflective traffic buttons, roadway marker tabs and other pavement markings can be found at the Material Producer List web address shown on BC(1).

Texas Department of Transportation

Traffic Safety Division Standard

BARRICADE AND CONSTRUCTION PAVEMENT MARKINGS

BC(11)-21

FILE: bc-21.dgn	DN: TxDOT	CK: TxDOT	DW: TxDOT	CK: TxDOT
© TxDOT February 1998	CONT	SECT	JOB	HIGHWAY
REVISIONS	0914	05	222	RM 2243
2-98 9-07 5-21	DIST	COUNTY		SHEET NO.
1-02 7-13	AUS	WILLIAMSON		80
11-02 8-14				

DISCLAIMER:
The use of this standard is governed by the "Texas Engineering Practice Act". No warranty of any kind is made by TxDOT for any purpose whatsoever. TxDOT assumes no responsibility for the conversion of this standard to other formats or for incorrect results or damages resulting from its use.

DATE: 4/10/2025 12:54:16 PM
FILE: G:\TXC\Projects\County_Williamson\7473-02 RM 2243 Phase 1A\03_CADD\01_Shts\02-TCP\Sts\bc-21.dgn

PAVEMENT MARKING PATTERNS

REFLECTORIZED PAVEMENT MARKINGS - PATTERN A

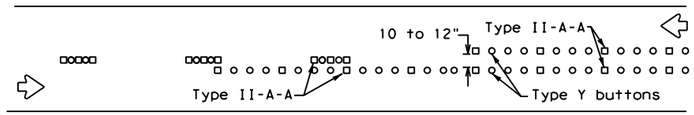

RAISED PAVEMENT MARKERS - PATTERN A

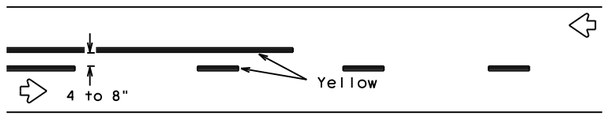

REFLECTORIZED PAVEMENT MARKINGS - PATTERN B

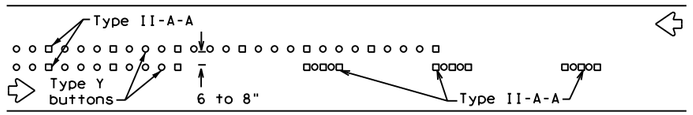

RAISED PAVEMENT MARKERS - PATTERN B

Pattern A is the TXDOT Standard, however Pattern B may be used if approved by the Engineer.
Prefabricated markings may be substituted for reflectorized pavement markings.

CENTER LINE & NO-PASSING ZONE BARRIER LINES FOR TWO-LANE, TWO-WAY HIGHWAYS

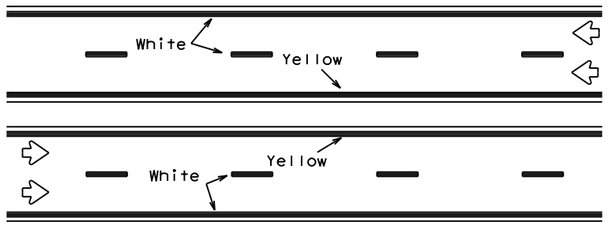

REFLECTORIZED PAVEMENT MARKINGS

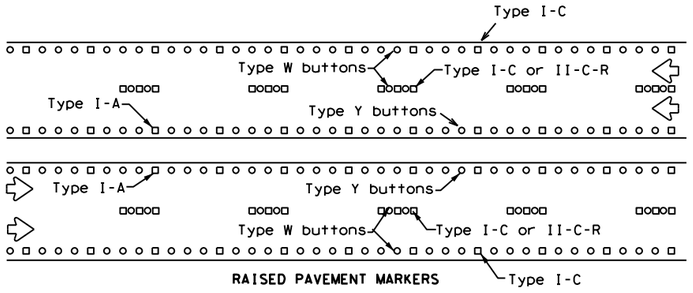

RAISED PAVEMENT MARKERS

Prefabricated markings may be substituted for reflectorized pavement markings.

EDGE & LANE LINES FOR DIVIDED HIGHWAY

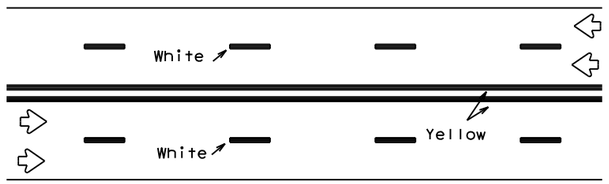

REFLECTORIZED PAVEMENT MARKINGS

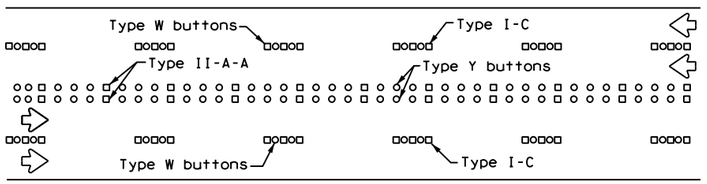

RAISED PAVEMENT MARKERS

Prefabricated markings may be substituted for reflectorized pavement markings.

LANE & CENTER LINES FOR MULTILANE UNDIVIDED HIGHWAYS

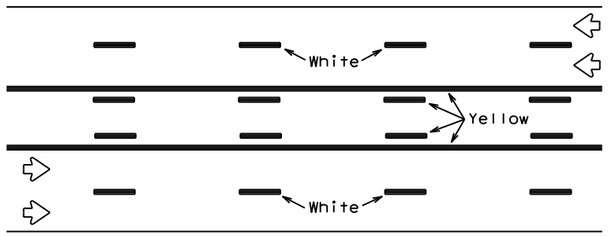

REFLECTORIZED PAVEMENT MARKINGS

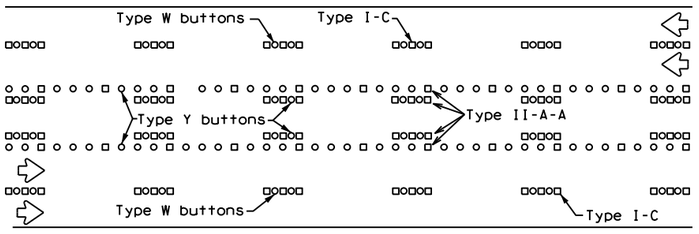

RAISED PAVEMENT MARKERS

Prefabricated markings may be substituted for reflectorized pavement markings.

TWO-WAY LEFT TURN LANE

STANDARD WORK ZONE PAVEMENT MARKINGS DETAILS

SOLID LINES

DOUBLE NO-PASSING LINE

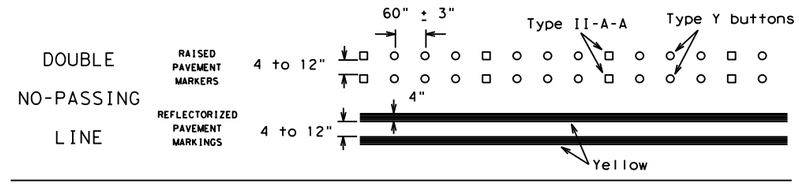

EDGE LINE OR SINGLE NO-PASSING LINE

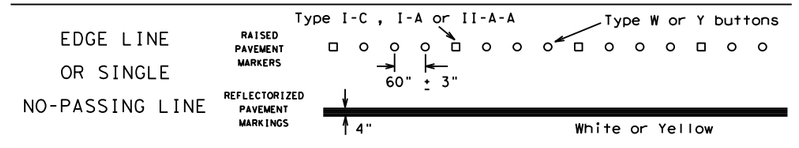

WIDE LINE

(FOR LEFT TURN CHANNELIZING LINE OR CHANNELIZING LINE USED TO DISCOURAGE LANE CHANGING.)

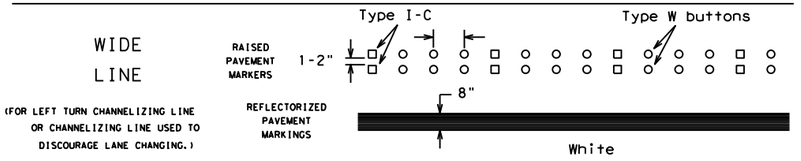

BROKEN LINES

CENTER LINE OR LANE LINE

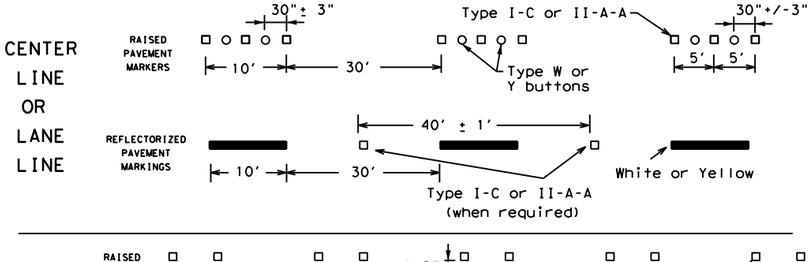

AUXILIARY OR LANEDROP LINE

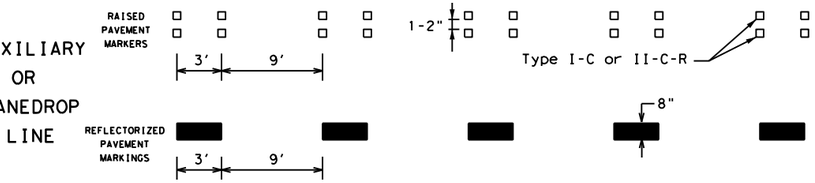

REMOVABLE MARKINGS WITH RAISED PAVEMENT MARKERS

If raised pavement markers are used to supplement REMOVABLE markings, the markers shall be applied to the top of the tape at the approximate mid length of tape used for broken lines or at 20 foot spacing for solid lines. This allows an easier removal of raised pavement markers and tape.

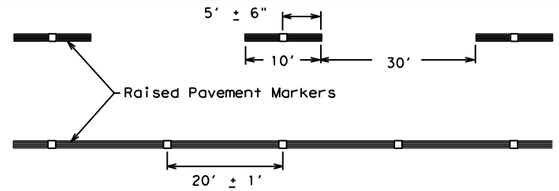

Centerline only - not to be used on edge lines

Raised pavement markers used as standard pavement markings shall be from the approved products list and meet the requirements of Item 672 "RAISED PAVEMENT MARKERS."

Texas Department of Transportation

Traffic Safety Division Standard

BARRICADE AND CONSTRUCTION PAVEMENT MARKING PATTERNS

BC(12)-21

FILE: bc-21.dgn	DN: TxDOT	CK: TxDOT	DW: TxDOT	CK: TxDOT
© TxDOT February 1998	CONT	SECT	JOB	HIGHWAY
REVISIONS 1-97 9-07 5-21 2-98 7-13 11-02 8-14	0914	05	222	RM 2243
	DIST	COUNTY		SHEET NO.
	AUS	WILLIAMSON		81

DISCLAIMER:
The use of this standard is governed by the "Texas Engineering Practice Act". No warranty of any kind is made by TxDOT for any purpose whatsoever. TxDOT assumes no responsibility for the conversion of this standard to other formats or for incorrect results or damages resulting from its use.

DATE: 4/10/2025
FILE: G:\TXC\Projects\County_Williamson\7473-02 RM 2243 Phase 1A\03_CADD\01_Shts\02-TCP\Stds\lpcb13.dgn

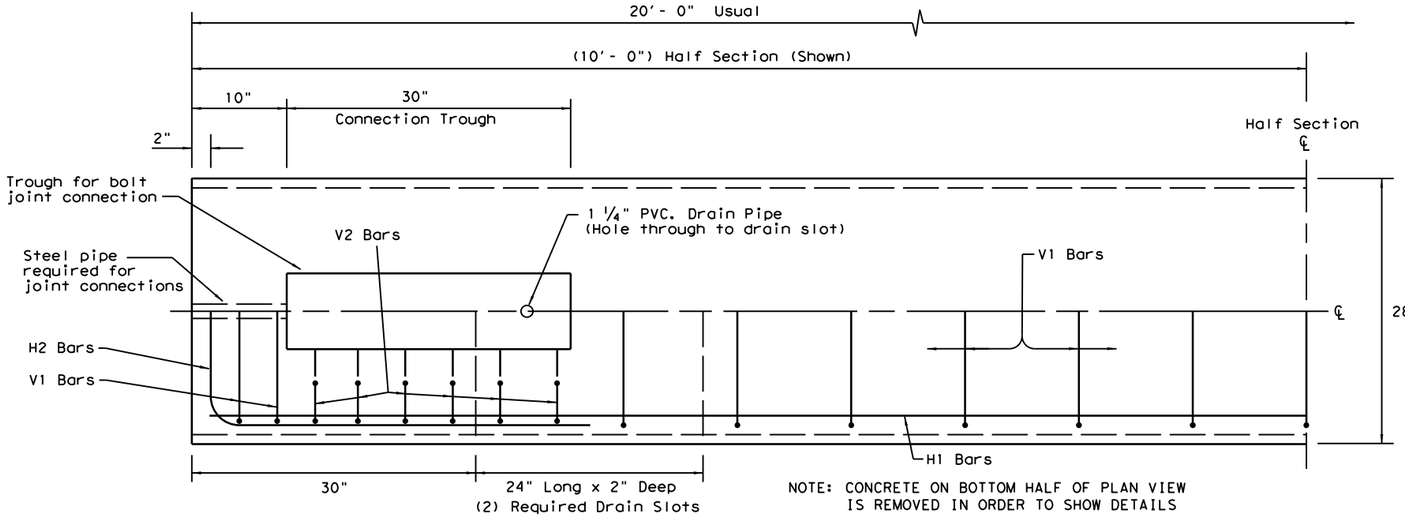

PLAN
(TYPE 1) BARRIER SEGMENT
(SYMMETRICAL ABOUT CENTER LINES)

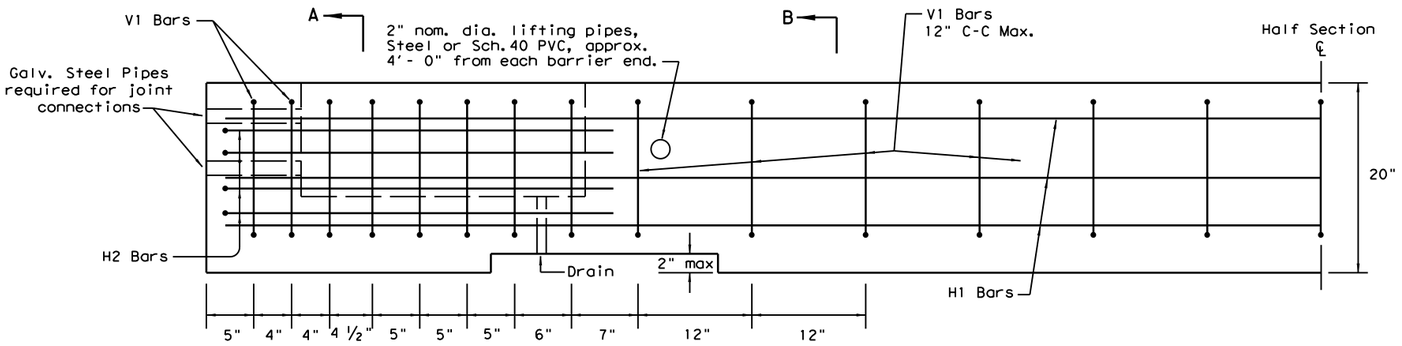

ELEVATION
(TYPE 1) BARRIER SEGMENT
(SYMMETRICAL ABOUT CENTER LINES)

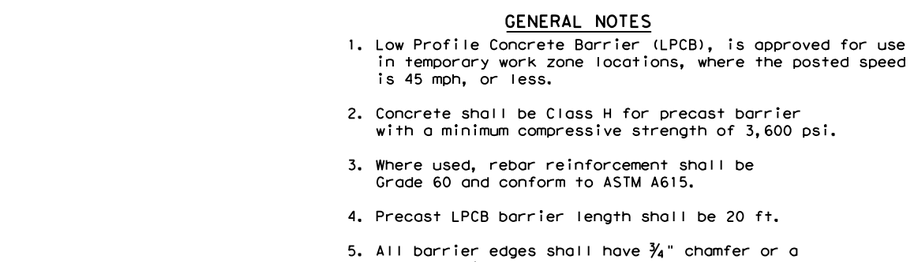

REINFORCING STEEL DETAILS
TYPE 1 - BARRIER SEGMENT

Note: Use 2" Dia. Bending Pin, unless otherwise shown

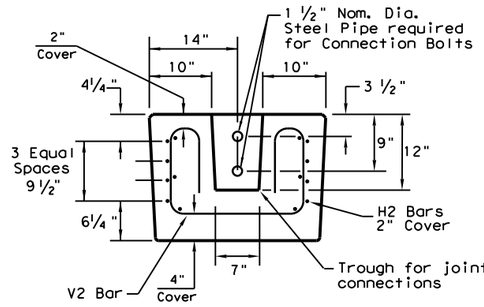

SECTION A-A

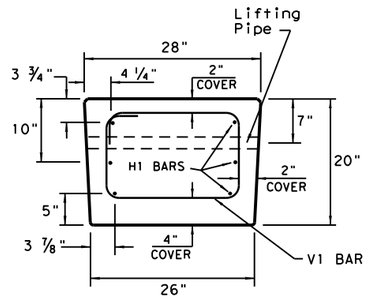

SECTION B-B

GENERAL NOTES

1. Low Profile Concrete Barrier (LPCB), is approved for use in temporary work zone locations, where the posted speed is 45 mph, or less.
2. Concrete shall be Class H for precast barrier with a minimum compressive strength of 3,600 psi.
3. Where used, rebar reinforcement shall be Grade 60 and conform to ASTM A615.
4. Precast LPCB barrier length shall be 20 ft.
5. All barrier edges shall have ¾" chamfer or a tooled radius.
6. Joint connection hardware shall be in accordance with Item 449, "Anchor Bolts." and is considered subsidiary.
7. Steel pipe required for joint connection bolts shall be galvanized in accordance with Item 445, "Galvanizing."
8. Welded wire reinforcement (WWR) may be used in lieu of conventional reinforcement for Type 1 barrier, and shall meet the requirements shown.

FOR CONTRACTORS INFORMATION ONLY

(TYPE 1) APPROX. QUANTITIES 20 FT. SECTION		
CONCRETE	CY	2.6
REINFORCING STEEL	LBS	330
TOTAL BARRIER WT.	LBS	11000

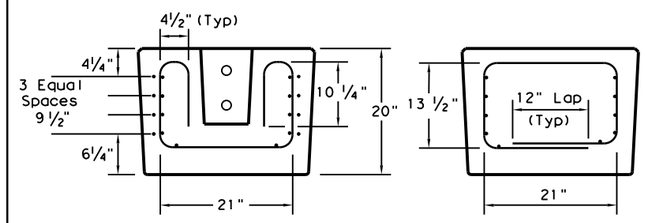

SECTION A-A SECTION B-B

(WWR) GENERAL NOTES

1. Deformed Welded Wire Reinforcement shall conform to ASTM A497.
2. Welded wire cage may be cut or bent, if necessary, but must be approved by the Engineer.
3. Combinations of reinforcing steel and WWR are permitted, as directed by the Engineer. The dimensions from the end of the barrier section to the first wire shall not exceed 3".

REQUIRED (WWR) WIRE DESIGN

8 ~ (D31) Horizontal Wires (Equally spaced)
10 ~ (D20) Horizontal Wires (Equally spaced)
29 ~ (D20) Vertical Wires (Spaced as shown in Elevation View)

WELDED WIRE REINFORCEMENT (WWR)- OPTIONAL REINFORCING

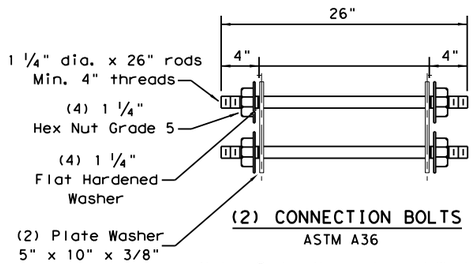

(2) CONNECTION BOLTS
ASTM A36

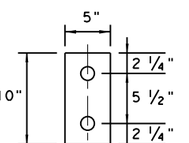

PLATE WASHER
5" x 10" x ⅜"

Note: Rods, Hex nuts and Washers shall be Galvanized.

SHEET 1 OF 2

Texas Department of Transportation — Design Division Standard

LOW PROFILE CONCRETE BARRIER
PRECAST BARRIER (TYPE 1)
LPCB-13

FILE: lpcb13.dgn	DN: TxDOT	CK: AM	DW: VP	CK:
©TxDOT December 2010	CONT	SECT	JOB	HIGHWAY
REVISIONS	0914	05	222	RM 2243
	DIST	COUNTY		SHEET NO.
	AUS	WILLIAMSON		82

DISCLAIMER:
The use of this standard is governed by the "Texas Engineering Practice Act". No warranty of any kind is made by TxDOT for any purpose whatsoever. TxDOT assumes no responsibility for the conversion of this standard to other formats or for incorrect results or damages resulting from its use.

DATE: 4/10/2025
FILE: G:\TXC\Projects\County_Williamson\7473-02 RM 2243 Phase 1A\03_CADD\01_Shts\02-TCP\Stds\lpcb13.dgn

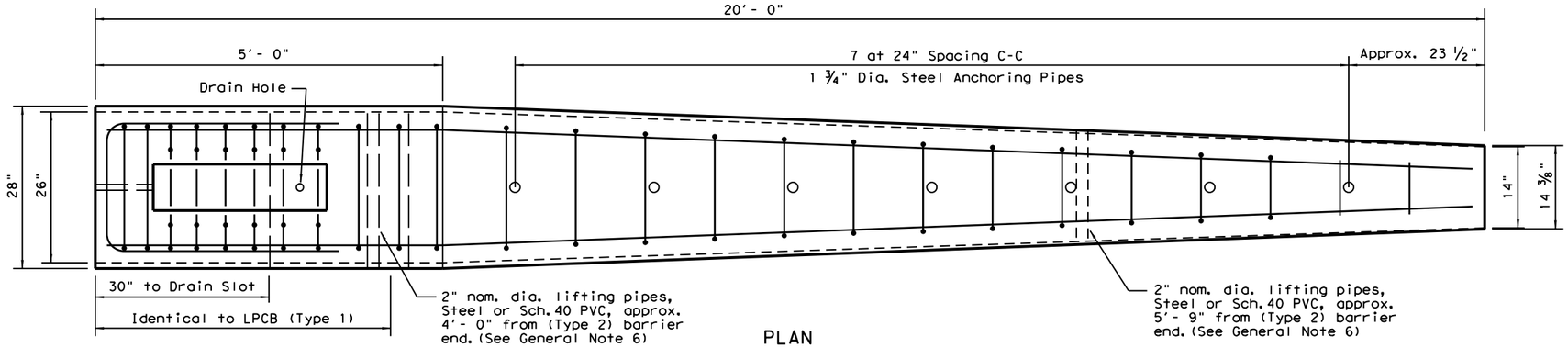

PLAN
(TYPE 2) END TERMINAL

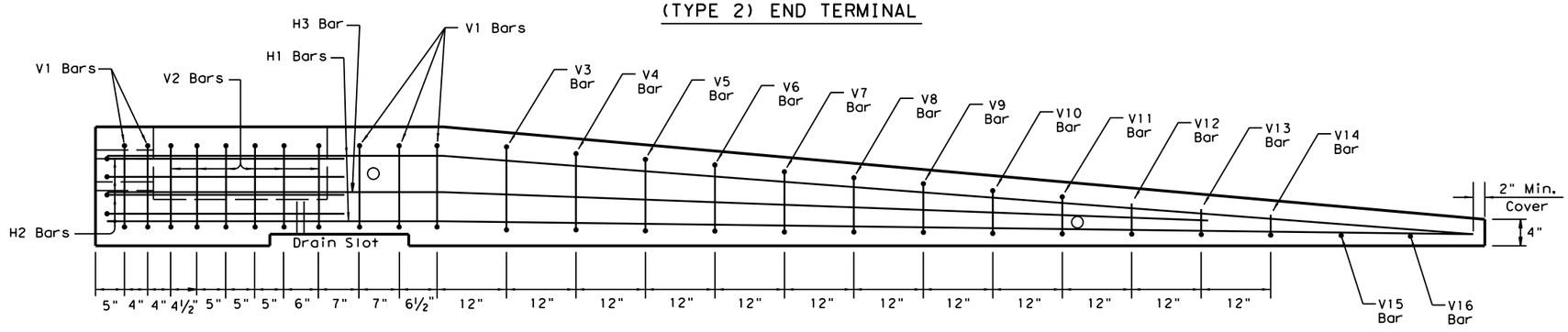

ELEVATION
(TYPE 2) END TERMINAL

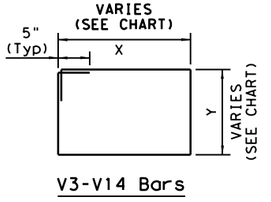

V3-V14 Bars

BAR (#4)	X (IN.)	Y (IN.)
V3 BAR	20 ¼	14 ½
V4 BAR	19 ½	13 ½
V5 BAR	18 ½	12 ¼
V6 BAR	17 ½	11 ¼
V7 BAR	17	10 ¼
V8 BAR	16 ¼	9
V9 BAR	15 ½	8
V10 BAR	14 ½	7
V11 BAR	13 ¾	6

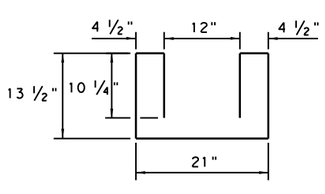

(6)~V2 Bars

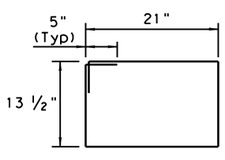

(5)~V1 Bars

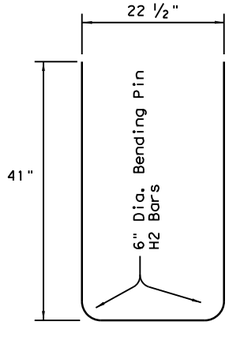

(4)~H2 Bars
(#5) Bars

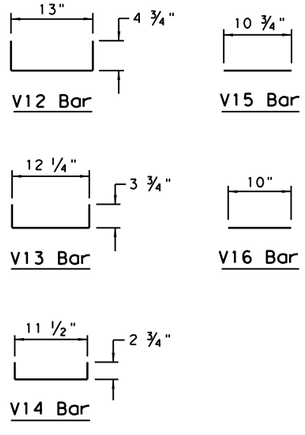

Note: All V Bars are (#4)

REINFORCING STEEL DETAILS
TYPE 2 - END TERMINAL

Note: Use 2" Dia. Bending Pin, unless otherwise shown

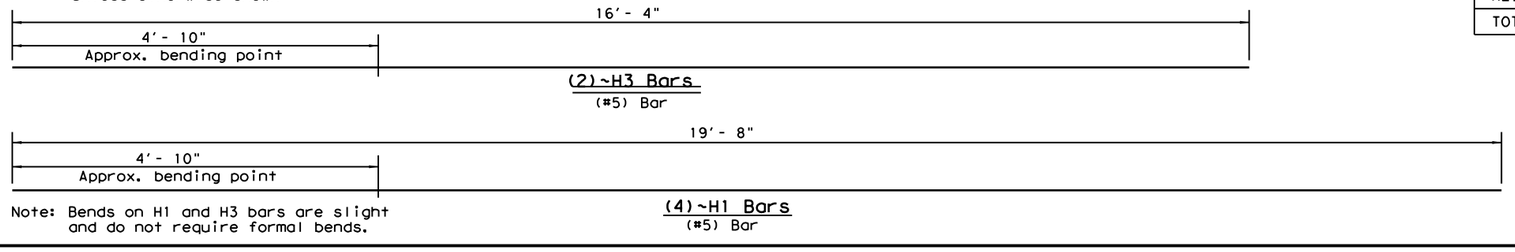

(2)~H3 Bars
(#5) Bar

Note: Bends on H1 and H3 bars are slight and do not require formal bends.

(4)~H1 Bars
(#5) Bar

Note:
Anchoring pipes not shown in Elevation View

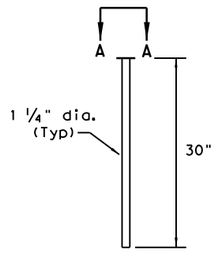

(7) Anchor Pins
ASTM A36 Steel
(See Note 3)

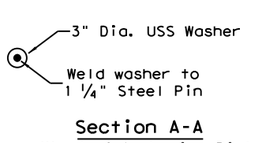

Section A-A
(Head of Anchoring Pin)

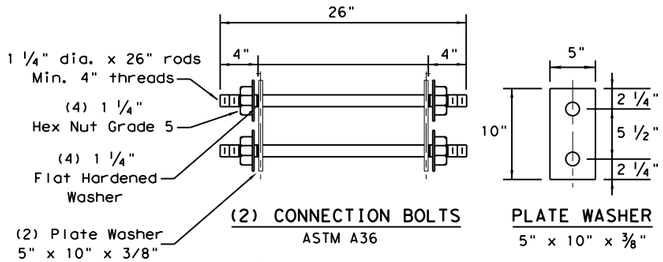

(2) CONNECTION BOLTS
ASTM A36

PLATE WASHER
5" x 10" x ⅜"

Note: Rods, Hex nuts and Washers shall be Galvanized.

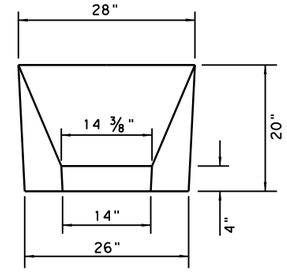

APPROACH VIEW

TYPE 2 - NOTES

1. Welded wire reinforcment (WWR) is "not" an option for Type 2 Barrier.
2. Type 2 Barrier shall be used as an end treatment for the Type 1 barrier segments, when applicable.
3. The end treatment can be used without the anchor pins in locations that can accommodate approximately 4 ft. of lateral displacement of the end treatment. The use of non-pinned end treatment does not affect the performance or the deflection of the Low-Profile barrier system.
4. The anchor pins are all the same length and are to be driven flush with the top of the (Type 2) barrier surface.
5. The bends in the H3 and H1 bars are slight, no formal bend is necessary.
6. The Type 2 barrier segment must be lifted from the rear first, to prevent cracking of sloped section.
7. See LPCB sheet 1 for additional information.

FOR CONTRACTORS INFORMATION ONLY

(TYPE 2) APPROX. QUANTITIES	20 FT. SECTION	
CONCRETE	CY	1.65
REINFORCING STEEL	LBS	240
TOTAL BARRIER WT.	LBS	7000

Texas Department of Transportation
Design Division Standard

LOW PROFILE CONCRETE BARRIER
PRECAST BARRIER (TYPE 2)
LPCB-13

FILE: lpcb13.dgn	DN: TxDOT	CK: AM	DW: VP	CK:
© TxDOT December 2010	CONT	SECT	JOB	HIGHWAY
REVISIONS	0914	05	222	RM 2243
	DIST	COUNTY		SHEET NO.
	AUS	WILLIAMSON		83

DISCLAIMER:
The use of this standard is governed by the "Texas Engineering Practice Act". No warranty of any kind is made by TxDOT for any purpose whatsoever. TxDOT assumes no responsibility for the conversion of this standard to other formats or for incorrect results or damages resulting from its use.

DATE: 4/10/2025
FILE: G:\TXC\Projects\County_Williamson\7473-02 RM 2243 Phase 1A\03_CADD\01_Shts\02-TCP\Stds\sscb210.dgn

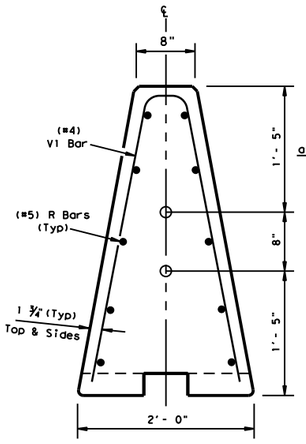

End View
Precast Barrier

Pipe locations for Joint Type X connection

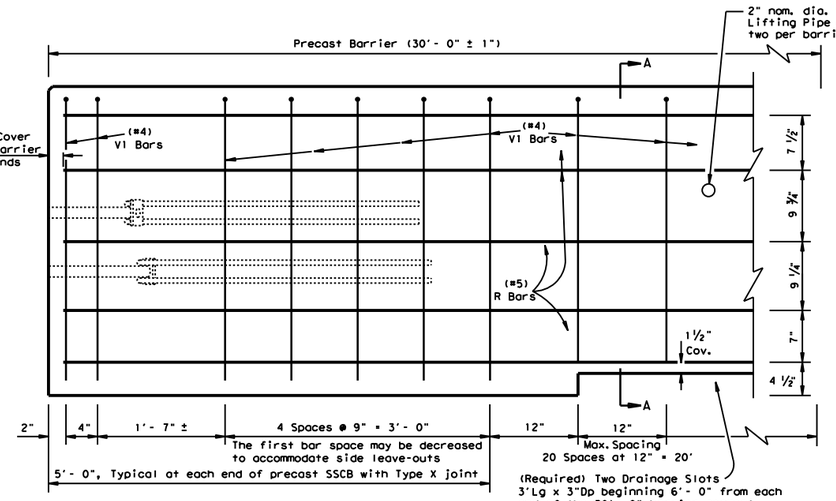

Reinforcement for Precast (SSCB)
Single Slope Concrete Barrier (Type 1)

Showing reinforcement for Joint Connection (Type X)

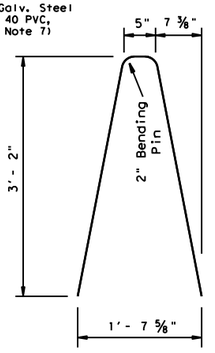

V1 Bar
#4 Rebar

Note:
V1 Bars above the drainage slots may bent to accomadate 1 ½" clear cover as directed by the Engineer.

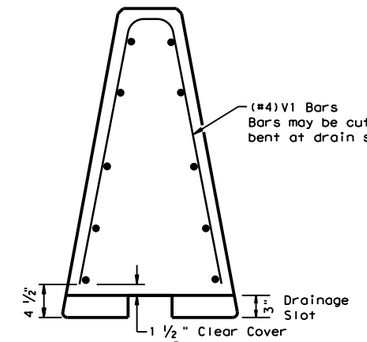

Section A-A
Steel Placement at (Required) Drainage Slots

All precast barrier edges shall have a ¾" chamfer or tooled radius.

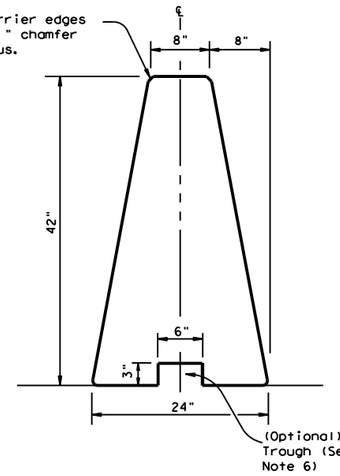

Single Slope Concrete Traffic Barrier

Precast SSCB barrier may be connected to cast-in-place SSBC. The joint connection "Types" may be used in the cast-in-place barrier, to match the precast barrier connection.

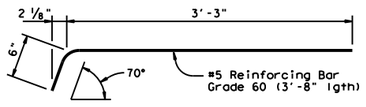

DEFORMED BAR ANCHOR DETAILS

Two (2) Bars required per assembly.
Eight (8) required per Joint.

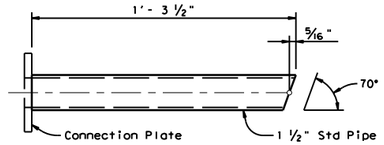

UPPER CONNECTION PIPE DETAILS

One (1) Steel Pipe required per Upper Assembly.
Two (2) required per Joint.

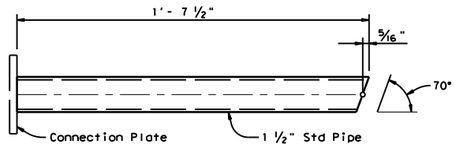

LOWER CONNECTION PIPE DETAILS

One (1) Steel Pipe required per Lower Assembly.
Two (2) required per Joint.

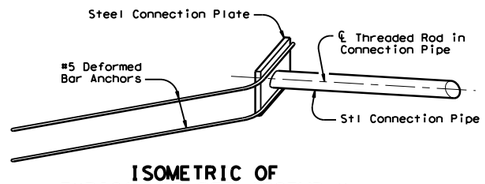

ISOMETRIC OF
TYPICAL WELDED ASSEMBLY

Four (4) [2 Upper & 2 Lower] Assemblies required per Joint.

General Notes

1. Concrete shall be Class H with a minimum compressive strength of 3,600 psi.
2. Where used, rebar reinforcement shall be Grade 60 and conform to ASTM A615.
3. Precast barrier length shall be 30 ft. unless otherwise specified on the plans.
4. All precast barrier edges shall have a ¾" chamfer or a tooled radius.
5. All concrete, reinforcement, joint connection systems, grout etc. as shown, are considered as part of the barrier payment.
6. Conduit trough when required shall be shown elsewhere on the plans, or as directed by the Engineer.
7. Regardless of the method of handling, barrier lifting points shall be approx. 7.5 feet from the ends of the barrier. Lifting devices and attachments to barrier sections shall be approved by the Engineer.
8. Surface finishing and grouting (where required) shall be two parts sand one part cement with enough water to make the mixture plastic. Grouting shall be done in a manner that will assure a smooth surface. Surface finishing shall be considered subsidiary to the various bid items.
9. All steel assemblies shall be galvanized after fabrication in accordance with Item 445, "Galvanizing."

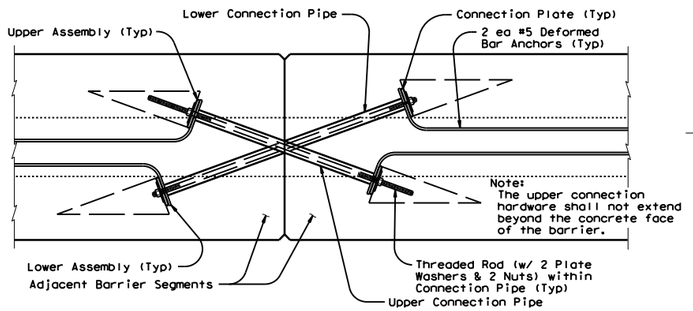

TYPE X JOINT INSTALLATION DETAIL

Barrier reinforcing and Type X Joint Leave-Out dimensions not shown for clarity.

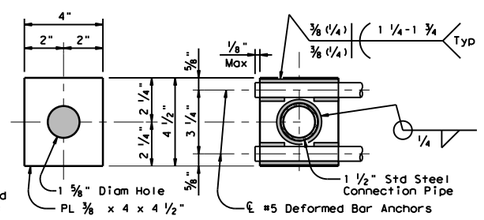

PLATE DIMENSIONS WELDING DETAILS

CONNECTION PLATE DETAILS

One (1) Plate required per assembly.
Four (4) required per Joint. All steel fittings for joint Type X shall be galvanized after fabrication in accordance with Item 445.

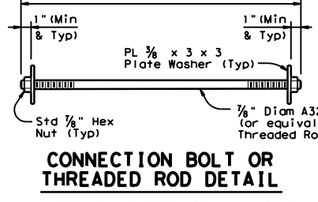

✳ The connection hardware shall not extend beyond the concrete face of the barrier. Hex head bolts may be provided. The proper length of all hardware should be verified.

CONNECTION BOLT OR
THREADED ROD DETAIL

Two (2) Threaded Rods (Or Equivalent Hex Hd. Bolts) (w/ Two (2) PL ⅜ x 3 x 3 Plate Washers & Two (2) Std Hex Nuts) required per Joint.

Weight of one precast 30 ft. (SSCB) segment = Approx. 10.5 Tons or 717 lbs per ft.

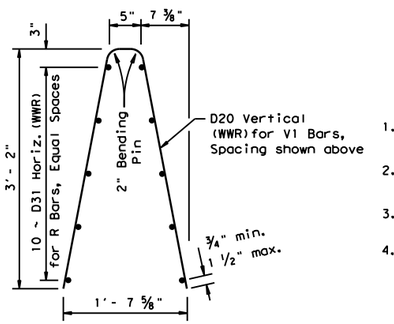

Welded Wire Reinforcement (WWR) Option for Bars R and V1

(WWR) General Notes

1. Deformed Welded Wire Reinforcement (WWR) shall conform to ASTM A497.
2. Welded wire cage may be cut or bent to accommodate the Type X joint connection and drainage slots, as directed by the Engineer.
3. All reinforcement shall comply with Item 440, "Reinforcing Steel."
4. Combinations of reinforcing steel and WWR will be permitted, as directed by the Engineer. The dimension from the end of the barrier section to the first wire shall not exceed 3".

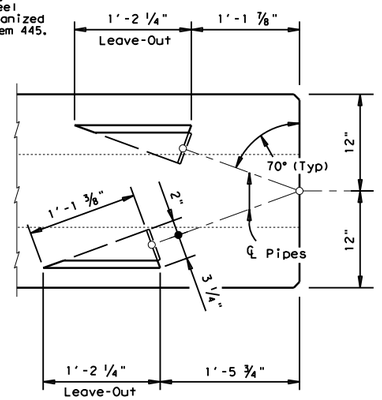

BARRIER PLAN AT JOINT

SHEET 1 OF 2

Texas Department of Transportation — Design Division Standard

SINGLE SLOPE CONCRETE BARRIER

PRECAST BARRIER
(TYPE 1)

SSCB(2)-10

FILE: sscb210.dgn	DN: TxDOT	CK: AM	DW: BD	CK:
©TxDOT December 2010	CONT	SECT	JOB	HIGHWAY
REVISIONS	0914	05	222	RM 2243
	DIST	COUNTY		SHEET NO.
	AUS	WILLIAMSON		84

DISCLAIMER:
The use of this standard is governed by the "Texas Engineering Practice Act". No warranty of any kind is made by TxDOT for any purpose whatsoever. TxDOT assumes no responsibility for the conversion of this standard to other formats or for incorrect results or damages resulting from its use.

DATE: 4/10/2025
FILE: G:\TXC\Projects\County_Williamson\7473-02 RM 2243 Phase 1A\03_CADD\01_Snts\02-TCP\Stds\sscb210.dgn

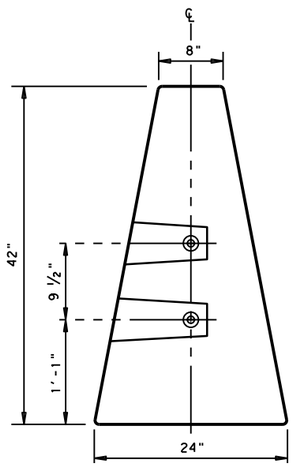

END VIEW
"QUICK-BOLT" POCKET LOCATIONS

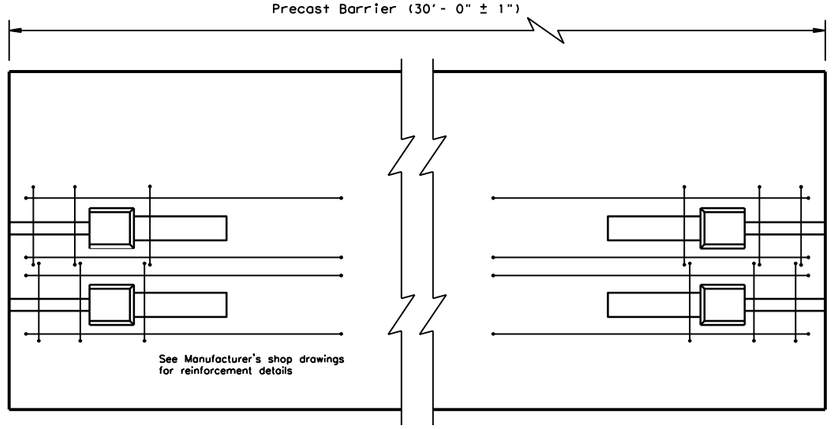

ELEVATION VIEW
"QUICK-BOLT" (SSCB)
See Manufacturer's shop drawing for additional details

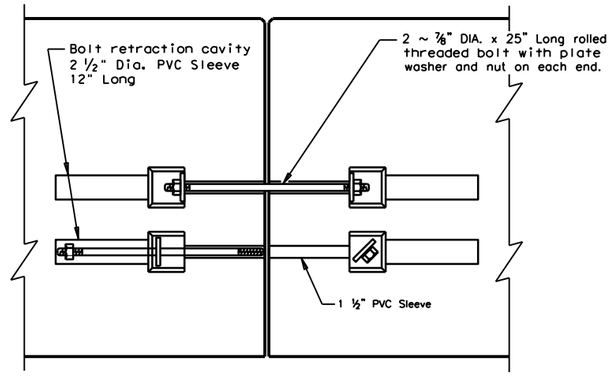

ELEVATION VIEW SHOWING JOINT CONNECTION
"QUICK-BOLT"

Joint Connection (Type Q)

TOP VIEW
PRECAST (SSCB) WITH J-J HOOKS
See Manufacturer's shop drawing for additional details

VIEW FROM ABOVE
J-J HOOK CONNECTION

END VIEW

Proprietary Joint Connections (SSCB)

Two proprietary joint connections are acceptable as alternates to the (Type X) connection shown, here on. These joint connections types are:

J-J Hooks by Easi-Set Industries, (800)547-4045
Quick-Bolt by Bexar Concrete, (210)497-3773

If one of these connection systems are exclusively specified in the plans, prior approval for sole source use must be obtained. Details of the connection components and barrier reinforcement for these systems, will be shown on the manufacturer's shop drawing(s) furnished to the Engineer.

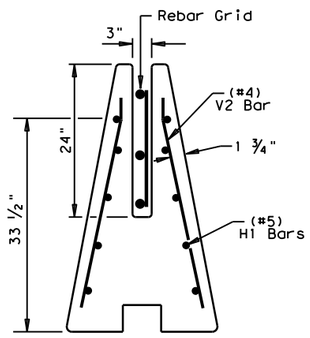

SECTION A-A
Showing (Type R) Rebar Grid

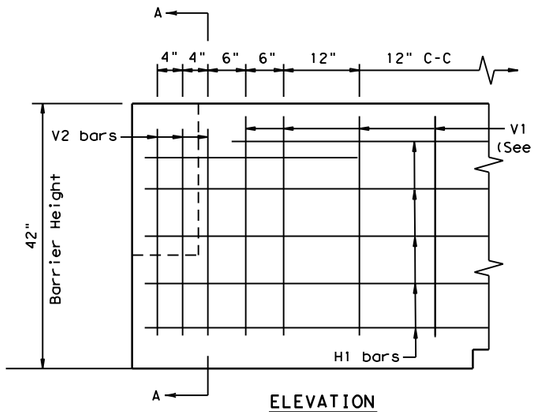

ELEVATION
V1 Bars (See Sheet 1)

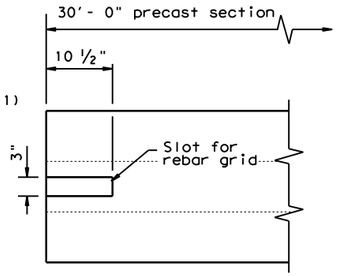

TOP VIEW
JOINT CONNECTION
Typical at both ends of barrier segment

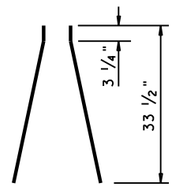

(#4) V2 BARS
6 ~ two piece bars per barrier segment

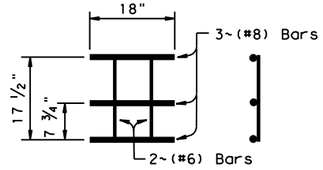

WELDED REBAR GRID

Joint Connection (Type R)

SHEET 2 OF 2

Texas Department of Transportation — Design Division Standard

SINGLE SLOPE CONCRETE BARRIER

PRECAST BARRIER
(TYPE 1)

SSCB(2)-10

FILE: sscb210.dgn	DN: TxDOT	CK: AM	DW: VP	CK:
©TxDOT December 2010	CONT	SECT	JOB	HIGHWAY
REVISIONS	0914	05	222	RM 2243
	DIST	COUNTY		SHEET NO.
	AUS	WILLIAMSON		85

DISCLAIMER:
THE USE OF THIS STANDARD IS GOVERNED BY THE "TEXAS ENGINEERING PRACTICE ACT". NO WARRANTY OF ANY KIND IS MADE BY TXDOT FOR ANY PURPOSE WHATSOEVER. TXDOT ASSUMES NO RESPONSIBILITY FOR THE CONVERSION OF THIS STANDARD TO OTHER FORMATS OR FOR INCORRECT RESULTS OR DAMAGES RESULTING FROM ITS USE.

DATE: 4/10/2025
FILE: G:\TXC\Projects\County_Williamson\7473-02 RM 2243 Phase 1A\03_CADD\01_Shts\02-TCP\$rds\absorbm19.dgn

SYSTEM SHOWN - ABSORB-M TL-3

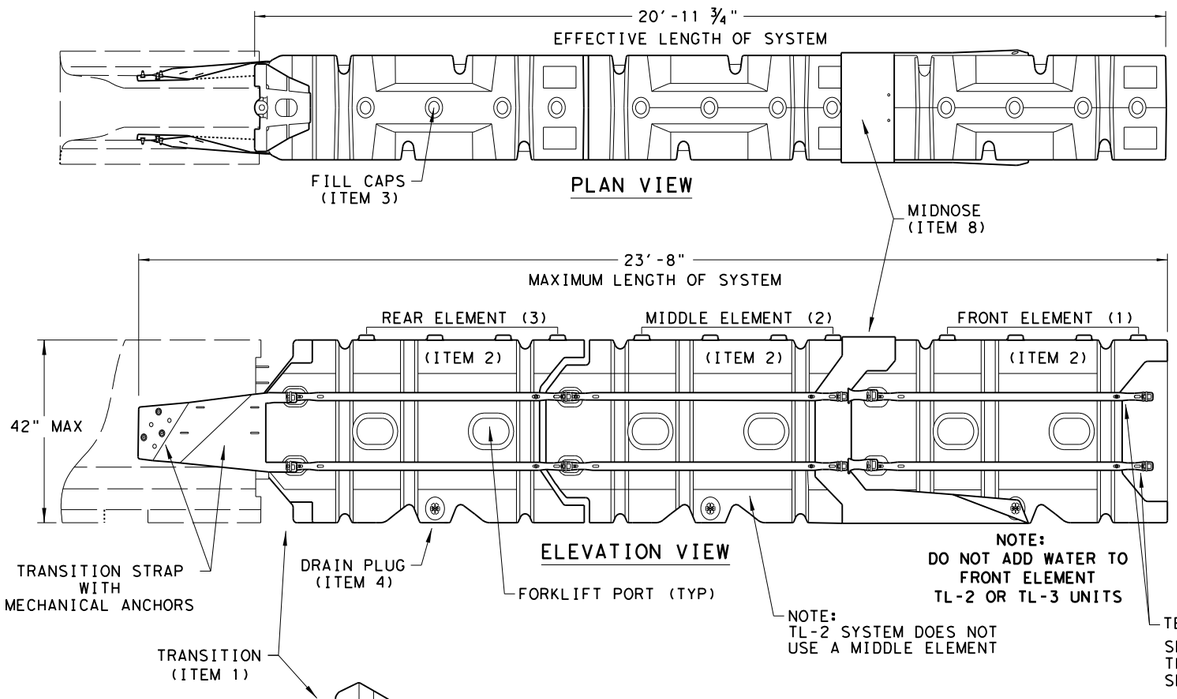

THE ABSORB-M IS A NON-REDIRECTIVE, GATING, CRASH CUSHION DESIGNED TO MEET THE LATEST TL-3 & TL-2 MASH REQUIREMENTS.

THE SYSTEM IS DESIGNED TO ACCOMMODATE A VARIETY OF F-SHAPE AND SINGLE SLOPE CONCRETE BARRIERS. CONTACT THE MANUFACTURER FOR GUIDANCE REGARDING OTHER ALLOWABLE SHAPES.

TEST LEVEL	NUMBER OF ELEMENTS	EFFECTIVE LENGTH	MAXIMUM LENGTH
TL-2	2	14'- 7 3/4"	17'- 4"
TL-3	3	20'- 11 3/4"	23'- 8"

NOTE:
CROSS SLOPES OF UP TO 8% (OR 1:12 SLOPE) CAN BE ACCOMMODATED WITH STANDARD HARDWARE SHOWN WITHIN THE INSTRUCTIONS MANUAL. FOR SLOPES WITH EXCESS OF 8% (OR 1:12) CONTACT, LINDSAY TRANSPORTATION SOLUTIONS.

GENERAL NOTES

1. FOR SPECIFIC INFORMATION REGARDING THE INSTALLATION AND TECHNICAL GUIDANCE, CONTACT: LINDSAY TRANSPORTATION SOLUTIONS (LTS) - BARRIER SYSTEMS, INC. AT (707) 374-6800. 180 RIVER ROAD, RIO VISTA, CA 94571
2. THE ABSORB-M SYSTEM IS ONLY APPROVED FOR USE IN (TEMPORARY WORK ZONE) LOCATIONS.
3. THE ABSORB-M IS A WATER FILLED NON-REDIRECTIVE, GATING CRASH CUSHION THAT DOES NOT NEED TO BE ATTACHED TO A FOUNDATION AND CAN BE INSTALLED ON TOP OF CONCRETE, ASPHALT, OR ANY SURFACE CAPABLE OF BEARING THE WEIGHT OF THE SYSTEM.
4. MAXIMUM PERMISSIBLE CROSS-SLOPE IS 8%.
5. THE INSTALLATION AREA SHOULD BE FREE FROM CURBS, ELEVATED OBJECTS, OR DEPRESSIONS.
6. THE ABSORB-M SHOULD BE LOCATED APPROXIMATELY PARALLEL WITH THE BARRIER.
7. THE USE OF THE ABSORB-M IS RESTRICTED TO A BARRIER HEIGHT OF UP TO 42 INCHES.
8. DO NOT ADD WATER TO FRONT ELEMENT (TL-2 OR TL-3 UNIT).

BILL OF MATERIALS (BOM) ABSORB-M TL-3 & TL-2 SYSTEMS			QTY	QTY
ITEM #		PART NUMBER	PART DESCRIPTION	TL-2 SYSTEM	TL-3 SYSTEM
1		BSI-1809036-00	TRANSITION-(GALV)	1	1
* 2		BSI-1808002-00	PRE-ASSEMBLED ABSORBING (ELEMENTS)	2	3
* 3		BSI-4004598	FILL CAPS	8	12
* 4		BSI-4004599	DRAIN PLUGS	2	3
* 5		BSI-1809053-00	TENSION STRAP-(GALV)	8	12
* 6		BSI-2001998	C-SCR FH 3/8-16 X 1 1/2 GR5 PLT	8	12
* 7		BSI-2001999	C-SCR FH 3/8-16 X 1 GR5 PLT	8	12
8		BSI-1809035-00	MIDNOSE-(GALV)	1	1
9		BSI-1808014-00	NOSE PLATE	1	1
10		BSI-1809037-00	TRANSITION STRAP (LEFT-HAND)-(GALV)	1	1
11		BSI-1809038-00	TRANSITION STRAP (RIGHT-HAND)-(GALV)	1	1
12		BSI-1808005-00	PIN ASSEMBLY	8	10
13		BSI-2002001	ANC MECH 5/8-11X5 (GALV)	6	6
14		ABSORB-M	INSTALLATION AND INSTRUCTIONS MANUAL	1	1

*COMPONENTS PRE-ASSEMBLED WITH ELEMENT ASSEMBLY

DELINEATION DECAL PLACEMENT GUIDE

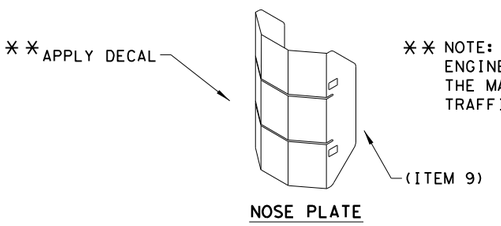

** NOTE: (PROVIDED BY OTHERS)
ENGINEER OR CONTRACTOR SHALL COORDINATE WITH THE MANUFACTURER FOR THE CORRECT DECAL PER TRAFFIC FLOW, LEFT, RIGHT OR BOTH-SIDES.

NOTE:
APPLY A HIGH REFLECTIVE DECAL TO THE NOSE PLATE. DELINEATION DECAL ORIENTATION IS SHOWN ON THE CONSTRUCTION PLAN SET AND SHALL BE IN ACCORDANCE WITH THE TEXAS MUTCD FOR (TRAFFIC CONTROL DEVICES). DECALs ARE AVAILABLE FOR TRAFFIC FLOW ON THE LEFT-SIDE, BOTH -SIDES AND RIGHT-SIDE.

NOTE:
THIS STANDARD IS A BASIC REPRESENTATION OF THE ABSORB-M, IT IS NOT INTENDED TO REPLACE THE INSTALLATION INSTRUCTIONS MANUAL.

SACRIFICIAL

Texas Department of Transportation — Design Division Standard

LINDSAY TRANSPORTATION SOLUTIONS
CRASH CUSHION
(MASH TL-3 & TL-2)
TEMPORARY - WORK ZONE
ABSORB(M)-19

FILE: absorbm19	DN: TxDOT	CK: KM	DW: VP	CK:
© TxDOT: JULY 2019	CONT	SECT	JOB	HIGHWAY
REVISIONS	0914	05	222	RM 2243
	DIST	COUNTY		SHEET NO.
	AUS	WILLIAMSON		86

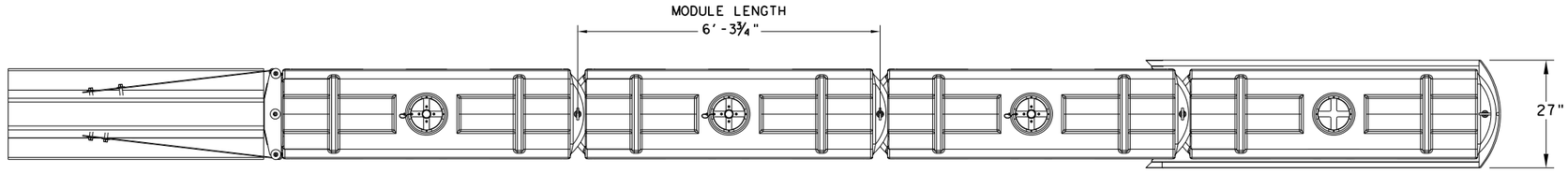

PLAN VIEW

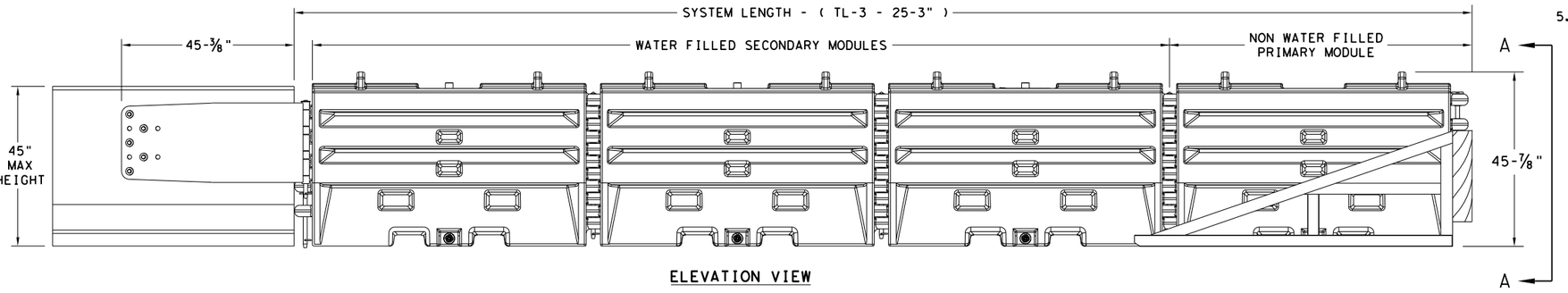

ELEVATION VIEW

GENERAL NOTES

1. REFER TO THE INSTALLATION MANUAL FOR SPECIFIC SYSTEM ASSEMBLY AND MODULE ORIENTATION. FOR ADDITIONAL INFORMATION, CONTACT TRAFFIX, INC. AT (949) 361-5663.
2. THE SLED SYSTEM IS A MASH APPROVED TEST LEVEL 3 (TL-3) CRASH CUSHION APPROVED FOR USE IN TEMPORARY WORK ZONES. THE SLED SYSTEM IS A NON-REDIRECTIVE, GATING CRASH CUSHION THAT DOES NOT NEED TO BE ATTACHED TO THE GROUND AND CAN BE INSTALLED ON CONCRETE, ASPHALT, GRAVEL OR COMPACTED SOIL.
3. MAXIMUM PERMISSIBLE CROSS SLOPE IS 8° (DEGREES) (14%).
4. THE INSTALLATION AREA SHOULD BE FREE FROM CURBS, ELEVATED OBJECTS, OR DEPRESSIONS.
5. THE SLED SYSTEM CAN BE ATTACHED TO:

- CONCRETE BARRIER, TEMPORARY OR PERMANENT, 45" MAXIMUM HEIGHT
- STEEL BARRIER
- PLASTIC BARRIER
- CONCRETE BRIDGE ABUTMENTS
- W-BEAM GUARD RAIL
- THRIE BEAM GUARD RAIL

TEST LEVEL	NUMBER OF SECONDARY MODULES	SYSTEM LENGTH
TL-3	3	25' 3"

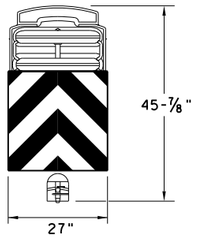

SECTION A-A

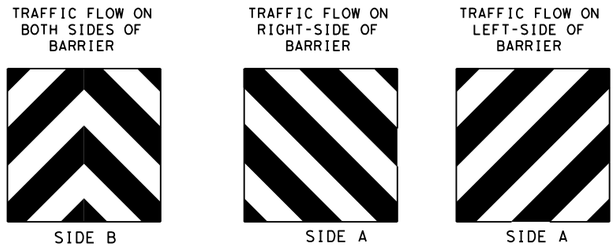

NOSE SHEETING PANEL DELINEATION

NOTE:
SEE INSTALLATION MANUAL FOR CUSTOMIZED DELINEATION NOSE SHEETING FOR DECAL PLACEMENT.

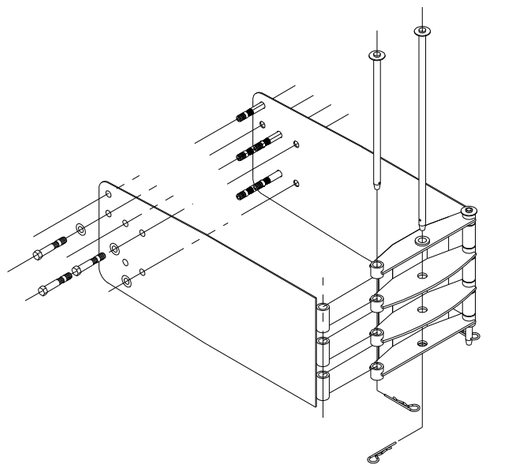

SLED TRANSITION COMPONENTS FOR ATTACHMENT TO CMB

NOTE:
SEE MANUFACTURER'S INSTALLATION MANUAL FOR FURTHER DETAILS.

TRANSITION OPTIONS
SLED TRANSITION TO CONCRETE TRAFFIC BARRIER (TEMPORARY OR PERMANENT)
SLED TRANSITION TO STEEL TRAFFIC BARRIER (CONTACT MFGR FOR PROPER TRANSITION)
SLED TRANSITION TO PLASTIC TRAFFIC BARRIER (CONTACT MFGR FOR PROPER TRANSITION)
SLED TRANSITION TO W-BEAM OR THRIE BEAM GUARD RAIL (CONTACT MFGR FOR PROPER TRANSITION)
SLED TRANSITION TO CONCRETE BRIDGE ABUTMENT

NOTE:
THIS STANDARD IS A BASIC REPRESENTATION OF THE SLED, IT IS NOT INTENDED TO REPLACE THE INSTALLATION INSTRUCTIONS MANUAL.

SACRIFICIAL

BILL OF MATERIAL

PART NUMBER	DESCRIPTION	QTY: TL-3
45131	TRANSITION FRAME, GALVANIZED	1
45150	TRANSITION PANEL, GALVANIZED	2
45147-CP	TRANSITION SHORT DROP PIN W/ KEEPER PIN, GALVANIZED	2
45148-CP	TRANSITION LONG DROP PIN W/ KEEPER PIN, GALVANIZED	1
45050	ANCHOR BOLTS	9
12060	WASHER, 3/4" ID X 2" OD	9
45044-Y	SLED YELLOW WATER FILLED MODULE	3
45044-YH	SLED YELLOW "NO FILL" MODULE	1
45044-S	CIS (CONTAINMENT IMPACT SLED), GALVANIZED	1
45043-CP	T-PIN W/ KEEPER PIN	4
18009-B-I	FILL CAP W/ "DRIVE BY" FLOAT INDICATOR	3
45033-RC-B	DRAIN PLUG	3
45032-DPT	DRAIN PLUG REMOVAL TOOL	1

Texas Department of Transportation — Design Division Standard

SLED
CRASH CUSHION
TL-3 MASH COMPLIANT
(TEMPORARY, WORK ZONE)
SLED-19

FILE: sled19.dgn	DN: TxDOT	CK: KM	DW: VP	CK:
©TxDOT: DECEMBER 2019	CONT	SECT	JOB	HIGHWAY
REVISIONS	0914	05	222	RM 2243
	DIST	COUNTY		SHEET NO.
	AUS	WILLIAMSON		87

DISCLAIMER:
The use of this standard is governed by the "Texas Engineering Practice Act". No warranty of any kind is made by TxDOT for any purpose whatsoever. TxDOT assumes no responsibility for the conversion of this standard to other formats or for incorrect results or damages resulting from its use.

DATE: 4/10/2025
FILE: G:\TXC\Projects\County_Williamson\7473-02 RM 2243 Phase 1A\03_CADD\01_Shts\02-TCP\Srds\sled19.dgn

DISCLAIMER:
The use of this standard is governed by the "Texas Engineering Practice Act". No warranty of any kind is made by TxDOT for any purpose whatsoever. TxDOT assumes no responsibility for the conversion of this standard to other formats or for incorrect results or damages resulting from its use.

DATE: 4/10/2025 12:54:22 PM
FILE: G:\TxC\Projects\County_Williamson\7473-02 RM 2243 Phase 1A\03_CADD\02-Civil\Traffic\tcp2-1-18.dgn

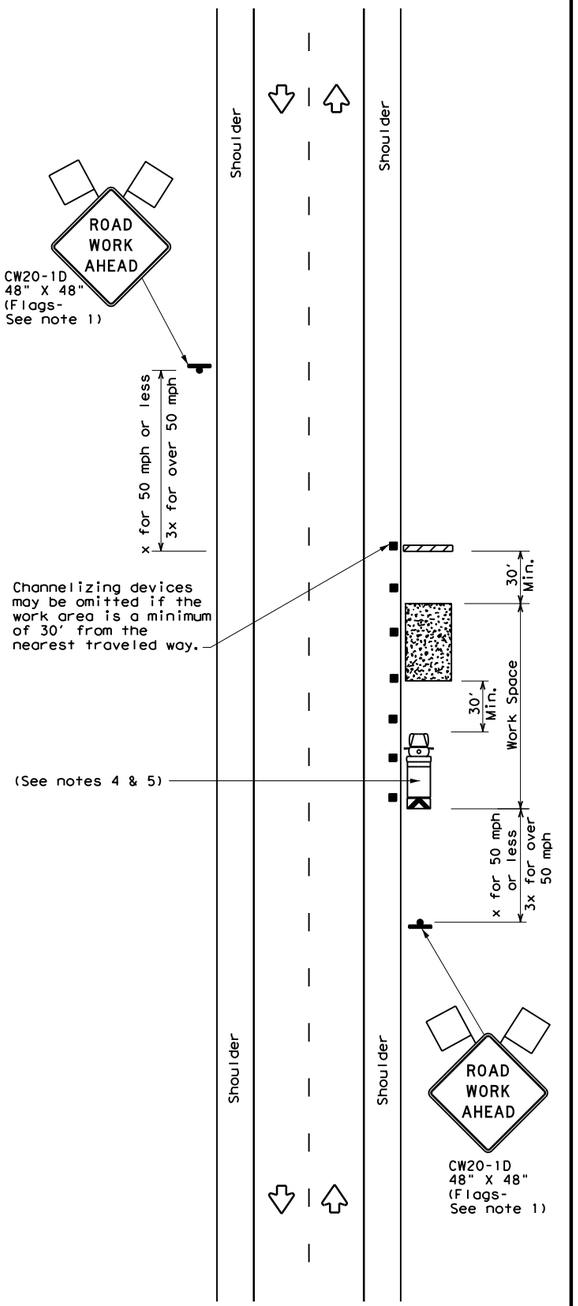

TCP (2-1a)

WORK SPACE NEAR SHOULDER
Conventional Roads

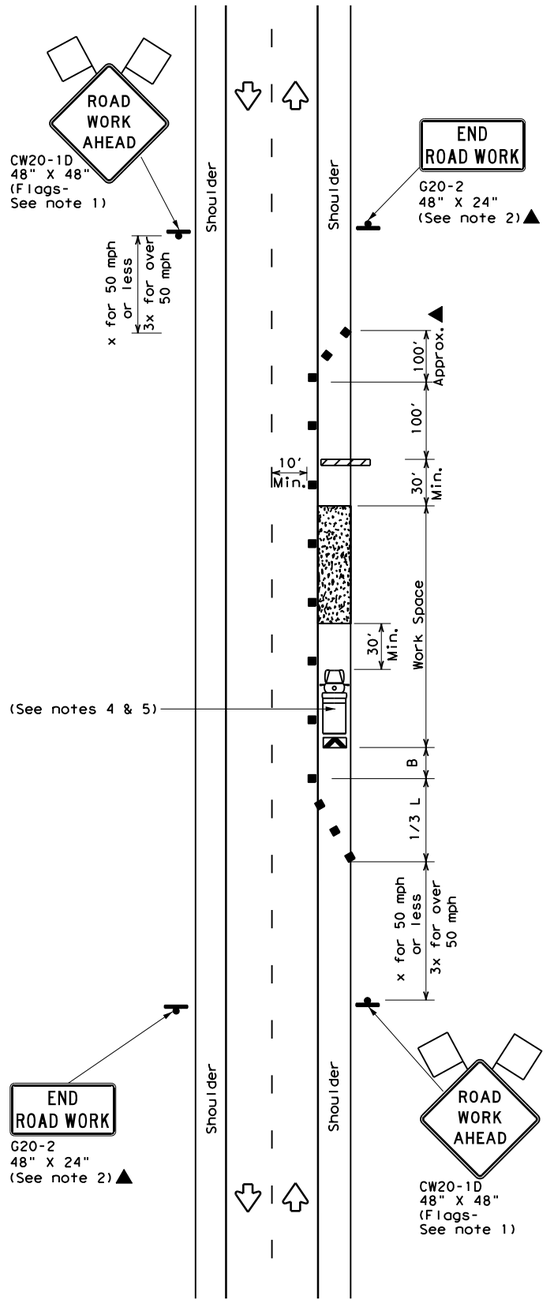

TCP (2-1b)

WORK SPACE ON SHOULDER
Conventional Roads

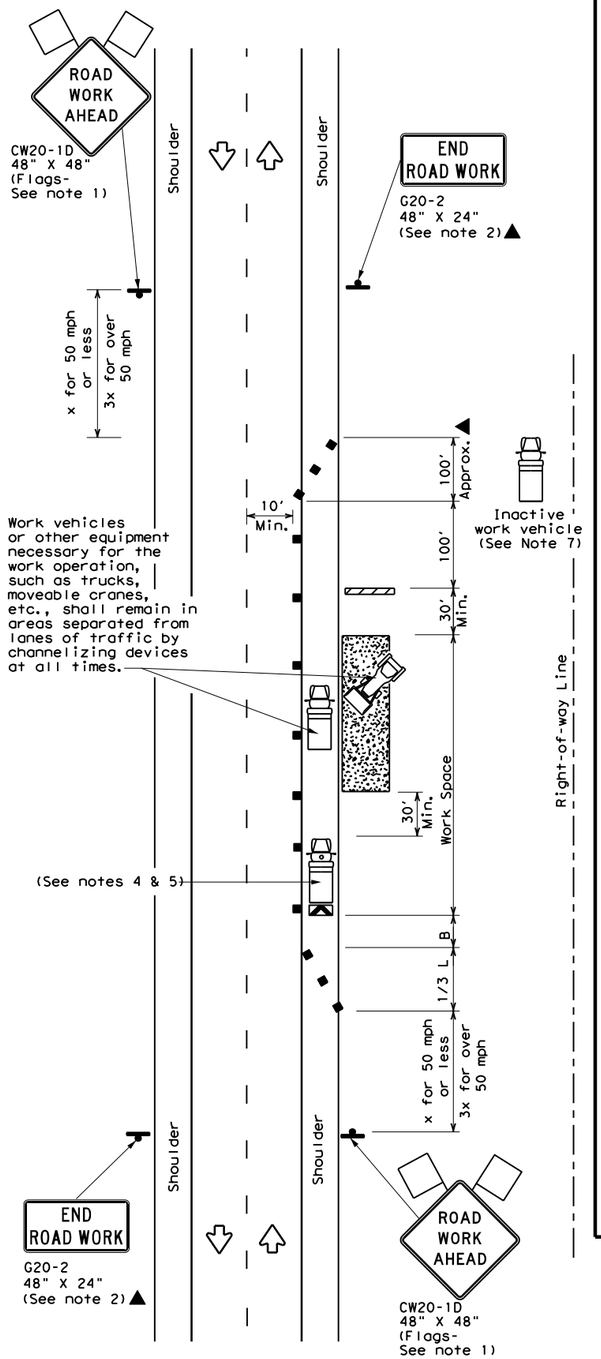

TCP (2-1c)

WORK VEHICLES ON SHOULDER
Conventional Roads

LEGEND			
	Type 3 Barricade		Channelizing Devices
	Heavy Work Vehicle		Truck Mounted Attenuator (TMA)
	Trailer Mounted Flashing Arrow Board	M	Portable Changeable Message Sign (PCMS)
	Sign		Traffic Flow
	Flag		Flagger

Posted Speed *	Formula	Minimum Desirable Taper Lengths ** 10' Offset	11' Offset	12' Offset	Suggested Maximum Spacing of Channelizing Devices On a Taper	On a Tangent	Minimum Sign Spacing "X" Distance	Suggested Longitudinal Buffer Space "B"
30	$L=\frac{WS^2}{60}$	150'	165'	180'	30'	60'	120'	90'
35		205'	225'	245'	35'	70'	160'	120'
40		265'	295'	320'	40'	80'	240'	155'
45	L=WS	450'	495'	540'	45'	90'	320'	195'
50		500'	550'	600'	50'	100'	400'	240'
55		550'	605'	660'	55'	110'	500'	295'
60		600'	660'	720'	60'	120'	600'	350'
65		650'	715'	780'	65'	130'	700'	410'
70		700'	770'	840'	70'	140'	800'	475'
75		750'	825'	900'	75'	150'	900'	540'

* Conventional Roads Only

** Taper lengths have been rounded off.
L=Length of Taper(FT) W=Width of Offset(FT) S=Posted Speed(MPH)

TYPICAL USAGE				
MOBILE	SHORT DURATION	SHORT TERM STATIONARY	INTERMEDIATE TERM STATIONARY	LONG TERM STATIONARY
	✓	✓	✓	✓

GENERAL NOTES

1. Flags attached to signs where shown, are REQUIRED.
2. All traffic control devices illustrated are REQUIRED, except those denoted with the triangle symbol may be omitted when stated in the plans, or for routine maintenance work, when approved by the Engineer.
3. Stockpiled material should be placed a minimum of 30 feet from nearest traveled way.
4. Shadow Vehicle with TMA and high intensity rotating, flashing, oscillating or strobe lights. A Shadow Vehicle with a TMA should be used anytime it can be positioned 30 to 100 feet in advance of the area of crew exposure without adversely affecting the performance or quality of the work. If workers are no longer present but road or work conditions require the traffic control to remain in place, Type 3 Barricades or other channelizing devices may be substituted for the Shadow Vehicle and TMA.
5. Additional Shadow Vehicles with TMAs may be positioned off the paved surface, next to those shown in order to protect a wider work space.
6. See TCP(5-1) for shoulder work on divided highways, expressways and freeways.
7. Inactive work vehicles or other equipment should be parked near the right-of-way line and not parked on the paved shoulder.
8. CW21-5 "SHOULDER WORK" signs may be used in place of CW21-1D "ROAD WORK AHEAD" signs for shoulder work on conventional roadways.

Texas Department of Transportation

Traffic Operations Division Standard

TRAFFIC CONTROL PLAN CONVENTIONAL ROAD SHOULDER WORK

TCP(2-1)-18

FILE: tcp2-1-18.dgn	DN:	CK:	DW:	CK:
© TxDOT December 1985	CONT	SECT	JOB	HIGHWAY
REVISIONS	0914	05	222	RM 2243
2-94 4-98	DIST	COUNTY		SHEET NO.
8-95 2-12	AUS	WILLIAMSON		88
1-97 2-18				

DISCLAIMER:
The use of this standard is governed by the "Texas Engineering Practice Act". No warranty of any kind is made by TxDOT for any purpose whatsoever. TxDOT assumes no responsibility for the conversion of this standard to other formats or for incorrect results or damages resulting from its use.

DATE: 4/10/2025 12:54:23 PM
FILE: G:\TxDOT\Projects\County_Williamson\7473-02 RM 2243 Phase 1A\03_CADD\01_Sheets\tcp2-2-18.dgn

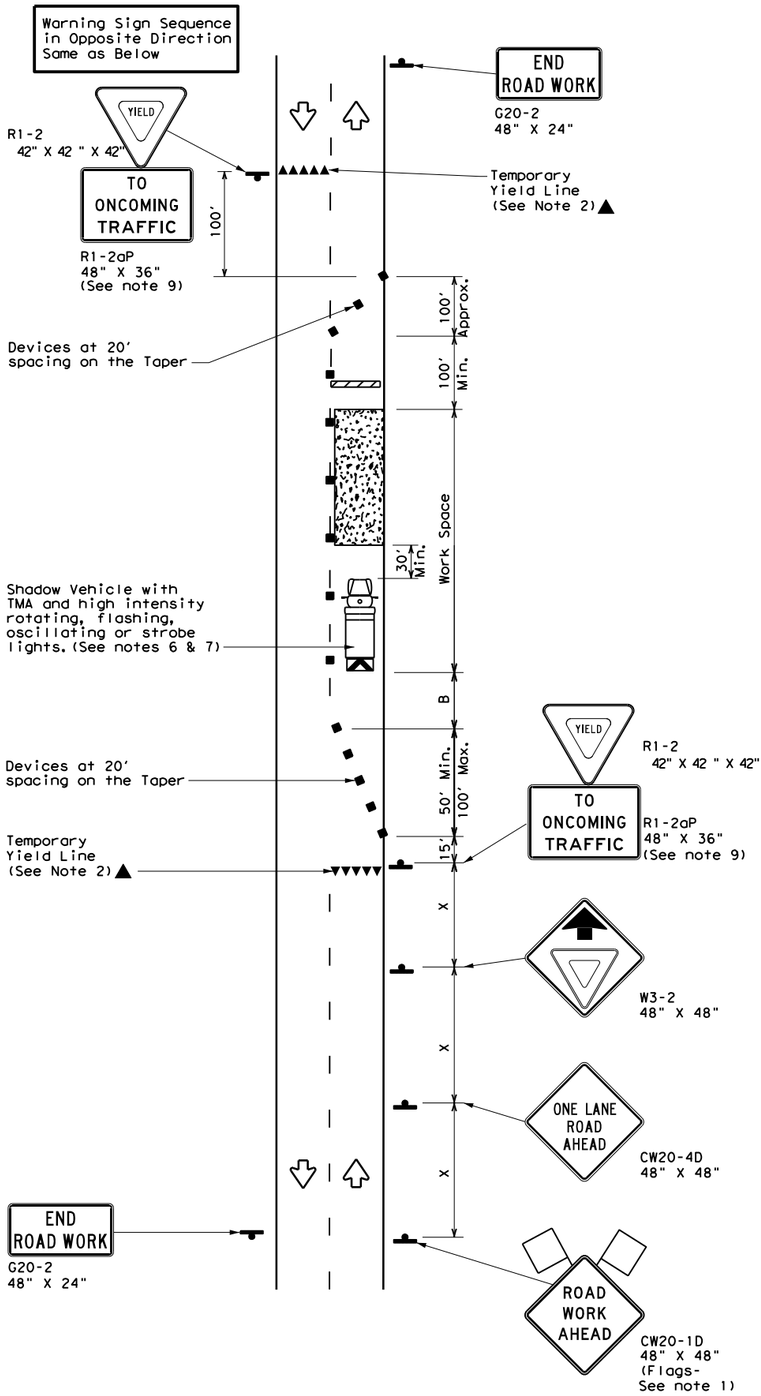

TCP (2-2a)

2-LANE ROADWAY WITHOUT PAVED SHOULDERS

ONE LANE TWO-WAY CONTROL WITH YIELD SIGNS

(Less than 2000 ADT - See Note 9)

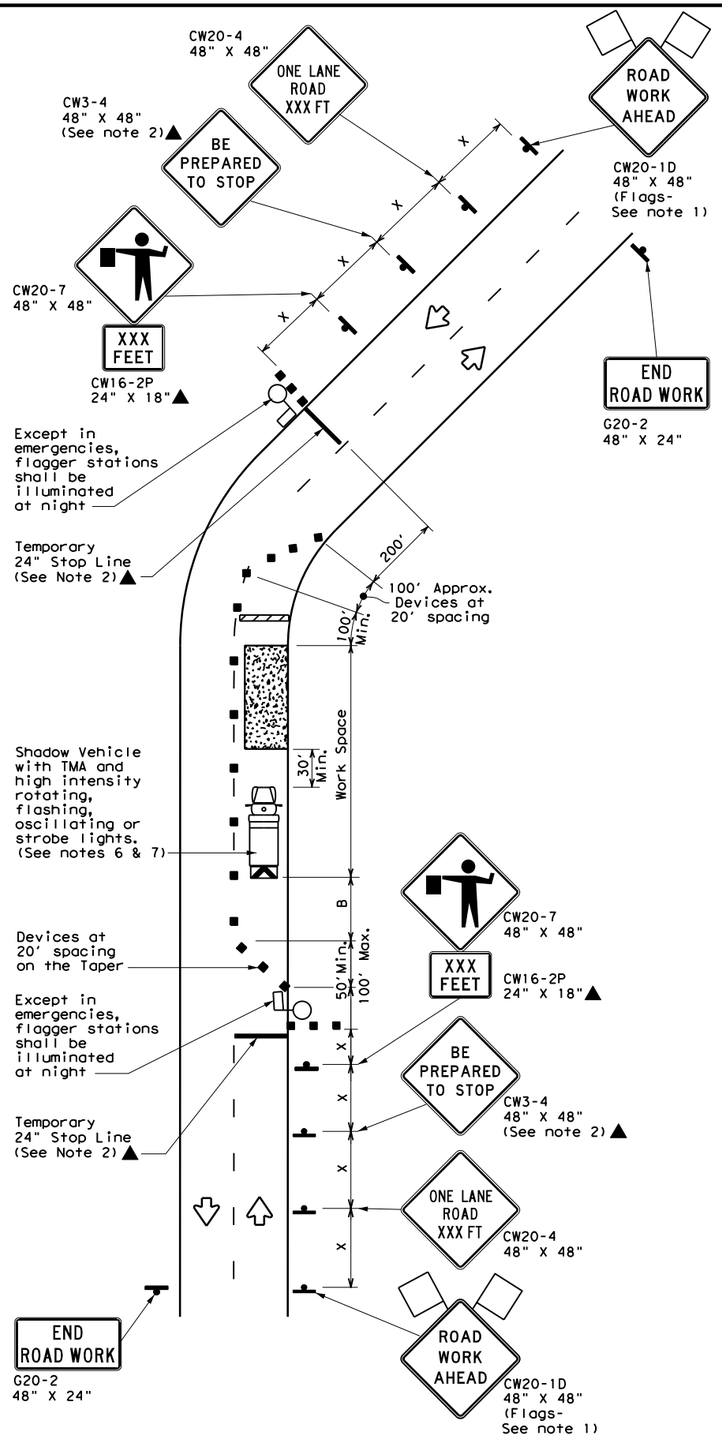

TCP (2-2b)

2-LANE ROADWAY WITHOUT PAVED SHOULDERS

ONE LANE TWO-WAY CONTROL WITH FLAGGERS

LEGEND			
	Type 3 Barricade		Channelizing Devices
	Heavy Work Vehicle		Truck Mounted Attenuator (TMA)
	Trailer Mounted Flashing Arrow Board	M	Portable Changeable Message Sign (PCMS)
	Sign		Traffic Flow
	Flag		Flagger

Posted Speed *	Formula	Minimum Desirable Taper Lengths ** 10' Offset	11' Offset	12' Offset	Suggested Maximum Spacing of Channelizing Devices: On a Taper	On a Tangent	Minimum Sign Spacing "X" Distance	Suggested Longitudinal Buffer Space "B"	Stopping Sight Distance
30	$L=\frac{WS^2}{60}$	150'	165'	180'	30'	60'	120'	90'	200'
35		205'	225'	245'	35'	70'	160'	120'	250'
40		265'	295'	320'	40'	80'	240'	155'	305'
45	L=WS	450'	495'	540'	45'	90'	320'	195'	360'
50		500'	550'	600'	50'	100'	400'	240'	425'
55		550'	605'	660'	55'	110'	500'	295'	495'
60		600'	660'	720'	60'	120'	600'	350'	570'
65		650'	715'	780'	65'	130'	700'	410'	645'
70		700'	770'	840'	70'	140'	800'	475'	730'
75		750'	825'	900'	75'	150'	900'	540'	820'

* Conventional Roads Only
** Taper lengths have been rounded off.
L=Length of Taper(FT) W=Width of Offset(FT) S=Posted Speed(MPH)

TYPICAL USAGE				
MOBILE	SHORT DURATION	SHORT TERM STATIONARY	INTERMEDIATE TERM STATIONARY	LONG TERM STATIONARY
	✓	✓	✓	

GENERAL NOTES

1. Flags attached to signs where shown, are REQUIRED.
2. All traffic control devices illustrated are REQUIRED, except those denoted with the triangle symbol may be omitted when stated elsewhere in the plans, or for routine maintenance work, when approved by the Engineer.
3. The CW3-4 "BE PREPARED TO STOP" sign may be installed after the CW20-4 "ONE LANE ROAD XXX FT" sign, but proper sign spacing shall be maintained.
4. Flaggers should use two-way radios or other methods of communication to control traffic.
5. Length of work space should be based on the ability of flaggers to communicate.
6. A Shadow Vehicle with a TMA should be used anytime it can be positioned 30 to 100 feet in advance of the area of crew exposure without adversely affecting the performance or quality of the work. If workers are no longer present but road or work conditions require the traffic control to remain in place, Type 3 Barricades or other channelizing devices may be substituted for the Shadow Vehicle and TMA.
7. Additional Shadow Vehicles with TMAs may be positioned off the paved surface, next to those shown in order to protect a wider work space.

TCP (2-2a)

8. The R1-2 "YIELD" sign traffic control may be used on projects with approaches that have adequate sight distance. For projects in urban areas, work space should be no longer than one half city block. In rural areas, roadways with less than 2000 ADT, work space should be no longer than 400 feet.
9. The R1-2aP "YIELD TO ONCOMING TRAFFIC" sign shall be placed on a support at a 7 foot minimum mounting height.

TCP (2-2b)

10. Channelizing devices on the center line may be omitted when a pilot car is leading traffic and approved by the Engineer.
11. If the work space is located near a horizontal or vertical curve, the buffer distances should be increased in order to maintain stopping sight distance to the flagger and a queue of stopped vehicles. (See table above).
12. Flaggers should use 24" STOP/SLOW paddles to control traffic. Flags should be limited to emergency situtations.

Texas Department of Transportation

Traffic Operations Division Standard

TRAFFIC CONTROL PLAN ONE-LANE TWO-WAY TRAFFIC CONTROL

TCP(2-2)-18

FILE: tcp2-2-18.dgn	DN:	CK:	DW:	CK:
©TxDOT December 1985	CONT	SECT	JOB	HIGHWAY
REVISIONS 8-95 3-03 1-97 2-12 4-98 2-18	0914	05	222	RM 2243
	DIST	COUNTY		SHEET NO.
	AUS	WILLIAMSON		89

DISCLAIMER:
The use of this standard is governed by the "Texas Engineering Practice Act". No warranty of any kind is made by TxDOT for any purpose whatsoever. TxDOT assumes no responsibility for the conversion of this standard to other formats or for incorrect results or damages resulting from its use.

DATE: 4/10/2025 12:54:24 PM
FILE: G:\TXC\Projects\County_Williamson\7473-02 RM 2243 Phase 1A\03_CADD\Prelim\tcp(2-3)-23.dgn

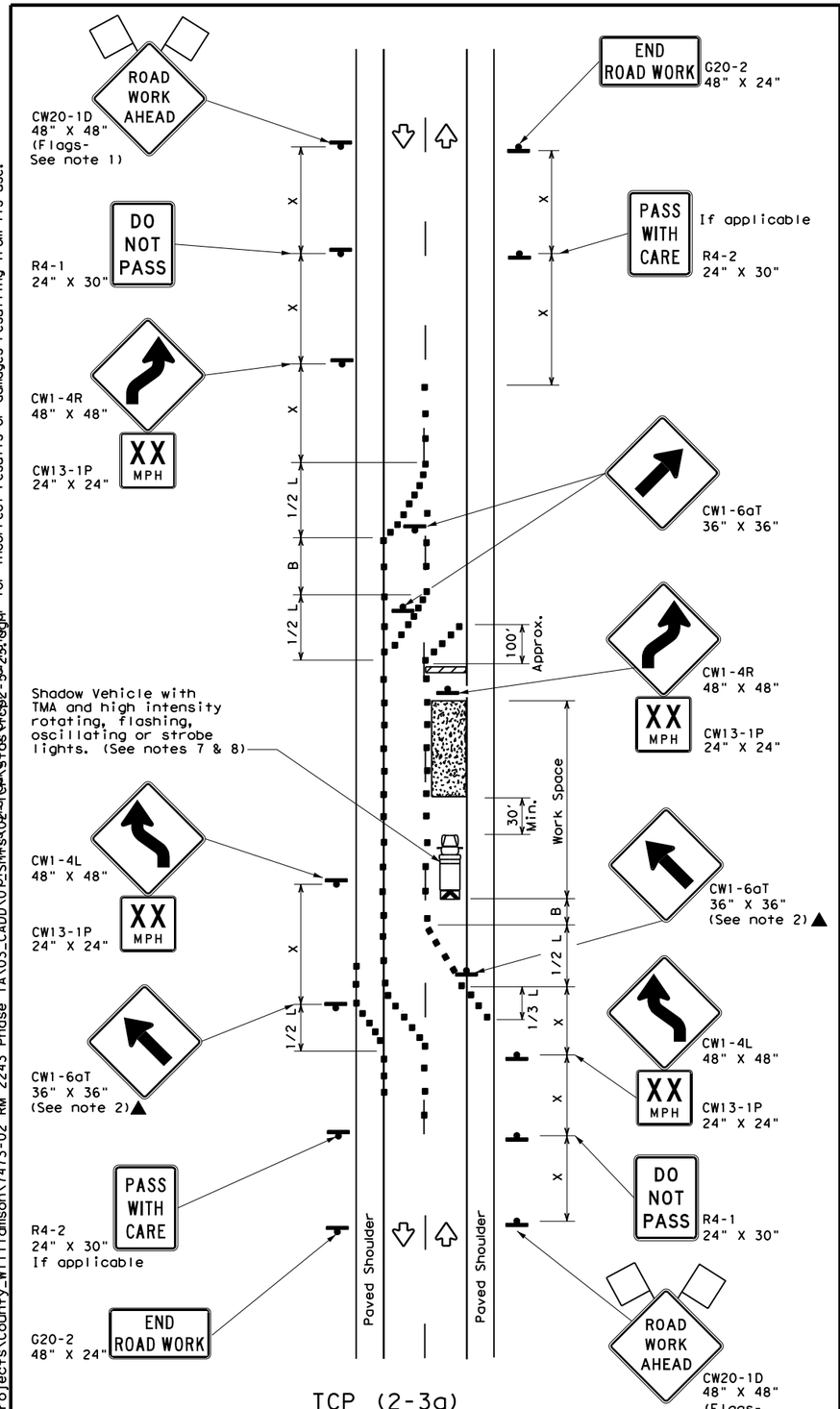

TCP (2-3a)
2-LANE ROADWAY WITH PAVED SHOULDERS

ONE LANE CLOSED
ADEQUATE FIELD OF VIEW

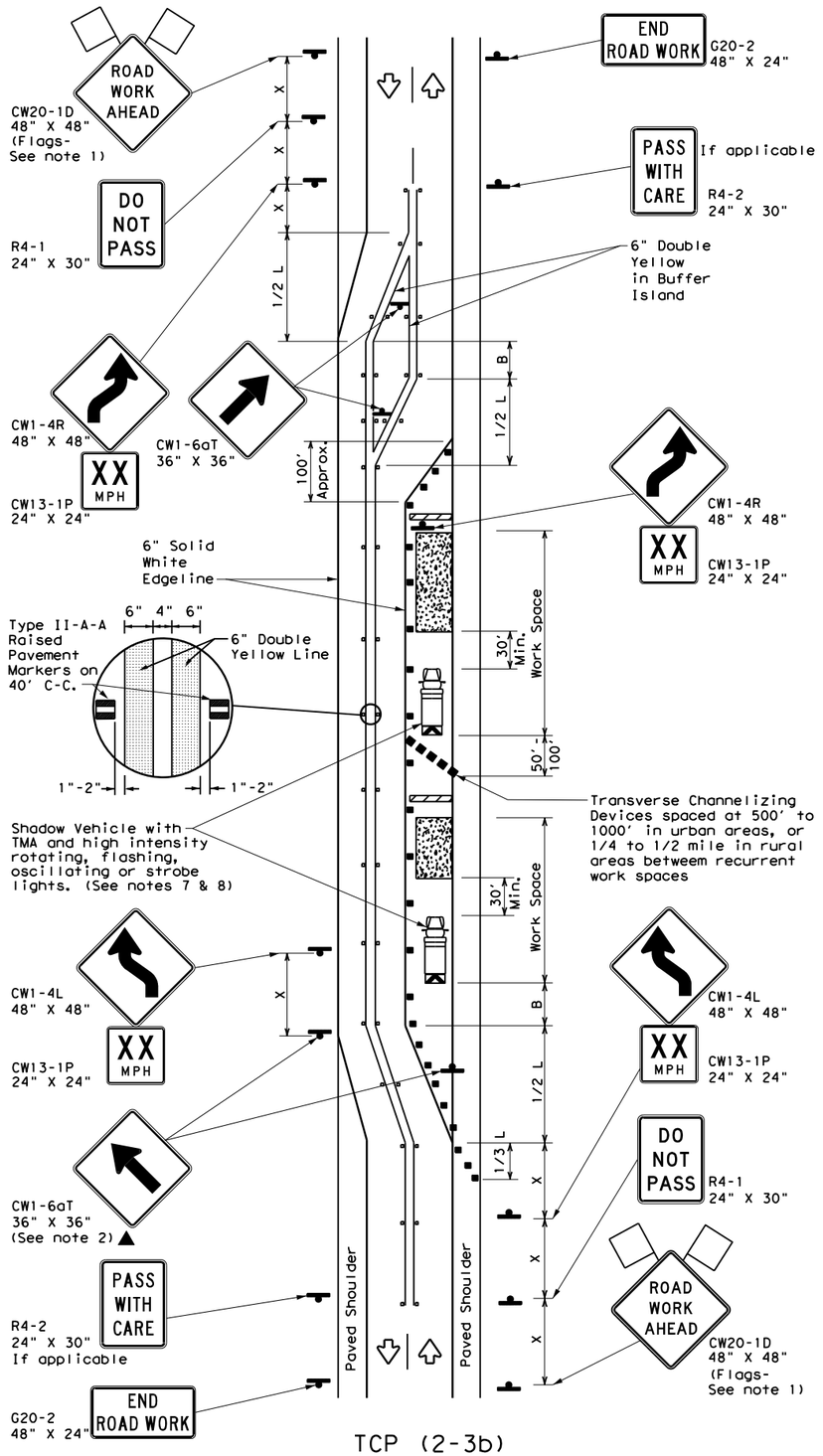

TCP (2-3b)
2-LANE ROADWAY WITH PAVED SHOULDERS

ONE LANE CLOSED
INADEQUATE FIELD OF VIEW

LEGEND			
	Type 3 Barricade	■ ■	Channelizing Devices
	Heavy Work Vehicle		Truck Mounted Attenuator (TMA)
	Trailer Mounted Flashing Arrow Board	• • • •	Raised Pavement Markers Ty II-AA
	Sign		Traffic Flow
	Flag		Flagger

Posted Speed *	Formula	Minimum Desirable Taper Lengths ** 10' Offset	11' Offset	12' Offset	Suggested Maximum Spacing of Channelizing Devices On a Taper	On a Tangent	Minimum Sign Spacing "X" Distance	Suggested Longitudinal Buffer Space "B"
30	$L=\frac{WS^2}{60}$	150'	165'	180'	30'	60'	120'	90'
35		205'	225'	245'	35'	70'	160'	120'
40		265'	295'	320'	40'	80'	240'	155'
45	L=WS	450'	495'	540'	45'	90'	320'	195'
50		500'	550'	600'	50'	100'	400'	240'
55		550'	605'	660'	55'	110'	500'	295'
60		600'	660'	720'	60'	120'	600'	350'
65		650'	715'	780'	65'	130'	700'	410'
70		700'	770'	840'	70'	140'	800'	475'
75		750'	825'	900'	75'	150'	900'	540'

* Conventional Roads Only

** Taper lengths have been rounded off.
L=Length of Taper(FT) W=Width of Offset(FT) S=Posted Speed(MPH)

TYPICAL USAGE				
MOBILE	SHORT DURATION	SHORT TERM STATIONARY	INTERMEDIATE TERM STATIONARY	LONG TERM STATIONARY
				TCP(2-3b)ONLY
			✓	✓

GENERAL NOTES

1. Flags attached to signs where shown, are REQUIRED.
2. All traffic control devices illustrated are REQUIRED, except those denoted with the triangle symbol may be omitted when stated elsewhere in the plans, or for routine maintenance work, when approved by the Engineer.
3. When work space will be in place less than three days existing pavement markings may remain in place. Channelizing devices shall be used to separate traffic.
4. Flagger control should NOT be used unless roadway conditions or heavy traffic volume require additional emphasis to safely control traffic. Flagger should be positioned at end of traffic queue.
5. The R4-1 "DO NOT PASS," R4-2 " PASS WITH CARE" and construction regulatory speed zone signs may be installed within CW20-1D "ROAD WORK AHEAD" signs. Proper spacing of signs shall be maintained.
6. Conflicting pavement marking shall be removed for long term projects.
7. A Shadow Vehicle with a TMA should be used anytime it can be positioned 30 to 100 feet in advance of the area of crew exposure without adversely affecting the performance or quality of the work. If workers are no longer present but road or work conditions require the traffic control to remain in place, Type 3 Barricades or other channelizing devices may be substituted.
8. Additional Shadow Vehicles with TMAs may be positioned off the paved surface, next to those shown in order to protect a wider work space.

TCP (2-3a)

9. Conflicting pavement markings shall be removed for long-term projects. For shorter durations where traffic is directed over a yellow centerline, channelizing devices which separate two-way traffic should be spaced on tapers at 20' or 15' if posted speeds are 35 mph or slower, and for tangent sections, at 1/2(S) where S is the speed in mph. This tighter device spacing is intended for the area of the conflicting markings, not the entire work zone.

Texas Department of Transportation

Traffic Safety Division Standard

TRAFFIC CONTROL PLAN TRAFFIC SHIFTS ON TWO-LANE ROADS

TCP(2-3)-23

FILE: tcp(2-3)-23.dgn	DN:	CK:	DW:	CK:
© TxDOT April 2023	CONT	SECT	JOB	HIGHWAY
REVISIONS 12-85 4-98 2-18	0914	05	222	RM 2243
8-95 3-03 4-23	DIST	COUNTY		SHEET NO.
1-97 2-12	AUS	WILLIAMSON		90

DISCLAIMER:
The use of this standard is governed by the "Texas Engineering Practice Act". No warranty of any kind is made by TxDOT for any purpose whatsoever. TxDOT assumes no responsibility for the conversion of this standard to other formats or for incorrect results or damages resulting from its use.

DATE: 4/10/2025 12:54:25 PM
FILE: G:\TXC\Projects\County_Williamson\7473-02 RM 2243 Phase 1A\03_CADD\0_Cshts\tcp2-4-18.dgn

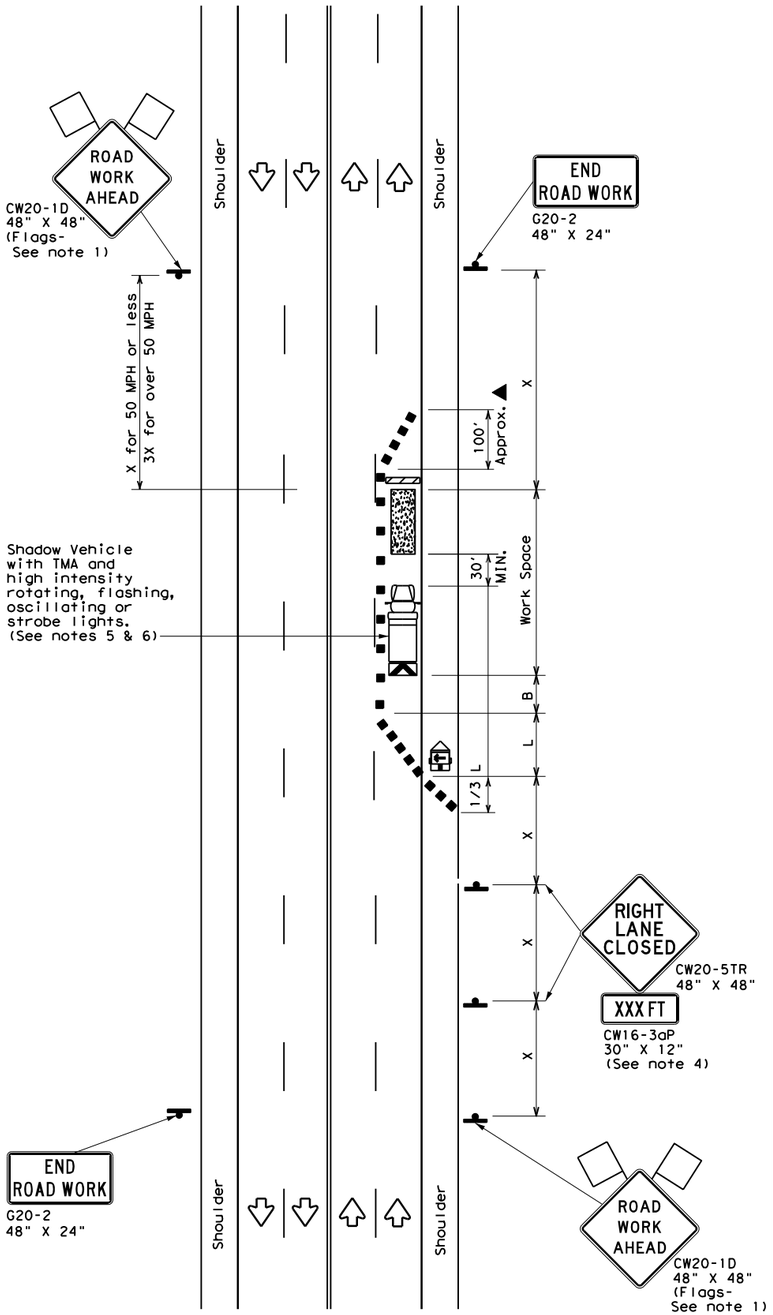

TCP (2-4a)

ONE LANE CLOSED

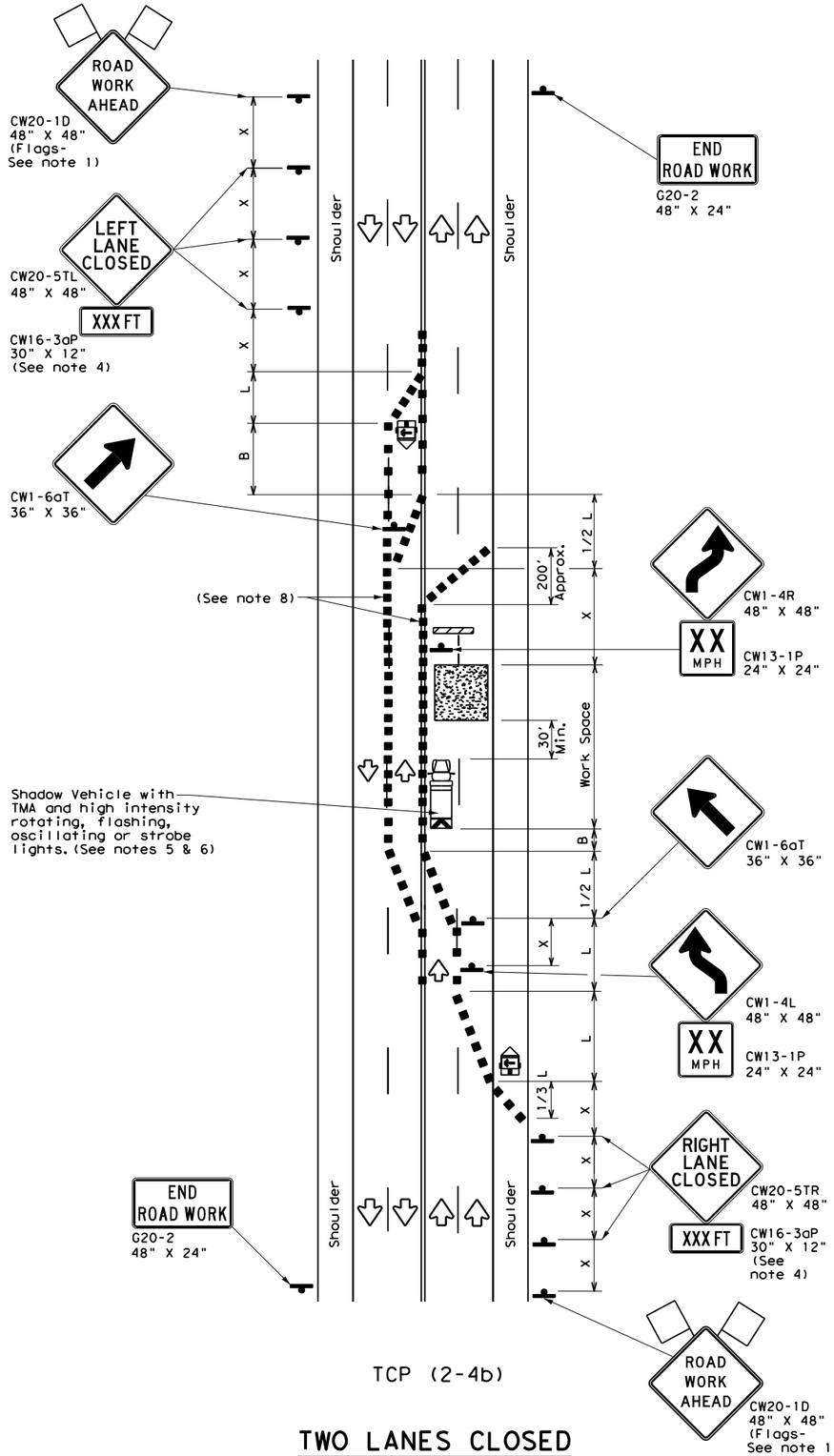

TCP (2-4b)

TWO LANES CLOSED

LEGEND			
	Type 3 Barricade		Channelizing Devices
	Heavy Work Vehicle		Truck Mounted Attenuator (TMA)
	Trailer Mounted Flashing Arrow Board	M	Portable Changeable Message Sign (PCMS)
	Sign		Traffic Flow
	Flag		Flagger

Posted Speed *	Formula	Minimum Desirable Taper Lengths ** 10' Offset	11' Offset	12' Offset	Suggested Maximum Spacing of Channelizing Devices: On a Taper	On a Tangent	Minimum Sign Spacing "X" Distance	Suggested Longitudinal Buffer Space "B"
30	$L=\frac{WS^2}{60}$	150'	165'	180'	30'	60'	120'	90'
35		205'	225'	245'	35'	70'	160'	120'
40		265'	295'	320'	40'	80'	240'	155'
45	L=WS	450'	495'	540'	45'	90'	320'	195'
50		500'	550'	600'	50'	100'	400'	240'
55		550'	605'	660'	55'	110'	500'	295'
60		600'	660'	720'	60'	120'	600'	350'
65		650'	715'	780'	65'	130'	700'	410'
70		700'	770'	840'	70'	140'	800'	475'
75		750'	825'	900'	75'	150'	900'	540'

* Conventional Roads Only

** Taper lengths have been rounded off.
L=Length of Taper(FT) W=Width of Offset(FT) S=Posted Speed(MPH)

TYPICAL USAGE				
MOBILE	SHORT DURATION	SHORT TERM STATIONARY	INTERMEDIATE TERM STATIONARY	LONG TERM STATIONARY
		✓	✓	

GENERAL NOTES

1. Flags attached to signs where shown, are REQUIRED.
2. All traffic control devices illustrated are REQUIRED, except those denoted with the triangle symbol may be omitted when stated elsewhere in the plans, or for routine maintenance work, when approved by the Engineer.
3. The downstream taper is optional. When used, it should be 100 feet minimum length per lane.
4. For short term applications, when post mounted signs are not used, the distance legend may be shown on the sign face rather than on a CW16-3aP supplemental plaque.
5. A Shadow Vehicle with a TMA should be used anytime it can be positioned 30 to 100 feet in advance of the area of crew exposure without adversely affecting the performance or quality of the work. If workers are no longer present but road or work conditions require the traffic control to remain in place, Type 3 Barricades or other channelizing devices may be substituted for the Shadow Vehicle and TMA.
6. Additional Shadow Vehicles with TMAs may be positioned in each closed lane, on the shoulder or off the paved surface, next to those shown in order to protect a wider work space.

TCP (2-4a)

7. If this TCP is used for a left lane closure, CW20-5TL "LEFT LANE CLOSED"signs shall be used and channelizing devices shall be placed on the centerline to protect the work space from opposing traffic with the arrow board placed in the closed lane near the end of the merging taper.

TCP (2-4b)

8. For shorter durations where traffic is directed over a yellow centerline, channelizing devices which separate two-way traffic should be spaced on tapers at 20' or 15' if posted speeds are 35 mph or slower, and for tangent sections, at 1/2(S) where S is the speed in mph. This tighter devices spacing is intended for the area of conflicting markings, not the entire work zone.

Texas Department of Transportation | Traffic Operations Division Standard

TRAFFIC CONTROL PLAN LANE CLOSURES ON MULTILANE CONVENTIONAL ROADS

TCP(2-4)-18

FILE: tcp2-4-18.dgn	DN:	CK:	DW:	CK:
© TxDOT December 1985	CONT	SECT	JOB	HIGHWAY
REVISIONS 8-95 3-03	0914	05	222	RM 2243
1-97 2-12	DIST	COUNTY		SHEET NO.
4-98 2-18	AUS	WILLIAMSON		91

DISCLAIMER:
The use of this standard is governed by the "Texas Engineering Practice Act". No warranty of any kind is made by TxDOT for any purpose whatsoever. TxDOT assumes no responsibility for the conversion of this standard to other formats or for incorrect results or damages resulting from its use.

DATE: 4/10/2025 12:54:26 PM
FILE: G:\TXC\Projects\County_Williamson\7473-02 RM 2243 Phase 1A\03_CADD\02_Sht\tcp3-1.dgn

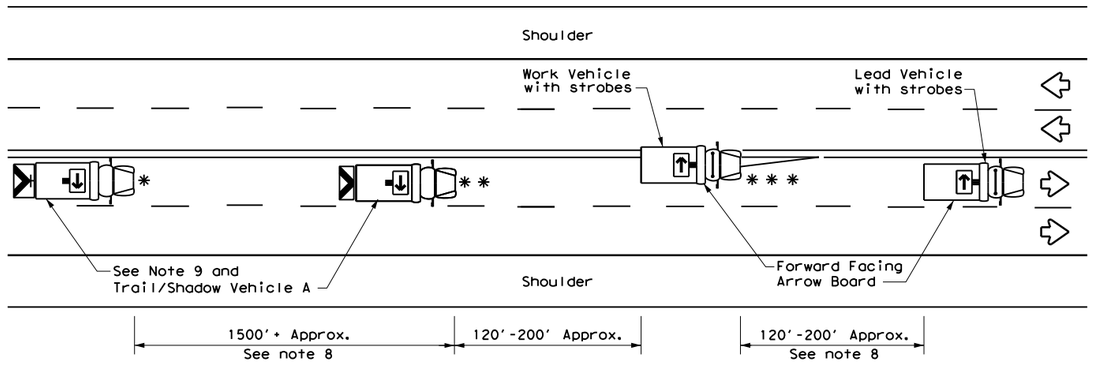

TCP (3-1a)

UNDIVIDED MULTILANE ROADWAY

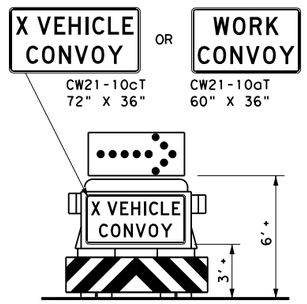

TRAIL/SHADOW VEHICLE A

with RIGHT Directional display Flashing Arrow Board

LEGEND			
*	Trail Vehicle	ARROW BOARD DISPLAY	
**	Shadow Vehicle		
***	Work Vehicle		RIGHT Directional
	Heavy Work Vehicle		LEFT Directional
	Truck Mounted Attenuator (TMA)		Double Arrow
	Traffic Flow		CAUTION (Alternating Diamond or 4 Corner Flash)

TYPICAL USAGE				
MOBILE	SHORT DURATION	SHORT TERM STATIONARY	INTERMEDIATE TERM STATIONARY	LONG TERM STATIONARY
✓				

GENERAL NOTES

1. TRAIL, SHADOW, and LEAD vehicles shall be equipped with arrow boards as illustrated. When a LEAD vehicle is not used the WORK vehicle must be equipped with an arrow board. The Engineer will determine if the LEAD VEHICLE and/or TRAIL VEHICLE are required based on prevailing roadway conditions, traffic volume, and sight distance restrictions.
2. The use of amber high intensity rotating, flashing, oscillating, or strobe lights on vehicles are required. Blue high intensity rotating, flashing, oscillating or strobe lights when mounted on the driver's side of the vehicle may be operated simultaneously with the amber beacons or strobe lights.
3. The use of truck mounted attenuators (TMA) on the SHADOW VEHICLE and TRAIL VEHICLE are required.
4. Reflective sheeting on the rear of the TMA shall meet or exceed the reflectivity and color requirements of DEPARTMENTAL MATERIAL SPECIFICATION DMS 8300, Type A.
5. Flashing arrow boards shall be Type B or Type C as per the Barricade and Construction (BC) standards. The board shall be controlled from inside the vehicle.
6. Each vehicle shall have two-way radio communication capability.
7. When work convoys must change lanes, the TRAIL VEHICLE should change lanes first to shadow the other convoy vehicles.
8. Vehicle spacing between the TRAIL VEHICLE and the SHADOW VEHICLE will vary depending on sight distance restrictions. Motorists approaching the work convoy should be able to see the TRAIL VEHICLE in time to slow down and/or change lanes as they approach the TRAIL VEHICLE. Vehicle spacing between the WORK VEHICLE and SHADOW VEHICLE and vehicle spacing between WORK VEHICLE and LEAD VEHICLE may vary according to terrain, work activity and other factors.
9. "X VEHICLE CONVOY" (CW21-10cT) or "WORK CONVOY" (CW21-10aT) signs shall be used on TRAIL VEHICLES and SHADOW VEHICLES as shown. As an option 48" X 48" diamond shaped "WORK CONVOY"(CW21-10T) or "X VEHICLE CONVOY" (CW21-10bT) signs may be used where adequate mounting space exists. When used, the X VEHICLE CONVOY sign shall have the number of the convoy vehicles displayed on the sign in the number designation "X" location. The "X VEHICLE CONVOY" sign shall not be used on the SHADOW VEHICLE if a TRAIL VEHICLE is used.
10. On two-lane two-way roadways, the work and protection vehicles should pull over periodically to allow motor vehicle traffic to pass. If motorists are not allowed to pass the work convoy, a "DO NOT PASS" (R4-1) sign should be placed on the back of the rearmost protection vehicle.

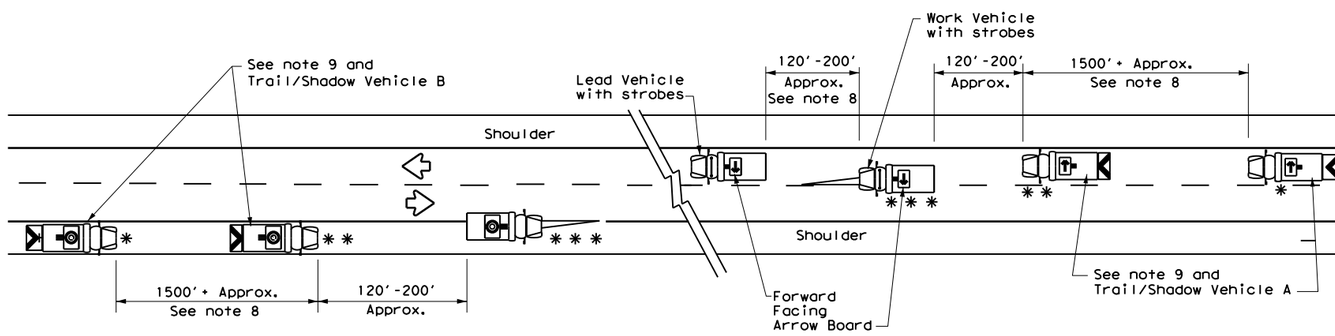

WORK ON SHOULDER

WORK ON TRAVEL LANE

TCP (3-1b)

TWO-WAY ROADWAY WITH PAVED SHOULDERS

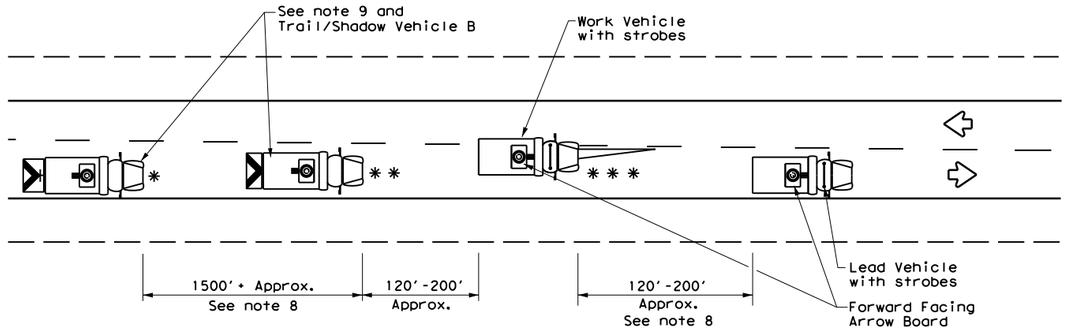

TCP (3-1c)

TWO-WAY ROADWAY WITHOUT PAVED SHOULDERS

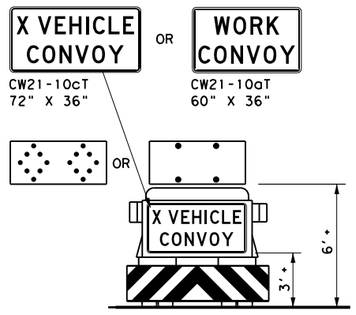

TRAIL/SHADOW VEHICLE B

with Flashing Arrow Board in CAUTION display

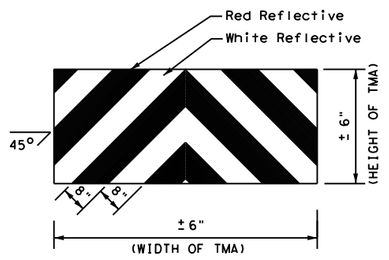

STRIPING FOR TMA

Texas Department of Transportation

Traffic Operations Division Standard

TRAFFIC CONTROL PLAN MOBILE OPERATIONS UNDIVIDED HIGHWAYS

TCP(3-1)-13

FILE: tcp3-1.dgn	DN: TxDOT	CK: TxDOT	DW: TxDOT	CK: TxDOT
©TxDOT December 1985	CONT	SECT	JOB	HIGHWAY
REVISIONS	0914	05	222	RM 2243
2-94 4-98 8-95 7-13 1-97	DIST	COUNTY		SHEET NO.
	AUS	WILLIAMSON		92

DISCLAIMER:
The use of this standard is governed by the "Texas Engineering Practice Act". No warranty of any kind is made by TxDOT for any purpose whatsoever. TxDOT assumes no responsibility for the conversion of this standard to other formats or for incorrect results or damages resulting from its use.

DATE: 4/10/2025 12:54:27 PM
FILE: G:\TXC\Projects\County_Williamson\7473-02 RM 2243 Phase 1A\03_CADD\0P\SHEETS\TCP3-3-14.dgn

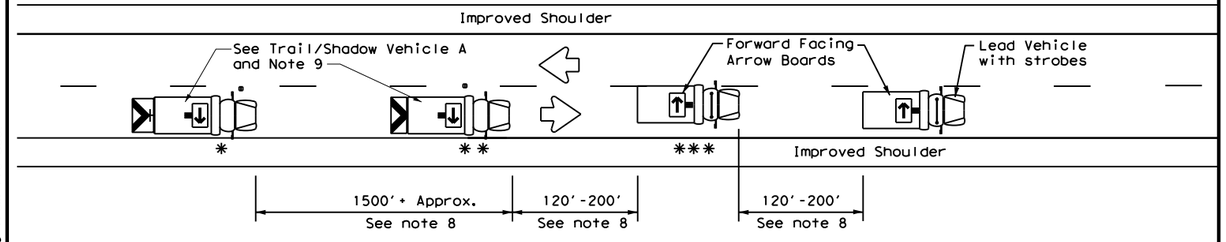

TCP (3-3a)

TWO LANE HIGHWAY WITH PAVED SHOULDERS (WORK ON TRAVEL LANE)

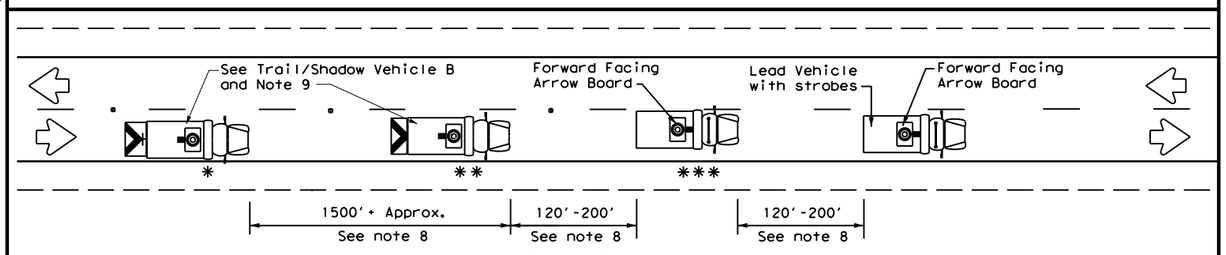

TCP (3-3b)

TWO LANE HIGHWAY WITHOUT PAVED SHOULDERS (WORK ON TRAVEL LANE)

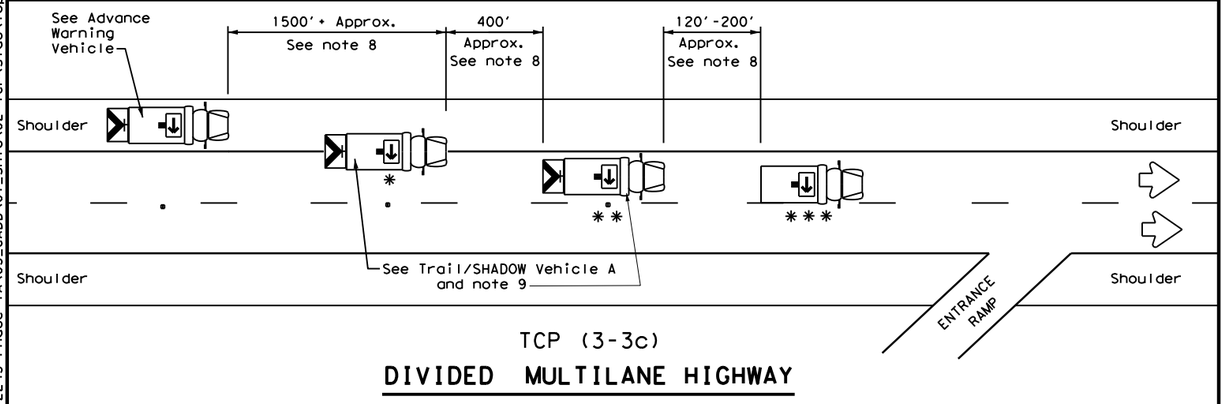

TCP (3-3c)

DIVIDED MULTILANE HIGHWAY

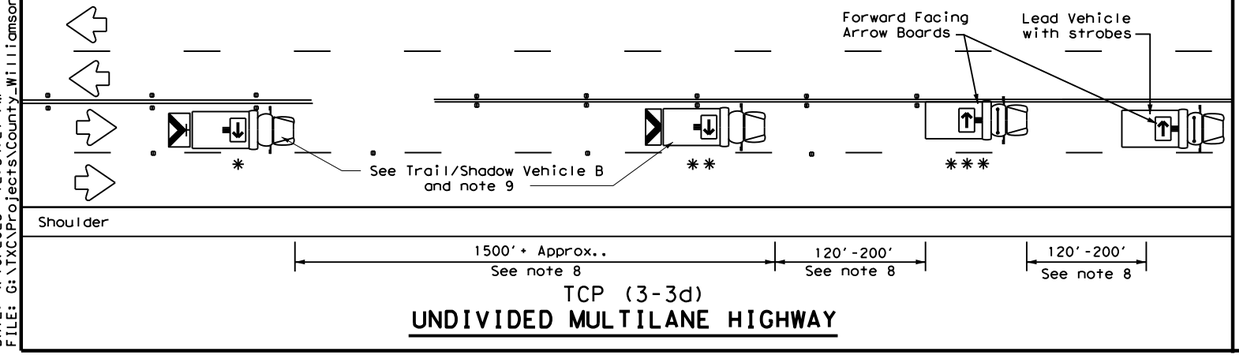

TCP (3-3d)

UNDIVIDED MULTILANE HIGHWAY

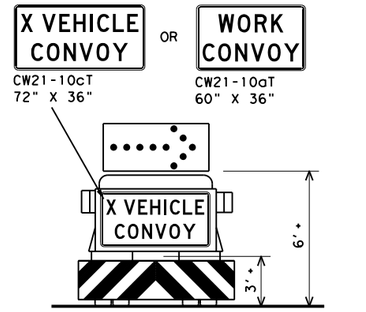

TRAIL/SHADOW VEHICLE A

with RIGHT Directional display
Flashing Arrow Board

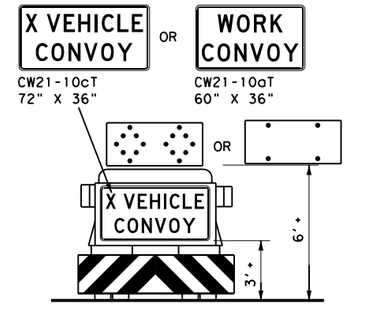

TRAIL/SHADOW VEHICLE B

with Flashing Arrow Board
in Caution Mode

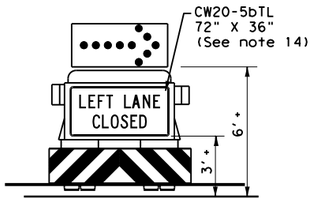

ADVANCE WARNING VEHICLE

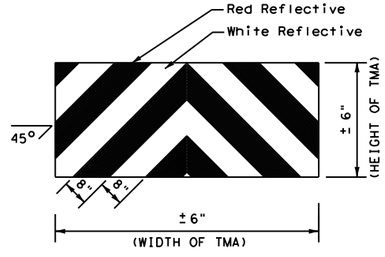

STRIPING FOR TMA

LEGEND			
*	Trail Vehicle	ARROW BOARD DISPLAY	
**	Shadow Vehicle		
***	Work Vehicle		RIGHT Directional
	Heavy Work Vehicle		LEFT Directional
	Truck Mounted Attenuator (TMA)		Double Arrow
	Traffic Flow		CAUTION (Alternating Diamond or 4 Corner Flash)

TYPICAL USAGE				
MOBILE	SHORT DURATION	SHORT TERM STATIONARY	INTERMEDIATE TERM STATIONARY	LONG TERM STATIONARY
✓				

GENERAL NOTES

1. TRAIL, SHADOW, and LEAD vehicles shall be equipped with arrow boards as illustrated. When a LEAD vehicle is not used on two way roads the WORK vehicle must have an arrow board. For divided roadways, the arrow board on the WORK vehicle is optional based on the type of work being performed. The Engineer will determine if the LEAD vehicle and/or TRAIL vehicle are required based on prevailing roadway conditions, traffic volume, and sight distance restrictions.
2. The use of amber high intensity rotating, flashing, oscillating, or strobe lights on vehicles are required. Blue high intensity rotating, flashing, oscillating, or strobe lights when mounted on the driver's side of the vehicle may be operated simultaneously with the amber beacons or strobe lights.
3. The use of truck mounted attenuators (TMA) on the SHADOW VEHICLE, ADVANCE WARNING and TRAIL VEHICLE are required.
4. Reflective sheeting on the rear of the TMA shall meet or exceed the reflectivity and color requirements of DEPARTMENTAL MATERIAL SPECIFICATION DMS 8300, Type A.
5. Flashing arrow boards shall be Type B or Type C as per the Barricade and Construction (BC) standards. The board shall be controlled from inside the vehicle.
6. Each vehicle shall have two-way radio communication capability.
7. When work convoys must change lanes, the TRAIL VEHICLE should change lanes first to shadow the other convoy vehicles.
8. Vehicle spacing between the TRAIL VEHICLE and the SHADOW VEHICLE will vary depending on sight distance restrictions. Motorists approaching the convoy should be able to see the TRAIL VEHICLE in time to slow down and/or change lanes as they approach the TRAIL VEHICLE. Vehicle spacing between the WORK VEHICLE and SHADOW VEHICLE and vehicle spacing between WORK VEHICLE and LEAD VEHICLE may vary according to terrain, work activity and other factors.
9. X VEHICLE CONVOY (CW21-10cT) or WORK CONVOY (CW21-10aT) signs shall be used on TRAIL VEHICLES and SHADOW VEHICLES as shown. As an option 48" x 48" diamond shaped WORK CONVOY (CW21-10T) or X VEHICLE CONVOY (CW21-10bT) signs may be used where adequate mounting space exists. When used, the X VEHICLE CONVOY sign shall have the number of the convoy vehicles displayed on the sign in the number designation "X" location. The X VEHICLE CONVOY sign shall not be used on the SHADOW VEHICLE if a TRAIL VEHICLE is used.
10. For divided highways with two or three lanes in one direction, the appropriate LEFT LANE CLOSED (CW20-5bTL), RIGHT LANE CLOSED (CW20-5bTR), or CENTER LANE CLOSED (CW20-5dT) sign should be used on the Advance Warning Vehicle. As an option, a portable changeable message sign (PCMS) or truck mounted changeable message sign (TMCMS) with a minimum character height of 12", and displaying the same legend may be substituted for these signs. An appropriate directional arrow display, simulating the size and legibility of the flashing arrow board may be used in the second phase of the PCMS/TMCMS message. When this is done, the arrow board will not be required on the Advance Warning Vehicle.
11. A double arrow shall not be displayed on the arrow board on the Advance Warning Vehicle.
12. For divided highways with three or four lanes in each direction, use TCP(3-2).
13. Standard diamond shape versions of the CW20-5 series signs may be used as an option if the rectangular signs shown are not available.
14. The Advance Warning Vehicle may straddle the edgeline when Shoulder width makes it necessary.
15. On two-lane two-way roadways, the work and protection vehicles should pull over periodically to allow motor vehicle traffic to pass. If motorists are not allowed to pass the work convoy, a DO NOT PASS (R4-1) sign should be placed on the back of the rearmost protection vehicle.

Texas Department of Transportation

Traffic Operations Division Standard

TRAFFIC CONTROL PLAN MOBILE OPERATIONS RAISED PAVEMENT MARKER INSTALLATION/ REMOVAL

TCP(3-3)-14

FILE: tcp3-3.dgn	DN: TxDOT	CK: TxDOT	DW: TxDOT	CK: TxDOT
©TxDOT September 1987	CONT	SECT	JOB	HIGHWAY
REVISIONS	0914	05	222	RM 2243
2-94 4-98	DIST	COUNTY		SHEET NO.
8-95 7-13	AUS	WILLIAMSON		93
1-97 7-14				

DISCLAIMER:
The use of this standard is governed by the "Texas Engineering Practice Act". No warranty of any kind is made by TxDOT for any purpose whatsoever. TxDOT assumes no responsibility for the conversion of this standard to other formats or for incorrect results or damages resulting from its use.

DATE: 4/10/2025 12:54:28 PM
FILE: G:\TXC\Projects\County_Williamson\7473-02 RM 2243 Phase 1A\03_CADD\02\SHTS\edgecon.dgn

DEFINITION OF TREATMENT ZONES FOR VARIOUS EDGE CONDITIONS

Edge Height (D) in Inches versus Lateral Clearance (Y) in Feet

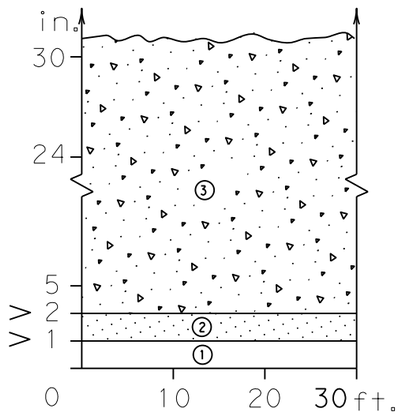

Edge Condition I
S = (3:1) (or flatter)

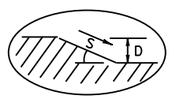

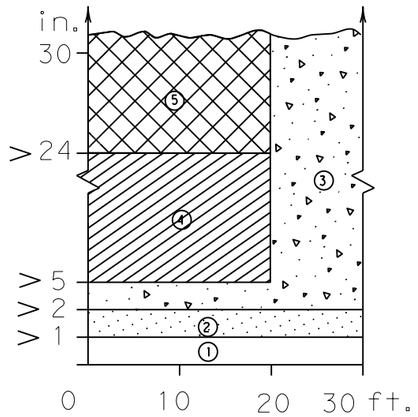

Edge Condition II
S = ((2.99):1) to (1:1)

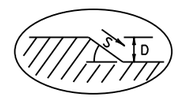

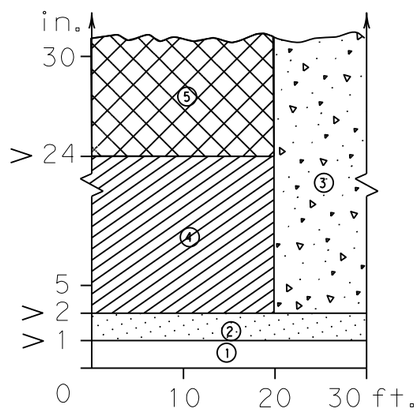

Edge Condition III
S is steeper than (1:1)

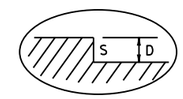

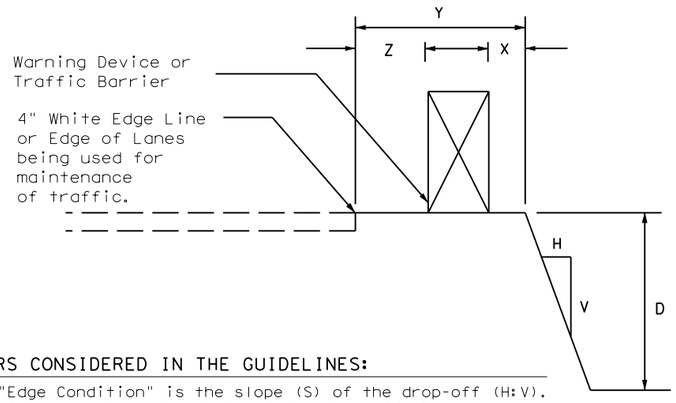

FACTORS CONSIDERED IN THE GUIDELINES:

1. The "Edge Condition" is the slope (S) of the drop-off (H:V). The "Edge Height is the depth of the drop-off "D".

2. Distance "X" is to be the maximum practical under job conditions. Two feet minimum for high speed conditions. Distance "Y" is the lateral clearance from edge of travel lane to edge of dropoff. Distance "Z" does not have a minimum.

3. In addition to the factors considered in the guidelines, each construction zone drop-off situation should be analyzed individually, taking into account other variables, such as: traffic mix, posted speed in the construction zone, horizontal curvature, and the practicality of the treatment options.

4. The conditions for indicating the use of positive or protective barriers are given by Zone-5 and Figure-1. Traffic barriers are primarily applicable for high speed conditions. Urban areas with speeds of 30 mph or less may have a lesser need for signing, delineation, and barriers. Right-angled edges, however, with "D" greater than 2 inches and located within a lateral offset of 6 feet, may indicate a higher level of treatment.

5. If the distance "Y" must be less than 3 feet, the use of a positive barrier may not be feasible. In such a case, consider either: 1) narrowing the lanes to a desired 11 to 12 feet or 10 foot minimum (see CW20-8 sign), or 2) provide an edge slope such as Edge Condition I.

Zone	Treatment Types Guidelines:
①	No treatment
②	CW 8-11 "Uneven Lanes" signs.
③	CW 8-9a Shoulder Drop-Off" or CW 8-11 signs plus vertical panels.
④	CW8-9a or CW 8-11, signs plus drums. Where restricted space precludes the use of drums, use vertical panels. An edge slope to that of the profered Edge Condition I.
⑤	Check indications (Figure-1) for possitive barrier. Where positive barrier is not indicated, the treatment shown above for Zone-4 may be used after consideration of other applicable factors.

Edge Condition Notes:

1. Edge Condition I: Most vehicles are able to traverse an edge condition with a slope rate of (3 to 1) or flatter. The slope must be constructed with a compacted material capable of supporting vehicles.

2. Edge Condition II: Most vehicles are able to traverse an edge condition with a slope between (2.99 to 1) and (1 to 1) so long as "D" does not exceed 5 inches. Under-carriage drag on most automobiles will occur when "D" exceeds 6 inches. As "D" exeeds 24 inches, the possibility for rollover is greater in most vehicles.

3. Edge Condition III: When slopes are greater than (1 to 1) and where "D" is greater than 2 inches, a more difficult control factor may exist for some vehicles, if not properly treated. For example, where "D" is greater than 2 inches and up to 24 inches different types of vehicles may experience different steering control at different edge heights. Automobiles might experience more steering control differential when "D" is greater than 2 inches and up to 5 inches. Trucks, particularly those with high loads, have more steering control differential when "D" is greater than 5 inches and up to 24 inches. When "D" exceeds 24 inches, the possibility of rollover is greater for most vehicles.

4. Milling or overlay operations that result in Edge Condition III should not be in place without appropriate warning treatments, and these conditions should not be left in place for extended periods of time.

FIGURE-1: CONDITIONS INDICATING USE OF POSITIVE BARRIER FOR ZONE 5 (▨)

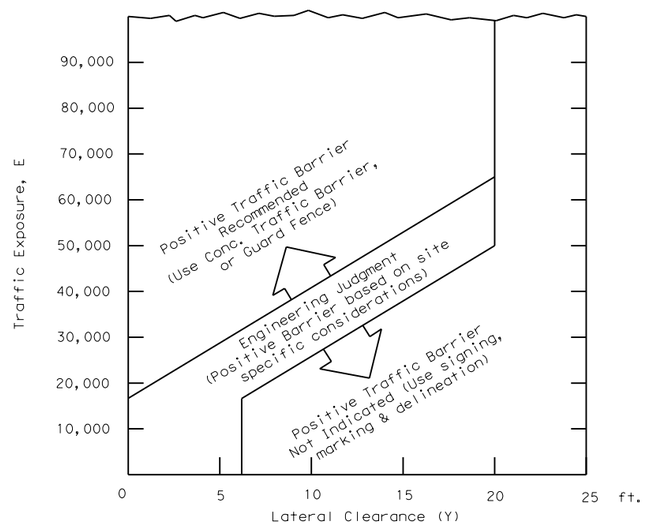

1. E = ADT x T
Where ADT is that portion of the average daily traffic volume traveling within 20 feet (generally two adjacent lanes) of the edge dropoff condition; and, T is the duration time in years of the dropoff condition.

2. Figure-1 provides a practical approach to the use of positive barriers for the protection of vehicles from pavement drop-offs. Other factors, such as the presence of heavy machinery, construction workers, or the mix and volume of traffic may make the use of positive barriers appropriate, even when the edge condition alone may not justify the use of a barrier.

3. An approved end treatment should be provided for any positive barrier end located within the clear zone.

These guidelines apply to temporary traffic control areas or work zones where continuous pavement edges or drop-offs exists parallel and adjacent to a lane used by traffic. The edge conditions may be present between shoulders and travel lanes, between adjacent or opposing travel lanes, or at intermediate points across the width of the paved surface. Due to the variability in construction operations, tolerances in the variables may be allowed by the engineer. These guidelines do not apply to short term operations. These guidelines do not constitute a rigid standard or policy; rather, they are guidance to be used in conjunction with engineering judgement. These guidelines may be updated on the Design Division's on-line manuals.

STATE OF TEXAS
JOSHUA T. RICHTER
141234
LICENSED
PROFESSIONAL ENGINEER

Date _____

Texas Department of Transportation

Traffic Safety Division Standard

TREATMENT FOR VARIOUS EDGE CONDITIONS

FILE: edgecon.dgn	DN:	CK:	DW:	CK:
©TxDOT August 2000	CONT	SECT	JOB	HIGHWAY
REVISIONS	0914	05	222	RM 2243
03-01 08-01 9-21	DIST	COUNTY		SHEET NO.
	AUS	WILLIAMSON		94

DISCLAIMER:
The use of this standard is governed by the "Texas Engineering Practice Act". No warranty of any kind is made by TxDOT for any purpose whatsoever. TxDOT assumes no responsibility for the conversion of this standard for incorrect results or damages resulting from its use.

DATE: 4/10/2025 12:54:29 PM
FILE: G:\TxDC\Projects\County_Williamson\7473-02 RM 2243 Phase 1A\03_CADD\0PSHEETS\4-08 WZRCD-13.DGN

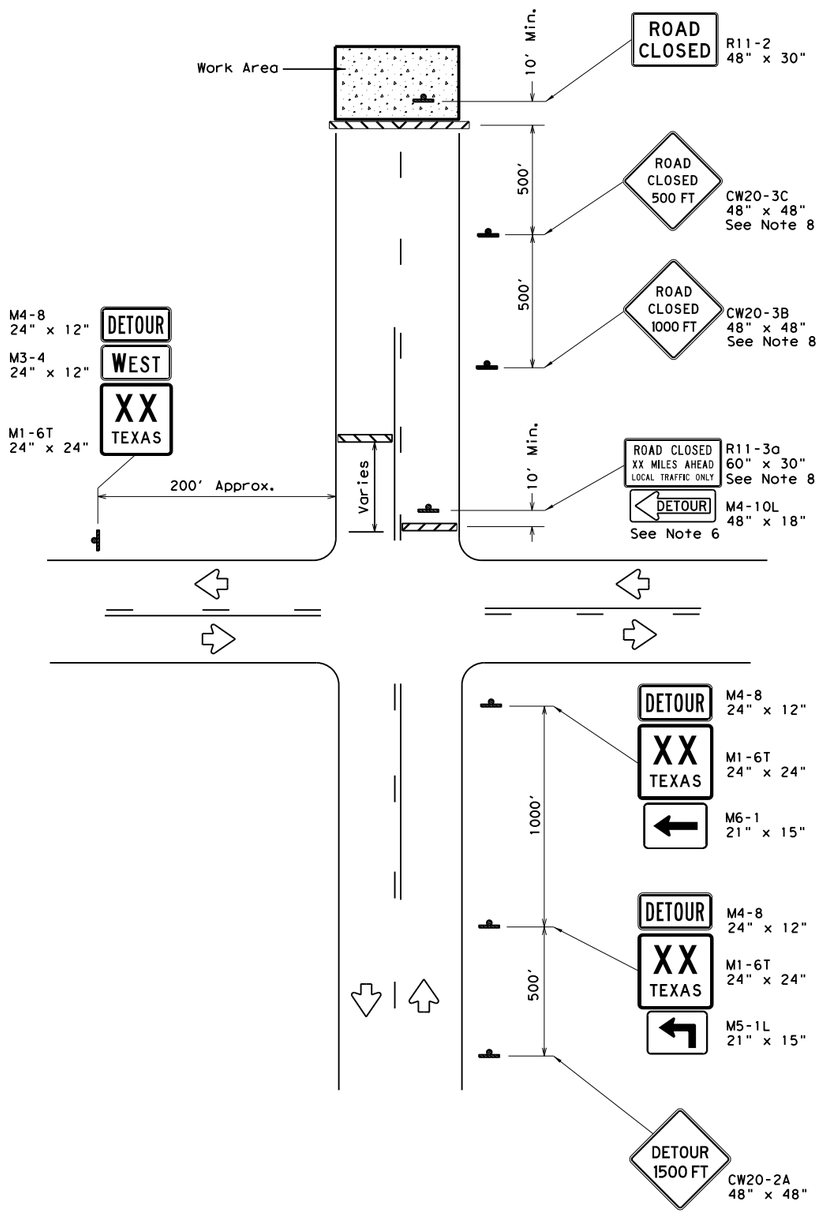

ROAD CLOSURE BEYOND THE INTERSECTION

Signing for a Numbered Route with an Off-Site Detour

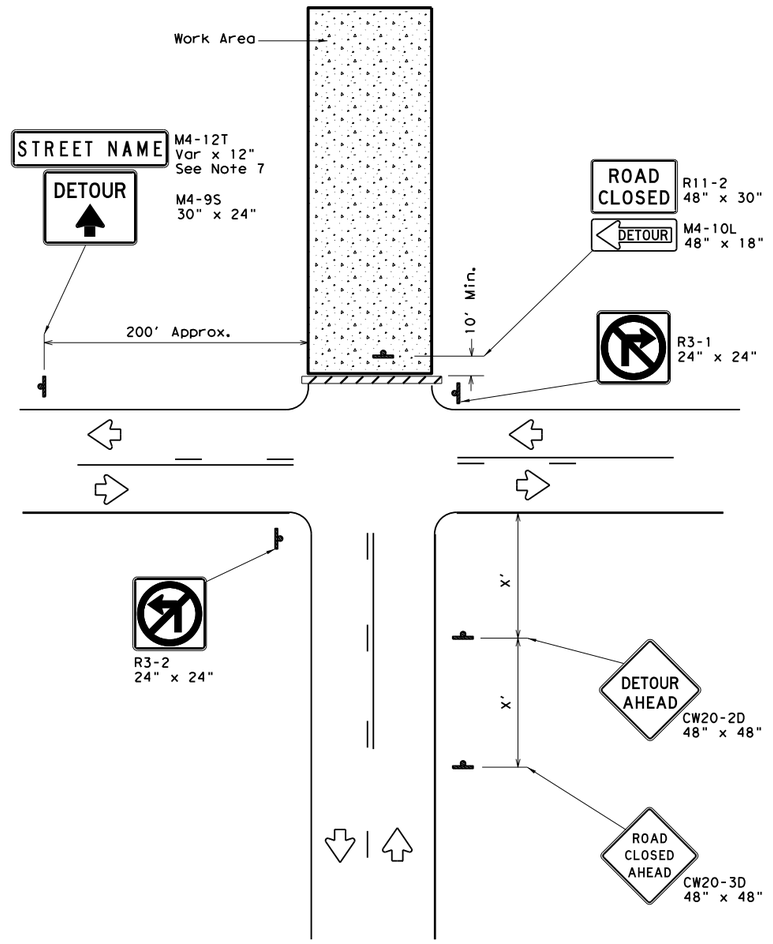

ROAD CLOSURE AT THE INTERSECTION

Signing for an Un-numbered Route with an Off-Site Detour

LEGEND	
	Type 3 Barricade
	Sign

Posted Speed *	Minimum Sign Spacing "X" Distance
30	120'
35	160'
40	240'
45	320'
50	400'
55	500'
60	600'
65	700'
70	800'
75	900'

* Conventional Roads Only

GENERAL NOTES

1. This sheet is intended to provide details for temporary work zone road closures. For permanent road closure details see the D&OM standards.
2. Barricades used shall meet the requirements shown on Barricade and Construction Standard BC(10) and listed on the Compliant Work Zone Traffic Control Devices list (CWZTCD).
3. Stockpiled materials shall not be placed on the traffic side of barricades.
4. Barricades at the road closure should extend from pavement edge to pavement edge.
5. Detour signing shown is intended to illustrate the type of signing that is appropriate for numbered routes or un-numbered routes as labeled. It does not indicate the full extent of detour signing required. Detour routes should be signed as shown elsewhere in the plans.
6. If the road is open for a significant distance beyond the intersection or there are significant origin/destination points beyond the intersection, the signs and barricades at this location should be located at the edge of the traveled way.
7. The Street Name (M4-12T) sign is to be placed above the DETOUR (M4-9S) sign.
8. For urban areas where there is a shorter distance between the intersection and the actual closure location, the ROAD CLOSED XX MILES AHEAD (R11-3a) sign may be replaced with a ROAD CLOSED TO THRU TRAFFIC (R11-4) sign. If adequate space does not exist between the intersection and the closure a single ROAD CLOSED AHEAD (CW20-3D) sign spaced as per the table above may replace the ROAD CLOSED 1000 FT (CW20-3B) and ROAD CLOSED 500 FT (CW20-3C) signs.
9. Signs and barricades shown shall be subsidiary to Item 502. Locations where these details will be required shall be as shown elsewhere in the plans.

Texas Department of Transportation

Traffic Operations Division Standard

WORK ZONE ROAD CLOSURE DETAILS

WZ(RCD)-13

FILE: wzrcd-13.dgn	DN: TxDOT	CK: TxDOT	DW: TxDOT	CK: TxDOT
©TxDOT August 1995	CONT	SECT	JOB	HIGHWAY
REVISIONS	0914	05	222	RM 2243
1-97 4-98 7-13	DIST	COUNTY		SHEET NO.
2-98 3-03	AUS	WILLIAMSON		95

DISCLAIMER:
The use of this standard is governed by the "Texas Engineering Practice Act". No warranty of any kind is made by TxDOT for any purpose whatsoever. TxDOT assumes no responsibility for the conversion of this standard to other formats or for incorrect results or damages resulting from its use.

DATE: 4/10/2025 12:54:30 PM
FILE: G:\TxDC\Projects\County_Williamson\7473-02 RM 2243 Phase 1A\03_CADD\0PSAM\sheets\wzrs22.dgn

Warning sign and rumble strip sequence in opposite direction is same as below.

TABLE 1		
Flagger to Flagger (Length of Work Area)	ADT	# of Rumble Strip Arrays
1/8 Mile	< 4,500	1
	≥ 4,500	2
1/4 Mile	< 3,500	1
	≥ 3,500	2
1/2 Mile	< 2,600	1
	≥ 2,600	2
1 Mile	< 1,600	1
	≥ 1,600	2
> 1 Mile	N/A	2

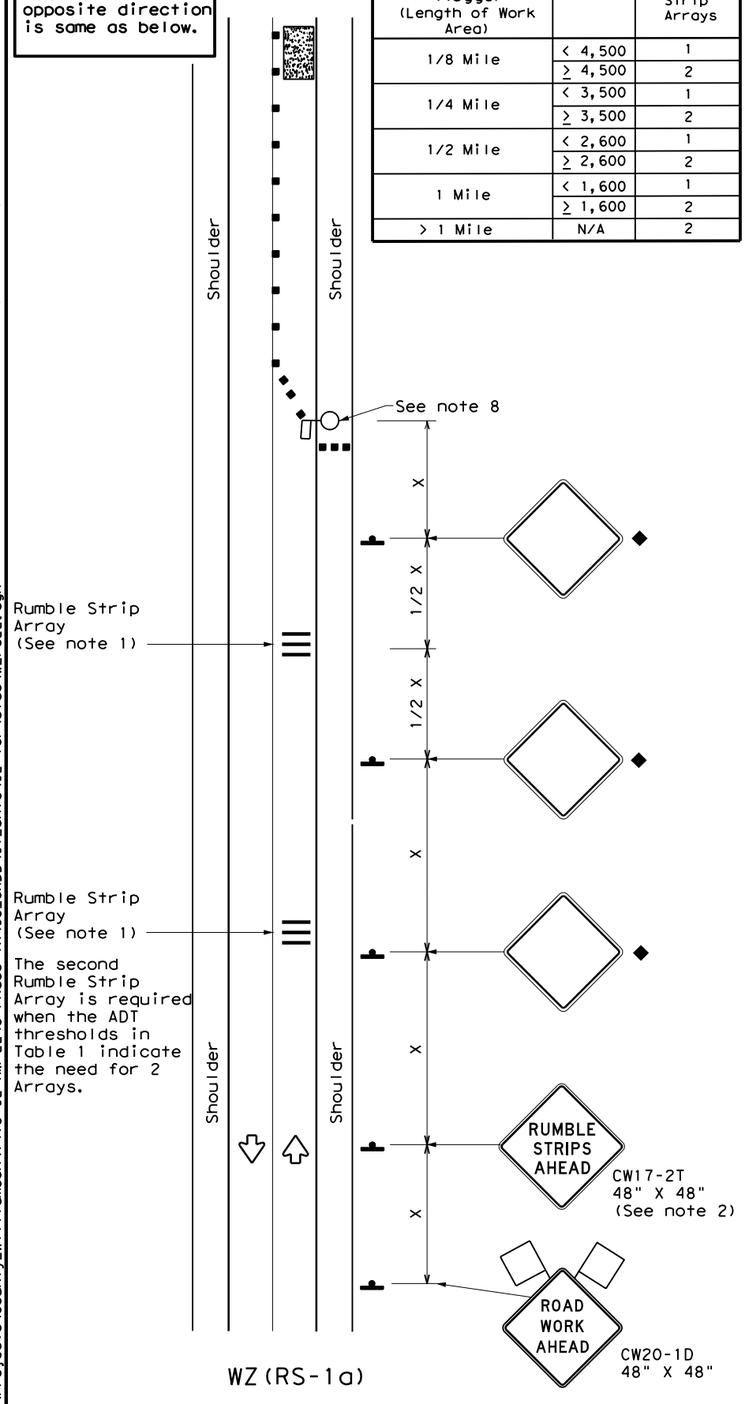

WZ(RS-1a)

RUMBLE STRIPS ON ONE-LANE TWO-WAY APPLICATION

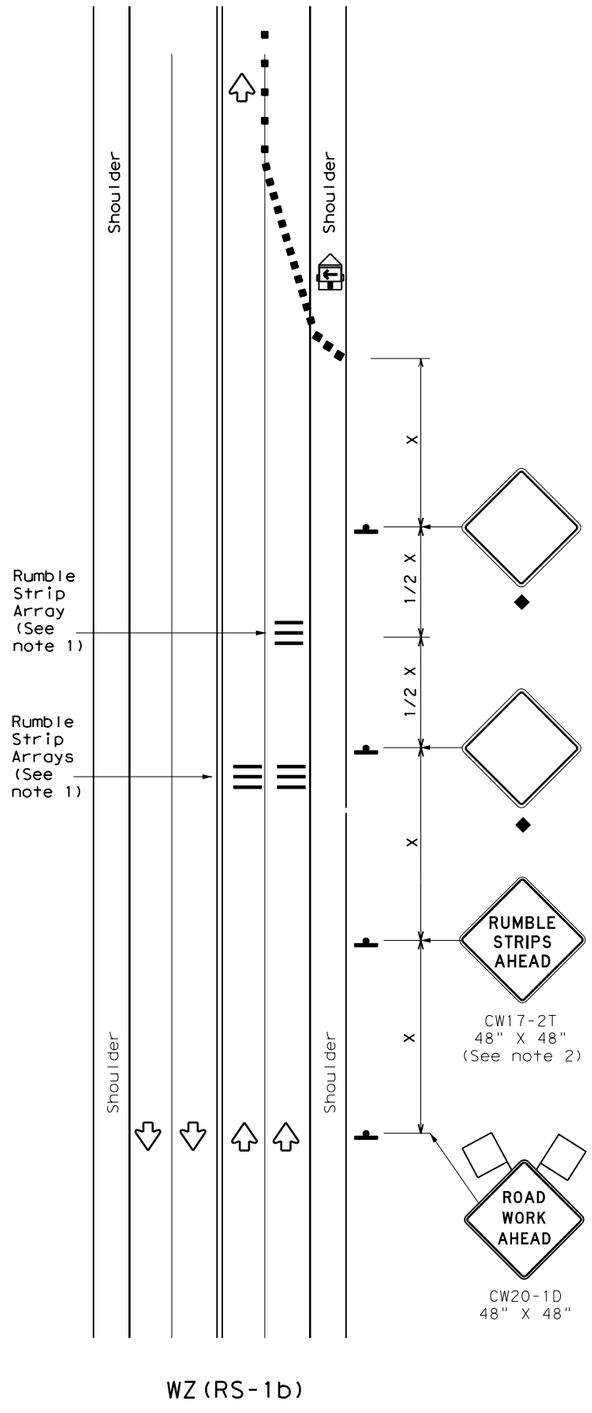

WZ(RS-1b)

RUMBLE STRIPS FOR LANE CLOSURE ON CONVENTIONAL ROADWAY

GENERAL NOTES

1. Each Rumble Strip Array should consist of three rumble strips spaced center to center at the spacing shown in Table 2, placed transverse across the lane at locations shown.
2. The CW17-2T "RUMBLE STRIPS AHEAD" sign should be located after the CW20-1D "ROAD WORK AHEAD sign and spaced as shown. If traffic is observed to be queuing, or is expected to queue beyond the Rumble Strips, the CW17-2T sign and the first Rumble Strip Array may be located upstream of the CW20-1D sign as necessary to provide needed warning.
3. Temporary Rumble Strips will be considered subsidiary to Item 502, and shall be a product listed on the Compliant Work Zone Traffic Control Devices.
4. Remove Temporary Rumble Strips before removing the advanced warning signs.
5. Temporary Rumble Strips should not be used on horizontal curves, loose gravel, soft or bleeding asphalt, heavily rutted pavements or unpaved surfaces.
6. Temporary Rumble Strips shall be installed and maintained as per manufacturer's recommendations.
7. This standard sheet shall be used in conjunction with other appropriate TCP standard, TMUTCD typical application or project specific detail for the project.
8. The one-lane two-way application may utilize a flagger, an Automated Flagger Assistance Device (AFAD) or a Portable Traffic Signal (PTS).
9. Replace defective Temporary Rumble Strips as directed by the Engineer.
10. Temporary Rumble Strips may be used on freeways or expressways based on engineering judgment and written direction from the Engineer.

LEGEND			
	Type 3 Barricade		Channelizing Devices
	Heavy Work Vehicle		Truck Mounted Attenuator (TMA)
	Trailer Mounted Flashing Arrow Panel	M	Portable Changeable Message Sign (PCMS)
	Sign		Traffic Flow
	Flag		Flagger

Posted Speed *	Formula	Minimum Desirable Taper Lengths ** 10' Offset	11' Offset	12' Offset	Suggested Maximum Spacing of Channelizing Devices On a Taper	On a Tangent	Minimum Sign Spacing "X" Distance	Suggested Longitudinal Buffer Space "B"
30	$L = \frac{WS^2}{60}$	150'	165'	180'	30'	60'	120'	90'
35		205'	225'	245'	35'	70'	160'	120'
40		265'	295'	320'	40'	80'	240'	155'
45	L=WS	450'	495'	540'	45'	90'	320'	195'
50		500'	550'	600'	50'	100'	400'	240'
55		550'	605'	660'	55'	110'	500'	295'
60		600'	660'	720'	60'	120'	600'	350'
65		650'	715'	780'	65'	130'	700'	410'
70		700'	770'	840'	70'	140'	800'	475'
75		750'	825'	900'	75'	150'	900'	540'

* Conventional Roads Only

** Taper lengths have been rounded off.
L=Length of Taper(FT) W=Width of Offset(FT)
S=Posted Speed(MPH)

TYPICAL USAGE				
MOBILE	SHORT DURATION	SHORT TERM STATIONARY	INTERMEDIATE TERM STATIONARY	LONG TERM STATIONARY
	✓	✓		

◆ Signs are for illustrative purposes only. Signs required may vary depending on the TCP, TMUTCD Typical Application, or project specific details for the project.

* For posted speeds in excess of 65 MPH, it is recommended that spacing is increased as speed limits increase. Increasing space between rumble strips will improve effectiveness.

TABLE 2	
Speed	Approximate distance between strips in an array
≤ 40 MPH	10'
> 40 MPH & ≤ 55 MPH	15'
= 60 MPH	20'
≥ 65 MPH	* 35' +

Texas Department of Transportation — Traffic Safety Division Standard

TEMPORARY RUMBLE STRIPS

WZ(RS)-22

FILE: wzrs22.dgn	DN: TxDOT	CK: TxDOT	DW: TxDOT	CK: TxDOT
©TxDOT November 2012	CONT	SECT	JOB	HIGHWAY
REVISIONS 2-14 1-22 4-16	0914	05	222	RM 2243
	DIST	COUNTY		SHEET NO.
	AUS	WILLIAMSON		96

DISCLAIMER:
The use of this standard is governed by the "Texas Engineering Practice Act". No warranty of any kind is made by TxDOT for any purpose whatsoever. TxDOT assumes no responsibility for the conversion of this standard to other formats or for incorrect results or damages resulting from its use.

DATE: 4/10/2025 12:54:31 PM
FILE: G:\TXC\Projects\County_Williamson\7473-02 RM 2243 Phase 1A\03_CADD\01_Shts\02-TCP\Stds\wzstpm-23.dgn

WORK ZONE SHORT TERM PAVEMENT MARKINGS DETAILS

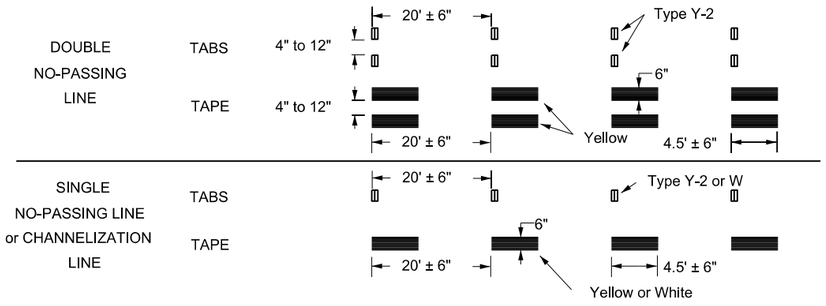

NOTES:

1. Short term pavement markings may be prefabricated markings (stick down tape) or temporary flexible reflective roadway marker tabs unless otherwise specified elsewhere in plans.
2. Short term pavement markings shall NOT be used to simulate edge lines.
3. Dimensions indicated on this sheet are typical and approximate. Variations in size and height may occur between markers or devices made by manufacturers, by as much as 1/4 inch, unless otherwise noted.
4. Temporary flexible-reflective roadway marker tabs will require normal maintenance replacement when used on roadways with an ADT per lane of up to 7500 vehicles with no more than 10% truck mix. When roadways exceed these values, additional maintenance replacement of devices should be planned.
5. No segment of roadway open to traffic shall remain without permanent pavement markings for a period greater than 14 calendar days. The Contractor will be responsible for maintaining short term pavement markings until permanent pavement markings are in place. When the Contractor is responsible for placement of permanent pavement markings, no segment of roadway shall remain without permanent pavement markings for a period greater than 14 calendar days unless weather conditions prohibit placement. Permanent pavement markings shall be placed as soon as weather permits.
6. For two lane, two-way roadways, DO NOT PASS signs shall be erected to mark the beginning of sections where passing is prohibited and PASS WITH CARE signs shall be erected to mark the beginning of sections where passing is permitted. Signs shall be in accordance with the "Texas Manual on Uniform Traffic Control Devices" (TMUTCD) and may be used to indicate the limits of no-passing zones for up to 14 calendar days. Permanent pavement markings should then be placed.
7. For low volume two lane, two-way roadways of 4000 ADT or less, no-passing lines may be omitted when approved by the Engineer. DO NOT PASS and PASS WITH CARE signs shall be erected (see note 6).
8. For exit gores where a lane is being dropped place wide gore markings or retroreflective channelizing devices to guide motorist through the exit. If channelizing devices are to be used it should be noted elsewhere in the plans. One piece cones are not allowed for this purpose.

TEMPORARY FLEXIBLE, REFLECTIVE ROADWAY MARKER TABS (TABS)

1. Temporary flexible-reflective roadway marker tabs detailed on this sheet will be designated Type Y-2 (two amber reflective surfaces with yellow body); Type Y (one amber reflective surface with yellow body); and Type W (one white or silver reflective surface with white body). Additional details may be found on BC(11).
2. Tabs shall meet requirements of Departmental Material Specification DMS-8242.
3. When dry, tabs shall be visible for a minimum distance of 200 feet during normal daylight hours and when illuminated by automobile low-beam head light at night, unless sight distance is restricted by roadway geometrics.
4. No two consecutive tabs nor four tabs per 1000 feet of line shall be missing or fail to meet the visual performance requirements of Note 3.

WORK ZONE SHORT TERM PAVEMENT MARKINGS PATTERNS

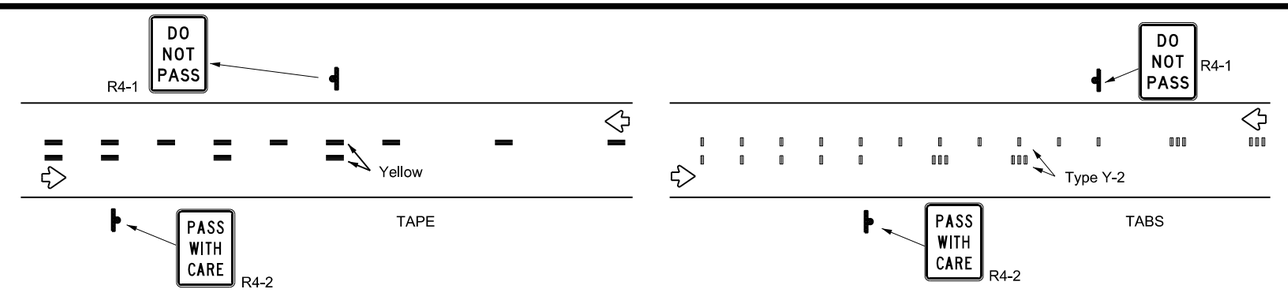

CENTER LINE & NO-PASSING ZONE BARRIER LINES FOR TWO LANE TWO-WAY HIGHWAYS

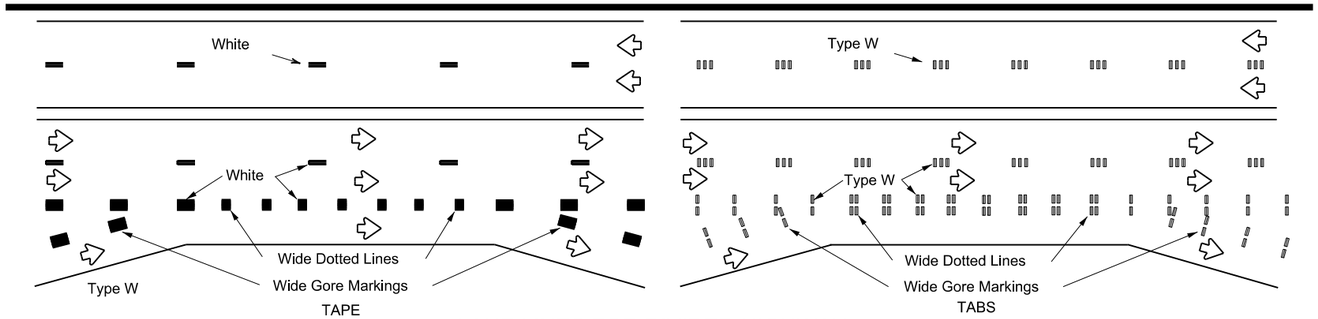

LANE LINES FOR DIVIDED HIGHWAY

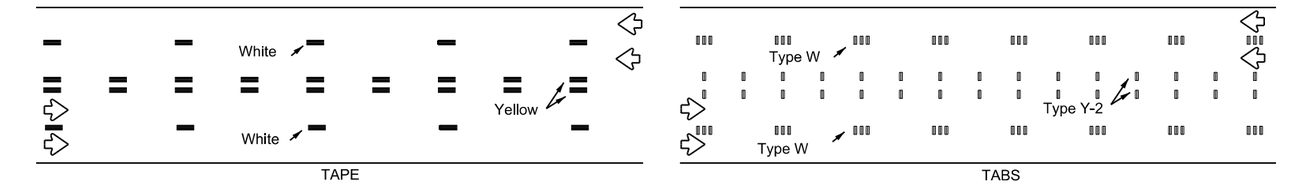

LANE & CENTER LINES FOR MULTILANE UNDIVIDED HIGHWAYS

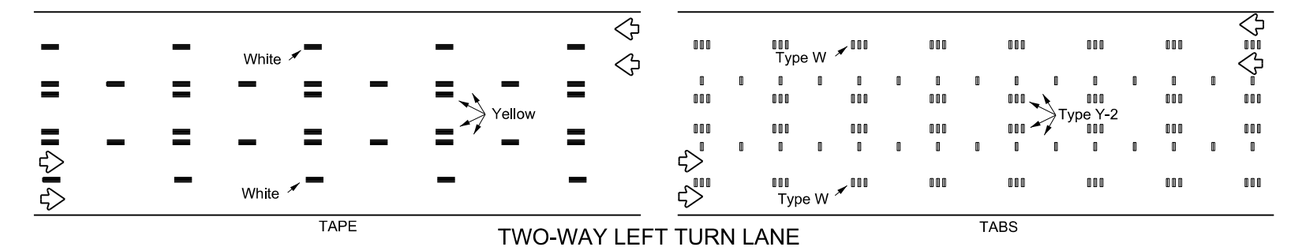

TWO-WAY LEFT TURN LANE

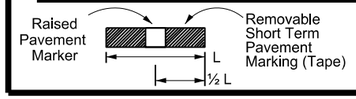

If raised pavement markers are used to supplement REMOVABLE short term markings, the markers shall be applied to the top of the tape at the approximate mid length of the tape. This allows an easier removal of raised markers and tape.

PREFABRICATED PAVEMENT MARKINGS

1. Temporary Removable Prefabricated Pavement Markings shall meet the requirements of DMS-8241.
2. Non-removable Prefabricated Pavement Markings shall meet the requirements of either DMS-8240 "Permanent Prefabricated Pavement Markings" or DMS-8243 "Temporary Costruction-Grade Prefabricated Pavement Markings."

RAISED PAVEMENT MARKERS

1. All raised pavement markers used for work zone markings shall meet the requirements of Item 672, "RAISED PAVEMENT MARKERS" and DMS-4200.

DEPARTMENTAL MATERIAL SPECIFICATIONS (DMS) & MATERIAL PRODUCER LISTS (MPL)

1. DMSs referenced above can be found along with embedded links to their respective MPLs at the following website:

http://www.txdot.gov/business/contractors_consultants/material_specifications/default.htm

Texas Department of Transportation

Traffic Safety Division Standard

WORK ZONE SHORT TERM PAVEMENT MARKINGS

WZ(STPM)-23

FILE: wzstpm-23.dgn	DN:	CK:	DW:	CK:
© TxDOT February 2023	CONT	SECT	JOB	HIGHWAY
REVISIONS	0914	05	222	RM 2243
4-92 7-13 1-97 2-23 3-03	DIST	COUNTY		SHEET NO.
	AUS	WILLIAMSON		97

111

DISCLAIMER:
The use of this standard is governed by the "Texas Engineering Practice Act". No warranty of any kind is made by TxDOT for any purpose whatsoever. TxDOT assumes no responsibility for the conversion of this standard to other formats or for incorrect results or damages resulting from its use.

DATE: 4/10/2025 12:54:32 PM
FILE: G:\TXC\Projects\County_Williamson\7473-02 RM 2243 Phase 1A\03_CADD\01_SHEETS\wztd-17.dgn

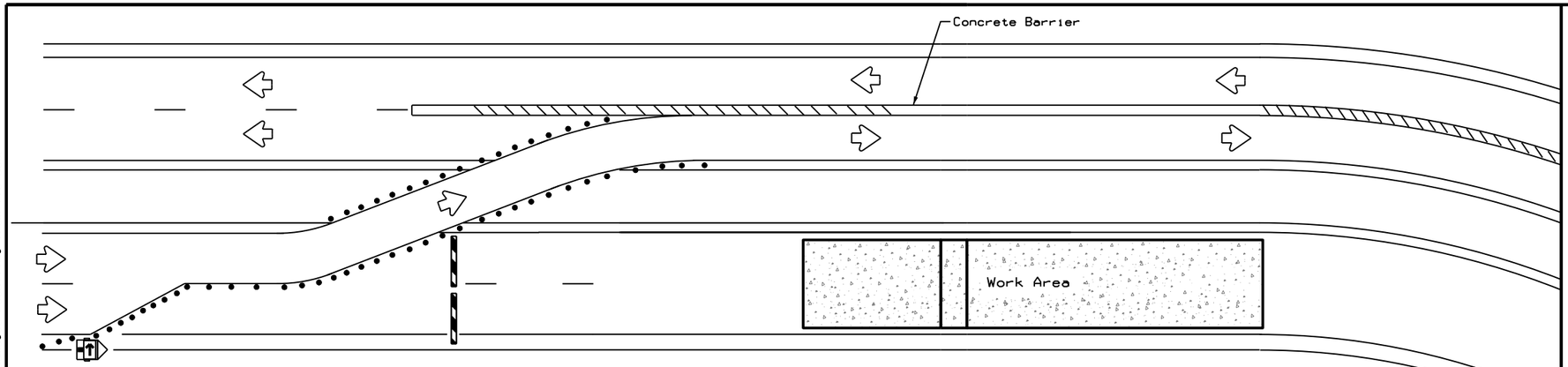

NOTES:

1. Length of Safety Glare screen will be specified elsewhere in the plans.
2. The cumulative nominal length of the modular safety glare screen units shall equal the length of the individual sections of temporary concrete traffic barrier on which they are installed so the joint between barrier sections will not be spanned by any one safety glare screen unit.
3. Screen Panel/blades will be designed such that reflective sheeting conforming with Departmental Material Specification DMS-8300, Sign Face Materials, Type B or C Yellow, minimum size of 2 inches by 12 inches can be attached to the edge of the panel/blade. The sheeting shall be attached to one glare screen panel/blade per section of concrete barrier not to exceed a spacing of 30 feet. Barrier reflectors are not necessary when panel/blades are installed with reflective sheeting as described.
4. Payment for these devices will be under statewide Special Specification "Modular Glare Screens for Headlight Barrier."
5. This detail is only intended to show types of locations where Glare Screens would be appropriate. Required signing and other devices shall be as shown elsewhere in the plans.

BARRIER DELINEATION WITH MODULAR GLARE SCREENS

LEGEND	
	Type 3 Barricade
• • •	Channelizing Devices
	Trailer Mounted Flashing Arrow Board
	Sign
\\\\	Safety glare screen

DEPARTMENTAL MATERIAL SPECIFICATIONS	
SIGN FACE MATERIALS	DMS-8300
DELINEATORS AND OBJECT MARKERS	DMS-8600
MODULAR GLARE SCREENS FOR HEADLIGHT BARRIER	DMS-8610

Only pre-qualified products shall be used. A copy of the Compliant Work Zone Traffic Control Devices List" CWZTCD)describes pre-qualified products and their sources and may be found at the following web address:

http://www.txdot.gov/business/resources/producer-list.html

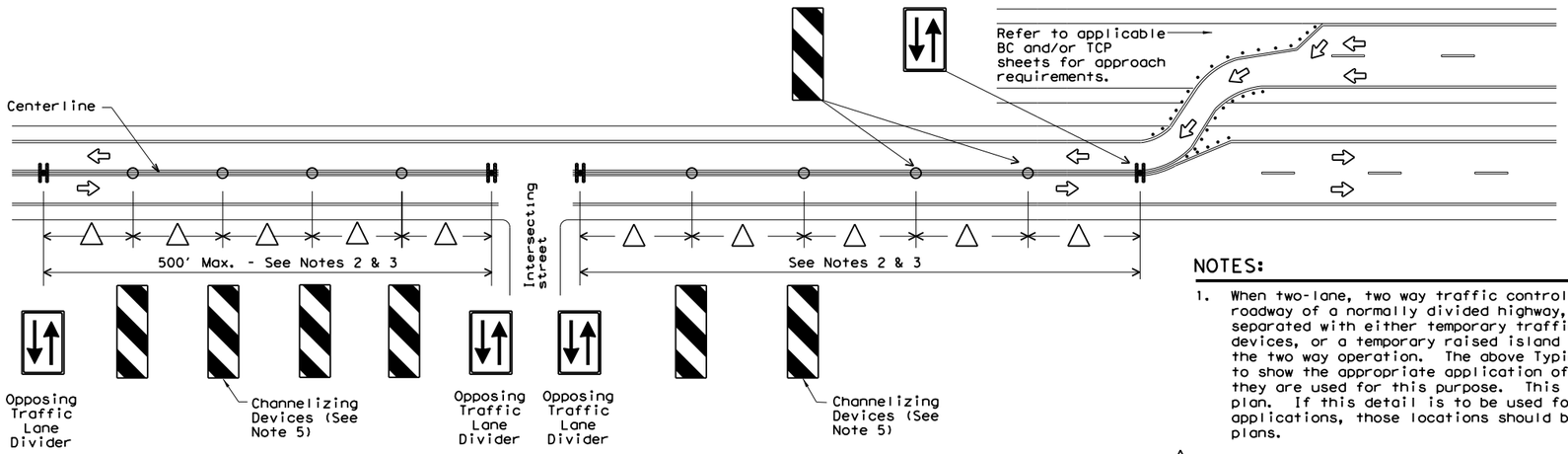

VERTICAL PANELS & OPPOSING TRAFFIC LANE DIVIDERS (OTLD) SEPARATING TWO-WAY TRAFFIC ON NORMALLY DIVIDED HIGHWAYS

NOTES:

1. When two-lane, two way traffic control must be maintained on one roadway of a normally divided highway, opposing traffic shall be separated with either temporary traffic barriers, channelizing devices, or a temporary raised island throughout the length of the two way operation. The above Typical Application is intended to show the appropriate application of channelizing devices when they are used for this purpose. This is not a traffic control plan. If this detail is to be used for other types of roads or applications, those locations should be stated elsewhere in the plans.

△2. Space devices according to the Tangent Spacing shown on the Device Spacing table on BC(9) but not exceeding 100'.

3. Every fifth device should be an OTLD except when spaced closer to accommodate an intersection. An OTLD should be the first device on each side of intersecting streets or roads.
4. Locations where surface mount bases with adhesives or self-righting devices will be required in order to maintain them in their proper position should be noted elsewhere in the plans.
5. Channelizing devices are to be vertical panels, 42" cones or tubular markers that are at least 36" tall. Tubular markers used to separate traffic should have a rubber base weighing at least 30 pounds. Tubular markers that are 42" tall or more shall have four bands of reflective material as detailed for 42" cones on BC(10). Tubular markers less than 42" but at least 36" tall shall have three bands of 3" wide white reflective material spaced 2" apart. Reflective material shall meet DMS-8300, Type A.

Texas Department of Transportation

Traffic Operations Division Standard

TRAFFIC CONTROL PLAN TYPICAL DETAILS

WZ(TD)-17

FILE: wztd-17.dgn	DN: TxDOT	CK: TxDOT	DW: TxDOT	CK: TxDOT
©TxDOT February 1998	CONT	SECT	JOB	HIGHWAY
REVISIONS 4-98 2-17 3-03 7-13	0914	05	222	RM 2243
	DIST	COUNTY		SHEET NO.
	AUS	WILLIAMSON		98

DISCLAIMER:
The use of this standard is governed by the "Texas Engineering Practice Act". No warranty of any kind is made by TxDOT for any purpose whatsoever. TxDOT assumes no responsibility for the conversion of this standard to other formats or for incorrect results or damages resulting from its use.

DATE: 4/10/2025 12:54:33 PM
FILE: G:\TXC\Projects\County_Williamson\7473-02 RM 2243 Phase 1A\03_CADD\01-Sheets\02-Traffic\WZ(UL)-13.dgn

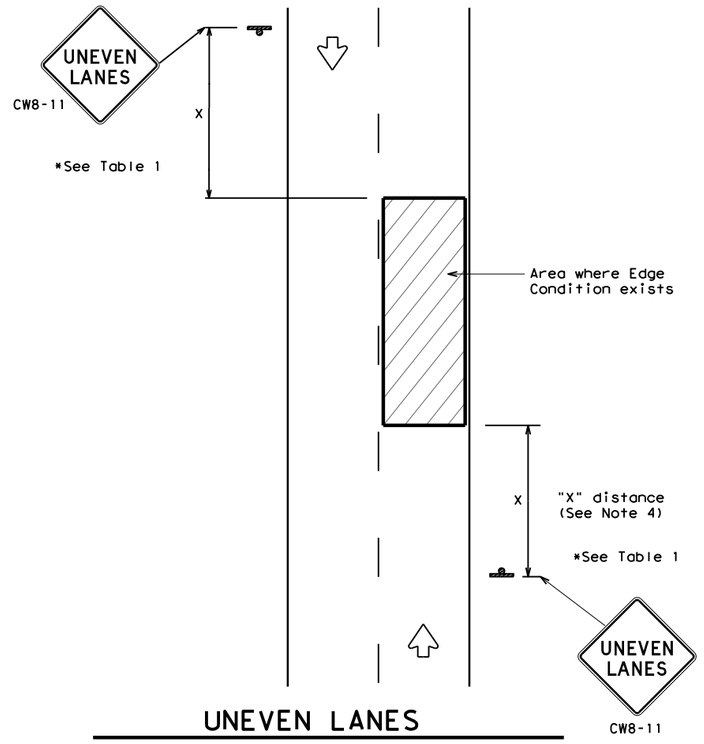

UNEVEN LANES
TWO LANE CONVENTIONAL ROAD

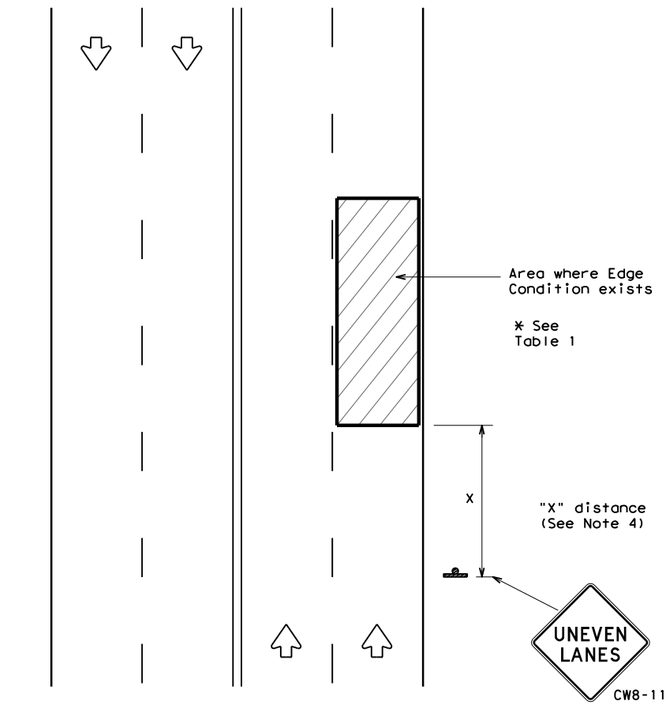

UNEVEN LANES
FOUR LANE CONVENTIONAL ROAD

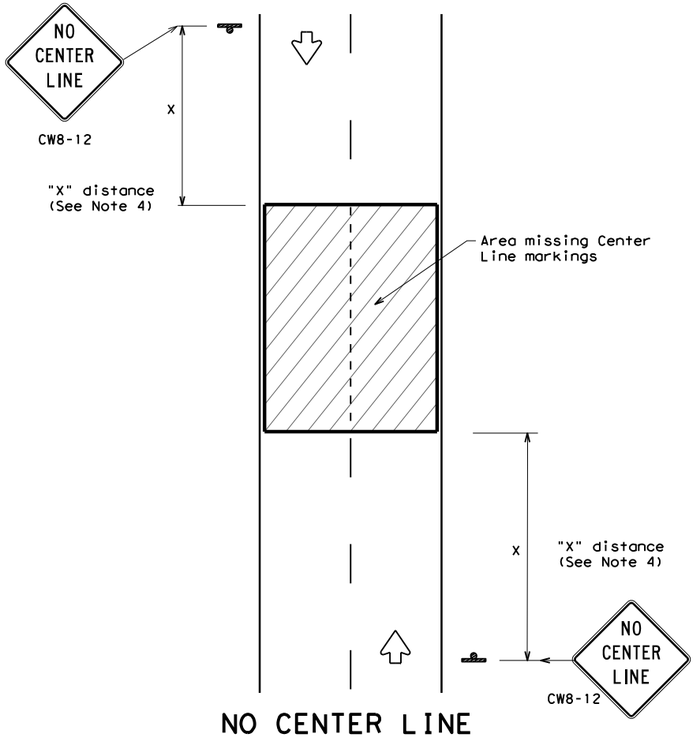

NO CENTER LINE
TWO LANE CONVENTIONAL ROAD

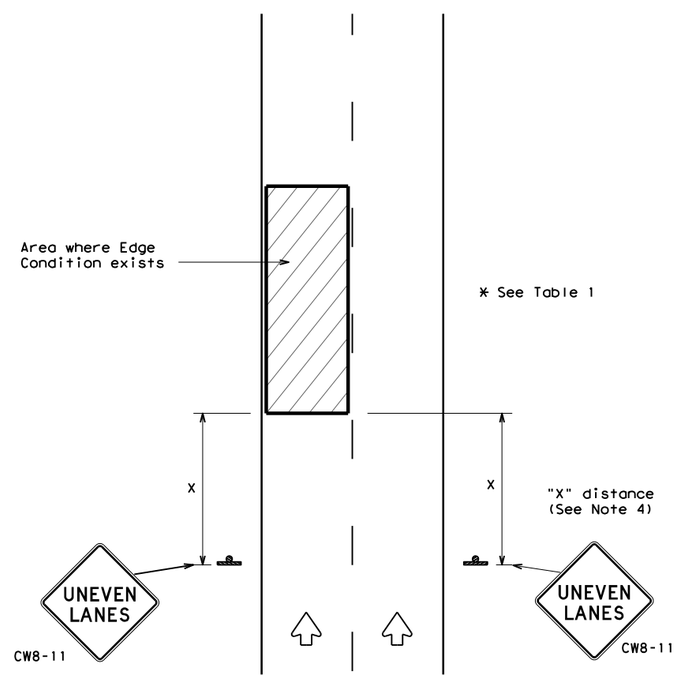

UNEVEN LANES
DIVIDED ROADWAY

DEPARTMENTAL MATERIAL SPECIFICATIONS	
PERMANENT PREFABRICATED PAVEMENT MARKINGS	DMS-8240
TEMPORARY (REMOVABLE) PREFABRICATED PAVEMENT MARKINGS	DMS-8241
SIGN FACE MATERIALS	DMS-8300

COLOR	USAGE	SHEETING MATERIAL
ORANGE	BACKGROUND	TYPE B_{FL} OR TYPE C_{FL} SHEETING
BLACK	LEGEND & BORDERS	ACRYLIC NON-REFLECTIVE SHEETING

GENERAL NOTES

1. If spalling or holes occur, ROUGH ROAD (CW8-8) signs should be placed in advance of the condition and be repeated every two miles where the condition persists.
2. UNEVEN LANES (CW8-11) signs shall be installed in advance of the condition and repeated every mile. Signs installed along the uneven lane condition may be supplemented with the NEXT XX MILES (CW7-3aP) plaque or Advisory Speed (CW13-1P) plaque.
3. NO CENTER LINE (CW8-12) signs and temporary pavement markings as per the WZ(STPM) standard shall be installed if yellow centerlines separating two way traffic are obscured or obliterated. Repeat NO CENTER LINE signs every two miles where the center line markings are not in place. The signs and markings shall remain in place until permanent pavement markings are installed.
4. Signs shall be spaced at the distances recommended as per BC standards.
5. Additional signs may be required as directed by the Engineer. Signs shall remain in place until final surface is applied. Signs shall be considered subsidiary to Item 502 "BARRICADES, SIGNS AND TRAFFIC HANDLING."
6. Signs shall be fabricated and mounted on supports as shown on the BC standards and/or listed on the "Compliant Work Zone Traffic Control Devices" list.
7. Short term markings shall not be used to simulate edge lines.
8. All signs shall be constructed in accordance with the details found in the "Standard Highway Sign Designs for Texas," latest edition.

TABLE 1

Edge Condition	Edge Height (D)	* Warning Devices
① 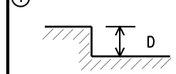	Less than or equal to: 1¼" (maximum-planing) 1½" (typical-overlay)	Sign: CW8-11
	Distance "D" may be a maximum of 1 1/4 " for planing operations and 2" for overlay operations if uneven lanes with edge condition 1 are open to traffic after work operations cease.	
② 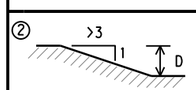	Less than or equal to 3"	Sign: CW8-11
③ 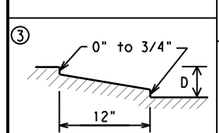 Notched Wedge Joint	Distance "D" may be a maximum of 3" if uneven lanes with edge condition 2 or 3 are open to traffic after work operations cease. Uneven lanes should not be open to traffic when "D" is greater than 3".	

TRAFFIC CONTROL DURING PLANING, OVERLAY AND LEVELING OPERATIONS ARE SHOWN ELSEWHERE IN THE PLANS.

MINIMUM WARNING SIGN SIZE	
Conventional roads	36" x 36"
Freeways/expressways, divided roadways	48" x 48"

Texas Department of Transportation
Traffic Operations Division Standard

SIGNING FOR UNEVEN LANES

WZ(UL)-13

FILE: wzul-13.dgn	DN: TxDOT	CK: TxDOT	DW: TxDOT	CK: TxDOT
© TxDOT April 1992	CONT 0914	SECT 05	JOB 222	HIGHWAY RM 2243
REVISIONS 8-95 2-98 7-13 1-97 3-03	DIST AUS	COUNTY WILLIAMSON		SHEET NO. 99

HORIZONTAL / VERTICAL CONTROL - GRID COORDINATES

PT	NORTHING	EASTING	ELEV.	DESCRIPTION
CP-1	10199606.71	3127629.47	783.31'	CP 5/8"IR W/ALUM CAP STAMPED"SAM CONTROL CP-1"
CP-2	10196296.15	3123536.22	852.27'	CP 5/8"IR W/ALUM CAP STAMPED"SAM CONTROL CP-2"
CP-3	10193448.48	3118816.88	879.96'	CP 5/8"IR W/ALUM CAP STAMPED"SAM CONTROL CP-3"
CP-4	10192371.07	3113734.37	929.79'	CP 5/8"IR W/ALUM CAP STAMPED"SAM CONTROL CP-4"
CP-5	10191208.81	3108526.89	953.60'	CP 5/8"IR W/ALUM CAP STAMPED"SAM CONTROL CP-5"

HORIZONTAL / VERTICAL CONTROL - SURFACE COORDINATES

PT	NORTHING	EASTING	ELEV.	DESCRIPTION
CP-1	10200830.67	3128004.79	783.31'	CP 5/8"IR W/ALUM CAP STAMPED"SAM CONTROL CP-1"
CP-2	10197519.71	3123911.05	852.27'	CP 5/8"IR W/ALUM CAP STAMPED"SAM CONTROL CP-2"
CP-3	10194671.69	3119191.13	879.96'	CP 5/8"IR W/ALUM CAP STAMPED"SAM CONTROL CP-3"
CP-4	10193594.16	3114108.02	929.79'	CP 5/8"IR W/ALUM CAP STAMPED"SAM CONTROL CP-4"
CP-5	10192431.75	3108899.92	953.60'	CP 5/8"IR W/ALUM CAP STAMPED"SAM CONTROL CP-5"

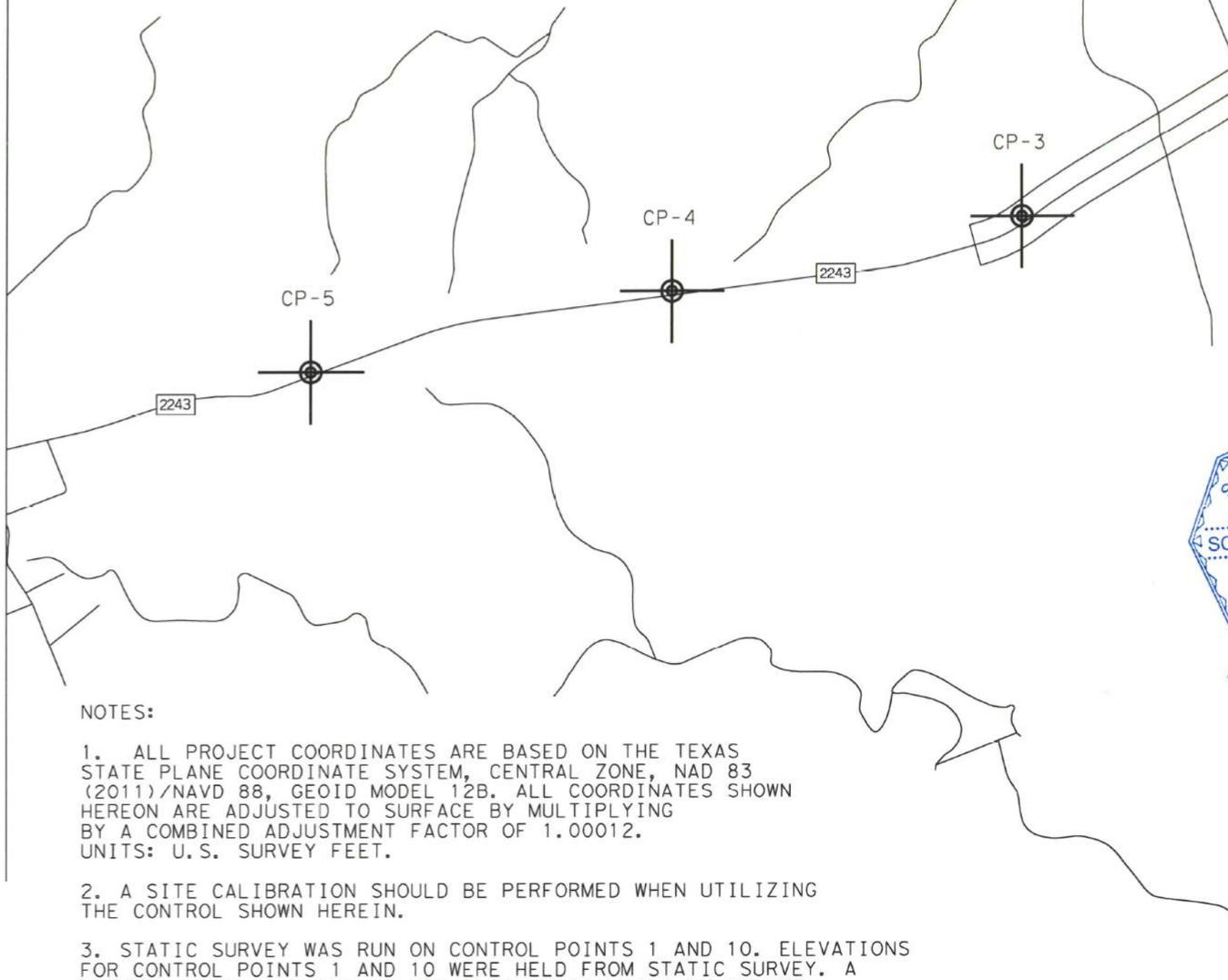

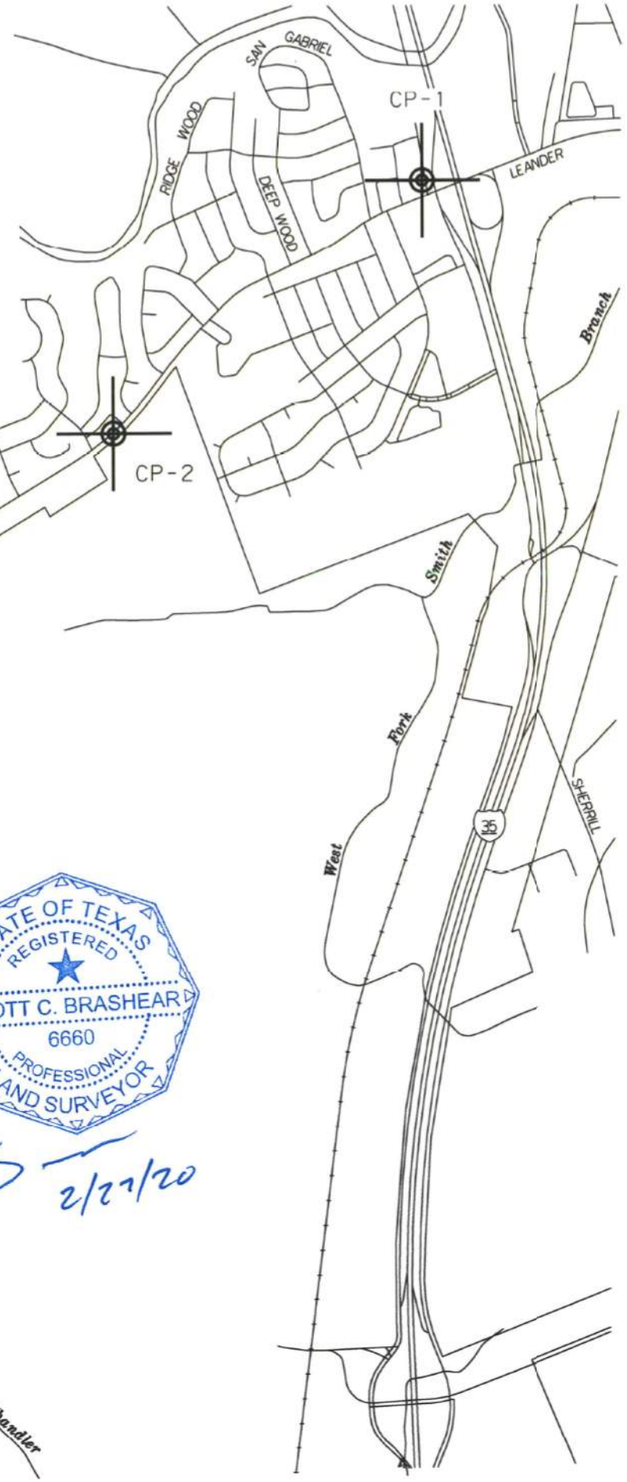

NOTES:

1. ALL PROJECT COORDINATES ARE BASED ON THE TEXAS STATE PLANE COORDINATE SYSTEM, CENTRAL ZONE, NAD 83 (2011)/NAVD 88, GEOID MODEL 12B. ALL COORDINATES SHOWN HEREON ARE ADJUSTED TO SURFACE BY MULTIPLYING BY A COMBINED ADJUSTMENT FACTOR OF 1.00012. UNITS: U.S. SURVEY FEET.

2. A SITE CALIBRATION SHOULD BE PERFORMED WHEN UTILIZING THE CONTROL SHOWN HEREIN.

3. STATIC SURVEY WAS RUN ON CONTROL POINTS 1 AND 10. ELEVATIONS FOR CONTROL POINTS 1 AND 10 WERE HELD FROM STATIC SURVEY. A DIGITAL LEVEL WAS RUN TO ESTABLISH ELEVATIONS OF CONTROL POINTS 2-9.

STATE OF TEXAS
REGISTERED
SCOTT C. BRASHEAR
6660
PROFESSIONAL
LAND SURVEYOR

2/27/20

N

1000 0 500 1000 2000

GRAPHIC SCALE
SCALE: 1" = 2000' (11" X 17")
SCALE: 1" = 1000' (22" X 34")
WILLIAMSON COUNTY, TEXAS

Survey Date: FEBRUARY, 2020

SAM
4801 Southwest Parkway
Building Two, Suite 100
Austin, Texas 78735
(512) 447-0575
Fax: (512) 326-3029
Texas Firm Registration No. 10064300

SURVEY CONTROL INDEX SHEET

FHWA TEXAS DIVISION	FEDERAL AID PROJECT NO.		SHEET NO.
			1 OF 4
STATE	DISTRICT	COUNTY	
TEXAS		WILLIAMSON	
CONTROL	SECTION	JOB	HIGHWAY NO.
			RM 2243

FILE:\\smallcv\GIS\PROJECTS\101881\305\10\Survey\Office\Control Sheet\RM 2243_Control Layout Sheet_8.5x11in_1.00012.dgn
4/10/2025 12:54:34 PM pdf.pltcfg
G:\TXC\Projects\County\Williamson\7473-02 RM 2243 Phase 1A\03*CADD\01*Shts\03-RDWY\RM2243_1A_SURVEY_CONTROL_01.dgn

HORIZONTAL / VERTICAL CONTROL - GRID COORDINATES

PT	NORTHING	EASTING	ELEV.	DESCRIPTION
CP-6	10189925.59	3103269.32	973.79'	CP 5/8"IR W/ALUM CAP STAMPED"SAM CONTROL CP-6"
CP-7	10189419.27	3098114.49	1,030.51'	CP 5/8"IR W/ALUM CAP STAMPED"SAM CONTROL CP-7"
CP-8	10189329.89	3093441.17	933.52'	CP 5/8"IR W/ALUM CAP STAMPED"SAM CONTROL CP-8"
CP-9	10187455.78	3089966.46	923.30'	CP 5/8"IR W/ALUM CAP STAMPED"SAM CONTROL CP-9"
CP-10	10187016.59	3080650.03	964.16'	CP 5/8"IR W/ALUM CAP STAMPED"SAM CONTROL CP-10"

HORIZONTAL / VERTICAL CONTROL - SURFACE COORDINATES

PT	NORTHING	EASTING	ELEV.	DESCRIPTION
CP-6	10191148.38	3103641.71	973.79'	CP 5/8"IR W/ALUM CAP STAMPED"SAM CONTROL CP-6"
CP-7	10190642.01	3098486.27	1,030.51'	CP 5/8"IR W/ALUM CAP STAMPED"SAM CONTROL CP-7"
CP-8	10190552.61	3093812.38	933.52'	CP 5/8"IR W/ALUM CAP STAMPED"SAM CONTROL CP-8"
CP-9	10188678.28	3090337.26	923.30'	CP 5/8"IR W/ALUM CAP STAMPED"SAM CONTROL CP-9"
CP-10	10188239.04	3081019.71	964.16'	CP 5/8"IR W/ALUM CAP STAMPED"SAM CONTROL CP-10"

STATE OF TEXAS
REGISTERED
SCOTT C. BRASHEAR
6660
PROFESSIONAL
LAND SURVEYOR

2/27/20

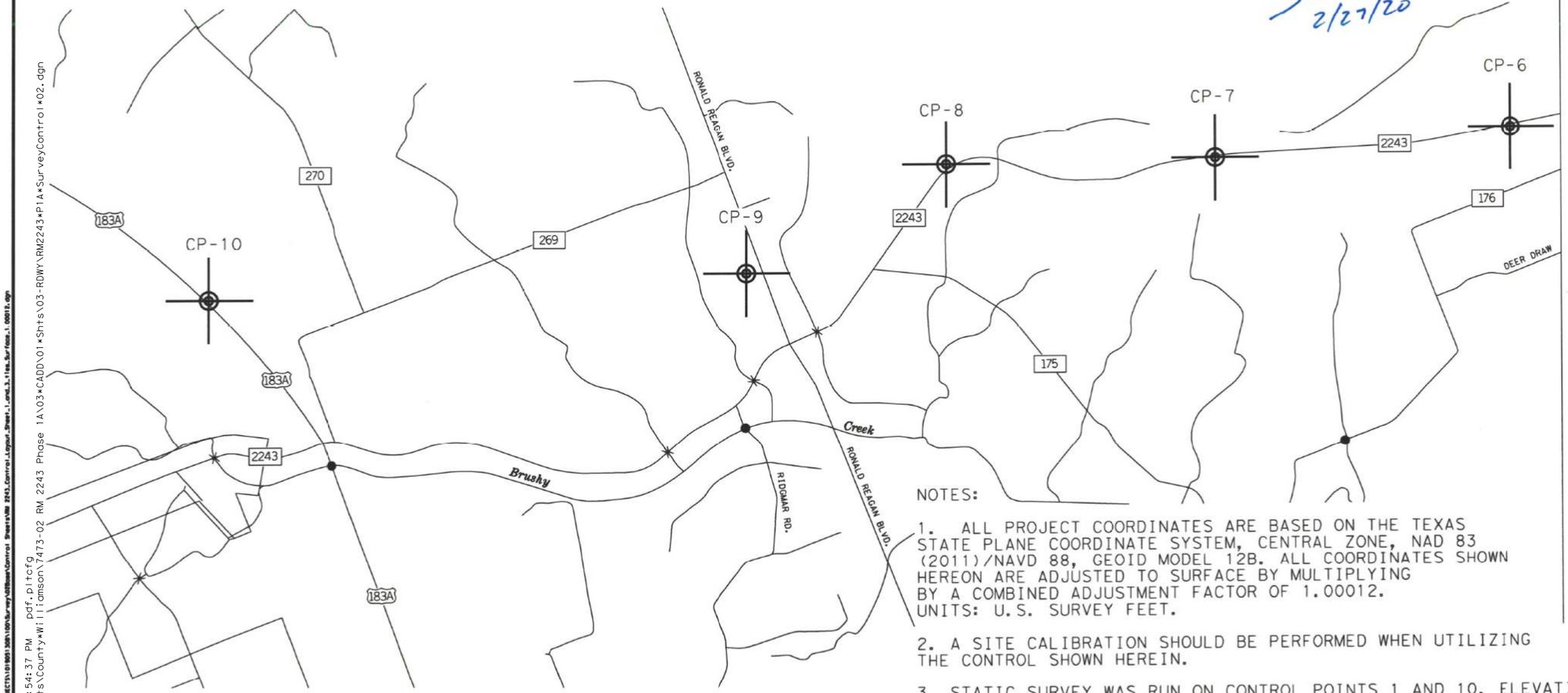

NOTES:

1. ALL PROJECT COORDINATES ARE BASED ON THE TEXAS STATE PLANE COORDINATE SYSTEM, CENTRAL ZONE, NAD 83 (2011)/NAVD 88, GEOID MODEL 12B. ALL COORDINATES SHOWN HEREON ARE ADJUSTED TO SURFACE BY MULTIPLYING BY A COMBINED ADJUSTMENT FACTOR OF 1.00012. UNITS: U.S. SURVEY FEET.

2. A SITE CALIBRATION SHOULD BE PERFORMED WHEN UTILIZING THE CONTROL SHOWN HEREIN.

3. STATIC SURVEY WAS RUN ON CONTROL POINTS 1 AND 10. ELEVATIONS FOR CONTROL POINTS 1 AND 10 WERE HELD FROM STATIC SURVEY. A DIGITAL LEVEL WAS RUN TO ESTABLISH ELEVATIONS OF CONTROL POINTS 2-9.

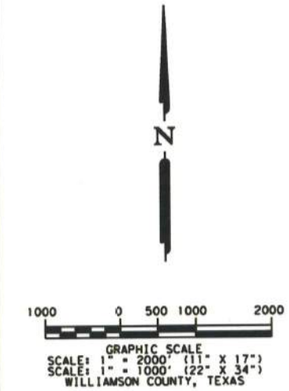

Survey Date: FEBRUARY, 2020

SAM®
4801 Southwest Parkway
Building Two, Suite 100
Austin, Texas 78735
(512) 447-0575
Fax: (512) 326-3029
Texas Firm Registration No. 10064300

SURVEY CONTROL INDEX SHEET

FHWA TEXAS DIVISION	FEDERAL AID PROJECT NO.		SHEET NO. 2 OF 4
STATE	DISTRICT	COUNTY	
TEXAS		WILLIAMSON	
CONTROL	SECTION	JOB	HIGHWAY NO.
			RM 2243

4/10/2025 12:54:37 PM pdf.pltcfg
G:\TXC\Projects\County*Williamson\7473-02 RM 2243 Phase 1A\03*CADD\01*Shts\03-RDWY\RM2243*P1A*SurveyControl*02.dgn

CP-1

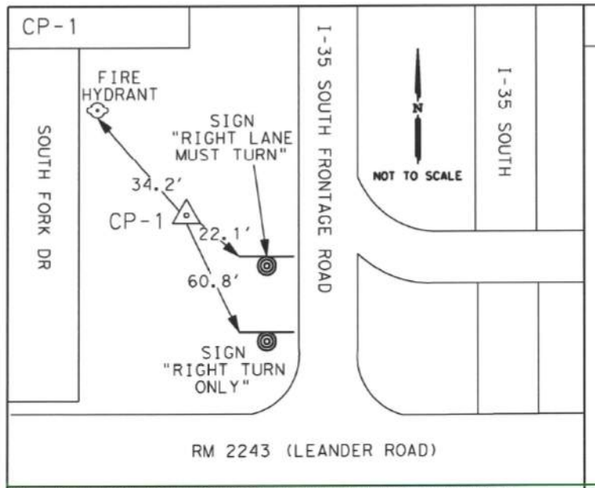

CP-1 IS A 5/8" IRON ROD WITH AN ALUMINUM CAP IN CONCRETE STAMPED "SAM CONTROL CP-1" SET APPROXIMATELY 158 FEET NORTHWEST FROM THE INTERSECTION OF I-35 SOUTH FRONTAGE ROAD AND LEANDER ROAD. POINT IS ALSO ±34.2 FEET SOUTHEAST OF A FIRE HYDRANT, ±22.1 FEET NORTHWEST OF A RIGHT LANE MUST TURN SIGN, AND ±60.8 FEET NORTHWEST FROM A RIGHT TURN ONLY SIGN.

SURFACE COORDINATES
N = 10,200,830.67
E = 3,128,004.79
ELEV. = 783.31'

GRID COORDINATES
N = 10,199,606.71
E = 3,127,629.47
ELEV. = 783.31'

CP-2

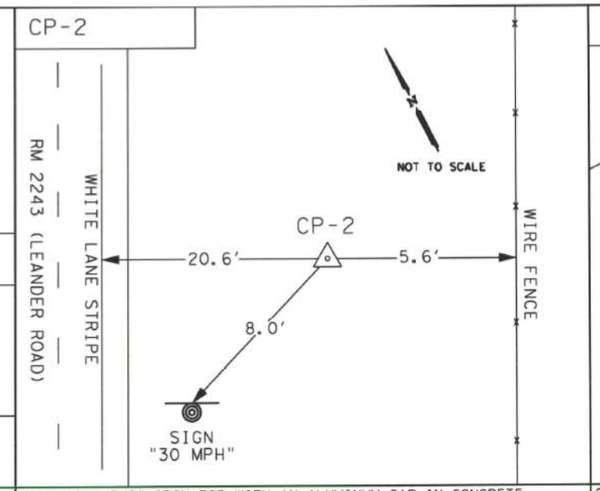

CP-2 IS A 5/8" IRON ROD WITH AN ALUMINUM CAP IN CONCRETE STAMPED "SAM CONTROL CP-2" SET APPROXIMATELY 407 FEET NORTHEAST OF RIVER RIDGE DRIVE AND RM 2243 (LEANDER ROAD). POINT IS ALSO ±5.6 FEET WEST OF A WIRE FENCE, ±8.0 FEET NORTHEAST OF A 30 MPH SIGN, AND ±20.6 FEET EAST OF THE WHITE LANE STRIPE OF RM 2243 (LEANDER ROAD).

SURFACE COORDINATES
N = 10,197,519.71
E = 3,123,911.05
ELEV. = 852.27'

GRID COORDINATES
N = 10,196,296.15
E = 3,123,536.22
ELEV. = 852.27'

CP-3

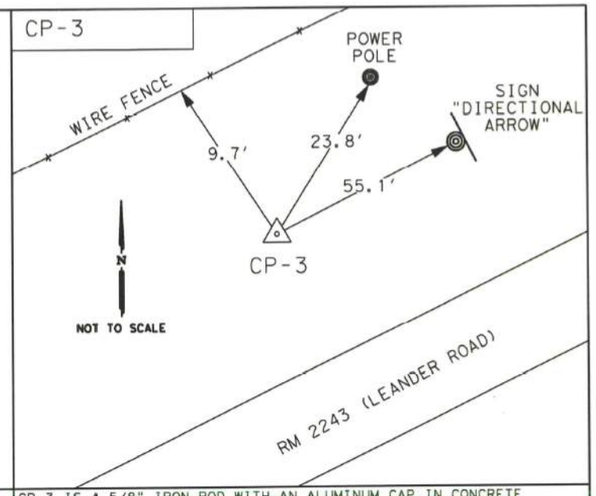

CP-3 IS A 5/8" IRON ROD WITH AN ALUMINUM CAP IN CONCRETE STAMPED "SAM CONTROL CP-3" SET APPROXIMATELY 0.3 MILES SOUTHWEST OF WEIR RANCH ROAD AND RM 2243 (LEANDER ROAD). POINT IS ALSO ±9.7 FEET SOUTHEAST OF A WIRE FENCE, ±23.8 FEET SOUTHWEST OF A POWER POLE, AND ±55.1 FEET WEST OF A DIRECTIONAL ARROW SIGN.

SURFACE COORDINATES
N = 10,194,671.69
E = 3,119,191.13
ELEV. = 879.96'

GRID COORDINATES
N = 10,193,448.48
E = 3,118,816.88
ELEV. = 879.96'

CP-4

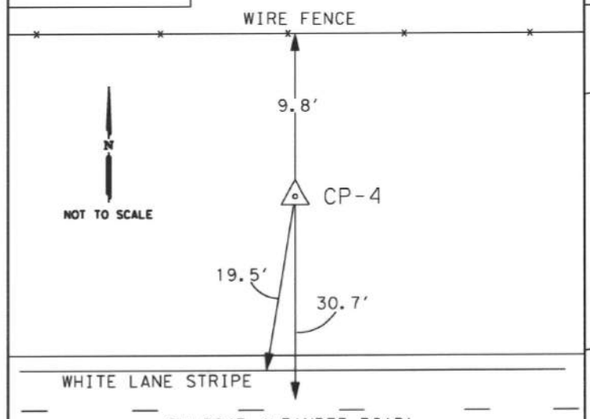

CP-4 IS A 5/8" IRON ROD WITH AN ALUMINUM CAP IN CONCRETE STAMPED "SAM CONTROL CP-4" SET APPROXIMATELY 1.3 MILES SOUTHWEST OF WEIR RANCH ROAD AND RM 2243 (LEANDER ROAD). POINT IS ALSO ±9.8 FEET SOUTH OF A WIRE FENCE, ±19.5 FEET NORTH OF THE WHITE LANE STRIPE OF RM 2243 (LEANDER ROAD), AND ±30.7 FEET NORTH OF THE CENTERLINE OF RM 2243 (LEANDER ROAD).

SURFACE COORDINATES
N = 10,193,594.16
E = 3,114,108.02
ELEV. = 929.79'

GRID COORDINATES
N = 10,192,371.07
E = 3,113,734.37
ELEV. = 929.79'

CP-5

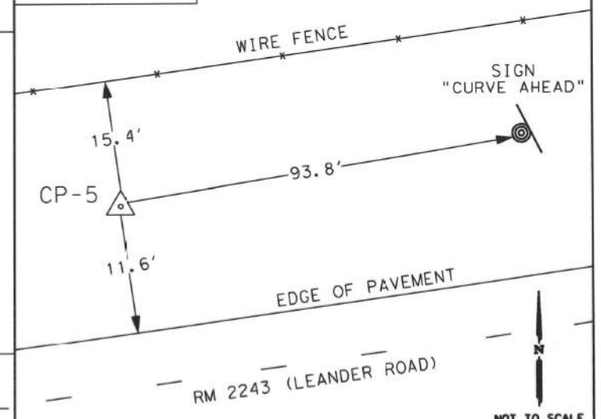

CP-5 IS A 5/8" IRON ROD WITH AN ALUMINUM CAP IN CONCRETE STAMPED "SAM CONTROL CP-5" SET APPROXIMATELY 0.75 MILES NORTHEAST OF CR 176 AND RM 2243 (LEANDER ROAD). POINT IS ALSO ±15.4 FEET SOUTH OF A WIRE FENCE, ±11.6 FEET NORTH OF THE EDGE OF PAVEMENT OF RM 2243 (LEANDER ROAD), AND ±93.8 FEET WEST OF THE CURVE AHEAD SIGN.

SURFACE COORDINATES
N = 10,192,431.75
E = 3,108,899.92
ELEV. = 953.60'

GRID COORDINATES
N = 10,191,208.81
E = 3,108,526.89
ELEV. = 953.60'

STATE OF TEXAS
REGISTERED
SCOTT C. BRASHEAR
6660
PROFESSIONAL
LAND SURVEYOR

2/27/20

Survey Date: FEBRUARY, 2020

SAM®
4801 Southwest Parkway
Building Two, Suite 100
Austin, Texas 78735
(512) 447-0575
Fax: (512) 326-3029
Texas Firm Registration No. 10064300

SURVEY CONTROL INDEX SHEET

FHWA TEXAS DIVISION	FEDERAL AID PROJECT NO.		SHEET NO.
			3 OF 4

STATE	DISTRICT	COUNTY	
TEXAS		WILLIAMSON	
CONTROL	SECTION	JOB	HIGHWAY NO.
			RM 2243

FILE:\\samfs\prj\AUTOPROJECTS\1993\3001\Survey\ROWControl Sheets\RM 2243_Control_Layout_Sheet_1_of_3_sites_Surface_1_00012.dgn
4/10/2025 12:54:40 PM pdf.pltcfg
G:\TXC\Projects\County\Williamson\7473-02 RM 2243 Phase 1A\03\CADD\01\Shts\03-ROWY\RM2243\P1A\SurveyControl\03.dgn

CP-6

RM 2243 (LEANDER ROAD)

WHITE LANE STRIPE

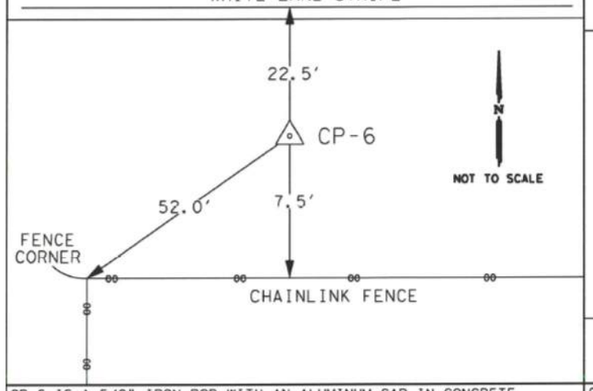

CP-6 IS A 5/8" IRON ROD WITH AN ALUMINUM CAP IN CONCRETE STAMPED "SAM CONTROL CP-6" SET APPROXIMATELY 0.3 MILES WEST OF CR 176 AND RM 2243 (LEANDER ROAD). POINT IS ALSO ±22.5 FEET SOUTH OF THE WHITE LANE STRIPE OF RM 2243 (LEANDER ROAD), ±52.0 FEET NORTHEAST OF A FENCE CORNER, AND ±7.5 FEET NORTH OF A CHAINLINK FENCE.

SURFACE COORDINATES	GRID COORDINATES
N = 10,191,148.38	N = 10,189,925.59
E = 3,103,641.71	E = 3,103,269.32
ELEV. = 973.79'	ELEV. = 973.79'

CP-7

RM 2243 (LEANDER ROAD)

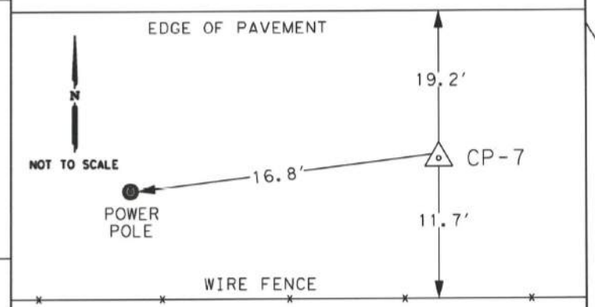

CP-7 IS A 5/8" IRON ROD WITH AN ALUMINUM CAP IN CONCRETE STAMPED "SAM CONTROL CP-7" SET APPROXIMATELY 0.3 MILES WEST OF ESCALERA PARKWAY AND RM 2243 (LEANDER ROAD). POINT IS ALSO ±16.8 FEET NORTHEAST OF A POWER POLE, ±19.2 FEET SOUTH OF THE EDGE OF PAVEMENT OF RM 2243 (LEANDER ROAD), AND ±11.7 FEET NORTH OF A WIRE FENCE.

SURFACE COORDINATES	GRID COORDINATES
N = 10,190,642.01	N = 10,189,419.27
E = 3,098,486.27	E = 3,098,114.49
ELEV. = 1,030.51'	ELEV. = 1,030.51

CP-8

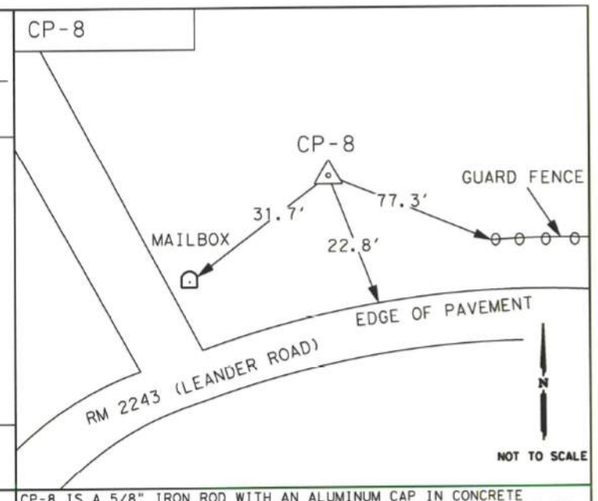

CP-8 IS A 5/8" IRON ROD WITH AN ALUMINUM CAP IN CONCRETE STAMPED "SAM CONTROL CP-8" SET APPROXIMATELY 300 FEET WEST OF FLINTLOCK DRIVE AND RM 2243 (LEANDER ROAD). POINT IS ALSO ±31.7 FEET NORTHEAST OF A MAILBOX, ±22.8 FEET NORTH OF THE EDGE OF PAVEMENT OF RM 2243 (LEANDER ROAD), AND ±77.3 FEET NORTHWEST OF THE END OF A GUARD FENCE.

SURFACE COORDINATES	GRID COORDINATES
N = 10,190,552.61	N = 10,189,329.89
E = 3,093,812.38	E = 3,093,441.17
ELEV. = 933.52'	ELEV. = 933.52'

CP-9

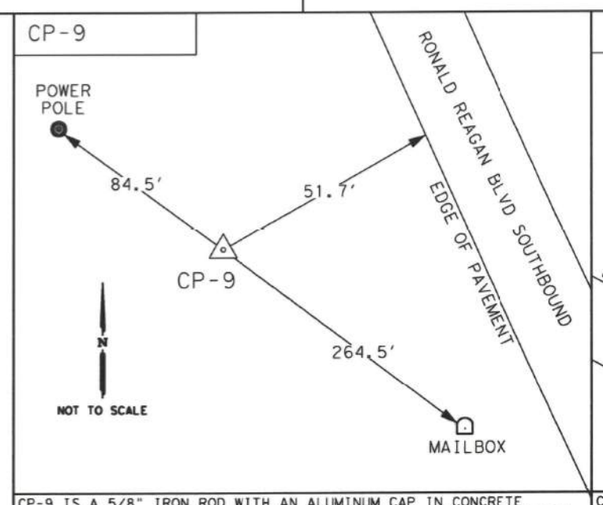

CP-9 IS A 5/8" IRON ROD WITH AN ALUMINUM CAP IN CONCRETE STAMPED "SAM CONTROL CP-9" SET APPROXIMATELY 0.30 MILES NORTH OF RM 2243 (LEANDER ROAD) AND RONALD REAGAN BLVD. POINT IS ALSO ±84.5 FEET SOUTHEAST OF A POWER POLE, ±51.7 FEET SOUTHWEST OF THE EDGE OF PAVEMENT OF RONAL REAGAN BLVD SOUTHBOUND, AND ±264.5 FEET NORTHWEST OF A MAILBOX.

SURFACE COORDINATES	GRID COORDINATES
N = 10,188,678.28	N = 10,187,455.78
E = 3,090,337.26	E = 3,089,966.46
ELEV. = 923.30'	ELEV. = 923.30'

CP-10

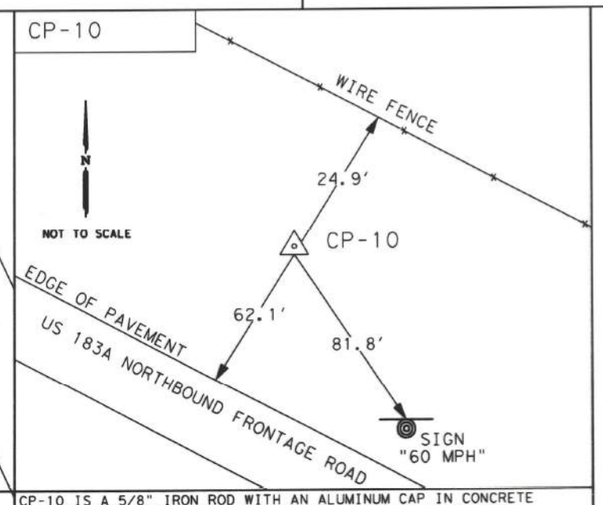

CP-10 IS A 5/8" IRON ROD WITH AN ALUMINUM CAP IN CONCRETE STAMPED "SAM CONTROL CP-10" SET APPROXIMATELY 0.2 MILES NORTHWEST OF HERO WAY AND US 183A NORTHBOUND FRONTAGE ROAD. POINT IS ALSO ±24.9 FEET SOUTHWEST OF A WIRE FENCE, ±62.1 FEET NORTHEAST OF THE EDGE OF PAVEMENT AND ±81.8 FEET NORTHWEST OF A 60 MPH SIGN.

SURFACE COORDINATES	GRID COORDINATES
N = 10,188,239.04	N = 10,187,016.59
E = 3,081,019.71	E = 3,080,650.03
ELEV. = 964.16'	ELEV. = 964.16'

STATE OF TEXAS
REGISTERED
SCOTT C. BRASHEAR
6660
PROFESSIONAL
LAND SURVEYOR

2/27/20

Survey Date: FEBRUARY, 2020

SAM®
4801 Southwest Parkway
Building Two, Suite 100
Austin, Texas 78735
(512) 447-0575
Fax: (512) 326-3029
Texas Firm Registration No. 10064300

SURVEY CONTROL INDEX SHEET

FHWA TEXAS DIVISION	FEDERAL AID PROJECT NO.		SHEET NO.
			4 OF 4
STATE	DISTRICT	COUNTY	
TEXAS		WILLIAMSON	
CONTROL	SECTION	JOB	HIGHWAY NO.
			RM 2243

FILE:\\amir\civil\PROJECTS\101903\300\100\Survey\Ottmers\Control Drawings\RM 2243\Control Layout Sheet 1 of 4 3.1 to Surface 1.0012.dgn
4/10/2025 12:54:43 PM pdf.pltcfg
d:\TXC\Projects\County\Williamson\7473-02 RM 2243 Phase 1A\03*CADD\01*Shts\03-RDWY\RM2243*P1A*SurveyControl*04.dgn

```
*        1   DESCRIBE CHAIN 2243 P1A CL

Chain 2243 P1A CL contains:
 10 CUR 2243 P1A CL 3 CUR 2243 P1A CL 6 CUR 2243 P1A CL 9 CUR 2243 P1A CL 12 CU-
R 2243 P1A CL 15 CUR 2243 P1A CL 18 CUR 2243 P1A CL 21 CUR 2243 P1A CL 24 CUR 2-
243 P1A CL 27 CUR 2243 P1A CL 30 11

Beginning chain 2243 P1A CL description
Feature: Geom Centerline
********************************************************************************

Point 10              X      3,081,745.35 Y     10,187,446.43 Sta      499+00.00

Course from 10 to PC 2243 P1A CL 3 N 69° 03' 12.46" E Dist 604.27

                                    Curve Data
                                   *----------*
Curve 2243 P1A CL 3
P.I.  Station              506+43.14  X        3,082,439.38  Y        10,187,712.10
Delta        =       14° 23' 26.54" (LT)
Degree       =        5° 12' 31.35"
Tangent      =               138.87
Length       =               276.28
Radius       =            1,100.00
External     =                8.73
Long Chord   =               275.56
Mid. Ord.    =                8.66
P.C.  Station              505+04.27  X        3,082,309.69  Y        10,187,662.46
P.T.  Station              507+80.55  X        3,082,552.67  Y        10,187,792.43
C.C.                                  X        3,081,916.44  Y        10,188,689.76
Back         = N  69° 03' 12.46" E
Ahead        = N  54° 39' 45.92" E
Chord Bear   = N  61° 51' 29.19" E

Course from PT 2243 P1A CL 3 to PC 2243 P1A CL 6 N 54° 39' 45.92" E Dist 382.04

                                    Curve Data
                                   *----------*
Curve 2243 P1A CL 6
P.I.  Station              518+38.67  X        3,083,415.84  Y        10,188,404.43
Delta        =       20° 42' 36.87" (RT)
Degree       =        1° 32' 54.72"
Tangent      =               676.08
Length       =            1,337.41
Radius       =            3,700.00
External     =                61.26
Long Chord   =            1,330.14
Mid. Ord.    =                60.26
P.C.  Station              511+62.59  X        3,082,864.32  Y        10,188,013.39
P.T.  Station              525+00.00  X        3,084,070.01  Y        10,188,575.16
C.C.                                  X        3,085,004.36  Y        10,184,995.07
Back         = N  54° 39' 45.92" E
Ahead        = N  75° 22' 22.79" E
Chord Bear   = N  65° 01' 04.35" E

Course from PT 2243 P1A CL 6 to PC 2243 P1A CL 9 N 75° 22' 22.79" E Dist 797.92

                                    Curve Data
                                   *----------*
Curve 2243 P1A CL 9
P.I.  Station              534+92.41  X        3,085,030.25  Y        10,188,825.77
Delta        =        5° 34' 01.91" (RT)
Degree       =        1° 25' 56.62"
Tangent      =               194.48
Length       =               388.66
Radius       =            4,000.00
External     =                4.73
Long Chord   =               388.51
Mid. Ord.    =                4.72
P.C.  Station              532+97.92  X        3,084,842.07  Y        10,188,776.65
P.T.  Station              536+86.58  X        3,085,222.31  Y        10,188,856.39
C.C.                                  X        3,085,852.17  Y        10,184,906.29
Back         = N  75° 22' 22.79" E
Ahead        = N  80° 56' 24.69" E
Chord Bear   = N  78° 09' 23.74" E

Course from PT 2243 P1A CL 9 to PC 2243 P1A CL 12 N 80° 56' 24.69" E Dist 260.35

                                    Curve Data
                                   *----------*
Curve 2243 P1A CL 12
P.I.  Station              543+69.45  X        3,085,896.66  Y        10,188,963.92
Delta        =       12° 03' 34.68" (LT)
Degree       =        1° 25' 56.62"
Tangent      =               422.52
Length       =               841.92
Radius       =            4,000.00
External     =                22.25
Long Chord   =               840.37
Mid. Ord.    =                22.13
P.C.  Station              539+46.93  X        3,085,479.41  Y        10,188,897.39
P.T.  Station              547+88.85  X        3,086,290.80  Y        10,189,116.16
C.C.                                  X        3,084,849.55  Y        10,192,847.48
Back         = N  80° 56' 24.69" E
Ahead        = N  68° 52' 50.01" E
Chord Bear   = N  74° 54' 37.35" E

Course from PT 2243 P1A CL 12 to PC 2243 P1A CL 15 N 68° 52' 50.01" E Dist 173.09

                                    Curve Data
                                   *----------*
Curve 2243 P1A CL 15
P.I.  Station              551+66.73  X        3,086,643.30  Y        10,189,252.31
Delta        =        2° 53' 47.61" (RT)
Degree       =        0° 42' 26.48"
Tangent      =               204.79
Length       =               409.49
Radius       =            8,100.00
External     =                2.59
Long Chord   =               409.45
Mid. Ord.    =                2.59
P.C.  Station              549+61.94  X        3,086,452.26  Y        10,189,178.52
P.T.  Station              553+71.43  X        3,086,837.82  Y        10,189,316.35
C.C.                                  X        3,089,370.80  Y        10,181,622.59
Back         = N  68° 52' 50.01" E
Ahead        = N  71° 46' 37.62" E
Chord Bear   = N  70° 19' 43.81" E

Course from PT 2243 P1A CL 15 to PC 2243 P1A CL 18 N 71° 46' 37.62" E Dist 185.64

                                    Curve Data
                                   *----------*
Curve 2243 P1A CL 18
P.I.  Station              557+85.50  X        3,087,231.12  Y        10,189,445.84
Delta        =        2° 21' 20.10" (LT)
Degree       =        0° 30' 56.40"
Tangent      =               228.43
Length       =               456.80
Radius       =           11,111.00
External     =                2.35
Long Chord   =               456.77
Mid. Ord.    =                2.35
P.C.  Station              555+57.07  X        3,087,014.14  Y        10,189,374.40
P.T.  Station              560+13.87  X        3,087,444.98  Y        10,189,526.13
C.C.                                  X        3,083,539.57  Y        10,199,928.16
Back         = N  71° 46' 37.62" E
Ahead        = N  69° 25' 17.52" E
Chord Bear   = N  70° 35' 57.57" E

Course from PT 2243 P1A CL 18 to PC 2243 P1A CL 21 N 69° 25' 17.52" E Dist 2,178.09

                                    Curve Data
                                   *----------*
Curve 2243 P1A CL 21
P.I.  Station              587+23.21  X        3,089,981.44  Y        10,190,478.43
Delta        =       17° 45' 40.25" (RT)
Degree       =        1° 41' 06.61"
Tangent      =               531.25
Length       =            1,053.97
Radius       =            3,400.00
External     =                41.25
Long Chord   =            1,049.75
Mid. Ord.    =                40.76
P.C.  Station              581+91.96  X        3,089,484.09  Y        10,190,291.71
P.T.  Station              592+45.93  X        3,090,512.04  Y        10,190,504.55
C.C.                                  X        3,090,679.15  Y        10,187,108.66
Back         = N  69° 25' 17.52" E
Ahead        = N  87° 10' 57.77" E
Chord Bear   = N  78° 18' 07.64" E

Course from PT 2243 P1A CL 21 to PC 2243 P1A CL 24 N 87° 10' 57.77" E Dist 755.91

                                    Curve Data
                                   *----------*
Curve 2243 P1A CL 24
P.I.  Station              607+40.21  X        3,092,004.52  Y        10,190,577.99
Delta        =       10° 25' 01.53" (RT)
Degree       =        0° 42' 26.48"
Tangent      =               738.38
Length       =            1,472.68
Radius       =            8,100.00
External     =                33.58
Long Chord   =            1,470.65
Mid. Ord.    =                33.45
P.C.  Station              600+01.84  X        3,091,267.03  Y        10,190,541.70
P.T.  Station              614+74.52  X        3,092,736.41  Y        10,190,480.34
C.C.                                  X        3,091,665.16  Y        10,182,451.49
Back         = N  87° 10' 57.77" E
Ahead        = S  82° 24' 00.70" E
Chord Bear   = S  87° 36' 31.47" E

Course from PT 2243 P1A CL 24 to PC 2243 P1A CL 27 S 82° 24' 00.70" E Dist 2,467.69

                                    Curve Data
                                   *----------*
Curve 2243 P1A CL 27
P.I.  Station              647+68.74  X        3,096,001.69  Y        10,190,044.67
Delta        =       23° 20' 59.30" (LT)
Degree       =        1° 25' 56.62"
Tangent      =               826.53
Length       =            1,630.12
Radius       =            4,000.00
External     =                84.50
Long Chord   =            1,618.87
Mid. Ord.    =                82.75
P.C.  Station              639+42.21  X        3,095,182.42  Y        10,190,153.98
P.T.  Station              655+72.33  X        3,096,797.19  Y        10,190,269.02
C.C.                                  X        3,095,711.43  Y        10,194,118.84
Back         = S  82° 24' 00.70" E
Ahead        = N  74° 15' 00.00" E
Chord Bear   = N  85° 55' 29.65" E

Course from PT 2243 P1A CL 27 to PC 2243 P1A CL 30 N 74° 15' 00.00" E Dist 561.44

                                    Curve Data
                                   *----------*
Curve 2243 P1A CL 30
P.I.  Station              670+42.41  X        3,098,212.08  Y        10,190,668.06
Delta        =       12° 57' 35.08" (RT)
Degree       =        0° 42' 58.31"
Tangent      =               908.64
Length       =            1,809.52
Radius       =            8,000.00
External     =                51.44
Long Chord   =            1,805.67
Mid. Ord.    =                51.11
P.C.  Station              661+33.77  X        3,097,337.56  Y        10,190,421.42
P.T.  Station              679+43.30  X        3,099,119.64  Y        10,190,712.29
C.C.                                  X        3,099,509.08  Y        10,182,721.78
Back         = N  74° 15' 00.00" E
Ahead        = N  87° 12' 35.08" E
Chord Bear   = N  80° 43' 47.54" E

Course from PT 2243 P1A CL 30 to 11 N 87° 12' 35.08" E Dist 256.39

Point 11              X      3,099,375.73 Y     10,190,724.78 Sta      681+99.69

********************************************************************************
Ending chain 2243 P1A CL description
```

4/10/2025

WILCO TEXAS

BGE, Inc.
101 W Louis Henna Blvd, Suite 400, Austin, TX 78728
Tel: 512-879-0400 • www.bgeinc.com
TBPE Registration No. F-1046

RM 2243 ROADWAY HORIZONTAL ALIGNMENT DATA

SHEET 1 OF 6

FED.RD. DIV.NO.	PROJECT NO.	SHEET NO.
6		104

STATE	DIST.	COUNTY
TEXAS	AUS	WILLIAMSON

CONT.	SECT.	JOB	HIGHWAY NO.
0914	05	222	RM 2243

4/10/2025 12:54:46 PM pdf.pltcfg
G:\TXC\Projects\County*Williamson\7473-02 RM 2243 Phase 1A\03*CADD\01*Shts\03-RDWY\RM2243*HALN*01.dgn

```
*        1    DESCRIBE CHAIN EXIST2243

Chain EXIST2243 contains:
 E01 CUR EXIST22431 CUR EXIST22432 CUR EXIST22433 CUR EXIST22434 CUR EXIST22435-
 E02

Beginning chain EXIST2243 description
================================================================================

Point E01             X     3,093,002.82 Y    10,189,481.15 Sta    3000+00.00

Course from E01 to PC EXIST22431 N 33° 50' 17.36" E Dist 837.17

                                    Curve Data
                                   *----------*
Curve EXIST22431
P.I.  Station          3018+04.75  X       3,094,007.79  Y       10,190,980.21
Delta       =      80° 09' 10.25" (RT)
Degree      =       4° 58' 56.07"
Tangent     =              967.58
Length      =            1,608.77
Radius      =            1,150.00
External    =              352.90
Long Chord  =            1,480.76
Mid. Ord.   =              270.04
P.C.  Station          3008+37.17  X       3,093,469.00  Y       10,190,176.52
P.T.  Station          3024+45.94  X       3,094,891.78  Y       10,190,586.79
C.C.                               X       3,094,424.20  Y       10,189,536.14
Back        = N  33° 50' 17.36" E
Ahead       = S  66° 00' 32.39" E
Chord Bear  = N  73° 54' 52.48" E

Course from PT EXIST22431 to PC EXIST22432 S 66° 00' 32.39" E Dist 519.41

                                    Curve Data
                                   *----------*
Curve EXIST22432
P.I.  Station          3032+94.78  X       3,095,667.29  Y       10,190,241.66
Delta       =      25° 35' 59.55" (LT)
Degree      =       3° 57' 05.16"
Tangent     =              329.43
Length      =              647.86
Radius      =            1,450.00
External    =               36.95
Long Chord  =              642.49
Mid. Ord.   =               36.03
P.C.  Station          3029+65.35  X       3,095,366.32  Y       10,190,375.61
P.T.  Station          3036+13.22  X       3,095,996.59  Y       10,190,250.91
C.C.                               X       3,095,955.88  Y       10,191,700.34
Back        = S  66° 00' 32.39" E
Ahead       = N  88° 23' 28.06" E
Chord Bear  = S  78° 48' 32.16" E

Course from PT EXIST22432 to PC EXIST22433 N 88° 23' 28.06" E Dist 479.32

                                    Curve Data
                                   *----------*
Curve EXIST22433
P.I.  Station          3043+97.98  X       3,096,781.05  Y       10,190,272.94
Delta       =      18° 45' 02.55" (LT)
Degree      =       3° 05' 49.45"
Tangent     =              305.45
Length      =              605.43
Radius      =            1,850.00
External    =               25.05
Long Chord  =              602.74
Mid. Ord.   =               24.71
P.C.  Station          3040+92.53  X       3,096,475.72  Y       10,190,264.37
P.T.  Station          3046+97.97  X       3,097,067.41  Y       10,190,379.21
C.C.                               X       3,096,423.78  Y       10,192,113.64
Back        = N  88° 23' 28.06" E
Ahead       = N  69° 38' 25.51" E
Chord Bear  = N  79° 00' 56.79" E

Course from PT EXIST22433 to PC EXIST22434 N 69° 38' 25.51" E Dist 241.07

                                    Curve Data
                                   *----------*
Curve EXIST22434
P.I.  Station          3051+47.52  X       3,097,488.88  Y       10,190,535.62
Delta       =      11° 54' 09.05" (RT)
Degree      =       2° 51' 53.24"
Tangent     =              208.49
Length      =              415.48
Radius      =            2,000.00
External    =               10.84
Long Chord  =              414.73
Mid. Ord.   =               10.78
P.C.  Station          3049+39.03  X       3,097,293.42  Y       10,190,463.08
P.T.  Station          3053+54.51  X       3,097,695.11  Y       10,190,566.28
C.C.                               X       3,097,989.24  Y       10,188,588.03
Back        = N  69° 38' 25.51" E
Ahead       = N  81° 32' 34.56" E
Chord Bear  = N  75° 35' 30.03" E

Course from PT EXIST22434 to PC EXIST22435 N 81° 32' 34.56" E Dist 510.24

                                    Curve Data
                                   *----------*
Curve EXIST22435
P.I.  Station          3061+18.08  X       3,098,450.37  Y       10,190,678.58
Delta       =       5° 34' 40.99" (RT)
Degree      =       1° 06' 06.63"
Tangent     =              253.32
Length      =              506.25
Radius      =            5,200.00
External    =                6.17
Long Chord  =              506.05
Mid. Ord.   =                6.16
P.C.  Station          3058+64.75  X       3,098,199.80  Y       10,190,641.32
P.T.  Station          3063+71.00  X       3,098,703.38  Y       10,190,691.30
C.C.                               X       3,098,964.56  Y       10,185,497.86
Back        = N  81° 32' 34.56" E
Ahead       = N  87° 07' 15.54" E
Chord Bear  = N  84° 19' 55.05" E

Course from PT EXIST22435 to E02 N 87° 07' 15.54" E Dist 473.94

Point E02             X     3,099,176.72 Y    10,190,715.11 Sta    3068+44.95

================================================================================
Ending chain EXIST2243 description


*        1    DESCRIBE CHAIN OLD2243

Chain OLD2243 contains:
 OLD01 CUR OLD22431 OLD02

Beginning chain OLD2243 description
================================================================================

Point OLD01           X     3,093,434.14 Y    10,190,387.24 Sta    1000+00.00

Course from OLD01 to PC OLD22431 S 7° 35' 59.20" W Dist 97.83

                                    Curve Data
                                   *----------*
Curve OLD22431
P.I.  Station          1003+30.89  X       3,093,390.38  Y       10,190,059.26
Delta       =      26° 14' 18.16" (RT)
Degree      =       5° 43' 46.48"
Tangent     =              233.06
Length      =              457.95
Radius      =            1,000.00
External    =               26.80
Long Chord  =              453.95
Mid. Ord.   =               26.10
P.C.  Station          1000+97.83  X       3,093,421.21  Y       10,190,290.27
P.T.  Station          1005+55.78  X       3,093,260.60  Y       10,189,865.68
C.C.                               X       3,092,429.99  Y       10,190,422.52
Back        = S   7° 35' 59.20" W
Ahead       = S  33° 50' 17.36" W
Chord Bear  = S  20° 43' 08.28" W

Course from PT OLD22431 to OLD02 S 33° 50' 17.36" W Dist 102.65

Point OLD02           X     3,093,203.44 Y    10,189,780.41 Sta    1006+58.42

================================================================================
Ending chain OLD2243 description


*        1    DESCRIBE CHAIN LCR

Chain LCR contains:
 LCR1 CUR LCR 3 LCR5

Beginning chain LCR description
Feature: Geom Centerline
================================================================================

Point LCR1            X     3,094,027.87 Y    10,190,308.03 Sta    2000+00.00

Course from LCR1 to PC LCR 3 N 6° 29' 15.35" E Dist 278.03

                                    Curve Data
                                   *----------*
Curve LCR 3
P.I.  Station          2003+83.80  X       3,094,071.23  Y       10,190,689.36
Delta       =      32° 29' 17.75" (LT)
Degree      =      15° 47' 02.26"
Tangent     =              105.76
Length      =              205.83
Radius      =              363.00
External    =               15.09
Long Chord  =              203.08
Mid. Ord.   =               14.49
P.C.  Station          2002+78.03  X       3,094,059.28  Y       10,190,584.28
P.T.  Station          2004+83.86  X       3,094,024.87  Y       10,190,784.42
C.C.                               X       3,093,698.60  Y       10,190,625.29
Back        = N   6° 29' 15.35" E
Ahead       = N  26° 00' 02.40" W
Chord Bear  = N   9° 45' 23.52" W

Course from PT LCR 3 to LCR5 N 26° 00' 02.40" W Dist 265.97

Point LCR5            X     3,093,908.27 Y    10,191,023.48 Sta    2007+49.84

================================================================================
Ending chain LCR description
```

4/10/2025 12:54:47 PM pdf.pltcfg
G:\TXC\Projects\County\Williamson\7473-02 RM 2243 Phase 1A\03*CADD\01*Shts\03-RDWY\RM2243*HALN*02.dgn

STATE OF TEXAS
JOSHUA T. RICHTER
141234
LICENSED
PROFESSIONAL ENGINEER

4/10/2025

WILCO
TEXAS

BGE, Inc.
101 W Louis Henna Blvd, Suite 400, Austin, TX 78728
Tel: 512-879-0400 ● www.bgeinc.com
TBPE Registration No. F-1046

RM 2243
ROADWAY
HORIZONTAL
ALIGNMENT DATA

SHEET 2 OF 6

FED.RD. DIV.NO.	PROJECT NO.	SHEET NO.
6		105

STATE	DIST.	COUNTY
TEXAS	AUS	WILLIAMSON

CONT.	SECT.	JOB	HIGHWAY NO.
0914	05	222	RM 2243

<* 1 DESCRIBE CHAIN DW01

Chain DW01 contains:
 DW011 DW013 DW014

Beginning chain DW01 description
Feature: Geom Driveway Centerline
==========

Point DW011 X 3,082,414.52 Y 10,187,708.99 Sta 0+00.00

Course from DW011 to DW013 N 21° 04′ 15.02" W Dist 19.83

Point DW013 X 3,082,407.39 Y 10,187,727.50 Sta 0+19.83

Course from DW013 to DW014 N 21° 04′ 15.02" W Dist 48.26

Point DW014 X 3,082,390.04 Y 10,187,772.53 Sta 0+68.09

==========
Ending chain DW01 description

<* 2 DESCRIBE CHAIN DW02

Chain DW02 contains:
 DW021 DW023 DW024

Beginning chain DW02 description
Feature: Geom Driveway Centerline
==========

Point DW021 X 3,082,889.35 Y 10,188,030.98 Sta 0+00.00

Course from DW021 to DW023 N 17° 11′ 43.56" W Dist 19.94

Point DW023 X 3,082,883.45 Y 10,188,050.02 Sta 0+19.94

Course from DW023 to DW024 N 17° 11′ 43.56" W Dist 148.75

Point DW024 X 3,082,839.48 Y 10,188,192.12 Sta 1+68.68

==========
Ending chain DW02 description

<* 3 DESCRIBE CHAIN DW03

Chain DW03 contains:
 DW031 DW033 DW034

Beginning chain DW03 description
Feature: Geom Driveway Centerline
==========

Point DW031 X 3,084,857.61 Y 10,188,780.67 Sta 0+00.00

Course from DW031 to DW033 N 21° 08′ 10.87" W Dist 19.13

Point DW033 X 3,084,850.71 Y 10,188,798.52 Sta 0+19.13

Course from DW033 to DW034 N 21° 08′ 10.87" W Dist 49.03

Point DW034 X 3,084,833.03 Y 10,188,844.25 Sta 0+68.17

==========
Ending chain DW03 description

<* 4 DESCRIBE CHAIN DW04

Chain DW04 contains:
 DW041 DW043 DW044

Beginning chain DW04 description
Feature: Geom Driveway Centerline
==========

Point DW041 X 3,085,355.21 Y 10,188,877.58 Sta 0+00.00

Course from DW041 to DW043 N 21° 08′ 10.87" W Dist 19.43

Point DW043 X 3,085,348.20 Y 10,188,895.70 Sta 0+19.43

Course from DW043 to DW044 N 21° 08′ 10.87" W Dist 91.21

Point DW044 X 3,085,315.31 Y 10,188,980.77 Sta 1+10.64

==========
Ending chain DW04 description

<* 1 DESCRIBE CHAIN DW05

Chain DW05 contains:
 DW051 DW053 DW054

Beginning chain DW05 description
Feature: Geom Driveway Centerline
==========

Point DW051 X 3,085,675.14 Y 10,188,933.61 Sta 0+00.00

Course from DW051 to DW053 S 22° 21′ 16.81" E Dist 23.38

Point DW053 X 3,085,684.03 Y 10,188,911.98 Sta 0+23.38

Course from DW053 to DW054 S 22° 21′ 16.81" E Dist 56.62

Point DW054 X 3,085,705.56 Y 10,188,859.62 Sta 0+80.00

==========
Ending chain DW05 description

<* 2 DESCRIBE CHAIN DW06

Chain DW06 contains:
 DW061 DW063 DW064

Beginning chain DW06 description
Feature: Geom Driveway Centerline
==========

Point DW061 X 3,086,136.33 Y 10,189,060.11 Sta 0+00.00

Course from DW061 to DW063 N 21° 06′ 38.92" W Dist 19.02

Point DW063 X 3,086,129.49 Y 10,189,077.85 Sta 0+19.02

Course from DW063 to DW064 N 21° 06′ 38.92" W Dist 112.39

Point DW064 X 3,086,089.01 Y 10,189,182.70 Sta 1+31.40

==========
Ending chain DW06 description

<* 3 DESCRIBE CHAIN DW07

Chain DW07 contains:
 DW071 DW073 DW074

Beginning chain DW07 description
Feature: Geom Driveway Centerline
==========

Point DW071 X 3,086,154.21 Y 10,189,066.23 Sta 0+00.00

Course from DW071 to DW073 S 21° 08′ 10.87" E Dist 23.01

Point DW073 X 3,086,162.50 Y 10,189,044.77 Sta 0+23.01

Course from DW073 to DW074 S 21° 08′ 10.87" E Dist 106.99

Point DW074 X 3,086,201.08 Y 10,188,944.98 Sta 1+30.00

==========
Ending chain DW07 description

<* 4 DESCRIBE CHAIN DW08

Chain DW08 contains:
 DW081 DW083 DW084

Beginning chain DW08 description
Feature: Geom Driveway Centerline
==========

Point DW081 X 3,086,457.03 Y 10,189,180.36 Sta 0+00.00

Course from DW081 to DW083 S 21° 04′ 59.94" E Dist 23.01

Point DW083 X 3,086,465.31 Y 10,189,158.89 Sta 0+23.01

Course from DW083 to DW084 S 21° 04′ 59.94" E Dist 52.02

Point DW084 X 3,086,484.02 Y 10,189,110.36 Sta 0+75.03

==========
Ending chain DW08 description

STATE OF TEXAS
JOSHUA T. RICHTER
141234
LICENSED
PROFESSIONAL ENGINEER

4/10/2025

WILCO
TEXAS

BGE, Inc.
101 W Louis Henna Blvd, Suite 400, Austin, TX 78728
Tel: 512-879-0400 • www.bgeinc.com
TBPE Registration No. F-1046

RM 2243
ROADWAY
HORIZONTAL
ALIGNMENT DATA

SHEET 3 OF 6

FED.RD. DIV.NO.	PROJECT NO.		SHEET NO.
6			106
STATE	DIST.	COUNTY	
TEXAS	AUS	WILLIAMSON	
CONT.	SECT.	JOB	HIGHWAY NO.
0914	05	222	RM 2243

4/10/2025 12:54:49 PM pdf.pltcfg
G:\TXC\Projects\County*Williamson\7473-02 RM 2243 Phase 1A\03*CADD\01*Shts\03-RDWY\RM2243*HALN*DRWY*01.dgn

<* 1 DESCRIBE CHAIN DW09

Chain DW09 contains:
 DW091 DW093 DW094

Beginning chain DW09 description
Feature: Geom Driveway Centerline
==========

Point DW091 X 3,086,608.59 Y 10,189,237.06 Sta 0+00.00

Course from DW091 to DW093 N 21° 08′ 10.87" W Dist 19.00

Point DW093 X 3,086,601.74 Y 10,189,254.79 Sta 0+19.00

Course from DW093 to DW094 N 21° 08′ 10.87" W Dist 51.15

Point DW094 X 3,086,583.29 Y 10,189,302.50 Sta 0+70.16

==========
Ending chain DW09 description

<* 2 DESCRIBE CHAIN DW10

Chain DW10 contains:
 DW101 DW103 DW104

Beginning chain DW10 description
Feature: Geom Driveway Centerline
==========

Point DW101 X 3,086,850.44 Y 10,189,320.51 Sta 0+00.00

Course from DW101 to DW103 S 21° 08′ 10.87" E Dist 23.03

Point DW103 X 3,086,858.75 Y 10,189,299.03 Sta 0+23.03

Course from DW103 to DW104 S 21° 08′ 10.87" E Dist 50.97

Point DW104 X 3,086,877.13 Y 10,189,251.49 Sta 0+74.00

==========
Ending chain DW10 description

<* 3 DESCRIBE CHAIN DW11

Chain DW11 contains:
 DW111 DW113 DW114

Beginning chain DW11 description
Feature: Geom Driveway Centerline
==========

Point DW111 X 3,087,080.91 Y 10,189,396.62 Sta 0+00.00

Course from DW111 to DW113 N 20° 34′ 42.48" W Dist 19.01

Point DW113 X 3,087,074.23 Y 10,189,414.42 Sta 0+19.01

Course from DW113 to DW114 N 20° 34′ 42.48" W Dist 39.02

Point DW114 X 3,087,060.52 Y 10,189,450.95 Sta 0+58.04

==========
Ending chain DW11 description

<* 4 DESCRIBE CHAIN DW12

Chain DW12 contains:
 DW121 DW123 DW124

Beginning chain DW12 description
Feature: Geom Driveway Centerline
==========

Point DW121 X 3,087,242.24 Y 10,189,452.25 Sta 0+00.00

Course from DW121 to DW123 S 20° 34′ 42.48" E Dist 25.91

Point DW123 X 3,087,251.35 Y 10,189,427.99 Sta 0+25.91

Course from DW123 to DW124 S 20° 34′ 42.48" E Dist 49.09

Point DW124 X 3,087,268.60 Y 10,189,382.04 Sta 0+75.00

==========
Ending chain DW12 description

<* 1 DESCRIBE CHAIN DW13

Chain DW13 contains:
 DW131 DW133 DW134

Beginning chain DW13 description
Feature: Geom Driveway Centerline
==========

Point DW131 X 3,087,492.56 Y 10,189,544.00 Sta 0+00.00

Course from DW131 to DW133 S 20° 34′ 42.48" E Dist 29.00

Point DW133 X 3,087,502.76 Y 10,189,516.85 Sta 0+29.00

Course from DW133 to DW134 S 20° 34′ 42.48" E Dist 37.40

Point DW134 X 3,087,515.90 Y 10,189,481.83 Sta 0+66.40

==========
Ending chain DW13 description

<* 2 DESCRIBE CHAIN DW14

Chain DW14 contains:
 DW141 DW143 DW144

Beginning chain DW14 description
Feature: Geom Driveway Centerline
==========

Point DW141 X 3,087,521.80 Y 10,189,554.97 Sta 0+00.00

Course from DW141 to DW143 N 20° 34′ 42.48" W Dist 19.00

Point DW143 X 3,087,515.12 Y 10,189,572.76 Sta 0+19.00

Course from DW143 to DW144 N 20° 34′ 42.48" W Dist 52.00

Point DW144 X 3,087,496.84 Y 10,189,621.44 Sta 0+71.00

==========
Ending chain DW14 description

<* 3 DESCRIBE CHAIN DW15

Chain DW15 contains:
 DW151 DW153 CUR DW15 5

Beginning chain DW15 description
Feature: Geom Driveway Centerline
==========

Point DW151 X 3,087,630.09 Y 10,189,595.63 Sta 0+00.00

Course from DW151 to DW153 N 20° 34′ 42.48" W Dist 19.00

Point DW153 X 3,087,623.41 Y 10,189,613.42 Sta 0+19.00

Course from DW153 to PC DW15 5 N 20° 34′ 42.48" W Dist 20.70

Curve Data

Curve DW15 5					
P.I. Station		0+57.37	X	3,087,609.93	Y	10,189,649.34
Delta	=	32° 48′ 31.01" (LT)				
Degree	=	95° 29′ 34.68"				
Tangent	=	17.66				
Length	=	34.36				
Radius	=	60.00				
External	=	2.55				
Long Chord	=	33.89				
Mid. Ord.	=	2.44				
P.C. Station		0+39.70	X	3,087,616.14	Y	10,189,632.80
P.T. Station		0+74.06	X	3,087,595.75	Y	10,189,659.87
C.C.			X	3,087,559.96	Y	10,189,611.71
Back	= N	20° 34′ 42.48" W				
Ahead	= N	53° 23′ 13.49" W				
Chord Bear	= N	36° 58′ 57.99" W				

==========
Ending chain DW15 description

STATE OF TEXAS
JOSHUA T. RICHTER
141234
LICENSED
PROFESSIONAL ENGINEER

4/10/2025

WILCO TEXAS

BGE, Inc.
101 W Louis Henna Blvd, Suite 400, Austin, TX 78728
Tel: 512-879-0400 • www.bgeinc.com
TBPE Registration No. F-1046

RM 2243
ROADWAY
HORIZONTAL
ALIGNMENT DATA

FED.RD. DIV.NO.	PROJECT NO.		SHEET NO.
6			107
STATE	DIST.	COUNTY	
TEXAS	AUS	WILLIAMSON	
CONT.	SECT.	JOB	HIGHWAY NO.
0914	05	222	RM 2243

4/10/2025 12:54:50 PM pdf.pltcfg
G:\TXC\Projects\County*Williamson\7473-02 RM 2243 Phase 1A\03*CADD\01*Shts\03-RDWY\RM2243*HALN*DRWY*02.dgn

<* 1 DESCRIBE CHAIN DW16

Chain DW16 contains:
 DW161 DW163 DW164

Beginning chain DW16 description
Feature: Geom Driveway Centerline
==========

Point DW161 X 3,089,363.56 Y 10,190,246.46 Sta 0+00.00

Course from DW161 to DW163 S 20° 34′ 42.48" E Dist 41.93

Point DW163 X 3,089,378.30 Y 10,190,207.20 Sta 0+41.93

Course from DW163 to DW164 S 20° 34′ 42.48" E Dist 26.20

Point DW164 X 3,089,387.51 Y 10,190,182.67 Sta 0+68.13

==========
Ending chain DW16 description

<* 2 DESCRIBE CHAIN DW17

Chain DW17 contains:
 DW171 DW173 DW174

Beginning chain DW17 description
Feature: Geom Driveway Centerline
==========

Point DW171 X 3,089,486.90 Y 10,190,292.76 Sta 0+00.00

Course from DW171 to DW173 N 20° 09′ 26.70" W Dist 19.00

Point DW173 X 3,089,480.36 Y 10,190,310.60 Sta 0+19.00

Course from DW173 to DW174 N 20° 09′ 26.70" W Dist 28.59

Point DW174 X 3,089,470.50 Y 10,190,337.43 Sta 0+47.59

==========
Ending chain DW17 description

<* 3 DESCRIBE CHAIN DW18

Chain DW18 contains:
 DW181 DW183 CUR DW18 5 DW187

Beginning chain DW18 description
Feature: Geom Driveway Centerline
==========

Point DW181 X 3,090,899.52 Y 10,190,523.61 Sta 0+00.00

Course from DW181 to DW183 N 2° 49′ 02.23" W Dist 19.00

Point DW183 X 3,090,898.58 Y 10,190,542.59 Sta 0+19.00

Course from DW183 to PC DW18 5 N 2° 49′ 02.23" W Dist 17.84

Curve Data

Curve DW18 5
P.I. Station 0+44.70 X 3,090,897.32 Y 10,190,568.26
Delta = 34° 54′ 30.08" (RT)
Degree = 229° 10′ 59.22"
Tangent = 7.86
Length = 15.23
Radius = 25.00
External = 1.21
Long Chord = 15.00
Mid. Ord. = 1.15
P.C. Station 0+36.84 X 3,090,897.71 Y 10,190,560.41
P.T. Station 0+52.07 X 3,090,901.50 Y 10,190,574.92
C.C. X 3,090,922.68 Y 10,190,561.64
Back = N 2° 49′ 02.23" W
Ahead = N 32° 05′ 27.85" E
Chord Bear = N 14° 38′ 12.81" E

Course from PT DW18 5 to DW187 N 32° 05′ 27.85" E Dist 8.39

Point DW187 X 3,090,905.95 Y 10,190,582.03 Sta 0+60.46

==========
Ending chain DW18 description

<* 1 DESCRIBE CHAIN DW19

Chain DW19 contains:
 DW191 DW193 CUR DW19 5 CUR DW19 8 DW1910

Beginning chain DW19 description
Feature: Geom Driveway Centerline
==========

Point DW191 X 3,092,208.09 Y 10,190,533.27 Sta 0+00.00

Course from DW191 to DW193 N 3° 50′ 36.15" E Dist 18.99

Point DW193 X 3,092,209.37 Y 10,190,552.22 Sta 0+18.99

Course from DW193 to PC DW19 5 N 3° 50′ 36.15" E Dist 37.08

Curve Data

Curve DW19 5
P.I. Station 0+72.28 X 3,092,212.94 Y 10,190,605.39
Delta = 23° 38′ 00.00" (LT)
Degree = 73° 55′ 48.14"
Tangent = 16.21
Length = 31.97
Radius = 77.50
External = 1.68
Long Chord = 31.74
Mid. Ord. = 1.64
P.C. Station 0+56.07 X 3,092,211.85 Y 10,190,589.22
P.T. Station 0+88.04 X 3,092,207.45 Y 10,190,620.65
C.C. X 3,092,134.53 Y 10,190,594.41
Back = N 3° 50′ 36.15" E
Ahead = N 19° 47′ 23.84" W
Chord Bear = N 7° 58′ 23.85" W

Course from PT DW19 5 to PC DW19 8 N 19° 47′ 23.85" W Dist 18.42

Curve Data

Curve DW19 8
P.I. Station 1+25.62 X 3,092,194.72 Y 10,190,656.02
Delta = 27° 46′ 52.72" (LT)
Degree = 73° 55′ 48.14"
Tangent = 19.17
Length = 37.58
Radius = 77.50
External = 2.33
Long Chord = 37.21
Mid. Ord. = 2.27
P.C. Station 1+06.46 X 3,092,201.21 Y 10,190,637.98
P.T. Station 1+44.04 X 3,092,180.58 Y 10,190,668.95
C.C. X 3,092,128.29 Y 10,190,611.74
Back = N 19° 47′ 23.84" W
Ahead = N 47° 34′ 16.56" W
Chord Bear = N 33° 40′ 50.20" W

Course from PT DW19 8 to DW1910 N 47° 34′ 16.56" W Dist 90.03

Point DW1910 X 3,092,114.13 Y 10,190,729.69 Sta 2+34.06

==========
Ending chain DW19 description

<* 1 DESCRIBE CHAIN DW20

Chain DW20 contains:
 DW201 DW203 DW204

Beginning chain DW20 description
Feature: Geom Driveway Centerline
==========

Point DW201 X 3,096,111.23 Y 10,190,138.87 Sta 0+00.00

Course from DW201 to DW203 N 5° 44′ 10.81" W Dist 19.00

Point DW203 X 3,096,109.33 Y 10,190,157.78 Sta 0+19.00

Course from DW203 to DW204 N 5° 44′ 10.81" W Dist 137.27

Point DW204 X 3,096,095.61 Y 10,190,294.36 Sta 1+56.27

==========
Ending chain DW20 description

STATE OF TEXAS
JOSHUA T. RICHTER
141234
LICENSED
PROFESSIONAL ENGINEER

4/10/2025

WILCO
TEXAS

BGE, Inc.
101 W Louis Henna Blvd, Suite 400, Austin, TX 78728
Tel: 512-879-0400 • www.bgeinc.com
TBPE Registration No. F-1046

RM 2243
ROADWAY
HORIZONTAL
ALIGNMENT DATA

SHEET 5 OF 6

FED.RD. DIV.NO.	PROJECT NO.		SHEET NO.
6			108
STATE	DIST.	COUNTY	
TEXAS	AUS	WILLIAMSON	
CONT.	SECT.	JOB	HIGHWAY NO.
0914	05	222	RM 2243

4/10/2025 12:54:51 PM pdf.pltcfg
G:\TXC\Projects\County*Williamson\7473-02 RM 2243 Phase 1A\03*CADD\01*Shts\03-RDWY\RM2243*HAL*DRWY*03.dgn

```
<*       1   DESCRIBE CHAIN DW21

Chain DW21 contains:
 DW211 DW213 CUR DW21 5 DW217

Beginning chain DW21 description
Feature: Geom Driveway Centerline
================================================================================

Point DW211            X     3,096,618.62 Y    10,190,223.08 Sta       0+00.00

Course from DW211 to DW213 S 13° 06′ 31.12" E Dist 29.00

Point DW213            X     3,096,625.20 Y    10,190,194.83 Sta       0+29.00

Course from DW213 to PC DW21 5 S 13° 06′ 31.12" E Dist 19.00

                                  Curve Data
                                 *----------*
Curve DW21 5
P.I.  Station              0+57.28  X        3,096,631.61  Y       10,190,167.29
Delta        =      34° 22′ 38.88" (RT)
Degree       =     190° 59′ 09.35"
Tangent      =                9.28
Length       =               18.00
Radius       =               30.00
External     =                1.40
Long Chord   =               17.73
Mid. Ord.    =                1.34
P.C.  Station              0+48.00  X        3,096,629.51  Y       10,190,176.33
P.T.  Station              0+66.00  X        3,096,628.25  Y       10,190,158.64
C.C.                                X        3,096,600.29  Y       10,190,169.52
Back         = S  13° 06′ 31.12" E
Ahead        = S  21° 16′ 07.76" W
Chord Bear   = S   4° 04′ 48.32" W

Course from PT DW21 5 to DW217 S 21° 16′ 07.76" W Dist 40.00

Point DW217            X     3,096,613.74 Y    10,190,121.37 Sta       1+06.00

================================================================================
Ending chain DW21 description


<*       1   DESCRIBE CHAIN DW22

Chain DW22 contains:
 DW221 DW223 CUR DW22 5 DW227

Beginning chain DW22 description
Feature: Geom Driveway Centerline
================================================================================

Point DW221            X     3,097,371.12 Y    10,190,430.81 Sta       0+00.00

Course from DW221 to DW223 S 15° 32′ 36.10" E Dist 29.00

Point DW223            X     3,097,378.89 Y    10,190,402.87 Sta       0+29.00

Course from DW223 to PC DW22 5 S 15° 32′ 36.10" E Dist 14.58

                                  Curve Data
                                 *----------*
Curve DW22 5
P.I.  Station              0+69.80  X        3,097,389.82  Y       10,190,363.56
Delta        =      55° 20′ 26.41" (RT)
Degree       =     114° 35′ 29.61"
Tangent      =               26.22
Length       =               48.29
Radius       =               50.00
External     =                6.46
Long Chord   =               46.44
Mid. Ord.    =                5.72
P.C.  Station              0+43.58  X        3,097,382.80  Y       10,190,388.82
P.T.  Station              0+91.87  X        3,097,373.04  Y       10,190,343.42
C.C.                                X        3,097,334.63  Y       10,190,375.42
Back         = S  15° 32′ 36.10" E
Ahead        = S  39° 47′ 50.30" W
Chord Bear   = S  12° 07′ 37.10" W

Course from PT DW22 5 to DW227 S 39° 47′ 50.30" W Dist 77.81

Point DW227            X     3,097,323.24 Y    10,190,283.64 Sta       1+69.68

================================================================================
Ending chain DW22 description


<*       1   DESCRIBE CHAIN DW23

Chain DW23 contains:
 DW231 CUR DW23 3 DW235

Beginning chain DW23 description
Feature: Geom Driveway Centerline
================================================================================

Point DW231            X     3,097,952.31 Y    10,190,568.85 Sta       0+00.00

Course from DW231 to PC DW23 3 N 11° 13′ 16.08" W Dist 34.38

                                  Curve Data
                                 *----------*
Curve DW23 3
P.I.  Station              0+40.17  X        3,097,944.49  Y       10,190,608.25
Delta        =      26° 03′ 44.55" (LT)
Degree       =     229° 10′ 59.22"
Tangent      =                5.79
Length       =               11.37
Radius       =               25.00
External     =                0.66
Long Chord   =               11.27
Mid. Ord.    =                0.64
P.C.  Station              0+34.38  X        3,097,945.62  Y       10,190,602.57
P.T.  Station              0+45.75  X        3,097,940.99  Y       10,190,612.85
C.C.                                X        3,097,921.10  Y       10,190,597.71
Back         = N  11° 13′ 16.08" W
Ahead        = N  37° 17′ 00.63" W
Chord Bear   = N  24° 15′ 08.36" W

Course from PT DW23 3 to DW235 N 37° 17′ 00.63" W Dist 57.16

Point DW235            X     3,097,906.36 Y    10,190,658.33 Sta       1+02.92

================================================================================
Ending chain DW23 description


<*       1   DESCRIBE CHAIN DW24

Chain DW24 contains:
 DW241 DW243 DW244

Beginning chain DW24 description
Feature: Geom Driveway Centerline
================================================================================

Point DW241            X     3,098,870.72 Y    10,190,696.27 Sta       0+00.00

Course from DW241 to DW243 N 4° 34′ 36.53" W Dist 19.00

Point DW243            X     3,098,869.20 Y    10,190,715.21 Sta       0+19.00

Course from DW243 to DW244 N 4° 34′ 36.53" W Dist 32.13

Point DW244            X     3,098,866.64 Y    10,190,747.23 Sta       0+51.12

================================================================================
Ending chain DW24 description
```

STATE OF TEXAS
JOSHUA T. RICHTER
141234
LICENSED PROFESSIONAL ENGINEER

4/10/2025

WILCO TEXAS

BGE, Inc.
101 W Louis Henna Blvd, Suite 400, Austin, TX 78728
Tel: 512-879-0400 • www.bgeinc.com
TBPE Registration No. F-1046

RM 2243
ROADWAY
HORIZONTAL
ALIGNMENT DATA

SHEET 6 OF 6

FED.RD. DIV.NO.	PROJECT NO.	SHEET NO.
6		109

STATE	DIST.	COUNTY	
TEXAS	AUS	WILLIAMSON	
CONT.	SECT.	JOB	HIGHWAY NO.
0914	05	222	RM 2243

4/10/2025 12:54:52 PM pdf.pltcfg
G:\TXC\Projects\County\Williamson\7473-02 RM 2243 Phase 1A\03*CADD\01*Shts\03-RDWY\RM2243*HALN*DRWY*04.dgn

RM 2243 PHASE 1A SUPERELEVATION DATA

RM2243_P1A_CL Superelevation:

RM 2243 PHASE 1A SUPERELEVATION DATA (emax=6%)			
STA	CROSS SLOPE (LT)	CROSS SLOPE (RT)	DESCRIPTION
507+81.00	2.00%	-2.00%	BEGIN CONSTRUCTION, TIE INTO EXISTING CROSS SLOPE
511+20.00	2.00%	-2.00%	BEGIN SUPERELEVATION TRANSITION (REVERSE CROWN)
511+77.00	3.80%	-3.80%	END SUPERELEVATION TRANSITION (FULL SUPER)
524+86.00	3.80%	-3.80%	BEGIN SUPERELEVATION TRANSITION (FULL SUPER)
525+43.00	2.00%	-2.00%	END SUPERELEVATION TRANSITION (REVERSE CROWN)
532+60.00	2.00%	-2.00%	BEGIN SUPERELEVATION TRANSITION (REVERSE CROWN)
533+10.00	3.60%	-3.60%	END SUPERELEVATION TRANSITION (FULL SUPER)
536+74.00	3.60%	-3.60%	BEGIN SUPERELEVATION TRANSITION (FULL SUPER)
537+24.00	2.00%	-2.00%	END SUPERELEVATION TRANSITION (REVERSE CROWN)
538+14.00	2.00%	-2.00%	BEGIN SUPERELEVATION TRANSITION (REVERSE CROWN)
539+91.00	-3.60%	3.60%	END SUPERELEVATION TRANSITION (FULL SUPER)
547+45.00	-3.60%	3.60%	BEGIN SUPERELEVATION TRANSITION (FULL SUPER)
549+22.00	2.00%	-2.00%	END SUPERELEVATION TRANSITION (REVERSE CROWN)
581+63.00	2.00%	-2.00%	BEGIN SUPERELEVATION TRANSITION (REVERSE CROWN)
582+01.00	3.20%	-3.20%	END SUPERELEVATION TRANSITION (FULL SUPER)
592+36.00	3.20%	-3.20%	BEGIN SUPERELEVATION TRANSITION (FULL SUPER)
592+74.00	2.00%	-2.00%	END SUPERELEVATION TRANSITION (REVERSE CROWN)
638+09.00	2.00%	-2.00%	BEGIN SUPERELEVATION TRANSITION (REVERSE CROWN)
639+86.00	-3.60%	3.60%	END SUPERELEVATION TRANSITION (FULL SUPER)
655+28.00	-3.60%	3.60%	BEGIN SUPERELEVATION TRANSITION (FULL SUPER)
657+05.00	2.00%	-2.00%	END SUPERELEVATION TRANSITION (REVERSE CROWN)
661+29.00	2.00%	-2.00%	BEGIN SUPERELEVATION TRANSITION (REVERSE CROWN)
661+35.00	2.20%	-2.20%	END SUPERELEVATION TRANSITION (FULL SUPER)
679+42.00	2.20%	-2.20%	BEGIN SUPERELEVATION TRANSITION (FULL SUPER)
679+48.00	2.00%	-2.00%	END SUPERELEVATION TRANSITION (REVERSE CROWN)
680+20.00	-2.16%	-2.92%	END CONSTRUCTION, TIE INTO EXISTING CROSS SLOPE (SEE ROADWAY P&P SHEET 17 OF 19)

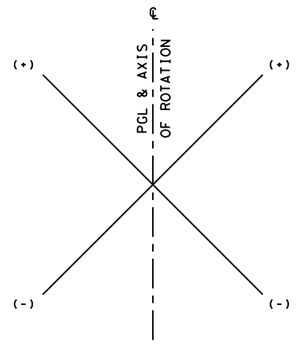

CROSS SLOPE SIGN CONVENTION

STATE OF TEXAS
JOSHUA T. RICHTER
141234
LICENSED PROFESSIONAL ENGINEER

4/10/2025

WILCO TEXAS

BGE, Inc.
101 W Louis Henna Blvd, Suite 400, Austin, TX 78728
Tel: 512-879-0400 ● www.bgeinc.com
TBPE Registration No. F-1046

RM 2243 ROADWAY SUPERELEVATION DATA

SHEET 1 OF 1

FED.RD. DIV.NO.	PROJECT NO.		SHEET NO.
6			110
STATE	DIST.	COUNTY	
TEXAS	AUS	WILLIAMSON	
CONT.	SECT.	JOB	HIGHWAY NO.
0914	05	222	RM 2243

4/10/2025 12:54:53 PM pdf.pltcfg
G:\TXC\Projects\County\Williamson\7473-02 RM 2243 Phase 1A\03\CADD\01\Shts\03-RDWY\RM2243_SUPER_01.dgn

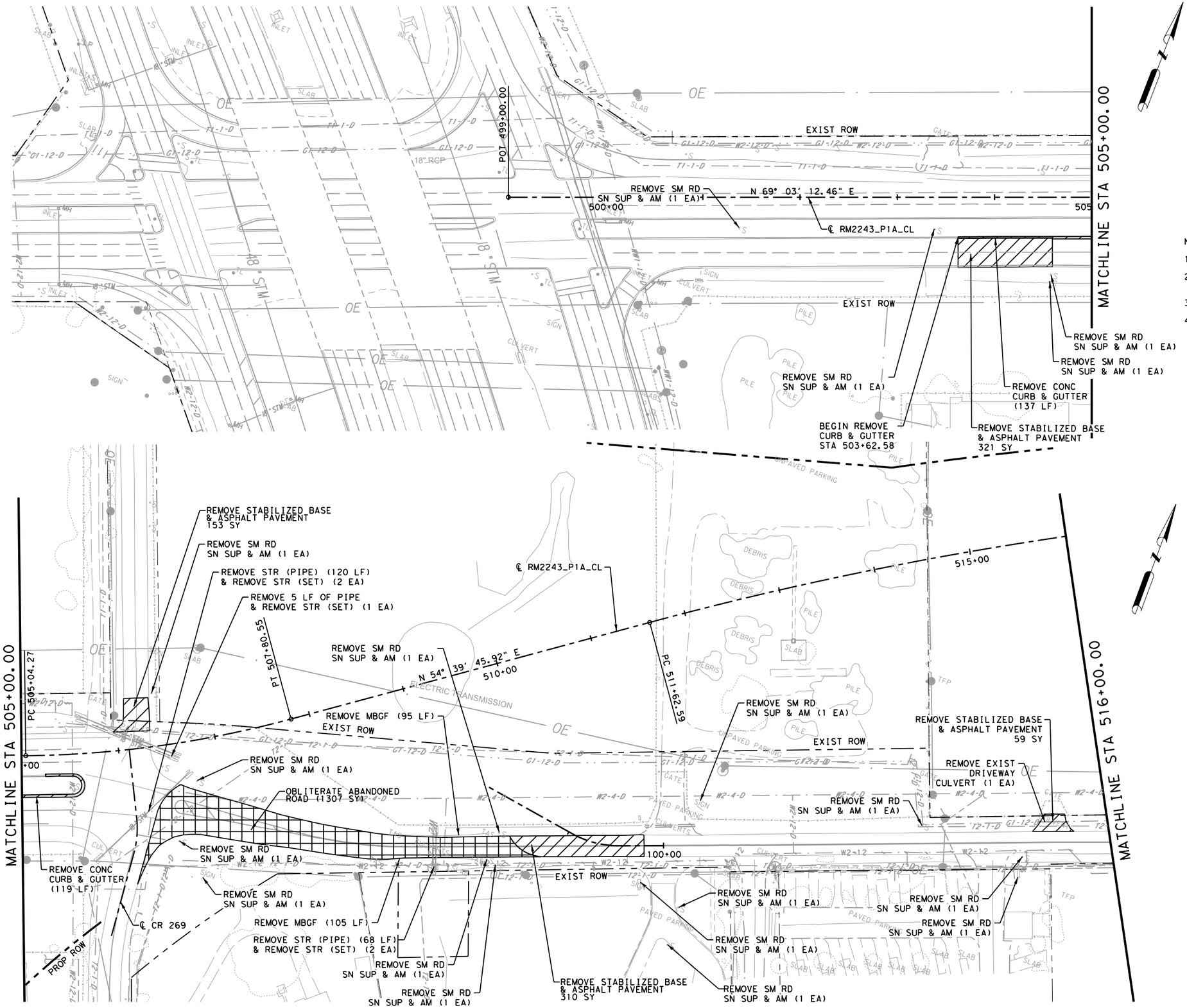

LEGEND:

REMOVAL OF EXISTING ROADWAY INCLUDED IN ITEM 110

OBLITERATE EXISTING PAVEMENT

NOTES:

1. SEE TRAFFIC CONTROL PLAN FOR PHASING OF STRIPING REMOVAL.
2. REMOVAL OF EXISTING ROADWAY QUANTITY IS FOR CONTRACTOR'S INFORMATION ONLY. PAYMENT WILL BE SUBSIDIARY TO EXCAVATION (ROADWAY).
3. ITEMS NOT CALLED OUT DIRECTLY SHALL BE SUBSIDIARY TO PREP ROW.
4. ALL TREES AND BRUSH REMOVED AS PART OF THIS PROJECT SHALL BE HAULED OFFSITE. THE REMOVAL AND HAUL OFF ARE CONSIDERED SUBSIDIARY TO PREP ROW.

0 50 100

SCALE: 1"=100'

STATE OF TEXAS
JOSHUA T. RICHTER
141234
LICENSED
PROFESSIONAL ENGINEER

4/10/2025

WILCO TEXAS

BGE, Inc.
101 W Louis Henna Blvd, Suite 400, Austin, TX 78728
Tel: 512-879-0400 • www.bgeinc.com
TBPE Registration No. F-1046

RM 2243

REMOVAL LAYOUT

SHEET 1 OF 11

FED.RD. DIV.NO.	PROJECT NO.		SHEET NO.
6			111
STATE	DIST.	COUNTY	
TEXAS	AUS	WILLIAMSON	
CONT.	SECT.	JOB	HIGHWAY NO.
0914	05	222	RM 2243

4/10/2025 12:54:56 PM pdf.pltcfg
G:\TXC\Projects\County\Williamson\7473-02 RM 2243 Phase 1A\03*CADD\01*Shts\18-RMVL\RM2243*P1A*RMVL*01.dgn

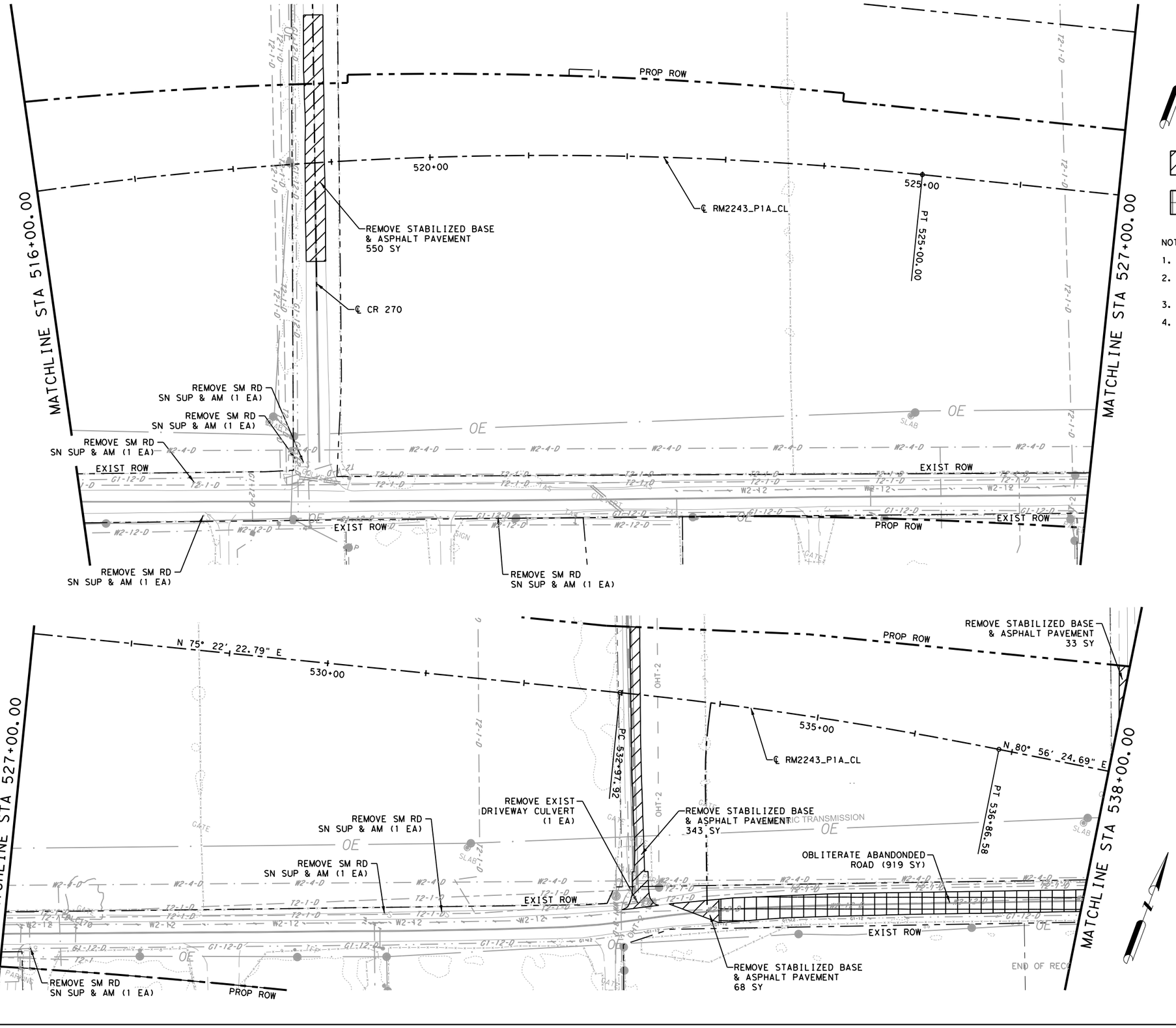

LEGEND:

REMOVAL OF EXISTING ROADWAY INCLUDED IN ITEM 110

OBLITERATE EXISTING PAVEMENT

NOTES:

1. SEE TRAFFIC CONTROL PLAN FOR PHASING OF STRIPING REMOVAL.
2. REMOVAL OF EXISTING ROADWAY QUANTITY IS FOR CONTRACTOR'S INFORMATION ONLY. PAYMENT WILL BE SUBSIDIARY TO EXCAVATION (ROADWAY).
3. ITEMS NOT CALLED OUT DIRECTLY SHALL BE SUBSIDIARY TO PREP ROW.
4. ALL TREES AND BRUSH REMOVED AS PART OF THIS PROJECT SHALL BE HAULED OFFSITE. THE REMOVAL AND HAUL OFF ARE CONSIDERED SUBSIDIARY TO PREP ROW.

0 50 100

SCALE: 1"=100'

STATE OF TEXAS
JOSHUA T. RICHTER
141234
LICENSED
PROFESSIONAL ENGINEER

4/10/2025

WILCO TEXAS

BGE, Inc.
101 W Louis Henna Blvd, Suite 400, Austin, TX 78728
Tel: 512-879-0400 • www.bgeinc.com
TBPE Registration No. F-1046

RM 2243

REMOVAL LAYOUT

SHEET 2 OF 11

FED.RD. DIV.NO.	PROJECT NO.		SHEET NO.
6			112
STATE	DIST.	COUNTY	
TEXAS	AUS	WILLIAMSON	
CONT.	SECT.	JOB	HIGHWAY NO.
0914	05	222	RM 2243

4/10/2025 12:54:57 PM pdf.pltcfg
G:\TXC\Projects\County\Williamson\7473-02 RM 2243 Phase 1A\03*CADD\01*Shts\18-RWL\RM2243*P1A*RWL*02.dgn

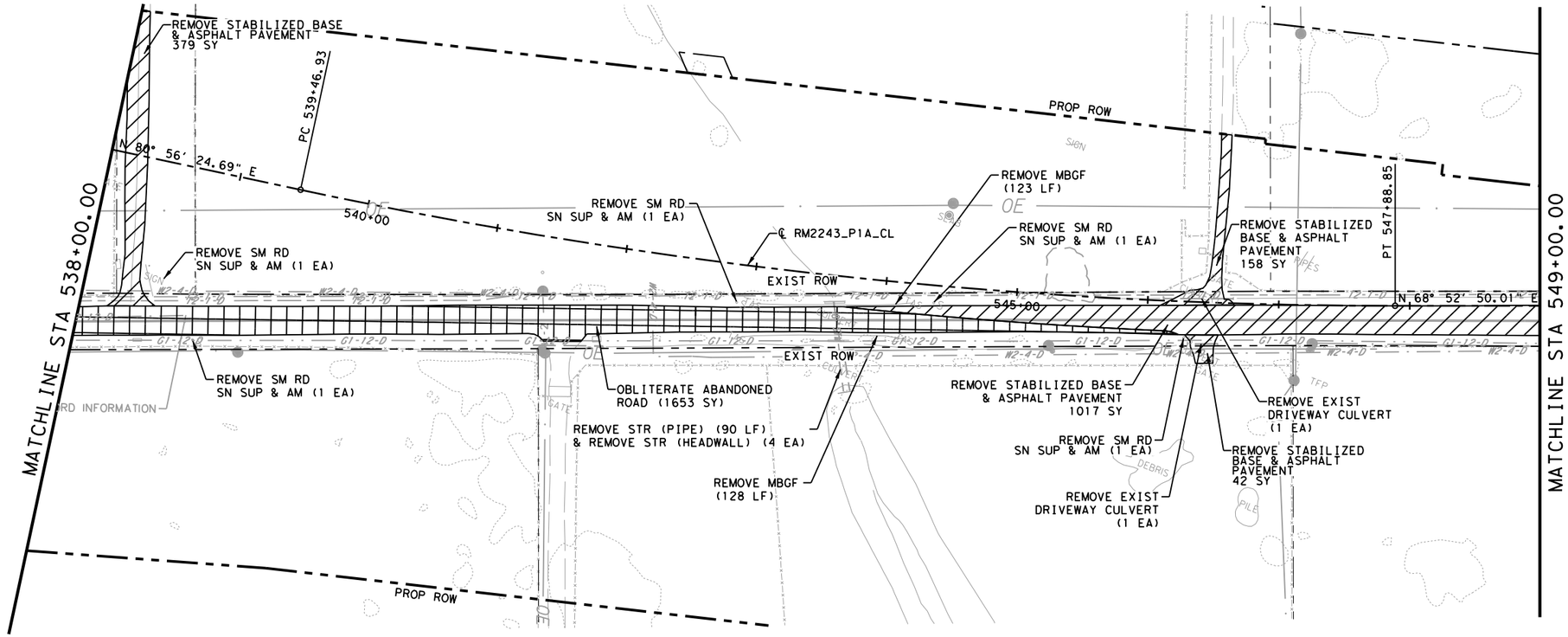

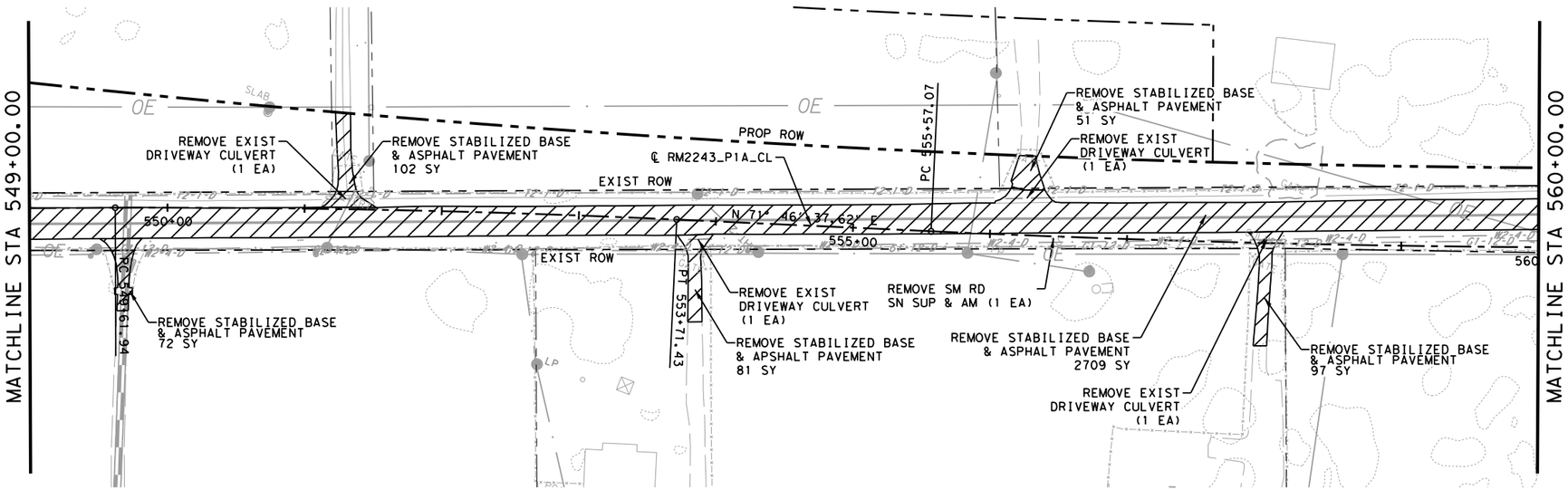

LEGEND:

REMOVAL OF EXISTING ROADWAY INCLUDED IN ITEM 110

OBLITERATE EXISTING PAVEMENT

NOTES:

1. SEE TRAFFIC CONTROL PLAN FOR PHASING OF STRIPING REMOVAL.
2. REMOVAL OF EXISTING ROADWAY QUANTITY IS FOR CONTRACTOR'S INFORMATION ONLY. PAYMENT WILL BE SUBSIDIARY TO EXCAVATION (ROADWAY).
3. ITEMS NOT CALLED OUT DIRECTLY SHALL BE SUBSIDIARY TO PREP ROW.
4. ALL TREES AND BRUSH REMOVED AS PART OF THIS PROJECT SHALL BE HAULED OFFSITE. THE REMOVAL AND HAUL OFF ARE CONSIDERED SUBSIDIARY TO PREP ROW.

0 50 100

SCALE: 1"=100'

STATE OF TEXAS
JOSHUA T. RICHTER
141234
LICENSED
PROFESSIONAL ENGINEER

4/10/2025

WILCO TEXAS

BGE, Inc.
101 W Louis Henna Blvd, Suite 400, Austin, TX 78728
Tel: 512-879-0400 • www.bgeinc.com
TBPE Registration No. F-1046

RM 2243

REMOVAL LAYOUT

SHEET 3 OF 11

FED.RD. DIV.NO.	PROJECT NO.		SHEET NO.
6			113
STATE	DIST.	COUNTY	
TEXAS	AUS	WILLIAMSON	
CONT.	SECT.	JOB	HIGHWAY NO.
0914	05	222	RM 2243

4/10/2025 12:54:58 PM pdf.pltcfg
G:\TXC\Projects\County\Williamson\7473-02 RM 2243 Phase 1A\03\CADD\01\Shts\18-RMVL\RM2243\P1A\RMVL\03.dgn

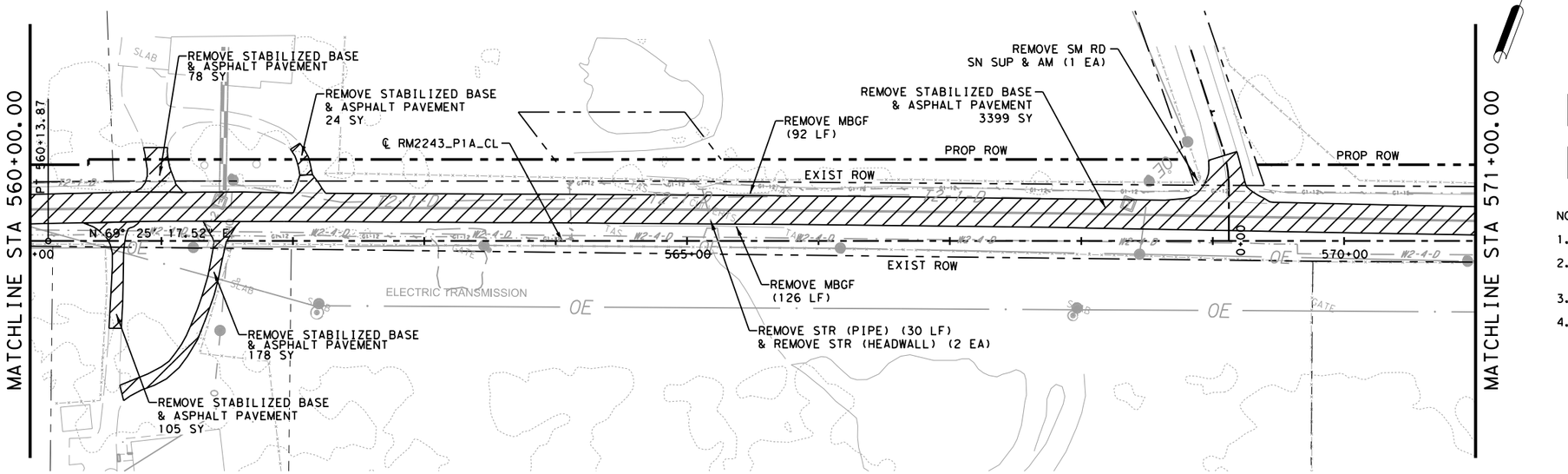

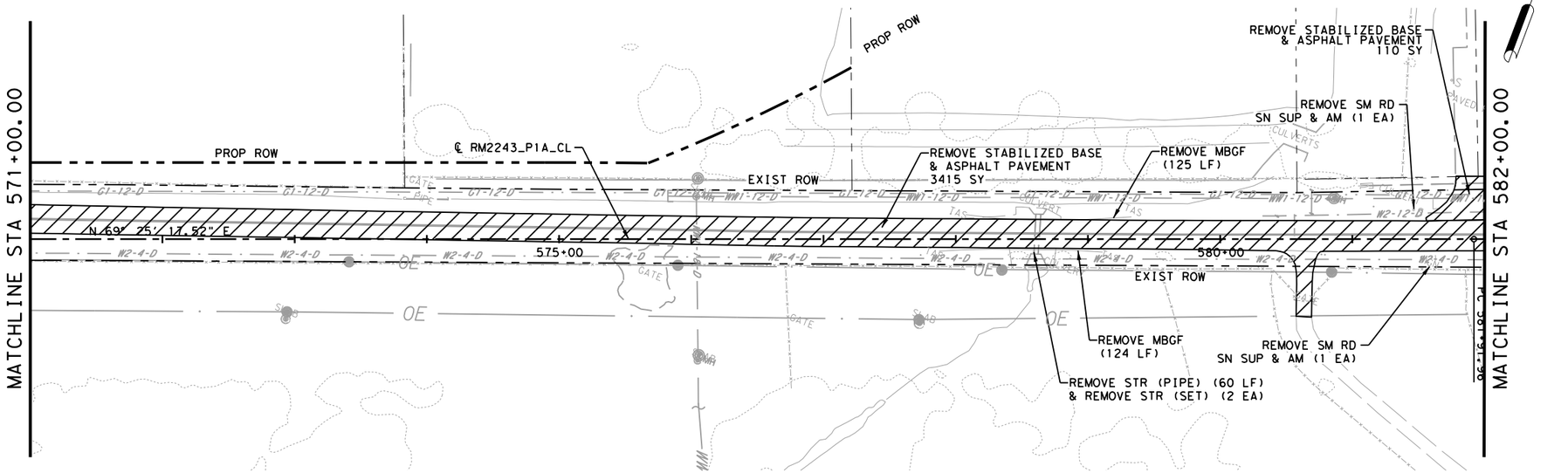

LEGEND:

REMOVAL OF EXISTING ROADWAY INCLUDED IN ITEM 110

OBLITERATE EXISTING PAVEMENT

NOTES:

1. SEE TRAFFIC CONTROL PLAN FOR PHASING OF STRIPING REMOVAL.
2. REMOVAL OF EXISTING ROADWAY QUANTITY IS FOR CONTRACTOR'S INFORMATION ONLY. PAYMENT WILL BE SUBSIDIARY TO EXCAVATION (ROADWAY).
3. ITEMS NOT CALLED OUT DIRECTLY SHALL BE SUBSIDIARY TO PREP ROW.
4. ALL TREES AND BRUSH REMOVED AS PART OF THIS PROJECT SHALL BE HAULED OFFSITE. THE REMOVAL AND HAUL OFF ARE CONSIDERED SUBSIDIARY TO PREP ROW.

0 50 100

SCALE: 1"=100'

STATE OF TEXAS
JOSHUA T. RICHTER
141234
LICENSED
PROFESSIONAL ENGINEER

4/10/2025

WILCO TEXAS

BGE, Inc.
101 W Louis Henna Blvd, Suite 400, Austin, TX 78728
Tel: 512-879-0400 • www.bgeinc.com
TBPE Registration No. F-1046

RM 2243

REMOVAL LAYOUT

SHEET 4 OF 11

FED.RD. DIV.NO.	PROJECT NO.		SHEET NO.
6			114
STATE	DIST.	COUNTY	
TEXAS	AUS	WILLIAMSON	
CONT.	SECT.	JOB	HIGHWAY NO.
0914	05	222	RM 2243

4/10/2025 12:54:59 PM pdf.pltcfg
G:\TXC\Projects\County*Williamson\7473-02 RM 2243 Phase 1A\03*CADD\01*Shts\18-RMVL\RM2243*P1A*RMVL*04.dgn

LEGEND:

REMOVAL OF EXISTING ROADWAY INCLUDED IN ITEM 110

OBLITERATE EXISTING PAVEMENT

NOTES:

1. SEE TRAFFIC CONTROL PLAN FOR PHASING OF STRIPING REMOVAL.
2. REMOVAL OF EXISTING ROADWAY QUANTITY IS FOR CONTRACTOR'S INFORMATION ONLY. PAYMENT WILL BE SUBSIDIARY TO EXCAVATION (ROADWAY).
3. ITEMS NOT CALLED OUT DIRECTLY SHALL BE SUBSIDIARY TO PREP ROW.
4. ALL TREES AND BRUSH REMOVED AS PART OF THIS PROJECT SHALL BE HAULED OFFSITE. THE REMOVAL AND HAUL OFF ARE CONSIDERED SUBSIDIARY TO PREP ROW.

0 50 100

SCALE: 1"=100'

STATE OF TEXAS
JOSHUA T. RICHTER
141234
LICENSED
PROFESSIONAL ENGINEER

4/10/2025

WILCO TEXAS

BGE, Inc.
101 W Louis Henna Blvd, Suite 400, Austin, TX 78728
Tel: 512-879-0400 • www.bgeinc.com
TBPE Registration No. F-1046

RM 2243

REMOVAL LAYOUT

SHEET 5 OF 11

FED.RD. DIV.NO.	PROJECT NO.		SHEET NO.
6			115
STATE	DIST.	COUNTY	
TEXAS	AUS	WILLIAMSON	
CONT.	SECT.	JOB	HIGHWAY NO.
0914	05	222	RM 2243

4/10/2025 12:55:00 PM pdf.pltcfg
G:\TXC\Projects\County\Williamson\7473-02 RM 2243 Phase 1A\03\CADD\01\Shts\18-RMVL\RM2243_P1A_RMVL_05.dgn

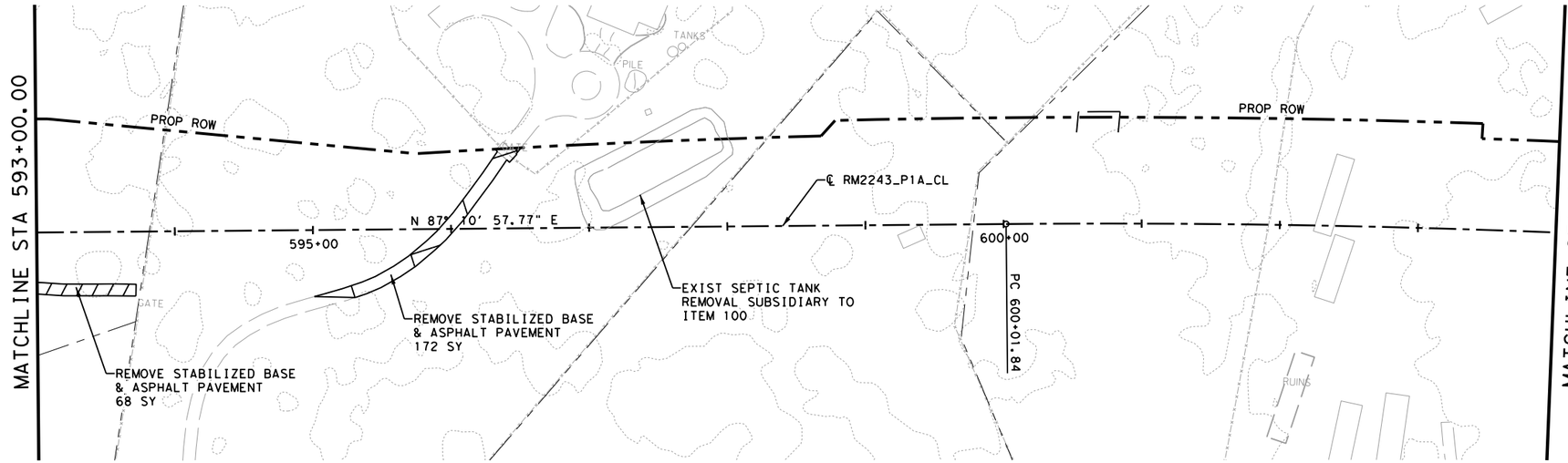

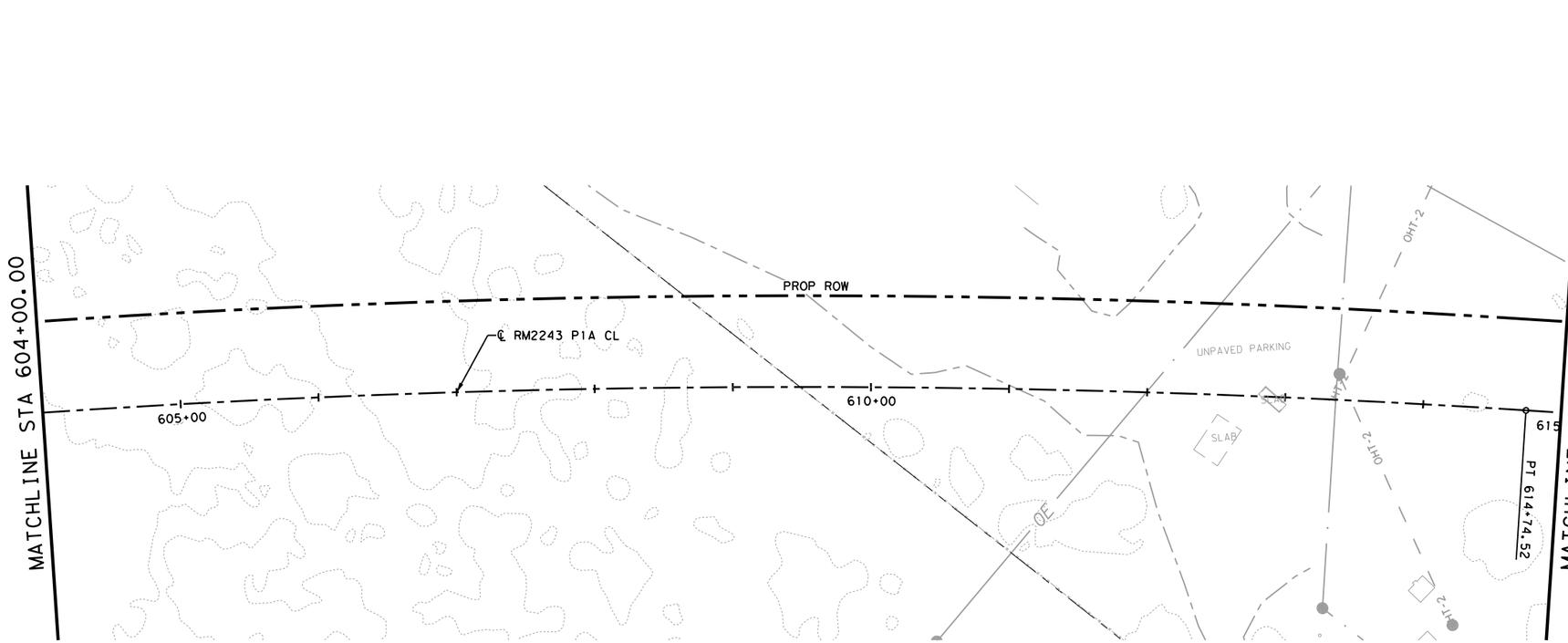

LEGEND:

REMOVAL OF EXISTING ROADWAY INCLUDED IN ITEM 110

OBLITERATE EXISTING PAVEMENT

NOTES:

1. SEE TRAFFIC CONTROL PLAN FOR PHASING OF STRIPING REMOVAL.
2. REMOVAL OF EXISTING ROADWAY QUANTITY IS FOR CONTRACTOR'S INFORMATION ONLY. PAYMENT WILL BE SUBSIDIARY TO EXCAVATION (ROADWAY).
3. ITEMS NOT CALLED OUT DIRECTLY SHALL BE SUBSIDIARY TO PREP ROW.
4. ALL TREES AND BRUSH REMOVED AS PART OF THIS PROJECT SHALL BE HAULED OFFSITE. THE REMOVAL AND HAUL OFF ARE CONSIDERED SUBSIDIARY TO PREP ROW.

0 50 100

SCALE: 1"=100'

STATE OF TEXAS
JOSHUA T. RICHTER
141234
LICENSED
PROFESSIONAL ENGINEER

4/10/2025

WILCO TEXAS

BGE, Inc.
101 W Louis Henna Blvd, Suite 400, Austin, TX 78728
Tel: 512-879-0400 • www.bgeinc.com
TBPE Registration No. F-1046

RM 2243

REMOVAL LAYOUT

SHEET 6 OF 11

FED.RD. DIV.NO.	PROJECT NO.		SHEET NO.
6			116
STATE	DIST.	COUNTY	
TEXAS	AUS	WILLIAMSON	
CONT.	SECT.	JOB	HIGHWAY NO.
0914	05	222	RM 2243

4/10/2025 12:55:01 PM pdf.pltcfg
G:\TXC\Projects\County\Williamson\7473-02 RM 2243 Phase 1A\03*CADD\01*Shts\18-RMVL\RM2243*P1A*RMVL*06.dgn

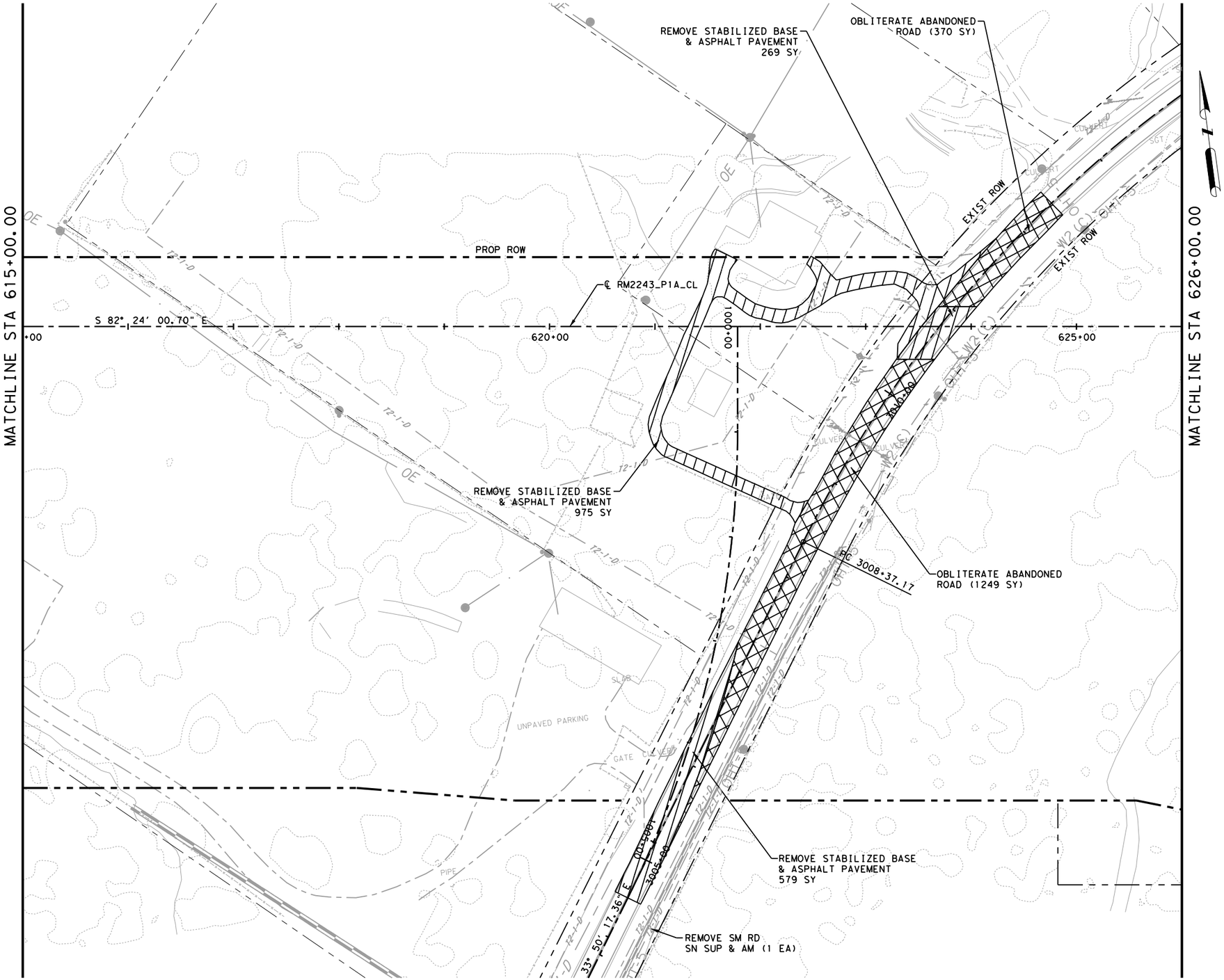

LEGEND:

REMOVAL OF EXISTING ROADWAY INCLUDED IN ITEM 110

OBLITERATE EXISTING PAVEMENT

NOTES:

1. SEE TRAFFIC CONTROL PLAN FOR PHASING OF STRIPING REMOVAL.
2. REMOVAL OF EXISTING ROADWAY QUANTITY IS FOR CONTRACTOR'S INFORMATION ONLY. PAYMENT WILL BE SUBSIDIARY TO EXCAVATION (ROADWAY).
3. ITEMS NOT CALLED OUT DIRECTLY SHALL BE SUBSIDIARY TO PREP ROW.
4. ALL TREES AND BRUSH REMOVED AS PART OF THIS PROJECT SHALL BE HAULED OFFSITE. THE REMOVAL AND HAUL OFF ARE CONSIDERED SUBSIDIARY TO PREP ROW.

0 50 100

SCALE: 1"=100'

STATE OF TEXAS
JOSHUA T. RICHTER
141234
LICENSED
PROFESSIONAL ENGINEER

4/10/2025

WILCO TEXAS

BGE, Inc.
101 W Louis Henna Blvd, Suite 400, Austin, TX 78728
Tel: 512-879-0400 • www.bgeinc.com
TBPE Registration No. F-1046

RM 2243

REMOVAL LAYOUT

SHEET 7 OF 11

FED.RD. DIV.NO.	PROJECT NO.		SHEET NO.
6			117
STATE	DIST.	COUNTY	
TEXAS	AUS	WILLIAMSON	
CONT.	SECT.	JOB	HIGHWAY NO.
0914	05	222	RM 2243

4/10/2025 12:55:02 PM pdf.pltcfg
G:\TXC\Projects\County\Williamson\7473-02 RM 2243 Phase 1A\03*CADD\01*Shts\18-RMVL\RM2243*P1A*RMVL*07.dgn

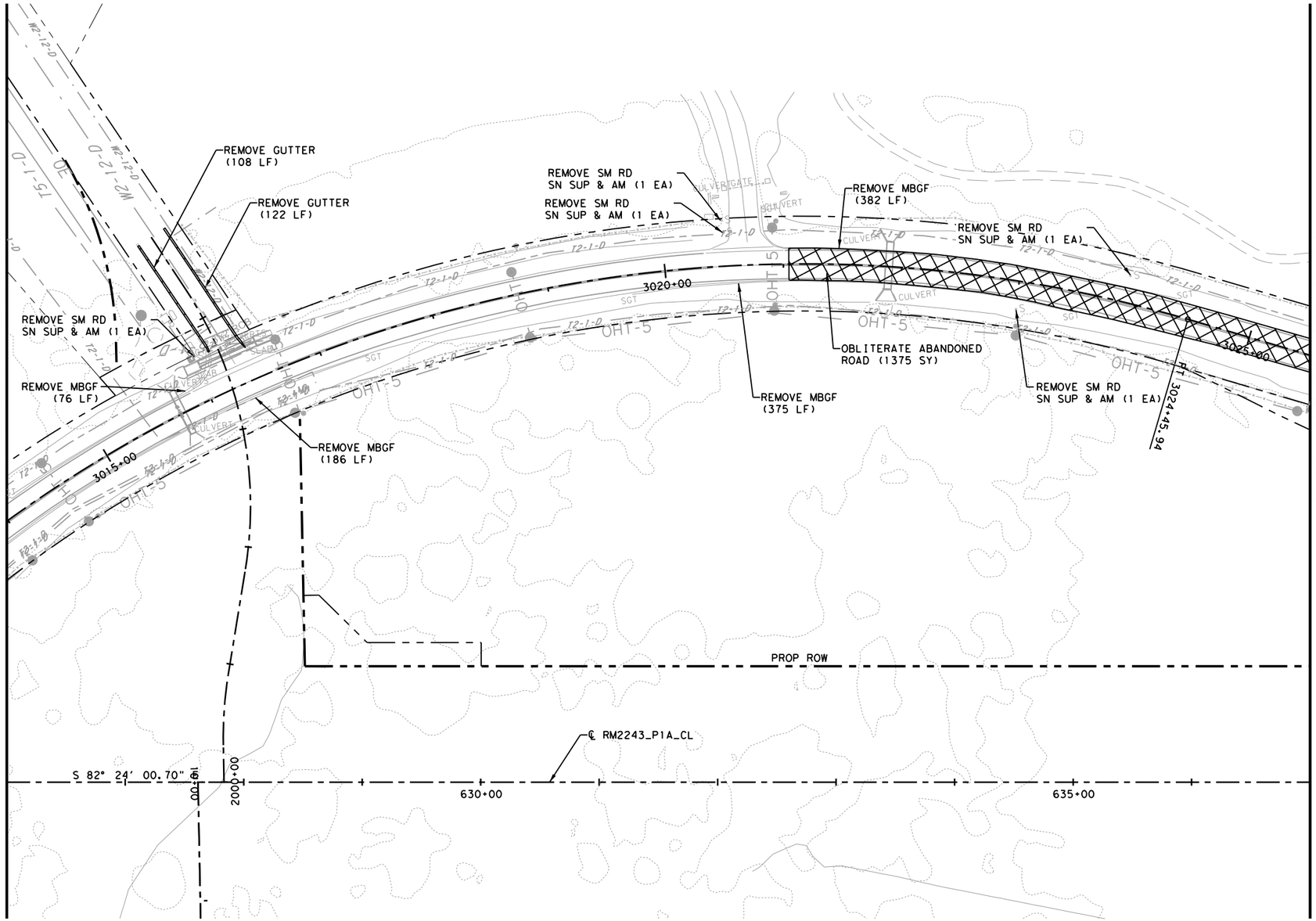

LEGEND:

REMOVAL OF EXISTING ROADWAY INCLUDED IN ITEM 110

OBLITERATE EXISTING PAVEMENT

NOTES:

1. SEE TRAFFIC CONTROL PLAN FOR PHASING OF STRIPING REMOVAL.
2. REMOVAL OF EXISTING ROADWAY QUANTITY IS FOR CONTRACTOR'S INFORMATION ONLY. PAYMENT WILL BE SUBSIDIARY TO EXCAVATION (ROADWAY).
3. ITEMS NOT CALLED OUT DIRECTLY SHALL BE SUBSIDIARY TO PREP ROW.
4. ALL TREES AND BRUSH REMOVED AS PART OF THIS PROJECT SHALL BE HAULED OFFSITE. THE REMOVAL AND HAUL OFF ARE CONSIDERED SUBSIDIARY TO PREP ROW.

0 50 100

SCALE: 1"=100'

STATE OF TEXAS
JOSHUA T. RICHTER
141234
LICENSED
PROFESSIONAL ENGINEER

4/10/2025

WILCO TEXAS

BGE, Inc.
101 W Louis Henna Blvd, Suite 400, Austin, TX 78728
Tel: 512-879-0400 • www.bgeinc.com
TBPE Registration No. F-1046

RM 2243

REMOVAL LAYOUT

SHEET 8 OF 11

FED.RD. DIV.NO.	PROJECT NO.	SHEET NO.
6		118

STATE	DIST.	COUNTY	
TEXAS	AUS	WILLIAMSON	
CONT.	SECT.	JOB	HIGHWAY NO.
0914	05	222	RM 2243

4/10/2025 12:55:03 PM pdf.pltcfg
G:\TXC\Projects\County\Williamson\7473-02 RM 2243 Phase 1A\03*CADD\01*Shts\18-RMVL\RM2243*P1A*RMVL*08.dgn

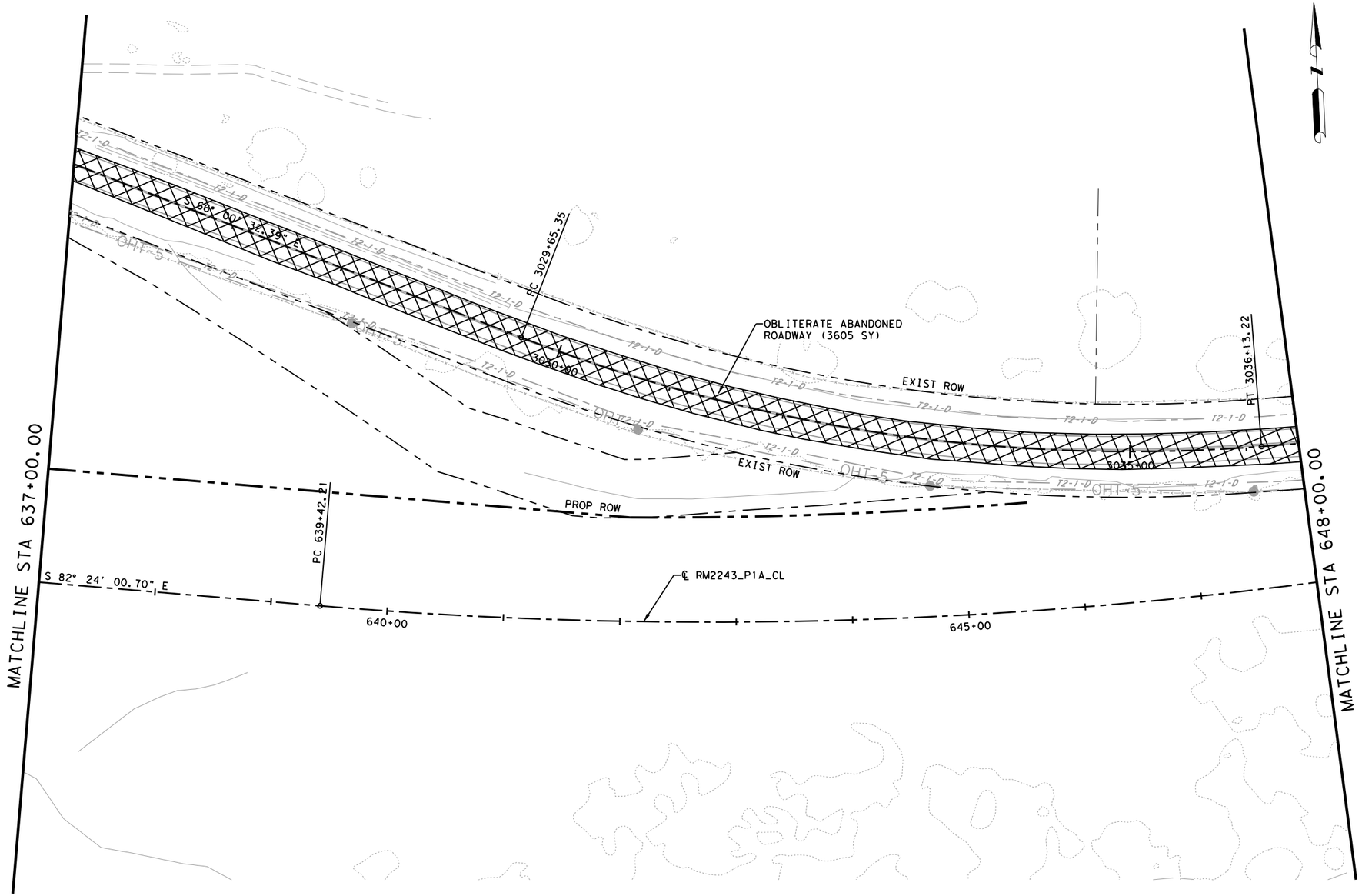

LEGEND:

REMOVAL OF EXISTING ROADWAY INCLUDED IN ITEM 110

OBLITERATE EXISTING PAVEMENT

NOTES:

1. SEE TRAFFIC CONTROL PLAN FOR PHASING OF STRIPING REMOVAL.
2. REMOVAL OF EXISTING ROADWAY QUANTITY IS FOR CONTRACTOR'S INFORMATION ONLY. PAYMENT WILL BE SUBSIDIARY TO EXCAVATION (ROADWAY).
3. ITEMS NOT CALLED OUT DIRECTLY SHALL BE SUBSIDIARY TO PREP ROW.
4. ALL TREES AND BRUSH REMOVED AS PART OF THIS PROJECT SHALL BE HAULED OFFSITE. THE REMOVAL AND HAUL OFF ARE CONSIDERED SUBSIDIARY TO PREP ROW.

0 50 100

SCALE: 1"=100'

STATE OF TEXAS
JOSHUA T. RICHTER
141234
LICENSED PROFESSIONAL ENGINEER

4/10/2025

WILCO TEXAS

BGE, Inc.
101 W Louis Henna Blvd, Suite 400, Austin, TX 78728
Tel: 512-879-0400 • www.bgeinc.com
TBPE Registration No. F-1046

RM 2243

REMOVAL LAYOUT

SHEET 9 OF 11

FED.RD. DIV.NO.	PROJECT NO.		SHEET NO.
6			119
STATE	DIST.	COUNTY	
TEXAS	AUS	WILLIAMSON	
CONT.	SECT.	JOB	HIGHWAY NO.
0914	05	222	RM 2243

4/10/2025 12:55:04 PM pdf.pltcfg
G:\TXC\Projects\County\Williamson\7473-02 RM 2243 Phase 1A\03*CADD\01*Shts\18-RMVL\RM2243*P1A*RMVL*09.dgn

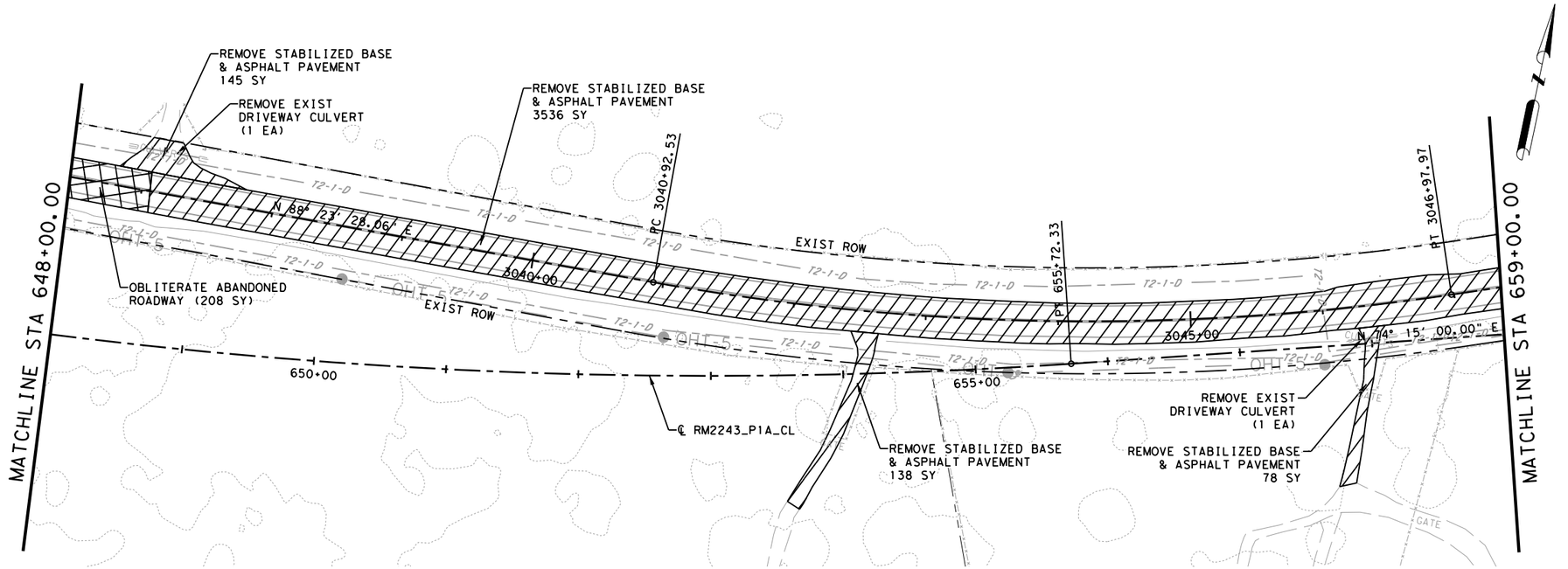

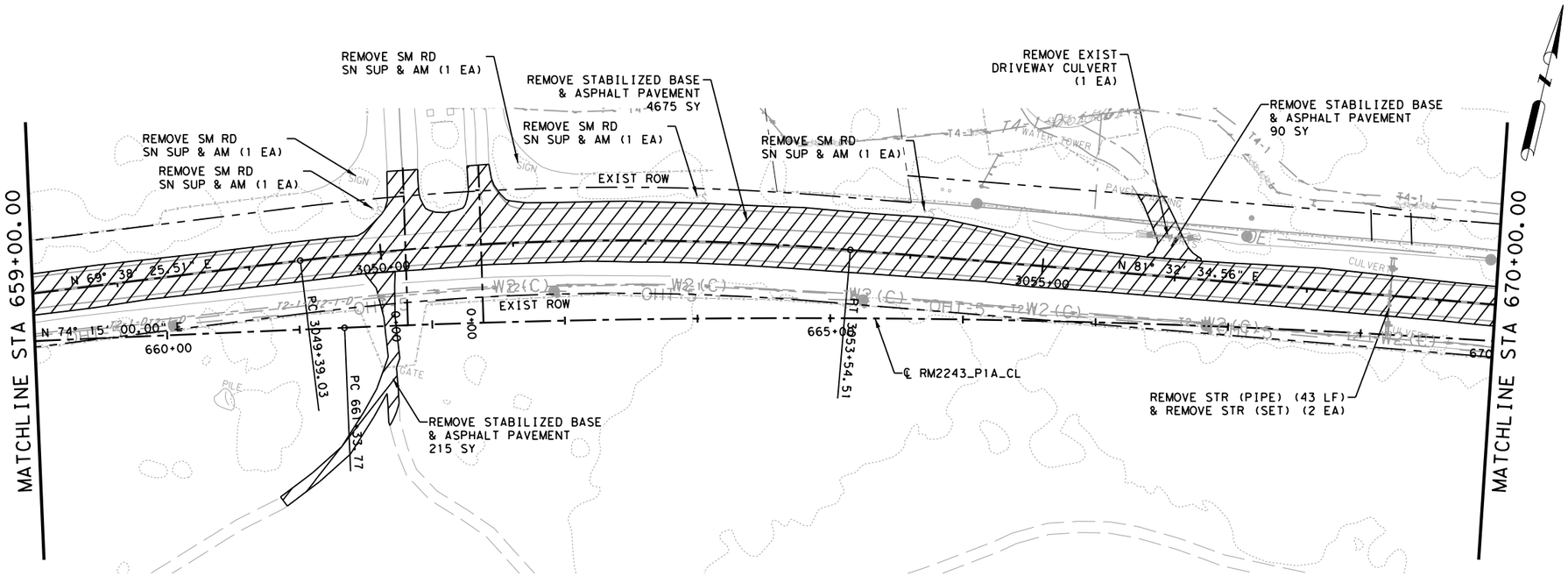

LEGEND:

REMOVAL OF EXISTING ROADWAY INCLUDED IN ITEM 110

OBLITERATE EXISTING PAVEMENT

NOTES:

1. SEE TRAFFIC CONTROL PLAN FOR PHASING OF STRIPING REMOVAL.
2. REMOVAL OF EXISTING ROADWAY QUANTITY IS FOR CONTRACTOR'S INFORMATION ONLY. PAYMENT WILL BE SUBSIDIARY TO EXCAVATION (ROADWAY).
3. ITEMS NOT CALLED OUT DIRECTLY SHALL BE SUBSIDIARY TO PREP ROW.
4. ALL TREES AND BRUSH REMOVED AS PART OF THIS PROJECT SHALL BE HAULED OFFSITE. THE REMOVAL AND HAUL OFF ARE CONSIDERED SUBSIDIARY TO PREP ROW.

0 50 100

SCALE: 1"=100'

STATE OF TEXAS
JOSHUA T. RICHTER
141234
LICENSED
PROFESSIONAL ENGINEER

4/10/2025

WILCO TEXAS

BGE, Inc.
101 W Louis Henna Blvd, Suite 400, Austin, TX 78728
Tel: 512-879-0400 • www.bgeinc.com
TBPE Registration No. F-1046

RM 2243

REMOVAL LAYOUT

SHEET 10 OF 11

FED.RD. DIV.NO.	PROJECT NO.		SHEET NO.
6			120
STATE	DIST.	COUNTY	
TEXAS	AUS	WILLIAMSON	
CONT.	SECT.	JOB	HIGHWAY NO.
0914	05	222	RM 2243

4/10/2025 12:55:05 PM pdf.pltcfg
G:\TXC\Projects\County*Williamson\7473-02 RM 2243 Phase 1A\03*CADD\01*Shts\18-RMVL\RM2243*P1A*RMVL*10.dgn

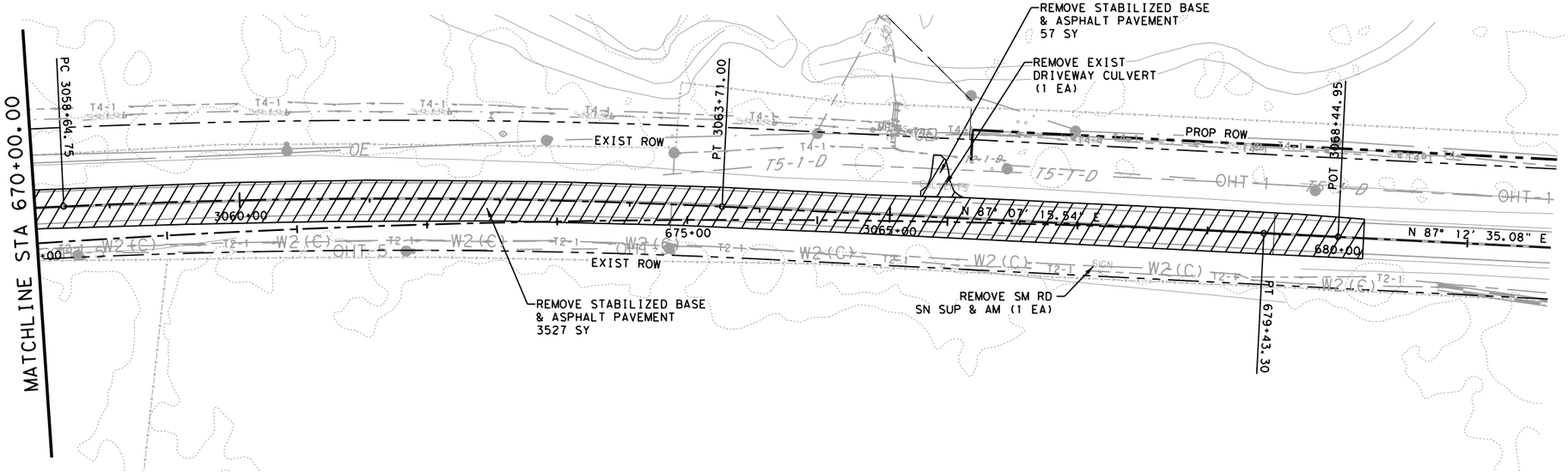

LEGEND:

REMOVAL OF EXISTING ROADWAY INCLUDED IN ITEM 110

OBLITERATE EXISTING PAVEMENT

NOTES:

1. SEE TRAFFIC CONTROL PLAN FOR PHASING OF STRIPING REMOVAL.
2. REMOVAL OF EXISTING ROADWAY QUANTITY IS FOR CONTRACTOR'S INFORMATION ONLY. PAYMENT WILL BE SUBSIDIARY TO EXCAVATION (ROADWAY).
3. ITEMS NOT CALLED OUT DIRECTLY SHALL BE SUBSIDIARY TO PREP ROW.
4. ALL TREES AND BRUSH REMOVED AS PART OF THIS PROJECT SHALL BE HAULED OFFSITE. THE REMOVAL AND HAUL OFF ARE CONSIDERED SUBSIDIARY TO PREP ROW.

0 50 100

SCALE: 1"=100'

STATE OF TEXAS
JOSHUA T. RICHTER
141234
LICENSED
PROFESSIONAL ENGINEER

4/10/2025

WILCO TEXAS

BGE, Inc.
101 W Louis Henna Blvd, Suite 400, Austin, TX 78728
Tel: 512-879-0400 • www.bgeinc.com
TBPE Registration No. F-1046

RM 2243

REMOVAL LAYOUT

SHEET 11 OF 11

FED.RD. DIV.NO.	PROJECT NO.		SHEET NO.
6			121
STATE	DIST.	COUNTY	
TEXAS	AUS	WILLIAMSON	
CONT.	SECT.	JOB	HIGHWAY NO.
0914	05	222	RM 2243

4/10/2025 12:55:06 PM pdf.pltcfg
G:\TXC\Projects\County\Williamson\7473-02 RM 2243 Phase 1A\03*CADD\01*Shts\18-RMVL\RM2243*P1A*RMVL*11.dgn

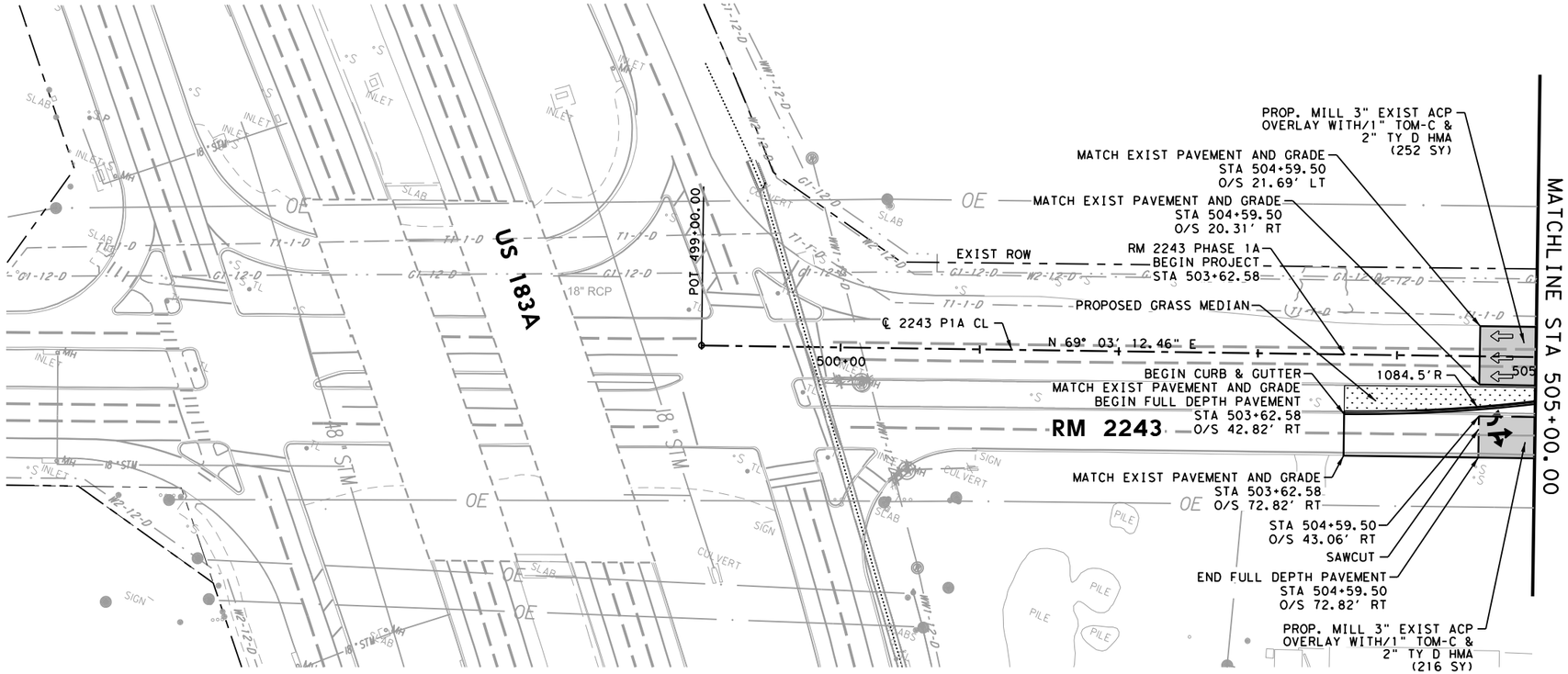

LEGEND:

- EXISTING SIGN
- DIRECTION OF TRAFFIC
- (DW#) DRIVEWAY NUMBER
- [CURVE #] ALIGNMENT CURVE NUMBER
- DITCH FLOWLINE
- MILL & OVERLAY

NOTES:

1. ALL DIMENSIONS AND OFFSETS ARE RELATIVE TO THE LIP OF GUTTER UNLESS OTHERWISE NOTED
2. FOR 50 FT RADIALLY FROM ALL LCRA POLES, CONTRACTOR SHALL COMPACT ALL FILL TO ORDINARY COMPACTION IN NO GREATER THAN 8IN LIFTS. CONTRACTOR SHALL PROOF ROLL BETWEEN EACH LIFT AND CORRECT UNSTABLE OR NONUNIFORM AREAS.

0 50 100
SCALE: 1"=100' H
1"=10' V

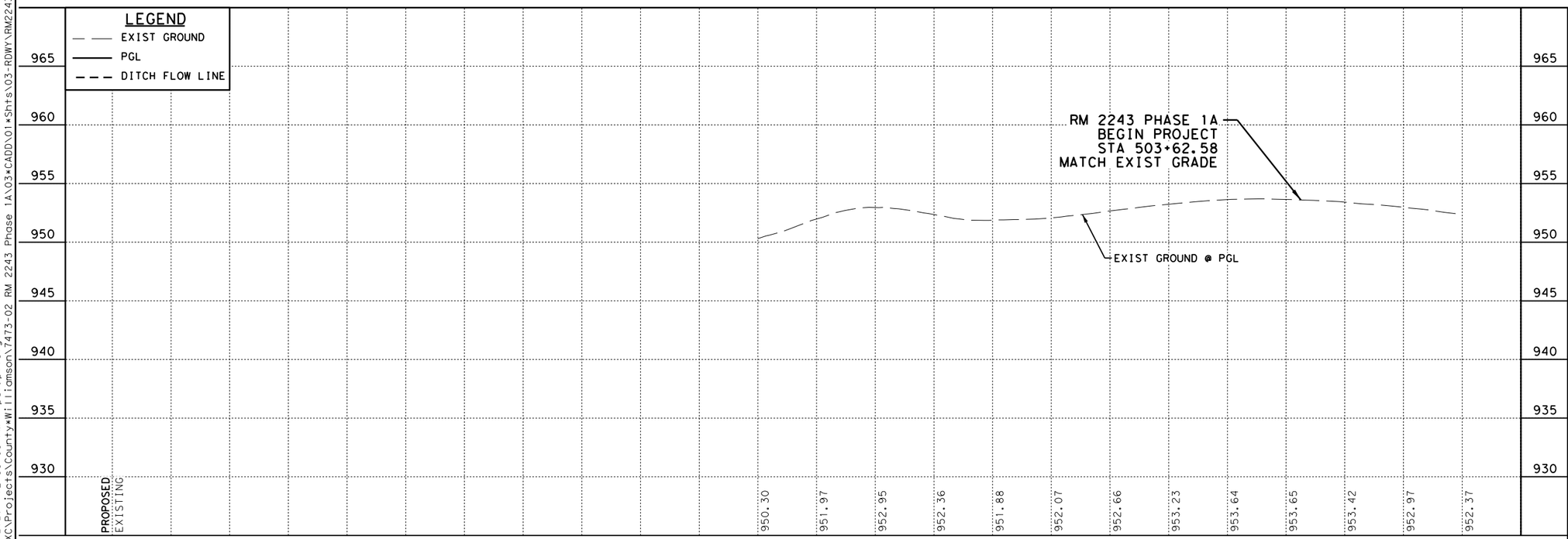

STATE OF TEXAS
JOSHUA T. RICHTER
141234
LICENSED
PROFESSIONAL ENGINEER

4/10/2025

WILCO
TEXAS

BGE, Inc.
101 W Louis Henna Blvd, Suite 400, Austin, TX 78728
Tel: 512-879-0400 • www.bgeinc.com
TBPE Registration No. F-1046

RM 2243

ROADWAY PLAN & PROFILE

BEGIN PROJECT TO STA 505+00

SHEET 1 OF 26

FED.RD. DIV.NO.	PROJECT NO.	SHEET NO.
6		122

STATE	DIST.	COUNTY	
TEXAS	AUS	WILLIAMSON	
CONT.	SECT.	JOB	HIGHWAY NO.
0914	05	222	RM 2243

4/10/2025 12:55:08 PM pdf.pltcfg
G:\TXC\Projects\County\Williamson\7473-02 RM 2243 Phase 1A\03*CADD\01*Shts\03-RDWY\RM2243*P1A*PP*01.dgn

① END CURB & GUTTER
MATCH EXISTING PAVEMENT AND GRADE
PT
STA 505+23.95
O/S 21.81' RT

② 3.5'R

③ PCC
STA 505+24.42
O/S 28.78' RT

④ LIP OF GUTTER
BEGIN SAWCUT
STA 506+66.51
O/S 19.00' LT

⑤ BEGIN FULL PAVEMENT
MATCH EXISTING ELEVATION
STA 506+30.88

⑥ FULL DEPTH RECONSTRUCTION

⑦ PI
STA 505+23.98
O/S 19.24' RT

⑧ END SAWCUT
STA 505+23.95
O/S 20.31' RT

⑨ PC
STA 505+50.96
O/S 44.09' RT

⑩ PC
STA 505+51.96
O/S 20.11' RT

⑪ PROPOSED CONCRETE MEDIAN
(24 SY)

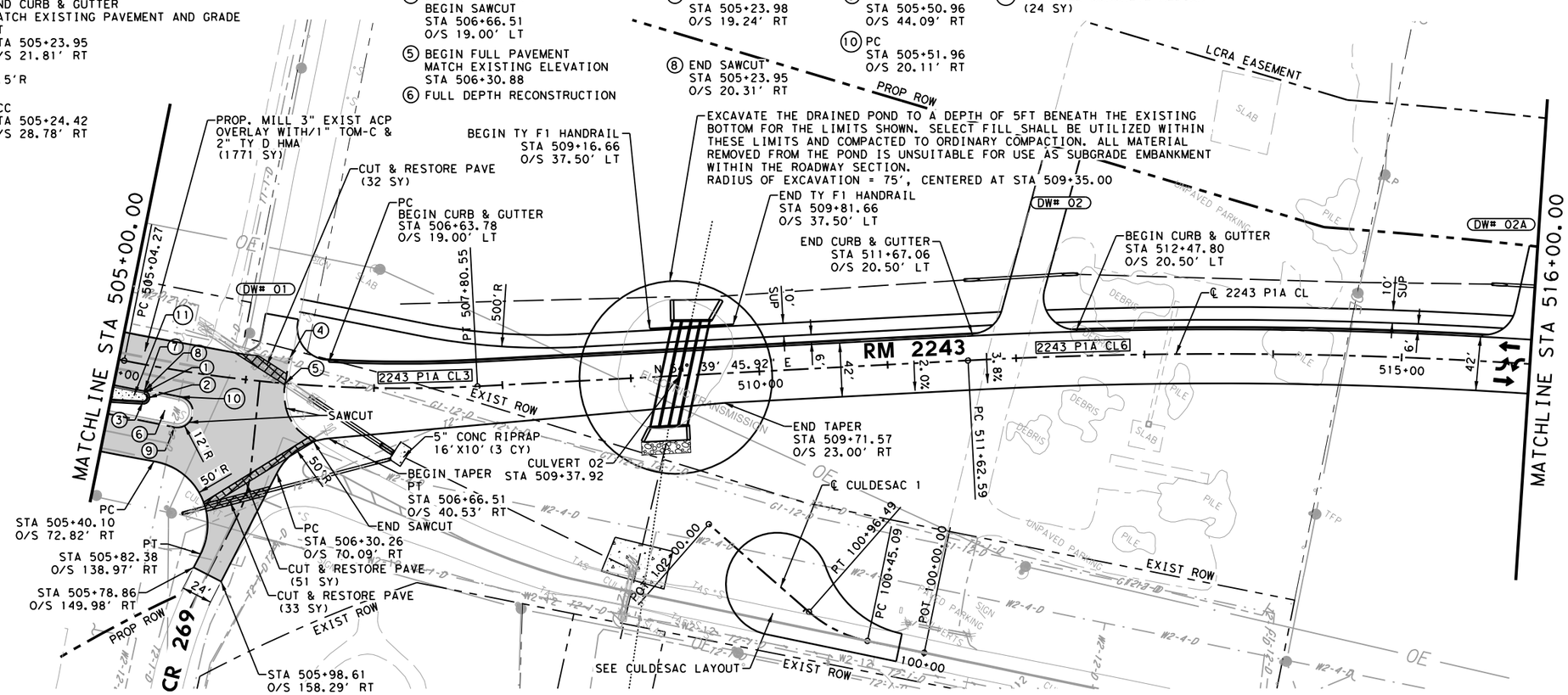

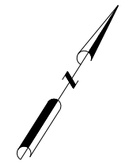

LEGEND:

- EXISTING SIGN
- DIRECTION OF TRAFFIC
- (DW#) DRIVEWAY NUMBER
- [CURVE #] ALIGNMENT CURVE NUMBER
- DITCH FLOWLINE
- MILL & OVERLAY

NOTES:

1. ALL DIMENSIONS AND OFFSETS ARE RELATIVE TO THE LIP OF GUTTER UNLESS OTHERWISE NOTED
2. FOR 50 FT RADIALLY FROM ALL LCRA POLES, CONTRACTOR SHALL COMPACT ALL FILL TO ORDINARY COMPACTION IN NO GREATER THAN 8IN LIFTS. CONTRACTOR SHALL PROOF ROLL BETWEEN EACH LIFT AND CORRECT UNSTABLE OR NONUNIFORM AREAS.

0 50 100
SCALE: 1"=100' H
1"=10' V

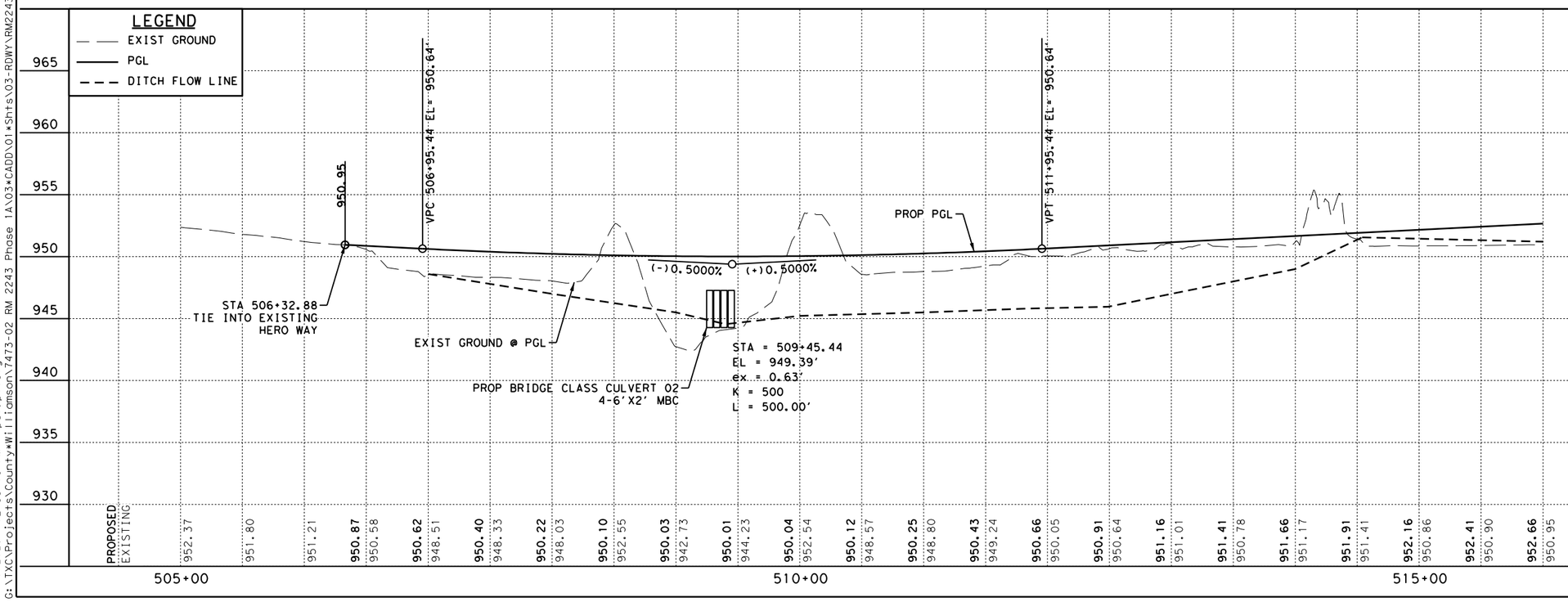

4/10/2025

WILCO TEXAS

BGE, Inc.
101 W Louis Henna Blvd, Suite 400, Austin, TX 78728
Tel: 512-879-0400 ● www.bgeinc.com
TBPE Registration No. F-1046

RM 2243

ROADWAY PLAN & PROFILE

STA 505+00 TO STA 516+00

SHEET 2 OF 26

FED.RD. DIV.NO.	PROJECT NO.		SHEET NO.
6			123
STATE	DIST.	COUNTY	
TEXAS	AUS	WILLIAMSON	
CONT.	SECT.	JOB	HIGHWAY NO.
0914	05	222	RM 2243

4/10/2025 12:55:10 PM pdf.pltcfg
G:\TXC\Projects\County\Williamson\7473-02 RM 2243 Phase 1A\03*CADD\01*Shts\03-RDWY\RM2243*P1A*PP*02.dgn

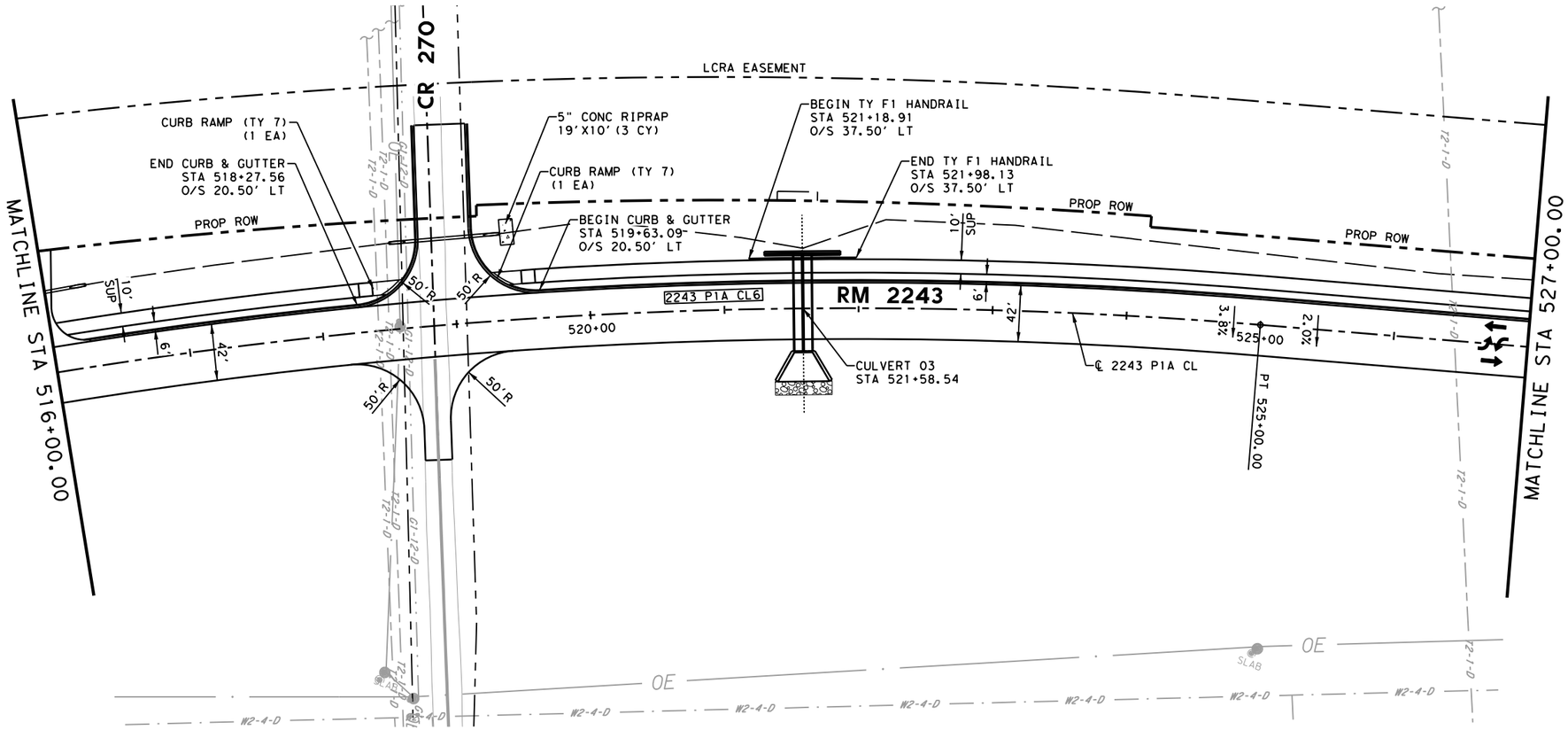

LEGEND:

- EXISTING SIGN
- DIRECTION OF TRAFFIC
- DRIVEWAY NUMBER (DW#)
- ALIGNMENT CURVE NUMBER (CURVE #)
- DITCH FLOWLINE
- MILL & OVERLAY

NOTES:

1. ALL DIMENSIONS AND OFFSETS ARE RELATIVE TO THE LIP OF GUTTER UNLESS OTHERWISE NOTED
2. FOR 50 FT RADIALLY FROM ALL LCRA POLES, CONTRACTOR SHALL COMPACT ALL FILL TO ORDINARY COMPACTION IN NO GREATER THAN 8IN LIFTS. CONTRACTOR SHALL PROOF ROLL BETWEEN EACH LIFT AND CORRECT UNSTABLE OR NONUNIFORM AREAS.

0 50 100
SCALE: 1"=100' H
1"=10' V

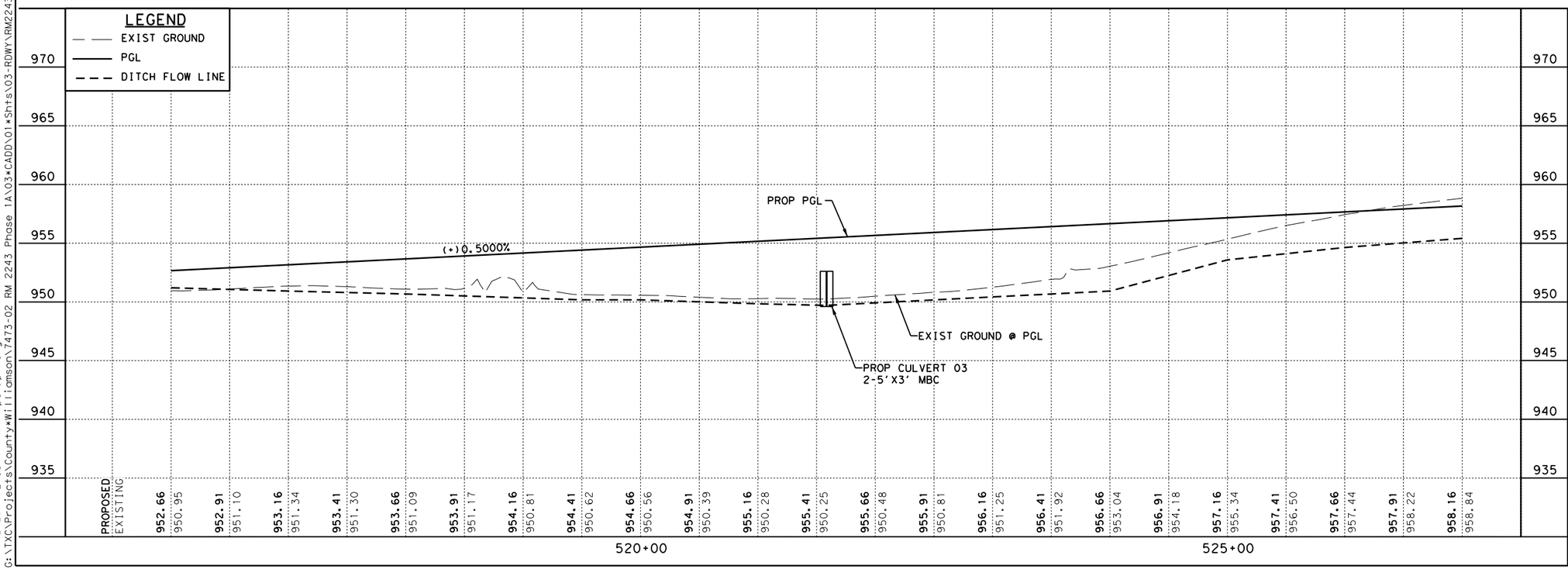

STATE OF TEXAS
JOSHUA T. RICHTER
141234
LICENSED PROFESSIONAL ENGINEER

4/10/2025

WILCO TEXAS

BGE, Inc.
101 W Louis Henna Blvd, Suite 400, Austin, TX 78728
Tel: 512-879-0400 • www.bgeinc.com
TBPE Registration No. F-1046

RM 2243

ROADWAY PLAN & PROFILE
STA 516+00 TO STA 527+00

FED.RD. DIV.NO.	PROJECT NO.		SHEET NO.
6			124
STATE	DIST.	COUNTY	
TEXAS	AUS	WILLIAMSON	
CONT.	SECT.	JOB	HIGHWAY NO.
0914	05	222	RM 2243

4/10/2025 12:55:11 PM
G:\TXC\Projects\County\Williamson\7473-02 RM 2243 Phase 1A\03*CADD\01*Shts\03-RDWY\RM2243*P1A*PP*03.dgn
pdf.pltcfg

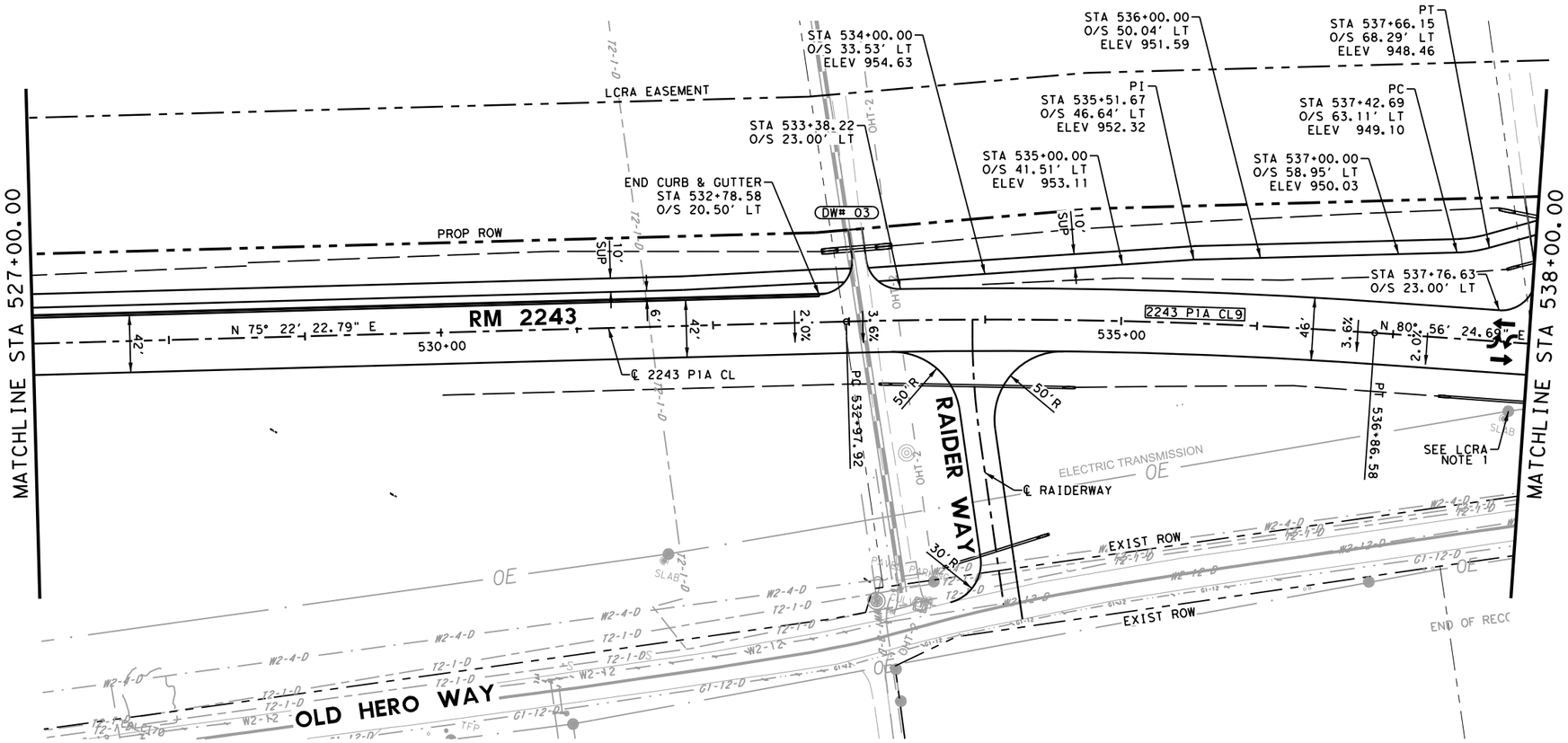

LEGEND:

- EXISTING SIGN
- DIRECTION OF TRAFFIC
- DW# — DRIVEWAY NUMBER
- CURVE # — ALIGNMENT CURVE NUMBER
- DITCH FLOWLINE
- MILL & OVERLAY

NOTES:

1. ALL DIMENSIONS AND OFFSETS ARE RELATIVE TO THE LIP OF GUTTER UNLESS OTHERWISE NOTED
2. FOR 50 FT RADIALLY FROM ALL LCRA POLES, CONTRACTOR SHALL COMPACT ALL FILL TO ORDINARY COMPACTION IN NO GREATER THAN 8IN LIFTS. CONTRACTOR SHALL PROOF ROLL BETWEEN EACH LIFT AND CORRECT UNSTABLE OR NON-COMPACTED AREAS.

LCRA NOTE

1. THE ADJACENT CULVERT SHALL BE CLASS V RCP. ADDITIONAL CULVERT LENGTH IS PROVIDED AT THIS LOCATION FOR LCRA ACCESS.

0 50 100
SCALE: 1"=100' H
1"=10' V

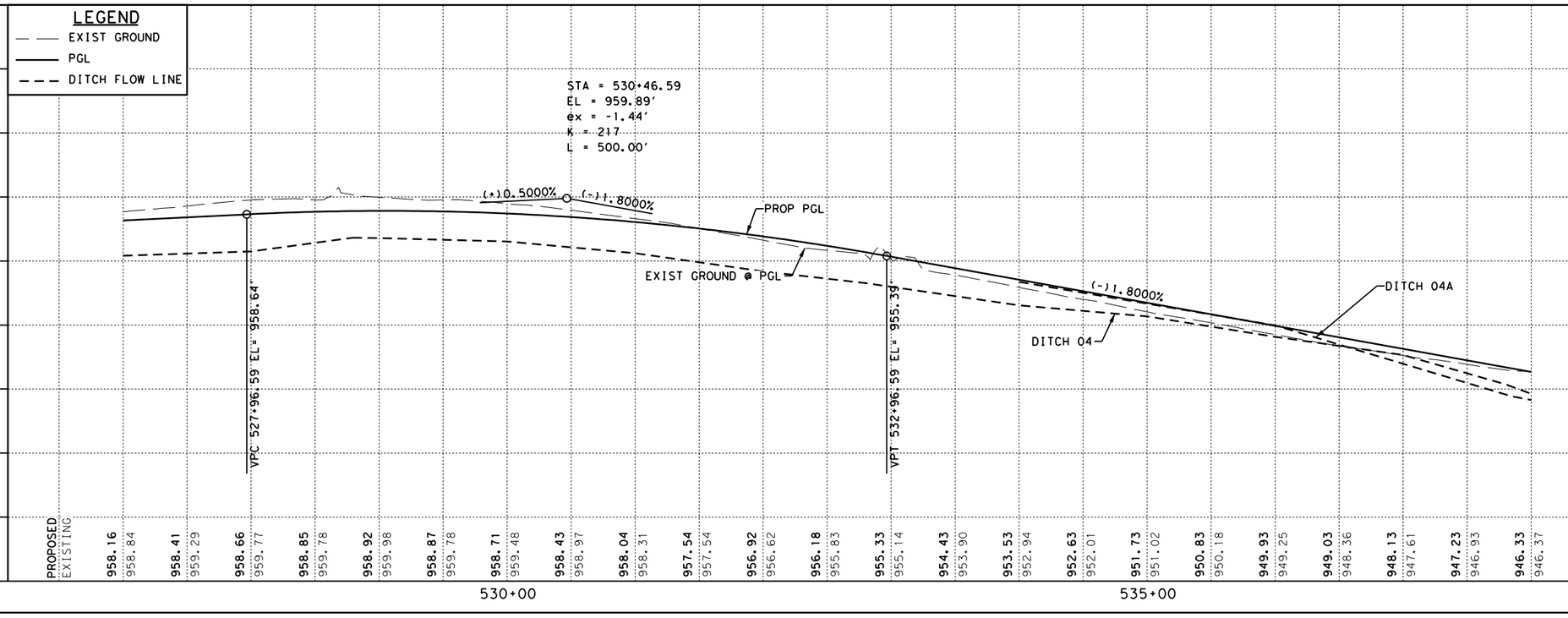

STATE OF TEXAS
JOSHUA T. RICHTER
141234
LICENSED
PROFESSIONAL ENGINEER

4/10/2025

WILCO
TEXAS

BGE, Inc.
101 W Louis Henna Blvd, Suite 400, Austin, TX 78728
Tel: 512-879-0400 ● www.bgeinc.com
TBPE Registration No. F-1046

RM 2243

ROADWAY PLAN & PROFILE

STA 527+00 TO STA 538+00

SHEET 4 OF 26

FED.RD. DIV.NO.	PROJECT NO.	SHEET NO.
6		125

STATE	DIST.	COUNTY	
TEXAS	AUS	WILLIAMSON	
CONT.	SECT.	JOB	HIGHWAY NO.
0914	05	222	RM 2243

4/10/2025 12:55:12 PM pdf.pltcfg
G:\TXC\Projects\County\Williamson\7473-02 RM 2243 Phase 1A\03*CADD\01*Shts\03-RDWY\RM2243*P1A*PP*04.dgn

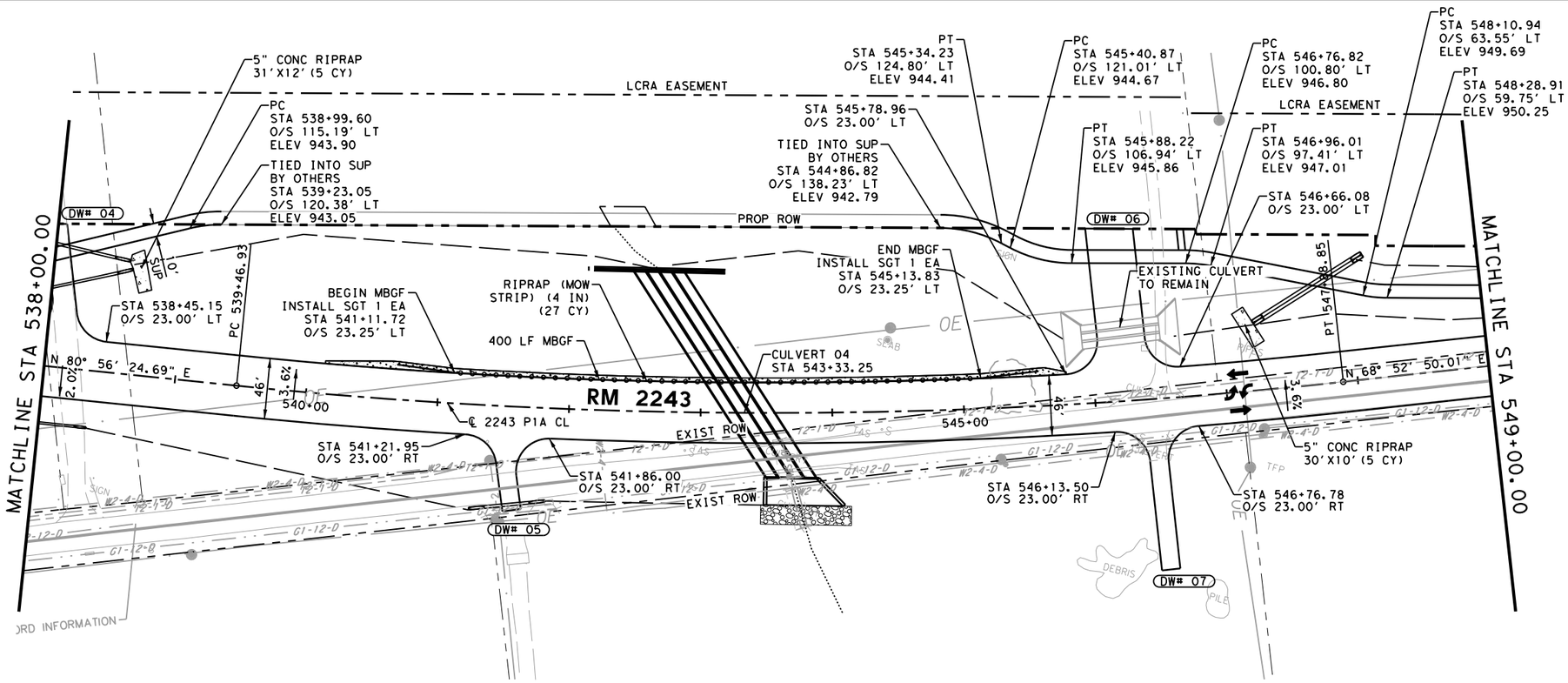

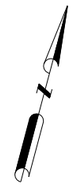

LEGEND:

- EXISTING SIGN
- DIRECTION OF TRAFFIC
- (DW#) DRIVEWAY NUMBER
- [CURVE #] ALIGNMENT CURVE NUMBER
- DITCH FLOWLINE
- MILL & OVERLAY

NOTES:

1. ALL DIMENSIONS AND OFFSETS ARE RELATIVE TO THE LIP OF GUTTER UNLESS OTHERWISE NOTED
2. FOR 50 FT RADIALLY FROM ALL LCRA POLES, CONTRACTOR SHALL COMPACT ALL FILL TO ORDINARY COMPACTION IN NO GREATER THAN 8IN LIFTS. CONTRACTOR SHALL PROOF ROLL BETWEEN EACH LIFT AND CORRECT UNSTABLE OR NONUNIFORM AREAS.

0 50 100
SCALE: 1"=100' H
1"=10' V

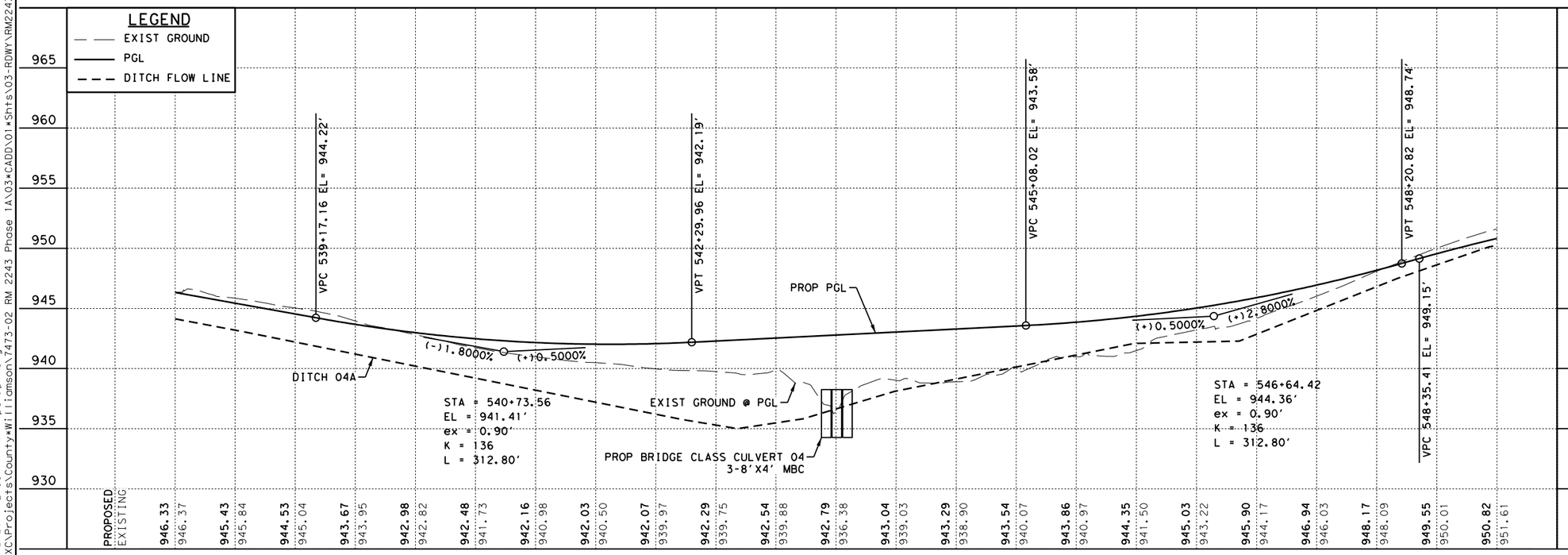

4/10/2025

WILCO TEXAS

BGE, Inc.
101 W Louis Henna Blvd, Suite 400, Austin, TX 78728
Tel: 512-879-0400 ● www.bgeinc.com
TBPE Registration No. F-1046

RM 2243

ROADWAY PLAN & PROFILE

STA 538+00 TO STA 549+00

SHEET 5 OF 26

FED.RD. DIV.NO.	PROJECT NO.	SHEET NO.
6		126

STATE	DIST.	COUNTY	
TEXAS	AUS	WILLIAMSON	
CONT.	SECT.	JOB	HIGHWAY NO.
0914	05	222	RM 2243

4/10/2025 12:55:14 PM
G:\TXCL\Projects\County\Williamson\7473-02 RM 2243 Phase 1A\03*CADD\01*Shts\03-RDWY\RM2243*P1A*PP*05.dgn
pdf.pltcfg

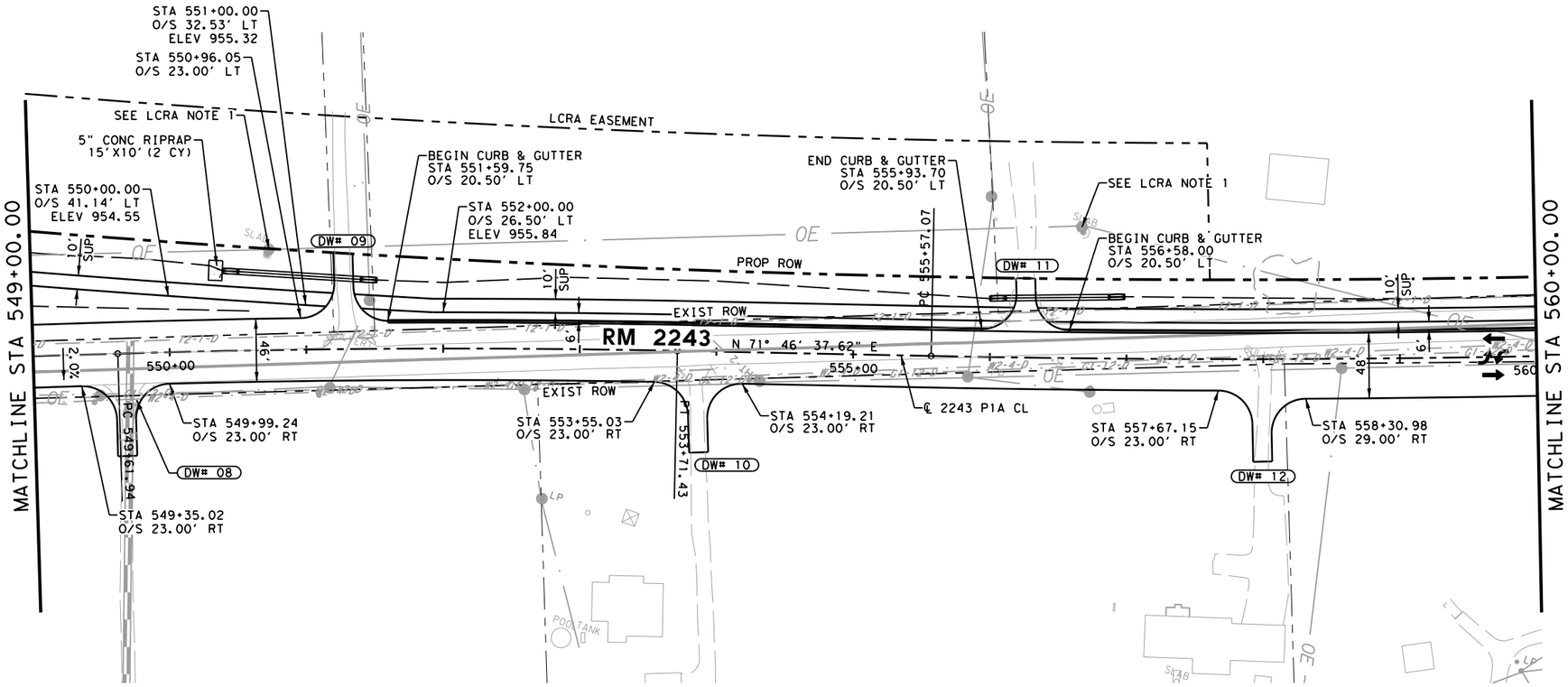

LEGEND:

- EXISTING SIGN
- DIRECTION OF TRAFFIC
- (DW#) DRIVEWAY NUMBER
- [CURVE #] ALIGNMENT CURVE NUMBER
- DITCH FLOWLINE
- MILL & OVERLAY

NOTES:

1. ALL DIMENSIONS AND OFFSETS ARE RELATIVE TO THE LIP OF GUTTER UNLESS OTHERWISE NOTED
2. FOR 50 FT RADIALLY FROM ALL LCRA POLES, CONTRACTOR SHALL COMPACT ALL FILL TO ORDINARY COMPACTION IN NO GREATER THAN 8IN LIFTS. CONTRACTOR SHALL PROOF ROLL BETWEEN EACH LIFT AND CORRECT UNSTABLE OR NON-UNIFORM AREAS.

LCRA NOTE

1. THE ADJACENT CULVERT SHALL BE CLASS V RCP. ADDITIONAL CULVERT LENGTH IS PROVIDED AT THIS LOCATION FOR LCRA ACCESS.

0 50 100

SCALE: 1"=100' H
1"=10' V

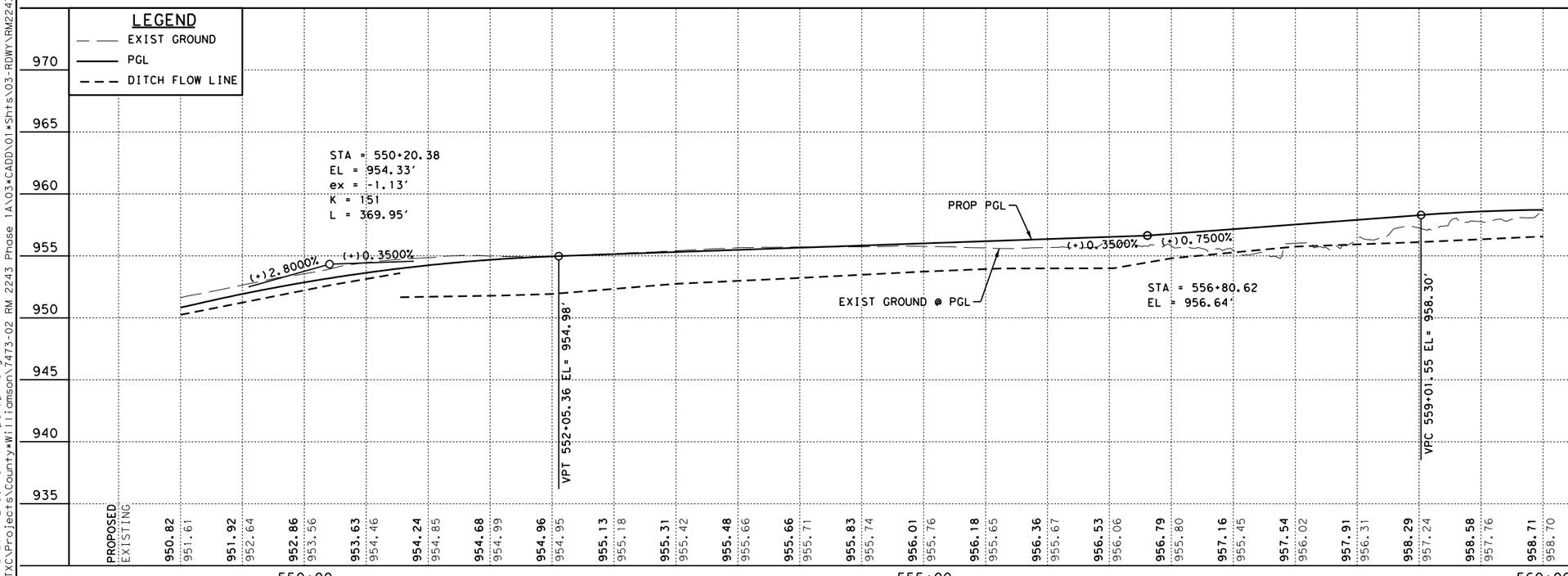

STATE OF TEXAS
JOSHUA T. RICHTER
141234
LICENSED
PROFESSIONAL ENGINEER

4/10/2025

WILCO
TEXAS

BGE, Inc.
101 W Louis Henna Blvd, Suite 400, Austin, TX 78728
Tel: 512-879-0400 • www.bgeinc.com
TBPE Registration No. F-1046

RM 2243

ROADWAY PLAN & PROFILE

STA 549+00 TO STA 560+00

SHEET 6 OF 26

FED.RD. DIV.NO.	PROJECT NO.	SHEET NO.
6		127

STATE	DIST.	COUNTY	
TEXAS	AUS	WILLIAMSON	
CONT.	SECT.	JOB	HIGHWAY NO.
0914	05	222	RM 2243

4/10/2025 12:55:15 PM pdf.pltcfg
G:\TXC\Projects\County\Williamson\7473-02 RM 2243 Phase 1A\03*CADD\01*Shts\03-RDWY\RM2243*P1A*PP*06.dgn

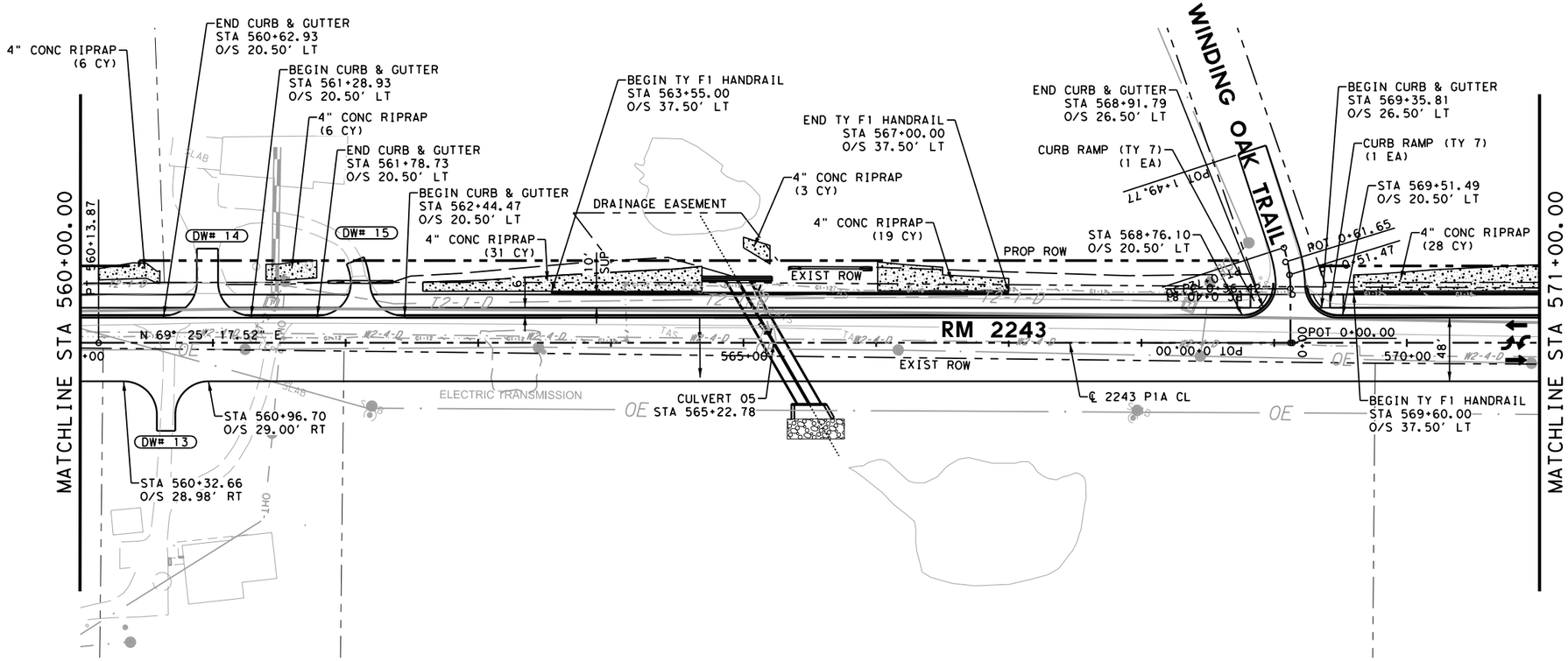

LEGEND:

- EXISTING SIGN
- DIRECTION OF TRAFFIC
- DW# — DRIVEWAY NUMBER
- CURVE # — ALIGNMENT CURVE NUMBER
- DITCH FLOWLINE
- MILL & OVERLAY

NOTES:

1. ALL DIMENSIONS AND OFFSETS ARE RELATIVE TO THE LIP OF GUTTER UNLESS OTHERWISE NOTED
2. FOR 50 FT RADIALLY FROM ALL LCRA POLES, CONTRACTOR SHALL COMPACT ALL FILL TO ORDINARY COMPACTION IN NO GREATER THAN 8IN LIFTS. CONTRACTOR SHALL PROOF ROLL BETWEEN EACH LIFT AND CORRECT UNSTABLE OR NONUNIFORM AREAS.

0 50 100

SCALE: 1"=100' H
1"=10' V

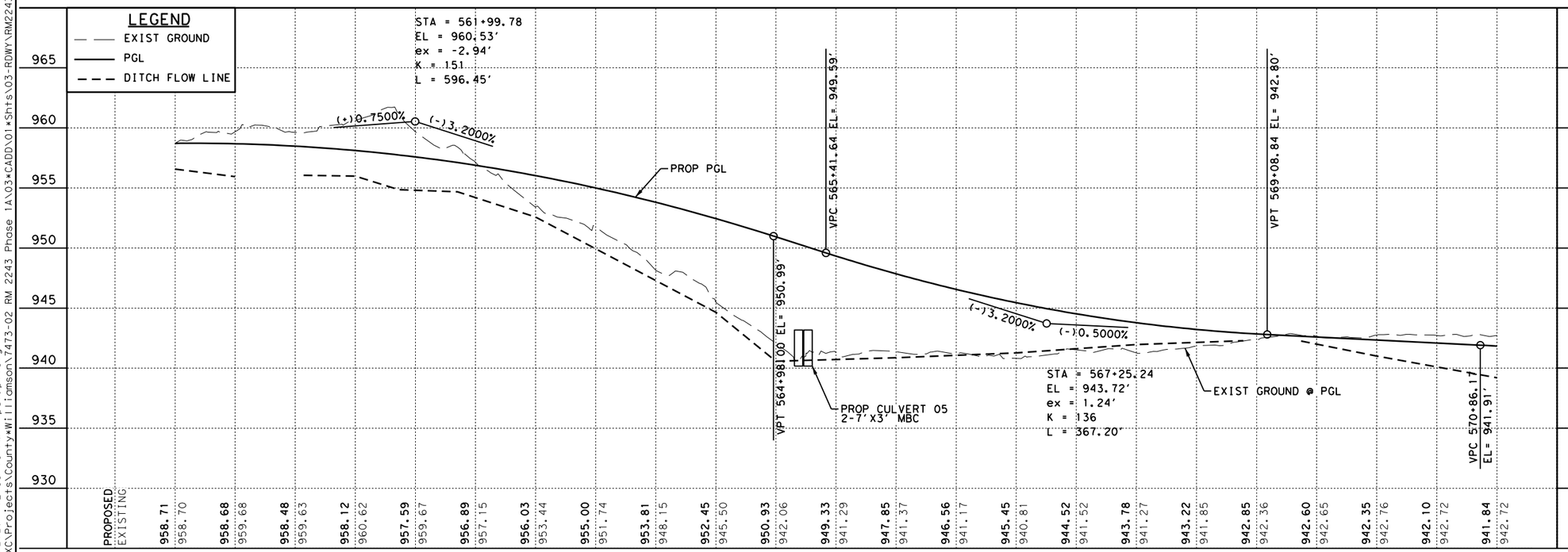

STATE OF TEXAS
JOSHUA T. RICHTER
141234
LICENSED PROFESSIONAL ENGINEER

4/10/2025

WILCO TEXAS

BGE, Inc.
101 W Louis Henna Blvd, Suite 400, Austin, TX 78728
Tel: 512-879-0400 ● www.bgeinc.com
TBPE Registration No. F-1046

RM 2243

ROADWAY PLAN & PROFILE

STA 560+00 TO STA 571+00

FED.RD. DIV.NO.	PROJECT NO.	SHEET NO.
6		128

STATE	DIST.	COUNTY	
TEXAS	AUS	WILLIAMSON	
CONT.	SECT.	JOB	HIGHWAY NO.
0914	05	222	RM 2243

4/10/2025 12:55:16 PM pdf.pltcfg
G:\TXC\Projects\County\Williamson\7473-02 RM 2243 Phase 1A\03*CADD\01*Shts\03-RDWY\RM2243*P1A*PP*07.dgn

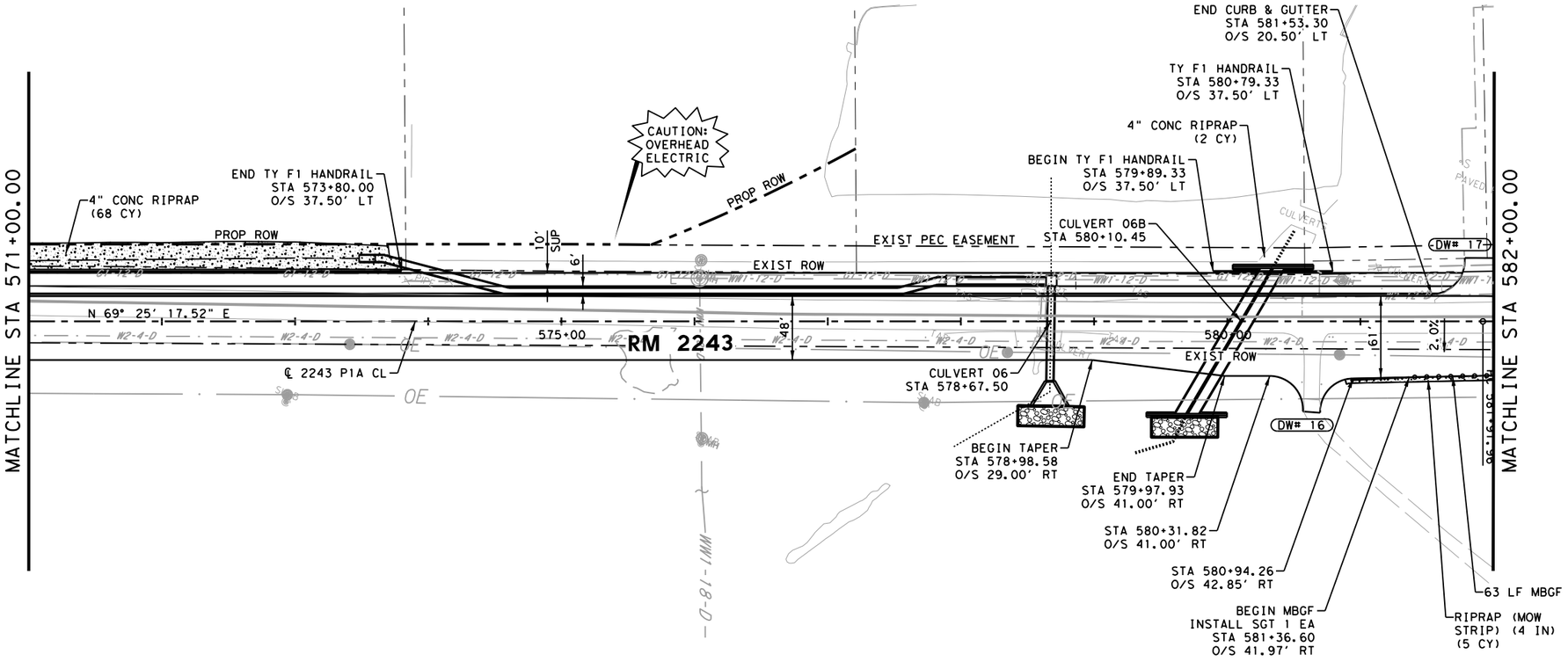

LEGEND:

- EXISTING SIGN
- DIRECTION OF TRAFFIC
- DW# — DRIVEWAY NUMBER
- CURVE # — ALIGNMENT CURVE NUMBER
- DITCH FLOWLINE
- MILL & OVERLAY

NOTES:

1. ALL DIMENSIONS AND OFFSETS ARE RELATIVE TO THE LIP OF GUTTER UNLESS OTHERWISE NOTED
2. FOR 50 FT RADIALLY FROM ALL LCRA POLES, CONTRACTOR SHALL COMPACT ALL FILL TO ORDINARY COMPACTION IN NO GREATER THAN 8IN LIFTS. CONTRACTOR SHALL PROOF ROLL BETWEEN EACH LIFT AND CORRECT UNSTABLE OR NONUNIFORM AREAS.

0 50 100
SCALE: 1"=100' H
1"=10' V

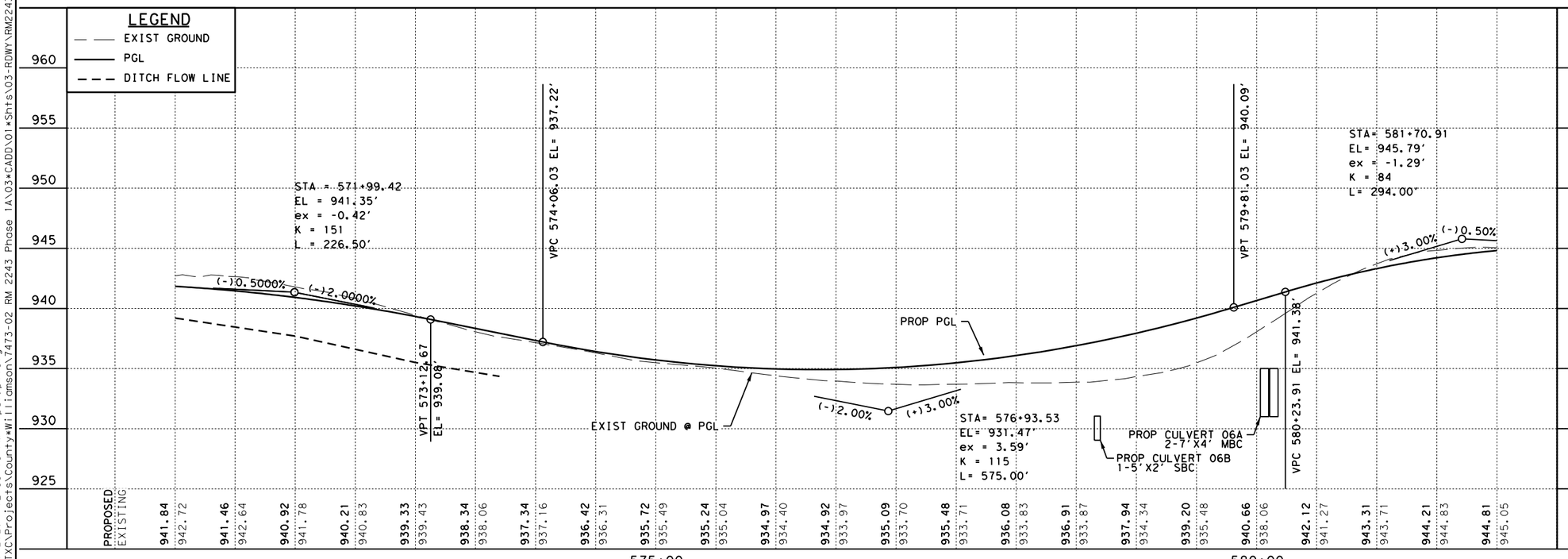

STATE OF TEXAS
JOSHUA T. RICHTER
141234
LICENSED
PROFESSIONAL ENGINEER

4/10/2025

WILCO
TEXAS

BGE, Inc.
101 W Louis Henna Blvd, Suite 400, Austin, TX 78728
Tel: 512-879-0400 • www.bgeinc.com
TBPE Registration No. F-1046

RM 2243

ROADWAY PLAN & PROFILE

STA 571+00 TO STA 582+00

SHEET 8 OF 26

FED.RD. DIV.NO.	PROJECT NO.		SHEET NO.
6			129
STATE	DIST.	COUNTY	
TEXAS	AUS	WILLIAMSON	
CONT.	SECT.	JOB	HIGHWAY NO.
0914	05	222	RM 2243

4/10/2025 12:55:18 PM pdf.pltcfg
G:\TXCL\Projects\County\Williamson\7473-02 RM 2243 Phase 1A\03*CADD\01*Shts\03-RDWY\RM2243*P1A*PP*08.dgn

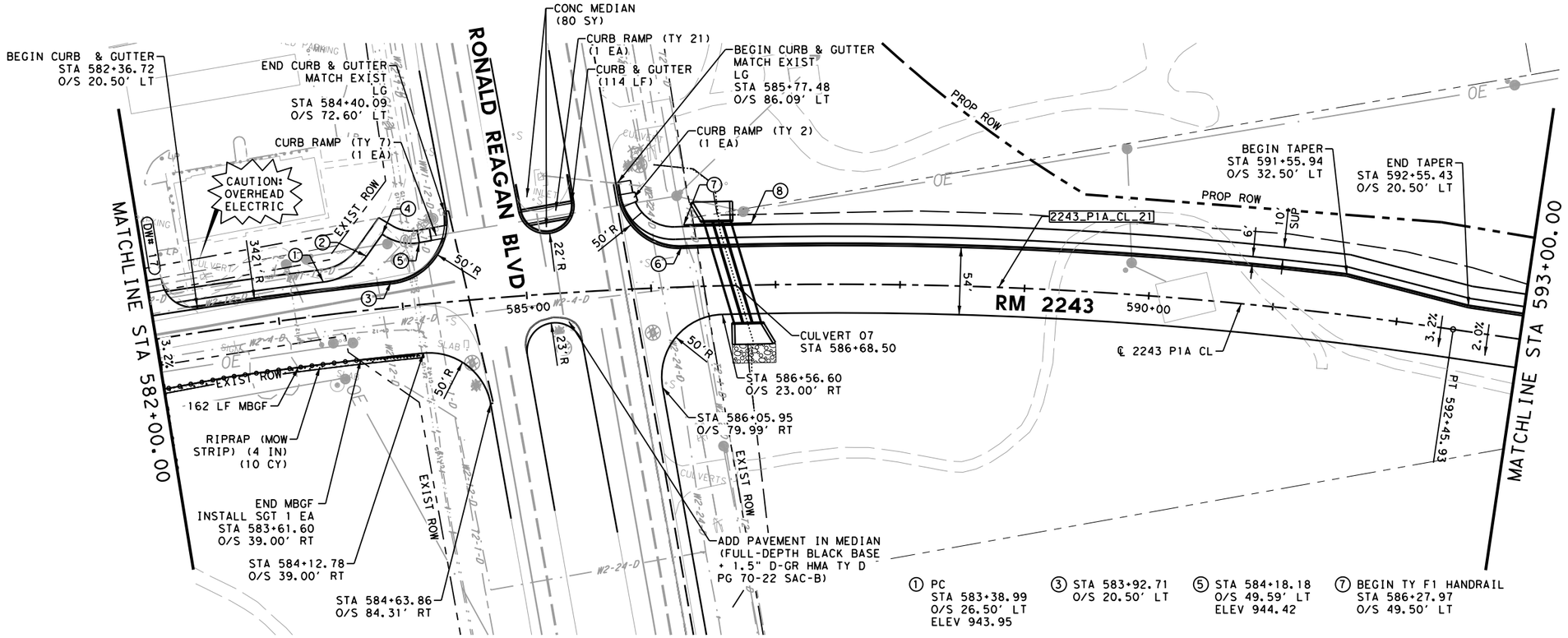

① PC
STA 583+38.99
O/S 26.50' LT
ELEV 943.95

② PT
STA 583+75.04
O/S 42.53' LT
ELEV 943.87

③ STA 583+92.71
O/S 20.50' LT

④ PI
STA 583+89.69
O/S 59.30' LT
ELEV 943.96

⑤ STA 584+18.18
O/S 49.59' LT
ELEV 944.42

⑥ STA 586+25.84
O/S 32.50' LT

⑦ BEGIN TY F1 HANDRAIL
STA 586+27.97
O/S 49.50' LT

⑧ END TY F1 HANDRAIL
STA 586+81.42
O/S 49.50' LT

LEGEND:

- EXISTING SIGN
- DIRECTION OF TRAFFIC
- (DW#) DRIVEWAY NUMBER
- [CURVE #] ALIGNMENT CURVE NUMBER
- DITCH FLOWLINE
- MILL & OVERLAY

NOTES:

1. ALL DIMENSIONS AND OFFSETS ARE RELATIVE TO THE LIP OF GUTTER UNLESS OTHERWISE NOTED
2. FOR 50 FT RADIALLY FROM ALL LCRA POLES, CONTRACTOR SHALL COMPACT ALL FILL TO ORDINARY COMPACTION IN NO GREATER THAN 8IN LIFTS. CONTRACTOR SHALL PROOF ROLL BETWEEN EACH LIFT AND CORRECT UNSTABLE OR NONUNIFORM AREAS.

0 50 100
SCALE: 1"=100' H
1"=10' V

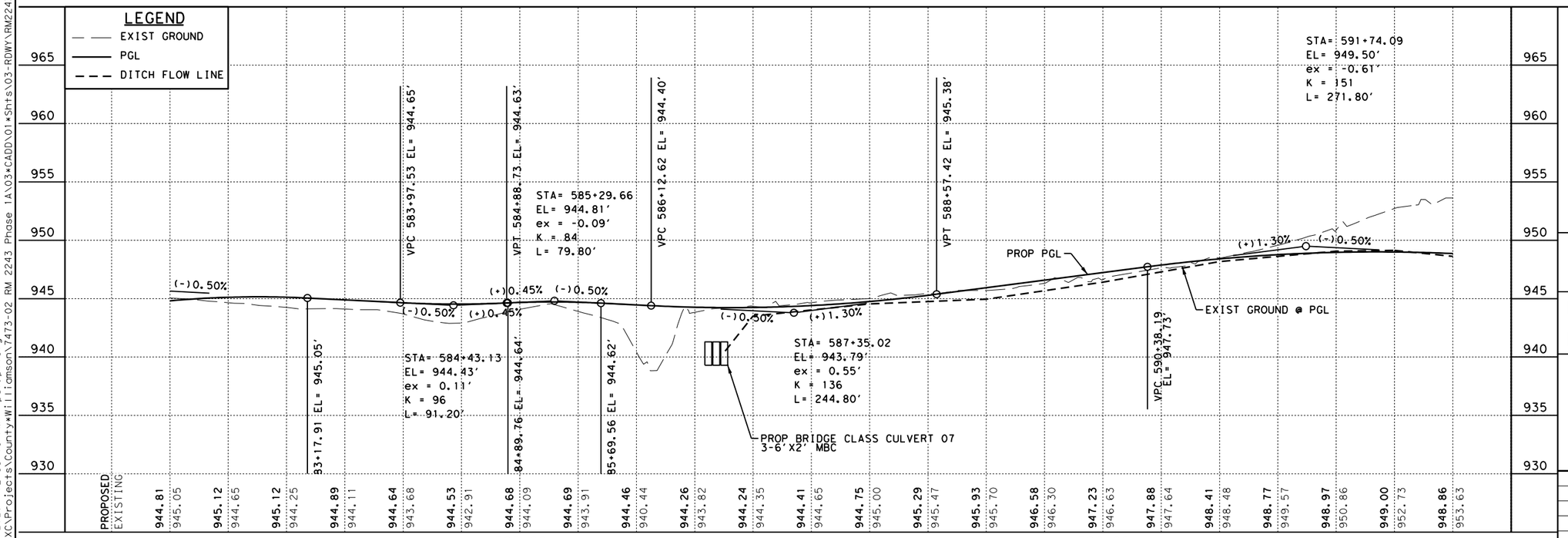

STATE OF TEXAS
JOSHUA T. RICHTER
141234
LICENSED
PROFESSIONAL ENGINEER

4/10/2025

WILCO TEXAS

BGE, Inc.
101 W Louis Henna Blvd, Suite 400, Austin, TX 78728
Tel: 512-879-0400 • www.bgeinc.com
TBPE Registration No. F-1046

RM 2243

ROADWAY PLAN & PROFILE
STA 582+00 TO STA 593+00

SHEET 9 OF 26

FED.RD. DIV.NO.	PROJECT NO.		SHEET NO.
6			130
STATE	DIST.	COUNTY	
TEXAS	AUS	WILLIAMSON	
CONT.	SECT.	JOB	HIGHWAY NO.
0914	05	222	RM 2243

4/10/2025 12:55:19 PM pdf.pltcfg
G:\TXC\Projects\County*Williamson\7473-02 RM 2243 Phase 1A\03*CADD\01*Shts\03-RDWY\RM2243*P1A*PP*09.dgn

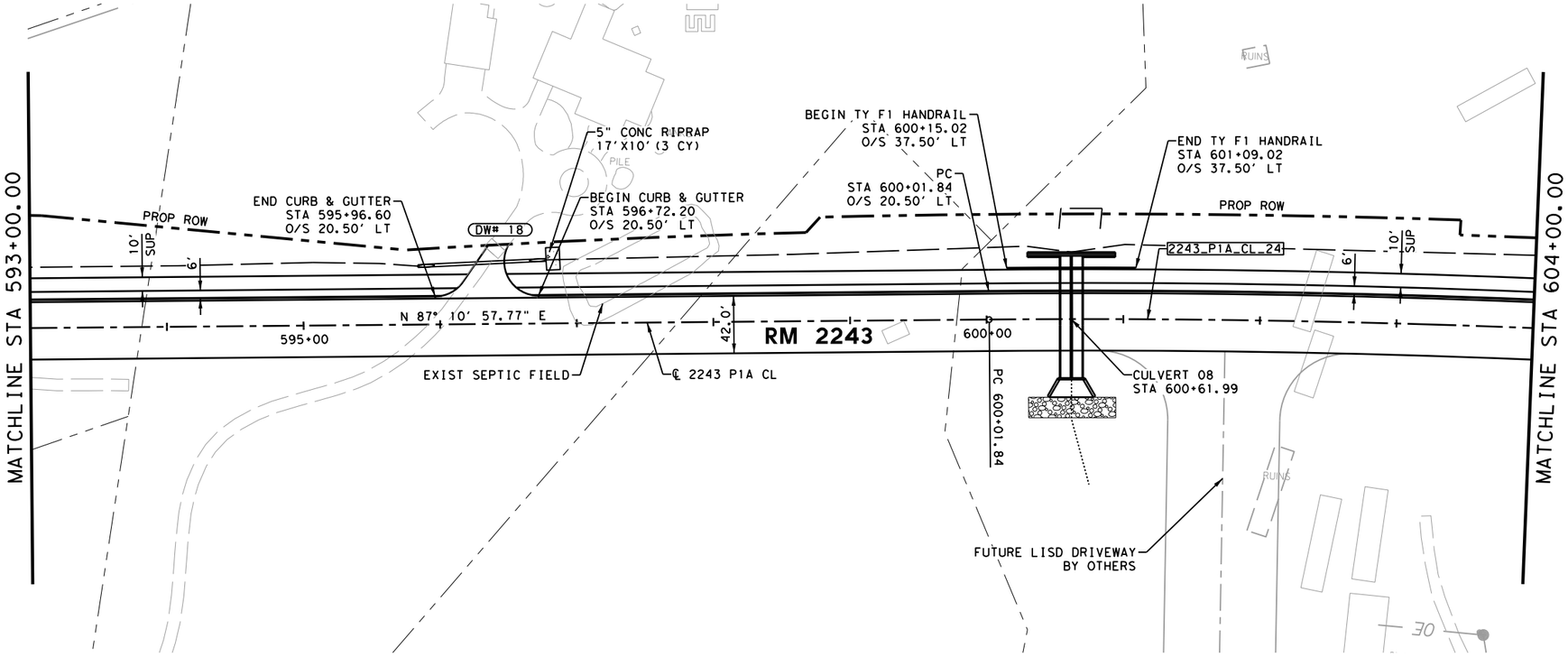

LEGEND:

- EXISTING SIGN
- DIRECTION OF TRAFFIC
- DW# — DRIVEWAY NUMBER
- CURVE # — ALIGNMENT CURVE NUMBER
- DITCH FLOWLINE
- MILL & OVERLAY

NOTES:

1. ALL DIMENSIONS AND OFFSETS ARE RELATIVE TO THE LIP OF GUTTER UNLESS OTHERWISE NOTED
2. FOR 50 FT RADIALLY FROM ALL LCRA POLES, CONTRACTOR SHALL COMPACT ALL FILL TO ORDINARY COMPACTION IN NO GREATER THAN 8IN LIFTS. CONTRACTOR SHALL PROOF ROLL BETWEEN EACH LIFT AND CORRECT UNSTABLE OR NONUNIFORM AREAS.

SCALE: 1"=100' H
1"=10' V

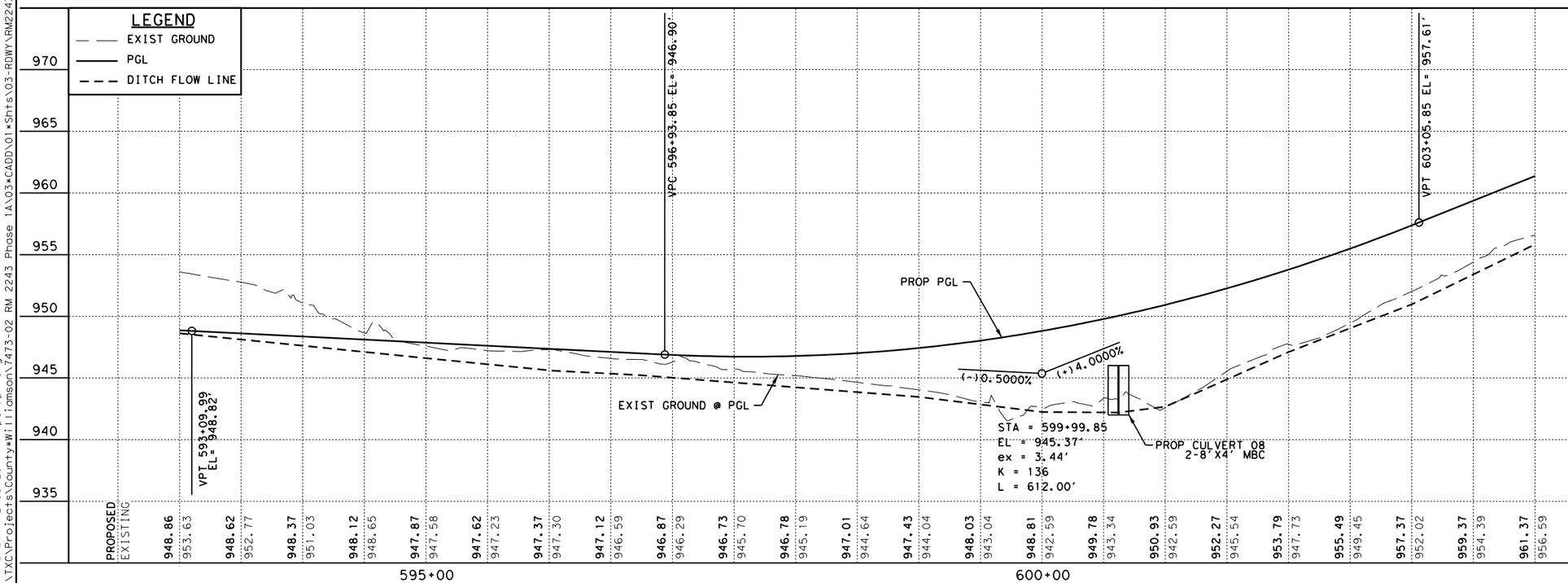

STATE OF TEXAS
JOSHUA T. RICHTER
141234
LICENSED PROFESSIONAL ENGINEER
4/10/2025

WILCO TEXAS

BGE, Inc.
101 W Louis Henna Blvd, Suite 400, Austin, TX 78728
Tel: 512-879-0400 ● www.bgeinc.com
TBPE Registration No. F-1046

RM 2243

ROADWAY PLAN & PROFILE

STA 593+00 TO STA 604+00

SHEET 10 OF 26

FED.RD. DIV.NO.	PROJECT NO.		SHEET NO.
6			131
STATE	DIST.	COUNTY	
TEXAS	AUS	WILLIAMSON	
CONT.	SECT.	JOB	HIGHWAY NO.
0914	05	222	RM 2243

4/10/2025 12:55:20 PM pdf.pltcfg
G:\TXC\Projects\County\Williamson\7473-02 RM 2243 Phase 1A\03*CADD\01*Shts\03-RDWY\RM2243*P1A*PP*10.dgn

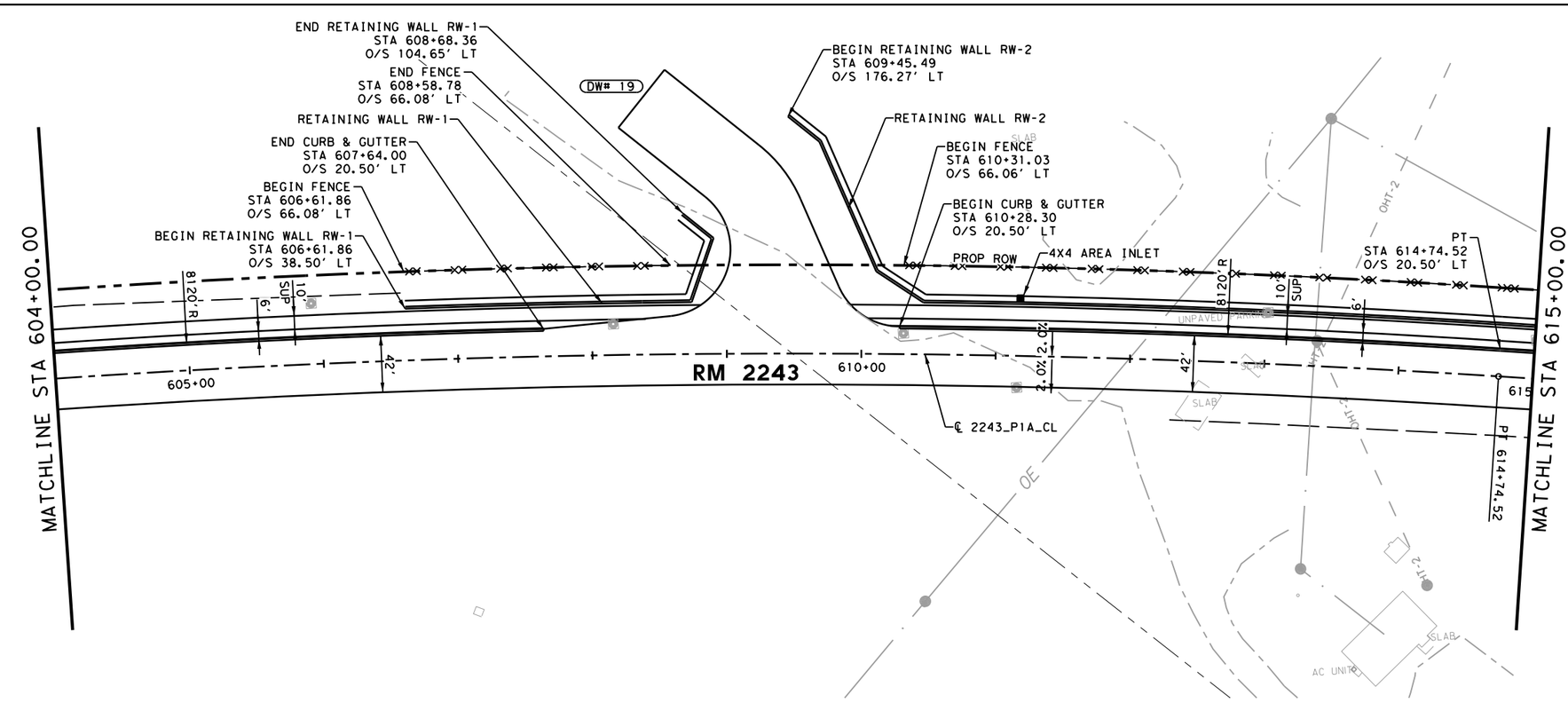

LEGEND:

- EXISTING SIGN
- DIRECTION OF TRAFFIC
- DW# — DRIVEWAY NUMBER
- CURVE # — ALIGNMENT CURVE NUMBER
- DITCH FLOWLINE
- MILL & OVERLAY

NOTES:

1. ALL DIMENSIONS AND OFFSETS ARE RELATIVE TO THE LIP OF GUTTER UNLESS OTHERWISE NOTED
2. FOR 50 FT RADIALLY FROM ALL LCRA POLES, CONTRACTOR SHALL COMPACT ALL FILL TO ORDINARY COMPACTION IN NO GREATER THAN 8IN LIFTS. CONTRACTOR SHALL PROOF ROLL BETWEEN EACH LIFT AND CORRECT UNSTABLE OR NONUNIFORM AREAS.

SCALE: 1"=100' H
1"=10' V

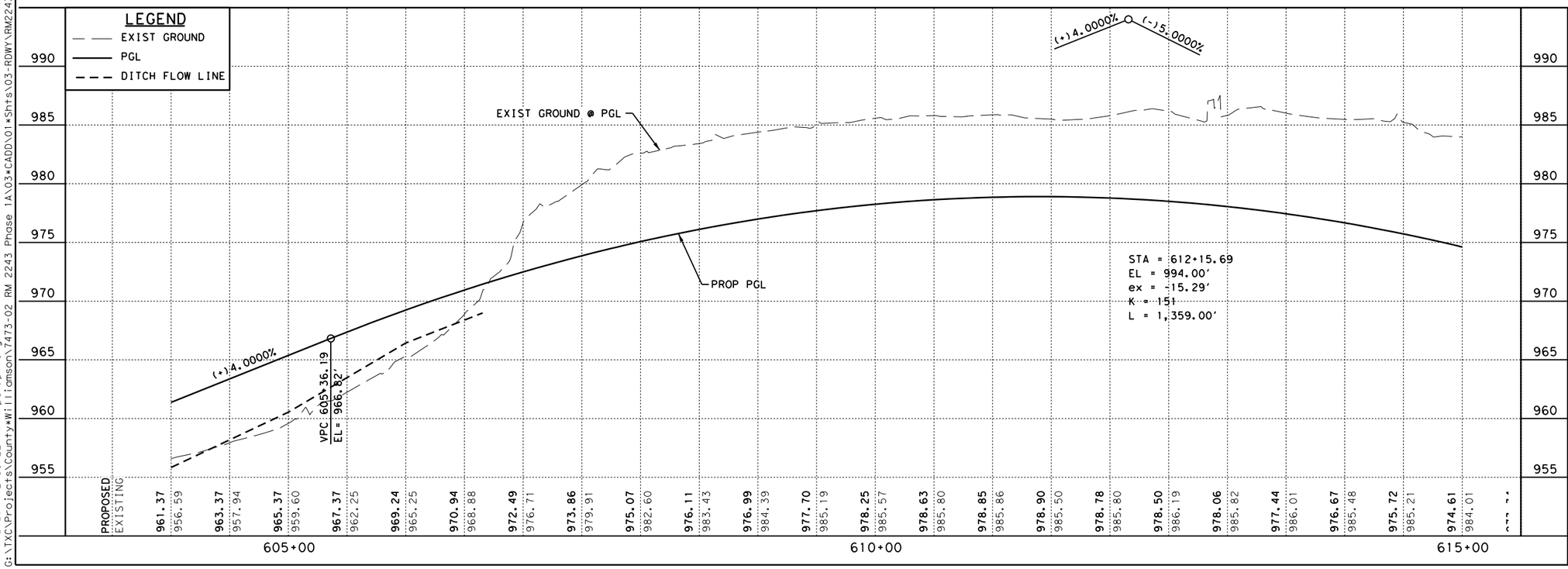

STATE OF TEXAS
JOSHUA T. RICHTER
141234
LICENSED PROFESSIONAL ENGINEER

4/10/2025

WILCO TEXAS

BGE, Inc.
101 W Louis Henna Blvd, Suite 400, Austin, TX 78728
Tel: 512-879-0400 ● www.bgeinc.com
TBPE Registration No. F-1046

RM 2243

ROADWAY PLAN & PROFILE

STA 604+00 TO STA 615+00

SHEET 11 OF 26

FED.RD. DIV.NO.	PROJECT NO.	SHEET NO.
6		132

STATE	DIST.	COUNTY	
TEXAS	AUS	WILLIAMSON	
CONT.	SECT.	JOB	HIGHWAY NO.
0914	05	222	RM 2243

4/10/2025 12:55:22 PM pdf.pltcfg
G:\TXC\Projects\County\Williamson\7473-02 RM 2243 Phase 1A\03*CADD\01*Shts\03-RDWY\RM2243*P1A*PP*11.dgn

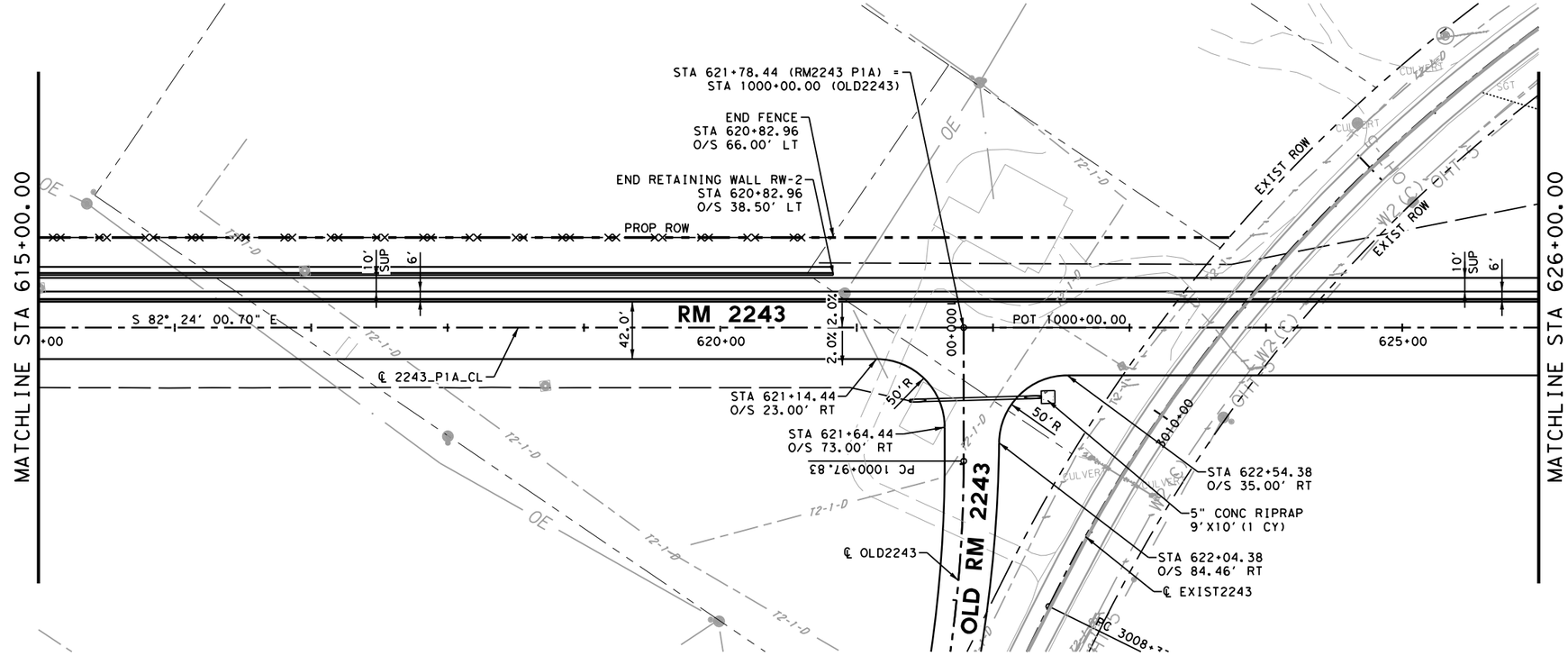

LEGEND:

- EXISTING SIGN
- DIRECTION OF TRAFFIC
- DW# DRIVEWAY NUMBER
- CURVE # ALIGNMENT CURVE NUMBER
- DITCH FLOWLINE
- MILL & OVERLAY

NOTES:

1. ALL DIMENSIONS AND OFFSETS ARE RELATIVE TO THE LIP OF GUTTER UNLESS OTHERWISE NOTED
2. FOR 50 FT RADIALLY FROM ALL LCRA POLES, CONTRACTOR SHALL COMPACT ALL FILL TO ORDINARY COMPACTION IN NO GREATER THAN 8IN LIFTS. CONTRACTOR SHALL PROOF ROLL BETWEEN EACH LIFT AND CORRECT UNSTABLE OR NONUNIFORM AREAS.

0 50 100
SCALE: 1"=100' H
1"=10' V

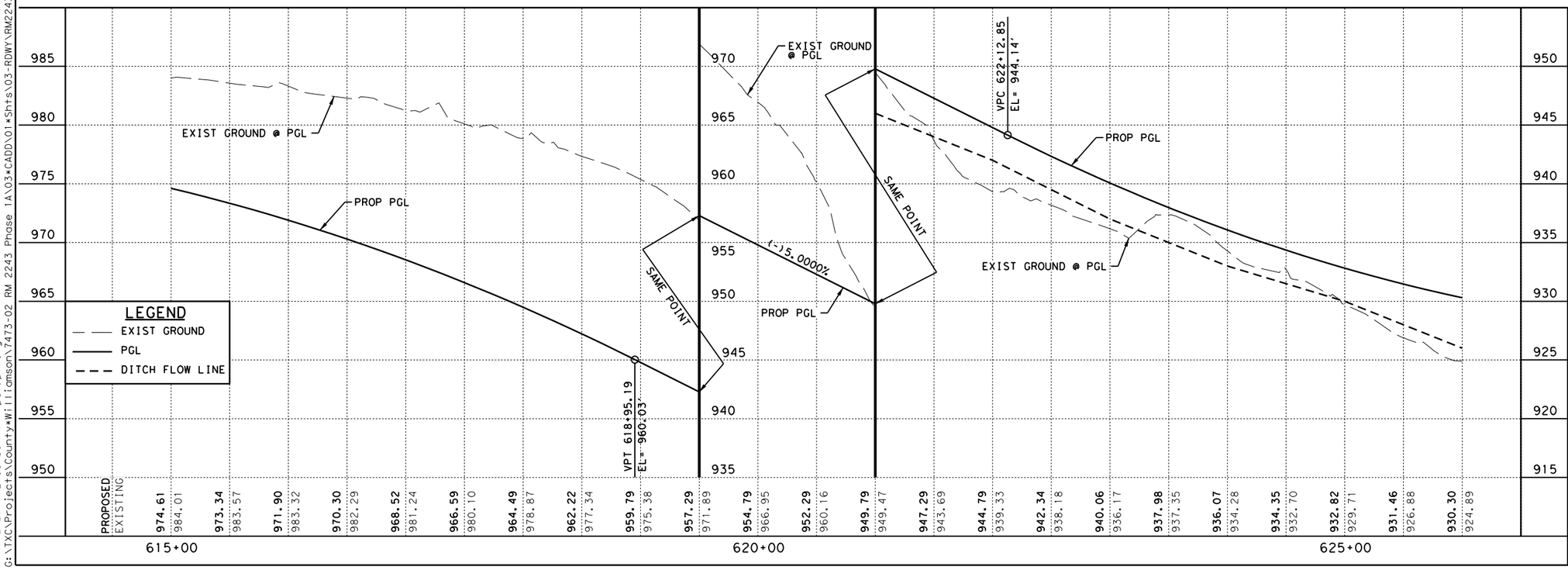

STATE OF TEXAS
JOSHUA T. RICHTER
141234
LICENSED
PROFESSIONAL ENGINEER

4/10/2025

WILCO
TEXAS

BGE, Inc.
101 W Louis Henna Blvd, Suite 400, Austin, TX 78728
Tel: 512-879-0400 • www.bgeinc.com
TBPE Registration No. F-1046

RM 2243

ROADWAY PLAN & PROFILE

STA 615+00 TO STA 626+00

SHEET 12 OF 26

FED.RD. DIV.NO.	PROJECT NO.	SHEET NO.
6		133

STATE	DIST.	COUNTY	
TEXAS	AUS	WILLIAMSON	
CONT.	SECT.	JOB	HIGHWAY NO.
0914	05	222	RM 2243

4/10/2025 12:55:30 PM pdf.pltcfg
G:\TXC\Projects\County\Williamson\7473-02 RM 2243 Phase 1A\03*CADD\01*Shts\03-RDWY\RM2243*P1A*PP*12.dgn

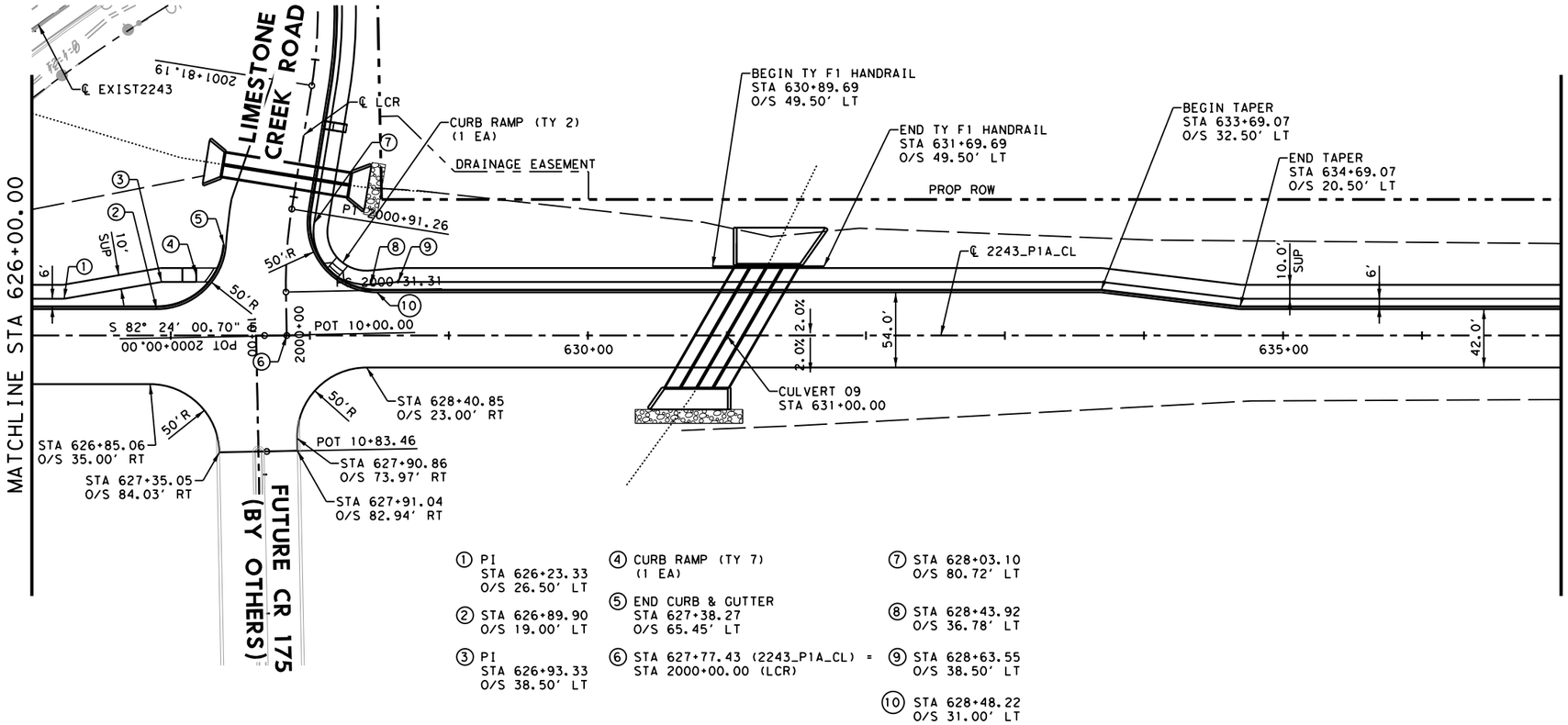

LEGEND:

- EXISTING SIGN
- DIRECTION OF TRAFFIC
- DW# — DRIVEWAY NUMBER
- CURVE # — ALIGNMENT CURVE NUMBER
- DITCH FLOWLINE
- MILL & OVERLAY

NOTES:

1. ALL DIMENSIONS AND OFFSETS ARE RELATIVE TO THE LIP OF GUTTER UNLESS OTHERWISE NOTED
2. FOR 50 FT RADIALLY FROM ALL LCRA POLES, CONTRACTOR SHALL COMPACT ALL FILL TO ORDINARY COMPACTION IN NO GREATER THAN 8IN LIFTS. CONTRACTOR SHALL PROOF ROLL BETWEEN EACH LIFT AND CORRECT UNSTABLE OR NONUNIFORM AREAS.

0 50 100
SCALE: 1"=100' H
1"=10' V

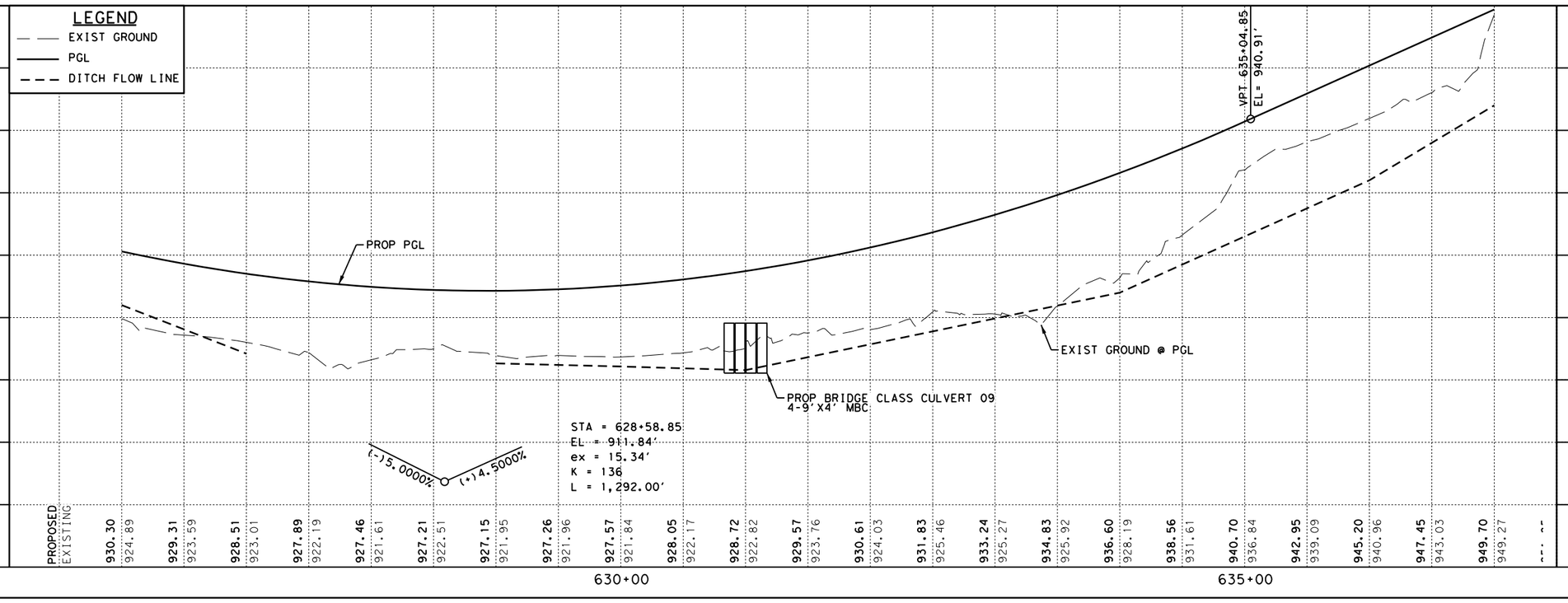

STATE OF TEXAS
JOSHUA T. RICHTER
141234
LICENSED
PROFESSIONAL ENGINEER

4/10/2025

WILCO TEXAS

BGE, Inc.
101 W Louis Henna Blvd, Suite 400, Austin, TX 78728
Tel: 512-879-0400 • www.bgeinc.com
TBPE Registration No. F-1046

RM 2243

ROADWAY PLAN & PROFILE
STA 626+00 TO STA 637+00

SHEET 13 OF 26

FED.RD. DIV.NO.	PROJECT NO.		SHEET NO.
6			134
STATE	DIST.	COUNTY	
TEXAS	AUS	WILLIAMSON	
CONT.	SECT.	JOB	HIGHWAY NO.
0914	05	222	RM 2243

4/10/2025 12:55:32 PM pdf.pltcfg
G:\TX\Projects\County*Williamson\7473-02 RM 2243 Phase 1A\03*CADD\01*Shts\03-RDWY\RM2243*P1A*PP*13.dgn

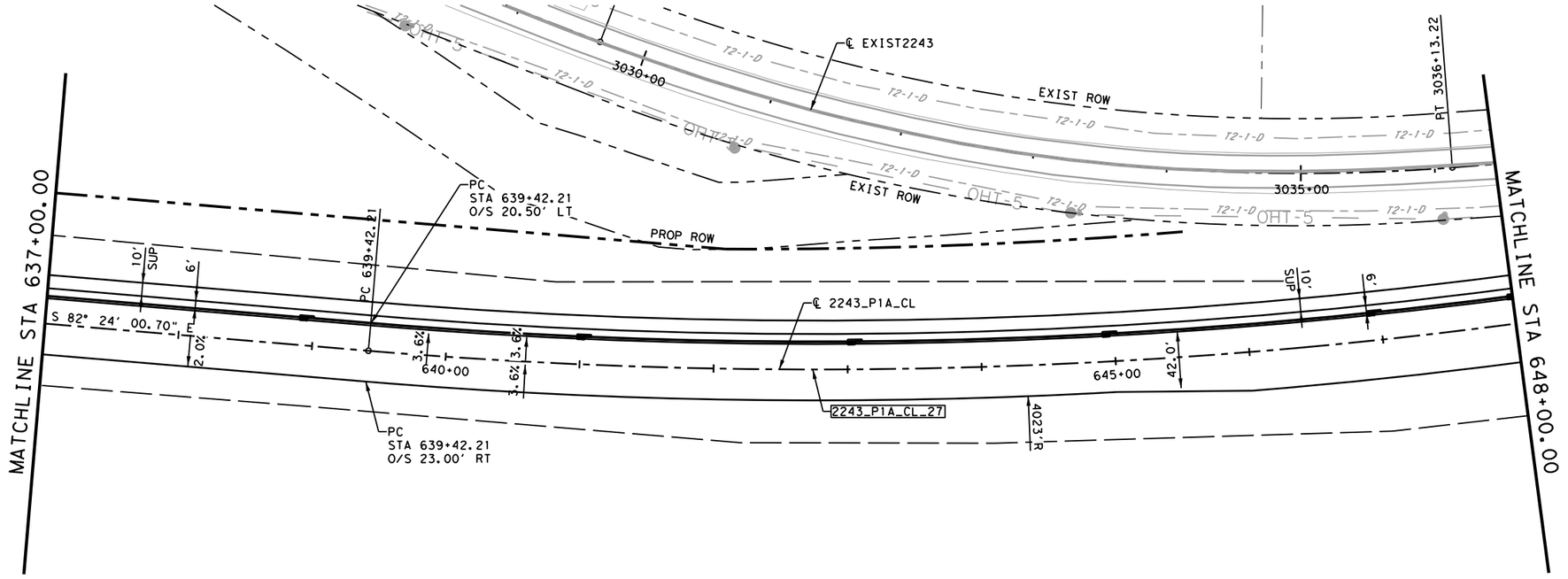

LEGEND:

- EXISTING SIGN
- DIRECTION OF TRAFFIC
- (DW#) DRIVEWAY NUMBER
- [CURVE #] ALIGNMENT CURVE NUMBER
- DITCH FLOWLINE
- MILL & OVERLAY

NOTES:

1. ALL DIMENSIONS AND OFFSETS ARE RELATIVE TO THE LIP OF GUTTER UNLESS OTHERWISE NOTED
2. FOR 50 FT RADIALLY FROM ALL LCRA POLES, CONTRACTOR SHALL COMPACT ALL FILL TO ORDINARY COMPACTION IN NO GREATER THAN 8IN LIFTS. CONTRACTOR SHALL PROOF ROLL BETWEEN EACH LIFT AND CORRECT UNSTABLE OR NONUNIFORM AREAS.

0 50 100
SCALE: 1"=100' H
1"=10' V

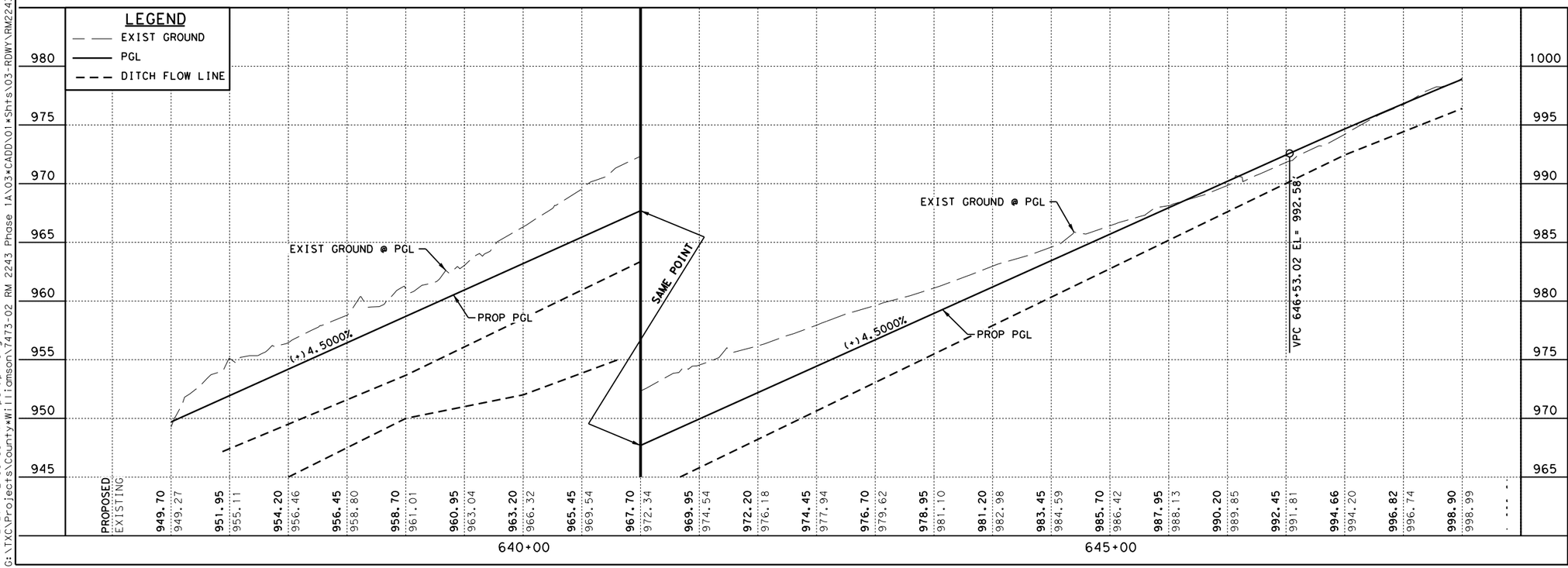

STATE OF TEXAS
JOSHUA T. RICHTER
141234
LICENSED PROFESSIONAL ENGINEER

4/10/2025

WILCO TEXAS

BGE, Inc.
101 W Louis Henna Blvd, Suite 400, Austin, TX 78728
Tel: 512-879-0400 ● www.bgeinc.com
TBPE Registration No. F-1046

RM 2243

ROADWAY PLAN & PROFILE

STA 637+00 TO STA 648+00

SHEET 14 OF 26

FED.RD. DIV.NO.	PROJECT NO.		SHEET NO.
6			135
STATE	DIST.	COUNTY	
TEXAS	AUS	WILLIAMSON	
CONT.	SECT.	JOB	HIGHWAY NO.
0914	05	222	RM 2243

4/10/2025 12:55:33 PM pdf.pltcfg
G:\TXC\Projects\County\Williamson\7473-02 RM 2243 Phase 1A\03*CADD\01*Shts\03-RDWY\RM2243*P1A*PP*14.dgn

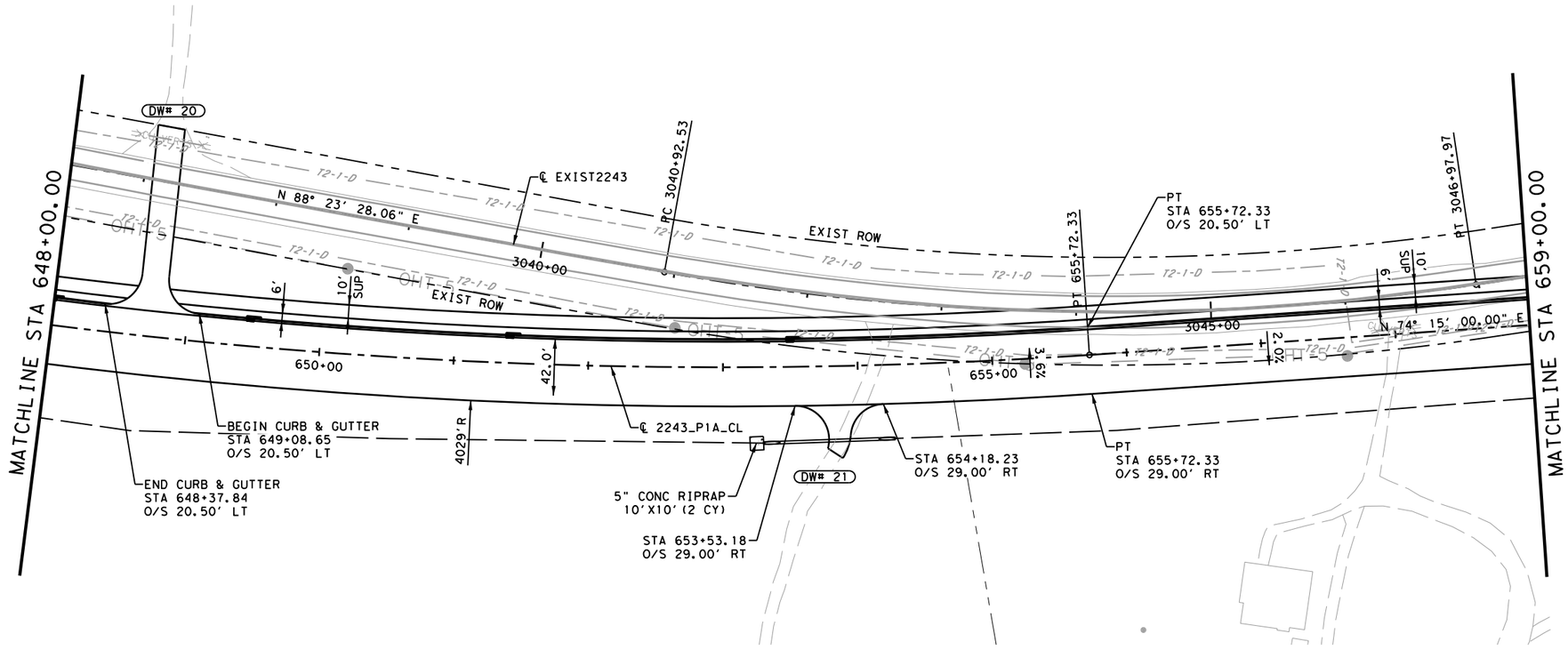

LEGEND:

- EXISTING SIGN
- DIRECTION OF TRAFFIC
- DW# — DRIVEWAY NUMBER
- CURVE # — ALIGNMENT CURVE NUMBER
- DITCH FLOWLINE
- MILL & OVERLAY

NOTES:

1. ALL DIMENSIONS AND OFFSETS ARE RELATIVE TO THE LIP OF GUTTER UNLESS OTHERWISE NOTED
2. FOR 50 FT RADIALLY FROM ALL LCRA POLES, CONTRACTOR SHALL COMPACT ALL FILL TO ORDINARY COMPACTION IN NO GREATER THAN 8IN LIFTS. CONTRACTOR SHALL PROOF ROLL BETWEEN EACH LIFT AND CORRECT UNSTABLE OR NONUNIFORM AREAS.

0 50 100
SCALE: 1"=100' H
1"=10' V

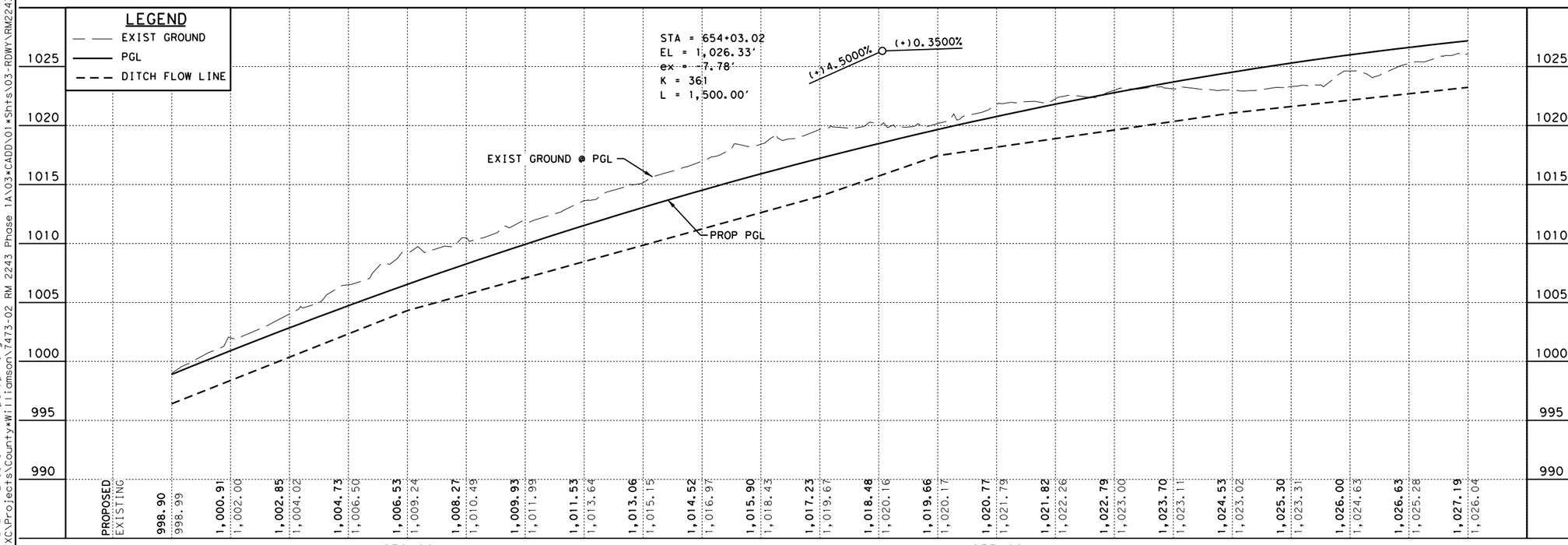

PROPOSED	EXISTING
998.90	998.99
1,000.91	1,002.00
1,002.85	1,004.02
1,004.73	1,006.50
1,006.53	1,009.24
1,008.27	1,010.49
1,009.93	1,011.99
1,011.53	1,013.64
1,013.06	1,015.15
1,014.52	1,016.97
1,015.90	1,018.43
1,017.23	1,019.67
1,018.48	1,020.16
1,019.66	1,020.17
1,020.77	1,021.79
1,021.82	1,022.26
1,022.79	1,023.00
1,023.70	1,023.11
1,024.53	1,023.02
1,025.30	1,023.31
1,026.00	1,024.63
1,026.63	1,025.28
1,027.19	1,026.04

STATE OF TEXAS
JOSHUA T. RICHTER
141234
LICENSED
PROFESSIONAL ENGINEER

4/10/2025

WILCO
TEXAS

BGE, Inc.
101 W Louis Henna Blvd, Suite 400, Austin, TX 78728
Tel: 512-879-0400 • www.bgeinc.com
TBPE Registration No. F-1046

RM 2243

ROADWAY PLAN & PROFILE

STA 648+00 TO STA 659+00

SHEET 15 OF 26

FED.RD. DIV.NO.	PROJECT NO.		SHEET NO.
6			136
STATE	DIST.	COUNTY	
TEXAS	AUS	WILLIAMSON	
CONT.	SECT.	JOB	HIGHWAY NO.
0914	05	222	RM 2243

4/10/2025 12:55:34 PM pdf.pltcfg
G:\TXC\Projects\County\Williamson\7473-02 RM 2243 Phase 1A\03*CADD\01*Shts\03-RDWY\RM2243*P1A*PP*15.dgn

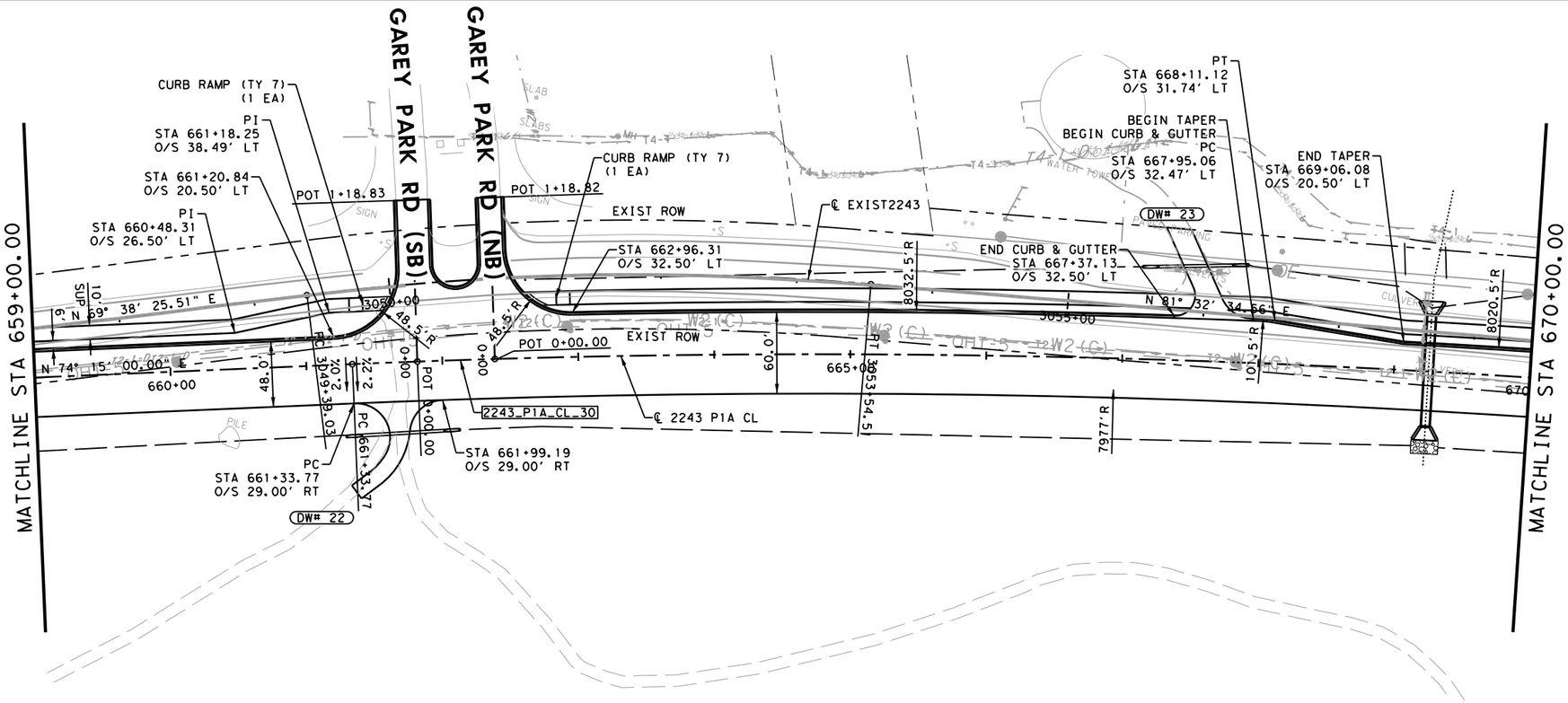

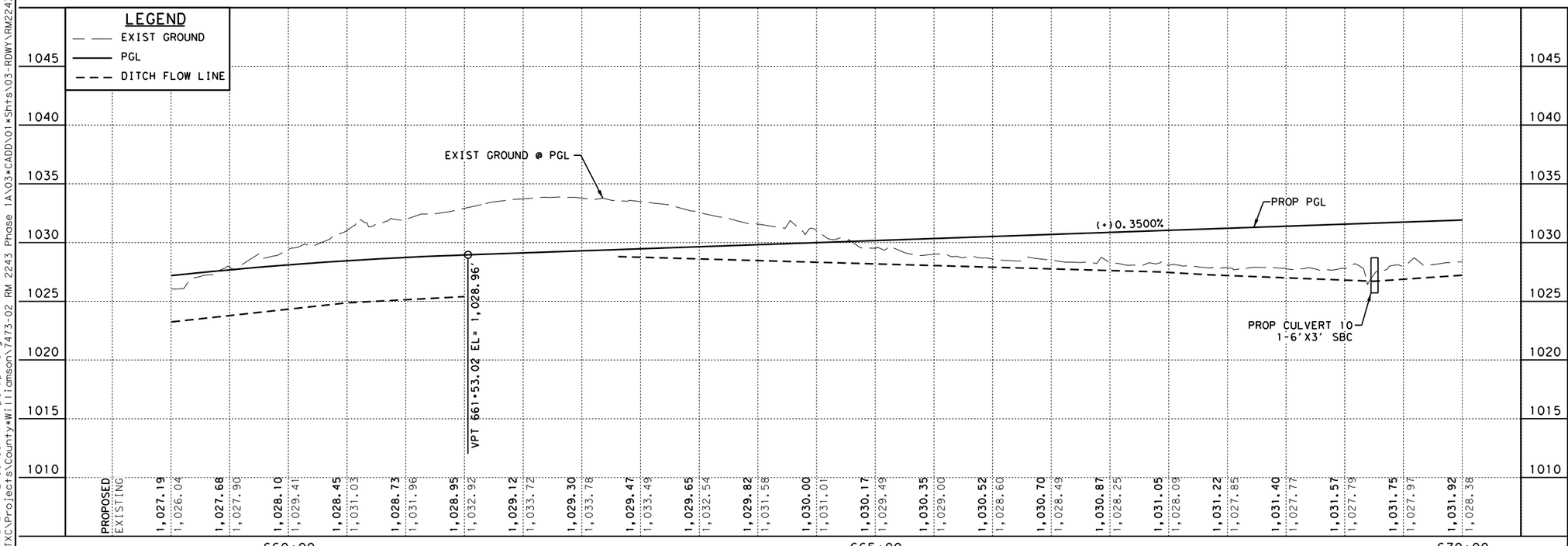

LEGEND:

- EXISTING SIGN
- DIRECTION OF TRAFFIC
- DW# — DRIVEWAY NUMBER
- CURVE # — ALIGNMENT CURVE NUMBER
- DITCH FLOWLINE
- MILL & OVERLAY

NOTES:

1. ALL DIMENSIONS AND OFFSETS ARE RELATIVE TO THE LIP OF GUTTER UNLESS OTHERWISE NOTED
2. FOR 50 FT RADIALLY FROM ALL LCRA POLES, CONTRACTOR SHALL COMPACT ALL FILL TO ORDINARY COMPACTION IN NO GREATER THAN 8IN LIFTS. CONTRACTOR SHALL PROOF ROLL BETWEEN EACH LIFT AND CORRECT UNSTABLE OR NONUNIFORM AREAS.

SCALE: 1"=100' H
1"=10' V

STATE OF TEXAS
JOSHUA T. RICHTER
141234
LICENSED
PROFESSIONAL ENGINEER

4/10/2025

WILCO TEXAS

BGE, Inc.
101 W Louis Henna Blvd, Suite 400, Austin, TX 78728
Tel: 512-879-0400 • www.bgeinc.com
TBPE Registration No. F-1046

RM 2243

ROADWAY PLAN & PROFILE

STA 659+00 TO STA 670+00

SHEET 16 OF 26

FED.RD. DIV.NO.	PROJECT NO.	SHEET NO.
6		137

STATE	DIST.	COUNTY	
TEXAS	AUS	WILLIAMSON	
CONT.	SECT.	JOB	HIGHWAY NO.
0914	05	222	RM 2243

4/10/2025 12:55:35 PM pdf.pltcfg
G:\TXCL\Projects\County\Williamson\7473-02 RM 2243 Phase 1A\03*CADD\01*Shts\03-RDWY\RM2243*P1A*PP*16.dgn

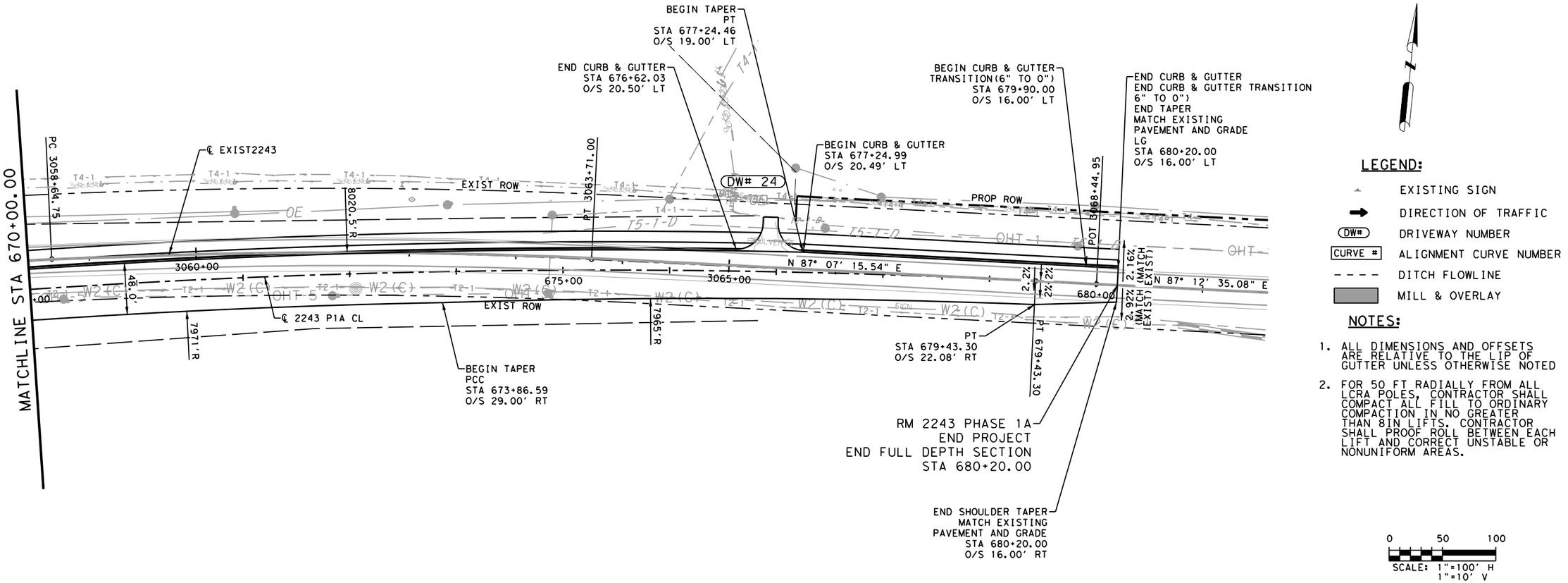

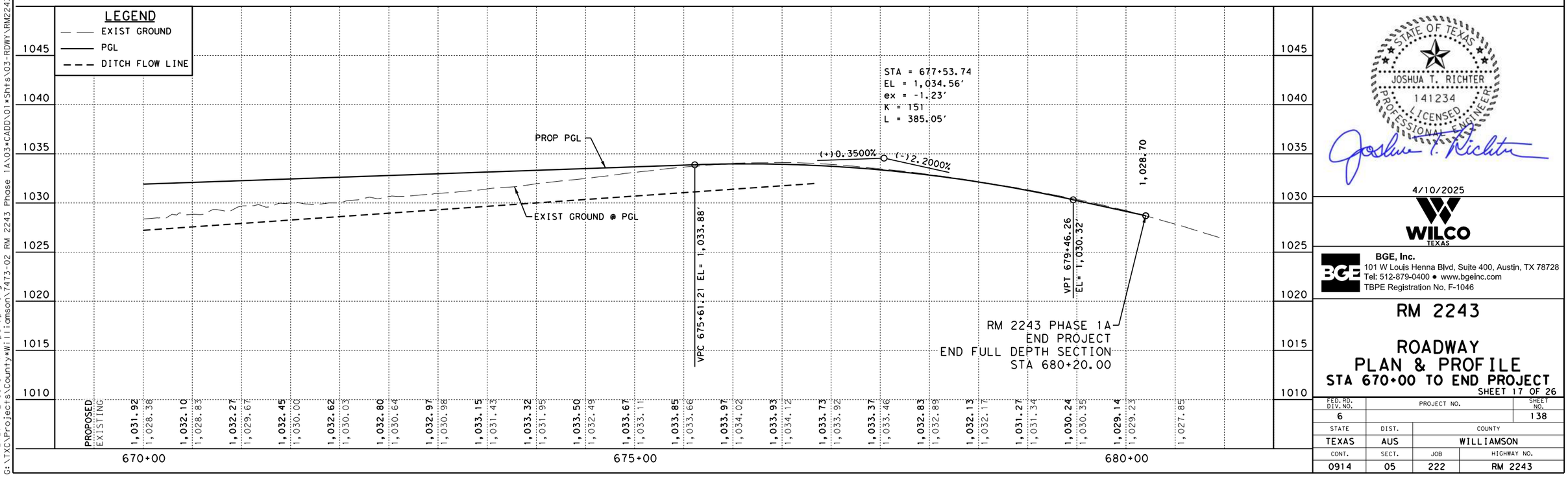

STATE OF TEXAS
JOSHUA T. RICHTER
141234
LICENSED PROFESSIONAL ENGINEER

4/10/2025

WILCO TEXAS

BGE, Inc.
101 W Louis Henna Blvd, Suite 400, Austin, TX 78728
Tel: 512-879-0400 ● www.bgeinc.com
TBPE Registration No. F-1046

RM 2243

ROADWAY PLAN & PROFILE

STA 670+00 TO END PROJECT

SHEET 17 OF 26

FED.RD. DIV.NO.	PROJECT NO.	SHEET NO.
6		138

STATE	DIST.	COUNTY	
TEXAS	AUS	WILLIAMSON	
CONT.	SECT.	JOB	HIGHWAY NO.
0914	05	222	RM 2243

4/10/2025 12:55:37 PM pdf.pltcfg
G:\TXC\Projects\County\Williamson\7473-02 RM 2243 Phase 1A\03*CADD\01*Shts\03-RDWY\RM2243*P1A*PP*17.dgn

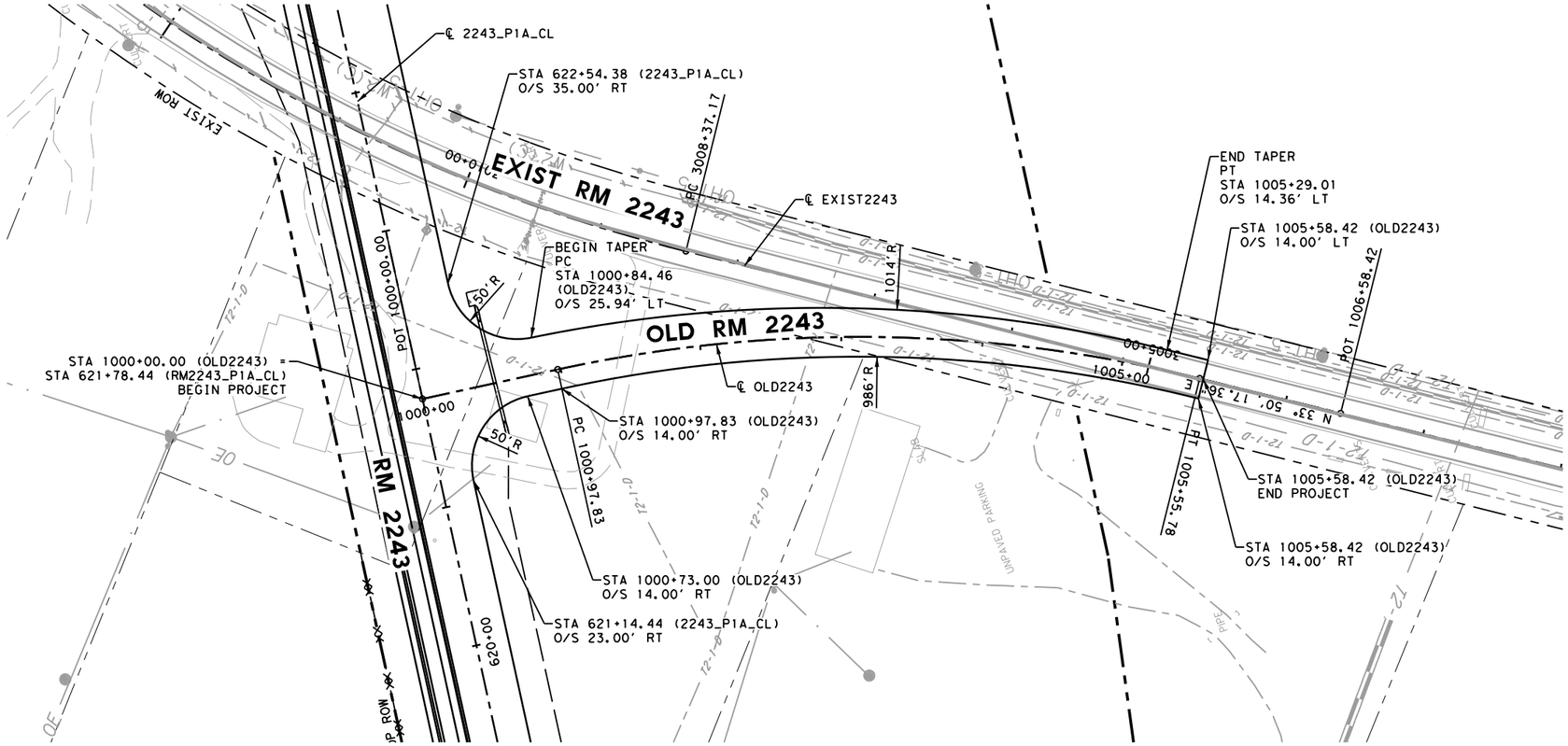

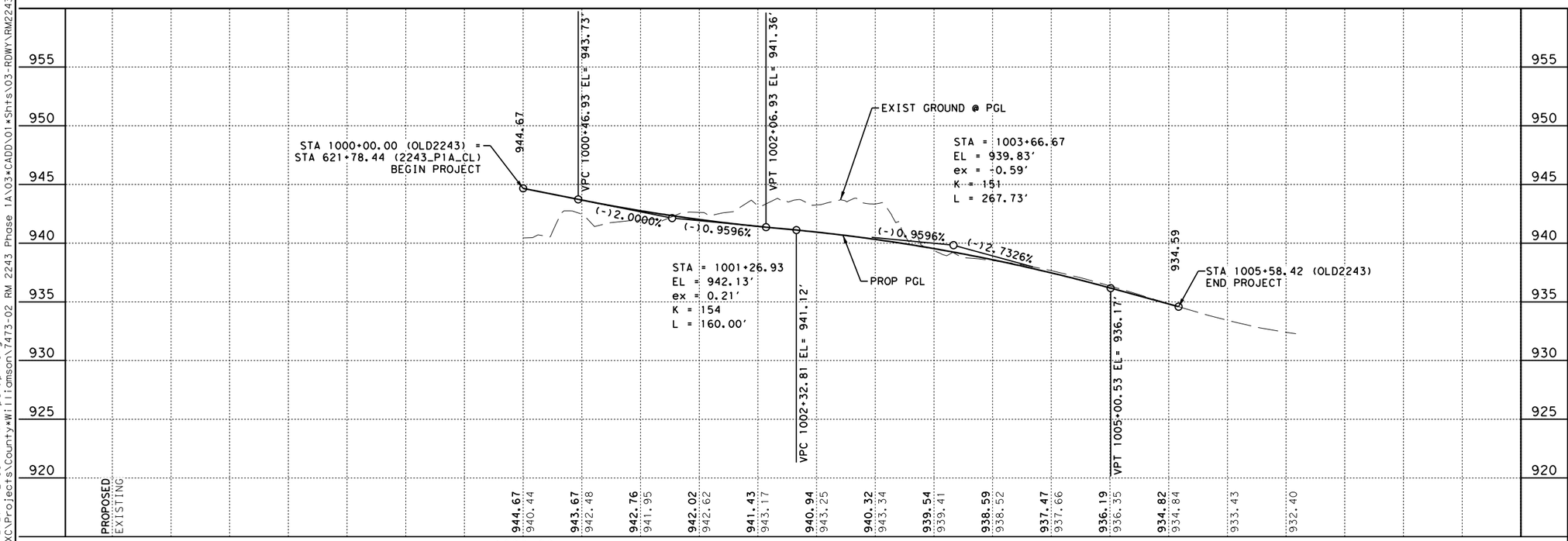

LEGEND:

- EXISTING SIGN
- DIRECTION OF TRAFFIC
- (DW#) DRIVEWAY NUMBER
- [CURVE #] ALIGNMENT CURVE NUMBER
- DITCH FLOWLINE
- MILL & OVERLAY

NOTES:

1. ALL DIMENSIONS AND OFFSETS ARE RELATIVE TO THE LIP OF GUTTER UNLESS OTHERWISE NOTED
2. FOR 50 FT RADIALLY FROM ALL LCRA POLES, CONTRACTOR SHALL COMPACT ALL FILL TO ORDINARY COMPACTION IN NO GREATER THAN 8IN LIFTS. CONTRACTOR SHALL PROOF ROLL BETWEEN EACH LIFT AND CORRECT UNSTABLE OR NONUNIFORM AREAS.

0 50 100
SCALE: 1"=100' H
1"=10' V

STATE OF TEXAS
JOSHUA T. RICHTER
141234
LICENSED
PROFESSIONAL ENGINEER

4/10/2025

WILCO
TEXAS

BGE, Inc.
101 W Louis Henna Blvd, Suite 400, Austin, TX 78728
Tel: 512-879-0400 • www.bgeinc.com
TBPE Registration No. F-1046

RM 2243

ROADWAY PLAN & PROFILE OLD RM 2243

SHEET 18 OF 26

FED.RD. DIV.NO.	PROJECT NO.	SHEET NO.
6		139

STATE	DIST.	COUNTY
TEXAS	AUS	WILLIAMSON

CONT.	SECT.	JOB	HIGHWAY NO.
0914	05	222	RM 2243

4/10/2025 12:55:41 PM pdf.pltcfg
G:\TXC\Projects\County\Williamson\7473-02 RM 2243 Phase 1A\03\CADD\01\Shts\03-RDWY\RM2243_P1A_PP_18.dgn

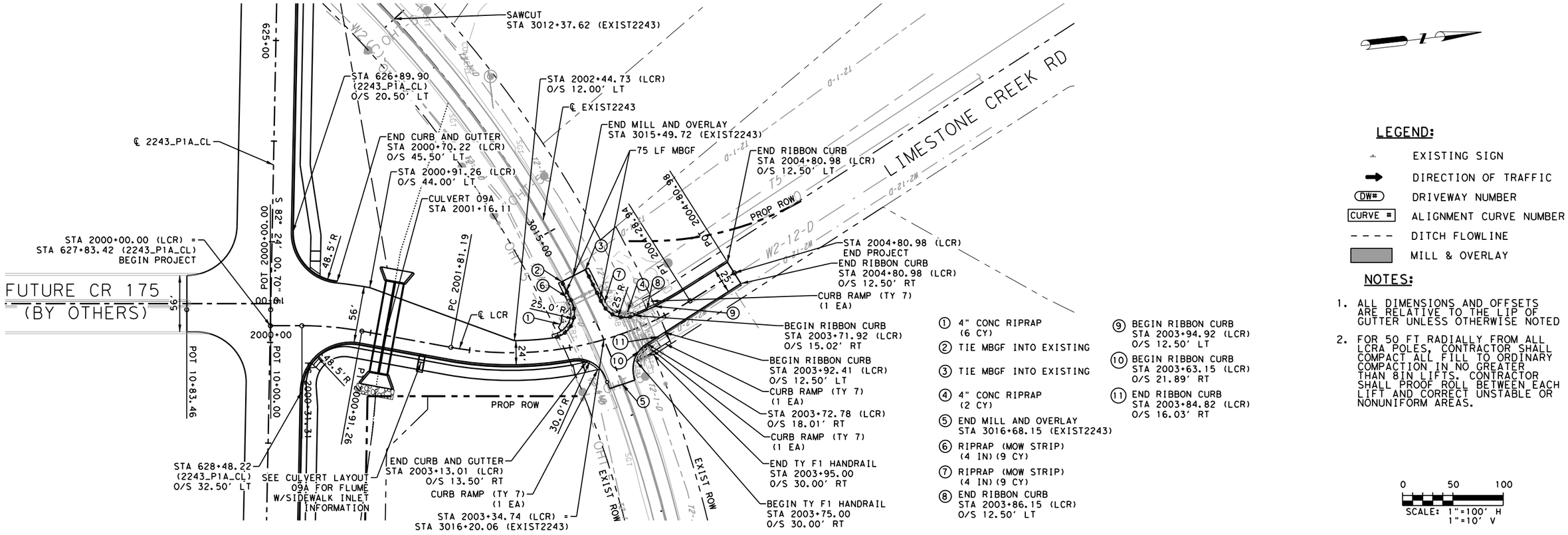

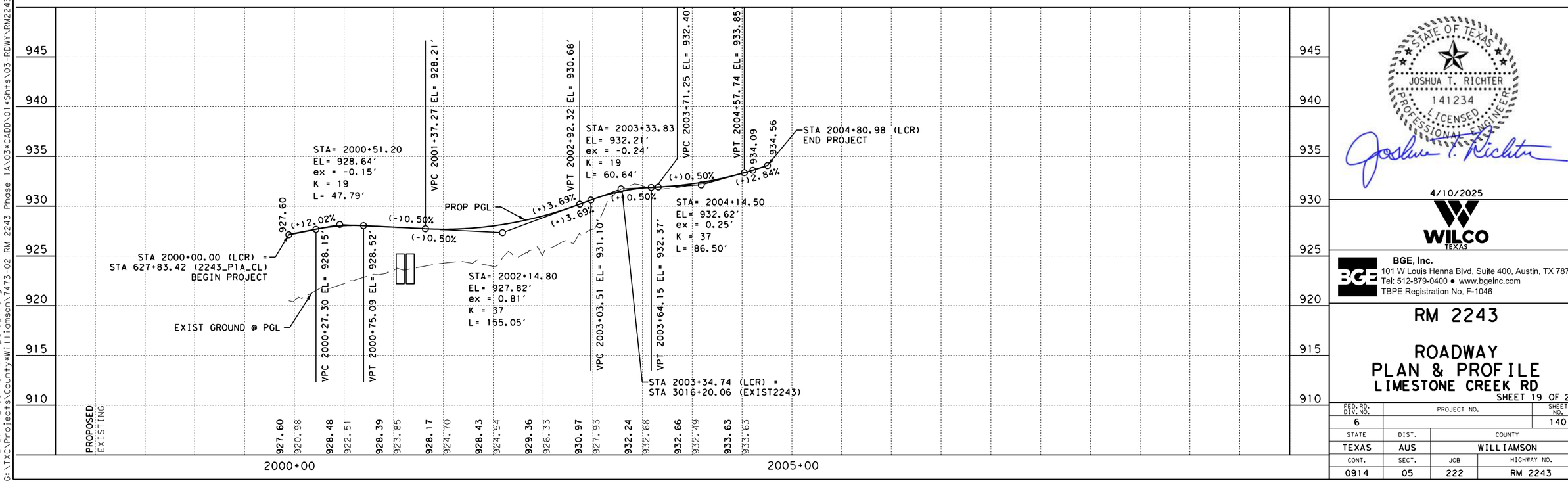

JOSHUA T. RICHTER
141234
LICENSED
PROFESSIONAL ENGINEER
STATE OF TEXAS

4/10/2025

WILCO
TEXAS

BGE, Inc.
101 W Louis Henna Blvd, Suite 400, Austin, TX 78728
Tel: 512-879-0400 • www.bgeinc.com
TBPE Registration No. F-1046

RM 2243

ROADWAY PLAN & PROFILE LIMESTONE CREEK RD

SHEET 19 OF 26

FED.RD. DIV.NO.	PROJECT NO.		SHEET NO.
6			140
STATE	DIST.	COUNTY	
TEXAS	AUS	WILLIAMSON	
CONT.	SECT.	JOB	HIGHWAY NO.
0914	05	222	RM 2243

4/10/2025 12:55:43 PM pdf.pltcfg
G:\TXC\Projects\County\Williamson\7473-02 RM 2243 Phase 1A\03*CADD\01*Shts\03-RDWY\RM2243*P1A*PP*19.dgn

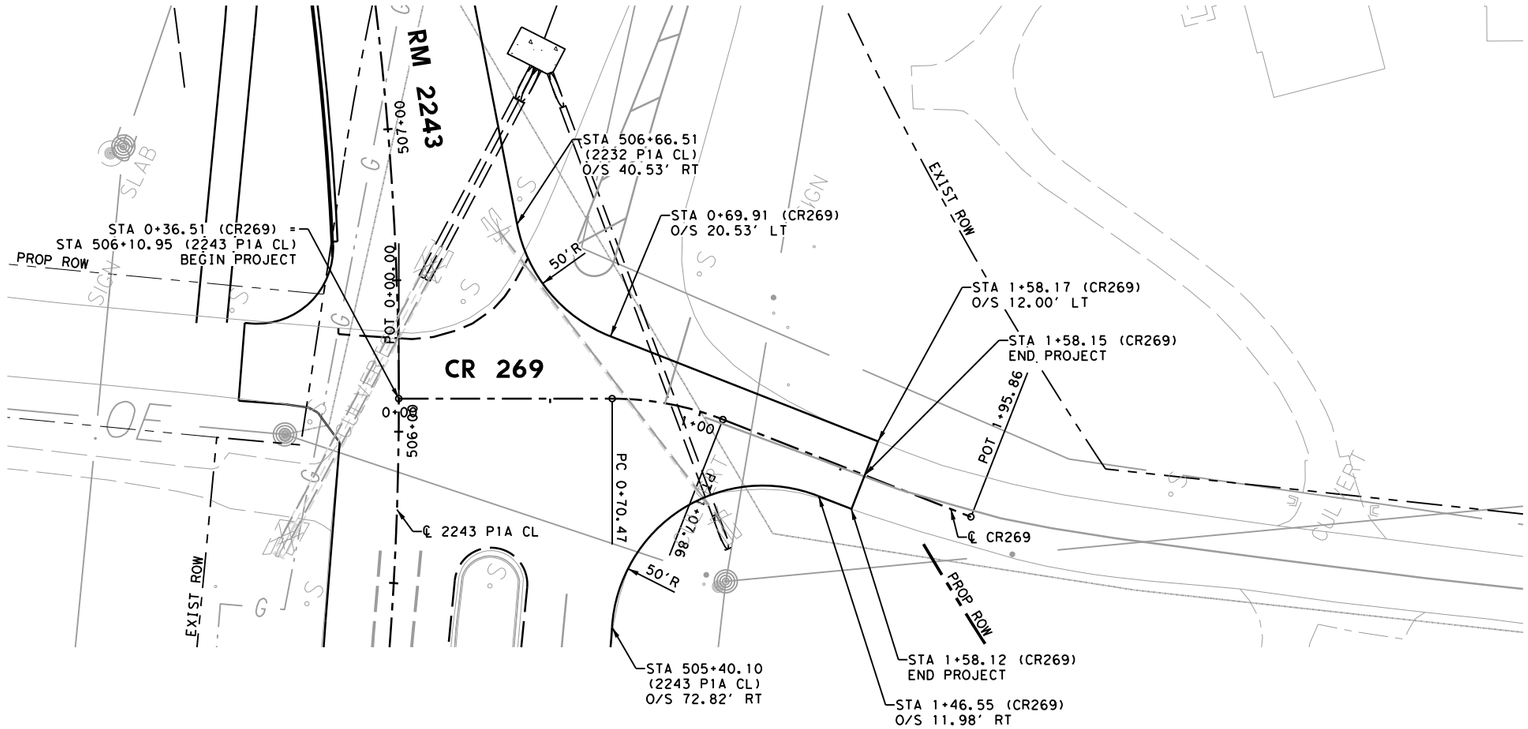

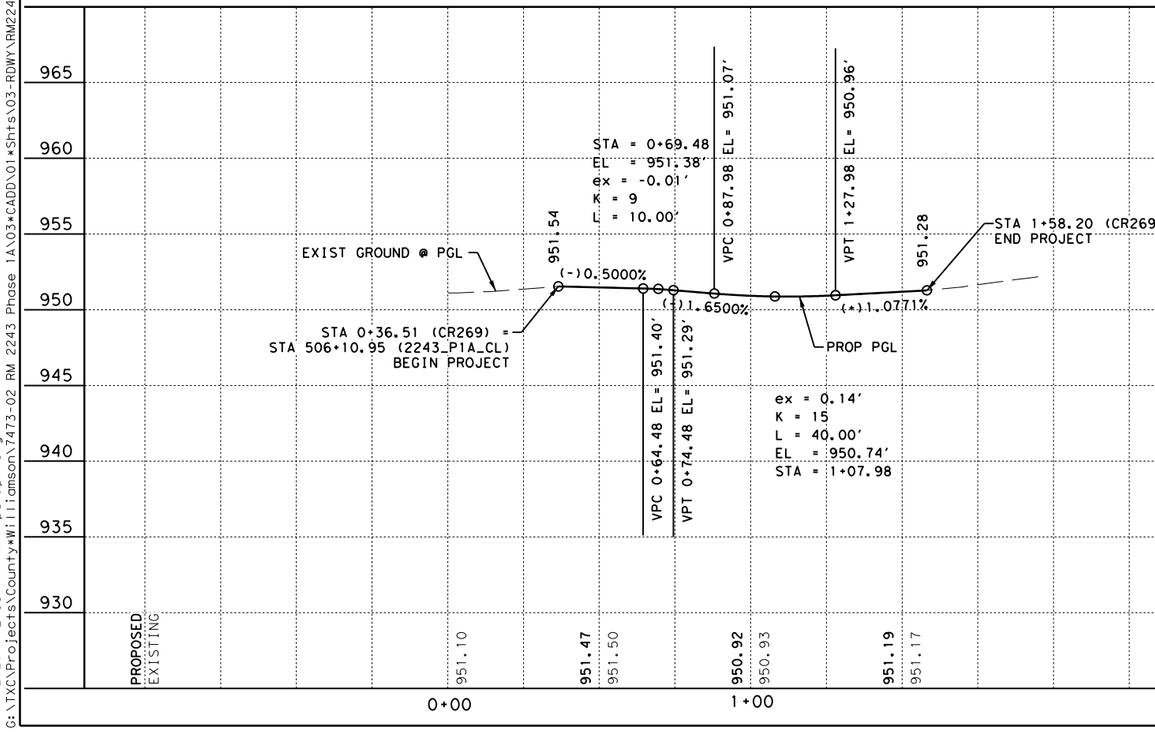

LEGEND:

- EXISTING SIGN
- DIRECTION OF TRAFFIC
- DW# — DRIVEWAY NUMBER
- CURVE # — ALIGNMENT CURVE NUMBER
- DITCH FLOWLINE
- MILL & OVERLAY

NOTES:

1. ALL DIMENSIONS AND OFFSETS ARE RELATIVE TO THE LIP OF GUTTER UNLESS OTHERWISE NOTED
2. FOR 50 FT RADIALLY FROM ALL LCRA POLES, CONTRACTOR SHALL COMPACT ALL FILL TO ORDINARY COMPACTION IN NO GREATER THAN 8IN LIFTS. CONTRACTOR SHALL PROOF ROLL BETWEEN EACH LIFT AND CORRECT UNSTABLE OR NONUNIFORM AREAS.

0 25 50
SCALE: 1"=50' H
1"=10' V

STATE OF TEXAS
JOSHUA T. RICHTER
141234
LICENSED
PROFESSIONAL ENGINEER

4/10/2025

WILCO
TEXAS

BGE, Inc.
101 W Louis Henna Blvd, Suite 400, Austin, TX 78728
Tel: 512-879-0400 • www.bgeinc.com
TBPE Registration No. F-1046

RM 2243

ROADWAY PLAN & PROFILE
CR 269

SHEET 20 OF 26

FED.RD. DIV.NO.	PROJECT NO.		SHEET NO.
6			141
STATE	DIST.	COUNTY	
TEXAS	AUS	WILLIAMSON	
CONT.	SECT.	JOB	HIGHWAY NO.
0914	05	222	RM 2243

4/10/2025 12:55:44 PM pdf.pltcfg
G:\TXC\Projects\County\Williamson\7473-02 RM 2243 Phase 1A\03*CADD\01*Shts\03-RDWY\RM2243*P1A*PP*20.dgn

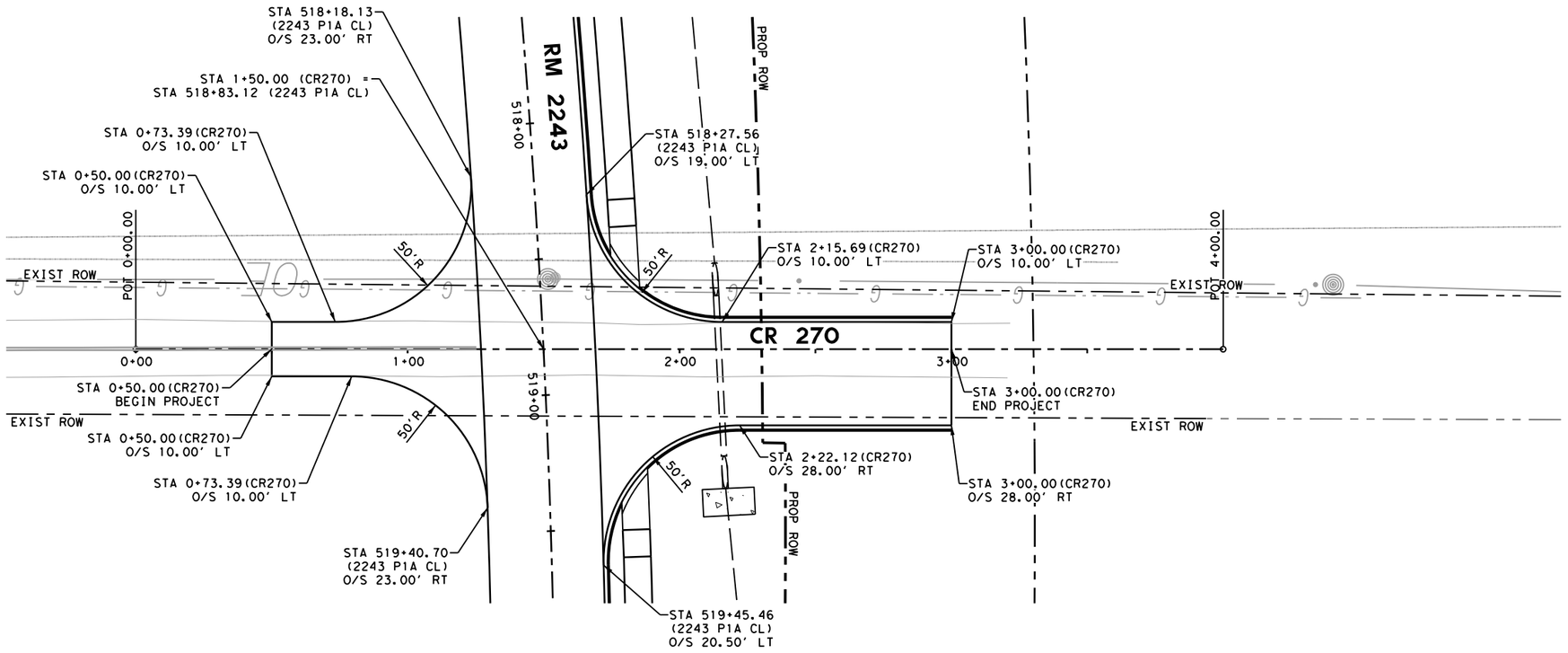

LEGEND:

- EXISTING SIGN
- DIRECTION OF TRAFFIC
- DW# — DRIVEWAY NUMBER
- CURVE # — ALIGNMENT CURVE NUMBER
- DITCH FLOWLINE
- MILL & OVERLAY

NOTES:

1. ALL DIMENSIONS AND OFFSETS ARE RELATIVE TO THE LIP OF GUTTER UNLESS OTHERWISE NOTED
2. FOR 50 FT RADIALLY FROM ALL LCRA POLES, CONTRACTOR SHALL COMPACT ALL FILL TO ORDINARY COMPACTION IN NO GREATER THAN 8IN LIFTS. CONTRACTOR SHALL PROOF ROLL BETWEEN EACH LIFT AND CORRECT UNSTABLE OR NONUNIFORM AREAS.

0 25 50

SCALE: 1"=50' H
1"=10' V

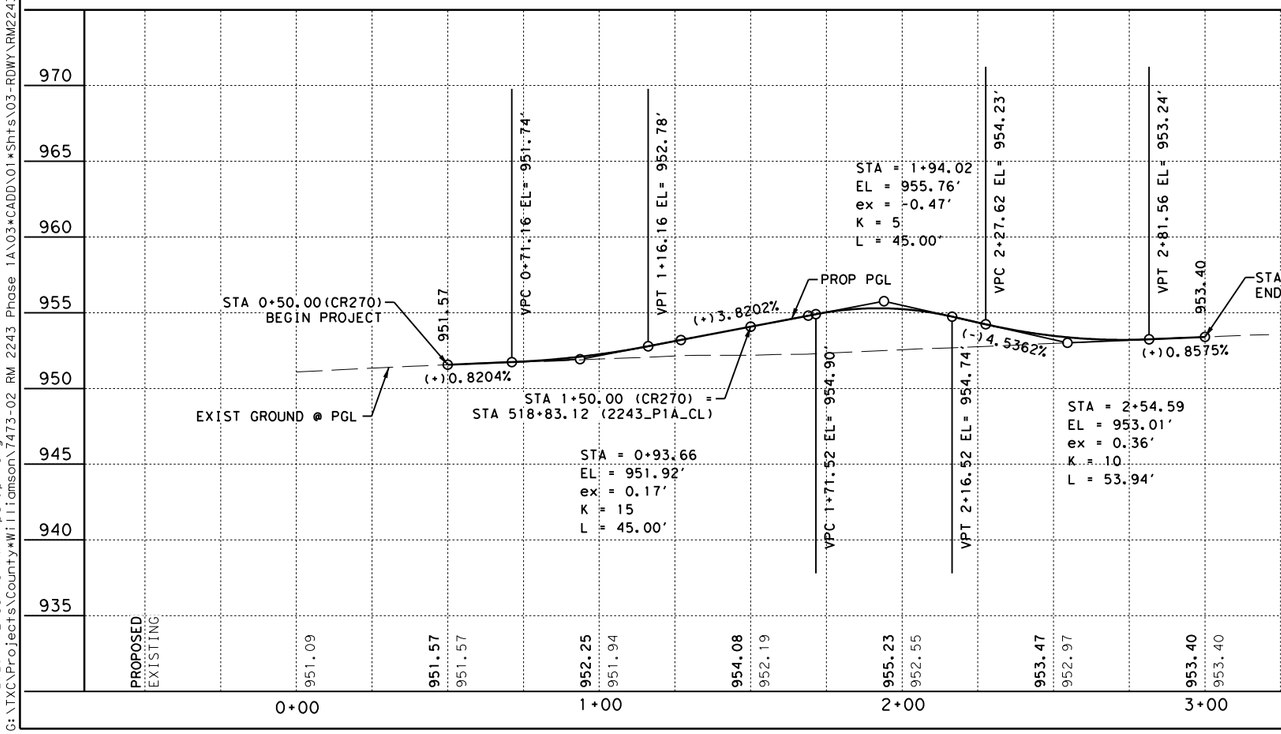

STATE OF TEXAS
JOSHUA T. RICHTER
141234
LICENSED
PROFESSIONAL ENGINEER
4/10/2025

WILCO
TEXAS

BGE, Inc.
101 W Louis Henna Blvd, Suite 400, Austin, TX 78728
Tel: 512-879-0400 • www.bgeinc.com
TBPE Registration No. F-1046

RM 2243

ROADWAY PLAN & PROFILE
CR 270

SHEET 21 OF 26

FED.RD. DIV.NO.	PROJECT NO.	SHEET NO.
6		142

STATE	DIST.	COUNTY	
TEXAS	AUS	WILLIAMSON	
CONT.	SECT.	JOB	HIGHWAY NO.
0914	05	222	RM 2243

4/10/2025 12:55:45 PM pdf.pltcfg
G:\TX\Projects\County\Williamson\7473-02 RM 2243 Phase 1A\03*CADD\01*Shts\03-RDWY\RM2243*P1A*PP*21.dgn

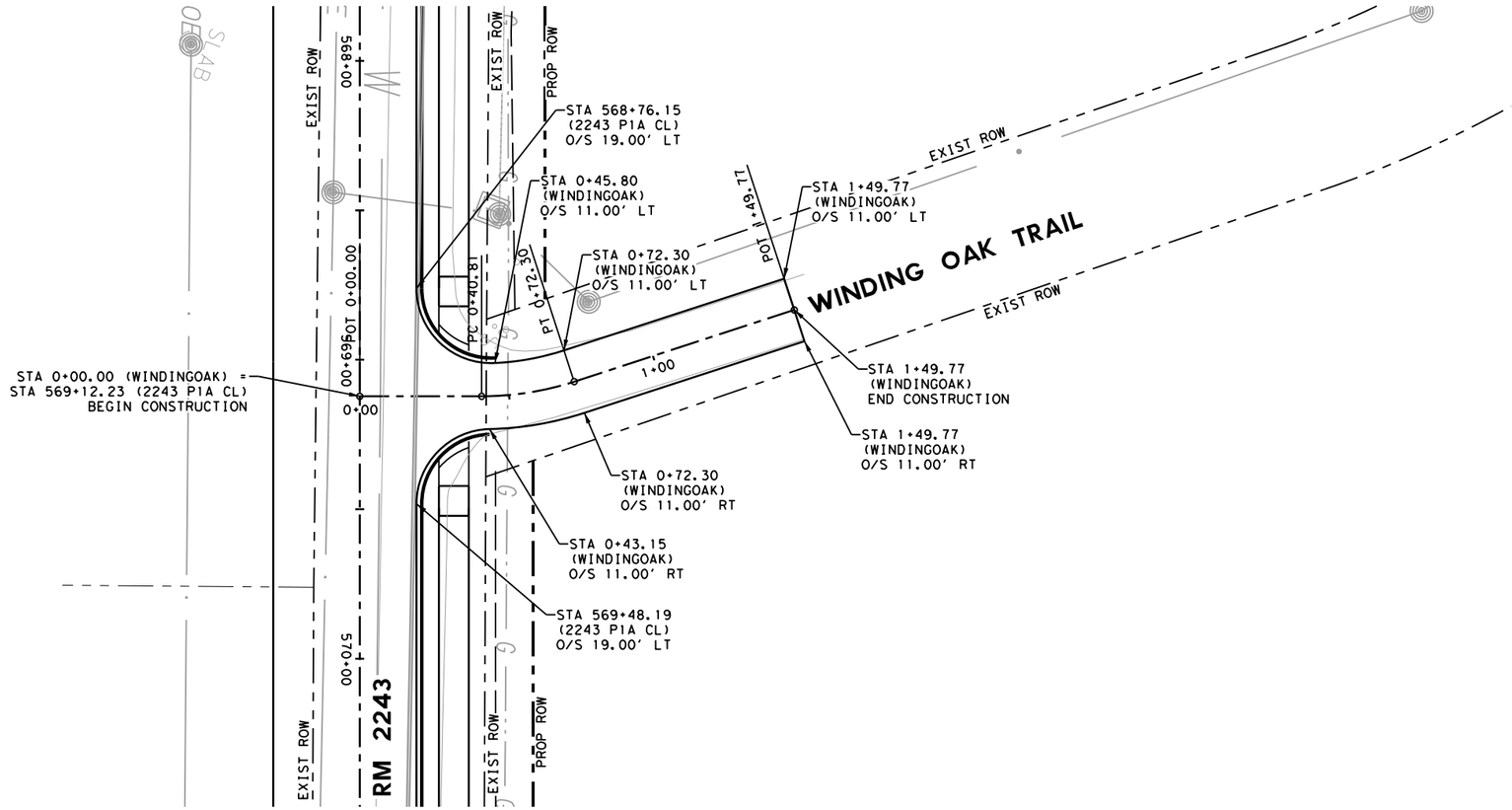

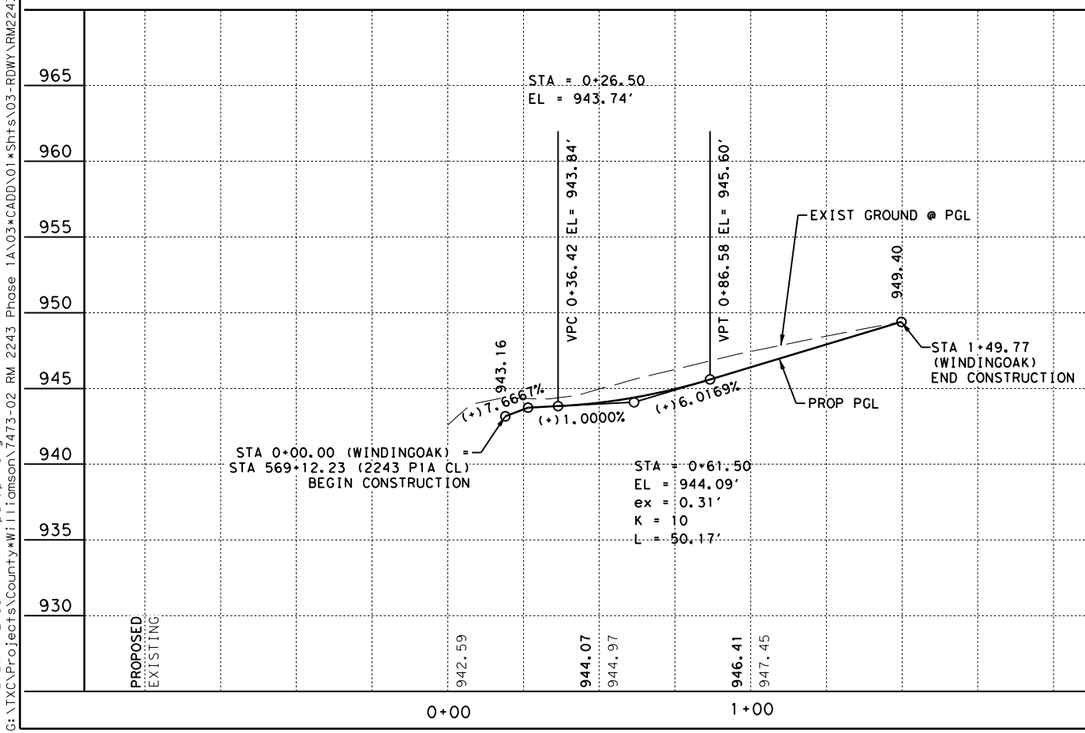

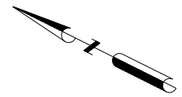

LEGEND:

- EXISTING SIGN
- DIRECTION OF TRAFFIC
- DW# — DRIVEWAY NUMBER
- CURVE # — ALIGNMENT CURVE NUMBER
- DITCH FLOWLINE
- MILL & OVERLAY

NOTES:

1. ALL DIMENSIONS AND OFFSETS ARE RELATIVE TO THE LIP OF GUTTER UNLESS OTHERWISE NOTED
2. FOR 50 FT RADIALLY FROM ALL LCRA POLES, CONTRACTOR SHALL COMPACT ALL FILL TO ORDINARY COMPACTION IN NO GREATER THAN 8IN LIFTS. CONTRACTOR SHALL PROOF ROLL BETWEEN EACH LIFT AND CORRECT UNSTABLE OR NONUNIFORM AREAS.

0 25 50

SCALE: 1"=50' H
1"=10' V

STATE OF TEXAS
JOSHUA T. RICHTER
141234
LICENSED
PROFESSIONAL ENGINEER

4/10/2025

WILCO
TEXAS

BGE, Inc.
101 W Louis Henna Blvd, Suite 400, Austin, TX 78728
Tel: 512-879-0400 • www.bgeinc.com
TBPE Registration No. F-1046

RM 2243

ROADWAY PLAN & PROFILE
WINDING OAK TRAIL

SHEET 22 OF 26

FED.RD. DIV.NO.	PROJECT NO.		SHEET NO.
6			143
STATE	DIST.	COUNTY	
TEXAS	AUS	WILLIAMSON	
CONT.	SECT.	JOB	HIGHWAY NO.
0914	05	222	RM 2243

4/10/2025 12:55:47 PM pdf.pltcfg
G:\TXC\Projects\County\Williamson\7473-02 RM 2243 Phase 1A\03\CADD\01\Shts\03-RDWY\RM2243_P1A_PP_22.dgn

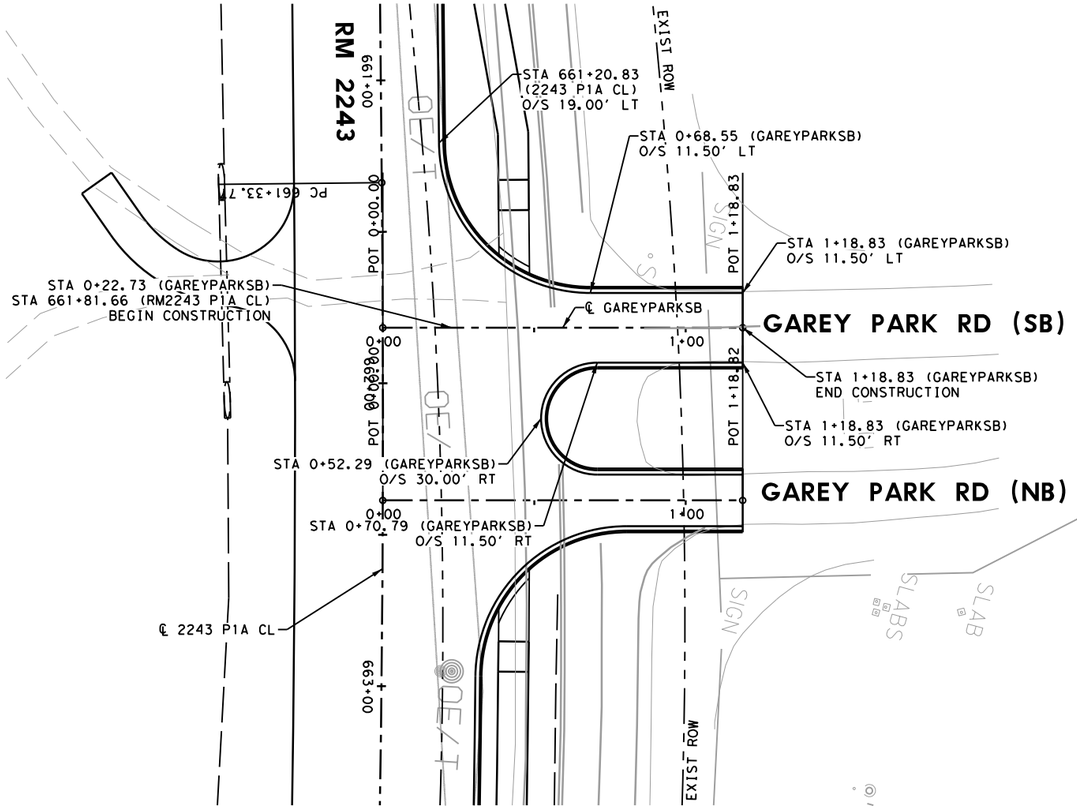

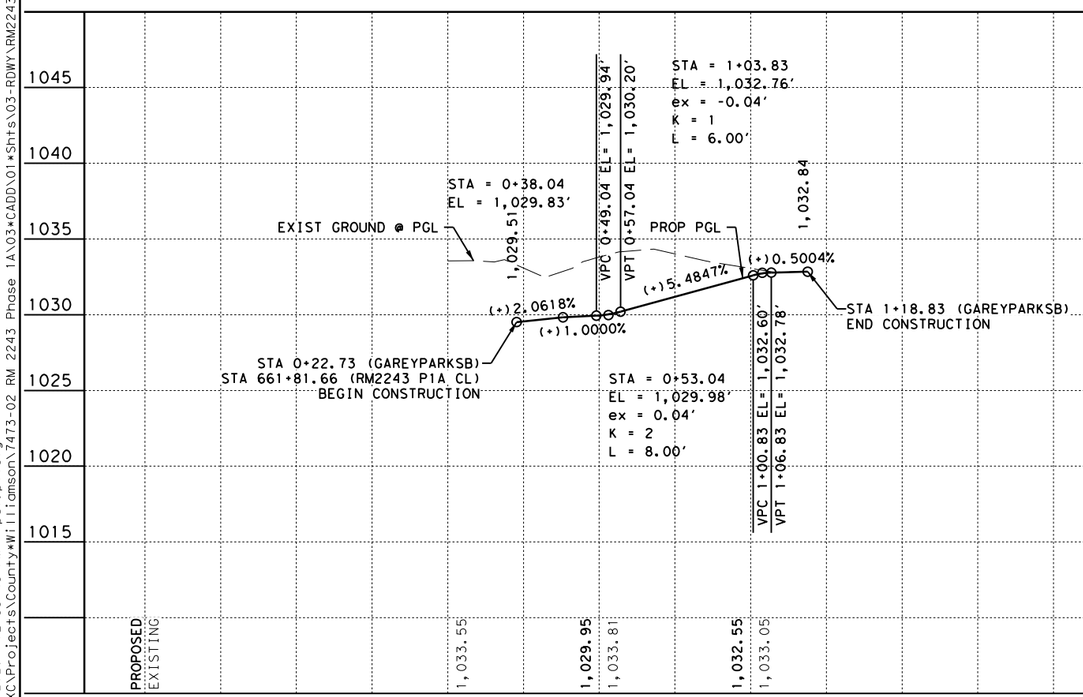

LEGEND:

- EXISTING SIGN
- DIRECTION OF TRAFFIC
- (DW#) DRIVEWAY NUMBER
- [CURVE #] ALIGNMENT CURVE NUMBER
- DITCH FLOWLINE
- MILL & OVERLAY

NOTES:

1. ALL DIMENSIONS AND OFFSETS ARE RELATIVE TO THE LIP OF GUTTER UNLESS OTHERWISE NOTED
2. FOR 50 FT RADIALLY FROM ALL LCRA POLES, CONTRACTOR SHALL COMPACT ALL FILL TO ORDINARY COMPACTION IN NO GREATER THAN 8IN LIFTS. CONTRACTOR SHALL PROOF ROLL BETWEEN EACH LIFT AND CORRECT UNSTABLE OR NONUNIFORM AREAS.

0 25 50
SCALE: 1"=50' H
1"=10' V

STATE OF TEXAS
JOSHUA T. RICHTER
141234
LICENSED
PROFESSIONAL ENGINEER

4/10/2025

WILCO TEXAS

BGE, Inc.
101 W Louis Henna Blvd, Suite 400, Austin, TX 78728
Tel: 512-879-0400 • www.bgeinc.com
TBPE Registration No. F-1046

RM 2243

ROADWAY PLAN & PROFILE GAREY PARK RD (SB)

SHEET 23 OF 26

FED.RD. DIV.NO.	PROJECT NO.		SHEET NO.
6			144
STATE	DIST.	COUNTY	
TEXAS	AUS	WILLIAMSON	
CONT.	SECT.	JOB	HIGHWAY NO.
0914	05	222	RM 2243

4/10/2025 12:55:48 PM pdf.pltcfg
G:\TXC\Projects\County*Wi\Williamson\7473-02 RM 2243 Phase 1A\03*CADD\01*Shts\03-RDWY\RM2243*P1A*PP*23.dgn

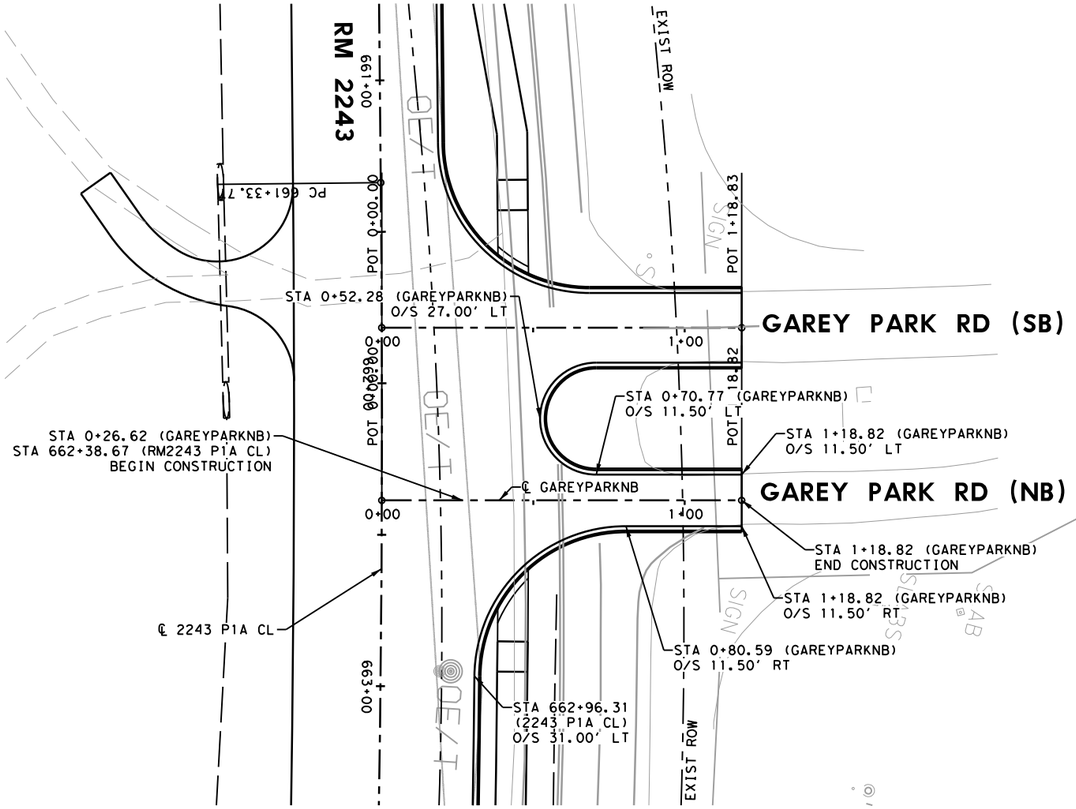
RM 2243
661+00
663+00
EXIST ROW
EXIST ROW
PC 661+33.77
POT 0+00.00
POT 0+00.00
POT 1+18.83
POT 1+18.82
STA 0+52.28 (GAREYPARKNB)
O/S 27.00' LT
GAREY PARK RD (SB)
0+00
1+00
STA 0+70.77 (GAREYPARKNB)
O/S 11.50' LT
STA 1+18.82 (GAREYPARKNB)
O/S 11.50' LT
STA 0+26.62 (GAREYPARKNB)
STA 662+38.67 (RM2243 P1A CL)
BEGIN CONSTRUCTION
℄ GAREYPARKNB
GAREY PARK RD (NB)
0+00
1+00
STA 1+18.82 (GAREYPARKNB)
END CONSTRUCTION
STA 1+18.82 (GAREYPARKNB)
O/S 11.50' RT
℄ 2243 P1A CL
STA 0+80.59 (GAREYPARKNB)
O/S 11.50' RT
STA 662+96.31
(2243 P1A CL)
O/S 31.00' LT
SIGN
SIGN
SIGN

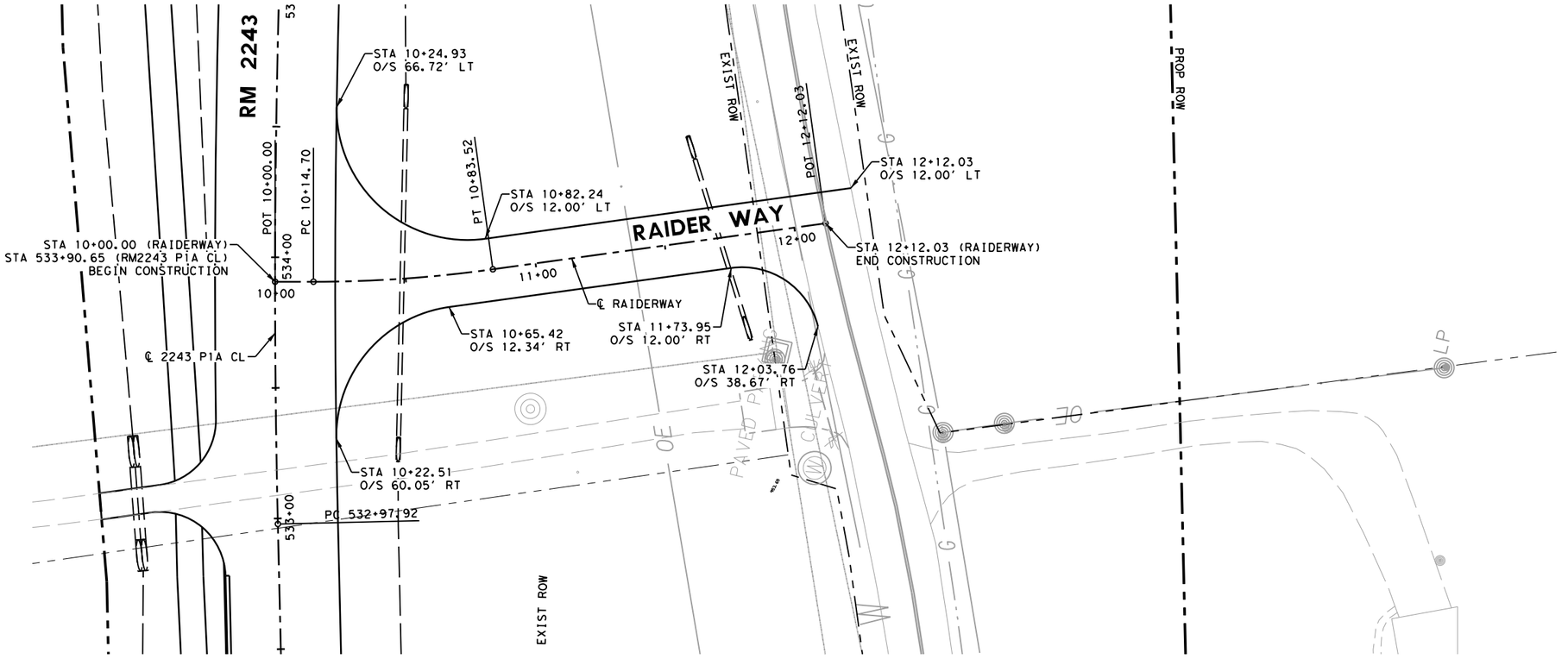

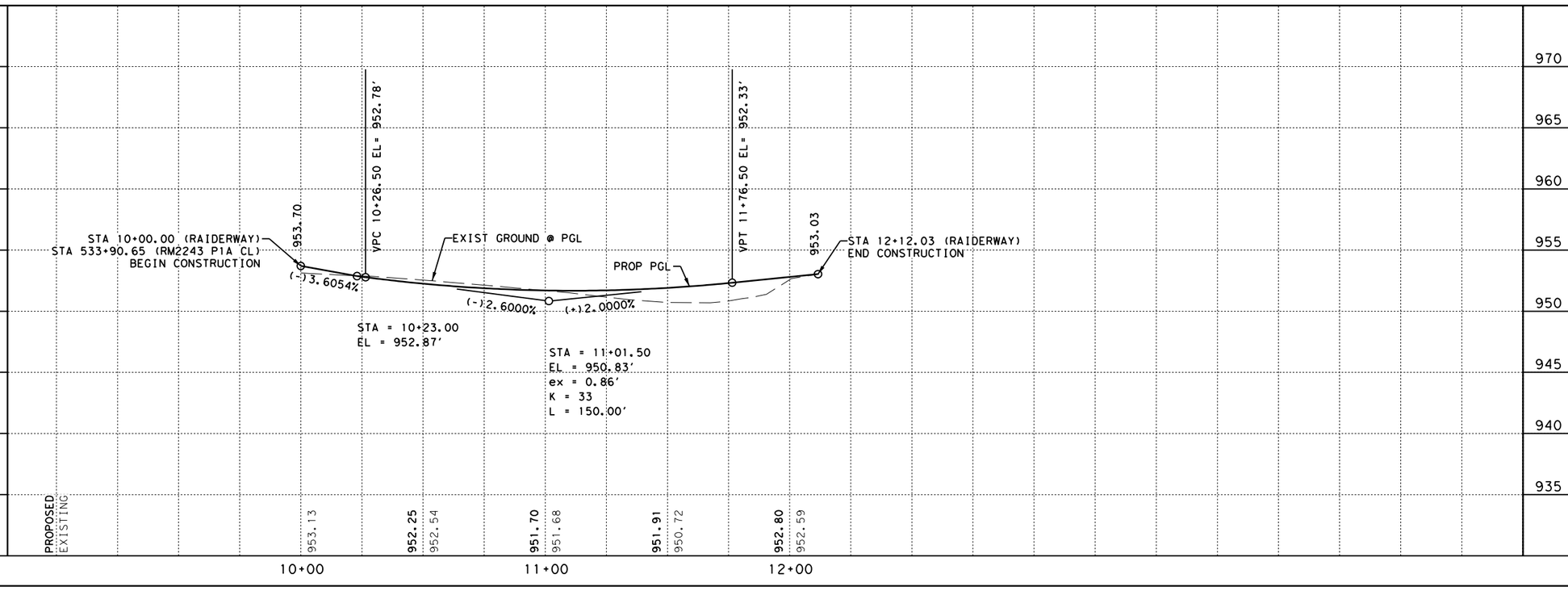

LEGEND:

- EXISTING SIGN
- DIRECTION OF TRAFFIC
- DW# — DRIVEWAY NUMBER
- CURVE # — ALIGNMENT CURVE NUMBER
- DITCH FLOWLINE
- MILL & OVERLAY

NOTES:

1. ALL DIMENSIONS AND OFFSETS ARE RELATIVE TO THE LIP OF GUTTER UNLESS OTHERWISE NOTED
2. FOR 50 FT RADIALLY FROM ALL LCRA POLES, CONTRACTOR SHALL COMPACT ALL FILL TO ORDINARY COMPACTION IN NO GREATER THAN 8IN LIFTS. CONTRACTOR SHALL PROOF ROLL BETWEEN EACH LIFT AND CORRECT UNSTABLE OR NONUNIFORM AREAS.

0 25 50

SCALE: 1"=50' H
1"=10' V

STATE OF TEXAS
JOSHUA T. RICHTER
141234
LICENSED
PROFESSIONAL ENGINEER

4/10/2025

WILCO
TEXAS

BGE, Inc.
101 W Louis Henna Blvd, Suite 400, Austin, TX 78728
Tel: 512-879-0400 • www.bgeinc.com
TBPE Registration No. F-1046

RM 2243

ROADWAY PLAN & PROFILE
RAIDER WAY

SHEET 25 OF 26

FED.RD. DIV.NO.	PROJECT NO.		SHEET NO.
6			146
STATE	DIST.	COUNTY	
TEXAS	AUS	WILLIAMSON	
CONT.	SECT.	JOB	HIGHWAY NO.
0914	05	222	RM 2243

4/10/2025 12:55:51 PM pdf.pltcfg
G:\TXC\Projects\County\Williamson\7473-02 RM 2243 Phase 1A\03*CADD\01*Shts\03-RDWY\RM2243*P1A*PP*25.dgn

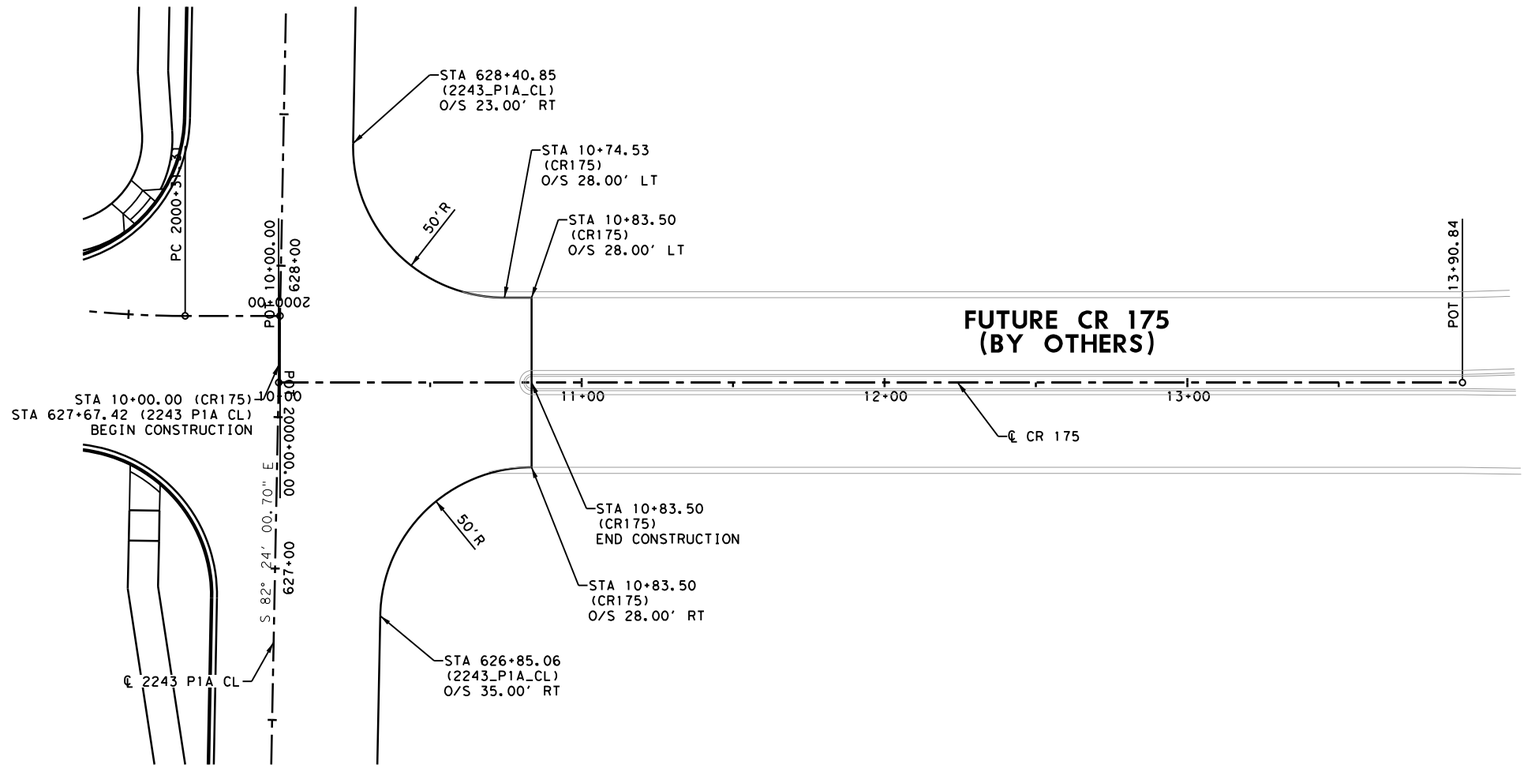

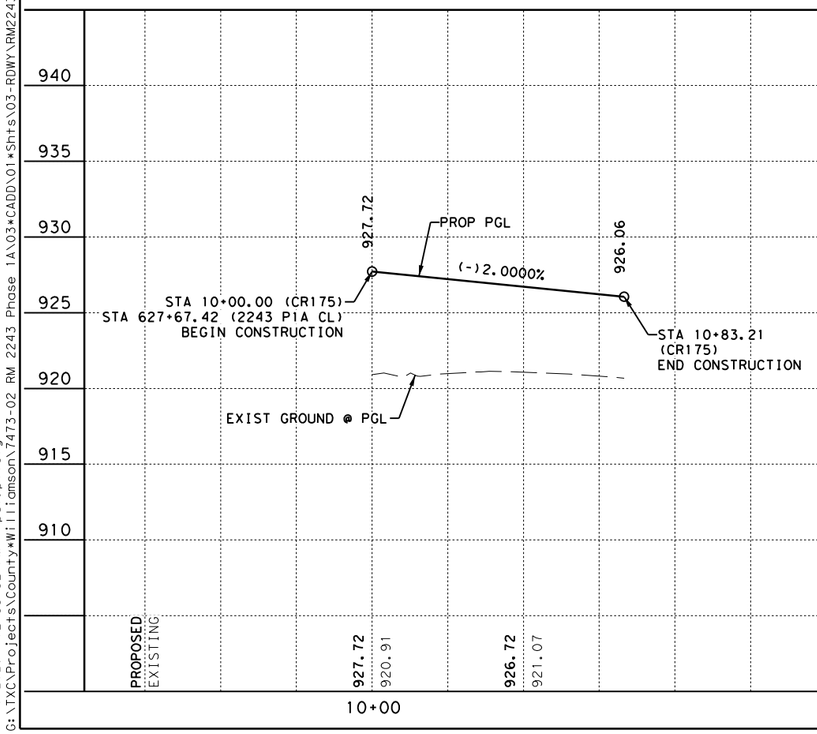

LEGEND:

- EXISTING SIGN
- DIRECTION OF TRAFFIC
- DW# — DRIVEWAY NUMBER
- CURVE # — ALIGNMENT CURVE NUMBER
- DITCH FLOWLINE
- MILL & OVERLAY

NOTES:

1. ALL DIMENSIONS AND OFFSETS ARE RELATIVE TO THE LIP OF GUTTER UNLESS OTHERWISE NOTED
2. FOR 50 FT RADIALLY FROM ALL LCRA POLES, CONTRACTOR SHALL COMPACT ALL FILL TO ORDINARY COMPACTION IN NO GREATER THAN 8IN LIFTS. CONTRACTOR SHALL PROOF ROLL BETWEEN EACH LIFT AND CORRECT UNSTABLE OR NONUNIFORM AREAS.

0 25 50
SCALE: 1"=50' H
1"=10' V

STATE OF TEXAS
JOSHUA T. RICHTER
141234
LICENSED
PROFESSIONAL ENGINEER

4/10/2025

WILCO
TEXAS

BGE, Inc.
101 W Louis Henna Blvd, Suite 400, Austin, TX 78728
Tel: 512-879-0400 • www.bgeinc.com
TBPE Registration No. F-1046

RM 2243

ROADWAY PLAN & PROFILE
CR 175 (BY OTHERS)

SHEET 26 OF 26

FED.RD. DIV.NO.	PROJECT NO.		SHEET NO.
6			147
STATE	DIST.	COUNTY	
TEXAS	AUS	WILLIAMSON	
CONT.	SECT.	JOB	HIGHWAY NO.
0914	05	222	RM 2243

4/10/2025 12:55:52 PM pdf.pltcfg
G:\TXC\Projects\County\Williamson\7473-02 RM 2243 Phase 1A\03*CADD\01*Shts\03-RDWY\RM2243*P1A*PP*26.dgn

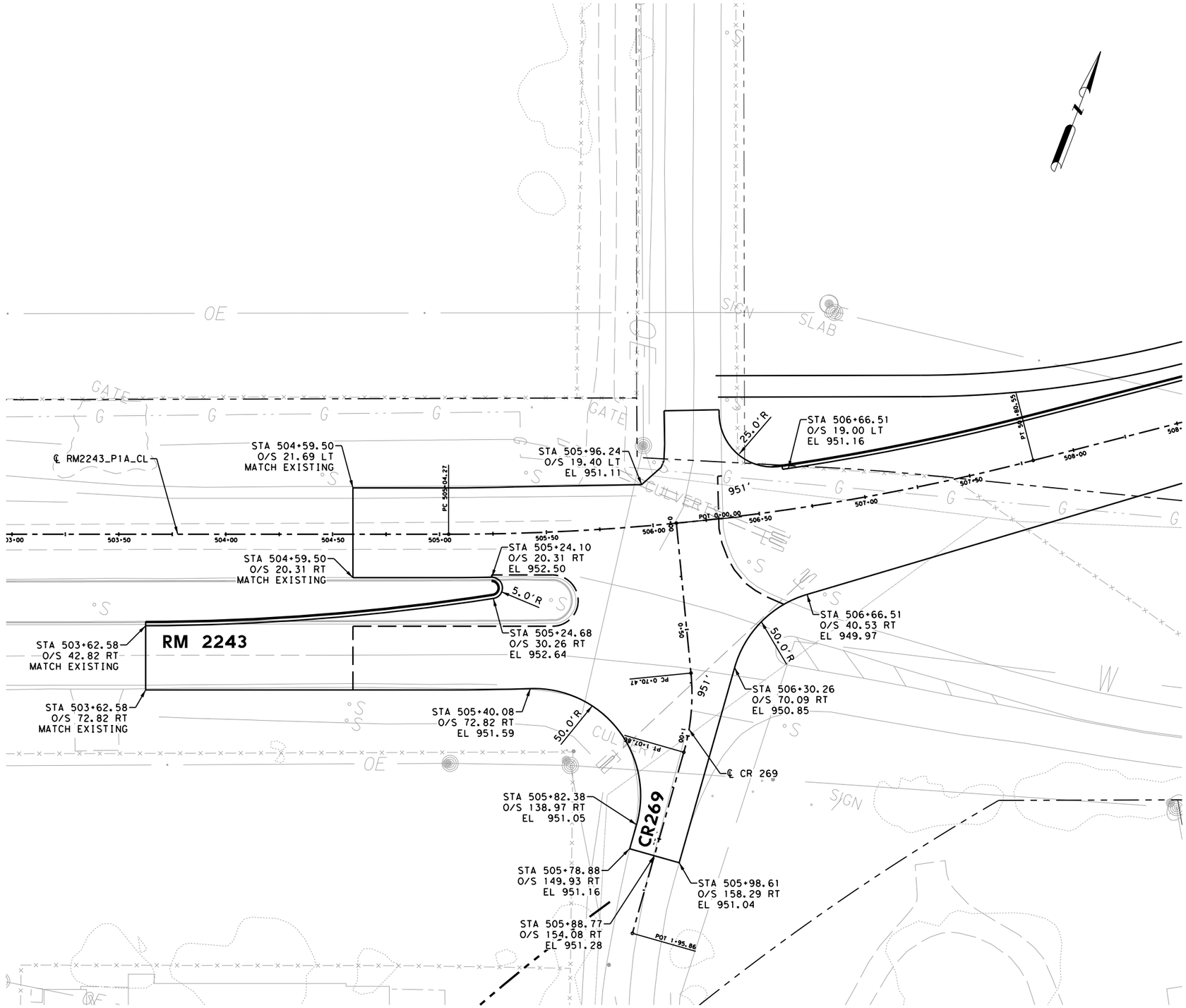

STATE OF TEXAS
JOSHUA T. RICHTER
141234
LICENSED
PROFESSIONAL ENGINEER

4/10/2025

WILCO
TEXAS

BGE, Inc.
101 W Louis Henna Blvd, Suite 400, Austin, TX 78728
Tel: 512-879-0400 • www.bgeinc.com
TBPE Registration No. F-1046

RM 2243

GRADING LAYOUT

CR 269

SHEET 1 OF 9

FED.RD. DIV.NO.	PROJECT NO.	SHEET NO.
6		148

STATE	DIST.	COUNTY	
TEXAS	AUS	WILLIAMSON	
CONT.	SECT.	JOB	HIGHWAY NO.
0914	05	222	RM 2243

4/10/2025 12:55:53 PM pdf.pltcfg
G:\TXC\Projects\County\Williamson\7473-02 RM 2243 Phase 1A\03*CADD\01*Shts\03-RDWY\RM2243*INT*01.dgn

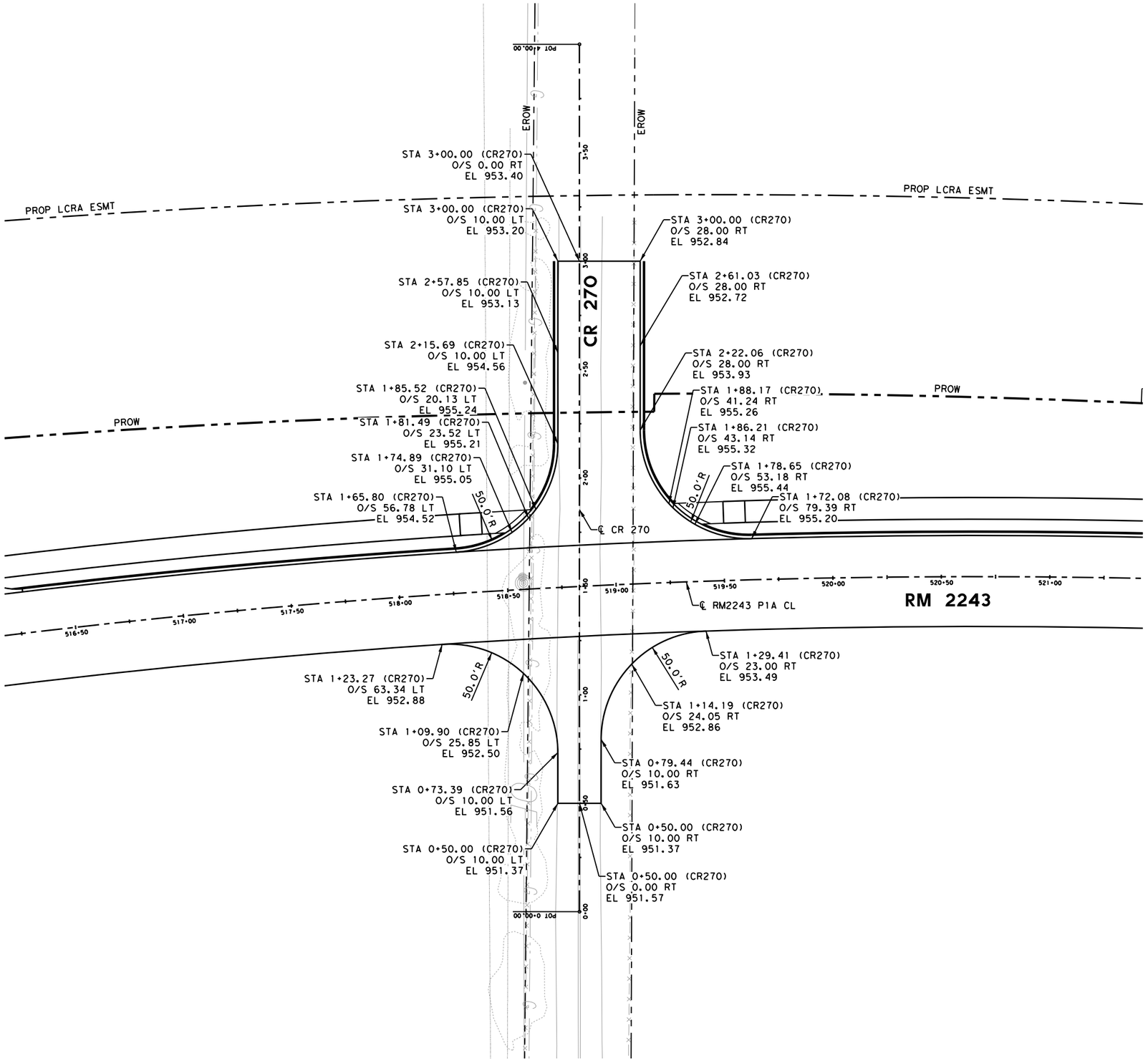

0 25 50

SCALE: 1"=50'

STATE OF TEXAS
JOSHUA T. RICHTER
141234
LICENSED
PROFESSIONAL ENGINEER

4/10/2025

WILCO
TEXAS

BGE, Inc.
101 W Louis Henna Blvd, Suite 400, Austin, TX 78728
Tel: 512-879-0400 • www.bgeinc.com
TBPE Registration No. F-1046

RM 2243

GRADING LAYOUT

CR 270

SHEET 2 OF 9

FED.RD. DIV.NO.	PROJECT NO.		SHEET NO.
6			149
STATE	DIST.	COUNTY	
TEXAS	AUS	WILLIAMSON	
CONT.	SECT.	JOB	HIGHWAY NO.
0914	05	222	RM 2243

4/10/2025 12:55:54 PM pdf.pltcfg
G:\TXC\Projects\County\Williamson\7473-02 RM 2243 Phase 1A\03*CADD\01*Shts\03-RDWY\RM2243*INT*02.dgn

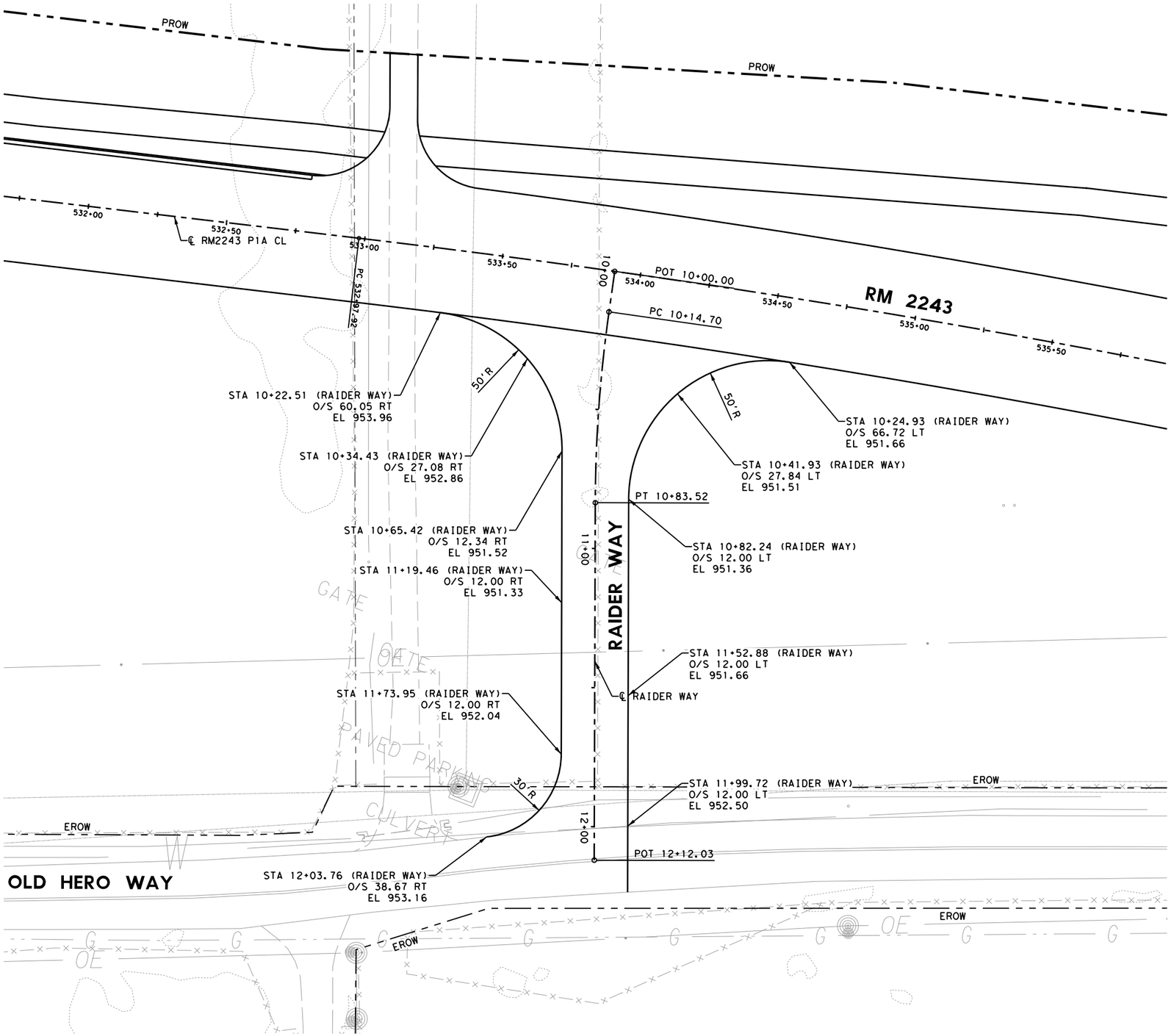

4/10/2025 12:55:56 PM pdf.pltcfg
G:\TXC\Projects\County\Williamson\7473-02 RM 2243 Phase 1A\03*CADD\01*Shts\03-RDWY\RM2243*INT*02*RAIDER.dgn

STATE OF TEXAS
JOSHUA T. RICHTER
141234
LICENSED PROFESSIONAL ENGINEER

4/10/2025

WILCO
TEXAS

BGE, Inc.
101 W Louis Henna Blvd, Suite 400, Austin, TX 78728
Tel: 512-879-0400 ● www.bgeinc.com
TBPE Registration No. F-1046

RM 2243

GRADING LAYOUT

RAIDER WAY

SHEET 3 OF 9

FED.RD. DIV.NO.	PROJECT NO.		SHEET NO.
6			150
STATE	DIST.	COUNTY	
TEXAS	AUS	WILLIAMSON	
CONT.	SECT.	JOB	HIGHWAY NO.
0914	05	222	RM 2243

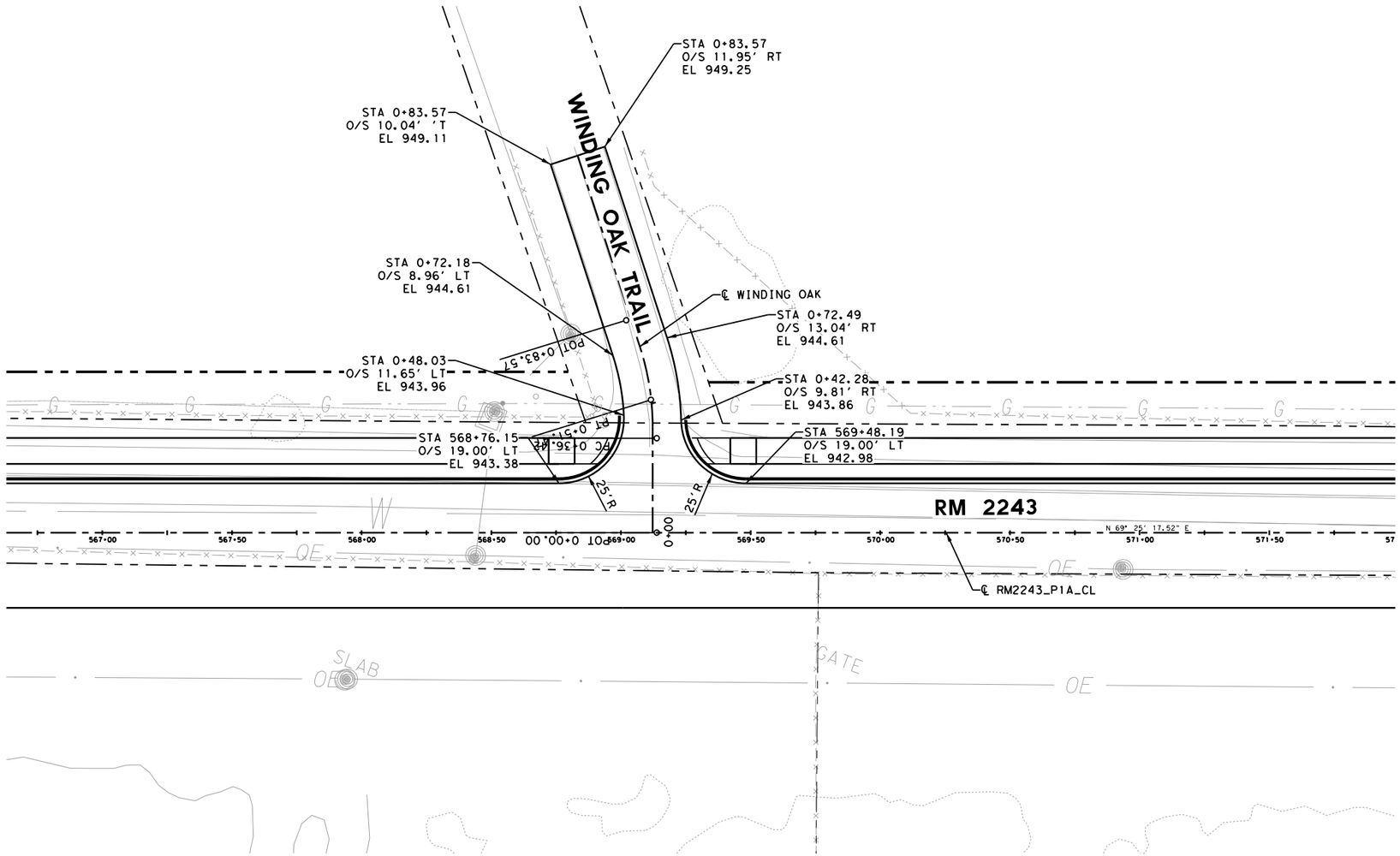

0 25 50

SCALE: 1"=50'

STATE OF TEXAS
JOSHUA T. RICHTER
141234
LICENSED
PROFESSIONAL ENGINEER

4/10/2025

WILCO TEXAS

BGE, Inc.
101 W Louis Henna Blvd, Suite 400, Austin, TX 78728
Tel: 512-879-0400 • www.bgeinc.com
TBPE Registration No. F-1046

RM 2243

GRADING LAYOUT

WINDING OAK TRAIL

SHEET 4 OF 9

FED.RD. DIV.NO.	PROJECT NO.		SHEET NO.
6			151
STATE	DIST.	COUNTY	
TEXAS	AUS	WILLIAMSON	
CONT.	SECT.	JOB	HIGHWAY NO.
0914	05	222	RM 2243

4/10/2025 12:55:57 PM pdf.pltcfg
G:\TXC\Projects\County*Williamson\7473-02 RM 2243 Phase 1A\03*CADD\01*Shts\03-RDWY\RM2243*INT*02A.dgn

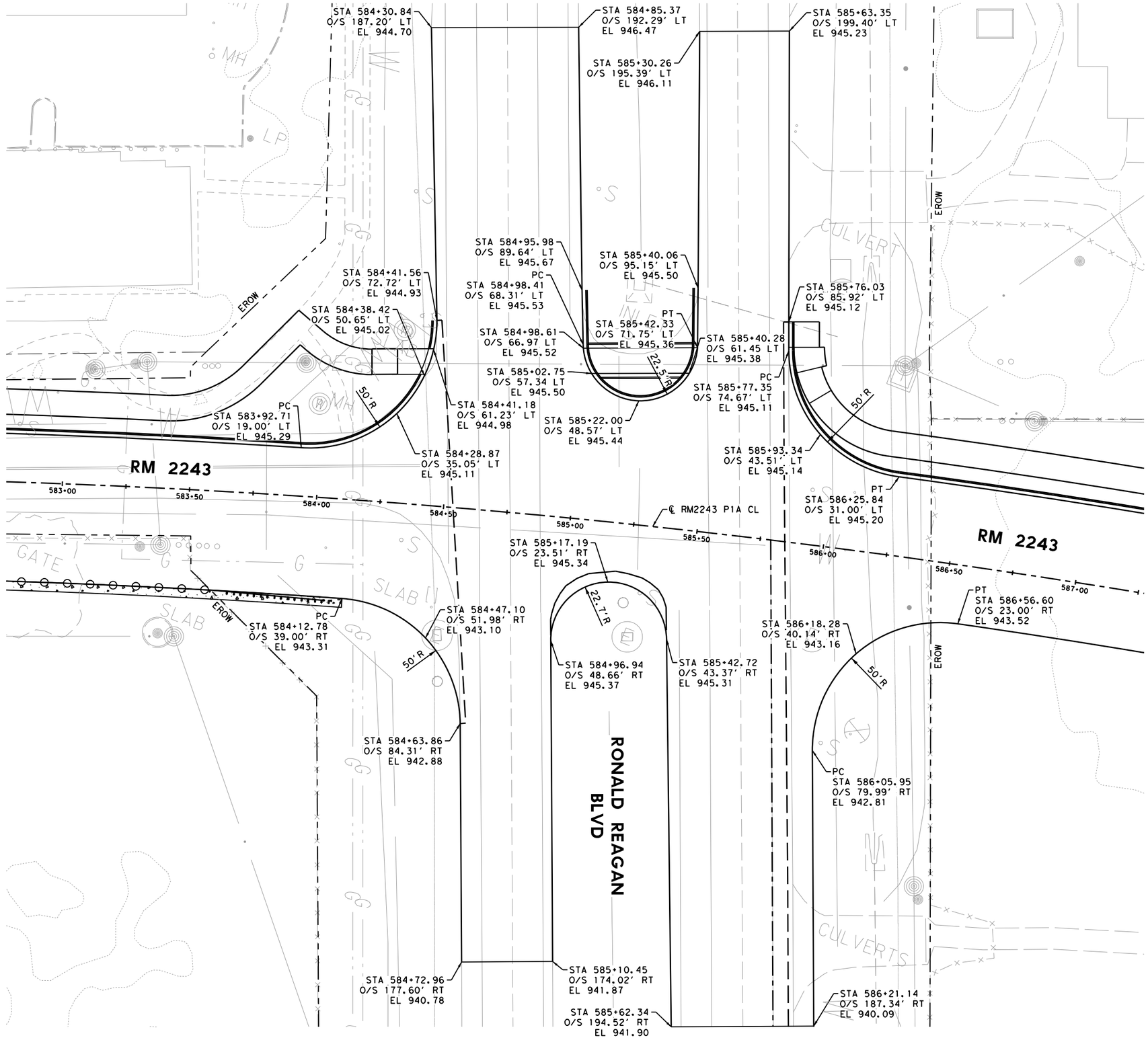

STATE OF TEXAS
JOSHUA T. RICHTER
141234
LICENSED PROFESSIONAL ENGINEER

4/10/2025

WILCO TEXAS

BGE, Inc.
101 W Louis Henna Blvd, Suite 400, Austin, TX 78728
Tel: 512-879-0400 ● www.bgeinc.com
TBPE Registration No. F-1046

RM 2243

GRADING LAYOUT

RONALD REAGAN BLVD

SHEET 5 OF 9

FED.RD. DIV.NO.	PROJECT NO.	SHEET NO.
6		152

STATE	DIST.	COUNTY	
TEXAS	AUS	WILLIAMSON	
CONT.	SECT.	JOB	HIGHWAY NO.
0914	05	222	RM 2243

4/10/2025 12:55:58 PM pdf.pltcfg
G:\TXC\Projects\County\Williamson\7473-02 RM 2243 Phase 1A\03*CADD\01*Shts\03-RDWY\RM2243*INT*03.dgn

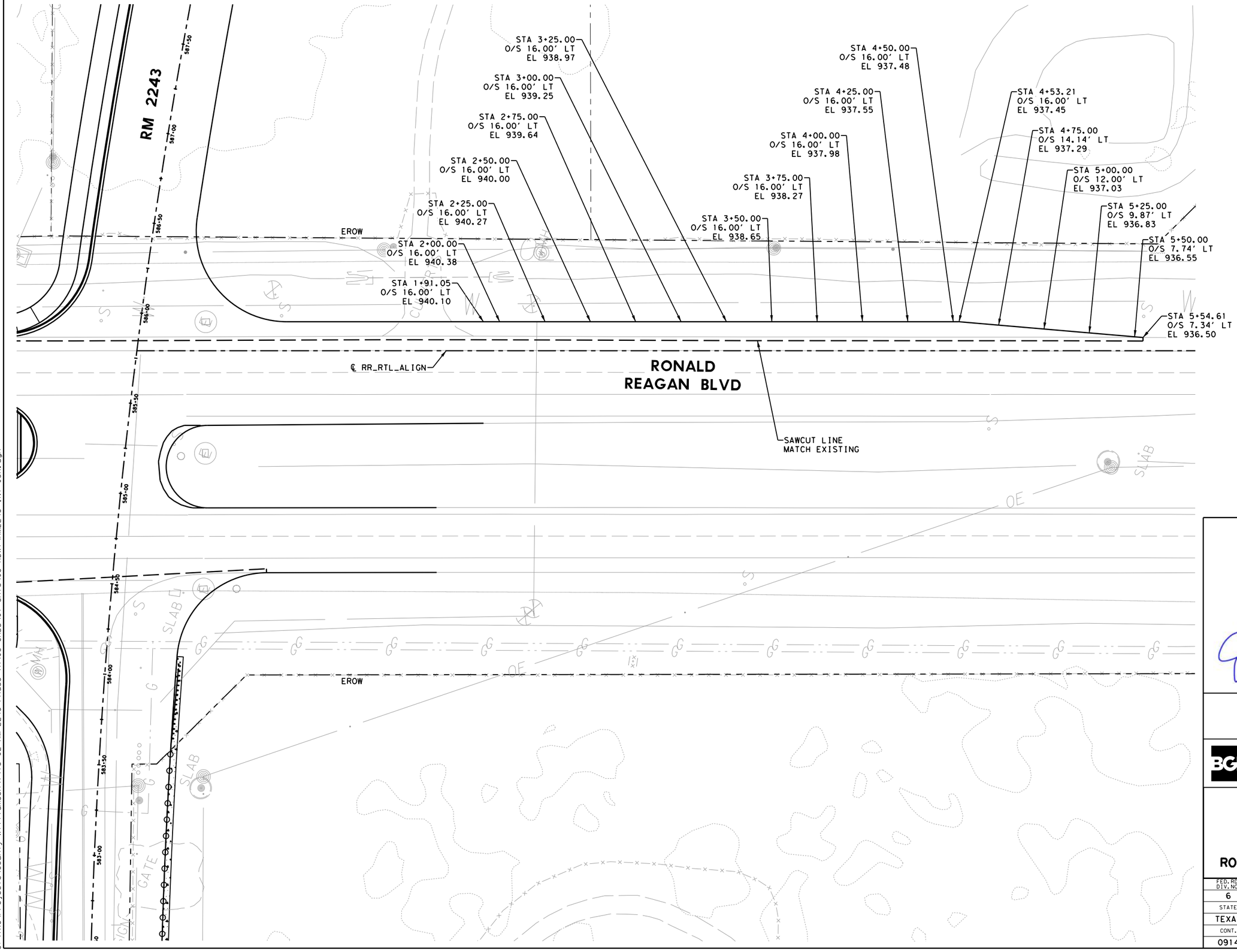

4/10/2025 12:56:00 PM pdf.pltcfg
G:\TXC\Projects\County\Williamson\7473-02 RM 2243 Phase 1A\03*CADD\01*Shts\03-RDWY\RM2243*INT*03A.dgn

STATE OF TEXAS
JOSHUA T. RICHTER
141234
LICENSED
PROFESSIONAL ENGINEER

4/10/2025

WILCO
TEXAS

BGE, Inc.
101 W Louis Henna Blvd, Suite 400, Austin, TX 78728
Tel: 512-879-0400 • www.bgeinc.com
TBPE Registration No. F-1046

RM 2243

GRADING LAYOUT

RONALD REAGAN RIGHT-TURN

SHEET 6 OF 9

FED.RD. DIV.NO.	PROJECT NO.		SHEET NO.
6			153
STATE	DIST.	COUNTY	
TEXAS	AUS	WILLIAMSON	
CONT.	SECT.	JOB	HIGHWAY NO.
0914	05	222	RM 2243

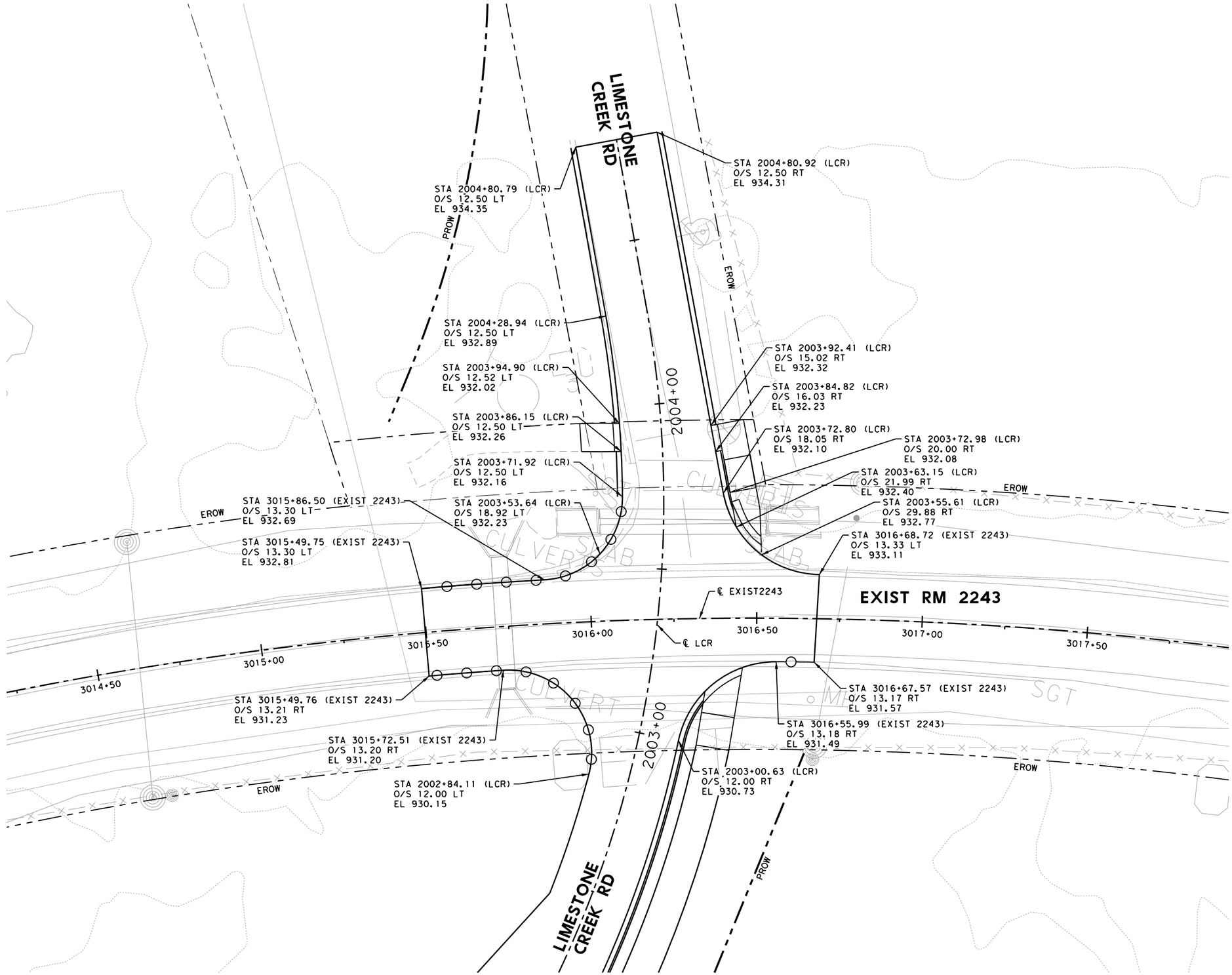

STATE OF TEXAS
JOSHUA T. RICHTER
141234
LICENSED
PROFESSIONAL ENGINEER

4/10/2025

WILCO TEXAS

BGE, Inc.
101 W Louis Henna Blvd, Suite 400, Austin, TX 78728
Tel: 512-879-0400 • www.bgeinc.com
TBPE Registration No. F-1046

RM 2243

GRADING LAYOUT

LIMESTONE CREEK RD

SHEET 7 OF 9

FED.RD. DIV.NO.	PROJECT NO.		SHEET NO.
6			154
STATE	DIST.	COUNTY	
TEXAS	AUS	WILLIAMSON	
CONT.	SECT.	JOB	HIGHWAY NO.
0914	05	222	RM 2243

4/10/2025 12:56:01 PM pdf.pltcfg
G:\TXC\Projects\County*Williamson\7473-02 RM 2243 Phase 1A\03*CADD\01*Shts\03-RDWY\RM2243*INT*04.dgn

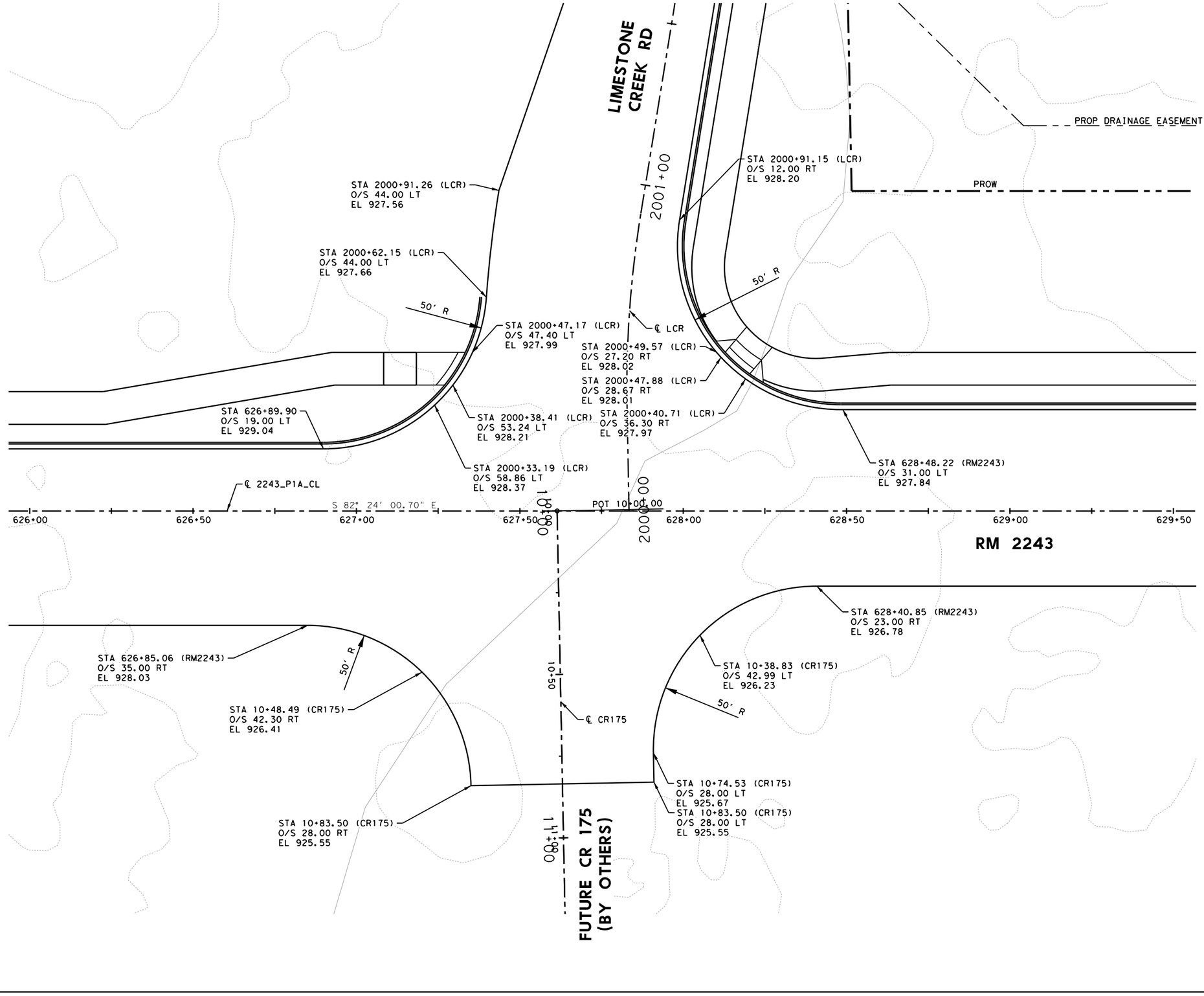

0 15 30
SCALE: 1"=30'

STATE OF TEXAS
JOSHUA T. RICHTER
141234
LICENSED
PROFESSIONAL ENGINEER

4/10/2025

WILCO
TEXAS

BGE, Inc.
101 W Louis Henna Blvd, Suite 400, Austin, TX 78728
Tel: 512-879-0400 • www.bgeinc.com
TBPE Registration No. F-1046

RM 2243

GRADING LAYOUT

CR 175

SHEET 8 OF 9

FED.RD. DIV.NO.	PROJECT NO.		SHEET NO.
6			155
STATE	DIST.	COUNTY	
TEXAS	AUS	WILLIAMSON	
CONT.	SECT.	JOB	HIGHWAY NO.
0914	05	222	RM 2243

4/10/2025 12:56:02 PM pdf.pltcfg
G:\TXC\Projects\County\Williamson\7473-02 RM 2243 Phase 1A\03*CADD\01*Shts\03-RDWY\RM2243*INT*04A.dgn

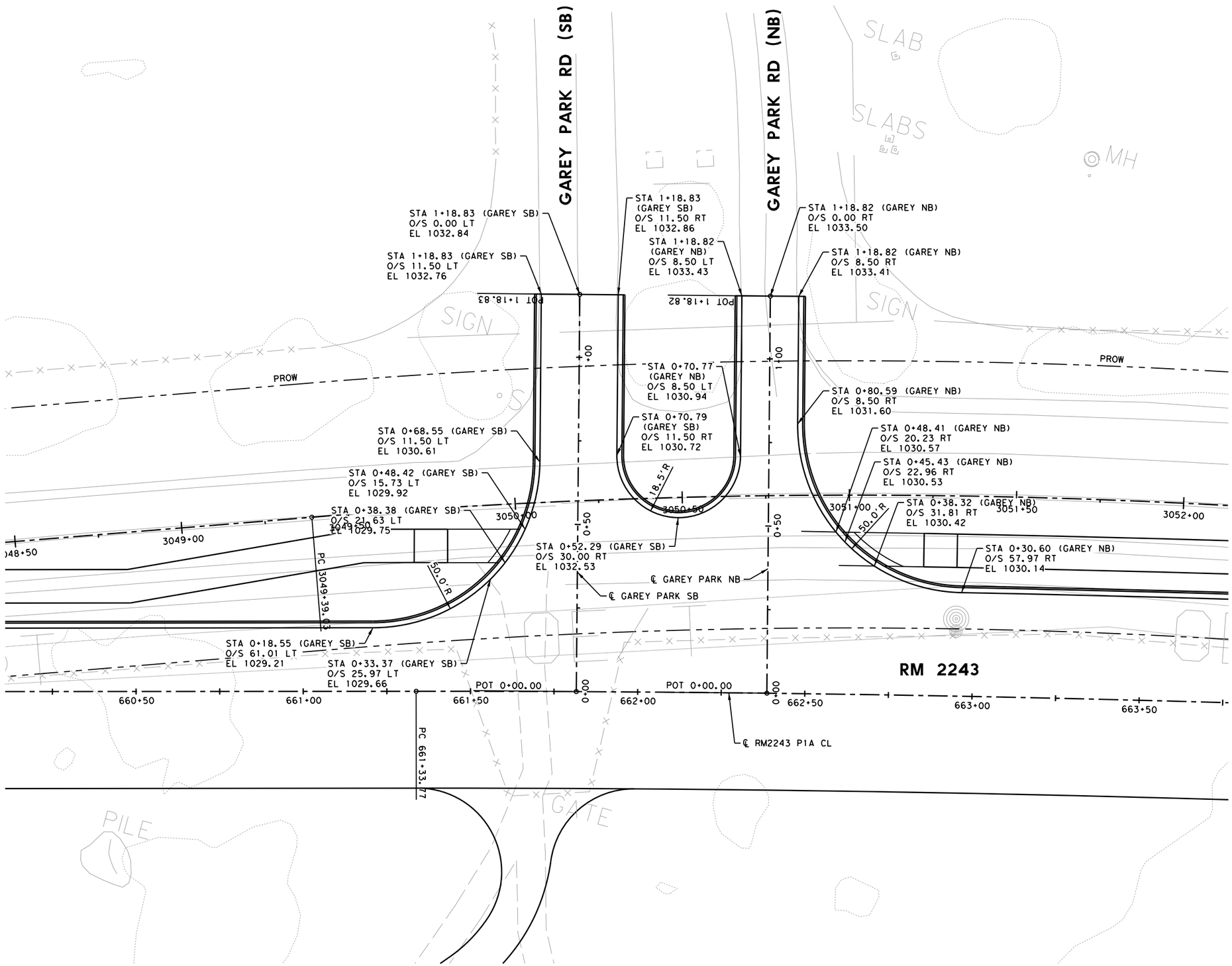

STATE OF TEXAS
JOSHUA T. RICHTER
141234
LICENSED
PROFESSIONAL ENGINEER

4/10/2025

WILCO
TEXAS

BGE, Inc.
101 W Louis Henna Blvd, Suite 400, Austin, TX 78728
Tel: 512-879-0400 • www.bgeinc.com
TBPE Registration No. F-1046

RM 2243

GRADING LAYOUT

GAREY PARK RD

SHEET 9 OF 9

FED.RD. DIV.NO.	PROJECT NO.		SHEET NO.
6			156
STATE	DIST.	COUNTY	
TEXAS	AUS	WILLIAMSON	
CONT.	SECT.	JOB	HIGHWAY NO.
0914	05	222	RM 2243

4/10/2025 12:56:04 PM pdf.pltcfg
G:\TXC\Projects\County\Williamson\7473-02 RM 2243 Phase 1A\03*CADD\01*Shts\03-RDWY\RM2243*INT*05.dgn

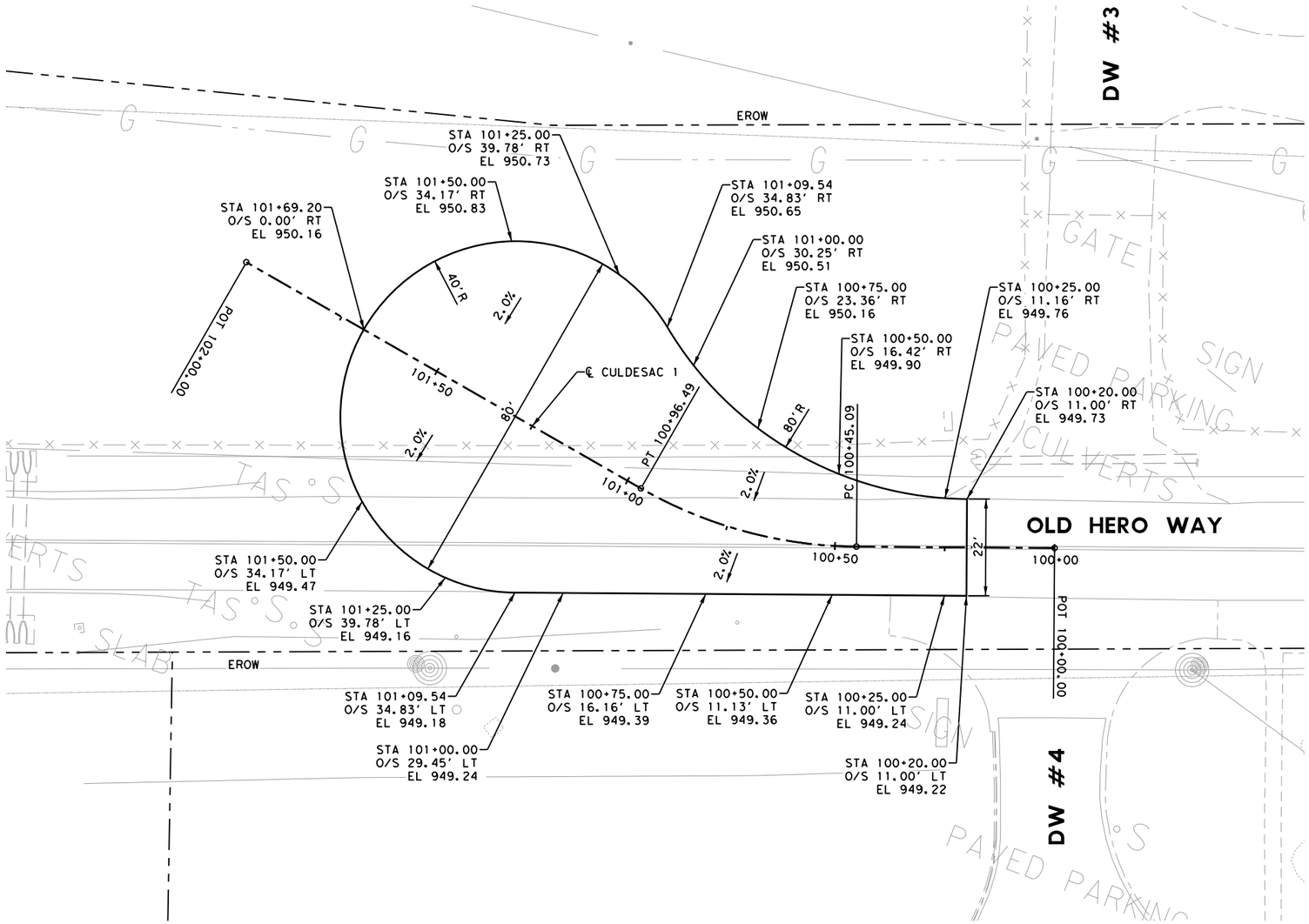

0 15 30
SCALE: 1"=30'

STATE OF TEXAS
JOSHUA T. RICHTER
141234
LICENSED
PROFESSIONAL ENGINEER

4/10/2025

WILCO
TEXAS

BGE, Inc.
101 W Louis Henna Blvd, Suite 400, Austin, TX 78728
Tel: 512-879-0400 • www.bgeinc.com
TBPE Registration No. F-1046

RM 2243

CUL-DE-SAC LAYOUT

SHEET 1 OF 1

FED.RD. DIV.NO.	PROJECT NO.		SHEET NO.
6			157
STATE	DIST.	COUNTY	
TEXAS	AUS	WILLIAMSON	
CONT.	SECT.	JOB	HIGHWAY NO.
0914	05	222	RM 2243

4/10/2025 12:56:05 PM pdf.pltcfg
G:\TXC\Projects\County\Williamson\7473-02 RM 2243 Phase 1A\03*CADD\01*Shts\03-RDWY\RM2243*INT*02B.dgn

DRIVEWAY TABLE

DRIVEWAY NUMBER	P&P SHEET NUMBER	CENTERLINE STATION		EXISTING SURFACE	PROPOSED SURFACE	R1 (FT)	R2 (FT)	WIDTH	AREA	*GRADES								C1		C2		C3		DRIVEWAY TYPE
								FT	SY	G1 (%)	G2 (%)	G3 (%)	G4 (%)	L1 (FT)	L2 (FT)	L3 (FT)	L4 (FT)	ELEVATION (FT)	CURVE LENGTH (FT)	ELEVATION (FT)	CURVE LENGTH (FT)	ELEVATION (FT)	CURVE LENGTH (FT)	
DW# 01	2 OF 24	506+19	LT	GRAVEL	ASPHALT	-	25	26	170	0.85	2.71	0.97	-	7.00	11.69	29.57	-	951.18	10.00	951.50	6.00	-	-	RESIDENTIAL
DW# 02	2 OF 24	511+93	LT	ASPHALT	ASPHALT	25	25	28	508	6.79	1.10	-2.40	0.75	7.86	15.47	38.22	87.19	-	-	952.08	6.00	951.16	8.00	COMMERCIAL
DW# 02A	2 OF 24	515+88	LT	ASPHALT	ASPHALT	25	25	16	170	6.96	1.06	-8.94	1.29	7.59	15.12	26.50	24.18	-	-	954.03	6.00	951.66	8.00	RESIDENTIAL
DW# 03	4 OF 24	533+14	LT	ASPHALT	ASPHALT	25	25	10	94	7.11	1.17	-0.86	-	7.54	14.07	27.43	-	-	-	956.51	6.00	-	-	RESIDENTIAL
DW# 04	5 OF 24	538+21	LT	ASPHALT	ASPHALT	25	25	17	214	2.24	0.50	-	-	17.00	74.21	-	-	946.77	6.00	-	-	-	-	RESIDENTIAL
DW# 05	5 OF 24	541+46	RT	ASPHALT	ASPHALT	25	25	14	164	3.52	-4.15	-	-	10.00	46.61	-	-	943.21	6.00	-	-	-	-	RESIDENTIAL
DW# 06	5 OF 24	546+25	LT	GRAVEL	ASPHALT	25	25	36	464	-3.60	4.00	0.88	-0.06	11.88	70.14	10.06	16.30	943.40	22.80	-	-	-	-	COMMERCIAL
DW# 07	5 OF 24	546+43	RT	ASPHALT	ASPHALT	25	25	14	197	3.66	-6.33	-10.00	-2.44	6.00	10.00	44.00	46.99	945.99	8.00	945.36	6.00	940.96	10.00	RESIDENTIAL
DW# 08	6 OF 24	549+67	RT	ASPHALT	ASPHALT	25	25	14	69	-2.02	-	-	-	52.02	-	-	-	-	-	-	-	-	-	RESIDENTIAL
DW# 09	6 OF 24	551+29	LT	ASPHALT	ASPHALT	25	25	14	118	4.67	0.93	-1.15	-	11.50	10.02	29.64	-	-	-	-	-	-	-	RESIDENTIAL
DW# 10	6 OF 24	553+85	RT	ASPHALT	ASPHALT	25	25	14	110	-1.98	-8.00	-1.12	-	6.00	26.00	18.97	-	955.03	8.00	952.95	8.00	-	-	RESIDENTIAL
DW# 11	6 OF 24	556+27	LT	ASPHALT	ASPHALT	25	25	14	99	6.62	0.99	1.24	-	7.51	10.01	21.51	-	-	-	-	-	-	-	RESIDENTIAL
DW# 12	6 OF 24	557+98	RT	ASPHALT	ASPHALT	25	25	14	70	-1.99	-10.00	-3.25	-	6.00	30.00	13.09	-	956.89	8.00	953.89	8.00	-	-	RESIDENTIAL
DW# 13	7 OF 24	560+65	RT	ASPHALT	ASPHALT	25	25	14	69	-2.00	-3.17	-	-	15.00	22.40	-	-	957.76	8.00	-	-	-	-	RESIDENTIAL
DW# 14	7 OF 24	560+96	LT	ASPHALT	ASPHALT	25	25	16	131	6.64	1.00	10.00	0.54	7.50	15.00	21.00	8.50	-	-	959.53	8.00	961.63	6.00	RESIDENTIAL
DW# 15	7 OF 24	562+12	LT	ASPHALT	ASPHALT	25	25	14	111	SEE P&P SHEETS FOR PROFILE INFORMATION														RESIDENTIAL
DW# 16	8 OF 24	580+63	RT	ASPHALT	ASPHALT	25	25	13	68	-2.00	8.00	-0.55	-	6.00	17.00	3.20	-	939.97	10.00	941.33	6.00	-	-	RESIDENTIAL
DW# 17	8 OF 24	581+95	LT	CONCRETE	CONCRETE	25	25	34	138	6.97	1.01	1.65	-	7.50	10.00	11.09	-	-	-	-	-	-	-	COMMERCIAL
DW# 18	10 OF 24	596+34	LT	GRAVEL	ASPHALT	25	25	15	134	SEE P&P SHEETS FOR PROFILE INFORMATION														RESIDENTIAL
DW# 19	11 OF 24	609+43	LT	GRAVEL	ASPHALT	50	50	55	1709	SEE P&P SHEETS FOR PROFILE INFORMATION														COMMERCIAL
DW# 20	15 OF 24	648+73	LT	GRAVEL	ASPHALT	25	25	20	344	5.65	1.00	-3.76	-	7.50	15.00	114.77	-	-	-	1001.71	6.00	-	-	RESIDENTIAL
DW# 21	15 OF 24	653+88	RT	GRAVEL	ASPHALT	25	25	12	146	SEE P&P SHEETS FOR PROFILE INFORMATION														RESIDENTIAL
DW# 22	15 OF 24	661+69	RT	GRAVEL	ASPHALT	25	25	12	226	SEE P&P SHEETS FOR PROFILE INFORMATION														RESIDENTIAL
DW# 23	16 OF 24	667+66	LT	CONCRETE	CONCRETE	15	25	16	152	SEE P&P SHEETS FOR PROFILE INFORMATION														COMMERCIAL
DW# 24	17 OF 24	676+94	LT	GRAVEL	ASPHALT	25	25	14	88	6.68	1.00	4.50	-	7.50	10.00	14.62	-	-	-	-	-	-	-	RESIDENTIAL

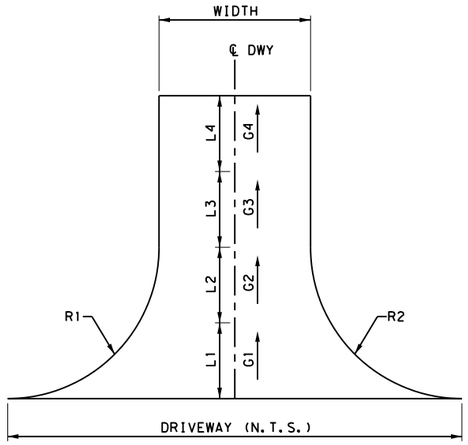

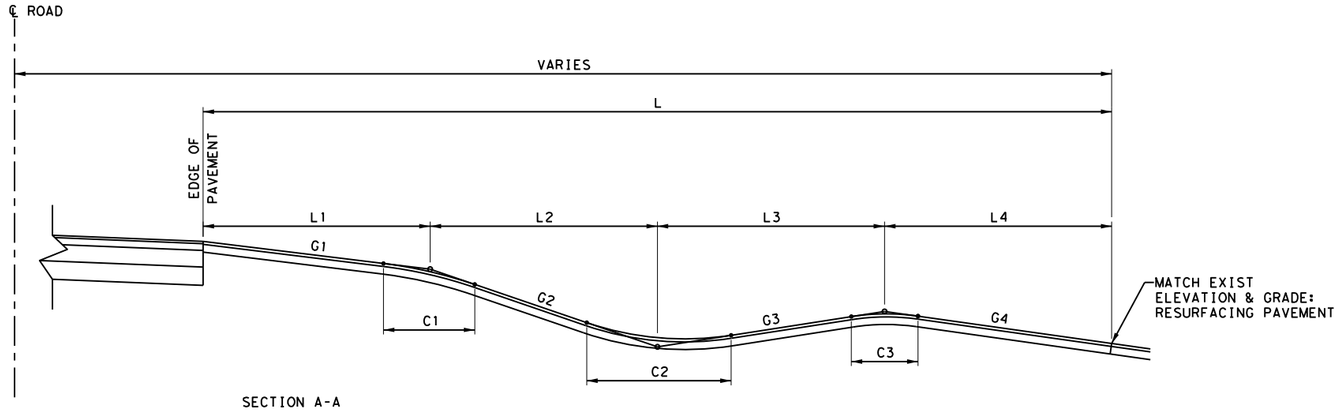

SECTION A-A

STATE OF TEXAS
JOSHUA T. RICHTER
141234
LICENSED
PROFESSIONAL ENGINEER

4/10/2025

WILCO TEXAS

BGE, Inc.
101 W Louis Henna Blvd, Suite 400, Austin, TX 78728
Tel: 512-879-0400 • www.bgeinc.com
TBPE Registration No. F-1046

RM 2243

DRIVEWAY AND INTERSECTION DETAILS

SHEET 1 OF 2

FED.RD. DIV.NO.	PROJECT NO.		SHEET NO.
6			158
STATE	DIST.	COUNTY	
TEXAS	AUS	WILLIAMSON	
CONT.	SECT.	JOB	HIGHWAY NO.
0914	05	222	RM 2243

4/10/2025 12:56:09 PM pdf.pltcfg
C:\TXC\Projects\County\Williamson\7473-02 RM 2243 Phase 1A\03*CADD\01*Shts\03-RDWY\RM2243*P1A*DRWY*DET*01.dgn

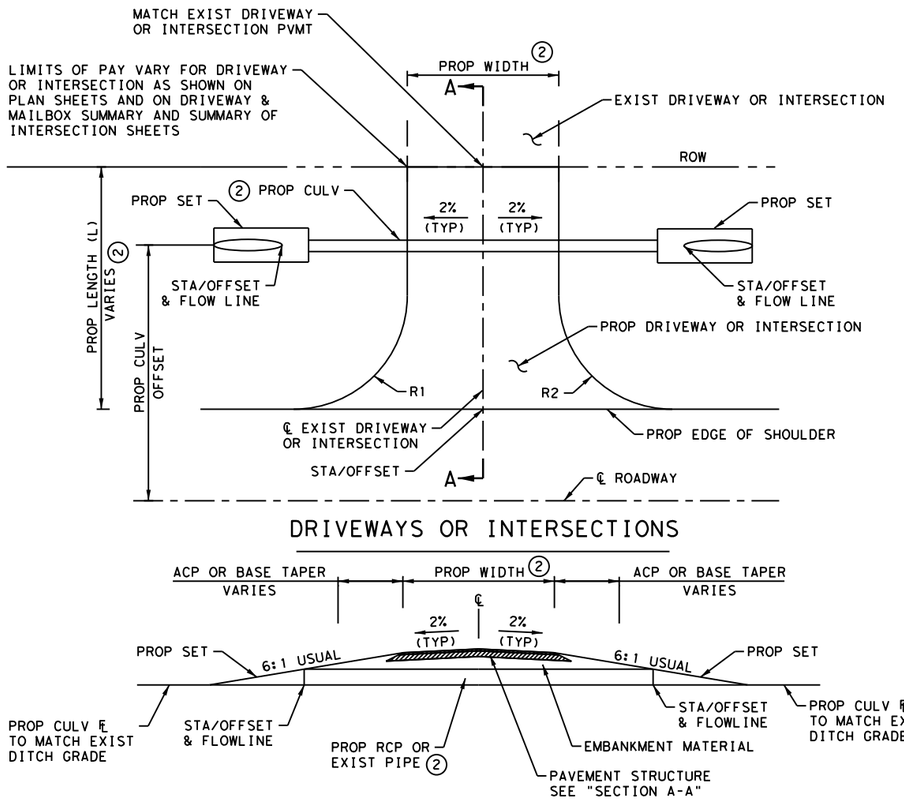

DRIVEWAYS OR INTERSECTIONS

DRIVEWAY OR INTERSECTION TYPICAL SECTION

(ACP, CONCRETE)

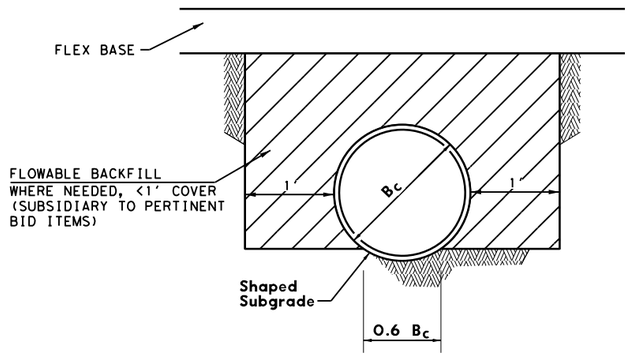

FLOWABLE BACKFILL DETAIL (3) FOR INTERSECTIONS

NTS

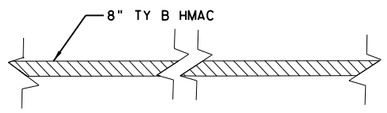

PAVEMENT REPAIR DETAIL

NTS

NOTE: LOCATION AS DIRECTED BY CONSTRUCTION INSPECTOR

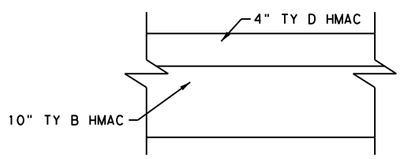

FULL DEPTH PAVEMENT REPAIR

LOCATIONS AND SIZES WILL BE FIELD DETERMINED BY THE ENGINEER.

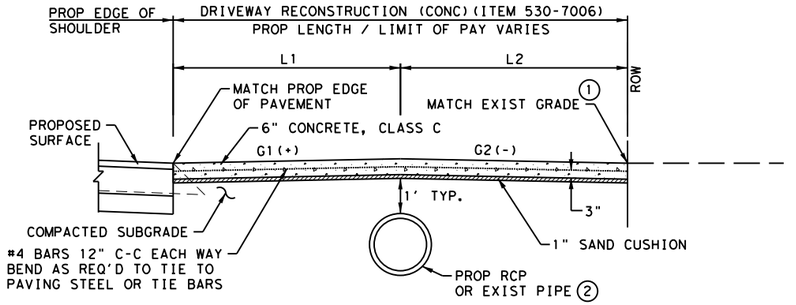

SECTION A-A

DRIVEWAYS (CONC)

NOTES:

(1) SAW CUT JOINT AT LIMITS OF PAY LINE ON DRIVEWAYS OR INTERSECTIONS WITH EXISTING SURFACE.

(2) SEE "DRIVEWAY TABLE" AND "SUMMARY OF INTERSECTIONS" FOR ADDITIONAL DETAILS, DIMENSIONS AND QUANTITIES.

(3) IF LESS THAN 1' OF COVER BETWEEN BOTTOM OF PROPOSED PAVEMENT STRUCTURE AND TOP OF PROPOSED DRIVEWAY CULVERT, USE FLOWABLE BACKFILL DETAIL FOR INTERSECTIONS.

(4) IF LESS THAN 1' OF COVER BETWEEN BOTTOM OF PROPOSED PAVEMENT STRUCTURE AND TOP OF PROPOSED ROADWAY CROSS CULVERT, US FLOWABLE BACKFILL DETAIL FOR CROSS CULVERTS.

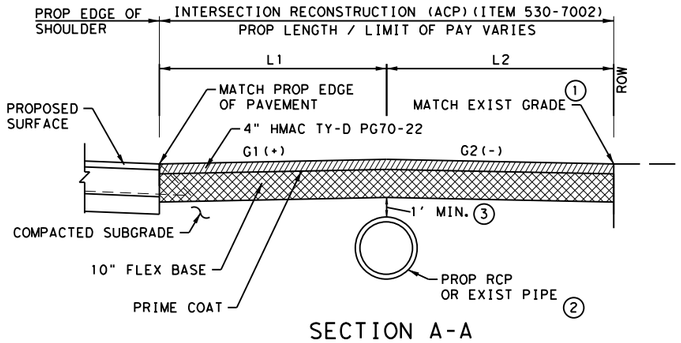

SECTION A-A

INTERSECTIONS (ACP)

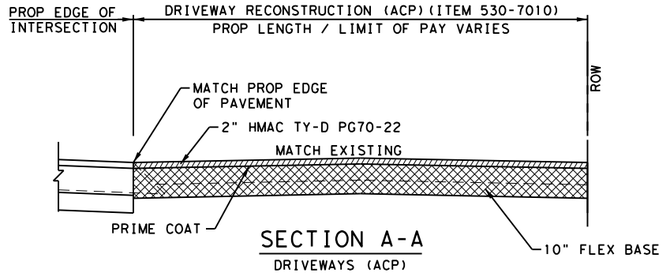

SECTION A-A

DRIVEWAYS (ACP)

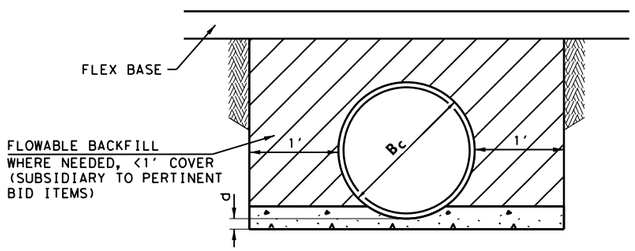

FLOWABLE BACKFILL DETAIL (4) FOR CROSS CULVERTS

NTS

B_c - OUTSIDE DIAMETER OR HORIZONTAL DIMENSION

D - INSIDE DIAMETER OF PIPE

d - MIN. BEDDING MATERIAL BELOW PIPE

D	d
≤ 27"	3"
30" TO 60"	4"
≥ 66"	6"

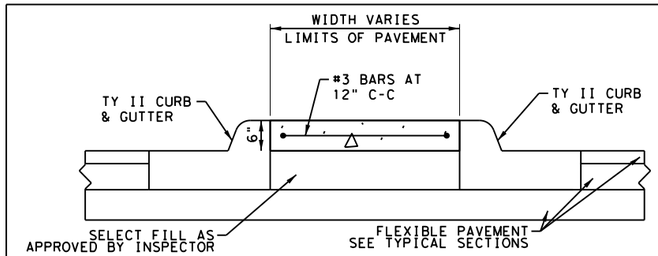

CONCRETE MEDIAN DETAIL

FLEXIBLE PAVEMENT NOT TO SCALE

NOTES:

(1) PROVIDE #3 REINFORCING BARS AT 12" SPACING CENTER TO CENTER. USE LAP SPLICES OF A MINIMUM 6", MEASURED FROM THE ENDS OF REINFORCING BARS.

(2) REINFORCING STEEL IS CONTINUOUS THROUGH CONCRETE MEDIAN CONSTRUCTION JOINTS. PROVIDE REINFORCING BARS THAT EXTEND 1'-1" MINIMUM INTO ADJACENT CONCRETE MEDIAN ON EACH SIDE OF CONSTRUCTION JOINT.

(3) GROOVED JOINTS IN CONCRETE MEDIAN SHALL BE AT A MAX SPACING OF 10' AND SHALL HAVE 3/4" EXPANSION JOINTS AT A MAX. SPACING OF 60' AND TO COINCIDE WITH CURB EXPANSION JOINTS.

4/10/2025

WILCO TEXAS

BGE, Inc.
101 W Louis Henna Blvd, Suite 400, Austin, TX 78728
Tel: 512-879-0400 • www.bgeinc.com
TBPE Registration No. F-1046

RM 2243

DRIVEWAY AND INTERSECTION DETAILS

SHEET 2 OF 2

FED.RD. DIV.NO.	PROJECT NO.		SHEET NO.
6			159
STATE	DIST.	COUNTY	
TEXAS	AUS	WILLIAMSON	
CONT.	SECT.	JOB	HIGHWAY NO.
0914	05	222	RM 2243

4/10/2025 12:56:09 PM pdf.pltcfg
G:\TXC\Projects\County\Williamson\7473-02 RM 2243 Phase 1A\03*CADD\01*Shts\03-RDWY\RM2243*P1A*DRWY*DET*02.dgn

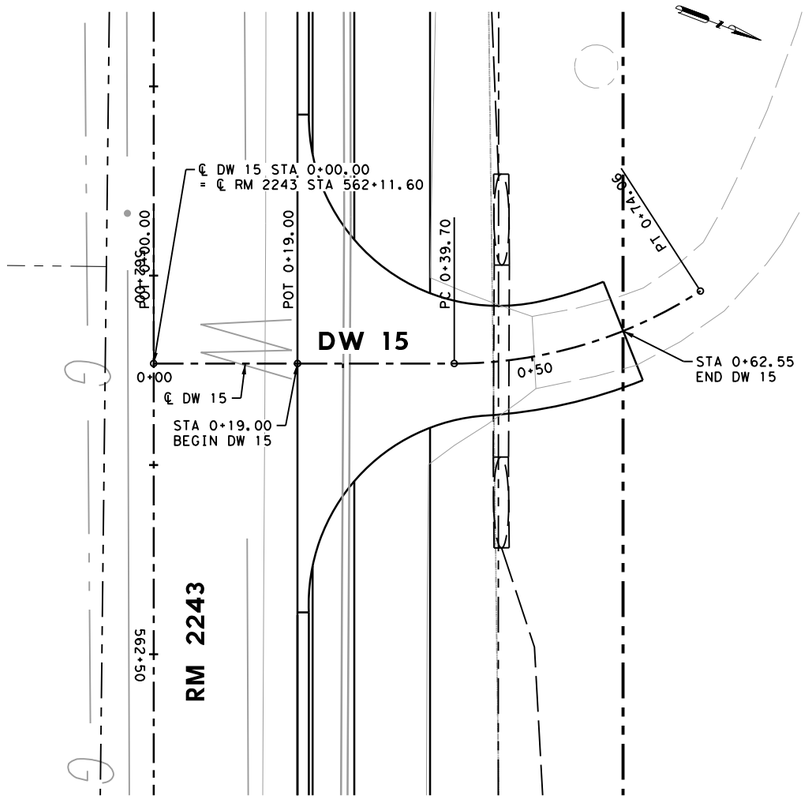

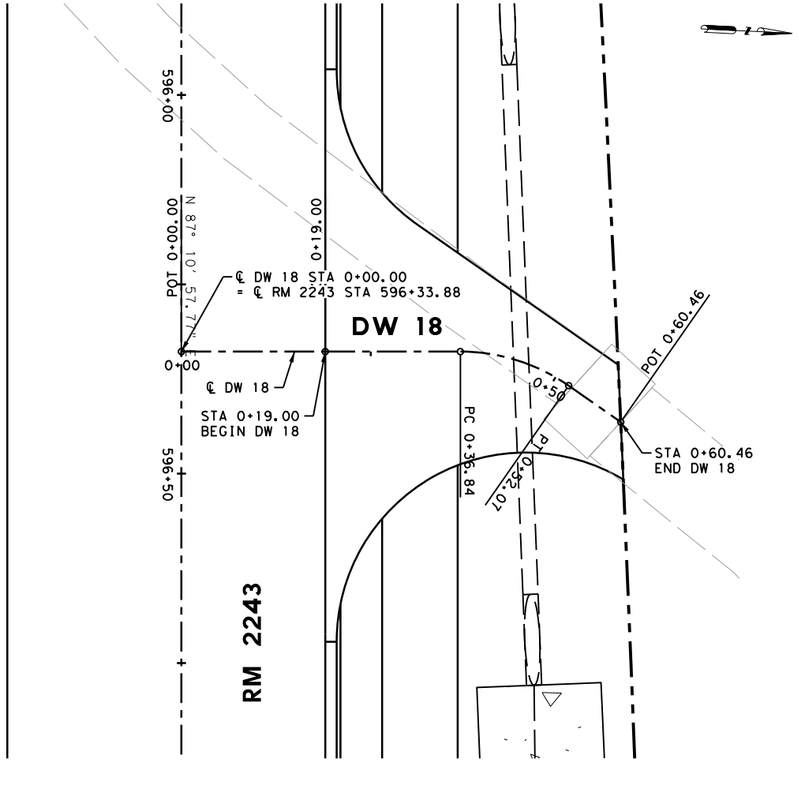

LEGEND:

- EXISTING SIGN
- DIRECTION OF TRAFFIC
- (DW#) DRIVEWAY NUMBER
- [CURVE #] ALIGNMENT CURVE NUMBER
- DITCH FLOWLINE
- MILL & OVERLAY

NOTES:

1. ALL DIMENSIONS AND OFFSETS ARE RELATIVE TO THE LIP OF GUTTER UNLESS OTHERWISE NOTED
2. FOR 50 FT RADIALLY FROM ALL LCRA POLES, CONTRACTOR SHALL COMPACT ALL FILL TO ORDINARY COMPACTION IN NO GREATER THAN 8IN LIFTS. CONTRACTOR SHALL PROOF ROLL BETWEEN EACH LIFT AND CORRECT UNSTABLE OR NONUNIFORM AREAS.

SCALE: 1"=20' H
1"=2' V

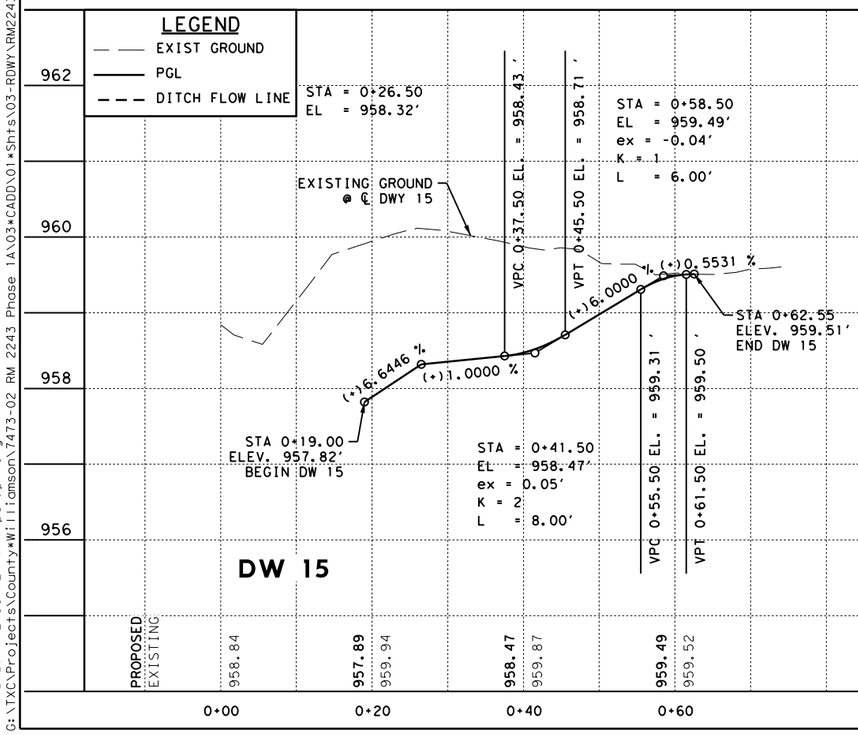

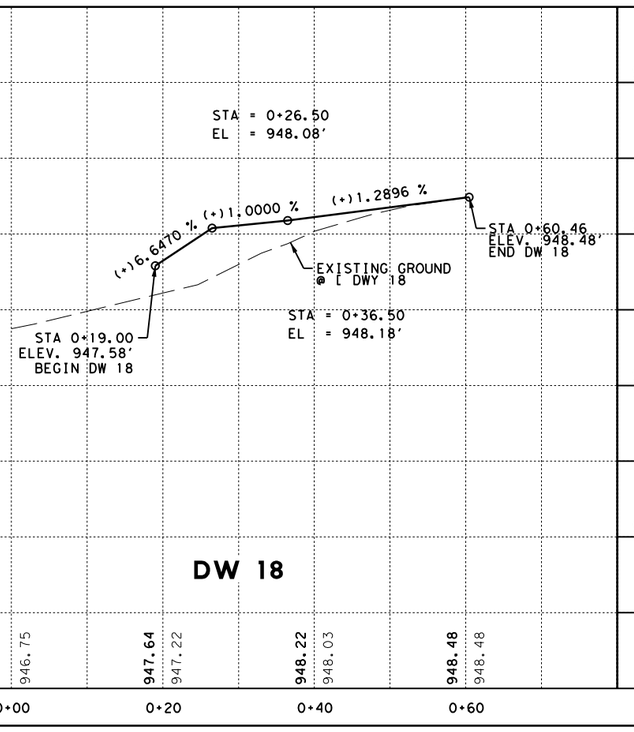

STATE OF TEXAS
JOSHUA T. RICHTER
141234
PROFESSIONAL ENGINEER
LICENSED

4/10/2025

WILCO TEXAS

BGE, Inc.
101 W Louis Henna Blvd, Suite 400, Austin, TX 78728
Tel: 512-879-0400 • www.bgeinc.com
TBPE Registration No. F-1046

RM 2243

DRIVEWAY PLAN & PROFILE

SHEET 1 OF 5

FED.RD. DIV.NO.	PROJECT NO.	SHEET NO.
6		160

STATE	DIST.	COUNTY
TEXAS	AUS	WILLIAMSON

CONT.	SECT.	JOB	HIGHWAY NO.
0914	05	222	RM 2243

4/10/2025 12:56:12 PM pdf.pltcfg
G:\TXC\Projects\County\Williamson\7473-02 RM 2243 Phase 1A\03*CADD\01*Shts\03-RDWY\RM2243*P1A*PP*DRWY*01.dgn

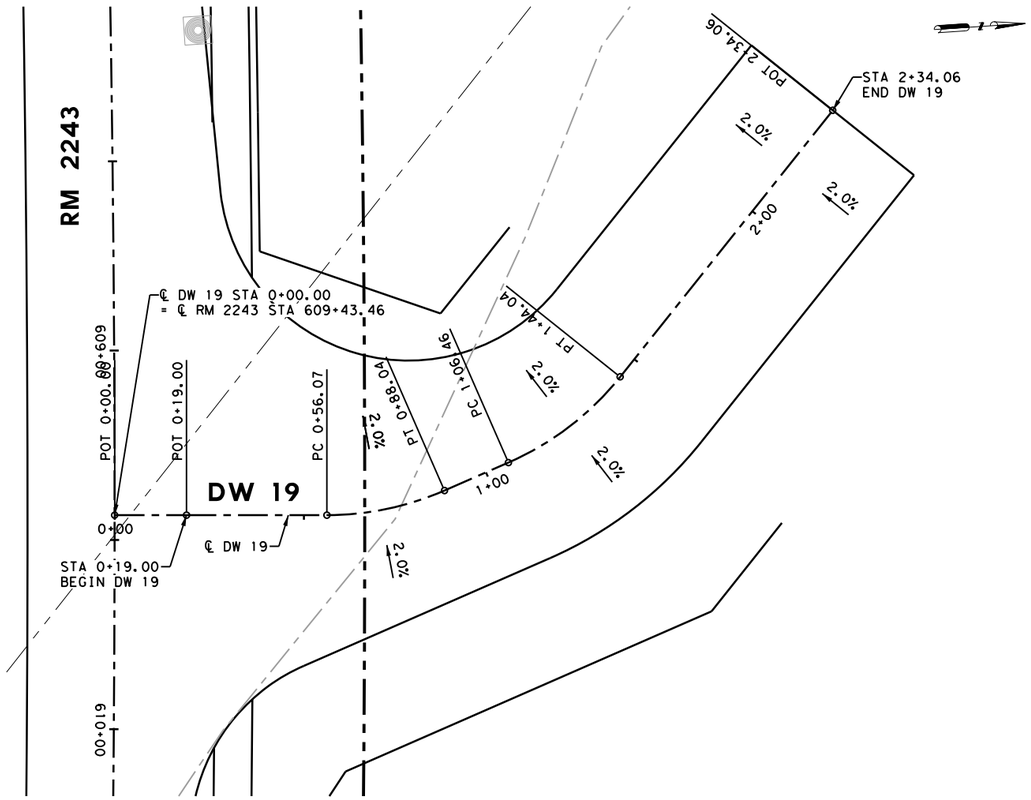

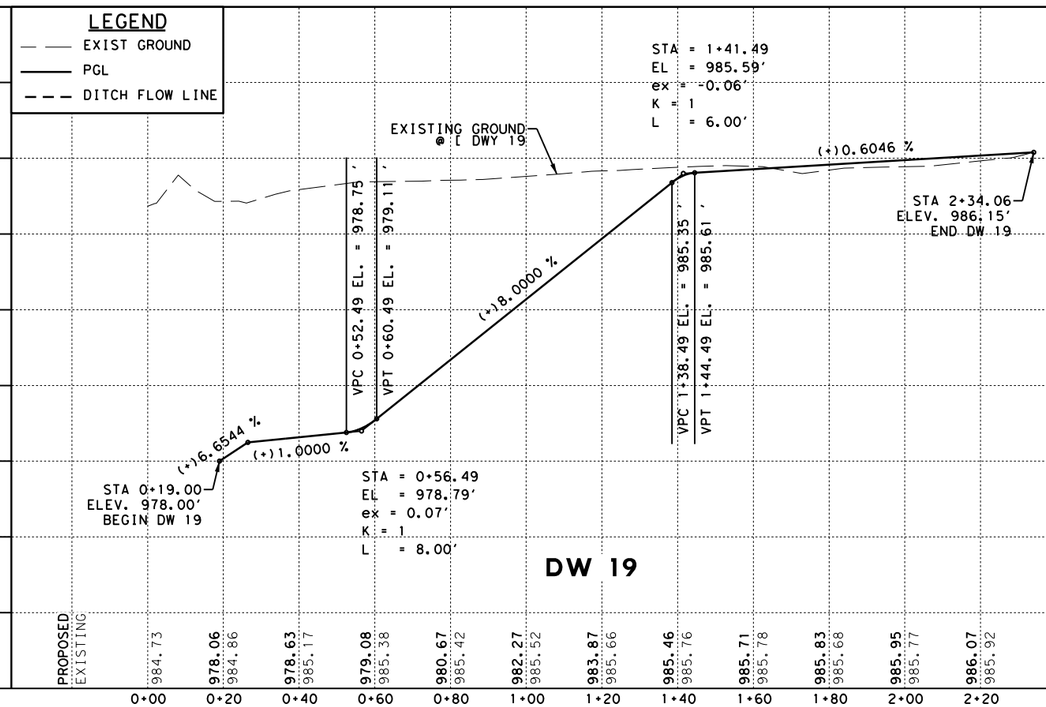

LEGEND:

- EXISTING SIGN
- DIRECTION OF TRAFFIC
- (DW#) DRIVEWAY NUMBER
- [CURVE #] ALIGNMENT CURVE NUMBER
- DITCH FLOWLINE
- MILL & OVERLAY

NOTES:

1. ALL DIMENSIONS AND OFFSETS ARE RELATIVE TO THE LIP OF GUTTER UNLESS OTHERWISE NOTED
2. FOR 50 FT RADIALLY FROM ALL LCRA POLES, CONTRACTOR SHALL COMPACT ALL FILL TO ORDINARY COMPACTION IN NO GREATER THAN 8IN LIFTS. CONTRACTOR SHALL PROOF ROLL BETWEEN EACH LIFT AND CORRECT UNSTABLE OR NONUNIFORM AREAS.

0 20 40
SCALE: 1"=40' H
1"=4' V

STATE OF TEXAS
JOSHUA T. RICHTER
141234
LICENSED
PROFESSIONAL ENGINEER

4/10/2025

WILCO
TEXAS

BGE, Inc.
101 W Louis Henna Blvd, Suite 400, Austin, TX 78728
Tel: 512-879-0400 ● www.bgeinc.com
TBPE Registration No. F-1046

RM 2243

DRIVEWAY PLAN & PROFILE

SHEET 2 OF 5

FED.RD. DIV.NO.	PROJECT NO.		SHEET NO.
6			161
STATE	DIST.	COUNTY	
TEXAS	AUS	WILLIAMSON	
CONT.	SECT.	JOB	HIGHWAY NO.
0914	05	222	RM 2243

4/10/2025 12:56:14 PM pdf.pltcfg
G:\TXC\Projects\County*Williamson\7473-02 RM 2243 Phase 1A\03*CADD\01*Shts\03-RDWY\RM2243*P1A*PP*DRWY*02.dgn

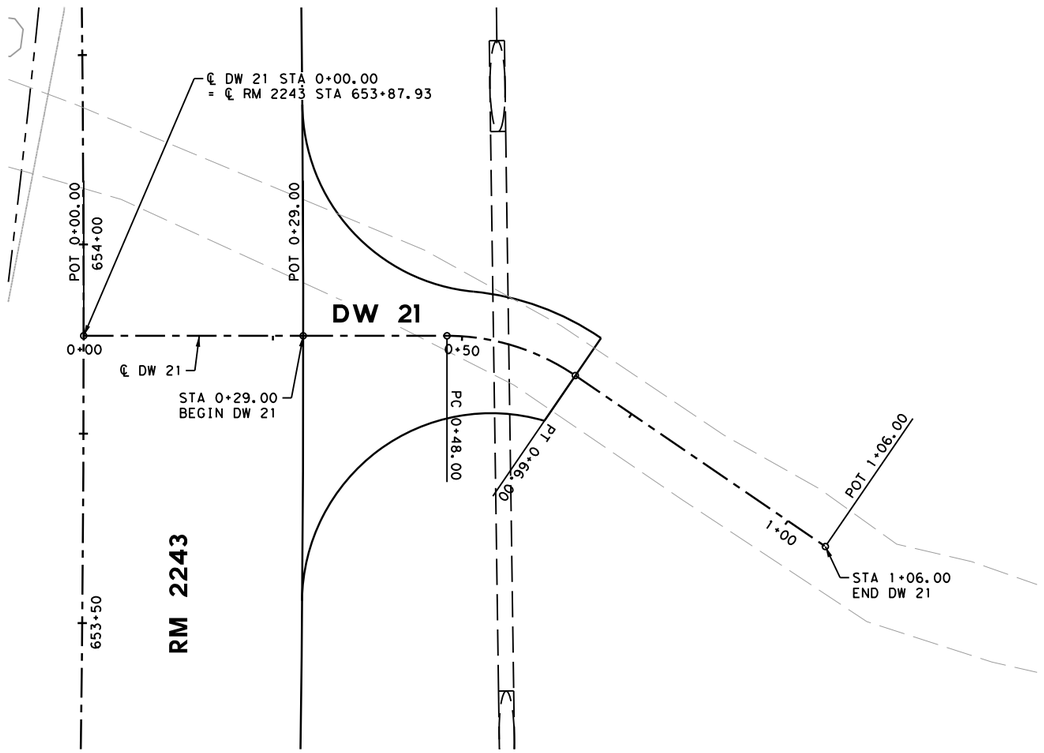

LEGEND:

- EXISTING SIGN
- DIRECTION OF TRAFFIC
- DW# — DRIVEWAY NUMBER
- CURVE # — ALIGNMENT CURVE NUMBER
- DITCH FLOWLINE
- MILL & OVERLAY

NOTES:

1. ALL DIMENSIONS AND OFFSETS ARE RELATIVE TO THE LIP OF GUTTER UNLESS OTHERWISE NOTED
2. FOR 50 FT RADIALLY FROM ALL LCRA POLES, CONTRACTOR SHALL COMPACT ALL FILL TO ORDINARY COMPACTION IN NO GREATER THAN 8IN LIFTS. CONTRACTOR SHALL PROOF ROLL BETWEEN EACH LIFT AND CORRECT UNSTABLE OR NONUNIFORM AREAS.

0 10 20
SCALE: 1"=20' H
1"=2' V

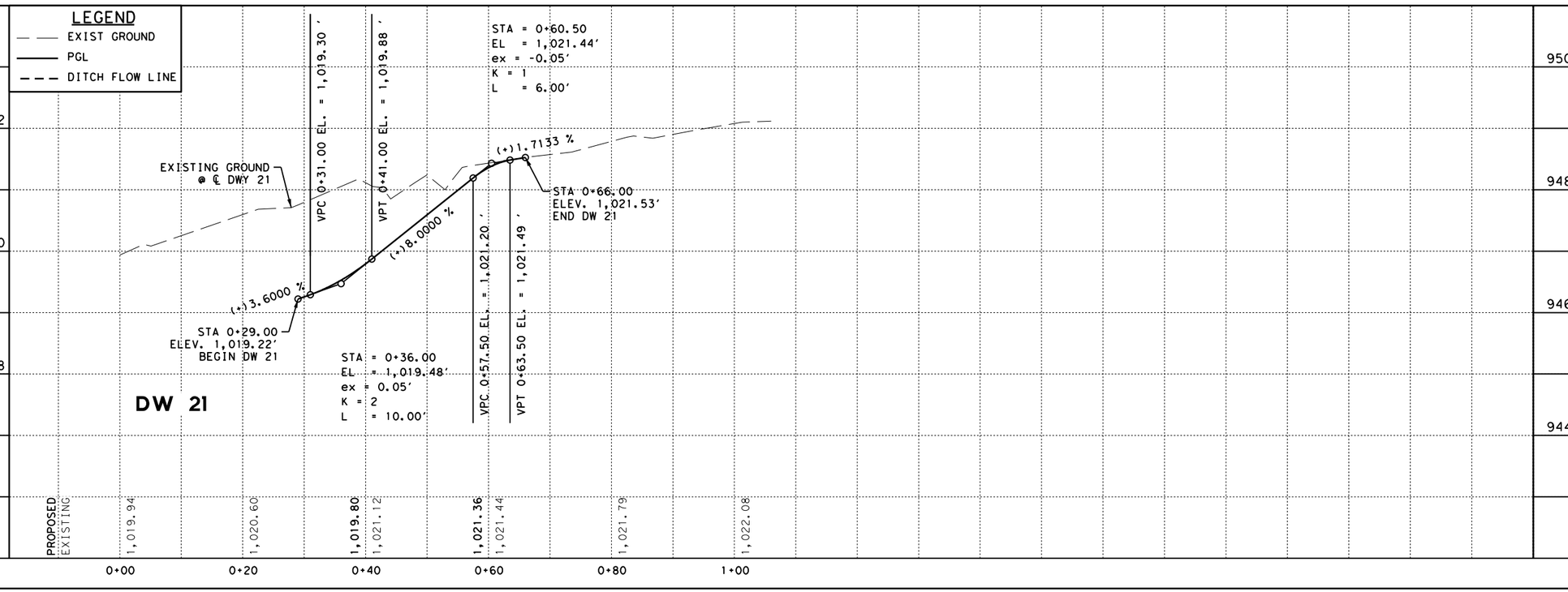

STATE OF TEXAS
JOSHUA T. RICHTER
141234
LICENSED
PROFESSIONAL ENGINEER

4/10/2025

WILCO TEXAS

BGE, Inc.
101 W Louis Henna Blvd, Suite 400, Austin, TX 78728
Tel: 512-879-0400 • www.bgeinc.com
TBPE Registration No. F-1046

RM 2243

DRIVEWAY PLAN & PROFILE

SHEET 3 OF 5

FED.RD. DIV.NO.	PROJECT NO.	SHEET NO.
6		162

STATE	DIST.	COUNTY
TEXAS	AUS	WILLIAMSON

CONT.	SECT.	JOB	HIGHWAY NO.
0914	05	222	RM 2243

4/10/2025 12:56:15 PM pdf.pltcfg
G:\TXC\Projects\County\Williamson\7473-02 RM 2243 Phase 1A\03\CADD\01\Shts\03-RDWY\RM2243_P1A_PP_DRWY_03.dgn

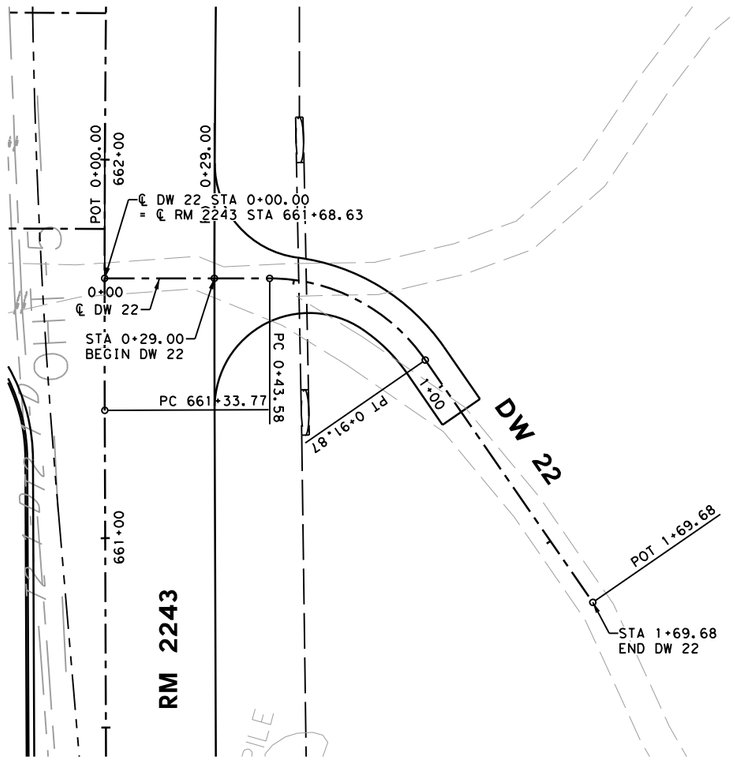

LEGEND:

- EXISTING SIGN
- DIRECTION OF TRAFFIC
- DW# — DRIVEWAY NUMBER
- CURVE # — ALIGNMENT CURVE NUMBER
- DITCH FLOWLINE
- MILL & OVERLAY

NOTES:

1. ALL DIMENSIONS AND OFFSETS ARE RELATIVE TO THE LIP OF GUTTER UNLESS OTHERWISE NOTED
2. FOR 50 FT RADIALLY FROM ALL LCRA POLES, CONTRACTOR SHALL COMPACT ALL FILL TO ORDINARY COMPACTION IN NO GREATER THAN 8IN LIFTS. CONTRACTOR SHALL PROOF ROLL BETWEEN EACH LIFT AND CORRECT UNSTABLE OR NONUNIFORM AREAS.

0 20 40
SCALE: 1"=40' H
1"=4' V

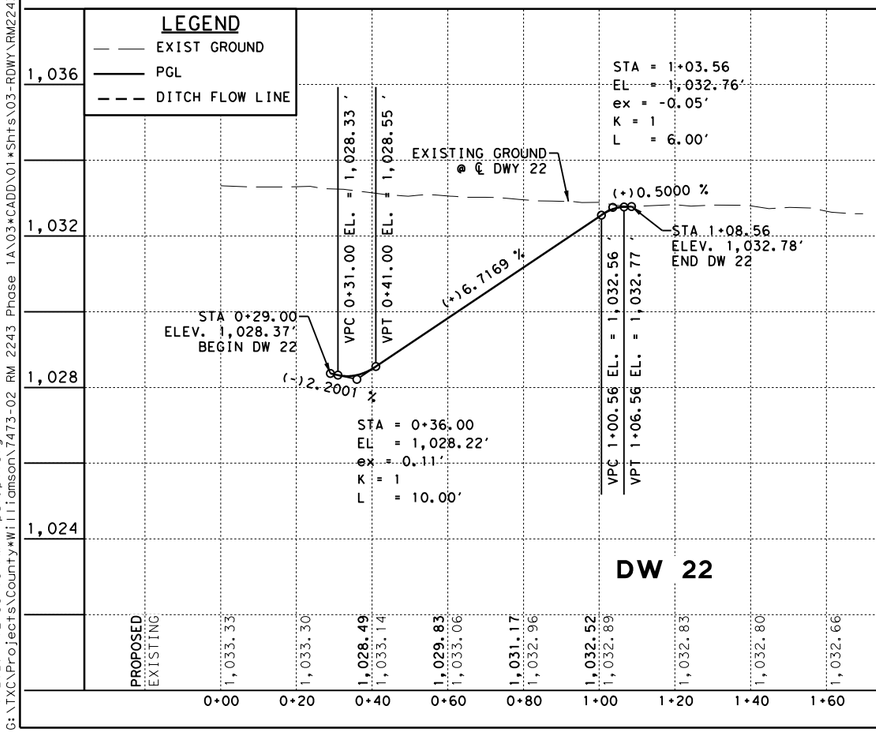

STATE OF TEXAS
JOSHUA T. RICHTER
141234
LICENSED
PROFESSIONAL ENGINEER

4/10/2025

WILCO TEXAS

BGE, Inc.
101 W Louis Henna Blvd, Suite 400, Austin, TX 78728
Tel: 512-879-0400 • www.bgeinc.com
TBPE Registration No. F-1046

RM 2243

DRIVEWAY PLAN & PROFILE

SHEET 4 OF 5

FED.RD. DIV.NO.	PROJECT NO.		SHEET NO.
6			163
STATE	DIST.	COUNTY	
TEXAS	AUS	WILLIAMSON	
CONT.	SECT.	JOB	HIGHWAY NO.
0914	05	222	RM 2243

4/10/2025 12:56:16 PM pdf.pltcfg
G:\TXC\Projects\County\Williamson\7473-02 RM 2243 Phase 1A\03*CADD\01*Shts\03-RDWY\RM2243*P1A*PP*DRWY*04.dgn

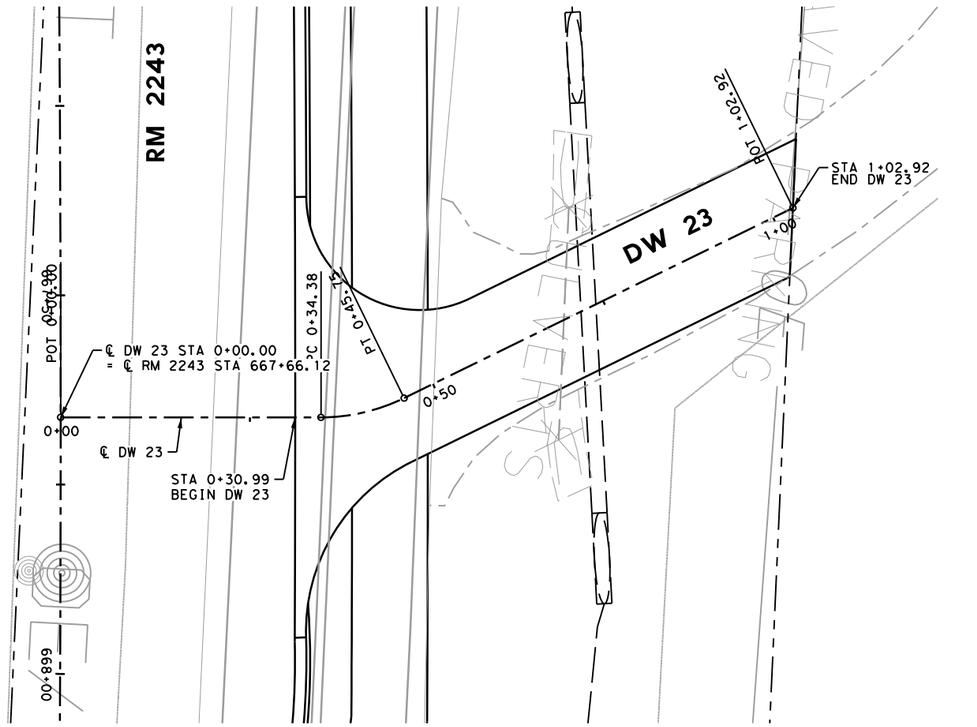

LEGEND:

- EXISTING SIGN
- DIRECTION OF TRAFFIC
- DW# — DRIVEWAY NUMBER
- CURVE # — ALIGNMENT CURVE NUMBER
- DITCH FLOWLINE
- MILL & OVERLAY

NOTES:

1. ALL DIMENSIONS AND OFFSETS ARE RELATIVE TO THE LIP OF GUTTER UNLESS OTHERWISE NOTED
2. FOR 50 FT RADIALLY FROM ALL LCRA POLES, CONTRACTOR SHALL COMPACT ALL FILL TO ORDINARY COMPACTION IN NO GREATER THAN 8IN LIFTS. CONTRACTOR SHALL PROOF ROLL BETWEEN EACH LIFT AND CORRECT UNSTABLE OR NONUNIFORM AREAS.

0 10 20
SCALE: 1"=20' H
1"=2' V

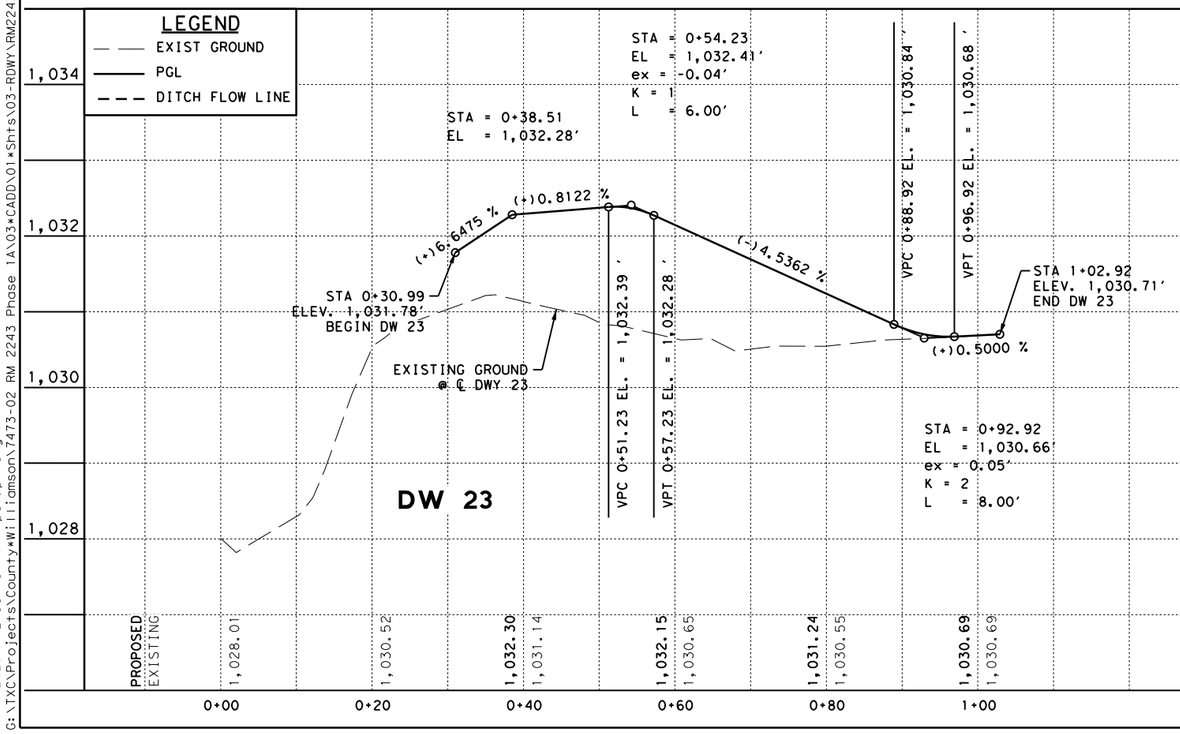

STATE OF TEXAS
JOSHUA T. RICHTER
141234
LICENSED
PROFESSIONAL ENGINEER

4/10/2025

WILCO
TEXAS

BGE, Inc.
101 W Louis Henna Blvd, Suite 400, Austin, TX 78728
Tel: 512-879-0400 ● www.bgeinc.com
TBPE Registration No. F-1046

RM 2243

DRIVEWAY PLAN & PROFILE

SHEET 5 OF 5

FED.RD. DIV.NO.	PROJECT NO.	SHEET NO.
6		164

STATE	DIST.	COUNTY
TEXAS	AUS	WILLIAMSON

CONT.	SECT.	JOB	HIGHWAY NO.
0914	05	222	RM 2243

4/10/2025 12:56:18 PM pdf.pltcfg
G:\TXC\Projects\County\Williamson\7473-02 RM 2243 Phase 1A\03*CADD\01*Shts\03-RDWY\RM2243*P1A*PP*DRWY*05.dgn

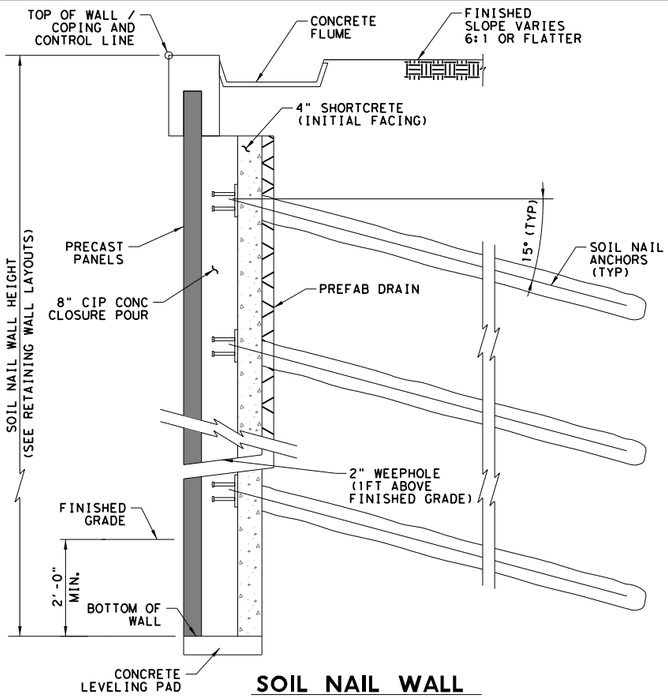

SOIL NAIL WALL TYPICAL SECTION

ESTIMATED SOIL NAIL PLAN & PROFILE SHEET QUANTITIES				
ITEM NO.	CODE	DESCRIPTION	UNIT	QUANTITY
423	7032	RETAINING WALL (SOIL NAIL) (FASCIA)	SF	14854
432	7012	RIPRAP (CONC) (FLUME)	CY	173

GENERAL NOTES:

1. THESE DRAWINGS PROVIDE INFORMATION SPECIFIC TO THE DESIGN AND INSTALLATION OF THE PERMANENT WALLS RW-1 AND RW-2 ALONG RM 2243.
2. THE DESIGN OF THE SOIL NAIL WALLS IS BASED ON CORSAIR CONSULTING LLC FINAL GEOTECHNICAL ENGINEERING REPORT "RM 2243 IMPROVEMENTS SOIL/ROCK NAILED RETAINING WALLS", PROJECT NO.1900598 DATED NOVEMBER 25, 2024.
3. UNDER NO CIRCUMSTANCES SHALL ANY EXCAVATION BE MADE BELOW THE BOTTOM OF SOIL NAIL WALL WITHOUT PRIOR APPROVAL OF THE ENGINEER.
4. CONTRACTOR SHALL TAKE SUITABLE MEASURES TO PREVENT PONDING OF WATER ADJACENT TO THE SHORING (TEMPORARY OR FINAL FACE OF WALL) THROUGHOUT THE DURATION OF THE PROJECT. PROLONGED PONDING MAY COMPROMISE THE INTEGRITY AND/OR STABILITY OF THE WALL.
5. SEE SOIL NAIL LAYOUTS FOR NAIL LOCATIONS IN ELEVATION ALONG THE WALL.
6. CHAMFER ALL EXPOSED CORNERS 3/4".
7. ALL RETAINING WALL AESTHETIC TREATMENT (ASHLAR PATTERN) AND DETAILS, INCLUDING FORM LINES, CONCRETE FINISH/PAINT, COPING, ETC. WILL BE CONSIDERED SUBSIDIARY TO THE PAY ITEM 423.
8. CONTRACTOR IS RESPONSIBLE FOR ENSURING THE TOP OF WALL ELEVATIONS ARE CONSTRUCTED TO THE ROADWAY EDGE OF PAVEMENT ELEVATIONS WHILE MAINTAINING A SLOPE OF 6:1 OR FLATTER AS SHOWN IN THE TYPICAL SECTION BASED ON FIELD CONDITIONS.
9. CONTRACTOR SHALL NOTIFY THE GEOTECHNICAL ENGINEER OF RECORD AND THE ENGINEER OF ANY GRANULAR MATERIAL ENCOUNTERED WHICH WILL CAUSE THE DRILLED HOLE TO COLLAPSE.
10. THE PRICE BID PER SQUARE FOOT FOR THE ITEM CONCRETE RETAINING WALL (SOIL NAIL) FASCIA, SHALL INCLUDE ALL CONCRETE, JOINTS, REINFORCING STEEL, COPINGS ON TOP OF WALL, PAINT, PNEUMATICALLY PLACED CONCRETE, DRAINAGE MATERIAL, AND ANY OTHER MATERIALS NECESSARY TO CONSTRUCT THE WALL. SOIL NAILS SHALL BE PAID FOR SEPARATELY BY LINEAR FOOT. THE PRICE BID PER SOIL NAIL WILL INCLUDE ALL DRILLING, NAIL REINFORCEMENT, HARDWARE, GROUT, AND ALL TESTING.
11. SEE RETAINING WALL SOIL NAIL LAYOUTS FOR SECTION WIDTHS, NAIL LENGTHS, AND ESTIMATED NUMBER OF NAILS.
12. USE ADDITIONAL HARDENED WASHER FOR SOIL NAIL BARS. THREADED STEEL ANCHOR NUTS SHALL BE CAPABLE OF DEVELOPING 100% OF THE GUARANTEED ULTIMATE TENSILE STRENGTH OF THREADED BAR AND CONFORM TO ASTM A563.
13. IF GRANULAR SOIL IS ENCOUNTERED BEHIND SOIL NAIL RETAINING WALLS, CONTRACTOR SHALL CONTACT GEOTECHNICAL ENGINEER PRIOR TO CONTINUING WITH EXCAVATION.
14. EXPANSION JOINTS IN THE FLUME, RIPRAP, COPING, AND RETAINING WALL SHALL BE LOCATED ON 96' CENTERS (MAX.) AND SHALL BE ALIGNED.
15. ACTUAL HEIGHTS AND NUMBER OF NAIL ROWS VARIES FROM THAT SHOWN IN TYPICAL SECTION. SEE RETAINING WALL LAYOUT FOR WALL PAYMENT HEIGHTS AND NUMBER OF NAIL ROWS.
16. DRAINAGE SYSTEM SHALL CONSIST OF 2'-0" WIDE VERTICAL GEOCOMPOSITE PANELS OR STRIPS PLACED BETWEEN NAIL COLUMNS, EMPTYING INTO A 2" DIA. WEEPHOLE. THE STRIPS SHALL BE SPLICED TO OVERLAP A MINIMUM OF 12" OVERLAP TO ASSURE WATER FLOW IS NOT IMPEDED. WHERE 24" STRIPS ARE NOT POSSIBLE DUE TO CLOSE NAIL SPACING, 12" WIDE STRIPS ARE ACCEPTABLE. THE DRAINAGE CORE OF THE STRIPS SHALL HAVE MINIMUM COMPRESSIVE STRENGTH OF 40 PSI ACCORDING TO ASTM D1621 PROCEDURE A. THE DRAINAGE CORE SHALL HAVE MINIMUM FLOW RATE OF 0.1 GALLONS PER SECOND PER FOOT OF STRIP WIDTH ACCORDING TO ASTM D4716. THE GEOCOMPOSITE STRIPS ARE SUBSIDIARY TO TXDOT ITEM 423 "RETAINING WALLS". PNEUMATICALLY PLACED CONCRETE SHALL BE PLACED OVER THE DRAINS WITH THE DRAINAGE MATS.

FACING MATERIALS:

1. ALL REINFORCING STEEL SHALL CONFORM TO ASTM A615 (GRADE 60).
2. ALL WELDED WIRE REINFORCEMENT SHALL CONFORM TO ASTM A1064 (GRADE 65).
3. ALL CONCRETE SHALL BE CLASS C PER TXDOT ITEM 421 UNO WITH MINIMUM 28-DAY COMPRESSIVE STRENGTH OF 3,600 PSI.
4. SHOTCRETE SHALL BE PER TXDOT ITEM 431 "PNEUMATICALLY PLACED CONCRETE" AND SHALL HAVE MINIMUM 7-DAY COMPRESSIVE STRENGTH OF 3,500 PSI AND A MINIMUM 28-DAY COMPRESSIVE STRENGTH OF 4,000 PSI AND SHALL COMPLY WITH REQUIREMENTS OF TXDOT ITEM 431 "PNEUMATICALLY PLACED CONCRETE", EXCEPT IT WILL NOT BE PAID FOR DIRECTLY.
5. SHOTCRETE MUST ATTAIN THE MINIMUM 3-DAY COMPRESSIVE STRENGTH OF 1,500 PSI.

SOIL NAIL MATERIALS:

1. GROUT SHALL BE TYPE II NEAT OR SAND CEMENT MIXTURE AND SHALL ACHIEVE A MINIMUM 3-DAY COMPRESSIVE STRENGTH OF 1,500 PSI AND A MINIMUM 28-DAY COMPRESSIVE STRENGTH OF 3,500 PSI. WATER FOR MIXING GROUT SHALL BE POTABLE. ALL NAILS SHALL BE GROUTED THE SAME DAY THEY ARE DRILLED. INJECT GROUT AT THE LOWEST POINT OF THE DRILL HOLE BY TREMIE SUCH THAT THE HOLE IS FILLED WITH GROUT PROGRESSIVELY FROM THE BOTTOM OF TO THE TOP. GROUTING IS COMPLETE WHEN GROUT REACHES THE TOP AND RUNS OUT OF THE DRILL HOLE.
2. SOIL NAIL ANCHORS SHALL CONFORM TO ASTM A615 (GRADE 75). NAIL ANCHOR SHALL BE EPOXY COATED WITH A MINIMUM 12 MIL THICKNESS CONFORMING TO ASTM A775.
3. NAIL ANCHORS AND NAIL HEAD (BEARING PLATES, HEADED STUDS, WASHERS, AND NUTS) SHALL HAVE EPOXY COATING OR GALVINIZATION. EPOXY COATING SHALL CONFORM TO ASTM A775 WITH MINIMUM 12 MILS OR AS RECOMMENDED BY THE MANUFACTURER.
4. ALL HARDWARE, INCLUDING NAIL HEAD AND COUPLERS, SHALL BE CAPABLE OF DEVELOPING 100% OF THE MINIMUM GUARANTEED ULTIMATE TENSILE STRENGTH OF THE BAR.

CONSTRUCTION NOTES:

1. THE CONTRACTOR IS RESPONSIBLE FOR PROVIDING AND MAINTAINING STABLE SLOPES ABOVE AND BELOW THE NAILS. THE SLOPE IN FRONT OF THE RETAINING WALL SHALL BE REMOVED IN LIFTS. THE DEPTH OF EACH LIFT SHALL BE LIMITED TO THE AMOUNT NECESSARY TO INSTALL A SINGLE HORIZONTAL ROW OF SOIL NAILS. AT NO TIME SHALL MORE THAN 5' OF UNNAILED VERTICAL SOIL BE EXPOSED. THE LENGTH OF EACH LIFT REMOVED SHALL BE LIMITED TO THE AMOUNT THAT CAN BE NAILED IN ONE DAY.
2. AT NO TIME SHALL ANY UNNAILED CUT FACE BE EXPOSED FOR OVER 48 HOURS.
3. UPON COMPLETION OF EACH DAY'S INSTALLATION OF NAILS AND PREFABRICATED DRAIN MAT, PNEUMATICALLY PLACED CONCRETE (PPC) SHALL BE APPLIED TO THE CUT FACE. THE CONCRETE SHALL BE REINFORCED WITH A SINGLE LAYER OF WELDED WIRE REINFORCING FABRIC, 4X4-W2.9XW2.9, AND HORIZONTAL WALER BARS SHOWN ON THE DETAILS. ANCHOR PLATES AND NUTS SHALL BE TIGHTENED UP TO THE FACE OF THE PPC. WHEN ALL ROWS OF NAILS HAVE BEEN PLACED, PRECAST CONCRETE SHALL BE PLACED IN LIFTS NOT EXCEEDING 6 FT UNLESS OTHERWISE APPROVED BY THE ENGINEER.
4. ALL UTILITIES SHALL BE FIELD LOCATED PRIOR TO BEGINNING OF SOIL NAIL WALL INSTALLATION.

SOIL NAIL CONSTRUCTION SEQUENCE:

1. EXCAVATE FIRST LIFT, 5' MAXIMUM HEIGHT.
2. DRILL HOLES FOR SOIL NAILS AND INSTALL PER TXDOT ITEM 410 "SOIL NAIL ANCHORS".
3. INSTALL GEOCOMPOSITE DRAIN STRIPS.
4. CONSTRUCT INITIAL SHOTCRETE ON CUT FACE. PRIOR TO PROCEEDING WITH THE NEXT EXCAVATION LIFT, SHOTCRETE MUST ATTAIN THE MINIMUM 3-DAY COMPRESSIVE STRENGTH OF 1,500 PSI.
5. INSTALL NAIL HEAD AND TEST AFTER SHOTCRETE AND GROUT HAVE A MINIMUM 28-DAY COMPRESSIVE STRENGTH.
6. REPEAT FOR NEXT LIFT.

STATE OF TEXAS
BRANDON K. SMITH
106318
LICENSED
PROFESSIONAL ENGINEER

4/10/2025

WILCO TEXAS

BGE, Inc.
101 W Louis Henna Blvd, Suite 400, Austin, TX 78728
Tel: 512-879-0400 • www.bgeinc.com
TBPE Registration No. F-1046

RM 2243

GENERAL NOTES

SHEET 1 OF 1

FED.RD. DIV.NO.	PROJECT NO.		SHEET NO.
6			165
STATE	DIST.	COUNTY	
TEXAS	AUS	WILLIAMSON	
CONT.	SECT.	JOB	HIGHWAY NO.
0914	05	222	RM 2243

4/10/2025 12:56:19 PM pdf.pltcfg
G:\TXC\Projects\County\Williamson\7473-02 RM 2243 Phase 1A\03\CADD\01\Shts\04-RETWL\RM2243*P1A*RETWL-GEN*01.dgn

GEOTECHNICAL NOTES:

1. LIVE LOAD SURCHARGE OF 250 PSF APPLIED TO THE WALL.

2. HEAVY CONSTRUCTION OR IMPACT LOADS ARE NOT CONSIDERED IN THE DESIGN OF THE SOIL NAIL WALLS. THE CONTRACTOR SHALL DETERMINE THE IMPACT OF HEAVY CONSTRUCTION TRAFFIC ADJACENT TO WALLS ON BOTH INTERNAL AND GLOBAL STABILITY OF THE WALLS IF APPLICABLE.

3. ALL SOIL NAILS ARE AT 15-DEGREE INCLINATION BELOW HORIZONTAL.

4. DUE TO THE PRESENCE OF COHESIONLESS SOIL LAYERS, THE USE OF TEMPORARY CASING THROUGHOUT THE SOIL LAYERS MAY BE REQUIRED TO MAINTAIN HOLE STABILITY UNTIL GROUT CAN BE INJECTED.

SOIL NAILS TESTING:

1. VERIFICATION AND PROOF TESTING SHALL BE CARRIED OUT IN CONFORMANCE WITH ITEM 410 OF TXDOT STANDARD SPECIFICATIONS. TEST NAILS SHALL BE INSTALLED USING THE SAME EQUIPMENT, INSTALLATION AND GROUTING MEANS AND METHODS, AND HOLE DIAMETER AS PLANNED FOR THE PRODUCTION NAILS. THE CONTRACTOR SHALL ENSURE THE REQUIRED PULLOUT RESISTANCES ARE OBTAINED.

2. CREEP TESTS SHALL BE PERFORMED AS PART OF THE VERIFICATION AND PROOF TESTING AND SHALL CONFORM TO ITEM 410 OF TXDOT STANDARD SPECIFICATIONS.

3. VERIFICATION TESTS SHOULD BE CONDUCTED TO A MAXIMUM LOAD THAT INDUCES BOND STRESSES THAT ARE EQUAL TO OR GREATER THAN THE NOMINAL BOND RESISTANCE FOR THE STATED VERIFICATION TEST LOAD. VERIFICATION TEST LOADS AND BONDED LENGTHS OF TEST SOIL NAILS ARE PROVIDED IN TABLE "SOIL NAIL TEST ANCHORS RW01" AND TABLE "SOIL NAIL TEST ANCHORS RW02".

4. VERIFICATION TESTS SHALL BE PERFORMED ON SACRIFICIAL TEST NAILS ONLY AND ARE NOT TO BE INCORPERATED INTO PERMANENT WORK.

5. PROOF TESTS SHALL BE CONDUCTED DURING CONSTRUCTION ON A MINIMUM OF 5 PERCENT OF THE TOTAL PRODUCTION NAILS THAT ARE INSTALLED. PROOF TESTS ARE INTENDED TO VERIFY THAT THERE ARE NO SIGNIFICANT VARIATIONS IN SOIL NAIL PERFORMANCE THROUGHOUT THE WALL. WHEN SELECTING NAILS FOR PROOF TESTING, THE INSTALLATION RECORDS OF THE NAILS PREPARED BY THE INSPECTOR SHALL BE CONSIDERED.

6. PROOF TESTING SHALL BE CONDUCTED WHERE ISSUES ARE OBSERVED DURING INSTALLATION OF ADJACENT PRODUCTION NAILS, SUCH AS IRREGULAR DRILLING PROGRESS, LOWER THAN TYPICAL GROUT TAKE, OR THOSE THAT HAD TO BE REDRILLED.

7. TEST LOADS AND BOND LENGTHS FOR BOTH VERIFICATION AND PROOF TESTING SHALL BE IN ACCORDANCE WITH FHWA'S SOIL NAIL WALLS REFERENCE MANUAL GEC 007, FEBRUARY 2015.

8. TESTING TO BE CORRDINATED WITH THE ENGINEER A MINIMUM OF ONE WEEK PRIOR TO THE DESIRED TESTING DATE. ENGINEER IS TO BE PRESENT DURING TESTING AND MAY CHOOSE TO MONITOR THE APPLIED TEST LOAD USING THEIR OWN EQUIPMENT.

9. PROJECT TEST ANCHORS FROM THE FACE OF THE CUT ENOUGH TO ACCOMMODATE THE CONTRACTOR'S LOADING AND MEASUREMENT DEVICES AS WELL AS AN ADDITIONAL 1FT FOR THE CONTRACTOR'S LOAD CELL.

10. THE LOCATION OF THE TEST NAILS WILL BE APPROVED BY THE ENGINEER.

11. IF VARYING SOIL CONDITIONS ARE ENCOUNTERED, THE ENGINEER MAY REQUIRE UP TO TWO ADDITIONAL TEST ANCHORS PER WALL. TEST ANCHORS WILL NOT BE PAID FOR DIRECTLY, BUT WILL BE CONSIDERED SUBSIDIARY TO THE ITEM "RETAINING WALL" SOIL NAIL.

SOIL NAIL TEST ANCHORS RW01

BOND STRENGTH (PSI)	LOCATION ON WALL			PROOF TESTS			VERIFICATION TESTS		
	ELEV (FT)	FROM STA.	TO STA.	BONDED LENGTH (FT)	REQD BAR	PTL (KIPS)	BONDED LENGTH (FT)	REQD BAR	VTL (KIPS)
7	977 OR HIGHER	2+37.99	5+30.98	6	#8	8	10	#8	16
30	977 OR LOWER	2+37.99	5+30.98	6	#8	31	10	#10	68

SOIL NAIL TEST ANCHORS RW02

BOND STRENGTH (PSI)	LOCATION ON WALL			PROOF TESTS			VERIFICATION TESTS		
	ELEV (FT)	FROM STA.	TO STA.	BONDED LENGTH (FT)	REQD BAR	PTL (KIPS)	BONDED LENGTH (FT)	REQD BAR	VTL (KIPS)
7	-	1+07.98	3+70.00	6	#8	8	10	#8	16
7	982 OR HIGHER	3+70.00	7+40.00	6	#8	8	10	#8	16
13	982 OR LOWER	3+70.00	7+40.00	6	#8	14	10	#8	30
13	977 OR HIGHER	7+40.00	10+40.00	6	#8	14	10	#8	30
				8	#8	18			
				10	#8	23			
30	977 OR LOWER	7+40.00	10.40.00	6	#8	31	10	#10	68
				8	#8	41			
				10	#9	51			
6	972 OR HIGHER	10+40.00	13+24.60	6	#8	7	10	#8	14
				8	#8	9			
				10	#8	11			
30	972 OR LOWER	10+40.00	13+24.60	6	#8	31	10	#10	68
				8	#8	41			
				10	#9	51			

STATE OF TEXAS
BRANDON K. SMITH
106318
LICENSED
PROFESSIONAL ENGINEER

4/10/2025

WILCO
TEXAS

BGE, Inc.
101 W Louis Henna Blvd, Suite 400, Austin, TX 78728
Tel: 512-879-0400 • www.bgeinc.com
TBPE Registration No. F-1046

RM 2243

GEOTECHNICAL AND SOIL NAIL TESTING NOTES

SHEET 1 OF 1

FED.RD. DIV.NO.	PROJECT NO.		SHEET NO.
6			166
STATE	DIST.	COUNTY	
TEXAS	AUS	WILLIAMSON	
CONT.	SECT.	JOB	HIGHWAY NO.
0914	05	222	RM 2243

4/10/2025 12:56:20 PM pdf.pltcfg
G:\TXC\Projects\County\Williamson\7473-02 RM 2243 Phase 1A\03*CADD\01*Shts\04-RETWL\RM2243*P1A*RETWL-GEN*02.dgn

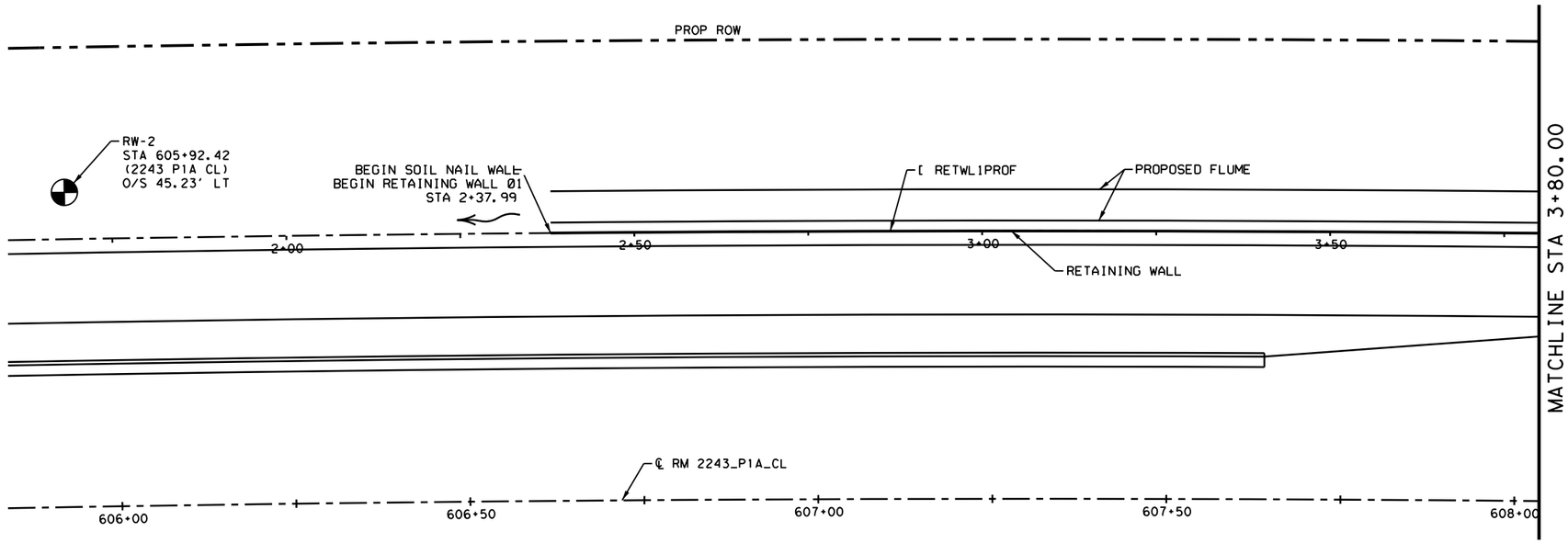

PLAN

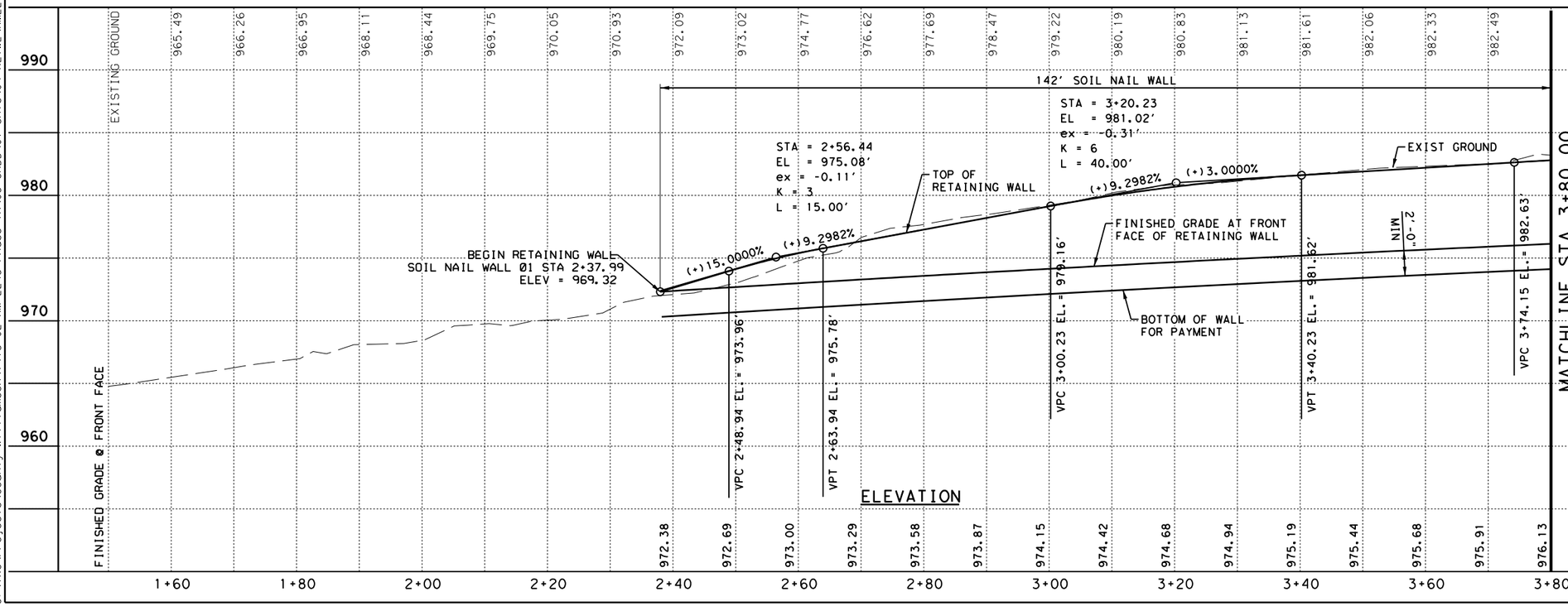

ELEVATION

LEGEND

BORE HOLE

NOTES:
1. SEE GENERAL NOTES AND GEOTECHNICAL NOTES SHEET FOR NOTES, QUANTITIES, TYPICAL SECTION AND HORIZONTAL CONTROL DATA.

SCALE: 1"=20' H
1"=10' V

STATE OF TEXAS
JOSHUA T. RICHTER
141234
LICENSED
PROFESSIONAL ENGINEER

4/10/2025

WILCO TEXAS

BGE, Inc.
101 W Louis Henna Blvd, Suite 400, Austin, TX 78728
Tel: 512-879-0400 • www.bgeinc.com
TBPE Registration No. F-1046

RM 2243

RETAINING WALL RW-1 LAYOUT

SHEET 1 OF 2

FED.RD. DIV.NO.	PROJECT NO.		SHEET NO.
6			167
STATE	DIST.	COUNTY	
TEXAS	AUS	WILLIAMSON	
CONT.	SECT.	JOB	HIGHWAY NO.
0914	05	222	RM 2243

4/10/2025 12:56:23 PM pdf.pltcfg
G:\TXC\Projects\County*Williamson\7473-02 RM 2243 Phase 1A\03*CADD\01*Shts\04-RETWL\RM2243*P1A*RETWL-1*01.dgn

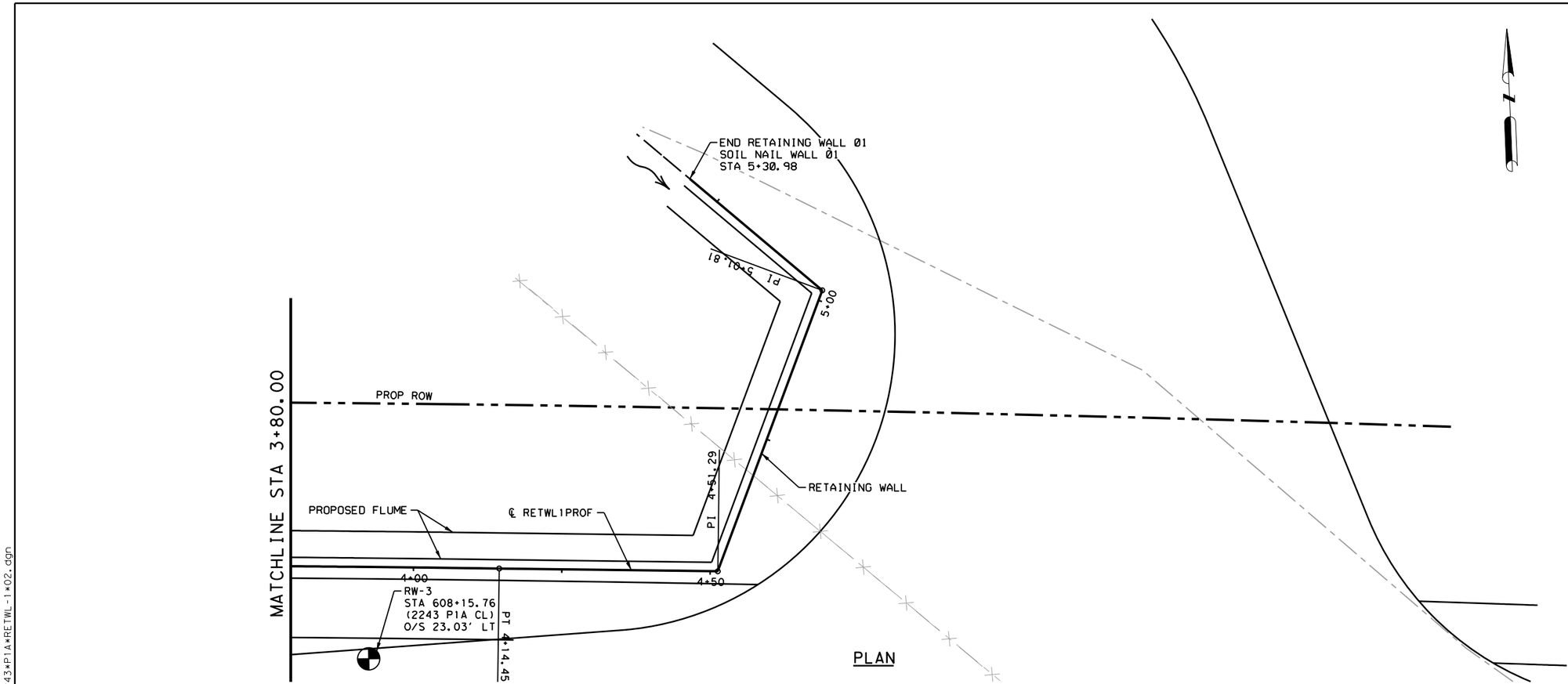

LEGEND

BORE HOLE

NOTES:
1. SEE GENERAL NOTES AND GEOTECHNICAL NOTES SHEET FOR NOTES, QUANTITIES, TYPICAL SECTION AND HORIZONTAL CONTROL DATA.

SCALE: 1"=20' H
1"=10' V

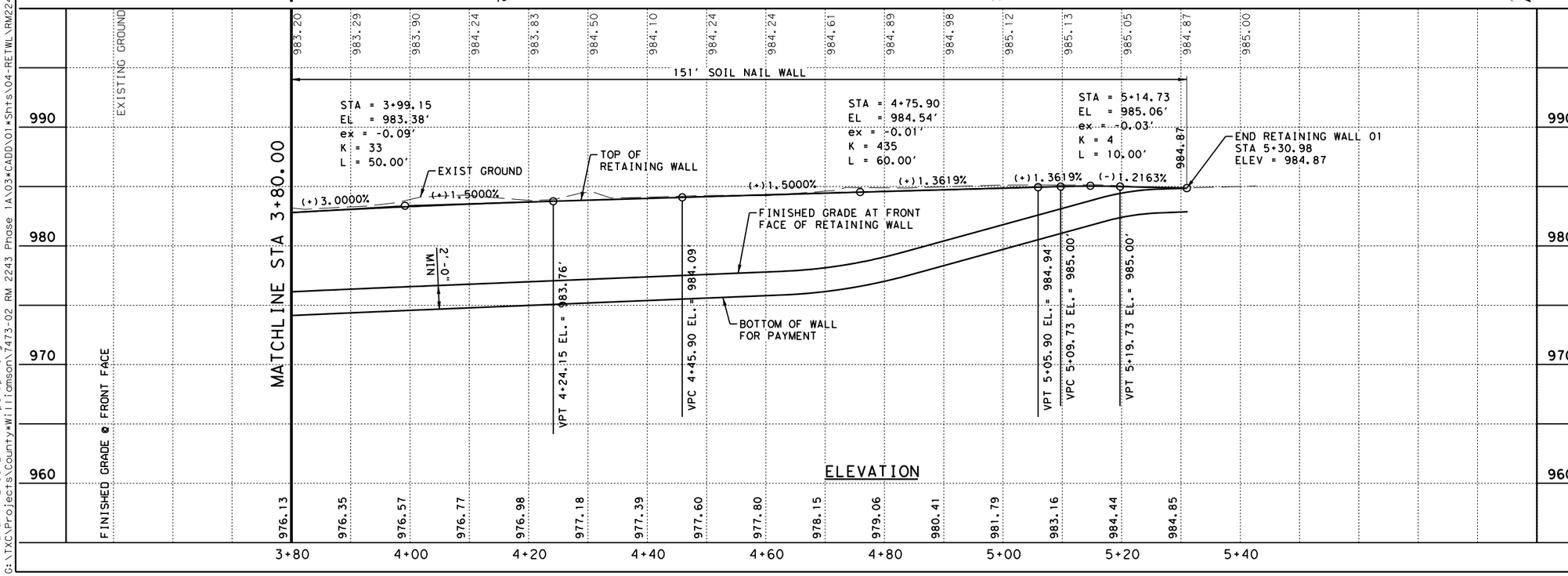

STATE OF TEXAS
JOSHUA T. RICHTER
141234
LICENSED
PROFESSIONAL ENGINEER

4/10/2025

WILCO TEXAS

BGE, Inc.
101 W Louis Henna Blvd, Suite 400, Austin, TX 78728
Tel: 512-879-0400 • www.bgeinc.com
TBPE Registration No. F-1046

RM 2243

RETAINING WALL RW-1 LAYOUT

SHEET 2 OF 2

FED.RD. DIV.NO.	PROJECT NO.		SHEET NO.
6			168
STATE	DIST.	COUNTY	
TEXAS	AUS	WILLIAMSON	
CONT.	SECT.	JOB	HIGHWAY NO.
0914	05	222	RM 2243

4/10/2025 12:56:24 PM pdf.pltcfg
G:\TXC\Projects\County\Williamson\7473-02 RM 2243 Phase 1A\03*CADD\01*Shts\04-RETWL\RM2243*P1A*RETWL-1*02.dgn

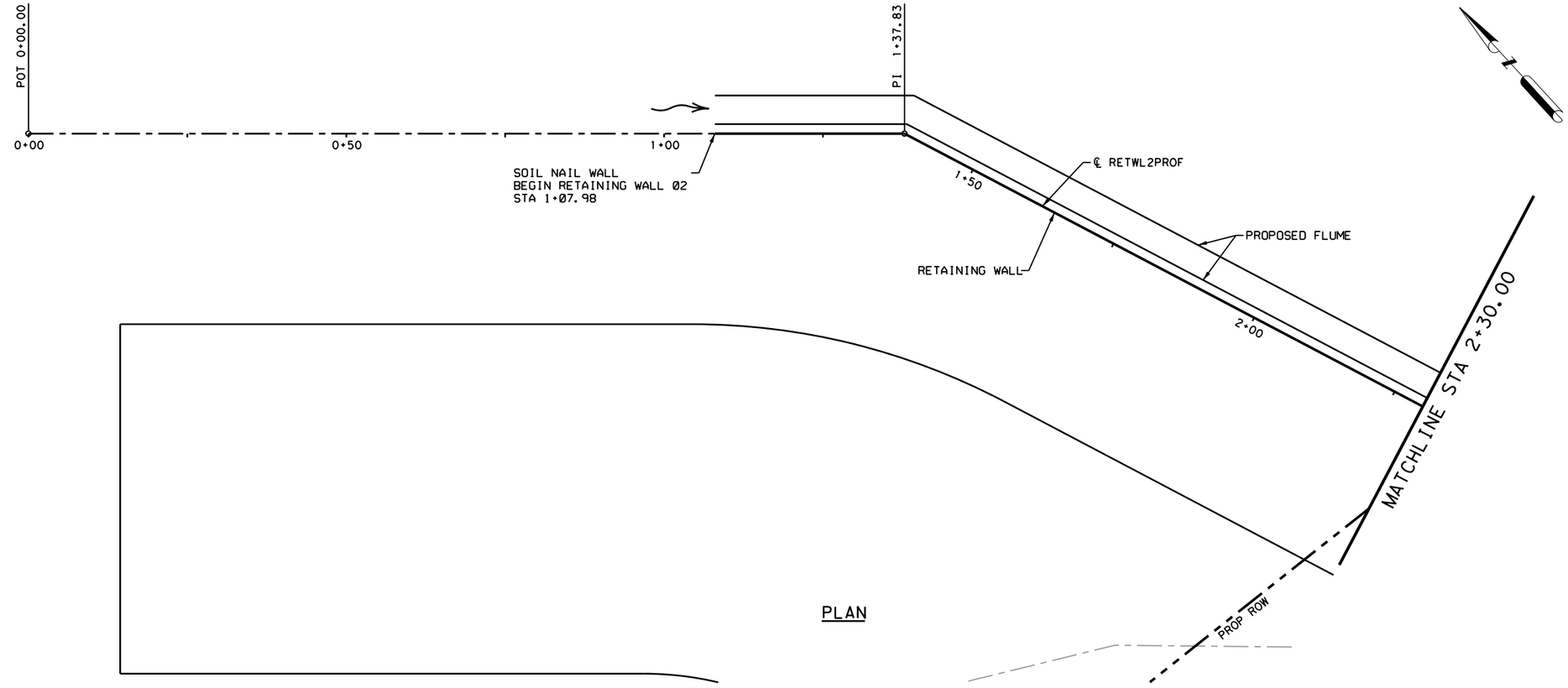

PLAN

LEGEND

BORE HOLE

NOTES:
1. SEE GENERAL NOTES AND GEOTECHNICAL NOTES SHEET FOR NOTES, QUANTITIES, TYPICAL SECTION AND HORIZONTAL CONTROL DATA.

0 10 20
SCALE: 1"=20' H
1"=10' V

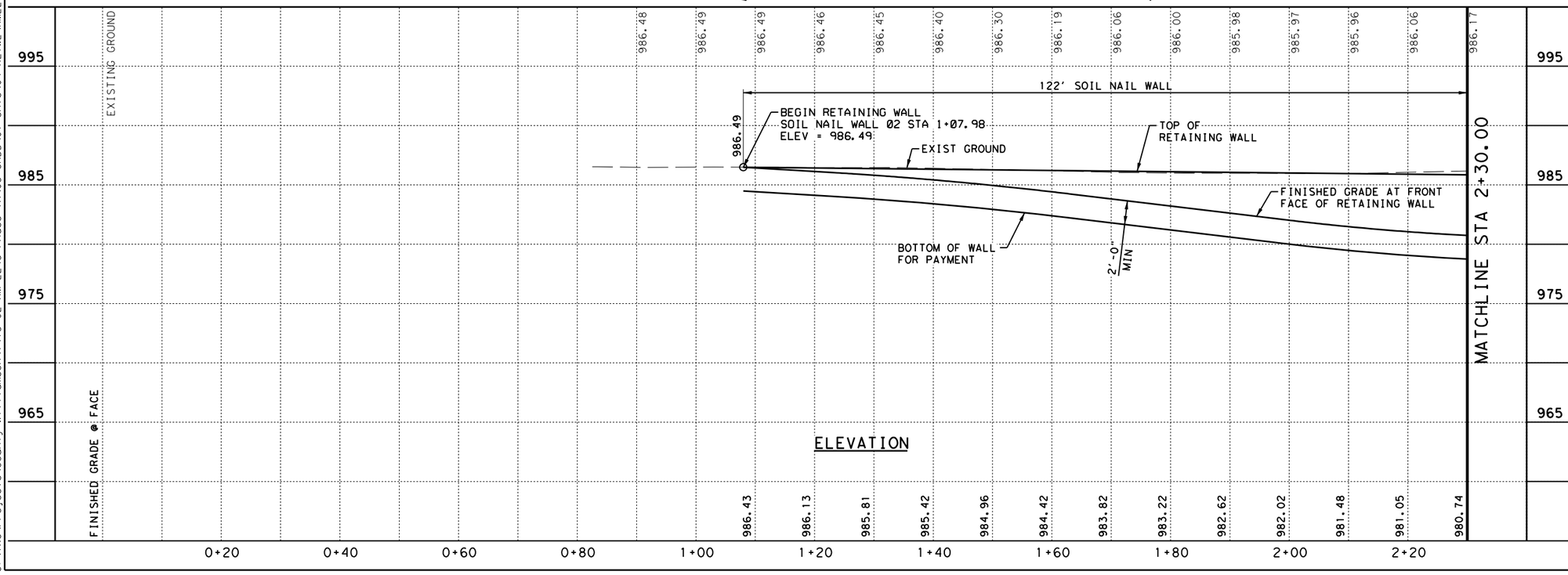

ELEVATION

STATE OF TEXAS
JOSHUA T. RICHTER
141234
LICENSED
PROFESSIONAL ENGINEER

4/10/2025

WILCO
TEXAS

BGE, Inc.
101 W Louis Henna Blvd, Suite 400, Austin, TX 78728
Tel: 512-879-0400 • www.bgeinc.com
TBPE Registration No. F-1046

RM 2243

RETAINING WALL RW-2 LAYOUT

SHEET 1 OF 6

FED.RD. DIV.NO.	PROJECT NO.	SHEET NO.
6		169

STATE	DIST.	COUNTY	
TEXAS	AUS	WILLIAMSON	
CONT.	SECT.	JOB	HIGHWAY NO.
0914	05	222	RM 2243

4/10/2025 12:56:25 PM pdf.pltcfg
G:\TXC\Projects\County\Williamson\7473-02 RM 2243 Phase 1A\03*CADD\01*Shts\04-RETWL\RM2243*P1A*RETWL-2*01.dgn

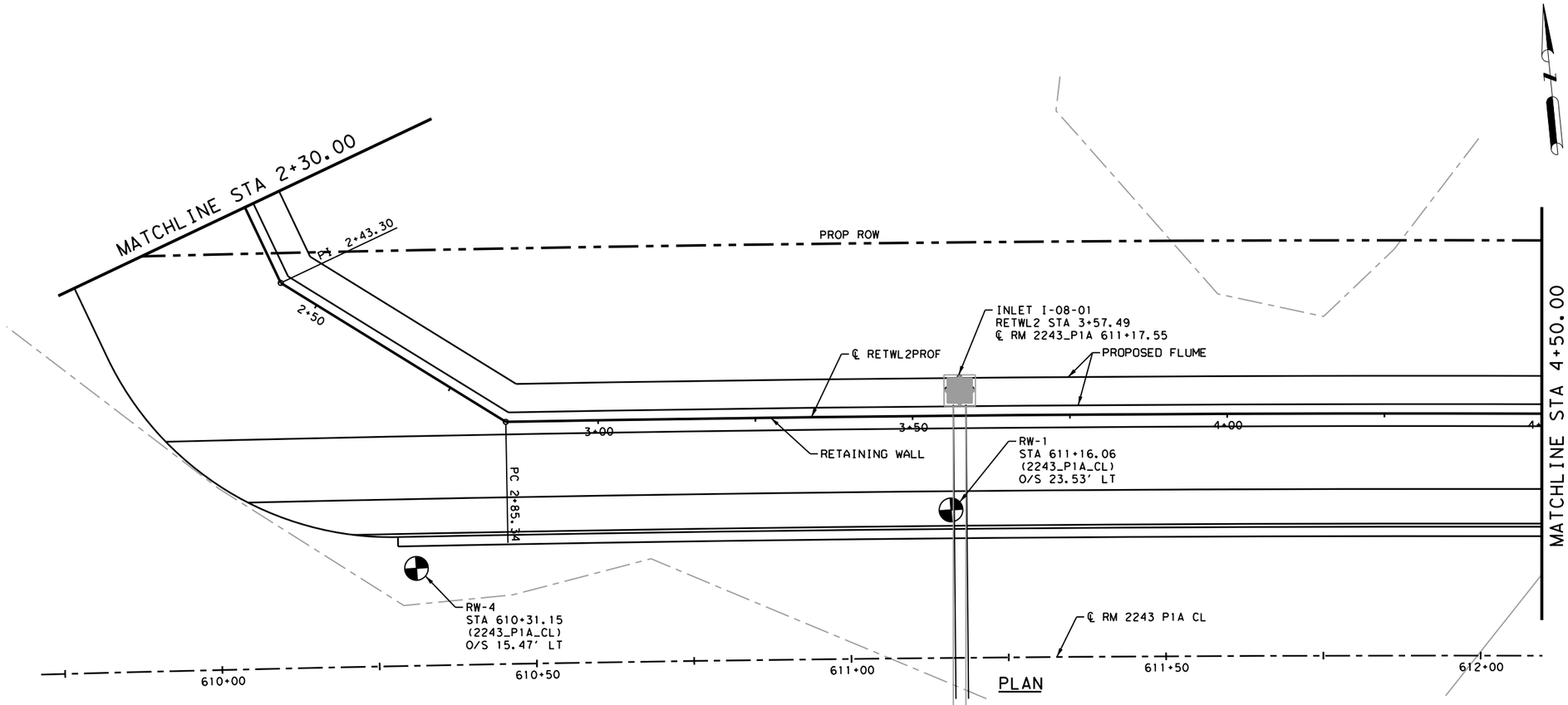

LEGEND

BORE HOLE

NOTES:
1. SEE GENERAL NOTES AND GEOTECHNICAL NOTES SHEET FOR NOTES, QUANTITIES, TYPICAL SECTION AND HORIZONTAL CONTROL DATA.

SCALE: 1"=20' H
1"=10' V

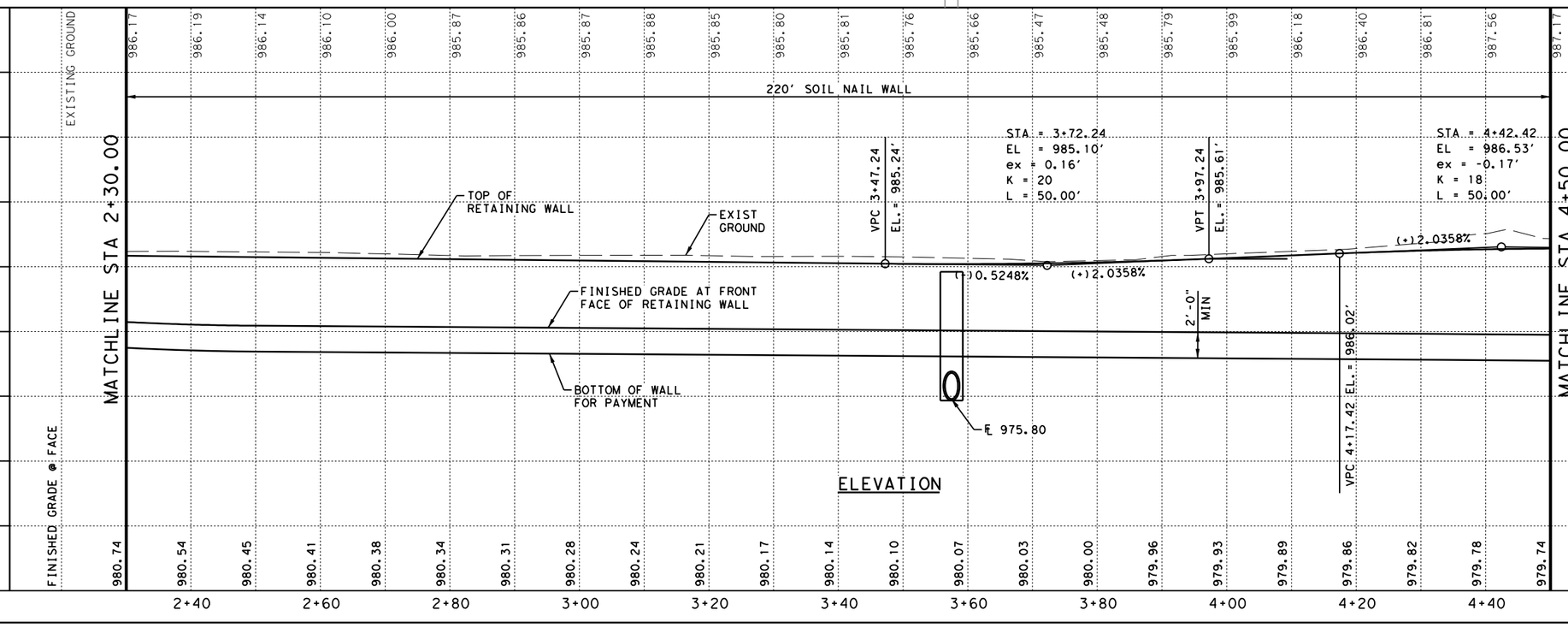

ELEVATION

STATE OF TEXAS
JOSHUA T. RICHTER
141234
LICENSED
PROFESSIONAL ENGINEER

4/10/2025

WILCO
TEXAS

BGE, Inc.
101 W Louis Henna Blvd, Suite 400, Austin, TX 78728
Tel: 512-879-0400 ● www.bgeinc.com
TBPE Registration No. F-1046

RM 2243

RETAINING WALL RW-2 LAYOUT

SHEET 2 OF 6

FED.RD. DIV.NO.	PROJECT NO.	SHEET NO.
6		170

STATE	DIST.	COUNTY	
TEXAS	AUS	WILLIAMSON	
CONT.	SECT.	JOB	HIGHWAY NO.
0914	05	222	RM 2243

4/10/2025 12:56:27 PM pdf.pltcfg
G:\TXC\Projects\County\Williamson\7473-02 RM 2243 Phase 1A\03*CADD\01*Shts\04-RETWL\RM2243*P1A*RETWL-2*02.dgn

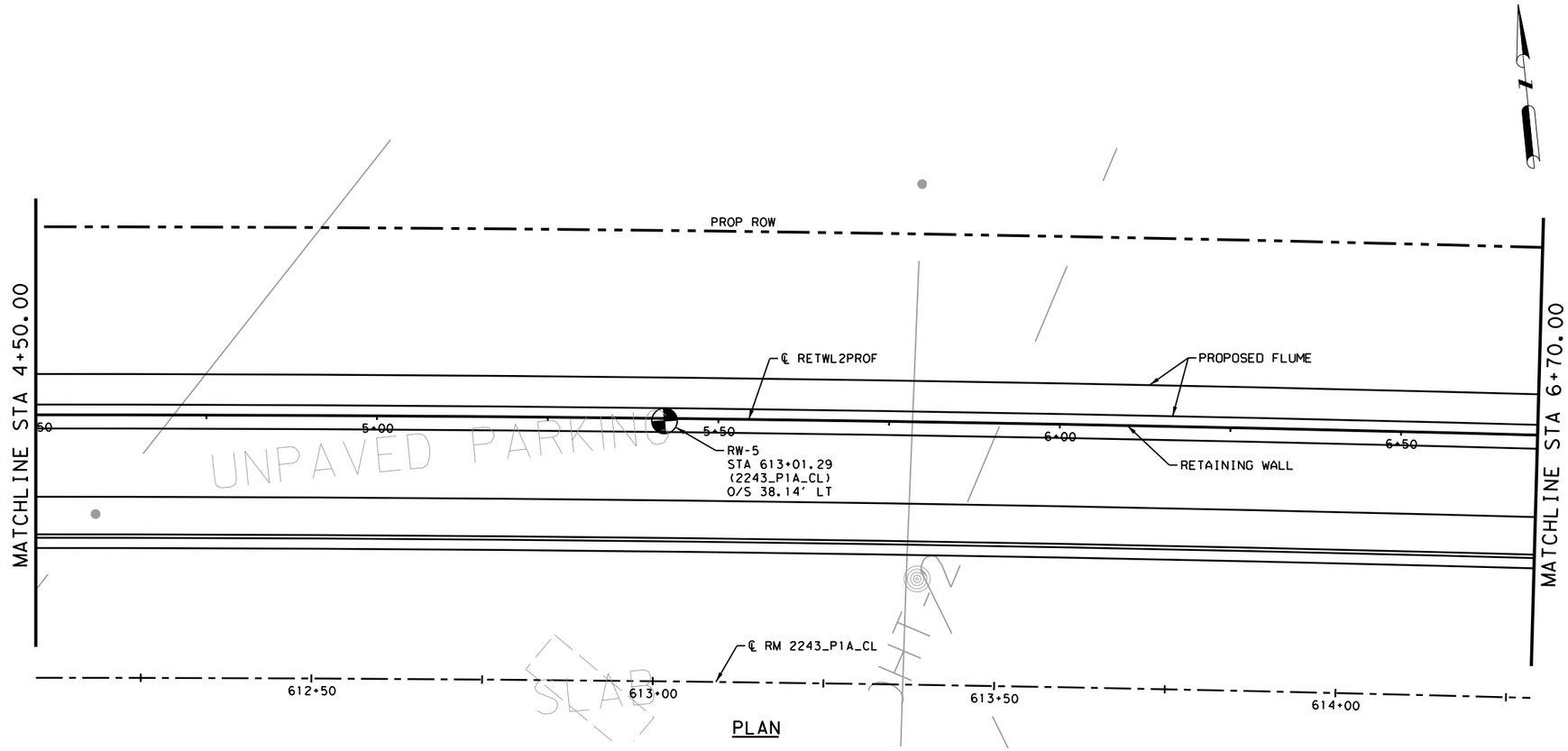

PLAN

LEGEND

BORE HOLE

NOTES:
1. SEE GENERAL NOTES AND GEOTECHNICAL NOTES SHEET FOR NOTES, QUANTITIES, TYPICAL SECTION AND HORIZONTAL CONTROL DATA.

0 10 20
SCALE: 1"=20' H
1"=10' V

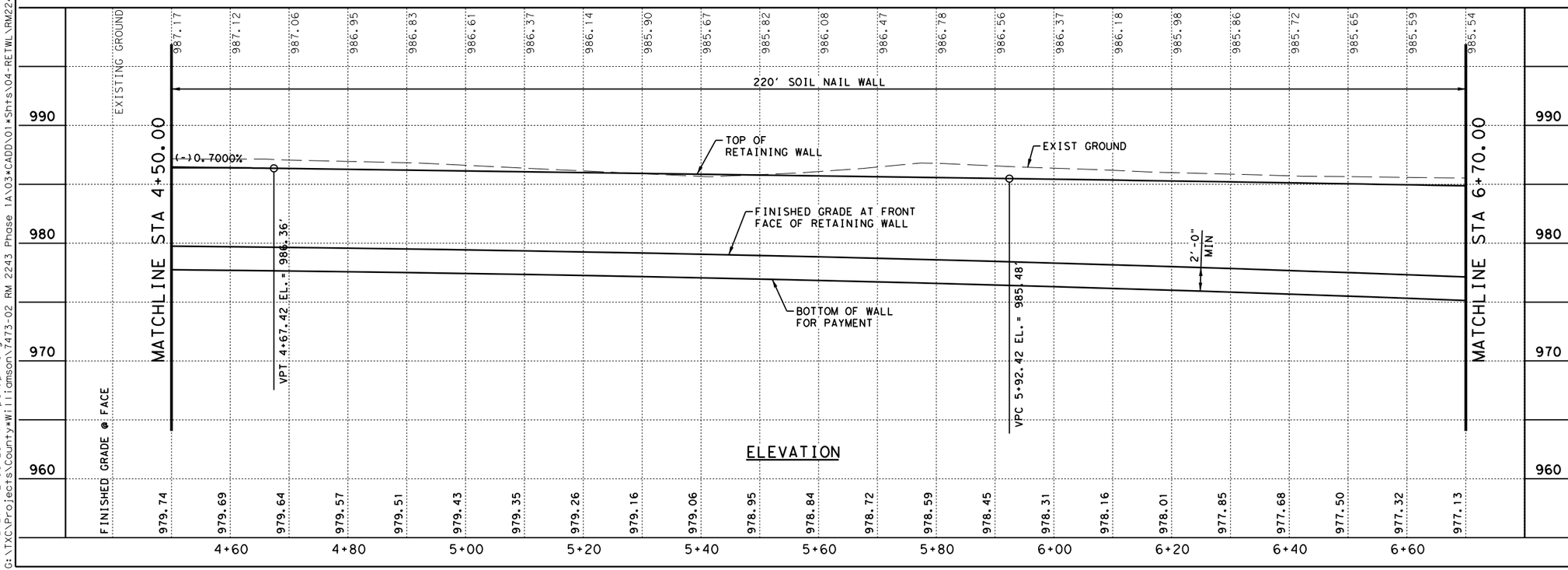

ELEVATION

STATE OF TEXAS
JOSHUA T. RICHTER
141234
LICENSED
PROFESSIONAL ENGINEER

4/10/2025

WILCO
TEXAS

BGE, Inc.
101 W Louis Henna Blvd, Suite 400, Austin, TX 78728
Tel: 512-879-0400 • www.bgeinc.com
TBPE Registration No. F-1046

RM 2243

RETAINING WALL RW-2 LAYOUT

SHEET 3 OF 6

FED.RD. DIV.NO.	PROJECT NO.		SHEET NO.
6			171
STATE	DIST.	COUNTY	
TEXAS	AUS	WILLIAMSON	
CONT.	SECT.	JOB	HIGHWAY NO.
0914	05	222	RM 2243

4/10/2025 12:56:28 PM pdf.pltcfg
G:\TXC\Projects\County\Williamson\7473-02 RM 2243 Phase 1A\03*CADD\01*Shts\04-RETWL\RM2243*P1A*RETWL-2*03.dgn

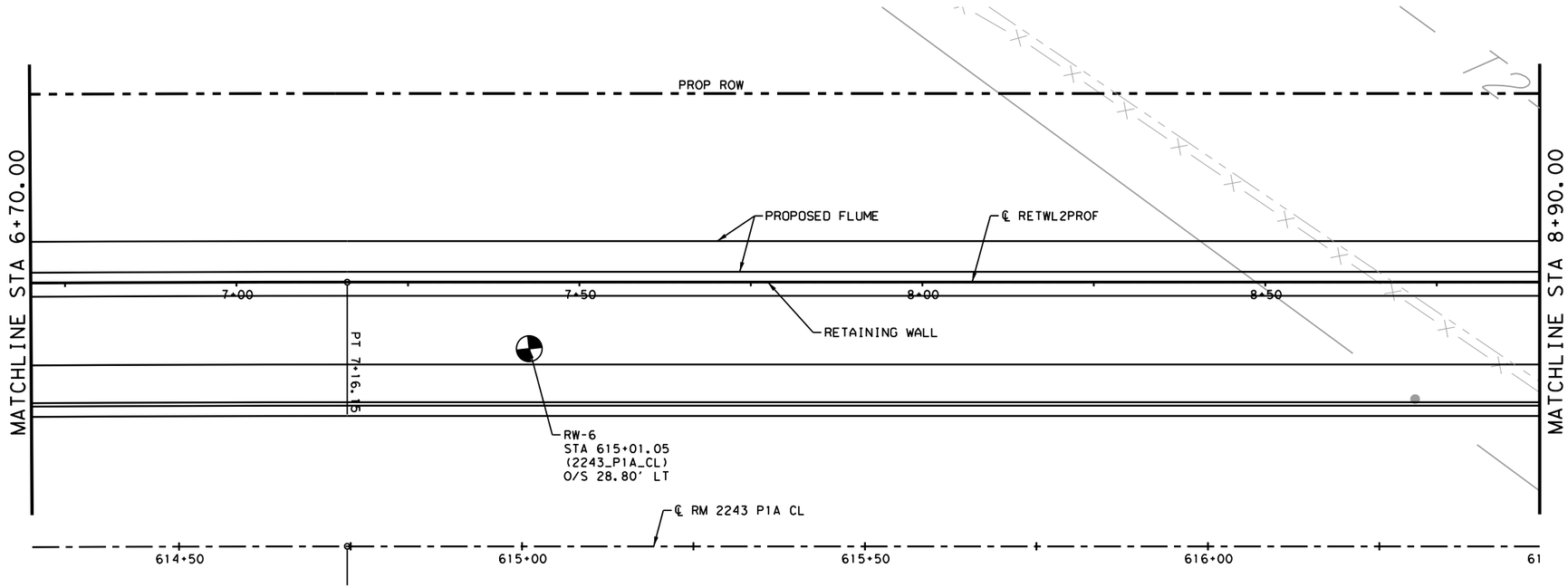

PLAN

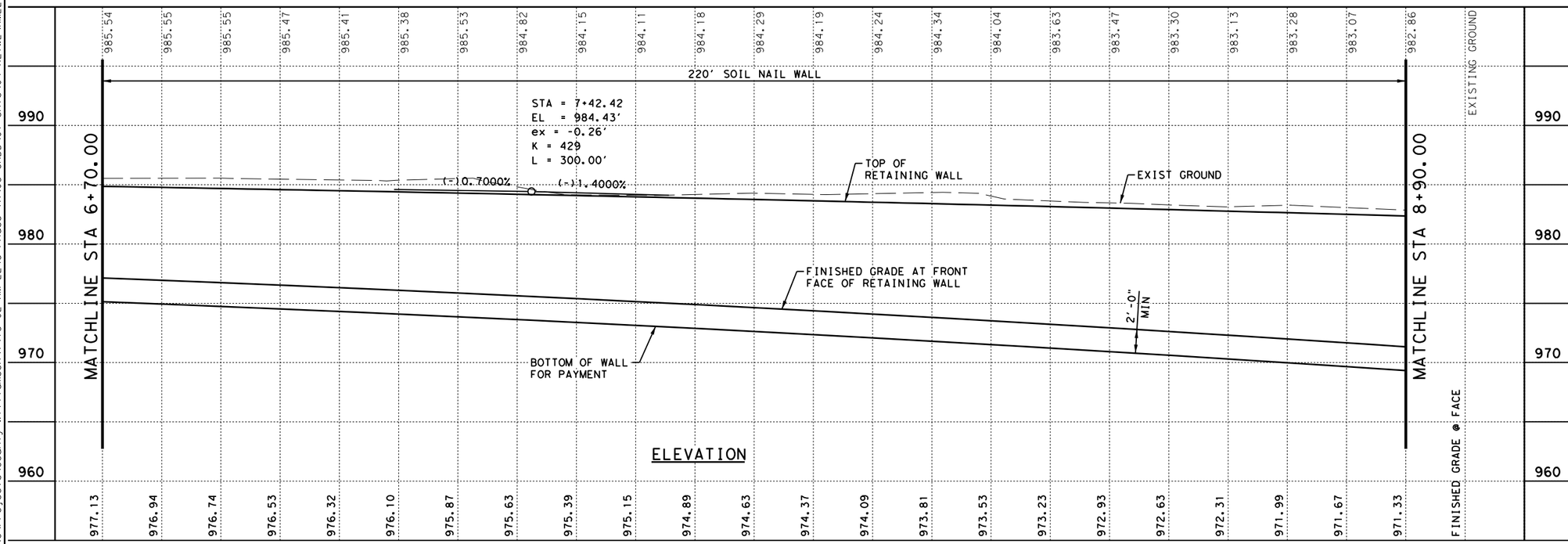

ELEVATION

LEGEND

BORE HOLE

NOTES:
1. SEE GENERAL NOTES AND GEOTECHNICAL NOTES SHEET FOR NOTES, QUANTITIES, TYPICAL SECTION AND HORIZONTAL CONTROL DATA.

SCALE: 1"=20' H
1"=10' V

STATE OF TEXAS
JOSHUA T. RICHTER
141234
LICENSED
PROFESSIONAL ENGINEER

4/10/2025

WILCO TEXAS

BGE, Inc.
101 W Louis Henna Blvd, Suite 400, Austin, TX 78728
Tel: 512-879-0400 • www.bgeinc.com
TBPE Registration No. F-1046

RM 2243

RETAINING WALL RW-2 LAYOUT

SHEET 4 OF 6

FED.RD. DIV.NO.	PROJECT NO.		SHEET NO.
6			172
STATE	DIST.	COUNTY	
TEXAS	AUS	WILLIAMSON	
CONT.	SECT.	JOB	HIGHWAY NO.
0914	05	222	RM 2243

4/10/2025 12:56:29 PM pdf.pltcfg
G:\TXC\Projects\County\Williamson\7473-02 RM 2243 Phase 1A\03*CADD\01*Shts\04-RETWL\RM2243*P1A*RETWL-2*04.dgn

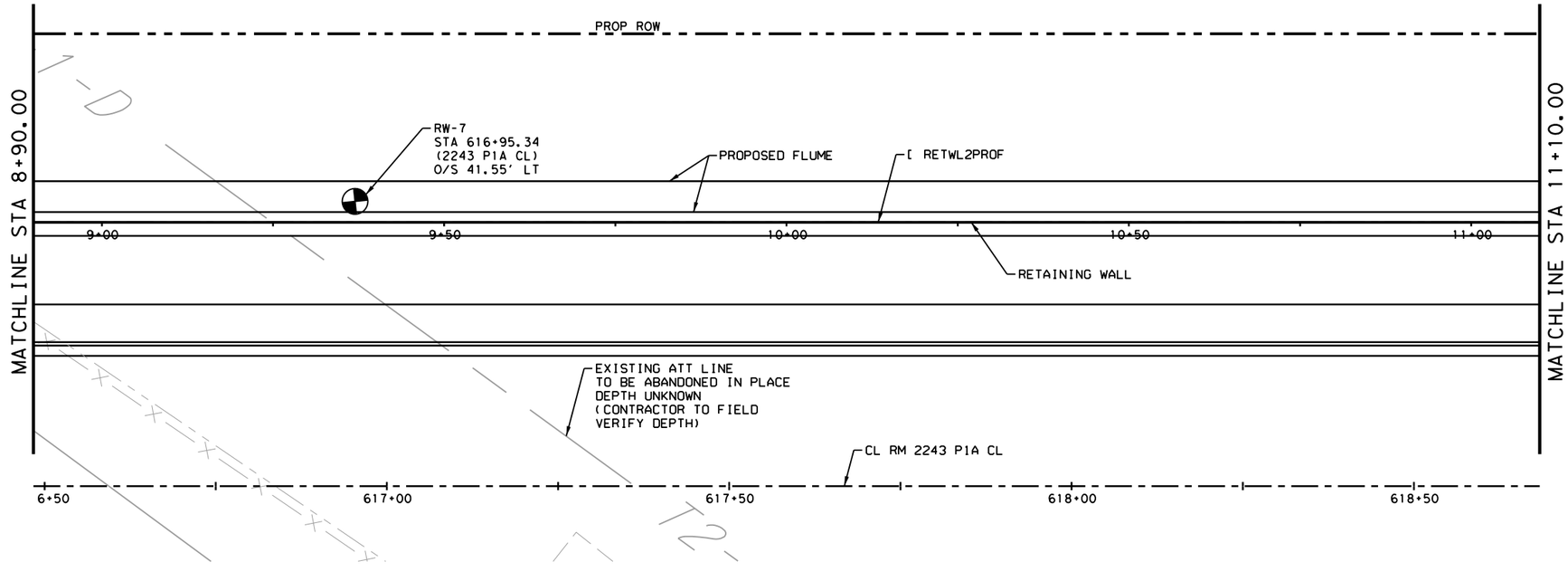

PLAN

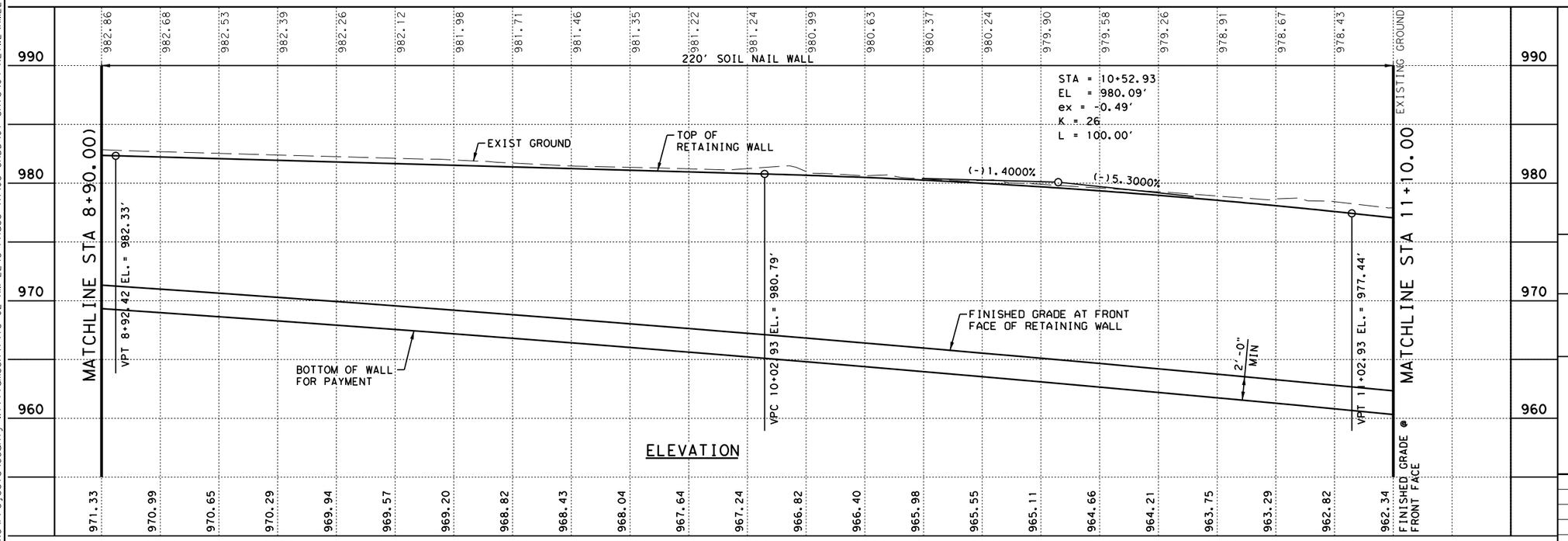

ELEVATION

LEGEND

BORE HOLE

NOTES:
1. SEE GENERAL NOTES AND GEOTECHNICAL NOTES SHEET FOR NOTES, QUANTITIES, TYPICAL SECTION AND HORIZONTAL CONTROL DATA.

SCALE: 1"=20' H
1"=10' V

STATE OF TEXAS
JOSHUA T. RICHTER
141234
LICENSED
PROFESSIONAL ENGINEER

4/10/2025

WILCO TEXAS

BGE, Inc.
101 W Louis Henna Blvd, Suite 400, Austin, TX 78728
Tel: 512-879-0400 • www.bgeinc.com
TBPE Registration No. F-1046

RM 2243

RETAINING WALL RW-2 LAYOUT

SHEET 5 OF 6

FED.RD. DIV.NO.	PROJECT NO.	SHEET NO.
6		173

STATE	DIST.	COUNTY	
TEXAS	AUS	WILLIAMSON	
CONT.	SECT.	JOB	HIGHWAY NO.
0914	05	222	RM 2243

4/10/2025 12:56:31 PM pdf.pltcfg
G:\TXC\Projects\County\Williamson\7473-02 RM 2243 Phase 1A\03*CADD\01*Shts\04-RETWL\RM2243*P1A*RETWL-2*05.dgn

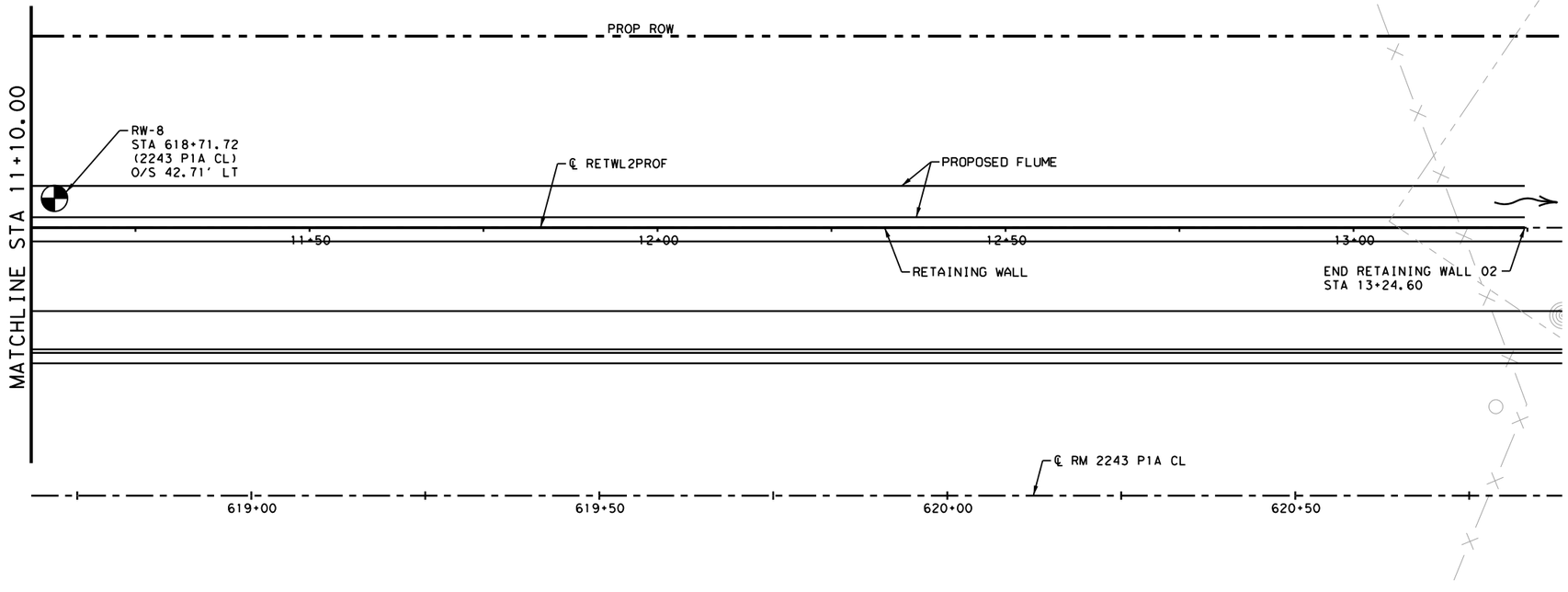

PLAN

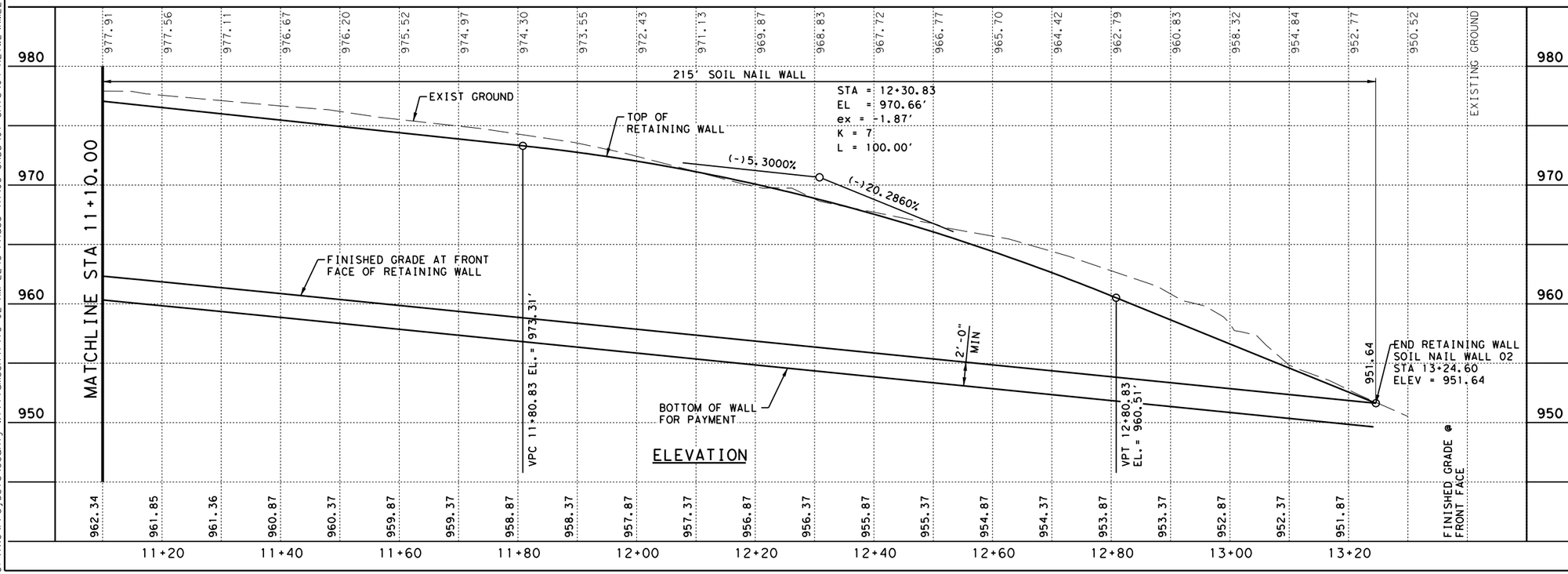

ELEVATION

LEGEND

BORE HOLE

NOTES:
1. SEE GENERAL NOTES AND GEOTECHNICAL NOTES SHEET FOR NOTES, QUANTITIES, TYPICAL SECTION AND HORIZONTAL CONTROL DATA.

0 10 20
SCALE: 1"=20' H
1"=10' V

STATE OF TEXAS
JOSHUA T. RICHTER
141234
LICENSED
PROFESSIONAL ENGINEER

4/10/2025

WILCO TEXAS

BGE, Inc.
101 W Louis Henna Blvd, Suite 400, Austin, TX 78728
Tel: 512-879-0400 • www.bgeinc.com
TBPE Registration No. F-1046

RM 2243

RETAINING WALL RW-2 LAYOUT

SHEET 6 OF 6

FED.RD. DIV.NO.	PROJECT NO.		SHEET NO.
6			174
STATE	DIST.	COUNTY	
TEXAS	AUS	WILLIAMSON	
CONT.	SECT.	JOB	HIGHWAY NO.
0914	05	222	RM 2243

4/10/2025 12:56:32 PM pdf.pltcfg
G:\TXC\Projects\County\Williamson\7473-02 RM 2243 Phase 1A\03\CADD\01\Shts\04-RETWL\RM2243_P1A_RETWL-2_06.dgn

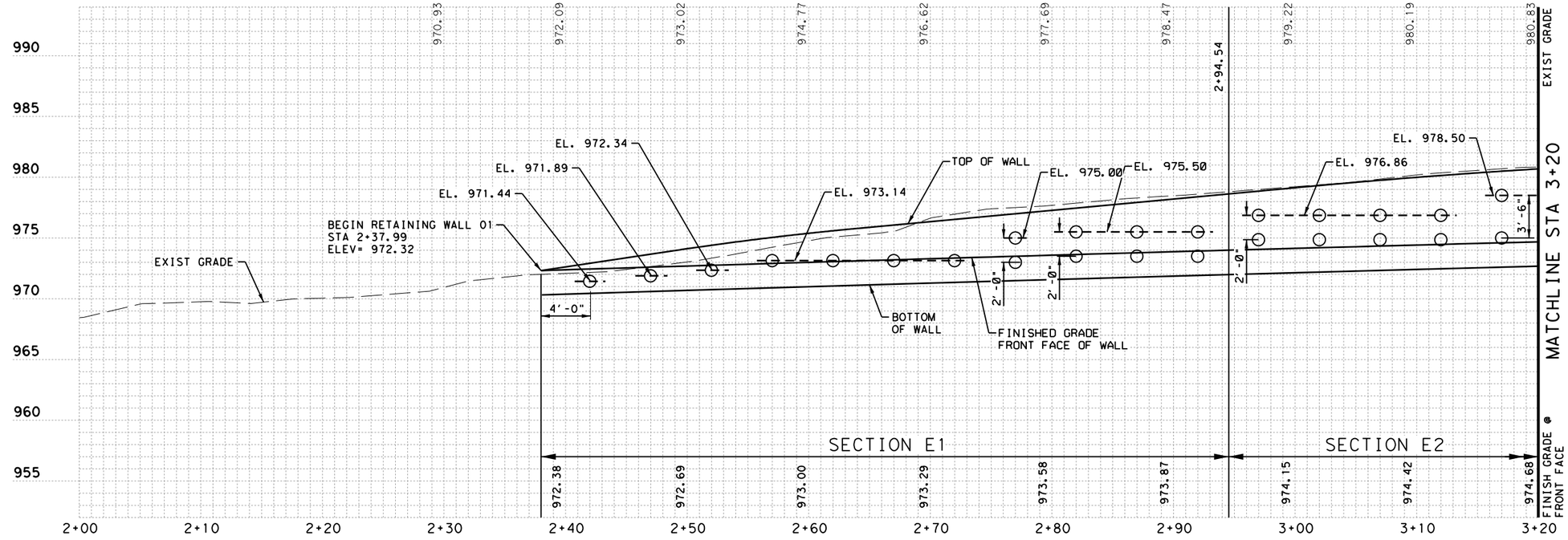

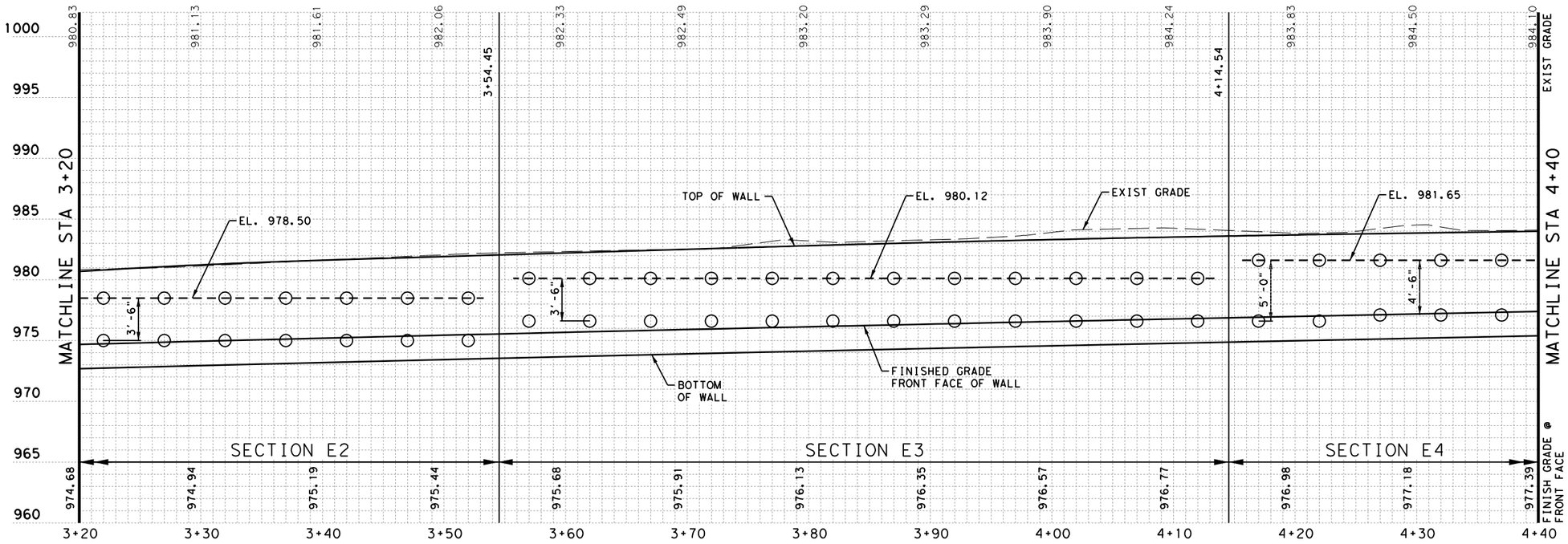

LEGEND

○ LOCATION OF SOIL NAIL - #8 BARS

NOTES:

1. HORIZONTAL SOIL NAIL SPACING IS 5' UNLESS OTHERWISE NOTED.
2. NAIL REINFORCEMENT LENGTH SHALL BE NAIL LENGTH SHOWN PLUS 6 INCHES.
3. SEE SOIL NAIL SCHEDULE ON THIS SHEET FOR NAIL LENGTHS AND QUANTITIES.
4. CONTRACTOR MAY ADJUST THE HORIZONTAL ANGLE OF THE SOIL NAILS WITHIN 15 DEGREES TO THE LEFT OR RIGHT OF THE NORMAL IN ORDER TO RESOLVE CONFLICTS BETWEEN SOIL NAILS AND EXISTING STRUCTURES.

0 5 10

SCALE: 1"=10'

STATE OF TEXAS
BRANDON K. SMITH
106318
LICENSED
PROFESSIONAL ENGINEER

4/10/2025

WILCO TEXAS

BGE, Inc.
101 W Louis Henna Blvd, Suite 400, Austin, TX 78728
Tel: 512-879-0400 • www.bgeinc.com
TBPE Registration No. F-1046

RM 2243

SOIL NAIL WALL LAYOUT RW1

SHEET 1 OF 2

FED.RD. DIV.NO.	PROJECT NO.	SHEET NO.
6		175

STATE	DIST.	COUNTY	
TEXAS	AUS	WILLIAMSON	
CONT.	SECT.	JOB	HIGHWAY NO.
0914	05	222	RM 2243

4/10/2025 12:56:33 PM pdf.pltcfg
G:\TXC\Projects\County\Williamson\7473-02 RM 2243 Phase 1A\03*CADD\01*Shts\04-RETWL\RM2243*P1A*RETWL-1*LYT*01.dgn

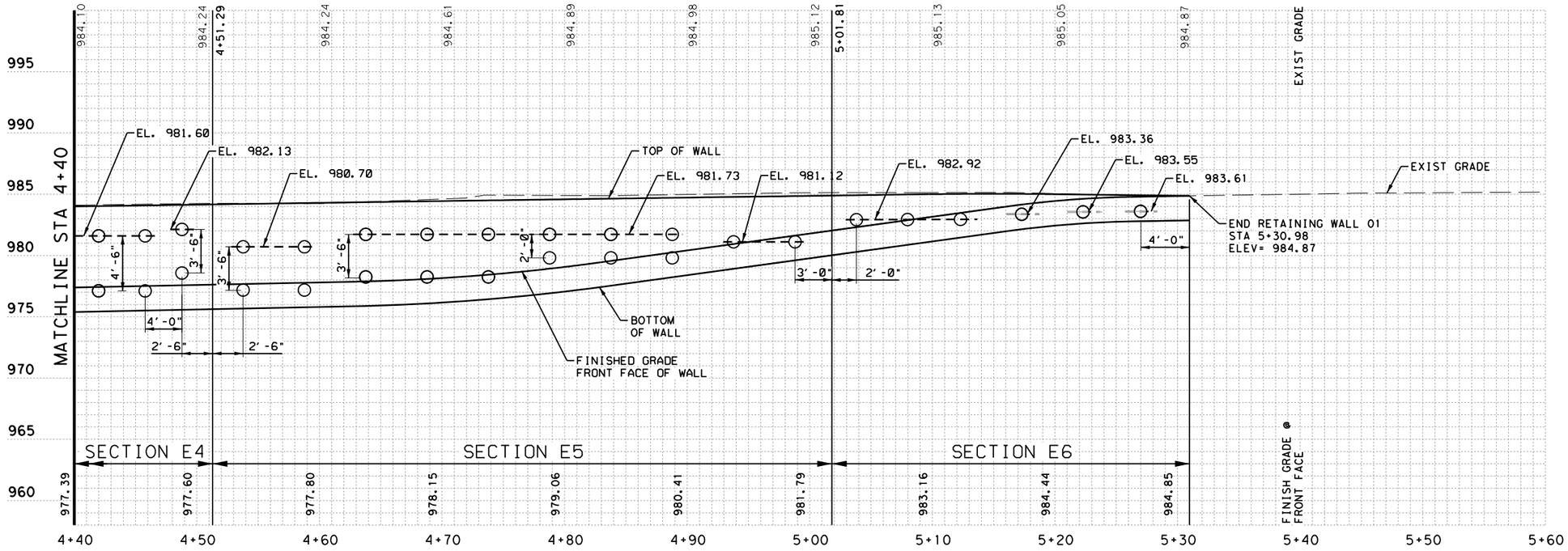

LEGEND

○ LOCATION OF SOIL NAIL - #8 BARS

NOTES:

1. HORIZONTAL SOIL NAIL SPACING IS 5' UNLESS OTHERWISE NOTED.
2. NAIL REINFORCEMENT LENGTH SHALL BE NAIL LENGTH SHOWN PLUS 6 INCHES.
3. SEE SOIL NAIL SCHEDULE ON THIS SHEET FOR NAIL LENGTHS AND QUANTITIES.
4. CONTRACTOR MAY ADJUST THE HORIZONTAL ANGLE OF THE SOIL NAILS WITHIN 15 DEGREES TO THE LEFT OR RIGHT OF THE NORMAL IN ORDER TO RESOLVE CONFLICTS BETWEEN SOIL NAILS AND EXISTING STRUCTURES.

0 5 10

SCALE: 1"=10'

SECTION	BEGIN STATION	END STATION	SECTION LENGTH (FT)	AREA (FT2)	NUMBER OF NAILS	MAX. WALL HEIGHT (FT)	NAIL SIZE	NAIL LENGTH (FT)	TOTAL NAIL LENGTH (FT)
E1	2+37.99	2+94.54	56.55	263	15	6.63	#8	8.0	120
E2	2+94.54	3+54.45	59.91	477	24	8.54	#8	8.0	192
E3	3+54.45	4+14.54	60.09	521	24	8.75	#8	8.0	192
E4	4+14.54	4+51.29	36.75	318	16	8.73	#8	8.0	128
E5	4+51.29	5+01.81	50.52	374	18	8.54	#8	8.0	144
E6	5+01.81	5+30.98	29.17	90	6	4.87	#8	8.0	48

STATE OF TEXAS
BRANDON K. SMITH
106318
LICENSED
PROFESSIONAL ENGINEER

4/10/2025

WILCO TEXAS

BGE, Inc.
101 W Louis Henna Blvd, Suite 400, Austin, TX 78728
Tel: 512-879-0400 • www.bgeinc.com
TBPE Registration No. F-1046

RM 2243

SOIL NAIL WALL LAYOUT RW1

SHEET 2 OF 2

FED.RD. DIV.NO.	PROJECT NO.	SHEET NO.
6		176

STATE	DIST.	COUNTY	
TEXAS	AUS	WILLIAMSON	
CONT.	SECT.	JOB	HIGHWAY NO.
0914	05	222	RM 2243

4/10/2025 12:56:34 PM pdf.pltcfg
G:\TXC\Projects\County*Williamson\7473-02 RM 2243 Phase 1A\03*CADD\01*Shts\04-RETWL\RM2243*P1A*RETWL-1*LYT*02.dgn

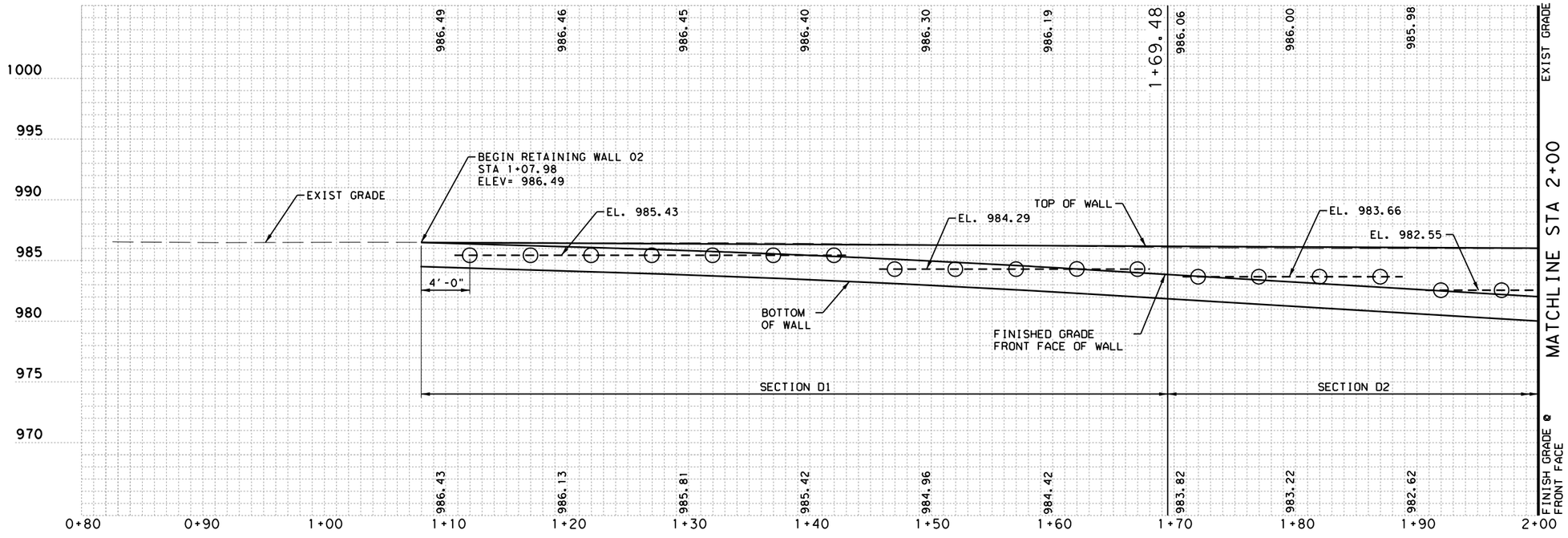

LEGEND

○ LOCATION OF SOIL NAIL - #8 BARS

● LOCATION OF SOIL NAIL - #9 BARS

NOTES:

1. HORIZONTAL SOIL NAIL SPACING IS 5' UNLESS OTHERWISE NOTED.
2. NAIL REINFORCEMENT LENGTH SHALL BE NAIL LENGTH SHOWN PLUS 6 INCHES.
3. SEE SOIL NAIL SCHEDULE ON SOIL NAIL WALL LAYOUT RW2 SHEET 6 OF 6 FOR NAIL LENGTHS AND QUANTITIES.
4. CONTRACTOR MAY ADJUST THE HORIZONTAL ANGLE OF THE SOIL NAILS WITHIN 15 DEGREES TO THE LEFT OR RIGHT OF THE NORMAL IN ORDER TO RESOLVE CONFLICTS BETWEEN SOIL NAILS AND EXISTING STRUCTURES.

0 5 10

SCALE: 1"=10'

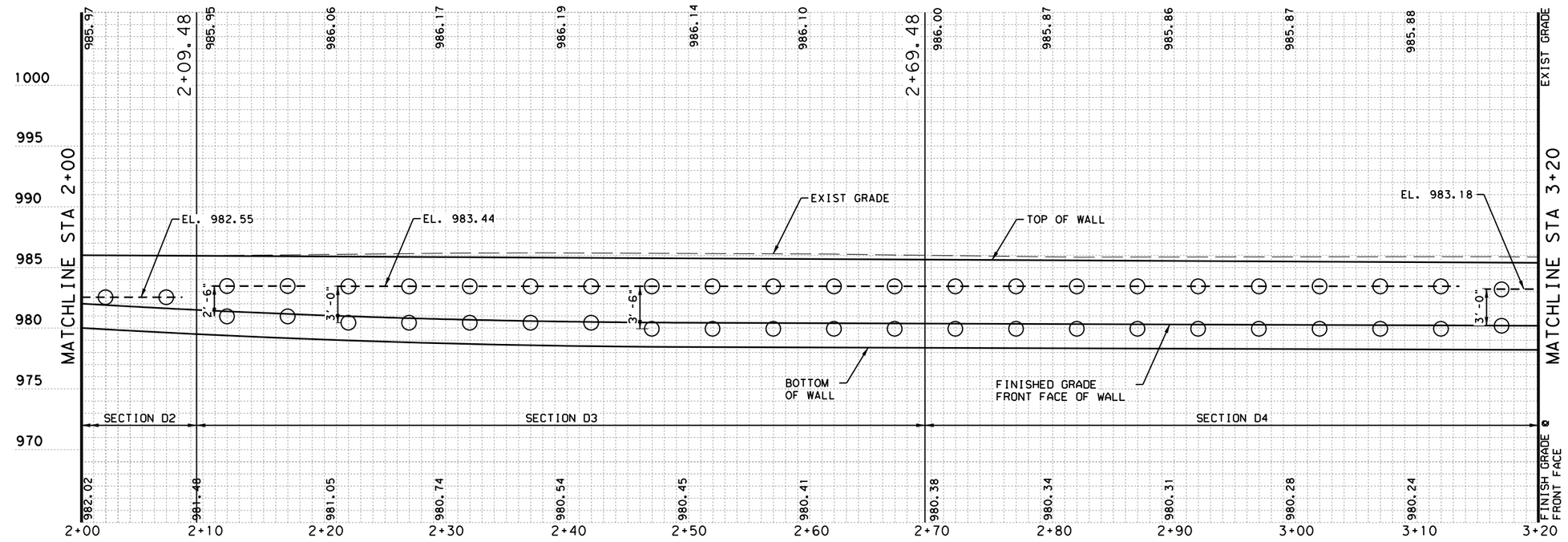

STATE OF TEXAS
BRANDON K. SMITH
106318
LICENSED
PROFESSIONAL ENGINEER

4/10/2025

WILCO TEXAS

BGE, Inc.
101 W Louis Henna Blvd, Suite 400, Austin, TX 78728
Tel: 512-879-0400 • www.bgeinc.com
TBPE Registration No. F-1046

RM 2243

SOIL NAIL WALL LAYOUT RW2

SHEET 1 OF 6

FED.RD. DIV.NO.	PROJECT NO.	SHEET NO.
6		177

STATE	DIST.	COUNTY	
TEXAS	AUS	WILLIAMSON	
CONT.	SECT.	JOB	HIGHWAY NO.
0914	05	222	RM 2243

4/10/2025 12:56:35 PM pdf.pltcfg
G:\TXC\Projects\County\Williamson\7473-02 RM 2243 Phase 1A\03*CADD\01*Shts\04-RETWL\RM2243*P1A*RETWL-2*LYT*01.dgn

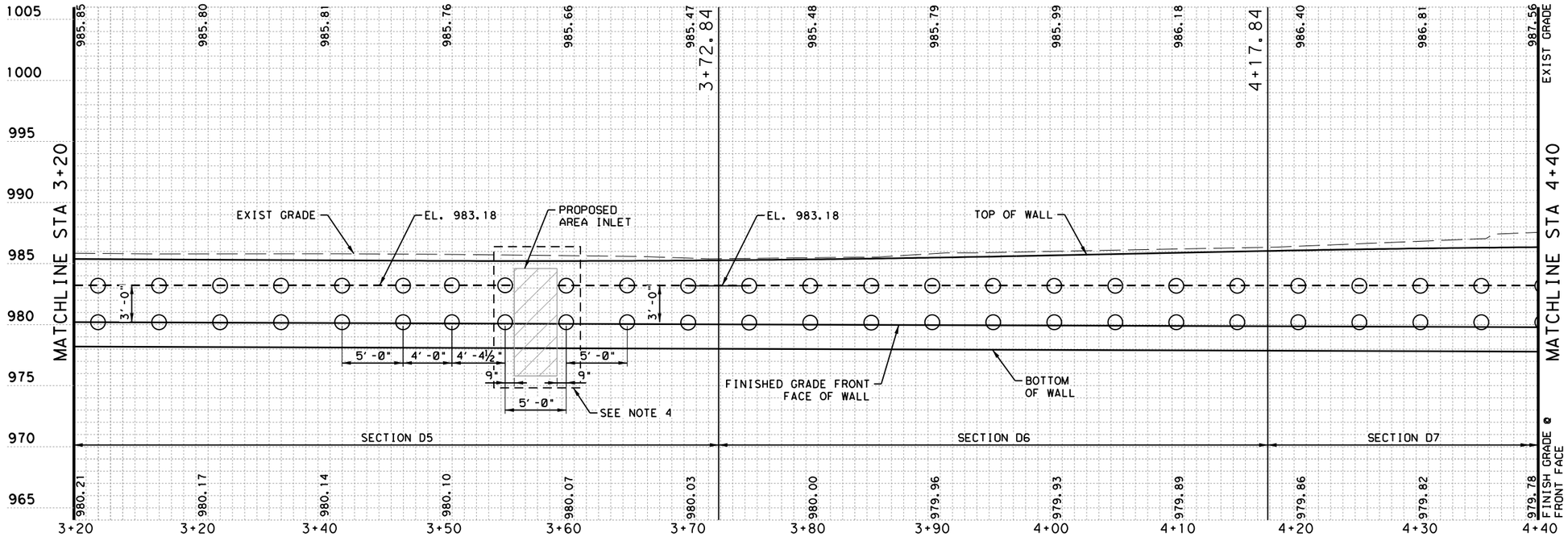

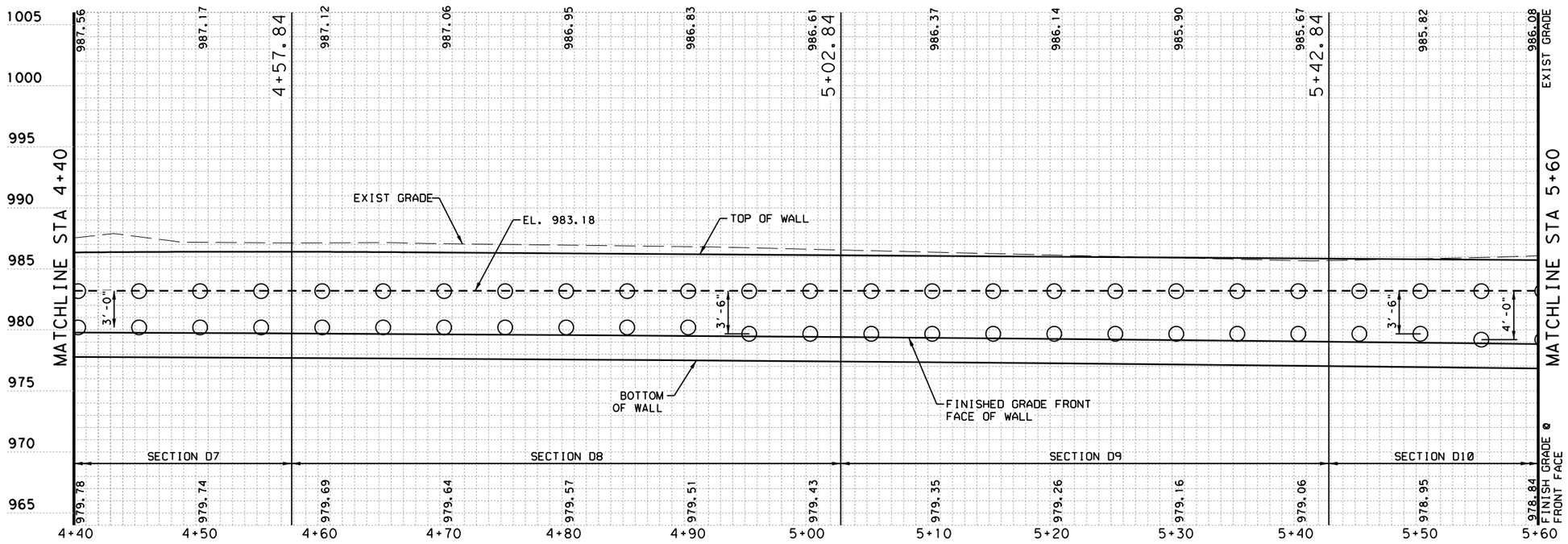

LEGEND

○ LOCATION OF SOIL NAIL - #8 BARS

● LOCATION OF SOIL NAIL - #9 BARS

NOTES:

1. HORIZONTAL SOIL NAIL SPACING IS 5' UNLESS OTHERWISE NOTED.
2. NAIL REINFORCEMENT LENGTH SHALL BE NAIL LENGTH SHOWN PLUS 6 INCHES.
3. SEE SOIL NAIL SCHEDULE ON SOIL NAIL WALL LAYOUT RW2 SHEET 6 OF 6 FOR NAIL LENGTHS AND QUANTITIES.
4. CONTRACTOR MAY ADJUST THE HORIZONTAL ANGLE OF THE SOIL NAILS WITHIN 15 DEGREES TO THE LEFT OR RIGHT OF THE NORMAL IN ORDER TO RESOLVE CONFLICTS BETWEEN SOIL NAILS AND EXISTING STRUCTURES.

0 5 10

SCALE: 1"=10'

STATE OF TEXAS
BRANDON K. SMITH
106318
LICENSED PROFESSIONAL ENGINEER

4/10/2025

WILCO TEXAS

BGE, Inc.
101 W Louis Henna Blvd, Suite 400, Austin, TX 78728
Tel: 512-879-0400 • www.bgeinc.com
TBPE Registration No. F-1046

RM 2243

SOIL NAIL WALL LAYOUT RW2

SHEET 2 OF 6

FED.RD. DIV.NO.	PROJECT NO.		SHEET NO.
6			178
STATE	DIST.	COUNTY	
TEXAS	AUS	WILLIAMSON	
CONT.	SECT.	JOB	HIGHWAY NO.
0914	05	222	RM 2243

4/10/2025 12:56:37 PM pdf.pltcfg
G:\TXC\Projects\County\Williamson\7473-02 RM 2243 Phase 1A\03*CADD\01*Shts\04-RETWL\RM2243*P1A*RETWL-2*LYT*02.dgn

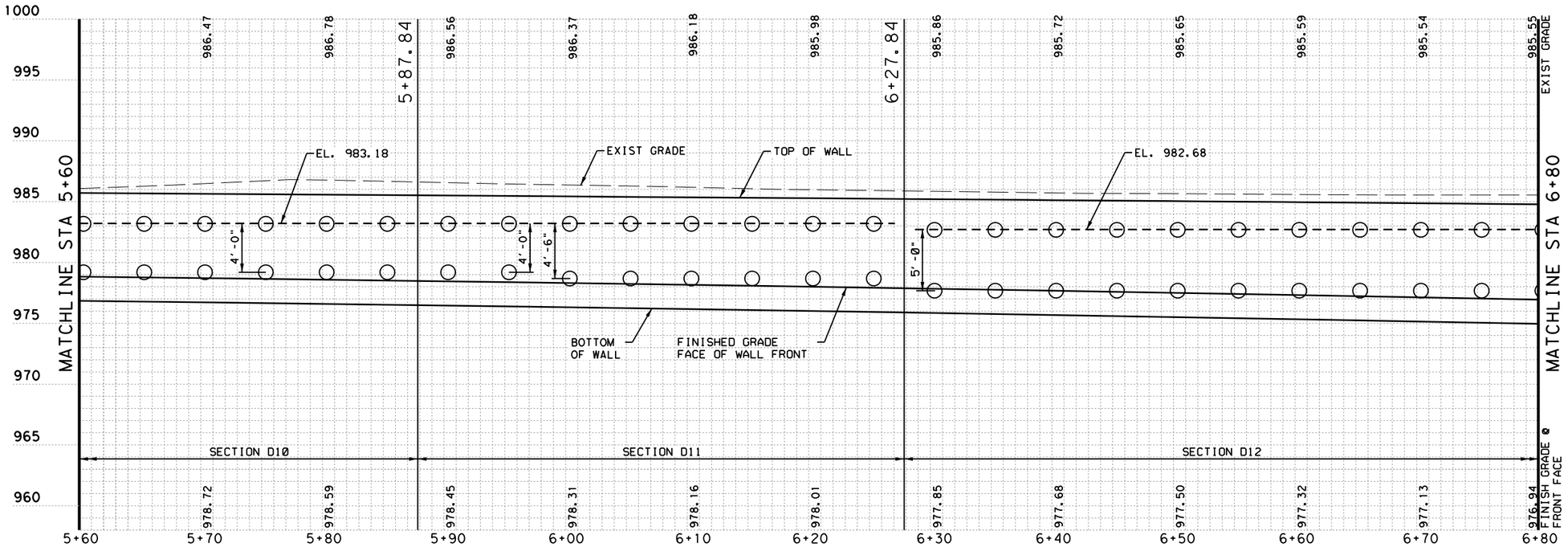

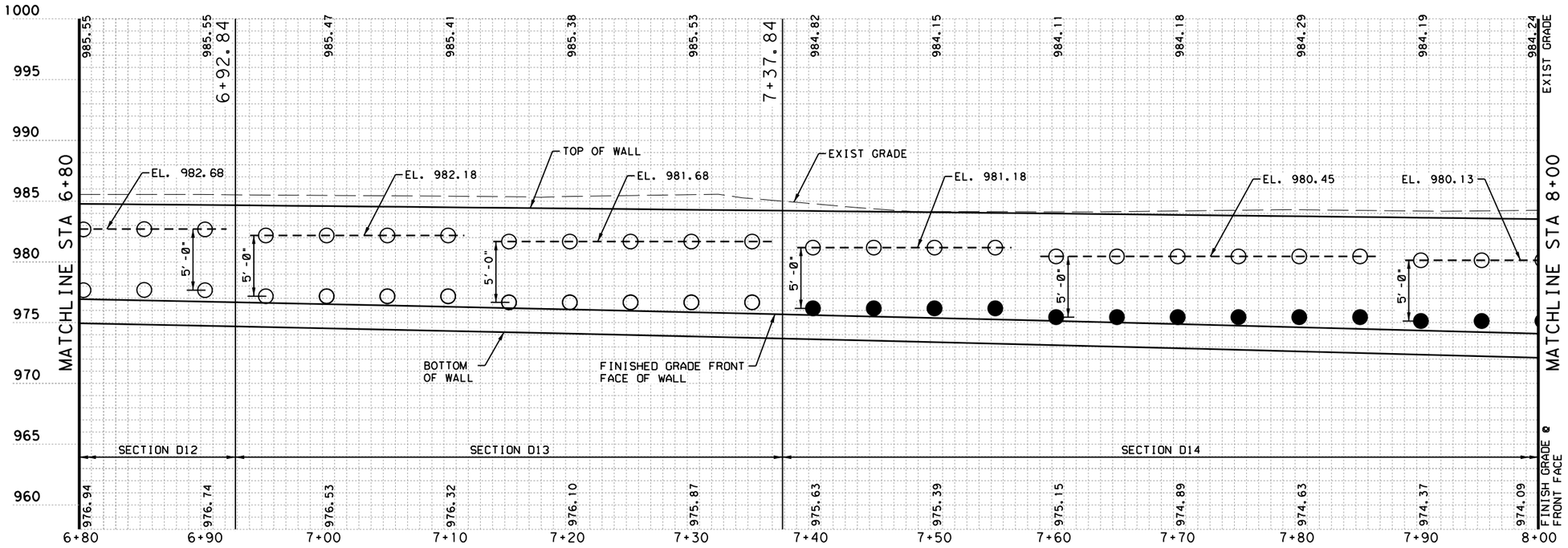

LEGEND

- ○ LOCATION OF SOIL NAIL - #8 BARS
- ● LOCATION OF SOIL NAIL - #9 BARS

NOTES:

1. HORIZONTAL SOIL NAIL SPACING IS 5' UNLESS OTHERWISE NOTED.
2. NAIL REINFORCEMENT LENGTH SHALL BE NAIL LENGTH SHOWN PLUS 6 INCHES.
3. SEE SOIL NAIL SCHEDULE ON SOIL NAIL WALL LAYOUT RW2 SHEET 6 OF 6 FOR NAIL LENGTHS AND QUANTITIES.
4. CONTRACTOR MAY ADJUST THE HORIZONTAL ANGLE OF THE SOIL NAILS WITHIN 15 DEGREES TO THE LEFT OR RIGHT OF THE NORMAL IN ORDER TO RESOLVE CONFLICTS BETWEEN SOIL NAILS AND EXISTING STRUCTURES.

0 5 10

SCALE: 1"=10'

STATE OF TEXAS
BRANDON K. SMITH
106318
LICENSED
PROFESSIONAL ENGINEER

4/10/2025

WILCO TEXAS

BGE, Inc.
101 W Louis Henna Blvd, Suite 400, Austin, TX 78728
Tel: 512-879-0400 • www.bgeinc.com
TBPE Registration No. F-1046

RM 2243

SOIL NAIL WALL LAYOUT RW2

SHEET 3 OF 6

FED.RD. DIV.NO.	PROJECT NO.		SHEET NO.
6			179
STATE	DIST.	COUNTY	
TEXAS	AUS	WILLIAMSON	
CONT.	SECT.	JOB	HIGHWAY NO.
0914	05	222	RM 2243

4/10/2025 12:56:38 PM pdf.pltcfg
G:\TXC\Projects\County*Williamson\7473-02 RM 2243 Phase 1A\03*CADD\01*Shts\04-RETWL\RM2243*P1A*RETWL-2*LYT*03.dgn

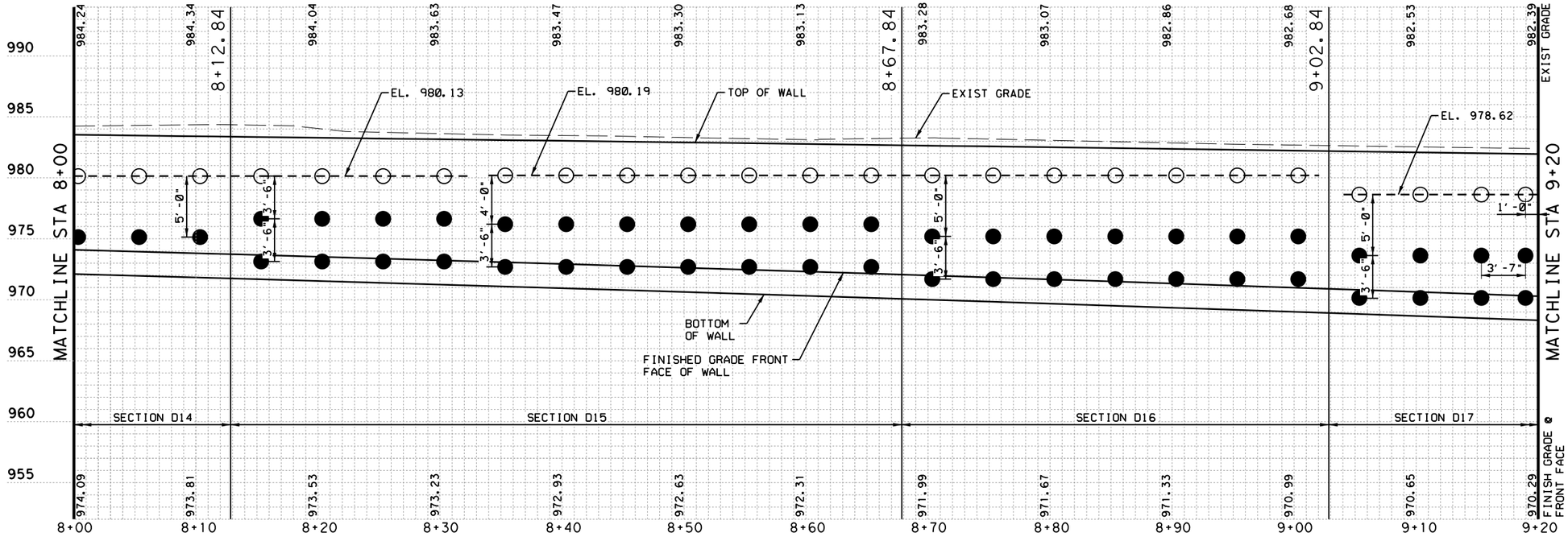

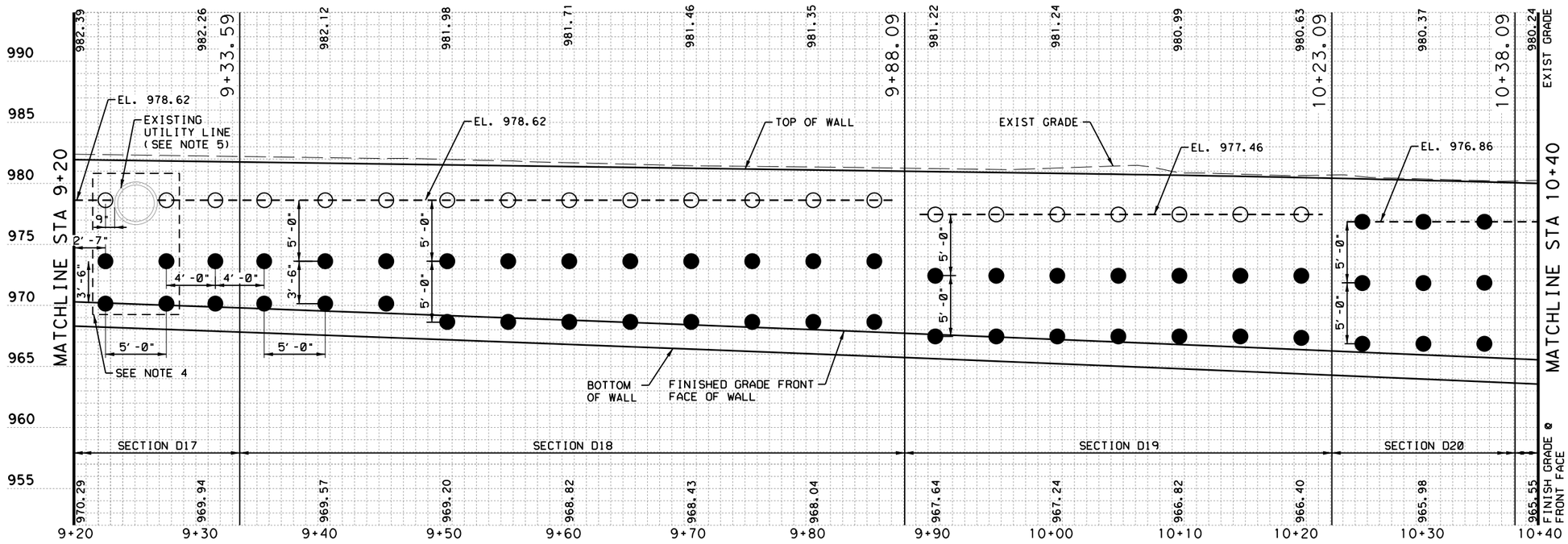

LEGEND

- ○ LOCATION OF SOIL NAIL - #8 BARS
- ● LOCATION OF SOIL NAIL - #9 BARS

NOTES:

1. HORIZONTAL SOIL NAIL SPACING IS 5' UNLESS OTHERWISE NOTED.
2. NAIL REINFORCEMENT LENGTH SHALL BE NAIL LENGTH SHOWN PLUS 6 INCHES.
3. SEE SOIL NAIL SCHEDULE ON SOIL NAIL WALL LAYOUT RW2 SHEET 6 OF 6 FOR NAIL LENGTHS AND QUANTITIES.
4. CONTRACTOR MAY ADJUST THE HORIZONTAL ANGLE OF THE SOIL NAILS WITHIN 15 DEGREES TO THE LEFT OR RIGHT OF THE NORMAL IN ORDER TO RESOLVE CONFLICTS BETWEEN SOIL NAILS AND EXISTING STRUCTURES.
5. CONTRACTOR TO FIELD VERIFY LOCATION OF EXISTING UTILITY LINE PRIOR TO SOIL NAIL INSTALLATION.

0 5 10

SCALE: 1"=10'

STATE OF TEXAS
BRANDON K. SMITH
106318
LICENSED
PROFESSIONAL ENGINEER

4/10/2025

WILCO TEXAS

BGE, Inc.
101 W Louis Henna Blvd, Suite 400, Austin, TX 78728
Tel: 512-879-0400 • www.bgeinc.com
TBPE Registration No. F-1046

RM 2243

SOIL NAIL WALL LAYOUT RW2

SHEET 4 OF 6

FED.RD. DIV.NO.	PROJECT NO.		SHEET NO.
6			180
STATE	DIST.	COUNTY	
TEXAS	AUS	WILLIAMSON	
CONT.	SECT.	JOB	HIGHWAY NO.
0914	05	222	RM 2243

4/10/2025 12:56:39 PM pdf.pltcfg
G:\TXC\Projects\County*Williamson\7473-02 RM 2243 Phase 1A\03*CADD\01*Shts\04-RETWL\RM2243*P1A*RETWL-2*LYT*04.dgn

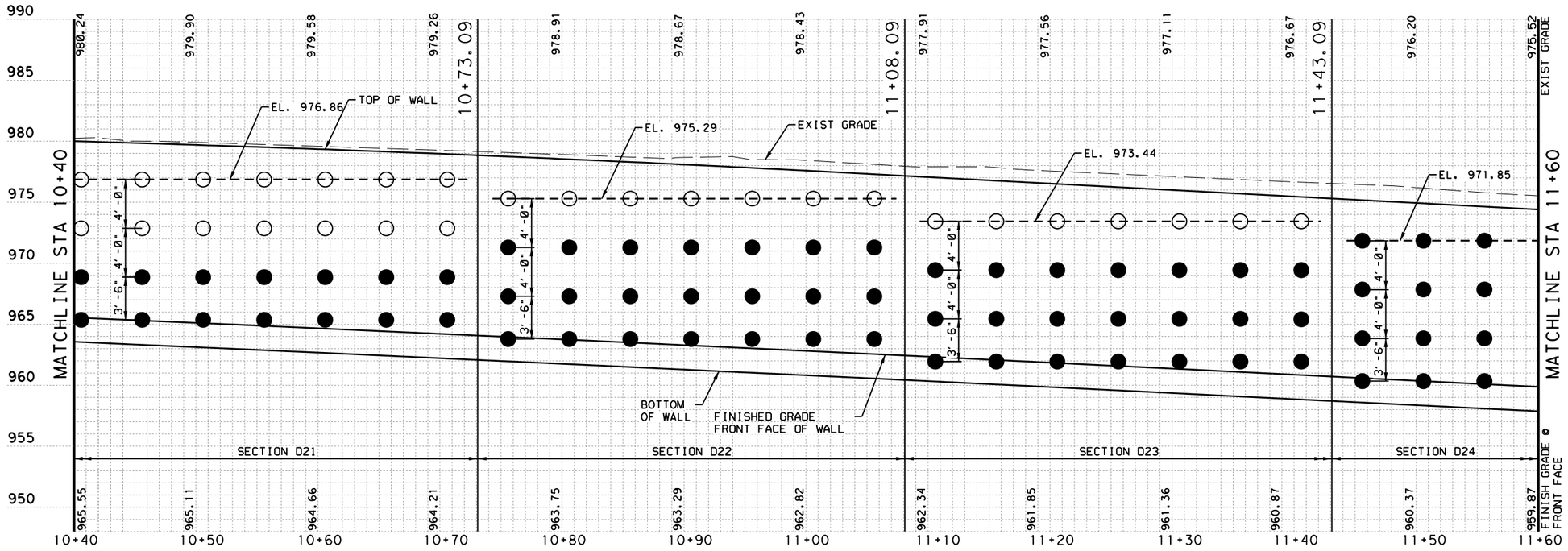

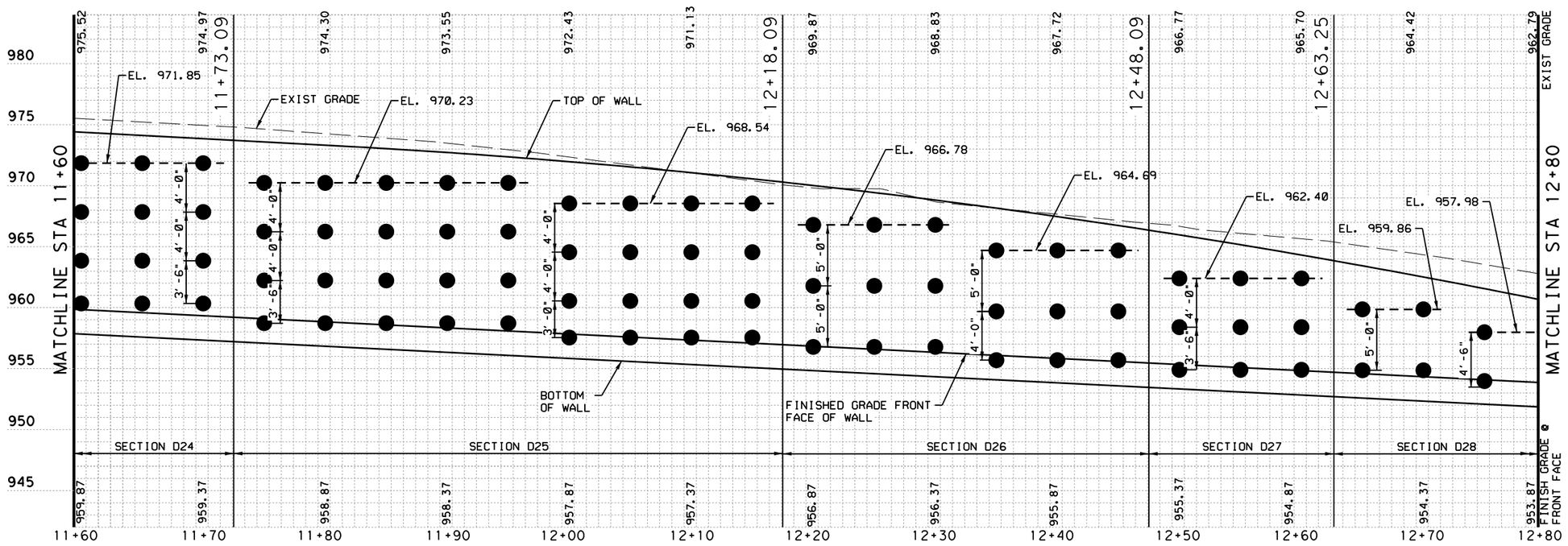

LEGEND

- ○ LOCATION OF SOIL NAIL - #8 BARS
- ● LOCATION OF SOIL NAIL - #9 BARS

NOTES:

1. HORIZONTAL SOIL NAIL SPACING IS 5' UNLESS OTHERWISE NOTED.
2. NAIL REINFORCEMENT LENGTH SHALL BE NAIL LENGTH SHOWN PLUS 6 INCHES.
3. SEE SOIL NAIL SCHEDULE ON SOIL NAIL WALL LAYOUT RW2 SHEET 6 OF 6 FOR NAIL LENGTHS AND QUANTITIES.
4. CONTRACTOR MAY ADJUST THE HORIZONTAL ANGLE OF THE SOIL NAILS WITHIN 15 DEGREES TO THE LEFT OR RIGHT OF THE NORMAL IN ORDER TO RESOLVE CONFLICTS BETWEEN SOIL NAILS AND EXISTING STRUCTURES.

0 5 10

SCALE: 1"=10'

STATE OF TEXAS
BRANDON K. SMITH
106318
LICENSED PROFESSIONAL ENGINEER

4/10/2025

WILCO TEXAS

BGE, Inc.
101 W Louis Henna Blvd, Suite 400, Austin, TX 78728
Tel: 512-879-0400 • www.bgeinc.com
TBPE Registration No. F-1046

RM 2243

SOIL NAIL WALL LAYOUT RW2

SHEET 5 OF 6

FED.RD. DIV.NO.	PROJECT NO.	SHEET NO.
6		181

STATE	DIST.	COUNTY	
TEXAS	AUS	WILLIAMSON	
CONT.	SECT.	JOB	HIGHWAY NO.
0914	05	222	RM 2243

4/10/2025 12:56:40 PM pdf.pltcfg
G:\TXC\Projects\County*Williamson\7473-02 RM 2243 Phase 1A\03*CADD\01*Shts\04-RETWL\RM2243*P1A*RETWL-2*LYT*05.dgn

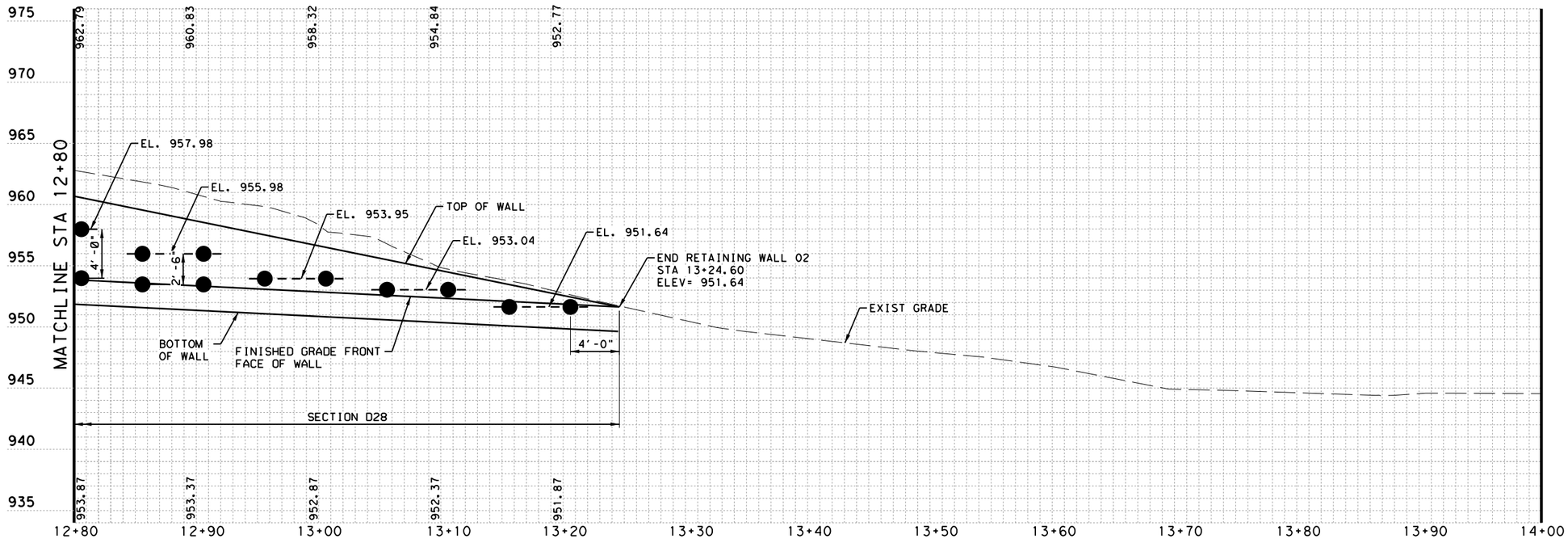

LEGEND

- ○ LOCATION OF SOIL NAIL - #8 BARS
- ● LOCATION OF SOIL NAIL - #9 BARS

NOTES:

1. HORIZONTAL SOIL NAIL SPACING IS 5' UNLESS OTHERWISE NOTED.
2. NAIL REINFORCEMENT LENGTH SHALL BE NAIL LENGTH SHOWN PLUS 6 INCHES.
3. SEE SOIL NAIL SCHEDULE ON SOIL NAIL WALL LAYOUT RW2 SHEET 6 OF 6 FOR NAIL LENGTHS AND QUANTITIES.
4. CONTRACTOR MAY ADJUST THE HORIZONTAL ANGLE OF THE SOIL NAILS WITHIN 15 DEGREES TO THE LEFT OR RIGHT OF THE NORMAL IN ORDER TO RESOLVE CONFLICTS BETWEEN SOIL NAILS AND EXISTING STRUCTURES.

0 5 10

SCALE: 1"=10'

SECTION	FROM STATION	TO STATION	SECTION LENGTH (FT)	AREA (FT2)	MAX. WALL HEIGHT (FT)	ROW	NUMBER OF NAILS	NAIL SIZE	NAIL LENGTH (FT)	TOTAL NAIL LENGTH (FT)
D1	1+07.98	1+69.48	61.50	194	4.32	1	12	#8	8.0	96
D2	1+69.48	2+09.48	40.00	216	6.45	1	8	#8	8.0	64
D3	2+09.48	2+69.48	60.00	427	7.26	1-2	24	#8	8.0	192
D4	2+69.48	3+20.00	50.52	365	7.26	1-2	20	#8	8.0	160
D5	3+20.00	3+72.84	52.84	382	7.24	1-2	22	#8	8.0	176
D6	3+72.84	4+17.84	45.00	345	8.16	1-2	18	#8	8.0	144
D7	4+17.84	4+57.84	40.00	340	8.69	1-2	16	#8	8.0	128
D8	4+57.84	5+02.84	45.00	391	8.70	1-2	18	#8	8.0	144
D9	5+02.84	5+42.84	40.00	350	8.79	1-2	16	#8	8.0	128
D10	5+42.84	5+87.84	45.00	401	9.03	1-2	18	#8	8.0	144
D11	5+87.84	6+27.84	40.00	367	9.33	1-2	16	#8	8.0	128
D12	6+27.84	6+92.84	65.00	626	9.97	1-2	26	#8	8.0	208
D13	6+92.84	7+37.84	45.00	461	10.52	1-2	18	#8	8.0	144
D14	7+37.84	8+12.84	75.00	829	11.62	1	11	#8	9.0	99
						2	15	#9*	9.0	135
D15	8+12.84	8+67.84	55.00	665	12.59	1	11	#8	9.0	99
						2-3	22	#9*	9.0	198
D16	8+67.84	9+02.84	35.00	452	13.27	1	7	#8	10.0	70
						2-3	14	#9*	10.0	140
D17	9+02.84	9+33.59	30.75	418	13.93	1	7	#8	10.0	70
						2-3	14	#9*	10.0	140
D18	9+33.59	9+88.09	54.50	795	15.26	1	11	#8	11.0	121
						2-3	22	#9*	11.0	242
D19	9+88.09	10+23.09	35.00	550	16.14	1	7	#8	12.0	84
						2-3	14	#9*	12.0	168
D20	10+23.09	10+38.09	15.00	245	16.41	1-3	9	#9*	12.0	108
D21	10+38.09	10+73.09	35.00	581	16.76	1-2	14	#8	12.0	168
						3-4	14	#9*	12.0	168
D22	10+73.09	11+08.09	35.00	587	16.73	1	7	#8	12.0	84
						2-4	21	#9*	12.0	252
D23	11+08.09	11+43.09	35.00	583	16.60	1	7	#8	12.0	84
						2-4	21	#9*	12.0	252
D24	11+43.09	11+73.09	30.00	497	16.60	1-4	24	#9*	12.0	288
D25	11+73.09	12+18.09	45.00	726	16.51	1-4	36	#9*	12.0	432
D26	12+18.09	12+48.09	30.00	427	15.33	1-3	18	#9*	11.0	198
D27	12+48.09	12+63.25	15.16	183	12.89	1-3	9	#9*	10.0	90
D28	12+63.25	13+24.60	61.35	408	11.15	1-2	18	#9*	8.0	144

*REFER TO LEGEND ON SOIL NAIL WALL LAYOUTS

STATE OF TEXAS
BRANDON K. SMITH
106318
LICENSED
PROFESSIONAL ENGINEER

4/10/2025

WILCO TEXAS

BGE, Inc.
101 W Louis Henna Blvd, Suite 400, Austin, TX 78728
Tel: 512-879-0400 • www.bgeinc.com
TBPE Registration No. F-1046

RM 2243

SOIL NAIL WALL LAYOUT RW2

SHEET 6 OF 6

FED.RD. DIV.NO.	PROJECT NO.	SHEET NO.
6		182

STATE	DIST.	COUNTY	
TEXAS	AUS	WILLIAMSON	
CONT.	SECT.	JOB	HIGHWAY NO.
0914	05	222	RM 2243

4/10/2025 12:56:41 PM pdf.pltcfg
G:\TXC\Projects\County\Williamson\7473-02 RM 2243 Phase 1A\03*CADD\01*Shts\04-RETWL\RM2243*P1A*RETWL-2*LYT*06.dgn

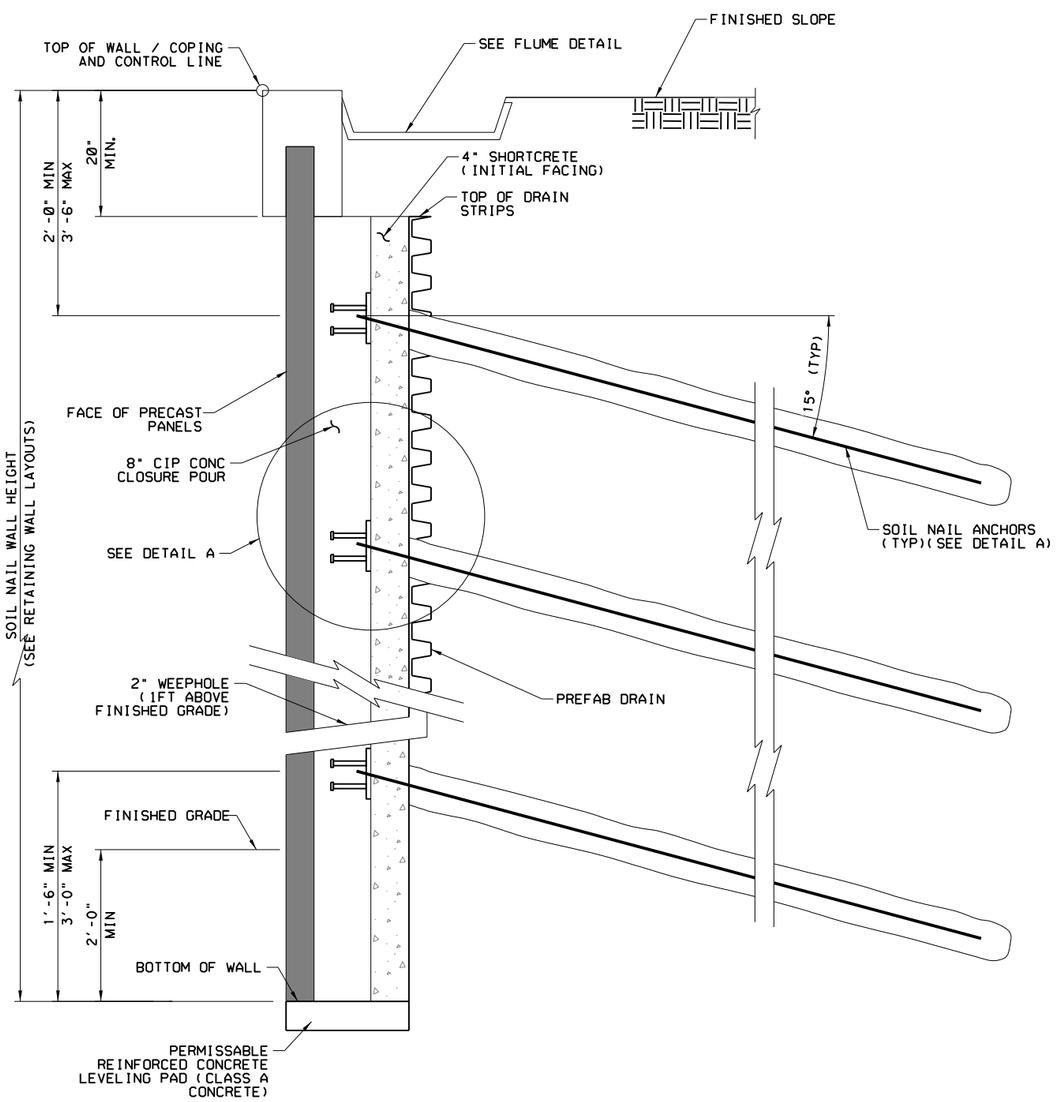

SOIL NAIL TYPICAL SECTION THROUGH WALL

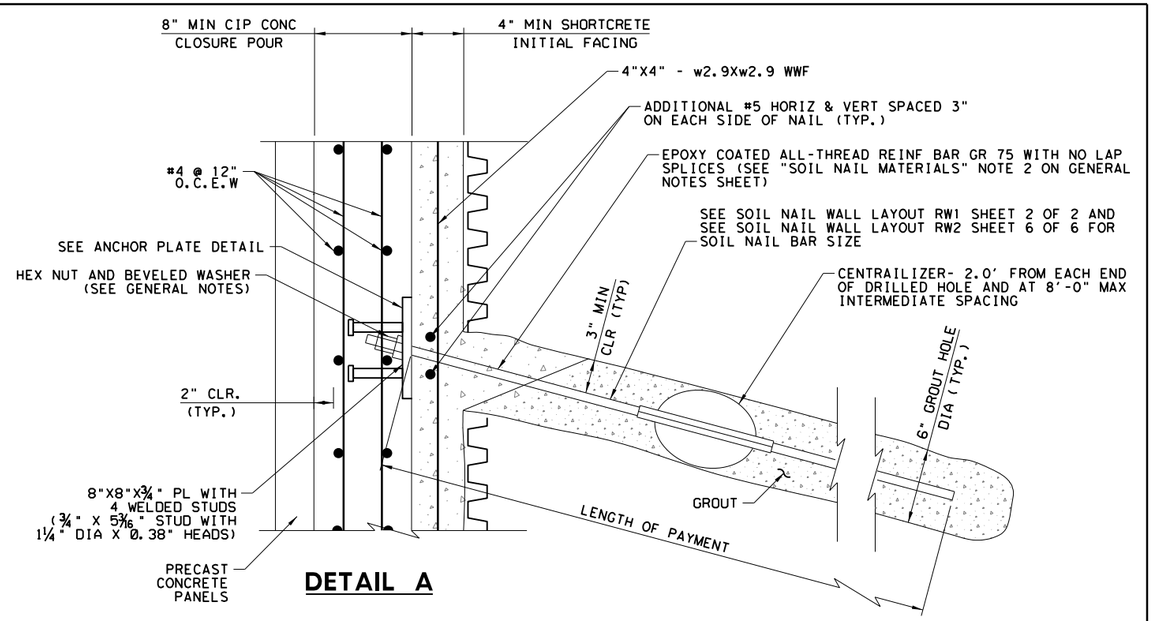

DETAIL A

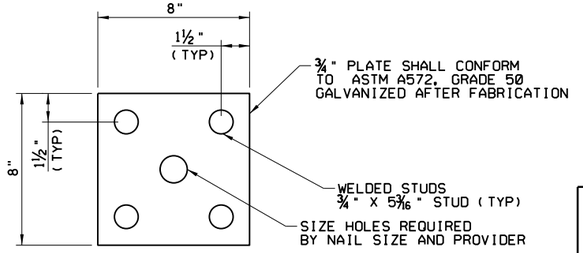

ANCHOR PLATE DETAIL

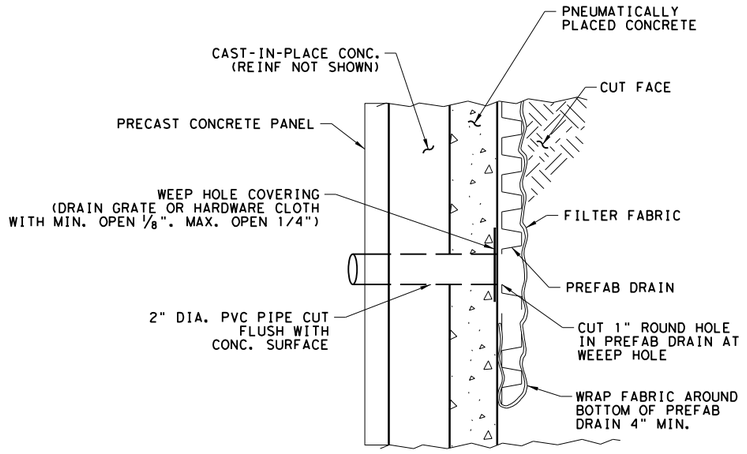

SECTION

WEEP HOLE DETAIL

STATE OF TEXAS
BRANDON K. SMITH
106318
LICENSED
PROFESSIONAL ENGINEER

4/10/2025

WILCO TEXAS

BGE, Inc.
101 W Louis Henna Blvd, Suite 400, Austin, TX 78728
Tel: 512-879-0400 • www.bgeinc.com
TBPE Registration No. F-1046

RM 2243

SOIL NAIL WALL DETAILS

SHEET 1 OF 2

FED.RD. DIV.NO.	PROJECT NO.		SHEET NO.
6			183
STATE	DIST.	COUNTY	
TEXAS	AUS	WILLIAMSON	
CONT.	SECT.	JOB	HIGHWAY NO.
0914	05	222	RM 2243

4/10/2025 12:56:42 PM pdf.pltcfg
G:\TXC\Projects\County*Williamson\7473-02 RM 2243 Phase 1A\03*CADD\01*Shts\04-RETWL\RM2243*P1A*RETWL-DET-01.dgn

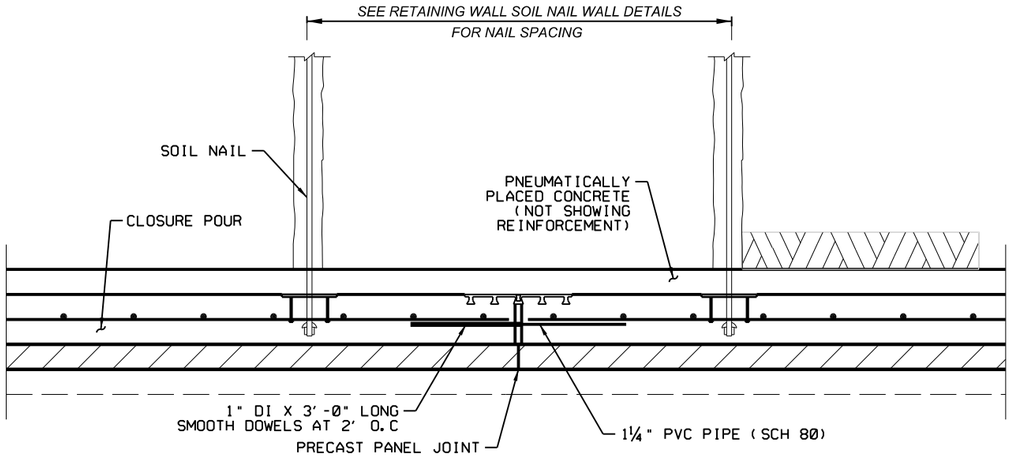

VERTICAL EXPANSION JOINT DETAIL

VERTICAL EXPANSION JOINTS SHALL BE SPACED AT 96 FT MAX.
TYPE "A" WATERSTOP MAY BE ELIMINATED IF JOINT OCCURS AT DRAINAGE MAT.

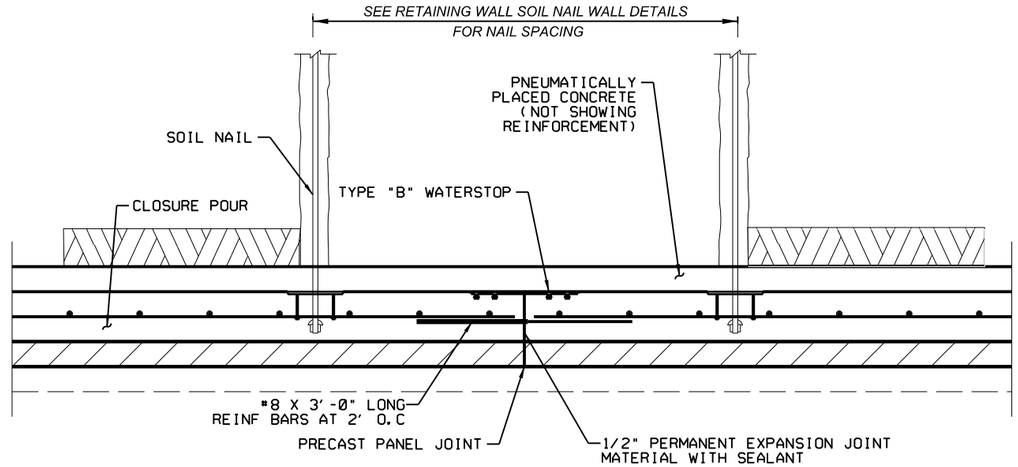

OPTIONAL VERTICAL CONSTRUCTION JOINT DETAIL

CONTRACTOR HAS THE OPTION TO USE #8 BARS AT CONSTRUCTION JOINT AS SHOWN OR CONTINUE CLOSURE POUR WALL REINFORCING THROUGH JOINT.

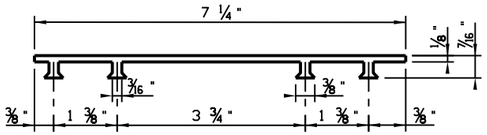

PVC WATERSTOP TYPE "B"

DIMENSIONS AND SHAPES MAY VARY SLIGHTLY DEPENDING ON MANUFACTURER.

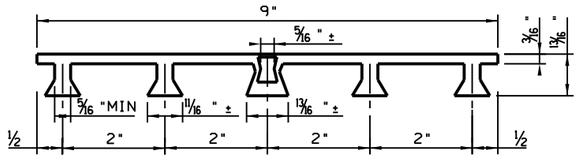

PVC WATERSTOP TYPE "A"

DIMENSIONS AND SHAPES MAY VARY SLIGHTLY DEPENDING ON MANUFACTURER.

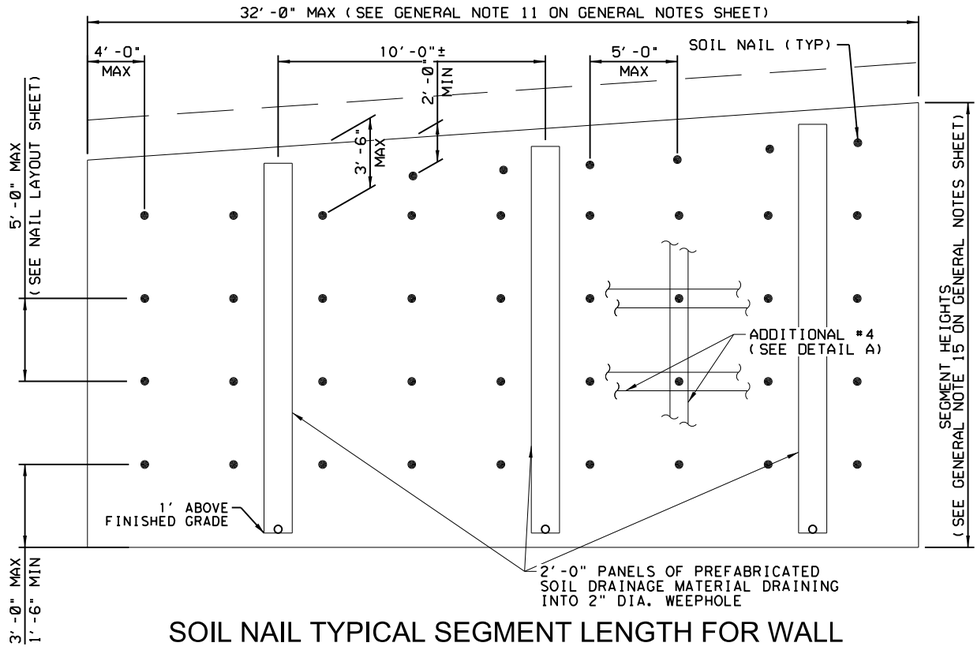

SOIL NAIL TYPICAL SEGMENT LENGTH FOR WALL

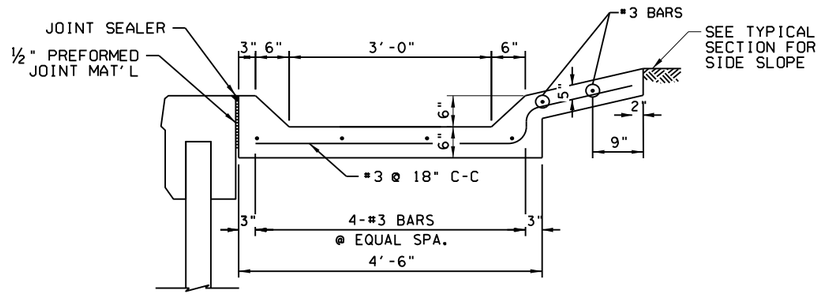

FLUME DETAIL

STATE OF TEXAS
BRANDON K. SMITH
106318
LICENSED
PROFESSIONAL ENGINEER

4/10/2025

WILCO TEXAS

BGE, Inc.
101 W Louis Henna Blvd, Suite 400, Austin, TX 78728
Tel: 512-879-0400 • www.bgeinc.com
TBPE Registration No. F-1046

RM 2243

SOIL NAIL WALL DETAILS

SHEET 2 OF 2

FED.RD. DIV.NO.	PROJECT NO.	SHEET NO.
6		184

STATE	DIST.	COUNTY	
TEXAS	AUS	WILLIAMSON	
CONT.	SECT.	JOB	HIGHWAY NO.
0914	05	222	RM 2243

4/10/2025 12:56:43 PM pdf.pltcfg
G:\TXC\Projects\County*Williamson\7473-02 RM 2243 Phase 1A\03*CADD\01*Shts\04-RETWL\RM2243*P1A*RETWL-DET-02.dgn

DISCLAIMER:
The use of this standard is governed by the "Texas Engineering Practice Act". No warranty of any kind is made by TxDOT for any purpose whatsoever. TxDOT assumes no responsibility for the conversion of this standard to other formats or for incorrect results or damages resulting from its use.

DATE: 4/10/2025
FILE: G:\TXC\Projects\County_Williamson\7473-02 RM 2243 Phase 1A\03_CADD\01_Shts\03-RDWY\Stds\tehmac11.dgn

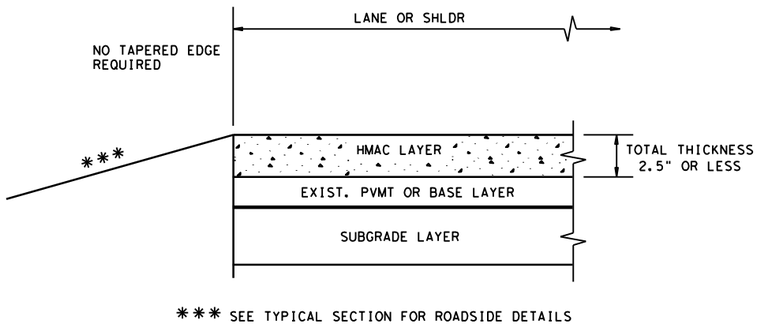

*** SEE TYPICAL SECTION FOR ROADSIDE DETAILS

CONDITION - 1
THIN HMAC SURFACES OR HMAC OVERLAY
WITH THICKNESS OF 2.5" OR LESS

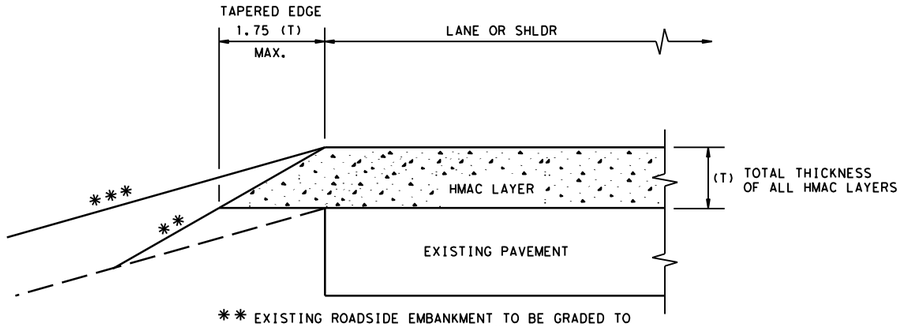

** EXISTING ROADSIDE EMBANKMENT TO BE GRADED TO PRODUCE A SMOOTH LEVEL SURFACE FOR PLACEMENT OF TAPERED EDGE. THIS WORK IS SUBSIDIARY TO THE VARIOUS BID ITEMS.

*** SEE TYPICAL SECTION FOR ROADSIDE DETAILS

CONDITION - 2
OVERLAY OF EXISTING PAVEMENT
HMAC THICKNESS 2.5" TO 5"

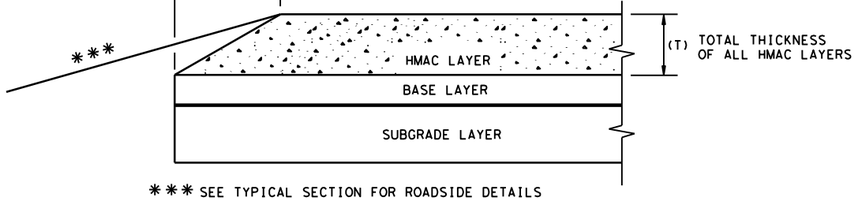

*** SEE TYPICAL SECTION FOR ROADSIDE DETAILS

CONDITION - 3
NEW OR RECONSTRUCTED PAVEMENT
HMAC THICKNESS 2.5" TO 5"

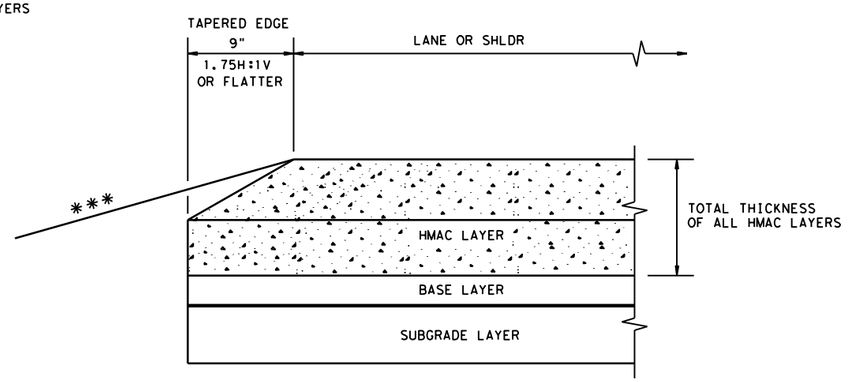

*** SEE TYPICAL SECTION FOR ROADSIDE DETAILS

CONDITION - 4
NEW OR RECONSTRUCTED PAVEMENT
HMAC THICKNESS 5" OR GREATER

GENERAL NOTES

1. UNLESS OTHERWISE SHOWN IN THE PLANS, A VERTICAL EDGE IS PERMISSIBLE FOR HMAC PLACED GREATER THAN 5" BELOW THE EDGE OF PAVEMENT AND FOR THICKNESS OF HMAC LESS THAN 2.5".
2. FOR FURTHER INFORMATION REGARDING THE ROADSIDE AND PAVEMENT DETAILS, SEE TYPICAL SECTIONS.
3. PAYMENT FOR TAPERED EDGE WILL BE IN ACCORDANCE WITH APPLICABLE ITEMS IN THE CONTRACT.
4. THE SLOPE OF THE TAPERED EDGE SHALL BE 1.75H:1V OR FLATTER.
5. THE TAPERED EDGE SHALL BE PRODUCED BY USE OF A SCREED ATTACHMENT CAPABLE OF PRODUCING A SMOOTH COMPACTED SURFACE. ADDITIONAL COMPACTING EFFORT BEHIND THE SCREED IS NOT REQUIRED.

(NOT TO SCALE)

Texas Department of Transportation | Design Division Standard

TAPERED EDGE DETAILS
HMAC PAVEMENT

TE(HMAC)-11

FILE: tehmac11.dgn	DN: TxDOT	CK: RL	DW: KB	CK:
©TxDOT January 2011	CONT	SECT	JOB	HIGHWAY
REVISIONS	0914	05	222	RM 2243
	DIST	COUNTY		SHEET NO.
	AUS	WILLIAMSON		185

DISCLAIMER:
The use of this standard is governed by the "Texas Engineering Practice Act". No warranty of any kind is made by TxDOT for any purpose whatsoever. TxDOT assumes no responsibility for the conversion of this standard to other formats or for incorrect results or damages resulting from its use.

DATE: 4/10/2025
FILE: G:\TXC\Projects\County_Williamson\7473-02 RM 2243 Phase 1A\03_CADD\01_Shts\03-RDWY\Stds\cccg22.dgn

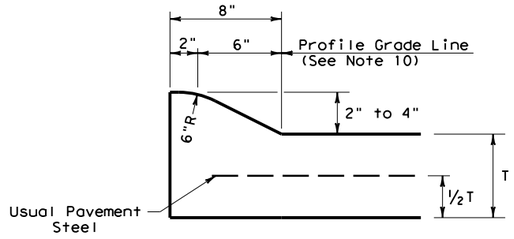

TYPE I CURB (MONOLITHIC)
2" - 4" HEIGHT

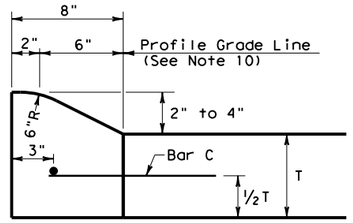

TYPE I CURB
2" - 4" HEIGHT

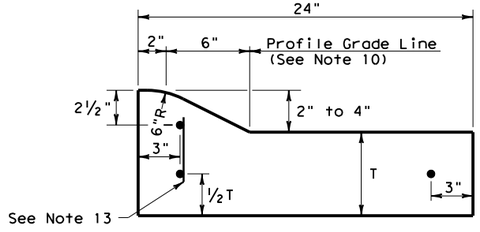

TYPE I CURB AND GUTTER
2" - 4" HEIGHT

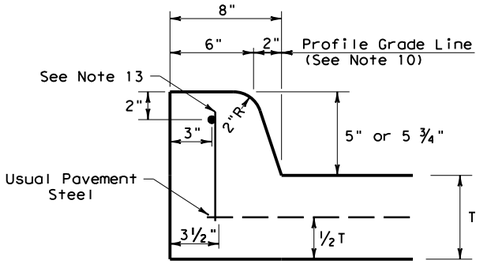

TYPE II CURB (MONOLITHIC)
5" - 5 ¾" HEIGHT

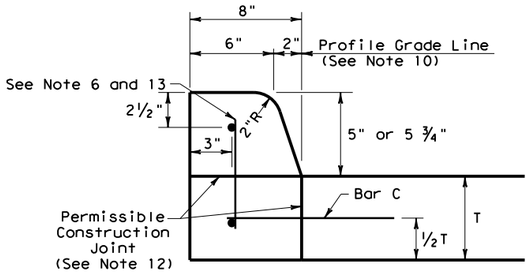

TYPE II CURB
5" - 5 ¾" HEIGHT

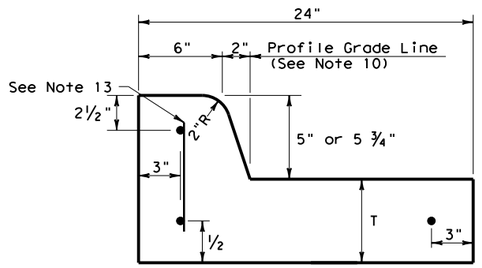

TYPE II CURB AND GUTTER
5" - 5 ¾" HEIGHT

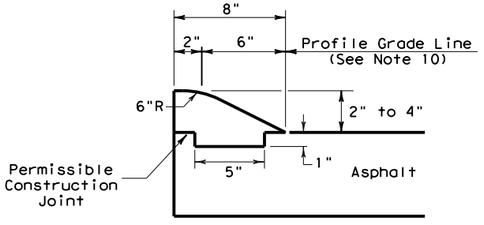

TYPE III CURB (KEYED)
2" - 4" HEIGHT

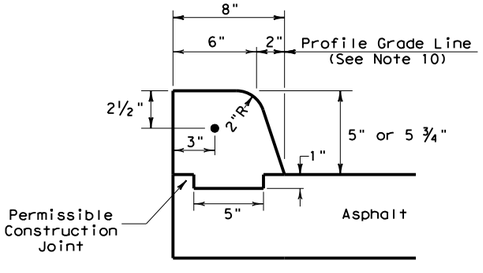

TYPE IV CURB (KEYED)
5" - 5 ¾" HEIGHT

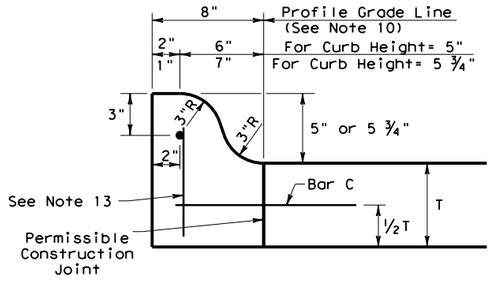

TYPE IIa CURB
5" - 5 ¾" HEIGHT

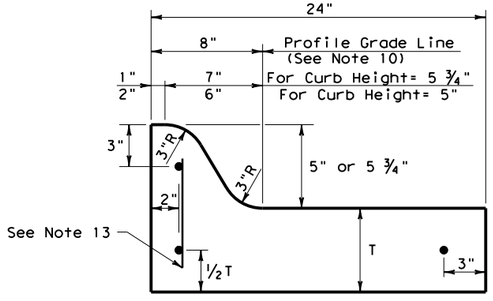

TYPE IIa CURB AND GUTTER
5" - 5 ¾" HEIGHT

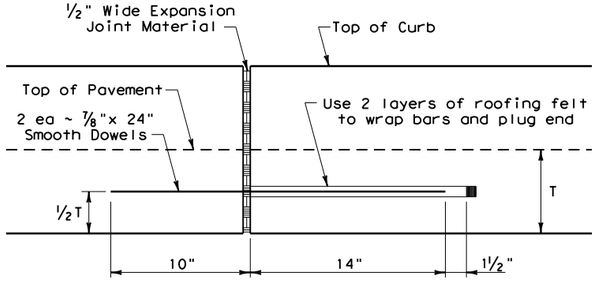

EXPANSION JOINT DETAIL

CURB TRANSITION NOTE:
Field conditions may require a longer or shorter transition, and shall be shown elsewhere in the plans, or as directed by the Engineer.

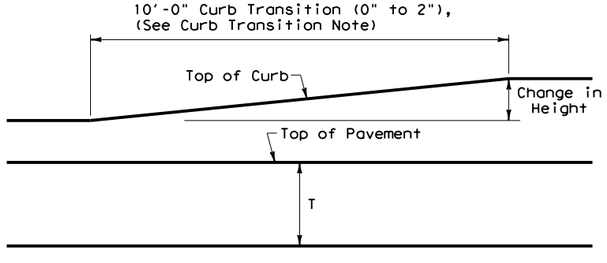

CURB TRANSITION
Note: To be paid for as Highest Curb

GENERAL NOTES

1. All materials and construction shall be in accordance with Item 529, "Concrete Curb, Gutter, and Combined Curb and Gutter."
2. Concrete shall be Class A.
3. When reinforcing bars are used, they shall be No.4 unless otherwise shown. The use of fiber reinforced concrete in lieu of reinforcing steel is acceptable. Use fibers meeting the requirements of DMS 4550, "Fibers for Concrete," and dose fibers in accordance with Material Producers List (MPL) "Fibers for Class A and B Concrete Applications."
4. Round exposed sharp edges with a rounding tool, to a minimum radius of ¼ inch.
5. All existing curbs and driveways to be removed shall be sawed or removed at existing joints.
6. Where concrete curb is to be placed on existing concrete pavement, Bar B may be drilled and grouted in place, or may be inserted into fresh concrete.
7. Expansion and contraction joints shall be constructed to match pavement joints in all curbs and curb and gutter adjacent to jointed concrete pavement. Where placement of curb or curb and gutter is not adjacent to concrete pavement, expansion joints shall be provided at structures, curb returns at streets, and at locations directed by The Engineer.
8. Vertical and horizontal dowel bars and transverse reinforcing bars shall be placed at four feet C~C.
9. Dimension 'T' shown is the thickness of concrete pavement. When curb is installed adjacent to flexible pavement dimension 'T' is 8" maximum.
10. Usual profile grade line. Refer to typical sections and plan-profile sheets for exact locations.
11. One-half inch expansion joint material shall be provided where curb or curb and gutter is adjacent to sidewalk or riprap.
12. When horizontal permissible construction joints are used, the longitudinal pavement steel shall be placed in accordance with pavement details shown elsewhere in the plans. Reinforcing steel for curb section shall then conform to that required for concrete curb.
13. Bar B placement as needed (typically at four ft. C-C) to support curb reinforcing steel during concrete placement.

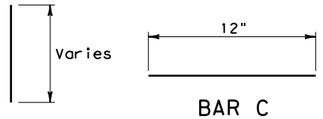

BAR B

BAR C

Texas Department of Transportation

Design Division Standard

CONCRETE CURB AND CURB AND GUTTER

CCCG-22

FILE: cccg21.dgn	DN: TXDOT	CK: AN	DW: CS	CK: KM
© TxDOT: JUNE 2022	CONT	SECT	JOB	HIGHWAY
REVISIONS	0914	05	222	RM 2243
	DIST	COUNTY		SHEET NO.
	AUS	WILLIAMSON		186

DISCLAIMER:
THE USE OF THIS STANDARD IS GOVERNED BY THE "TEXAS ENGINEERING PRACTICE ACT". NO WARRANTY OF ANY KIND IS MADE BY TXDOT FOR ANY PURPOSE WHATSOEVER. TXDOT ASSUMES NO RESPONSIBILITY FOR THE CONVERSION OF THIS STANDARD TO OTHER FORMATS OR FOR INCORRECT RESULTS OR DAMAGES RESULTING FROM ITS USE.

DATE: 4/10/2025
FILE: G:\TXC\Projects\County_Williamson\7473-02 RM 2243 Phase 1A\03_CADD\01_Shts\03-RDWY\Stds\gf31ms19.dgn

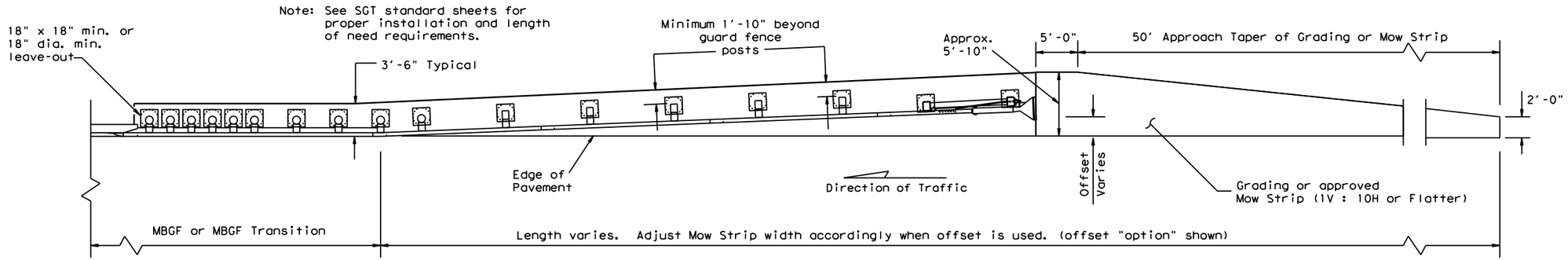

GRADING AND MOW STRIP AT GUARDRAIL END TREATMENTS

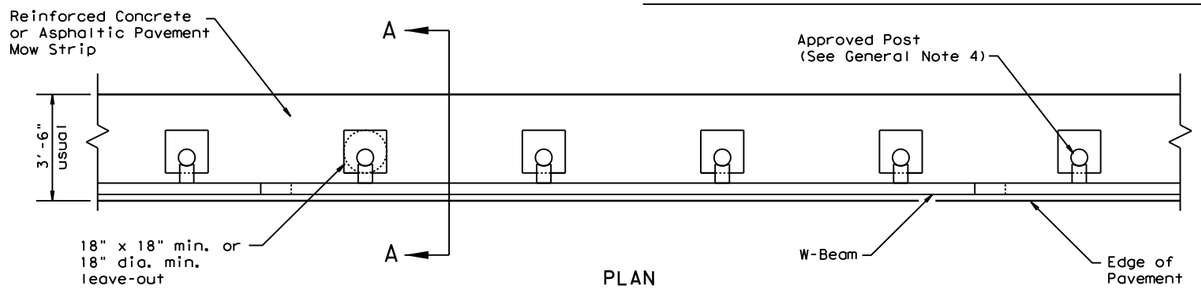

PLAN

GF(31) shown with Mow Strip
(See GF(31) standard sheet for proper installation)

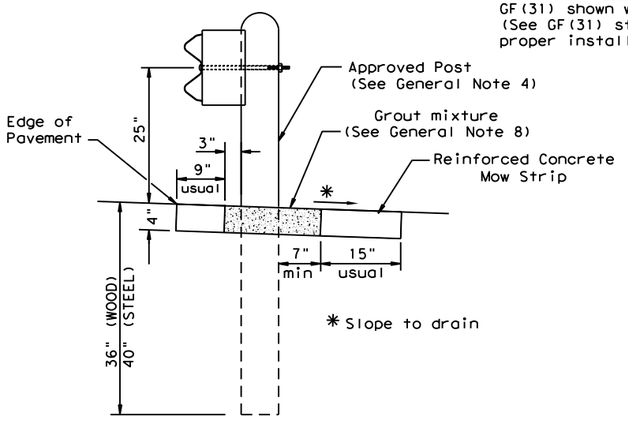

SECTION A-A

Typical

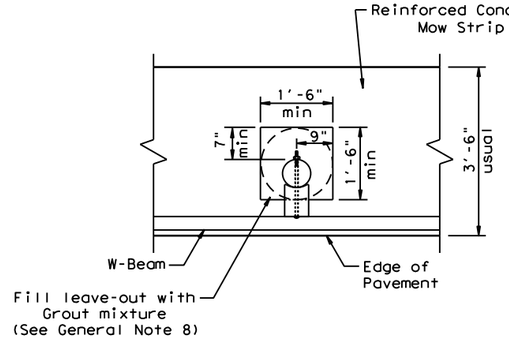

MOW STRIP DETAIL

Reinforced Concrete Mow Strip with 18" x 18" Square or 18" Dia. minimum leave-out.

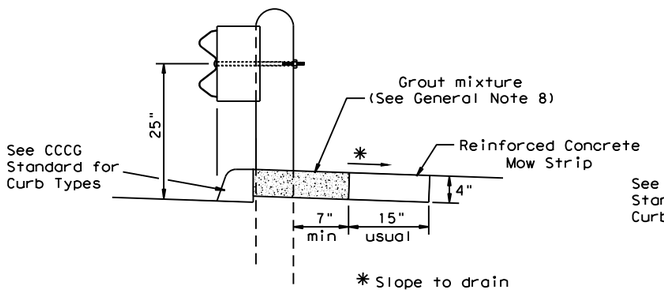

CURB OPTION (1)

This option will increase the post embedment throughout the system.

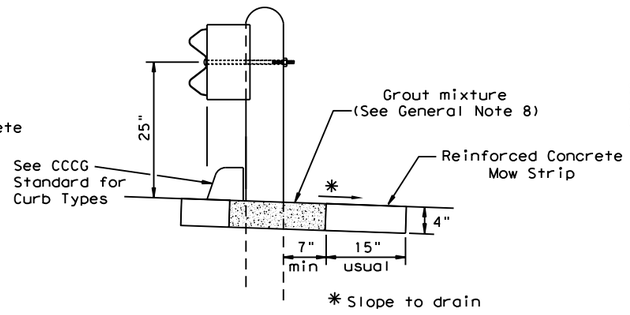

CURB OPTION (2)

Curb shown on top of mow strip

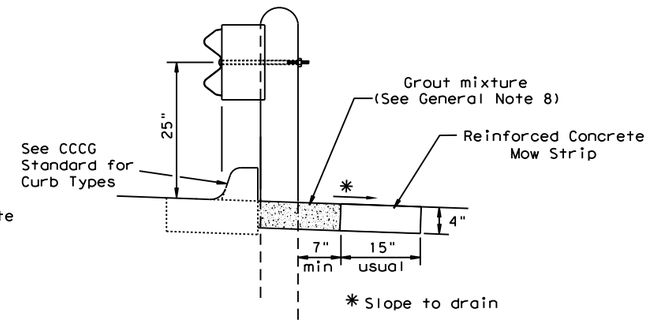

CURB OPTION (3)

Note: Site Condition(s)

Site conditions may exist where grading is required for the proper installation of metal guard fence and end treatments.

Approach grading or mow strip may be decreased or eliminated, as directed by the Engineer.

GENERAL NOTES

1. This mow strip design is for use with metal beam guard fence, guard fence transitions, and guard fence end treatments. See applicable GF(31) MBGF or GF(31) Transition Standard sheet for additional information.
2. Mow strips shall be reinforced concrete with (wire mesh or synthetic fiber), as shown on the plans and will be paid for under the pertinent bid item. Reinforced concrete shall be placed in accordance with Item 432, "Riprap." The use of the synthetic fiber in lieu of steel reinforcing is acceptable, provided the fiber producer is on the Department Material Producer List (MPL), maintained by TxDOT, Construction Division.
3. The leave-out behind the post shall be a minimum of 7".
4. Only steel (W6 x 8.5 or W6 x 9.0), or 7 ½" Dia. round wood posts are acceptable for use in the mow strip. See GF(31) Standard for additional details.
5. Other curb placement options may be used. Curbs are not considered part of the mow strip and will be paid for under other pertinent bid item.
6. Thickness of the mow strip will be 4".
7. The limits of payment for reinforced concrete will include leave-outs for the posts.
8. The leave-outs shall be filled with a Grout mixture consisting of: 2719 pounds sand, 188 pounds Type I or II cement, and 550 pounds of water per cubic yard, with a 28-day compressive strength of approximately 230 psi or less. Provide grout with a consistency that will flow into and completely fill all voids. Due to auger size, larger leave-out dimensions are acceptable from both an impact performance and maintenance repair standpoint (Suggested Maximum leave-out of 20"). Payment for furnishing and placing the grout mixture will be subsidiary to the pay item of riprap mow strip.

Texas Department of Transportation

Design Division Standard

METAL BEAM GUARD FENCE (MOW STRIP) TL-3 MASH COMPLIANT

GF(31)MS-19

FILE: gf31ms19.dgn	DN: TxDOT	CK: KM	DW: VP	CK: CGL/AG
©TxDOT: NOVEMBER 2019	CONT	SECT	JOB	HIGHWAY
REVISIONS	0914	05	222	RM 2243
	DIST	COUNTY		SHEET NO.
	AUS	WILLIAMSON		187

DISCLAIMER:
THE USE OF THIS STANDARD IS GOVERNED BY THE "TEXAS ENGINEERING PRACTICE ACT". NO WARRANTY OF ANY KIND IS MADE BY TXDOT FOR ANY PURPOSE WHATSOEVER. TXDOT ASSUMES NO RESPONSIBILITY FOR THE CONVERSION OF THIS STANDARD TO OTHER FORMATS OR FOR INCORRECT RESULTS OR DAMAGES RESULTING FROM ITS USE.

DATE: 4/10/2025
FILE: G:\TXC\Projects\County_Williamson\7473-02 RM 2243 Phase 1A\03_CADD\01_Shts\03-RDWY\Stds\gf3119.dgn

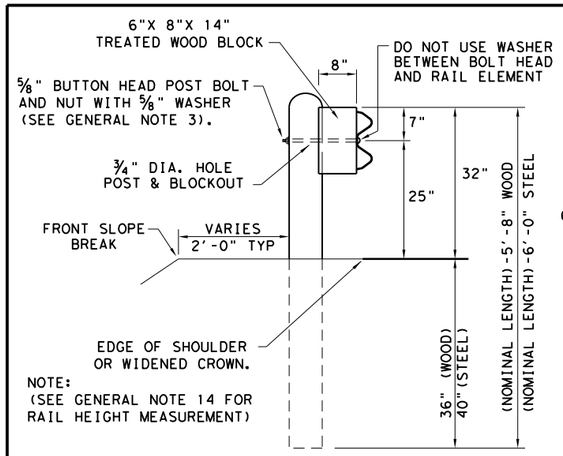

TYPICAL POST PLACEMENT

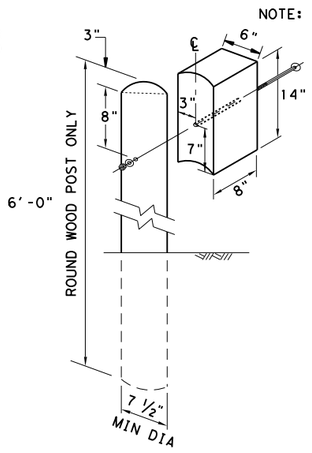

WOOD BLOCK TO ROUND WOOD POST

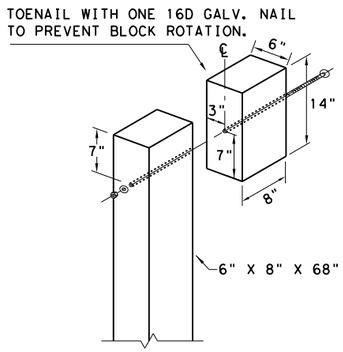

WOOD BLOCK TO RECTANGULAR WOOD POST

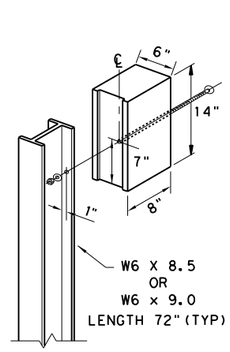

ROUTED WOOD BLOCK TO I-BEAM STEEL POST

NOTE: ** "WOOD" INDICATES DIMENSIONS FOR BOTH ROUND AND RECTANGULAR WOOD POST SYSTEMS.

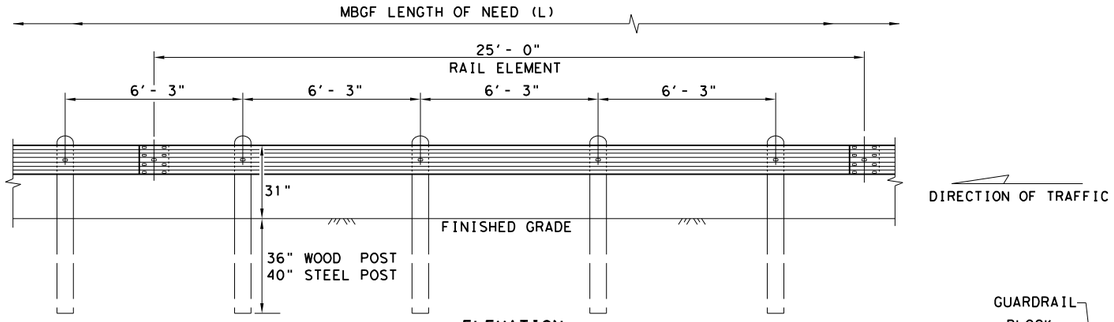

ELEVATION MID-SPAN RAIL SPLICE

SHOWING A 25'- 0" SECTION OF W-BEAM RAIL. (SEE GENERAL NOTE 2)

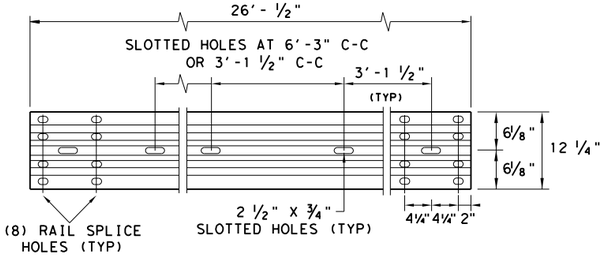

ELEVATION 25'- 0" (NOM.) W-BEAM SECTION

NOTES: SEE GENERAL NOTE 2 FOR ALLOWABLE RAIL TYPES.
SEE RAIL SPLICE DETAIL FOR REQUIRED HARDWARE.

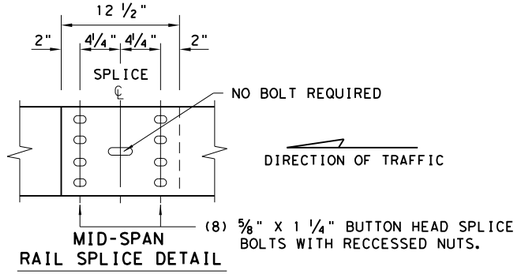

MID-SPAN RAIL SPLICE DETAIL

NOTE: GF(31), MID-SPAN RAIL SPLICES ARE REQUIRED WITH 6'-3" POST SPACINGS.

NOTE:
FOUR TYPES OF BUTTON-HEAD GUARD RAIL BOLTS COME WITH A RECCESSED NUT.

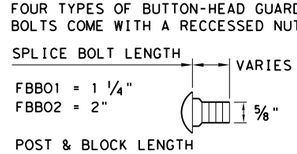

BUTTON HEAD BOLT

NOTE: SEE GENERAL NOTE 3 FOR SPLICE & POST BOLT DETAILS.

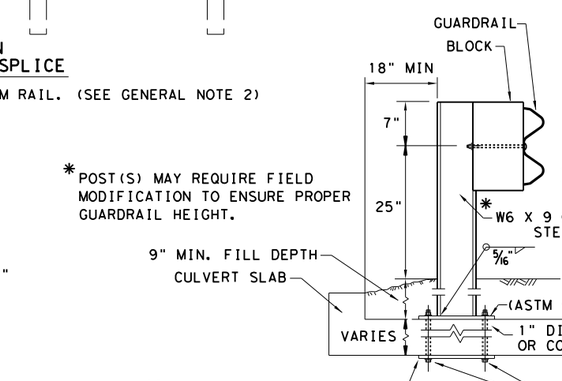

LOW FILL CULVERT POST

*POST(S) MAY REQUIRE FIELD MODIFICATION TO ENSURE PROPER GUARDRAIL HEIGHT.

NOTE: TWO INSTALLATION OPTIONS.

1. BOLT-THROUGH OPTION: REQUIRES A 6" MIN. SLAB THICKNESS. ⅞" DIA (ASTM A449) HEAVY HEX BOLTS WITH TWO HARDENED WASHER EACH AND HEAVY HEX NUTS.
NOTE: BOLT LENGTH = SLAB PLUS 2 ¼" MIN.

2. EPOXY ANCHOR OPTION: THIS OPTION MAY ONLY BE USED IF THE CULVERT SLAB IS 9" MIN. THICK. THREADED ANCHOR RODS MUST BE ⅞" DIA. ASTM A449 OR A193 GRADE B7 WITH HEAVY HEX NUT, AND ONE HARDENED WASHER EACH. EMBED ANCHOR RODS 6" WITH HILTI HIT RE 500 EPOXY ADHESIVE. OTHER TYPE III CLASS C EPOXY ADHESIVES MEETING THE REQUIREMENTS OF DMS-6100, "EPOXIES AND ADHESIVES", MAY BE USED IF IT CAN BE DEMONSTRATED THAT THEY MEET OR EXCEED THE STRENGTH OF HILTI HIT RE 500 WITH THE SAME EMBEDMENT DEPTH AND THREADED ROD DIA. FOLLOW THE MANUFACTURER'S REQUIREMENTS FOR INSTALLING EPOXIED THREADED RODS. EXTEND RODS ¼" MIN. BEYOND NUT.

NOTE: CULVERTS OF 25 FT. OR LESS, SEE GF(31)LS STANDARD FOR "LONG SPAN" OPTION.

NOTE: TRANSISTIONS TO BRIDGE RAILS OR TRAFFIC BARRIERS.
SEE GF(31)TL3 TR STANDARD FOR HIGH-SPEED TL-3 TRANSITIONS.
SEE GF(31)TL2 TR STANDARD FOR LOW-SPEED TL-2 TRANSITIONS.

GENERAL NOTES

1. THE TYPE OF POST (ROUND WOOD POST, RECTANGULAR WOOD POST, OR STEEL POST) WILL BE AS SHOWN IN THE PLANS. THE EXACT POSITION OF MBGF SHALL BE SHOWN IN THE PLANS OR AS DIRECTED BY THE ENGINEER. STEEL POSTS TO BE GALVANIZED IN ACCORDANCE WITH ITEM 445, "GALVANIZING."
2. RAIL ELEMENTS SHALL MEET THE REQUIREMENTS OF ITEM 540,"METAL BEAM GUARD FENCE" EXCEPT AS MODIFIED IN THE PLANS. THE CONTRACTOR MAY FURNISH RAIL ELEMENTS OF 25'- 0", OR 12'- 6" (NOM.) LENGTHS. RAIL ELEMENTS MAY HAVE SLOTTED HOLES AT 3'-1 ½" C-C OR 6'-3" C-C. A SPECIAL LENGTH OF RAIL MAY BE MANUFACTURED TO ACCOMMODATE THE DOWNSTREAM ANCHOR TERMINAL (DAT) AND THE TRANSITION SECTIONS OF GUARDRAIL.
3. BUTTON HEAD "POST BOLTS & NUTS" SHALL MEET THE REQUIREMENTS OF (ASTM A307), AND SHALL BE OF SUFFICIENT LENGTH TO EXTEND THROUGH THE FULL THICKNESS OF THE NUT AND ⅝" WASHER (FWC16a) AND NOT MORE THAN 1" BEYOND IT. TRIM REMAINING BOLT LENGTH TO MEET REQUIRED LENGTH.
4. FITTINGS (BOLTS, NUTS, AND WASHERS) SHALL BE GALVANIZED IN ACCORDANCE WITH ITEM 445,"GALVANIZING." FITTINGS SHALL BE SUBSIDIARY TO THE BID ITEM.
5. CROWN SHALL BE WIDENED TO ACCOMMODATE THE METAL BEAM GUARD FENCE.
6. THE LATERAL APPROACH TO THE GUARD FENCE, SHALL HAVE A MAXIMUM SLOPE OF 1V:10H.
7. IF SHOWN ELSEWHERE IN THE PLANS OR AS DIRECTED BY THE ENGINEER, THE GUARD FENCE MAY BE FLARED AT A RATE OF 25:1 OR FLATTER.
8. UNLESS OTHERWISE SHOWN IN THE PLANS, GUARD FENCE PLACED IN THE VICINITY OF CURBS SHALL BE POSITIONED SO THAT THE FACE OF CURB IS LOCATED DIRECTLY BELOW OR BEHIND THE FACE OF THE RAIL. RAIL PLACED OVER CURBS SHALL BE INSTALLED SO THAT THE POST BOLT IS LOCATED APPROXIMATELY 25 INCHES ABOVE THE GUTTER PAN OR EDGE OF SHOULDER.
9. APPLICATIONS IN SOLID ROCK ARE ONLY ALLOWED WITH STEEL POSTS. IF SOLID ROCK IS ENCOUNTERED WITHIN 0 TO 18" OF THE FINISHED GRADE, DRILL A 24" DIA. HOLE, 24" INTO THE ROCK. IF SOLID ROCK IS ENCOUNTERED BELOW 18", DRILL A 12" DIA. HOLE, 12" INTO THE ROCK OR TO THE STANDARD EMBEDMENT DEPTH, WHICHEVER MAYBE LESS. ANY EXCESS POST LENGTH, AFTER MEETING THESE DEPTHS, MAY BE FIELD CUT TO ENSURE PROPER GUARDRAIL MOUNTING HEIGHT. BACKFILL WITH COARSE AGGREGATE MATERIAL.
10. POSTS SHALL NOT BE SET IN CONCRETE, OF ANY DEPTH.
11. SPECIAL FABRICATION WILL BE REQUIRED AT INSTALLATION LOCATIONS HAVING A CURVATURE OF LESS THAN 150 FT. RADIUS.
12. UNLESS OTHERWISE SHOWN IN THE PLANS, A COMPOSITE MATERIAL BLOCK THAT MEETS THE REQUIREMENTS OF DMS-7210,"COMPOSITE MATERIAL POSTS AND BLOCKS FOR METAL BEAM GUARD FENCE" MAY BE SUBSTITUTED FOR BLOCKS OF SIMILAR DIMENSIONS. THE CONSTRUCTION DIVISION, TXDOT MAINTAINS A MATERIAL PRODUCER LIST (MPL) FOR PRODUCERS OF MATERIALS CONFORMING TO DMS-7210 ONLY PRODUCERS ON THE MPL MAY FURNISH COMPOSITE MATERIAL BLOCKS.
13. FOR THE LOW FILL CULVERT OPTION, POSTS LOCATED PARTIALLY OR WHOLLY BETWEEN PRECAST BOX CULVERT UNITS, THE USE OF A CAST-IN-PLACE CONCRETE CLOSURE BETWEEN BOXES IS REQUIRED. THE LENGTH OF THE CAST-IN-PLACE CONCRETE CLOSURE SHALL ACCOMMODATE THE PLACEMENT OF THE LOW FILL CULVERT OPTION. SEE CONCRETE CLOSURE DETAILS ON BRIDGE STANDARD SCP-MD.
14. GUARDRAIL HEIGHT MEASUREMENT: WHEN THE GUARDRAIL IS LOCATED ABOVE PAVEMENT, MEASURE THE HEIGHT FROM THE PAVEMENT TO THE TOP OF THE W-BEAM RAIL. WHEN THE GUARDRAIL IS LOCATED UP TO 2 FT. OFF OF THE EDGE OF PAVEMENT OR FOR A PAVEMENT OVERLAY, USE A 10-FOOT STRAIGHTEDGE TO EXTEND THE PAVEMENT/SHOULDER SLOPE TO THE BACK OF RAIL, MEASURE FROM THE BOTTOM OF STRAIGHTEDGE TO THE TOP OF RAIL. FOR GUARDRAIL LOCATED DOWN A 10:1 SLOPE, MEASURE FROM THE NOMINAL TERRAIN.

Texas Department of Transportation — Design Division Standard

METAL BEAM GUARD FENCE
TL-3 MASH COMPLIANT
GF(31)-19

FILE: gf3119.dgn	DN: TxDOT	CK: KM	DW: VP	CK: CGL/AG
©TxDOT: NOVEMBER 2019	CONT	SECT	JOB	HIGHWAY
REVISIONS	0914	05	222	RM 2243
	DIST	COUNTY		SHEET NO.
	AUS	WILLIAMSON		188

DISCLAIMER:
THE USE OF THIS STANDARD IS GOVERNED BY THE "TEXAS ENGINEERING PRACTICE ACT". NO WARRANTY OF ANY KIND IS MADE BY TXDOT FOR ANY PURPOSE WHATSOEVER. TXDOT ASSUMES NO RESPONSIBILITY FOR THE CONVERSION OF THIS STANDARD TO OTHER FORMATS OR FOR INCORRECT RESULTS OR DAMAGES RESULTING FROM ITS USE.

DATE: 4/10/2025
FILE: G:\TXC\Projects\County_Williamson\7473-02 RM 2243 Phase 1A\03_CADD\01_Shts\03-RDWY\Stds\gf31dat19.dgn

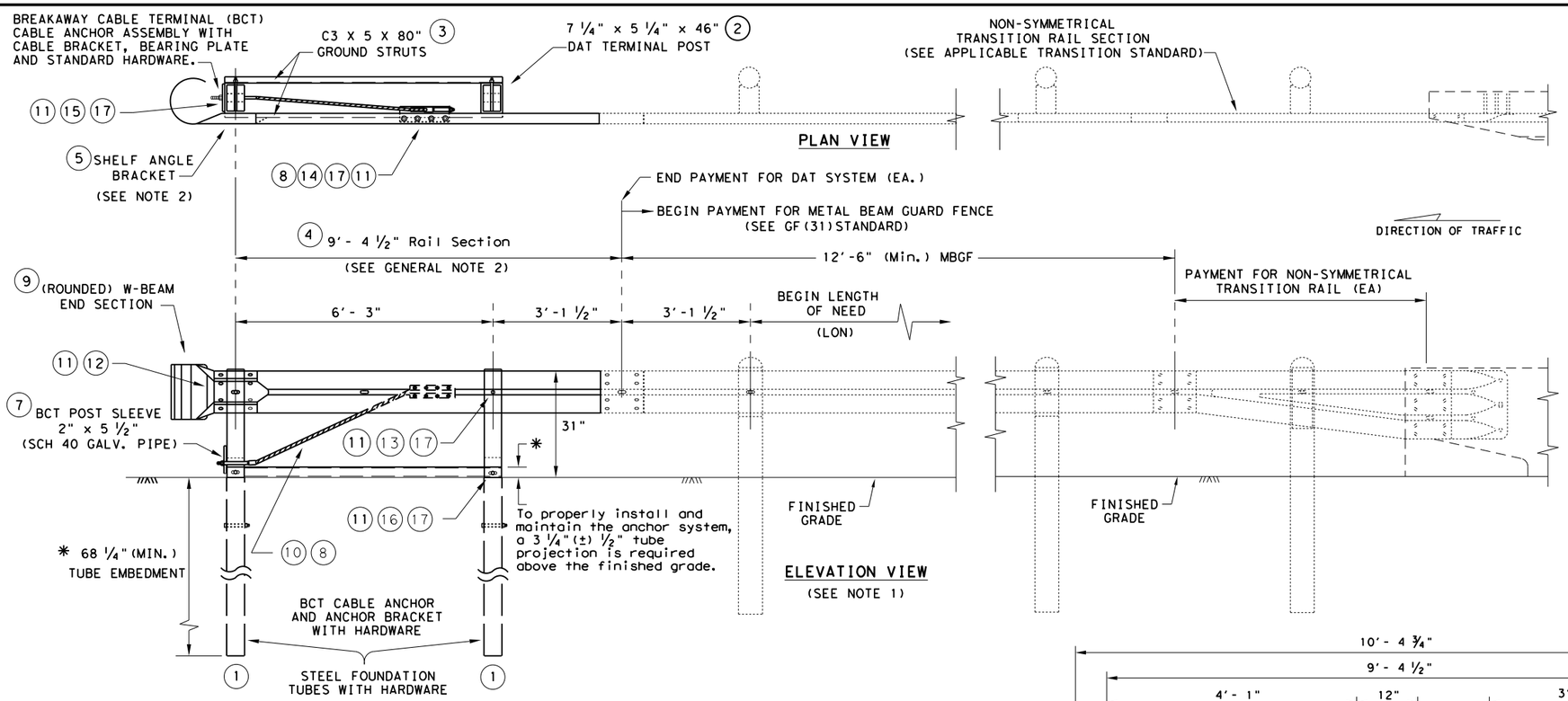

DOWNSTREAM ANCHOR TERMINAL (DAT)

NOTE: ONLY FOR DOWNSTREAM USE, WHEN LOCATED OUTSIDE THE HORIZONTAL CLEARANCE AREA OF OPPOSING TRAFFIC.

GENERAL NOTES

1. THE DETAIL SHOWN IS THE MINIMUM LENGTH OF NEED (LON) FOR A DOWNSTREAM ANCHOR TERMINAL (DAT) CONNECTED TO A CONCRETE RAIL.
2. THE RAIL SECTION AT THE END POST IS SUPPORTED BY THE SHELF ANGLE BRACKET. THE RAIL ELEMENT IS NOT ATTACHED TO THE END POST.
3. THE FOUNDATION TUBES SHALL NOT PROJECT MORE THAN 3 3/4" ABOVE THE FINISHED GRADE.
4. ALL HARDWARE FOR DAT SHALL BE ASTM A307 UNLESS OTHERWISE SHOWN.
5. REFER TO GF(31) SHEET FOR TERMINAL CONNECTION DETAILS.

MOW STRIP INSTALLATION

IF A MOW STRIP IS REQUIRED WITH THE DAT INSTALLATION THE LEAVE-OUT AREA AROUND THE STEEL FOUNDATION TUBES AND THE TWO CHANNEL STRUTS MAY BE OMITTED. THIS WILL REQUIRE A FULL POUR AT THE FOUNDATION TUBES.

#	(DAT) PARTS LIST	QTY
(1)	STEEL FOUNDATION TUBE	2
(2)	DAT TERMINAL POST	2
(3)	CHANNEL STRUT	2
(4)	TERMINAL RAIL ELEMENT	1
(5)	SHELF ANGLE BRACKET	1
(6)	BCT BEARING PLATE	1
(7)	BCT POST SLEEVE	1
(8)	GUARDRAIL ANCHOR BRACKET	1
(9)	(ROUNDED) W-BEAM END SECTION	1
(10)	BCT CABLE ANCHOR	1
(11)	RECESSED NUT, GUARDRAIL	20
(12)	1 1/4" BUTTON HEAD BOLT	4
(13)	10" BUTTON HEAD BOLT	2
(14)	5/8" X 2" HEX HEAD BOLT	8
(15)	5/8" X 8" HEX HEAD BOLT	4
(16)	5/8" X 10" HEX HEAD BOLT	2
(17)	5/8" FLAT WASHER	18

(4) TERMINAL RAIL ELEMENT FOR DAT

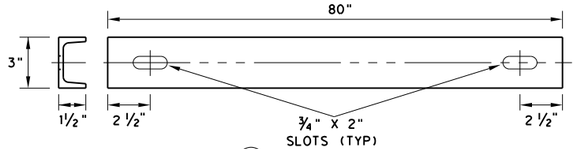

(3) CHANNEL STRUT
C3 X 5 X 80", GRADE A36

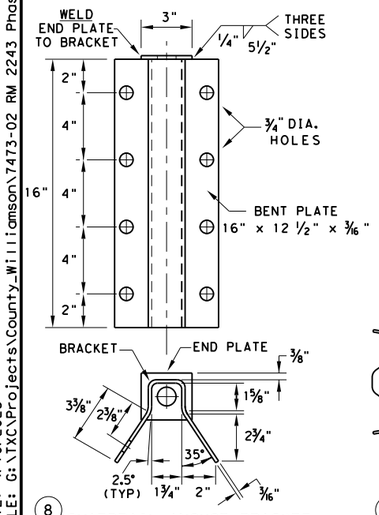

(8) GUARDRAIL ANCHOR BRACKET

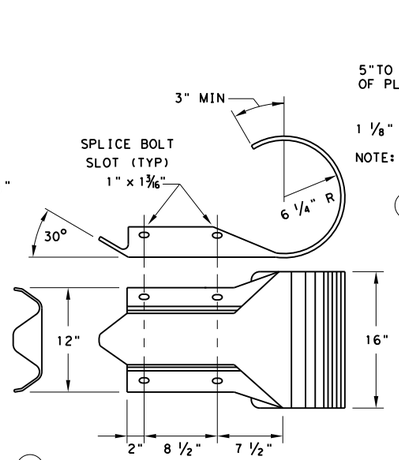

(9) W-BEAM END SECTION (ROUNDED) (12 GA.)

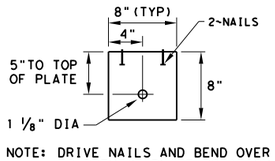

NOTE: DRIVE NAILS AND BEND OVER TO PREVENT PLATE ROTATION

(6) BEARING PLATE
8"x 8"x 5/8" R

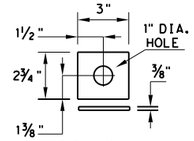

END PLATE

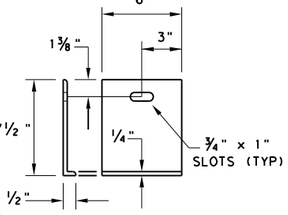

(5) SHELF ANGLE BRACKET

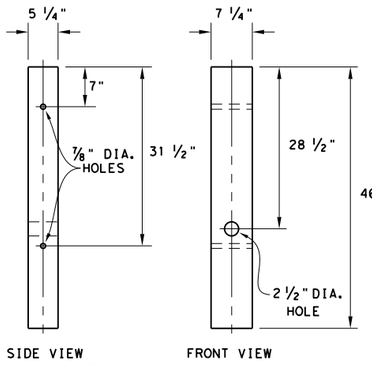

(2) TERMINAL POST
7 1/4"x 5 1/4"x 46" WOOD POST

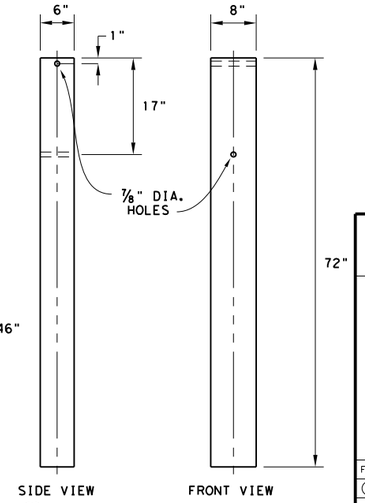

(1) STEEL FOUNDATION TUBE
6"x 8"x 1/8" x 72" STEEL TUBE

Texas Department of Transportation

Design Division Standard

METAL BEAM GUARD FENCE
(DOWNSTREAM ANCHOR TERMINAL)
TL-3 MASH COMPLIANT

GF(31)DAT-19

FILE: gf31dat19.dgn	DN: TxDOT	CK: KM	DW: VP	CK: CGL/AG	
©TxDOT: NOVEMBER 2019	CONT	SECT	JOB	HIGHWAY	
REVISIONS	0914	05	222	RM 2243	
	DIST	COUNTY		SHEET NO.	
	AUS	WILLIAMSON		189	

DISCLAIMER:
The use of this standard is governed by the "Texas Engineering Practice Act". No warranty of any kind is made by TxDOT for any purpose whatsoever. TxDOT assumes no responsibility for the conversion made by TxDOT or any purpose whatsoever. TxDOT assumes no responsibility for the conversion of this standard to other formats or for incorrect results or damages resulting from its use.

DATE: 4/10/2025 12:56:49 PM
FILE: G:\TXC\Projects\County_Williamson\7473-02 RM 2243 Phase 1A\03_CADD\02_Plans\05-ROW\

TYPE 1 - MULTIPLE

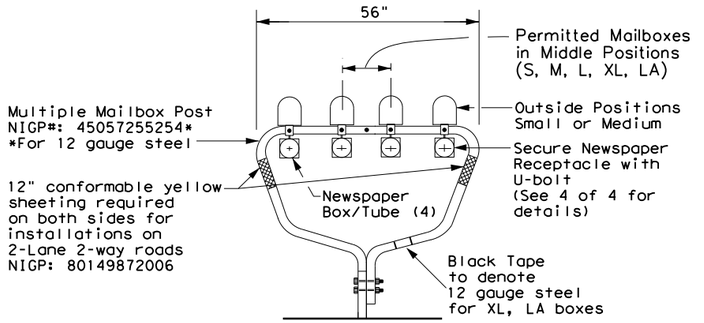

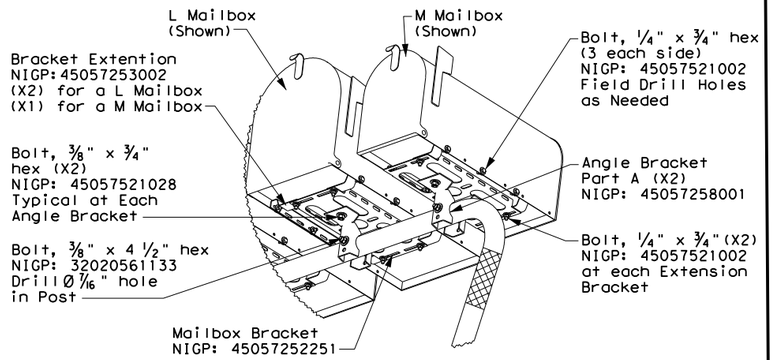

TYPE 4 - MULTIPLE

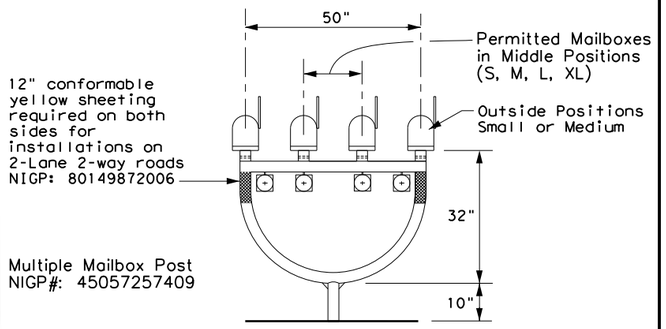

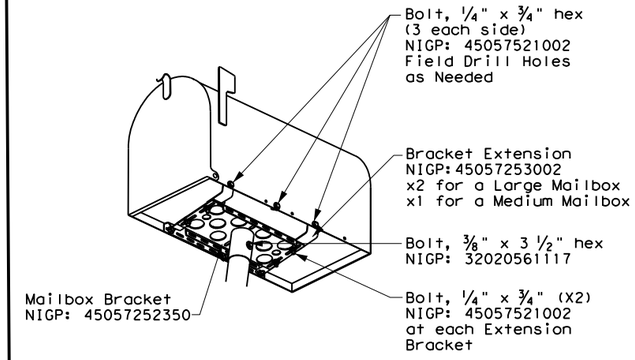

MAILBOX SIZES

MAILBOX SIZE	TYPICAL DIMENSIONS			MAX **
	LENGTH	WIDTH	HEIGHT	WEIGHT
SMALL	19 1/2"	6"	7"	6 LBS
MEDIUM	22 1/2" *	8" *	11 1/2" *	8 LBS
LARGE	23 1/2"	11 1/2"	13 1/2"	11 LBS
EXTRA LARGE	18"	14"	12"	13 LBS
LOCKABLE	18"	11 1/2"	15"	23 LBS

* See Note 1.
** Excluding Molded Plastic on 4 X 4 Post

GENERAL NOTES:

1. Dimensions shown (length, width, and height) are typical, not maximums. However, anytime a medium size mailbox is mounted on a single/double mount or on the outside position on a multi mount, the dimensions shown are maximums.
2. Mailboxes shall be made of light weight sheet metal or light weight plastic. Heavy steel, cast iron or decorative mailboxes shall not be used on the state highway system.

TYPICAL INSTALLATION MEASUREMENTS

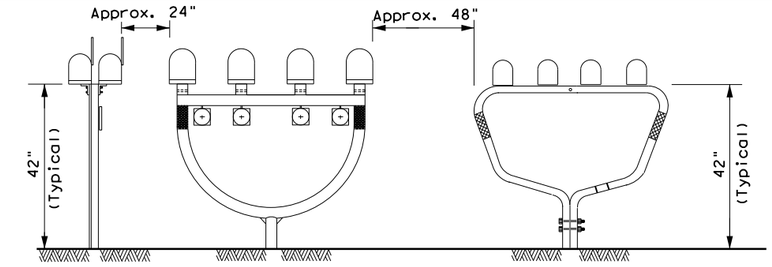

NOTE:

Mailbox installations in sidewalk areas shall be in accordance with the latest TxDOT Design Standard sheets PED-Pedestrian Facilities Curb Ramps.

TYPE 2 and 4 - SINGLE/DOUBLE

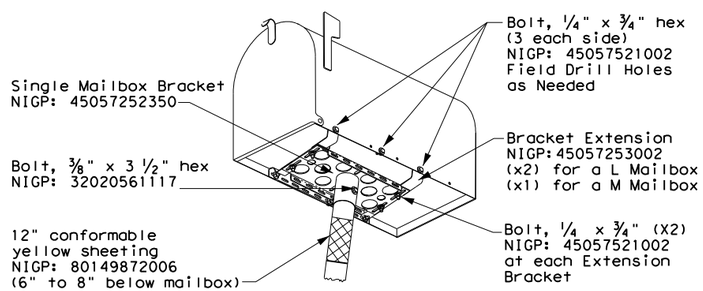

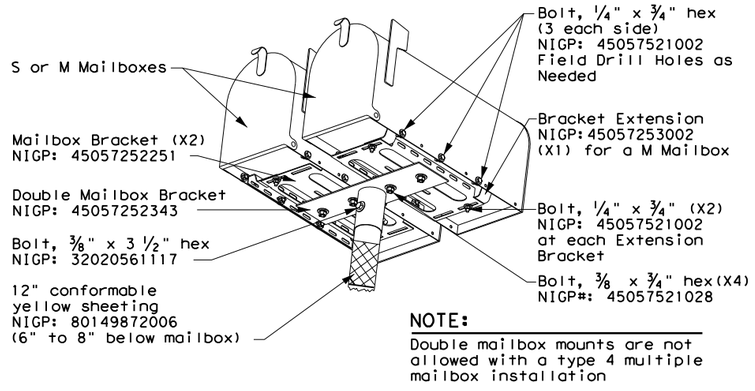

NOTE:

Double mailbox mounts are not allowed with a type 4 multiple mailbox installation

TYPE 3 - SINGLE/DOUBLE

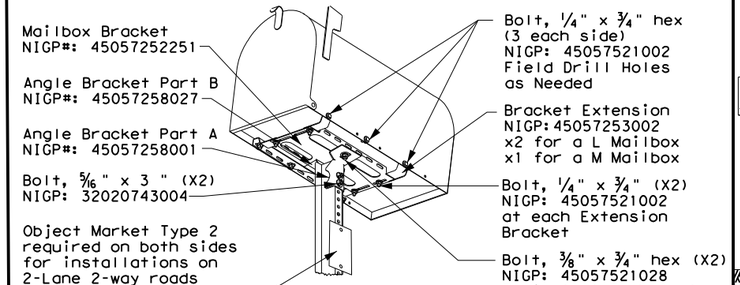

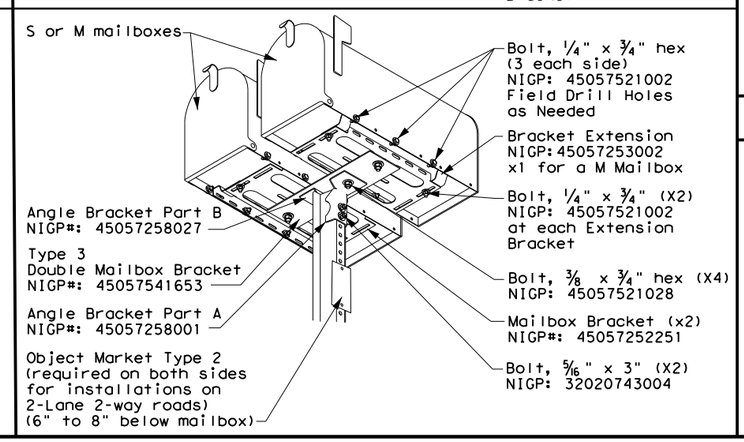

PLACEMENT OF EMERGENCY LOCATION NUMBER

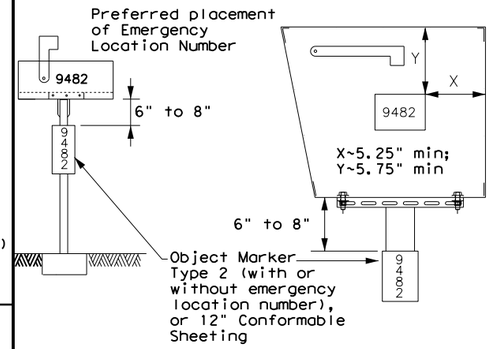

NOTES:

1. Location numbers are provided by homeowner. Minimum size 1" height.
2. Location number is typically placed on the mailbox in a contrasting color.
3. Black numbers may be placed on the Type 2 object marker if the numbers cannot be placed on the mailbox.
4. Alternatively, a green or blue plate with white numbers attached may be mounted below the object marker. Other contrasting color configuration, as approved, may be used.
5. See 3 of 4 for Foundation details.
6. See 4 of 4 for Hardware details.

SHEET 1 OF 4

TYPE 5

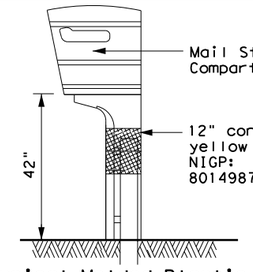

Typical Molded Plastic Mailbox

Texas Department of Transportation — Maintenance Division Standard

MAILBOX MOUNTING AND ASSEMBLY

MB(1)-21

FILE: MB-21.dgn	DN: TxDOT	CK: TxDOT	DW: TxDOT	CK: TxDOT
©TxDOT March 2004	CONT	SECT	JOB	HIGHWAY
REVISIONS 2/2005 11/2009 4/2015 6/2005 1/2011 11/2006 7/2014	0914	05	222	RM 2243
	DIST	COUNTY		SHEET NO.
	AUS	WILLIAMSON		190

DISCLAIMER:
The use of this standard is governed by the "Texas Engineering Practice Act". No warranty of any kind is made by TxDOT for any purpose whatsoever. TxDOT assumes no responsibility for the conversion of this standard to other formats or for incorrect results or damages resulting from its use.

DATE: 4/10/2025 12:56:50 PM
FILE: G:\TXC\Projects\County_Williamson\7473-02 RM 2243 Phase 1A\03_CADD\01_Sheets\05-RDWY\Standard.dgn

TYPE I- MULTI LOCKABLE AND XL MAILBOX

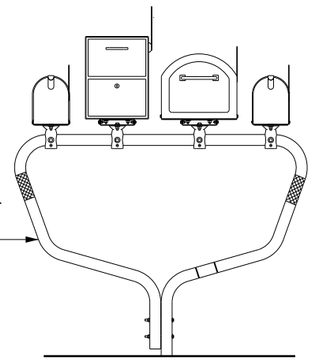

TYPE 2/4 - SINGLE LOCKABLE MAILBOX

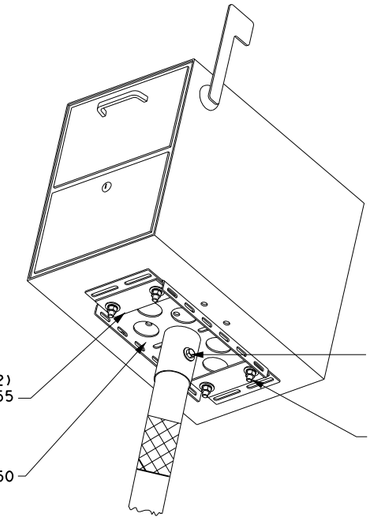

TYPE 2/4 - SINGLE XL MAILBOX

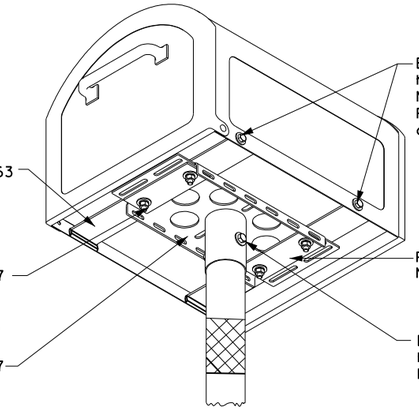

NOTE:
Follow same configuration when mounting an XL mailbox on a Type 4 multi post.

TYPE 1 MULTI – LOCKABLE ARCHITECTURAL (LA)

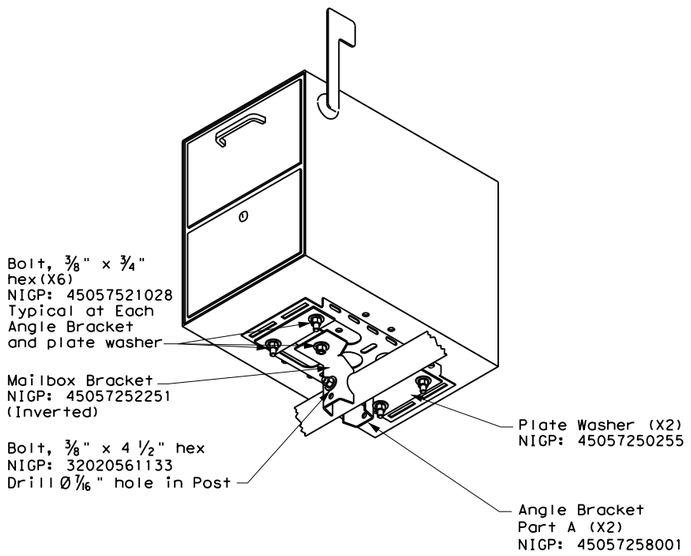

TYPE 1 MULTI – XL MAILBOX

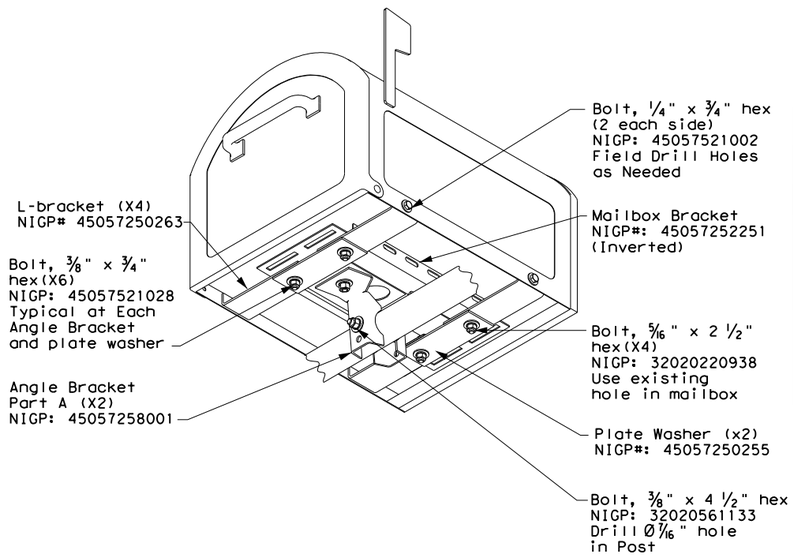

TYPE 3 - XL MAILBOX MOUNTING

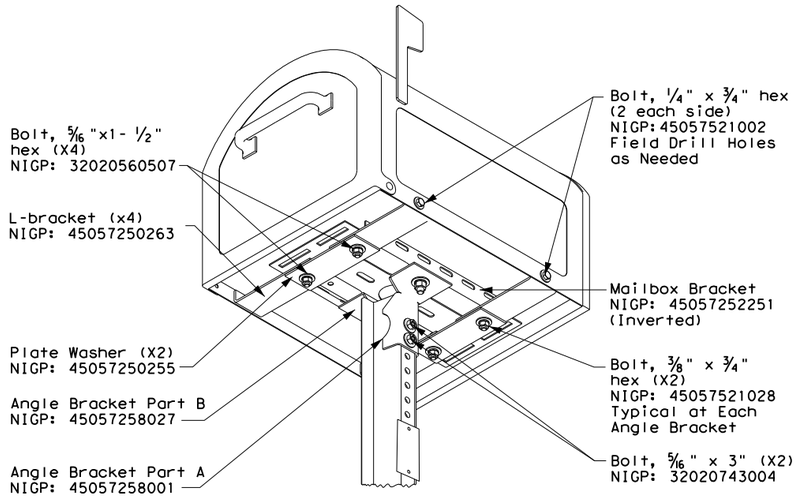

SHEET 2 OF 4

Texas Department of Transportation | Maintenance Division Standard

XL AND LOCKABLE ARCHITECTURAL MAILBOX ASSEMBLY

MB(2)-21

FILE: MB-21.dgn	DN: TxDOT	CK: TxDOT	DW: TxDOT	CK: TxDOT
© TxDOT March 2004	CONT	SECT	JOB	HIGHWAY
REVISIONS 2/2005 11/2009 4/2015 6/2005 1/2011 11/2006 7/2014	0914	05	222	RM 2243
	DIST		COUNTY	SHEET NO.
	AUS		WILLIAMSON	191

DISCLAIMER:
The use of this standard is governed by the "Texas Engineering Practice Act". No warranty of any kind is made by TxDOT for any purpose whatsoever. TxDOT assumes no responsibility for the conversion of this standard to other formats or for incorrect results or damages resulting from its use.

DATE: 4/10/2025 12:56:50 PM
FILE: G:\TXC\Projects\County_Williamson\7473-02 RM 2243 Phase 1A\03_CADD\02_SHTS\MB-21.dgn

TYPE 1 - SUPPORT/FOUNDATION
Thin Wall Tube w/ V-LOC Anchorage

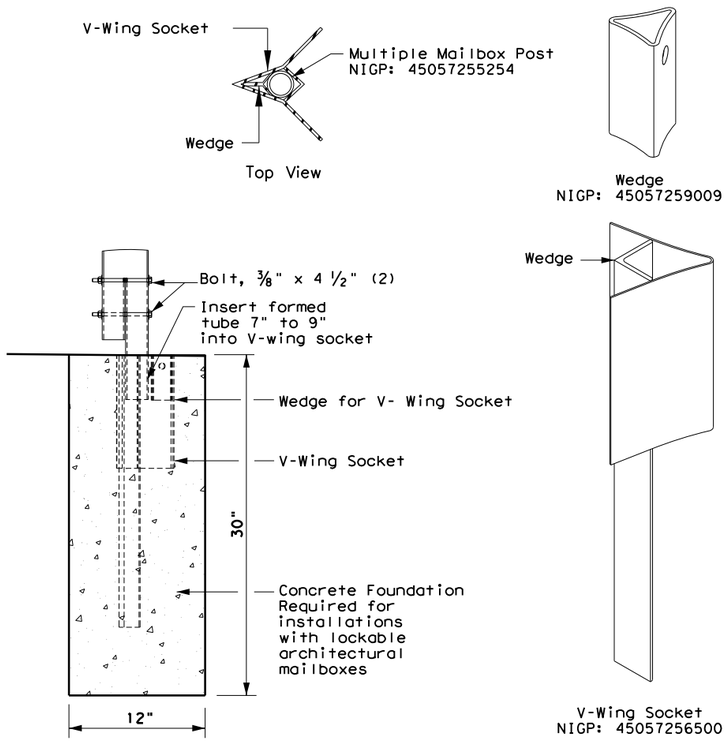

TYPE 3 - SUPPORT/FOUNDATION

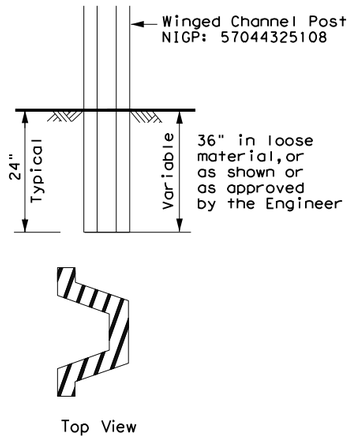

NOTES:
1. Attach Object Marker (OM) facing direction of traffic.
2. OM will also be required on opposite side if installed on a 2-Lane, 2-Way roadway.

TYPE 5 - SUPPORT/FOUNDATION

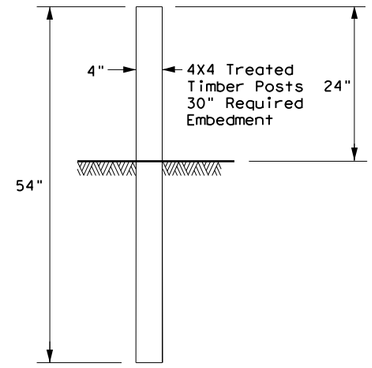

TYPE 6 - TEMPORARY MAILBOX SUPPORT

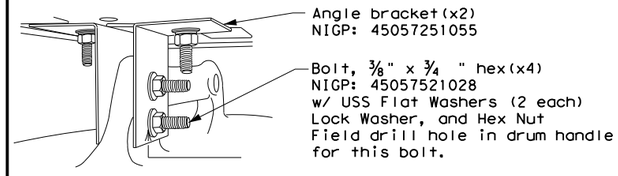

Plastic Drum NIGP: 55093383655
Rubber Collar NIGP: 55093387102

NOTES:
1. Place on approved plastic drum as shown in the Compliant Work Zone Traffic Control Devices (CWZTCD).
2. Existing attachment hardware shall be used unless damaged. Damaged hardware shall be replaced.

GENERAL NOTES:
1. Erect post plumb or vertical.
2. When galvanized part is required galvanize in accordance with Item 445.
3. Use a concrete footing as shown or when directed. Concrete footing will be required when soils do not hold the support/foundations in a stable condition, only on Type 1, Type 2, and Type 4

TYPE 2 - SUPPORT/FOUNDATION
Thin Wall Steel Tube w/Wedge Anchor System

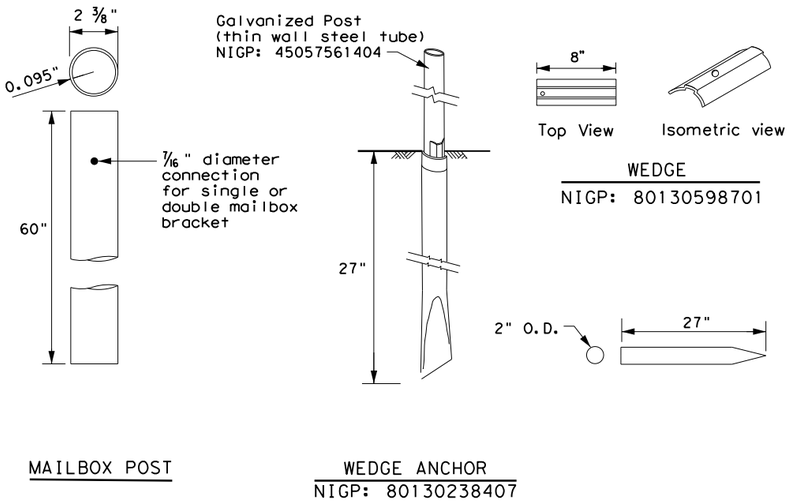

MAILBOX POST

WEDGE ANCHOR
NIGP: 80130238407

TYPE 4 - SUPPORT/FOUNDATION
Whitecoated steel post NIGP: 45057561107
Multiple post NIGP: 45057257409
Recycled Rubber post (RR) NIGP: 45057561057

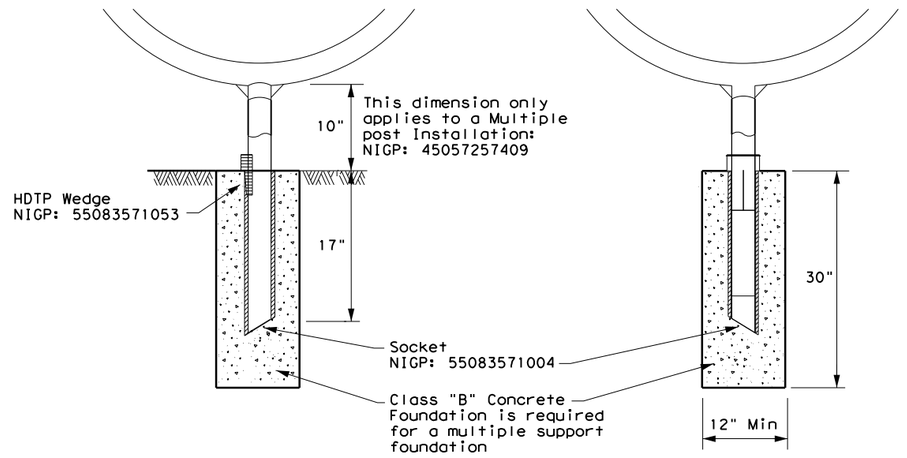

SHEET 3 OF 4

Texas Department of Transportation | Maintenance Division Standard

MAILBOX SUPPORT AND FOUNDATION

MB(3)-21

FILE: MB-21.dgn	DN:	CK:	DW:	CK:
© TxDOT March 2004	CONT	SECT	JOB	HIGHWAY
REVISIONS 2/2005 11/2009 4/2015 6/2005 1/2011 11/2006 7/2014	0914	05	222	RM 2243
	DIST	COUNTY		SHEET NO.
	AUS	WILLIAMSON		192

TYPE	TYPE 1	TYPE 2	TYPE 3	TYPE 4			TYPE 5	TYPE 6
Configuration	Multiple	Single or Double	Single or Double	Single	Double	Multiple	Single	Single
Mailbox Size NIGP #	Outside Position: S or M Inside Position: S, M, L, XL, or LA	Single: S, M, L, XL, or LA Double: SS, SM, MM	Single: S, M, L, or XL Double: SS, SM, MM	S, M, L, XL, or LA	SS, SM, or MM	Outside Position: S or M Inside Position: S, M, L, or XL	Molded Plastic	S, or M
Mailbox Post NIGP #	45057255254 (Galvanized Multiple)	45057561404 (Thin Walled Gavanize)	57044325108 (Wing Channel Post)	45057561107 (Thin walled white powder coated) 45057561057 (Recycled Rubber Post: S or M only)	45057561107 (Thin Walled White Powder Coated)	45057257409 (White Powder Coated Multiple)	4x4 Timber	Construction Barrel
Post and Mailbox Hardware NIGP #	45057259009 (Wedge) 45057256500 (V-Wing Socket) 45057253002 (Bracket Extension) 45057252251 (Mailbox Bracket) 45057258001 (Part A Angle Bracket x2) 45057250255 (Plate Washer for XL/LA x2) 45057250263 (L-Bracket for XL x4)	80130598701 (Wedge) 80130238407 (Wedge Anchor) 45057253002 (Bracket Extension) 45057252343 (Double MB Bracket) 45057252350 (S. Mailbox Bracket) 45057252251 (Mailbox Bracket) 45057250255 (Plate Washer for XL/LA x2) 45057250263 (L-Bracket forXL x4)	45057541653 (Type 3 Double Mailbox Bracket) 45057252251 (Mailbox Bracket) 45057253002 (Bracket Extension) 45057258001 (Part A Angle Bracket) 45057258027 (Part B Angle Bracket) 45057250255 (Plate Washer for XL x2) 45057250263 (L-Bracket for XL x4)	55083571053 (Wedge) 55083571004 (Socket) 45057252350 (Single Mailbox Bracket) 45057253002 (Bracket Extension) 45057250255 (Plate Washer for XL/LA x2) 45057250263 (L-Bracket for XL x4)	55083571053 (Wedge) 55083571004 (Socket) 45057253002 (Bracket Extension) 45057252343 (Double Mount Bracket) 45057252251 (Mailbox Bracket x2)	55083571053 (Wedge) 55083571004 (Socket) 45057253002 (Bracket Extension) 45057252350 (Single Mount Bracket) 45057250255 (Plate Washer for XL x2) 45057250263 (L-Bracket for XL x4)	None	45057251055 Angle Bracket (x2)
Foundation Used	Class B Concrete (Required for LA Mailboxes)	Class B Concrete (Required for LA Mailboxes)	None	Class B Concrete (not used with recycled rubber post, required for LA Mailboxes)	Class B Concrete (not required)	Class B Concrete	None	None

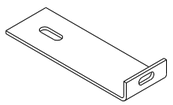

NIGP: 45057250263
L-Bracket x4 for
XL sized mailboxes

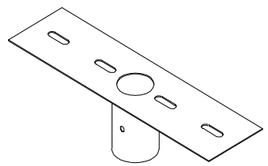

NIGP: 45057252343
Double Mailbox Bracket
For Type 2 and Type 4
double mount

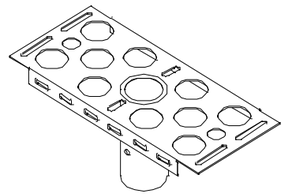

NIGP: 45057252350
Single Mailbox Bracket
For Type 2 single and for
Type 4 single and multi mount

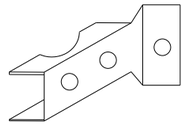

NIGP: 45057258001
Part "A" Angle Bracket
For Type 1 multi (2 per mailbox)
and Type 3 single and double

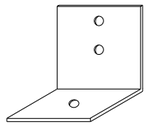

NIGP: 45057251055
Type 6 Angle Bracket
(2 per mailbox)

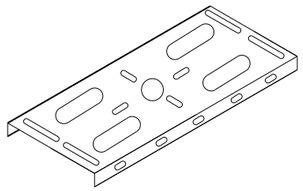

NIGP: 45057252251
Mailbox Bracket
For Type 1 multi and
any double mount (use 2)

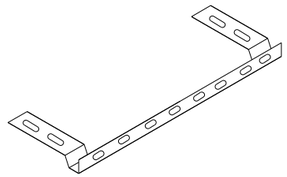

NIGP: 45057253002
Bracket Extension
Use 1 for a medium Mailbox
Use 2 for a Large Mailbox

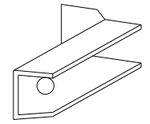

NIGP: 45057258027
Part "B" Angle Bracket
For Type 3 single
and double

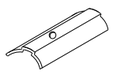

NIGP: 80130598701
Wedge for Type 2

NIGP: 45057250255
Plate Washer for Architecural
and XL Mailboxes

NIGP: 45057541653
Type 3 double mailbox bracket

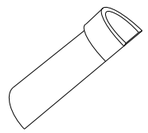

NIGP: 55083571053
Type 4 Mailbox Wedge

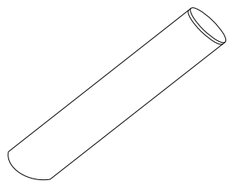

NIGP: 55083571004
Type 4 Mailbox Socket

NIGP: 80130238407
Type 2 Wedge Anchor

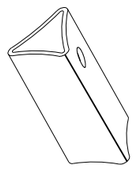

NIGP: 45057259009
Wedge for Type 1 V-wing Socket

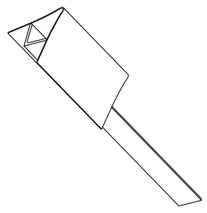

NIGP: 45057256500
V-wing Socket for
Type 1 Foundation

NIGP #	OBJECT MARKERS AND CONFORMABLE SHEETING
55008311759	Type 2 OM 4"x4" (3 Needed) for Type 3 Wing Channel Post
55008312906	Type 2 OM 6"x12" (1 needed) for Type 3 Wing Channel Post
80149872006	12" Conformable Reflective Yellow Sheeting for Flexible Posts

NOTES:

1. Type 2 object marker in accordance with Traffic Engineering Standard Delineators & Object Markers.
2. A light weight receptacle for newspaper delivery can be attached to mailbox posts if the receptacle does not touch the mailbox, present a hazard to traffic or delivery of the mail, extend beyond the front of the mailbox, or display advertising, except the publication title.

BID CODES FOR CONTRACTS

MB-(X) ASSM TY (XXX) (X)

Type of Mailbox
- S = Single
- D = Double
- M = Multiple
- MP = Molded Plastic

Type of Post
- WC = Winged Channel Post
- RR = Recycled Rubber
- TWW = Thin Walled White Tubing
- TWG = Thin Walled Galvanized Tubing
- TIM = Timber

Type of Foundation
- Ty 1 = V-Loc
- Ty 2 = Wedge Anchor Steel System
- Ty 3 = Winged Channel post
- Ty 4 = Wedge Anchor Plastic System
- Ty 5 = 4 X 4 Post

DISCLAIMER:
The use of this standard is governed by the "Texas Engineering Practice Act". No warranty of any kind is made by TxDOT for any purpose whatsoever. TxDOT assumes no responsibility for the conversion of this standard to other formats or for incorrect results or damages resulting from its use.

DATE: 4/10/2025 12:56:51 PM
FILE: G:\TXC\Projects\County_Williamson\7473-02 RM 2243 Phase 1A\03_CADD\02_Sht\MB-21.dgn

SHEET 4 OF 4

Texas Department of Transportation — Maintenance Division Standard

NIGP PARTS LIST AND COMPATIBILITY

MB(4)-21

FILE: MB-21.dgn	DN: TxDOT	CK: TxDOT	DW: TxDOT	CK: TxDOT
©TxDOT March 2004	CONT	SECT	JOB	HIGHWAY
REVISIONS	0914	05	222	RM 2243
2/2005 11/2009 4/2015 6/2005 1/2011 11/2006 7/2014	DIST	COUNTY		SHEET NO.
	AUS	WILLIAMSON		193

DISCLAIMER:
The use of this standard is governed by the "Texas Engineering Practice Act". No warranty of any kind is made by TxDOT for any purpose whatsoever. TxDOT assumes no responsibility for the conversion of this standard to other formats or for incorrect results or damages resulting from its use.

DATE: 4/10/2025
FILE: G:\TxC\Projects\County_Williamson\7473-02 RM 2243 Phase 1A\03_CADD\01_Snts\03-RDWY\Stds\sgt10s3116.dgn

NOTE: STEEL I-BEAM POST W6 X 8.5 (6'-0") PN: 533G
STANDARD WOOD BLOCKOUTS (6"X8"X14") PN: 4076B
AT (POSTS 2 THRU 8)

⅝" X 10" HGR BOLT PN: 3500G
⅝" HGR NUT PN: 3340G

LINE AT THE BACK OF POST #2 THRU #8

FROM THE CENTERLINE OF POST(1) & POST(0)

ANCHOR PADDLE PN: 15204A

ANGLE STRUT PN: 15202G

16"

POST(8) POST(7) POST(6) POST(5) POST(4) POST(3) POST(1) POST(0)

DO NOT BOLT ANCHOR RAIL TO - POST (2)

SEE DETAIL 1

BEGIN LENGTH OF NEED

PLAN VIEW

TRAFFIC FLOW

MASH TEST LEVEL 3 (TL-3) LENGTH OF SoftStop TERMINAL (50'-9 ½")

50'-9 ½" STANDARD INSTALLATION LENGTH (MASH TL-3 SoftStop)

BEGIN STANDARD MBGF

END PAYMENT FOR SGT

6¼" 3'-1 ½" 6'-3" 6'-3"

ANCHOR RAIL WITH SLOTS - (THREADED THRU HEAD)
SEE SoftStop MANUAL FOR COMPLETE DETAILS

MIDDLE SLOT CUTOUT (1) 1 ¾" X 6'-10 ¼"

OUTSIDE SLOTS CUTOUT (2)1½" X 6'-9 ⅝"

SoftStop FACE SEE GN(3) & NOTE:B

MBGF LAPPED IN DIRECTION OF TRAFFIC FLOW

25'-0" DOWNSTREAM W-BEAM GUARDRAIL PN: 61G

SoftStop ANCHOR RAIL (12GA) PN: 15215G

3'-1 ½"(+/-) 6'-3" 6'-3" 6'-3" 6'-3" 6'-3" 6'-3" 5'-8" 4'-7"

ANCHOR PADDLE PN: 15204A

END OF ANCHOR RAIL PN: 15215G

SEE NOTE:C

POST 32" HEIGHT

31"

RAIL HEIGHT

RAIL 25'-0" PN: 61G

RAIL 25'-0" PN: 15215G

DO NOT BOLT ANCHOR RAIL TO POST(2)

SEE DETAIL 2

SEE NOTE:A

13/16" DIA. YIELDING HOLES

SEE DETAIL 3

6'-1⅜"

(8) ⅝"x 1-¼" GR BOLTS PN: 3360G
⅝" HEX NUTS PN: 3340G

POST 40" DEPTH (TYP 1-8)

(8) ⅝"x 1-¼" HGR BOLTS PN: 3360G
⅝" HEX NUTS PN: 3340G

POST(8) POST(7) POST(6) POST(5) POST(4) POST(3) POST(2) 6'-0" (SYTP) PN: 15000G POST(1) 4'-9 ½" SYTP PN: 15203G POST(0) 6'-5 ⅜" PN: 15205A

ELEVATION VIEW

HARDWARE FOR POST(2) THRU POST(8)
(1) ⅝"x 10" HGR BOLT PN: 3500G
(1) ⅝" HGR HEX NUT PN: 3340G

NOTE: DO NOT BOLT ANCHOR RAIL PANEL TO POST(2)

ALTERNATE BLOCKOUT SEE GENERAL NOTE:6

4" X 7 ½" X 14" BLOCKOUT COMPOSITE PN: 6777B

6" X 8" X 14" BLOCKOUT WOOD PN: 4076B

NOTE: DO NOT BOLT ANCHOR RAIL TO POST(2)

8" 6" 14"

⅝" HGR NUT PN: 3340G

⅝" X 10" HGR POST BOLT PN: 3500G

13/16" DIAMETER YIELDING HOLES LOCATED IN FLANGES

FINISHED GRADE

(HOLES APROXIMATELY CENTERED AT FINISHED GRADE)

ISOMETRIC VIEW POST(1 & 2)

W6 X 8.5 I-BEAM POST SHOWING STANDARD WOOD BLOCKOUT

NOTE: NO BLOCKOUT INSTALLED AT POST(1)

(1) ⅝" X 1 ¾" HEX HD BOLT PN 3391G

ANGLE STRUT PN: 15202G

(2) ⅝" WASHERS PN 4372G

(1) ⅝" HGR HEX NUT PN 3340G

DETAIL 1

SHOWN AT POST(1) NEAR GROUND

(1) ⅝" HEX NUT

(1) ⅝" x 1-½" HEX HD BOLT-GR-5 PN: 105286

(2) ⅝" ROUND WASHERS PN: 3240G

DETAIL 2

SHOWN AT POST(1)

ANCHOR KEEPER PLATE (24 GA) PN: 15207G

ANCHOR PLATE WASHER ½" THICK PN: 15206G

1" ROUND WASHER F463 PN: 4902G

(2) ⅝" x 2 ½" HEX HD BOLT GR-5 PN: 105285G

ALTERNATE BLOCKOUT SEE GENERAL NOTE:6

(2) ⅝" ROUND WASHER (WIDE) PN: 3240G

ANCHOR PADDLE PN: 15204A

(2) ⅝" HEX NUT A563 GR.DH PN: 3245G

1" NUT PN: 3908G SHALL BE SECURELY TIGHTENED AFTER FINAL ASSEMBLY, BUT NOT DEFORMING THE KEEPER PLATE.

W-BEAM FLATTENED (4 PLIES)

ANGLE STRUT PN: 15202G

SEE NOTE:A

(2) ¾" x 2 ½" HEX BOLT (TYP) PN: 3717G

(4) ¾" FLAT WASHER (TYP) PN: 3701G

(2) ¾" HEX NUT (TYP) PN: 3704G

6'-1 ⅜" POST DEPTH

(2) ANCHOR POST ANGLE PN: 15201G

DETAIL 3 AT POST(0)

6'-5 ⅜" (W6 X 15) I-BEAM POST PN: 15205A

TRAFFIC FLOW

W-BEAM RAIL 25'-0"

6" X 8" X 14" BLOCKOUT WOOD

⅝" X 10" HGR POST BOLT PN: 3500G

⅝" HGR NUT PN: 3340G

POST HEIGHT 32"

31" RAIL HEIGHT

40"

FINISHED GRADE

LINE POST (3, 4, 5, 6, 7 & 8)

SECTION VIEW B-B

6'-0" (W6 X 8.5)
I-BEAM POST PN: 533G

POST(2)

SECTION VIEW A-A

6'-0" (W6 X 8.5)
(SYTP) I-BEAM POST PN: 15000G

NOTE: DO NOT BOLT ANCHOR RAIL PANEL TO POST(2)

POST 17"- ½" HEIGHT

4'-9 ½"

13/16" DIA. YIELDING HOLES

40"

POST(1)

FRONT VIEW POST(1)

4'-9 ½" (W6 X 8.5)
(SYTP) I-BEAM POST PN: 15203G

NOTE: NO BLOCKOUT INSTALLED AT POST(1)

APPROX 5'-10"

5'-0"

50' APPROACH GRADING

2'-0"

STANDARD MBGF

EDGE OF PAVEMENT

NOTE: ADJUST WIDTH ACCORDINGLY WHEN OFFSET IS USED. (OFFSET "OPTION" SHOWN)

2'-0" MAX. RAIL OFFSET

APPROACH GRADING (1V:10H OR FLATTER) SEE PRODUCT ASSEMBLY MANUAL FOR ADDITIONAL GUIDANCE.

APPROACH GRADING AT GUARDRAIL END TREATMENTS

GENERAL NOTES

1. FOR SPECIFIC INFORMATION REGARDING INSTALLATION AND TECHNICAL GUIDANCE OF THE SYSTEM, CONTACT: TRINITY HIGHWAY AT 1(888)323-6374. 2525 N. STEMMONS FREEWAY, DALLAS, TX 75207
2. FOR INSTALLATION, REPAIR AND MAINTENANCE REFER TO THE; SoftStop END TERMINAL, PRODUCT DESCRIPTION ASSEMBLY MANUAL. PN: 620237B
3. APPLY HIGH INTENSITY REFLECTIVE SHEETING, "OBJECT MARKER" ON THE FRONT FACE OF THE DEVICE PER MANUFACTURER'S RECOMMENDATIONS. OBJECT MARKER SHALL CONFORM TO THE STANDARDS REQUIRED IN TEXAS MUTCD.
4. FOR POST (LEAVE-OUT) INSTALLATION AND GUIDANCE SEE TXDOT'S LATEST ROADWAY MOW STRIP STANDARD.
5. HARDWARE (BOLTS, NUTS, & WASHERS) SHALL BE GALVANIZED IN ACCORDANCE WITH ITEM 445, "GALVANIZING". FITTINGS SHALL BE SUBSIDIARY TO THE BID ITEM.
6. A COMPOSITE MATERIAL BLOCKOUT THAT MEETS THE REQUIREMENTS OF DMS-7210, MAY BE SUBSTITUTED FOR BLOCKOUTS OF SIMILAR DIMENSIONS. SEE CONSTRUCTION DIVISION MATERIAL PRODUCER LIST (MPL) FOR CERTIFIED PRODUCERS.
7. IF SOLID ROCK IS ENCOUNTERED SEE THE MANUFACTURER'S INSTALLATION MANUAL AND REFER TO THE LATEST ROADWAY MBGF STANDARD FOR INSTALLATION GUIDANCE.
8. POSTS SHALL NOT BE SET IN CONCRETE.
9. IT IS ACCEPTABLE TO INSTALL THE SoftStop IMPACT HEAD PARALLEL TO THE GRADE LINE OR WITH AN UPWARD TILT.
10. DO NOT ATTACH THE SoftStop SYSTEM DIRECTLY TO A RIGID BARRIER.
11. UNDER NO CIRCUMSTANCES SHALL THE GUARDRAIL WITHIN THE SoftStop SYSTEM BE CURVED.
12. A FLARE RATE OF UP TO 25:1 MAY BE USED TO PREVENT THE TERMINAL HEAD FROM ENCROACHING ON THE SHOULDER. THE FLARE MAY BE DECREASED OR ELIMINATED FOR SPECIFIC INSTALLATIONS, IF DIRECTED BY THE ENGINEER.

NOTE:A	THE INSTALLATION HEIGHT OF FULLY ASSEMBLED ANCHOR POST WILL VARY FROM 3-¾" MIN. TO 4" MAX. ABOVE FINISHED GRADE.
NOTE:B	PART PN: 5852B RIGHT-SIDE (HIGH INTENSITY REFLECTIVE SHEETING) PART PN: 5851B LEFT-SIDE (HIGH INTENSITY REFLECTIVE SHEETING)
NOTE:C	W-BEAM SPLICE LOCATED BETWEEN LINE POST(4) AND LINE POST(5) GUARDRAIL PANEL 25'-0" PN: 61G ANCHOR RAIL 25'-0" PN: 15215G LAP GUARDRAIL IN DIRECTION OF TRAFFIC FLOW.

PART	QTY	MAIN SYSTEM COMPONENTS
620237B	1	PRODUCT DESCRIPTION ASSEMBLY MANUAL (LATEST REV.)
15208A	1	SoftStop HEAD (SEE MANUAL FOR RIGHT-LEFT APPROACH)
15215G	1	SoftStop ANCHOR RAIL (12GA) WITH CUTOUT SLOTS
61G	1	SoftStop DOWNSTREAM W-BEAM RAIL (12GA) (25'- 0")
15205A	1	POST #0 - ANCHOR POST (6'- 5 ⅞")
15203G	1	POST #1 - (SYTP) (4'- 9 ½")
15000G	1	POST #2 - (SYTP) (6'- 0")
533G	6	POST #3 THRU #8 - I-BEAM (W6 x 8.5) (6'- 0")
4076B	7	BLOCKOUT - WOOD (ROUTED) (6" x 8" x 14")
6777B	7	BLOCKOUT - COMPOSITE (4" x 7 ½" x 14")
15204A	1	ANCHOR PADDLE
15207G	1	ANCHOR KEEPER PLATE (24 GA)
15206G	1	ANCHOR PLATE WASHER (½" THICK)
15201G	2	ANCHOR POST ANGLE (10" LONG)
15202G	1	ANGLE STRUT
		HARDWARE
4902G	1	1" ROUND WASHER F436
3908G	1	1" HEAVY HEX NUT A563 GR.DH
3717G	2	¾" x 2 ½" HEX BOLT A325
3701G	4	¾" ROUND WASHER F436
3704G	2	¾" HEAVY HEX NUT A563 GR.DH
3360G	16	⅝" x 1 ¼" W-BEAM RAIL SPLICE BOLTS HGR
3340G	25	⅝" W-BEAM RAIL SPLICE NUTS HGR
3500G	7	⅝" x 10" HGR POST BOLT A307
3391G	1	⅝" x 1 ¾" HEX HD BOLT A325
4489G	1	⅝" x 9" HEX HD BOLT A325
4372G	4	⅝" WASHER F436
105285G	2	⅝" x 2 ½" HEX HD BOLT GR-5
105286G	1	⅝" x 1 ½" HEX HD BOLT GR-5
3240G	6	⅝" ROUND WASHER (WIDE)
3245G	3	⅝" HEX NUT A563 GR.DH
5852B	1	HIGH INTENSITY REFLECTIVE SHEETING - SEE NOTE:B

NOTE:
THIS STANDARD IS A BASIC REPRESENTATION OF THE SoftStop END TERMINAL, IT IS NOT INTENDED TO REPLACE THE PRODUCT DESCRIPTION ASSEMBLY MANUAL.

Texas Department of Transportation

Design Division Standard

TRINITY HIGHWAY
SOFTSTOP END TERMINAL
MASH - TL-3
SGT(10S)31-16

FILE: sgt10s3116	DN: TxDOT	CK: KM	DW: VP	CK: MB/VP	
©TxDOT: JULY 2016	CONT	SECT	JOB	HIGHWAY	
REVISIONS	0914	05	222	RM 2243	
	DIST	COUNTY		SHEET NO.	
	AUS	WILLIAMSON		194	

DISCLAIMER:
The use of this standard is governed by the "Texas Engineering Practice Act". No warranty of any kind is made by TxDOT for any purpose whatsoever. TxDOT assumes no responsibility for the conversion of this standard to other formats or for incorrect results or damages resulting from its use.

DATE: 4/10/2025
FILE: G:\TXC\Projects\County_Williamson\7473-02 RM 2243 Phase 1A\03_CADD\01_SHTS\sgt11s3118.dgn

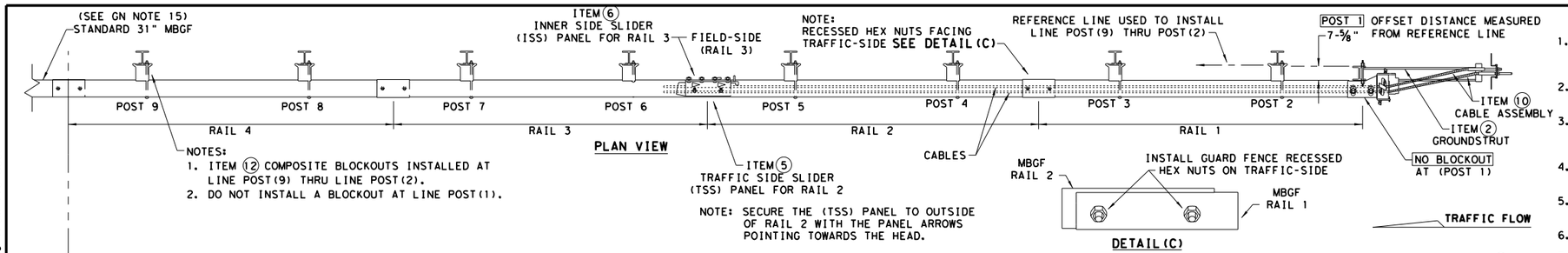

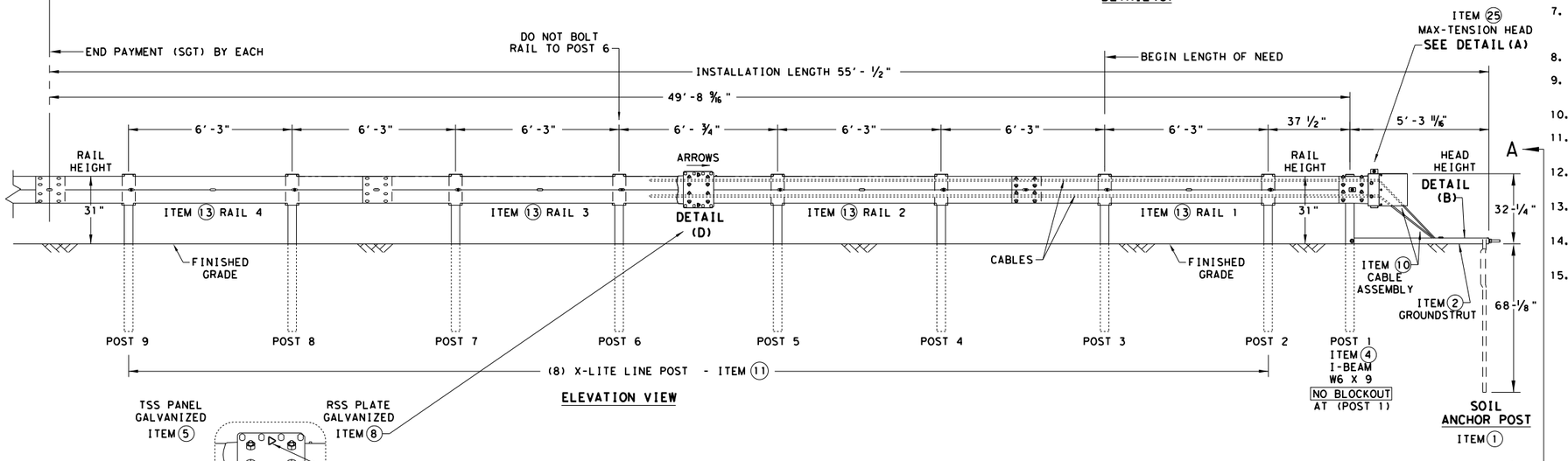

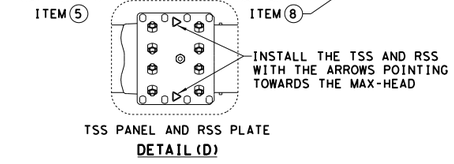

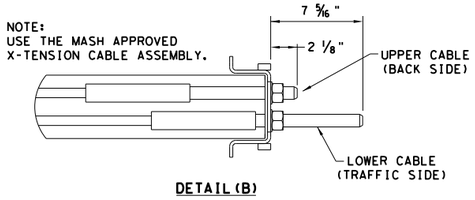

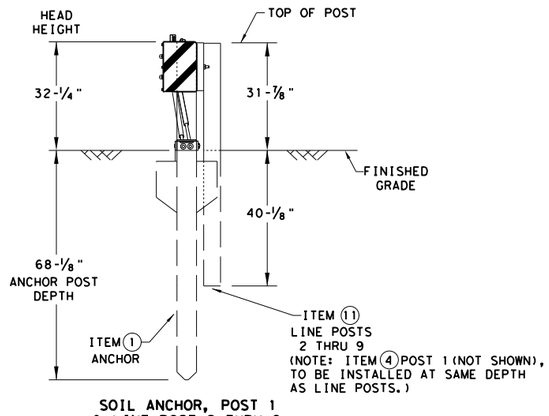

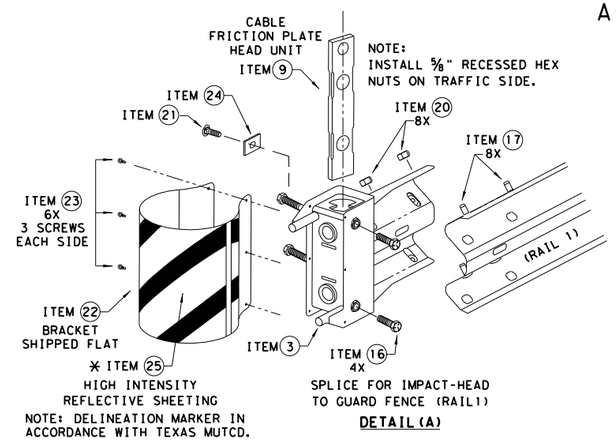

GENERAL NOTES

1. FOR SPECIFIC INFORMATION REGARDING INSTALLATION AND TECHNICAL GUIDANCE OF THE SYSTEM, CONTACT: LINDSAY TRANSPORTATION SOLUTIONS (LTS) - BARRIER SYSTEMS, INC. AT (707) 374-6800
2. FOR INSTALLATION, REPAIR, & MAINTENANCE REFER TO THE; MAX-TENSION INSTALLATION INSTRUCTION MANUAL. P/N MANMAX REV D (ECN 3516).
3. APPLY HIGH INTENSITY REFLECTIVE SHEETING, "OBJECT MARKER" ON THE FRONT FACE OF THE DEVICE PER MANUFACTURE'S RECOMMENDATIONS. OBJECT MARKER SHALL CONFORM TO THE STANDARDS REQUIRED IN TEXAS MUTCD.
4. FOR POST (LEAVE-OUT) INSTALLATION AND GUIDANCE SEE TXDOT'S LATEST ROADWAY MOW STRIP STANDARD.
5. ALL STEEL COMPONENTS ARE GALVANIZED PER ASTM A123 OR EQUIVALENT UNLESS OTHERWISE STATED.
6. SYSTEM SHOWN USING STEEL WIDE FLANGE POST WITH COMPOSITE BLOCKOUTS.
7. COMPOSITE MATERIAL BLOCKOUT THAT MEETS THE REQUIREMENTS OF DMS-7210, MAY BE SUBSTITUTED FOR BLOCKOUTS SIMILAR DIMENSIONS. SEE CONSTRUCTION DIVISION MATERIAL PRODUCER LIST(MPL)FOR CERTIFIED PRODUCERS.
8. REFER TO INSTALLATION MANUAL FOR SPECIFIC PANEL LAPPING GUIDANCE.
9. IF SOLID ROCK IS ENCOUNTERED SEE THE MANUFACTURER'S INSTALLATION MANUAL FOR INSTALLATION GUIDANCE.
10. POSTS SHALL NOT BE SET IN CONCRETE.
11. A DRIVING CAP WITH A TIMBER OR PLASTIC INSERT SHALL BE USED WHEN DRIVING POST TO PREVENT DAMAGE TO THE GALVANIZING ON TOP OF THE POST.
12. MAX-TENSION SYSTEM SHALL NEVER BE INSTALLED WITHIN A CURVED SECTION OF GUARDRAIL.
13. IF A DELINEATION MARKER IS REQUIRED, MARKER SHALL BE IN ACCORDANCE WITH TEXAS MUTCD.
14. THE SYSTEM IS SHOWN WITH 12'-6" MBGF PANELS, 25'-0" MBGF PANELS ARE ALSO ALLOWED.
15. A MINIMUM OF 12'-6" OF 12GA. MBGF IS REQUIRED IMMEDIATELY DOWNSTREAM OF THE MAX-TENSION SYSTEM.

ITEM #	PART NUMBER	DESCRIPTION	QTY
1	BSI-1610060-00	SOIL ANCHOR - GALVANIZED	1
2	BSI-1610061-00	GROUND STRUT - GALVANIZED	1
3	BSI-1610062-00	MAX-TENSION IMPACT HEAD	1
4	BSI-1610063-00	W6x9 I-BEAM POST 6FT.-GALVANIZED	1
5	BSI-1610064-00	TSS PANEL - TRAFFIC SIDE SLIDER	1
6	BSI-1610065-00	ISS PANEL - INNER SIDE SLIDER	1
7	BSI-1610066-00	TOOTH - GEOMET	1
8	BSI-1610067-00	RSS PLATE - REAR SIDE SLIDER	1
9	B061058	CABLE FRICTION PLATE - HEAD UNIT	1
10	BSI-1610069-00	CABLE ASSEMBLY - MASH X-TENSION	2
11	BSI-1012078-00	X-LITE LINE POST-GALVANIZED	8
12	B090534	8" W-BEAM COMPOSITE-BLOCKOUT XT110	8
13	BSI-4004386	12'-6" W-BEAM GUARD FENCE PANELS 12GA.	4
14	BSI-1102027-00	X-LITE SQUARE WASHER	1
15	BSI-2001886	⅝" X 7" THREAD BOLT HH (GR.5)GEOMET	1
16	BSI-2001885	¾" X 3" ALL-THREAD BOLT HH (GR.5)GEOMET	4
17	4001115	⅝" X 1 ¼" GUARD FENCE BOLTS (GR.2)MGAL	48
18	2001840	⅝" X 10" GUARD FENCE BOLTS MGAL	8
19	2001636	⅝" WASHER F436 STRUCTURAL MGAL	2
20	4001116	⅝" RECESSED GUARD FENCE NUT (GR.2)MGAL	59
21	BSI-2001888	⅝" X 2" ALL THREAD BOLT (GR.5)GEOMET	1
22	BSI-1701063-00	DELINEATION MOUNTING (BRACKET)	1
23	BSI-2001887	¼" X ¾" SCREW SD HH 410SS	7
24	4002051	GUARDRAIL WASHER RECT AASHTO FWR03	1
* 25	SEE NOTE BELOW	HIGH INTENSITY REFLECTIVE SHEETING	1
** 26	4002337	8" W-BEAM TIMBER-BLOCKOUT, PDB01B	8
** 27	BSI-4004431	25' W-BEAM GUARDRAIL PANEL,8-SPACE,12GA.	2
28	MANMAX Rev-(D)	MAX-TENSION INSTALLATION INSTRUCTIONS	1

* TO BE PROVIDED BY DISTRIBUTOR OR CONTRACTOR.

** ALTERNATIVE ITEMS NOT SHOWN.
ITEM(26) 8" WOOD-BLOCKOUTS
ITEM(27) 25'GUARD FENCE PANELS

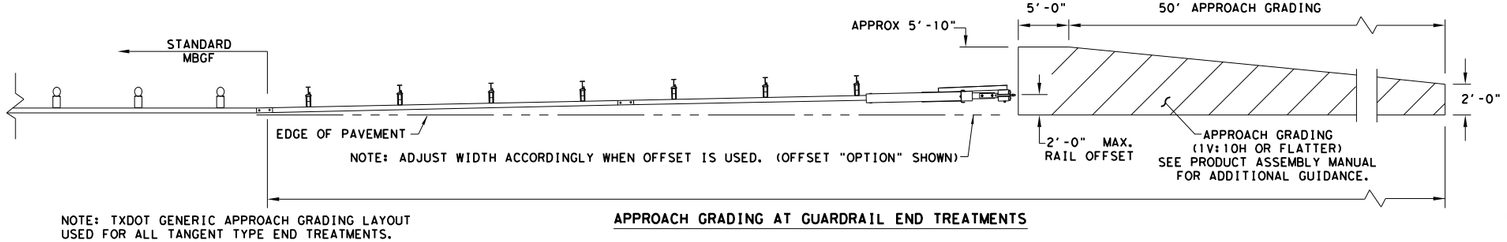

TRAFFIC FLOW

NOTE:
THIS STANDARD IS A BASIC REPRESENTATION OF THE MAX-TENSION END TERMINAL, IT IS NOT INTENDED TO REPLACE THE PRODUCT DESCRIPTION ASSEMBLY MANUAL.

Texas Department of Transportation

Design Division Standard

MAX-TENSION END TERMINAL MASH - TL-3

SGT(11S)31-18

FILE: sgt11s3118.dgn	DN: TxDOT	CK: KM	DW: TxDOT	CK: CL
© TxDOT: FEBRUARY 2018	CONT	SECT	JOB	HIGHWAY
REVISIONS	0914	05	222	RM 2243
	DIST	COUNTY		SHEET NO.
	AUS	WILLIAMSON		195

DISCLAIMER:
The use of this standard is governed by the "Texas Engineering Practice Act". No warranty of any kind is made by TxDOT for any purpose whatsoever. TxDOT assumes no responsibility for the conversion of this standard to other formats or for incorrect results or damages resulting from its use.

DATE: 4/10/2025
FILE: G:\TXC\Projects\County_Williamson\7473-02 RM 2243 Phase 1A\03_CADD\01_Shts\03-RDWY\Stds\ped18.dgn

TYPE 1

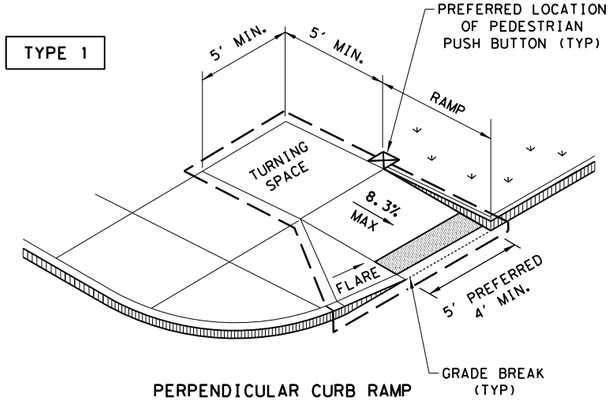

PERPENDICULAR CURB RAMP

TYPE 2

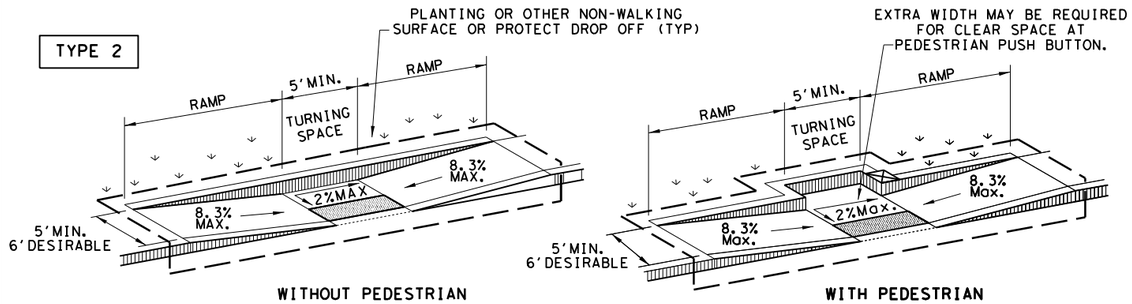

PARALLEL CURB RAMP

TYPE 3

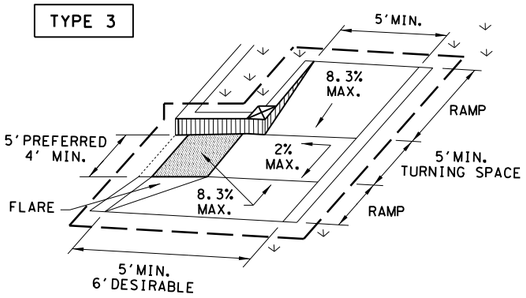

TYPE 20

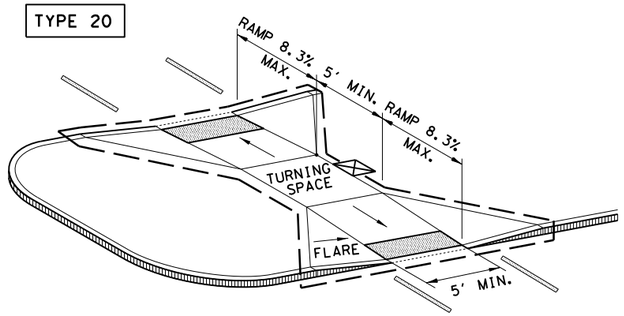

CURB RAMPS AT MEDIAN ISLANDS

TYPE 7
(SIDEWALK SET BACK FROM CURB)

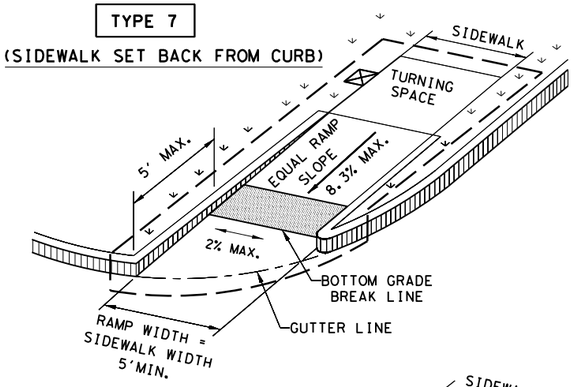

CROSS SLOPE NOT TO EXCEED 2% ON ANY PORTION OF RAMP, TURNING SPACE OR TRANSITION TO STREET.

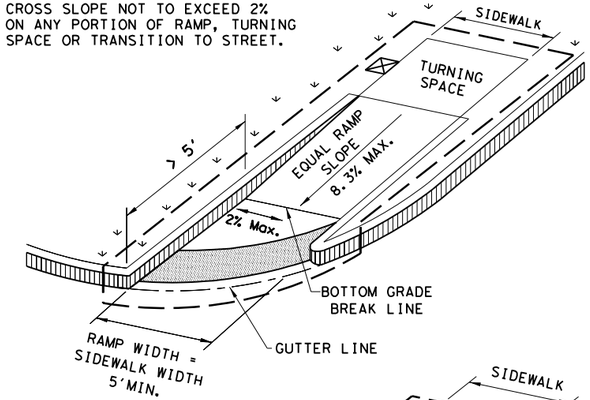

TYPE 6

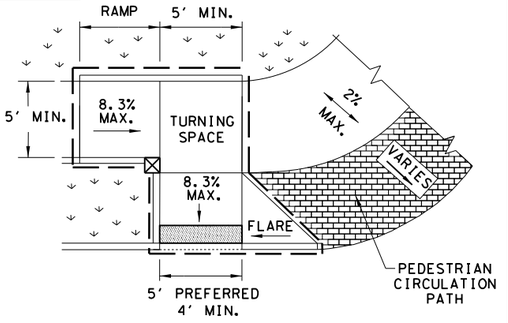

COMBINATION CURB RAMPS

TYPE 10
(SIDEWALK ADJACENT TO CURB)

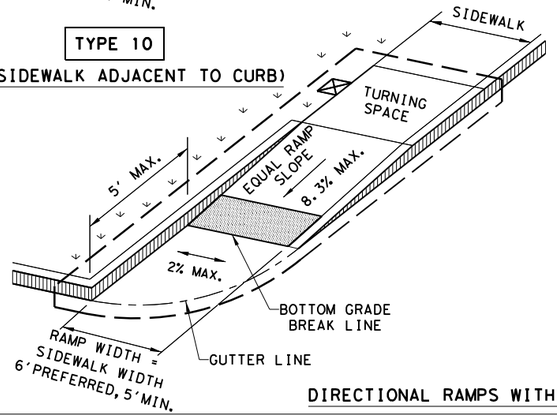

CROSS SLOPE NOT TO EXCEED 2% ON ANY PORTION OF RAMP, TURNING SPACE OR TRANSITION TO STREET.

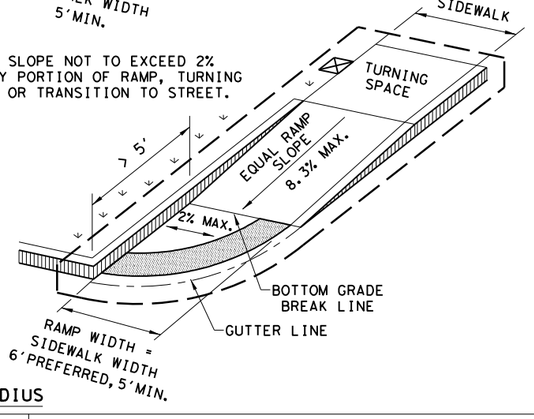

DIRECTIONAL RAMPS WITHIN RADIUS

TYPE 5

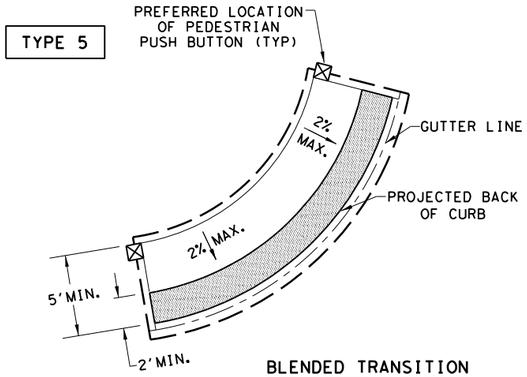

BLENDED TRANSITION
(FLUSH LANDING)

TYPE 21

INSTALL DETECTABLE WARNING SURFACE AT EACH END OF THE CUT-THROUGH RAMP WITH A MINIMUM 2' USUAL SIDEWALK SURFACE BETWEEN. IF MEDIAN IS LESS THAN 6' WIDE, ELIMINATE DETECTABLE WARNING SURFACES.

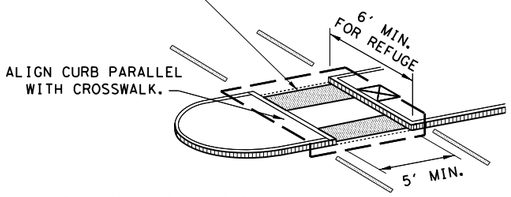

NOTE: CURB DETAILS ARE SHOWN ELSEWHERE IN THE PLANS.

TYPE 22

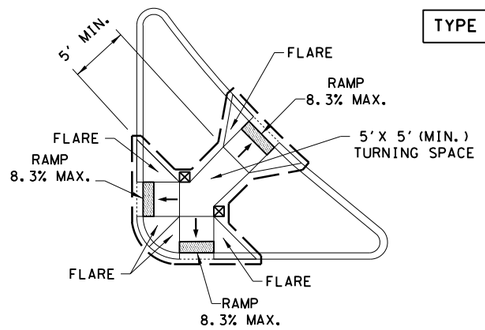

COMBINATION ISLAND RAMPS

BOTTOM GRADE BREAK OF CURB RAMP WILL NORMALLY BE AT GUTTER LINE. SURFACE SLOPES AT GRADE BREAKS SHALL BE FLUSH.

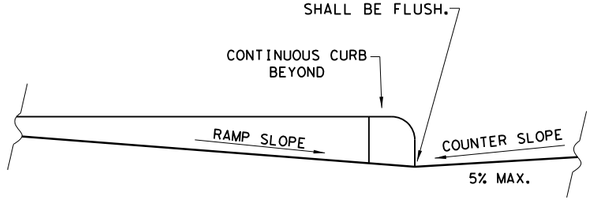

TYPICAL SECTION OF PERPENDICULAR CURB RAMP AT CONNECTION TO ROADWAY

NOTES / LEGEND:

SEE GENERAL NOTES ON SHEET 2 OF 4 FOR MORE INFORMATION.

DENOTES PLANTING OR NON-WALKING SURFACE NOT PART OF PEDESTRIAN CIRCULATION PATH.

DETECTABLE WARNING SURFACE

DENOTES PREFERRED LOCATION OF PEDESTRIAN PUSH BUTTON IF APPLICABLE.

GUTTER LINE

GRADE BREAK

RAMP LIMITS OF PAYMENT

Texas Department of Transportation

Design Division Standard

PEDESTRIAN FACILITIES CURB RAMPS

PED-18

FILE: ped18	DN: TxDOT	DW: VP	CK: KM	CK: PK & JG
© TxDOT: MARCH, 2002	CONT	SECT	JOB	HIGHWAY
REVISIONS	0914	05	222	RM 2243
REVISED 08,2005 REVISED 06,2012 REVISED 01,2018	DIST	COUNTY		SHEET NO.
	AUS	WILLIAMSON		196

DISCLAIMER:
The use of this standard is governed by the "Texas Engineering Practice Act". No warranty of any kind is made by TxDOT for any purpose whatsoever. TxDOT assumes no responsibility for the conversion of this standard to other formats or for incorrect results or damages resulting from its use.

DATE: 4/10/2025
FILE: G:\TXC\Projects\County_Williamson\7473-02 RM 2243 Phase 1A\03_CADD\01_Shts\03-RDWY\Stds\ped18.dgn

GENERAL NOTES

CURB RAMPS

1. Install a curb ramp or blended transition at each pedestrian street crossing.
2. All slopes shown are maximum allowable. Cross slopes of 1.5% and lesser running should be used. Adjust curb ramp length or grade of approach sidewalks as directed.
3. Maximum allowable cross slope on sidewalk and curb ramp surfaces is 2%.
4. The minimum sidewalk width is 5'. Where the sidewalk is adjacent to the back of curb, a 6' sidewalk width is desirable. Where a 5' sidewalk cannot be provided due to site constraints, sidewalk width may be reduced to 4' for short distances. 5'x 5' passing areas at intervals not to exceed 200' are required.
5. Turning Spaces shall be 5'x 5' minimum. Cross slope shall be maximum 2%.
6. Clear space at the bottom of curb ramps shall be a minimum of 4'x 4' wholly contained within the crosswalk and wholly outside the parallel vehicular travel path.
7. Provide flared sides where the pedestrian circulation path crosses the curb ramp. Flared sides shall be sloped at 10% maximum, measured parallel to the curb. Returned curbs may be used only where pedestrians would not normally walk across the ramp, either because the adjacent surface is planted, substantially obstructed, or otherwise protected.
8. Additional information on curb ramp location, design, light reflective value and texture may be found in the latest draft of the Proposed Guidelines for Pedestrian Facilities in the Public Right of Way (PROWAG) as published by the U.S. Architectural and Transportation Barriers Compliance Board (Access Board).
9. To serve as a pedestrian refuge area, the median should be a minimum of 6' wide, measured from back of curbs. Medians should be designed to provide accessible passage over or through them.
10. Small channelization islands, which do not provide a minimum 5'x 5' landing at the top of curb ramps, shall be cut through level with the surface of the street.
11. Crosswalk dimensions, crosswalk markings and stop bar locations shall be as shown elsewhere in the plans. At intersections where crosswalk markings are not required, curb ramps shall align with theoretical crosswalks unless otherwise directed.
12. Provide curb ramps to connect the pedestrian access route at each pedestrian street crossing. Handrails are not required on curb ramps.
13. Curb ramps and landings shall be constructed and paid for in accordance with Item 531 "Sidewalks".
14. Place concrete at a minimum depth of 5" for ramps, flares and landings, unless otherwise directed.
15. Furnish and install No. 3 reinforcing steel bars at 18" o.c. both ways, unless otherwise directed.
16. Provide a smooth transition where the curb ramps connect to the street.
17. Curbs shown on sheet 1 within the limits of payment are considered part of the curb ramp for payment, whether it is concrete curb, gutter, or combined curb and gutter.
18. Existing features that comply with applicable standards may remain in place unless otherwise shown on the plans.

DETECTABLE WARNING MATERIAL

19. Curb ramps must contain a detectable warning surface that consists of raised truncated domes complying with PROWAG. The surface must contrast visually with adjoining surfaces, including side flares. Furnish and install an approved cast-in-place dark brown or dark red detectable warning surface material adjacent to uncolored concrete, unless specified elsewhere in the plans.
20. Detectable Warning Materials must meet TxDOT Departmental Materials Specification DMS 4350 and be listed on the Material Producer List. Install products in accordance with manufacturer's specifications.
21. Detectable warning surfaces must be firm, stable and slip resistant.
22. Detectable warning surfaces shall be a minimum of 24 inches in depth in the direction of pedestrian travel, and extend the full width of the curb ramp or landing where the pedestrian access route enters the street.
23. Detectable warning surfaces shall be located so that the edge nearest the curb line is at the back of curb and neither end of that edge is greater than 5 feet from the back of curb. Detectable warning surfaces may be curved along the corner radius.
24. Shaded areas on Sheet 1 of 4 indicate the approximate location for the detectable warning surface for each curb ramp type.

DETECTABLE WARNING PAVERS (IF USED)

25. Furnish detectable warning paver units meeting all requirements of ASTM C-936, C-33. Lay in a two by two unit basket weave pattern or as directed.
26. Lay full-size units first followed by closure units consisting of at least 25 percent (25%) of a full unit. Cut detectable warning paver units using a power saw.

SIDEWALKS

27. Provide clear ground space at operable parts, including pedestrian push buttons. Operable parts shall be placed within unobstructed reach range specified in PROWAG section R406.
28. Place traffic signal or illumination poles, ground boxes, controller boxes, signs, drainage facilities and other items so as not to obstruct the pedestrian access route or clear ground space.
29. Street grades and cross slopes shall be as shown elsewhere in the plans.
30. Changes in level greater than 1/4 inch are not permitted.
31. The least possible grade should be used to maximize accessibility. The running slope of sidewalks and crosswalks within the public right of way may follow the grade of the parallel roadway. Where a continuous grade greater than five percent (5%) must be provided, handrails may be desirable to improve accessibility. Handrails may also be needed to protect pedestrians from potentially hazardous conditions. If provided, handrails shall comply with PROWAG R409.
32. Handrail extensions shall not protrude into the usable landing area or into intersecting pedestrian routes.
33. Driveways and turnouts shall be constructed and paid for in accordance with Item "Intersections, Driveways and Turnouts". Sidewalks shall be constructed and paid for in accordance with Item, "Sidewalks".
34. Sidewalk details are shown elsewhere in the plans.

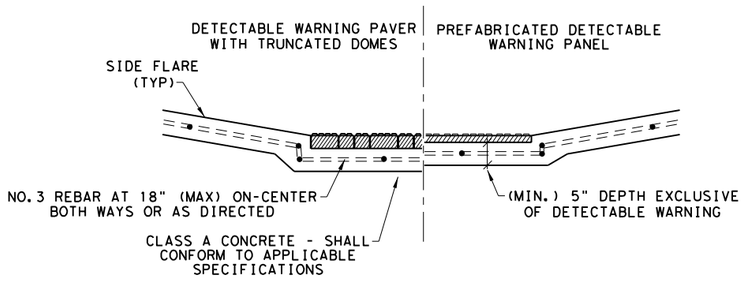

SECTION VIEW DETAIL
CURB RAMP AT DETECTIBLE WARNINGS

DETECTABLE WARNING SURFACE DETAILS

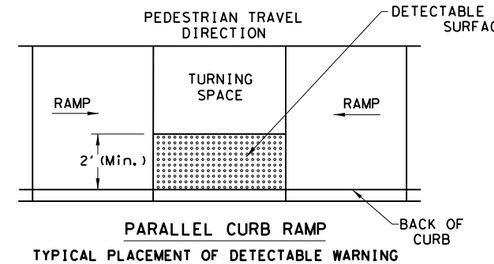

PARALLEL CURB RAMP

TYPICAL PLACEMENT OF DETECTABLE WARNING SURFACE ON LANDING AT STREET EDGE.

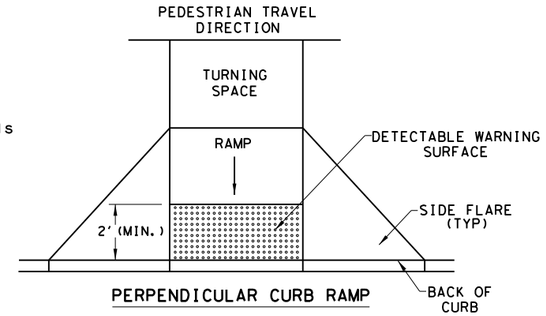

PERPENDICULAR CURB RAMP

TYPICAL PLACEMENT OF DETECTABLE WARNING SURFACE ON SLOPING RAMP RUN.

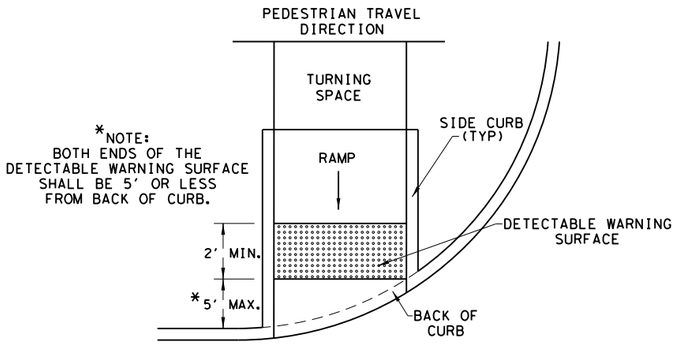

DIRECTIONAL CURB RAMP

TYPICAL PLACEMENT OF DETECTABLE WARNING SURFACE ON SLOPING RAMP RUN.

Texas Department of Transportation | Design Division Standard

PEDESTRIAN FACILITIES CURB RAMPS

PED-18

FILE: ped18	DN: TxDOT		DW: VP	CK: KM	CK: PK & JG
© TxDOT: MARCH, 2002	CONT	SECT	JOB		HIGHWAY
REVISIONS	0914	05	222		RM 2243
REVISED 08,2005 REVISED 06,2012 REVISED 01,2018	DIST	COUNTY			SHEET NO.
	AUS	WILLIAMSON			197

DISCLAIMER:
The use of this standard is governed by the "Texas Engineering Practice Act". No warranty of any kind is made by TxDOT for any purpose whatsoever. TxDOT assumes no responsibility for the conversion of this standard to other formats or for incorrect results or damages resulting from its use.

DATE: 4/10/2025
FILE: G:\TXC\Projects\County_Williamson\7473-02 RM 2243 Phase 1A\03_CADD\01_Shts\03-RDWY\Stds\ped18.dgn

SIDEWALK TREATMENT AT DRIVEWAYS

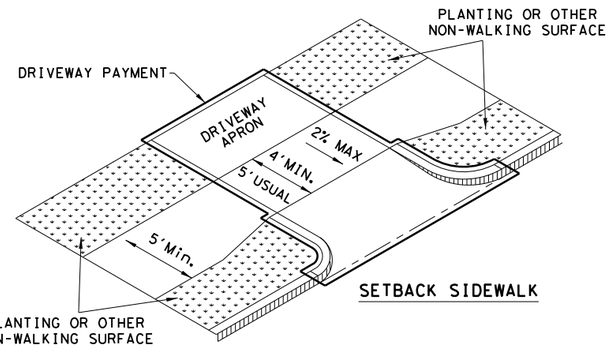

SETBACK SIDEWALK

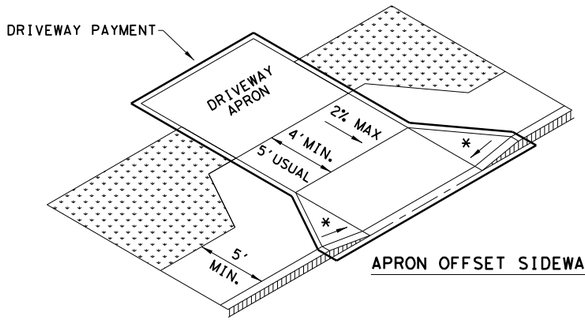

APRON OFFSET SIDEWALK

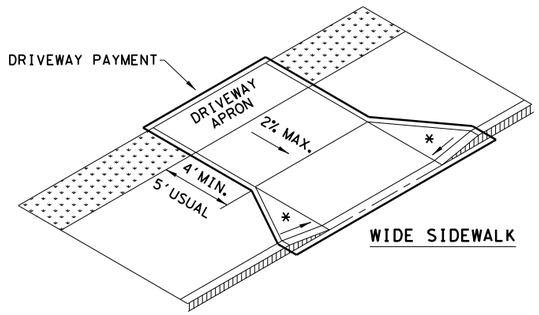

WIDE SIDEWALK

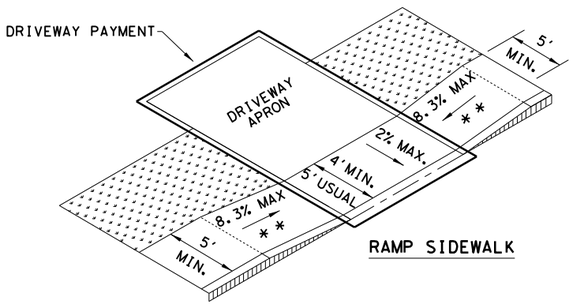

RAMP SIDEWALK

NOTES:

* WHERE DRIVEWAYS CROSS THE PEDESTRIAN ROUTE, SIDES SHALL BE FLARED AT 10% MAX SLOPE.

* * IF CURB HEIGHT IS GREATER THAN 6 INCHES, USE GRADE LESS THAN OR EQUAL TO 5%. HANDRAIL AND DETECTABLE WARNING ARE NOT REQUIRED.

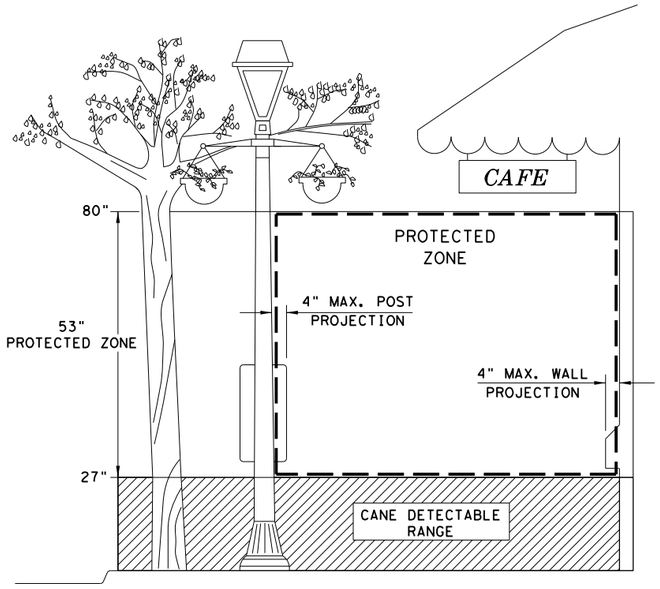

PROTECTED ZONE

NOTE: IN PEDESTRIAN CIRCULATION AREA, MAXIMUM 4" PROJECTION FOR POST OR WALL MOUNTED OBJECTS BETWEEN 27" AND 80" ABOVE THE SURFACE.

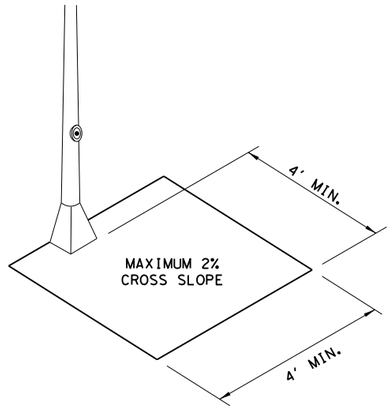

CLEAR SPACE ADJACENT TO PEDESTRIAN PUSH BUTTON

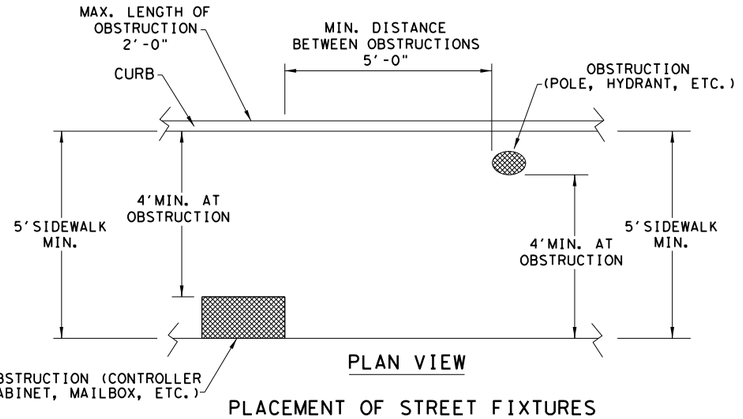

PLAN VIEW

PLACEMENT OF STREET FIXTURES

NOTE: ITEMS NOT INTENDED FOR PUBLIC USE. MINIMUM 4' X 4' CLEAR GROUND SPACE REQUIRED AT PUBLIC USE FIXTURES.

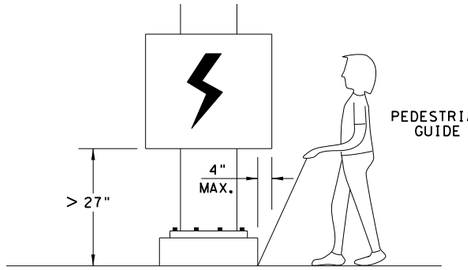

WHEN AN OBSTRUCTION OF A HEIGHT GREATER THAN 27" FROM THE SURFACE WOULD CREATE A PROTRUSION OF MORE THAN 4" INTO THE PEDESTRIAN CIRCULATION AREA, CONSTRUCT ADDITIONAL CURB OR FOUNDATION AT THE BOTTOM TO PROVIDE A MAXIMUM 4" OVERHANG.

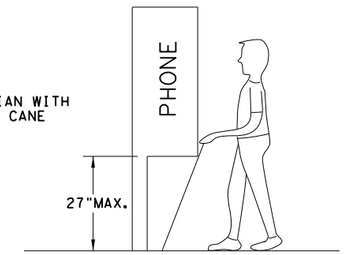

PROTRUDING OBJECTS OF A HEIGHT ≤ 27" ARE DETECTABLE BY CANE AND DO NOT REQUIRE ADDITIONAL TREATMENT.

DETECTION BARRIER FOR VERTICAL CLEARANCE < 80"

Texas Department of Transportation

Design Division Standard

PEDESTRIAN FACILITIES
CURB RAMPS

PED-18

FILE: ped18	DN: TxDOT	DW: VP	CK: KM	CK: PK & JG
© TxDOT: MARCH, 2002	CONT	SECT	JOB	HIGHWAY
REVISIONS	0914	05	222	RM 2243
REVISED 08,2005 REVISED 06,2012 REVISED 01,2018	DIST	COUNTY		SHEET NO.
	AUS	WILLIAMSON		198

DISCLAIMER:
The use of this standard is governed by the "Texas Engineering Practice Act". No warranty of any kind is made by TxDOT for any purpose whatsoever. TxDOT assumes no responsibility for the conversion of this standard to other formats or for incorrect results or damages resulting from its use.

DATE: 4/10/2025
FILE: G:\TXC\Projects\County_Williamson\7473-02 RM 2243 Phase 1A\03_CADD\01_Shts\03-RDWY\Stds\ped18.dgn

TYPICAL CROSSING LAYOUTS

SEE SHEET 1 OF 4 FOR DETAILS AND DIMENSIONS

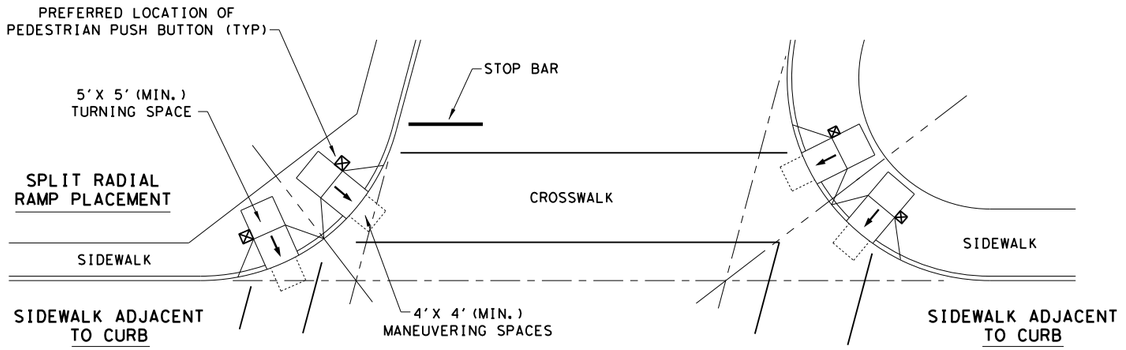

SKEWED INTERSECTION WITH "LARGE" RADIUS

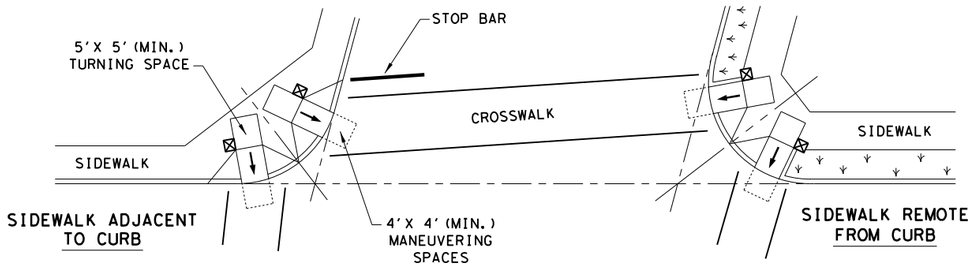

SKEWED INTERSECTION WITH "SMALL" RADIUS

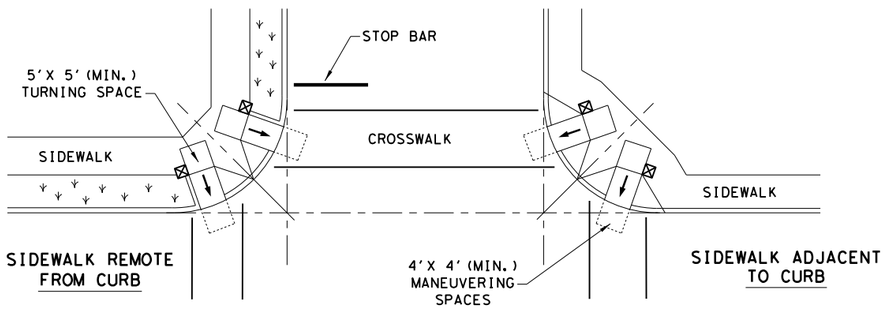

NORMAL INTERSECTION WITH "SMALL" RADIUS

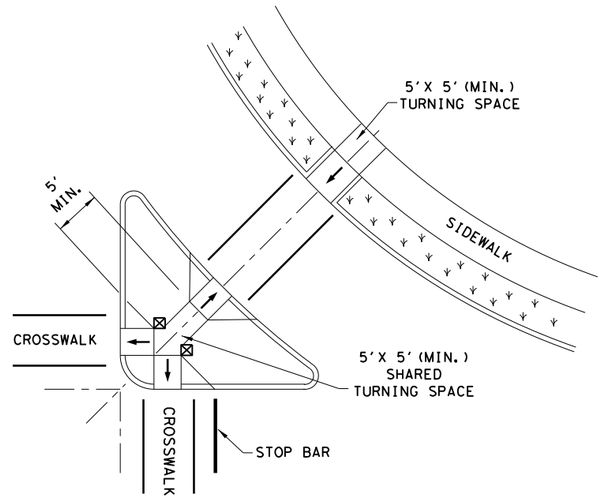

AT INTERSECTION
W/FREE RIGHT TURN & ISLAND

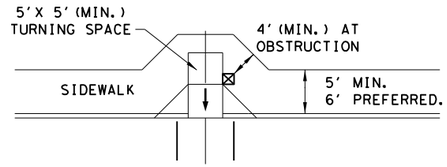

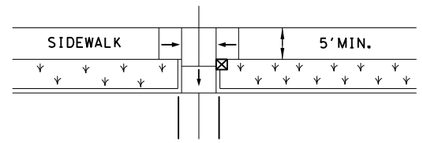

MID-BLOCK PLACEMENT
PERPENDICULAR RAMPS

LEGEND:

SHOWS DOWNWARD SLOPE. →

DENOTES PREFERRED LOCATION OF PEDESTRIAN PUSH BUTTON (IF APPLICABLE). ⊠

DENOTES PLANTING OR NON-WALKING SURFACE NOT PART OF PEDESTRIAN CIRCULATION PATH.

Texas Department of Transportation — Design Division Standard

PEDESTRIAN FACILITIES CURB RAMPS

PED-18

FILE: ped18	DN: TxDOT	DW: VP	CK: KM	CK: PK & JG
© TxDOT: MARCH, 2002	CONT	SECT	JOB	HIGHWAY
REVISIONS REVISED 08,2005 REVISED 06,2012 REVISED 01,2018	0914	05	222	RM 2243
	DIST	COUNTY		SHEET NO.
	AUS	WILLIAMSON		199

DISCLAIMER:
The use of this standard is governed by the "Texas Engineering Practice Act". No warranty of any kind is made by TxDOT for any purpose whatsoever. TxDOT assumes no responsibility for the conversion of this standard to other formats or for incorrect results or damages resulting from its use.

DATE: 4/10/2025
FILE: G:\TXC\Projects\County_Williamson\7473-02 RM 2243 Phase 1A\03_CADD\01_Shts\03-RDWY\Stds\prd13.dgn

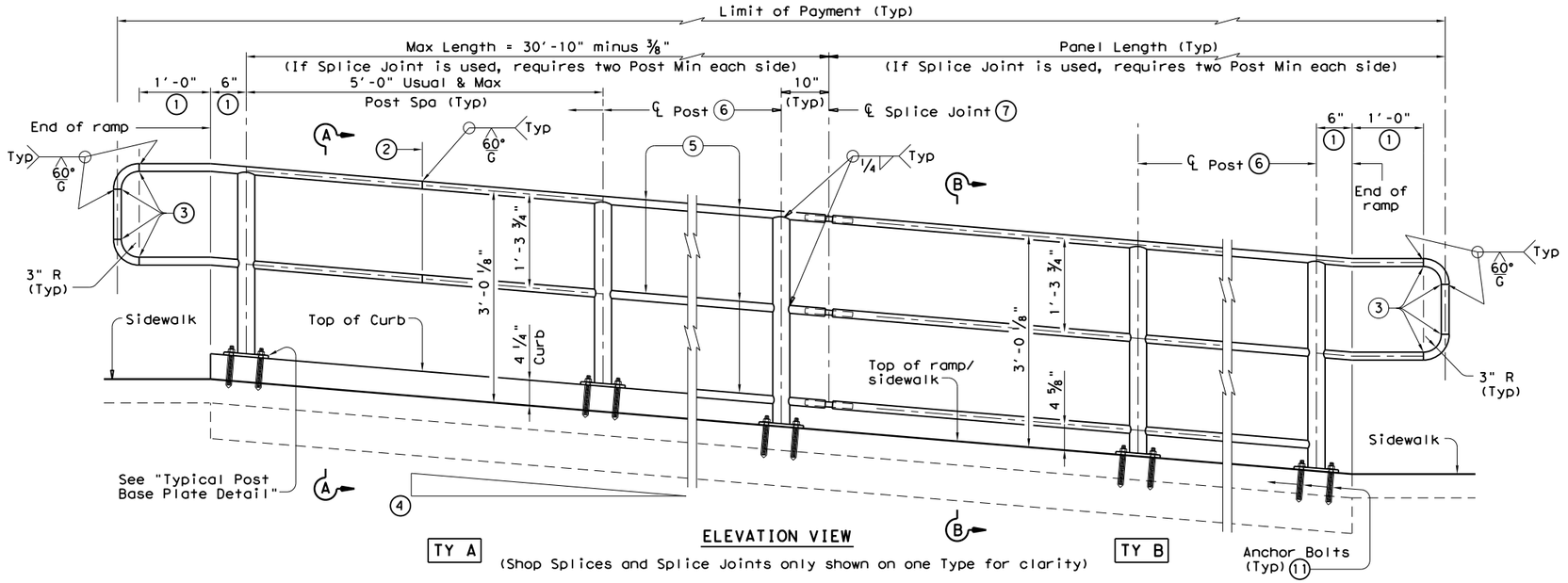

ELEVATION VIEW

(Shop Splices and Splice Joints only shown on one Type for clarity)

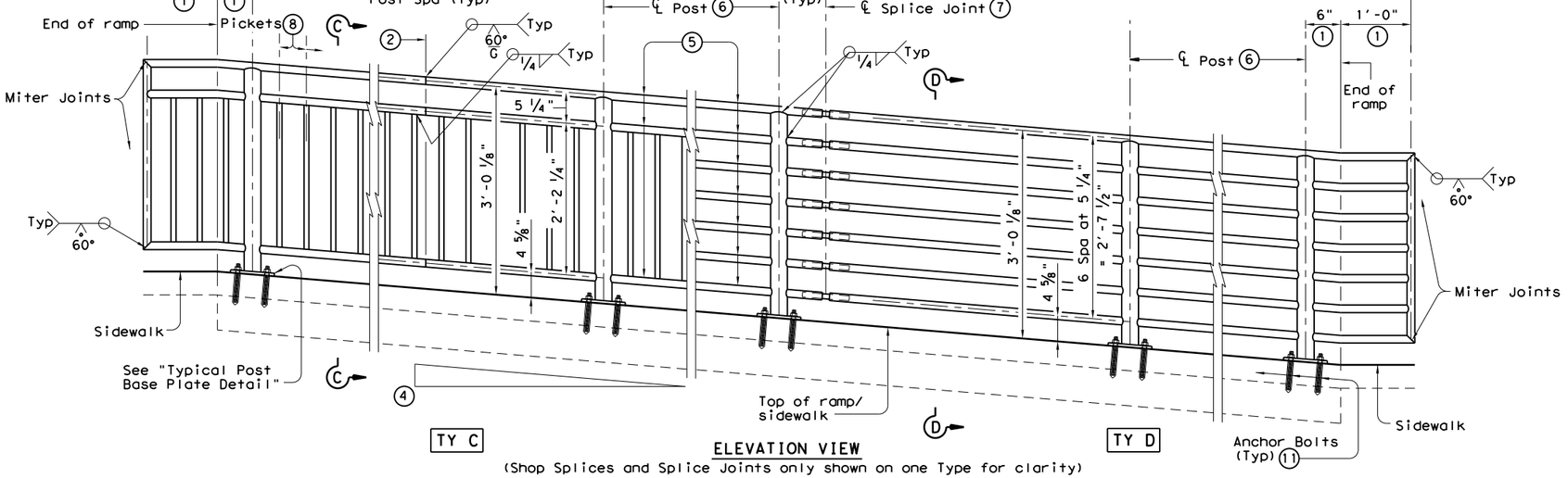

ELEVATION VIEW

(Shop Splices and Splice Joints only shown on one Type for clarity)

RECOMMENDED USAGE (9) (10)	
Dropoff Height/ Condition	Recommended Rail Options
< 30" dropoff	TY A, TY B, TY C, or TY D
≥ 30" dropoff, or along Bike Path	TY E or TY F

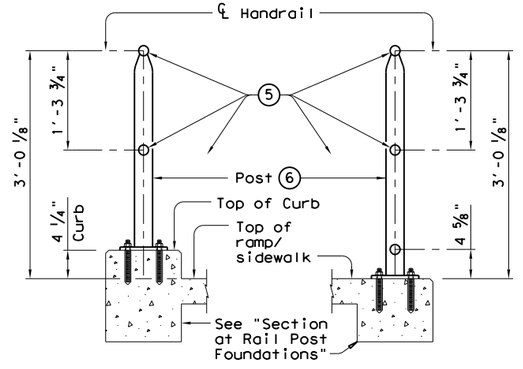

SECTION A-A

(Showing Handrail TY A)

SECTION B-B

(Showing Handrail TY B)

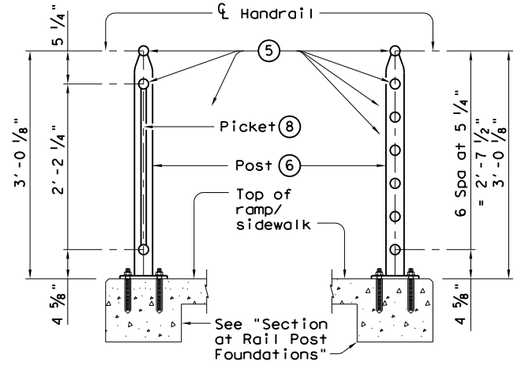

SECTION C-C

(Showing Handrail TY C)

SECTION D-D

(Showing Handrail TY D)

1. Parallel to ground.
2. One shop splice per panel is permitted with minimum 85 percent penetration. The weld may be square groove or single vee groove. Grind smooth.
3. Shop splice is permitted with minimum 85 percent penetration. The weld may be square groove or single vee groove. Grind smooth.
4. See Ramp Details located elsewhere in plans for ramp slope and dimensions. Maximum ramp slope will not exceed 8.3 percent. Level landing required for each 30" rise if grade exceeds 5 percent.
5. 1 ½" Dia. Standard Pipe (1.900" O.D., 0.145" wall thickness). Parallel to ramp / sidewalk. Provide holes as needed in 1 ½" Dia. pipe for galvanizing drainage and venting.
6. 2 ½" Dia. Standard Pipe (2.875" O.D., 0.203" wall thickness). See "Post Mount Detail" for crimping and trimming post to fit Dia. of top rail. Provide holes as needed in post for galvanizing drainage and venting. Plumb all posts.
7. See "Handrail Fabrication Details" for Splice Joints.
8. ℄ ⅝" Dia. Round Bar equal spacing at 4 ½" Max. Plumb all pickets.
9. When needed for accessibility (grade > 5 percent) or as needed for pedestrian safety.
10. Not to be used on bridges.
11. See "General Notes" for anchor bolt information.

SHEET 1 OF 3

Texas Department of Transportation

Design Division Standard

PEDESTRIAN HANDRAIL DETAILS

PRD-13

FILE: prd13.dgn	DN: TxDOT	CK: AM	DW: JTR	CK: CGL
©TxDOT Decmeber 2006	CONT	SECT	JOB	HIGHWAY
REVISIONS REVISED MAY, 2013 (VP)	0914	05	222	RM 2243
	DIST	COUNTY		SHEET NO.
	AUS	WILLIAMSON		200

DISCLAIMER:
The use of this standard is governed by the "Texas Engineering Practice Act". No warranty of any kind is made by TxDOT for any purpose whatsoever. TxDOT assumes no responsibility for the conversion of this standard to other formats or for incorrect results or damages resulting from its use.

DATE: 4/10/2025
FILE: G:\TXC\Projects\County_Williamson\7473-02 RM 2243 Phase 1A\03_CADD\01_Shts\03-RDWY\Stds\prd13.dgn

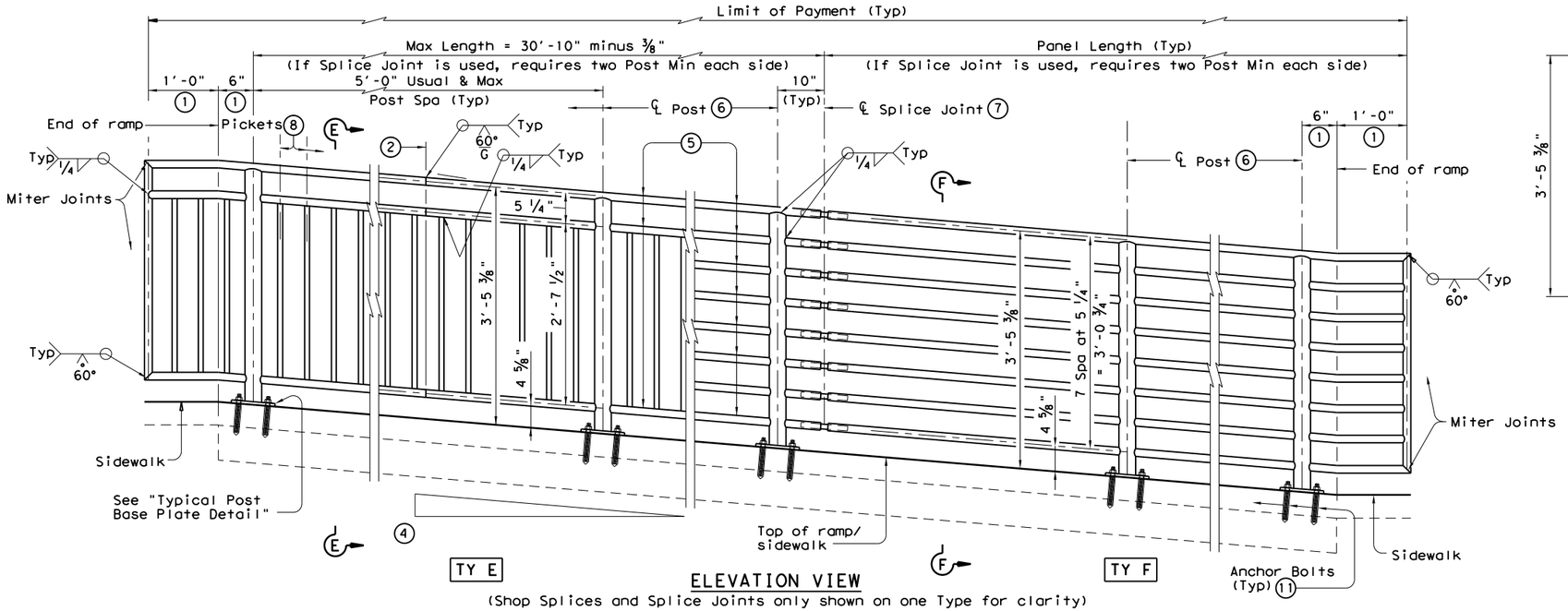

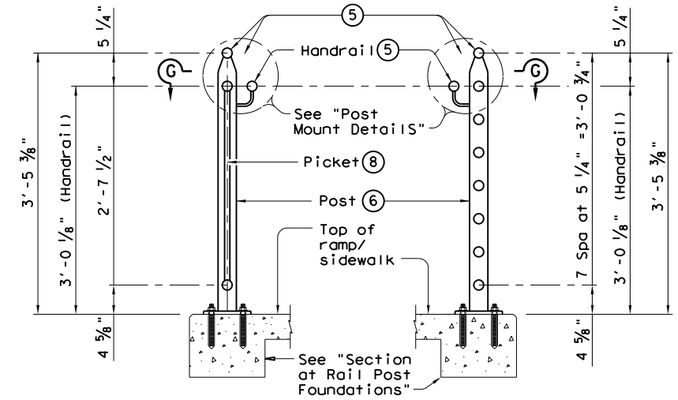

SECTION E-E
(Showing Handrail TY E)

SECTION F-F
(Showing Handrail TY F)

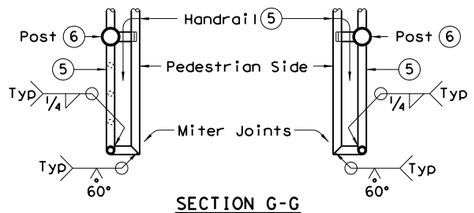

SECTION G-G
(Showing Handrail Termination)

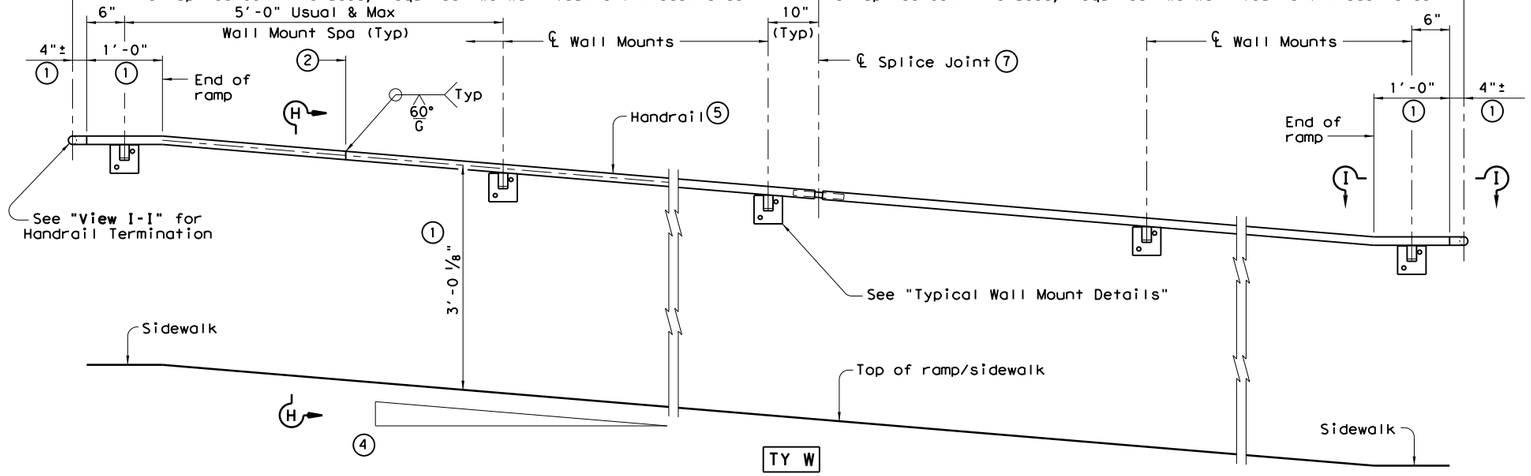

ELEVATION VIEW

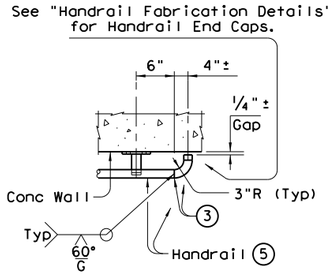

VIEW I-I
(Showing Handrail Termination)

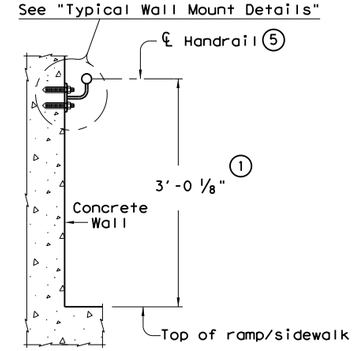

SECTION H-H
(Showing Handrail TY W)

1. Parallel to ground.
2. One shop splice per panel is permitted with minimum 85 percent penetration. The weld may be square groove or single vee groove. Grind smooth.
3. Shop splice is permitted with minimum 85 percent penetration. The weld may be square groove or single vee groove. Grind smooth.
4. See Ramp Details located elsewhere in plans for ramp slope and dimensions. Maximum ramp slope will not exceed 8.3 percent. Level landing required for each 30" rise if grade exceeds 5 percent.
5. 1 ½" Dia. Standard Pipe (1.900" O.D., 0.145" wall thickness). Parallel to ramp / sidewalk. Provide holes as needed in 1 ½" Dia. pipe for galvanizing drainage and venting.
6. 2 ½" Dia. Standard Pipe (2.875" O.D., 0.203" wall thickness). See "Post Mount Detail" for crimping and trimming post to fit Dia. of top rail. Provide holes as needed in post for galvanizing drainage and venting. Plumb all posts.
7. See "Handrail Fabrication Details" for Splice Joints.
8. ℄ ⅝" Dia. Round Bar equal spacing at 4 ½" Max. Plumb all pickets.
11. See "General Notes" for anchor bolt information.

Texas Department of Transportation — Design Division Standard

PEDESTRIAN HANDRAIL DETAILS

PRD-13

FILE: prd13.dgn	DN: TxDOT	CK: AM	DW: JTR	CK: CGL
©TxDOT December 2006	CONT	SECT	JOB	HIGHWAY
REVISIONS	0914	05	222	RM 2243
REVISED MAY, 2013 (VP)	DIST	COUNTY		SHEET NO.
	AUS	WILLIAMSON		201

DISCLAIMER:
The use of this standard is governed by the "Texas Engineering Practice Act". No warranty of any kind is made by TxDOT for any purpose whatsoever. TxDOT assumes no responsibility for the conversion of this standard to other formats or for incorrect results or damages resulting from its use.

DATE: 4/10/2025
FILE: G:\TXC\Projects\County_Williamson\7473-02 RM 2243 Phase 1A\03_CADD\01_Shts\03-RDWY\Stds\prd13.dgn

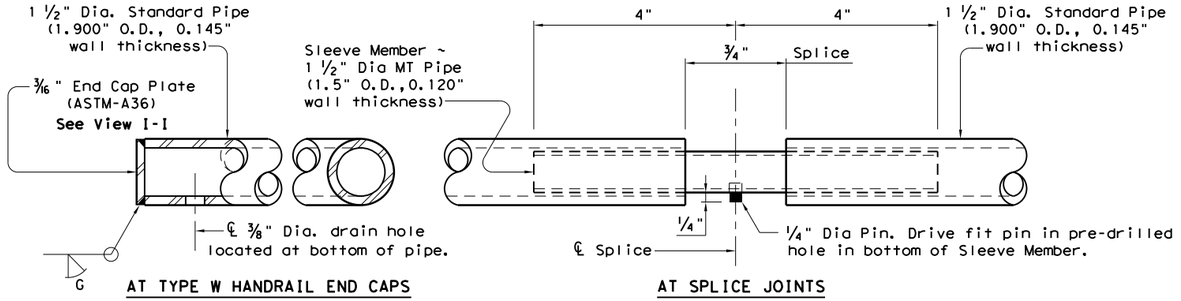

AT TYPE W HANDRAIL END CAPS

AT SPLICE JOINTS

HANDRAIL FABRICATION DETAILS

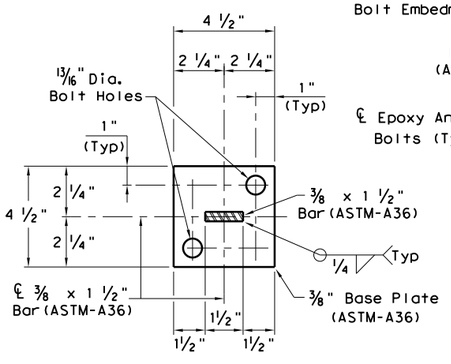

SECTION J-J
(Anchor Bolts not shown for clarity)

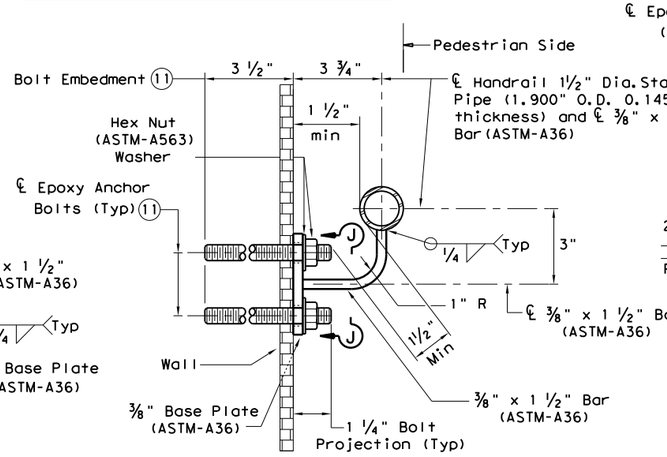

SECTION AT WALL MOUNT

TYPICAL WALL MOUNT DETAILS

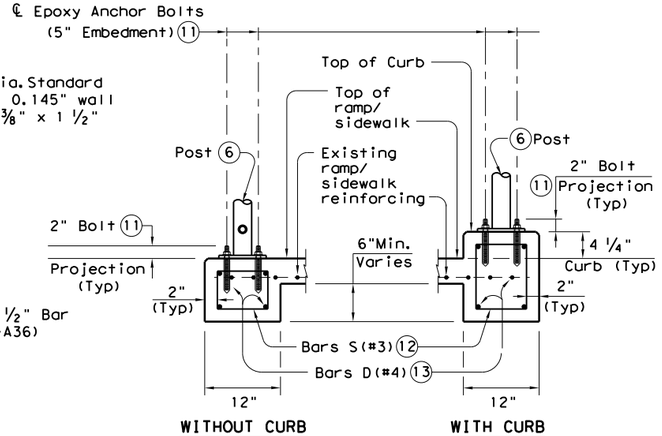

SECTION AT RAIL POST FOUNDATIONS

RAMP INTERSECTION

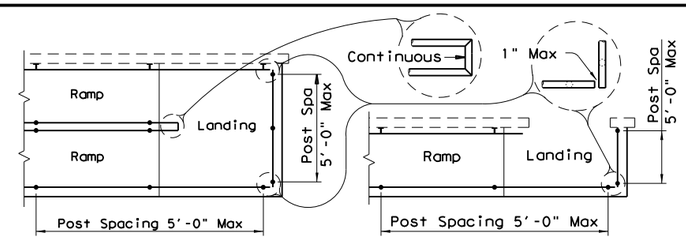

MULTI-LEVEL RAMP

SINGLE-LEVEL RAMP

PLAN SHOWING RAIL AT RAMP CONDITIONS

GENERAL NOTES

Designed according to ADAAG, Texas Accessibility Standards, Uniform Building Code, and AASHTO LRFD Specifications.

Handrail anchorage details shown on this standard may require modification for select structure types. See appropriate details elsewhere in plans for these modifications.

Pipe will conform to ASTM-A53 Grade B or A500 Grade B. Steel plates and steel bars will conform to ASTM-A36. Mechanical tubing (MT) will conform to ASTM A513 Grade 1015 or higher. Galvanize all steel components except reinforcing steel unless noted otherwise.

Concrete for foundations will be in accordance with Item 531 "Sidewalks". All reinforcing steel must be Grade 60. Bar laps, where required, will be as follows: Uncoated ~ #4 = 1'-5" Epoxy coated ~ #4 = 2'-1"

When the plans require painted steel, follow the requirements for painting galvanized steel in Item 446, "Cleaning and Painting Steel". Sleeve Members will receive galvanization and only get field painted after installation unless directed otherwise by Engineer.

Epoxy Anchor bolts for wall mount and post base plate will be ⅝" Dia. ASTM A36 threaded rods with one hex nut and one hardened steel washer at each bolt. ⅝" Dia. threaded rod embedment depth for wall mounts is 3 ½" and embedment depth for post base plate is 5".

Embed threaded rods into concrete with a Type III (Class C) epoxy meeting the requirements of DMS-6100, "Epoxies and Adhesives". Mix and dispense adhesive with the manufacturer's static mixing nozzle/dual cartridge system. Core drill holes (percussion drilling not permitted).

At the contractor's option the post base plate anchor bolts may be cast with the Ramp/Sidewalk (See Cast-in-Place Anchor Bolt Options).

Optional cast-in-place anchor bolts will be ⅝" Dia ASTM A307 Grade A bolts (or A36 threaded rods with one tack welded hex nut each) with one hex nut and one hardened steel washer at each bolt. Embedment depth of cast-in-place bolt will be 8" for post base plate.

Handrails and any wall or other surface adjacent to them will be free of any sharp or abrasive elements.

Submit shop drawings to the Engineer unless otherwise noted. For curved handrail applications, fabricate the handrail to the curve if radius is less than 600 ft. Shop drawings are required when rail is fabricated to the curve.

For all handrails, erection drawings will be submitted to the Engineer for approval to ensure proper installation.

Drawings will show handrail mount locations with bolts setting, spacing, ramp slope, and/or splice joint locations, and handrail lengths with identification showing where each handrail goes on the layout.

Payment for concrete sidewalks or curb ramps will be paid for in accordance with Item 531 "Sidewalks".

Payment for all items shown is to be included in unit price bid in accordance with Item 450 "Railing" of the type specified.

All exposed edges will be rounded or chamfered to approximately ⅛" by grinding.

⑤ 1 ½" Dia. Standard Pipe (1.900" O.D., 0.145" wall thickness). Parallel to ramp/sidewalk. Provide holes as needed in 1 ½" Dia. pipe for galvanizing drainage and venting.

⑥ 2 ½" Dia. Standard Pipe (2.875" O.D., 0.203" wall thickness). Plumb all posts. See "Post Mount Detail" for crimping and trimming post to fit the diamenter of top rail. Provide holes as needed in post for galvanizing drainage and venting.

⑪ See "General Notes" for anchor bolt information.

⑫ Bars S(#3) spaced at 12" Max (Spaced 3" from outside edge of overall length of Ramp/Sidewalk).

⑬ Provide 1 ½" end cover to Bars D(#4) from outside edge of overall length of Ramp/Sidewalk.

℄ ⅝" Dia. Hex Head Anchor Bolt (ASTM-A307) or Threaded Rod (ASTM-A36) with one Hardened Steel Washer placed under Hex Nut. One additional Hex Nut will be furnished for each Threaded Rod.

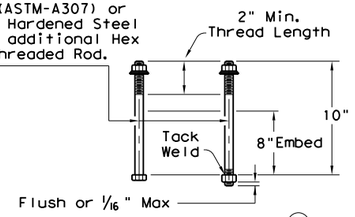

CAST-IN-PLACE ANCHOR BOLT OPTIONS
(Used for Post Base Plate only)

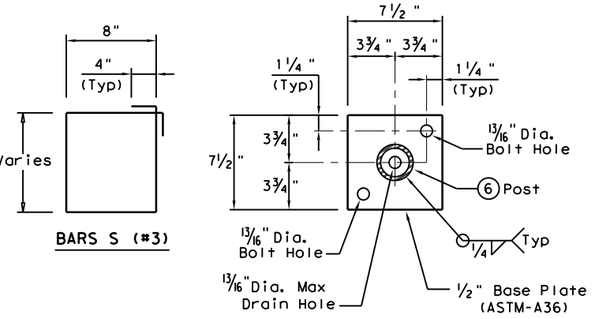

TYPICAL POST BASE PLATE DETAIL

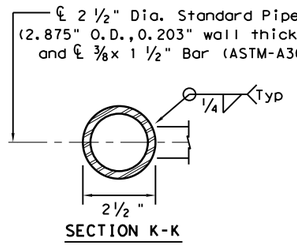

SECTION K-K

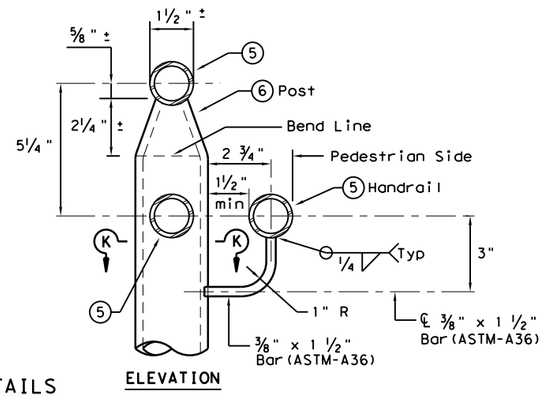

ELEVATION

POST MOUNT DETAILS

SHEET 3 OF 3

Texas Department of Transportation

Design Division Standard

PEDESTRIAN HANDRAIL DETAILS

PRD-13

FILE: prd13.dgn	DN: TxDOT	CK: AM	DW: JTR	CK: CGL
©TxDOT December 2006	CONT	SECT	JOB	HIGHWAY
REVISIONS	0914	05	222	RM 2243
REVISED MAY, 2013 (VP)	DIST	COUNTY		SHEET NO.
	AUS	WILLIAMSON		202

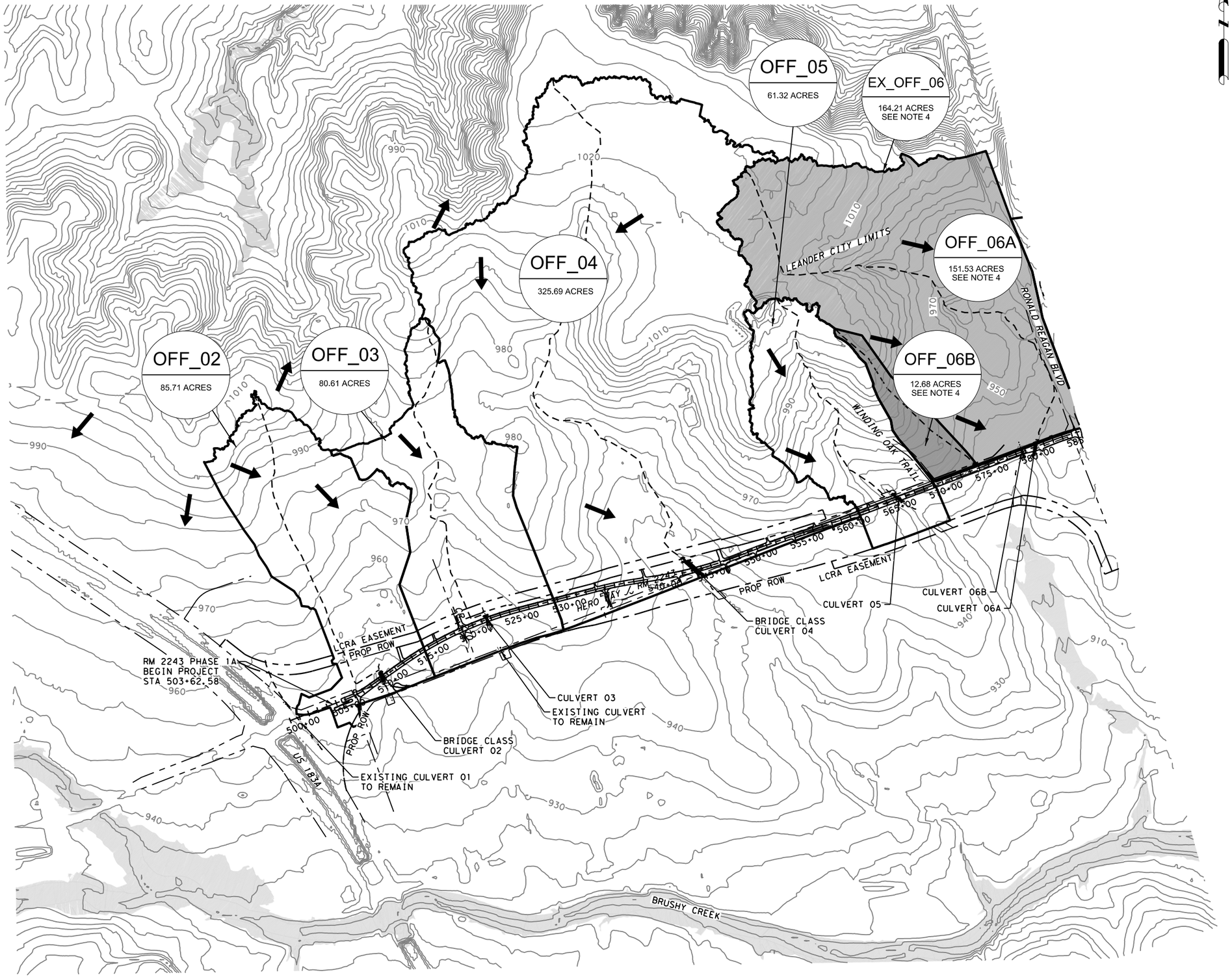

LEGEND

- # / 77.0 ac — CULVERT DRAINAGE AREA / DRAINAGE AREA (ACRES)
- FLOW DIRECTION
- 690 — 5-FOOT CONTOURS
- DRAINAGE AREA BOUNDARY
- TC PATH
- FEMA FLOODPLAIN

NOTES:
1. SEE HYDROLOGIC DATA SHEET FOR ADDITIONAL INFORMATION.

2. TERRAIN DATA OBTAINED FROM USGS 2024 LIDAR DATA.

3. EXISTING CONDITIONS DRAINAGE AREA DELINEATIONS AND PROPOSED DRAINAGE AREA DELINEATIONS ARE THE SAME EXCEPT FOR EXISTING OFF_06.

4. FOR PROPOSED CONDITIONS, EX_OFF_06 WAS SPLIT INTO OFF_06_A AND OFF_06_B.

5. CONTRIBUTING DRAINAGE AREAS ARE IN THE SOUTH BRUSHY CREEK-BRUSHY CREEK WATERHSHED.

0 500 1000
SCALE: 1"=1000'

STATE OF TEXAS
VANESSA MOLINA
141173
PROFESSIONAL LICENSED ENGINEER

WILCO TEXAS

BGE, Inc.
101 W Louis Henna Blvd, Suite 400, Austin, TX 78728
Tel: 512-879-0400 • www.bgeinc.com
TBPE Registration No. F-1046

RM 2243

EXTERNAL DRAINAGE AREA MAP

SHEET 1 OF 2

FED.RD. DIV.NO.	PROJECT NO.		SHEET NO.
6			203
STATE	DIST.	COUNTY	
TEXAS	AUS	WILLIAMSON	
CONT.	SECT.	JOB	HIGHWAY NO.
0914	05	222	RM 2243

4/10/2025 12:57:00 PM pdf.pltcfg
G:\TXC\Projects\County\Williamson\7473-02 RM 2243 Phase 1A\03*CADD\01*Shts\06-DRNG\RM2243*P1A*DA*01.dgn

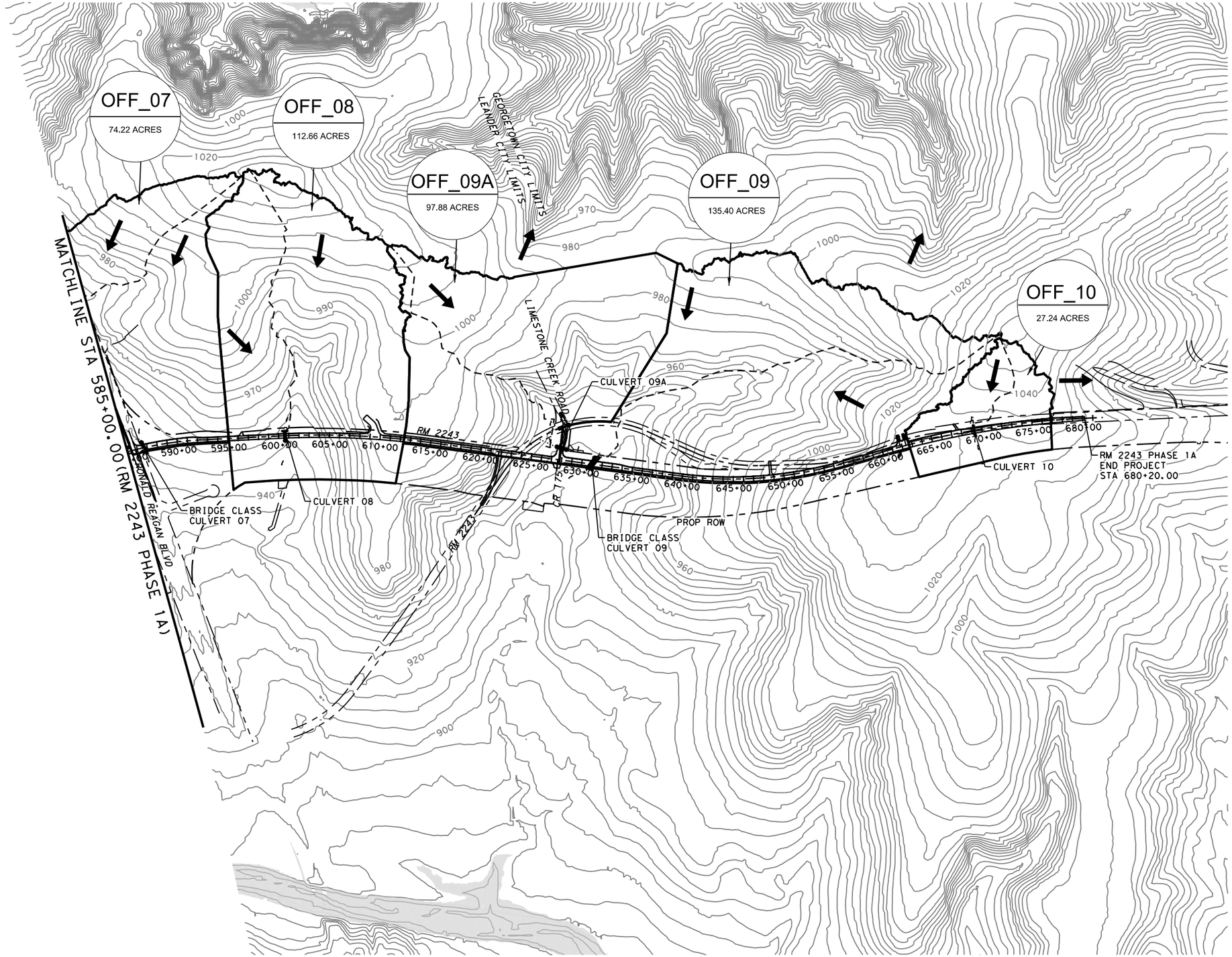

LEGEND

- # / 77.0 ac — CULVERT DRAINAGE AREA / DRAINAGE AREA (ACRES)
- FLOW DIRECTION
- 690 — 5-FOOT CONTOURS
- DRAINAGE AREA BOUNDARY
- TC PATH
- FEMA FLOODPLAIN

NOTES:
1. SEE HYDROLOGIC DATA SHEET FOR ADDITIONAL INFORMATION.

2. TERRAIN DATA OBTAINED FROM USGS 2024 LIDAR DATA.

3. EXISTING CONDITIONS DRAINAGE AREA DELINEATIONS AND PROPOSED DRAINAGE AREA DELINEATIONS ARE THE SAME EXCEPT FOR EXISTING OFF_06.

4. FOR PROPOSED CONDITIONS, EX_OFF_06 WAS SPLIT INTO OFF_06_A AND OFF_06_B.

5. CONTRIBUTING DRAINAGE AREAS ARE IN THE SOUTH BRUSHY CREEK-BRUSHY CREEK WATERHSHED.

0 500 1000

SCALE: 1"=1000'

STATE OF TEXAS
VANESSA MOLINA
141173
PROFESSIONAL ENGINEER
LICENSED

WILCO TEXAS

BGE, Inc.
101 W Louis Henna Blvd, Suite 400, Austin, TX 78728
Tel: 512-879-0400 • www.bgeinc.com
TBPE Registration No. F-1046

RM 2243

EXTERNAL DRAINAGE AREA MAP

SHEET 2 OF 2

FED.RD. DIV.NO.	PROJECT NO.		SHEET NO.
6			204
STATE	DIST.	COUNTY	
TEXAS	AUS	WILLIAMSON	
CONT.	SECT.	JOB	HIGHWAY NO.
0914	05	222	RM 2243

4/10/2025 12:57:04 PM pdf.pltcfg
G:\TXC\Projects\County\Williamson\7473-02 RM 2243 Phase 1A\03*CADD\01*Shts\06-DRNG\RM2243*P1A*DA*02.dgn

PROP CULVERT	CL	STA	CROSSING TYPE FOR THE ULTIMATE RDWY CONFIGURATION OF RM 2243	DESIGN STORM
CULVERT 02	RM 2243 PH1A	509+37.92	WESTBOUND FRONTAGE RD	25-YEAR
CULVERT 03	RM 2243 PH1A	521+58.54	WESTBOUND FRONTAGE RD	25-YEAR
CULVERT 04	RM 2243 PH1A	543+37.25	WESTBOUND FRONTAGE RD	25-YEAR
CULVERT 05	RM 2243 PH1A	565+22.78	FRONTAGE RD AND MAINLANES	50-YEAR
CULVERT 06B	RM 2243 PH1A	578+67.50	WESTBOUND FRONTAGE RD	25-YEAR
CULVERT 06A	RM 2243 PH1A	580+10.45	WESTBOUND FRONTAGE RD	25-YEAR
CULVERT 07	RM 2243 PH1A	586+68.50	WESTBOUND FRONTAGE RD	25-YEAR
CULVERT 08	RM 2243 PH1A	600+61.99	FRONTAGE RD AND MAINLANES	50-YEAR
CULVERT 09	RM 2243 PH1A	631+00.00	WESTBOUND FRONTAGE RD	25-YEAR
CULVERT 09A	LIMESTONE CREEK RD	2001+14.89	LIMESTONE CREEK RD	25-YEAR
CULVERT 10	RM 2243 PH1A	669+25.38	FRONTAGE RD AND MAINLANES	50-YEAR

Duration	Average Recurrence Interval and					
	2-yr	5-yr	10-yr	25-yr	50-yr	100-yr
5-min	0.469	0.629	0.756	0.936	1.080	1.240
15-min	0.942	1.260	1.510	1.860	2.150	2.460
1-hr	1.730	2.320	2.780	3.450	3.980	4.560
2-hr	2.080	2.880	3.540	4.490	5.280	6.180
3-hr	2.280	3.220	4.010	5.160	6.150	7.270
6-hr	2.650	3.820	4.800	6.270	7.530	8.990
12-hr	3.060	4.400	5.530	7.210	8.650	10.300
1-day	3.520	5.030	6.290	8.140	9.710	11.500

DATA FROM NOAA ATLAS 14 POINT PRECIPITATION FREQUENCY ESTIMATE.
VOLUME 11, VERSION 2
LOCATION NAME: LEANDER, TEXAS
LATITUDE: 30.581°
LONGITUDE: -97.82°
ELEVATION: 899 FT

EXISTING FLOWS

RATIONAL METHOD CALCULATIONS (EXISTING CONDITIONS)

CULVERT NAME	DRAINAGE AREA NAME	AREA (AC)	C	INTENSITY (IN/HR)						TC (MIN.)	FLOW (CFS)					
				I2	I5	I10	I25	I50	I100		Q2	Q5	Q10	Q25	Q50	Q100
CULVERT 02	OFF_02	85.71	0.61	2.98	3.98	4.76	5.85	6.72	7.64	25	155	206	247	303	348	396
CULVERT 03	OFF_03	80.61	0.60	2.48	3.32	3.99	4.92	5.66	6.46	35	120	161	193	238	275	313
CULVERT 05	OFF_05	61.32	0.60	4.35	5.74	6.82	8.29	9.45	10.64	12	160	212	251	306	348	392
CULVERT 06	EX_OFF_06	164.21	0.61	2.15	2.89	3.48	4.31	4.97	5.69	44	216	291	350	433	500	572
CULVERT 07	OFF_07	74.22	0.64	2.77	3.71	4.44	5.46	6.28	7.15	29	133	177	212	261	300	342
CULVERT 08	OFF_08	112.66	0.65	2.84	3.80	4.55	5.60	6.43	7.32	28	208	277	332	408	469	534
CULVERT 10	OFF_10	27.24	0.55	3.22	4.28	5.12	6.28	7.20	8.17	22	48	64	76	94	108	122

NRCS UNIT HYDROGRAPH METHOD (EXISTING CONDITIONS)

	CULVERT NAME	DRAINAGE AREA NAME	AREA (AC)	AREA (SQ. MI.)	CN	% IC	TC (MIN.)	LAG (MIN.)	FLOW (CFS) Q2 (CFS)	Q5 (CFS)	Q10 (CFS)	Q25 (CFS)	Q50 (CFS)	Q100 (CFS)
	Culvert 04	OFF_04	325.69	0.509	84	63%	63	37.70	487	691	853	1087	1276	1480
	Culvert 09	OFF_09	135.40	0.212	77	77%	39	23.37	449	635	784	998	1171	1359
*	Culvert 09A	OFF_09A	97.88	0.153	77	60%	36	21.80	181	261	325	417	492	574

*DRAINAGE AREA OFF_09A IS CONVEYED THROUGH CULVERT 09A AND THE EXISTING CULVERT ON OLD RM 2243

PROPOSED FLOWS

RATIONAL METHOD CALCULATIONS (ULTIMATE CONDITIONS)

CULVERT NAME	DRAINAGE AREA NAME	AREA (AC)	C	INTENSITY (IN/HR)						TC (MIN.)	FLOW (CFS)					
				I2	I5	I10	I25	I50	I100		Q2	Q5	Q10	Q25	Q50	Q100
CULVERT 02	OFF_02	85.71	0.62	2.98	3.98	4.76	5.85	6.72	7.64	25	159	212	254	312	358	407
CULVERT 03	OFF_03	80.61	0.63	2.48	3.32	3.99	4.92	5.66	6.46	35	125	168	202	249	287	327
CULVERT 05	OFF_05	61.32	0.62	4.35	5.74	6.82	8.29	9.45	10.64	12	165	217	258	314	358	403
CULVERT 06A	OFF_06A	151.53	0.62	2.15	2.89	3.48	4.31	4.97	5.69	44	203	273	329	406	469	537
CULVERT 06B	**OFF_06B	12.68	-	-	-	-	-	-	-	-	-	-	-	-	-	-
CULVERT 07	OFF_07	74.22	0.66	2.77	3.71	4.44	5.46	6.28	7.15	29	135	181	217	266	306	349
CULVERT 08	OFF_08	112.66	0.67	2.84	3.80	4.55	5.60	6.43	7.32	28	214	286	342	421	484	551
CULVERT 10	OFF_10	27.24	0.61	3.22	4.28	5.12	6.28	7.20	8.17	22	54	72	86	105	120	137

**SEE GEOPAK DRAINAGE CALCULATION SHEETS FOR HYDROLOGY INFORMATION RELATED TO PROPOSED CULVERT 6B

NRCS UNIT HYDROGRAPH METHOD (ULTIMATE CONDITIONS)

	CULVERT NAME	DRAINAGE AREA NAME	AREA (AC)	AREA (SQ. MI.)	CN	% IC	TC (MIN.)	LAG (MIN.)	FLOW (CFS) Q2 (CFS)	Q5 (CFS)	Q10 (CFS)	Q25 (CFS)	Q50 (CFS)	Q100 (CFS)
	Culvert 04	OFF_04	325.69	0.509	84	64%	63	37.70	489	693	841	1069	1254	1453
	Culvert 09	OFF_09	135.40	0.212	77	77%	39	23.37	448	634	783	996	1169	1357
*	Culvert 09A	OFF_09A	97.88	0.153	77	61%	36	21.80	181	261	325	417	492	573

*DRAINAGE AREA OFF_09A IS CONVEYED THROUGH CULVERT 09A AND THE EXISTING CULVERT ON OLD RM 2243

NOTES:

1. RATIONAL METHOD WAS USED FOR ALL DRAINAGE AREAS UNDER 200 ACRES, UNLESS SPECIFIED OTHERWISE. NRCS METHOD WAS USED FOR DRAINAGE AREAS OVER 200 ACRES.

2. HEC-HMS V4.8. WAS USED FOR THE PEAK FLOW COMPUTATIONS USING THE NRCS METHOD.

3. THE PROPOSED CULVERTS WERE SIZED BASED ON THE CROSSING TYPE FOR THE ULTIMATE ROADWAY CONFIGURATION OF RM 2243.

4. THE PROPOSED CULVERT 09 WAS SIZED USING THE COMBINED FLOWS FROM DA OFF_09 PLUS AND DA OFF_09A.

5. THE HARMONY SCHOOL DETENTION POND PROPOSED BY OTHERS WAS INCORPORATED INTO THE HMS AS A RESERVOIR. THEIR POND GRADING WAS INCORPORATED INTO THE HEC-RAS MODEL.

6. STOCK PONDS TO REMAIN WERE NOT INCORPORATED INTO HMS. SEE POND GRADING SHEETS FOR ADDITIONAL DETAILS. TERRAINS REFLECTING POND GRADING ARE INCORPORATED INTO THE HEC-RAS MODEL.

STATE OF TEXAS
VANESSA MOLINA
141173
PROFESSIONAL LICENSED ENGINEER

WILCO
TEXAS

BGE, Inc.
101 W Louis Henna Blvd, Suite 400, Austin, TX 78728
Tel: 512-879-0400 • www.bgeinc.com
TBPE Registration No. F-1046

RM 2243

CROSS DRAINAGE HYDROLOGIC DATA

SHEET 1 OF 1

FED.RD. DIV.NO.	PROJECT NO.		SHEET NO.
6			205
STATE	DIST.	COUNTY	
TEXAS	AUS	WILLIAMSON	
CONT.	SECT.	JOB	HIGHWAY NO.
0914	05	222	RM 2243

4/10/2025 12:57:06 PM pdf.pltcfg
G:\TXC\Projects\County\Williamson\7473-02 RM 2243 Phase 1A\03*CADD\01*Shts\06-DRNG\RM2243*P1A*CROSS*DRN*HYDRO*DATA*01.dgn

HEC-RAS Version 6.0

RIVER STA.	PROFILE	CONDITION	Q TOTAL	MIN CH EL	W.S ELEV	DELTA W.S ELEV	CRIT W.S.	E.G ELEV	E.G. SLOPE	VEL CHNL	DELTA VEL CHNL	FLOW AREA	TOP WIDTH	FROUDE # CHL
			(CFS)	(FT)	(FT)	(FT)	(FT)	(FT)	(FT/FT)	(FT/S)	(FT/S)	(SQ FT)	(FT)	
1952	25yr	PROP	312	955.12	956.98	0.00	0.00	957.17	0.005494	4.50	0.10	129.15	141.75	0.61
1952	25yr	EXIST	303	955.12	956.98		0.00	957.16	0.005257	4.40		128.46	141.64	0.59
1952	100yr	PROP	407	955.12	957.13	0.02	0.00	957.36	0.006208	5.06	0.05	150.81	146.51	0.65
1952	100yr	EXIST	396	955.12	957.11		0.00	957.34	0.006176	5.01		147.92	145.53	0.65
1774	25yr	PROP	312	953.51	955.43	0.06	955.43	955.89	0.009881	5.66	-0.13	76.62	135.79	0.80
1774	25yr	EXIST	303	953.51	955.37		955.37	955.85	0.010884	5.79		69.27	118.33	0.83
1774	100yr	PROP	407	953.51	955.67	0.02	955.67	956.10	0.008358	5.73	0.03	113.57	160.06	0.75
1774	100yr	EXIST	396	953.51	955.65		955.65	956.08	0.008379	5.70		110.33	158.86	0.75
1562	25yr	PROP	312	951.41	952.16	0.10	0.00	952.23	0.004918	2.19	-0.37	154.75	294.78	0.49
1562	25yr	EXIST	303	951.41	952.06		951.93	952.16	0.008396	2.56		126.17	280.18	0.62
1562	100yr	PROP	407	951.41	952.05	-0.19	952.02	952.24	0.016738	3.54	1.10	121.97	279.25	0.87
1562	100yr	EXIST	396	951.41	952.24		0.00	952.33	0.005152	2.44		179.27	302.05	0.51
1374	25yr	PROP	312	949.75	950.68	-0.14	950.59	950.83	0.01267	3.22	0.76	107.68	229.01	0.76
1374	25yr	EXIST	303	949.75	950.82		0.00	950.91	0.00543	2.46		142.92	260.30	0.52
1374	100yr	PROP	407	949.75	951.13	0.35	0.00	951.19	0.00265	2.18	-1.25	227.29	297.86	0.38
1374	100yr	EXIST	396	949.75	950.78		950.67	950.95	0.011476	3.43		132.34	256.03	0.75
1303	25yr	PROP	312	946.63	949.87	0.46	949.37	950.18	0.004984	4.80	-2.10	116.33	260.76	0.58
1303	25yr	EXIST	303	946.63	949.41		949.35	950.15	0.014305	6.90		44.56	40.30	0.95
1303	100yr	PROP	407	946.63	951.09	1.06	0.00	951.11	0.000398	1.84	-3.19	553.81	460.09	0.18
1303	100yr	EXIST	396	946.63	950.03		950.03	950.33	0.004961	5.03		159.42	280.02	0.59
1206	25yr	PROP	312	945.72	949.99	0.24	946.89	950.00	0.00008	0.86	0.08	367.21	509.53	0.08
1206	25yr	EXIST	303	945.88	949.75		0.00	949.75	0.000064	0.78		575.80	435.40	0.07
1206	100yr	PROP	407	945.72	951.09	1.24	947.07	951.09	0.000022	0.52	-0.46	1403.49	746.58	0.04
1206	100yr	EXIST	396	945.88	949.85		0.00	949.86	0.000096	0.98		619.87	447.16	0.09
1151		PROP	PR CULVERT 02											
1027	25yr	PROP	-	-	-	-	-	-	-	-	-	-	-	-
1027	25yr	EXIST	303	947.78	949.72		0.00	949.73	0.000397	0.95		428.97	378.77	0.15
1027	100yr	PROP	-	-	-	-	-	-	-	-	-	-	-	-
1027	100yr	EXIST	396	947.78	949.81		0.00	949.82	0.000538	1.16		463.28	400.97	0.18
937	25yr	PROP	312	947.30	948.74	-0.95	948.74	949.31	0.017259	6.30	5.66	53.57	395.26	1.01
937	25yr	EXIST	303	947.31	949.69		949.00	949.70	0.000087	0.64		975.35	773.33	0.08
937	100yr	PROP	407	947.30	948.96	-0.81	948.96	949.65	0.01658	6.91	6.12	63.76	479.20	1.02
937	100yr	EXIST	396	947.31	949.77		949.27	949.78	0.000124	0.79		1036.60	775.83	0.09
919		EXIST	EX CULVERT 02											
872	25yr	PROP	312	944.19	947.13	0.02	947.13	947.69	0.009106	7.30	0.13	75.62	248.65	0.80
872	25yr	EXIST	303	944.19	947.11		947.11	947.65	0.008821	7.17		74.82	248.49	0.79
872	100yr	PROP	407	944.19	947.36	0.03	947.36	948.00	0.009837	8.04	0.06	89.95	263.59	0.84
872	100yr	EXIST	396	944.19	947.33		947.33	947.97	0.009792	7.98		88.28	260.86	0.84
733	25yr	PROP	312	941.34	943.64	0.02	943.64	944.01	0.009678	5.49	-0.01	93.09	146.04	0.79
733	25yr	EXIST	303	941.34	943.62		943.62	943.99	0.009939	5.50		89.31	143.85	0.79
733	100yr	PROP	407	941.34	943.82	0.02	943.82	944.21	0.009686	5.91	0.03	121.23	177.93	0.80
733	100yr	EXIST	396	941.34	943.80		943.80	944.19	0.00972	5.88		117.88	174.72	0.80
654	25yr	PROP	312	940.40	942.60	0.01	942.60	942.87	0.009152	5.80	0.07	126.68	196.87	0.78
654	25yr	EXIST	303	940.40	942.59		942.59	942.86	0.008977	5.73		124.69	196.45	0.77
654	100yr	PROP	407	940.40	942.72	0.03	942.72	943.02	0.009854	6.31	-0.11	151.46	201.55	0.82
654	100yr	EXIST	396	940.40	942.69		942.69	943.00	0.01043	6.42		145.09	200.32	0.84
503	25yr	PROP	312	939.57	941.10	0.03	0.00	941.22	0.007732	4.07	0.01	124.83	147.75	0.67
503	25yr	EXIST	303	939.57	941.07		0.00	941.19	0.008012	4.06		120.26	144.52	0.68
503	100yr	PROP	407	939.57	941.34	0.02	0.00	941.47	0.006955	4.38	0.06	165.18	188.09	0.66
503	100yr	EXIST	396	939.57	941.32		0.00	941.45	0.006882	4.32		162.01	185.92	0.65

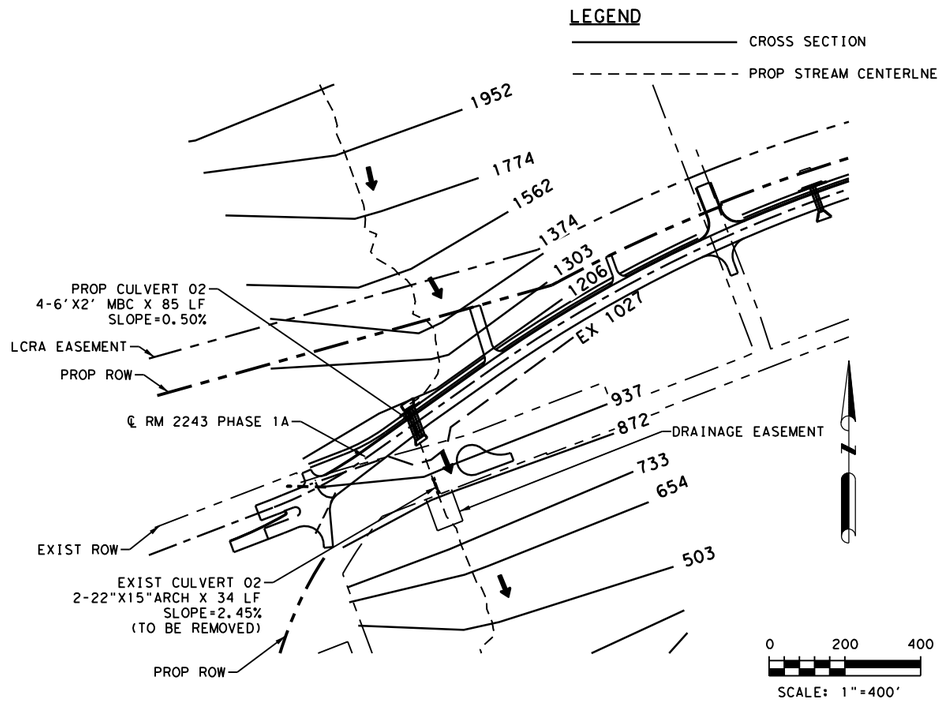

NBI NO. 14-246-0-L094-39-001

NOTES:

1. HEC-RAS V6.0 WAS USED FOR THE HYDRAULIC ANALYSIS.
   BOUNDARY CONDITION USED: NORMAL DEPTH S=0.0116 FT/FT
   MODEL TYPE: 1D, STEADY FLOW
   UNITS UTILIZED: US SURVEY FEET
   DATUM USED: GCS NORTH AMERICAN 1983
2. THERE IS A RISE, BUT THERE ARE NO ADVERSE IMPACTS.
3. 2024 TERRAIN DATA IS SOURCED FROM TNRIS.
4. FEMA ZONE: ZONE X
   COUNTY NAME: WILLIAMSON
   FIRM PANEL NAME: 48491C0455F
   EFFECTIVE FIRM PANEL DATE: 12/20/2019
5. UTILIZED SURVEY DATA: JUNE 25TH, 2024

STATE OF TEXAS
VANESSA MOLINA
141173
PROFESSIONAL LICENSED ENGINEER

WILCO TEXAS

BGE, Inc.
101 W Louis Henna Blvd, Suite 400, Austin, TX 78728
Tel: 512-879-0400 • www.bgeinc.com
TBPE Registration No. F-1046

RM 2243

HYDRAULIC DATA
CULVERT 02
STA 509+37.92

SHEET 1 OF 16

FED.RD. DIV.NO.	PROJECT NO.	SHEET NO.
6		206

STATE	DIST.	COUNTY
TEXAS	AUS	WILLIAMSON

CONT.	SECT.	JOB	HIGHWAY NO.
0914	05	222	RM 2243

4/10/2025 8:38:03 AM pdf*color*new.pltcfg
G:\TXC\Projects\County*Williamson\7473-02 RM 2243 Phase 1A\03*CADD\01*Shts\06-DRNG\RM2243*P1A*C2*HYDRA*DATA*01.dgn

UPSTREAM

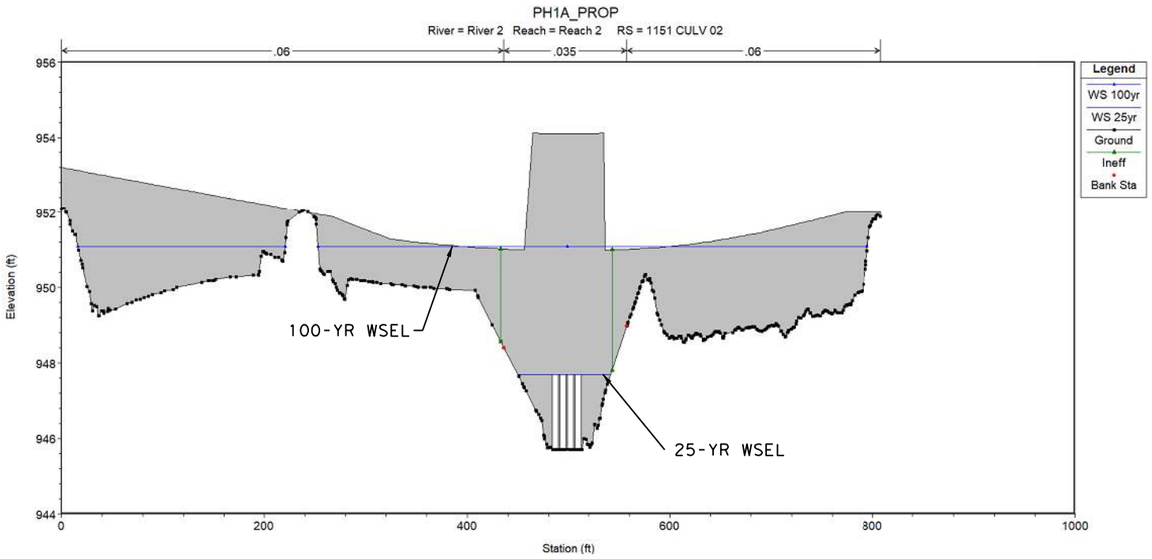

DOWNSTREAM

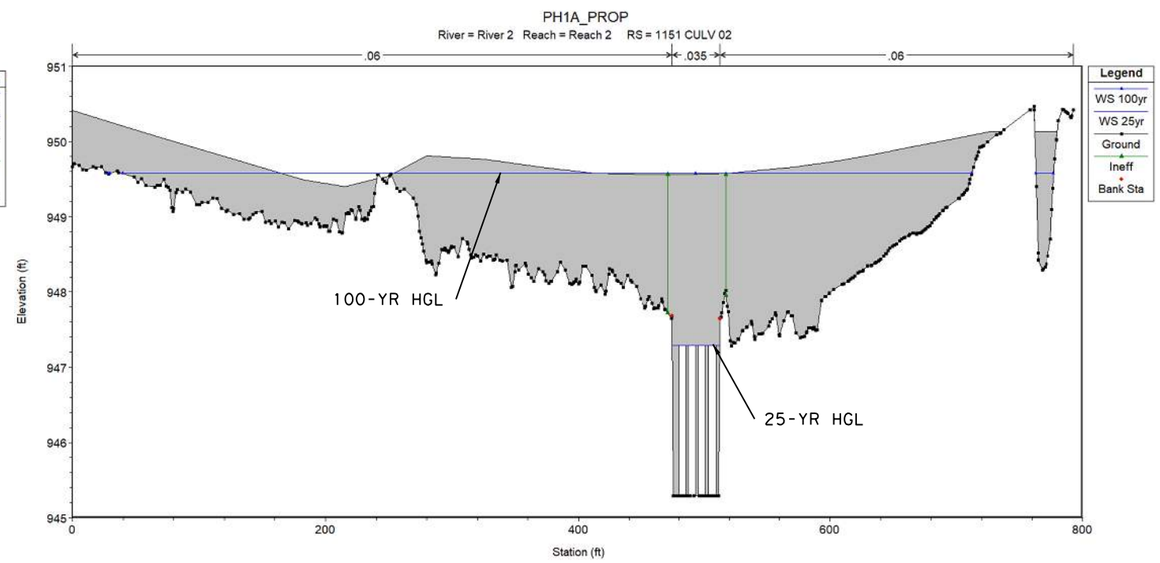

NOTES:

1. HEC-RAS V6.0 WAS USED FOR THE HYDRAULIC ANALYSIS.
   BOUNDARY CONDITION USED: NORMAL DEPTH S=0.0116 FT/FT
   MODEL TYPE: 1D, STEADY FLOW
   UNITS UTILIZED: US SURVEY FEET
   DATUM USED: GCS NORTH AMERICAN 1983
2. THERE IS A RISE, BUT THERE ARE NO ADVERSE IMPACTS.
3. 2024 TERRAIN DATA IS SOURCED FROM TNRIS.
4. FEMA ZONE:ZONE X
   COUNTY NAME: WILLIAMSON
   FIRM PANEL NAME:48491C0455F
   EFFECTIVE FIRM PANEL DATE:12/20/2019
5. UTILIZED SURVEY DATA:JUNE 25TH, 2024

NBI NO. 14-246-0-L094-39-001

Plan: PR_PH1A River 2 Reach 2 RS: 1151 Culv Group: Culvert 02 Profile: 25yr

Q Culv Group (cfs)	312	Culv Full Len (ft)	85
# Barrels	4	Culv Vel US (ft/s)	6.5
Q Barrel (cfs)	78	Culv Vel DS (ft/s)	6.5
E.G. US. (ft)	950	Culv Inv El Up (ft)	945.7
W.S. US. (ft)	949.99	Culv Inv El Dn (ft)	945.29
E.G. DS (ft)	949.31	Culv Frctn Ls (ft)	0.34
W.S. DS (ft)	948.74	Culv Exit Loss (ft)	0.08
Delta EG (ft)	0.69	Culv Entr Loss (ft)	0.26
Delta WS (ft)	1.25	Q Weir (cfs)	
E.G. IC (ft)	948.88	Weir Sta Lft (ft)	
E.G. OC (ft)	950	Weir Sta Rgt (ft)	
Culvert Control	Outlet	Weir Submerg	
Culv WS Inlet (ft)	947.7	Weir Max Depth (ft)	
Culv WS Outlet (ft)	947.29	Weir Avg Depth (ft)	
Culv Nml Depth (ft)		Weir Flow Area (sq ft)	
Culv Crt Depth (ft)	1.74	Min El Weir Flow (ft)	951

Plan: PR_PH1A River 2 Reach 2 RS: 1151 Culv Group: Culvert 02 Profile: 100yr

Q Culv Group (cfs)	405.6	Culv Full Len (ft)	85
# Barrels	4	Culv Vel US (ft/s)	8.45
Q Barrel (cfs)	101.4	Culv Vel DS (ft/s)	8.45
E.G. US. (ft)	951.09	Culv Inv El Up (ft)	945.7
W.S. US. (ft)	951.09	Culv Inv El Dn (ft)	945.29
E.G. DS (ft)	949.65	Culv Frctn Ls (ft)	0.58
W.S. DS (ft)	948.96	Culv Exit Loss (ft)	0.42
Delta EG (ft)	1.44	Culv Entr Loss (ft)	0.44
Delta WS (ft)	2.13	Q Weir (cfs)	1.4
E.G. IC (ft)	949.91	Weir Sta Lft (ft)	414.65
E.G. OC (ft)	951.09	Weir Sta Rgt (ft)	583.75
Culvert Control	Outlet	Weir Submerg	0
Culv WS Inlet (ft)	947.7	Weir Max Depth (ft)	0.06
Culv WS Outlet (ft)	947.29	Weir Avg Depth (ft)	0.03
Culv Nml Depth (ft)	1.82	Weir Flow Area (sq ft)	2.77
Culv Crt Depth (ft)	2	Min El Weir Flow (ft)	951

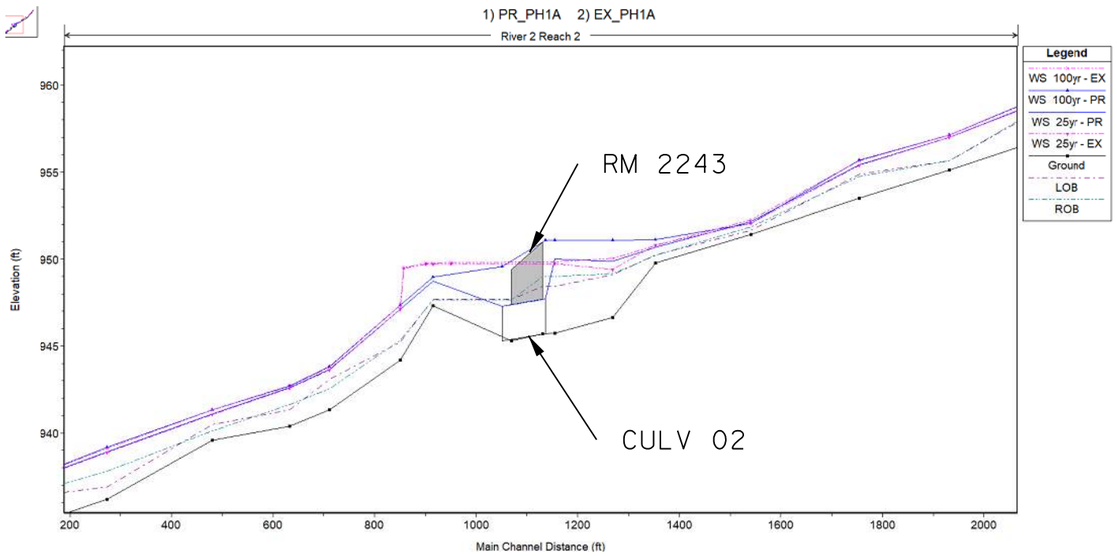

STATE OF TEXAS
VANESSA MOLINA
141173
PROFESSIONAL ENGINEER
LICENSED

WILCO TEXAS

BGE, Inc.
101 W Louis Henna Blvd, Suite 400, Austin, TX 78728
Tel: 512-879-0400 ● www.bgeinc.com
TBPE Registration No. F-1046

RM 2243

HYDRAULIC DATA
CULVERT 02
STA 509+37.92

FED.RD. DIV.NO.	PROJECT NO.		SHEET NO.
6			207
STATE	DIST.	COUNTY	
TEXAS	AUS	WILLIAMSON	
CONT.	SECT.	JOB	HIGHWAY NO.
0914	05	222	RM 2243

4/10/2025 8:38:08 AM pdf*color*new.pltcfg
G:\TXC\Projects\County*Williamson\7473-02 RM 2243 Phase 1A\03*CADD\01*Shts\06-DRNG\RM2243*PH1A*C2*HYDRA*DATA*02.dgn

NOTES:

1. HY-8 V7.8 WAS USED FOR THE HYDRAULIC ANALYSIS.
2. EXISTING AND PROPOSED CULVERTS ARE AT TWO DIFFERENT LOCATIONS.

EXISTING CULVERT

SITE DATA - CULVERT 03

SITE DATA OPTION: CULVERT INVERT DATA
INLET STATION: 0.00 FT
INLET ELEVATION: 946.75 FT
OUTLET STATION: 44.73 FT
OUTLET ELEVATION: 946.30 FT
NUMBER OF BARRELS: 2
COMPUTED CULVERT SLOPE: 0.01006 FT/FT
CULVERT LENGTH: 44.73 LF

CULVERT DATA SUMMARY - CULVERT 03

BARREL SHAPE: CIRCULAR
BARREL DIAMETER: 1.00 FT
BARREL MATERIAL: CONCRETE
EMBEDMENT: 0.00 IN
BARREL MANNING'S N: 0.0120
CULVERT TYPE: STRAIGHT
INLET CONFIGURATION: SQUARE EDGE WITH HEADWALL (KE=0.5)
INLET DEPRESSION: NONE

ROADWAY DATA FOR CROSSING: CULVERT 03

ROADWAY PROFILE SHAPE:

COORD NO.	STATION (FT)	ELEVATION (FT)
0	0	950.21
1	11.19	950.09
2	22.51	949.96
3	32.53	949.87
4	40.57	949.83
5	50.41	949.77
6	60.3	949.71
7	72.08	949.7

ROADWAY SURFACE: PAVED

ROADWAY TOP WIDTH: 20.20 LF

TABLE 1 - CULVERT SUMMARY TABLE: CULVERT 03

DISCHARGE NAMES	TOTAL DISCHARGE (CFS)	CULVERT DISCHARGE (CFS)	HEADWATER ELEVATION (FT)	INLET CONTROL DEPTH (FT)	OUTLET CONTROL DEPTH (FT)	FLOW TYPE	NORMAL DEPTH (FT)	CRITICAL DEPTH (FT)	OUTLET DEPTH (FT)	TAILWATER DEPTH (FT)	OUTLET VELOCITY (FT/S)	TAILWATER VELOCITY (FT/S)	TAILWATER ELEVATION (FT)
2-YR	120.00	13.72	950.5	3.750	3.734	6-FFC	1.000	1.000	1.000	0.510	8.740	2.600	946.810
5-YR	161.00	14.04	950.65	3.900	3.882	6-FFC	1.000	1.000	1.000	0.580	8.940	2.840	946.88
10-YR	193.00	14.24	950.76	4.000	4.005	4-FFF	1.000	1.000	1.000	0.650	9.070	2.820	946.95
25-YR	238.00	14.4	950.9	4.080	4.146	4-FFF	1.000	1.000	1.000	0.720	9.170	2.910	947.02
50-YR	275.00	14.55	951.01	4.150	4.255	4-FFF	1.000	1.000	1.000	0.750	9.260	3.070	947.05
100-YR	313.00	14.7	951.11	4.220	4.362	4-FFF	1.000	1.000	1.000	0.790	9.360	3.210	947.09

TAILWATER CHANNEL DATA - CULVERT 03

TAILWATER CHANNEL OPTION: IRREGULAR CHANNEL

CHANNEL SLOPE: IRREGULAR CHANNEL

COORD NO.	STATION (FT)	ELEVATION (FT)	MANNING'S N
1	0	950.61	0.035
2	11.51	949.14	0.035
3	25.23	947.62	0.035
4	55.85	947.12	0.035
5	110.85	946.67	0.035
6	150.64	946.71	0.035
7	211.57	947.35	0.035
8	250.84	947.29	0.035
9	267.52	947.99	0.035
10	288.11	949.71	0.03

TABLE 2 - DOWNSTREAM CHANNEL RATING CURVE (CROSSING: CULVERT 03)

FLOW (CFS)	WATER SURFACE ELEV (FT)	DEPTH (FT)	VELOCITY (FT/S)	SHEAR (PSF)	FROUDE NUMBER
116.71	947.18	0.51	2.60	0.54	0.81
156.57	947.25	0.58	2.84	0.62	0.83
188.11	947.33	0.65	2.82	0.69	0.82
232.12	947.39	0.72	2.91	0.76	0.83
267.37	947.43	0.75	3.07	0.80	0.84
305.34	947.46	0.79	3.21	0.84	0.85

PROPOSED CULVERT

SITE DATA - CULVERT 03

SITE DATA OPTION: CULVERT INVERT DATA
INLET STATION: 0.00 FT
INLET ELEVATION: 950.62 FT
OUTLET STATION: 75.00 FT
OUTLET ELEVATION: 949.44 FT
NUMBER OF BARRELS: 2
COMPUTED CULVERT SLOPE: 0.015733 FT/FT
CULVERT LENGTH: 75 LF

CULVERT DATA SUMMARY - CULVERT 03

BARREL SHAPE: CONCRETE BOX
BARREL SPAN: 6.00 FT
BARREL RISE: 3.00 FT
BARREL MATERIAL: CONCRETE
EMBEDMENT: 0.00 IN
BARREL MANNING'S N: 0.0120
CULVERT TYPE: STRAIGHT
INLET CONFIGURATION: SQUARE EDGE (90°) HEADWALL (KE=0.5)
INLET DEPRESSION: NONE

ROADWAY DATA FOR CROSSING: CULVERT 03

ROADWAY PROFILE SHAPE: IRREGULAR ROADWAY SHAPE (COORDINATES)

COORD NO.	STATION (FT)	ELEVATION (FT)
0	0	955.27
1	38.97	955.46
2	86.39	956.3
3	120.49	956.47
4	154.77	956.64
5	185.83	956.86
6	225.84	956.99
7	265.85	957.2

ROADWAY SURFACE: PAVED

ROADWAY TOP WIDTH: 44.00 FT

TABLE 1 - CULVERT SUMMARY TABLE: CULVERT 03

DISCHARGE NAMES	TOTAL DISCHARGE (CFS)	CULVERT DISCHARGE (CFS)	HEADWATER ELEVATION (FT)	INLET CONTROL DEPTH (FT)	OUTLET CONTROL DEPTH (FT)	FLOW TYPE	NORMAL DEPTH (FT)	CRITICAL DEPTH (FT)	OUTLET DEPTH (FT)	TAILWATER DEPTH (FT)	OUTLET VELOCITY (FT/S)	TAILWATER VELOCITY (FT/S)	TAILWATER ELEVATION (FT)
2-YR	125.00	125.00 CFS	953.13	2.510	0.659	1-S2N	0.870	1.500	0.970	1.160	10.790	1.920	950.60
5-YR	168.00	168.00 CFS	953.7	3.080	1.259	5-S2N	1.060	1.830	1.200	1.240	11.630	2.030	950.68
10-YR	202.00	202.00 CFS	954.16	3.540	1.771	5-S2N	1.200	2.060	1.380	1.290	12.170	2.150	950.73
25-YR	249.00	249.00 CFS	954.86	4.240	2.854	5-S2N	1.380	2.370	1.620	1.350	12.810	2.280	950.79
50-YR	287.00	284.23 CFS	955.45	4.830	3.371	5-S2N	1.510	2.590	1.790	1.400	13.220	2.380	950.84
100-YR	327.00	299.61 CFS	955.72	5.100	3.613	5-S2N	1.570	2.690	1.870	1.440	13.370	2.500	950.88

* DESIGN FLOW IS 25-YEAR EVENT.

** CHECK FLOW IS 100-YEAR EVENT.

TAILWATER CHANNEL DATA - CULVERT 03

TAILWATER CHANNEL OPTION: IRREGULAR CHANNEL

CHANNEL SLOPE: IRREGULAR CHANNEL

COORD NO.	STATION (FT)	ELEVATION (FT)	MANNING'S N
1	0	951.24	0.035
2	28.28	950.18	0.035
3	62.72	950.14	0.035
4	101.85	949.98	0.035
5	142.07	950	0.035
6	179.54	949	0.035
7	225.88	950.1	0.035
8	256.2	950.24	0.035
9	288.27	950.4	0.035
10	335.49	951.84	0.03

TABLE 2 - DOWNSTREAM CHANNEL RATING CURVE (CROSSING: CULVERT 03)

FLOW (CFS)	WATER SURFACE ELEV (FT)	VELOCITY (FT/S)	DEPTH (FT)	SHEAR (PSF)	FROUDE NUMBER
125.00	950.16	1.16	1.92	0.65	0.59
168.00	950.24	1.24	2.03	0.70	0.60
202.00	950.29	1.29	2.15	0.73	0.61
249.00	950.35	1.35	2.28	0.76	0.62
287.00	950.40	1.40	2.38	0.78	0.62
327.00	950.44	1.44	2.50	0.81	0.63

STATE OF TEXAS
VANESSA MOLINA
141173
PROFESSIONAL LICENSED ENGINEER

WILCO TEXAS

BGE, Inc.
101 W Louis Henna Blvd, Suite 400, Austin, TX 78728
Tel: 512-879-0400 • www.bgeinc.com
TBPE Registration No. F-1046

RM 2243

HYDRAULIC DATA
CULVERT 03
STA 521+58.54

SHEET 3 OF 16

FED.RD. DIV.NO.	PROJECT NO.	SHEET NO.
6		208

STATE	DIST.	COUNTY
TEXAS	AUS	WILLIAMSON

CONT.	SECT.	JOB	HIGHWAY NO.
0914	05	222	RM 2243

4/10/2025 8:38:16 AM pdf*color*new.pltcfg
G:\TXC\Projects\County\Williamson\7473-02 RM 2243 Phase 1A\03*CADD\01*Shts\06-DRNG\RM2243*P1A*C3*HYDRA*DATA*01.dgn

HEC-RAS Version 6.0

RIVER STA.	PROFILE	CONDITION	Q TOTAL	MIN CH EL	W.S ELEV	DELTA W.S	CRIT W.S.	E.G ELEV	E.G. SLOPE	VEL CHNL	DELTA VEL	FLOW AREA	TOP WIDTH	FROUDE # CHL
			(CFS)	(FT)	(FT)	(FT)	(FT)	(FT)	(FT/FT)	(FT/S)	(FT/S)	(SQ FT)	(FT)	
5965	25yr	PROP	1069	943.22	947.40	0.01	947.40	947.74	0.00769	6.71	-0.22	388.88	423.28	0.74
5965	25yr	EXIST	1087	943.22	947.39		947.39	947.75	0.008213	6.93		383.65	422.34	0.76
5965	100yr	PROP	1453	943.22	947.55	-0.03	947.55	947.96	0.009898	7.68	0.06	455.62	447.07	0.84
5965	100yr	EXIST	1480	943.22	947.58		947.58	947.98	0.009735	7.62		465.31	448.24	0.83
5765	25yr	PROP	1069	941.81	944.93	-0.06	0.00	945.11	0.001708	3.49	0.04	352.50	255.12	0.37
5765	25yr	EXIST	1087	941.81	944.99		0.00	945.17	0.001617	3.45		369.32	264.60	0.36
5765	100yr	PROP	1453	941.81	945.29	-0.03	0.00	945.53	0.001936	4.03	-0.04	461.10	380.19	0.40
5765	100yr	EXIST	1480	941.81	945.32		0.00	945.56	0.001955	4.07		469.63	391.82	0.40
5508	25yr	PROP	1069	941.07	943.85	0.08	943.80	944.24	0.00973	5.78	-0.61	290.90	418.55	0.80
5508	25yr	EXIST	1087	941.07	943.77		943.77	944.25	0.012752	6.39		265.16	410.90	0.91
5508	100yr	PROP	1453	941.07	944.01	-0.02	944.01	944.52	0.011797	6.78	-0.04	340.99	425.96	0.89
5508	100yr	EXIST	1480	941.07	944.03		944.03	944.54	0.011822	6.82		345.41	426.46	0.90
5354	25yr	PROP	1069	939.51	942.15	-0.49	942.15	942.56	0.012423	6.53	2.19	290.17	312.79	0.90
5354	25yr	EXIST	1087	939.51	942.64		0.00	942.81	0.003852	4.34		449.00	335.14	0.52
5354	100yr	PROP	1453	939.51	942.90	-0.10	0.00	943.10	0.004162	4.86	0.20	534.50	343.21	0.56
5354	100yr	EXIST	1480	939.51	943.00		0.00	943.18	0.003615	4.66		569.57	349.00	0.52
5215	25yr	PROP	1069	936.77	941.43	-0.41	938.71	941.57	0.00	3.45	-1.64	390.27	488.25	0.29
5215	25yr	EXIST	1087	938.44	941.84		941.84	942.12	0.01	5.09		357.36	558.57	0.62
5215	100yr	PROP	1453	936.77	942.99	1.05	939.12	943.00	0.00	1.26	-5.17	2315.01	590.46	0.09
5215	100yr	EXIST	1480	938.44	941.94		941.85	942.38	0.01	6.43		387.45	560.65	0.76
5100		PROP	CULVERT 04											
4971	25yr	PROP	1069	932.43	937.34	-	934.79	937.57	0.001114	4.03	-	303.59	94.81	0.32
4971	25yr	EXIST	-	-	-		-	-	-	-		-	-	-
4971	100yr	PROP	1453	932.43	937.82	-	935.27	938.16	0.001492	4.97	-	334.61	184.30	0.38
4971	100yr	EXIST	-	-	-		-	-	-	-		-	-	-
4798	25yr	PROP	1069	932.47	936.57	-0.20	935.53	937.14	0.003676	6.50	3.85	276.88	244.54	0.57
4798	25yr	EXIST	1087	932.47	936.77		0.00	936.84	0.000567	2.65		783.81	423.61	0.23
4798	100yr	PROP	1453	932.47	936.81	-0.24	936.81	937.60	0.00497	7.86	4.69	340.57	282.99	0.67
4798	100yr	EXIST	1480	932.47	937.05		0.00	937.15	0.000744	3.17		907.82	441.07	0.26
4653	25yr	PROP	1069	932.47	936.75	-0.02	0	936.82	0.000559	2.62	-0.03	777.66	422.94	0.22
4653	25yr	EXIST	1087	932.47	936.77		0	936.84	0.000567	2.65		783.81	423.61	0.23
4653	100yr	PROP	1453	932.47	937.04	-0.01	0	937.14	0.00073	3.13	-0.04	901.2	440.57	0.26
4653	100yr	EXIST	1480	932.47	937.05		0	937.15	0.000744	3.17		907.82	441.07	0.26
4305	25yr	PROP	1069	933.56	936	0	936	936.28	0.011601	6.87	-0.02	412.72	645.03	0.89
4305	25yr	EXIST	1087	933.56	936		936	936.29	0.011621	6.89		418.24	649.85	0.89
4305	100yr	PROP	1453	933.56	936.14	-0.01	936.14	936.45	0.012703	7.55	0	508.61	708.15	0.94
4305	100yr	EXIST	1480	933.56	936.15		936.15	936.46	0.012628	7.55		517.28	713.35	0.98

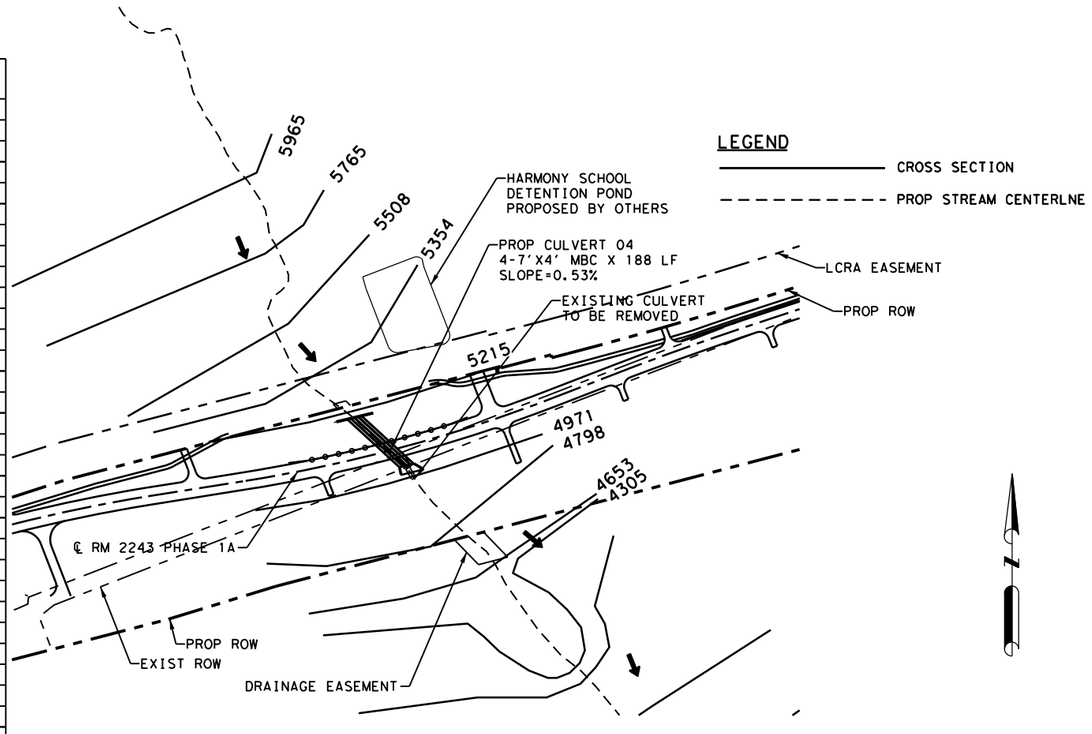

Plan: PR_PH1A River 4	Reach 4 RS: 5100	Culv Group: Culvert 04	Profile: 25yr
Q Culv Group (cfs)	1069	Culv Full Len (ft)	
# Barrels	4	Culv Vel US (ft/s)	9.54
Q Barrel (cfs)	267.25	Culv Vel DS (ft/s)	13.41
E.G. US. (ft)	941.58	Culv Inv El Up (ft)	935
W.S. US. (ft)	941.43	Culv Inv El Dn (ft)	934
E.G. DS (ft)	937.57	Culv Frctn Ls (ft)	1.37
W.S. DS (ft)	937.34	Culv Exit Loss (ft)	2.08
Delta EG (ft)	4.01	Culv Entr Loss (ft)	0.57
Delta WS (ft)	4.09	Q Weir (cfs)	
E.G. IC (ft)	941.58	Weir Sta Lft (ft)	
E.G. OC (ft)	941.06	Weir Sta Rgt (ft)	
Culvert Control	Inlet	Weir Submerg	
Culv WS Inlet (ft)	939	Weir Max Depth (ft)	
Culv WS Outlet (ft)	936.85	Weir Avg Depth (ft)	
Culv Nml Depth (ft)	3.05	Weir Flow Area (sq ft)	
Culv Crt Depth (ft)	3.56	Min El Weir Flow (ft)	942.54

Plan: PR_PH1A River 4	Reach 4 RS: 5100	Culv Group: Culvert 04	Profile: 100yr
Q Culv Group (cfs)	1429.95	Culv Full Len (ft)	188
# Barrels	4	Culv Vel US (ft/s)	12.77
Q Barrel (cfs)	357.49	Culv Vel DS (ft/s)	12.77
E.G. US. (ft)	943	Culv Inv El Up (ft)	935
W.S. US. (ft)	942.99	Culv Inv El Dn (ft)	934
E.G. DS (ft)	938.16	Culv Frctn Ls (ft)	1.45
W.S. DS (ft)	937.82	Culv Exit Loss (ft)	2.37
Delta EG (ft)	4.84	Culv Entr Loss (ft)	1.01
Delta WS (ft)	5.16	Q Weir (cfs)	23.05
E.G. IC (ft)	943.21	Weir Sta Lft (ft)	484.97
E.G. OC (ft)	943	Weir Sta Rgt (ft)	554.47
Culvert Control	Outlet	Weir Submerg	0
Culv WS Inlet (ft)	939	Weir Max Depth (ft)	0.42
Culv WS Outlet (ft)	938	Weir Avg Depth (ft)	0.24
Culv Nml Depth (ft)	3.79	Weir Flow Area (sq ft)	16.49
Culv Crt Depth (ft)	4	Min El Weir Flow (ft)	942.54

0 200 400

SCALE: 1"=400'

NBI NO. 14-246-0-L094-39-002

NOTES:

1. HEC-RAS V6.0 WAS USED FOR THE HYDRAULIC ANALYSIS.
   BOUNDARY CONDITION USED: NORMAL DEPTH S=0.0135 FT/FT
   MODEL TYPE: 1D, STEADY FLOW
   UNITS UTILIZED: US SURVEY FEET
   DATUM USED: GCS NORTH AMERICAN 1983
2. THERE IS A RISE, BUT THERE ARE NO ADVERSE IMPACTS.
3. 2024 TERRAIN DATA IS SOURCED FROM TNRIS.
4. FEMA ZONE: ZONE X
   COUNTY NAME: WILLIAMSON
   FIRM PANEL NAME: 48491C0455F
   EFFECTIVE FIRM PANEL DATE: 12/20/2019
5. UTILIZED SURVEY DATA: JUNE 25TH, 2024

VANESSA MOLINA
141173
LICENSED PROFESSIONAL ENGINEER
STATE OF TEXAS

WILCO TEXAS

BGE, Inc.
101 W Louis Henna Blvd, Suite 400, Austin, TX 78728
Tel: 512-879-0400 • www.bgeinc.com
TBPE Registration No. F-1046

RM 2243

HYDRAULIC DATA
CULVERT 04
STA 543+37.25

SHEET 4 OF 16

FED.RD. DIV.NO.	PROJECT NO.		SHEET NO.
6			209
STATE	DIST.	COUNTY	
TEXAS	AUS	WILLIAMSON	
CONT.	SECT.	JOB	HIGHWAY NO.
0914	05	222	RM 2243

4/10/2025 8:38:18 AM pdf*color*new.pltcfg
G:\TXC\Projects\County*Williamson\7473-02 RM 2243 Phase 1A\03*CADD\01*Shts\06-DRNG\RM2243*P1A*C4*HYDRA*DATA*01.dgn

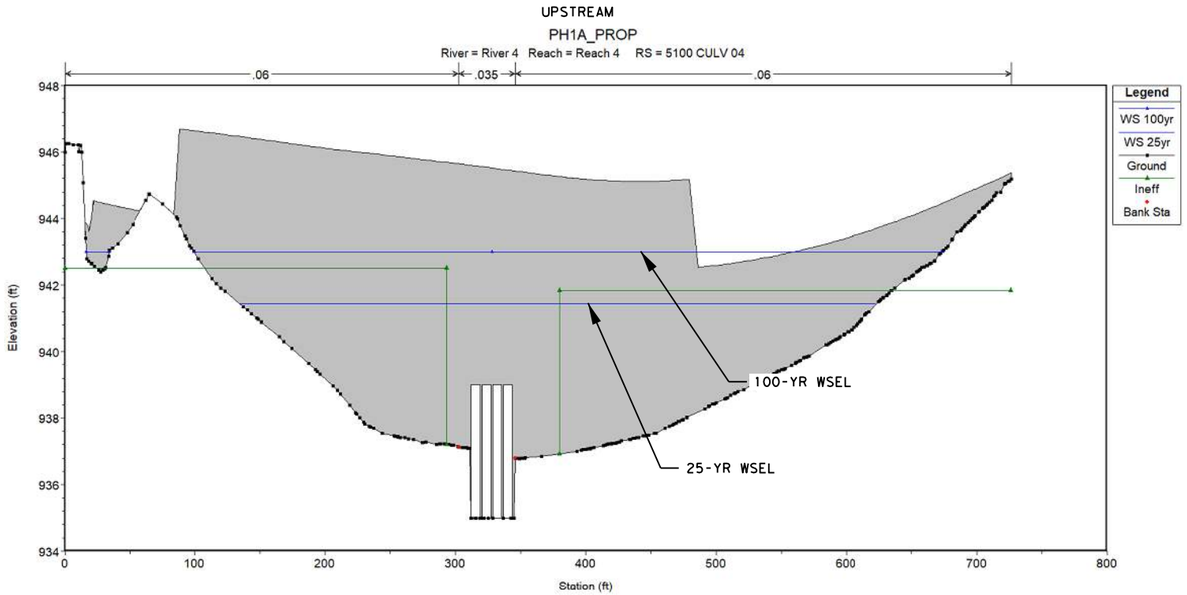

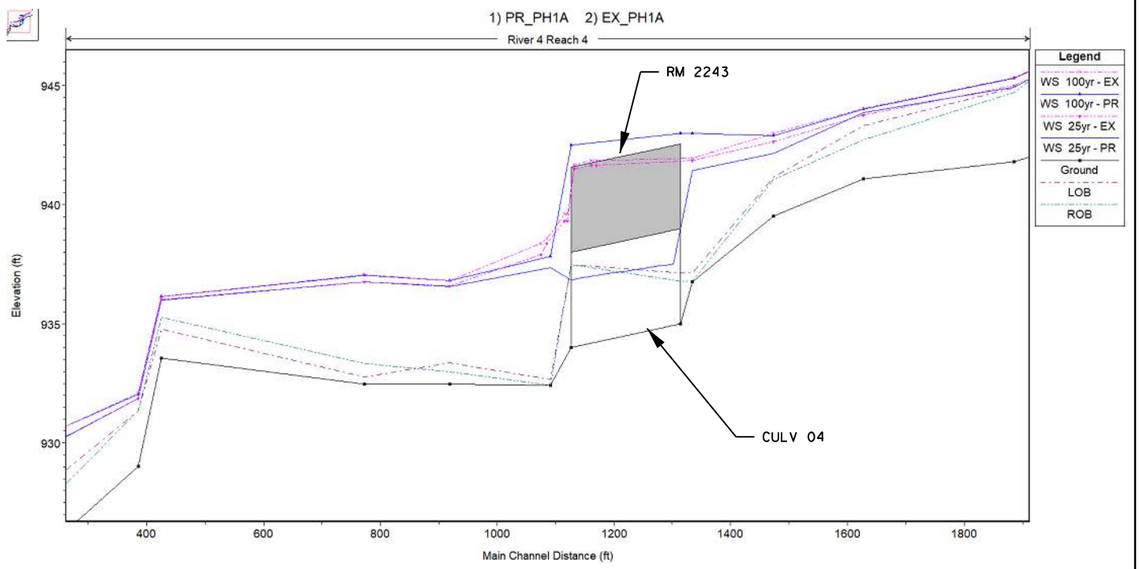

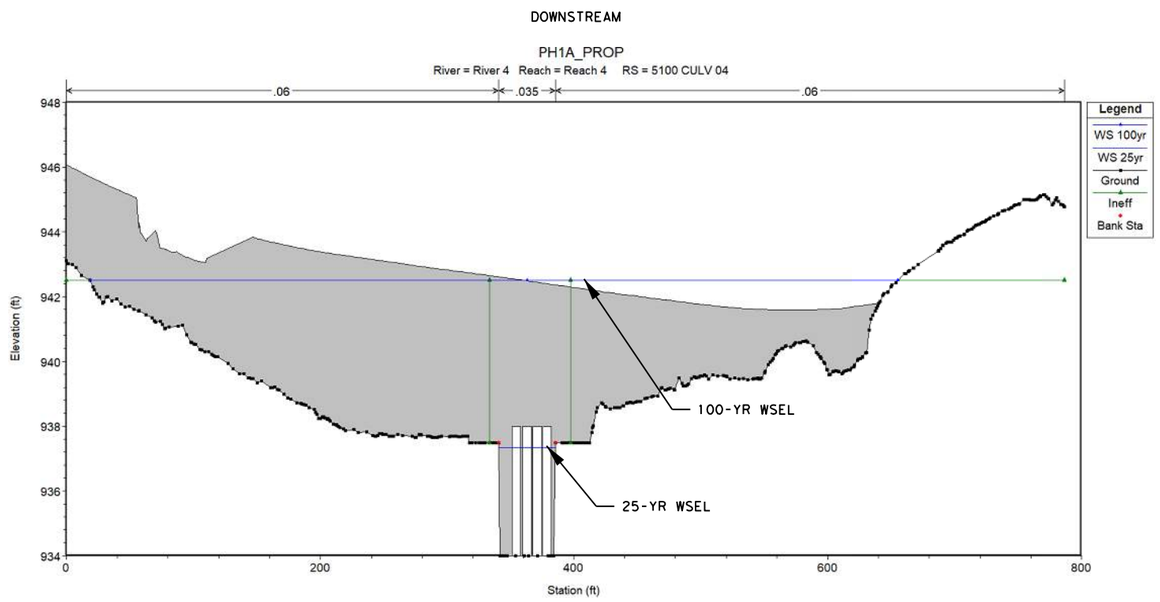

NOTES:

1. HEC-RAS V6.0 WAS USED FOR THE HYDRAULIC ANALYSIS.
   BOUNDARY CONDITION USED: NORMAL DEPTH S=0.0135 FT/FT
   MODEL TYPE: 1D, STEADY FLOW
   UNITS UTILIZED: US SURVEY FEET
   DATUM USED: GCS NORTH AMERICAN 1983
2. THERE IS A RISE, BUT THERE ARE NO ADVERSE IMPACTS.
3. 2024 TERRAIN DATA IS SOURCED FROM TNRIS.
4. FEMA ZONE: ZONE X
   COUNTY NAME: WILLIAMSON
   FIRM PANEL NAME: 48491C0455F
   EFFECTIVE FIRM PANEL DATE: 12/20/2019
5. UTILIZED SURVEY DATA: JUNE 25TH, 2024

NBI NO. 14-246-0-L094-39-002

STATE OF TEXAS
VANESSA MOLINA
141173
PROFESSIONAL LICENSED ENGINEER

WILCO TEXAS

BGE, Inc.
101 W Louis Henna Blvd, Suite 400, Austin, TX 78728
Tel: 512-879-0400 • www.bgeinc.com
TBPE Registration No. F-1046

RM 2243

HYDRAULIC DATA
CULVERT 04
STA 543+37.25

SHEET 5 OF 16

FED.RD. DIV.NO.	PROJECT NO.		SHEET NO.
6			210
STATE	DIST.	COUNTY	
TEXAS	AUS	WILLIAMSON	
CONT.	SECT.	JOB	HIGHWAY NO.
0914	05	222	RM 2243

4/10/2025 8:38:19 AM pdf*color*new.pltcfg
G:\TXC\Projects\County*Williamson\7473-02 RM 2243 Phase 1A\03*CADD\01*Shts\06-DRNG\RM2243*P1A*C4*HYDRA*DATA*02.dgn

NOTES:

1. HY-8 V7.8 WAS USED FOR THE HYDRAULIC ANALYSIS.

EXISTING

SITE DATA - CULVERT 05

SITE DATA OPTION: CULVERT INVERT DATA
INLET STATION: 0.00 FT
INLET ELEVATION: 940.41 FT
OUTLET STATION: 30.01 FT
OUTLET ELEVATION: 939.78 FT
NUMBER OF BARRELS: 1
COMPUTED CULVERT SLOPE: 0.021 FT/FT
CULVERT LENGTH: 30.02 LF

CULVERT DATA SUMMARY - CULVERT 05

BARREL SHAPE: CIRCULAR
BARREL DIAMETER: 1.00 FT
BARREL MATERIAL: CORRUGATED STEEL
EMBEDMENT: 0.00 IN
BARREL MANNING'S N: 0.0240
CULVERT TYPE: STRAIGHT
INLET CONFIGURATION: SQUARE EDGE WITH HEADWALL (KE=0.5)
INLET DEPRESSION: NONE

ROADWAY DATA FOR CROSSING: CULVERT 05

ROADWAY PROFILE SHAPE:

COORD NO.	STATION (FT)	ELEVATION (FT)
0	0	943.73
1	9.47	943.9
2	15.02	943.99
3	21.06	944.1
4	28.37	944.29
5	34.88	944.45
6	41.12	944.61
7	46.95	944.77

ROADWAY SURFACE: PAVED

ROADWAY TOP WIDTH: 22.68 FT

TABLE 1 - CULVERT SUMMARY TABLE: CULVERT 05

DISCHARGE NAMES	TOTAL DISCHARGE (CFS)	CULVERT DISCHARGE (CFS)	HEADWATER ELEVATION (FT)	INLET CONTROL DEPTH (FT)	OUTLET CONTROL DEPTH (FT)	FLOW TYPE	NORMAL DEPTH (FT)	CRITICAL DEPTH (FT)	OUTLET DEPTH (FT)	TAILWATER DEPTH (FT)	OUTLET VELOCITY (FT/S)	TAILWATER VELOCITY (FT/S)	TAILWATER ELEVATION (FT)
2-YR	160.26	6.15	945.23	3.030	4.822	7-M2C	1.000	0.930	0.930	0.970	8.090	4.570	939.940
5-YR	211.55	6.28	945.46	3.140	5.048	4-FFF	1.000	0.910	1.000	1.080	8.000	5.020	940.05
10-YR	251.32	6.34	945.62	3.190	5.209	4-FFF	1.000	0.910	1.000	1.160	8.070	5.320	940.13
25-YR	305.55	6.41	945.83	3.250	5.416	4-FFF	1.000	0.880	1.000	1.260	8.160	5.690	940.23
50-YR	348.17	6.46	945.98	3.290	5.569	4-FFF	1.000	0.870	1.000	1.330	8.230	5.940	940.3
100-YR	392.12	6.52	946.13	3.340	5.720	4-FFF	1.000	0.870	1.000	1.400	8.300	6.180	940.37

TAILWATER CHANNEL DATA - CULVERT 05

TAILWATER CHANNEL OPTION: IRREGULAR CHANNEL

CHANNEL SLOPE: IRREGULAR CHANNEL

COORD NO.	STATION (FT)	ELEVATION (FT)	MANNING'S N
1	0	942.53	0.035
2	30.15	940	0.035
3	43.63	939.88	0.035
4	55.19	939.72	0.035
5	62.16	940.06	0.035
6	83.13	940.7	0.035
7	90.11	941.62	0.035
8	113.39	943	0.035
9	122.89	944	0.035
10	153.36	946.08	0.03

TABLE 2 - DOWNSTREAM CHANNEL RATING CURVE (CROSSING: CULVERT 05)

FLOW (CFS)	WATER SURFACE ELEV (FT)	DEPTH (FT)	VELOCITY (FT/S)	SHEAR (PSF)	FROUDE NUMBER
160.26	940.69	0.97	4.57	1.45	1.06
211.55	940.80	1.08	5.02	1.62	1.08
251.32	940.88	1.16	5.32	1.74	1.10
305.55	940.98	1.26	5.69	1.89	1.12
348.17	941.05	1.33	5.94	2.00	1.13
392.12	941.12	1.40	6.18	2.10	1.14

PROPOSED

SITE DATA - CULVERT 05

SITE DATA OPTION: CULVERT INVERT DATA
INLET STATION: 0.00 FT
INLET ELEVATION: 940.57 FT
OUTLET STATION: 112.00 FT
OUTLET ELEVATION: 938.97 FT
NUMBER OF BARRELS: 2
COMPUTED CULVERT SLOPE: 0.014286 FT/FT
CULVERT LENGTH: 112 LF

CULVERT DATA SUMMARY - CULVERT 05

BARREL SHAPE: CONCRETE BOX
BARREL SPAN: 7.00 FT
BARREL RISE: 3.00 FT
BARREL MATERIAL: CONCRETE
EMBEDMENT: 0.00 IN
BARREL MANNING'S N: 0.0120
CULVERT TYPE: STRAIGHT
INLET CONFIGURATION: SQUARE EDGE (90 & 15¾ FLARE) WINGWALL (KE=0.5)
INLET DEPRESSION: NONE

ROADWAY DATA FOR CROSSING: CULVERT 05

ROADWAY PROFILE SHAPE: IRREGULAR ROADWAY SHAPE (COORDINATES)

COORD NO.	STATION (FT)	ELEVATION (FT)
0	0	947.55
1	39.81	948.58
2	89.66	950.04
3	134.4	951.47
4	163.54	952.39
5	197.82	953.4
6	232.01	954.34
7	266.4	955.2

ROADWAY SURFACE: PAVED

ROADWAY TOP WIDTH: 48.00 FT

TABLE 1 - CULVERT SUMMARY TABLE: CULVERT 05

	DISCHARGE NAMES	TOTAL DISCHARGE (CFS)	CULVERT DISCHARGE (CFS)	HEADWATER ELEVATION (FT)	INLET CONTROL DEPTH (FT)	OUTLET CONTROL DEPTH (FT)	FLOW TYPE	NORMAL DEPTH (FT)	CRITICAL DEPTH (FT)	OUTLET DEPTH (FT)	TAILWATER DEPTH (FT)	OUTLET VELOCITY (FT/S)	TAILWATER VELOCITY (FT/S)	TAILWATER ELEVATION (FT)
	2-YR	165.00	165.00	943.3	2.730	0.492	1-S2n	0.960	1.630	1.030	0.750	11.460	4.900	939.72
	5-YR	217.00	217.00	943.89	3.320	1.157	5-S2n	1.150	1.950	1.260	0.850	12.300	5.420	939.82
	10-YR	258.00	258.00	944.39	3.820	1.729	5-S2n	1.290	2.190	1.430	0.920	12.840	5.780	939.89
	25-YR	314.00	314.00	945.14	4.570	2.832	5-S2n	1.480	2.500	1.660	1.000	13.480	6.200	939.97
*	50-YR	358.00	358.00	945.81	5.240	3.451	5-S2n	1.610	2.730	1.840	1.070	13.920	6.500	940.04
**	100-YR	403.00	403.00	946.6	6.030	4.147	5-S2n	1.750	2.950	2.010	1.130	14.330	6.780	940.10

* DESIGN FLOW IS 50-YEAR EVENT.

** CHECK FLOW IS 100-YEAR EVENT.

TAILWATER CHANNEL DATA - CULVERT 05

TAILWATER CHANNEL OPTION: IRREGULAR CHANNEL

CHANNEL SLOPE: IRREGULAR CHANNEL

COORD NO.	STATION (FT)	ELEVATION (FT)	MANNING'S N
1	0	944.84	0.03
2	15.53	939.67	0.03
3	33.99	939.57	0.03
4	45.61	939.26	0.03
5	58.21	939.22	0.03
6	75.37	939.54	0.03
7	90.79	940.85	0.03
8	106.32	942.37	0.03
9	119.57	943.53	0.03
10	133.22	944.54	0.03

TABLE 2 - DOWNSTREAM CHANNEL RATING CURVE (CROSSING: CULVERT 05)

FLOW (CFS)	WATER SURFACE ELEV (FT)	VELOCITY (FT/S)	DEPTH (FT)	SHEAR (PSF)	FROUDE NUMBER
165.00	939.97	0.75	4.90	1.13	1.21
217.00	940.07	0.85	5.42	1.27	1.24
258.00	940.14	0.92	5.78	1.37	1.26
314.00	940.22	1.00	6.20	1.50	1.28
358.00	940.29	1.07	6.50	1.60	1.30
403.00	940.35	1.13	6.78	1.69	1.31

WILCO TEXAS

BGE, Inc.
101 W Louis Henna Blvd, Suite 400, Austin, TX 78728
Tel: 512-879-0400 • www.bgeinc.com
TBPE Registration No. F-1046

RM 2243

HYDRAULIC DATA
CULVERT 05
STA 565+22.78

FED.RD. DIV.NO.	PROJECT NO.		SHEET NO.
6			211
STATE	DIST.	COUNTY	
TEXAS	AUS	WILLIAMSON	
CONT.	SECT.	JOB	HIGHWAY NO.
0914	05	222	RM 2243

4/10/2025 8:38:29 AM pdf*color*new.pltcfg
G:\TXC\Projects\County*Williamson\7473-02 RM 2243 Phase 1A\03*CADD\01*Shts\06-DRNG\RM2243*P1A*C5*HYDRA*DATA*01.dgn

EXISTING

SITE DATA - CULVERT 06

SITE DATA OPTION: CULVERT INVERT DATA
INLET STATION: 0.00 FT
INLET ELEVATION: 930.4 FT
OUTLET STATION: 30.32 FT
OUTLET ELEVATION: 929.63 FT
NUMBER OF BARRELS: 2
COMPUTED CULVERT SLOPE: 0.0254 FT/FT
CULVERT LENGTH: 30.32 LF

CULVERT DATA SUMMARY - CULVERT 06

BARREL SHAPE: CIRCULAR
BARREL DIAMETER: 1.50 FT
BARREL MATERIAL: CMP
EMBEDMENT: 0.00 IN
BARREL MANNING'S N: 0.024
CULVERT TYPE: STRAIGHT
INLET CONFIGURATION: SQUARE EDGE WITH HEADWALL (Ke=0.5)
INLET DEPRESSION: NONE

ROADWAY DATA FOR CROSSING: CULVERT 06

ROADWAY PROFILE SHAPE:

COORD NO.	STATION (FT)	ELEVATION (FT)
0	0	933.89
1	9.47	933.82
2	15.02	933.8
3	21.06	933.78
4	28.37	933.74
5	34.88	933.74
6	41.12	933.73
7	46.95	933.73

ROADWAY SURFACE: PAVED

ROADWAY TOP WIDTH: 21.74

TABLE 1 - CULVERT SUMMARY TABLE: CULVERT 06

DISCHARGE NAMES	TOTAL DISCHARGE (CFS)	CULVERT DISCHARGE (CFS)	HEADWATER ELEVATION (FT)	INLET CONTROL DEPTH (FT)	OUTLET CONTROL DEPTH (FT)	FLOW TYPE	NORMAL DEPTH (FT)	CRITICAL DEPTH (FT)	OUTLET DEPTH (FT)	TAILWATER DEPTH (FT)	OUTLET VELOCITY (FT/S)	TAILWATER VELOCITY (FT/S)	TAILWATER ELEVATION (FT)
2-YR	216	28.81	934.98	4.550	4.578	7-M2c	1.500	1.390	1.390	1.670	8.420	3.440	931.300
5-YR	291	29.87	935.28	4.840	4.876	7-M2c	1.500	1.400	1.400	1.840	8.690	3.530	931.47
10-YR	350	30.62	935.49	5.050	5.091	7-M2c	1.500	1.410	1.410	1.930	8.870	3.750	931.56
25-YR	433	31.57	935.77	5.320	5.373	7-M2c	1.500	1.420	1.420	2.040	9.120	4.010	931.67
50-YR	500	32.27	935.99	5.520	5.588	7-M2c	1.500	1.430	1.430	2.120	9.300	4.200	931.75
100-YR	572	32.94	936.21	5.720	5.806	7-M2t	1.500	1.430	1.500	2.200	9.330	4.390	931.83

TAILWATER CHANNEL DATA - CULVERT 06

TAILWATER CHANNEL OPTION: IRREGULAR CHANNEL

CHANNEL SLOPE: IRREGULAR CHANNEL

COORD NO.	STATION (FT)	ELEVATION (FT)	MANNING'S N
1	0	933.08	0.035
2	10.81	932.66	0.035
3	34.46	931.96	0.035
4	61.57	931	0.035
5	82.51	930.45	0.035
6	116.75	930.69	0.035
7	142.53	928.92	0.035
8	162.87	930.43	0.035
9	171.19	929.12	0.035
10	213.18	932	0.035

TABLE 2 - DOWNSTREAM CHANNEL RATING CURVE (CROSSING: CULVERT 06)

FLOW (CFS)	WATER SURFACE ELEV (FT)	DEPTH (FT)	VELOCITY (FT/S)	SHEAR (PSF)	FROUDE NUMBER
216.00	930.59	1.67	3.44	1.25	0.76
291.00	930.76	1.84	3.53	1.38	0.76
350.00	930.84	1.93	3.75	1.44	0.78
433.00	930.95	2.04	4.01	1.52	0.79
500.00	931.04	2.12	4.20	1.59	0.80
572.00	931.12	2.20	4.39	1.65	0.81

NOTES:

1. HY-8 V7.8 WAS USED FOR THE HYDRAULIC ANALYSIS.
2. GEOPAK DRAINAGE WAS USED FOR THE PROPOSED CULVERT 6B ANALYSIS. SEE STORM SEWER HYDRAULIC DATA SHEET FOR MORE INFORMATION.

STATE OF TEXAS
VANESSA MOLINA
141173
LICENSED PROFESSIONAL ENGINEER

WILCO TEXAS

BGE, Inc.
101 W Louis Henna Blvd, Suite 400, Austin, TX 78728
Tel: 512-879-0400 • www.bgeinc.com
TBPE Registration No. F-1046

RM 2243

HYDRAULIC DATA EXISTING CULVERT 06

SHEET 7 OF 16

FED.RD. DIV.NO.	PROJECT NO.		SHEET NO.
6			212
STATE	DIST.	COUNTY	
TEXAS	AUS	WILLIAMSON	
CONT.	SECT.	JOB	HIGHWAY NO.
0914	05	222	RM 2243

4/10/2025 8:38:34 AM pdf*color*new.pltcfg
G:\TXC\Projects\County*Williamson\7473-02 RM 2243 Phase 1A\03*CADD\01*Shts\06-DRNG\RM2243*P1A*C6*HYDRA*DATA*01.dgn

NOTES:

1. HY-8 V7.8 WAS USED FOR THE HYDRAULIC ANALYSIS.

PROPOSED

SITE DATA - CULVERT 06A

SITE DATA OPTION: CULVERT INVERT DATA
INLET STATION: 0.00 FT
INLET ELEVATION: 933.43 FT
BREAK STATION: 40.00 FT
BREAK ELEVATION: 931.30 FT
OUTLET STATION: 129.52 FT
OUTLET ELEVATION: 931.00 FT
NUMBER OF BARRELS: 2
AVERAGE CULVERT SLOPE: 0.0283 FT/FT
CULVERT LENGTH: 129.50 LF

CULVERT DATA SUMMARY - CULVERT 06A

BARREL SHAPE: CONCRETE BOX
BARREL SPAN: 7.00 FT
BARREL RISE: 4.00 FT
UPPER SECTION MATERIAL: CONCRETE
LOWER SECTION MATERIAL: CONCRETE
EMBEDMENT: 0.00 IN
UPPER SECTION MANNING'S N: 0.0120
LOWER SECTION MANNING'S N: 0.0120
CULVERT TYPE: SINGLE BROKEN-BACK
INLET CONFIGURATION: SQUARE EDGE (90$^{33}/_{34}$) HEADWALL (KE=0.5)
INLET DEPRESSION: NONE

ROADWAY DATA FOR CROSSING: CULVERT 06A

ROADWAY PROFILE SHAPE:

COORD NO.	STATION (FT)	ELEVATION (FT)
0	0.00	941.70
1	15.17	941.40
2	36.13	941.00
3	46.21	940.80
4	56.38	940.60
5	65.68	940.40
6	78.48	940.00
7	101.69	939.90

ROADWAY SURFACE: PAVED

ROADWAY TOP WIDTH: 48.00

TABLE 1 - CULVERT SUMMARY TABLE: CULVERT 06A

	DISCHARGE NAMES	TOTAL DISCHARGE (CFS)	CULVERT DISCHARGE (CFS)	HEADWATER ELEVATION (FT)	INLET CONTROL DEPTH (FT)	OUTLET CONTROL DEPTH (FT)	FLOW TYPE	NORMAL DEPTH (FT)	CRITICAL DEPTH (FT)	OUTLET DEPTH (FT)	TAILWATER DEPTH (FT)	OUTLET VELOCITY (FT/S)	TAILWATER VELOCITY (FT/S)	TAILWATER ELEVATION (FT)
	2-YR	203.00 CFS	203.00 CFS	936.56	3.130	0.0*	1-S2N	0.000	0.000	1.230	1.390	11.820	3.730	932.39
	5-YR	273.00 CFS	273.00 CFS	937.25	3.820	0.0*	1-S2N	0.000	0.000	1.490	1.540	13.060	4.120	932.54
	10-YR	329.00 CFS	329.00 CFS	937.8	4.370	0.0*	5-S2N	0.000	0.000	1.700	1.660	13.830	4.310	932.66
*	25-YR	406.00 CFS	406.00 CFS	938.61	5.180	0.422	5-S2N	0.000	0.000	1.970	1.810	14.700	4.540	932.81
	50-YR	469.00 CFS	469.00 CFS	939.33	5.900	0.865	5-S2N	0.000	0.000	2.190	1.960	15.300	4.430	932.96
**	100-YR	537.00 CFS	531.30 CFS	940.14	6.710	1.365	5-S2N	0.000	1.190	2.400	2.050	15.810	4.630	933.05

* DESIGN FLOW IS 25-YEAR EVENT.

** CHECK FLOW IS 100-YEAR EVENT.

TAILWATER CHANNEL DATA - CULVERT 06A

TAILWATER CHANNEL OPTION: IRREGULAR CHANNEL

CHANNEL SLOPE: IRREGULAR CHANNEL

COORD NO.	STATION (FT)	ELEVATION (FT)	MANNING'S N
1	0	930.71	0.035
2	15.53	930.01	0.035
3	33.99	929.91	0.035
4	45.61	929.63	0.035
5	58.21	928.9	0.035
6	75.37	928.09	0.035
7	90.79	928.8	0.035
8	106.32	928.88	0.035
9	119.57	928.91	0.035
10	133.22	930.67	0.035

TABLE 2 - DOWNSTREAM CHANNEL RATING CURVE (CROSSING: CULVERT 06A)

FLOW (CFS)	WATER SURFACE ELEV (FT)	DEPTH (FT)	VELOCITY (FT/S)	SHEAR (PSF)	FROUDE NUMBER
203.00	929.48	1.39	3.73	1.04	0.78
273.00	929.63	1.54	4.12	1.15	0.79
329.00	929.75	1.66	4.31	1.24	0.80
406.00	929.90	1.81	4.54	1.35	0.81
469.00	930.05	1.96	4.43	1.47	0.81
537.00	930.14	2.05	4.63	1.54	0.82

WILCO TEXAS

BGE, Inc.
101 W Louis Henna Blvd, Suite 400, Austin, TX 78728
Tel: 512-879-0400 • www.bgeinc.com
TBPE Registration No. F-1046

RM 2243

HYDRAULIC DATA
CULVERT 06A
STA 580+10.45

FED.RD. DIV.NO.	PROJECT NO.	SHEET NO.
6		213

STATE	DIST.	COUNTY	
TEXAS	AUS	WILLIAMSON	
CONT.	SECT.	JOB	HIGHWAY NO.
0914	05	222	RM 2243

4/10/2025 8:38:38 AM pdf*color*new.pltcfg
G:\TXC\Projects\County*Williamson\7473-02 RM 2243 Phase 1A\03*CADD\01*Shts\06-DRNG\RM2243*P1A*C6A*HYDRA*DATA*02.dgn

HEC-RAS Version 6.0

RIVER STA.	PROFILE	CONDITION	Q TOTAL	MIN CH EL	W.S ELEV	DELTA W.S ELEV	CRIT W.S.	E.G ELEV	E.G. SLOPE	VEL CHNL	DELTA VEL CHNL	FLOW AREA	TOP WIDTH	FROUDE # CHL
			(CFS)	(FT)	(FT)	(FT)	(FT)	(FT)	(FT/FT)	(FT/S)	(FT/S)	(SQ FT)	(FT)	
5340	25yr	PROP	266	949.30	951.37	0.01	951.28	951.97	0.01	6.22	0.05	43.37	32.29	0.91
5340	25yr	EXIST	261	949.30	951.36		951.26	951.95	0.013165	6.17		42.89	32.13	0.91
5340	100yr	PROP	349	949.30	951.62	0.02	951.58	952.36	0.014114	6.92	0.05	51.68	34.97	0.96
5340	100yr	EXIST	342	949.30	951.60		951.56	952.33	0.014032	6.87		51.03	34.77	0.95
5211	25yr	PROP	266	947.35	949.40	0.02	949.40	950.06	0.016494	6.55	0.03	40.98	32.50	1.00
5211	25yr	EXIST	261	947.35	949.38		949.38	950.04	0.016606	6.52		40.36	32.33	1.00
5211	100yr	PROP	349	947.35	949.68	0.02	949.68	950.45	0.015497	7.05	0.05	50.41	35.06	1.00
5211	100yr	EXIST	342	947.35	949.66		949.66	950.42	0.015588	7.00		49.67	34.84	1.00
5007	25yr	PROP	266	943.80	947.43	0.02	0.00	947.66	0.003084	3.81	0.03	69.77	32.94	0.46
5007	25yr	EXIST	261	943.80	947.41		0.00	947.63	0.003059	3.78		69.01	32.77	0.46
5007	100yr	PROP	349	943.80	947.76	0.02	0.00	948.05	0.00	4.31	0.04	81.13	35.88	0.49
5007	100yr	EXIST	342	943.80	947.74		0.00	948.02	0.003358	4.27		80.23	35.65	0.49
4900	25yr	PROP	266	944.24	946.91	0.01	0.00	947.22	0.00542	4.44	0.04	60.22	36.18	0.60
4900	25yr	EXIST	261	944.24	946.90		0.00	947.20	0.005387	4.40		59.55	36.02	0.59
4900	100yr	PROP	349	944.24	947.18	0.02	0.00	947.57	0.005969	5.02	0.04	70.07	38.40	0.64
4900	100yr	EXIST	342	944.24	947.16		0.00	947.54	0.005959	4.98		69.22	38.20	0.64
4756	25yr	PROP	266	941.57	946.77	0.01	0.00	946.85	0.001086	2.27	0.03	119.16	65.14	0.27
4756	25yr	EXIST	261	941.57	946.76		0.00	946.83	0.001067	2.24		118.15	64.79	0.27
4756	100yr	PROP	349	941.57	947.01	0.02	0.00	947.12	0.00137	2.65	0.03	135.79	75.51	0.31
4756	100yr	EXIST	342	941.57	946.99		0.00	947.10	0.00135	2.62		134.26	74.63	0.31
4644	25yr	PROP	266	944.89	946.14	0.01	946.14	946.50	0.020464	4.87	0.04	54.95	80.74	1.01
4644	25yr	EXIST	261	944.89	946.13		946.13	946.49	0.020437	4.83		54.32	80.41	1.01
4644	100yr	PROP	349	944.89	946.29	0.01	946.29	946.71	0.018625	5.27	0.07	68.06	96.93	1.00
4644	100yr	EXIST	342	944.89	946.28		946.28	946.70	0.02	5.20		67.44	96.16	0.99
4544	25yr	PROP	266	939.91	943.33	0.54	940.96	943.35	0.000198	1.20	-5.64	223.38	88.38	0.13
4544	25yr	EXIST	261	940.00	942.79		942.79	943.51	0.015873	6.84		39.28	28.97	0.98
4544	100yr	PROP	349	939.91	943.77	0.65	941.13	943.79	0.000211	1.36	-5.88	259.67	101.78	0.13
4544	100yr	EXIST	342	940.00	943.12		943.12	943.92	0.014363	7.24		49.27	30.54	0.96
4478		PROP	CULVERT 07											
4362	25yr	PROP	266	938.16	939.63	-0.71	939.62	940.22	0.016696	6.17	2.15	43.09	55.28	0.99
4362	25yr	EXIST	261	937.69	940.34		0	940.59	0.003676	4.02		66.25	37.16	0.5
4362	100yr	PROP	349	938.16	939.89	-0.85	939.87	940.57	0.015714	6.62	2.28	52.69	59.35	0.99
4362	100yr	EXIST	342	937.69	940.74		0	941.03	0.003334	4.34		81.77	39.6	0.5
4329	25yr	PROP	266	937.75	939.45	-0.72	0.00	939.71	0.006985	4.08	-0.34	65.38	53.42	0.64
4329	25yr	EXIST	261	937.05	940.17		0.00	940.46	0.003485	4.42		65.60	34.76	0.50
4329	100yr	PROP	349	937.75	939.80	-0.76	0.00	940.07	0.005741	4.14	-0.77	84.87	59.23	0.60
4329	100yr	EXIST	342	937.05	940.56		0.00	940.91	0.00	4.91		79.49	37.20	0.52
4210	25yr	PROP	266	936.36	938.75	0.06	0.00	938.97	0.00	3.77	-3.49	70.80	44.52	0.52
4210	25yr	EXIST	261	936.07	938.69		938.69	939.51	0.02	7.26		36.02	23.01	1.01
4210	100yr	PROP	349	936.36	939.18	0.12	0.00	939.41	0.003946	3.81	-3.95	93.00	58.34	0.51
4210	100yr	EXIST	342	936.07	939.06		939.06	939.99	0.01423	7.76		45.03	30.17	0.97
4144	25yr	PROP	266	935.52	937.92	0.03	937.72	938.51	0.011293	6.16	0.14	43.19	26.68	0.85
4144	25yr	EXIST	261	935.49	937.89		937.70	938.45	0.010948	6.02		43.95	29.61	0.83
4144	100yr	PROP	349	935.52	938.18	0.04	938.04	938.93	0.012019	6.96	0.17	50.38	28.56	0.90
4144	100yr	EXIST	342	935.49	938.14		938.01	938.85	0.011468	6.79		51.98	32.47	0.87
3980	25yr	PROP	266	933.50	935.62	0.02	935.62	936.38	0.014896	7.01	0.03	39.44	29.31	0.98
3980	25yr	EXIST	261	933.50	935.60		935.60	936.35	0.014999	6.98		38.84	29.13	0.98
3980	100yr	PROP	349	933.50	935.94	0.03	935.94	936.82	0.013736	7.60	0.05	49.11	32.15	0.97
3980	100yr	EXIST	342	933.50	935.91		935.91	936.78	0.01	7.55		48.30	31.88	0.97

RIVER STA.	PROFILE	CONDITION	Q TOTAL	MIN CH EL	W.S ELEV	DELTA W.S ELEV	CRIT W.S.	E.G ELEV	E.G. SLOPE	VEL CHNL	DELTA VEL CHNL	FLOW AREA	TOP WIDTH	FROUDE # CHL
			(CFS)	(FT)	(FT)	(FT)	(FT)	(FT)	(FT/FT)	(FT/S)	(FT/S)	(SQ FT)	(FT)	
3815	25yr	PROP	266	931.47	933.87	0.02	0.00	934.27	0.008042	5.05	0.04	53.02	37.18	0.72
3815	25yr	EXIST	261	931.47	933.85		0.00	934.24	0.008017	5.01		52.43	37.00	0.71
3815	100yr	PROP	349	931.47	934.20	0.02	0.00	934.66	0.007229	5.45	0.06	65.91	41.96	0.70
3815	100yr	EXIST	342	931.47	934.18		0.00	934.63	0.00717	5.39		65.18	41.66	0.70
3685	25yr	PROP	266	929.77	932.26	0.02	932.20	932.91	0.013602	6.46	0.03	41.70	62.61	0.93
3685	25yr	EXIST	261	929.77	932.24		932.18	932.88	0.01376	6.43		41.05	61.64	0.93
3685	100yr	PROP	349	929.77	932.49	0.03	932.49	933.33	0.014717	7.37	0.03	48.52	75.16	0.99
3685	100yr	EXIST	342	929.77	932.46		932.46	933.29	0.014923	7.34		47.65	74.07	0.99
3428	25yr	PROP	266	926.37	928.73	0.01	928.67	929.46	0.013178	6.93	0.07	40.75	140.08	0.93
3428	25yr	EXIST	261	926.37	928.72		928.66	929.43	0.013048	6.86		40.30	136.67	0.93
3428	100yr	PROP	349	926.37	928.81	0.00	928.81	929.06	0.006733	5.11	0.10	131.13	151.51	0.67
3428	100yr	EXIST	342	926.37	928.81		928.81	929.05	0.006467	5.01		131.12	151.51	0.66
3090	25yr	PROP	266	924.56	924.66	0.00	924.59	924.81	0.044255	1.42	0.07	87.07	204.02	0.99
3090	25yr	EXIST	261	924.56	924.66		924.58	924.80	0.044861	1.35		85.50	202.27	0.99
3090	100yr	PROP	349	924.56	924.78	0.01	924.68	924.93	0.037257	2.36	0.04	111.22	219.31	1.05
3090	100yr	EXIST	342	924.56	924.77		924.67	924.92	0.03764	2.32		109.42	218.51	1.05
3023	25yr	PROP	266	923.33	923.94	0.01	923.52	923.96	0.003854	1.30	0.01	224.64	345.35	0.38
3023	25yr	EXIST	261	923.33	923.93		923.52	923.95	0.003835	1.29		222.28	344.44	0.38
3023	100yr	PROP	349	923.33	924.06	0.01	923.58	924.09	0.004036	1.49	0.01	267.89	361.44	0.40
3023	100yr	EXIST	342	923.33	924.05		923.58	924.08	0.00402	1.48		264.89	361.11	0.40
2949	25yr	PROP	266	922.05	922.30	0.00	922.14	922.36	0.015714	1.78	0.03	147.98	361.86	0.71
2949	25yr	EXIST	261	922.05	922.30		922.14	922.35	0.015803	1.75		145.97	361.36	0.71
2949	100yr	PROP	349	922.05	922.38	0.01	922.20	922.44	0.015717	2.17	0.03	175.96	376.99	0.75
2949	100yr	EXIST	342	922.05	922.37		922.19	922.43	0.015808	2.14		173.39	376.20	0.75

NOTES:

1. HEC-RAS V6.0 WAS USED FOR THE HYDRAULIC ANALYSIS.
   BOUNDARY CONDITION USED: NORMAL DEPTH S=0.01571
   MODEL TYPE: 1D, STEADY FLOW
   UNITS UTILIZED: US SURVEY FEET
   DATUM USED: GCS NORTH AMERICAN 1983
2. THERE IS A RISE, BUT THERE ARE NO ADVERSE IMPACTS.
3. 2024 TERRAIN DATA IS SOURCED FROM TNRIS.
4. FEMA ZONE:ZONE X
   COUNTY NAME: WILLIAMSON
   FIRM PANEL NAME:48491C0460F
   EFFECTIVE FIRM PANEL DATE:12/20/2019
5. UTILIZED SURVEY DATA:JUNE 25TH, 2024

NBI NO. 14-246-0-L094-39-003

STATE OF TEXAS
VANESSA MOLINA
141173
PROFESSIONAL ENGINEER

WILCO TEXAS

BGE, Inc.
101 W Louis Henna Blvd, Suite 400, Austin, TX 78728
Tel: 512-879-0400 • www.bgeinc.com
TBPE Registration No. F-1046

RM 2243

HYDRAULIC DATA
CULVERT 07
STA 586+68.50

FED.RD. DIV.NO.	PROJECT NO.		SHEET NO.
6			214
STATE	DIST.	COUNTY	
TEXAS	AUS	WILLIAMSON	
CONT.	SECT.	JOB	HIGHWAY NO.
0914	05	222	RM 2243

4/10/2025 8:38:47 AM pdf*color*new.pltcfg
G:\TXC\Projects\County*Williamson\7473-02 RM 2243 Phase 1A\03*CADD\01*Shts\06-DRNG\RM2243*P1A*C7*HYDRA*DATA*01.dgn

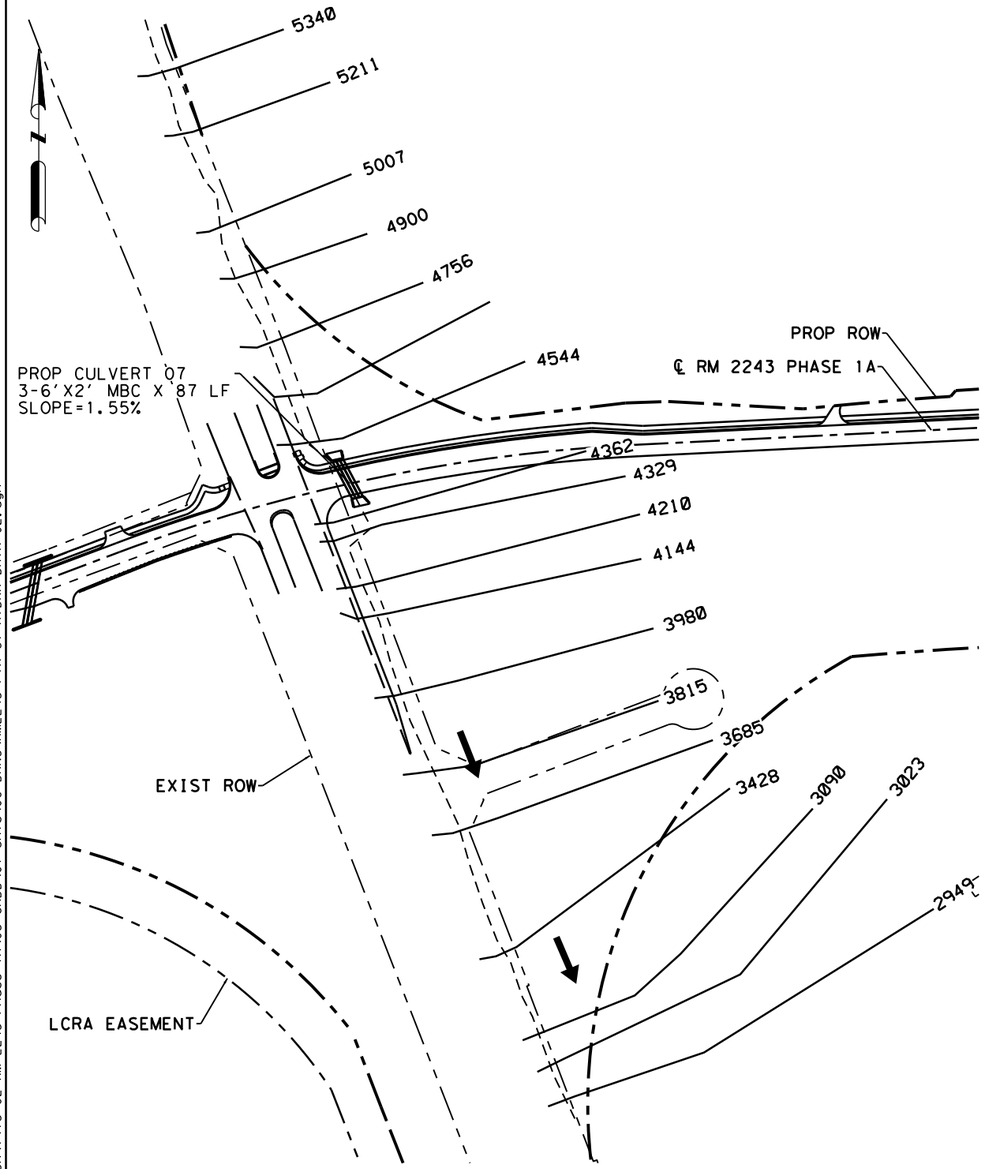

Plan: PR_PH1A	River 3	Reach 3	RS: 4478	Culv Group:	Culvert 07	Profile: 25yr

Q Culv Group (cfs)	266	Culv Full Len (ft)	
# Barrels	3	Culv Vel US (ft/s)	7.39
Q Barrel (cfs)	88.67	Culv Vel DS (ft/s)	12.56
E.G. US. (ft)	943.35	Culv Inv El Up (ft)	939.8
W.S. US. (ft)	943.33	Culv Inv El Dn (ft)	938.4
E.G. DS (ft)	940.22	Culv Frctn Ls (ft)	0.98
W.S. DS (ft)	939.63	Culv Exit Loss (ft)	1.81
Delta EG (ft)	3.13	Culv Entr Loss (ft)	0.34
Delta WS (ft)	3.7	Q Weir (cfs)	
E.G. IC (ft)	943.35	Weir Sta Lft (ft)	
E.G. OC (ft)	942.97	Weir Sta Rgt (ft)	
Culvert Control	Inlet	Weir Submerg	
Culv WS Inlet (ft)	941.75	Weir Max Depth (ft)	
Culv WS Outlet (ft)	939.58	Weir Avg Depth (ft)	
Culv Nml Depth (ft)	1.11	Weir Flow Area (sq ft)	
Culv Crt Depth (ft)	1.89	Min El Weir Flow (ft)	945.45

Plan: PR_PH1A	River 3	Reach 3	RS: 4478	Culv Group:	Culvert 07	Profile: 100yr

Q Culv Group (cfs)	349	Culv Full Len (ft)	87
# Barrels	3	Culv Vel US (ft/s)	9.69
Q Barrel (cfs)	116.33	Culv Vel DS (ft/s)	9.69
E.G. US. (ft)	943.79	Culv Inv El Up (ft)	939.75
W.S. US. (ft)	943.77	Culv Inv El Dn (ft)	938.4
E.G. DS (ft)	940.57	Culv Frctn Ls (ft)	1.35
W.S. DS (ft)	939.89	Culv Exit Loss (ft)	1.29
Delta EG (ft)	3.22	Culv Entr Loss (ft)	0.58
Delta WS (ft)	3.88	Q Weir (cfs)	
E.G. IC (ft)	944.72	Weir Sta Lft (ft)	
E.G. OC (ft)	943.79	Weir Sta Rgt (ft)	
Culvert Control	Outlet	Weir Submerg	
Culv WS Inlet (ft)	941.75	Weir Max Depth (ft)	
Culv WS Outlet (ft)	940.4	Weir Avg Depth (ft)	
Culv Nml Depth (ft)	1.33	Weir Flow Area (sq ft)	
Culv Crt Depth (ft)	2	Min El Weir Flow (ft)	945.45

LEGEND

——————— CROSS SECTION

– – – – – – – – – – PROP STREAM CENTERLNE

NOTES:

1. HEC-RAS V6.0 WAS USED FOR THE HYDRAULIC ANALYSIS.
   BOUNDARY CONDITION USED: NORMAL DEPTH S=0.01571
   MODEL TYPE: 1D, STEADY FLOW
   UNITS UTILIZED: US SURVEY FEET
   DATUM USED: GCS NORTH AMERICAN 1983
2. THERE IS A RISE, BUT THERE ARE NO ADVERSE IMPACTS.
3. 2024 TERRAIN DATA IS SOURCED FROM TNRIS.
4. FEMA ZONE: ZONE X
   COUNTY NAME: WILLIAMSON
   FIRM PANEL NAME: 48491C0460F
   EFFECTIVE FIRM PANEL DATE: 12/20/2019
5. UTILIZED SURVEY DATA: JUNE 25TH, 2024

0 200 400

SCALE: 1"=400'

NBI NO. 14-246-0-L094-39-003

STATE OF TEXAS
VANESSA MOLINA
141173
PROFESSIONAL LICENSED ENGINEER

WILCO TEXAS

BGE, Inc.
101 W Louis Henna Blvd, Suite 400, Austin, TX 78728
Tel: 512-879-0400 • www.bgeinc.com
TBPE Registration No. F-1046

RM 2243

HYDRAULIC DATA
CULVERT 07
STA 586+68.50

SHEET 10 OF 16

FED.RD. DIV.NO.	PROJECT NO.		SHEET NO.
6			215
STATE	DIST.	COUNTY	
TEXAS	AUS	WILLIAMSON	
CONT.	SECT.	JOB	HIGHWAY NO.
0914	05	222	RM 2243

4/10/2025 8:38:49 AM pdf*color*new.pltcfg
G:\TXC\Projects\County*Williamson\7473-02 RM 2243 Phase 1A\03*CADD\01*Shts\06-DRNG\RM2243*P1A*C7*HYDRA*DATA*02.dgn

NOTES:

1. HEC-RAS V6.0 WAS USED FOR THE HYDRAULIC ANALYSIS.
   BOUNDARY CONDITION USED: NORMAL DEPTH S=0.01571
   MODEL TYPE: 1D, STEADY FLOW
   UNITS UTILIZED: US SURVEY FEET
   DATUM USED: GCS NORTH AMERICAN 1983
2. THERE IS A RISE, BUT THERE ARE NO ADVERSE IMPACTS.
3. 2024 TERRAIN DATA IS SOURCED FROM TNRIS.
4. FEMA ZONE: ZONE X
   COUNTY NAME: WILLIAMSON
   FIRM PANEL NAME: 48491C0460F
   EFFECTIVE FIRM PANEL DATE: 12/20/2019
5. UTILIZED SURVEY DATA: JUNE 25TH, 2024

UPSTREAM

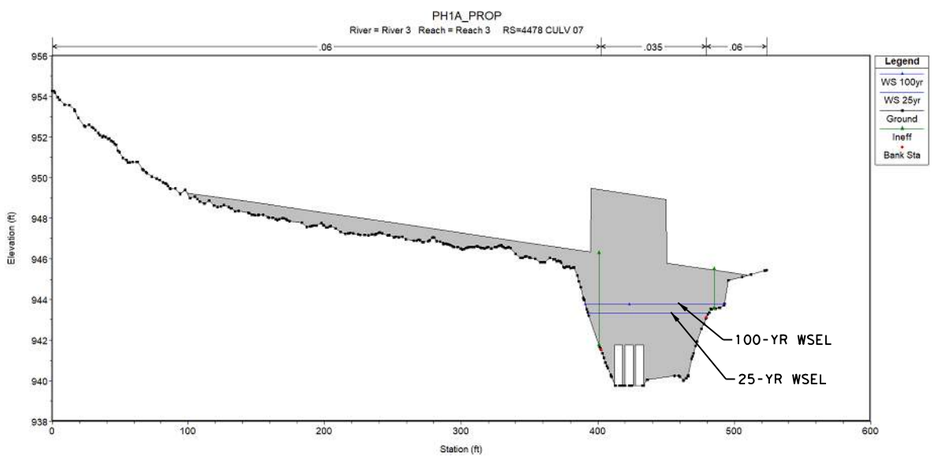

DOWNSTREAM

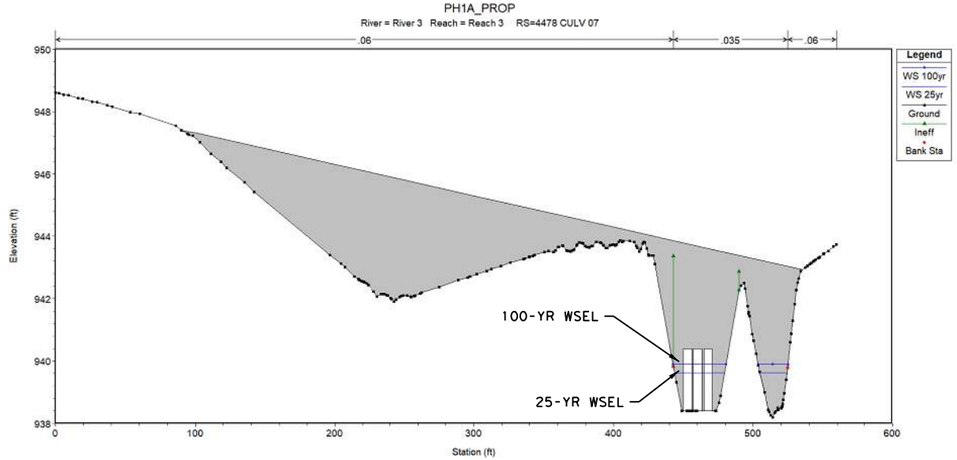

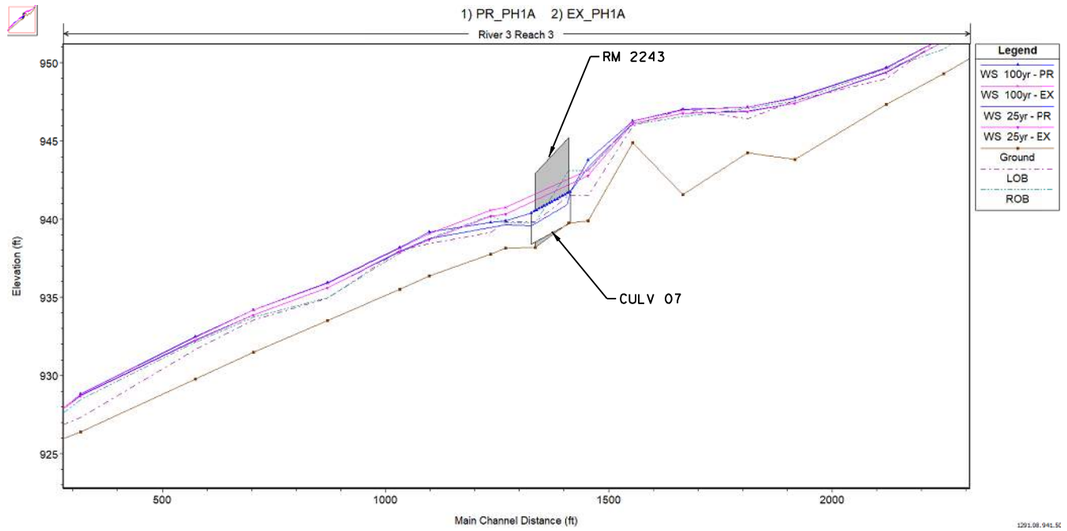

NBI NO. 14-246-0-L094-39-003

STATE OF TEXAS
VANESSA MOLINA
141173
PROFESSIONAL LICENSED ENGINEER

WILCO TEXAS

BGE, Inc.
101 W Louis Henna Blvd, Suite 400, Austin, TX 78728
Tel: 512-879-0400 • www.bgeinc.com
TBPE Registration No. F-1046

RM 2243

HYDRAULIC DATA
CULVERT 07
STA 586+68.50

SHEET 11 OF 16

FED.RD. DIV.NO.	PROJECT NO.		SHEET NO.
6			216
STATE	DIST.	COUNTY	
TEXAS	AUS	WILLIAMSON	
CONT.	SECT.	JOB	HIGHWAY NO.
0914	05	222	RM 2243

4/10/2025 8:38:50 AM pdf*color*new.pltcfg
G:\TXC\Projects\County*Williamson\7473-02 RM 2243 Phase 1A\03*CADD\01*Shts\06-DRNG\RM2243*P1A*C7*HYDRA*DATA*03.dgn

NOTES:

1. HY-8 V7.8 WAS USED FOR THE HYDRAULIC ANALYSIS.

PROPOSED

SITE DATA - CULVERT 08

SITE DATA OPTION: CULVERT INVERT DATA
INLET STATION: 0.00 FT
INLET ELEVATION: 942.20 FT
OUTLET STATION: 94 FT
OUTLET ELEVATION: 941.85 FT
NUMBER OF BARRELS: 2
COMPUTED CULVERT SLOPE: 0.003700 FT/FT
CULVERT LENGTH: 94 LF

CULVERT DATA SUMMARY - CULVERT 08

BARREL SHAPE: CONCRETE BOX
BARREL SPAN: 8.00 FT
BARREL RISE: 4.00 FT
BARREL MATERIAL: CONCRETE
EMBEDMENT: 0.00 IN
BARREL MANNING'S N: 0.0120
CULVERT TYPE: STRAIGHT
INLET CONFIGURATION: SQUARE EDGE (30-75° FLARE) WINGWALL (KE=0.4)
INLET DEPRESSION: NONE

ROADWAY DATA FOR CROSSING: CULVERT 08

ROADWAY PROFILE SHAPE: IRREGULAR ROADWAY SHAPE (COORDINATES)

COORD NO.	STATION (FT)	ELEVATION (FT)
0	0	950.86
1	9.47	950.63
2	15.02	950.5
3	21.06	950.36
4	28.36	950.2
5	34.87	950.05
6	41.11	949.92
7	46.95	949.8

ROADWAY SURFACE: PAVED

ROADWAY TOP WIDTH: 48.00 FT

TABLE 1 - CULVERT SUMMARY TABLE: CULVERT 08

	DISCHARGE NAMES	TOTAL DISCHARGE (CFS)	CULVERT DISCHARGE (CFS)	HEADWATER ELEVATION (FT)	INLET CONTROL DEPTH (FT)	OUTLET CONTROL DEPTH (FT)	FLOW TYPE	NORMAL DEPTH (FT)	CRITICAL DEPTH (FT)	OUTLET DEPTH (FT)	TAILWATER DEPTH (FT)	OUTLET VELOCITY (FT/S)	TAILWATER VELOCITY (FT/S)	TAILWATER ELEVATION (FT)
	2-YR	214.00	214.00	944.93	2.730	1.711	1-S2n	1.610	1.770	1.620	0.900	8.250	2.980	942.75
	5-YR	286.00	286.00	945.52	3.320	2.316	1-S2n	1.960	2.150	1.980	0.990	9.020	3.280	942.84
	10-YR	342.00	342.00	945.96	3.760	2.810	1-S2n	2.220	2.420	2.240	1.060	9.530	3.470	942.91
	25-YR	421.00	421.00	946.59	4.390	3.551	5-S2n	2.580	2.780	2.600	1.140	10.130	3.710	942.99
*	50-YR	484.00	484.00	947.13	4.930	4.657	5-S2n	2.850	3.050	2.870	1.200	10.540	3.870	943.05
**	100-YR	551.00	551.00	947.76	5.560	5.233	5-S2n	3.130	3.330	3.150	1.260	10.940	4.030	943.11

* DESIGN FLOW IS 50-YEAR EVENT.

** CHECK FLOW IS 100-YEAR EVENT.

TAILWATER CHANNEL DATA - CULVERT 08

TAILWATER CHANNEL OPTION: IRREGULAR CHANNEL

CHANNEL SLOPE: IRREGULAR CHANNEL

COORD NO.	STATION (FT)	ELEVATION (FT)	MANNING'S N
1	0	945.62	0.03
2	42.47	944.81	0.03
3	104.55	944.1	0.03
4	160.09	943.36	0.03
5	202.56	942.93	0.03
6	261.37	942.18	0.03
7	300.57	941.38	0.03
8	359.38	942.08	0.03
9	408.38	941.78	0.03
10	686.09	954.82	0

TABLE 2 - DOWNSTREAM CHANNEL RATING CURVE (CROSSING: CULVERT 08)

FLOW (CFS)	WATER SURFACE ELEV (FT)	DEPTH (FT)	VELOCITY (FT/S)	SHEAR (PSF)	FROUDE NUMBER
214.00	942.28	0.90	2.98	0.62	0.80
286.00	942.37	0.99	3.28	0.68	0.82
342.00	942.43	1.06	3.47	0.72	0.83
421.00	942.51	1.14	3.71	0.78	0.84
484.00	942.57	1.20	3.87	0.82	0.85
551.00	942.63	1.26	4.03	0.86	0.86

STATE OF TEXAS
VANESSA MOLINA
141173
PROFESSIONAL LICENSED ENGINEER

WILCO TEXAS

BGE, Inc.
101 W Louis Henna Blvd, Suite 400, Austin, TX 78728
Tel: 512-879-0400 • www.bgeinc.com
TBPE Registration No. F-1046

RM 2243

HYDRAULIC DATA
CULVERT 08
STA 600+61.99

FED.RD. DIV.NO.	PROJECT NO.		SHEET NO.
6			217
STATE	DIST.	COUNTY	
TEXAS	AUS	WILLIAMSON	
CONT.	SECT.	JOB	HIGHWAY NO.
0914	05	222	RM 2243

4/10/2025 8:38:55 AM pdf*color*new.pltcfg
C:\TXC\Projects\County*Williamson\7473-02 RM 2243 Phase 1A\03*CADD\01*Shts\06-DRNG\RM2243*P1A*C8*HYDRA*DATA*01.dgn

HEC-RAS Version 6.0

RIVER STA.	PROFILE	CONDITION	Q TOTAL	MIN CH EL	W.S ELEV	DELTA W.S ELEV	CRIT W.S.	E.G ELEV	E.G. SLOPE	VEL CHNL	DELTA VEL CHNL	FLOW AREA	TOP WIDTH	FROUDE # CHL
			(CFS)	(FT)	(FT)	(FT)	(FT)	(FT)	(FT/FT)	(FT/S)	(FT/S)	(SQ FT)	(FT)	
6364	25yr	PROP	1413	927.69	933.19	0.00	933.19	935.29	0.01122	11.63	-0.01	121.54	272.98	1.00
6513	25yr	EXIST	1415	927.69	933.19		933.19	935.30	0.011229	11.64		121.61	273.07	1.00
6364	100yr	PROP	1930	927.69	933.98	0.00	933.87	934.06	0.000438	2.26	0.00	959.66	332.37	0.20
6513	100yr	EXIST	1933	927.69	933.98		933.87	934.06	0.000438	2.26		961.04	332.43	0.20
6325	25yr	PROP	1413	928.34	931.48	-0.01	931.48	932.72	0.013172	8.91	0.01	158.52	232.78	1.00
6474	25yr	EXIST	1415	928.34	931.49		931.49	932.72	0.013061	8.90		159.06	233.26	0.99
6325	100yr	PROP	1930	928.34	932.05	-0.01	932.05	933.57	0.01229	9.89	0.01	195.15	261.06	1.00
6474	100yr	EXIST	1933	928.34	932.06		932.06	933.58	0.012243	9.88		195.56	261.26	1.00
6237	25yr	PROP	1413	927.62	929.64	0.00	929.49	930.18	0.01109	5.89	0.00	245.00	180.74	0.84
6386	25yr	EXIST	1415	927.62	929.64		929.49	930.18	0.011084	5.89		245.27	180.77	0.84
6237	100yr	PROP	1930	927.62	929.80	-0.09	929.80	930.61	0.014834	7.27	0.40	273.40	185.35	0.99
6386	100yr	EXIST	1933	927.62	929.89		929.81	930.62	0.012297	6.87		291.66	192.65	0.91
6118	25yr	PROP	1413	926.19	928.02	0.00	928.02	928.61	0.016208	6.21	-0.01	241.59	220.31	0.99
6268	25yr	EXIST	1415	926.19	928.02		928.02	928.61	0.016225	6.22		241.73	220.32	0.99
6118	100yr	PROP	1930	926.19	928.80	0.51	0.00	929.18	0.005569	5.05	-1.83	420.31	238.58	0.63
6268	100yr	EXIST	1933	926.19	928.29		928.29	929.00	0.015278	6.88		302.15	226.54	0.99
6022	25yr	PROP	1413	921.56	927.59	2.12	0.00	927.60	0.000089	1.06	-1.71	1452.45	653.17	0.09
6129	25yr	EXIST	1415	922.22	925.47		924.88	925.59	0.004139	2.77		510.99	526.24	0.48
6022	100yr	PROP	1930	921.56	929.03	3.23	0.00	929.05	0.00006	1.06	-1.76	2024.99	721.65	0.08
6129	100yr	EXIST	1933	922.22	925.80		925.09	925.93	0.003151	2.82		696.74	620.06	0.44
5924	25yr	PROP	1413	920.93	927.48	2.07	923.71	927.57	0.000338	2.40	-0.59	588.90	511.87	0.18
6115	25yr	EXIST	1415	922.23	925.41		0.00	925.54	0.002487	2.99		562.94	518.24	0.41
5924	100yr	PROP	1930	920.93	928.91	3.18	924.14	929.01	0.000289	2.59	-0.70	744.61	576.90	0.17
6115	100yr	EXIST	1933	922.23	925.73		924.90	925.88	0.002389	3.29		739.28	567.82	0.41
5879		PROP	Culvert 09											
5625	25yr	PROP	1413	919.37	922.82	0.44	922.82	923.93	0.013996	8.46	1.93	167.06	284.53	1.00
5622	25yr	EXIST	1415	919.37	922.38		922.38	923.05	0.015799	6.53		216.58	160.07	0.99
5625	100yr	PROP	1930	919.37	923.36	0.64	923.36	924.67	0.013244	9.20	2.22	209.84	333.90	1.00
5622	100yr	EXIST	1933	919.37	922.72		922.72	923.48	0.015977	6.98		277.78	195.86	1.01
5562	25yr	PROP	1413	919.47	921.70	-0.14	0.00	921.95	0.005025	3.95	-0.28	361.37	287.99	0.57
5562	25yr	EXIST	1415	919.47	921.84		0.00	922.10	0.00732	4.23		385.27	384.23	0.66
5562	100yr	PROP	1930	919.47	922.04	-0.10	0.00	922.34	0.004724	4.39	-0.11	451.93	295.92	0.57
5562	100yr	EXIST	1933	919.47	922.14		0.00	922.43	0.006202	4.50		503.06	386.45	0.63
5471	25yr	PROP	1413	917.98	920.79	0.00	0.00	921.26	0.011608	5.51	-0.01	258.91	213.13	0.84
5471	25yr	EXIST	1415	917.98	920.79		920.64	921.26	0.011618	5.52		259.92	225.41	0.84
5471	100yr	PROP	1930	917.98	921.04	0.00	920.93	921.65	0.012146	6.32	0.03	312.82	223.67	0.89
5471	100yr	EXIST	1933	917.98	921.04		920.94	921.65	0.011994	6.29		323.40	275.18	0.88

THE FLOWS USED IN THIS MODEL ARE THE COMBINED FLOWS FROM AREAS OFF_09 AND OFF_09A.

Plan: PR_PH1A	River 1	Reach 1 RS: 5879	Culv Group: Culvert 01	Profile: 25yr
Q Culv Group (cfs)	1413	Culv Full Len (ft)		
# Barrels	4	Culv Vel US (ft/s)	9.81	
Q Barrel (cfs)	353.25	Culv Vel DS (ft/s)	14.3	
E.G. US. (ft)	927.57	Culv Inv El Up (ft)	920.79	
W.S. US. (ft)	927.48	Culv Inv El Dn (ft)	920.32	
E.G. DS (ft)	923.93	Culv Frctn Ls (ft)	0.73	
W.S. DS (ft)	922.82	Culv Exit Loss (ft)	2.31	
Delta EG (ft)	3.64	Culv Entr Loss (ft)	0.6	
Delta WS (ft)	4.65	Q Weir (cfs)		
E.G. IC (ft)	927.57	Weir Sta Lft (ft)		
E.G. OC (ft)	926.97	Weir Sta Rgt (ft)		
Culvert Control	Inlet	Weir Submerg		
Culv WS Inlet (ft)	924.79	Weir Max Depth (ft)		
Culv WS Outlet (ft)	923.06	Weir Avg Depth (ft)		
Culv Nml Depth (ft)	3.11	Weir Flow Area (sq ft)		
Culv Crt Depth (ft)	3.63	Min El Weir Flow (ft)	929.33	

Plan: PR_PH1A	River 1	Reach 1 RS: 5879	Culv Group: Culvert 01	Profile: 100yr
Q Culv Group (cfs)	1930	Culv Full Len (ft)	104	
# Barrels	4	Culv Vel US (ft/s)	13.4	
Q Barrel (cfs)	482.5	Culv Vel DS (ft/s)	13.4	
E.G. US. (ft)	929.01	Culv Inv El Up (ft)	920.79	
W.S. US. (ft)	928.91	Culv Inv El Dn (ft)	920.32	
E.G. DS (ft)	924.67	Culv Frctn Ls (ft)	0.79	
W.S. DS (ft)	923.36	Culv Exit Loss (ft)	2.43	
Delta EG (ft)	4.34	Culv Entr Loss (ft)	1.12	
Delta WS (ft)	5.54	Q Weir (cfs)		
E.G. IC (ft)	930.46	Weir Sta Lft (ft)		
E.G. OC (ft)	929.01	Weir Sta Rgt (ft)		
Culvert Control	Outlet	Weir Submerg		
Culv WS Inlet (ft)	924.79	Weir Max Depth (ft)		
Culv WS Outlet (ft)	924.32	Weir Avg Depth (ft)		
Culv Nml Depth (ft)	3.91	Weir Flow Area (sq ft)		
Culv Crt Depth (ft)	4	Min El Weir Flow (ft)	929.33	

NBI NO. 14-246-0-L094-39-004

NOTES:

1. HEC-RAS V6.0 WAS USED FOR THE HYDRAULIC ANALYSIS.
   BOUNDARY CONDITION USED: NORMAL DEPTH S=0.01
   MODEL TYPE: 1D, STEADY FLOW
   UNITS UTILIZED: US SURVEY FEET
   DATUM USED: GCS NORTH AMERICAN 1983
2. THERE IS A RISE, BUT THERE ARE NO ADVERSE IMPACTS.
3. 2024 TERRAIN DATA IS SOURCED FROM TNRIS.
4. FEMA ZONE:ZONE X
   COUNTY NAME: WILLIAMSON
   FIRM PANEL NAME:48491C0460F
   EFFECTIVE FIRM PANEL DATE:12/20/2019
5. UTILIZED SURVEY DATA:JUNE 25TH, 2024

STATE OF TEXAS
VANESSA MOLINA
141173
PROFESSIONAL LICENSED ENGINEER

WILCO TEXAS

BGE, Inc.
101 W Louis Henna Blvd, Suite 400, Austin, TX 78728
Tel: 512-879-0400 • www.bgeinc.com
TBPE Registration No. F-1046

RM 2243

HYDRAULIC DATA
CULVERT 09
STA 631+00.00

SHEET 13 OF 16

FED.RD. DIV.NO.	PROJECT NO.		SHEET NO.
6			218
STATE	DIST.	COUNTY	
TEXAS	AUS	WILLIAMSON	
CONT.	SECT.	JOB	HIGHWAY NO.
0914	05	222	RM 2243

4/10/2025 8:39:04 AM pdf*color*new.pltcfg
G:\TXC\Projects\County*Williamson\7473-02 RM 2243 Phase 1A\03*CADD\01*Shts\06-DRNG\RM2243*P1A*C9*HYDRA*DATA*01.dgn

NOTES:

1. HEC-RAS V6.0 WAS USED FOR THE HYDRAULIC ANALYSIS.
   BOUNDARY CONDITION USED: NORMAL DEPTH S=0.01
   MODEL TYPE: 1D, STEADY FLOW
   UNITS UTILIZED: US SURVEY FEET
   DATUM USED: GCS NORTH AMERICAN 1983
2. THERE IS A RISE, BUT THERE ARE NO ADVERSE IMPACTS.
3. 2024 TERRAIN DATA IS SOURCED FROM TNRIS.
4. FEMA ZONE: ZONE X
   COUNTY NAME: WILLIAMSON
   FIRM PANEL NAME: 48491C0460F
   EFFECTIVE FIRM PANEL DATE: 12/20/2019
5. UTILIZED SURVEY DATA: JUNE 25TH, 2024

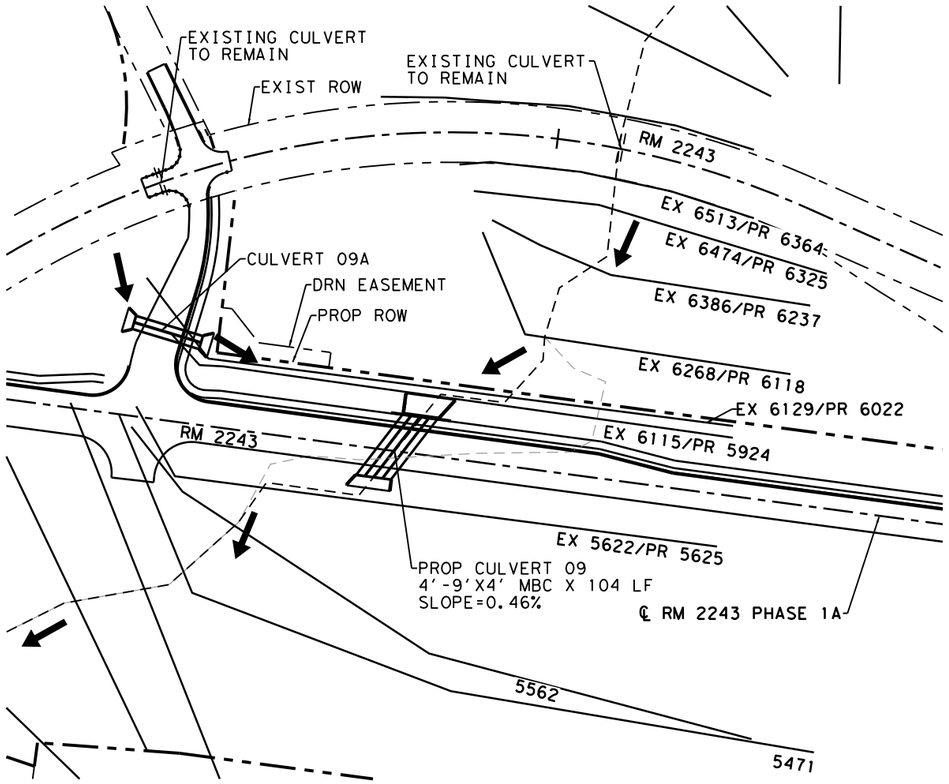

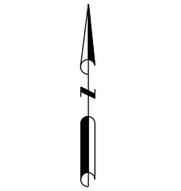

LEGEND

- CROSS SECTION
- PROP STREAM CENTERLNE
- EXIST STREAM CENTERLNE

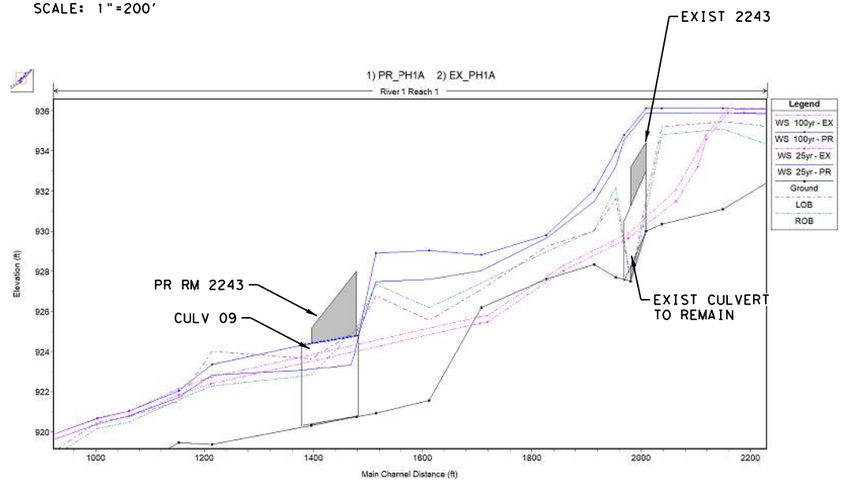

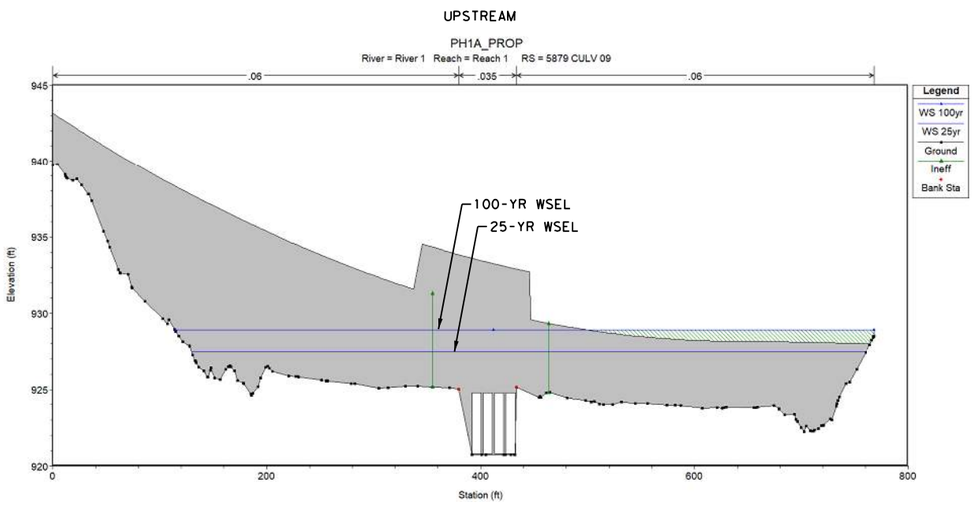

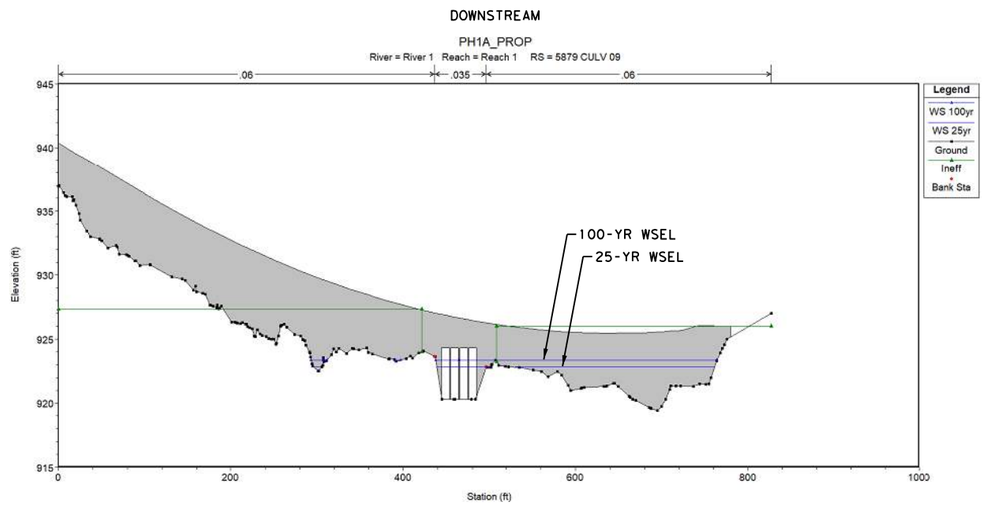

NBI NO. 14-246-0-L094-39-004

STATE OF TEXAS
VANESSA MOLINA
141173
PROFESSIONAL ENGINEER
LICENSED

WILCO TEXAS

BGE, Inc.
101 W Louis Henna Blvd, Suite 400, Austin, TX 78728
Tel: 512-879-0400 ● www.bgeinc.com
TBPE Registration No. F-1046

RM 2243

HYDRAULIC DATA
CULVERT 09
STA 631+00.00

SHEET 14 OF 16

FED.RD. DIV.NO.	PROJECT NO.	SHEET NO.
6		219

STATE	DIST.	COUNTY	
TEXAS	AUS	WILLIAMSON	
CONT.	SECT.	JOB	HIGHWAY NO.
0914	05	222	RM 2243

4/10/2025 8:39:06 AM pdf*color*new.pltcfg
G:\TXC\Projects\County*Williamson\7473-02 RM 2243 Phase 1A\03*CADD\01*Shts\06-DRNG\RM2243*P1A*C9*HYDRA*DATA*02.dgn

PROPOSED

SITE DATA - CULVERT 09A

SITE DATA OPTION: CULVERT INVERT DATA
INLET STATION: 0.00 FT
INLET ELEVATION: 921.82 FT
OUTLET STATION: 93.00 FT
OUTLET ELEVATION: 921.54 FT
NUMBER OF BARRELS: 2
COMPUTED CULVERT SLOPE: 0.00300 FT/FT
CULVERT LENGTH: 93.00 LF

CULVERT DATA SUMMARY - CULVERT 09A

BARREL SHAPE: CONCRETE BOX
BARREL SPAN: 8.00 FT
BARREL RISE: 3.00 FT
BARREL MATERIAL: CONCRETE
EMBEDMENT: 0.00 IN
BARREL MANNING'S N: 0.0120
CULVERT TYPE: STRAIGHT
INLET CONFIGURATION: SQUARE EDGE (30-75¾ FLARE) WINGWALL (KE=0.4)
INLET DEPRESSION: NONE

ROADWAY DATA FOR CROSSING: CULVERT 09A

ROADWAY PROFILE SHAPE: IRREGULAR ROADWAY SHAPE (COORDINATES)

COORD NO.	STATION (FT)	ELEVATION (FT)
0	0	927.57
1	15.83	927.49
2	30.75	927.51
3	39.78	927.51
4	52.71	927.54
5	67.89	927.55
6	84.73	927.62
7	100.3	927.67

ROADWAY SURFACE: PAVED

ROADWAY TOP WIDTH: 52.00 FT

TABLE 1 - CULVERT SUMMARY TABLE: CULVERT 09A

	DISCHARGE NAMES	TOTAL DISCHARGE (CFS)	CULVERT DISCHARGE (CFS)	HEADWATER ELEVATION (FT)	INLET CONTROL DEPTH (FT)	OUTLET CONTROL DEPTH (FT)	FLOW TYPE	NORMAL DEPTH (FT)	CRITICAL DEPTH (FT)	OUTLET DEPTH (FT)	TAILWATER DEPTH (FT)	OUTLET VELOCITY (FT/S)	TAILWATER VELOCITY (FT/S)	TAILWATER ELEVATION (FT)
	2-YR	181.00	181.00	924.27	2.450	1.689	1-S2n	1.550	1.580	1.550	1.300	7.320	5.310	922.84
	5-YR	261.00	261.00	924.99	3.170	2.543	5-S2n	1.980	2.020	1.980	1.540	8.220	5.880	923.08
	10-YR	325.00	325.00	925.63	3.810	3.633	5-S2n	2.310	2.340	2.310	1.700	8.780	6.240	923.24
*	25-YR	417.00	417.00	926.72	4.900	4.648	5-S2n	2.760	2.760	2.760	2.010	9.440	5.910	923.55
	50-YR	492.00	481.33	927.66	5.840	5.446	6-FFc	3.000	3.000	3.000	2.170	10.030	5.920	923.71
**	100-YR	573.00	499.22	927.94	6.120	5.652	6-FFc	3.000	3.000	3.000	2.310	10.400	6.000	923.85

* DESIGN FLOW IS 25-YEAR EVENT.

** CHECK FLOW IS 100-YEAR EVENT.

TAILWATER CHANNEL DATA - CULVERT 09A

TAILWATER CHANNEL OPTION: IRREGULAR CHANNEL

CHANNEL SLOPE: IRREGULAR CHANNEL

COORD NO.	STATION (FT)	ELEVATION (FT)	MANNING'S N
1	0	925.07	0.035
2	5.51	924.98	0.035
3	34.55	924.49	0.035
4	87.15	923.29	0.035
5	101.92	921.78	0.035
6	112.38	921.58	0.035
7	122.89	921.99	0.035
8	136.59	923.32	0.035
9	162.28	924.06	0.035
10	169.85	924.2	0

TABLE 2 - DOWNSTREAM CHANNEL RATING CURVE (CROSSING: CULVERT 09A)

FLOW (CFS)	WATER SURFACE ELEV (FT)	VELOCITY (FT/S)	DEPTH (FT)	SHEAR (PSF)	FROUDE NUMBER
181.00	922.88	1.30	5.31	1.62	1.02
261.00	923.12	1.54	5.88	1.92	1.05
325.00	923.28	1.70	6.24	2.12	1.07
417.00	923.59	2.01	5.91	2.51	1.05
492.00	923.75	2.17	5.92	2.70	1.05
573.00	923.89	2.31	6.00	2.88	1.06

NOTES:

1. HY-8 V7.8 WAS USED FOR THE HYDRAULIC ANALYSIS.

STATE OF TEXAS
VANESSA MOLINA
141173
LICENSED PROFESSIONAL ENGINEER

WILCO TEXAS

BGE, Inc.
101 W Louis Henna Blvd, Suite 400, Austin, TX 78728
Tel: 512-879-0400 • www.bgeinc.com
TBPE Registration No. F-1046

RM 2243

HYDRAULIC DATA
CULVERT 9A
STA 2001+16.11

SHEET 15 OF 16

FED.RD. DIV.NO.	PROJECT NO.	SHEET NO.
6		220

STATE	DIST.	COUNTY	
TEXAS	AUS	WILLIAMSON	
CONT.	SECT.	JOB	HIGHWAY NO.
0914	05	222	RM 2243

4/10/2025 8:39:11 AM pdf*color*new.pltcfg
G:\TXC\Projects\County*Williamson\7473-02 RM 2243 Phase 1A\03*CADD\01*Shts\06-DRNG\RM2243*P1A*C9A*HYDRA*DATA*01.dgn

NOTES:

1. HY-8 V7.8 WAS USED FOR THE HYDRAULIC ANALYSIS.

EXISTING

SITE DATA - CULVERT 10

SITE DATA OPTION: CULVERT INVERT DATA
INLET STATION: 0.00 FT
INLET ELEVATION: 1026.73 FT
OUTLET STATION: 42.79 FT
OUTLET ELEVATION: 1026.37 FT
NUMBER OF BARRELS: 1
COMPUTED CULVERT SLOPE: 0.0084 FT/FT
CULVERT LENGTH: 56.68 LF

CULVERT DATA SUMMARY - CULVERT 10

BARREL SHAPE: CIRCULAR
BARREL DIAMETER: 2.00 FT
BARREL MATERIAL: CORRUGATED STEEL
EMBEDMENT: 0.00 IN
BARREL MANNING'S N: 0.0240
CULVERT TYPE: STRAIGHT
INLET CONFIGURATION: MITERED TO CONFORM TO SLOPE (KE=0.7)
INLET DEPRESSION: NONE

ROADWAY DATA FOR CROSSING: CULVERT 10

ROADWAY PROFILE SHAPE:

COORD NO.	STATION (FT)	ELEVATION (FT)
0	0	1030.74
1	9.47	1030.76
2	15.02	1030.77
3	21.06	1030.78
4	28.37	1030.74
5	34.88	1030.72
6	41.12	1030.7
7	46.95	1030.66

ROADWAY SURFACE: PAVED

ROADWAY TOP WIDTH: 30.00 FT

TABLE 1 - CULVERT SUMMARY TABLE: CULVERT 10

DISCHARGE NAMES	TOTAL DISCHARGE (CFS)	CULVERT DISCHARGE (CFS)	HEADWATER ELEVATION (FT)	INLET CONTROL DEPTH (FT)	OUTLET CONTROL DEPTH (FT)	FLOW TYPE	NORMAL DEPTH (FT)	CRITICAL DEPTH (FT)	OUTLET DEPTH (FT)	TAILWATER DEPTH (FT)	OUTLET VELOCITY (FT/S)	TAILWATER VELOCITY (FT/S)	TAILWATER ELEVATION (FT)
2-YR	48.05	22.65	1031.06	3.870	4.329	7-M2C	2.000	1.700	1.700	0.910	7.980	1.770	1027.28
5-YR	63.99	23.08	1031.18	3.970	4.445	7-M2C	2.000	1.710	1.710	0.950	8.080	1.940	1027.32
10-YR	76.5	23.39	1031.26	4.040	4.530	7-M2C	2.000	1.720	1.720	0.980	8.150	2.050	1027.35
25-YR	93.79	23.77	1031.36	4.130	4.634	7-M2C	2.000	1.730	1.730	1.010	8.240	2.180	1027.38
50-YR	107.52	24.06	1031.44	4.200	4.710	7-M2C	2.000	1.740	1.740	1.030	8.300	2.270	1027.40
100-YR	122.06	24.33	1031.52	4.270	4.787	7-M2C	2.000	1.740	1.740	1.060	8.370	2.360	1027.43

TAILWATER CHANNEL DATA - CULVERT 10

TAILWATER CHANNEL OPTION: IRREGULAR CHANNEL

CHANNEL SLOPE: IRREGULAR CHANNEL

COORD NO.	STATION (FT)	ELEVATION (FT)	MANNING'S N
1	0	1030.39	0.035
2	15.49	1028.56	0.035
3	55.27	1028.22	0.035
4	70.28	1027.84	0.035
5	107.34	1027.61	0.035
6	153.6	1027.7	0.035
7	164.07	1026.93	0.035
8	167.53	1027.58	0.035
9	254.28	1028	0.035
10	266.68	1030	0

TABLE 2 - DOWNSTREAM CHANNEL RATING CURVE (CROSSING: CULVERT 10E)

FLOW (CFS)	WATER SURFACE ELEV (FT)	DEPTH (FT)	VELOCITY (FT/S)	SHEAR (PSF)	FROUDE NUMBER
48.05	1027.84	0.91	1.77	0.97	0.73
63.99	1027.88	0.95	1.94	1.01	0.75
76.50	1027.90	0.98	2.05	1.03	0.76
93.79	1027.94	1.01	2.18	1.07	0.77
107.52	1027.96	1.03	2.27	1.10	0.78
122.06	1027.98	1.06	2.36	1.12	0.79

PROPOSED

SITE DATA - CULVERT 10

SITE DATA OPTION: CULVERT INVERT DATA
INLET STATION: 0.00 FT
INLET ELEVATION: 1026.48 FT
OUTLET STATION: 81.00 FT
OUTLET ELEVATION: 1025.56 FT
NUMBER OF BARRELS: 1
COMPUTED CULVERT SLOPE: 0.011333 FT/FT
CULVERT LENGTH: 81 LF

CULVERT DATA SUMMARY - CULVERT 10

BARREL SHAPE: CONCRETE BOX
BARREL SPAN: 6.00 FT
BARREL RISE: 3.00 FT
BARREL MATERIAL: CONCRETE
EMBEDMENT: 0.00 IN
BARREL MANNING'S N: 0.0120
CULVERT TYPE: STRAIGHT
INLET CONFIGURATION: SQUARE EDGE (30-75$^{5}/_{64}$ FLARE) WINGWALL (KE=0.4)
INLET DEPRESSION: NONE

ROADWAY DATA FOR CROSSING: CULVERT 10

ROADWAY PROFILE SHAPE: IRREGULAR ROADWAY SHAPE (COORDINATES)

COORD NO.	STATION (FT)	ELEVATION (FT)
0	0	1030.83
1	9.47	1030.8
2	15.02	1030.78
3	21.06	1030.76
4	28.36	1030.74
5	34.87	1030.72
6	41.11	1030.7
7	46.95	1030.68

ROADWAY SURFACE: PAVED

ROADWAY TOP WIDTH: 47.89 FT

TABLE 1 - CULVERT SUMMARY TABLE: CULVERT 10

	DISCHARGE NAMES	TOTAL DISCHARGE (CFS)	CULVERT DISCHARGE (CFS)	HEADWATER ELEVATION (FT)	INLET CONTROL DEPTH (FT)	OUTLET CONTROL DEPTH (FT)	FLOW TYPE	NORMAL DEPTH (FT)	CRITICAL DEPTH (FT)	OUTLET DEPTH (FT)	TAILWATER DEPTH (FT)	OUTLET VELOCITY (FT/S)	TAILWATER VELOCITY (FT/S)	TAILWATER ELEVATION (FT)
	2-YR	54.00 CFS	54.00 CFS	1028.57	2.090	0.685	1-S2N	0.880	1.360	0.940	0.460	9.520	3.140	1026.02
	5-YR	72.00 CFS	72.00 CFS	1029.01	2.530	1.161	1-S2N	1.070	1.650	1.160	0.540	10.330	3.480	1026.10
	10-YR	86.00 CFS	86.00 CFS	1029.35	2.870	1.553	1-S2N	1.200	1.850	1.320	0.600	10.830	3.720	1026.16
	25-YR	105.00 CFS	105.00 CFS	1029.82	3.340	2.119	5-S2N	1.380	2.120	1.530	0.680	11.400	3.990	1026.24
*	50-YR	120.00 CFS	120.00 CFS	1030.22	3.740	2.940	5-S2N	1.510	2.320	1.700	0.730	11.800	4.180	1026.29
**	100-YR	137.00 CFS	137.00 CFS	1030.72	4.240	3.406	5-S2N	1.650	2.530	1.870	0.790	12.200	4.380	1026.35

* DESIGN FLOW IS 50-YEAR EVENT.

** CHECK FLOW IS 100-YEAR EVENT.

TAILWATER CHANNEL DATA - CULVERT 10

TAILWATER CHANNEL OPTION: IRREGULAR CHANNEL

CHANNEL SLOPE: IRREGULAR CHANNEL

COORD NO.	STATION (FT)	ELEVATION (FT)	MANNING'S N
1	0	1027.41	0.035
2	25.49	1027.88	0.035
3	28.48	1026.76	0.035
4	44.24	1026.6	0.035
5	48.18	1026.6	0.035
6	60.82	1024.5	0.035
7	95.43	1024.5	0.035
8	101.02	1025.4	0.035
9	132.79	1027.36	0.035
10	174.2	1027.72	0

TABLE 2 - DOWNSTREAM CHANNEL RATING CURVE (CROSSING: CULVERT 10)

FLOW (CFS)	WATER SURFACE ELEV (FT)	DEPTH (FT)	VELOCITY (FT/S)	SHEAR (PSF)	FROUDE NUMBER
54.00	1024.96	0.46	3.14	0.49	0.85
72.00	1025.04	0.54	3.48	0.58	0.87
86.00	1025.10	0.60	3.72	0.64	0.88
105.00	1025.18	0.68	3.99	0.72	0.90
120.00	1025.23	0.73	4.18	0.78	0.91
137.00	1025.29	0.79	4.38	0.84	0.92

STATE OF TEXAS
VANESSA MOLINA
141173
PROFESSIONAL ENGINEER
LICENSED

WILCO TEXAS

BGE, Inc.
101 W Louis Henna Blvd, Suite 400, Austin, TX 78728
Tel: 512-879-0400 • www.bgeinc.com
TBPE Registration No. F-1046

RM 2243

HYDRAULIC DATA
CULVERT 10
STA 669+25.38

SHEET 16 OF 16

FED.RD. DIV.NO.	PROJECT NO.	SHEET NO.
6		221

STATE	DIST.	COUNTY
TEXAS	AUS	WILLIAMSON

CONT.	SECT.	JOB	HIGHWAY NO.
0914	05	222	RM 2243

4/10/2025 8:39:15 AM pdf*color*new.pltcfg
G:\TXC\Projects\County*\Williamson\7473-02 RM 2243 Phase 1A\03*CADD\01*Shts\06-DRNG\RM2243*P1A*C10*HYDRA*DATA*01.dgn

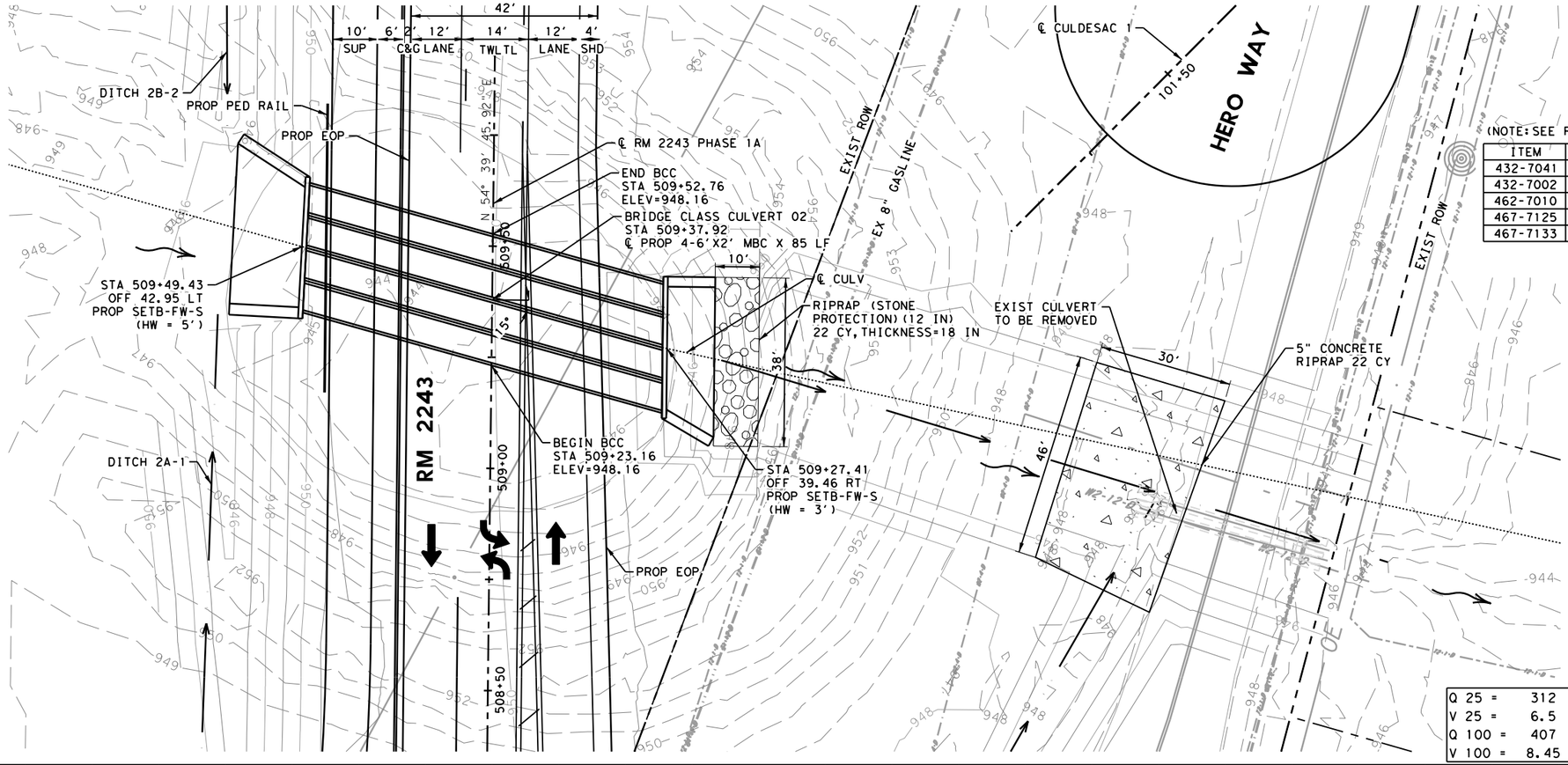

(NOTE: SEE REMOVAL SHEETS FOR REMOVAL ITEMS.)

ITEM	DESCRIPTION	QUANTITY
432-7041	RIPRAP (STONE PROTECTION) (12 IN)	22 CY
432-7002	RIPRAP (CONC) (5 IN)	22 CY
462-7010	CONC BOX CULV (6 FT X 2 FT)	340 LF
467-7125	SET (TY I) (S= 6 FT) (HW= 3 FT) (4:1) (C)	1 EA
467-7133	SET (TY I) (S= 6 FT) (HW= 5 FT) (4:1) (C)	1 EA

LEGEND:

- PROPOSED DITCH FLOW DIRECTION
- FLOW DIRECTION
- DIRECTION OF TRAFFIC
- 690 EXISTING CONTOURS
- 690 PROPOSED CONTOURS

NOTES:

1. CONTRACTOR IS RESPONSIBLE FOR VERIFYING ALL EXISTING UTILITIES BEFORE CONSTRUCTION.
2. SEE HYDRAULIC DATA SHEET FOR DETAILED ANALYSIS.
3. SEE HORIZONTAL CURVE DATA SHEET FOR MORE INFORMATION.
4. ALLOWABLE HEADWATER: 950.99 FT

SCALE: 1"=30' H, 1"=15' V

Q 25 =	312	CFS
V 25 =	6.5	FT/S
Q 100 =	407	CFS
V 100 =	8.45	FT/S

DESIGN SPEED: 45 MPH
ADT = 14,990 (2020)
ADT = 44,600 (2040)
FUNCTIONAL CLASS:
SUBURBAN ARTERIAL
NBI NO. 14-246-0-L094-39-001

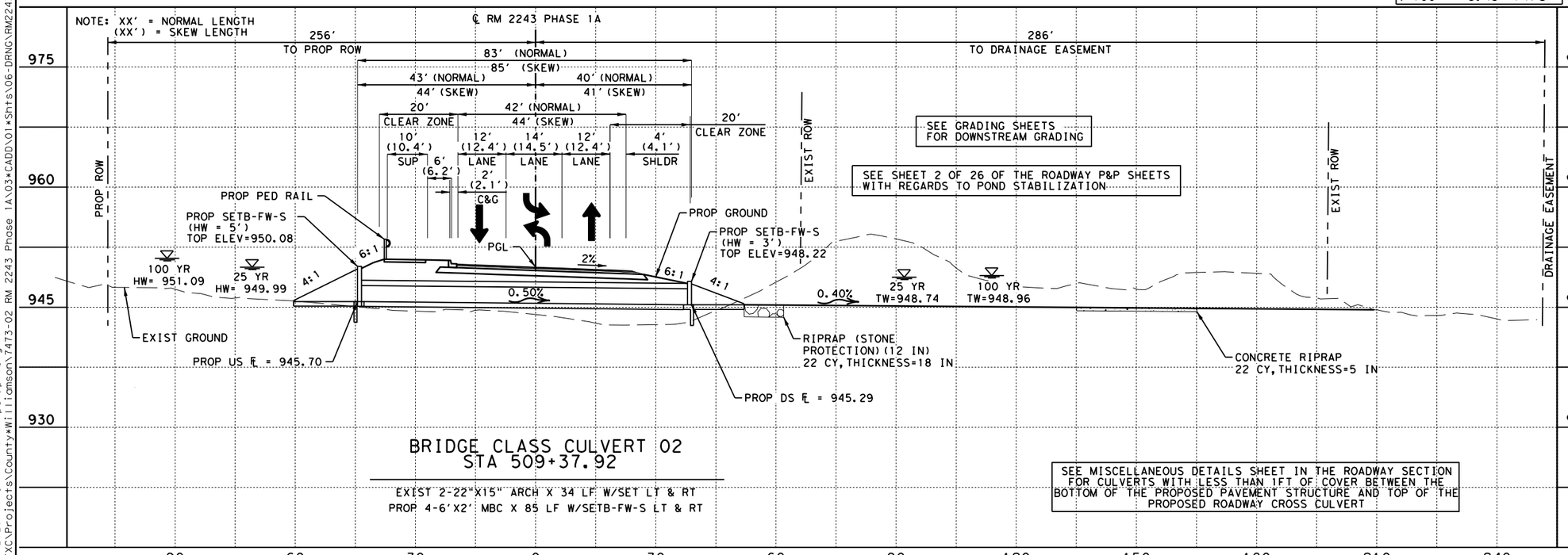

BRIDGE CLASS CULVERT 02
STA 509+37.92

EXIST 2-22"X15" ARCH X 34 LF W/SET LT & RT
PROP 4-6'X2' MBC X 85 LF W/SETB-FW-S LT & RT

SEE MISCELLANEOUS DETAILS SHEET IN THE ROADWAY SECTION FOR CULVERTS WITH LESS THAN 1FT OF COVER BETWEEN THE BOTTOM OF THE PROPOSED PAVEMENT STRUCTURE AND TOP OF THE PROPOSED ROADWAY CROSS CULVERT

STATE OF TEXAS
VANESSA MOLINA
141173
PROFESSIONAL LICENSED ENGINEER

WILCO TEXAS

BGE, Inc.
101 W Louis Henna Blvd, Suite 400, Austin, TX 78728
Tel: 512-879-0400 • www.bgeinc.com
TBPE Registration No. F-1046

RM 2243

BRIDGE CLASS CULVERT 02 LAYOUT

SHEET 1 OF 11

FED.RD. DIV.NO.	PROJECT NO.		SHEET NO.
6			222
STATE	DIST.	COUNTY	
TEXAS	AUS	WILLIAMSON	
CONT.	SECT.	JOB	HIGHWAY NO.
0914	05	222	RM 2243

4/10/2025 1:01:44 PM pdf.pltcfg
G:\TXC\Projects\County\Williamson\7473-02 RM 2243 Phase 1A\03*CADD\01*Shts\06-DRNG\RM2243*P1A*CULV*02.dgn

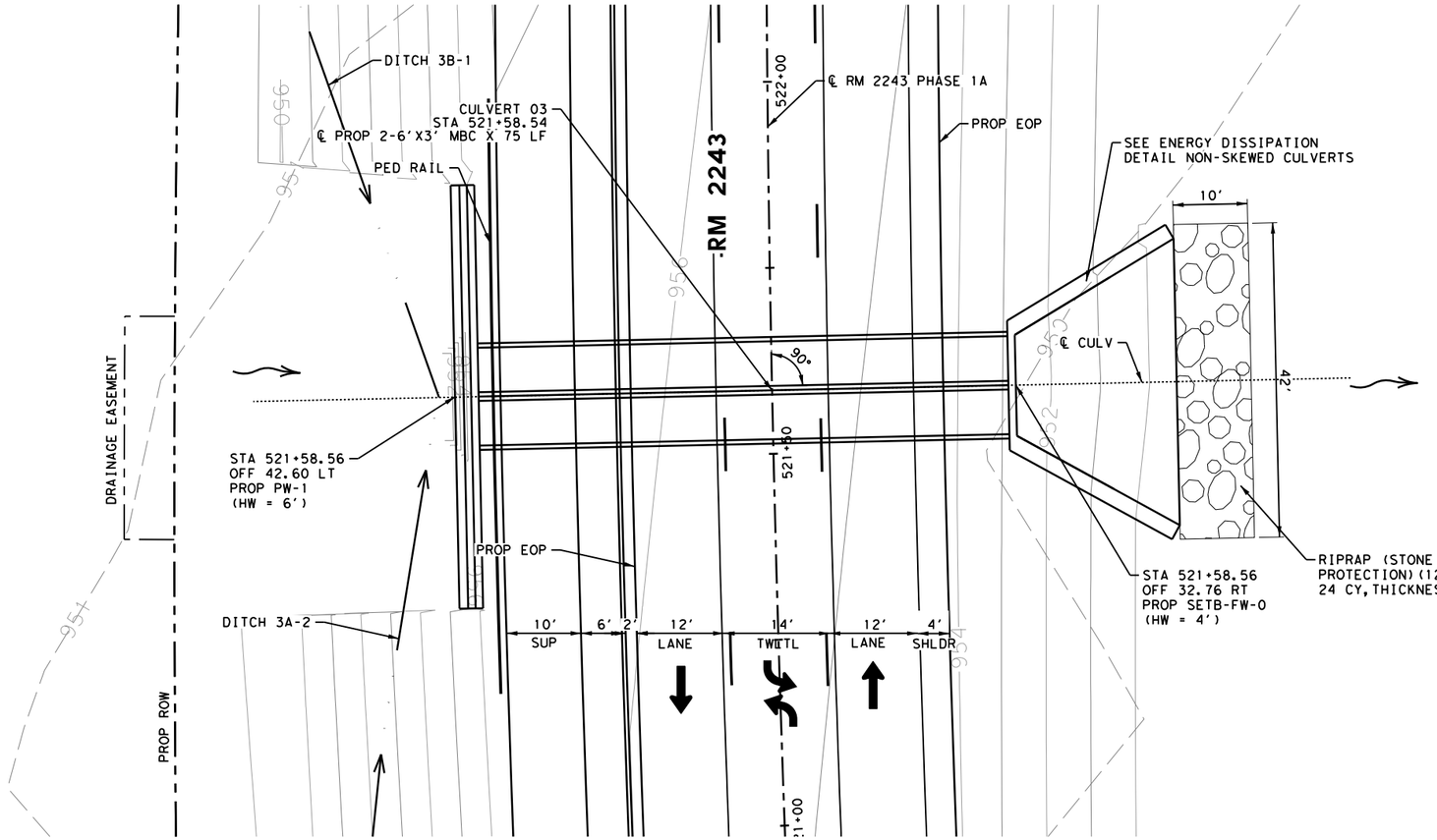

(NOTE: SEE REMOVAL SHEETS FOR REMOVAL ITEMS.)

ITEM	DESCRIPTION	QUANTITY
432-7041	RIPRAP (STONE PROTECTION) (12 IN)	24 CY
462-7011	CONC BOX CULV (6 FT X 3 FT)	150 LF
466-7176	WINGWALL (PW-1) (HW=6 FT)	1 EA
467-7130	SET (TY I) (S= 6 FT) (HW= 4 FT) (6:1) (C)	1 EA

LEGEND:

- PROPOSED DITCH FLOW DIRECTION
- FLOW DIRECTION
- DIRECTION OF TRAFFIC
- 690 EXISTING CONTOURS
- 690 PROPOSED CONTOURS

NOTES:

1. CONTRACTOR IS RESPONSIBLE FOR VERIFYING ALL EXISTING UTILITIES BEFORE CONSTRUCTION.
2. SEE HYDRAULIC DATA SHEET FOR DETAILED ANALYSIS.
3. SEE HORIZONTAL CURVE DATA SHEET FOR MORE INFORMATION.

0 10 20
SCALE: 1"=20' H
1"=10' V

Q 25 =	249.00 CFS
V 25 =	12.81 FT/S
Q 100 =	327.00 CFS
V 100 =	13.37 FT/S

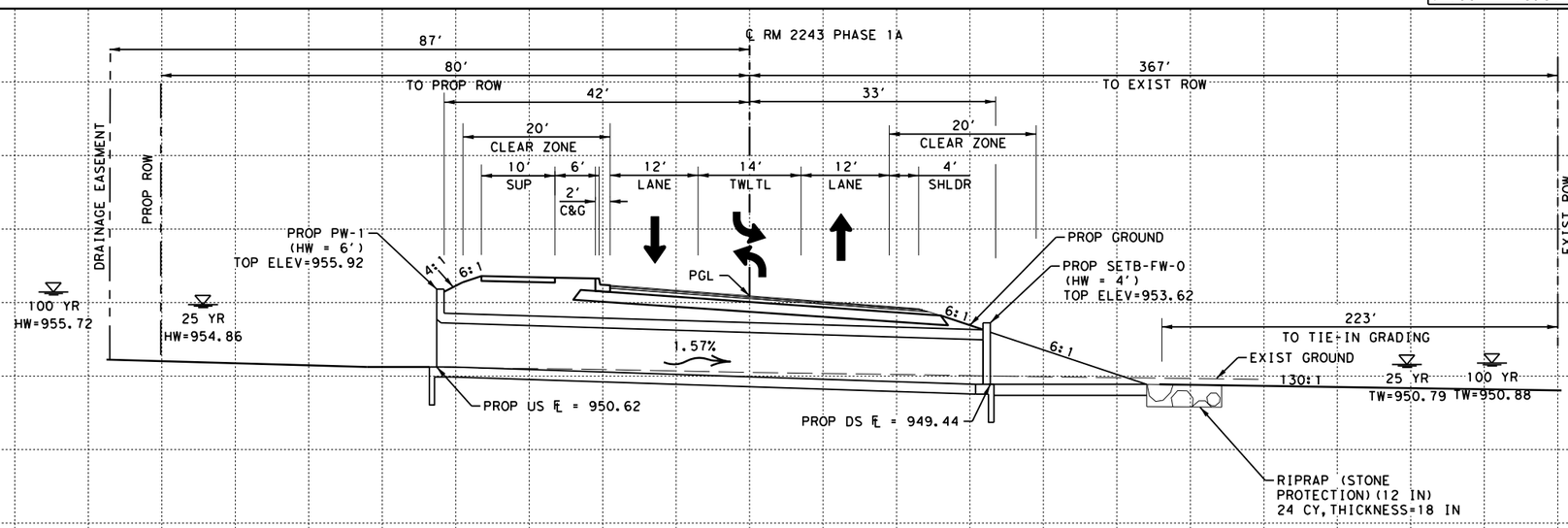

SEE MISCELLANEOUS DETAILS SHEET IN THE ROADWAY SECTION FOR CULVERTS WITH LESS THAN 1FT OF COVER BETWEEN THE BOTTOM OF THE PROPOSED PAVEMENT STRUCTURE AND TOP OF THE PROPOSED ROADWAY CROSS CULVERT

CULVERT 03
STA 521+58.54

PROP 2-6'X3' MBC X 75 LF W/SETB-FW-0 RT & PW-1 LT

STATE OF TEXAS
VANESSA MOLINA
141173
PROFESSIONAL ENGINEER
LICENSED

WILCO TEXAS

BGE, Inc.
101 W Louis Henna Blvd, Suite 400, Austin, TX 78728
Tel: 512-879-0400 ● www.bgeinc.com
TBPE Registration No. F-1046

RM 2243

CULVERT 03 LAYOUT

SHEET 2 OF 11

FED.RD. DIV.NO.	PROJECT NO.	SHEET NO.
6		223

STATE	DIST.	COUNTY	
TEXAS	AUS	WILLIAMSON	
CONT.	SECT.	JOB	HIGHWAY NO.
0914	05	222	RM 2243

4/10/2025 1:01:45 PM pdf.pltcfg
G:\TXC\Projects\County\Williamson\7473-02 RM 2243 Phase 1A\03*CADD\01*Shts\06-DRNG\RM2243*P1A*CULV*03.dgn

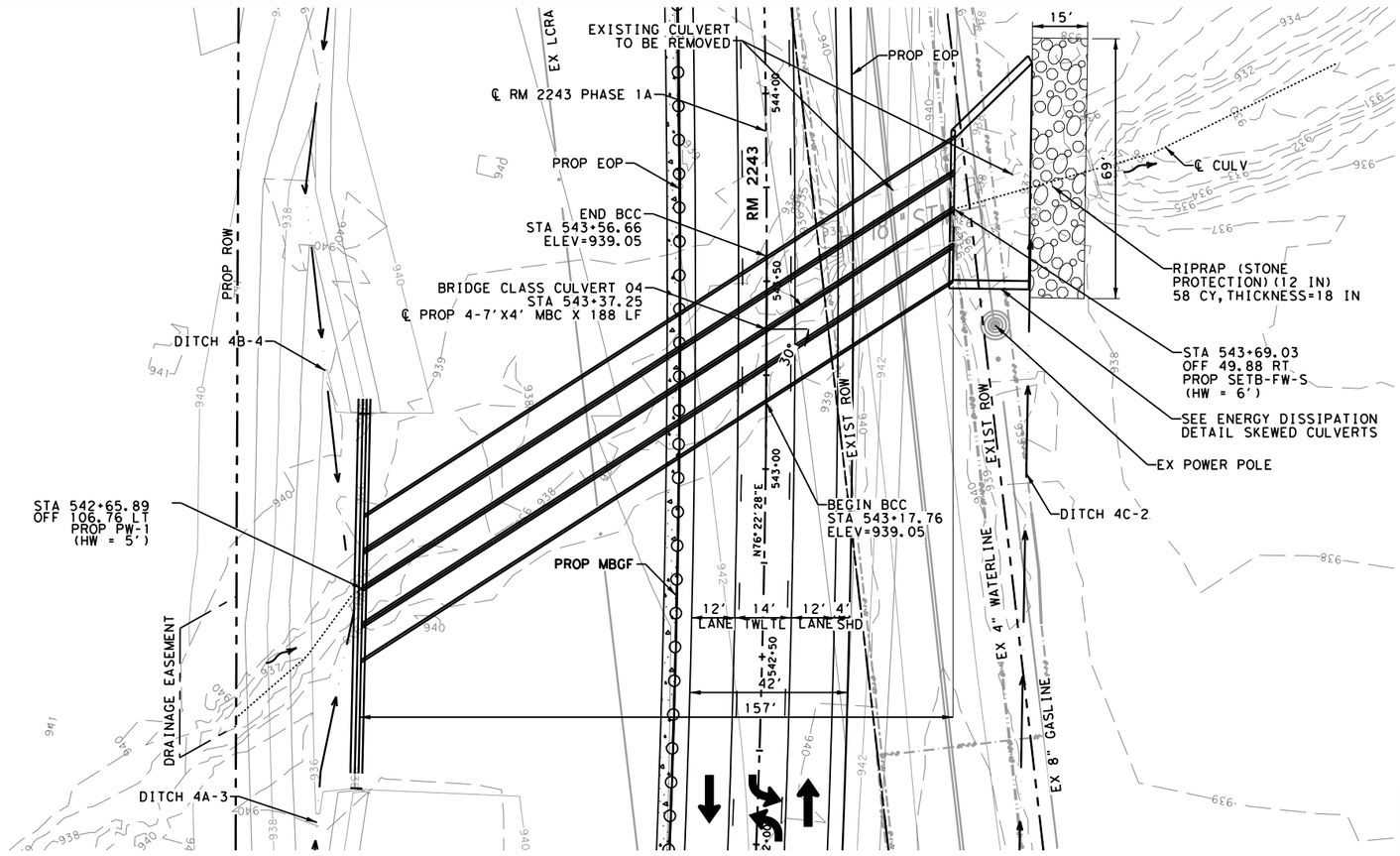

(NOTE: SEE REMOVAL SHEETS FOR REMOVAL ITEMS.)

ITEM	DESCRIPTION	QUANTITY
402-7001	TRENCH EXCAVATION PROTECTION	75 LF
432-7041	RIPRAP (STONE PROTECTION) (12 IN)	58 CY
462-7016	CONC BOX CULV (7 FT X 4 FT)	752 LF
466-7175	WINGWALL (PW-1) (HW=5 FT)	1 EA
467-7162	SET (TY I) (S= 7 FT) (HW= 6 FT) (4:1) (C)	1 EA

LEGEND:

- PROPOSED DITCH FLOW DIRECTION
- FLOW DIRECTION
- DIRECTION OF TRAFFIC
- 690 EXISTING CONTOURS
- 690 PROPOSED CONTOURS

NOTES:

1. CONTRACTOR IS RESPONSIBLE FOR VERIFYING ALL EXISTING UTILITIES BEFORE CONSTRUCTION.
2. SEE HYDRAULIC DATA SHEET FOR DETAILED ANALYSIS.
3. SEE HORIZONTAL CURVE DATA SHEET FOR MORE INFORMATION.
4. ALLOWABLE HEADWATER: 942.53 FT

SCALE: 1"=40' H, 1"=20' V (0, 20, 40)

Q 25 =	1069	CFS
V 25 =	13.41	FT/S
Q 100 =	1453	CFS
V 100 =	12.77	FT/S

DESIGN SPEED: 45 MPH
ADT = 14,990 (2020)
ADT = 44,600 (2040)
FUNCTIONAL CLASS:
SUBURBAN ARTERIAL
NBI NO. 14-246-0-L094-39-002

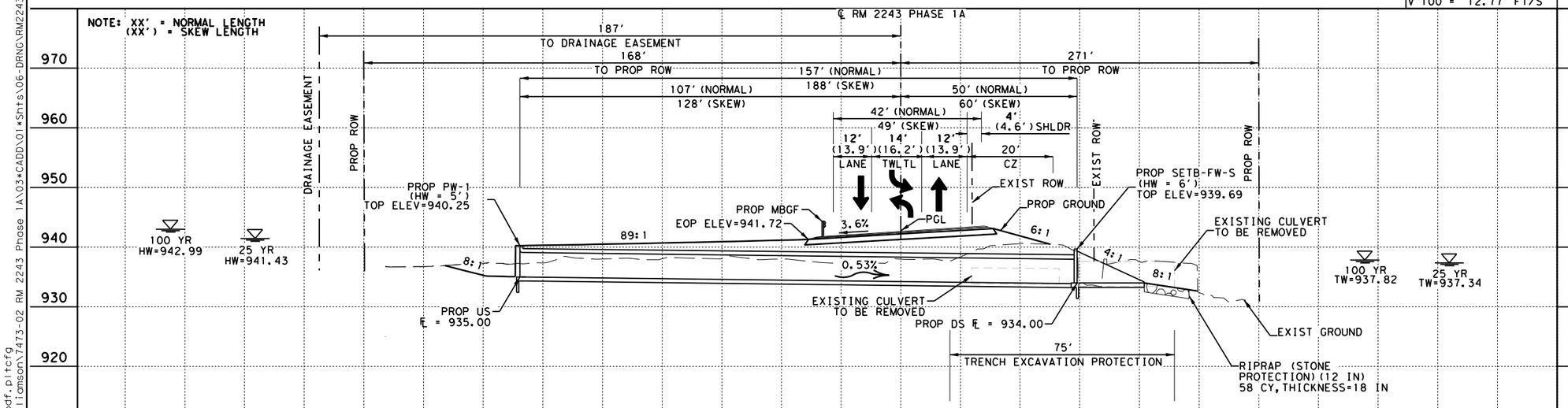

SEE MISCELLANEOUS DETAILS SHEET IN THE ROADWAY SECTION FOR CULVERTS WITH LESS THAN 1FT OF COVER BETWEEN THE BOTTOM OF THE PROPOSED PAVEMENT STRUCTURE AND TOP OF THE PROPOSED ROADWAY CROSS CULVERT

BRIDGE CLASS CULVERT 04
STA 543+37.25

EXIST 1-32" CMP X 30 LF W/PW LT & RT
EXIST 2-50" CMP X 30 LF W/PW LT & RT
PROP 4-7' X4' MBC X 188 LF W/SETB-FW-S RT & PW-1 LT

STATE OF TEXAS
VANESSA MOLINA
141173
PROFESSIONAL LICENSED ENGINEER

WILCO TEXAS

BGE, Inc.
101 W Louis Henna Blvd, Suite 400, Austin, TX 78728
Tel: 512-879-0400 ● www.bgeinc.com
TBPE Registration No. F-1046

RM 2243

BRIDGE CLASS CULVERT 04 LAYOUT

SHEET 3 OF 11

FED.RD. DIV.NO.	PROJECT NO.	SHEET NO.
6		224

STATE	DIST.	COUNTY	
TEXAS	AUS	WILLIAMSON	
CONT.	SECT.	JOB	HIGHWAY NO.
0914	05	222	RM 2243

4/10/2025 1:01:47 PM pdf.pltcfg
G:\TXC\Projects\County\Williamson\7473-02 RM 2243 Phase 1A\03*CADD\01*Shts\06-DRNG\RM2243*P1A*CULV*04.dgn

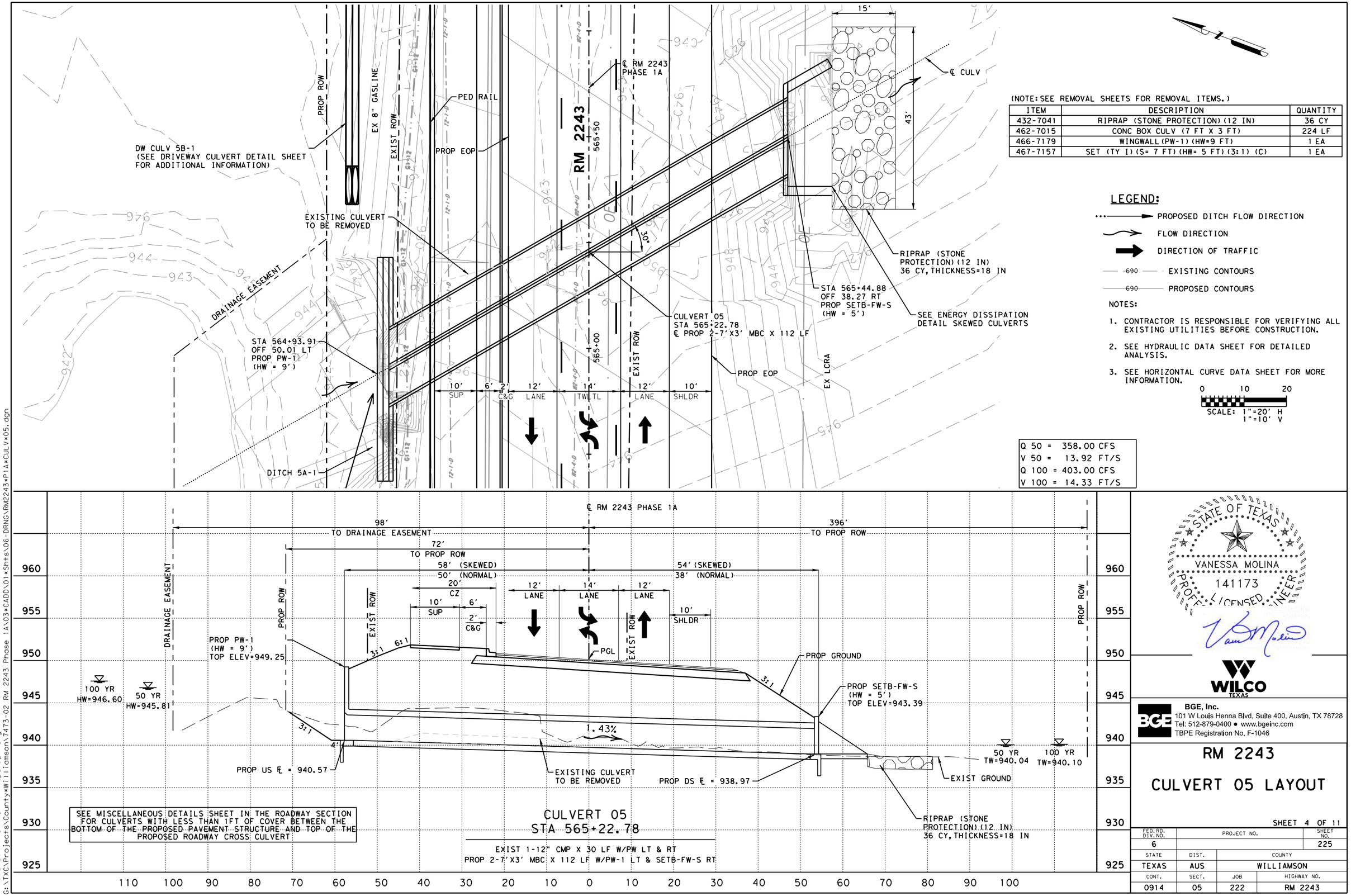

(NOTE: SEE REMOVAL SHEETS FOR REMOVAL ITEMS.)

ITEM	DESCRIPTION	QUANTITY
432-7041	RIPRAP (STONE PROTECTION) (12 IN)	36 CY
462-7015	CONC BOX CULV (7 FT X 3 FT)	224 LF
466-7179	WINGWALL (PW-1) (HW=9 FT)	1 EA
467-7157	SET (TY I) (S= 7 FT) (HW= 5 FT) (3:1) (C)	1 EA

LEGEND:

- PROPOSED DITCH FLOW DIRECTION
- FLOW DIRECTION
- DIRECTION OF TRAFFIC
- 690 EXISTING CONTOURS
- 690 PROPOSED CONTOURS

NOTES:

1. CONTRACTOR IS RESPONSIBLE FOR VERIFYING ALL EXISTING UTILITIES BEFORE CONSTRUCTION.
2. SEE HYDRAULIC DATA SHEET FOR DETAILED ANALYSIS.
3. SEE HORIZONTAL CURVE DATA SHEET FOR MORE INFORMATION.

SCALE: 1"=20' H, 1"=10' V

Q 50 =	358.00 CFS
V 50 =	13.92 FT/S
Q 100 =	403.00 CFS
V 100 =	14.33 FT/S

SEE MISCELLANEOUS DETAILS SHEET IN THE ROADWAY SECTION FOR CULVERTS WITH LESS THAN 1FT OF COVER BETWEEN THE BOTTOM OF THE PROPOSED PAVEMENT STRUCTURE AND TOP OF THE PROPOSED ROADWAY CROSS CULVERT

CULVERT 05
STA 565+22.78

EXIST 1-12" CMP X 30 LF W/PW LT & RT
PROP 2-7'X3' MBC X 112 LF W/PW-1 LT & SETB-FW-S RT

STATE OF TEXAS
VANESSA MOLINA
141173
LICENSED
PROFESSIONAL ENGINEER

WILCO TEXAS

BGE, Inc.
101 W Louis Henna Blvd, Suite 400, Austin, TX 78728
Tel: 512-879-0400 • www.bgeinc.com
TBPE Registration No. F-1046

RM 2243

CULVERT 05 LAYOUT

SHEET 4 OF 11

FED.RD. DIV.NO.	PROJECT NO.		SHEET NO.
6			225
STATE	DIST.	COUNTY	
TEXAS	AUS	WILLIAMSON	
CONT.	SECT.	JOB	HIGHWAY NO.
0914	05	222	RM 2243

4/10/2025 1:01:48 PM pdf.pltcfg
G:\TXC\Projects\County\Williamson\7473-02 RM 2243 Phase 1A\03-CADD\01-Shts\06-DRNG\RM2243-P1A-CULV-05.dgn

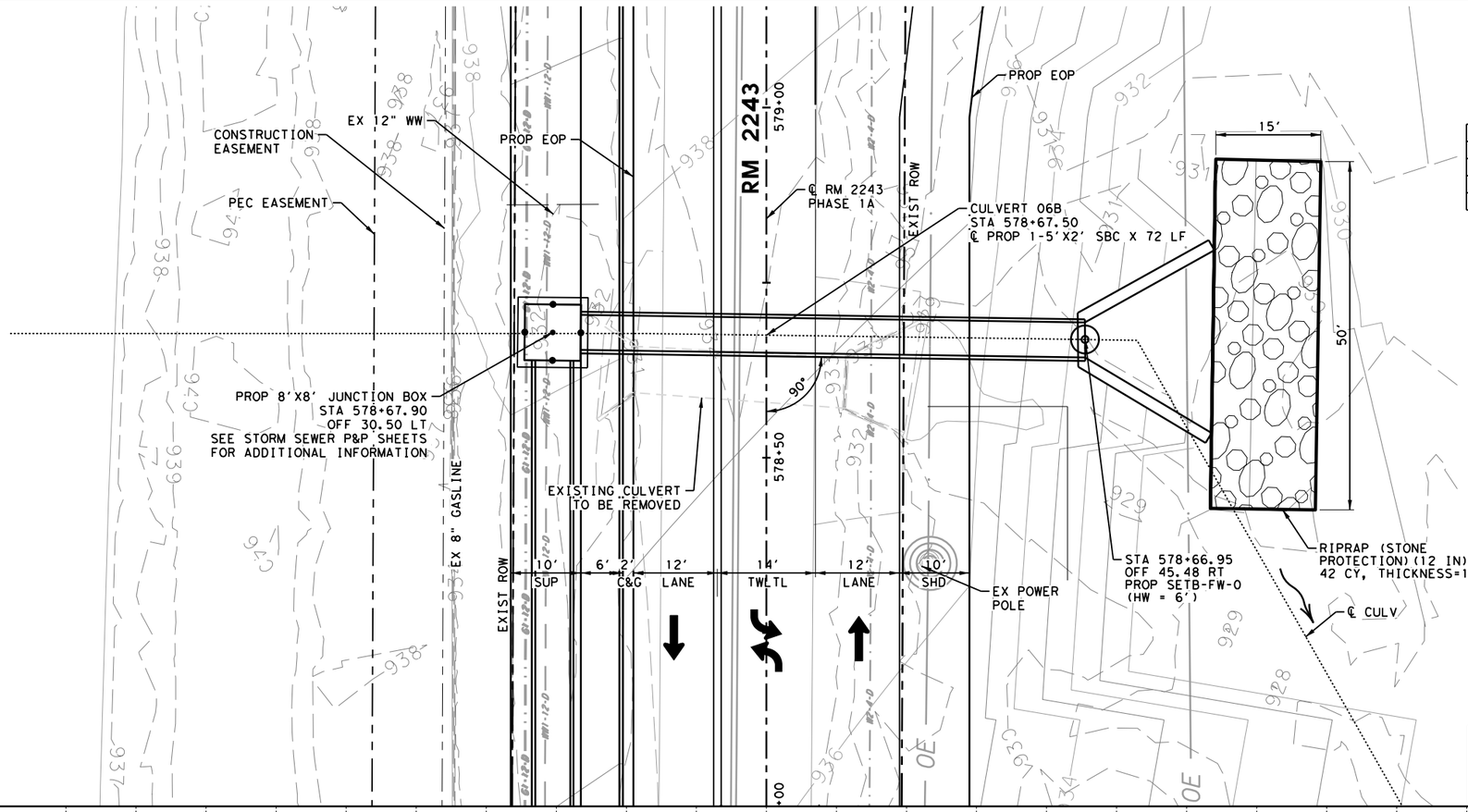

(NOTE: SEE REMOVAL SHEETS FOR REMOVAL ITEMS.)

ITEM	DESCRIPTION	QUANTITY
402-7001	TRENCH EXCAVATION PROTECTION	44 LF
432-7041	RIPRAP (STONE PROTECTION) (12 IN)	42 CY
462-7006	CONC BOX CULV (5 FT X 2 FT)	72 LF
467-7108	SET (TY I) (S= 5 FT) (HW= 6 FT) (4:1) (C)	1 EA

LEGEND:

- PROPOSED DITCH FLOW DIRECTION
- FLOW DIRECTION
- DIRECTION OF TRAFFIC
- 690 EXISTING CONTOURS
- 690 PROPOSED CONTOURS

NOTES:

1. CONTRACTOR IS RESPONSIBLE FOR VERIFYING ALL EXISTING UTILITIES BEFORE CONSTRUCTION.
2. SEE HYDRAULIC DATA SHEET FOR DETAILED ANALYSIS.
3. SEE HORIZONTAL CURVE DATA SHEET FOR MORE INFORMATION.

0 10 20
SCALE: 1"=20' H
1"=10' V

Q 25 =	56.63	CFS
V 25 =	8.48	FT/S
Q 100 =	73.49	CFS
V 100 =	9.13	FT/S

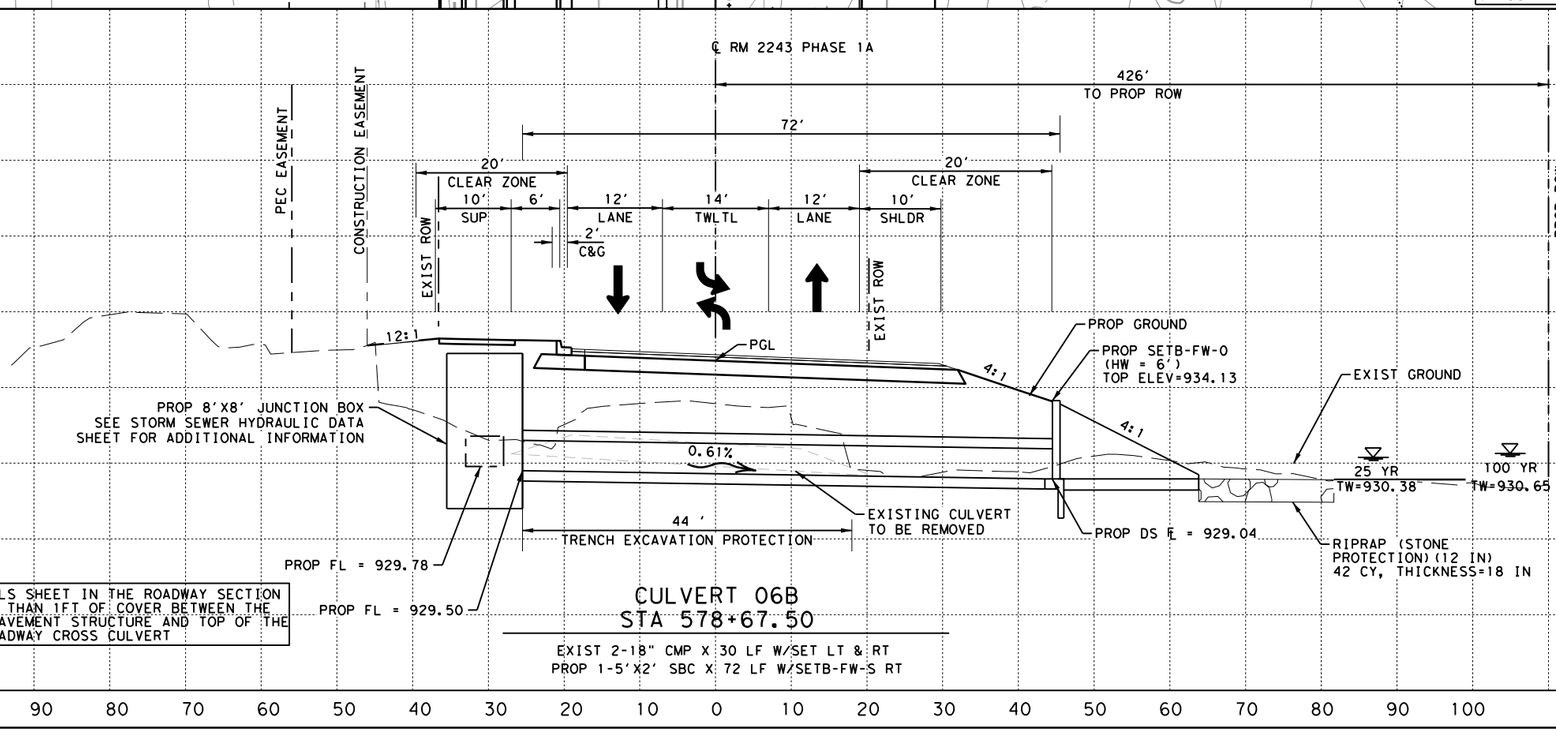

SEE MISCELLANEOUS DETAILS SHEET IN THE ROADWAY SECTION FOR CULVERTS WITH LESS THAN 1FT OF COVER BETWEEN THE BOTTOM OF THE PROPOSED PAVEMENT STRUCTURE AND TOP OF THE PROPOSED ROADWAY CROSS CULVERT

CULVERT 06B
STA 578+67.50

EXIST 2-18" CMP X 30 LF W/SET LT & RT
PROP 1-5'X2' SBC X 72 LF W/SETB-FW-S RT

STATE OF TEXAS
VANESSA MOLINA
141173
PROFESSIONAL LICENSED ENGINEER

WILCO TEXAS

BGE, Inc.
101 W Louis Henna Blvd, Suite 400, Austin, TX 78728
Tel: 512-879-0400 • www.bgeinc.com
TBPE Registration No. F-1046

RM 2243

CULVERT 06 LAYOUT

SHEET 5 OF 11

FED.RD. DIV.NO.	PROJECT NO.	SHEET NO.
6		226

STATE	DIST.	COUNTY
TEXAS	AUS	WILLIAMSON

CONT.	SECT.	JOB	HIGHWAY NO.
0914	05	222	RM 2243

4/10/2025 1:01:50 PM pdf.pltcfg
G:\TXC\Projects\County\Williamson\7473-02 RM 2243 Phase 1A\03*CADD\01*Shts\06-DRNG\RM2243*P1A*CULV*06.dgn

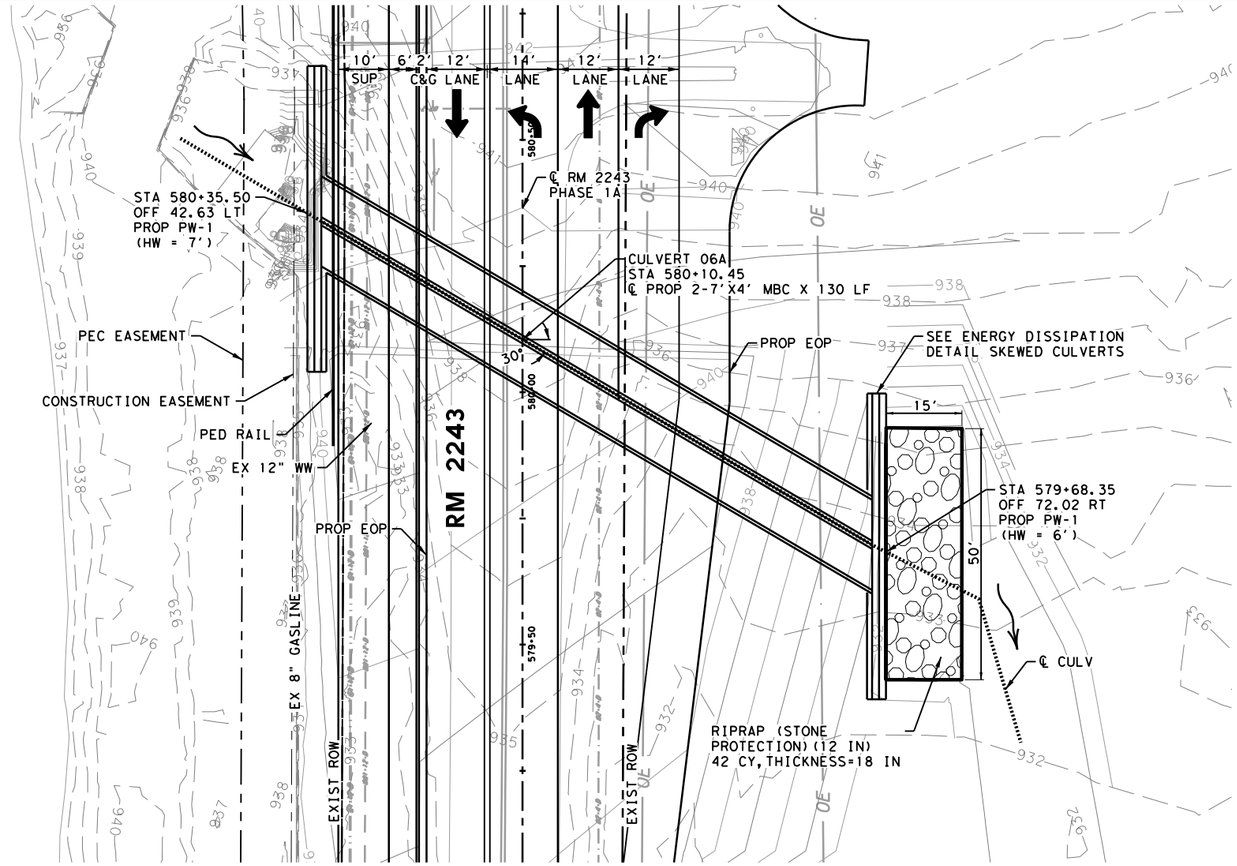

(NOTE: SEE REMOVAL SHEETS FOR REMOVAL ITEMS.)

ITEM	DESCRIPTION	QUANTITY
402-7001	TRENCH EXCAVATION PROTECTION	55 LF
432-7041	RIPRAP (STONE PROTECTION) (12 IN)	42 CY
462-7016	CONC BOX CULV (7 FT X 4 FT)	260 LF
466-7176	WINGWALL (PW - 1) (HW=6 FT)	1 EA
466-7177	WINGWALL (PW - 1) (HW=7 FT)	1 EA

LEGEND:

- PROPOSED DITCH FLOW DIRECTION
- FLOW DIRECTION
- DIRECTION OF TRAFFIC
- 690 EXISTING CONTOURS
- 690 PROPOSED CONTOURS

NOTES:

1. CONTRACTOR IS RESPONSIBLE FOR VERIFYING ALL EXISTING UTILITIES BEFORE CONSTRUCTION.
2. SEE HYDRAULIC DATA SHEET FOR DETAILED ANALYSIS.
3. SEE HORIZONTAL CURVE DATA SHEET FOR MORE INFORMATION.

0 15 30
SCALE: 1"=30' H
1"=10' V

Q 25 =	406.00 CFS
V 25 =	14.7 FT/S
Q 100 =	537.00 CFS
V 100 =	15.81 FT/S

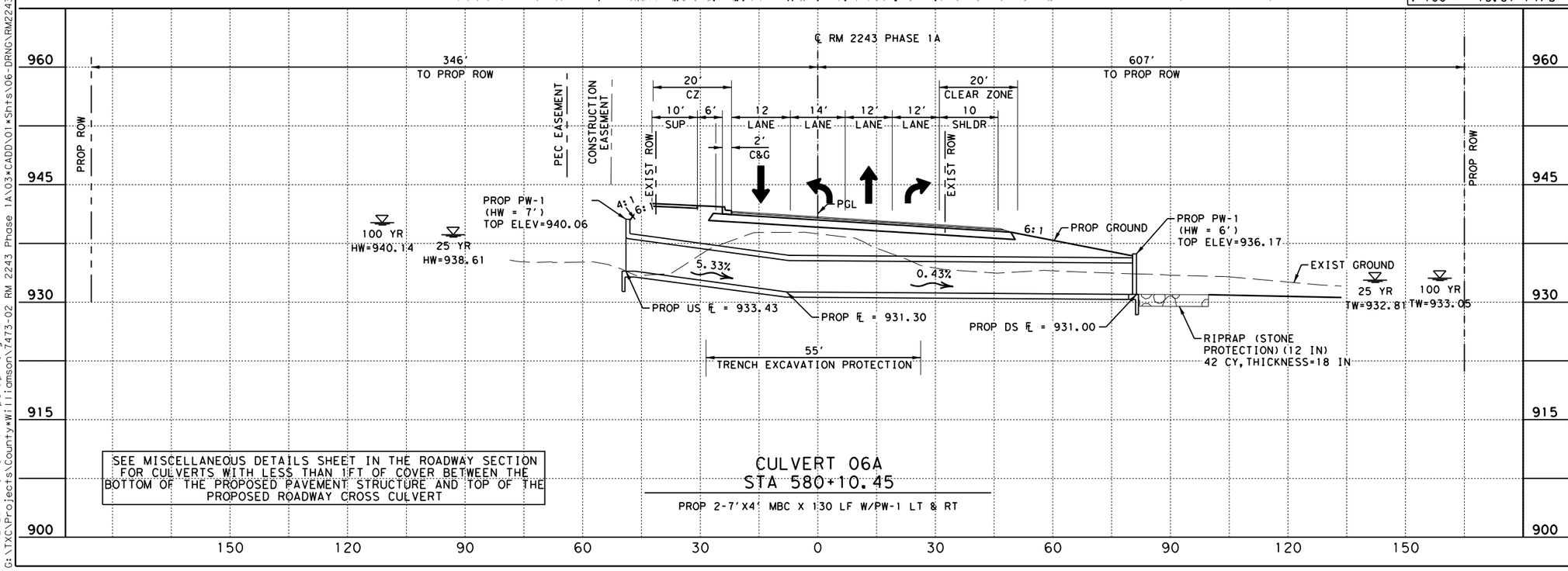

SEE MISCELLANEOUS DETAILS SHEET IN THE ROADWAY SECTION FOR CULVERTS WITH LESS THAN 1FT OF COVER BETWEEN THE BOTTOM OF THE PROPOSED PAVEMENT STRUCTURE AND TOP OF THE PROPOSED ROADWAY CROSS CULVERT

CULVERT 06A
STA 580+10.45

PROP 2-7'X4' MBC X 130 LF W/PW-1 LT & RT

STATE OF TEXAS
VANESSA MOLINA
141173
PROFESSIONAL LICENSED ENGINEER

WILCO TEXAS

BGE, Inc.
101 W Louis Henna Blvd, Suite 400, Austin, TX 78728
Tel: 512-879-0400 ● www.bgeinc.com
TBPE Registration No. F-1046

RM 2243

CULVERT 06A LAYOUT

SHEET 6 OF 11

FED.RD. DIV.NO.	PROJECT NO.		SHEET NO.
6			227
STATE	DIST.	COUNTY	
TEXAS	AUS	WILLIAMSON	
CONT.	SECT.	JOB	HIGHWAY NO.
0914	05	222	RM 2243

4/10/2025 1:01:51 PM pdf.pltcfg
G:\TXC\Projects\County\Williamson\7473-02 RM 2243 Phase 1A\03*CADD\01*Shts\06-DRNG\RM2243*P1A*CULV*06A.dgn

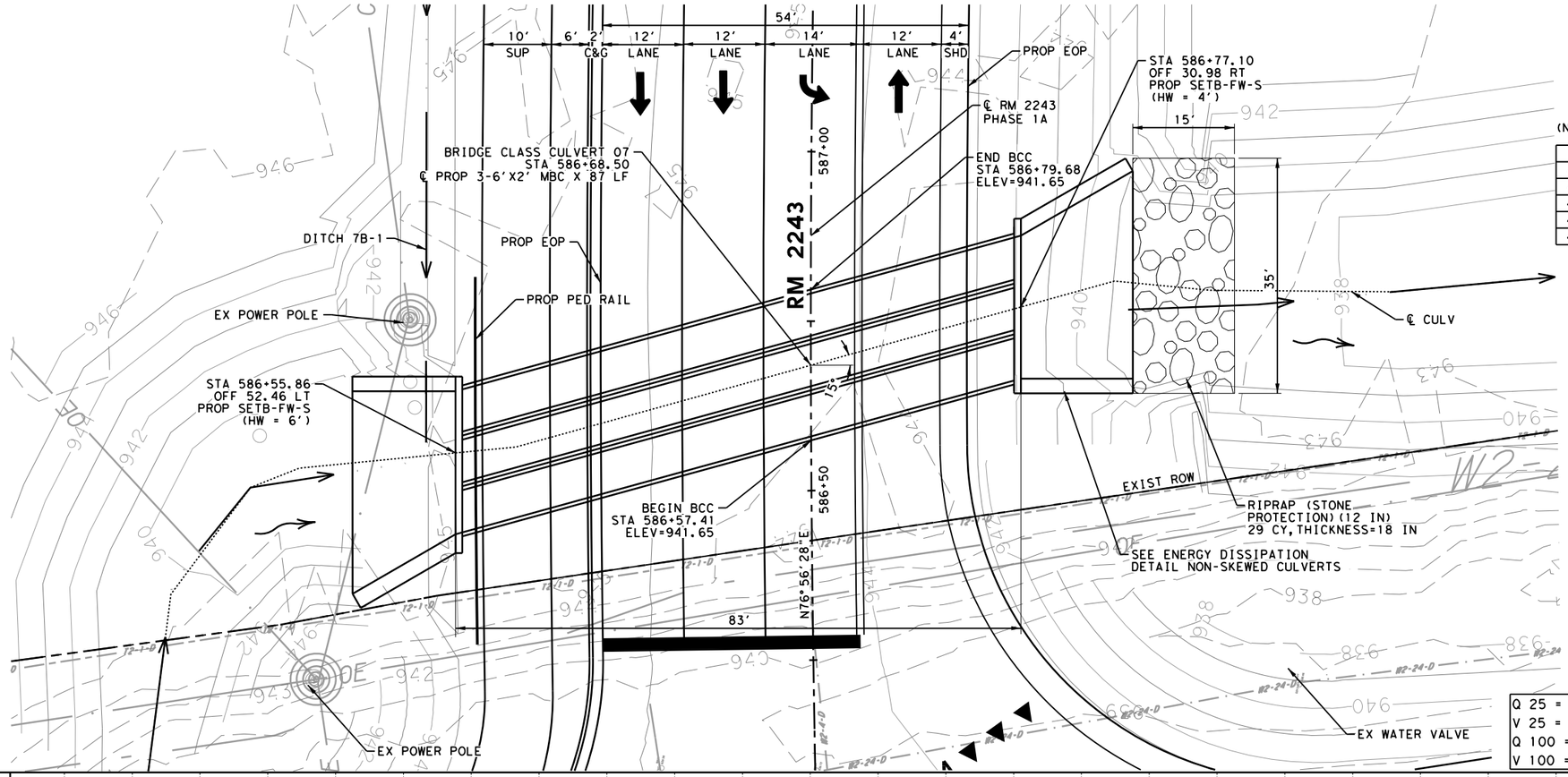

(NOTE: SEE REMOVAL SHEETS FOR REMOVAL ITEMS.)

ITEM	DESCRIPTION	QUANTITY
402-7001	TRENCH EXCAVATION PROTECTION	120 LF
432-7041	RIPRAP (STONE PROTECTION) (12 IN)	29 CY
462-7010	CONC BOX CULV (6 FT X 2 FT)	261 LF
467-7130	SET (TY I) (S= 6 FT) (HW= 4 FT) (6:1) (C)	1 EA
467-7136	SET (TY I) (S= 6 FT) (HW= 6 FT) (3:1) (C)	1 EA

LEGEND:

- PROPOSED DITCH FLOW DIRECTION
- FLOW DIRECTION
- DIRECTION OF TRAFFIC
- 690 EXISTING CONTOURS
- 690 PROPOSED CONTOURS

NOTES:

1. CONTRACTOR IS RESPONSIBLE FOR VERIFYING ALL EXISTING UTILITIES BEFORE CONSTRUCTION.
2. SEE HYDRAULIC DATA SHEET FOR DETAILED ANALYSIS.
3. SEE HORIZONTAL CURVE DATA SHEET FOR MORE INFORMATION.
4. ALLOWABLE HEADWATER: 943.57 FT

0 10 20
SCALE: 1"=20' H
1"=10' V

Q 25 =	266	CFS
V 25 =	12.56	FT/S
Q 100 =	349	CFS
V 100 =	9.69	FT/S

DESIGN SPEED: 45 MPH
ADT = 14,990 (2020)
ADT = 44,600 (2040)
FUNCTIONAL CLASS:
SUBURBAN ARTERIAL
NBI NO. 14-246-0-L094-39-003

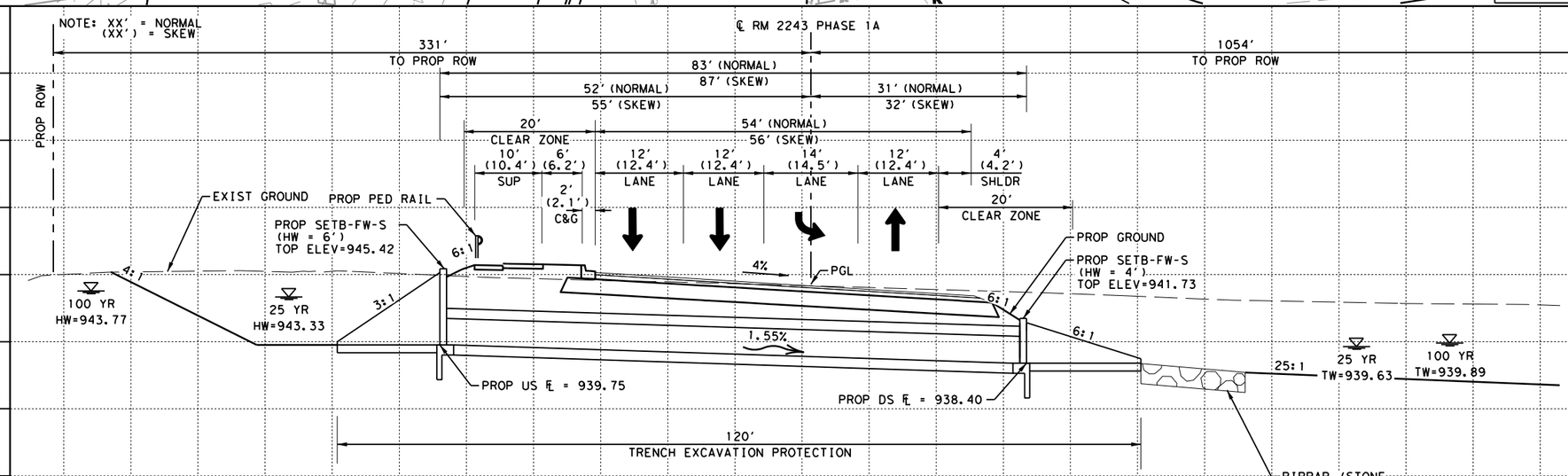

SEE MISCELLANEOUS DETAILS SHEET IN THE ROADWAY SECTION FOR CULVERTS WITH LESS THAN 1FT OF COVER BETWEEN THE BOTTOM OF THE PROPOSED PAVEMENT STRUCTURE AND TOP OF THE PROPOSED ROADWAY CROSS CULVERT

BRIDGE CLASS CULVERT 07
STA 586+68.50

PROP 3-6'X2' MBC X 87 LF W/SETB-FW-S LT & RT

STATE OF TEXAS
VANESSA MOLINA
141173
LICENSED PROFESSIONAL ENGINEER

WILCO TEXAS

BGE, Inc.
101 W Louis Henna Blvd, Suite 400, Austin, TX 78728
Tel: 512-879-0400 • www.bgeinc.com
TBPE Registration No. F-1046

RM 2243

BRIDGE CLASS CULVERT 07 LAYOUT

SHEET 7 OF 11

FED.RD. DIV.NO.	PROJECT NO.	SHEET NO.
6		228

STATE	DIST.	COUNTY	
TEXAS	AUS	WILLIAMSON	
CONT.	SECT.	JOB	HIGHWAY NO.
0914	05	222	RM 2243

4/10/2025 1:01:53 PM pdf.pltcfg
G:\TXC\Projects\County\Williamson\7473-02 RM 2243 Phase 1A\03*CADD\01*Shts\06-DRNG\RM2243*P1A*CULV*07.dgn

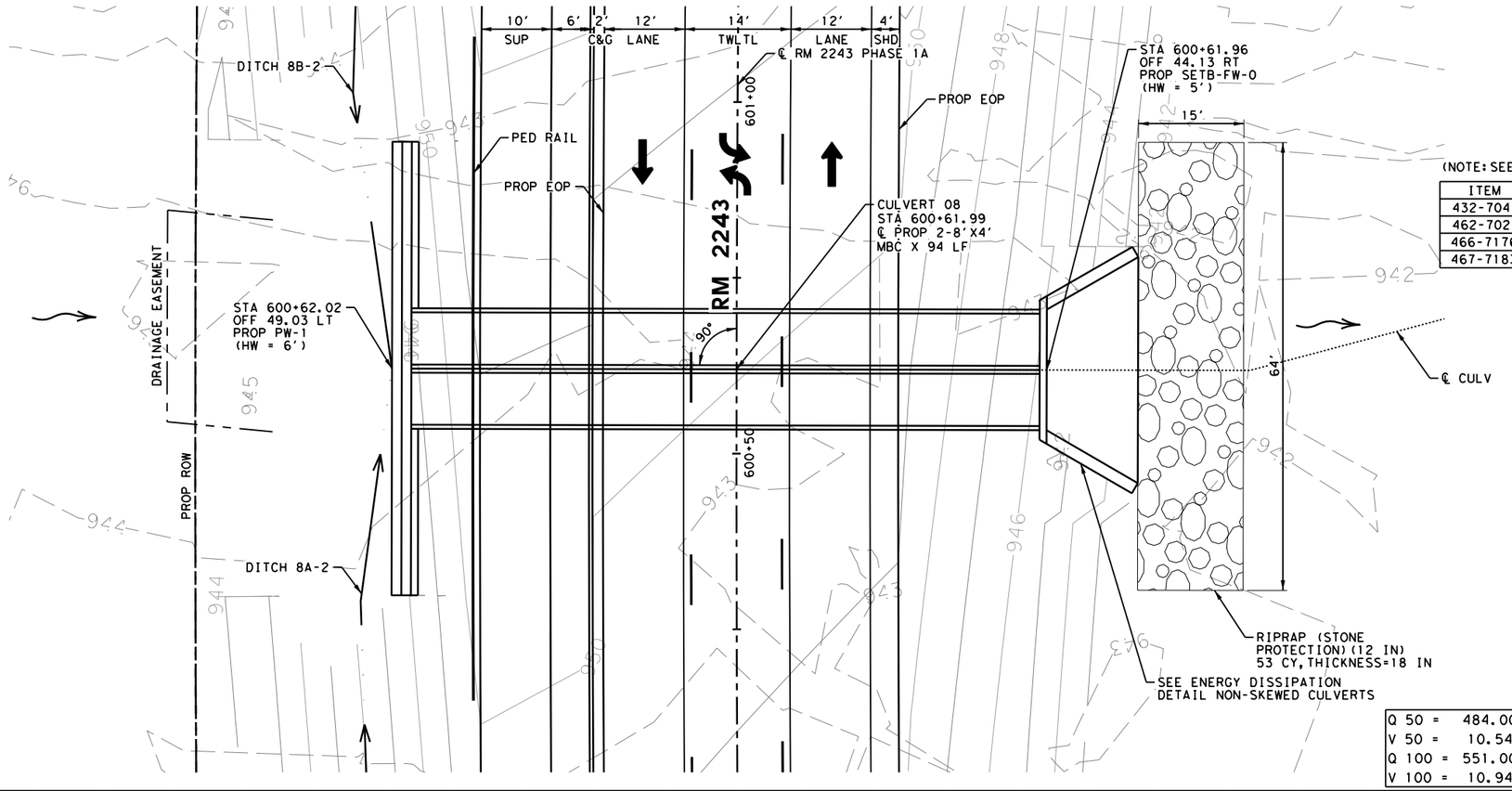

(NOTE: SEE REMOVAL SHEETS FOR REMOVAL ITEMS.)

ITEM	DESCRIPTION	QUANTITY
432-7041	RIPRAP (STONE PROTECTION) (12 IN)	53 CY
462-7021	CONC BOX CULV (8 FT X 4 FT)	188 LF
466-7176	WINGWALL (PW-1) (HW=6 FT)	1 EA
467-7183	SET (TY I) (S=8 FT) (HW=5 FT) (3:1) (C)	1 EA

LEGEND:

- PROPOSED DITCH FLOW DIRECTION
- FLOW DIRECTION
- DIRECTION OF TRAFFIC
- 690 EXISTING CONTOURS
- 690 PROPOSED CONTOURS

NOTES:

1. CONTRACTOR IS RESPONSIBLE FOR VERIFYING ALL EXISTING UTILITIES BEFORE CONSTRUCTION.
2. SEE HYDRAULIC DATA SHEET FOR DETAILED ANALYSIS.
3. SEE HORIZONTAL CURVE DATA SHEET FOR MORE INFORMATION.

0 10 20
SCALE: 1"=20' H
1"=10' V

Q 50 =	484.00 CFS
V 50 =	10.54 FT/S
Q 100 =	551.00 CFS
V 100 =	10.94 FT/S

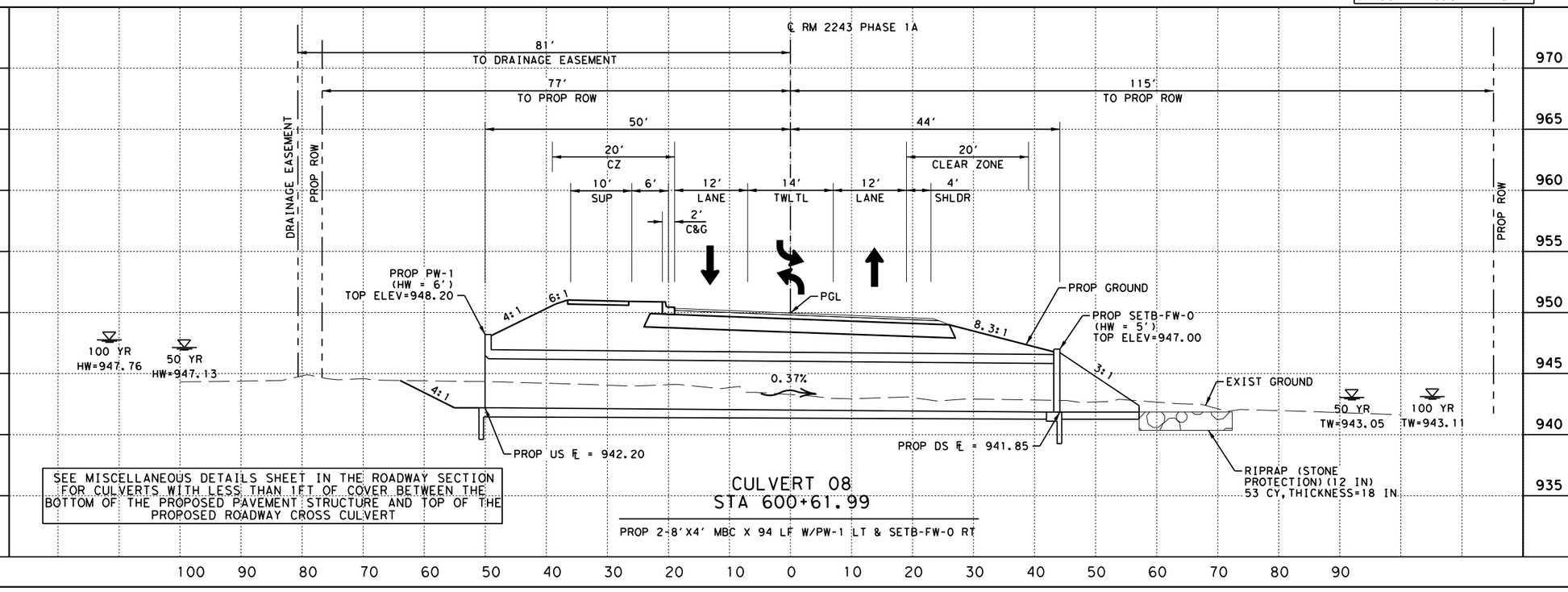

SEE MISCELLANEOUS DETAILS SHEET IN THE ROADWAY SECTION FOR CULVERTS WITH LESS THAN 1FT OF COVER BETWEEN THE BOTTOM OF THE PROPOSED PAVEMENT STRUCTURE AND TOP OF THE PROPOSED ROADWAY CROSS CULVERT

CULVERT 08
STA 600+61.99

PROP 2-8'X4' MBC X 94 LF W/PW-1 LT & SETB-FW-0 RT

STATE OF TEXAS
VANESSA MOLINA
141173
LICENSED PROFESSIONAL ENGINEER

WILCO TEXAS

BGE, Inc.
101 W Louis Henna Blvd, Suite 400, Austin, TX 78728
Tel: 512-879-0400 • www.bgeinc.com
TBPE Registration No. F-1046

RM 2243

CULVERT 08 LAYOUT

SHEET 8 OF 11

FED.RD. DIV.NO.	PROJECT NO.		SHEET NO.
6			229
STATE	DIST.	COUNTY	
TEXAS	AUS	WILLIAMSON	
CONT.	SECT.	JOB	HIGHWAY NO.
0914	05	222	RM 2243

4/10/2025 1:01:54 PM
G:\TXC\Projects\County\Williamson\7473-02 RM 2243 Phase 1A\03*CADD\01*Shts\06-DRNG\RM2243*P1A*CULV*08.dgn pdf.pltcfg

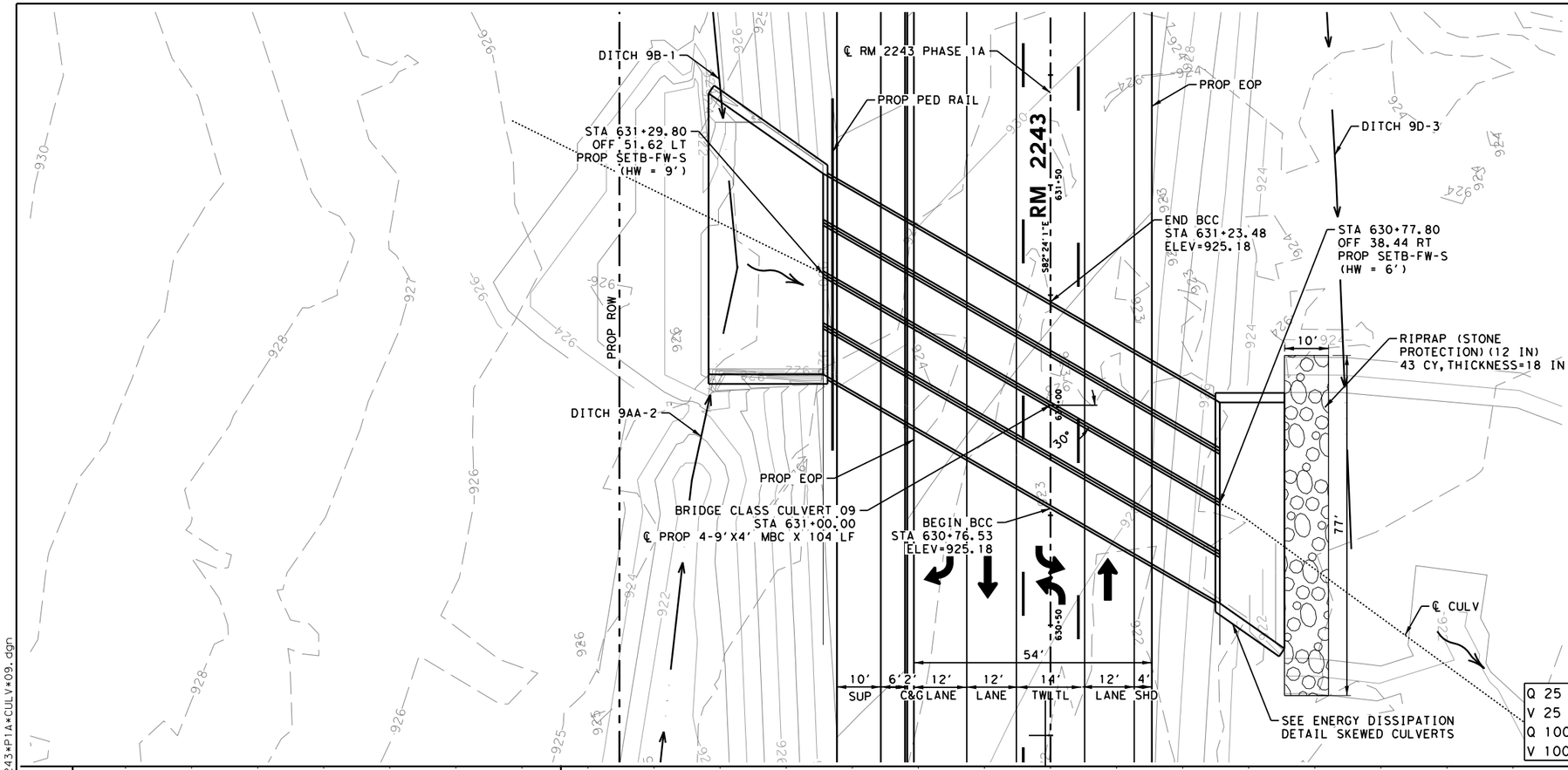

(NOTE: SEE REMOVAL SHEETS FOR REMOVAL ITEMS.)

ITEM	DESCRIPTION	QUANTITY
432-7041	RIPRAP (STONE PROTECTION) (12 IN)	43 CY
462-7026	CONC BOX CULV (9 FT X 4 FT)	416 LF
467-7209	SET (TY I) (S= 9 FT) (HW= 6 FT) (3:1) (C)	1 EA
467-7218	SET (TY I) (S= 9 FT) (HW= 9 FT) (3:1) (C)	1 EA

LEGEND:

- PROPOSED DITCH FLOW DIRECTION
- FLOW DIRECTION
- DIRECTION OF TRAFFIC
- 690 EXISTING CONTOURS
- 690 PROPOSED CONTOURS

NOTES:

1. CONTRACTOR IS RESPONSIBLE FOR VERIFYING ALL EXISTING UTILITIES BEFORE CONSTRUCTION.
2. SEE HYDRAULIC DATA SHEET FOR DETAILED ANALYSIS.
3. SEE HORIZONTAL CURVE DATA SHEET FOR MORE INFORMATION.
4. ALLOWABLE HEADWATER: 928 FT

0 15 30
SCALE: 1"=30' H
1"=15' V

Q 25 =	1413 CFS
V 25 =	14.3 FT/S
Q 100 =	1930 CFS
V 100 =	13.40 FT/S

DESIGN SPEED: 60 MPH
ADT = 14,990 (2020)
ADT = 44,600 (2040)
FUNCTIONAL CLASS:
SUBURBAN ARTERIAL
NBI NO. 14-246-0-L094-39-004

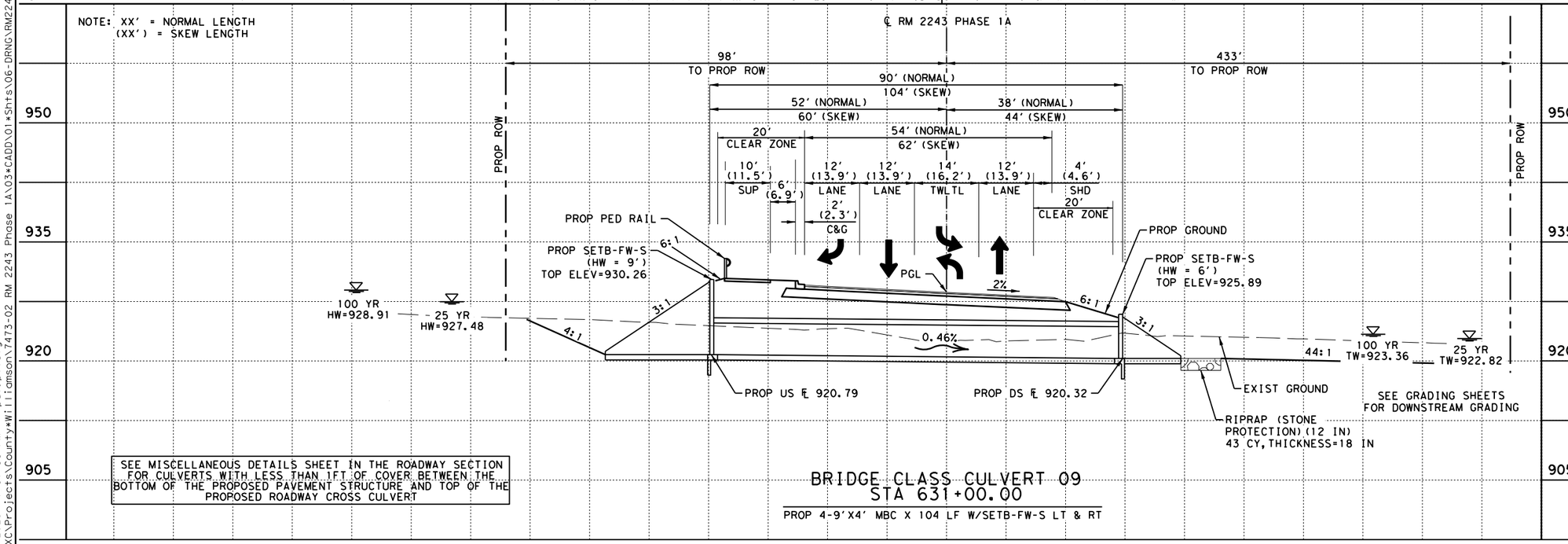

SEE MISCELLANEOUS DETAILS SHEET IN THE ROADWAY SECTION FOR CULVERTS WITH LESS THAN 1FT OF COVER BETWEEN THE BOTTOM OF THE PROPOSED PAVEMENT STRUCTURE AND TOP OF THE PROPOSED ROADWAY CROSS CULVERT

BRIDGE CLASS CULVERT 09
STA 631+00.00

PROP 4-9'X4' MBC X 104 LF W/SETB-FW-S LT & RT

VANESSA MOLINA
141173
STATE OF TEXAS
PROFESSIONAL LICENSED ENGINEER

WILCO TEXAS

BGE, Inc.
101 W Louis Henna Blvd, Suite 400, Austin, TX 78728
Tel: 512-879-0400 • www.bgeinc.com
TBPE Registration No. F-1046

RM 2243

BRIDGE CLASS CULVERT 09 LAYOUT

SHEET 9 OF 11

FED.RD. DIV.NO.	PROJECT NO.		SHEET NO.
6			230
STATE	DIST.	COUNTY	
TEXAS	AUS	WILLIAMSON	
CONT.	SECT.	JOB	HIGHWAY NO.
0914	05	222	RM 2243

4/10/2025 1:01:58 PM pdf.pltcfg
G:\TXC\Projects\County*Williamson\7473-02 RM 2243 Phase 1A\03*CADD\01*Shts\06-DRNG\RM2243*P1A*CULV*09.dgn

(NOTE: SEE REMOVAL SHEETS FOR REMOVAL ITEMS.)

ITEM	DESCRIPTION	QUANTITY
420-7147	CL S CONC (CULV)	5 CY
432-7002	RIPRAP (CONC) (5 IN)	2 CY
432-7041	RIPRAP (STONE PROTECTION) (12 IN)	21 CY
462-7020	CONC BOX CULV (8 FT X 3 FT)	186 LF
467-7179	SET (TY I) (S=8 FT) (HW=4 FT) (3:1) (C)	2 EA

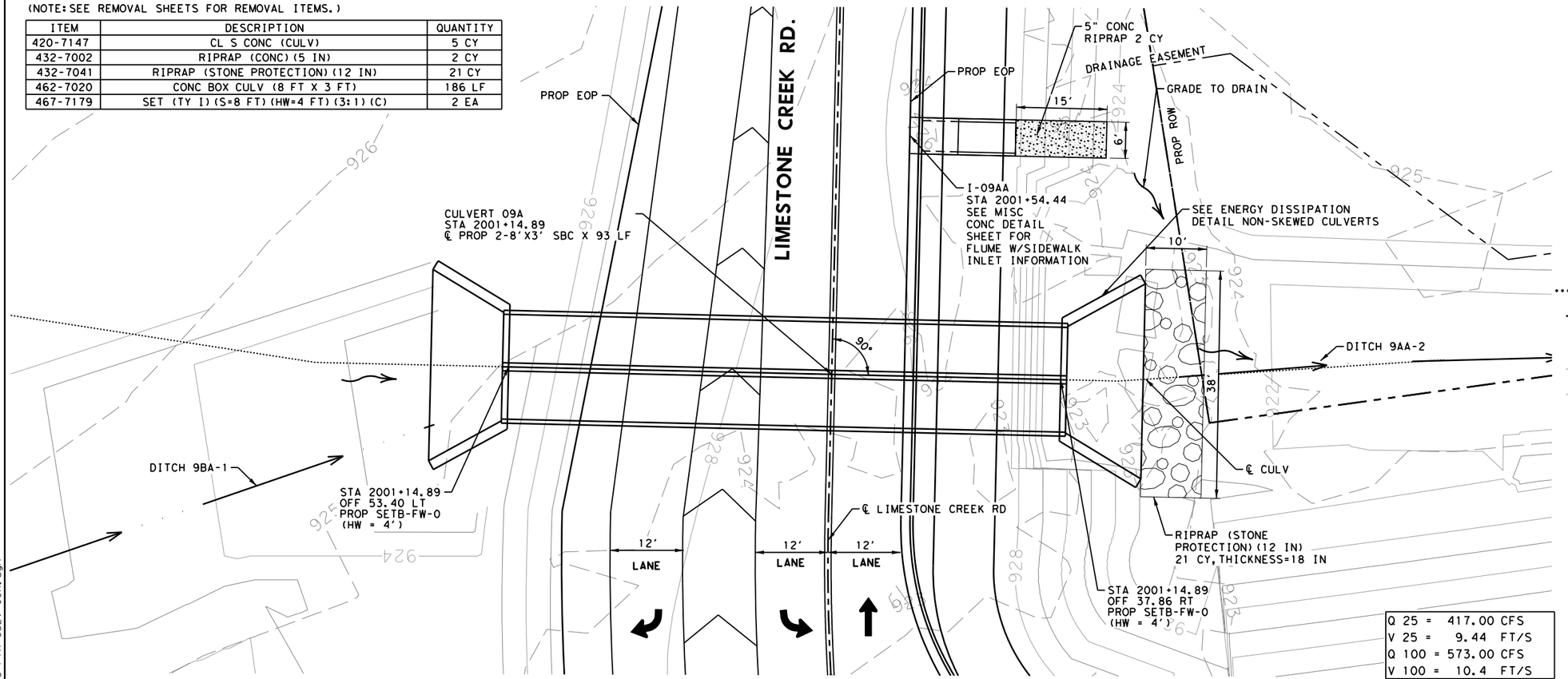

LEGEND:

- PROPOSED DITCH FLOW DIRECTION
- FLOW DIRECTION
- DIRECTION OF TRAFFIC
- 690 EXISTING CONTOURS
- 690 PROPOSED CONTOURS

NOTES:

1. CONTRACTOR IS RESPONSIBLE FOR VERIFYING ALL EXISTING UTILITIES BEFORE CONSTRUCTION.
2. SEE HYDRAULIC DATA SHEET FOR DETAILED ANALYSIS.
3. SEE HORIZONTAL CURVE DATA SHEET FOR MORE INFORMATION.

SCALE: 1"=20' H, 1"=10' V (0, 10, 20)

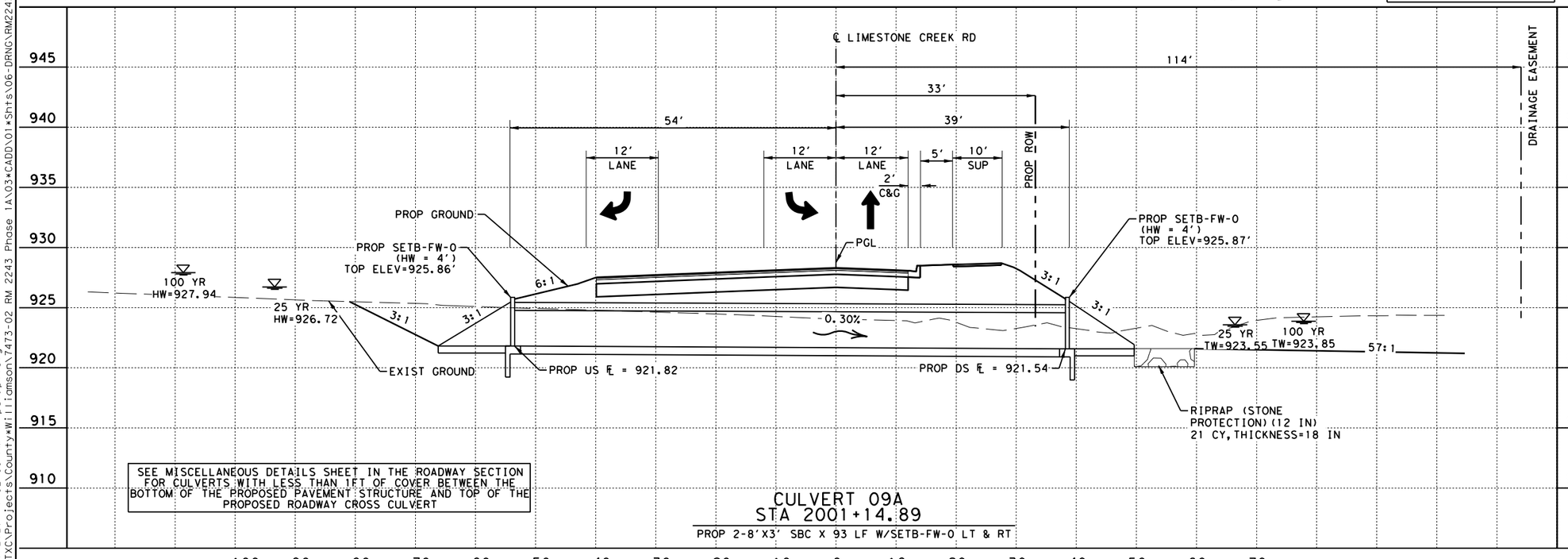

SEE MISCELLANEOUS DETAILS SHEET IN THE ROADWAY SECTION FOR CULVERTS WITH LESS THAN 1FT OF COVER BETWEEN THE BOTTOM OF THE PROPOSED PAVEMENT STRUCTURE AND TOP OF THE PROPOSED ROADWAY CROSS CULVERT

CULVERT 09A
STA 2001+14.89

PROP 2-8'X3' SBC X 93 LF W/SETB-FW-0 LT & RT

STATE OF TEXAS
VANESSA MOLINA
141173
PROFESSIONAL LICENSED ENGINEER

WILCO TEXAS

BGE, Inc.
101 W Louis Henna Blvd, Suite 400, Austin, TX 78728
Tel: 512-879-0400 • www.bgeinc.com
TBPE Registration No. F-1046

RM 2243

CULVERT 09A LAYOUT

SHEET 10 OF 11

FED.RD. DIV.NO.	PROJECT NO.		SHEET NO.
6			231
STATE	DIST.	COUNTY	
TEXAS	AUS	WILLIAMSON	
CONT.	SECT.	JOB	HIGHWAY NO.
0914	05	222	RM 2243

4/10/2025 1:02:00 PM pdf.pltcfg
G:\TXC\Projects\County\Williamson\7473-02 RM 2243 Phase 1A\03*CADD\01*Shts\06-DRNG\RM2243*P1A*CULV*09A.dgn

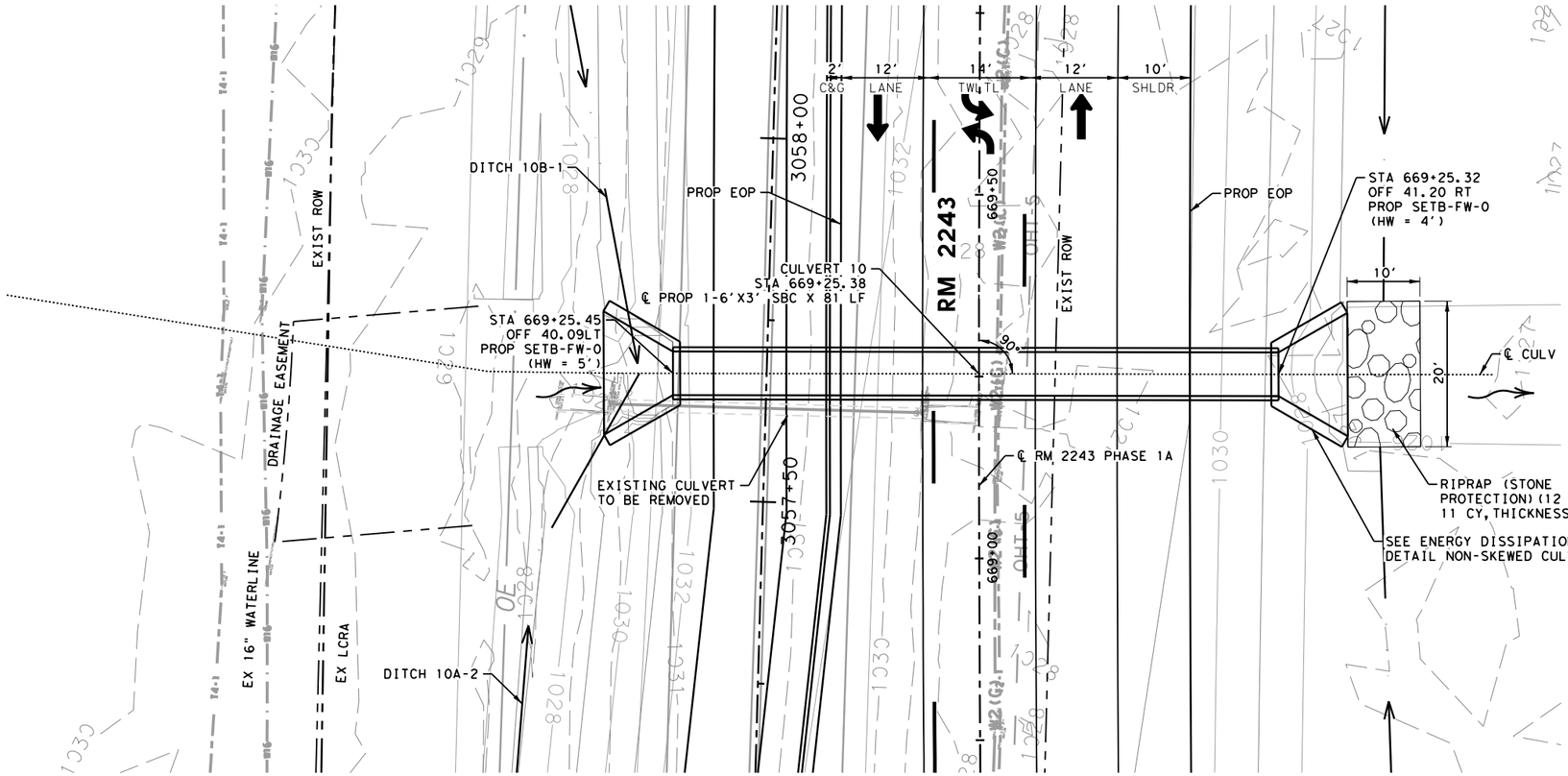

(NOTE: SEE REMOVAL SHEETS FOR REMOVAL ITEMS.)

ITEM	DESCRIPTION	QUANTITY
402-7001	TRENCH EXCAVATION PROTECTION	30 LF
432-7041	RIPRAP (STONE PROTECTION) (12 IN)	11 CY
462-7011	CONC BOX CULV (6 FT X 3 FT)	81 LF
467-7129	SET (TY I) (S= 6 FT) (HW= 4 FT) (4:1) (C)	1 EA
467-7133	SET (TY I) (S= 6 FT) (HW= 5 FT) (4:1) (C)	1 EA

LEGEND:

- PROPOSED DITCH FLOW DIRECTION
- FLOW DIRECTION
- DIRECTION OF TRAFFIC
- 690 EXISTING CONTOURS
- 690 PROPOSED CONTOURS

NOTES:

1. CONTRACTOR IS RESPONSIBLE FOR VERIFYING ALL EXISTING UTILITIES BEFORE CONSTRUCTION.
2. SEE HYDRAULIC DATA SHEET FOR DETAILED ANALYSIS.
3. SEE HORIZONTAL CURVE DATA SHEET FOR MORE INFORMATION.

0 10 20
SCALE: 1"=20' H
1"=10' V

Q 50 =	20.00 CFCFS
V 50 =	11.8 FT/S
Q 100 =	37.00 CFCFS
V 100 =	12.2 FT/S

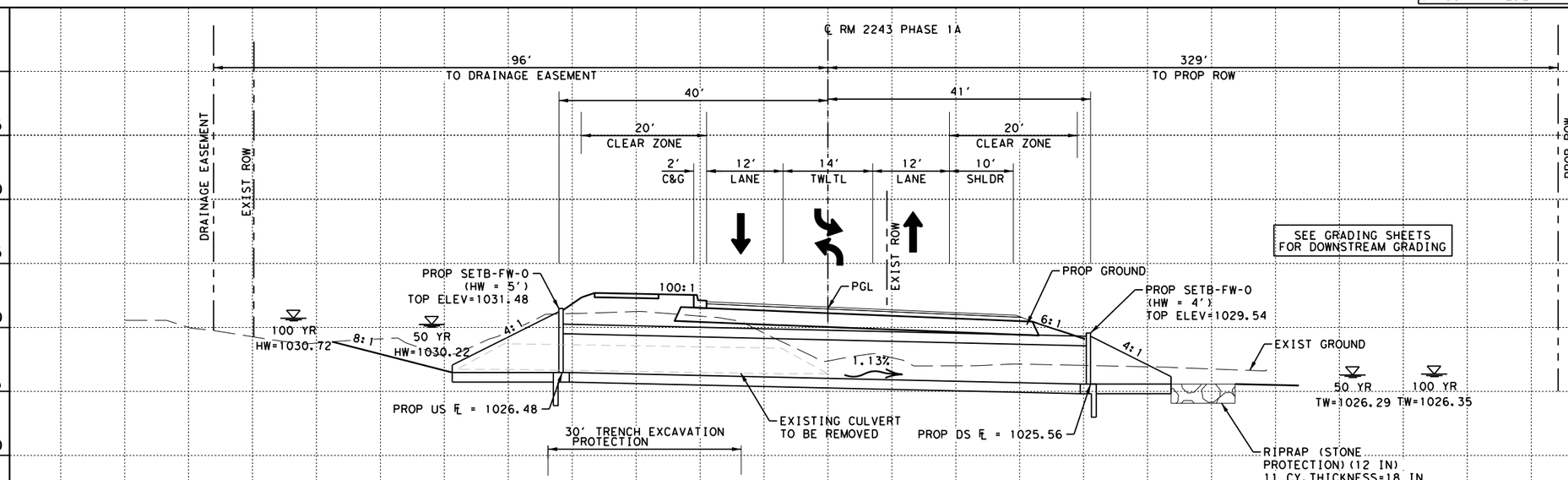

SEE MISCELLANEOUS DETAILS SHEET IN THE ROADWAY SECTION FOR CULVERTS WITH LESS THAN 1FT OF COVER BETWEEN THE BOTTOM OF THE PROPOSED PAVEMENT STRUCTURE AND TOP OF THE PROPOSED ROADWAY CROSS CULVERT

CULVERT 10
STA 669+25.38

EXIST 1-24" CMP X 43 LF
PROP 1-6'X3' SBC X 81 LF W/SETB-FW-0 LT & RT

STATE OF TEXAS
VANESSA MOLINA
141173
PROFESSIONAL LICENSED ENGINEER

WILCO TEXAS

BGE, Inc.
101 W Louis Henna Blvd, Suite 400, Austin, TX 78728
Tel: 512-879-0400 • www.bgeinc.com
TBPE Registration No. F-1046

RM 2243

CULVERT 10 LAYOUT

SHEET 11 OF 11

FED.RD. DIV.NO.	PROJECT NO.		SHEET NO.
6			232
STATE	DIST.	COUNTY	
TEXAS	AUS	WILLIAMSON	
CONT.	SECT.	JOB	HIGHWAY NO.
0914	05	222	RM 2243

4/10/2025 1:02:02 PM pdf.pltcfg
G:\TXC\Projects\County\Williamson\7473-02 RM 2243 Phase 1A\03*CADD\01*Shts\06-DRNG\RM2243*P1A*CULV*10.dgn

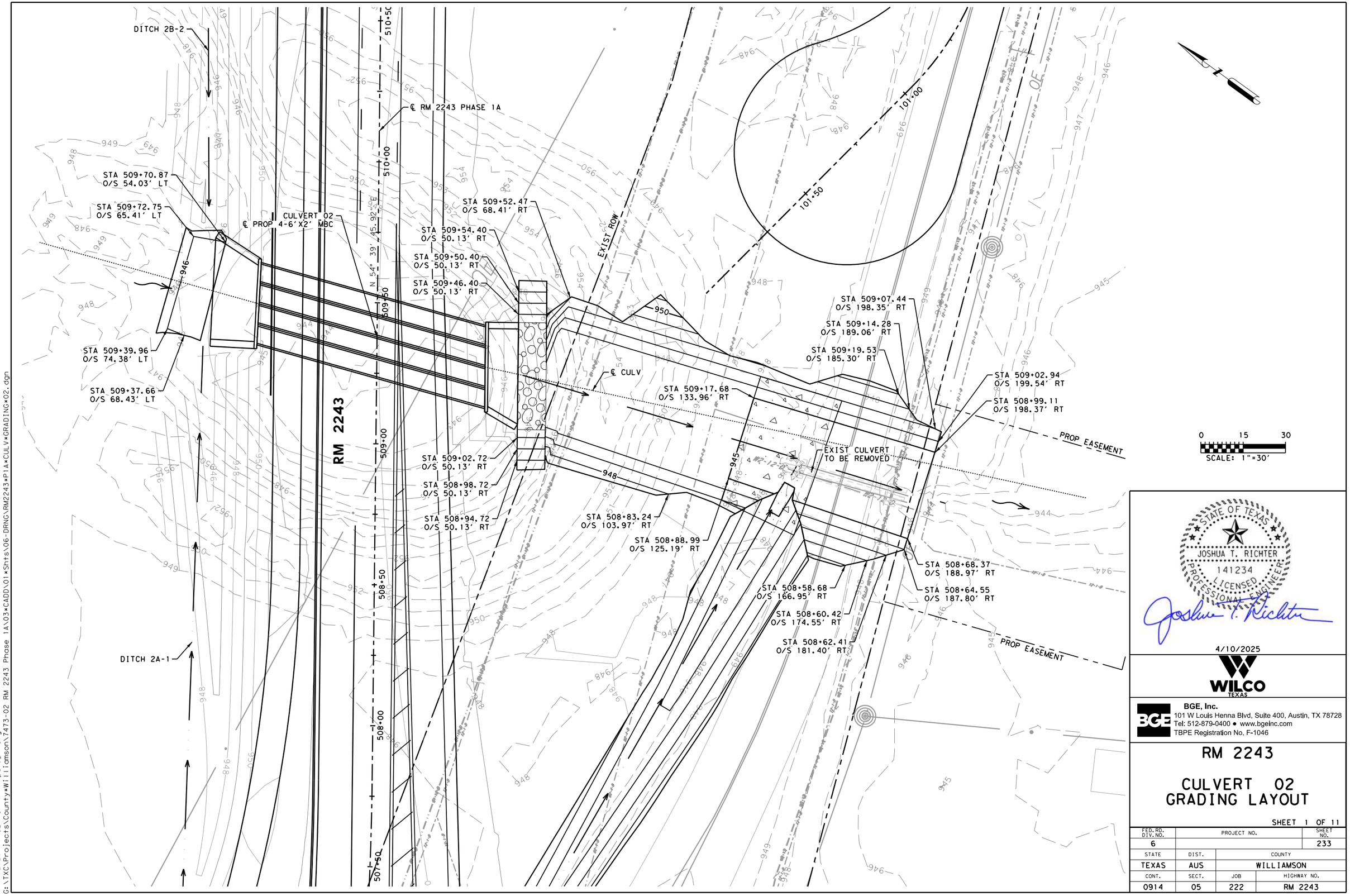

STATE OF TEXAS
JOSHUA T. RICHTER
141234
LICENSED
PROFESSIONAL ENGINEER

4/10/2025

WILCO
TEXAS

BGE, Inc.
101 W Louis Henna Blvd, Suite 400, Austin, TX 78728
Tel: 512-879-0400 • www.bgeinc.com
TBPE Registration No. F-1046

RM 2243

CULVERT 02 GRADING LAYOUT

SHEET 1 OF 11

FED.RD. DIV.NO.	PROJECT NO.		SHEET NO.
6			233
STATE	DIST.	COUNTY	
TEXAS	AUS	WILLIAMSON	
CONT.	SECT.	JOB	HIGHWAY NO.
0914	05	222	RM 2243

4/10/2025 1:02:16 PM pdf.pltcfg
G:\TXC\Projects\County\Williamson\7473-02 RM 2243 Phase 1A\03*CADD\01*Shts\06-DRNG\RM2243*P1A*CULV*GRADING*02.dgn

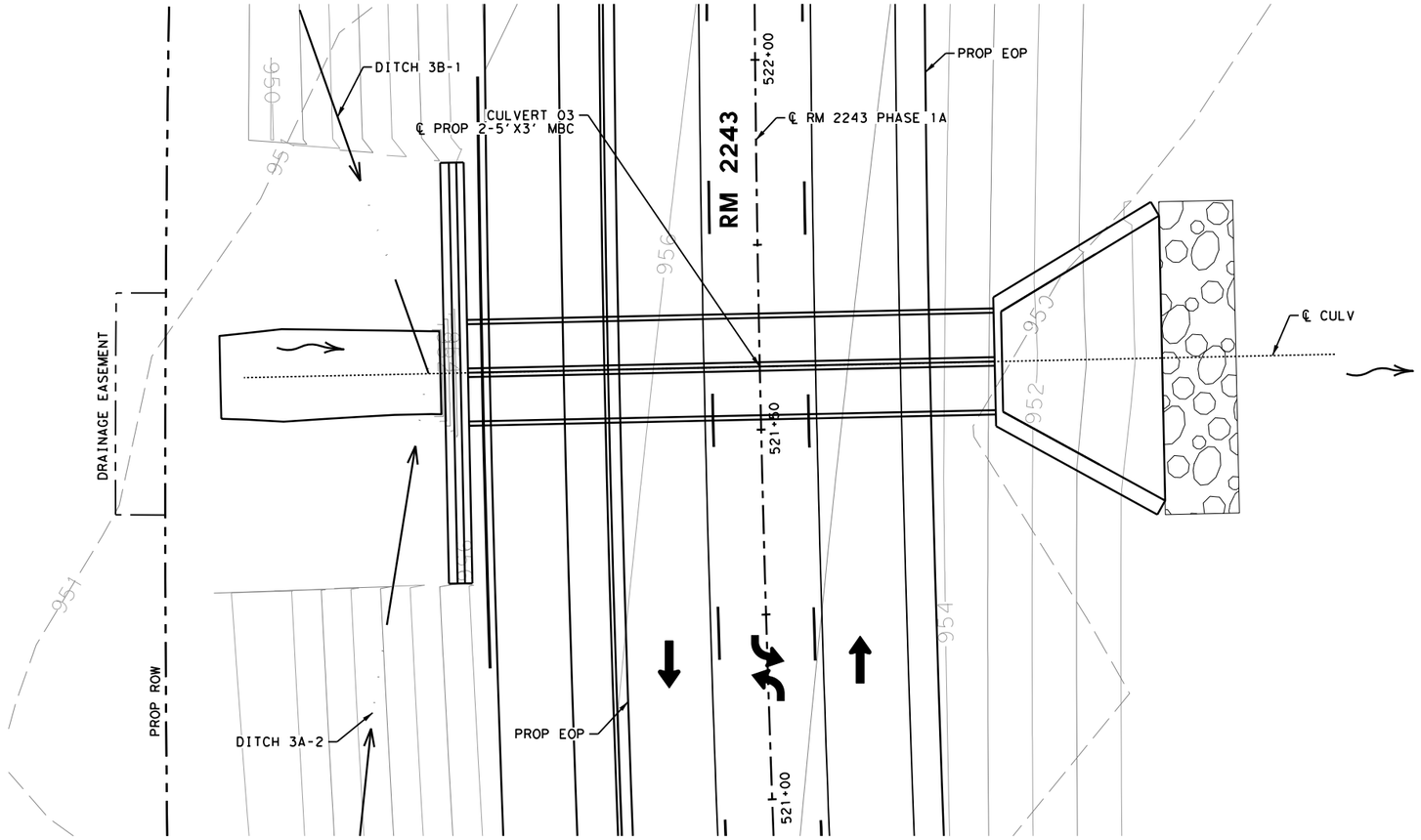

MATCHLINE A-A

MATCHLINE A-A

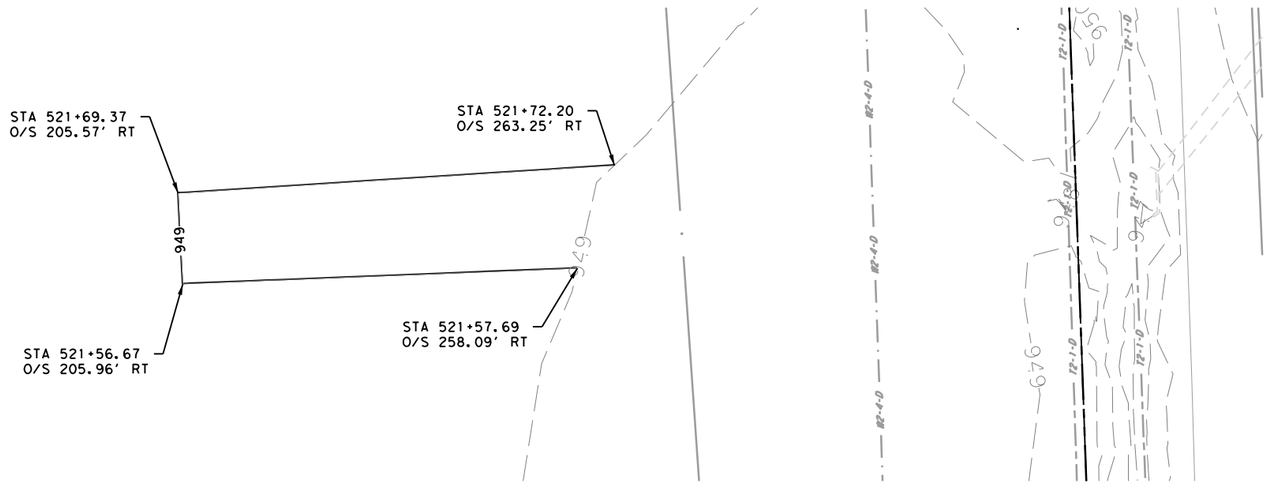

0 10 20
SCALE: 1"=20'

STATE OF TEXAS
JOSHUA T. RICHTER
141234
LICENSED
PROFESSIONAL ENGINEER

4/10/2025

WILCO TEXAS

BGE, Inc.
101 W Louis Henna Blvd, Suite 400, Austin, TX 78728
Tel: 512-879-0400 • www.bgeinc.com
TBPE Registration No. F-1046

RM 2243

CULVERT 03 GRADING LAYOUT

SHEET 2 OF 11

FED.RD. DIV.NO.	PROJECT NO.		SHEET NO.
6			234
STATE	DIST.	COUNTY	
TEXAS	AUS	WILLIAMSON	
CONT.	SECT.	JOB	HIGHWAY NO.
0914	05	222	RM 2243

4/10/2025 1:02:18 PM pdf.pltcfg
G:\TXC\Projects\County\Williamson\7473-02 RM 2243 Phase 1A\03*CADD\01*Shts\06-DRNG\RM2243*P1A*CULV*GRADING*03.dgn

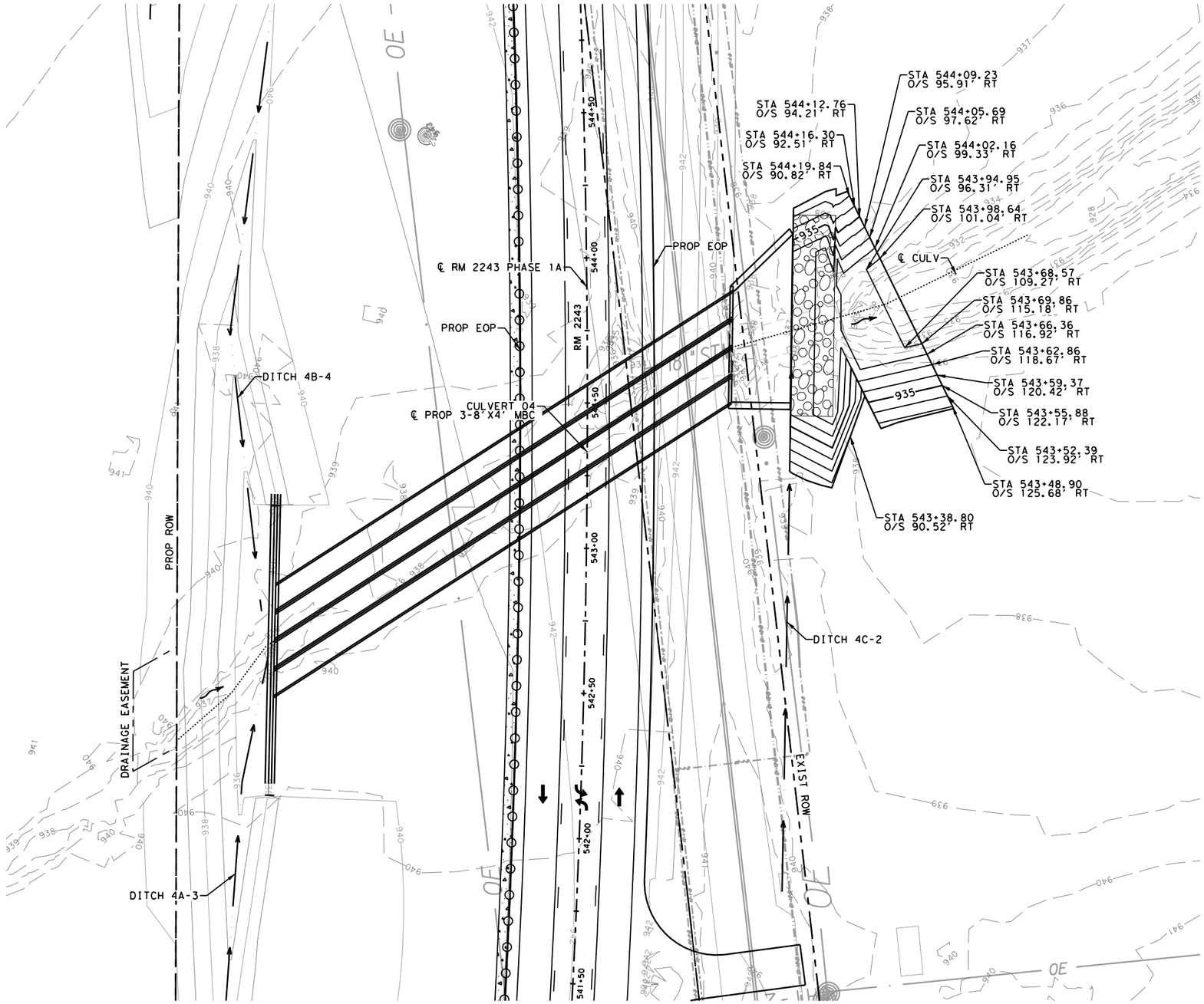

0 20 40
SCALE: 1"=40'

NBI NO.

STATE OF TEXAS
JOSHUA T. RICHTER
141234
LICENSED
PROFESSIONAL ENGINEER

4/10/2025

WILCO
TEXAS

BGE, Inc.
101 W Louis Henna Blvd, Suite 400, Austin, TX 78728
Tel: 512-879-0400 ● www.bgeinc.com
TBPE Registration No. F-1046

RM 2243

CULVERT 04 GRADING LAYOUT

SHEET 3 OF 11

FED.RD. DIV.NO.	PROJECT NO.		SHEET NO.
6			235
STATE	DIST.	COUNTY	
TEXAS	AUS	WILLIAMSON	
CONT.	SECT.	JOB	HIGHWAY NO.
0914	05	222	RM 2243

4/10/2025 1:02:19 PM pdf.pltcfg
G:\TXC\Projects\County*Williamson\7473-02 RM 2243 Phase 1A\03*CADD\01*Shts\06-DRNG\RM2243*P1A*CULV*GRADING*04.dgn

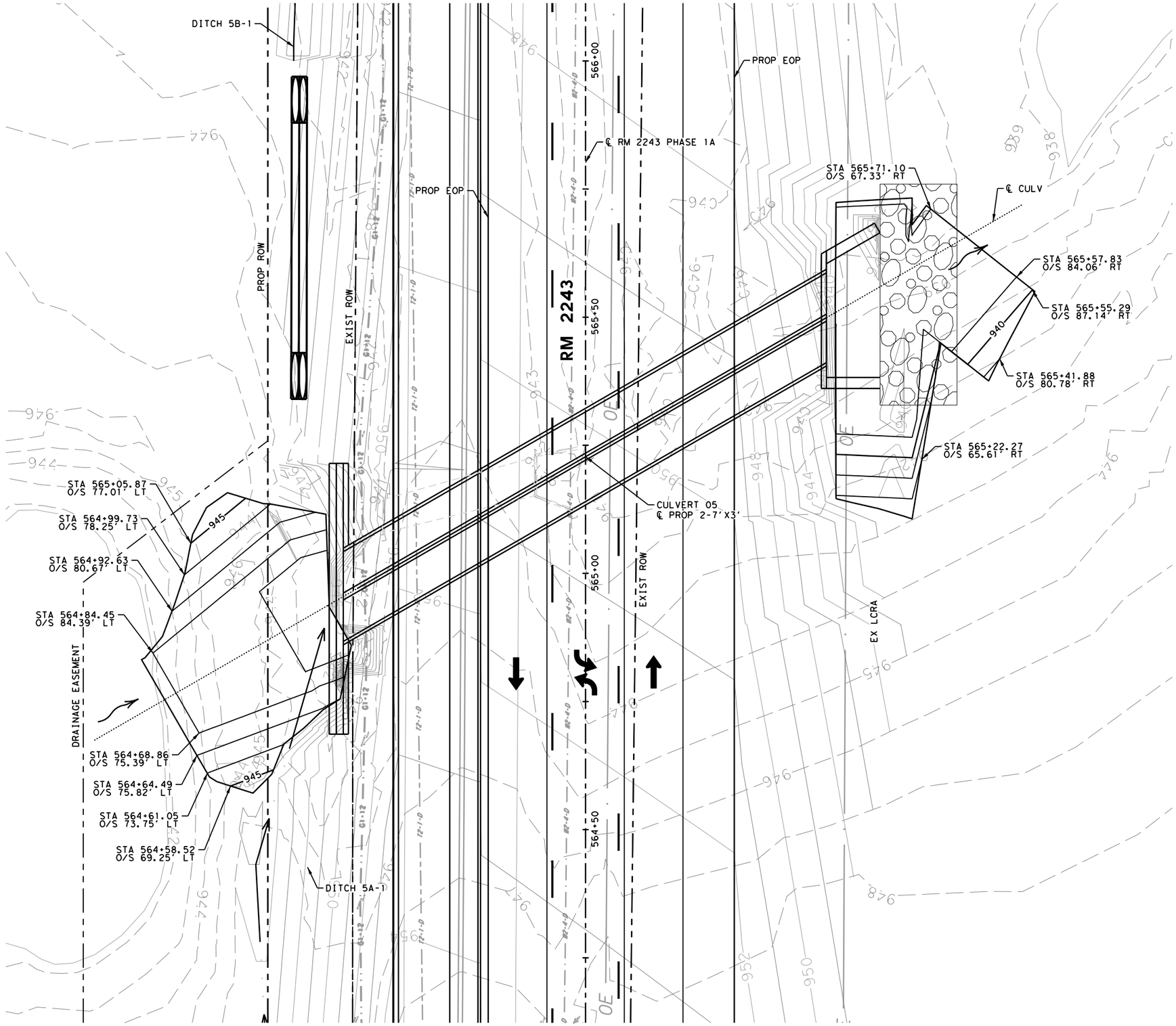

4/10/2025 1:02:21 PM pdf.pltcfg
G:\TXC\Projects\County*Williamson\7473-02 RM 2243 Phase 1A\03*CADD\01*Shts\06-DRNG\RM2243*P1A*CULV*GRADING*05.dgn

STATE OF TEXAS
JOSHUA T. RICHTER
141234
LICENSED
PROFESSIONAL ENGINEER

4/10/2025

WILCO
TEXAS

BGE, Inc.
101 W Louis Henna Blvd, Suite 400, Austin, TX 78728
Tel: 512-879-0400 • www.bgeinc.com
TBPE Registration No. F-1046

RM 2243

CULVERT 05 GRADING LAYOUT

SHEET 4 OF 11

FED.RD. DIV.NO.	PROJECT NO.		SHEET NO.
6			236
STATE	DIST.	COUNTY	
TEXAS	AUS	WILLIAMSON	
CONT.	SECT.	JOB	HIGHWAY NO.
0914	05	222	RM 2243

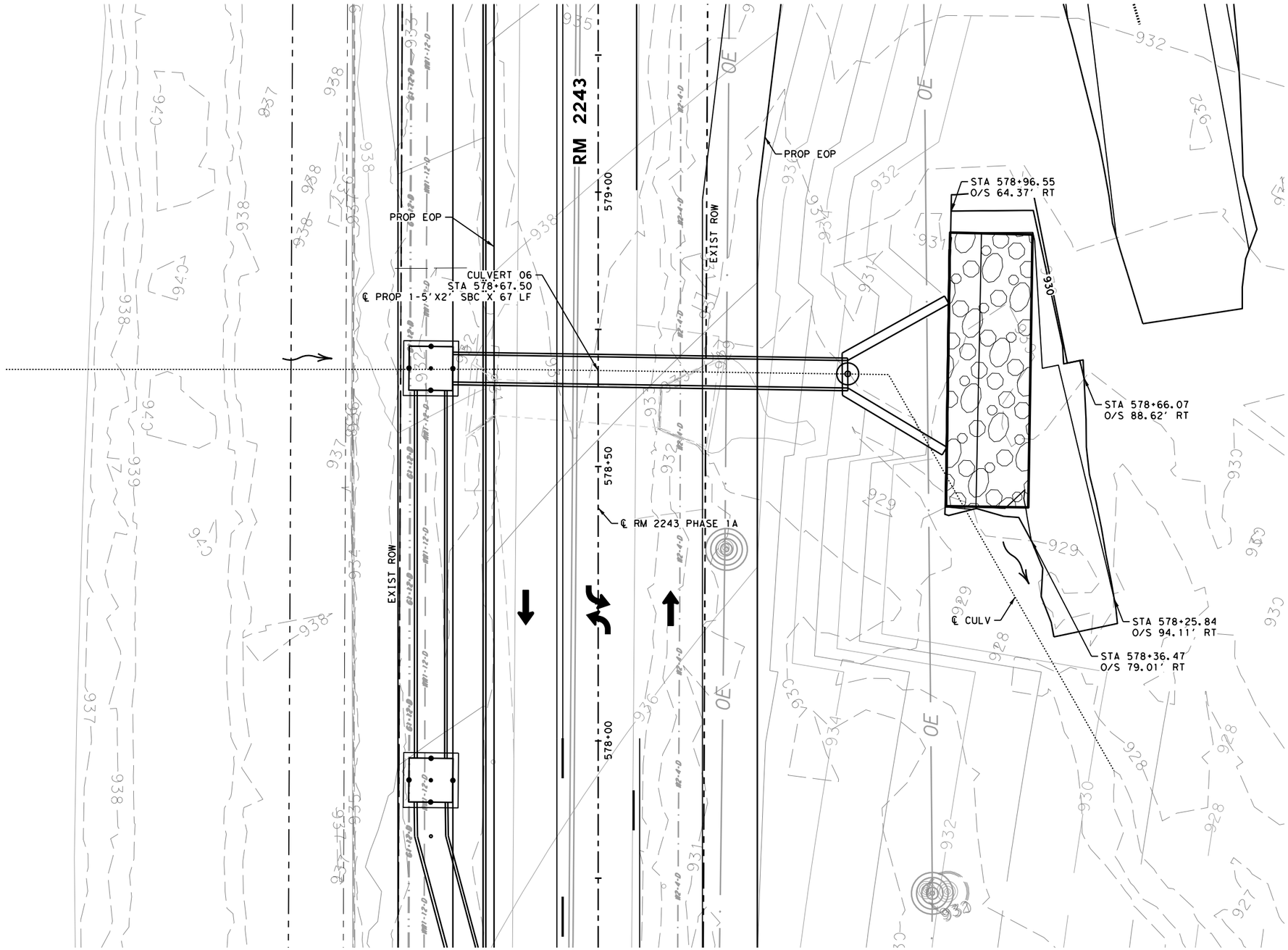

STATE OF TEXAS
JOSHUA T. RICHTER
141234
LICENSED
PROFESSIONAL ENGINEER

4/10/2025

WILCO
TEXAS

BGE, Inc.
101 W Louis Henna Blvd, Suite 400, Austin, TX 78728
Tel: 512-879-0400 ● www.bgeinc.com
TBPE Registration No. F-1046

RM 2243

CULVERT 06
GRADING LAYOUT

SHEET 5 OF 11

FED.RD. DIV.NO.	PROJECT NO.		SHEET NO.
6			237
STATE	DIST.	COUNTY	
TEXAS	AUS	WILLIAMSON	
CONT.	SECT.	JOB	HIGHWAY NO.
0914	05	222	RM 2243

4/10/2025 1:02:22 PM pdf.pltcfg
G:\TXC\Projects\County*Williamson\7473-02 RM 2243 Phase 1A\03*CADD\01*Shts\06-DRNG\RM2243*P1A*CULV*GRADING*06.dgn

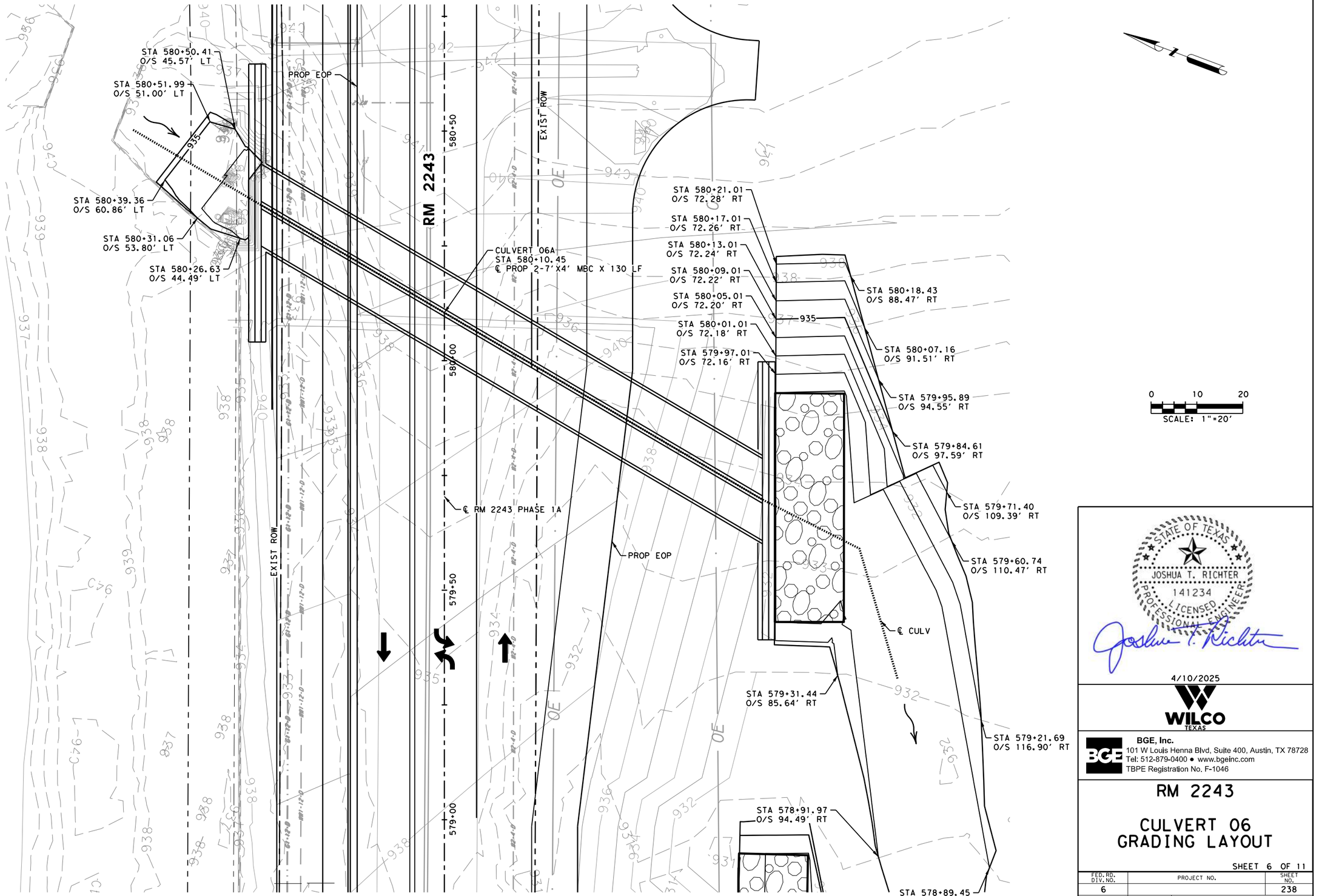

4/10/2025 1:02:23 PM pdf.pltcfg
G:\TXC\Projects\County\Williamson\7473-02 RM 2243 Phase 1A\03\CADD\01\Shts\06-DRNG\RM2243*P1A*CULV*GRADING*06A.dgn

STATE OF TEXAS
JOSHUA T. RICHTER
141234
LICENSED
PROFESSIONAL ENGINEER

4/10/2025

WILCO
TEXAS

BGE, Inc.
101 W Louis Henna Blvd, Suite 400, Austin, TX 78728
Tel: 512-879-0400 • www.bgeinc.com
TBPE Registration No. F-1046

RM 2243

CULVERT 06 GRADING LAYOUT

SHEET 6 OF 11

FED.RD. DIV.NO.	PROJECT NO.		SHEET NO.
6			238
STATE	DIST.	COUNTY	
TEXAS	AUS	WILLIAMSON	
CONT.	SECT.	JOB	HIGHWAY NO.
0914	05	222	RM 2243

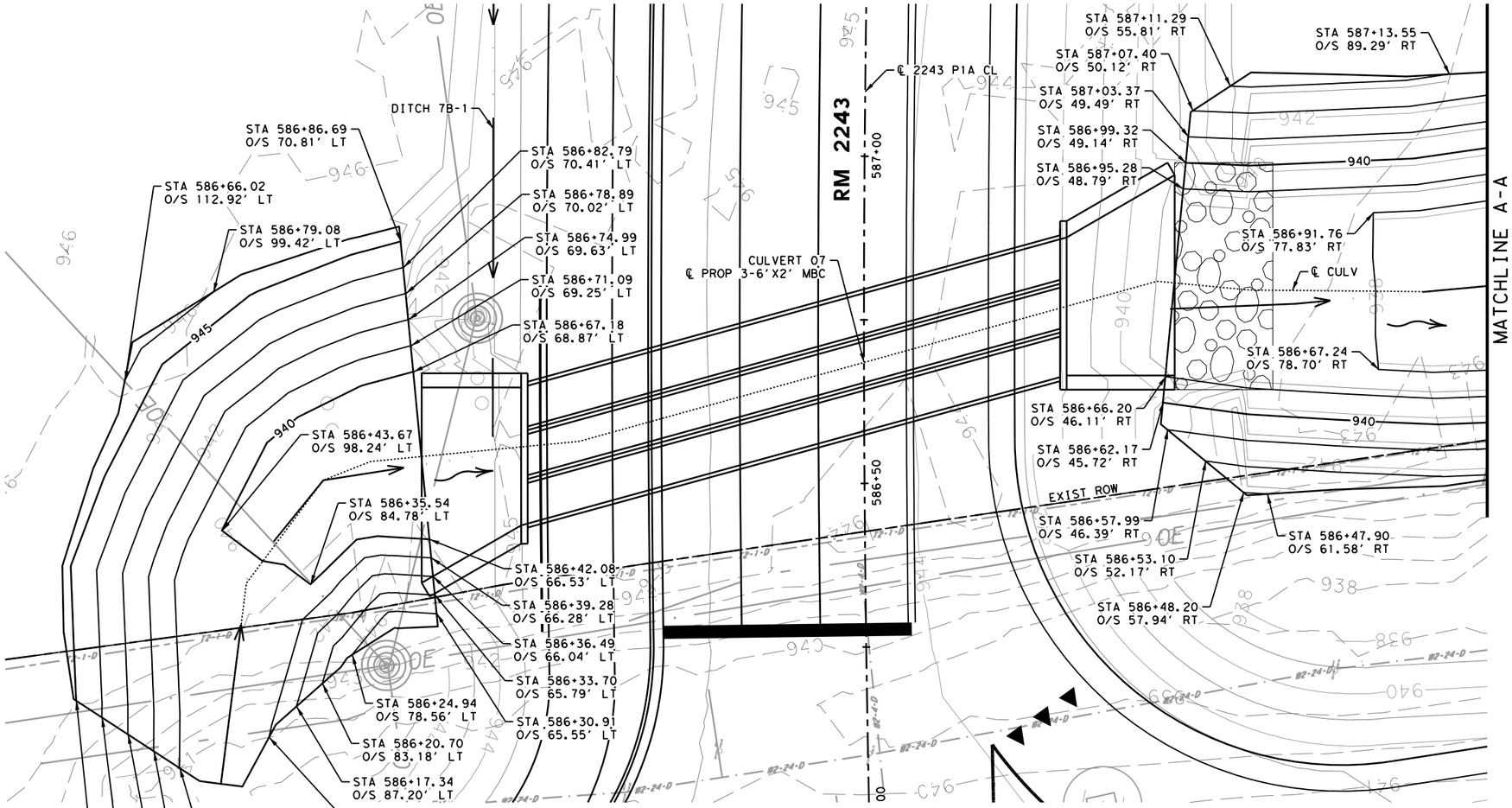

4/10/2025 1:02:25 PM pdf.pltcfg
G:\TXC\Projects\County*Williamson\7473-02 RM 2243 Phase 1A\03*CADD\01*Shts\06-DRNG\RM2243*P1A*CULV*GRADING*07.dgn

STATE OF TEXAS
JOSHUA T. RICHTER
141234
LICENSED
PROFESSIONAL ENGINEER

4/10/2025

WILCO
TEXAS

BGE, Inc.
101 W Louis Henna Blvd, Suite 400, Austin, TX 78728
Tel: 512-879-0400 ● www.bgeinc.com
TBPE Registration No. F-1046

RM 2243

CULVERT 07 GRADING LAYOUT

SHEET 7 OF 11

FED.RD. DIV.NO.	PROJECT NO.		SHEET NO.
6			239
STATE	DIST.	COUNTY	
TEXAS	AUS	WILLIAMSON	
CONT.	SECT.	JOB	HIGHWAY NO.
0914	05	222	RM 2243

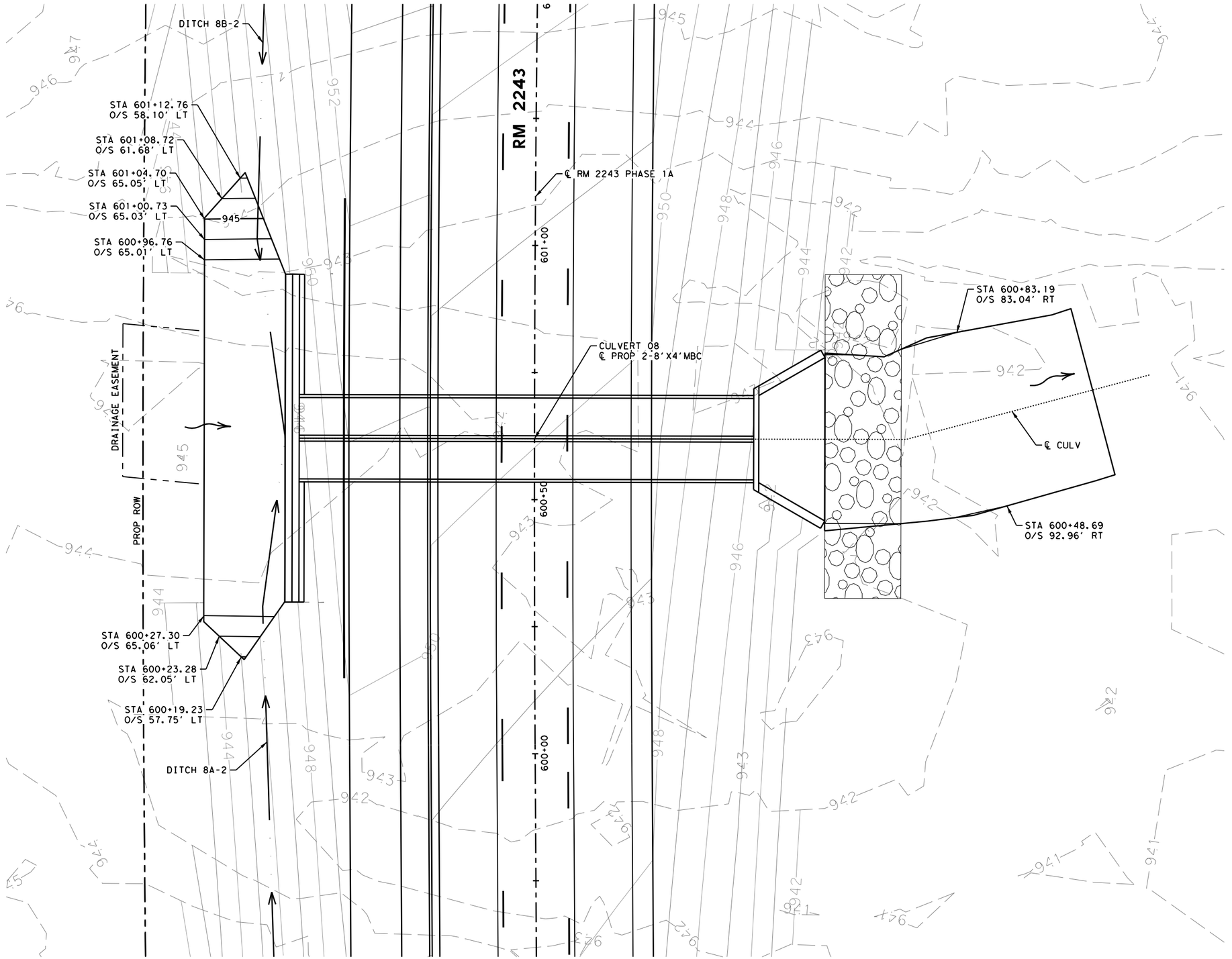

4/10/2025 1:02:26 PM pdf.pltcfg
C:\TXC\Projects\County*Williamson\7473-02 RM 2243 Phase 1A\03*CADD\01*Shts\06-DRNG\RM2243*P1A*CULV*GRADING*08.dgn

STATE OF TEXAS
JOSHUA T. RICHTER
141234
LICENSED
PROFESSIONAL ENGINEER

4/10/2025

WILCO
TEXAS

BGE, Inc.
101 W Louis Henna Blvd, Suite 400, Austin, TX 78728
Tel: 512-879-0400 • www.bgeinc.com
TBPE Registration No. F-1046

RM 2243

CULVERT 08 GRADING LAYOUT

SHEET 8 OF 11

FED.RD. DIV.NO.	PROJECT NO.		SHEET NO.
6			240
STATE	DIST.	COUNTY	
TEXAS	AUS	WILLIAMSON	
CONT.	SECT.	JOB	HIGHWAY NO.
0914	05	222	RM 2243

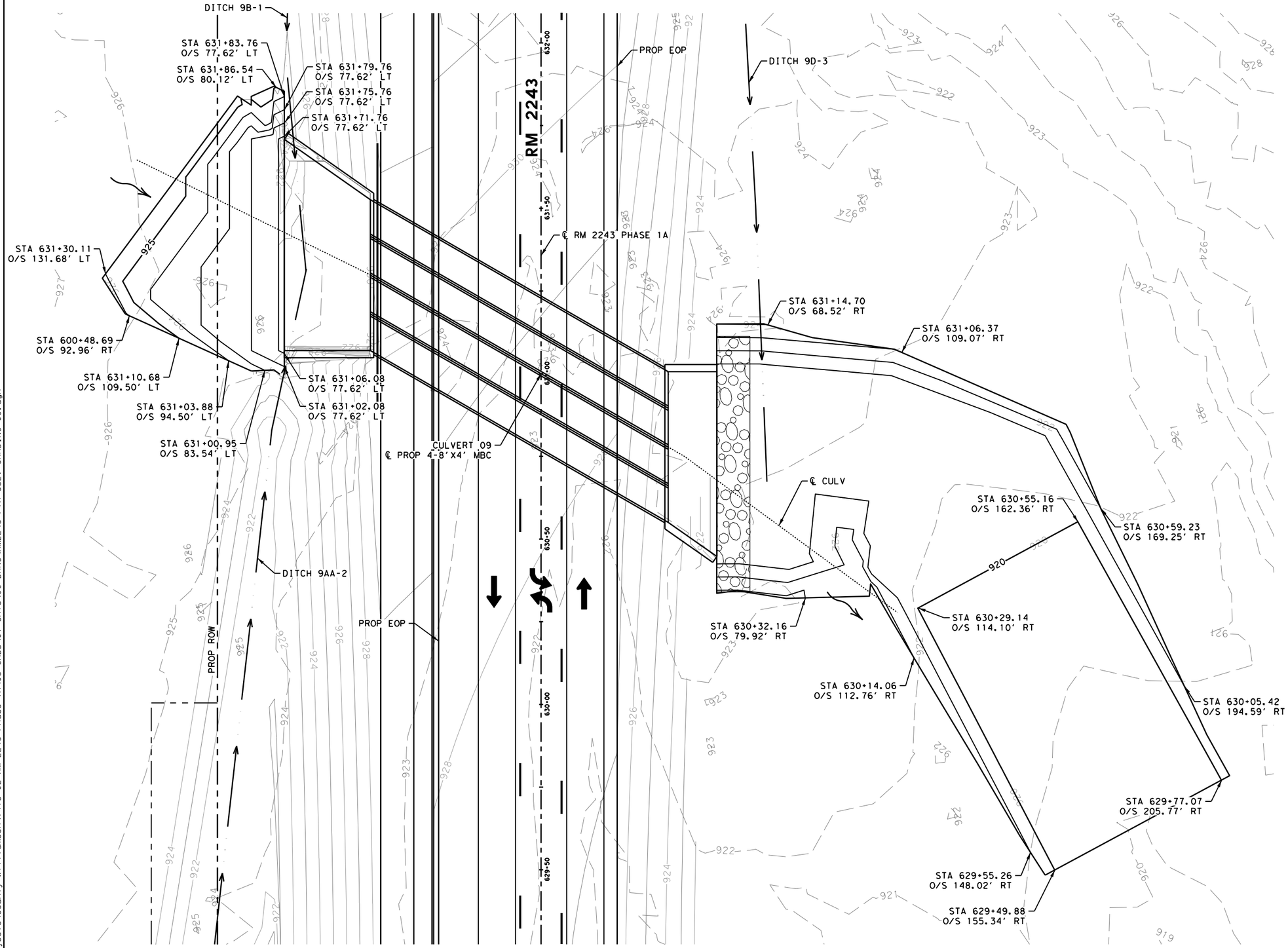

STATE OF TEXAS
JOSHUA T. RICHTER
141234
LICENSED
PROFESSIONAL ENGINEER

4/10/2025

WILCO
TEXAS

BGE, Inc.
101 W Louis Henna Blvd, Suite 400, Austin, TX 78728
Tel: 512-879-0400 ● www.bgeinc.com
TBPE Registration No. F-1046

RM 2243

CULVERT 09 GRADING LAYOUT

SHEET 9 OF 11

FED.RD. DIV.NO.	PROJECT NO.		SHEET NO.
6			241
STATE	DIST.	COUNTY	
TEXAS	AUS	WILLIAMSON	
CONT.	SECT.	JOB	HIGHWAY NO.
0914	05	222	RM 2243

4/10/2025 1:02:28 PM pdf.pltcfg
G:\TXC\Projects\County\Williamson\7473-02 RM 2243 Phase 1A\03*CADD\01*Shts\06-DRNG\RM2243*P1A*CULV*GRADING*09.dgn

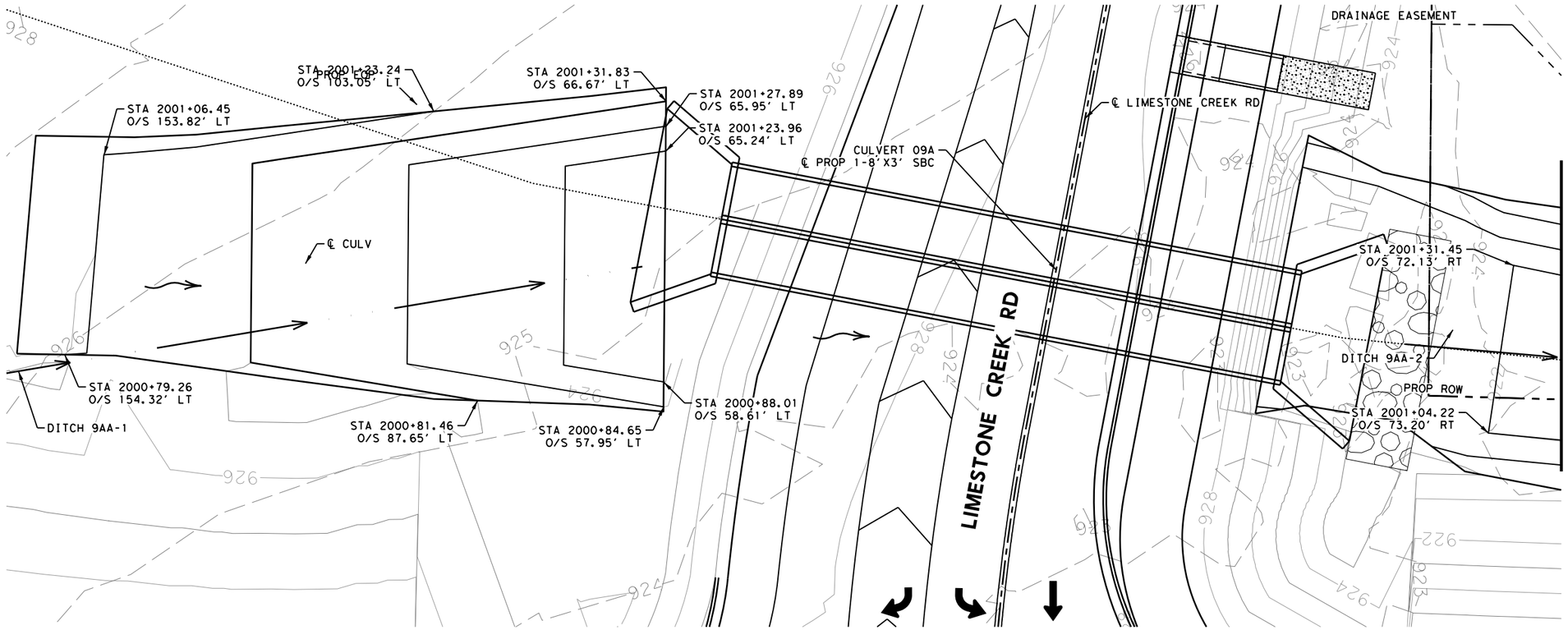

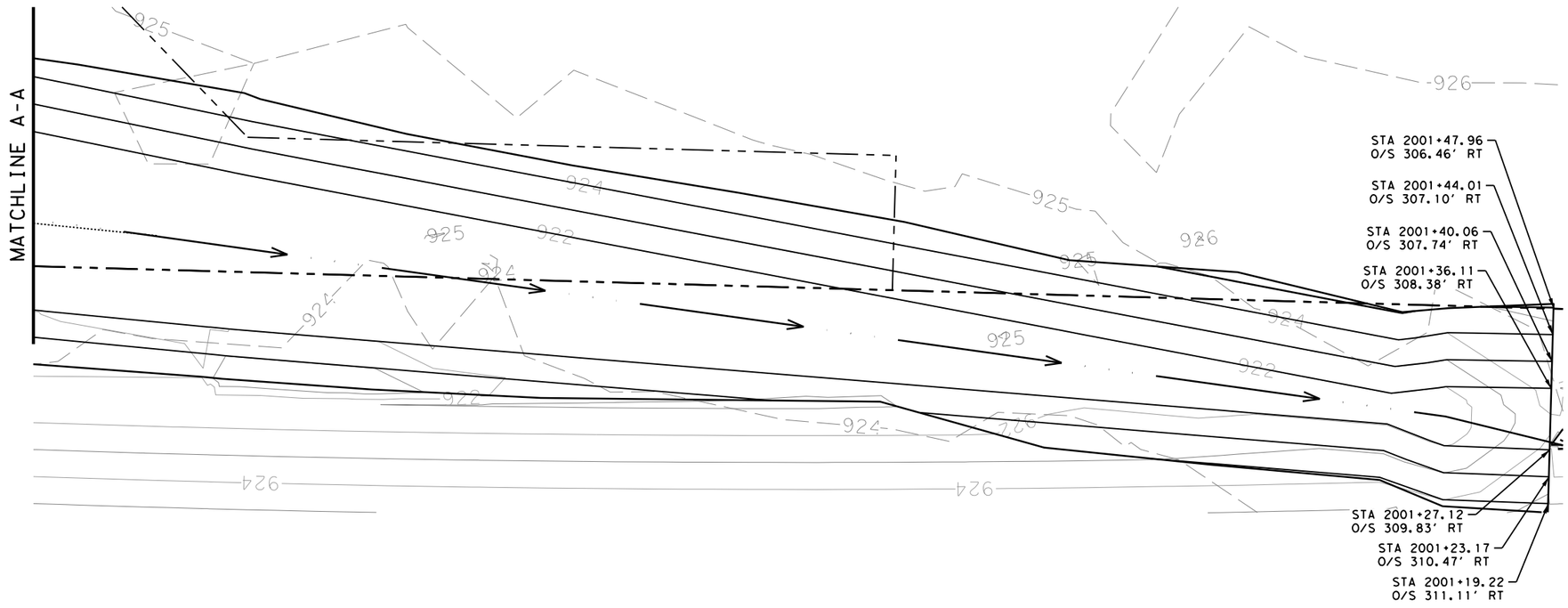

STATE OF TEXAS
JOSHUA T. RICHTER
141234
LICENSED
PROFESSIONAL ENGINEER

4/10/2025

WILCO
TEXAS

BGE, Inc.
101 W Louis Henna Blvd, Suite 400, Austin, TX 78728
Tel: 512-879-0400 • www.bgeinc.com
TBPE Registration No. F-1046

RM 2243

CULVERT 09A GRADING LAYOUT

SHEET 10 OF 11

FED.RD. DIV.NO.	PROJECT NO.		SHEET NO.
6			242
STATE	DIST.	COUNTY	
TEXAS	AUS	WILLIAMSON	
CONT.	SECT.	JOB	HIGHWAY NO.
0914	05	222	RM 2243

4/10/2025 1:02:30 PM pdf.pltcfg
G:\TXC\Projects\County\Williamson\7473-02 RM 2243 Phase 1A\03*CADD\01*Shts\06-DRNG\RM2243*P1A*CULV*GRADING*09A.dgn

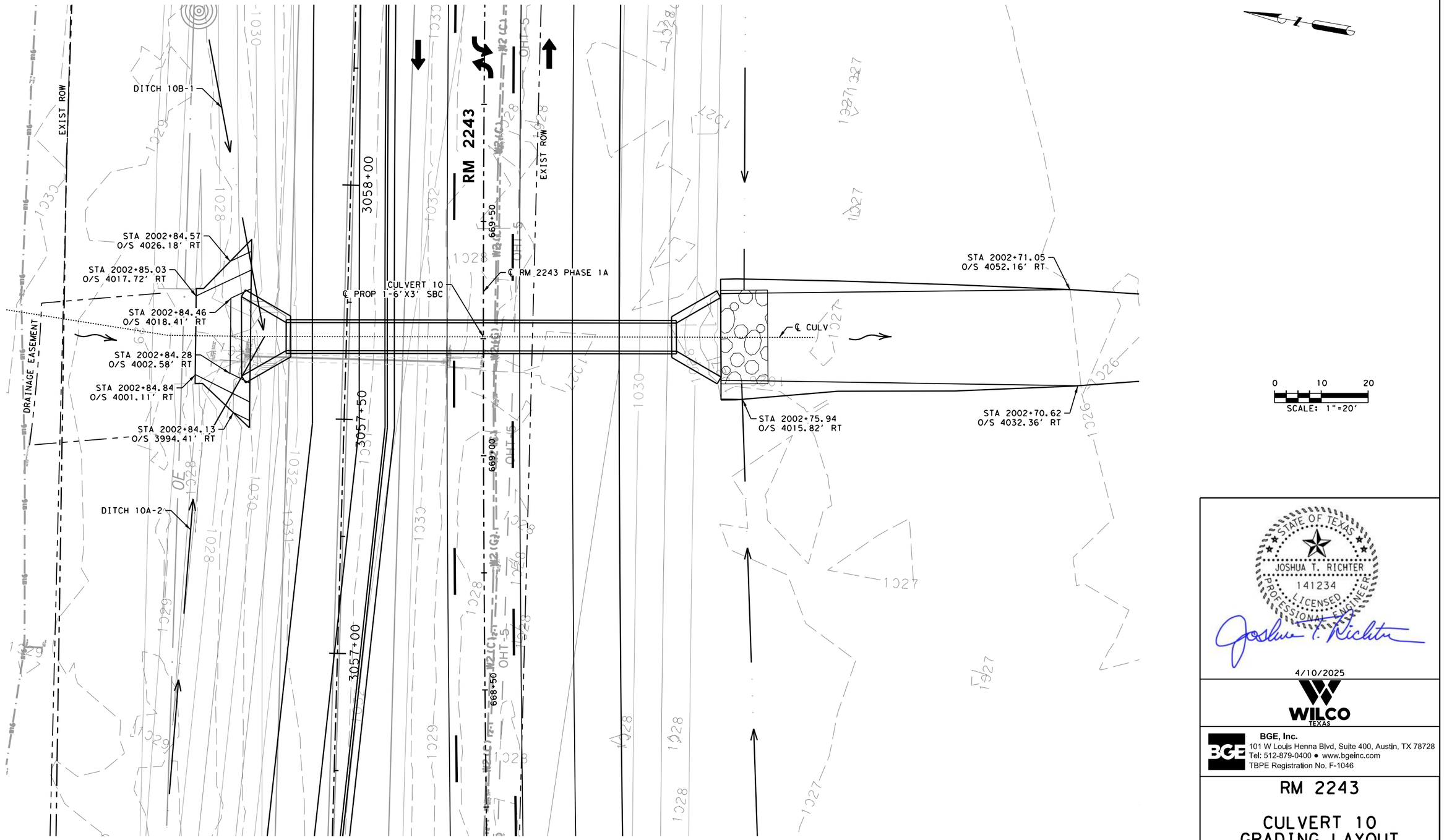

STATE OF TEXAS
JOSHUA T. RICHTER
141234
LICENSED
PROFESSIONAL ENGINEER

4/10/2025

WILCO
TEXAS

BGE, Inc.
101 W Louis Henna Blvd, Suite 400, Austin, TX 78728
Tel: 512-879-0400 • www.bgeinc.com
TBPE Registration No. F-1046

RM 2243

CULVERT 10 GRADING LAYOUT

SHEET 11 OF 11

FED.RD. DIV.NO.	PROJECT NO.		SHEET NO.
6			243
STATE	DIST.	COUNTY	
TEXAS	AUS	WILLIAMSON	
CONT.	SECT.	JOB	HIGHWAY NO.
0914	05	222	RM 2243

4/10/2025 1:02:31 PM pdf.pltcfg
G:\TXC\Projects\County*Williamson\7473-02 RM 2243 Phase 1A\03*CADD\01*Shts\06-DRNG\RM2243*P1A*CULV*GRADING*10.dgn

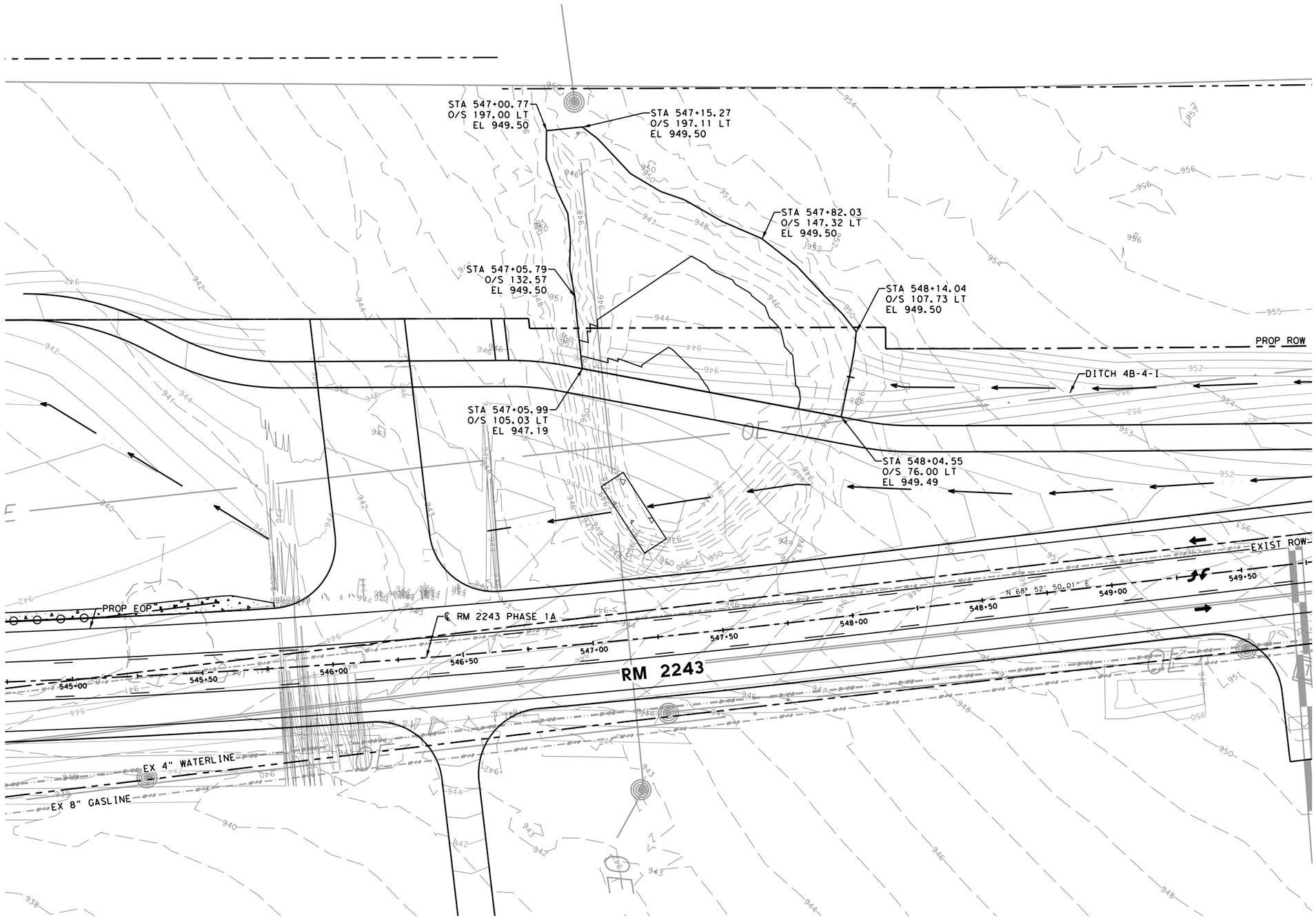

0 20 40
SCALE: 1"=40'

NBI NO.

STATE OF TEXAS
JOSHUA T. RICHTER
141234
LICENSED
PROFESSIONAL ENGINEER

4/10/2025

WILCO
TEXAS

BGE, Inc.
101 W Louis Henna Blvd, Suite 400, Austin, TX 78728
Tel: 512-879-0400 ● www.bgeinc.com
TBPE Registration No. F-1046

RM 2243

STOCK POND GRADING LAYOUT

SHEET 1 OF 1

FED.RD. DIV.NO.	PROJECT NO.		SHEET NO.
6			244
STATE	DIST.	COUNTY	
TEXAS	AUS	WILLIAMSON	
CONT.	SECT.	JOB	HIGHWAY NO.
0914	05	222	RM 2243

4/10/2025 1:02:33 PM pdf.pltcfg
G:\TXC\Projects\County\Williamson\7473-02 RM 2243 Phase 1A\03*CADD\01*Shts\06-DRNG\RM2243*P1A*POND*GRADING*01.dgn

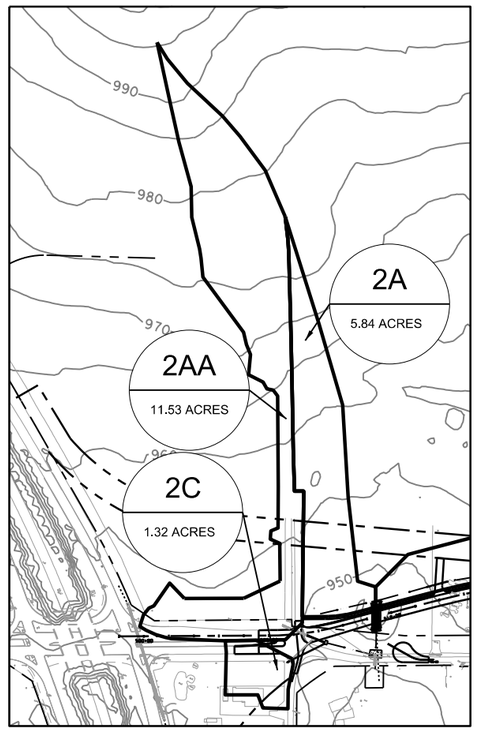

DETAIL 'A'

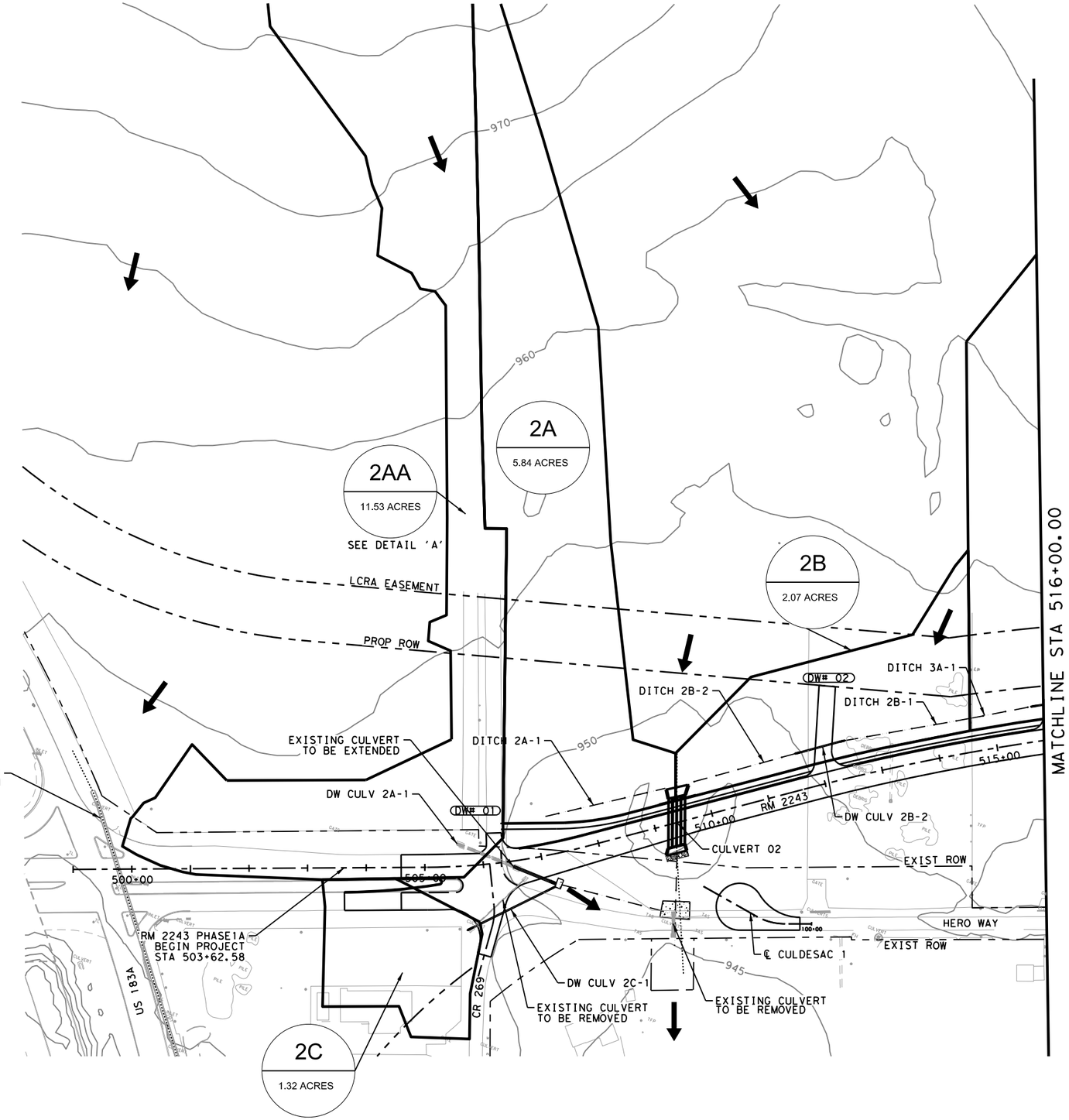

LEGEND

- # / 77.0 ac — DRAINAGE AREA ID / DRAINAGE AREA (ACRES)
- FLOW DIRECTION
- 690 — 5-FOOT CONTOURS
- DRAINAGE AREA BOUNDARY
- DITCH CENTERLINE

NOTES:
1. SEE PARALLEL DRAINAGE HYDROLOGIC DATA SHEET FOR ADDITIONAL INFORMATION.
2. TERRAIN DATA OBTAINED FROM USGS 2024 LIDAR DATA.

0 100 200
SCALE: 1"=200'

STATE OF TEXAS
VANESSA MOLINA
141173
LICENSED PROFESSIONAL ENGINEER

WILCO TEXAS

BGE, Inc.
101 W Louis Henna Blvd, Suite 400, Austin, TX 78728
Tel: 512-879-0400 • www.bgeinc.com
TBPE Registration No. F-1046

RM 2243

INTERNAL DRAINAGE AREA MAP

SHEET 1 OF 9

FED.RD. DIV.NO.	PROJECT NO.		SHEET NO.
6			245
STATE	DIST.	COUNTY	
TEXAS	AUS	WILLIAMSON	
CONT.	SECT.	JOB	HIGHWAY NO.
0914	05	222	RM 2243

4/10/2025 1:02:34 PM pdf.pltcfg
G:\TXC\Projects\County\Williamson\7473-02 RM 2243 Phase 1A\03*CADD\01*Shts\06-DRNG\RM2243*P1A*INT-DA*01.dgn

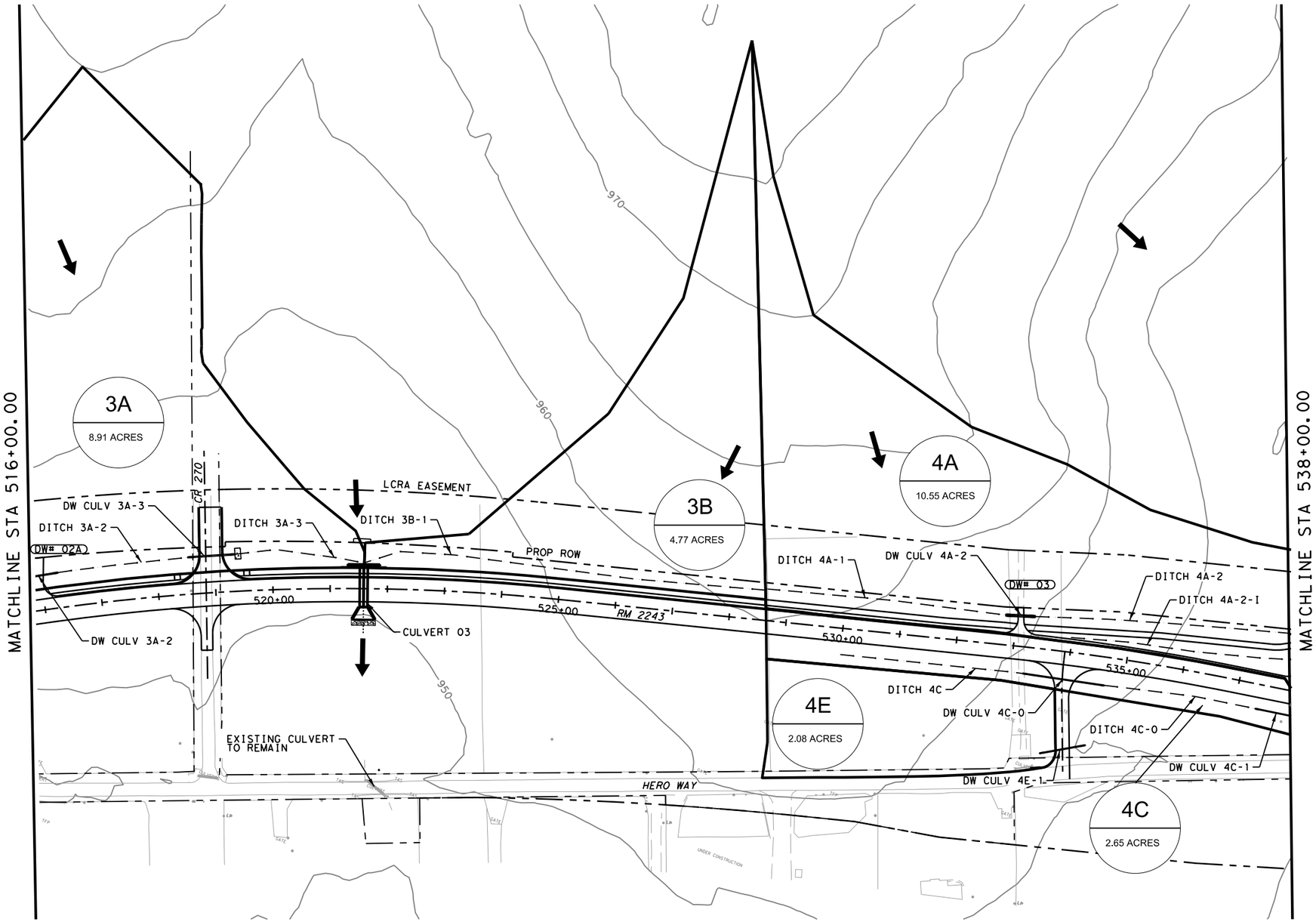

LEGEND

- # / 77.0 ac — DRAINAGE AREA ID / DRAINAGE AREA (ACRES)
- FLOW DIRECTION
- 690 — 5-FOOT CONTOURS
- DRAINAGE AREA BOUNDARY
- DITCH CENTERLINE

NOTES:
1. SEE PARALLEL DRAINAGE HYDROLOGIC DATA SHEET FOR ADDITIONAL INFORMATION.
2. TERRAIN DATA OBTAINED FROM USGS 2024 LIDAR DATA.

0 100 200
SCALE: 1"=200'

STATE OF TEXAS
VANESSA MOLINA
141173
PROFESSIONAL ENGINEER

WILCO TEXAS

BGE, Inc.
101 W Louis Henna Blvd, Suite 400, Austin, TX 78728
Tel: 512-879-0400 • www.bgeinc.com
TBPE Registration No. F-1046

RM 2243

INTERNAL DRAINAGE AREA MAP

SHEET 2 OF 9

FED.RD. DIV.NO.	PROJECT NO.		SHEET NO.
6			246
STATE	DIST.	COUNTY	
TEXAS	AUS	WILLIAMSON	
CONT.	SECT.	JOB	HIGHWAY NO.
0914	05	222	RM 2243

4/10/2025 1:02:35 PM pdf.pltcfg
G:\TXC\Projects\County\Williamson\7473-02 RM 2243 Phase 1A\03\CADD\01\Shts\06-DRNG\RM2243_P1A_INT-DA_02.dgn

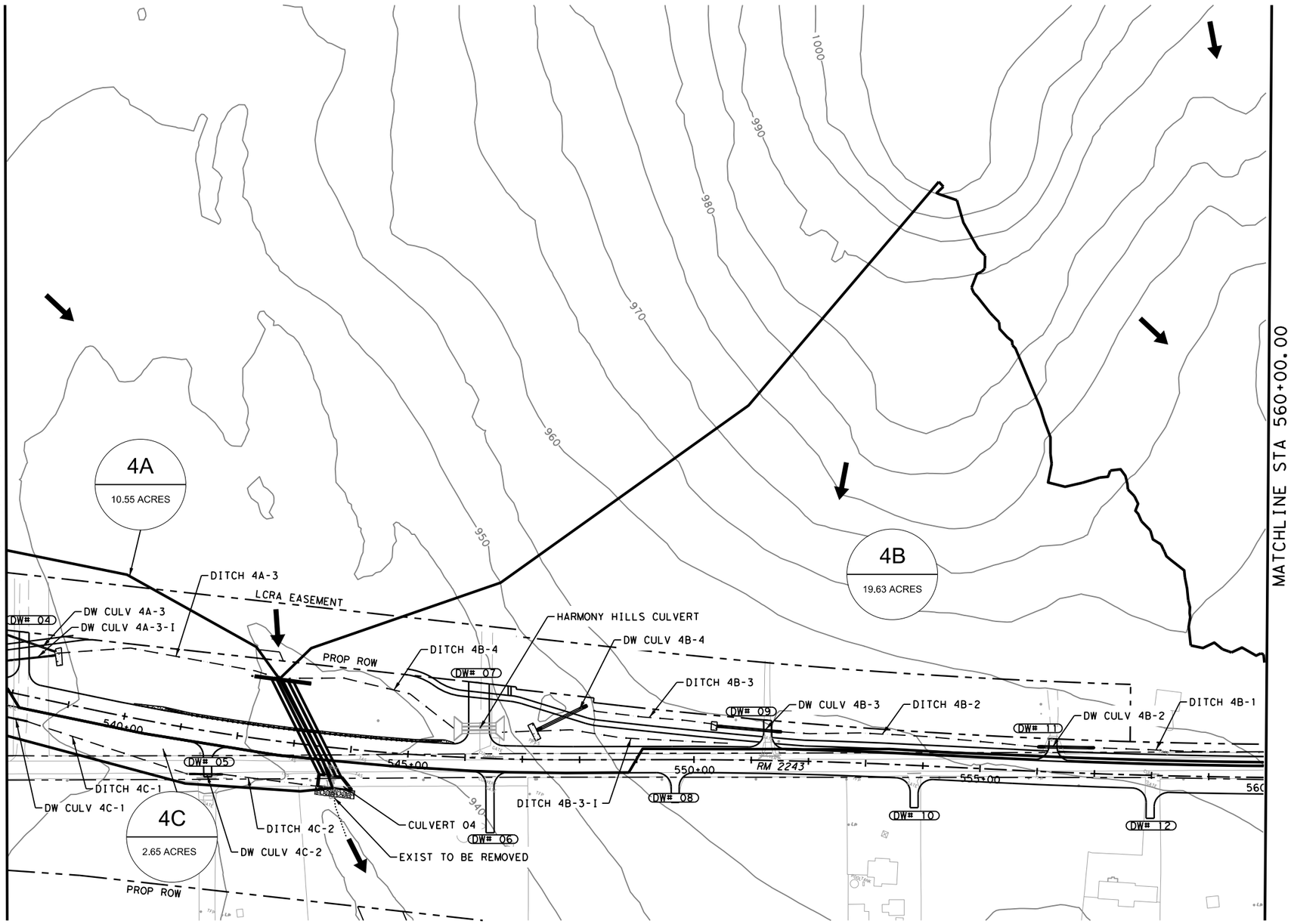

LEGEND

- # / 77.0 ac — DRAINAGE AREA ID / DRAINAGE AREA (ACRES)
- FLOW DIRECTION
- 690 — 5-FOOT CONTOURS
- DRAINAGE AREA BOUNDARY
- DITCH CENTERLINE

NOTES:
1. SEE PARALLEL DRAINAGE HYDROLOGIC DATA SHEET FOR ADDITIONAL INFORMATION.
2. TERRAIN DATA OBTAINED FROM USGS 2024 LIDAR DATA.

0 100 200
SCALE: 1"=200'

STATE OF TEXAS
VANESSA MOLINA
141173
PROFESSIONAL LICENSED ENGINEER

WILCO TEXAS

BGE, Inc.
101 W Louis Henna Blvd, Suite 400, Austin, TX 78728
Tel: 512-879-0400 • www.bgeinc.com
TBPE Registration No. F-1046

RM 2243

INTERNAL DRAINAGE AREA MAP

SHEET 3 OF 9

FED.RD. DIV.NO.	PROJECT NO.		SHEET NO.
6			247
STATE	DIST.	COUNTY	
TEXAS	AUS	WILLIAMSON	
CONT.	SECT.	JOB	HIGHWAY NO.
0914	05	222	RM 2243

4/10/2025 1:02:36 PM pdf.pltcfg
G:\TXC\Projects\County*Williamson\7473-02 RM 2243 Phase 1A\03*CADD\01*Shts\06-DRNG\RM2243*P1A*INT-DA*03.dgn

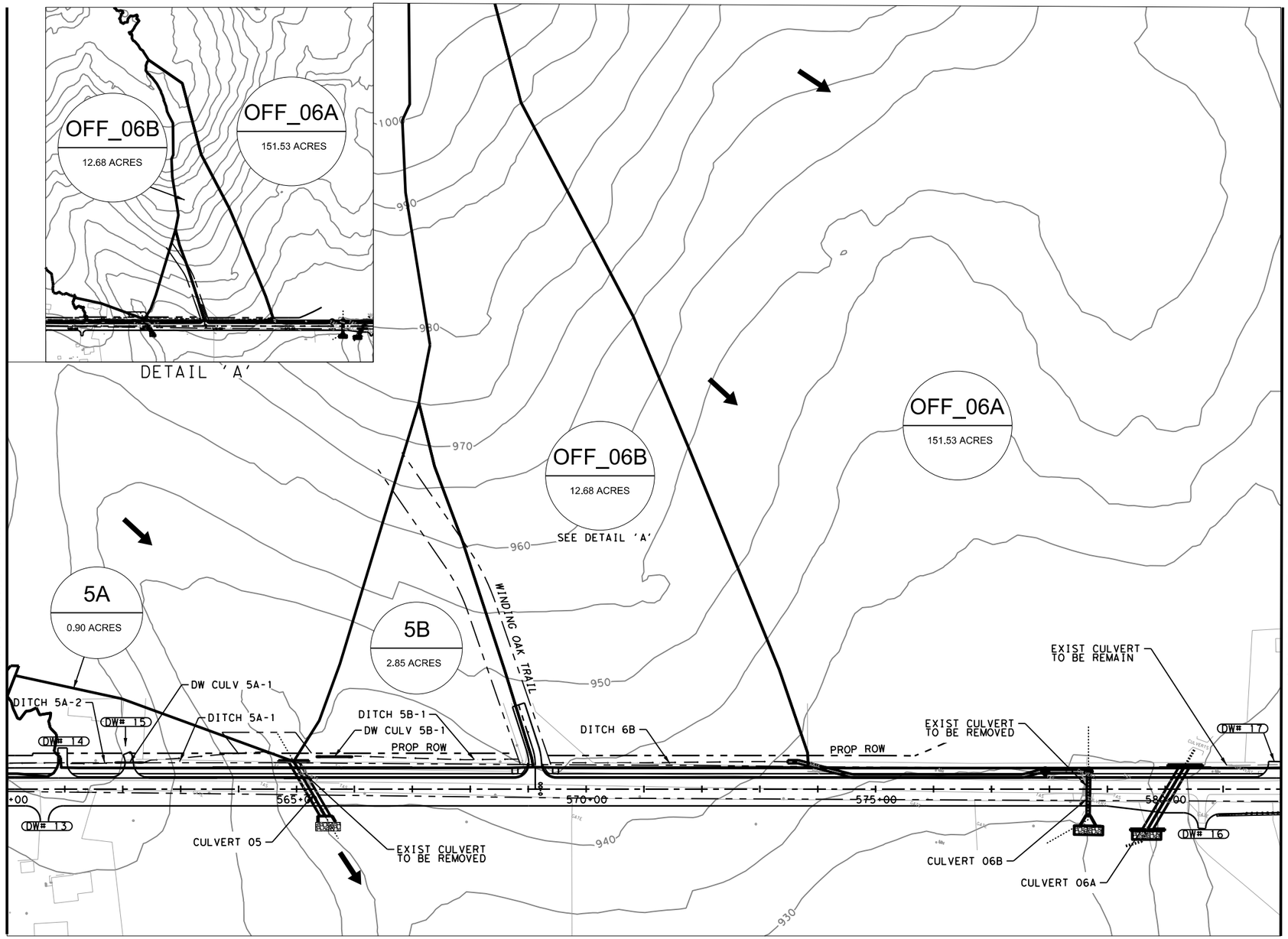

LEGEND

- # / 77.0 ac — DRAINAGE AREA ID / DRAINAGE AREA (ACRES)
- FLOW DIRECTION
- 690 — 5-FOOT CONTOURS
- DRAINAGE AREA BOUNDARY
- DITCH CENTERLINE

NOTES:
1. SEE PARALLEL DRAINAGE HYDROLOGIC DATA SHEET FOR ADDITIONAL INFORMATION.

2. TERRAIN DATA OBTAINED FROM USGS 2024 LIDAR DATA.

0 100 200
SCALE: 1"=200'

STATE OF TEXAS
VANESSA MOLINA
141173
LICENSED
PROFESSIONAL ENGINEER

WILCO TEXAS

BGE, Inc.
101 W Louis Henna Blvd, Suite 400, Austin, TX 78728
Tel: 512-879-0400 • www.bgeinc.com
TBPE Registration No. F-1046

RM 2243

INTERNAL DRAINAGE AREA MAP

SHEET 4 OF 9

FED.RD. DIV.NO.	PROJECT NO.		SHEET NO.
6			248
STATE	DIST.	COUNTY	
TEXAS	AUS	WILLIAMSON	
CONT.	SECT.	JOB	HIGHWAY NO.
0914	05	222	RM 2243

4/10/2025 1:02:37 PM pdf.pltcfg
C:\TXC\Projects\County\Williamson\7473-02 RM 2243 Phase 1A\03*CADD\01*Shts\06-DRNG\RM2243*P1A*INT-DA*04.dgn

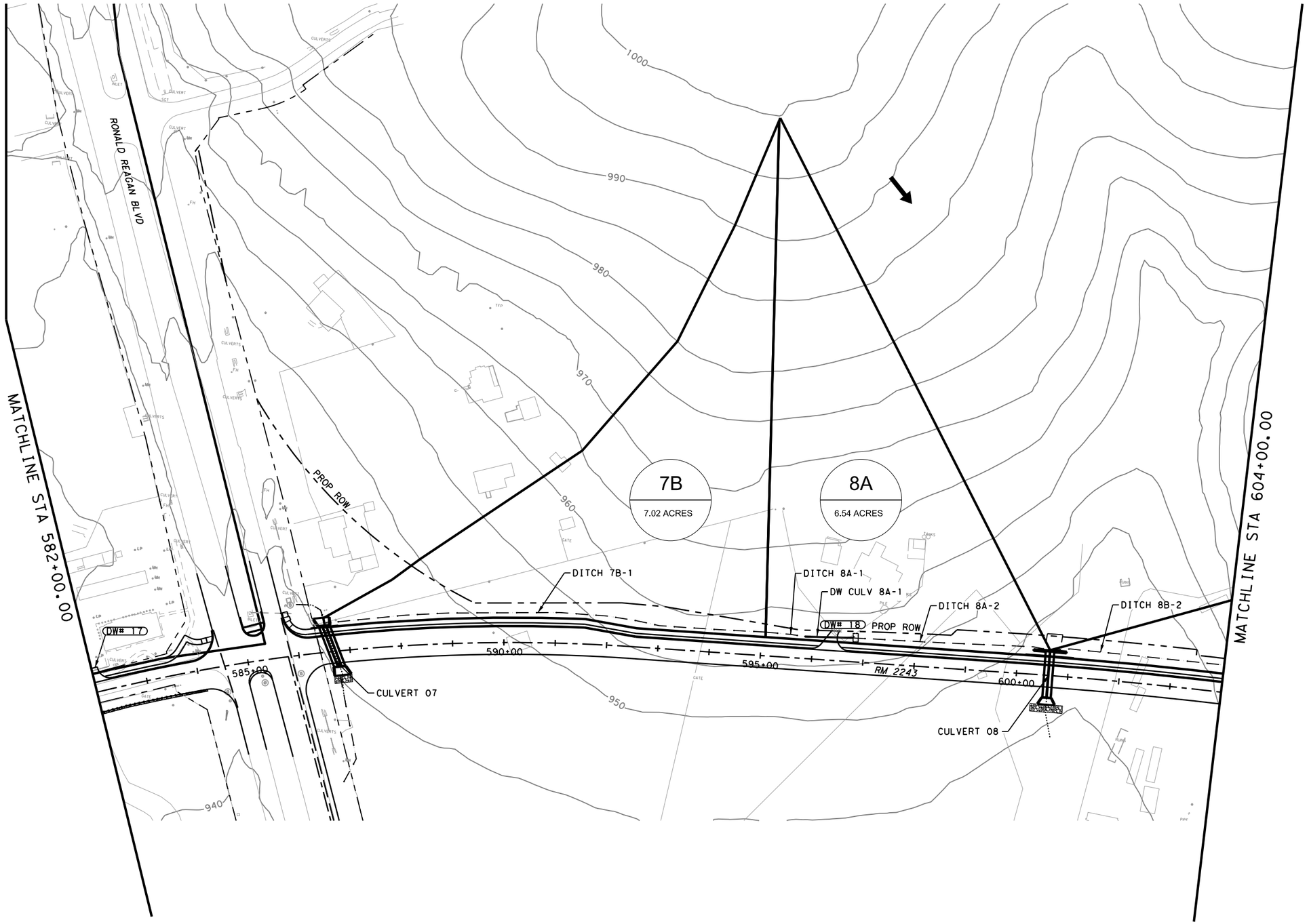

LEGEND

- # / 77.0 ac — DRAINAGE AREA ID / DRAINAGE AREA (ACRES)
- FLOW DIRECTION
- 690 — 5-FOOT CONTOURS
- DRAINAGE AREA BOUNDARY
- DITCH CENTERLINE

NOTES:
1. SEE PARALLEL DRAINAGE HYDROLOGIC DATA SHEET FOR ADDITIONAL INFORMATION.

2. TERRAIN DATA OBTAINED FROM USGS 2024 LIDAR DATA.

0 100 200
SCALE: 1"=200'

STATE OF TEXAS
VANESSA MOLINA
141173
PROFESSIONAL ENGINEER
LICENSED

WILCO TEXAS

BGE, Inc.
101 W Louis Henna Blvd, Suite 400, Austin, TX 78728
Tel: 512-879-0400 • www.bgeinc.com
TBPE Registration No. F-1046

RM 2243

INTERNAL DRAINAGE AREA MAP

SHEET 5 OF 9

FED.RD. DIV.NO.	PROJECT NO.		SHEET NO.
6			249
STATE	DIST.	COUNTY	
TEXAS	AUS	WILLIAMSON	
CONT.	SECT.	JOB	HIGHWAY NO.
0914	05	222	RM 2243

4/10/2025 1:02:39 PM pdf.pltcfg
G:\TXC\Projects\County\Williamson\7473-02 RM 2243 Phase 1A\03*CADD\01*Shts\06-DRNG\RM2243*P1A*INT-DA*05.dgn

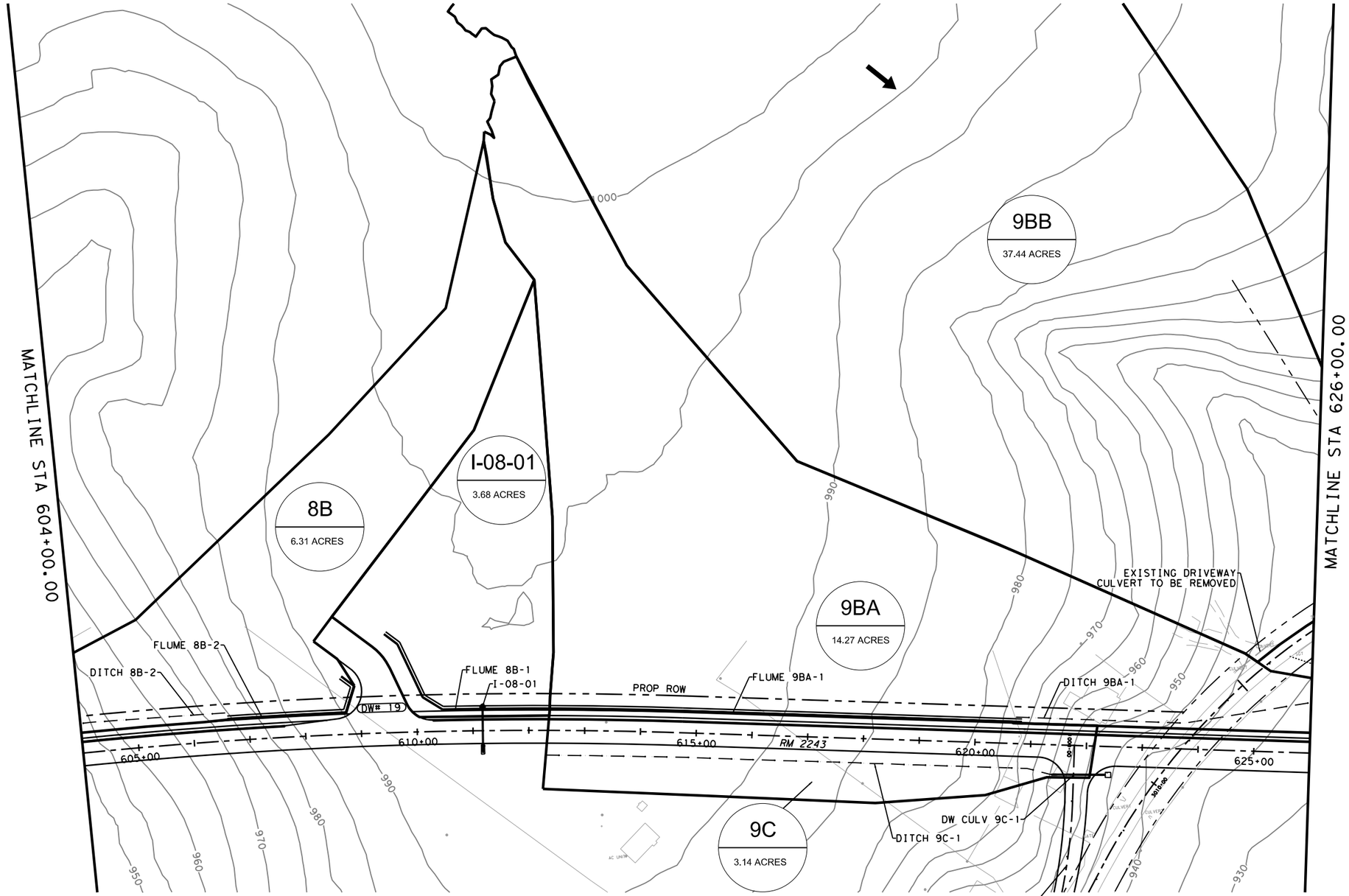

LEGEND

- # / 77.0 ac — DRAINAGE AREA ID / DRAINAGE AREA (ACRES)
- FLOW DIRECTION
- 690 — 5-FOOT CONTOURS
- DRAINAGE AREA BOUNDARY
- DITCH CENTERLINE

NOTES:
1. SEE PARALLEL DRAINAGE HYDROLOGIC DATA SHEET FOR additional INFORMATION.
2. TERRAIN DATA OBTAINED FROM USGS 2024 LIDAR DATA.

0 100 200
SCALE: 1"=200'

STATE OF TEXAS
VANESSA MOLINA
141173
LICENSED PROFESSIONAL ENGINEER

WILCO TEXAS

BGE, Inc.
101 W Louis Henna Blvd, Suite 400, Austin, TX 78728
Tel: 512-879-0400 • www.bgeinc.com
TBPE Registration No. F-1046

RM 2243

INTERNAL DRAINAGE AREA MAP

SHEET 6 OF 9

FED.RD. DIV.NO.	PROJECT NO.		SHEET NO.
6			250
STATE	DIST.	COUNTY	
TEXAS	AUS	WILLIAMSON	
CONT.	SECT.	JOB	HIGHWAY NO.
0914	05	222	RM 2243

4/10/2025 1:02:40 PM pdf.pltcfg
G:\TXC\Projects\County\Williamson\7473-02 RM 2243 Phase 1A\03\CADD\01\Shts\06-DRNG\RM2243_P1A_INT-DA_06.dgn

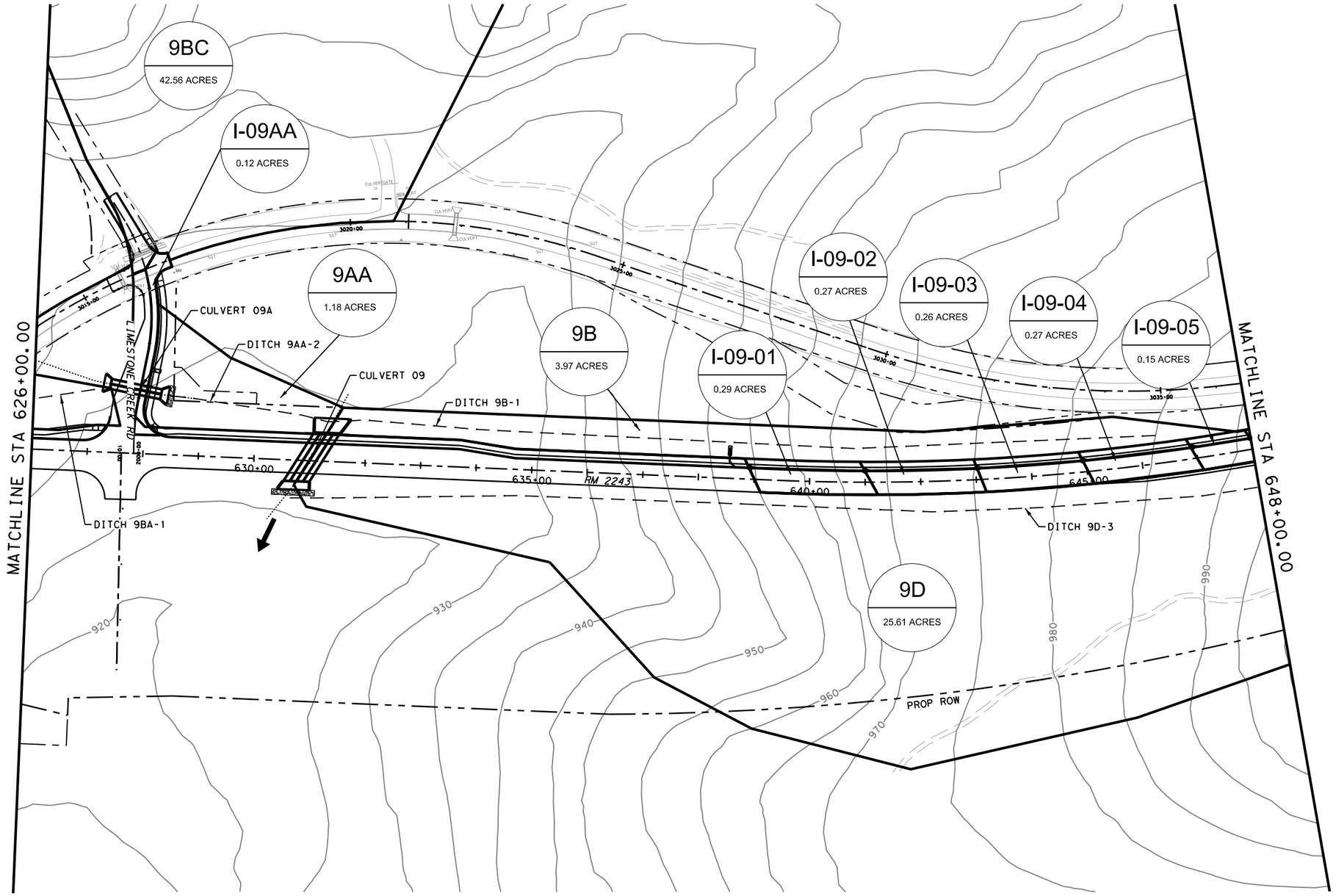

LEGEND

- # / 77.0 ac — DRAINAGE AREA ID / DRAINAGE AREA (ACRES)
- FLOW DIRECTION
- 690 — 5-FOOT CONTOURS
- DRAINAGE AREA BOUNDARY
- DITCH CENTERLINE

NOTES:
1. SEE PARALLEL DRAINAGE HYDROLOGIC DATA SHEET FOR ADDITIONAL INFORMATION.

2. TERRAIN DATA OBTAINED FROM USGS 2024 LIDAR DATA.

0 100 200
SCALE: 1"=200'

STATE OF TEXAS
VANESSA MOLINA
141173
LICENSED PROFESSIONAL ENGINEER

WILCO TEXAS

BGE, Inc.
101 W Louis Henna Blvd, Suite 400, Austin, TX 78728
Tel: 512-879-0400 ● www.bgeinc.com
TBPE Registration No. F-1046

RM 2243

INTERNAL DRAINAGE AREA MAP

SHEET 7 OF 9

FED.RD. DIV.NO.	PROJECT NO.		SHEET NO.
6			251

STATE	DIST.	COUNTY	
TEXAS	AUS	WILLIAMSON	
CONT.	SECT.	JOB	HIGHWAY NO.
0914	05	222	RM 2243

4/10/2025 1:02:41 PM pdf.pltcfg
G:\TXC\Projects\County\Williamson\7473-02 RM 2243 Phase 1A\03*CADD\01*Shts\06-DRNG\RM2243*P1A*INT-DA*07.dgn

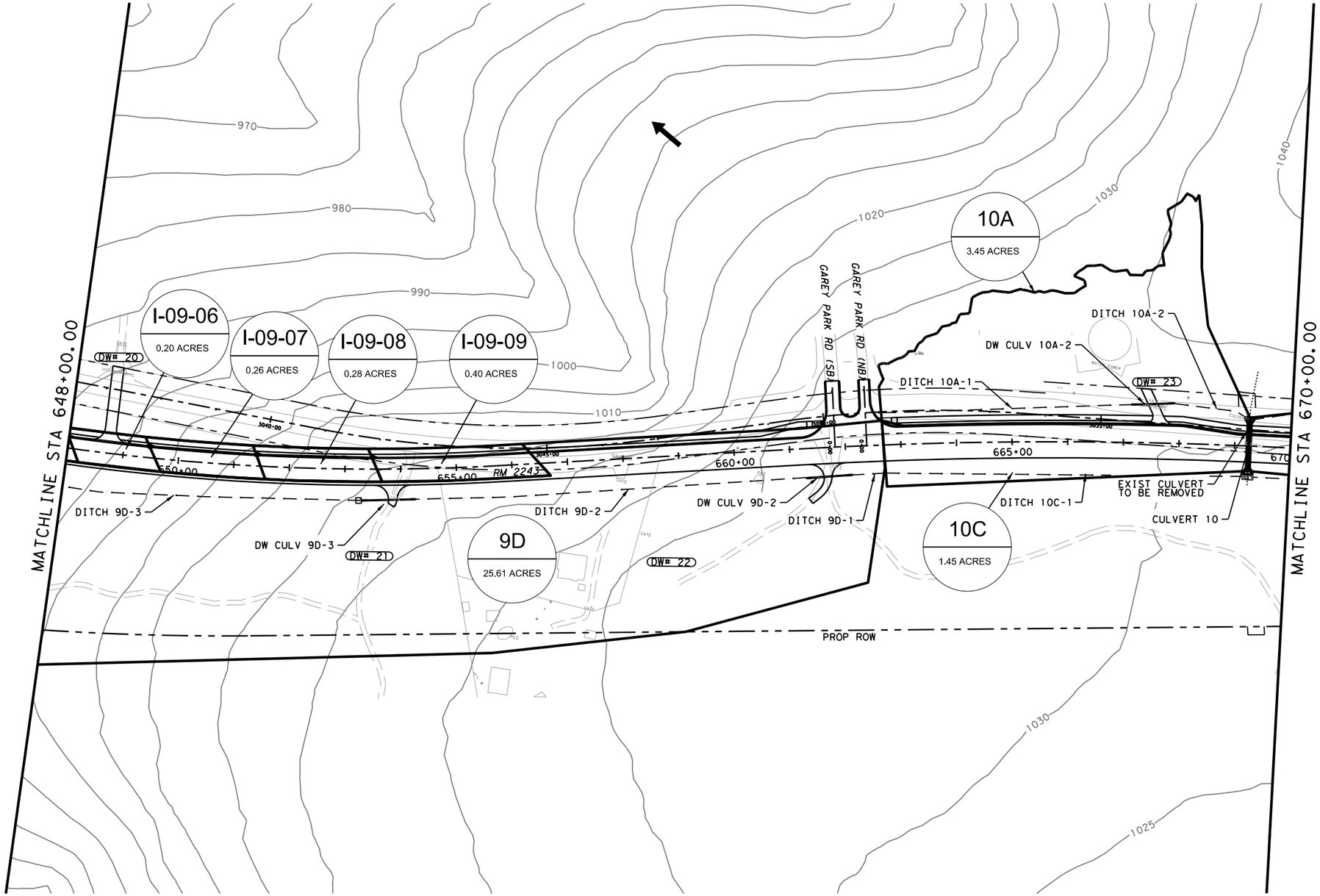

LEGEND

- # / 77.0 ac — DRAINAGE AREA ID / DRAINAGE AREA (ACRES)
- FLOW DIRECTION
- 690 — 5-FOOT CONTOURS
- DRAINAGE AREA BOUNDARY
- DITCH CENTERLINE

NOTES:
1. SEE PARALLEL DRAINAGE HYDROLOGIC DATA SHEET FOR ADDITIONAL INFORMATION.
2. TERRAIN DATA OBTAINED FROM USGS 2024 LIDAR DATA.

0 100 200
SCALE: 1"=200'

STATE OF TEXAS
VANESSA MOLINA
141173
LICENSED PROFESSIONAL ENGINEER

WILCO TEXAS

BGE, Inc.
101 W Louis Henna Blvd, Suite 400, Austin, TX 78728
Tel: 512-879-0400 • www.bgeinc.com
TBPE Registration No. F-1046

RM 2243

INTERNAL DRAINAGE AREA MAP

SHEET 8 OF 9

FED.RD. DIV.NO.	PROJECT NO.		SHEET NO.
6			252
STATE	DIST.	COUNTY	
TEXAS	AUS	WILLIAMSON	
CONT.	SECT.	JOB	HIGHWAY NO.
0914	05	222	RM 2243

4/10/2025 1:02:42 PM pdf.pltcfg
G:\TXC\Projects\County\Williamson\7473-02 RM 2243 Phase 1A\03*CADD\01*Shts\06-DRNG\RM2243*P1A*INT-DA*08.dgn

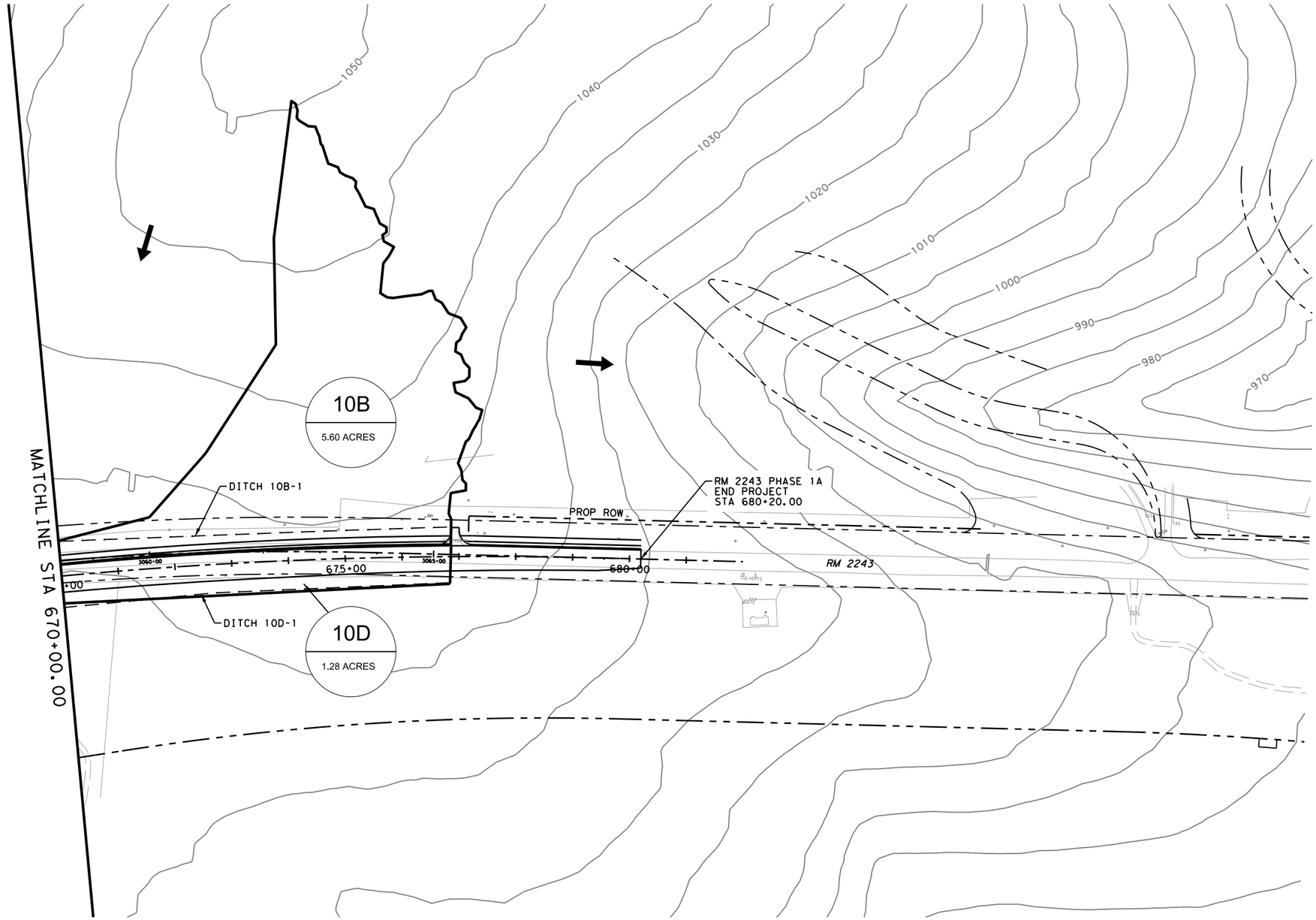

LEGEND

- # / 77.0 ac — DRAINAGE AREA ID / DRAINAGE AREA (ACRES)
- FLOW DIRECTION
- 690 — 5-FOOT CONTOURS
- DRAINAGE AREA BOUNDARY
- DITCH CENTERLINE

NOTES:
1. SEE PARALLEL DRAINAGE HYDROLOGIC DATA SHEET FOR ADDITIONAL INFORMATION.
2. TERRAIN DATA OBTAINED FROM USGS 2024 LIDAR DATA.

0 100 200
SCALE: 1"=200'

STATE OF TEXAS
VANESSA MOLINA
141173
LICENSED PROFESSIONAL ENGINEER

WILCO TEXAS

BGE, Inc.
101 W Louis Henna Blvd, Suite 400, Austin, TX 78728
Tel: 512-879-0400 • www.bgeinc.com
TBPE Registration No. F-1046

RM 2243

INTERNAL DRAINAGE AREA MAP

SHEET 9 OF 9

FED.RD. DIV.NO.	PROJECT NO.		SHEET NO.
6			253
STATE	DIST.	COUNTY	
TEXAS	AUS	WILLIAMSON	
CONT.	SECT.	JOB	HIGHWAY NO.
0914	05	222	RM 2243

4/10/2025 1:02:43 PM pdf.pltcfg
G:\TXC\Projects\County\Williamson\7473-02 RM 2243 Phase 1A\03*CADD\01*Shts\06-DRNG\RM2243*P1A*INT-DA*09.dgn

RATIONAL METHOD - RUNOFF COMPUTATIONS (ULTIMATE CONDITIONS)

	DISCHARGE CALCULATION														
	DRAINAGE BASIN	AREA (AC)	TC (MIN)	C	I - 2 YR (IN/HR)	Q2 (CFS)	I - 5 YR (IN/HR)	Q5 (CFS)	I - 10 YR (IN/HR)	Q10 (CFS)	I - 25 YR (IN/HR)	Q25 (CFS)	I - 50 YR (IN/HR)	Q50 (CFS)	I - 100 YR (IN/HR)	Q100 (CFS)
	2AA	11.53	23.35	0.62	3.12	22.41	4.15	29.87	4.97	35.73	6.09	43.84	6.99	50.29	7.94	57.13
	2A	5.84	11.94	0.63	4.28	15.78	5.66	20.85	6.72	24.77	8.18	30.13	9.32	34.35	10.50	38.70
	2B	2.07	19.92	0.72	3.39	5.05	4.50	6.72	5.38	8.02	6.59	9.82	7.54	11.25	8.55	12.75
**	2C	1.32	10.00	0.69	4.59	4.21	6.05	5.54	7.18	6.58	8.71	7.98	9.91	9.08	11.15	10.21
	3A	8.91	25.99	0.61	2.94	15.93	3.92	21.26	4.70	25.46	5.77	31.28	6.63	35.91	7.54	40.85
	3B	4.77	15.67	0.60	3.81	10.90	5.04	14.45	6.01	17.21	7.34	21.01	8.38	24.01	9.48	27.14
	4A	10.55	24.16	0.62	3.06	19.92	4.08	26.56	4.88	31.78	5.99	39.01	6.87	44.77	7.81	50.88
	4B	19.63	11.51	0.61	4.35	51.71	5.74	68.27	6.82	81.10	8.29	98.60	9.45	112.35	10.64	126.54
	4C	2.65	22.98	0.83	3.14	6.87	4.19	9.16	5.01	10.95	6.14	13.44	7.05	15.41	8.00	17.50
	4E	2.08	18.38	0.48	3.53	3.52	4.68	4.68	5.59	5.58	6.84	6.82	7.83	7.81	8.86	8.85
**	5A	0.90	10.00	0.71	4.59	2.92	6.05	3.85	7.18	4.56	8.71	5.54	9.91	6.30	11.15	7.09
**	5B	2.85	10.00	0.70	4.59	9.17	6.05	12.08	7.18	14.33	8.71	17.40	9.91	19.80	11.15	22.26
	OFF_06B	12.68	19.37	0.67	3.44	29.15	4.57	38.76	5.45	46.27	6.67	56.63	7.64	64.85	8.66	73.50
	OFF_06A	151.53	38.31	0.62	2.33	220.24	3.13	295.67	3.77	355.40	4.65	438.82	5.36	505.67	6.12	577.81
	7B	7.02	15.84	0.70	3.79	18.73	5.02	24.83	5.98	29.59	7.30	36.12	8.35	41.28	9.44	46.67
	8A	6.54	13.42	0.70	4.08	18.68	5.40	24.70	6.42	29.39	7.82	35.80	8.92	40.85	10.07	46.09
**	I-08-01	3.68	10.00	0.70	4.59	11.82	6.05	15.58	7.18	18.49	8.71	22.44	9.91	25.54	11.15	28.71
	8B	6.31	18.98	0.74	3.47	16.19	4.61	21.52	5.51	25.69	6.74	31.43	7.71	35.98	8.74	40.77
**	9B	3.97	10.00	0.72	4.59	13.10	6.05	17.26	7.18	20.48	8.71	24.85	9.91	28.28	11.15	31.80
**	9C	3.14	10.00	0.69	4.59	9.92	6.05	13.07	7.18	15.51	8.71	18.82	9.91	21.42	11.15	24.09
	9D	25.61	22.92	0.62	3.15	49.91	4.19	66.51	5.01	79.54	6.15	97.57	7.05	111.90	8.01	127.10
**	9AA	1.24	10.00	0.48	4.59	2.71	6.05	3.57	7.18	4.23	8.71	5.14	9.91	5.85	11.15	6.58
	9BA	14.27	22.36	0.59	3.19	27.00	4.25	35.96	5.08	43.00	6.23	52.73	7.14	60.46	8.11	68.64
	9BB	37.44	27.58	0.50	2.84	53.17	3.80	71.05	4.55	85.12	5.59	104.67	6.42	120.25	7.31	136.88
	9BC	42.56	23.40	0.43	3.11	56.30	4.15	75.04	4.96	89.76	6.09	110.13	6.98	126.33	7.93	143.52
**	10A	3.45	10.00	0.55	4.59	8.64	6.05	11.38	7.18	13.51	8.71	16.39	9.91	18.66	11.15	20.98
	10B	5.60	15.88	0.53	3.78	11.20	5.01	14.84	5.98	17.69	7.30	21.59	8.34	24.68	9.43	27.90
**	10C	1.45	10.0	0.90	4.59	5.99	6.05	7.89	7.18	9.37	8.71	11.37	9.91	12.94	11.15	14.55
**	10D	1.28	10.0	0.90	4.59	5.27	6.05	6.95	7.18	8.24	8.71	10.00	9.91	11.38	11.15	12.80

**10 minute Tc value assumed

Design Annual Exceedance Probability (Design Annual Recurrence Interval)			
Storm Frequency (Years)	Coefficients		
	d (min)	e	b
2	12.099	0.820	58.096
5	12.478	0.807	74.502
10	12.845	0.800	87.570
25	13.428	0.792	105.867
50	13.910	0.787	120.598
100	14.623	0.782	136.644

PROPOSED - RUNOFF COMPUTATIONS - 5-YR DESIGN

Area ID	C Value	Area (acre)	TC (min)	Intensity (in/hr)	Discharge (cfs)
I-08-01	0.70	3.68	10	6.050	15.59
I-09AA	0.90	0.12	10	11.143	1.20
I-09-01	0.90	0.29	10	6.050	1.56
I-09-02	0.90	0.27	10	6.050	1.49
I-09-03	0.90	0.26	10	6.050	1.43
I-09-04	0.90	0.27	10	6.050	1.46
I-09-05	0.90	0.15	10	6.050	0.82
I-09-06	0.90	0.20	10	6.050	1.09
I-09-07	0.90	0.26	10	6.050	1.42
I-09-08	0.90	0.28	10	6.050	1.55
I-09-09	0.90	0.40	10	6.050	2.15

PROPOSED - RUNOFF COMPUTATIONS - 25 -YR DESIGN

Area ID	C Value	Area (acre)	TC (min)	Intensity (in/hr)	Discharge (cfs)
OFF_06B	0.67	12.68	19	6.673	56.63

PROPOSED - RUNOFF COMPUTATIONS - 100-YR DESIGN

Area ID	C Value	Area (acre)	TC (min)	Intensity (in/hr)	Discharge (cfs)
OFF_06B	0.67	12.68	19	8.658	73.56
I-09AA	0.90	0.12	10	11.143	1.24
I-08-01	0.70	3.68	10	11.143	28.72
I-09-01	0.90	0.29	10	11.143	2.87
I-09-02	0.90	0.27	10	11.143	2.74
I-09-03	0.90	0.26	10	11.143	2.63
I-09-04	0.90	0.27	10	11.143	2.69
I-09-05	0.90	0.15	10	11.143	1.51
I-09-06	0.90	0.20	10	11.143	2.02
I-09-07	0.90	0.26	10	11.143	2.62
I-09-08	0.90	0.28	10	11.143	2.86
I-09-09	0.90	0.40	10	11.143	3.97

NOTE: RAINFALL DATA FROM NOAA ATLAS 14 POINT PRECIPITATION FREQUENCY ESTIMATE. VOLUME 11, VERSION 2
LOCATION NAME: LEANDER, TEXAS
LATITUDE: 30.581°
LONGITUDE: -97.82°
ELEVATION: 899 FT

STATE OF TEXAS
VANESSA MOLINA
141173
PROFESSIONAL ENGINEER
LICENSED

WILCO TEXAS

BGE, Inc.
101 W Louis Henna Blvd, Suite 400, Austin, TX 78728
Tel: 512-879-0400 • www.bgeinc.com
TBPE Registration No. F-1046

RM 2243

PARALLEL DRAINAGE HYDROLOGIC DATA

SHEET 1 OF 1

FED.RD. DIV.NO.	PROJECT NO.		SHEET NO.
6			254
STATE	DIST.	COUNTY	
TEXAS	AUS	WILLIAMSON	
CONT.	SECT.	JOB	HIGHWAY NO.
0914	05	222	RM 2243

4/10/2025 1:02:57 PM pdf.pltcfg
G:\TXC\Projects\County\Williamson\7473-02 RM 2243 Phase 1A\03*CADD\01*Shts\06-DRNG\RM2243*P1A*PARALLEL*DRN*HYDRO*DATA*01.dgn

DITCH CALCULATIONS - 5 YEAR STORM

PROPOSED LEFT SIDE DITCH/FLUME CALCULATIONS

DITCH/FLUME NAME	BEGIN STATION	END STATION	STATION ALIGNMENT	START DITCH FLOWLINE ELEVATION (FT)	END DITCH FLOWLINE ELEVATION (FT)	FRONT SIDE SLOPE (H:1)	BACK SIDE SLOPE (H:1)	BOTTOM WIDTH (FT)	AVERAGE LONG. SLOPE (FT/FT)	MANNING'S N	DRAINAGE BASIN ID	5YR MAX BASIN FLOW (CFS)	MAX % OF BASIN TO DITCH	MAX DITCH FLOW (CFS)	MAX FLOW DEPTH (FT)	AVERAGE VELOCITY (FPS)	MIN FREEBOARD TO EOP (FT)	MIN FREEBOARD TO ROW (FT)	SHEAR (LB/SQ.FT)	CHANNEL LINING TYPE
DITCH 2A-1	507+00	509+40	RM 2243	948.60	944.55	4	4	2	0.017	0.035	2A	20.85	100	20.85	0.88	3.42	2.55	0.35	0.55	GRASS
DITCH 2B-2	509+40	511+82	RM 2243	944.55	945.80	4	4	0	0.005	0.035	2B	6.72	100	6.72	1.05	1.74	4.70	2.63	0.19	GRASS
DITCH 2B-1	512+49	514+54	RM 2243	945.95	951.90	4	4	0	0.029	0.035	2B	6.72	90	6.04	0.70	2.44	1.27	0.30	0.16	GRASS
DITCH 3A-1	514+54	518+17	RM 2243	951.55	950.62	4	4	6	0.003	0.035	3A	21.26	60	3.19	0.39	0.75	1.05	0.20	0.01	GRASS
DITCH 3A-2	519+50	521+58	RM 2243	950.32	949.70	4	4	6	0.003	0.035	3A	21.26	100	12.76	0.83	1.22	2.33	0.22	0.01	GRASS
DITCH 3A-3	516+30	521+58	RM 2243	950.32	949.70	4	4	6	0.001	0.035	3A	21.26	100	21.26	1.14	1.76	4.02	0.05	0.15	GRASS
DITCH 3B-1	521+58	528+77	RM 2243	949.70	956.11	4	3	2	0.009	0.035	3B	14.45	100	14.45	1.30	2.21	2.29	0.14	0.13	GRASS
DITCH 4A-1	528+81	532+80	RM 2243	956.96	953.27	4	4	0	0.009	0.035	4A	26.56	40	10.62	0.98	2.06	2.34	2.29	0.24	GRASS
DITCH 4A-2	534+00	537+80	RM 2243	951.54	945.37	4	3	2	0.016	0.035	4A	26.56	60	15.94	0.85	3.41	3.88	1.28	0.45	GRASS
DITCH 4A-3	538+42	543+00	RM 2243	943.08	935.00	50	6	0	0.018	0.035	4A	26.56	100	26.56	0.60	2.48	2.47	1.32	0.55	GRASS
DITCH 4A-2-I	538+42	543+00	RM 2244	951.54	947.66	7	7	0	0.008	0.035	4A-I	26.56	100	26.56	0.60	1.62	4.49	1.47	0.25	GRASS
DITCH 4B-4	543+00	546+32	RM 2243	935.00	941.00	50	12	0	0.018	0.035	4B	68.27	100	68.27	1.17	3.25	1.28	0.83	0.20	GRASS
DITCH 4B-3	547+50	550+51	RM 2243	944.80	950.44	4	3	2	0.019	0.035	4B	68.27	86	58.71	1.97	4.49	1.87	0.54	0.60	GRASS
DITCH 4B-2	551+60	556+11	RM 2243	950.88	953.80	4	4	0	0.006	0.035	4B	68.27	65	44.37	1.90	3.26	2.31	0.16	0.29	GRASS
DITCH 4B-1	556+86	560+50	RM 2243	954.05	955.95	4	3	0	0.005	0.035	4B	68.27	30	20.48	1.26	3.26	1.46	1.33	0.32	GRASS
DITCH 4B-3-I	546+00	550+50	RM 2243	940.73	953.28	11	6	0	0.028	0.035	4B-I	68.27	45	30.72	1.24	4.64	0.50	1.20	1.43	GRASS
DITCH 5A-2	561+07	561+86	RM 2243	956.06	954.86	3	2	0	0.015	0.035	5A	3.85	30	1.15	0.68	0.99	0.65	4.86	0.06	CONCRETE
DITCH 5A-1	562+35	564+50	RM 2243	954.68	944.64	2	3	4	0.047	0.035	5A	3.85	100	3.85	0.35	2.92	0.56	0.45	0.38	CONCRETE
DITCH 5B-1	565+00	568+89	RM 2243	940.57	942.28	2	2	2	0.004	0.035	5B	12.08	100	12.08	1.49	1.46	0.90	0.14	0.06	CONCRETE
DITCH 6B	569+37	573+71	RM 2243	942.25	934.35	2	2	0	0.018	0.035	6A	38.76	100	38.76	1.97	4.22	0.15	2.83	0.99	CONCRETE
DITCH 7B-1	586+76	592+50	RM 2243	940.50	949.13	4	4	0	0.015	0.035	7B	24.83	100	24.83	1.21	2.85	0.41	1.19	0.55	GRASS
DITCH 8A-1	592+50	596+03	RM 2243	949.13	945.59	4	4	0	0.010	0.035	8A	24.70	50	12.35	1.07	2.26	0.03	1.92	0.21	GRASS
DITCH 8A-2	596+74	600+62	RM 2243	945.23	942.20	4	4	0	0.008	0.035	8A	24.70	100	24.70	1.07	1.95	1.29	0.23	0.04	GRASS
DITCH 8B-2	600+62	606+50	RM 2243	942.20	967.00	4	6	0	0.042	0.035	8B	21.52	100	21.52	1.06	5.38	1.77	0.10	1.75	GRASS
FLUME 8B-2	606+50	608+24	RM 2244	967.00	984.00	2	2	6	0.098	0.02	8B	21.52	50	10.76	0.19	4.67	0.90	0.20	0.09	CONCRETE
FLUME 8B-1	608+78	612+36	RM 2243	979.37	986.00	1	2	6	0.018	0.02	8B	15.58	100	15.58	0.44	3.26	0.19	1.88	0.10	CONCRETE
FLUME 9BA-1	612+38	620+70	RM 2243	986.00	952.00	2	3	2	0.041	0.035	9BA	35.96	70	25.17	0.85	5.38	1.36	0.35	0.14	CONCRETE
DITCH 9BA-1	620+70	627+00	RM 2244	952.00	922.10	4	4	0	0.047	0.035	9BA	35.96	80	28.77	1.13	5.77	1.65	1.24	2.33	GRASS
DITCH 9AA-2	628+24	631+00	RM 2243	921.58	920.79	4	4	0	0.003	0.035	9AA	3.57	100	3.57	0.85	1.22	5.52	2.57	0.14	GRASS
DITCH 9B-1	631+00	640+81	RM 2243	920.93	955.00	4	4	0	0.035	0.035	9B	17.26	100	17.26	1.19	3.50	3.95	0.45	0.50	GRASS
DITCH 10A-1	662+81	667+13	RM 2243	1028.80	1027.15	4	4	0	0.004	0.035	10A	11.38	80	9.11	1.13	1.54	1.59	2.10	0.15	GRASS
DITCH 10A-2	667+91	669+25	RM 2243	1026.90	1026.48	4	4	0	0.003	0.035	10A	11.38	100	11.38	1.31	1.86	2.22	1.14	0.23	GRASS
DITCH 10B-1	669+25	676+86	RM 2243	1026.48	1032.00	4	4	0	0.007	0.035	10B	14.84	100	14.84	1.22	2.09	0.57	0.44	0.15	GRASS

PROPOSED RIGHT SIDE DITCH CALCULATIONS

DITCH/FLUME NAME	BEGIN STATION	END STATION	STATION ALIGNMENT	START DITCH FLOWLINE ELEVATION (FT)	END DITCH FLOWLINE ELEVATION (FT)	FRONT SIDE SLOPE (H:1)	BACK SIDE SLOPE (H:1)	BOTTOM WIDTH (FT)	AVERAGE LONG. SLOPE (FT/FT)	MANNING'S N	DRAINAGE BASIN ID	5YR MAX BASIN FLOW (CFS)	MAX % OF BASIN TO DITCH	MAX DITCH FLOW (CFS)	MAX FLOW DEPTH (FT)	AVERAGE VELOCITY (FPS)	MIN FREEBOARD TO EOP (FT)	MIN FREEBOARD TO ROW (FT)	SHEAR (LB/SQ.FT)	CHANNEL LINING TYPE
DITCH 4C	530+00	533+25	RM 2243	954.50	950.10	6	4	2	0.014	0.035	4C	9.16	20	1.83	1.23	4.68	0.50	1.20	1.43	GRASS
DITCH 4C-0	534+67	541+34	RM 2243	947.30	936.77	6	4	2	0.016	0.035	4C	9.16	40	3.66	0.56	2.39	2.06	2.04	0.32	GRASS
DITCH 4C-1	538+00	541+34	RM 2243	941.69	936.77	6	4	2	0.015	0.035	4C	9.16	80	7.33	0.56	2.36	2.06	2.04	0.32	GRASS
DITCH 4C-2	541+68	543+42	RM 2243	936.63	932.00	6	6	0	0.027	0.035	4C	9.16	100	9.16	0.91	3.71	3.44	0.20	0.23	GRASS
DITCH 9C-1	612+00	621+39	RM 2243	975.00	941.35	6	4	2	0.036	0.035	9C	13.07	100	13.07	0.69	3.05	1.68	0.84	0.55	GRASS
DITCH 9D-3	631+00	653+30	RM 2243	920.32	1014.00	6	4	2	0.042	0.035	9D	66.51	100	66.51	1.46	5.77	1.74	0.20	0.97	GRASS
DITCH 9D-2	654+26	661+27	RM 2243	1016.00	1026.15	8	4	2	0.014	0.035	9D	66.51	25	16.63	0.79	2.59	1.22	2.66	0.27	GRASS
DITCH 9D-1	662+11	662+71	RM 2243	1026.42	1028.00	6	4	2	0.026	0.035	9D	66.51	4	2.66	0.31	2.23	0.40	5.14	0.35	GRASS
DITCH 10C-1	662+68	669+25	RM 2243	1028.00	1025.56	6	4	0	0.004	0.035	10C	7.89	100	7.89	0.84	1.38	0.45	0.01	0.07	GRASS
DITCH 10D-1	676+86	669+25	RM 2244	1030.00	1025.56	6	4	0	0.006	0.035	10D	6.95	100	6.95	1.00	1.29	0.93	0.01	0.09	GRASS

NOTE:
1. DITCHES ARE DESIGNED TO THE 5-YEAR STORM AND CHECKED WITH THE 100-YEAR STORM.

2. SEE ROADWAY P&P SHEET FOR CONCRETE RIP RAP LIMITS.

STATE OF TEXAS
VANESSA MOLINA
141173
LICENSED PROFESSIONAL ENGINEER

WILCO TEXAS

BGE, Inc.
101 W Louis Henna Blvd, Suite 400, Austin, TX 78728
Tel: 512-879-0400 • www.bgeinc.com
TBPE Registration No. F-1046

RM 2243

DITCH CAPACITY

FED.RD. DIV.NO.	PROJECT NO.		SHEET NO.
6			255
STATE	DIST.	COUNTY	
TEXAS	AUS	WILLIAMSON	
CONT.	SECT.	JOB	HIGHWAY NO.
0914	05	222	RM 2243

4/10/2025 1:03:03 PM pdf.pltcfg
G:\TXC\Projects\County\Williamson\7473-02 RM 2243 Phase 1A\03-CADD\01-Shts\06-DRNG\RM2243-P1A-DITCH-CAPACITY-01.dgn

DITCH CALCULATIONS - 100 YEAR STORM

NOTE:
1. DITCHES ARE DESIGNED TO THE 5-YEAR STORM AND CHECKED WITH THE 100-YEAR STORM.

2. SEE ROADWAY P&P SHEET FOR CONCRETE RIP RAP LIMITS.

PROPOSED LEFT SIDE DITCH/FLUME CALCULATIONS

DITCH/FLUME NAME	BEGIN STATION	END STATION	STATION ALIGNMENT	START DITCH FLOWLINE ELEVATION	END DITCH FLOWLINE ELEVATION	FRONT SIDE SLOPE (H:1)	BACK SIDE SLOPE (H:1)	BOTTOM WIDTH	AVERAGE LONG. SLOPE	MANNING'S N	DRAINAGE BASIN ID	100YR MAX BASIN FLOW	MAX % OF BASIN TO DITCH	MAX DITCH FLOW	MAX FLOW DEPTH	AVERAGE VELOCITY	MIN FREEBOARD TO EOP	MIN FREEBOARD TO ROW	SHEAR	CHANNEL LINING TYPE
				(FT)	(FT)			(FT)	(FT/FT)			(CFS)		(CFS)	(FT)	(FPS)	(FT)	(FT)	(LB/SQ.FT)	
DITCH 2A-1	507+00	509+40	RM 2243	948.60	944.55	4	4	2	0.017	0.035	2A	38.70	100	38.70	1.16	4.02	2.36	0.16	0.74	GRASS
DITCH 2B-2	509+40	511+82	RM 2243	944.55	945.80	4	4	0	0.005	0.035	2B	12.75	100	12.75	1.33	2.04	4.43	2.35	0.24	GRASS
DITCH 2B-1	512+49	514+54	RM 2243	945.95	951.90	4	4	0	0.029	0.035	2B	12.75	90	11.48	0.88	2.86	1.26	0.29	0.20	GRASS
DITCH 3A-1	514+54	518+17	RM 2243	951.55	950.62	4	4	6	0.003	0.035	3A	40.85	15	6.13	0.58	1.25	1.05	0.01	0.01	GRASS
DITCH 3A-2	519+50	521+58	RM 2243	950.32	949.70	4	4	6	0.003	0.035	3A	40.85	60	24.51	1.16	1.41	2.01	-0.10	0.01	GRASS
DITCH 3A-3	519+50	521+58	RM 2243	950.32	949.70	4	4	6	0.003	0.035	3A	27.14	100	40.85	1.57	2.11	3.68	-0.35	0.21	GRASS
DITCH 3B-1	521+58	528+77	RM 2243	949.70	956.11	4	3	2	0.009	0.035	3B	27.14	100	27.14	1.64	2.59	2.05	-0.21	0.16	GRASS
DITCH 4A-1	528+81	532+80	RM 2243	956.96	953.27	4	4	0	0.009	0.035	4A	50.88	40	20.35	1.25	2.43	2.16	2.02	0.31	GRASS
DITCH 4A-2	534+00	537+80	RM 2243	951.54	945.37	4	3	2	0.016	0.035	4A	50.88	60	30.53	1.14	4.03	3.59	1.00	0.61	GRASS
DITCH 4A-3	538+42	543+00	RM 2243	943.08	935.00	50	6	0	0.018	0.035	4A	50.88	100	50.88	0.77	2.91	2.33	1.17	0.70	GRASS
DITCH 4A-2-I	538+42	543+00	RM 2244	951.54	947.66	7	7	0	0.008	0.035	4A-I	50.88	100	50.88	0.76	1.90	4.39	1.31	0.31	GRASS
DITCH 4B-4	543+00	546+32	RM 2243	935.00	941.00	50	12	0	0.018	0.035	4B	126.54	100	126.54	1.03	4.88	1.71	0.98	1.30	GRASS
DITCH 4B-3	547+50	550+51	RM 2243	944.80	950.44	4	3	2	0.019	0.035	4B	126.54	86	108.82	2.55	5.24	1.33	0.00	0.77	GRASS
DITCH 4B-2	551+60	556+11	RM 2243	950.88	953.80	4	4	0	0.006	0.035	4B	126.54	65	82.25	2.40	3.80	1.82	-0.32	0.37	GRASS
DITCH 4B-1	556+86	560+50	RM 2243	954.05	955.95	4	3	0	0.005	0.035	4B	126.54	30	37.96	1.59	3.80	1.21	1.06	0.40	GRASS
DITCH 4B-3-I	546+00	550+50	RM 2243	940.73	953.28	11	6	0	0.028	0.035	4B-I	126.54	45	56.94	1.58	5.41	0.25	0.95	1.80	GRASS
DITCH 5A-2	561+07	561+86	RM 2243	956.06	954.86	3	2	0	0.015	0.035	5A	7.09	30	2.13	0.85	1.17	0.51	4.74	0.08	CONCRETE
DITCH 5A-1	562+35	564+50	RM 2243	954.68	944.64	2	3	4	0.047	0.035	5A	7.09	100	7.09	0.48	3.58	0.48	0.37	0.54	CONCRETE
DITCH 5B-1	565+00	568+89	RM 2243	940.57	942.28	2	2	2	0.004	0.035	5B	22.26	100	22.26	1.97	1.74	0.79	-0.06	0.08	CONCRETE
DITCH 6B	569+37	573+71	RM 2243	942.25	934.35	2	2	0	0.018	0.035	6A	73.50	100	73.50	2.51	4.96	-0.07	2.29	1.26	CONCRETE
DITCH 7B-1	586+76	592+50	RM 2243	940.50	949.13	4	4	0	0.015	0.035	7B	46.67	100	46.67	1.54	3.34	0.19	0.95	0.69	GRASS
DITCH 8A-1	592+50	596+03	RM 2243	949.13	945.59	4	4	0	0.010	0.035	8A	46.09	50	23.05	1.35	2.64	-0.14	1.64	0.27	GRASS
DITCH 8A-2	596+74	600+62	RM 2243	945.23	942.20	4	4	0	0.008	0.035	8A	46.09	100	46.09	2.11	2.77	0.68	-0.43	0.08	GRASS
DITCH 8B-2	600+62	606+50	RM 2243	942.20	967.00	4	6	0	0.042	0.035	8B	40.77	100	40.77	1.34	6.33	1.56	-0.43	2.37	GRASS
FLUME 8B-2	606+50	608+24	RM 2244	967.00	984.00	2	2	6	0.098	0.020	8B	40.77	50	20.39	0.28	5.94	0.86	0.12	0.13	CONCRETE
FLUME 8B-1	608+78	612+36	RM 2243	979.37	986.00	1	2	6	0.018	0.020	8B	40.77	100	40.77	0.63	4.07	0.00	1.82	0.15	CONCRETE
FLUME 9BA-1	612+38	620+70	RM 2243	986.00	952.00	2	3	2	0.041	0.035	9BA	68.64	70	48.05	0.85	6.34	1.26	0.19	0.20	CONCRETE
DITCH 9BA-1	620+70	627+00	RM 2244	952.00	922.10	4	4	0	0.047	0.035	9BA	68.64	80	54.92	1.44	6.65	1.65	1.03	2.39	GRASS
DITCH 9AA-2	628+24	631+00	RM 2243	921.58	920.79	4	4	0	0.003	0.035	9AA	6.58	100	6.58	1.07	1.43	5.33	2.36	0.17	GRASS
DITCH 9B-1	631+00	640+81	RM 2243	920.93	955.00	4	4	0	0.035	0.035	9B	31.80	100	31.80	1.50	4.08	3.77	0.25	0.63	GRASS
DITCH 10A-1	662+81	667+13	RM 2243	1028.80	1027.15	4	4	0	0.004	0.035	10A	20.98	80	16.78	1.43	1.79	1.51	1.84	0.19	GRASS
DITCH 10A-2	667+91	669+25	RM 2243	1026.90	1026.48	4	4	0	0.003	0.035	10A	20.98	100	20.98	1.65	2.17	1.95	0.87	0.29	GRASS
DITCH 10B-1	669+25	676+86	RM 2243	1026.48	1032.00	4	4	0	0.007	0.035	10B	27.90	100	27.90	1.55	2.45	0.26	0.17	0.19	GRASS

PROPOSED RIGHT SIDE DITCH CALCULATIONS

DITCH/FLUME NAME	BEGIN STATION	END STATION	STATION ALIGNMENT	START DITCH FLOWLINE ELEVATION	END DITCH FLOWLINE ELEVATION	FRONT SIDE SLOPE (H:1)	BACK SIDE SLOPE (H:1)	BOTTOM WIDTH	AVERAGE LONG. SLOPE	MANNING'S N	DRAINAGE BASIN ID	100YR MAX BASIN FLOW	MAX % OF BASIN TO DITCH	MAX DITCH FLOW	MAX FLOW DEPTH	AVERAGE VELOCITY	MIN FREEBOARD TO EOP	MIN FREEBOARD TO ROW	SHEAR	CHANNEL LINING TYPE
				(FT)	(FT)			(FT)	(FT/FT)			(CFS)		(CFS)	(FT)	(FPS)	(FT)	(FT)	(LB/SQ.FT)	
DITCH 4C	530+00	533+25	RM 2243	954.50	950.10	6	4	2	0.014	0.035	4C	17.50	20	3.50	1.55	5.46	0.25	0.95	1.80	GRASS
DITCH 4C-0	534+67	541+34	RM 2243	947.30	936.77	6	4	2	0.016	0.035	4C	17.50	40	7.00	0.75	2.84	1.88	1.86	0.44	GRASS
DITCH 4C-1	538+00	541+34	RM 2243	941.69	936.77	6	4	2	0.015	0.035	4C	17.50	80	14.00	0.75	2.81	1.88	1.86	0.44	GRASS
DITCH 4C-2	541+68	543+42	RM 2243	936.63	932.00	6	6	0	0.027	0.035	4C	17.50	100	17.50	1.16	4.37	3.19	-0.05	0.29	GRASS
DITCH 9C-1	612+00	621+39	RM 2243	975.00	941.35	6	4	2	0.036	0.035	9C	24.09	100	24.09	0.91	3.60	1.52	0.78	0.73	GRASS
DITCH 9D-3	631+00	653+30	RM 2243	920.32	1014.00	6	4	2	0.042	0.035	9D	127.10	100	127.10	1.91	6.80	1.42	-0.17	1.28	GRASS
DITCH 9D-2	654+26	661+27	RM 2243	1016.00	1026.15	8	4	2	0.014	0.035	9D	127.10	25	31.77	1.05	3.05	1.02	2.46	0.36	GRASS
DITCH 9D-1	662+11	662+71	RM 2243	1026.42	1028.00	6	4	2	0.026	0.035	9D	127.10	4	5.08	0.42	2.67	0.32	5.06	0.49	GRASS
DITCH 10C-1	662+68	669+25	RM 2243	1028.00	1025.56	6	4	0	0.004	0.035	10C	14.55	100	7.89	1.06	1.61	0.36	-0.45	0.08	GRASS
DITCH 10D-1	676+86	669+25	RM 2244	1030.00	1025.56	6	4	0	0.006	0.035	10D	12.80	100	6.95	1.25	1.50	0.87	-0.66	0.12	GRASS

STATE OF TEXAS
VANESSA MOLINA
141173
PROFESSIONAL LICENSED ENGINEER

WILCO TEXAS

BGE, Inc.
101 W Louis Henna Blvd, Suite 400, Austin, TX 78728
Tel: 512-879-0400 • www.bgeinc.com
TBPE Registration No. F-1046

RM 2243

DITCH CAPACITY

SHEET 2 OF 2

FED.RD. DIV.NO.	PROJECT NO.		SHEET NO.
6			256
STATE	DIST.	COUNTY	
TEXAS	AUS	WILLIAMSON	
CONT.	SECT.	JOB	HIGHWAY NO.
0914	05	222	RM 2243

4/10/2025 1:03:04 PM pdf.pltcfg
G:\TX\Projects\County\Williamson\7473-02 RM 2243 Phase 1A\03*CADD\01*Shts\06-DRNG\RM2243*P1A*DITCH*CAPACITY*02.dgn

NOTES:

1. HY-8 V7.8 WAS USED FOR THE HYDRAULIC ANALYSIS.

PROPOSED

SITE DATA - DW 2A-1

SITE DATA OPTION: CULVERT INVERT DATA
INLET STATION: 0.00 FT
INLET ELEVATION: 948.50 FT
OUTLET STATION: 157.30 FT
OUTLET ELEVATION: 947.20 FT
NUMBER OF BARRELS: 2

DW SUMMARY - CULVERT 2A-1

BARREL SHAPE: CIRCULAR
BARREL DIAMETER: 2.00 FT
BARREL MATERIAL: CONCRETE
EMBEDMENT: 0.00 IN
BARREL MANNING'S N: 0.0130
CULVERT TYPE: STRAIGHT
INLET CONFIGURATION: MITERED TO CONFORM TO SLOPE (KE=0.7)
INLET DEPRESSION: NONE

ROADWAY DATA FOR CROSSING: DW 2A-1

ROADWAY PROFILE SHAPE: IRREGULAR
ROADWAY SURFACE: PAVED
ROADWAY TOP WIDTH: 99.00 FT

IRREGULAR ROADWAY CROSS-SECTION

COORD NO.	STATION (FT)	ELEVATION (FT)
0	0	951.76
1	44.6	951.44
2	65.2	951.31
3	78.5	951.08

TABLE 1 - CULVERT SUMMARY TABLE: CULVERT 2A-1

	DISCHARGE NAMES	TOTAL DISCHARGE (CFS)	CULVERT DISCHARGE (CFS)	HEADWATER ELEVATION (FT)	INLET CONTROL DEPTH (FT)	OUTLET CONTROL DEPTH (FT)	FLOW TYPE	NORMAL DEPTH (FT)	CRITICAL DEPTH (FT)	OUTLET DEPTH (FT)	TAILWATER DEPTH (FT)	OUTLET VELOCITY (FT/S)	TAILWATER VELOCITY (FT/S)	TAILWATER ELEVATION (FT)
	2-YR	22.41 CFS	22.41 CFS	950.360	1.860	0.622	1-S2N	1.050	1.200	1.050	1.060	6.680	3.14	948.26
*	5-YR	29.87 CFS	29.87 CFS	950.870	2.370	1.375	5-S2N	1.260	1.390	1.260	1.210	7.130	3.38	948.41
	10-YR	35.73 CFS	34.72 CFS	951.270	2.770	2.183	5-S2N	1.410	1.500	1.410	1.310	7.340	3.54	948.51
	25-YR	43.84 CFS	36.79 CFS	951.460	2.960	2.416	5-S2N	1.480	1.540	1.480	1.430	7.400	3.73	948.63
	50-YR	50.29 CFS	37.61 CFS	951.540	3.040	2.512	5-S2N	1.500	1.560	1.500	1.520	7.420	3.86	948.72
**	100-YR	57.13 CFS	38.26 CFS	951.600	3.100	2.409	5-S2N	1.530	1.570	1.530	1.610	7.430	3.99	948.81

* DESIGN FLOW IS 5-YEAR EVENT.

** CHECK FLOW IS 100-YEAR EVENT.

TAILWATER CHANNEL DATA - CROSSING DW 2A-1

TAILWATER CHANNEL OPTION: TRAPEZOIDAL CHANNEL
BOTTOM WIDTH: 2.50 FT
SIDE SLOPE (H:V): 4.00 (_:1)
CHANNEL SLOPE: 0.0100
CHANNEL MANNING'S N: 0.0350
CHANNEL INVERT ELEVATION: 947.20 FT

TABLE 2 - DOWNSTREAM CHANNEL RATING CURVE (CROSSING: DW 2A-1)

FLOW (CFS)	WATER SURFACE ELEV (FT)	VELOCITY (FT/S)	DEPTH (FT)	SHEAR (PSF)	FROUDE NUMBER
22.41	948.26	1.06	3.14	0.66	0.69
29.87	948.41	1.21	3.38	0.75	0.70
35.73	948.51	1.31	3.54	0.82	0.71
43.84	948.63	1.43	3.73	0.89	0.72
50.29	948.72	1.52	3.86	0.95	0.72
57.13	948.81	1.61	3.99	1.00	0.73

PROPOSED

SITE DATA - DW 2B-2

SITE DATA OPTION: CULVERT INVERT DATA
INLET STATION: 0.00 FT
INLET ELEVATION: 945.95 FT
OUTLET STATION: 44.00 FT
OUTLET ELEVATION: 945.80 FT
NUMBER OF BARRELS: 1

DW SUMMARY - CULVERT 2B-2

BARREL SHAPE: CIRCULAR
BARREL DIAMETER: 2.00 FT
BARREL MATERIAL: CONCRETE
EMBEDMENT: 0.00 IN
BARREL MANNING'S N: 0.0130
CULVERT TYPE: STRAIGHT
INLET CONFIGURATION: MITERED TO CONFORM TO SLOPE (KE=0.7)
INLET DEPRESSION: NONE

ROADWAY DATA FOR CROSSING: DW 2B-2

ROADWAY PROFILE SHAPE: IRREGULAR
ROADWAY SURFACE: PAVED
ROADWAY TOP WIDTH: 24.00 FT

IRREGULAR ROADWAY CROSS-SECTION

COORD NO.	STATION (FT)	ELEVATION (FT)
0	0	950.77
1	16.43	951.64
2	33.96	951.81
3	48.4	951.57
4	62.3	951.27
5	78.66	951.03

TABLE 1 - CULVERT SUMMARY TABLE: CULVERT 2B-2

	DISCHARGE NAMES	TOTAL DISCHARGE (CFS)	CULVERT DISCHARGE (CFS)	HEADWATER ELEVATION (FT)	INLET CONTROL DEPTH (FT)	OUTLET CONTROL DEPTH (FT)	FLOW TYPE	NORMAL DEPTH (FT)	CRITICAL DEPTH (FT)	OUTLET DEPTH (FT)	TAILWATER DEPTH (FT)	OUTLET VELOCITY (FT/S)	TAILWATER VELOCITY (FT/S)	TAILWATER ELEVATION (FT)
	2-YR	4.29 CFS	4.29 CFS	947.110	1.050	1.157	2-M2C	0.780	0.730	0.730	0.550	4.160	1.26	946.350
*	5-YR	5.71 CFS	5.71 CFS	947.300	1.230	1.354	2-M2C	0.920	0.840	0.840	0.640	4.530	1.37	946.440
	10-YR	6.82 CFS	6.82 CFS	947.450	1.360	1.495	2-M2C	1.020	0.930	0.930	0.700	4.790	1.44	946.500
	25-YR	8.35 CFS	8.35 CFS	947.630	1.530	1.679	2-M2C	1.150	1.030	1.030	0.770	5.120	1.52	946.570
	50-YR	9.56 CFS	9.56 CFS	947.770	1.670	1.817	2-M2C	1.260	1.110	1.110	0.830	5.370	1.58	946.630
**	100-YR	10.84 CFS	10.84 CFS	947.910	1.810	1.961	2-M2C	1.380	1.180	1.180	0.880	5.620	1.63	946.680

* DESIGN FLOW IS 5-YEAR EVENT.

** CHECK FLOW IS 100-YEAR EVENT.

TAILWATER CHANNEL DATA - CROSSING DW 2B-2

TAILWATER CHANNEL OPTION: TRAPEZOIDAL CHANNEL
BOTTOM WIDTH: 4.00 FT
SIDE SLOPE (H:V): 4.00 (_:1)
CHANNEL SLOPE: 0.0030
CHANNEL MANNING'S N: 0.0350
CHANNEL INVERT ELEVATION: 945.80 FT

TABLE 2 - DOWNSTREAM CHANNEL RATING CURVE (CROSSING: DW 2B-2)

FLOW (CFS)	WATER SURFACE ELEV (FT)	VELOCITY (FT/S)	DEPTH (FT)	SHEAR (PSF)	FROUDE NUMBER
4.29	946.35	0.55	1.26	0.10	0.35
5.71	946.44	0.64	1.37	0.12	0.36
6.82	946.50	0.70	1.44	0.13	0.36
8.35	946.57	0.77	1.52	0.14	0.37
9.56	946.63	0.83	1.58	0.16	0.37
10.84	946.68	0.88	1.63	0.17	0.37

STATE OF TEXAS
VANESSA MOLINA
141173
PROFESSIONAL ENGINEER
LICENSED

WILCO TEXAS

BGE, Inc.
101 W Louis Henna Blvd, Suite 400, Austin, TX 78728
Tel: 512-879-0400 • www.bgeinc.com
TBPE Registration No. F-1046

RM 2243

DRIVEWAY CULVERT HYDRAULIC DATA

SHEET 1 OF 11

FED.RD. DIV.NO.	PROJECT NO.	SHEET NO.
6		257

STATE	DIST.	COUNTY	
TEXAS	AUS	WILLIAMSON	
CONT.	SECT.	JOB	HIGHWAY NO.
0914	05	222	RM 2243

4/10/2025 1:03:10 PM pdf.pltcfg
G:\TXC\Projects\County\Williamson\7473-02 RM 2243 Phase 1A\03*CADD\01*Shts\06-DRNG\RM2243*P1A*DW*HYDRA*DATA*01.dgn

NOTES:

1. HY-8 V7.8 WAS USED FOR THE HYDRAULIC ANALYSIS.

PROPOSED

SITE DATA - DW 2C-1

SITE DATA OPTION: CULVERT INVERT DATA
INLET STATION: 0.00 FT
INLET ELEVATION: 948.46 FT
OUTLET STATION: 144.00 FT
OUTLET ELEVATION: 947.20 FT
NUMBER OF BARRELS: 1

DW SUMMARY - CULVERT 2C-1

BARREL SHAPE: CIRCULAR
BARREL DIAMETER: 2.00 FT
BARREL MATERIAL: CONCRETE
EMBEDMENT: 0.00 IN
BARREL MANNING'S N: 0.0130
CULVERT TYPE: STRAIGHT
INLET CONFIGURATION: MITERED TO CONFORM TO SLOPE (KE=0.7)
INLET DEPRESSION: NONE

ROADWAY DATA FOR CROSSING: DW 2C-1

ROADWAY PROFILE SHAPE: IRREGULAR
ROADWAY SURFACE: PAVED
ROADWAY TOP WIDTH: 53.448 FT

IRREGULAR ROADWAY CROSS-SECTION

COORD NO.	STATION (FT)	ELEVATION (FT)
0	0	950.89
1	10.98	950.79
2	21.38	950.88
3	33.47	951
4	46.74	951.14
5	60.04	951.28

TABLE 1 - CULVERT SUMMARY TABLE: CULVERT 2C-1

	DISCHARGE NAMES	TOTAL DISCHARGE (CFS)	CULVERT DISCHARGE (CFS)	HEADWATER ELEVATION (FT)	INLET CONTROL DEPTH (FT)	OUTLET CONTROL DEPTH (FT)	FLOW TYPE	NORMAL DEPTH (FT)	CRITICAL DEPTH (FT)	OUTLET DEPTH (FT)	TAILWATER DEPTH (FT)	OUTLET VELOCITY (FT/S)	TAILWATER VELOCITY (FT/S)	TAILWATER ELEVATION (FT)
	2-YR	4.21 CFS	4.21 CFS	949.510	1.050	0.0*	1-S2N	0.600	0.720	0.600	0.390	5.260	1.92	947.590
*	5-YR	5.54 CFS	5.54 CFS	949.680	1.220	0.0*	1-S2N	0.700	0.830	0.700	0.460	5.680	2.08	947.660
	10-YR	6.58 CFS	6.58 CFS	949.80	1.34	0.0*	1-S2N	0.76	0.91	0.76	0.50	5.960	2.19	947.700
	25-YR	7.98 CFS	7.98 CFS	949.960	1.500	0.094	1-S2N	0.850	1.010	0.850	0.550	6.270	2.31	947.750
	50-YR	9.08 CFS	9.08 CFS	950.080	1.620	0.267	1-S2N	0.910	1.080	0.910	0.590	6.490	2.4	947.790
**	100-YR	10.21 CFS	10.21 CFS	950.210	1.750	0.454	1-S2N	0.980	1.140	0.980	0.630	6.690	2.48	947.830

* DESIGN FLOW IS 5-YEAR EVENT.

** CHECK FLOW IS 100-YEAR EVENT.

TAILWATER CHANNEL DATA - CROSSING DW 2B-2

TAILWATER CHANNEL OPTION: TRAPEZOIDAL CHANNEL
BOTTOM WIDTH: 4.00 FT
SIDE SLOPE (H:V): 4.00 (_:1)
CHANNEL SLOPE: 0.0100
CHANNEL MANNING'S N: 0.0350
CHANNEL INVERT ELEVATION: 947.20 FT

TABLE 2 - DOWNSTREAM CHANNEL RATING CURVE (CROSSING: DW 2B-2)

FLOW (CFS)	WATER SURFACE ELEV (FT)	VELOCITY (FT/S)	DEPTH (FT)	SHEAR (PSF)	FROUDE NUMBER
4.21	947.59	0.39	1.92	0.25	0.61
5.54	947.66	0.46	2.08	0.29	0.62
6.58	947.70	0.50	2.19	0.31	0.63
7.98	947.75	0.55	2.31	0.35	0.64
9.08	947.79	0.59	2.40	0.37	0.64
10.21	947.83	0.63	2.48	0.39	0.65

PROPOSED

SITE DATA - DW 3A-2

SITE DATA OPTION: CULVERT INVERT DATA
INLET STATION: 0.00 FT
INLET ELEVATION: 951.21 FT
OUTLET STATION: 41.00 FT
OUTLET ELEVATION: 950.98 FT
NUMBER OF BARRELS: 1

DW SUMMARY - CULVERT 3A-2

BARREL SHAPE: CIRCULAR
BARREL DIAMETER: 1.50 FT
BARREL MATERIAL: CONCRETE
EMBEDMENT: 0.00 IN
BARREL MANNING'S N: 0.0130
CULVERT TYPE: STRAIGHT
INLET CONFIGURATION: MITERED TO CONFORM TO SLOPE (KE=0.7)
INLET DEPRESSION: NONE

ROADWAY DATA FOR CROSSING: DW 3A-2

ROADWAY PROFILE SHAPE: IRREGULAR
ROADWAY SURFACE: PAVED
ROADWAY TOP WIDTH: 20.84 FT

IRREGULAR ROADWAY CROSS-SECTION

COORD NO.	STATION (FT)	ELEVATION (FT)
0	0	953.63
1	9.53	953.95
2	21.24	953.3
3	33.45	953.2
4	47.67	953.1

TABLE 1 - CULVERT SUMMARY TABLE: CULVERT 3A-2

	DISCHARGE NAMES	TOTAL DISCHARGE (CFS)	CULVERT DISCHARGE (CFS)	HEADWATER ELEVATION (FT)	INLET CONTROL DEPTH (FT)	OUTLET CONTROL DEPTH (FT)	FLOW TYPE	NORMAL DEPTH (FT)	CRITICAL DEPTH (FT)	OUTLET DEPTH (FT)	TAILWATER DEPTH (FT)	OUTLET VELOCITY (FT/S)	TAILWATER VELOCITY (FT/S)	TAILWATER ELEVATION (FT)
	2-YR	2.39 CFS	2.39 CFS	952.060	0.850	0.424	1-S2N	0.570	0.580	0.570	0.380	3.910	0.99	951.36
*	5-YR	3.19 CFS	3.19 CFS	952.210	1.000	0.574	1-S2N	0.660	0.680	0.660	0.440	4.230	1.08	951.42
	10-YR	3.82 CFS	3.82 CFS	952.320	1.110	0.694	1-S2N	0.740	0.750	0.740	0.490	4.430	1.13	951.47
	25-YR	4.69 CFS	4.69 CFS	952.620	1.260	1.405	2-M2C	0.830	0.830	0.830	0.540	4.660	1.2	951.52
	50-YR	5.39 CFS	5.39 CFS	952.730	1.380	1.52	7-M2C	0.910	0.890	0.890	0.580	4.900	1.25	951.56
**	100-YR	6.13 CFS	6.13 CFS	952.850	1.520	1.636	7-M2C	0.990	0.960	0.960	0.620	5.150	1.29	951.6

* DESIGN FLOW IS 5-YEAR EVENT.

** CHECK FLOW IS 100-YEAR EVENT.

TAILWATER CHANNEL DATA - CROSSING DW 3A-2

TAILWATER CHANNEL OPTION: TRAPEZOIDAL CHANNEL
BOTTOM WIDTH: 4.00 FT
SIDE SLOPE (H:V): 6.00 (_:1)
CHANNEL SLOPE: 0.0030
CHANNEL MANNING'S N: 0.0350
CHANNEL INVERT ELEVATION: 950.98 FT

TABLE 2 - DOWNSTREAM CHANNEL RATING CURVE (CROSSING: DW 3A-2)

FLOW (CFS)	WATER SURFACE ELEV (FT)	VELOCITY (FT/S)	DEPTH (FT)	SHEAR (PSF)	FROUDE NUMBER
2.39	951.36	0.38	0.99	0.07	0.33
3.19	951.42	0.44	1.08	0.08	0.34
3.82	951.47	0.49	1.13	0.09	0.34
4.69	951.52	0.54	1.20	0.10	0.35
5.39	951.56	0.58	1.25	0.11	0.35
6.13	951.60	0.62	1.29	0.12	0.35

STATE OF TEXAS
VANESSA MOLINA
141173
LICENSED PROFESSIONAL ENGINEER

WILCO TEXAS

BGE, Inc.
101 W Louis Henna Blvd, Suite 400, Austin, TX 78728
Tel: 512-879-0400 • www.bgeinc.com
TBPE Registration No. F-1046

RM 2243

DRIVEWAY CULVERT HYDRAULIC DATA

FED.RD. DIV.NO.	PROJECT NO.	SHEET NO.
6		258

STATE	DIST.	COUNTY	
TEXAS	AUS	WILLIAMSON	
CONT.	SECT.	JOB	HIGHWAY NO.
0914	05	222	RM 2243

4/10/2025 1:03:17 PM pdf.pltcfg
G:\TXC\Projects\County\Williamson\7473-02 RM 2243 Phase 1A\03*CADD\01*Shts\06-DRNG\RM2243*P1A*DW*HYDRA*DATA*02.dgn

NOTES:

1. HY-8 V7.8 WAS USED FOR THE HYDRAULIC ANALYSIS.

PROPOSED

SITE DATA - DW 4A-2

SITE DATA OPTION: CULVERT INVERT DATA
INLET STATION: 0.00 FT
INLET ELEVATION: 949.82 FT
OUTLET STATION: 29.78 FT
OUTLET ELEVATION: 949.64 FT
NUMBER OF BARRELS: 2

DW SUMMARY - CULVERT 4A-2

BARREL SHAPE: CIRCULAR
BARREL DIAMETER: 2.00 FT
BARREL MATERIAL: CONCRETE
EMBEDMENT: 0.00 IN
BARREL MANNING'S N: 0.0130
CULVERT TYPE: STRAIGHT
INLET CONFIGURATION: MITERED TO CONFORM TO SLOPE (KE=0.7)
INLET DEPRESSION: NONE

ROADWAY DATA FOR CROSSING: DW 4A-2

ROADWAY PROFILE SHAPE: IRREGULAR
ROADWAY SURFACE: PAVED
ROADWAY TOP WIDTH: 12.00 FT

IRREGULAR ROADWAY CROSS-SECTION

COORD NO.	STATION (FT)	ELEVATION (FT)
0	0	956.25
1	9.88	956.15
2	20.01	955.68
3	30.43	955.8
4	39.96	956.3
5	47.33	956.23

TABLE 1 - CULVERT SUMMARY TABLE: CULVERT 4A-2

	DISCHARGE NAMES	TOTAL DISCHARGE (CFS)	CULVERT DISCHARGE (CFS)	HEADWATER ELEVATION (FT)	INLET CONTROL DEPTH (FT)	OUTLET CONTROL DEPTH (FT)	FLOW TYPE	NORMAL DEPTH (FT)	CRITICAL DEPTH (FT)	OUTLET DEPTH (FT)	TAILWATER DEPTH (FT)	OUTLET VELOCITY (FT/S)	TAILWATER VELOCITY (FT/S)	TAILWATER ELEVATION (FT)
	2-YR	7.97 CFS	7.97 CFS	950.830	1.010	0.572	1-S2N	0.650	0.700	0.650	0.520	4.520	2.54	950.160
*	5-YR	10.62 CFS	10.62 CFS	951.010	1.190	0.724	1-S2N	0.750	0.810	0.760	0.600	4.880	2.76	950.240
	10-YR	12.71 CFS	12.71 CFS	951.130	1.310	0.844	1-S2N	0.830	0.890	0.830	0.660	5.130	2.9	950.300
	25-YR	15.61 CFS	15.61 CFS	951.300	1.480	1.012	1-S2N	0.930	0.990	0.940	0.730	5.410	3.07	950.370
	50-YR	17.91 CFS	17.91 CFS	951.420	1.600	1.149	1-S2N	1.010	1.070	1.010	0.790	5.610	3.19	950.430
**	100-YR	20.35 CFS	20.35 CFS	951.560	1.740	1.299	1-S2N	1.090	1.140	1.090	0.840	5.790	3.31	950.480

* DESIGN FLOW IS 5-YEAR EVENT.
** CHECK FLOW IS 100-YEAR EVENT.

TAILWATER CHANNEL DATA - CROSSING DW 4A-2

TAILWATER CHANNEL OPTION: TRAPEZOIDAL CHANNEL
BOTTOM WIDTH: 4.00 FT
SIDE SLOPE (H:V): 4.00 (_:1)
CHANNEL SLOPE: 0.0130
CHANNEL MANNING'S N: 0.0350
CHANNEL INVERT ELEVATION: 949.50 FT

TABLE 2 - DOWNSTREAM CHANNEL RATING CURVE (CROSSING: DW 4A-2)

FLOW (CFS)	WATER SURFACE ELEV (FT)	VELOCITY (FT/S)	DEPTH (FT)	SHEAR (PSF)	FROUDE NUMBER
7.97	950.02	0.52	2.54	0.42	0.72
10.62	950.10	0.60	2.76	0.49	0.73
12.71	950.16	0.66	2.90	0.54	0.74
15.61	950.23	0.73	3.07	0.59	0.75
17.91	950.29	0.79	3.19	0.64	0.76
20.35	950.34	0.84	3.31	0.68	0.77

PROPOSED

SITE DATA - DW 4A-3

SITE DATA OPTION: CULVERT INVERT DATA
INLET STATION: 0.00 FT
INLET ELEVATION: 944.02 FT
OUTLET STATION: 63.00 FT
OUTLET ELEVATION: 942.98 FT
NUMBER OF BARRELS: 1

DW SUMMARY - CULVERT 4A-3

BARREL SHAPE: CIRCULAR
BARREL DIAMETER: 2.00 FT
BARREL MATERIAL: CONCRETE
EMBEDMENT: 0.00 IN
BARREL MANNING'S N: 0.0130
CULVERT TYPE: STRAIGHT
INLET CONFIGURATION: MITERED TO CONFORM TO SLOPE (KE=0.7)
INLET DEPRESSION: NONE

ROADWAY DATA FOR CROSSING: DW 4A-3

ROADWAY PROFILE SHAPE: IRREGULAR
ROADWAY SURFACE: PAVED
ROADWAY TOP WIDTH: 12.00 FT

IRREGULAR ROADWAY

COORD NO.	STATION (FT)	ELEVATION (FT)
0	0	946.86
1	8.4	946.89
2	15.35	946.91
3	23.69	946.93
4	35.11	946.96

TABLE 1 - CULVERT SUMMARY TABLE: CULVERT 4A-3

	DISCHARGE NAMES	TOTAL DISCHARGE (CFS)	CULVERT DISCHARGE (CFS)	HEADWATER ELEVATION (FT)	INLET CONTROL DEPTH (FT)	OUTLET CONTROL DEPTH (FT)	FLOW TYPE	NORMAL DEPTH (FT)	CRITICAL DEPTH (FT)	OUTLET DEPTH (FT)	TAILWATER DEPTH (FT)	OUTLET VELOCITY (FT/S)	TAILWATER VELOCITY (FT/S)	TAILWATER ELEVATION (FT)
	2-YR	11.95 CFS	11.95 CFS	945.980	1.960	0.758	1-S2N	0.890	1.240	0.920	0.640	8.480	2.85	943.620
*	5-YR	15.94 CFS	15.94 CFS	946.560	2.540	1.389	5-S2N	1.050	1.440	1.090	0.740	9.070	3.09	943.720
	10-YR	19.07 CFS	18.17 CFS	946.950	2.930	2.014	5-S2N	1.140	1.530	1.190	0.810	9.360	3.25	943.790
	25-YR	23.41 CFS	18.64 CFS	947.040	3.020	2.091	5-S2N	1.160	1.550	1.210	0.900	9.410	3.44	943.880
	50-YR	26.86 CFS	18.91 CFS	947.090	3.070	2.136	5-S2N	1.170	1.560	1.220	0.960	9.440	3.56	943.940
**	100-YR	30.53 CFS	19.15 CFS	947.140	3.120	2.176	5-S2N	1.180	1.570	1.230	1.020	9.470	3.69	944.000

* DESIGN FLOW IS 5-YEAR EVENT.
** CHECK FLOW IS 100-YEAR EVENT.

TAILWATER CHANNEL DATA - CROSSING DW 4A-3

TAILWATER CHANNEL OPTION: TRAPEZOIDAL CHANNEL
BOTTOM WIDTH: 4.00 FT
SIDE SLOPE (H:V): 4.00 (_:1)
CHANNEL SLOPE: 0.0130
CHANNEL MANNING'S N: 0.0350
CHANNEL INVERT ELEVATION: 942.98 FT

TABLE 2 - DOWNSTREAM CHANNEL RATING CURVE (CROSSING: DW 4A-3)

FLOW (CFS)	WATER SURFACE ELEV (FT)	VELOCITY (FT/S)	DEPTH (FT)	SHEAR (PSF)	FROUDE NUMBER
11.95	943.62	0.64	2.85	0.52	0.74
15.94	943.72	0.74	3.09	0.60	0.76
19.07	943.79	0.81	3.25	0.66	0.76
23.41	943.88	0.90	3.44	0.73	0.78
26.86	943.94	0.96	3.56	0.78	0.78
30.53	944.00	1.02	3.69	0.83	0.79

STATE OF TEXAS
VANESSA MOLINA
141173
PROFESSIONAL LICENSED ENGINEER

WILCO TEXAS

BGE, Inc.
101 W Louis Henna Blvd, Suite 400, Austin, TX 78728
Tel: 512-879-0400 • www.bgeinc.com
TBPE Registration No. F-1046

RM 2243

DRIVEWAY CULVERT HYDRAULIC DATA

SHEET 3 OF 11

FED.RD. DIV.NO.	PROJECT NO.		SHEET NO.
6			259
STATE	DIST.	COUNTY	
TEXAS	AUS	WILLIAMSON	
CONT.	SECT.	JOB	HIGHWAY NO.
0914	05	222	RM 2243

4/10/2025 1:03:34 PM pdf.pltcfg
G:\TXC\Projects\County\Williamson\7473-02 RM 2243 Phase 1A\03*CADD\01*Shts\06-DRNG\RM2243*P1A*DW*HYDRA*DATA*03.dgn

NOTES:

1. HY-8 V7.8 WAS USED FOR THE HYDRAULIC ANALYSIS.

PROPOSED

SITE DATA - DW 4A-3-I

SITE DATA OPTION: CULVERT INVERT DATA
INLET STATION: 0.00 FT
INLET ELEVATION: 944.40 FT
OUTLET STATION: 63.00 FT
OUTLET ELEVATION: 942.98 FT
NUMBER OF BARRELS: 1

DW SUMMARY - CULVERT 4A-3-I

BARREL SHAPE: CIRCULAR
BARREL DIAMETER: 2.00 FT
BARREL MATERIAL: CONCRETE
EMBEDMENT: 0.00 IN
BARREL MANNING'S N: 0.0130
CULVERT TYPE: STRAIGHT
INLET CONFIGURATION: MITERED TO CONFORM TO SLOPE
INLET DEPRESSION: NONE

ROADWAY DATA FOR CROSSING: DW 4A-3-I

ROADWAY PROFILE SHAPE: IRREGULAR
ROADWAY SURFACE: PAVED
ROADWAY TOP WIDTH: 12.00 FT

IRREGULAR ROADWAY CROSS-SECTION

COORD NO.	STATION (FT)	ELEVATION (FT)
0	0	946.98
1	7.88	946.92
2	17.31	946.85
3	25.81	946.81
4	33.44	946.83
5	42.75	946.85

TABLE 1 - CULVERT SUMMARY TABLE: CULVERT 4A-3-I

	DISCHARGE NAMES	TOTAL DISCHARGE (CFS)	CULVERT DISCHARGE (CFS)	HEADWATER ELEVATION (FT)	INLET CONTROL DEPTH (FT)	OUTLET CONTROL DEPTH (FT)	FLOW TYPE	NORMAL DEPTH (FT)	CRITICAL DEPTH (FT)	OUTLET DEPTH (FT)	TAILWATER DEPTH (FT)	OUTLET VELOCITY (FT/S)	TAILWATER VELOCITY (FT/S)	TAILWATER ELEVATION (FT)
	2-YR	2.99 CFS	2.99 CFS	945.280	0.880	0.0*	1-S2N	0.400	0.600	0.400	0.300	6.680	1.89	943.280
*	5-YR	3.98 CFS	3.98 CFS	945.430	1.030	0.0*	1-S2N	0.460	0.700	0.470	0.360	7.130	2.06	943.340
	10-YR	4.77 CFS	4.77 CFS	945.540	1.140	0.0*	1-S2N	0.510	0.770	0.510	0.390	7.640	2.18	943.370
	25-YR	5.85 CFS	5.85 CFS	945.680	1.280	0.0*	1-S2N	0.560	0.850	0.570	0.440	7.880	2.32	943.420
	50-YR	6.71 CFS	6.71 CFS	945.780	1.380	0.0*	1-S2N	0.600	0.920	0.620	0.470	8.170	2.41	943.450
**	100-YR	7.63 CFS	7.63 CFS	945.880	1.480	0.0*	1-S2N	0.640	0.980	0.660	0.510	8.430	2.51	943.490

* DESIGN FLOW IS 5-YEAR EVENT.
** CHECK FLOW IS 100-YEAR EVENT.

TAILWATER CHANNEL DATA - CROSSING DW 4A-3-I

TAILWATER CHANNEL OPTION: TRAPEZOIDAL CHANNEL
BOTTOM WIDTH: 4.00 FT
SIDE SLOPE (H:V): 4.00 (_:1)
CHANNEL SLOPE: 0.0130
CHANNEL MANNING'S N: 0.0350
CHANNEL INVERT ELEVATION: 942.98 FT

TABLE 2 - DOWNSTREAM CHANNEL RATING CURVE (CROSSING: DW 4A-3-I)

FLOW (CFS)	WATER SURFACE ELEV (FT)	VELOCITY (FT/S)	DEPTH (FT)	SHEAR (PSF)	FROUDE NUMBER
2.99	943.28	0.30	1.89	0.25	0.67
3.98	943.34	0.36	2.06	0.29	0.68
4.77	943.37	0.39	2.18	0.32	0.69
5.85	943.42	0.44	2.32	0.36	0.70
6.71	943.45	0.47	2.41	0.38	0.71
7.63	943.49	0.51	2.51	0.41	0.72

PROPOSED

SITE DATA - DW 4C-O

SITE DATA OPTION: CULVERT INVERT DATA
INLET STATION: 0.00 FT
INLET ELEVATION: 950.10 FT
OUTLET STATION: 126.00 FT
OUTLET ELEVATION: 947.30 FT
NUMBER OF BARRELS: 1

DW SUMMARY - CULVERT 4C-O

BARREL SHAPE: CIRCULAR
BARREL DIAMETER: 1.50 FT
BARREL MATERIAL: CONCRETE
EMBEDMENT: 0.00 IN
BARREL MANNING'S N: 0.0130
CULVERT TYPE: STRAIGHT
INLET CONFIGURATION: MITERED TO CONFORM TO SLOPE (KE=0.7)
INLET DEPRESSION: NONE

ROADWAY DATA FOR CROSSING: DW 4C-O

ROADWAY PROFILE SHAPE: IRREGULAR
ROADWAY SURFACE: PAVED
ROADWAY TOP WIDTH: 36.00 FT

IRREGULAR ROADWAY CROSS-SECTION

COORD NO.	STATION	ELEVATION
0	0	953.49
1	17.24	952.97
2	37.44	952.35
3	50.87	951.95
4	62.5	951.69
5	71.99	951.59

TABLE 1 - CULVERT SUMMARY TABLE: CULVERT 4C-O

	DISCHARGE NAMES	TOTAL DISCHARGE (CFS)	CULVERT DISCHARGE (CFS)	HEADWATER ELEVATION (FT)	INLET CONTROL DEPTH (FT)	OUTLET CONTROL DEPTH (FT)	FLOW TYPE	NORMAL DEPTH (FT)	CRITICAL DEPTH (FT)	OUTLET DEPTH (FT)	TAILWATER DEPTH (FT)	OUTLET VELOCITY (FT/S)	TAILWATER VELOCITY (FT/S)	TAILWATER ELEVATION (FT)
	2-YR	1.37 CFS	1.37 CFS	950.740	0.640	0.0*	1-S2N	0.300	0.440	0.300	0.250	5.460	1.52	947.550
*	5-YR	1.83 CFS	1.83 CFS	950.850	0.750	0.0*	1-S2N	0.350	0.510	0.350	0.290	5.940	1.65	947.590
	10-YR	2.19 CFS	2.19 CFS	950.930	0.830	0.0*	1-S2N	0.380	0.560	0.380	0.320	6.210	1.73	947.620
	25-YR	2.69 CFS	2.69 CFS	951.030	0.930	0.0*	1-S2N	0.420	0.620	0.420	0.360	6.640	1.83	947.660
	50-YR	3.08 CFS	3.08 CFS	951.100	1.000	0.0*	1-S2N	0.450	0.670	0.450	0.380	6.900	1.9	947.680
**	100-YR	3.50 CFS	3.50 CFS	951.170	1.070	0.0*	1-S2N	0.480	0.710	0.480	0.400	7.100	1.96	947.700

* DESIGN FLOW IS 5-YEAR EVENT.
** CHECK FLOW IS 100-YEAR EVENT.

TAILWATER CHANNEL DATA - CROSSING DW 4C-O

TAILWATER CHANNEL OPTION: TRAPEZOIDAL CHANNEL
BOTTOM WIDTH: 2.00 FT
SIDE SLOPE (H:V): 6.00 (_:1)
CHANNEL SLOPE: 0.0130
CHANNEL MANNING'S N: 0.0350
CHANNEL INVERT ELEVATION: 947.30 FT

TABLE 2 - DOWNSTREAM CHANNEL RATING CURVE (CROSSING: DW 4C-O)

FLOW (CFS)	WATER SURFACE ELEV (FT)	VELOCITY (FT/S)	DEPTH (FT)	SHEAR (PSF)	FROUDE NUMBER
1.37	947.55	0.25	1.52	0.21	0.64
1.83	947.59	0.29	1.65	0.24	0.65
2.19	947.62	0.32	1.73	0.26	0.66
2.69	947.66	0.36	1.83	0.29	0.67
3.08	947.68	0.38	1.90	0.31	0.67
3.50	947.70	0.40	1.96	0.33	0.68

STATE OF TEXAS
VANESSA MOLINA
141173
PROFESSIONAL LICENSED ENGINEER

WILCO TEXAS

BGE, Inc.
101 W Louis Henna Blvd, Suite 400, Austin, TX 78728
Tel: 512-879-0400 • www.bgeinc.com
TBPE Registration No. F-1046

RM 2243

DRIVEWAY CULVERT HYDRAULIC DATA

FED.RD. DIV.NO.	PROJECT NO.	SHEET NO.
6		260

STATE	DIST.	COUNTY	
TEXAS	AUS	WILLIAMSON	
CONT.	SECT.	JOB	HIGHWAY NO.
0914	05	222	RM 2243

4/10/2025 1:03:43 PM pdf.pltcfg
G:\TXC\Projects\County\Williamson\7473-02 RM 2243 Phase 1A\03*CADD\01*Shts\06-DRNG\RM2243*P1A*DW*HYDRA*DATA*04.dgn

NOTES:

1. HY-8 V7.8 WAS USED FOR THE HYDRAULIC ANALYSIS.

PROPOSED

SITE DATA - DW 4E-1

SITE DATA OPTION: CULVERT INVERT DATA
INLET STATION: 0.00 FT
INLET ELEVATION: 948.91 FT
OUTLET STATION: 62.00 FT
OUTLET ELEVATION: 948.60 FT
NUMBER OF BARRELS: 1

DW SUMMARY - CULVERT 4E-1

BARREL SHAPE: CIRCULAR
BARREL DIAMETER: 1.50 FT
BARREL MATERIAL: CONCRETE
EMBEDMENT: 0.00 IN
BARREL MANNING'S N: 0.0130
CULVERT TYPE: STRAIGHT
INLET CONFIGURATION: MITERED TO CONFORM TO SLOPE (KE=0.7)
INLET DEPRESSION: NONE

ROADWAY DATA FOR CROSSING: DW 4E-1

ROADWAY PROFILE SHAPE: IRREGULAR
ROADWAY SURFACE: PAVED
ROADWAY TOP WIDTH: 24.00 FT

IRREGULAR ROADWAY CROSS-SECTION

COORD NO.	STATION	ELEVATION
0	0	952.97
1	17	952.54
2	37.08	952.07
3	49.62	951.82
4	59.08	951.69

TABLE 1 - CULVERT SUMMARY TABLE: CULVERT 4E-1

	DISCHARGE NAMES	TOTAL DISCHARGE (CFS)	CULVERT DISCHARGE (CFS)	HEADWATER ELEVATION (FT)	INLET CONTROL DEPTH (FT)	OUTLET CONTROL DEPTH (FT)	FLOW TYPE	NORMAL DEPTH (FT)	CRITICAL DEPTH (FT)	OUTLET DEPTH (FT)	TAILWATER DEPTH (FT)	OUTLET VELOCITY (FT/S)	TAILWATER VELOCITY (FT/S)	TAILWATER ELEVATION (FT)
	2-YR	3.52 CFS	3.52 CFS	950.090	1.060	1.182	2-M2C	0.730	0.720	0.720	0.400	4.230	1.97	949.000
*	5-YR	4.68 CFS	4.68 CFS	950.300	1.260	1.386	2-M2C	0.860	0.830	0.830	0.460	4.660	2.12	949.060
	10-YR	5.58 CFS	5.58 CFS	950.440	1.420	1.533	7-M2C	0.970	0.910	0.910	0.500	4.970	2.22	949.100
	25-YR	6.82 CFS	6.82 CFS	950.640	1.670	1.733	7-M2C	1.130	1.010	1.010	0.550	5.380	2.34	949.150
	50-YR	7.81 CFS	7.81 CFS	950.810	1.900	1.901	7-M2C	1.310	1.080	1.080	0.590	5.720	2.42	949.190
**	100-YR	8.85 CFS	8.85 CFS	951.100	2.190	2.103	7-M2C	1.500	1.150	1.150	0.620	6.080	2.5	949.220

* DESIGN FLOW IS 5-YEAR EVENT.

** CHECK FLOW IS 100-YEAR EVENT.

TAILWATER CHANNEL DATA - CROSSING DW 4E-1

TAILWATER CHANNEL OPTION: TRAPEZOIDAL CHANNEL
BOTTOM WIDTH: 2.00 FT
SIDE SLOPE (H:V): 6.00 (_:1)
CHANNEL SLOPE: 0.0130
CHANNEL MANNING'S N: 0.0350
CHANNEL INVERT ELEVATION: 948.60 FT

TABLE 2 - DOWNSTREAM CHANNEL RATING CURVE (CROSSING: DW 4E-1)

FLOW (CFS)	WATER SURFACE ELEV (FT)	VELOCITY (FT/S)	DEPTH (FT)	SHEAR (PSF)	FROUDE NUMBER
3.52	949.00	0.40	1.97	0.33	0.68
4.68	949.06	0.46	2.12	0.38	0.69
5.58	949.10	0.50	2.22	0.41	0.70
6.82	949.15	0.55	2.34	0.45	0.71
7.81	949.19	0.59	2.42	0.47	0.71
8.85	949.22	0.62	2.50	0.50	0.72

PROPOSED

SITE DATA - DW 4C-1

SITE DATA OPTION: CULVERT INVERT DATA
INLET STATION: 0.00 FT
INLET ELEVATION: 942.64 FT
OUTLET STATION: 80.00 FT
OUTLET ELEVATION: 941.69 FT
NUMBER OF BARRELS: 1

DW SUMMARY - CULVERT 4C-1

BARREL SHAPE: CIRCULAR
BARREL DIAMETER: 1.50 FT
BARREL MATERIAL: CONCRETE
EMBEDMENT: 0.00 IN
BARREL MANNING'S N: 0.0130
CULVERT TYPE: STRAIGHT
INLET CONFIGURATION: MITERED TO CONFORM TO SLOPE
INLET DEPRESSION: NONE

ROADWAY DATA FOR CROSSING: DW 4C-1

ROADWAY PROFILE SHAPE: IRREGULAR
ROADWAY SURFACE: PAVED
ROADWAY TOP WIDTH: 36.00 FT

IRREGULAR ROADWAY CROSS-SECTION

COORD NO.	STATION	ELEVATION
0	0	946.6
1	5	946.6
2	10	946.6
3	15	946.6
4	20	946.6

TABLE 1 - CULVERT SUMMARY TABLE: CULVERT 4C-1

	DISCHARGE NAMES	TOTAL DISCHARGE (CFS)	CULVERT DISCHARGE (CFS)	HEADWATER ELEVATION (FT)	INLET CONTROL DEPTH (FT)	OUTLET CONTROL DEPTH (FT)	FLOW TYPE	NORMAL DEPTH (FT)	CRITICAL DEPTH (FT)	OUTLET DEPTH (FT)	TAILWATER DEPTH (FT)	OUTLET VELOCITY (FT/S)	TAILWATER VELOCITY (FT/S)	TAILWATER ELEVATION (FT)
	2-YR	2.75 CFS	2.75 CFS	943.570	0.930	0.0*	1-S2N	0.500	0.630	0.500	0.350	5.310	1.78	942.040
*	5-YR	3.66 CFS	3.66 CFS	943.730	1.090	0.0*	1-S2N	0.580	0.730	0.580	0.400	5.770	1.92	942.090
	10-YR	4.38 CFS	4.38 CFS	943.850	1.210	0.153	1-S2N	0.640	0.800	0.640	0.430	6.060	2.01	942.120
	25-YR	5.37 CFS	5.37 CFS	944.020	1.380	0.395	1-S2N	0.720	0.890	0.720	0.480	6.380	2.12	942.170
	50-YR	6.16 CFS	6.16 CFS	944.170	1.530	0.603	5-S2N	0.780	0.960	0.780	0.510	6.610	2.2	942.200
**	100-YR	7.00 CFS	7.00 CFS	944.350	1.710	0.842	5-S2N	0.850	1.020	0.850	0.540	6.810	2.27	942.230

* DESIGN FLOW IS 5-YEAR EVENT.

** CHECK FLOW IS 100-YEAR EVENT.

TAILWATER CHANNEL DATA - CROSSING DW 4C-1

TAILWATER CHANNEL OPTION: TRAPEZOIDAL CHANNEL
BOTTOM WIDTH: 2.00 FT
SIDE SLOPE (H:V): 7.00 (_:1)
CHANNEL SLOPE: 0.0130
CHANNEL MANNING'S N: 0.0350
CHANNEL INVERT ELEVATION: 941.69 FT

TABLE 2 - DOWNSTREAM CHANNEL RATING CURVE (CROSSING: DW 4C-1)

FLOW (CFS)	WATER SURFACE ELEV (FT)	VELOCITY (FT/S)	DEPTH (FT)	SHEAR (PSF)	FROUDE NUMBER
2.75	942.04	0.35	1.78	0.28	0.66
3.66	942.09	0.40	1.92	0.32	0.67
4.38	942.12	0.43	2.01	0.35	0.68
5.37	942.17	0.48	2.12	0.39	0.69
6.16	942.20	0.51	2.20	0.41	0.70
7.00	942.23	0.54	2.27	0.43	0.70

STATE OF TEXAS
VANESSA MOLINA
141173
PROFESSIONAL ENGINEER
LICENSED

WILCO
TEXAS

BGE, Inc.
101 W Louis Henna Blvd, Suite 400, Austin, TX 78728
Tel: 512-879-0400 • www.bgeinc.com
TBPE Registration No. F-1046

RM 2243

DRIVEWAY CULVERT HYDRAULIC DATA

FED.RD. DIV.NO.	PROJECT NO.	SHEET NO.
6		261

STATE	DIST.	COUNTY
TEXAS	AUS	WILLIAMSON

CONT.	SECT.	JOB	HIGHWAY NO.
0914	05	222	RM 2243

4/10/2025 1:03:49 PM pdf.pltcfg
G:\TXC\Projects\County*Williamson\7473-02 RM 2243 Phase 1A\03*CADD\01*Shts\06-DRNG\RM2243*P1A*DW*HYDRA*DATA*05.dgn

NOTES:

1. HY-8 V7.8 WAS USED FOR THE HYDRAULIC ANALYSIS.

PROPOSED

SITE DATA - DW 4C-2

SITE DATA OPTION: CULVERT INVERT DATA
INLET STATION: 0.00 FT
INLET ELEVATION: 936.77 FT
OUTLET STATION: 34.16 FT
OUTLET ELEVATION: 936.63 FT
NUMBER OF BARRELS: 1

DW SUMMARY - CULVERT 4C-2

BARREL SHAPE: CIRCULAR
BARREL DIAMETER: 2.00 FT
BARREL MATERIAL: CONCRETE
EMBEDMENT: 0.00 IN
BARREL MANNING'S N: 0.0130
CULVERT TYPE: STRAIGHT
INLET CONFIGURATION: MITERED TO CONFORM TO SLOPE (KE=0.7)
INLET DEPRESSION: NONE

ROADWAY DATA FOR CROSSING: DW 4C-2

ROADWAY PROFILE SHAPE: IRREGULAR
ROADWAY SURFACE: PAVED
ROADWAY TOP WIDTH: 18.26 FT

IRREGULAR ROADWAY CROSS-SECTION

COORD NO.	STATION (FT)	ELEVATION (FT)
0	0	940.96
1	7.4	941.36
2	15.84	941.74
3	25.34	942.18
4	35.46	942.64
5	49.52	942.96

TABLE 1 - CULVERT SUMMARY TABLE: CULVERT 4C-2

	DISCHARGE NAMES	TOTAL DISCHARGE (CFS)	CULVERT DISCHARGE (CFS)	HEADWATER ELEVATION (FT)	INLET CONTROL DEPTH (FT)	OUTLET CONTROL DEPTH (FT)	FLOW TYPE	NORMAL DEPTH (FT)	CRITICAL DEPTH (FT)	OUTLET DEPTH (FT)	TAILWATER DEPTH (FT)	OUTLET VELOCITY (FT/S)	TAILWATER VELOCITY (FT/S)	TAILWATER ELEVATION (FT)
	2-YR	5.50 CFS	5.50 CFS	938.110	1.210	1.342	2-M2C	0.850	0.830	0.830	0.550	4.480	2.41	937.180
*	5-YR	7.33 CFS	7.33 CFS	938.340	1.420	1.573	2-M2C	1.010	0.960	0.960	0.630	4.910	2.6	937.260
	10-YR	8.76 CFS	8.76 CFS	938.510	1.580	1.739	2-M2C	1.120	1.060	1.060	0.680	5.210	2.72	937.310
	25-YR	10.75 CFS	10.75 CFS	938.730	1.800	1.96	2-M2C	1.280	1.170	1.170	0.750	5.600	2.87	937.380
	50-YR	12.33 CFS	12.33 CFS	938.900	1.990	2.131	7-M2C	1.420	1.260	1.260	0.800	5.900	2.98	937.430
**	100-YR	14.00 CFS	14.00 CFS	939.080	2.220	2.311	7-M2C	1.580	1.350	1.350	0.850	6.220	3.08	937.480

* DESIGN FLOW IS 5-YEAR EVENT.

** CHECK FLOW IS 100-YEAR EVENT.

TAILWATER CHANNEL DATA - CROSSING DW 4C-2

TAILWATER CHANNEL OPTION: TRAPEZOIDAL CHANNEL
BOTTOM WIDTH: 2.00 FT
SIDE SLOPE (H:V): 4.00 (_:1)
CHANNEL SLOPE: 0.0130
CHANNEL MANNING'S N: 0.0350
CHANNEL INVERT ELEVATION: 936.63 FT

TABLE 2 - DOWNSTREAM CHANNEL RATING CURVE (CROSSING: DW 4C-2)

FLOW (CFS)	WATER SURFACE ELEV (FT)	VELOCITY (FT/S)	DEPTH (FT)	SHEAR (PSF)	FROUDE NUMBER
5.50	937.18	0.55	2.41	0.44	0.71
7.33	937.26	0.63	2.60	0.51	0.72
8.76	937.31	0.68	2.72	0.55	0.73
10.75	937.38	0.75	2.87	0.61	0.74
12.33	937.43	0.80	2.98	0.65	0.75
14.00	937.48	0.85	3.08	0.69	0.75

PROPOSED

SITE DATA - DW 4B-4

SITE DATA OPTION: CULVERT INVERT DATA
INLET STATION: 0.00 FT
INLET ELEVATION: 945.40 FT
OUTLET STATION: 80.00 FT
OUTLET ELEVATION: 944.38 FT
NUMBER OF BARRELS: 2

DW SUMMARY - CULVERT 4B-4

BARREL SHAPE: CIRCULAR
BARREL DIAMETER: 2.50 FT
BARREL MATERIAL: CONCRETE
EMBEDMENT: 0.00 IN
BARREL MANNING'S N: 0.0130
CULVERT TYPE: STRAIGHT
INLET CONFIGURATION: MITERED TO CONFORM TO SLOPE (KE=0.7)
INLET DEPRESSION: NONE

ROADWAY DATA FOR CROSSING: DW 4B-4

ROADWAY PROFILE SHAPE: IRREGULAR
ROADWAY SURFACE: PAVED
ROADWAY TOP WIDTH: 10.00 FT

IRREGULAR ROADWAY CROSS-SECTION

COORD NO.	STATION (FT)	ELEVATION (FT)
0	0	948.9
1	6.62	949.09
2	14.1	949.31
3	24.12	949.61
4	35.45	949.96

TABLE 1 - CULVERT SUMMARY TABLE: CULVERT 4B-4

	DISCHARGE NAMES	TOTAL DISCHARGE (CFS)	CULVERT DISCHARGE (CFS)	HEADWATER ELEVATION (FT)	INLET CONTROL DEPTH (FT)	OUTLET CONTROL DEPTH (FT)	FLOW TYPE	NORMAL DEPTH (FT)	CRITICAL DEPTH (FT)	OUTLET DEPTH (FT)	TAILWATER DEPTH (FT)	OUTLET VELOCITY (FT/S)	TAILWATER VELOCITY (FT/S)	TAILWATER ELEVATION (FT)
	2-YR	44.47	44.47	947.970	2.570	1.359	5-S2N	1.220	1.600	1.250	1.230	9.030	4.08	945.610
*	5-YR	58.71	58.71	948.750	3.350	2.179	5-S2N	1.440	1.850	1.490	1.400	9.660	4.39	945.780
	10-YR	69.75	66.51	949.270	3.870	2.945	5-S2N	1.570	1.960	1.610	1.510	9.950	4.59	945.890
	25-YR	84.80	70.50	949.560	4.160	3.186	5-S2N	1.630	2.020	1.670	1.650	10.080	4.83	946.030
	50-YR	96.62	72.49	949.710	4.310	3.311	5-S2N	1.660	2.040	1.710	1.760	10.150	4.99	946.140
**	100-YR	108.82	74.12	949.840	4.440	3.414	5-S2N	1.690	2.060	1.730	1.850	10.200	5.15	946.230

* DESIGN FLOW IS 5-YEAR EVENT.

** CHECK FLOW IS 100-YEAR EVENT.

TAILWATER CHANNEL DATA - CROSSING DW 4B-4

TAILWATER CHANNEL OPTION: TRAPEZOIDAL CHANNEL
BOTTOM WIDTH: 4.00 FT
SIDE SLOPE (H:V): 4.00 (_:1)
CHANNEL SLOPE: 0.0130
CHANNEL MANNING'S N: 0.0350
CHANNEL INVERT ELEVATION: 944.38 FT

TABLE 2 - DOWNSTREAM CHANNEL RATING CURVE (CROSSING: DW 4B-4)

FLOW (CFS)	WATER SURFACE ELEV (FT)	VELOCITY (FT/S)	DEPTH (FT)	SHEAR (PSF)	FROUDE NUMBER
44.47	945.61	1.23	4.08	0.99	0.81
58.71	945.78	1.40	4.39	1.13	0.82
69.75	945.89	1.51	4.59	1.23	0.83
84.80	946.03	1.65	4.83	1.34	0.84
96.62	946.14	1.76	4.99	1.42	0.85
108.82	946.23	1.85	5.15	1.50	0.86

STATE OF TEXAS
VANESSA MOLINA
141173
LICENSED PROFESSIONAL ENGINEER

WILCO TEXAS

BGE, Inc.
101 W Louis Henna Blvd, Suite 400, Austin, TX 78728
Tel: 512-879-0400 • www.bgeinc.com
TBPE Registration No. F-1046

RM 2243

DRIVEWAY CULVERT HYDRAULIC DATA

FED.RD. DIV.NO.	PROJECT NO.	SHEET NO.
6		262

STATE	DIST.	COUNTY	
TEXAS	AUS	WILLIAMSON	
CONT.	SECT.	JOB	HIGHWAY NO.
0914	05	222	RM 2243

4/10/2025 1:03:55 PM pdf.pltcfg
G:\TXC\Projects\County\Williamson\7473-02 RM 2243 Phase 1A\03*CADD\01*Shts\06-DRNG\RM2243*P1A*DW*HYDRA*DATA*06.dgn

NOTES:

1. HY-8 V7.8 WAS USED FOR THE HYDRAULIC ANALYSIS.

PROPOSED

SITE DATA - DW 4B-3

SITE DATA OPTION: CULVERT INVERT DATA
INLET STATION: 0.00 FT
INLET ELEVATION: 950.88 FT
OUTLET STATION: 109.00 FT
OUTLET ELEVATION: 950.44 FT
NUMBER OF BARRELS: 2

DW SUMMARY - CULVERT 4B-3

BARREL SHAPE: CIRCULAR
BARREL DIAMETER: 2.50 FT
BARREL MATERIAL: CONCRETE
EMBEDMENT: 0.00 IN
BARREL MANNING'S N: 0.0130
CULVERT TYPE: STRAIGHT
INLET CONFIGURATION: MITERED TO CONFORM TO SLOPE (KE=0.7)
INLET DEPRESSION: NONE

ROADWAY DATA FOR CROSSING: DW 4B-3

ROADWAY PROFILE SHAPE: IRREGULAR
ROADWAY SURFACE: PAVED
ROADWAY TOP WIDTH: 11.37 FT

IRREGULAR ROADWAY CROSS-SECTION

COORD NO.	STATION (FT)	ELEVATION (FT)
0	0	955.22
1	8.97	955.02
2	20.64	954.76
3	32.16	954.51
4	39.78	954.53
5	49.4	954.8

TABLE 1 - CULVERT SUMMARY TABLE: CULVERT 4B-3

	DISCHARGE NAMES	TOTAL DISCHARGE (CFS)	CULVERT DISCHARGE (CFS)	HEADWATER ELEVATION (FT)	INLET CONTROL DEPTH (FT)	OUTLET CONTROL DEPTH (FT)	FLOW TYPE	NORMAL DEPTH (FT)	CRITICAL DEPTH (FT)	OUTLET DEPTH (FT)	TAILWATER DEPTH (FT)	OUTLET VELOCITY (FT/S)	TAILWATER VELOCITY (FT/S)	TAILWATER ELEVATION (FT)
	2-YR	33.61 CFS	33.61 CFS	953.180	2.090	2.302	2-M2C	1.460	1.390	1.390	1.070	6.020	3.79	951.510
*	5-YR	44.37 CFS	44.37 CFS	953.590	2.550	2.713	7-M2C	1.770	1.600	1.600	1.220	6.680	4.08	951.660
	10-YR	52.71 CFS	52.71 CFS	953.920	2.980	3.036	7-M2C	2.070	1.750	1.750	1.330	7.180	4.26	951.770
	25-YR	64.09 CFS	63.92 CFS	954.550	3.670	3.531	7-M2C	2.500	1.930	1.930	1.450	7.880	4.49	951.890
	50-YR	73.03 CFS	67.15 CFS	954.780	3.900	3.71	7-M2C	2.500	1.970	1.970	1.540	8.090	4.64	951.980
**	100-YR	82.25 CFS	68.81 CFS	954.900	4.020	3.832	7-M2C	2.500	1.990	1.990	1.630	8.200	4.79	952.070

* DESIGN FLOW IS 5-YEAR EVENT.

** CHECK FLOW IS 100-YEAR EVENT.

TAILWATER CHANNEL DATA - CROSSING DW 4B-3

TAILWATER CHANNEL OPTION: TRAPEZOIDAL CHANNEL
BOTTOM WIDTH: 4.00 FT
SIDE SLOPE (H:V): 4.00 (_:1)
CHANNEL SLOPE: 0.0130
CHANNEL MANNING'S N: 0.0350
CHANNEL INVERT ELEVATION: 950.44 FT

TABLE 2 - DOWNSTREAM CHANNEL RATING CURVE (CROSSING: DW 4B-3)

FLOW (CFS)	WATER SURFACE ELEV (FT)	VELOCITY (FT/S)	DEPTH (FT)	SHEAR (PSF)	FROUDE NUMBER
33.61	951.51	1.07	3.79	0.87	0.79
44.37	951.66	1.22	4.08	0.99	0.81
52.71	951.77	1.33	4.26	1.08	0.82
64.09	951.89	1.45	4.49	1.18	0.83
73.03	951.98	1.54	4.64	1.25	0.83
82.25	952.07	1.63	4.79	1.32	0.84

PROPOSED

SITE DATA - DW 4B-2

SITE DATA OPTION: CULVERT INVERT DATA
INLET STATION: 0.00 FT
INLET ELEVATION: 954.05 FT
OUTLET STATION: 75.00 FT
OUTLET ELEVATION: 953.80 FT
NUMBER OF BARRELS: 2

DW SUMMARY - CULVERT 4B-2

BARREL SHAPE: CIRCULAR
BARREL DIAMETER: 2.00 FT
BARREL MATERIAL: CONCRETE
EMBEDMENT: 0.00 IN
BARREL MANNING'S N: 0.0130
CULVERT TYPE: STRAIGHT
INLET CONFIGURATION: MITERED TO CONFORM TO SLOPE
INLET DEPRESSION: NONE

ROADWAY DATA FOR CROSSING: DW 4B-2

ROADWAY PROFILE SHAPE: IRREGULAR
ROADWAY SURFACE: PAVED
ROADWAY TOP WIDTH: 12.00 FT

IRREGULAR ROADWAY CROSS-SECTION

COORD NO.	STATION (FT)	ELEVATION (FT)
0	0	957.65
1	6.45	957.5
2	15.61	957.3
3	25.55	957.06
4	31.31	956.93
5	32.16	957.1

TABLE 1 - CULVERT SUMMARY TABLE: CULVERT 4B-2

	DISCHARGE NAMES	TOTAL DISCHARGE (CFS)	CULVERT DISCHARGE (CFS)	HEADWATER ELEVATION (FT)	INLET CONTROL DEPTH (FT)	OUTLET CONTROL DEPTH (FT)	FLOW TYPE	NORMAL DEPTH (FT)	CRITICAL DEPTH (FT)	OUTLET DEPTH (FT)	TAILWATER DEPTH (FT)	OUTLET VELOCITY (FT/S)	TAILWATER VELOCITY (FT/S)	TAILWATER ELEVATION (FT)
	2-YR	15.51 CFS	15.51 CFS	955.660	1.470	1.606	2-M2C	1.110	0.990	0.990	0.730	5.000	3.07	954.530
*	5-YR	20.48 CFS	20.48 CFS	955.940	1.740	1.893	2-M2C	1.330	1.150	1.150	0.840	5.500	3.31	954.640
	10-YR	24.33 CFS	24.33 CFS	956.160	1.970	2.108	7-M2C	1.530	1.250	1.250	0.920	5.870	3.47	954.720
	25-YR	29.58 CFS	29.58 CFS	956.460	2.340	2.408	7-M2C	2.000	1.390	1.390	1.010	6.370	3.66	954.810
	50-YR	33.71 CFS	33.71 CFS	956.720	2.670	2.664	7-M2C	2.000	1.480	1.480	1.070	6.760	3.79	954.870
**	100-YR	37.96 CFS	37.51 CFS	957.070	3.020	2.957	7-M2C	2.000	1.560	1.560	1.140	7.140	3.91	954.940

* DESIGN FLOW IS 5-YEAR EVENT.

** CHECK FLOW IS 100-YEAR EVENT.

TAILWATER CHANNEL DATA - CROSSING DW 4B-2

TAILWATER CHANNEL OPTION: TRAPEZOIDAL CHANNEL
BOTTOM WIDTH: 4.00 FT
SIDE SLOPE (H:V): 4.00 (_:1)
CHANNEL SLOPE: 0.0130
CHANNEL MANNING'S N: 0.0350
CHANNEL INVERT ELEVATION: 953.80 FT

TABLE 2 - DOWNSTREAM CHANNEL RATING CURVE (CROSSING: DW 4B-2)

FLOW (CFS)	WATER SURFACE ELEV (FT)	VELOCITY (FT/S)	DEPTH (FT)	SHEAR (PSF)	FROUDE NUMBER
15.51	954.53	0.73	3.07	0.59	0.75
20.48	954.64	0.84	3.31	0.68	0.77
24.33	954.72	0.92	3.47	0.74	0.78
29.58	954.81	1.01	3.66	0.82	0.79
33.71	954.87	1.07	3.79	0.87	0.79
37.96	954.94	1.14	3.91	0.92	0.80

STATE OF TEXAS
VANESSA MOLINA
141173
LICENSED PROFESSIONAL ENGINEER

WILCO TEXAS

BGE, Inc.
101 W Louis Henna Blvd, Suite 400, Austin, TX 78728
Tel: 512-879-0400 • www.bgeinc.com
TBPE Registration No. F-1046

RM 2243

DRIVEWAY CULVERT HYDRAULIC DATA

FED.RD. DIV.NO.	PROJECT NO.	SHEET NO.
6		263

STATE	DIST.	COUNTY	
TEXAS	AUS	WILLIAMSON	
CONT.	SECT.	JOB	HIGHWAY NO.
0914	05	222	RM 2243

4/10/2025 1:04:36 PM pdf.pltcfg
G:\TXC\Projects\County\Williamson\7473-02 RM 2243 Phase 1A\03*CADD\01*Shts\06-DRNG\RM2243*P1A*DW*HYDRA*DATA*07.dgn

NOTES:

1. HY-8 V7.8 WAS USED FOR THE HYDRAULIC ANALYSIS.

PROPOSED

SITE DATA - DW 5A-1

SITE DATA OPTION: CULVERT INVERT DATA
INLET STATION: 0.00 FT
INLET ELEVATION: 954.86 FT
OUTLET STATION: 25.35 FT
OUTLET ELEVATION: 954.68 FT
NUMBER OF BARRELS: 1

DW SUMMARY - CULVERT 5A-1

BARREL SHAPE: CIRCULAR
BARREL DIAMETER: 2.00 FT
BARREL MATERIAL: CONCRETE
EMBEDMENT: 0.00 IN
BARREL MANNING'S N: 0.0130
CULVERT TYPE: STRAIGHT
INLET CONFIGURATION: MITERED TO CONFORM TO SLOPE (KE=0.7)
INLET DEPRESSION: NONE

ROADWAY DATA FOR CROSSING: DW 5A-1

ROADWAY PROFILE SHAPE: IRREGULAR
ROADWAY SURFACE: PAVED
ROADWAY TOP WIDTH: 10.29 FT

IRREGULAR ROADWAY CROSS-SECTION

COORD NO.	STATION (FT)	ELEVATION (FT)
0	0	957.91
1	6.15	958.16
2	11.96	958.58
3	18.2	958.83
4	24.66	959.31
5	32.16	959.61

TABLE 1 - CULVERT SUMMARY TABLE: CULVERT DW 5A-1

	DISCHARGE NAMES	TOTAL DISCHARGE (CFS)	CULVERT DISCHARGE (CFS)	HEADWATER ELEVATION (FT)	INLET CONTROL DEPTH (FT)	OUTLET CONTROL DEPTH (FT)	FLOW TYPE	NORMAL DEPTH (FT)	CRITICAL DEPTH (FT)	OUTLET DEPTH (FT)	TAILWATER DEPTH (FT)	OUTLET VELOCITY (FT/S)	TAILWATER VELOCITY (FT/S)	TAILWATER ELEVATION (FT)
	2-YR	0.88 CFS	0.88 CFS	955.320	0.460	0.145	1-S2N	0.290	0.320	0.290	0.150	3.080	1.26	954.830
*	5-YR	1.15 CFS	1.15 CFS	955.390	0.530	0.194	1-S2N	0.330	0.370	0.330	0.180	3.330	1.38	954.860
	10-YR	1.37 CFS	1.37 CFS	955.440	0.580	0.23	1-S2N	0.360	0.400	0.360	0.200	3.530	1.47	954.880
	25-YR	1.66 CFS	1.66 CFS	955.500	0.640	0.275	1-S2N	0.400	0.450	0.400	0.220	3.720	1.56	954.900
	50-YR	1.89 CFS	1.89 CFS	955.540	0.680	0.308	1-S2N	0.420	0.480	0.430	0.230	3.850	1.63	954.910
**	100-YR	2.13 CFS	2.13 CFS	955.580	0.720	0.341	1-S2N	0.450	0.510	0.450	0.250	3.990	1.69	954.930

* DESIGN FLOW IS 5-YEAR EVENT.

** CHECK FLOW IS 100-YEAR EVENT.

TAILWATER CHANNEL DATA - CROSSING DW 5A-1

TAILWATER CHANNEL OPTION: TRAPEZOIDAL CHANNEL
BOTTOM WIDTH: 4.00 FT
SIDE SLOPE (H:V): 4.00 (_:1)
CHANNEL SLOPE: 0.0130
CHANNEL MANNING'S N: 0.0350
CHANNEL INVERT ELEVATION: 954.68 FT

TABLE 2 - DOWNSTREAM CHANNEL RATING CURVE (CROSSING: DW 5A-1)

FLOW (CFS)	WATER SURFACE ELEV (FT)	VELOCITY (FT/S)	DEPTH (FT)	SHEAR (PSF)	FROUDE NUMBER
0.88	954.83	0.15	1.26	0.12	0.61
1.15	954.86	0.18	1.38	0.14	0.62
1.37	954.88	0.20	1.47	0.16	0.63
1.66	954.90	0.22	1.56	0.18	0.64
1.89	954.91	0.23	1.63	0.19	0.65
2.13	954.93	0.25	1.69	0.20	0.65

PROPOSED

SITE DATA - DW 5B-1

SITE DATA OPTION: CULVERT INVERT DATA
INLET STATION: 0.00 FT
INLET ELEVATION: 940.75 FT
OUTLET STATION: 45.00 FT
OUTLET ELEVATION: 940.58 FT
NUMBER OF BARRELS: 2

DW SUMMARY - CULVERT 5B-1

BARREL SHAPE: CIRCULAR
BARREL DIAMETER: 1.50 FT
BARREL MATERIAL: CONCRETE
EMBEDMENT: 0.00 IN
BARREL MANNING'S N: 0.0130
CULVERT TYPE: STRAIGHT
INLET CONFIGURATION: MITERED TO CONFORM TO SLOPE
INLET DEPRESSION: NONE

ROADWAY DATA FOR CROSSING: DW 5B-1

ROADWAY PROFILE SHAPE: IRREGULAR
ROADWAY SURFACE: PAVED
ROADWAY TOP WIDTH: 24.00 FT

IRREGULAR ROADWAY CROSS-SECTION

COORD NO.	STATION (FT)	ELEVATION (FT)
0	0	942.35
1	5	942.35
2	15	942.35
3	30	942.35
4	45	942.35

TABLE 1 - CULVERT SUMMARY TABLE: CULVERT DW 5B-1

	DISCHARGE NAMES	TOTAL DISCHARGE (CFS)	CULVERT DISCHARGE (CFS)	HEADWATER ELEVATION (FT)	INLET CONTROL DEPTH (FT)	OUTLET CONTROL DEPTH (FT)	FLOW TYPE	NORMAL DEPTH (FT)	CRITICAL DEPTH (FT)	OUTLET DEPTH (FT)	TAILWATER DEPTH (FT)	OUTLET VELOCITY (FT/S)	TAILWATER VELOCITY (FT/S)	TAILWATER ELEVATION (FT)
	2-YR	7.33 CFS	7.33 CFS	941.940	1.080	1.185	2-M2C	0.810	0.730	0.730	0.720	4.290	2.95	941.300
*	5-YR	9.66 CFS	9.66 CFS	942.140	1.280	1.392	2-M2C	0.970	0.840	0.840	0.830	4.710	3.18	941.410
	10-YR	11.47 CFS	11.47 CFS	942.300	1.440	1.548	7-M2C	1.100	0.920	0.920	0.900	5.020	3.33	941.480
	25-YR	13.92 CFS	12.42 CFS	942.380	1.540	1.629	3-M2T	1.180	0.960	1.000	1.000	4.990	3.5	941.580
	50-YR	15.84 CFS	12.65 CFS	942.400	1.560	1.649	3-M2T	1.200	0.970	1.060	1.060	4.740	3.63	941.640
**	100-YR	17.81 CFS	12.82 CFS	942.420	1.580	1.666	3-M2T	1.220	0.980	1.120	1.120	4.520	3.74	941.700

* DESIGN FLOW IS 5-YEAR EVENT.

** CHECK FLOW IS 100-YEAR EVENT.

TAILWATER CHANNEL DATA - CROSSING DW 5B-1

TAILWATER CHANNEL OPTION: TRAPEZOIDAL CHANNEL
BOTTOM WIDTH: 2.00 FT
SIDE SLOPE (H:V): 2.00 (_:1)
CHANNEL SLOPE: 0.0130
CHANNEL MANNING'S N: 0.0350
CHANNEL INVERT ELEVATION: 940.58 FT

TABLE 2 - DOWNSTREAM CHANNEL RATING CURVE (CROSSING: DW 5B-1)

FLOW (CFS)	WATER SURFACE ELEV (FT)	VELOCITY (FT/S)	DEPTH (FT)	SHEAR (PSF)	FROUDE NUMBER
7.33	941.30	0.72	2.95	0.59	0.73
9.66	941.41	0.83	3.18	0.67	0.74
11.47	941.48	0.90	3.33	0.73	0.75
13.92	941.58	1.00	3.50	0.81	0.76
15.84	941.64	1.06	3.63	0.86	0.76
17.81	941.70	1.12	3.74	0.91	0.77

STATE OF TEXAS
VANESSA MOLINA
141173
PROFESSIONAL LICENSED ENGINEER

WILCO TEXAS

BGE, Inc.
101 W Louis Henna Blvd, Suite 400, Austin, TX 78728
Tel: 512-879-0400 • www.bgeinc.com
TBPE Registration No. F-1046

RM 2243

DRIVEWAY CULVERT HYDRAULIC DATA

SHEET 8 OF 11

FED.RD. DIV.NO.	PROJECT NO.		SHEET NO.
6			264
STATE	DIST.	COUNTY	
TEXAS	AUS	WILLIAMSON	
CONT.	SECT.	JOB	HIGHWAY NO.
0914	05	222	RM 2243

4/10/2025 1:04:47 PM pdf.pltcfg
G:\TXC\Projects\County\Williamson\7473-02 RM 2243 Phase 1A\03*CADD\01*Shts\06-DRNG\RM2243*P1A*DW*HYDRA*DATA*08.dgn

NOTES:

1. HY-8 V7.8 WAS USED FOR THE HYDRAULIC ANALYSIS.

PROPOSED

SITE DATA - DW 8A-1

SITE DATA OPTION: CULVERT INVERT DATA
INLET STATION: 0.00 FT
INLET ELEVATION: 945.00 FT
OUTLET STATION: 42.56 FT
OUTLET ELEVATION: 944.70 FT
NUMBER OF BARRELS: 1

DW SUMMARY - CULVERT 8A-1

BARREL SHAPE: CIRCULAR
BARREL DIAMETER: 2.00 FT
BARREL MATERIAL: CONCRETE
EMBEDMENT: 0.00 IN
BARREL MANNING'S N: 0.0130
CULVERT TYPE: STRAIGHT
INLET CONFIGURATION: MITERED TO CONFORM TO SLOPE (KE=0.7)
INLET DEPRESSION: NONE

ROADWAY DATA FOR CROSSING: DW 8A-1

ROADWAY PROFILE SHAPE: IRREGULAR
ROADWAY SURFACE: PAVED
ROADWAY TOP WIDTH: 27.70 FT

IRREGULAR ROADWAY CROSS-SECTION

COORD NO.	STATION (FT)	ELEVATION (FT)
0	0	947.48
1	13.08	947.63
2	23.77	947.94
3	32.32	948.08
4	39.79	948.19
5	44.65	948.25

TABLE 1 - CULVERT SUMMARY TABLE: CULVERT DW 8A-1

	DISCHARGE NAMES	TOTAL DISCHARGE (CFS)	CULVERT DISCHARGE (CFS)	HEADWATER ELEVATION (FT)	INLET CONTROL DEPTH (FT)	OUTLET CONTROL DEPTH (FT)	FLOW TYPE	NORMAL DEPTH (FT)	CRITICAL DEPTH (FT)	OUTLET DEPTH (FT)	TAILWATER DEPTH (FT)	OUTLET VELOCITY (FT/S)	TAILWATER VELOCITY (FT/S)	TAILWATER ELEVATION (FT)
	2-YR	9.34 CFS	9.34 CFS	946.650	1.650	1.098	1-S2N	0.990	1.090	0.990	0.560	5.990	2.66	945.260
*	5-YR	12.35 CFS	12.35 CFS	947.000	2.000	1.497	5-S2N	1.170	1.260	1.180	0.650	6.420	2.88	945.350
	10-YR	14.69 CFS	14.69 CFS	947.330	2.330	1.837	5-S2N	1.320	1.380	1.320	0.710	6.670	3.02	945.410
	25-YR	17.90 CFS	16.71 CFS	947.650	2.650	2.151	5-S2N	1.450	1.470	1.450	0.790	6.830	3.19	945.490
	50-YR	20.43 CFS	17.20 CFS	947.740	2.740	2.231	5-S2N	1.490	1.490	1.490	0.840	6.860	3.31	945.540
**	100-YR	23.05 CFS	17.59 CFS	947.810	2.810	2.766	7-M2C	1.520	1.510	1.510	0.890	6.910	3.42	945.590

* DESIGN FLOW IS 5-YEAR EVENT.

** CHECK FLOW IS 100-YEAR EVENT.

TAILWATER CHANNEL DATA - CROSSING DW 8A-1

TAILWATER CHANNEL OPTION: TRAPEZOIDAL CHANNEL
BOTTOM WIDTH: 4.00 FT
SIDE SLOPE (H:V): 4.00 (_:1)
CHANNEL SLOPE: 0.0130
CHANNEL MANNING'S N: 0.0350
CHANNEL INVERT ELEVATION: 945.23 FT

TABLE 2 - DOWNSTREAM CHANNEL RATING CURVE (CROSSING: DW 8A-1)

FLOW (CFS)	WATER SURFACE ELEV (FT)	VELOCITY (FT/S)	DEPTH (FT)	SHEAR (PSF)	FROUDE NUMBER
9.34	945.79	0.56	2.66	0.46	0.73
12.35	945.88	0.65	2.88	0.53	0.74
14.69	945.94	0.71	3.02	0.58	0.75
17.90	946.02	0.79	3.19	0.64	0.76
20.43	946.07	0.84	3.31	0.68	0.77
23.05	946.12	0.89	3.42	0.72	0.77

PROPOSED

SITE DATA - DW 9C-1

SITE DATA OPTION: CULVERT INVERT DATA
INLET STATION: 0.00 FT
INLET ELEVATION: 941.35 FT
OUTLET STATION: 70.00 FT
OUTLET ELEVATION: 941.10 FT
NUMBER OF BARRELS: 1

DW SUMMARY - CULVERT 9C-1

BARREL SHAPE: CIRCULAR
BARREL DIAMETER: 2.00 FT
BARREL MATERIAL: CONCRETE
EMBEDMENT: 0.00 IN
BARREL MANNING'S N: 0.0130
CULVERT TYPE: STRAIGHT
INLET CONFIGURATION: MITERED TO CONFORM TO SLOPE (KE=0.7)
INLET DEPRESSION: NONE

ROADWAY DATA FOR CROSSING: DW 9C-1

ROADWAY PROFILE SHAPE: IRREGULAR
ROADWAY SURFACE: PAVED
ROADWAY TOP WIDTH: 40.00 FT

IRREGULAR ROADWAY CROSS-SECTION

COORD NO.	STATION (FT)	ELEVATION (FT)
0	0	947.68
1	10.64	947.11
2	23.46	946.42
3	40.34	945.52
4	51.37	944.92
5	68.74	944

TABLE 1 - CULVERT SUMMARY TABLE: CULVERT DW 9C-1

	DISCHARGE NAMES	TOTAL DISCHARGE (CFS)	CULVERT DISCHARGE (CFS)	HEADWATER ELEVATION (FT)	INLET CONTROL DEPTH (FT)	OUTLET CONTROL DEPTH (FT)	FLOW TYPE	NORMAL DEPTH (FT)	CRITICAL DEPTH (FT)	OUTLET DEPTH (FT)	TAILWATER DEPTH (FT)	OUTLET VELOCITY (FT/S)	TAILWATER VELOCITY (FT/S)	TAILWATER ELEVATION (FT)
	2-YR	9.92 CFS	9.92 CFS	943.210	1.710	1.858	2-M2C	1.270	1.130	1.130	0.830	5.440	2.24	941.930
*	5-YR	13.07 CFS	13.07 CFS	943.560	2.090	2.207	7-M2C	1.580	1.300	1.300	0.940	6.040	2.4	942.040
	10-YR	15.51 CFS	15.51 CFS	943.840	2.450	2.486	7-M2C	2.000	1.420	1.420	1.020	6.500	2.51	942.120
	25-YR	18.82 CFS	18.15 CFS	944.260	2.910	2.827	7-M2C	2.000	1.530	1.530	1.110	7.020	2.64	942.210
	50-YR	21.42 CFS	19.03 CFS	944.430	3.080	2.969	7-M2C	2.000	1.570	1.570	1.170	7.200	2.73	942.270
**	100-YR	24.09 CFS	19.63 CFS	944.550	3.200	3.089	7-M2C	2.000	1.590	1.590	1.240	7.320	2.81	942.340

* DESIGN FLOW IS 5-YEAR EVENT.

** CHECK FLOW IS 100-YEAR EVENT.

TAILWATER CHANNEL DATA - CROSSING DW 9C-1

TAILWATER CHANNEL OPTION: TRAPEZOIDAL CHANNEL
BOTTOM WIDTH: 2.00 FT
SIDE SLOPE (H:V): 4.00 (_:1)
CHANNEL SLOPE: 0.0070
CHANNEL MANNING'S N: 0.0350
CHANNEL INVERT ELEVATION: 941.10 FT

TABLE 2 - DOWNSTREAM CHANNEL RATING CURVE (CROSSING: DW 9C-1)

FLOW (CFS)	WATER SURFACE ELEV (FT)	VELOCITY (FT/S)	DEPTH (FT)	SHEAR (PSF)	FROUDE NUMBER
9.92	941.93	0.83	2.24	0.36	0.55
13.07	942.04	0.94	2.40	0.41	0.56
15.51	942.12	1.02	2.51	0.44	0.57
18.82	942.21	1.11	2.64	0.48	0.57
21.42	942.27	1.17	2.73	0.51	0.58
24.09	942.34	1.24	2.81	0.54	0.58

STATE OF TEXAS
VANESSA MOLINA
141173
LICENSED PROFESSIONAL ENGINEER

WILCO TEXAS

BGE, Inc.
101 W Louis Henna Blvd, Suite 400, Austin, TX 78728
Tel: 512-879-0400 • www.bgeinc.com
TBPE Registration No. F-1046

RM 2243

DRIVEWAY CULVERT HYDRAULIC DATA

SHEET 9 OF 11

FED.RD. DIV.NO.	PROJECT NO.		SHEET NO.
6			265
STATE	DIST.	COUNTY	
TEXAS	AUS	WILLIAMSON	
CONT.	SECT.	JOB	HIGHWAY NO.
0914	05	222	RM 2243

4/10/2025 1:04:54 PM pdf.pltcfg
G:\TXC\Projects\County\Williamson\7473-02 RM 2243 Phase 1A\03\CADD\01\Shts\06-DRNG\RM2243_P1A_DW_HYDRA_DATA_09.dgn

NOTES:

1. HY-8 V7.8 WAS USED FOR THE HYDRAULIC ANALYSIS.

PROPOSED

SITE DATA - DW 9D-3

SITE DATA OPTION: CULVERT INVERT DATA
INLET STATION: 0.00 FT
INLET ELEVATION: 1016.00 FT
OUTLET STATION: 74.00 FT
OUTLET ELEVATION: 1014.00 FT
NUMBER OF BARRELS: 1

DW SUMMARY - CULVERT 9D-3

BARREL SHAPE: CIRCULAR
BARREL DIAMETER: 2.00 FT
BARREL MATERIAL: CONCRETE
EMBEDMENT: 0.00 IN
BARREL MANNING'S N: 0.0130
CULVERT TYPE: STRAIGHT
INLET CONFIGURATION: MITERED TO CONFORM TO SLOPE (KE=0.7)
INLET DEPRESSION: NONE

ROADWAY DATA FOR CROSSING: DW 9D-3

ROADWAY PROFILE SHAPE: IRREGULAR
ROADWAY SURFACE: PAVED
ROADWAY TOP WIDTH: 12.00 FT

IRREGULAR ROADWAY CROSS-SECTION

COORD NO.	STATION (FT)	ELEVATION (FT)
0	0	1019.2
1	7.5	1019.52
2	16.98	1019.94
3	28.11	1020.44
4	38.11	1020.8
5	48.17	1021.15

TABLE 1 - CULVERT SUMMARY TABLE: CULVERT DW 9D-3

	DISCHARGE NAMES	TOTAL DISCHARGE (CFS)	CULVERT DISCHARGE (CFS)	HEADWATER ELEVATION (FT)	INLET CONTROL DEPTH (FT)	OUTLET CONTROL DEPTH (FT)	FLOW TYPE	NORMAL DEPTH (FT)	CRITICAL DEPTH (FT)	OUTLET DEPTH (FT)	TAILWATER DEPTH (FT)	OUTLET VELOCITY (FT/S)	TAILWATER VELOCITY (FT/S)	TAILWATER ELEVATION (FT)
	2-YR	12.48 CFS	12.48 CFS	1018.050	2.050	0.0*	5-S2N	0.800	1.270	0.820	0.730	10.250	3.5	1014.820
*	5-YR	16.63 CFS	16.63 CFS	1018.670	2.670	0.608	5-S2N	0.940	1.470	0.980	0.830	10.900	3.78	1014.980
	10-YR	19.89 CFS	19.85 CFS	1019.280	3.280	1.42	5-S2N	1.040	1.600	1.090	0.900	11.300	3.95	1015.090
	25-YR	24.39 CFS	21.43 CFS	1019.620	3.620	1.716	5-S2N	1.090	1.660	1.150	0.990	11.500	4.17	1015.150
	50-YR	27.98 CFS	22.00 CFS	1019.740	3.740	1.828	5-S2N	1.110	1.670	1.170	1.050	11.570	4.32	1015.170
**	100-YR	31.77 CFS	22.46 CFS	1019.850	3.850	1.92	5-S2N	1.120	1.690	1.180	1.110	11.630	4.46	1015.180

* DESIGN FLOW IS 5-YEAR EVENT.

** CHECK FLOW IS 100-YEAR EVENT.

TAILWATER CHANNEL DATA - CROSSING DW 9D-3

TAILWATER CHANNEL OPTION: TRAPEZOIDAL CHANNEL
BOTTOM WIDTH: 2.00 FT
SIDE SLOPE (H:V): 4.00 (_:1)
CHANNEL SLOPE: 0.0200
CHANNEL MANNING'S N: 0.0350
CHANNEL INVERT ELEVATION: 1014.00 FT

TABLE 2 - DOWNSTREAM CHANNEL RATING CURVE (CROSSING: DW 9D-3)

FLOW (CFS)	WATER SURFACE ELEV (FT)	VELOCITY (FT/S)	DEPTH (FT)	SHEAR (PSF)	FROUDE NUMBER
12.48	1014.73	0.73	3.50	0.91	0.91
16.63	1014.83	0.83	3.78	1.03	0.93
19.89	1014.90	0.90	3.95	1.12	0.94
24.39	1014.99	0.99	4.17	1.23	0.95
27.98	1015.05	1.05	4.32	1.31	0.96
31.77	1015.11	1.11	4.46	1.38	0.97

PROPOSED

SITE DATA - DW 9D-2

SITE DATA OPTION: CULVERT INVERT DATA
INLET STATION: 0.00 FT
INLET ELEVATION: 1026.42 FT
OUTLET STATION: 60.00 FT
OUTLET ELEVATION: 1026.15 FT
NUMBER OF BARRELS: 1

DW SUMMARY - CULVERT 9D-2

BARREL SHAPE: CIRCULAR
BARREL DIAMETER: 1.50 FT
BARREL MATERIAL: CONCRETE
EMBEDMENT: 0.00 IN
BARREL MANNING'S N: 0.0120
CULVERT TYPE: STRAIGHT
INLET CONFIGURATION: SQUARE EDGE WITH HEADWALL (KE=0.5)
INLET DEPRESSION: NONE

ROADWAY DATA FOR CROSSING: DW 9D-2

ROADWAY PROFILE SHAPE: IRREGULAR
ROADWAY SURFACE: PAVED
ROADWAY TOP WIDTH: 14.00 FT

IRREGULAR ROADWAY CROSS-SECTION

COORD NO.	STATION (FT)	ELEVATION (FT)
0	0	1029.32
1	10	1029.32
2	20	1029.32
3	40	1029.32
4	60	1029.32

TABLE 1 - CULVERT SUMMARY TABLE: CULVERT DW 9D-2

	DISCHARGE NAMES	TOTAL DISCHARGE (CFS)	CULVERT DISCHARGE (CFS)	HEADWATER ELEVATION (FT)	INLET CONTROL DEPTH (FT)	OUTLET CONTROL DEPTH (FT)	FLOW TYPE	NORMAL DEPTH (FT)	CRITICAL DEPTH (FT)	OUTLET DEPTH (FT)	TAILWATER DEPTH (FT)	OUTLET VELOCITY (FT/S)	TAILWATER VELOCITY (FT/S)	TAILWATER ELEVATION (FT)
	2-YR	2.00 CFS	2.00 CFS	1027.160	0.740	0.311	1-S2N	0.520	0.530	0.520	0.350	3.640	1.66	1026.500
*	5-YR	2.66 CFS	2.66 CFS	1027.300	0.880	0.434	1-S2N	0.610	0.620	0.610	0.410	3.940	1.8	1026.560
	10-YR	3.18 CFS	3.18 CFS	1027.400	0.980	0.531	1-S2N	0.670	0.680	0.670	0.450	4.130	1.89	1026.600
	25-YR	3.90 CFS	3.90 CFS	1027.620	1.110	1.2	2-M2C	0.760	0.760	0.760	0.490	4.370	2.00	1026.640
	50-YR	4.48 CFS	4.48 CFS	1027.720	1.210	1.297	2-M2C	0.820	0.810	0.810	0.530	4.590	2.07	1026.680
**	100-YR	5.08 CFS	5.08 CFS	1027.810	1.310	1.393	2-M2C	0.890	0.870	0.870	0.560	4.800	2.14	1026.710

* DESIGN FLOW IS 5-YEAR EVENT.

** CHECK FLOW IS 100-YEAR EVENT.

TAILWATER CHANNEL DATA - CROSSING DW 9D-2

TAILWATER CHANNEL OPTION: TRAPEZOIDAL CHANNEL
BOTTOM WIDTH: 2.00 FT
SIDE SLOPE (H:V): 4.00 (_:1)
CHANNEL SLOPE: 0.0100
CHANNEL MANNING'S N: 0.0350
CHANNEL INVERT ELEVATION: 1026.15 FT

TABLE 2 - DOWNSTREAM CHANNEL RATING CURVE (CROSSING: DW 9D-2)

FLOW (CFS)	WATER SURFACE ELEV (FT)	VELOCITY (FT/S)	DEPTH (FT)	SHEAR (PSF)	FROUDE NUMBER
2.00	1026.50	0.35	1.66	0.22	0.59
2.66	1026.56	0.41	1.80	0.25	0.60
3.18	1026.60	0.45	1.89	0.28	0.61
3.90	1026.64	0.49	2.00	0.31	0.61
4.48	1026.68	0.53	2.07	0.33	0.62
5.08	1026.71	0.56	2.14	0.35	0.62

STATE OF TEXAS
VANESSA MOLINA
141173
PROFESSIONAL LICENSED ENGINEER

WILCO TEXAS

BGE, Inc.
101 W Louis Henna Blvd, Suite 400, Austin, TX 78728
Tel: 512-879-0400 • www.bgeinc.com
TBPE Registration No. F-1046

RM 2243

DRIVEWAY CULVERT HYDRAULIC DATA

SHEET 10 OF 11

FED.RD. DIV.NO.	PROJECT NO.		SHEET NO.
6			266
STATE	DIST.	COUNTY	
TEXAS	AUS	WILLIAMSON	
CONT.	SECT.	JOB	HIGHWAY NO.
0914	05	222	RM 2243

4/10/2025 1:05:00 PM pdf.pltcfg
G:\TXC\Projects\County\Williamson\7473-02 RM 2243 Phase 1A\03*CADD\01*Shts\06-DRNG\RM2243*P1A*DW*HYDRA*DATA*10.dgn

NOTES:

1. HY-8 V7.8 WAS USED FOR THE HYDRAULIC ANALYSIS.

PROPOSED

SITE DATA - DW 10A-2

SITE DATA OPTION: CULVERT INVERT DATA
INLET STATION: 0.00 FT
INLET ELEVATION: 1027.15 FT
OUTLET STATION: 54.20 FT
OUTLET ELEVATION: 1026.90 FT
NUMBER OF BARRELS: 1

DW SUMMARY - CULVERT 10A-2

BARREL SHAPE: CIRCULAR
BARREL DIAMETER: 2.00 FT
BARREL MATERIAL: CONCRETE
EMBEDMENT: 0.00 IN
BARREL MANNING'S N: 0.0130
CULVERT TYPE: STRAIGHT
INLET CONFIGURATION: MITERED TO CONFORM TO SLOPE (KE=0.7)
INLET DEPRESSION: NONE

ROADWAY DATA FOR CROSSING: DW 10A-2

ROADWAY PROFILE SHAPE: IRREGULAR
ROADWAY SURFACE: PAVED
ROADWAY TOP WIDTH: 17.43 FT

IRREGULAR ROADWAY CROSS-SECTION

COORD NO.	STATION (FT)	ELEVATION (FT)
0	0	1030.52
1	10.39	1030.46
2	23.84	1030.44
3	33.97	1031.18
4	52.58	1029.76

TABLE 1 - CULVERT SUMMARY TABLE: CULVERT DW 10A-2

	DISCHARGE NAMES	TOTAL DISCHARGE (CFS)	CULVERT DISCHARGE (CFS)	HEADWATER ELEVATION (FT)	INLET CONTROL DEPTH (FT)	OUTLET CONTROL DEPTH (FT)	FLOW TYPE	NORMAL DEPTH (FT)	CRITICAL DEPTH (FT)	OUTLET DEPTH (FT)	TAILWATER DEPTH (FT)	OUTLET VELOCITY (FT/S)	TAILWATER VELOCITY (FT/S)	TAILWATER ELEVATION (FT)
	2-YR	6.91 CFS	6.91 CFS	1028.690	1.380	1.54	3-M1T	0.940	0.930	1.020	1.020	4.310	1.67	1027.920
*	5-YR	9.11 CFS	9.11 CFS	1028.950	1.620	1.796	3-M1T	1.110	1.080	1.130	1.130	5.000	1.79	1028.030
	10-YR	10.81 CFS	10.81 CFS	1029.130	1.810	1.979	3-M2T	1.240	1.180	1.200	1.200	5.490	1.87	1028.100
	25-YR	13.11 CFS	13.11 CFS	1029.370	2.100	2.22	7-M2C	1.420	1.300	1.300	1.290	6.050	1.97	1028.190
	50-YR	14.93 CFS	14.93 CFS	1029.560	2.360	2.413	7-M2C	1.590	1.390	1.390	1.360	6.390	2.03	1028.260
**	100-YR	16.78 CFS	16.76 CFS	1029.810	2.660	2.615	7-M2C	2.000	1.480	1.480	1.420	6.740	2.09	1028.320

* DESIGN FLOW IS 5-YEAR EVENT.

** CHECK FLOW IS 100-YEAR EVENT.

TAILWATER CHANNEL DATA - CROSSING DW 10A-2

TAILWATER CHANNEL OPTION: TRIANGULAR CHANNEL
SIDE SLOPE (H:V): 4.00 (_:1)
CHANNEL SLOPE: 0.0040
CHANNEL MANNING'S N: 0.0350
CHANNEL INVERT ELEVATION: 1026.90 FT

TABLE 2 - DOWNSTREAM CHANNEL RATING CURVE (CROSSING: DW 10A-2)

FLOW (CFS)	WATER SURFACE ELEV (FT)	VELOCITY (FT/S)	DEPTH (FT)	SHEAR (PSF)	FROUDE NUMBER
6.91	1027.92	1.02	1.67	0.25	0.41
9.11	1028.03	1.13	1.79	0.28	0.42
10.81	1028.10	1.20	1.87	0.30	0.43
13.11	1028.19	1.29	1.97	0.32	0.43
14.93	1028.26	1.36	2.03	0.34	0.43
16.78	1028.32	1.42	2.09	0.35	0.44

PROPOSED

SITE DATA - DW 3A-3

SITE DATA OPTION: CULVERT INVERT DATA
INLET STATION: 0.00 FT
INLET ELEVATION: 950.62 FT
OUTLET STATION: 59.00 FT
OUTLET ELEVATION: 950.32 FT
NUMBER OF BARRELS: 1

DW SUMMARY - CULVERT 3A-3

BARREL SHAPE: CIRCULAR
BARREL DIAMETER: 2.00 FT
BARREL MATERIAL: CONCRETE
EMBEDMENT: 0.00 IN
BARREL MANNING'S N: 0.0130
CULVERT TYPE: STRAIGHT
INLET CONFIGURATION: MITERED TO CONFORM TO SLOPE (KE=0.7)
INLET DEPRESSION: NONE

ROADWAY DATA FOR CROSSING: DW 3A-3

ROADWAY PROFILE SHAPE: IRREGULAR
ROADWAY SURFACE: PAVED
ROADWAY TOP WIDTH: 20.84 FT

IRREGULAR ROADWAY CROSS-SECTION

COORD NO.	STATION (FT)	ELEVATION (FT)
0	0	953.08
1	17.45	953.46
2	41.65	954.43
3	60.46	954.52
4	85.03	954.54

TABLE 1 - CULVERT SUMMARY TABLE: CULVERT 3A-3

	DISCHARGE NAMES	TOTAL DISCHARGE (CFS)	CULVERT DISCHARGE (CFS)	HEADWATER ELEVATION (FT)	INLET CONTROL DEPTH (FT)	OUTLET CONTROL DEPTH (FT)	FLOW TYPE	NORMAL DEPTH (FT)	CRITICAL DEPTH (FT)	OUTLET DEPTH (FT)	TAILWATER DEPTH (FT)	OUTLET VELOCITY (FT/S)	TAILWATER VELOCITY (FT/S)	TAILWATER ELEVATION (FT)
	2-YR	9.56 CFS	9.56 CFS	952.490	1.670	1.866	2-M2C	1.110	1.110	1.110	0.770	5.370	1.45	951.09
*	5-YR	12.76 CFS	12.76 CFS	952.820	2.050	2.199	7-M2C	1.340	1.280	1.280	0.880	5.980	1.57	951.2
	10-YR	15.27 CFS	15.27 CFS	953.080	2.410	2.455	7-M2C	1.550	1.410	1.410	0.950	6.460	1.64	951.27
	25-YR	18.77 CFS	17.11 CFS	953.340	2.720	2.654	7-M2C	1.780	1.490	1.490	1.050	6.810	1.74	951.37
	50-YR	21.55 CFS	17.68 CFS	953.440	2.820	2.72	7-M2C	2.000	1.520	1.520	1.120	6.930	1.8	951.44
**	100-YR	24.51 CFS	18.08 CFS	953.520	2.900	2.767	7-M2C	2.000	1.530	1.530	1.190	7.000	1.86	951.51

* DESIGN FLOW IS 5-YEAR EVENT.

** CHECK FLOW IS 100-YEAR EVENT.

TAILWATER CHANNEL DATA - CROSSING DW 3A-3

TAILWATER CHANNEL OPTION: TRAPEZOIDAL CHANNEL
BOTTOM WIDTH: 4.00 FT
SIDE SLOPE (H:V): 6.00 (_:1)
CHANNEL SLOPE: 0.0030
CHANNEL MANNING'S N: 0.0350
CHANNEL INVERT ELEVATION: 950.32 FT

TABLE 2 - DOWNSTREAM CHANNEL RATING CURVE (CROSSING: DW 3A-3)

FLOW (CFS)	WATER SURFACE ELEV (FT)	VELOCITY (FT/S)	DEPTH (FT)	SHEAR (PSF)	FROUDE NUMBER
9.56	951.09	0.77	1.45	0.14	0.36
12.76	951.20	0.88	1.57	0.16	0.37
15.27	951.27	0.95	1.64	0.18	0.37
18.77	951.37	1.05	1.74	0.20	0.38
21.55	951.44	1.12	1.80	0.21	0.38
24.51	951.51	1.19	1.86	0.22	0.39

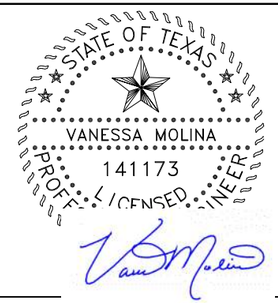

WILCO TEXAS

BGE, Inc.
101 W Louis Henna Blvd, Suite 400, Austin, TX 78728
Tel: 512-879-0400 • www.bgeinc.com
TBPE Registration No. F-1046

RM 2243

DRIVEWAY CULVERT HYDRAULIC DATA

FED.RD. DIV.NO.	PROJECT NO.		SHEET NO.
6			267
STATE	DIST.	COUNTY	
TEXAS	AUS	WILLIAMSON	
CONT.	SECT.	JOB	HIGHWAY NO.
0914	05	222	RM 2243

4/10/2025 1:05:07 PM pdf.pltcfg
G:\TXC\Projects\County\Williamson\7473-02 RM 2243 Phase 1A\03*CADD\01*Shts\06-DRNG\RM2243*P1A*DW*HYDRA*DATA*11.dgn

DRIVEWAY CULVERTS

DRIVEWAY ID	CULVERT ID	CULVERT DESCRIPTION					U.S. NODE DESCRIPTION	U.S KEYPOINT LOCATION					D.S. NODE DESCRIPTION	D.S. KEYPOINT LOCATION				
		PIPE SIZE	RCP CLASS	BARRELS	PIPE LENGTH	PIPE SLOPE		BL NAME	STATION	OFFSET		ELEV		BL NAME	STATION	OFFSET		ELEV
					LF	%				FT	RS/LS	FT				FT	RS/LS	FT
1	2A-1 (EXISTING)	24"	III	2	91.5	0.82	EXISTING SET	RM2243_P1A_CL	505+68.38	33.54	LS	948.50	TIE-IN POINT	RM2243_P1A_CL	506+50.27	9.17	RS	947.75
	2A-1 (PROPOSED EXTENSION)	24"	III	2	65.8	0.82	TIE-IN POINT	RM2243_P1A_CL	506+50.27	9.17	RS	947.75	SET (TY II) (24") (RCP) (6:1) (P)	RM2243_P1A_CL	507+06.19	44.12	RS	947.20
2	2B-2	24"	III	1	44.0	0.34	SET (TY II) (24") (RCP) (6:1) (P)	RM2243_P1A_CL	512+50.04	63.55	LS	945.95	SET (TY II) (24") (RCP) (6:1) (P)	RM2243_P1A_CL	511+62.75	62.61	LS	945.80
CR 269	2C-1	24"	III	1	144.0	0.83	SET (TY II) (24") (RCP) (6:1) (P)	RM2243_P1A_CL	505+75.87	105.07	RS	948.46	SET (TY II) (24") (RCP) (6:1) (P)	RM2243_P1A_CL	507+02.45	58.18	RS	947.26
2A	3A-2	18"	III	1	41.0	0.32	SET (TY II) (18") (RCP) (6:1) (P)	RM2243_P1A_CL	515+66.85	60.24	LS	951.20	SET (TY II) (18") (RCP) (6:1) (P)	RM2243_P1A_CL	516.30.79	61.30	LS	950.98
CR 270	3A-3	24"	III	1	59.0	0.43	SET (TY II) (24") (RCP) (6:1) (P)	RM2243_P1A_CL	518+66+45	69.82	LS	948.40	SET (TY II) (24") (RCP) (6:1) (P)	RM2243_P1A_CL	519+24.84	64.43	LS	948.10
3	4A-2	24"	III	2	29.8	0.60	SET (TY II) (24") (RCP) (6:1) (P)	RM2243_P1A_CL	532+80.90	62.01	LS	949.82	SET (TY II) (24") (RCP) (6:1) (P)	RM2243_P1A_CL	533+32.09	64.99	LS	949.64
4	4A-3	24"	III	1	63.0	1.65	SET (TY II) (24") (RCP) (6:1) (P)	RM2243_P1A_CL	537+83.34	96.53	LS	944.02	SET (TY II) (24") (RCP) (6:1) (P)	RM2243_P1A_CL	538+45.57	88.35	LS	942.98
4	4A-3-I	24"	III	1	63.0	2.25	SET (TY II) (24") (RCP) (6:1) (P)	RM2243_P1A_CL	537+88.88	56.40	LS	944.40	SET (TY II) (24") (RCP) (6:1) (P)	RM2243_P1A_CL	538+48.70	76.24	LS	942.98
RAIDERWAY	4C-O	18"	III	1	126.0	2.22	SET (TY II) (18") (RCP) (6:1) (P)	RM2243_P1A_CL	533+30.38	46.79	RS	951.10	SET (TY II) (18") (RCP) (6:1) (P)	RM2243_P1A_CL	534+57.74	49.51	RS	947.30
RAIDERWAY	4E-1	18"	III	1	62.0	0.50	SET (TY II) (18") (RCP) (6:1) (P)	RM2243_P1A_CL	533+76.62	179.29	RS	948.91	SET (TY II) (18") (RCP) (6:1) (P)	RM2243_P1A_CL	534+39.49	160.36	RS	948.60
N/A	4C-1	18"	V	1	80.0	1.19	SET (TY II) (18") (RCP) (6:1) (P)	RM2243_P1A_CL	537+45.19	43.08	RS	942.64	SET (TY II) (18") (RCP) (6:1) (P)	RM2243_P1A_CL	538+27.40	43.32	RS	941.69
5	4C-2	24"	III	1	34.2	0.41	SET (TY II) (24") (RCP) (6:1) (P)	RM2243_P1A_CL	541+28.14	79.18	RS	936.77	SET (TY II) (24") (RCP) (6:1) (P)	RM2243_P1A_CL	541+83.58	70.10	RS	936.63
N/A	4B-4	30"	III	2	80.0	1.28	SET (TY II) (30") (RCP) (6:1) (P)	RM2243_P1A_CL	548+04.28	88.91	LS	945.40	SET (TY II) (30") (RCP) (6:1) (P)	RM2243_P1A_CL	547+89.51	60.03	LS	944.38
9	4B-3	30"	V	2	109.0	0.40	SET (TY II) (30") (RCP) (6:1) (P)	RM2243_P1A_CL	551+40.04	50.92	LS	950.88	SET (TY II) (30") (RCP) (6:1) (P)	RM2243_P1A_CL	550+51.48	55.87	LS	950.44
11	4B-2	24"	V	2	75.0	0.33	SET (TY II) (24") (RCP) (6:1) (P)	RM2243_P1A_CL	556+86.41	44.87	LS	954.05	SET (TY II) (24") (RCP) (6:1) (P)	RM2243_P1A_CL	555+11.29	43.32	LS	953.80
15	5A-1	24"	III	1	25.4	0.71	SET (TY II) (24") (RCP) (6:1) (P)	RM2243_P1A_CL	561+86.59	45.89	LS	954.86	SET (TY II) (24") (RCP) (6:1) (P)	RM2243_P1A_CL	562+35.95	45.94	LS	954.68
N/A	5B-1	18"	III	2	45.0	0.38	SET (TY II) (18") (RCP) (6:1) (P)	RM2243_P1A_CL	565+42.52	55.52	LS	940.75	SET (TY II) (18") (RCP) (6:1) (P)	RM2243_P1A_CL	565+88.16	55.84	LS	940.58
18	8A-1	24"	III	1	42.6	0.85	SET (TY II) (24") (RCP) (6:1) (P)	RM2243_P1A_CL	959+84.00	42.83	LS	945.59	SET (TY II) (24") (RCP) (6:1) (P)	RM2243_P1A_CL	596+77.93	46.57	LS	945.23
OLD 2243	9C-1	24"	III	1	70.0	0.36	SET (TY II) (24") (RCP) (6:1) (P)	RM2243_P1A_CL	621+38.63	53.59	RS	942.35	SET (TY II) (24") (RCP) (6:1) (P)	RM2243_P1A_CL	622+32.51	50.88	RS	941.10
21	9D-3	24"	III	1	74.0	0.43	SET (TY II) (24") (RCP) (6:1) (P)	RM2243_P1A_CL	654+41.82	60.95	RS	1007.40	SET (TY II) (24") (RCP) (6:1) (P)	RM2243_P1A_CL	653+49.26	62.17	RS	1007.10
22	9D-2	24"	III	1	60.0	1.00	SET (TY II) (24") (RCP) (6:1) (P)	RM2243_P1A_CL	658+36.49	54.31	RS	1018.00	SET (TY II) (24") (RCP) (6:1) (P)	RM2243_P1A_CL	657+42.62	56.01	RS	1017.30
23	10A-2	24"	III	1	54.2	0.64	SET (TY II) (24") (RCP) (6:1) (P)	RM2243_P1A_CL	667+21.80	68.21	LS	1027.50	SET (TY II) (24") (RCP) (6:1) (P)	RM2243_P1A_CL	667+84.26	71.49	LS	1027.25

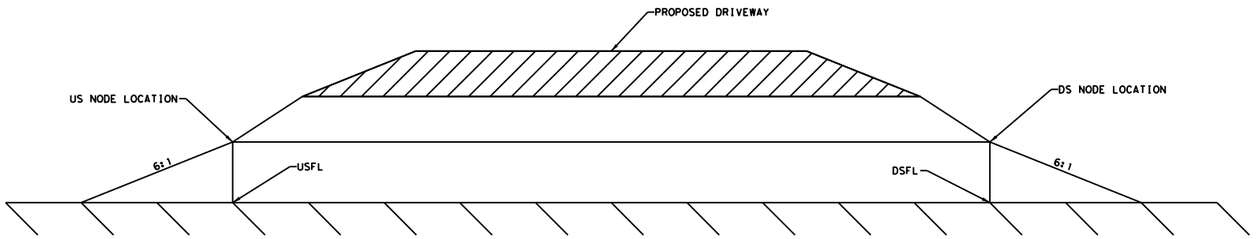

DRIVEWAY CULVERT PROFILE

NOT TO SCALE

NOTES:

1. DRIVEWAY CULVERTS WERE DESIGNED TO THE 5YR
2. EXISTING DW CULV 2A-1 TO BE EXTENDED.
3. DW CULV 2C-1 TO BE REMOVED AND REPLACED.
4. SEE ROADWAY P&P SHEET FOR OUTLET PROTECTION LIMITS.
5. FOR ADDITIONAL ROADWAY INFORMATION, SEE ROADWAY PLANS.

STATE OF TEXAS
VANESSA MOLINA
141173
LICENSED PROFESSIONAL ENGINEER

WILCO TEXAS

BGE, Inc.
101 W Louis Henna Blvd, Suite 400, Austin, TX 78728
Tel: 512-879-0400 • www.bgeinc.com
TBPE Registration No. F-1046

RM 2243

DRIVEWAY CULVERT DETAIL

SHEET 1 OF 1

FED.RD. DIV.NO.	PROJECT NO.	SHEET NO.
6		268

STATE	DIST.	COUNTY	
TEXAS	AUS	WILLIAMSON	
CONT.	SECT.	JOB	HIGHWAY NO.
0914	05	222	RM 2243

4/10/2025 1:05:08 PM pdf.pltcfg
G:\TXC\Projects\County\Williamson\7473-02 RM 2243 Phase 1A\03*CADD\01*Shts\06-DRNG\RM2243*P1A*DRWY*CUL*DTL*01.dgn

NOTES:

1.) THE DESIGN YEAR FOR STORM SEWER IS THE 5-YR STORM.

2.) THE DESIGN STORM FOR THE CULVERT 6B SYSTEM IS THE 25-YR STORM.

3.) ANALYSIS DONE USING GEOAK DRAINAGE.

5-YR Storm Sewer Inlet Computations

Network	Inlet ID	Inlet Type		Inlet Type	Inlet Discharge (cfs)	Inlet Capacity (cfs)	By Pass Flow (cfs)	By Pass To	Allowable Ponded Width (ft)	Ponded Width (ft)	Allowable Ponded Depth (ft)	Ponded Depth (ft)
System 9A	I-09AA	Curb	In Sag	MISC. CONC DETAIL	0.67	6.26	0.00	DITCH	6	5.64	0.50	0.11
SYSTEM 8	I-08-01	Grate	In Sag	PSL FG 4x4	15.59	9.1	0.00	N/A	N/A	N/A	N/A	0.72
SYSTEM 9	I-09-01	Curb	On Grade	PCU 10R - 3X5	1.78	1.53	0.25	DITCH	12	6.60	0.50	0.13
	I-09-02	Curb	On Grade	PCU 10R - 3X5	1.68	1.46	0.22	I-09-01	12	6.47	0.50	0.13
	I-09-03	Curb	On Grade	PCU 10R - 3X5	1.60	1.40	0.20	I-09-02	12	6.34	0.50	0.13
	I-09-04	Curb	On Grade	PCU 10R - 3X5	1.50	1.33	0.17	I-09-03	12	6.20	0.50	0.12
	I-09-05	Curb	On Grade	PCU 10R - 3X5	0.93	0.89	0.04	I-09-04	12	5.20	0.50	0.10
	I-09-06	Curb	On Grade	PCU 10R - 3X5	1.29	1.18	0.11	I-09-05	12	5.97	0.50	0.12
	I-09-07	Curb	On Grade	PCU 10R - 3X5	1.66	1.46	0.20	I-09-06	12	6.68	0.50	0.13
	I-09-08	Curb	On Grade	PCU 10R - 3X5	1.86	1.62	0.24	I-09-07	12	7.18	0.50	0.14
	I-09-09	Curb	On Grade	PCU 10R - 3X5	2.15	1.84	0.31	I-09-08	12	7.88	0.50	0.16

100-YR Storm Sewer Inlet Computations

Network	Inlet ID	Inlet Type		Inlet Type	Inlet Discharge (cfs)	Inlet Capacity (cfs)	By Pass Flow (cfs)	By Pass To	Allowable Ponded Width (ft)	Ponded Width (ft)	Allowable Ponded Depth (ft)	Ponded Depth (ft)
System 9A	I-09AA	Curb	In Sag	MISC. CONC DETAIL	1.24	6.26	0.00	DITCH	6	8.48	0.5	0.17
SYSTEM 8	I-08-01	Grate	In Sag	PSL FG 4x4	28.72	9.10	0.00	N/A	N/A	N/A	N/A	1.70
SYSTEM 9	I-09-01	Curb	On Grade	PCU 10R - 3X5	3.87	2.75	1.12	DITCH	12	8.83	0.50	0.18
	I-09-02	Curb	On Grade	PCU 10R - 3X5	3.62	2.63	1.00	I-09-01	12	8.62	0.50	0.17
	I-09-03	Curb	On Grade	PCU 10R - 3X5	3.38	2.49	0.89	I-09-02	12	8.40	0.50	0.17
	I-09-04	Curb	On Grade	PCU 10R - 3X5	3.09	2.33	0.75	I-09-03	12	8.12	0.50	0.16
	I-09-05	Curb	On Grade	PCU 10R - 3X5	2.20	1.81	0.39	I-09-04	12	7.19	0.50	0.14
	I-09-06	Curb	On Grade	PCU 10R - 3X5	2.98	2.29	0.69	I-09-05	12	8.16	0.50	0.16
	I-09-07	Curb	On Grade	PCU 10R - 3X5	3.65	2.68	0.97	I-09-06	12	8.97	0.50	0.18
	I-09-08	Curb	On Grade	PCU 10R - 3X5	3.87	2.84	1.03	I-09-07	12	9.45	0.50	0.19
	I-09-09	Curb	On Grade	PCU 10R - 3X5	3.97	2.95	1.02	I-09-08	12	9.90	0.50	0.20

STATE OF TEXAS
VANESSA MOLINA
141173
LICENSED PROFESSIONAL ENGINEER

WILCO TEXAS

BGE, Inc.
101 W Louis Henna Blvd, Suite 400, Austin, TX 78728
Tel: 512-879-0400 ● www.bgeinc.com
TBPE Registration No. F-1046

RM 2243

HYDRAULIC DATA STORM SEWER

SHEET 1 OF 2

FED.RD. DIV.NO.	PROJECT NO.		SHEET NO.
6			269
STATE	DIST.	COUNTY	
TEXAS	AUS	WILLIAMSON	
CONT.	SECT.	JOB	HIGHWAY NO.
0914	05	222	RM 2243

4/10/2025 1:05:09 PM pdf.pltcfg
G:\TXC\Projects\County\Williamson\7473-02 RM 2243 Phase 1A\03*CADD\01*Shts\06-DRNG\RM2243*P1A*SS*HYDRA*DATA*01.dgn

5-YR Storm Sewer Link Computations

Network	Link ID	Node ID US	Node ID DS	FL EL US (ft)	FL EL DS (ft)	Size	Actual Length (ft)	Slope (%)	Link Velocity (fps)	Link Discharge (cfs)	Link Capacity (cfs)	US HGL (ft)	DS HGL (ft)
SYSTEM 8	M-08-01	I-08-01	O-08-OUT	975.82	975.12	24" RCP	67.75	1.00	8.26	15.59	24.51	978.15	976.30
SYSTEM 9	LAT-I-09-01	I-09-01	W-09-01	952.41	952.13	24" RCP	24.94	1.00	7.76	11.92	24.51	954.16	954.12
	MAIN-M-09-01	M-09-01	O-09-OUT	952.07	952	24" RCP	13.00	0.50	5.96	11.92	17.33	954.00	953.22
	MAIN-M-09-02	I-09-02	I-09-01	958.94	952.38	24" RCP	202.18	3.17	11.46	10.60	43.62	960.17	953.05
	MAIN-M-09-03	I-09-03	I-09-02	965	958.94	24" RCP	196.93	3.00	10.83	9.31	42.45	966.15	959.58
	MAIN-M-09-04	I-09-04	I-09-03	974.25	968.55	24" RCP	185.00	3.00	10.39	8.05	42.45	975.32	969.14
	MAIN-M-09-05	I-09-05	I-09-04	986.92	979	24" RCP	192.97	4.00	10.94	6.74	49.02	987.88	979.50
	MAIN-M-09-06	I-09-06	I-09-05	991.04	986.82	24" RCP	100.45	4.00	10.57	5.99	49.02	991.95	987.30
	MAIN-M-09-07	I-09-07	I-09-06	996.83	990.94	24" RCP	142.24	4.00	10.02	4.98	49.02	997.67	991.37
	MAIN-M-09-08	I-09-08	I-09-07	1004.45	996.73	24" RCP	187.99	4.00	9.14	3.64	49.02	1005.18	997.10
	MAIN-W-09-01	W-09-01	M-09-01	952.13	952.07	24" RCP	13.48	0.50	5.96	11.92	17.33	954.12	954.00
	MAIN-W-09-09	I-09-09	I-09-08	1010.59	1004.35	24" RCP	202.89	3.00	7.07	2.15	42.45	1011.28	1004.66

NOTES:

1.) THE DESIGN YEAR FOR STORM SEWER IS THE 5-YR STORM.

2.) THE DESIGN STORM FOR THE CULVERT 6 SYSTEM IS THE 25-YR STORM.

3.) ANALYSIS DONE USING GEOPAK DRAINAGE.

25-YR Storm Sewer Link Computations

Network	Link ID	Node ID US	Node ID DS	FL EL US (ft)	FL EL DS (ft)	Size	Actual Length (ft)	Slope (%)	Link Velocity (fps)	Link Discharge (cfs)	Link Capacity (cfs)	US HGL (ft)	DS HGL (ft)
CULVERT 6B	C-06B	C-06-B	B-06-B1	934.35	934.24	5ft x 2ft Box	5.94	1.90	12.86	56.7	136.46	937.2	935.56
	B-06-B1	B-06-B1	B-06-B2	934.24	932.43	5ft x 2ft Box	97.33	1.86	12.75	56.7	134.9	935.89	933.39
	B-06-B2	B-06-B2	B-06-B2.5	932.43	932.31	5ft x 2ft Box	7.8	1.50	11.87	56.7	121.19	934.08	933.64
	B-06-B2.5	B-06-B2.5	B-06-B3	932.31	930.21	5ft x 2ft Box	284.94	0.74	9.28	56.7	85.07	933.9	931.43
	B-06-B3	B-06-B3	B-06-B3.5	930.21	929.98	5ft x 2ft Box	30.74	0.74	9.34	56.7	85.21	932.63	932.48
	B-06-B3.5	B-06-B3.5	B-06-B4	929.98	929.9	5ft x 2ft Box	10.2	0.75	9.34	56.7	85.41	932.48	932.41
	B-06-B4	B-06-B4	JB-C-06	929.9	929.68	5ft x 2ft Box	71.05	0.29	6.66	56.7	53.08	932.41	932.13
	JB-C-06	JB-C-06	C-06-OUT	929.5	929.04	5ft x 2ft Box	71.99	0.61	8.73	56.7	76.98	932.13	930.38

100-YR Storm Sewer Link Computations

Network	Link ID	Node ID US	Node ID DS	FL EL US (ft)	FL EL DS (ft)	Size	Actual Length (ft)	Slope (%)	Link Velocity (fps)	Link Discharge (cfs)	Link Capacity (cfs)	US HGL (ft)	DS HGL (ft)
CULVERT 6B	C-06B	C-06-B	B-06-B1	934.35	934.24	24" RCP	5.94	1.90	13.99	73.56	136.46	938.08	935.84
	B-06-B1	B-06-B1	B-06-B2	934.24	932.43	24" RCP	97.33	1.86	13.88	73.56	134.90	936.21	933.6
	B-06-B2	B-06-B2	B-06-B2.5	932.43	932.31	24" RCP	7.80	1.50	12.90	73.56	121.19	935.16	935.04
	B-06-B2.5	B-06-B2.5	B-06-B3	932.31	930.21	24" RCP	284.94	0.74	10.12	73.56	85.07	935.04	933.46
	B-06-B3	B-06-B3	B-06-B3.5	930.21	929.98	24" RCP	30.74	0.74	10.12	73.56	85.21	933.46	933.22
	B-06-B3.5	B-06-B3.5	B-06-B4	929.98	929.90	24" RCP	10.20	0.75	10.12	73.56	85.41	933.22	933.09
	B-06-B4	B-06-B4	JB-C-06	929.90	929.68	24" RCP	71.05	0.29	7.43	73.56	53.08	933.09	932.63
	JB-C-06	JB-C-06	C-06-OUT	929.50	929.04	24" RCP	71.99	0.61	9.42	73.56	76.98	932.63	930.65
SYSTEM 8	M-08-01	I-08-01	O-08-OUT	975.82	975.12	24" RCP	67.75	1.00	9.38	28.72	24.51	980.46	976.96
SYSTEM 9	LAT-I-09-01	I-09-01	W-09-01	952.41	952.13	18" RCP	24.94	1.00	8.81	22.43	24.51	955.74	955.46
	MAIN-M-09-01	M-09-01	O-09-OUT	952.07	952.00	30" RCP	13.00	0.50	7.32	22.43	17.33	955.03	953.69
	MAIN-M-09-02	I-09-02	I-09-01	958.94	952.38	24" RCP	202.18	3.17	13.56	19.89	43.62	960.65	953.33
	MAIN-M-09-03	I-09-03	I-09-02	965.00	958.94	24" RCP	196.93	3.00	12.85	17.43	42.45	966.6	959.84
	MAIN-M-09-04	I-09-04	I-09-03	974.25	968.55	24" RCP	185.00	3.00	12.36	15.04	42.45	975.74	969.38
	MAIN-M-09-05	I-09-05	I-09-04	986.92	979.00	18" RCP	192.97	4.00	13.06	12.55	49.02	988.26	979.69
	MAIN-M-09-06	I-09-06	I-09-05	991.04	986.82	18" RCP	100.45	4.00	12.63	11.14	49.02	992.31	987.48
	MAIN-M-09-07	I-09-07	I-09-06	996.83	990.94	18" RCP	142.24	4.00	11.97	9.24	49.02	998	991.53
	MAIN-M-09-08	I-09-08	I-09-07	1004.45	996.73	36" RCP	187.99	4.00	10.94	6.74	49.02	1005.46	997.23
	MAIN-W-09-01	W-09-01	M-09-01	952.13	952.07	30" RCP	13.48	0.50	7.32	22.43	17.33	955.46	955.03
	MAIN-W-09-09	I-09-09	I-09-08	1010.59	1004.35	18" RCP	202.89	3.00	8.47	3.97	42.45	1011.55	1004.76

STATE OF TEXAS
VANESSA MOLINA
141173
PROFESSIONAL ENGINEER
LICENSED

WILCO TEXAS

BGE, Inc.
101 W Louis Henna Blvd, Suite 400, Austin, TX 78728
Tel: 512-879-0400 • www.bgeinc.com
TBPE Registration No. F-1046

RM 2243

HYDRAULIC DATA STORM SEWER

SHEET 2 OF 2

FED.RD. DIV.NO.	PROJECT NO.		SHEET NO.
6			270
STATE	DIST.	COUNTY	
TEXAS	AUS	WILLIAMSON	
CONT.	SECT.	JOB	HIGHWAY NO.
0914	05	222	RM 2243

4/10/2025 1:05:10 PM pdf.pltcfg
G:\TXC\Projects\County\Williamson\7473-02 RM 2243 Phase 1A\03\CADD\01\Shts\06-DRNG\RM2243_P1A_SS_HYDRA_DATA_02.dgn

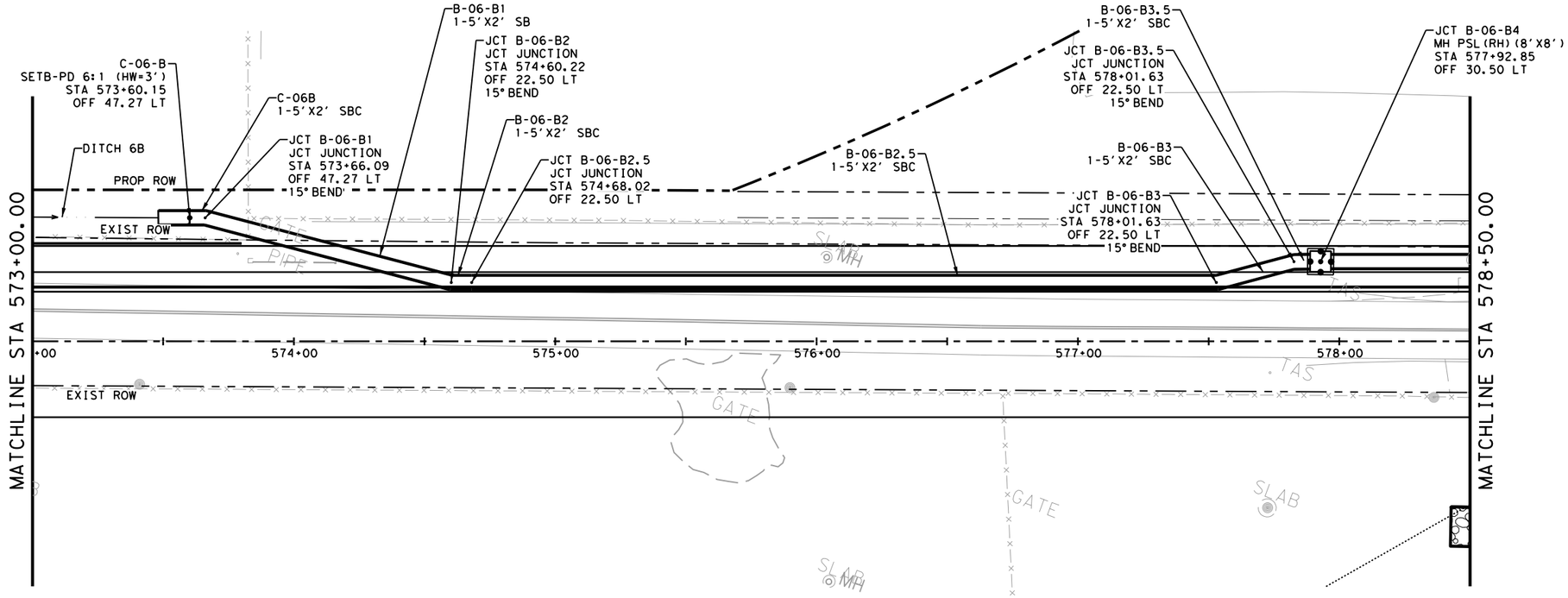

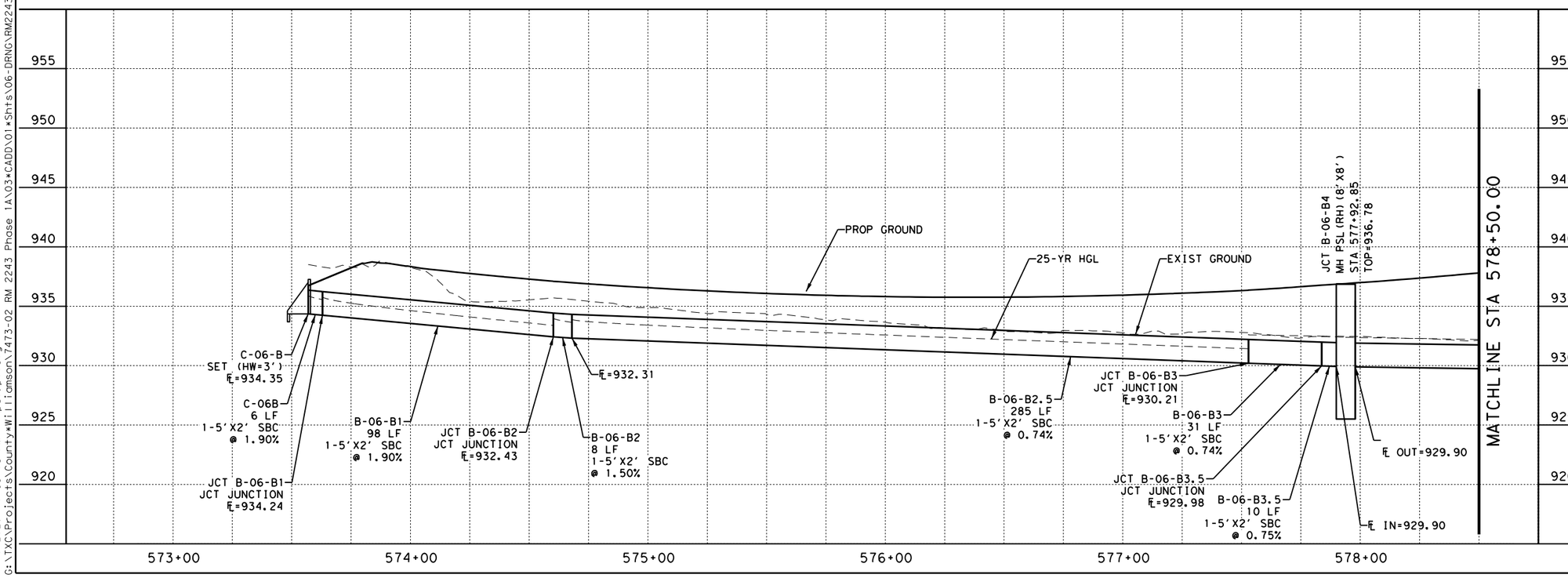

VANESSA MOLINA
141173
LICENSED ENGINEER
STATE OF TEXAS

WILCO TEXAS

BGE, Inc.
101 W Louis Henna Blvd, Suite 400, Austin, TX 78728
Tel: 512-879-0400 • www.bgeinc.com
TBPE Registration No. F-1046

RM 2243

STORM SEWER PLAN & PROFILE

SHEET 1 OF 6

FED.RD. DIV.NO.	PROJECT NO.	SHEET NO.
6		271

STATE	DIST.	COUNTY	
TEXAS	AUS	WILLIAMSON	
CONT.	SECT.	JOB	HIGHWAY NO.
0914	05	222	RM 2243

4/10/2025 1:05:13 PM pdf.pltcfg
C:\TXC\Projects\County*Williamson\7473-02 RM 2243 Phase 1A\03*CADD\01*Shts\06-DRNG\RM2243*P1A*SSPP*03.dgn

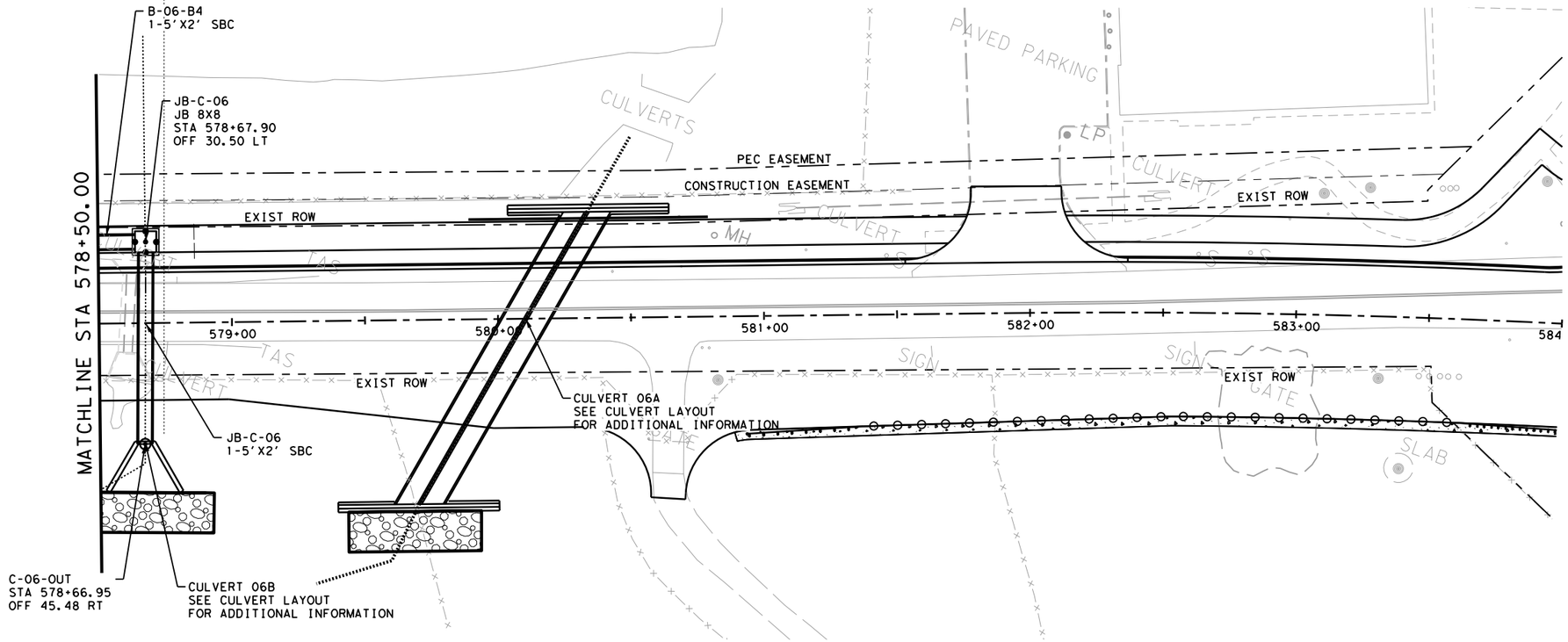

NODE TYPE LEGEND:

CGI = CURB AND GRATE
JB = JUNCTION BOX
JCT = MISC JUNCTION
MH = MANHOLE
RWI = RETAINING WALL INLET
SET = SAFETY END TREATMENT

0 25 50
SCALE: 1"=50' H
1"=10' V

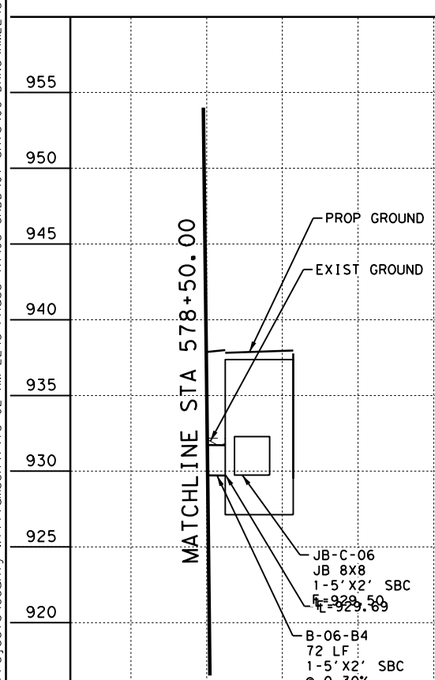

STATE OF TEXAS
VANESSA MOLINA
141173
PROFESSIONAL LICENSED ENGINEER

WILCO TEXAS

BGE, Inc.
101 W Louis Henna Blvd, Suite 400, Austin, TX 78728
Tel: 512-879-0400 • www.bgeinc.com
TBPE Registration No. F-1046

RM 2243

STORM SEWER PLAN & PROFILE

FED.RD. DIV.NO.	PROJECT NO.		SHEET NO.
6			272
STATE	DIST.	COUNTY	
TEXAS	AUS	WILLIAMSON	
CONT.	SECT.	JOB	HIGHWAY NO.
0914	05	222	RM 2243

4/10/2025 1:05:15 PM pdf.pltcfg
C:\TXC\Projects\County*Williamson\7473-02 RM 2243 Phase 1A\03*CADD\01*Shts\06-DRNG\RM2243*P1A*SSPP*04.dgn

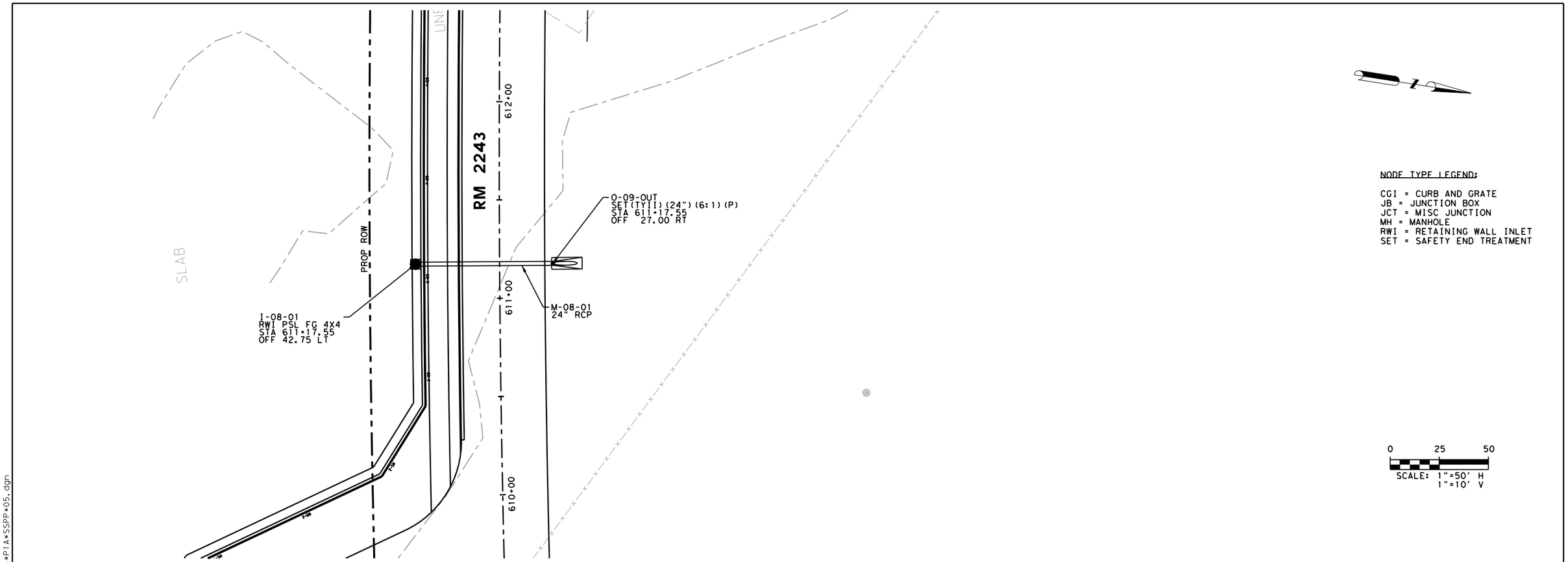

NODE TYPE LEGEND:

CGI = CURB AND GRATE
JB = JUNCTION BOX
JCT = MISC JUNCTION
MH = MANHOLE
RWI = RETAINING WALL INLET
SET = SAFETY END TREATMENT

0 25 50
SCALE: 1"=50' H
1"=10' V

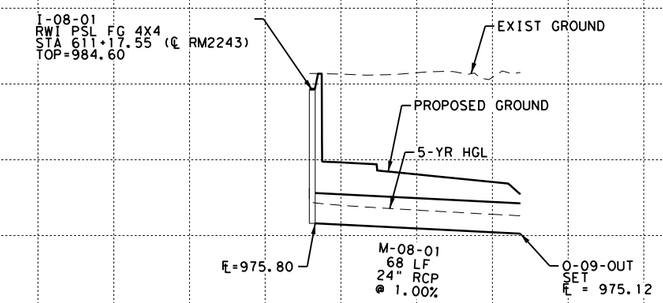

STATE OF TEXAS
VANESSA MOLINA
141173
PROFESSIONAL ENGINEER
LICENSED

WILCO TEXAS

BGE, Inc.
101 W Louis Henna Blvd, Suite 400, Austin, TX 78728
Tel: 512-879-0400 • www.bgeinc.com
TBPE Registration No. F-1046

RM 2243

STORM SEWER PLAN & PROFILE

SHEET 3 OF 6

FED.RD. DIV.NO.	PROJECT NO.	SHEET NO.
6		273

STATE	DIST.	COUNTY	
TEXAS	AUS	WILLIAMSON	
CONT.	SECT.	JOB	HIGHWAY NO.
0914	05	222	RM 2243

4/10/2025 1:05:17 PM pdf.pltcfg
C:\TXC\Projects\County\Williamson\7473-02 RM 2243 Phase 1A\03*CADD\01*Shts\06-DRNG\RM2243*P1A*SSPP*05.dgn

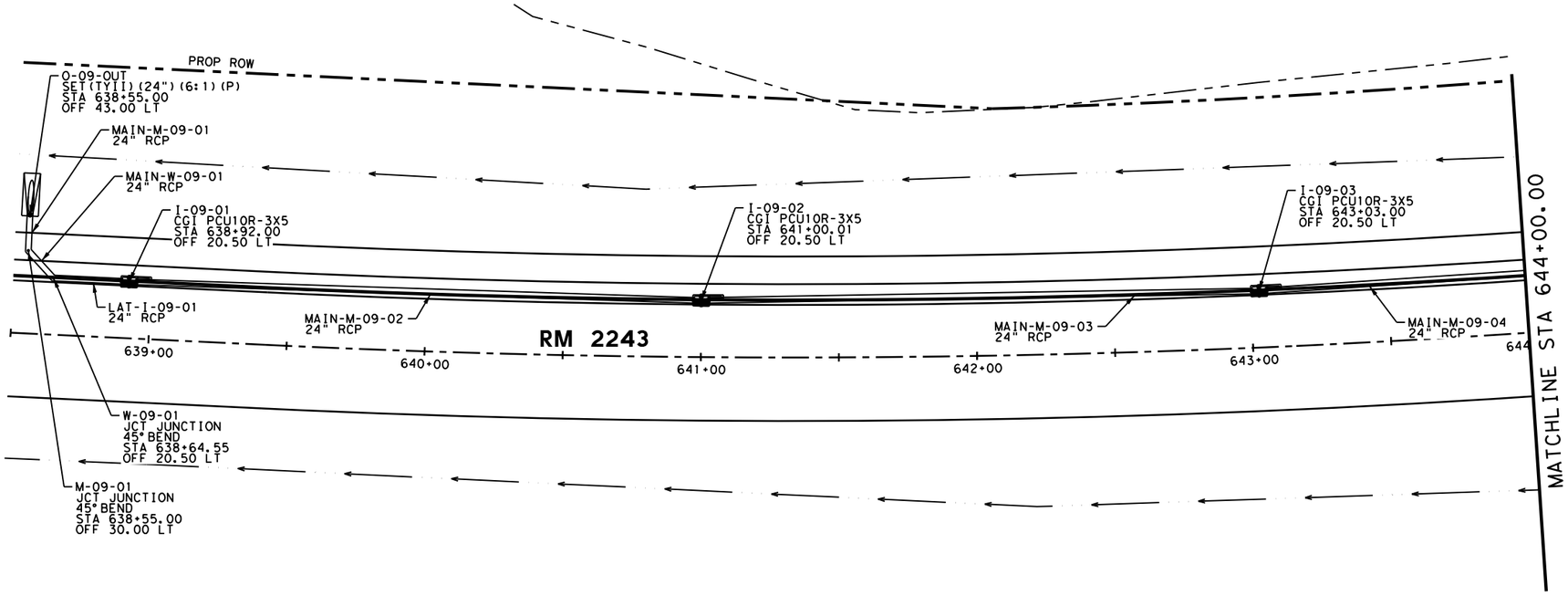

NODE TYPE LEGEND:

CGI = CURB AND GRATE
JB = JUNCTION BOX
JCT = MISC JUNCTION
MH = MANHOLE
RWI = RETAINING WALL INLET
SET = SAFETY END TREATMENT

0 25 50
SCALE: 1"=50' H
1"=10' V

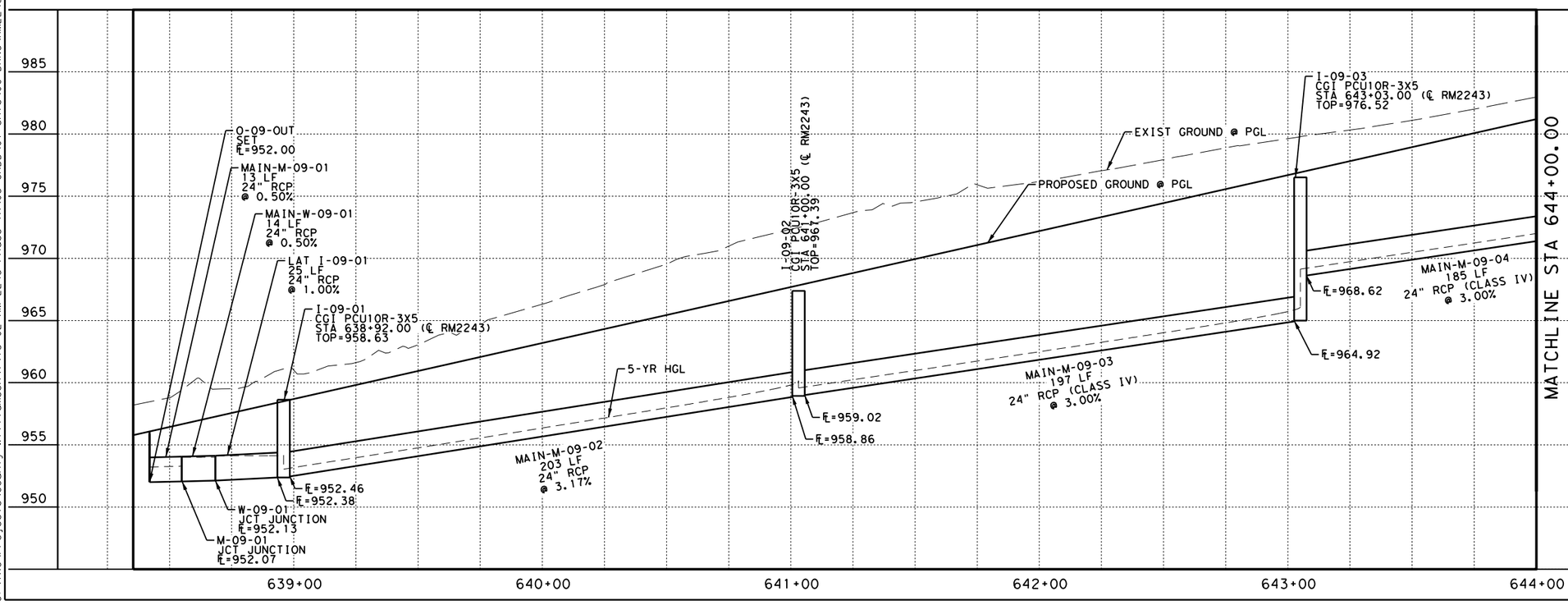

STATE OF TEXAS
VANESSA MOLINA
141173
LICENSED
PROFESSIONAL ENGINEER

WILCO
TEXAS

BGE, Inc.
101 W Louis Henna Blvd, Suite 400, Austin, TX 78728
Tel: 512-879-0400 • www.bgeinc.com
TBPE Registration No. F-1046

RM 2243

STORM SEWER PLAN & PROFILE

SHEET 4 OF 6

FED.RD. DIV.NO.	PROJECT NO.		SHEET NO.
6			274
STATE	DIST.	COUNTY	
TEXAS	AUS	WILLIAMSON	
CONT.	SECT.	JOB	HIGHWAY NO.
0914	05	222	RM 2243

4/10/2025 1:05:18 PM pdf.pltcfg
C:\TXC\Projects\County*Williamson\7473-02 RM 2243 Phase 1A\03*CADD\01*Shts\06-DRNG\RM2243*P1A*SSPP*06.dgn

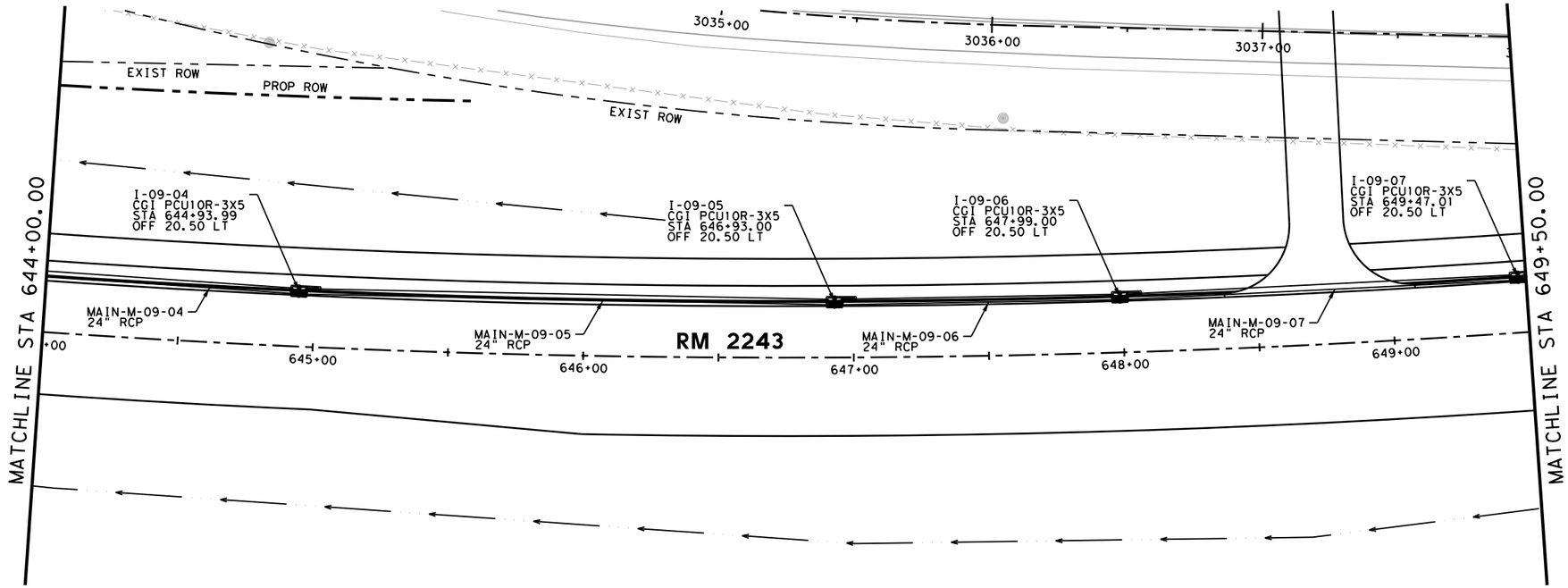

NODE TYPE LEGEND:

CGI = CURB AND GRATE
JB = JUNCTION BOX
JCT = MISC JUNCTION
MH = MANHOLE
RWI = RETAINING WALL INLET
SET = SAFETY END TREATMENT

0 25 50
SCALE: 1"=50' H
1"=10' V

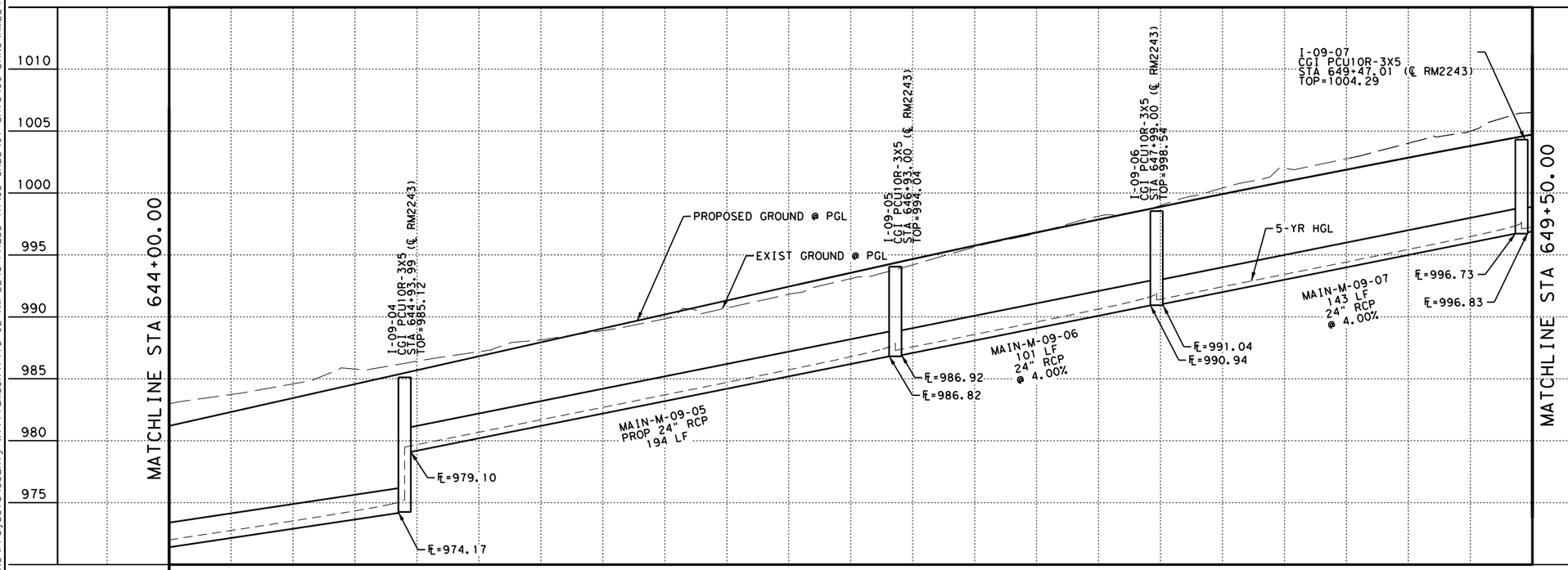

STATE OF TEXAS
VANESSA MOLINA
141173
PROFESSIONAL ENGINEER
LICENSED

WILCO TEXAS

BGE, Inc.
101 W Louis Henna Blvd, Suite 400, Austin, TX 78728
Tel: 512-879-0400 • www.bgeinc.com
TBPE Registration No. F-1046

RM 2243

STORM SEWER PLAN & PROFILE

SHEET 5 OF 6

FED.RD. DIV.NO.	PROJECT NO.		SHEET NO.
6			275
STATE	DIST.	COUNTY	
TEXAS	AUS	WILLIAMSON	
CONT.	SECT.	JOB	HIGHWAY NO.
0914	05	222	RM 2243

4/10/2025 1:05:19 PM pdf.pltcfg
G:\TXC\Projects\County\Williamson\7473-02 RM 2243 Phase 1A\03*CADD\01*Shts\06-DRNG\RM2243*P1A*SSPP*07.dgn

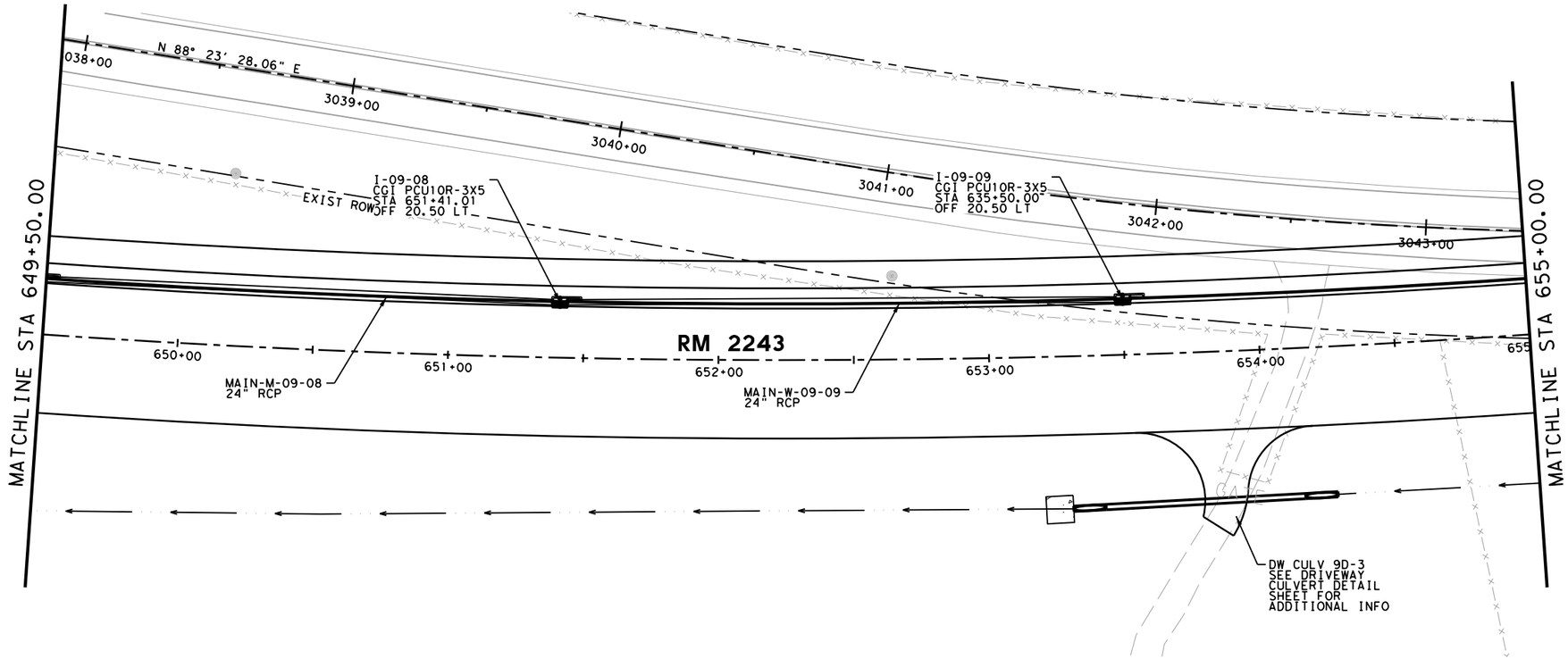

NODE TYPE LEGEND:

CGI = CURB AND GRATE
JB = JUNCTION BOX
JCT = MISC JUNCTION
MH = MANHOLE
RWI = RETAINING WALL INLET
SET = SAFETY END TREATMENT

0 25 50
SCALE: 1"=50' H
1"=10' V

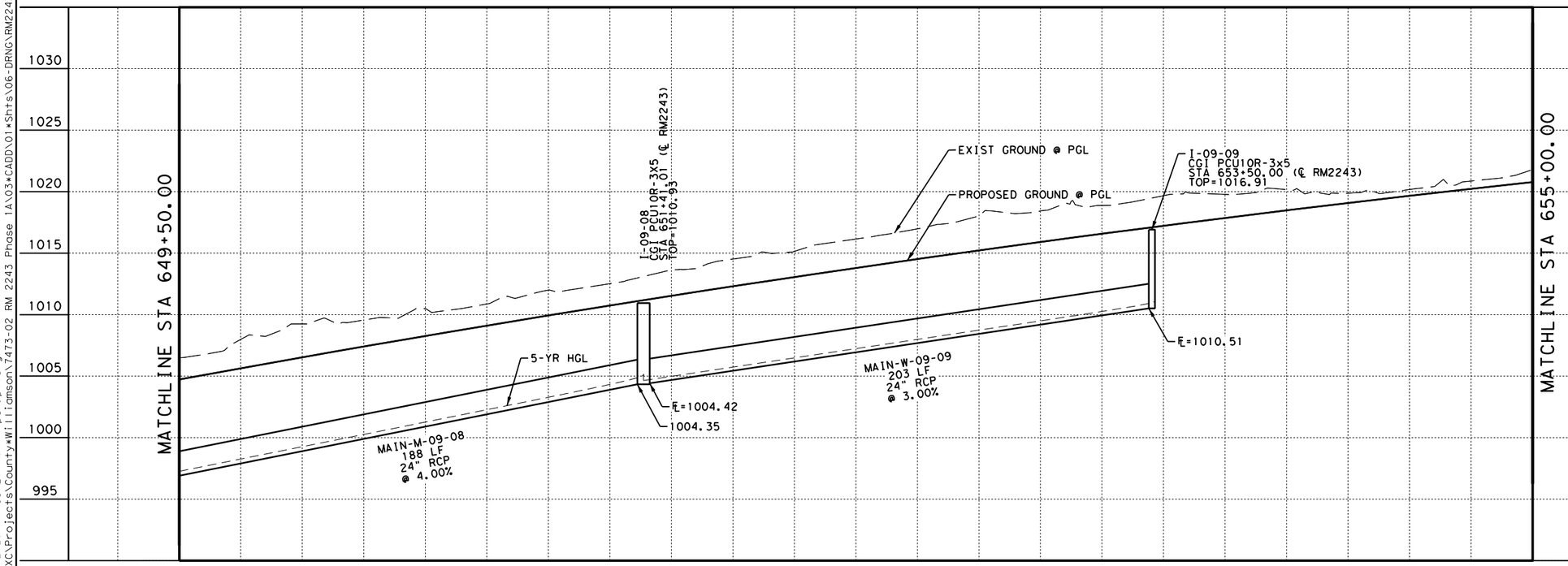

STATE OF TEXAS
VANESSA MOLINA
141173
PROFESSIONAL ENGINEER
LICENSED

WILCO TEXAS

BGE, Inc.
101 W Louis Henna Blvd, Suite 400, Austin, TX 78728
Tel: 512-879-0400 • www.bgeinc.com
TBPE Registration No. F-1046

RM 2243

STORM SEWER PLAN & PROFILE

SHEET 6 OF 6

FED.RD. DIV.NO.	PROJECT NO.	SHEET NO.
6		276

STATE	DIST.	COUNTY	
TEXAS	AUS	WILLIAMSON	
CONT.	SECT.	JOB	HIGHWAY NO.
0914	05	222	RM 2243

4/10/2025 1:05:21 PM pdf.pltcfg
G:\TXC\Projects\County*Williamson\7473-02 RM 2243 Phase 1A\03*CADD\01*Shts\06-DRNG\RM2243*P1A*SSPP*08.dgn

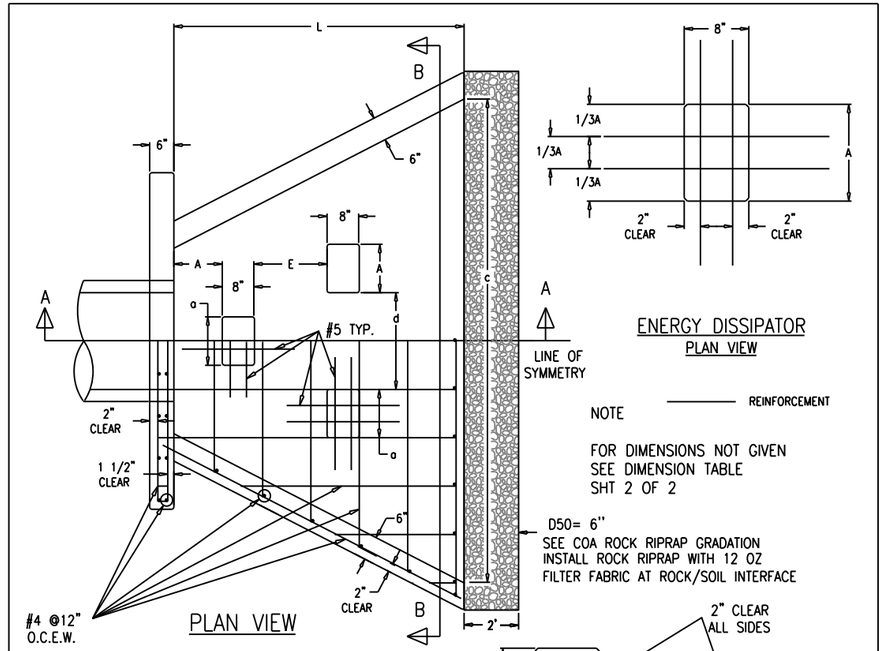

ENERGY DISSIPATOR
PLAN VIEW

LINE OF SYMMETRY

REINFORCEMENT

NOTE

FOR DIMENSIONS NOT GIVEN
SEE DIMENSION TABLE
SHT 2 OF 2

D50= 6"
SEE COA ROCK RIPRAP GRADATION
INSTALL ROCK RIPRAP WITH 12 OZ
FILTER FABRIC AT ROCK/SOIL INTERFACE

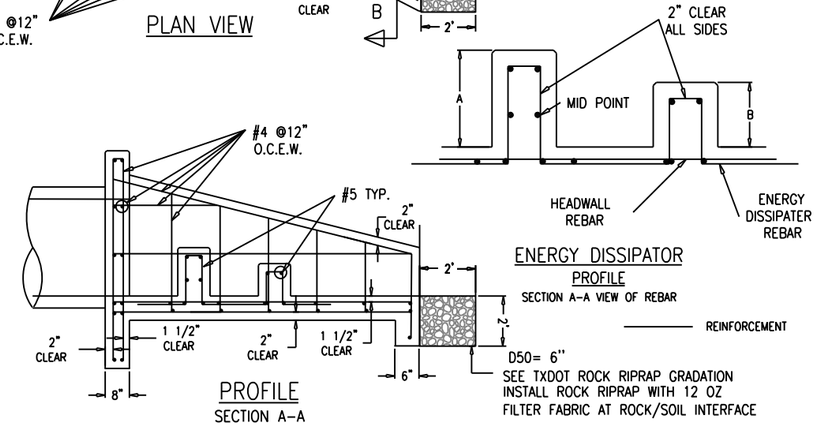

ENERGY DISSIPATOR
PROFILE
SECTION A-A VIEW OF REBAR

REINFORCEMENT

D50= 6"
SEE TXDOT ROCK RIPRAP GRADATION
INSTALL ROCK RIPRAP WITH 12 OZ
FILTER FABRIC AT ROCK/SOIL INTERFACE

PROFILE
SECTION A-A

SHT 1 OF 2

		(MODIFIED) TYPICAL HEADWALL AND ENERGY DISSIPATOR	
		THE ARCHITECT/ENGINEER ASSUMES RESPONSIBILITY FOR APPROPRIATE USE OF THIS STANDARD	N.T.S. STANDARD DETAIL

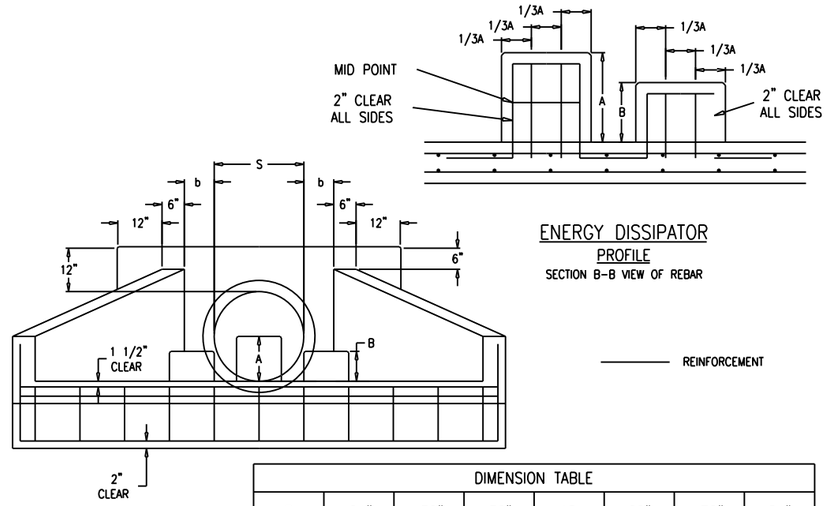

ENERGY DISSIPATOR
PROFILE
SECTION B-B VIEW OF REBAR

REINFORCEMENT

PROFILE
SECTION B-B

DIMENSION TABLE							
S	24"	30"	36"	48	60"	72"	84"
a	12"	15"	18"	21"	24"	27"	30"
b	8"	10"	12"	14"	16"	18"	20"
c	120"	150"	180"	210"	240"	270"	300"

DIMENSION TABLE							
H	24"	30"	36"	48	60"	72"	84"
A	12"	15"	18"	21"	24"	27"	30"
B	8"	10"	12"	14"	16"	18"	20"
L	72"	90"	108"	126"	144"	162"	180"
E	16"	20"	24"	28"	32"	36"	40"

NOTE:

1. ALL CONCRETE SHALL BE TYPE "C" PER SPEC. ITEM 466
2. CHAMFER ALL EXTERNAL VISIBLE CORNERS.
3. DISSIPATOR BLOCKS REQUIRED ON DISCHARGE HEADWALLS ONLY.
4. DISCHARGE VELOCITIES GREATER THAN 6 FEET/SECOND AFTER DISSIPATOR ALSO REQUIRE ROCK OUTLET PROTECTION.
5. DETAIL IS NOT FOR PIPES WITH EXIT VELOCITIES EXCEEDING 15 FEET PER SECOND.
6. ALL SPACING FOR CAST-IN-PLACE HEADWALLS AND DISSIPATORS.
7. ANY WALL THICKER THEN 6" WILL BE DOUBLE MATTED WITH REINFORCEMENT REBAR.

SHT 2 OF 2

		(MODIFIED) TYPICAL HEADWALL AND ENERGY DISSIPATOR	
		THE ARCHITECT/ENGINEER ASSUMES RESPONSIBILITY FOR APPROPRIATE USE OF THIS STANDARD	N.T.S. STANDARD DETAIL

NOTE: ENERGY DISSIPATORS ARE NOT PAID FOR SEPARATELY BUT ARE INCIDENTAL TO THE HEADWALL AND WINGWALL ITEMS AND SHALL BE CONSTRUCTED ACCORDING TO ITEM 466.

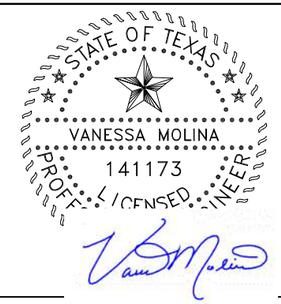

WILCO TEXAS

BGE, Inc.
101 W Louis Henna Blvd, Suite 400, Austin, TX 78728
Tel: 512-879-0400 • www.bgeinc.com
TBPE Registration No. F-1046

RM 2243
ENERGY DISSIPATION DETAIL
NON-SKEWED CULVERTS

SHEET 1 OF 2

FED.RD. DIV.NO.	PROJECT NO.		SHEET NO.
6			277
STATE	DIST.	COUNTY	
TEXAS	AUS	WILLIAMSON	
CONT.	SECT.	JOB	HIGHWAY NO.
0914	05	222	RM 2243

4/10/2025 1:05:22 PM pdf.pltcfg
G:\TXC\Projects\County*Williamson\7473-02 RM 2243 Phase 1A\03*CADD\01*Shts\06-DRNG\RM2243*P1A*ED*DTL*01.dgn

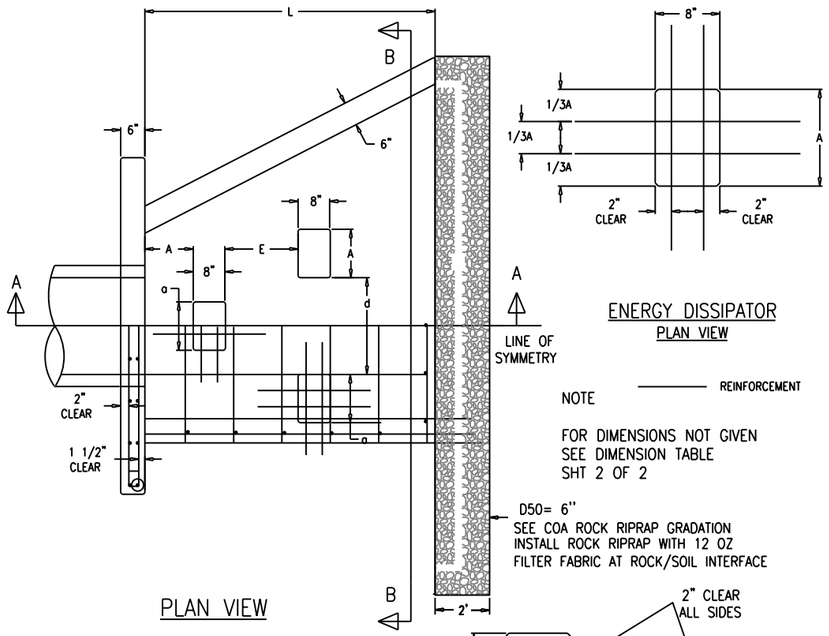

PLAN VIEW

ENERGY DISSIPATOR
PLAN VIEW

REINFORCEMENT

NOTE

FOR DIMENSIONS NOT GIVEN
SEE DIMENSION TABLE
SHT 2 OF 2

D50= 6"
SEE COA ROCK RIPRAP GRADATION
INSTALL ROCK RIPRAP WITH 12 OZ
FILTER FABRIC AT ROCK/SOIL INTERFACE

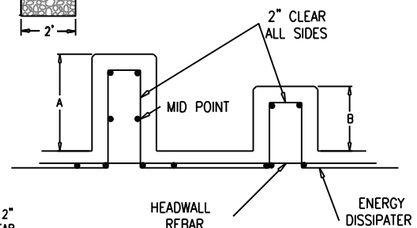

ENERGY DISSIPATOR
PROFILE
SECTION A-A VIEW OF REBAR

REINFORCEMENT

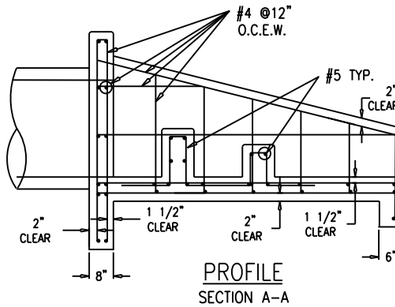

PROFILE
SECTION A-A

D50= 6"
SEE TXDOT ROCK RIPRAP GRADATION
INSTALL ROCK RIPRAP WITH 12 OZ
FILTER FABRIC AT ROCK/SOIL INTERFACE

SHT 1 OF 2

		(MODIFIED) TYPICAL HEADWALL AND ENERGY DISSIPATOR	
		THE ARCHITECT/ENGINEER ASSUMES RESPONSIBILITY FOR APPROPRIATE USE OF THIS STANDARD	N.T.S. STANDARD DETAIL

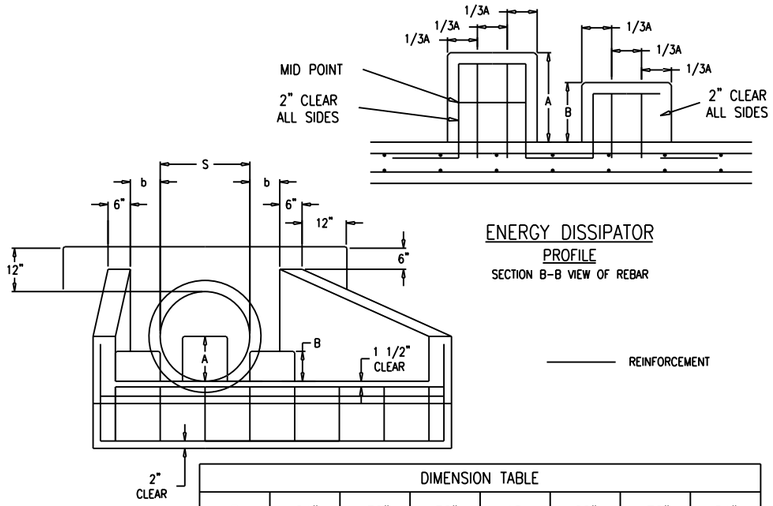

ENERGY DISSIPATOR
PROFILE
SECTION B-B VIEW OF REBAR

REINFORCEMENT

PROFILE
SECTION B-B

DIMENSION TABLE							
S	24"	30"	36"	48	60"	72"	84"
a	12"	15"	18"	21"	24"	27"	30"
b	8"	10"	12"	14"	16"	18"	20"
c	120"	150"	180"	210"	240"	270"	300"

DIMENSION TABLE							
H	24"	30"	36"	48	60"	72"	84"
A	12"	15"	18"	21"	24"	27"	30"
B	8"	10"	12"	14"	16"	18"	20"
L	72"	90"	108"	126"	144"	162"	180"
E	16"	20"	24"	28"	32"	36"	40"

NOTE:

1. ALL CONCRETE SHALL BE TYPE "C" PER SPEC. ITEM 466
2. CHAMFER ALL EXTERNAL VISIBLE CORNERS.
3. DISSIPATOR BLOCKS REQUIRED ON DISCHARGE HEADWALLS ONLY.
4. DISCHARGE VELOCITIES GREATER THAN 6 FEET/SECOND AFTER DISSIPATOR ALSO REQUIRE ROCK OUTLET PROTECTION.
5. DETAIL IS NOT FOR PIPES WITH EXIT VELOCITIES EXCEEDING 15 FEET PER SECOND.
6. ALL SPACING FOR CAST-IN-PLACE HEADWALLS AND DISSIPATORS.
7. ANY WALL THICKER THEN 6" WILL BE DOUBLE MATTED WITH REINFORCEMENT REBAR.

SHT 2 OF 2

		(MODIFIED) TYPICAL HEADWALL AND ENERGY DISSIPATOR	
		THE ARCHITECT/ENGINEER ASSUMES RESPONSIBILITY FOR APPROPRIATE USE OF THIS STANDARD	N.T.S. STANDARD DETAIL

NOTE: ENERGY DISSIPATORS ARE NOT PAID FOR SEPARATELY BUT ARE INCIDENTAL TO THE HEADWALL AND WINGWALL ITEMS AND SHALL BE CONSTRUCTED ACCORDING TO ITEM 466.

STATE OF TEXAS
VANESSA MOLINA
141173
PROFESSIONAL ENGINEER

WILCO TEXAS

BGE, Inc.
101 W Louis Henna Blvd, Suite 400, Austin, TX 78728
Tel: 512-879-0400 • www.bgeinc.com
TBPE Registration No. F-1046

RM 2243
ENERGY DISSIPATION DETAIL
SKEWED CULVERTS

SHEET 2 OF 2

FED.RD. DIV.NO.	PROJECT NO.		SHEET NO.
6			278
STATE	DIST.	COUNTY	
TEXAS	AUS	WILLIAMSON	
CONT.	SECT.	JOB	HIGHWAY NO.
0914	05	222	RM 2243

4/10/2025 1:05:23 PM pdf.pltcfg
G:\TXC\Projects\County*Williamson\7473-02 RM 2243 Phase 1A\03*CADD\01*Shts\06-DRNG\RM2243*P1A*ED*DTL*02.dgn

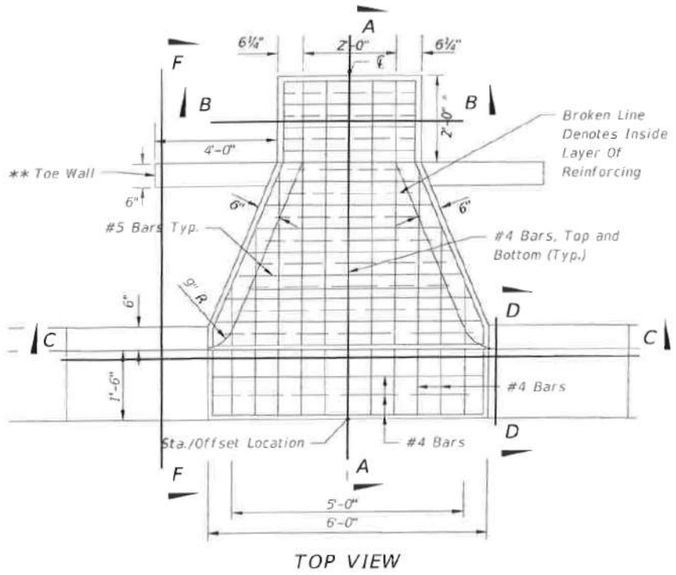

TOP VIEW

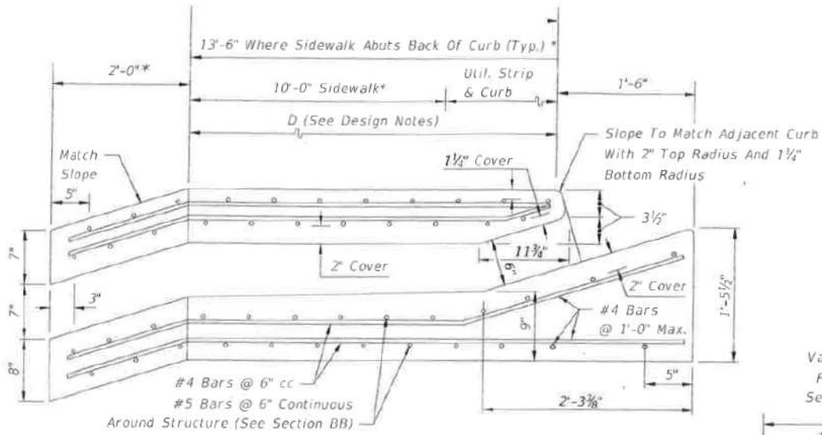

SECTION AA

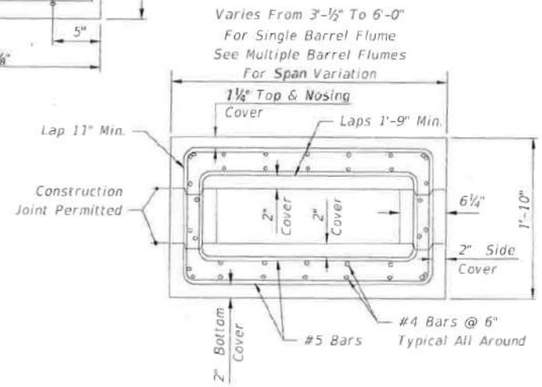

SECTION BB

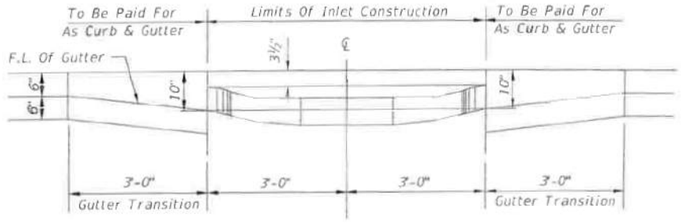

SECTION CC

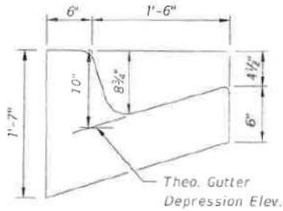

SECTION DD

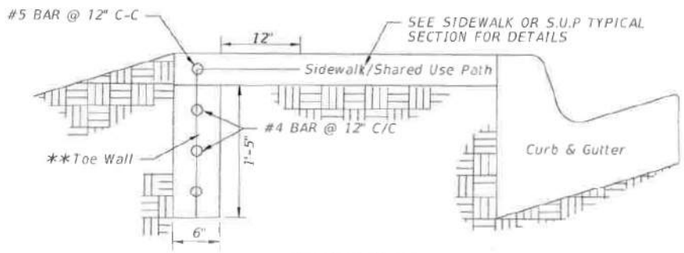

SECTION FF

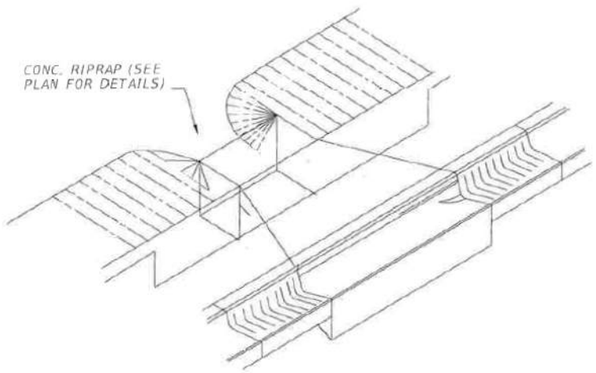

FLUME W/SIDEWALK INLET (CLOSED FLUME) TYPE I
SINGLE BARREL FLUME DEPICTED

* Sloped Section to be used w/sidewalk applications only.

** Toe Walls as depicted to be used with sidewalk application only. For endwall without sidewalk see detail on Sheet 2.

GENERAL NOTES

1. The finished grade and slope of the inlet top are to conform with the finished cross slope and grade of the proposed sidewalk and/or border.
2. When inlets are to be constructed on a curve, refer to the plans to determine the radius and, where necessary, modify the inlet details accordingly. Bend steel when necessary.
3. All steel shall have 2" minimum cover unless otherwise shown. Inlets can be either cast-in-place or precast concrete. Chamfer all exposed edges ¾".
4. All reinforcement is ASTM A615/A615M Grade 60 steel, either smooth or deformed. Equivalent area grade 40 steel or 65 ksi welded wire fabric may be substituted.

STATE OF TEXAS
VANESSA MOLINA
141173
LICENSED PROFESSIONAL ENGINEER

WILCO TEXAS

BGE, Inc.
101 W Louis Henna Blvd, Suite 400, Austin, TX 78728
Tel: 512-879-0400 • www.bgeinc.com
TBPE Registration No. F-1046

RM 2243

MISCELLANEOUS DETAIL

SHEET 1 OF 1

FED.RD. DIV.NO.	PROJECT NO.	SHEET NO.
6		279

STATE	DIST.	COUNTY	
TEXAS	AUS	WILLIAMSON	
CONT.	SECT.	JOB	HIGHWAY NO.
0914	05	222	RM 2243

4/10/2025 1:05:24 PM pdf.pltcfg
G:\TXC\Projects\County\Williamson\7473-02 RM 2243 Phase 1A\03*CADD\01*Shts\06-DRNG\RM2243*P1A*MISC*DETAIL*01.dgn

DISCLAIMER:
The use of this standard is governed by the "Texas Engineering Practice Act". No warranty of any kind is made by TxDOT for any purpose whatsoever. TxDOT assumes no responsibility for the conversion of this standard to other formats or for incorrect results or damages resulting from its use.

DATE: 4/10/2025 1:05:28 PM
FILE: G:\TxDOTProjects\County_Williamson\7473-02 RM 2243 Phase 1A\03_CADD\01_Snts\06-DRNG\Snts\CD-BCS-20.dgn

Culvert Station and/or Creek Name followed by applicable end (Lt, Rt or Both)	Description of Box Culvert No. Spans ~ Span X Height	Max Fill Height (Ft)	Applicable Box Culvert Standard (4)	Applicable Wingwall or End Treatment Standard	Skew Angle (0°,15°, 30° or 45°)	Side Slope or Channel Slope Ratio (SL:1)	T Culvert Top Slab Thickness (In)	U Culvert Wall Thickness (In)	C Estimated Curb Height (Ft)	Hw (1) Height of Wingwall (Ft)	A Curb to End of Wingwall (Ft)	B Offset of End of Wingwall (Ft)	Lw Length of Longest Wingwall (Ft)	Ltw Culvert Toewall Length (Ft)	Atw Anchor Toewall Length (Ft)	Riprap Apron (CY)	Class "C" (2) Conc (Curb) (CY)	Class "C" (3) Conc (Wingwall) (CY)	Total Wingwall Area (SF)
CULVERT 02 STA 509+37.92 (Lt)	4 ~ 6'x 2'	3.8'	MC-6-16	SETB-FW-S	15°	4:1	9"	7"	1.720'	4.229'	15.583'	8.997'	17.994'	27.866'	35.655'	0.0	1.8	9.1	N/A
CULVERT 02 STA 509+37.92 (Rt)	4 ~ 6'x 2'	1.3'	MC-6-16	SETB-FW-S	15°	4:1	9"	7"	0.250'	2.750'	9.667'	5.581'	11.162'	27.866'	32.239'	0.0	0.3	6.0	N/A
CULVERT 03 STA 521+58.54 (Lt)	2 ~ 6'x 3'	2.7'	MC-6-16	PW-1	0°	4:1	9"	7"	1.650'	5.396'	N/A	N/A	21.583'	13.750'	N/A	0.0	0.8	15.4	233
CULVERT 03 STA 521+58.54 (Rt)	2 ~ 6'x 3'	1.5'	MC-6-16	SETB-FW-0	0°	6:1	9"	7"	0.482'	3.979'	21.875'	12.630'	25.259'	13.750'	37.842'	0.0	0.2	10.4	N/A
CULVERT 04 STA 543+37.25 (Lt)	4 ~ 7'x 4'	3.8'	MC-7-10	PW-1	30°	4:1	8"	7"	0.500'	5.167'	N/A	N/A	23.864'	35.699'	N/A	0.0	0.7	18.6	247
CULVERT 04 STA 543+37.25 (Rt)	4 ~ 7'x 4'	4.2'	MC-7-10	SETB-FW-S	30°	4:1	8"	7"	0.970'	5.396'	20.250'	20.250'	28.638'	35.699'	54.602'	0.0	1.3	13.9	N/A
CULVERT 05 STA 565+22.78 (Lt)	2 ~ 7'x 3'	7.84'	MC-7-10	PW-1	30°	3:1	8"	7"	5.000'	8.667'	N/A	N/A	30.022'	18.187'	N/A	0.0	3.4	36.1	520
CULVERT 05 STA 565+22.78 (Rt)	2 ~ 7'x 3'	5.82'	MC-7-10	SETB-FW-S	30°	3:1	8"	7"	0.758'	4.167'	11.500'	11.500'	16.263'	18.187'	28.339'	0.0	0.5	7.2	N/A
CULVERT 07 STA 586+68.50 (Lt)	3 ~ 6'x 2'	2.7'	MC-6-16	SETB-FW-S	15°	3:1	9"	7"	2.940'	5.438'	15.313'	8.841'	17.681'	21.051'	28.683'	0.0	2.3	8.6	N/A
CULVERT 07 STA 586+68.50 (Rt)	3 ~ 6'x 2'	0.8'	MC-6-16	SETB-FW-S	15°	6:1	9"	7"	0.580'	3.083'	16.500'	9.526'	19.053'	21.051'	29.369'	0.0	0.5	7.7	N/A
CULVERT 08 STA 600+61.99 (Lt)	2 ~ 8'x 4'	4.1'	MC-8-13	PW-1	0°	4:1	8"	7"	1.250'	5.917'	N/A	N/A	23.667'	17.750'	N/A	0.0	0.8	18.7	280
CULVERT 08 STA 600+61.99 (Rt)	2 ~ 8'x 4'	2.9'	MC-8-13	SETB-FW-0	0°	3:1	8"	7"	0.434'	4.854'	13.563'	7.830'	15.661'	17.750'	32.244'	0.0	0.3	8.2	N/A
CULVERT 09 STA 631+00 (Lt)	4 ~ 9'x 4'	5'	MC-9-10	SETB-FW-S	30°	3:1	9"	7"	4.800'	9.292'	26.875'	26.875'	38.007'	44.937'	70.465'	0.0	8.0	25.5	N/A
CULVERT 09 STA 631+00 (Rt)	4 ~ 9'x 4'	2.5'	MC-9-10	SETB-FW-S	30°	3:1	9"	7"	0.913'	5.417'	15.250'	15.250'	21.567'	44.937'	58.840'	0.0	1.5	12.4	N/A
CULVERT 09A STA 2001+14.89 (Lt)	2 ~ 8'x 3'	0.25'	MC-8-13	SETB-FW-0	0°	3:1	8"	7"	0.400'	3.813'	10.438'	6.026'	12.052'	17.750'	28.636'	0.0	0.3	6.1	N/A
CULVERT 09A STA 2001+14.89 (Rt)	2 ~ 8'x 3'	0.25'	MC-8-13	SETB-FW-0	0°	3:1	8"	7"	0.625'	4.042'	11.125'	6.423'	12.846'	17.750'	29.429'	0.0	0.4	6.9	N/A
CULVERT 10 STA 669+25.38 (Lt)	1 ~ 6'x 3'	2.5'	SCC-5&6	SETB-FW-0	0°	4:1	8"	7"	1.225'	4.646'	17.250'	9.959'	19.919'	7.167'	25.919'	0.0	0.3	8.8	N/A
CULVERT 10 STA 669+25.38 (Rt)	1 ~ 6'x 3'	1.5'	SCC-5&6	SETB-FW-0	0°	4:1	8"	7"	0.250'	3.667'	13.333'	7.698'	15.396'	7.167'	21.396'	0.0	0.1	6.1	N/A
CULVERT 06B STA 578+67.50 (Rt)	1 ~ 5'x 2'	4.8'	SCC-5&6	SETB-FW-0	0°	4:1	8"	7"	2.500'	4.917'	18.333'	10.585'	21.170'	6.167'	26.170'	0.0	0.6	9.3	N/A
CULVERT 06A STA 580+10.45 (Lt)	2 ~ 7'x 4'	2.1'	MC-7-10	PW-1	30°	4:1	8"	7"	1.835'	6.500'	N/A	N/A	30.022'	18.187'	N/A	0.0	1.2	24.5	390
CULVERT 06A STA 580+10.45 (Rt)	2 ~ 7'x 4'	2.7'	MC-7-10	PW-1	30°	4:1	8"	7"	0.500'	5.167'	N/A	N/A	23.864'	18.187'	N/A	0.0	0.3	17.3	247

NOTES:
Skew = 0° on SW-0, FW-0, SETB-CD, SETB-SW-0, and SETB-FW-0 standard sheets;
30° maximum for safety end treatment

SL:1 = Horizontal : 1 Vertical
- Side slope at culvert for flared or straight wingwalls.
- Channel slope for parallel wingwalls.
- Slope must be 3:1 or flatter for safety end treatments.

T = Box culvert top slab thickness. Dimension can be found on the applicable box culvert standard sheet.

U = Box culvert wall thickness. Dimension can be found on the applicable box culvert standard sheet.

C = Curb height

See applicable wing or end treatment standard sheets for calculations of Hw, A, B, Lw, Ltw, Atw, and Total Wingwall Area.

Hw = Height of wingwall

A = Distance from face of curb to end of wingwall (not applicable to parallel or straight wingwalls)

B = Offset of end of wingwall (not applicable to parallel or straight wingwalls)

Lw = Length of longest wingwall.

Ltw = Length of culvert toewall (not applicable when using riprap apron)

Atw = Length of anchor toewall (applicable to safety end treatment only)
Total Wingwall Area = Wingwall area in sq. ft. for two wingwalls (one structure end) if Lt or Rt.
Area for four wingwalls (two structure ends) if Both.

(1) Round the wall heights shown to the nearest foot for bidding purposes.

(2) Concrete volume shown is for box culvert curb only. For curbs using the Box Culvert Rail Mounting Details (RAC) standard sheet quantities shown must be increased by a factor of 2.25. If Class S concrete is required for the top slab of the culvert, also provide Class S concrete for the curb. Curb concrete is considered part of the Box Culvert for payment.

(3) Concrete volume shown is total of wings, footings, culvert toewall (if any), anchor toewalls (if any) and wingwall toewalls. Riprap aprons, culverts, and curb quantities are not included.

(4) Regardless of the type of culvert shown on this sheet, the Contractor has the option of furnishing cast-in-place or precast culverts unless otherwise shown elsewhere on the plans. If the Contractor elects to provide culverts of a different type than those shown on this sheet, it is the Contractor's responsibility to make the necessary adjustments to the dimensions and quantities shown.

STATE OF TEXAS
VANESSA MOLINA
141173
PROFESSIONAL LICENSED ENGINEER

Texas Department of Transportation

Bridge Division Standard

BOX CULVERT SUPPLEMENT
WINGS AND END TREATMENTS

BCS

FILE:	DN: TxDOT	CK: TxDOT	DW: TxDOT	CK: TxDOT
©TxDOT February 2020	CONT	SECT	JOB	HIGHWAY
REVISIONS	0914	05	222	RM 2243
	DIST	COUNTY		SHEET NO.
	AUS	WILLIAMSON		280

DISCLAIMER:
The use of this standard is governed by the "Texas Engineering Practice Act". No warranty of any kind is made by TxDOT for any purpose whatsoever. TxDOT assumes no responsibility for the conversion of this standard to other formats or for incorrect results or damages resulting from its use.

DATE: 4/10/2025 1:05:29 PM
FILE: G:\TXC\Projects\County_Williamson\7473-02 RM 2243 Phase 1A\03_CADD\01_Shts\06-DRNG\Stds\CD-SCC-MD-20.dgn

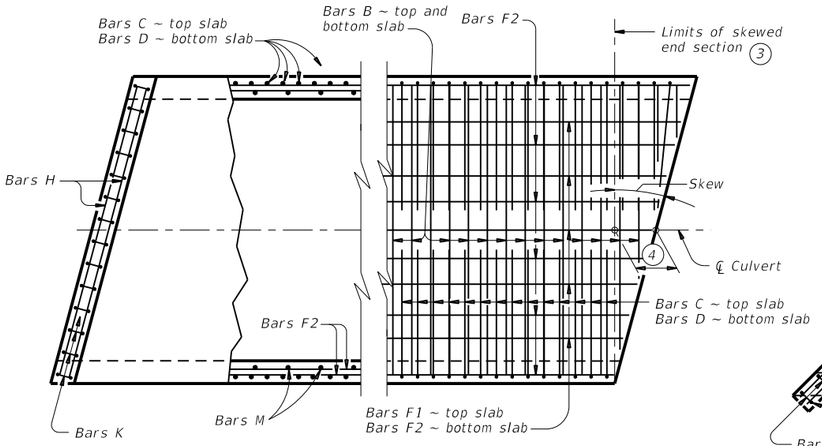

PLAN OF SKEWED ENDS ~ FROM 0° TO 15° (7)

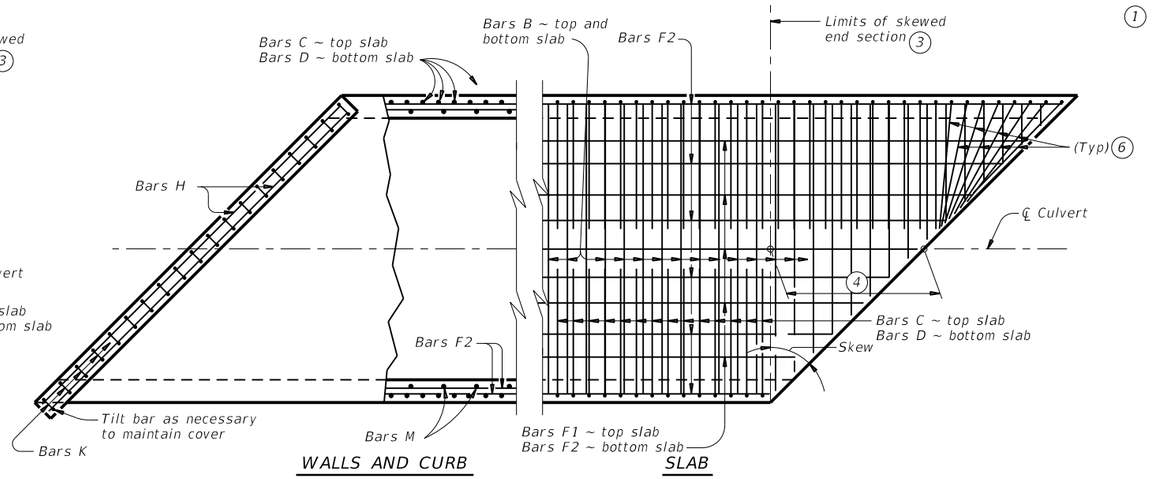

PLAN OF SKEWED ENDS ~ OVER 30° TO 45°

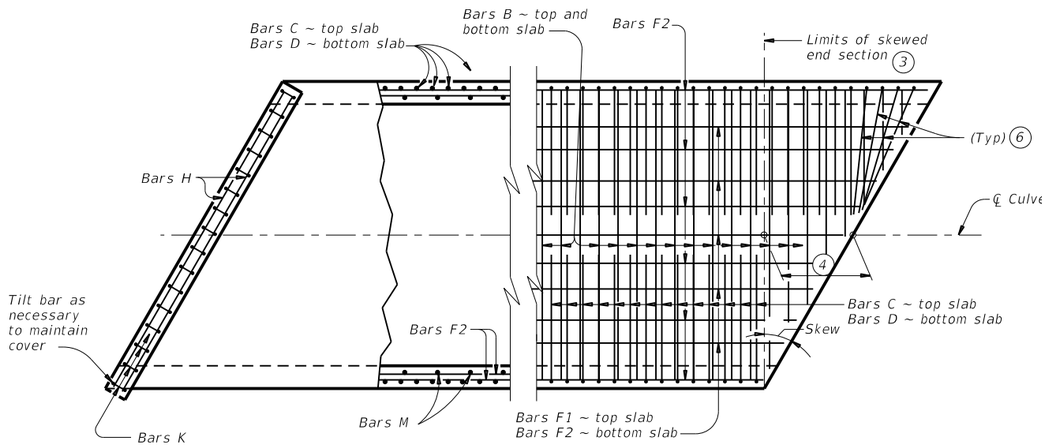

PLAN OF SKEWED ENDS ~ OVER 15° TO 30°

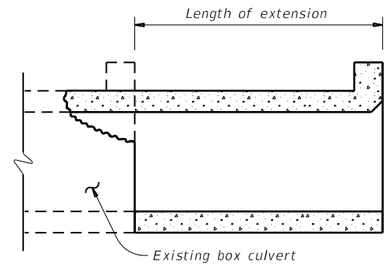

LENGTHENING DETAIL (1)

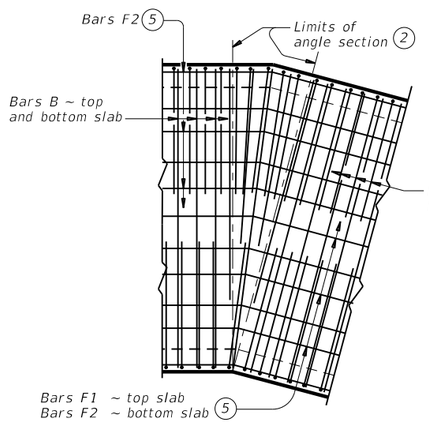

PLAN OF ANGLE SECTION ~ FROM 0° TO 15°

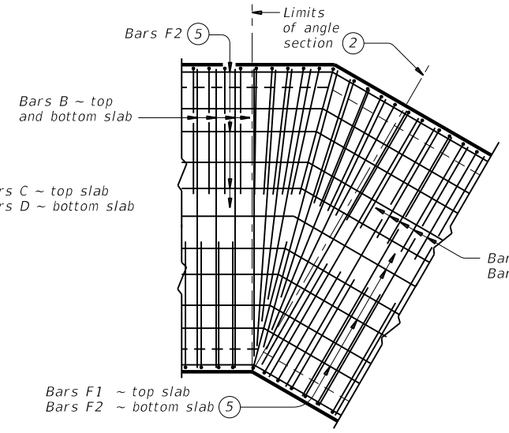

PLAN OF ANGLE SECTION ~ OVER 15° TO 30°

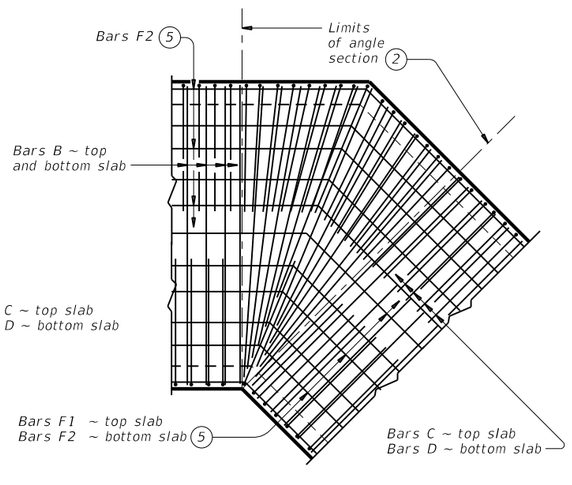

PLAN OF ANGLE SECTION ~ OVER 30° TO 45°

(1) For skewed box culverts with less than 2'-0" of fill, break back the top slab to provide a 1'-10" minimum lap of the existing longitudinal bars in the longitudinal bars in the extension.

For non-skewed box culverts with less than 2'-0" of fill and for skewed or non-skewed culverts with a fill depth of 2'-0" or greater, break back the top slab to provide a 1'-10" minimum lap of the existing longitudinal bars with the longitudinal bars in the extension. Alternatively, if the box is non-skewed, embed #6 anchor bars with a Type III, C, D , E, or F anchor adhesive into the existing walls, top and bottom slab at 1'-6" center-to-center spacing. Minimum embedment depth is 8". Anchor adhesive chosen must be able to achieve a basic bond strength in tension, Nba, of 26.4 kips. Submit signed and sealed calculations or the manufacturer's published literature showing the proposed anchor adhesive's ability to develop this load to the Engineer for approval prior to use. Anchor installation, including hole size, drilling, and clean out, must be in accordance with Item 450, "Railing." Test adhesive anchors in accordance with Item 450.3.3, "Tests." Test 3 anchors per 100 anchors installed.

Break back wings and apron as necessary to install the extension. Clean and extend the exposed wingwall and apron reinforcing into the extension. When lengthening existing box culverts with dimensions different than current standard dimensions, form horizontal and vertical transitions as directed by the Engineer. Match bottom slabs to maintain an uninterrupted flow line. Field bend existing and new reinforcing into transitions and maintain specified cover requirements. For top slabs of culverts with overlay, with 1-to-2 course surface treatment, or with the top slab as the final riding surface, adjust the "H" dimension to provide a smooth riding surface.

(2) When the spacing between Bars B becomes less than half of the normal spacing, cut bars to avoid conflict.

(3) The length of Bars B vary in the skewed end sections.

(4) [One half of overall width] x [tangent of the skew angle]

(5) Place Bars F1 and F2 continuously through the angle section. Bend Bars F1 and F2 to remain parallel to the walls of the box culvert.

(6) When necessary to avoid conflict in acute corners, shorten the slab extension leg of Bars C and Bars D to a minimum of 1'-6" for skews of 30° thru 45°.

(7) At the Contractor's option, for skews of 15° or less, place Bars B, C, and D parallel to the skewed end while maintaining spacing along centerline of box. Increase lengths of Bars B shown on the Single Box Culverts Cast-In-Place (SCC) standards sheets to accommodate the skew.

CONSTRUCTION NOTES:

Do not use permanent forms.
When required, lap Bars H 1'-8" for uncoated or galvanized bars.
Provide a minimum of 1 ½" clear cover.

MATERIAL NOTES:

Provide Grade 60 reinforcing steel.
Provide galvanized reinforcing steel, if required elsewhere in the plans.
Provide Class C concrete (f'c = 3,600 psi) with these exceptions: provide Class S concrete (f'c = 4,000 psi) for top slabs of culverts with overlay, with 1-to-2 course surface treatment, or with the top slab as the final riding surface.

GENERAL NOTES:

Designed according to AASHTO LRFD Bridge Design Specifications.

Refer to Single Box Culverts Cast-in-Place (SCC) standard sheets for details of straight sections of culvert.

For skewed sections and angle sections, refer to Single Box Culverts Cast-in-Place (SCC) standard sheets for slab and wall dimensions, bar sizes, maximum bar spacing, and any other details not shown.

For skewed ends with curbs, adjust length of Bars H, number of Bars K, curb concrete volume, and reinforcing steel weight by dividing the values shown on the culvert Single Box Culverts Cast-In-Place (SCC) standard sheets by the cosine of the skew angle.

Cover dimensions are clear dimensions, unless noted otherwise.

HL93 LOADING

Texas Department of Transportation

Bridge Division Standard

SINGLE BOX CULVERTS CAST-IN-PLACE MISCELLANEOUS DETAILS

SCC-MD

FILE: CD-SCC-MD-20.dgn	DN: TxDOT	CK: TxDOT	DW: TxDOT	CK: TxDOT
©TxDOT February 2020	CONT	SECT	JOB	HIGHWAY
REVISIONS	0914	05	222	RM 2243
	DIST	COUNTY		SHEET NO.
	AUS	WILLIAMSON		281

DISCLAIMER:
The use of this standard is governed by the "Texas Engineering Practice Act". No warranty of any kind is made by TxDOT for any purpose whatsoever. TxDOT assumes no responsibility for the conversion of this standard to other formats or for incorrect results or damages resulting from its use.

DATE: 4/10/2025 1:05:31 PM
FILE: G:\TXC\Projects\County_Williamson\7473-02 RM 2243 Phase 1A\03_CADD\01_Shts\06-DRNG\Stds\CD-SCC56-21.dgn

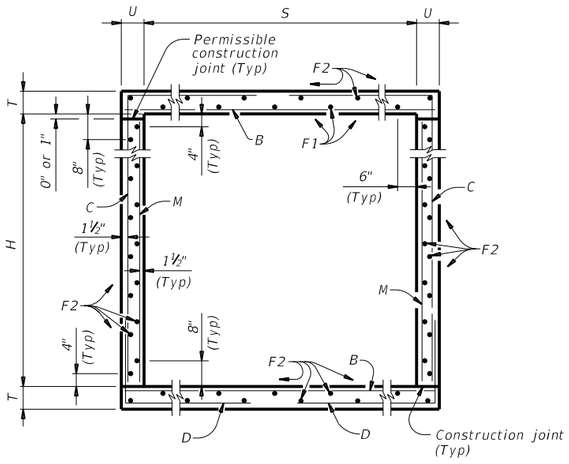

TYPICAL SECTION

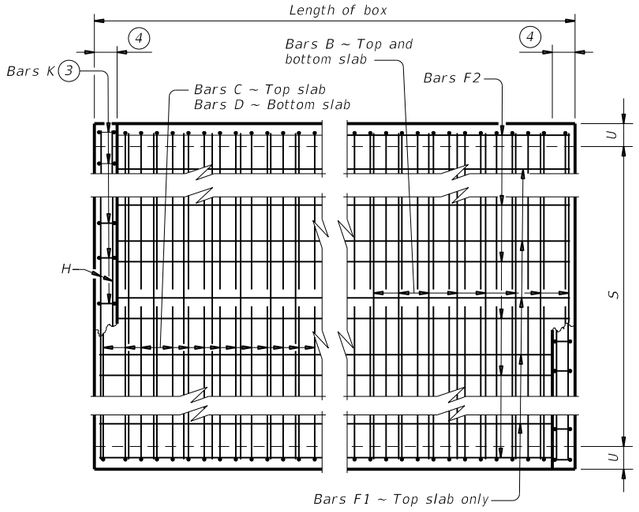

PLAN OF REINF STEEL

(1) 0" Min to 5'-0" Max. Estimated curb heights are shown elsewhere in the plans. For structures with pedestrian rail or curbs taller than 1'-0", refer to the Extended Curb Details (ECD) standard sheet. For structures with T631 or T631LS bridge rail, refer to the Mounting Details for T631 & T631LS Rails (T631-CM) standard sheet. Refer to the Rail Anchorage Curb (RAC) standard sheet for structures with bridge rail other than T631 or T631LS.

(2) For vehicle safety, the following requirements must be met:
- For structures without bridge rail, construct curbs no more than 3" above finished grade.
- For structures with bridge rail, construct curbs flush with finished grade.

Reduce curb heights, if necessary, to meet the above requirements. No changes will be made in quantities and no additional compensation will be allowed for this work.

(3) For curbs less than 1'-0" high, tilt Bars K or reduce bar height as necessary to maintain cover. For curbs less than 3" high, Bars K may be omitted.

(4) 1'-0" typical. 2'-3" when the Rail Anchorage Curb (RAC) standard sheet is referred to elsewhere in the plans.

The Contractor may replace Bars B, C, D, E, F1, F2, M, Y, and/or Z with deformed welded wire reinforcement (WWR) meeting the requirements of ASTM A1064. The area of required reinforcement may be reduced by the ratio of 60 ksi / 70 ksi. Spacing of WWR is limited to 4" Min and 18" Max. When required, provide lap splices in the WWR of the same length required for the equivalent bar size, rounded up for wire sizes between conventional bar sizes. The lap length required for WWR is never less than the lap length required for uncoated #4 bars.

Example conversion: Replacing No. 6 Gr 60 at 6" Spacing with WWR.
Required WWR = (0.44 sq. in. per 0.5 ft.) x (60 ksi / 70 ksi) = 0.755 sq. in. per ft.
If D30.6 wire is used to meet the 0.755 sq. in. per ft. requirement in this example, the required spacing = (0.306 sq. in.) / (0.755 sq. in. per ft.) x (12 in. per ft.) = 4.86" Max spacing. Required lap length for the provided D30.6 wire is 2'-1" (the same minimum lap length required for uncoated #5 bars, as listed under MATERIAL NOTES).

CONSTRUCTION NOTES:

Do not use permanent forms.
Chamfer the bottom edge of the top slab 3" at the entrance.
Optionally, raise construction joints shown at the flow line by a maximum of 6". If this option is taken, Bars M may be cut off or raised, Bars C and D may be reversed.

MATERIAL NOTES:

Provide Grade 60 reinforcing steel.
Provide galvanized reinforcing steel if required elsewhere in the plans.
Provide Class C concrete (f'c = 3,600 psi) for culvert barrel and curb, with the following exceptions: provide Class S concrete (f'c = 4,000 psi) for top slabs of:
- culverts with overlay,
- culverts with 1-to-2 course surface treatment, or
- culverts with the top slab as the final riding surface.

Provide bar laps, where required, as follows:
- Uncoated or galvanized ~ #4 = 1'-8" Min
- Uncoated or galvanized ~ #5 = 2'-1" Min
- Uncoated or galvanized ~ #6 = 2'-6" Min

GENERAL NOTES:

Designed according to AASHTO LRFD Bridge Design Specifications for the range of fill heights shown.
See the Single Box Culverts Cast-In-Place Miscellaneous Detail (SCC-MD) standard sheet for details pertaining to skewed ends, angle sections, and lengthening.

Cover dimensions are clear dimensions, unless noted otherwise.
Reinforcing bar dimensions shown are out-to-out of bar.

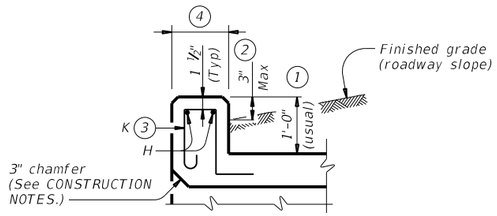

SECTION THRU CURB

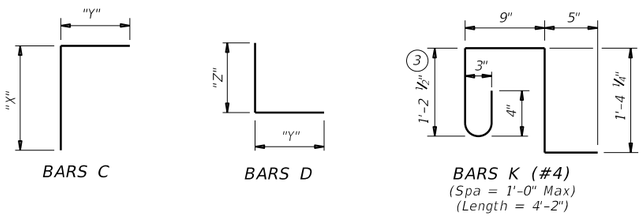

BARS C

BARS D

BARS K (#4)
(Spa = 1'-0" Max)
(Length = 4'-2")

HL93 LOADING SHEET 1 OF 2

Texas Department of Transportation — Bridge Division Standard

SINGLE BOX CULVERTS CAST-IN-PLACE 0' TO 30' FILL

SCC-5 & 6

FILE:	DN: TBE	CK: BMP	DW: TxDOT	CK: TxDOT
©TxDOT February 2020	CONT	SECT	JOB	HIGHWAY
REVISIONS	0914	05	222	RM 2243
04/2021 Updated X values.	DIST	COUNTY		SHEET NO.
	AUS	WILLIAMSON		282

DISCLAIMER:
The use of this standard is governed by the "Texas Engineering Practice Act". No warranty of any kind is made by TxDOT for any purpose whatsoever. TxDOT assumes no responsibility for the conversion of this standard to other formats or for incorrect results or damages resulting from its use.

DATE: 4/10/2025 1:05:31 PM
FILE: G:\TxC\Projects\County_Williamson\7473-02 RM 2243 Phase 1A\03_CADD\01_Shts\06-DRNG\Strds\CD-SCC56-21.dgn

SECTION DIMENSIONS				FILL HEIGHT (5)	BILLS OF REINFORCING STEEL (For Box Length = 40 feet)																										QUANTITIES					
					Bars B					Bars C							Bars D							Bars M ~ #4				Bars F1 ~ #4 at 18" Spa			Bars F2 ~ #4 at 18" Spa			Bars H 4 ~ #4		Bars K		Per Foot of Barrel		Curb		Total	
S	H	T	U		No.	Size	Spa	Length	Weight	No.	Size	Spa	Length	Weight	" X "	" Y "	No.	Size	Spa	Length	Weight	" Y "	" Z "	No.	Spa	Length	Weight	No.	Length	Wt	No.	Length	Weight	Length	Wt	No.	Wt	Conc (CY)	Reinf (Lb)	Conc (CY)	Reinf (Lb)	Conc (CY)	Reinf (Lb)
5' – 0"	2' – 0"	8"	7"	26'	108	#6	9"	5' – 11"	960	108	#5	9"	6' – 3"	704	2' – 6"	3' – 9"	108	#5	9"	6' – 5"	723	3' – 9"	2' – 8"	108	9"	2' – 0"	144	4	39' – 9"	106	22	39' – 9"	584	5' – 11"	16	14	39	0.391	80.5	0.5	55	16.1	3,276
5' – 0"	2' – 0"	9"	7"	30'	108	#6	9"	5' – 11"	960	108	#5	9"	6' – 4"	713	2' – 7"	3' – 9"	108	#5	9"	6' – 6"	732	3' – 9"	2' – 9"	108	9"	2' – 0"	144	4	39' – 9"	106	22	39' – 9"	584	5' – 11"	16	14	39	0.429	81.0	0.5	55	17.6	3,294
5' – 0"	3' – 0"	8"	7"	26'	108	#6	9"	5' – 11"	960	108	#5	9"	7' – 3"	817	3' – 6"	3' – 9"	108	#5	9"	6' – 5"	723	3' – 9"	2' – 8"	108	9"	3' – 0"	216	4	39' – 9"	106	26	39' – 9"	690	5' – 11"	16	14	39	0.434	87.8	0.5	55	17.8	3,567
5' – 0"	3' – 0"	9"	7"	30'	108	#6	9"	5' – 11"	960	108	#5	9"	7' – 4"	826	3' – 7"	3' – 9"	108	#5	9"	6' – 6"	732	3' – 9"	2' – 9"	108	9"	3' – 0"	216	4	39' – 9"	106	26	39' – 9"	690	5' – 11"	16	14	39	0.472	88.3	0.5	55	19.3	3,585
5' – 0"	4' – 0"	8"	7"	26'	108	#6	9"	5' – 11"	960	108	#5	9"	8' – 3"	929	4' – 6"	3' – 9"	108	#5	9"	6' – 5"	723	3' – 9"	2' – 8"	108	9"	4' – 0"	289	4	39' – 9"	106	26	39' – 9"	690	5' – 11"	16	14	39	0.477	92.4	0.5	55	19.5	3,752
5' – 0"	4' – 0"	9"	7"	30'	108	#6	9"	5' – 11"	960	108	#5	9"	8' – 4"	939	4' – 7"	3' – 9"	108	#5	9"	6' – 6"	732	3' – 9"	2' – 9"	108	9"	4' – 0"	289	4	39' – 9"	106	26	39' – 9"	690	5' – 11"	16	14	39	0.515	92.9	0.5	55	21.1	3,771
5' – 0"	5' – 0"	8"	7"	26'	108	#6	9"	5' – 11"	960	108	#5	9"	9' – 3"	1,042	5' – 6"	3' – 9"	108	#5	9"	6' – 5"	723	3' – 9"	2' – 8"	108	9"	5' – 0"	361	4	39' – 9"	106	30	39' – 9"	797	5' – 11"	16	14	39	0.521	99.7	0.5	55	21.3	4,044
5' – 0"	5' – 0"	9"	7"	30'	108	#6	9"	5' – 11"	960	108	#5	9"	9' – 4"	1,051	5' – 7"	3' – 9"	108	#5	9"	6' – 6"	732	3' – 9"	2' – 9"	108	9"	5' – 0"	361	4	39' – 9"	106	30	39' – 9"	797	5' – 11"	16	14	39	0.559	100.2	0.5	55	22.8	4,062
6' – 0"	2' – 0"	8"	7"	20'	108	#6	9"	6' – 11"	1,122	108	#5	9"	6' – 7"	742	2' – 6"	4' – 1"	108	#5	9"	6' – 9"	760	4' – 1"	2' – 8"	108	9"	2' – 0"	144	5	39' – 9"	133	25	39' – 9"	664	6' – 11"	18	16	45	0.440	89.1	0.5	63	18.1	3,628
6' – 0"	2' – 0"	9"	7"	26'	108	#6	9"	6' – 11"	1,122	162	#5	6"	6' – 8"	1,126	2' – 7"	4' – 1"	162	#5	6"	6' – 10"	1,155	4' – 1"	2' – 9"	108	9"	2' – 0"	144	5	39' – 9"	133	25	39' – 9"	664	6' – 11"	18	16	45	0.485	108.6	0.5	63	19.9	4,407
6' – 0"	2' – 0"	10"	8"	30'	108	#6	9"	7' – 1"	1,149	162	#5	6"	6' – 10"	1,155	2' – 8"	4' – 2"	162	#5	6"	7' – 0"	1,183	4' – 2"	2' – 10"	82	12"	2' – 0"	110	5	39' – 9"	133	25	39' – 9"	664	7' – 1"	19	18	50	0.551	109.9	0.5	69	22.6	4,463
6' – 0"	3' – 0"	8"	7"	20'	108	#6	9"	6' – 11"	1,122	108	#5	9"	7' – 7"	854	3' – 6"	4' – 1"	108	#5	9"	6' – 9"	760	4' – 1"	2' – 8"	108	9"	3' – 0"	216	5	39' – 9"	133	29	39' – 9"	770	6' – 11"	18	16	45	0.484	96.4	0.5	63	19.9	3,918
6' – 0"	3' – 0"	9"	7"	26'	108	#6	9"	6' – 11"	1,122	162	#5	6"	7' – 8"	1,295	3' – 7"	4' – 1"	162	#5	6"	6' – 10"	1,155	4' – 1"	2' – 9"	108	9"	3' – 0"	216	5	39' – 9"	133	29	39' – 9"	770	6' – 11"	18	16	45	0.528	117.3	0.5	63	21.6	4,754
6' – 0"	3' – 0"	10"	8"	30'	108	#6	9"	7' – 1"	1,149	162	#5	6"	7' – 10"	1,324	3' – 8"	4' – 2"	162	#5	6"	7' – 0"	1,183	4' – 2"	2' – 10"	82	12"	3' – 0"	164	5	39' – 9"	133	29	39' – 9"	770	7' – 1"	19	18	50	0.601	118.1	0.5	69	24.6	4,792
6' – 0"	4' – 0"	8"	7"	20'	108	#6	9"	6' – 11"	1,122	108	#5	9"	8' – 7"	967	4' – 6"	4' – 1"	108	#5	9"	6' – 9"	760	4' – 1"	2' – 8"	108	9"	4' – 0"	289	5	39' – 9"	133	29	39' – 9"	770	6' – 11"	18	16	45	0.527	101.0	0.5	63	21.6	4,104
6' – 0"	4' – 0"	9"	7"	26'	108	#6	9"	6' – 11"	1,122	162	#5	6"	8' – 8"	1,464	4' – 7"	4' – 1"	162	#5	6"	6' – 10"	1,155	4' – 1"	2' – 9"	108	9"	4' – 0"	289	5	39' – 9"	133	29	39' – 9"	770	6' – 11"	18	16	45	0.571	123.3	0.5	63	23.4	4,996
6' – 0"	4' – 0"	10"	8"	30'	108	#6	9"	7' – 1"	1,149	162	#5	6"	8' – 10"	1,493	4' – 8"	4' – 2"	162	#5	6"	7' – 0"	1,183	4' – 2"	2' – 10"	82	12"	4' – 0"	219	5	39' – 9"	133	29	39' – 9"	770	7' – 1"	19	18	50	0.650	123.7	0.5	69	26.5	5,016
6' – 0"	5' – 0"	8"	7"	20'	108	#6	9"	6' – 11"	1,122	108	#5	9"	9' – 7"	1,080	5' – 6"	4' – 1"	108	#5	9"	6' – 9"	760	4' – 1"	2' – 8"	108	9"	5' – 0"	361	5	39' – 9"	133	33	39' – 9"	876	6' – 11"	18	16	45	0.570	108.3	0.5	63	23.3	4,395
6' – 0"	5' – 0"	9"	7"	26'	108	#6	9"	6' – 11"	1,122	162	#5	6"	9' – 8"	1,633	5' – 7"	4' – 1"	162	#5	6"	6' – 10"	1,155	4' – 1"	2' – 9"	108	9"	5' – 0"	361	5	39' – 9"	133	33	39' – 9"	876	6' – 11"	18	16	45	0.614	132.0	0.5	63	25.1	5,343
6' – 0"	5' – 0"	10"	8"	30'	108	#6	9"	7' – 1"	1,149	162	#5	6"	9' – 10"	1,661	5' – 8"	4' – 2"	162	#5	6"	7' – 0"	1,183	4' – 2"	2' – 10"	82	12"	5' – 0"	274	5	39' – 9"	133	33	39' – 9"	876	7' – 1"	19	18	50	0.700	131.9	0.5	69	28.5	5,345
6' – 0"	6' – 0"	8"	7"	20'	108	#6	9"	6' – 11"	1,122	108	#5	9"	10' – 7"	1,192	6' – 6"	4' – 1"	108	#5	9"	6' – 9"	760	4' – 1"	2' – 8"	108	9"	6' – 0"	433	5	39' – 9"	133	37	39' – 9"	982	6' – 11"	18	16	45	0.613	115.6	0.5	63	25.0	4,685
6' – 0"	6' – 0"	9"	7"	26'	108	#6	9"	6' – 11"	1,122	162	#5	6"	10' – 8"	1,802	6' – 7"	4' – 1"	162	#5	6"	6' – 10"	1,155	4' – 1"	2' – 9"	108	9"	6' – 0"	433	5	39' – 9"	133	37	39' – 9"	982	6' – 11"	18	16	45	0.657	140.7	0.5	63	26.8	5,690
6' – 0"	6' – 0"	10"	8"	30'	108	#6	9"	7' – 1"	1,149	162	#5	6"	10' – 10"	1,830	6' – 8"	4' – 2"	162	#5	6"	7' – 0"	1,183	4' – 2"	2' – 10"	82	12"	6' – 0"	329	5	39' – 9"	133	37	39' – 9"	982	7' – 1"	19	18	50	0.749	140.2	0.5	69	30.5	5,675

(5) For direct traffic culverts (fill height ≤ 2 ft.), identify the required box size and select the option with the minimum fill height.

HL93 LOADING SHEET 2 OF 2

Texas Department of Transportation | Bridge Division Standard

SINGLE BOX CULVERTS CAST-IN-PLACE
0' TO 30' FILL

SCC-5 & 6

FILE:	DN: TBE	CK: BMP	DN: TxDOT	CK: TxDOT
©TxDOT February 2020	CONT	SECT	JOB	HIGHWAY
REVISIONS	0914	05	222	RM 2243
04/2021 Updated X values.	DIST	COUNTY		SHEET NO.
	AUS	WILLIAMSON		283

DISCLAIMER:
The use of this standard is governed by the "Texas Engineering Practice Act". No warranty of any kind is made by TxDOT for any purpose whatsoever. TxDOT assumes no responsibility for the conversion of this standard to other formats or for incorrect results or damages resulting from its use.

DATE: 4/10/2025 1:05:33 PM
FILE: G:\TxC\Projects\County_Williamson\7473-02 RM 2243 Phase 1A\03_CADD\01_Shts\06-DRNG\Strds\CD-SCC07-21.dgn

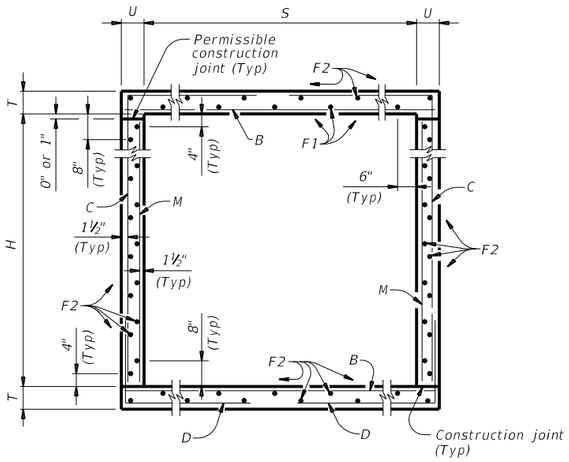

TYPICAL SECTION

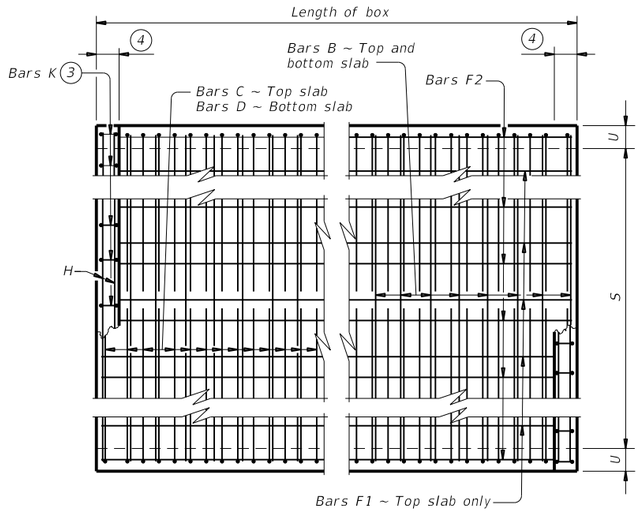

PLAN OF REINF STEEL

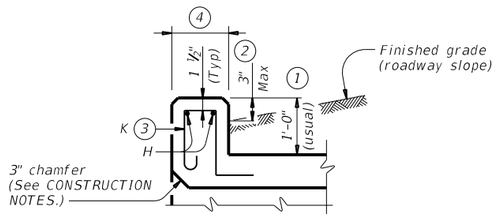

SECTION THRU CURB

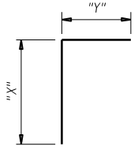

BARS C

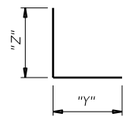

BARS D

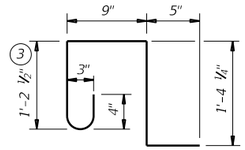

BARS K (#4)
(Spa = 1'-0" Max)
(Length = 4'-2")

(1) 0" Min to 5'-0" Max. Estimated curb heights are shown elsewhere in the plans. For structures with pedestrian rail or curbs taller than 1'-0", refer to the Extended Curb Details (ECD) standard sheet. For structures with T631 or T631LS bridge rail, refer to the Mounting Details for T631 & T631LS Rails (T631-CM) standard sheet. Refer to the Rail Anchorage Curb (RAC) standard sheet for structures with bridge rail other than T631 or T631LS.

(2) For vehicle safety, the following requirements must be met:
- For structures without bridge rail, construct curbs no more than 3" above finished grade.
- For structures with bridge rail, construct curbs flush with finished grade.

Reduce curb heights, if necessary, to meet the above requirements. No changes will be made in quantities and no additional compensation will be allowed for this work.

(3) For curbs less than 1'-0" high, tilt Bars K or reduce bar height as necessary to maintain cover. For curbs less than 3" high, Bars K may be omitted.

(4) 1'-0" typical. 2'-3" when the Rail Anchorage Curb (RAC) standard sheet is referred to elsewhere in the plans.

The Contractor may replace Bars B, C, D, E, F1, F2, M, Y, and/or Z with deformed welded wire reinforcement (WWR) meeting the requirements of ASTM A1064. The area of required reinforcement may be reduced by the ratio of 60 ksi / 70 ksi. Spacing of WWR is limited to 4" Min and 18" Max. When required, provide lap splices in the WWR of the same length required for the equivalent bar size, rounded up for wire sizes between conventional bar sizes. The lap length required for WWR is never less than the lap length required for uncoated #4 bars.

Example conversion: Replacing No. 6 Gr 60 at 6" Spacing with WWR.
Required WWR = (0.44 sq. in. per 0.5 ft.) x (60 ksi / 70 ksi) = 0.755 sq. in. per ft.
If D30.6 wire is used to meet the 0.755 sq. in. per ft. requirement in this example, the required spacing = (0.306 sq. in.) / (0.755 sq. in. per ft.) x (12 in. per ft.) = 4.86" Max spacing. Required lap length for the provided D30.6 wire is 2'-1" (the same minimum lap length required for uncoated #5 bars, as listed under MATERIAL NOTES).

CONSTRUCTION NOTES:

Do not use permanent forms.
Chamfer the bottom edge of the top slab 3" at the entrance.
Optionally, raise construction joints shown at the flow line by a maximum of 6". If this option is taken, Bars M may be cut off or raised, Bars C and D may be reversed.

MATERIAL NOTES:

Provide Grade 60 reinforcing steel.
Provide galvanized reinforcing steel if required elsewhere in the plans.
Provide Class C concrete (f'c = 3,600 psi) for culvert barrel and curb, with the following exceptions: provide Class S concrete (f'c = 4,000 psi) for top slabs of:
- culverts with overlay,
- culverts with 1-to-2 course surface treatment, or
- culverts with the top slab as the final riding surface.

Provide bar laps, where required, as follows:
- Uncoated or galvanized ~ #4 = 1'-8" Min
- Uncoated or galvanized ~ #5 = 2'-1" Min
- Uncoated or galvanized ~ #6 = 2'-6" Min

GENERAL NOTES:

Designed according to AASHTO LRFD Bridge Design Specifications for the range of fill heights shown.
See the Single Box Culverts Cast-In-Place Miscellaneous Detail (SCC-MD) standard sheet for details pertaining to skewed ends, angle sections, and lengthening.

Cover dimensions are clear dimensions, unless noted otherwise.
Reinforcing bar dimensions shown are out-to-out of bar.

HL93 LOADING SHEET 1 OF 2

Texas Department of Transportation

Bridge Division Standard

SINGLE BOX CULVERTS CAST-IN-PLACE 0' TO 30' FILL

SCC-7

FILE: CD-SCC07-21.dgn	DN: TBE	CK: BMP	DW: TxDOT	CK: TxDOT
©TxDOT February 2020	CONT	SECT	JOB	HIGHWAY
REVISIONS	0914	05	222	RM 2243
04/2021 Updated X values.	DIST	COUNTY		SHEET NO.
	AUS	WILLIAMSON		284

DISCLAIMER:
The use of this standard is governed by the "Texas Engineering Practice Act". No warranty of any kind is made by TxDOT for any purpose whatsoever. TxDOT assumes no responsibility for the conversion of this standard to other formats or for incorrect results or damages resulting from its use.

DATE: 4/10/2025 1:05:34 PM
FILE: G:\TXC\Projects\County_Williamson\7473-02 RM 2243 Phase 1A\03_CADD\01_Shts\06-DRNG\Stds\CD-SCC07-21.dgn

SECTION DIMENSIONS				FILL HEIGHT (5)	BILLS OF REINFORCING STEEL (For Box Length = 40 feet)																											QUANTITIES					
					Bars B					Bars C							Bars D							Bars M ~ #4				Bars F1 ~ #4 at 18" Spa			Bars F2 ~ #4 at 18" Spa			Bars H 4 ~ #4		Bars K		Per Foot of Barrel		Curb		Total	
S	H	T	U		No.	Size	Spa	Length	Weight	No.	Size	Spa	Length	Weight	" X "	" Y "	No.	Size	Spa	Length	Weight	" Y "	" Z "	No.	Spa	Length	Weight	No.	Length	Wt	No.	Length	Weight	Length	Wt	No.	Wt	Conc (CY)	Reinf (Lb)	Conc (CY)	Reinf (Lb)	Conc (CY)	Reinf (Lb)
7' – 0"	3' – 0"	8"	7"	16'	108	#6	9"	7' – 11"	1,284	162	#5	6"	7' – 11"	1,338	3' – 6"	4' – 5"	162	#5	6"	7' – 1"	1,197	4' – 5"	2' – 8"	108	9"	3' – 0"	216	5	39' – 9"	133	31	39' – 9"	823	7' – 11"	21	18	50	0.533	124.8	0.6	71	21.9	5,062
7' – 0"	3' – 0"	9"	7"	20'	108	#6	9"	7' – 11"	1,284	162	#5	6"	8' – 0"	1,352	3' – 7"	4' – 5"	162	#5	6"	7' – 2"	1,211	4' – 5"	2' – 9"	108	9"	3' – 0"	216	5	39' – 9"	133	31	39' – 9"	823	7' – 11"	21	18	50	0.583	125.5	0.6	71	23.9	5,090
7' – 0"	3' – 0"	10"	8"	23'	108	#6	9"	8' – 1"	1,311	162	#5	6"	8' – 2"	1,380	3' – 8"	4' – 6"	162	#5	6"	7' – 4"	1,239	4' – 6"	2' – 10"	82	12"	3' – 0"	164	5	39' – 9"	133	31	39' – 9"	823	8' – 1"	22	20	56	0.663	126.3	0.6	78	27.1	5,128
7' – 0"	3' – 0"	11"	8"	30'	108	#6	9"	8' – 1"	1,311	162	#5	6"	8' – 3"	1,394	3' – 9"	4' – 6"	162	#5	6"	7' – 5"	1,253	4' – 6"	2' – 11"	82	12"	3' – 0"	164	5	39' – 9"	133	31	39' – 9"	823	8' – 1"	22	20	56	0.714	127.0	0.6	78	29.2	5,156
7' – 0"	4' – 0"	8"	7"	16'	108	#6	9"	7' – 11"	1,284	162	#5	6"	8' – 11"	1,507	4' – 6"	4' – 5"	162	#5	6"	7' – 1"	1,197	4' – 5"	2' – 8"	108	9"	4' – 0"	289	5	39' – 9"	133	31	39' – 9"	823	7' – 11"	21	18	50	0.576	130.8	0.6	71	23.6	5,304
7' – 0"	4' – 0"	9"	7"	20'	108	#6	9"	7' – 11"	1,284	162	#5	6"	9' – 0"	1,521	4' – 7"	4' – 5"	162	#5	6"	7' – 2"	1,211	4' – 5"	2' – 9"	108	9"	4' – 0"	289	5	39' – 9"	133	31	39' – 9"	823	7' – 11"	21	18	50	0.627	131.5	0.6	71	25.7	5,332
7' – 0"	4' – 0"	10"	8"	23'	108	#6	9"	8' – 1"	1,311	162	#5	6"	9' – 2"	1,549	4' – 8"	4' – 6"	162	#5	6"	7' – 4"	1,239	4' – 6"	2' – 10"	82	12"	4' – 0"	219	5	39' – 9"	133	31	39' – 9"	823	8' – 1"	22	20	56	0.712	131.9	0.6	78	29.1	5,352
7' – 0"	4' – 0"	11"	8"	30'	162	#6	6"	8' – 1"	1,967	162	#5	6"	9' – 3"	1,563	4' – 9"	4' – 6"	162	#5	6"	7' – 5"	1,253	4' – 6"	2' – 11"	82	12"	4' – 0"	219	5	39' – 9"	133	31	39' – 9"	823	8' – 1"	22	20	56	0.763	149.0	0.6	78	31.1	6,036
7' – 0"	5' – 0"	8"	7"	16'	108	#6	9"	7' – 11"	1,284	162	#5	6"	9' – 11"	1,676	5' – 6"	4' – 5"	162	#5	6"	7' – 1"	1,197	4' – 5"	2' – 8"	108	9"	5' – 0"	361	5	39' – 9"	133	35	39' – 9"	929	7' – 11"	21	18	50	0.619	139.5	0.6	71	25.4	5,651
7' – 0"	5' – 0"	9"	7"	20'	108	#6	9"	7' – 11"	1,284	162	#5	6"	10' – 0"	1,690	5' – 7"	4' – 5"	162	#5	6"	7' – 2"	1,211	4' – 5"	2' – 9"	108	9"	5' – 0"	361	5	39' – 9"	133	35	39' – 9"	929	7' – 11"	21	18	50	0.670	140.2	0.6	71	27.4	5,679
7' – 0"	5' – 0"	10"	8"	23'	108	#6	9"	8' – 1"	1,311	162	#5	6"	10' – 2"	1,718	5' – 8"	4' – 6"	162	#5	6"	7' – 4"	1,239	4' – 6"	2' – 10"	82	12"	5' – 0"	274	5	39' – 9"	133	35	39' – 9"	929	8' – 1"	22	20	56	0.761	140.1	0.6	78	31.1	5,682
7' – 0"	5' – 0"	11"	8"	30'	162	#6	6"	8' – 1"	1,967	162	#5	6"	10' – 3"	1,732	5' – 9"	4' – 6"	162	#5	6"	7' – 5"	1,253	4' – 6"	2' – 11"	82	12"	5' – 0"	274	5	39' – 9"	133	35	39' – 9"	929	8' – 1"	22	20	56	0.813	157.2	0.6	78	33.1	6,366
7' – 0"	6' – 0"	8"	7"	16'	108	#6	9"	7' – 11"	1,284	162	#5	6"	10' – 11"	1,845	6' – 6"	4' – 5"	162	#5	6"	7' – 1"	1,197	4' – 5"	2' – 8"	108	9"	6' – 0"	433	5	39' – 9"	133	39	39' – 9"	1,036	7' – 11"	21	18	50	0.663	148.2	0.6	71	27.1	5,999
7' – 0"	6' – 0"	9"	7"	20'	108	#6	9"	7' – 11"	1,284	162	#5	6"	11' – 0"	1,859	6' – 7"	4' – 5"	162	#5	6"	7' – 2"	1,211	4' – 5"	2' – 9"	108	9"	6' – 0"	433	5	39' – 9"	133	39	39' – 9"	1,036	7' – 11"	21	18	50	0.713	148.9	0.6	71	29.1	6,027
7' – 0"	6' – 0"	10"	8"	23'	108	#6	9"	8' – 1"	1,311	162	#5	6"	11' – 2"	1,887	6' – 8"	4' – 6"	162	#5	6"	7' – 4"	1,239	4' – 6"	2' – 10"	82	12"	6' – 0"	329	5	39' – 9"	133	39	39' – 9"	1,036	8' – 1"	22	20	56	0.811	148.4	0.6	78	33.1	6,013
7' – 0"	6' – 0"	11"	8"	30'	162	#6	6"	8' – 1"	1,967	162	#5	6"	11' – 3"	1,901	6' – 9"	4' – 6"	162	#5	6"	7' – 5"	1,253	4' – 6"	2' – 11"	82	12"	6' – 0"	329	5	39' – 9"	133	39	39' – 9"	1,036	8' – 1"	22	20	56	0.862	165.5	0.6	78	35.1	6,697
7' – 0"	7' – 0"	8"	7"	16'	108	#6	9"	7' – 11"	1,284	162	#5	6"	11' – 11"	2,014	7' – 6"	4' – 5"	162	#5	6"	7' – 1"	1,197	4' – 5"	2' – 8"	108	9"	7' – 0"	505	5	39' – 9"	133	39	39' – 9"	1,036	7' – 11"	21	18	50	0.706	154.2	0.6	71	28.8	6,240
7' – 0"	7' – 0"	9"	7"	20'	108	#6	9"	7' – 11"	1,284	162	#5	6"	12' – 0"	2,028	7' – 7"	4' – 5"	162	#5	6"	7' – 2"	1,211	4' – 5"	2' – 9"	108	9"	7' – 0"	505	5	39' – 9"	133	39	39' – 9"	1,036	7' – 11"	21	18	50	0.756	154.9	0.6	71	30.8	6,268
7' – 0"	7' – 0"	10"	8"	23'	108	#6	9"	8' – 1"	1,311	162	#5	6"	12' – 2"	2,056	7' – 8"	4' – 6"	162	#5	6"	7' – 4"	1,239	4' – 6"	2' – 10"	108	9"	7' – 0"	505	5	39' – 9"	133	39	39' – 9"	1,036	8' – 1"	22	20	56	0.860	157.0	0.6	78	35.0	6,358
7' – 0"	7' – 0"	11"	8"	30'	162	#6	6"	8' – 1"	1,967	162	#5	6"	12' – 3"	2,070	7' – 9"	4' – 6"	162	#5	6"	7' – 5"	1,253	4' – 6"	2' – 11"	108	9"	7' – 0"	505	5	39' – 9"	133	39	39' – 9"	1,036	8' – 1"	22	20	56	0.912	174.1	0.6	78	37.1	7,042

(5) For direct traffic culverts (fill height ≤ 2 ft.), identify the required box size and select the option with the minimum fill height.

HL93 LOADING SHEET 2 OF 2

Texas Department of Transportation

Bridge Division Standard

SINGLE BOX CULVERTS CAST-IN-PLACE
0' TO 30' FILL

SCC-7

FILE: CD-SCC07-21.dgn	DN: TBE	CK: BMP	DW: TxDOT	CK: TxDOT
©TxDOT February 2020	CONT	SECT	JOB	HIGHWAY
REVISIONS	0914	05	222	RM 2243
04/2021 Updated X values.	DIST	COUNTY		SHEET NO.
	AUS	WILLIAMSON		285

DISCLAIMER:
The use of this standard is governed by the "Texas Engineering Practice Act". No warranty of any kind is made by TxDOT for any purpose whatsoever. TxDOT assumes no responsibility for the conversion of this standard to other formats or for incorrect results or damages resulting from its use.

DATE: 4/10/2025 1:05:35 PM
FILE: G:\TxDC\Projects\County_Williamson\7473-02 RM 2243 Phase 1A\03_CADD\01_Shts\06-DRNG\Strds\CD-SCC08-21.dgn

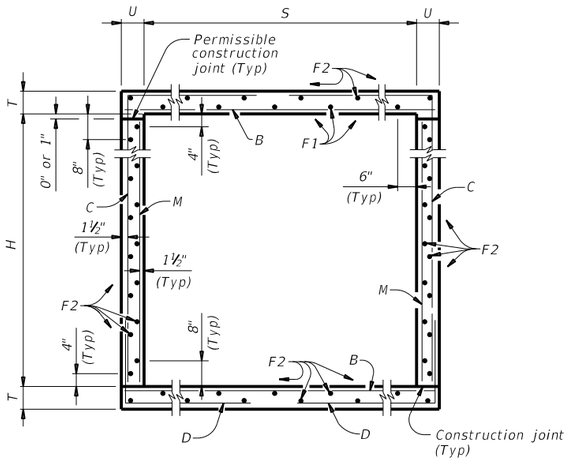

TYPICAL SECTION

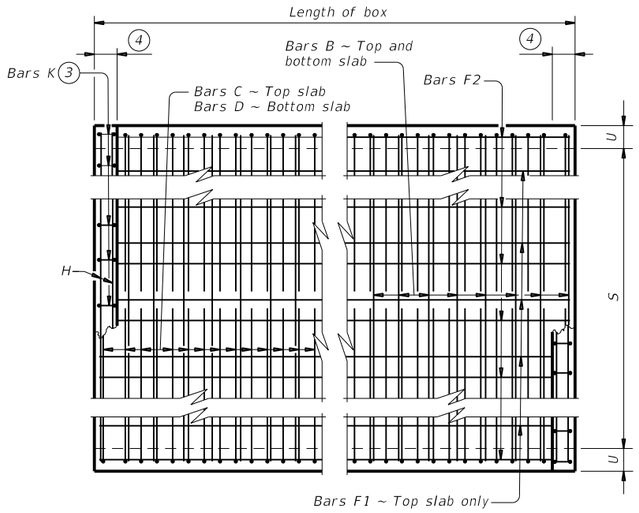

PLAN OF REINF STEEL

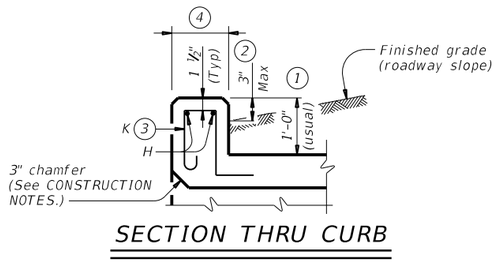

SECTION THRU CURB

1. 0" Min to 5'-0" Max. Estimated curb heights are shown elsewhere in the plans. For structures with pedestrian rail or curbs taller than 1'-0", refer to the Extended Curb Details (ECD) standard sheet. For structures with T631 or T631LS bridge rail, refer to the Mounting Details for T631 & T631LS Rails (T631-CM) standard sheet. Refer to the Rail Anchorage Curb (RAC) standard sheet for structures with bridge rail other than T631 or T631LS.

2. For vehicle safety, the following requirements must be met:
   - For structures without bridge rail, construct curbs no more than 3" above finished grade.
   - For structures with bridge rail, construct curbs flush with finished grade.

   Reduce curb heights, if necessary, to meet the above requirements. No changes will be made in quantities and no additional compensation will be allowed for this work.

3. For curbs less than 1'-0" high, tilt Bars K or reduce bar height as necessary to maintain cover. For curbs less than 3" high, Bars K may be omitted.

4. 1'-0" typical. 2'-3" when the Rail Anchorage Curb (RAC) standard sheet is referred to elsewhere in the plans.

The Contractor may replace Bars B, C, D, E, F1, F2, M, Y, and/or Z with deformed welded wire reinforcement (WWR) meeting the requirements of ASTM A1064. The area of required reinforcement may be reduced by the ratio of 60 ksi / 70 ksi. Spacing of WWR is limited to 4" Min and 18" Max. When required, provide lap splices in the WWR of the same length required for the equivalent bar size, rounded up for wire sizes between conventional bar sizes. The lap length required for WWR is never less than the lap length required for uncoated #4 bars.

Example conversion: Replacing No. 6 Gr 60 at 6" Spacing with WWR.
Required WWR = (0.44 sq. in. per 0.5 ft.) x (60 ksi / 70 ksi) = 0.755 sq. in. per ft.
If D30.6 wire is used to meet the 0.755 sq. in. per ft. requirement in this example, the required spacing = (0.306 sq. in.) / (0.755 sq. in. per ft.) x (12 in. per ft.) = 4.86" Max spacing. Required lap length for the provided D30.6 wire is 2'-1" (the same minimum lap length required for uncoated #5 bars, as listed under MATERIAL NOTES).

CONSTRUCTION NOTES:

Do not use permanent forms.
Chamfer the bottom edge of the top slab 3" at the entrance.
Optionally, raise construction joints shown at the flow line by a maximum of 6". If this option is taken, Bars M may be cut off or raised, Bars C and D may be reversed.

MATERIAL NOTES:

Provide Grade 60 reinforcing steel.
Provide galvanized reinforcing steel if required elsewhere in the plans.
Provide Class C concrete (f'_c = 3,600 psi) for culvert barrel and curb, with the following exceptions: provide Class S concrete (f'_c = 4,000 psi) for top slabs of:
- culverts with overlay,
- culverts with 1-to-2 course surface treatment, or
- culverts with the top slab as the final riding surface.

Provide bar laps, where required, as follows:
- Uncoated or galvanized ~ #4 = 1'-8" Min
- Uncoated or galvanized ~ #5 = 2'-1" Min
- Uncoated or galvanized ~ #6 = 2'-6" Min

GENERAL NOTES:

Designed according to AASHTO LRFD Bridge Design Specifications for the range of fill heights shown.
See the Single Box Culverts Cast-In-Place Miscellaneous Detail (SCC-MD) standard sheet for details pertaining to skewed ends, angle sections, and lengthening.

Cover dimensions are clear dimensions, unless noted otherwise.
Reinforcing bar dimensions shown are out-to-out of bar.

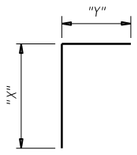

BARS C

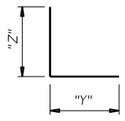

BARS D

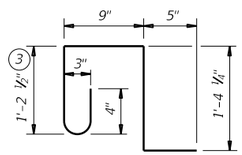

BARS K (#4)
(Spa = 1'-0" Max)
(Length = 4'-2")

HL93 LOADING SHEET 1 OF 2

Texas Department of Transportation — Bridge Division Standard

SINGLE BOX CULVERTS CAST-IN-PLACE 0' TO 30' FILL

SCC-8

FILE:	DN: TBE	CK: BMP	DW: TxDOT	CK: TxDOT
©TxDOT February 2020	CONT	SECT	JOB	HIGHWAY
REVISIONS	0914	05	222	RM 2243
04/2021 Updated X values.	DIST	COUNTY		SHEET NO.
	AUS	WILLIAMSON		286

DISCLAIMER:
The use of this standard is governed by the "Texas Engineering Practice Act". No warranty of any kind is made by TxDOT for any purpose whatsoever. TxDOT assumes no responsibility for the conversion of this standard to other formats or for incorrect results or damages resulting from its use.

DATE: 4/10/2025 1:05:36 PM
FILE: G:\TXC\Projects\County_Williamson\7473-02 RM 2243 Phase 1A\03_CADD\01_Shts\06-Shts\CD-SCC08-21.dgn

SECTION DIMENSIONS				FILL HEIGHT (5)	BILLS OF REINFORCING STEEL (For Box Length = 40 feet)																												QUANTITIES					
					Bars B					Bars C							Bars D							Bars M ~ #4				Bars F1 ~ #4 at 18" Spa			Bars F2 ~ #4 at 18" Spa			Bars H 4 ~ #4		Bars K		Per Foot of Barrel		Curb		Total	
S	H	T	U		No.	Size	Spa	Length	Weight	No.	Size	Spa	Length	Weight	" X "	" Y "	No.	Size	Spa	Length	Weight	" Y "	" Z "	No.	Spa	Length	Weight	No.	Length	Wt	No.	Length	Weight	Length	Wt	No.	Wt	Conc (CY)	Reinf (Lb)	Conc (CY)	Reinf (Lb)	Conc (CY)	Reinf (Lb)
8' – 0"	3' – 0"	8"	7"	13'	162	#6	6"	8' – 11"	2,170	108	#6	9"	8' – 8"	1,406	3' – 6"	5' – 2"	108	#6	9"	8' – 3"	1,338	5' – 2"	3' – 1"	108	9"	3' – 0"	216	6	39' – 9"	159	32	39' – 9"	850	8' – 11"	24	20	56	0.582	153.5	0.7	80	24.0	6,219
8' – 0"	3' – 0"	8"	7"	16'	162	#6	6"	8' – 11"	2,170	108	#6	9"	8' – 8"	1,406	3' – 6"	5' – 2"	108	#6	9"	8' – 3"	1,338	5' – 2"	3' – 1"	108	9"	3' – 0"	216	6	39' – 9"	159	32	39' – 9"	850	8' – 11"	24	20	56	0.582	153.5	0.7	80	24.0	6,219
8' – 0"	3' – 0"	10"	8"	20'	162	#6	6"	9' – 1"	2,210	108	#6	9"	8' – 10"	1,433	3' – 8"	5' – 2"	108	#6	9"	8' – 5"	1,365	5' – 2"	3' – 3"	82	12"	3' – 0"	164	6	39' – 9"	159	32	39' – 9"	850	9' – 1"	24	22	61	0.724	154.5	0.7	85	29.6	6,266
8' – 0"	3' – 0"	11"	8"	23'	162	#6	6"	9' – 1"	2,210	108	#6	9"	8' – 11"	1,446	3' – 9"	5' – 2"	108	#6	9"	8' – 6"	1,379	5' – 2"	3' – 4"	82	12"	3' – 0"	164	6	39' – 9"	159	32	39' – 9"	850	9' – 1"	24	22	61	0.782	155.2	0.7	85	32.0	6,293
8' – 0"	3' – 0"	13"	9"	30'	162	#6	6"	9' – 3"	2,251	108	#6	9"	9' – 2"	1,487	3' – 11"	5' – 3"	108	#6	9"	8' – 9"	1,419	5' – 3"	3' – 6"	108	9"	3' – 0"	216	6	39' – 9"	159	32	39' – 9"	850	9' – 3"	25	22	61	0.929	159.6	0.7	86	37.9	6,468
8' – 0"	4' – 0"	8"	7"	13'	162	#6	6"	8' – 11"	2,170	108	#6	9"	9' – 8"	1,568	4' – 6"	5' – 2"	108	#6	9"	8' – 3"	1,338	5' – 2"	3' – 1"	108	9"	4' – 0"	289	6	39' – 9"	159	32	39' – 9"	850	8' – 11"	24	20	56	0.626	159.4	0.7	80	25.7	6,454
8' – 0"	4' – 0"	8"	7"	16'	162	#6	6"	8' – 11"	2,170	108	#6	9"	9' – 8"	1,568	4' – 6"	5' – 2"	108	#6	9"	8' – 3"	1,338	5' – 2"	3' – 1"	108	9"	4' – 0"	289	6	39' – 9"	159	32	39' – 9"	850	8' – 11"	24	20	56	0.626	159.4	0.7	80	25.7	6,454
8' – 0"	4' – 0"	10"	8"	20'	162	#6	6"	9' – 1"	2,210	108	#6	9"	9' – 10"	1,595	4' – 8"	5' – 2"	108	#6	9"	8' – 5"	1,365	5' – 2"	3' – 3"	82	12"	4' – 0"	219	6	39' – 9"	159	32	39' – 9"	850	9' – 1"	24	22	61	0.774	160.0	0.7	85	31.6	6,483
8' – 0"	4' – 0"	11"	8"	23'	162	#6	6"	9' – 1"	2,210	108	#6	9"	9' – 11"	1,609	4' – 9"	5' – 2"	108	#6	9"	8' – 6"	1,379	5' – 2"	3' – 4"	82	12"	4' – 0"	219	6	39' – 9"	159	32	39' – 9"	850	9' – 1"	24	22	61	0.831	160.7	0.7	85	33.9	6,511
8' – 0"	4' – 0"	13"	9"	30'	162	#6	6"	9' – 3"	2,251	108	#6	9"	10' – 2"	1,649	4' – 11"	5' – 3"	108	#6	9"	8' – 9"	1,419	5' – 3"	3' – 6"	108	9"	4' – 0"	289	6	39' – 9"	159	32	39' – 9"	850	9' – 3"	25	22	61	0.985	165.4	0.7	86	40.1	6,703
8' – 0"	5' – 0"	8"	7"	13'	162	#6	6"	8' – 11"	2,170	108	#6	9"	10' – 8"	1,730	5' – 6"	5' – 2"	108	#6	9"	8' – 3"	1,338	5' – 2"	3' – 1"	108	9"	5' – 0"	361	6	39' – 9"	159	36	39' – 9"	956	8' – 11"	24	20	56	0.669	167.9	0.7	80	27.4	6,794
8' – 0"	5' – 0"	8"	7"	16'	162	#6	6"	8' – 11"	2,170	108	#6	9"	10' – 8"	1,730	5' – 6"	5' – 2"	108	#6	9"	8' – 3"	1,338	5' – 2"	3' – 1"	108	9"	5' – 0"	361	6	39' – 9"	159	36	39' – 9"	956	8' – 11"	24	20	56	0.669	167.9	0.7	80	27.4	6,794
8' – 0"	5' – 0"	10"	8"	20'	162	#6	6"	9' – 1"	2,210	108	#6	9"	10' – 10"	1,757	5' – 8"	5' – 2"	108	#6	9"	8' – 5"	1,365	5' – 2"	3' – 3"	82	12"	5' – 0"	274	6	39' – 9"	159	36	39' – 9"	956	9' – 1"	24	22	61	0.823	168.0	0.7	85	33.6	6,806
8' – 0"	5' – 0"	11"	8"	23'	162	#6	6"	9' – 1"	2,210	108	#6	9"	10' – 11"	1,771	5' – 9"	5' – 2"	108	#6	9"	8' – 6"	1,379	5' – 2"	3' – 4"	82	12"	5' – 0"	274	6	39' – 9"	159	36	39' – 9"	956	9' – 1"	24	22	61	0.881	168.7	0.7	85	35.9	6,834
8' – 0"	5' – 0"	13"	9"	30'	162	#6	6"	9' – 3"	2,251	108	#6	9"	11' – 2"	1,811	5' – 11"	5' – 3"	108	#6	9"	8' – 9"	1,419	5' – 3"	3' – 6"	108	9"	5' – 0"	361	6	39' – 9"	159	36	39' – 9"	956	9' – 3"	25	22	61	1.040	173.9	0.7	86	42.3	7,043
8' – 0"	6' – 0"	8"	7"	13'	162	#6	6"	8' – 11"	2,170	108	#6	9"	11' – 8"	1,893	6' – 6"	5' – 2"	108	#6	9"	8' – 3"	1,338	5' – 2"	3' – 1"	108	9"	6' – 0"	433	6	39' – 9"	159	40	39' – 9"	1,062	8' – 11"	24	20	56	0.712	176.4	0.7	80	29.2	7,135
8' – 0"	6' – 0"	8"	7"	16'	162	#6	6"	8' – 11"	2,170	108	#6	9"	11' – 8"	1,893	6' – 6"	5' – 2"	108	#6	9"	8' – 3"	1,338	5' – 2"	3' – 1"	108	9"	6' – 0"	433	6	39' – 9"	159	40	39' – 9"	1,062	8' – 11"	24	20	56	0.712	176.4	0.7	80	29.2	7,135
8' – 0"	6' – 0"	10"	8"	20'	162	#6	6"	9' – 1"	2,210	108	#6	9"	11' – 10"	1,920	6' – 8"	5' – 2"	108	#6	9"	8' – 5"	1,365	5' – 2"	3' – 3"	82	12"	6' – 0"	329	6	39' – 9"	159	40	39' – 9"	1,062	9' – 1"	24	22	61	0.872	176.1	0.7	85	35.6	7,130
8' – 0"	6' – 0"	11"	8"	23'	162	#6	6"	9' – 1"	2,210	108	#6	9"	11' – 11"	1,933	6' – 9"	5' – 2"	108	#6	9"	8' – 6"	1,379	5' – 2"	3' – 4"	82	12"	6' – 0"	329	6	39' – 9"	159	40	39' – 9"	1,062	9' – 1"	24	22	61	0.930	176.8	0.7	85	37.9	7,157
8' – 0"	6' – 0"	13"	9"	30'	162	#6	6"	9' – 3"	2,251	108	#6	9"	12' – 2"	1,974	6' – 11"	5' – 3"	108	#6	9"	8' – 9"	1,419	5' – 3"	3' – 6"	108	9"	6' – 0"	433	6	39' – 9"	159	40	39' – 9"	1,062	9' – 3"	25	22	61	1.096	182.5	0.7	86	44.5	7,384
8' – 0"	7' – 0"	8"	7"	13'	162	#6	6"	8' – 11"	2,170	108	#6	9"	12' – 8"	2,055	7' – 6"	5' – 2"	108	#6	9"	8' – 3"	1,338	5' – 2"	3' – 1"	108	9"	7' – 0"	505	6	39' – 9"	159	40	39' – 9"	1,062	8' – 11"	24	20	56	0.755	182.2	0.7	80	30.9	7,369
8' – 0"	7' – 0"	8"	7"	16'	162	#6	6"	8' – 11"	2,170	162	#6	6"	12' – 8"	3,082	7' – 6"	5' – 2"	162	#6	6"	8' – 3"	2,007	5' – 2"	3' – 1"	108	9"	7' – 0"	505	6	39' – 9"	159	40	39' – 9"	1,062	8' – 11"	24	20	56	0.755	224.6	0.7	80	30.9	9,065
8' – 0"	7' – 0"	10"	8"	20'	162	#6	6"	9' – 1"	2,210	162	#6	6"	12' – 10"	3,123	7' – 8"	5' – 2"	162	#6	6"	8' – 5"	2,048	5' – 2"	3' – 3"	82	12"	7' – 0"	383	6	39' – 9"	159	40	39' – 9"	1,062	9' – 1"	24	22	61	0.922	224.6	0.7	85	37.6	9,070
8' – 0"	7' – 0"	11"	8"	23'	162	#6	6"	9' – 1"	2,210	162	#6	6"	12' – 11"	3,143	7' – 9"	5' – 2"	162	#6	6"	8' – 6"	2,068	5' – 2"	3' – 4"	82	12"	7' – 0"	383	6	39' – 9"	159	40	39' – 9"	1,062	9' – 1"	24	22	61	0.979	225.6	0.7	85	39.8	9,110
8' – 0"	7' – 0"	13"	9"	30'	162	#6	6"	9' – 3"	2,251	162	#6	6"	13' – 2"	3,204	7' – 11"	5' – 3"	162	#6	6"	8' – 9"	2,129	5' – 3"	3' – 6"	108	9"	7' – 0"	505	6	39' – 9"	159	40	39' – 9"	1,062	9' – 3"	25	22	61	1.151	232.8	0.7	86	46.7	9,396
8' – 0"	8' – 0"	8"	7"	13'	162	#6	6"	8' – 11"	2,170	108	#6	9"	13' – 8"	2,217	8' – 6"	5' – 2"	108	#6	9"	8' – 3"	1,338	5' – 2"	3' – 1"	108	9"	8' – 0"	577	6	39' – 9"	159	44	39' – 9"	1,168	8' – 11"	24	20	56	0.798	190.7	0.7	80	32.6	7,709
8' – 0"	8' – 0"	8"	7"	16'	162	#6	6"	8' – 11"	2,170	162	#6	6"	13' – 8"	3,325	8' – 6"	5' – 2"	162	#6	6"	8' – 3"	2,007	5' – 2"	3' – 1"	108	9"	8' – 0"	577	6	39' – 9"	159	44	39' – 9"	1,168	8' – 11"	24	20	56	0.798	235.2	0.7	80	32.6	9,486
8' – 0"	8' – 0"	10"	8"	20'	162	#6	6"	9' – 1"	2,210	162	#6	6"	13' – 10"	3,366	8' – 8"	5' – 2"	162	#6	6"	8' – 5"	2,048	5' – 2"	3' – 3"	108	9"	8' – 0"	577	6	39' – 9"	159	44	39' – 9"	1,168	9' – 1"	24	22	61	0.971	238.2	0.7	85	39.5	9,613
8' – 0"	8' – 0"	11"	8"	23'	162	#6	6"	9' – 1"	2,210	162	#6	6"	13' – 11"	3,386	8' – 9"	5' – 2"	162	#6	6"	8' – 6"	2,068	5' – 2"	3' – 4"	162	6"	8' – 0"	866	6	39' – 9"	159	44	39' – 9"	1,168	9' – 1"	24	22	61	1.029	246.4	0.7	85	41.8	9,942
8' – 0"	8' – 0"	13"	9"	30'	162	#6	6"	9' – 3"	2,251	162	#6	6"	14' – 2"	3,447	8' – 11"	5' – 3"	162	#6	6"	8' – 9"	2,129	5' – 3"	3' – 6"	162	6"	8' – 0"	866	6	39' – 9"	159	44	39' – 9"	1,168	9' – 3"	25	22	61	1.207	250.5	0.7	86	49.0	10,106

(5) For direct traffic culverts (fill height ≤ 2 ft.), identify the required box size and select the option with the minimum fill height.

HL93 LOADING SHEET 2 OF 2

Texas Department of Transportation

Bridge Division Standard

SINGLE BOX CULVERTS CAST-IN-PLACE

0' TO 30' FILL

SCC-8

FILE:	DN: TBE	CK: BMP	DW: TxDOT	CK: TxDOT
©TxDOT February 2020	CONT	SECT	JOB	HIGHWAY
REVISIONS	0914	05	222	RM 2243
04/2021 Updated X values.	DIST	COUNTY		SHEET NO.
	AUS	WILLIAMSON		287

DISCLAIMER:
The use of this standard is governed by the "Texas Engineering Practice Act". No warranty of any kind is made by TxDOT for any purpose whatsoever. TxDOT assumes no responsibility for the conversion of this standard to other formats or for incorrect results or damages resulting from its use.

DATE: 4/10/2025 1:05:38 PM
FILE: G:\TXC\Projects\County_Williamson\7473-02 RM 2243 Phase 1A\03_CADD\01_Shts\06-DRNG\Stds\CD-SCC09-21.dgn

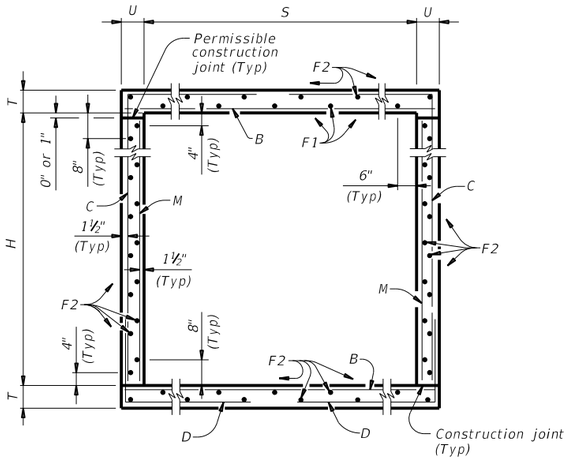

TYPICAL SECTION

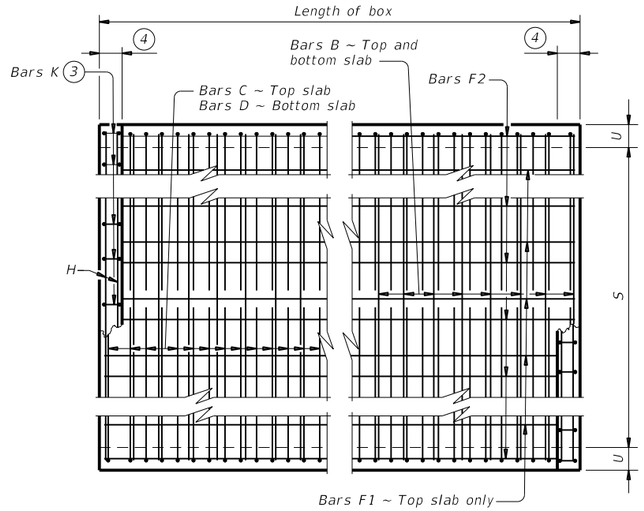

PLAN OF REINF STEEL

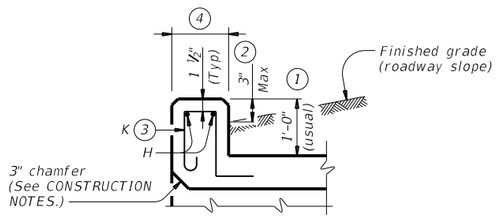

SECTION THRU CURB

(1) 0" Min to 5'-0" Max. Estimated curb heights are shown elsewhere in the plans. For structures with pedestrian rail or curbs taller than 1'-0", refer to the Extended Curb Details (ECD) standard sheet. For structures with T631 or T631LS bridge rail, refer to the Mounting Details for T631 & T631LS Rails (T631-CM) standard sheet. Refer to the Rail Anchorage Curb (RAC) standard sheet for structures with bridge rail other than T631 or T631LS.

(2) For vehicle safety, the following requirements must be met:
- For structures without bridge rail, construct curbs no more than 3" above finished grade.
- For structures with bridge rail, construct curbs flush with finished grade.

Reduce curb heights, if necessary, to meet the above requirements. No changes will be made in quantities and no additional compensation will be allowed for this work.

(3) For curbs less than 1'-0" high, tilt Bars K or reduce bar height as necessary to maintain cover. For curbs less than 3" high, Bars K may be omitted.

(4) 1'-0" typical. 2'-3" when the Rail Anchorage Curb (RAC) standard sheet is referred to elsewhere in the plans.

The Contractor may replace Bars B, C, D, E, F1, F2, M, Y, and/or Z with deformed welded wire reinforcement (WWR) meeting the requirements of ASTM A1064. The area of required reinforcement may be reduced by the ratio of 60 ksi / 70 ksi. Spacing of WWR is limited to 4" Min and 18" Max. When required, provide lap splices in the WWR of the same length required for the equivalent bar size, rounded up for wire sizes between conventional bar sizes. The lap length required for WWR is never less than the lap length required for uncoated #4 bars.

Example conversion: Replacing No. 6 Gr 60 at 6" Spacing with WWR.
Required WWR = (0.44 sq. in. per 0.5 ft.) x (60 ksi / 70 ksi) = 0.755 sq. in. per ft.
If D30.6 wire is used to meet the 0.755 sq. in. per ft. requirement in this example, the required spacing = (0.306 sq. in.) / (0.755 sq. in. per ft.) x (12 in. per ft.) = 4.86" Max spacing. Required lap length for the provided D30.6 wire is 2'-1" (the same minimum lap length required for uncoated #5 bars, as listed under MATERIAL NOTES).

CONSTRUCTION NOTES:

Do not use permanent forms.
Chamfer the bottom edge of the top slab 3" at the entrance.
Optionally, raise construction joints shown at the flow line by a maximum of 6". If this option is taken, Bars M may be cut off or raised, Bars C and D may be reversed.

MATERIAL NOTES:

Provide Grade 60 reinforcing steel.
Provide galvanized reinforcing steel if required elsewhere in the plans.
Provide Class C concrete (f'c = 3,600 psi) for culvert barrel and curb, with the following exceptions: provide Class S concrete (f'c = 4,000 psi) for top slabs of:
- culverts with overlay,
- culverts with 1-to-2 course surface treatment, or
- culverts with the top slab as the final riding surface.

Provide bar laps, where required, as follows:
- Uncoated or galvanized ~ #4 = 1'-8" Min
- Uncoated or galvanized ~ #5 = 2'-1" Min
- Uncoated or galvanized ~ #6 = 2'-6" Min

GENERAL NOTES:

Designed according to AASHTO LRFD Bridge Design Specifications for the range of fill heights shown.
See the Single Box Culverts Cast-In-Place Miscellaneous Detail (SCC-MD) standard sheet for details pertaining to skewed ends, angle sections, and lengthening.

Cover dimensions are clear dimensions, unless noted otherwise.
Reinforcing bar dimensions shown are out-to-out of bar.

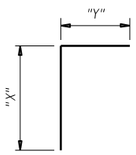

BARS C

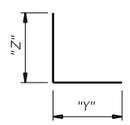

BARS D

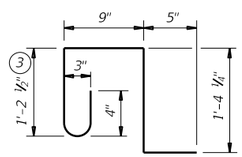

BARS K (#4)
(Spa = 1'-0" Max)
(Length = 4'-2")

HL93 LOADING SHEET 1 OF 2

Texas Department of Transportation — Bridge Division Standard

SINGLE BOX CULVERTS CAST-IN-PLACE
0' TO 30' FILL

SCC-9

FILE: CD-SCC09-21.dgn	DN: TBE	CK: BMP	DW: TxDOT	CK: TxDOT
©TxDOT February 2020	CONT	SECT	JOB	HIGHWAY
REVISIONS	0914	05	222	RM 2243
04/2021 Updated X values.	DIST	COUNTY		SHEET NO.
	AUS	WILLIAMSON		288

DISCLAIMER:
The use of this standard is governed by the "Texas Engineering Practice Act". No warranty of any kind is made by TxDOT for any purpose whatsoever. TxDOT assumes no responsibility for the conversion of this standard to other formats or for incorrect results or damages resulting from its use.

DATE: 4/10/2025 1:05:39 PM
FILE: G:\TXC\Projects\County_Williamson\7473-02 RM 2243 Phase 1A\03_CADD\01_Shts\06-DRNG\Stds\CD-SCC09-21.dgn

SECTION DIMENSIONS				FILL HEIGHT (5)	BILLS OF REINFORCING STEEL (For Box Length = 40 feet)																												QUANTITIES					
					Bars B					Bars C							Bars D							Bars M ~ #4				Bars F1 ~ #4 at 18" Spa			Bars F2 ~ #4 at 18" Spa			Bars H 4 ~ #4		Bars K		Per Foot of Barrel		Curb		Total	
S	H	T	U		No.	Size	Spa	Length	Weight	No.	Size	Spa	Length	Weight	" X "	" Y "	No.	Size	Spa	Length	Weight	" Y "	" Z "	No.	Spa	Length	Wt	No.	Length	Wt	No.	Length	Weight	Length	Wt	No.	Wt	Conc (CY)	Reinf (Lb)	Conc (CY)	Reinf (Lb)	Conc (CY)	Reinf (Lb)
9' – 0"	4' – 0"	8"	7"	10'	162	#6	6"	9' – 11"	2,413	108	#6	9"	10' – 0"	1,622	4' – 6"	5' – 6"	108	#6	9"	8' – 7"	1,392	5' – 6"	3' – 1"	108	9"	4' – 0"	289	7	39' – 9"	186	35	39' – 9"	929	9' – 11"	26	22	61	0.675	170.8	0.8	87	27.8	6,918
9' – 0"	4' – 0"	8"	7"	13'	162	#6	6"	9' – 11"	2,413	162	#6	6"	10' – 0"	2,433	4' – 6"	5' – 6"	162	#6	6"	8' – 7"	2,089	5' – 6"	3' – 1"	108	9"	4' – 0"	289	7	39' – 9"	186	35	39' – 9"	929	9' – 11"	26	22	61	0.675	208.5	0.8	87	27.8	8,426
9' – 0"	4' – 0"	9"	8"	16'	162	#6	6"	10' – 1"	2,454	162	#6	6"	10' – 2"	2,474	4' – 7"	5' – 7"	162	#6	6"	8' – 9"	2,129	5' – 7"	3' – 2"	82	12"	4' – 0"	219	7	39' – 9"	186	35	39' – 9"	929	10' – 1"	27	24	67	0.772	209.8	0.8	94	31.6	8,485
9' – 0"	4' – 0"	11"	8"	20'	162	#6	6"	10' – 1"	2,454	162	#6	6"	10' – 4"	2,514	4' – 9"	5' – 7"	162	#6	6"	8' – 11"	2,170	5' – 7"	3' – 4"	82	12"	4' – 0"	219	7	39' – 9"	186	35	39' – 9"	929	10' – 1"	27	24	67	0.899	211.8	0.8	94	36.7	8,566
9' – 0"	4' – 0"	12"	9"	23'	162	#6	6"	10' – 3"	2,494	162	#6	6"	10' – 5"	2,535	4' – 10"	5' – 7"	162	#6	6"	9' – 0"	2,190	5' – 7"	3' – 5"	108	9"	4' – 0"	289	7	39' – 9"	186	35	39' – 9"	929	10' – 3"	27	24	67	1.000	215.6	0.8	94	40.8	8,717
9' – 0"	4' – 0"	13"	10"	26'	162	#6	6"	10' – 5"	2,535	162	#6	6"	10' – 7"	2,575	4' – 11"	5' – 8"	162	#6	6"	9' – 2"	2,230	5' – 8"	3' – 6"	108	9"	4' – 0"	289	7	39' – 9"	186	35	39' – 9"	929	10' – 5"	28	24	67	1.103	218.6	0.8	95	44.9	8,839
9' – 0"	4' – 0"	14"	11"	30'	162	#6	6"	10' – 7"	2,575	162	#6	6"	10' – 9"	2,616	5' – 0"	5' – 9"	162	#6	6"	9' – 4"	2,271	5' – 9"	3' – 7"	108	9"	4' – 0"	289	7	39' – 9"	186	35	39' – 9"	929	10' – 7"	28	24	67	1.208	221.7	0.8	95	49.1	8,961
9' – 0"	5' – 0"	8"	7"	10'	162	#6	6"	9' – 11"	2,413	108	#6	9"	11' – 0"	1,784	5' – 6"	5' – 6"	108	#6	9"	8' – 7"	1,392	5' – 6"	3' – 1"	108	9"	5' – 0"	361	7	39' – 9"	186	39	39' – 9"	1,036	9' – 11"	26	22	61	0.718	179.3	0.8	87	29.5	7,259
9' – 0"	5' – 0"	8"	7"	13'	162	#6	6"	9' – 11"	2,413	162	#6	6"	11' – 0"	2,677	5' – 6"	5' – 6"	162	#6	6"	8' – 7"	2,089	5' – 6"	3' – 1"	108	9"	5' – 0"	361	7	39' – 9"	186	39	39' – 9"	1,036	9' – 11"	26	22	61	0.718	219.1	0.8	87	29.5	8,849
9' – 0"	5' – 0"	9"	8"	16'	162	#6	6"	10' – 1"	2,454	162	#6	6"	11' – 2"	2,717	5' – 7"	5' – 7"	162	#6	6"	8' – 9"	2,129	5' – 7"	3' – 2"	82	12"	5' – 0"	274	7	39' – 9"	186	39	39' – 9"	1,036	10' – 1"	27	24	67	0.821	219.9	0.8	94	33.6	8,890
9' – 0"	5' – 0"	11"	8"	20'	162	#6	6"	10' – 1"	2,454	162	#6	6"	11' – 4"	2,758	5' – 9"	5' – 7"	162	#6	6"	8' – 11"	2,170	5' – 7"	3' – 4"	82	12"	5' – 0"	274	7	39' – 9"	186	39	39' – 9"	1,036	10' – 1"	27	24	67	0.949	222.0	0.8	94	38.7	8,972
9' – 0"	5' – 0"	12"	9"	23'	162	#6	6"	10' – 3"	2,494	162	#6	6"	11' – 5"	2,778	5' – 10"	5' – 7"	162	#6	6"	9' – 0"	2,190	5' – 7"	3' – 5"	108	9"	5' – 0"	361	7	39' – 9"	186	39	39' – 9"	1,036	10' – 3"	27	24	67	1.056	226.1	0.8	94	43.0	9,139
9' – 0"	5' – 0"	13"	10"	26'	162	#6	6"	10' – 5"	2,535	162	#6	6"	11' – 7"	2,819	5' – 11"	5' – 8"	162	#6	6"	9' – 2"	2,230	5' – 8"	3' – 6"	108	9"	5' – 0"	361	7	39' – 9"	186	39	39' – 9"	1,036	10' – 5"	28	24	67	1.165	229.2	0.8	95	47.4	9,262
9' – 0"	5' – 0"	14"	11"	30'	162	#6	6"	10' – 7"	2,575	162	#6	6"	11' – 9"	2,859	6' – 0"	5' – 9"	162	#6	6"	9' – 4"	2,271	5' – 9"	3' – 7"	108	9"	5' – 0"	361	7	39' – 9"	186	39	39' – 9"	1,036	10' – 7"	28	24	67	1.276	232.2	0.8	95	51.8	9,383
9' – 0"	6' – 0"	8"	7"	10'	162	#6	6"	9' – 11"	2,413	108	#6	9"	12' – 0"	1,947	6' – 6"	5' – 6"	108	#6	9"	8' – 7"	1,392	5' – 6"	3' – 1"	108	9"	6' – 0"	433	7	39' – 9"	186	43	39' – 9"	1,142	9' – 11"	26	22	61	0.761	187.8	0.8	87	31.2	7,600
9' – 0"	6' – 0"	8"	7"	13'	162	#6	6"	9' – 11"	2,413	162	#6	6"	12' – 0"	2,920	6' – 6"	5' – 6"	162	#6	6"	8' – 7"	2,089	5' – 6"	3' – 1"	108	9"	6' – 0"	433	7	39' – 9"	186	43	39' – 9"	1,142	9' – 11"	26	22	61	0.761	229.6	0.8	87	31.2	9,270
9' – 0"	6' – 0"	9"	8"	16'	162	#6	6"	10' – 1"	2,454	162	#6	6"	12' – 2"	2,960	6' – 7"	5' – 7"	162	#6	6"	8' – 9"	2,129	5' – 7"	3' – 2"	82	12"	6' – 0"	329	7	39' – 9"	186	43	39' – 9"	1,142	10' – 1"	27	24	67	0.870	230.0	0.8	94	35.6	9,294
9' – 0"	6' – 0"	11"	8"	20'	162	#6	6"	10' – 1"	2,454	162	#6	6"	12' – 4"	3,001	6' – 9"	5' – 7"	162	#6	6"	8' – 11"	2,170	5' – 7"	3' – 4"	82	12"	6' – 0"	329	7	39' – 9"	186	43	39' – 9"	1,142	10' – 1"	27	24	67	0.998	232.1	0.8	94	40.7	9,376
9' – 0"	6' – 0"	12"	9"	23'	162	#6	6"	10' – 3"	2,494	162	#6	6"	12' – 5"	3,021	6' – 10"	5' – 7"	162	#6	6"	9' – 0"	2,190	5' – 7"	3' – 5"	108	9"	6' – 0"	433	7	39' – 9"	186	43	39' – 9"	1,142	10' – 3"	27	24	67	1.111	236.7	0.8	94	45.2	9,560
9' – 0"	6' – 0"	13"	10"	26'	162	#6	6"	10' – 5"	2,535	162	#6	6"	12' – 7"	3,062	6' – 11"	5' – 8"	162	#6	6"	9' – 2"	2,230	5' – 8"	3' – 6"	108	9"	6' – 0"	433	7	39' – 9"	186	43	39' – 9"	1,142	10' – 5"	28	24	67	1.226	239.7	0.8	95	49.8	9,683
9' – 0"	6' – 0"	14"	11"	30'	162	#6	6"	10' – 7"	2,575	162	#6	6"	12' – 9"	3,102	7' – 0"	5' – 9"	162	#6	6"	9' – 4"	2,271	5' – 9"	3' – 7"	108	9"	6' – 0"	433	7	39' – 9"	186	43	39' – 9"	1,142	10' – 7"	28	24	67	1.344	242.7	0.8	95	54.6	9,804
9' – 0"	7' – 0"	8"	7"	10'	162	#6	6"	9' – 11"	2,413	108	#6	9"	13' – 0"	2,109	7' – 6"	5' – 6"	108	#6	9"	8' – 7"	1,392	5' – 6"	3' – 1"	108	9"	7' – 0"	505	7	39' – 9"	186	43	39' – 9"	1,142	9' – 11"	26	22	61	0.805	193.7	0.8	87	33.0	7,834
9' – 0"	7' – 0"	8"	7"	13'	162	#6	6"	9' – 11"	2,413	162	#6	6"	13' – 0"	3,163	7' – 6"	5' – 6"	162	#6	6"	8' – 7"	2,089	5' – 6"	3' – 1"	108	9"	7' – 0"	505	7	39' – 9"	186	43	39' – 9"	1,142	9' – 11"	26	22	61	0.805	237.5	0.8	87	33.0	9,585
9' – 0"	7' – 0"	9"	8"	16'	162	#6	6"	10' – 1"	2,454	162	#6	6"	13' – 2"	3,204	7' – 7"	5' – 7"	162	#6	6"	8' – 9"	2,129	5' – 7"	3' – 2"	82	12"	7' – 0"	383	7	39' – 9"	186	43	39' – 9"	1,142	10' – 1"	27	24	67	0.920	237.5	0.8	94	37.6	9,592
9' – 0"	7' – 0"	11"	8"	20'	162	#6	6"	10' – 1"	2,454	162	#6	6"	13' – 4"	3,244	7' – 9"	5' – 7"	162	#6	6"	8' – 11"	2,170	5' – 7"	3' – 4"	82	12"	7' – 0"	383	7	39' – 9"	186	43	39' – 9"	1,142	10' – 1"	27	24	67	1.047	239.5	0.8	94	42.6	9,673
9' – 0"	7' – 0"	12"	9"	23'	162	#6	6"	10' – 3"	2,494	162	#6	6"	13' – 5"	3,265	7' – 10"	5' – 7"	162	#6	6"	9' – 0"	2,190	5' – 7"	3' – 5"	108	9"	7' – 0"	505	7	39' – 9"	186	43	39' – 9"	1,142	10' – 3"	27	24	67	1.167	244.6	0.8	94	47.5	9,876
9' – 0"	7' – 0"	13"	10"	26'	162	#6	6"	10' – 5"	2,535	162	#6	6"	13' – 7"	3,305	7' – 11"	5' – 8"	162	#6	6"	9' – 2"	2,230	5' – 8"	3' – 6"	108	9"	7' – 0"	505	7	39' – 9"	186	43	39' – 9"	1,142	10' – 5"	28	24	67	1.288	247.6	0.8	95	52.3	9,998
9' – 0"	7' – 0"	14"	11"	30'	162	#6	6"	10' – 7"	2,575	162	#6	6"	13' – 9"	3,346	8' – 0"	5' – 9"	162	#6	6"	9' – 4"	2,271	5' – 9"	3' – 7"	108	9"	7' – 0"	505	7	39' – 9"	186	43	39' – 9"	1,142	10' – 7"	28	24	67	1.412	250.6	0.8	95	57.3	10,120
9' – 0"	8' – 0"	8"	7"	10'	162	#6	6"	9' – 11"	2,413	108	#6	9"	14' – 0"	2,271	8' – 6"	5' – 6"	108	#6	9"	8' – 7"	1,392	5' – 6"	3' – 1"	108	9"	8' – 0"	577	7	39' – 9"	186	47	39' – 9"	1,248	9' – 11"	26	22	61	0.848	202.2	0.8	87	34.7	8,174
9' – 0"	8' – 0"	8"	7"	13'	162	#6	6"	9' – 11"	2,413	162	#6	6"	14' – 0"	3,407	8' – 6"	5' – 6"	162	#6	6"	8' – 7"	2,089	5' – 6"	3' – 1"	108	9"	8' – 0"	577	7	39' – 9"	186	47	39' – 9"	1,248	9' – 11"	26	22	61	0.848	248.0	0.8	87	34.7	10,007
9' – 0"	8' – 0"	9"	8"	16'	162	#6	6"	10' – 1"	2,454	162	#6	6"	14' – 2"	3,447	8' – 7"	5' – 7"	162	#6	6"	8' – 9"	2,129	5' – 7"	3' – 2"	108	9"	8' – 0"	577	7	39' – 9"	186	47	39' – 9"	1,248	10' – 1"	27	24	67	0.969	251.0	0.8	94	39.5	10,135
9' – 0"	8' – 0"	11"	8"	20'	162	#6	6"	10' – 1"	2,454	162	#6	6"	14' – 4"	3,488	8' – 9"	5' – 7"	162	#6	6"	8' – 11"	2,170	5' – 7"	3' – 4"	108	9"	8' – 0"	577	7	39' – 9"	186	47	39' – 9"	1,248	10' – 1"	27	24	67	1.097	253.1	0.8	94	44.6	10,217
9' – 0"	8' – 0"	12"	9"	23'	162	#6	6"	10' – 3"	2,494	162	#6	6"	14' – 5"	3,508	8' – 10"	5' – 7"	162	#6	6"	9' – 0"	2,190	5' – 7"	3' – 5"	108	9"	8' – 0"	577	7	39' – 9"	186	47	39' – 9"	1,248	10' – 3"	27	24	67	1.222	255.1	0.8	94	49.7	10,297
9' – 0"	8' – 0"	13"	10"	26'	162	#6	6"	10' – 5"	2,535	162	#6	6"	14' – 7"	3,548	8' – 11"	5' – 8"	162	#6	6"	9' – 2"	2,230	5' – 8"	3' – 6"	108	9"	8' – 0"	577	7	39' – 9"	186	47	39' – 9"	1,248	10' – 5"	28	24	67	1.350	258.1	0.8	95	54.8	10,419
9' – 0"	8' – 0"	14"	11"	30'	162	#6	6"	10' – 7"	2,575	162	#6	6"	14' – 9"	3,589	9' – 0"	5' – 9"	162	#6	6"	9' – 4"	2,271	5' – 9"	3' – 7"	108	9"	8' – 0"	577	7	39' – 9"	186	47	39' – 9"	1,248	10' – 7"	28	24	67	1.479	261.2	0.8	95	60.0	10,541
9' – 0"	9' – 0"	8"	7"	10'	162	#6	6"	9' – 11"	2,413	108	#6	9"	15' – 0"	2,433	9' – 6"	5' – 6"	108	#6	9"	8' – 7"	1,392	5' – 6"	3' – 1"	162	6"	9' – 0"	974	7	39' – 9"	186	51	39' – 9"	1,354	9' – 11"	26	22	61	0.891	218.8	0.8	87	36.4	8,839
9' – 0"	9' – 0"	8"	7"	13'	162	#6	6"	9' – 11"	2,413	162	#6	6"	15' – 0"	3,650	9' – 6"	5' – 6"	162	#6	6"	8' – 7"	2,089	5' – 6"	3' – 1"	162	6"	9' – 0"	974	7	39' – 9"	186	51	39' – 9"	1,354	9' – 11"	26	22	61	0.891	266.7	0.8	87	36.4	10,753
9' – 0"	9' – 0"	9"	8"	16'	162	#6	6"	10' – 1"	2,454	162	#6	6"	15' – 2"	3,690	9' – 7"	5' – 7"	162	#6	6"	8' – 9"	2,129	5' – 7"	3' – 2"	162	6"	9' – 0"	974	7	39' – 9"	186	51	39' – 9"	1,354	10' – 1"	27	24	67	1.019	269.7	0.8	94	41.5	10,881
9' – 0"	9' – 0"	11"	8"	20'	162	#6	6"	10' – 1"	2,454	162	#6	6"	15' – 4"	3,731	9' – 9"	5' – 7"	162	#6	6"	8' – 11"	2,170	5' – 7"	3' – 4"	162	6"	9' – 0"	974	7	39' – 9"	186	51	39' – 9"	1,354	10' – 1"	27	24	67	1.146	271.7	0.8	94	46.6	10,963
9' – 0"	9' – 0"	12"	9"	23'	162	#6	6"	10' – 3"	2,494	162	#6	6"	15' – 5"	3,751	9' – 10"	5' – 7"	162	#6	6"	9' – 0"	2,190	5' – 7"	3' – 5"	162	6"	9' – 0"	974	7	39' – 9"	186	51	39' – 9"	1,354	10' – 3"	27	24	67	1.278	273.7	0.8	94	51.9	11,043
9' – 0"	9' – 0"	13"	10"	26'	162	#6	6"	10' – 5"	2,535	162	#6	6"	15' – 7"	3,792	9' – 11"	5' – 8"	162	#6	6"	9' – 2"	2,230	5' – 8"	3' – 6"	162	6"	9' – 0"	974	7	39' – 9"	186	51	39' – 9"	1,354	10' – 5"	28	24	67	1.412	276.8	0.8	95	57.3	11,166
9' – 0"	9' – 0"	14"	11"	30'	162	#6	6"	10' – 7"	2,575	162	#6	6"	15' – 9"	3,832	10' – 0"	5' – 9"	162	#6	6"	9' – 4"	2,271	5' – 9"	3' – 7"	162	6"	9' – 0"	974	7	39' – 9"	186	51	39' – 9"	1,354	10' – 7"	28	24	67	1.547	279.8	0.8	95	62.7	11,287

(5) For direct traffic culverts (fill height ≤ 2 ft.), identify the required box size and select the option with the minimum fill height.

HL93 LOADING SHEET 2 OF 2

Texas Department of Transportation | Bridge Division Standard

SINGLE BOX CULVERTS CAST-IN-PLACE
0' TO 30' FILL

SCC-9

FILE: CD-SCC09-21.dgn	DN: TBE	CK: BMP	DW: TxDOT	CK: TxDOT
©TxDOT February 2020	CONT	SECT	JOB	HIGHWAY
REVISIONS	0914	05	222	RM 2243
04/2021 Updated X values.	DIST	COUNTY		SHEET NO.
	AUS	WILLIAMSON		289

DISCLAIMER:
The use of this standard is governed by the "Texas Engineering Practice Act". No warranty of any kind is made by TxDOT for any purpose whatsoever. TxDOT assumes no responsibility for the conversion of this standard to other formats or for incorrect results or damages resulting from its use.

DATE: 4/10/2025 1:05:41 PM
FILE: G:\TXC\Projects\County_Williamson\7473-02 RM 2243 Phase 1A\03_CADD\01_Shts\06-Shts\CD-DRNG\Stds\CD-SCP-MD-20.dgn

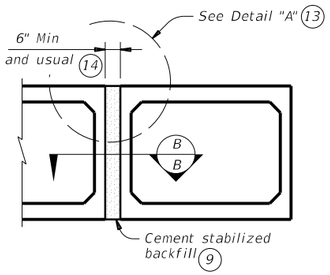

MULTIPLE UNIT PLACEMENT

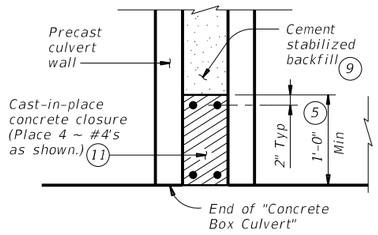

SECTION B-B

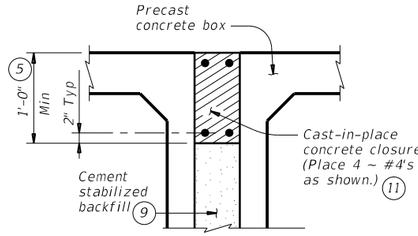

DETAIL "A" (13)

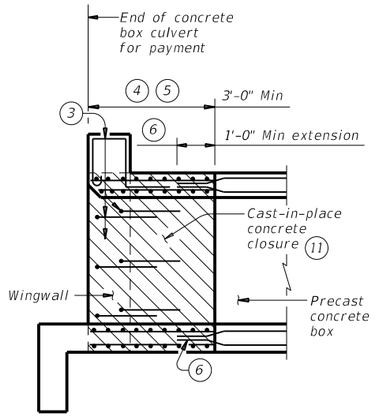

WINGWALL CONNECTION

(Also applies to safety end treatment.)

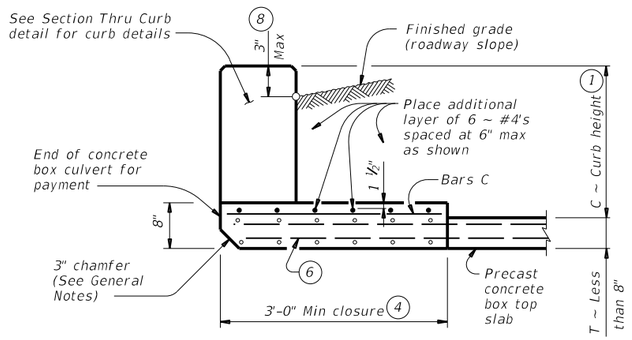

SECTION THRU TOP SLABS LESS THAN 8"

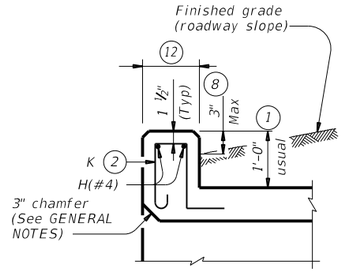

SECTION THRU CURB

QUANTITIES PER FOOT OF CURB (10)	
Reinforcing Steel	4.12 Lb
Concrete	0.037 CY

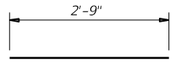

BARS C (#4)
(Spa = 1'-0" Max)

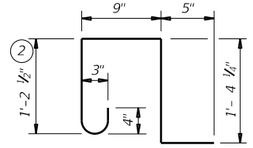

BARS K (#4)
(Spa = 1'-0" Max)
(Length = 4'-2")

1. 0" Min to 5'-0" Max. Estimated curb heights are shown elsewhere in the plans. For structures with pedestrian rail, bicycle rail, or curbs taller than 1'-0, refer to the Extended Curb Details (ECD) standard sheet. For structures with T631 or T631LS bridge rail, refer to the Mounting Details for T631 & T631LS Rails (T631-CM) standard sheet. Refer to the Box Culvert Rail Mounting Details (RAC) standard sheet for structures with bridge rail other than T631 or T631LS.
2. For curbs less than 1'-0" high, tilt Bars K or reduce bar height as necessary to maintain cover. For curbs less than 3" high, Bars K may be omitted.
3. Extend curb, wingwall, or safety end treatment reinforcing into concrete closure. Bend or trim, as necessary, any reinforcing that does not fit into closure area.
4. Provide a 3'-0" Min cast-in-place concrete closure. Break back boxes in the field or cast boxes short. Provide bands of reinforcing in the closure that are the same size and spacing as in the precast box section. Provide #4 longitudinal reinforcement spaced at 12 inches Max within the closure. Except where shown otherwise, construct the cast-in-place closure flush with the inside and outside faces of the precast box section.
5. For multiple unit placements, adjust the length of the closure for the interior walls as necessary. Provide a 3'-0" Min cast-in-place closure in the top slab, bottom slab, and exterior wall. See Section B-B detail when interior walls are cast full length.
6. Extend precast box reinforcing a minimum of 1'-0" into concrete closure (Typ).
7. Place bands of reinforcing matching the inside and outside face reinforcing in the gaps of the top and bottom slabs. Place a band matching the outside face reinforcing of the wall in the gaps of the walls (placed in the outside face only). Tack weld the bands to the exposed reinforcing at each point of contact.
8. For vehicle safety, the following requirements must be met:
   - For structures without bridge rail, construct curbs no more than 3" above finished grade.
   - For structures with bridge rail, construct curbs flush with finished grade.

   Reduce curb heights, if necessary, to meet the above requirements. No changes will be made in quantities and no additional compensation will be allowed for this work.
9. Cement stabilized backfill between boxes is considered part of the box culvert for payment.
10. All curb concrete and reinforcing is considered part of the box culvert for payment.
11. Any additional concrete and reinforcing required for the closures will be considered subsidiary to the box culvert for payment.
12. 1'-0" typical. 2'-3" when the Box Culvert Rail Mounting Details (RAC) standard sheet is referred to elsewhere in the plans.
13. For multiple unit placement with overlay, with 1 to 2 course surface treatment, or with the top slab as the final riding surface, provide wall closure as shown in Detail "A".
14. This dimension may be increased with approval of the Engineer to allow the precast boxes to be tunneled or jacked in accordance with Item 476, "Jacking, Boring, or Tunneling Pipe or Box." No payment will be made for any additional material in the gap between adjacent boxes.

MATERIAL NOTES:

Provide Grade 60 reinforcing steel.
Provide ASTM A1064 welded wire reinforcement.
Provide Class C concrete (f'c = 3,600 psi) for the closures.
Provide cement stabilized backfill meeting the requirements of Item 400, "Excavation and Backfill for Structures."
Any additional concrete required for the closures will be considered subsidiary to the box culvert.

GENERAL NOTES:

Designed according to AASHTO LRFD Bridge Design Specifications.
Refer to the Single Box Culverts Precast (SCP) standard sheets for details and notes not shown.
Chamfer the bottom edge of the top slab closure 3 inches at culvert closure ends.

Cover dimensions are clear dimensions, unless noted otherwise.
Reinforcing bars dimensions are out-to-out of bars.

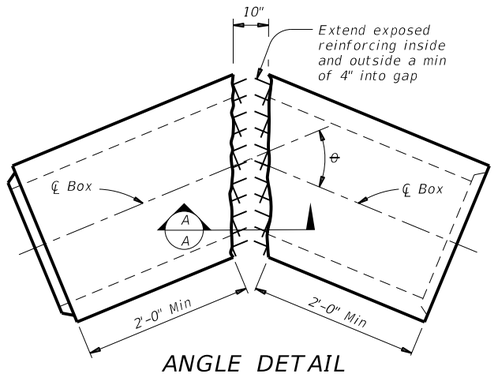

ANGLE DETAIL

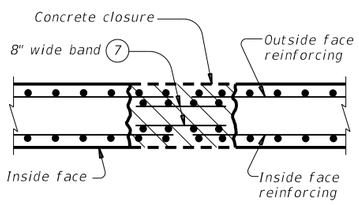

SECTION A-A

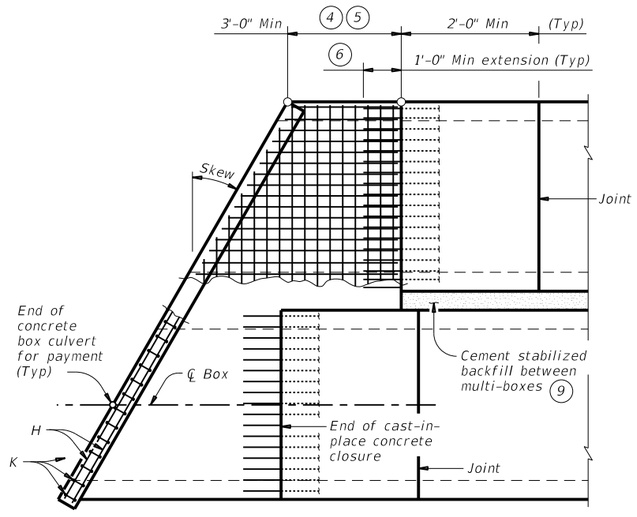

PLAN OF SKEWED ENDS

(Showing multi-box placement.)

HL93 LOADING

Texas Department of Transportation

Bridge Division Standard

BOX CULVERTS PRECAST MISCELLANEOUS DETAILS

SCP-MD

FILE:	DN: GAF	CK: LMW	DW: BWH/TxDOT	CK: GAF
©TxDOT February 2020	CONT	SECT	JOB	HIGHWAY
REVISIONS	0914	05	222	RM 2243
	DIST	COUNTY		SHEET NO.
	AUS	WILLIAMSON		290

DISCLAIMER:
The use of this standard is governed by the "Texas Engineering Practice Act". No warranty of any kind is made by TxDOT for any purpose whatsoever. TxDOT assumes no responsibility for the conversion of this standard to other formats or for incorrect results or damages resulting from its use.

DATE: 4/10/2025 1:05:42 PM
FILE: G:\TXC\Projects\County_Williamson\7473-02 RM 2243 Phase 1A\03_CADD\01_Shts\06-DRNG\Srds\CD-SCP05-20.dgn

BOX DATA

SECTION DIMENSIONS					Fill Height	M (Min)	REINFORCING (sq. in. / ft.) (2)							(1) Lift Weight
S (ft.)	H (ft.)	TT (in.)	TB (in.)	TS (in.)	(ft.)	(in.)	AS1	AS2	AS3	AS4	AS5	AS7	AS8	(tons)
5	2	8	7	6	< 2	–	0.19	0.27	0.18	0.14	0.19	0.19	0.17	6.0
5	2	6	6	6	2 < 3	44	0.22	0.20	0.16	0.14	–	–	–	5.1
5	2	6	6	6	3 – 5	44	0.16	0.14	0.14	0.14	–	–	–	5.1
5	2	6	6	6	10	36	0.15	0.14	0.14	0.14	–	–	–	5.1
5	2	6	6	6	15	36	0.20	0.18	0.18	0.14	–	–	–	5.1
5	2	6	6	6	20	36	0.26	0.23	0.24	0.14	–	–	–	5.1
5	2	6	6	6	25	36	0.33	0.29	0.29	0.14	–	–	–	5.1
5	2	6	6	6	30	36	0.39	0.34	0.35	0.14	–	–	–	5.1
5	3	8	7	6	< 2	–	0.19	0.31	0.21	0.14	0.19	0.19	0.17	6.6
5	3	6	6	6	2 < 3	45	0.18	0.24	0.19	0.14	–	–	–	5.7
5	3	6	6	6	3 – 5	36	0.14	0.17	0.16	0.14	–	–	–	5.7
5	3	6	6	6	10	36	0.14	0.16	0.17	0.14	–	–	–	5.7
5	3	6	6	6	15	35	0.16	0.21	0.22	0.14	–	–	–	5.7
5	3	6	6	6	20	35	0.21	0.27	0.28	0.14	–	–	–	5.7
5	3	6	6	6	25	35	0.26	0.34	0.34	0.14	–	–	–	5.7
5	3	6	6	6	30	35	0.31	0.41	0.41	0.14	–	–	–	5.7
5	4	8	7	6	< 2	–	0.19	0.33	0.24	0.14	0.19	0.19	0.17	7.2
5	4	6	6	6	2 < 3	45	0.16	0.27	0.22	0.14	–	–	–	6.3
5	4	6	6	6	3 – 5	45	0.14	0.19	0.18	0.14	–	–	–	6.3
5	4	6	6	6	10	36	0.14	0.18	0.18	0.14	–	–	–	6.3
5	4	6	6	6	15	35	0.14	0.23	0.24	0.14	–	–	–	6.3
5	4	6	6	6	20	35	0.17	0.30	0.31	0.14	–	–	–	6.3
5	4	6	6	6	25	35	0.21	0.37	0.38	0.14	–	–	–	6.3
5	4	6	6	6	30	35	0.25	0.44	0.45	0.14	–	–	–	6.3
5	5	8	7	6	< 2	–	0.19	0.35	0.26	0.14	0.19	0.19	0.17	7.8
5	5	6	6	6	2 < 3	45	0.14	0.29	0.24	0.14	–	–	–	6.9
5	5	6	6	6	3 – 5	45	0.14	0.21	0.20	0.14	–	–	–	6.9
5	5	6	6	6	10	45	0.14	0.19	0.20	0.14	–	–	–	6.9
5	5	6	6	6	15	36	0.14	0.24	0.25	0.14	–	–	–	6.9
5	5	6	6	6	20	35	0.15	0.31	0.32	0.14	–	–	–	6.9
5	5	6	6	6	25	35	0.18	0.38	0.39	0.14	–	–	–	6.9
5	5	6	6	6	30	35	0.21	0.46	0.47	0.14	–	–	–	6.9

(1) For box length = 8'-0"

(2) AS1 thru AS4, AS7 and AS8 are minimum required areas of reinforcement per linear foot of box length. AS5 is minimum required area of reinforcement per linear foot of box width.

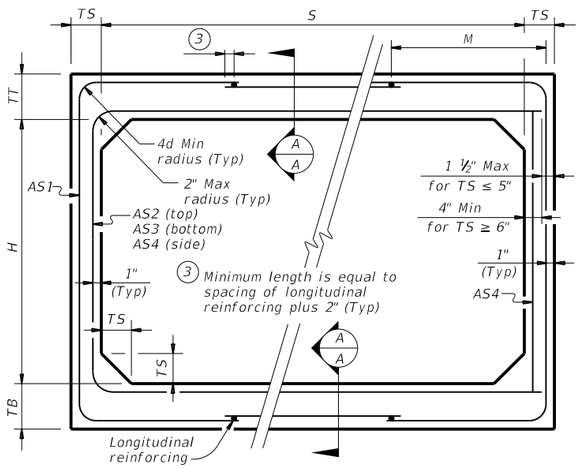

CORNER OPTION "A" CORNER OPTION "B"

FILL HEIGHT 2 FT AND GREATER

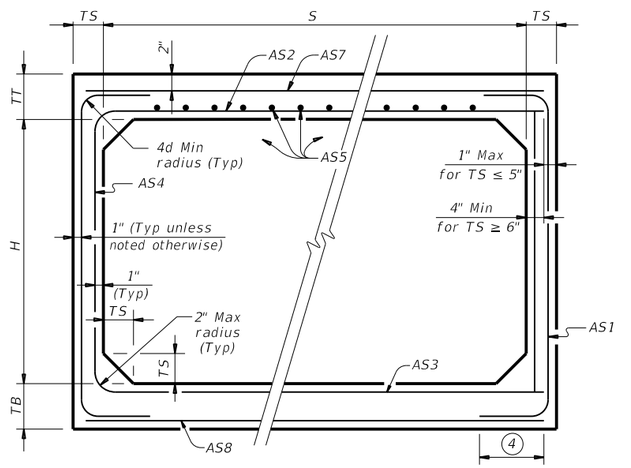

CORNER OPTION "A" CORNER OPTION "B"

FILL HEIGHT LESS THAN 2 FT

(4) Length is equal to spacing of longitudinal reinforcing plus 2". (10" Min) (Typ)

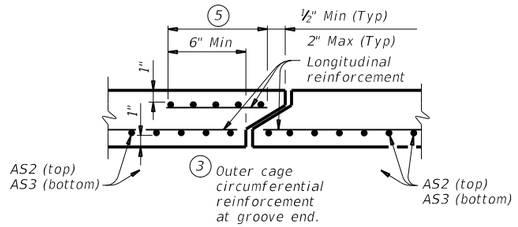

SECTION A-A

(Showing top and bottom slab joint reinforcement.)

MATERIAL NOTES:

Provide 0.03 sq. in./ft. minimum longitudinal reinforcement at each face in slabs and walls. This minimum requirement may be met by the transverse wires when wire mesh reinforcement is used.

Provide Class H concrete (f`c = 5,000 psi).

GENERAL NOTES:

Designs shown conform to ASTM C1577. Refer to ASTM C1577 for information or details not shown.

See Box Culverts Precast Miscellaneous Details (SCP-MD) standard sheet for details and notes not shown.

In lieu of furnishing the designs shown on this sheet, the contractor may furnish an alternate design that is equal to or exceeds the box design for the design fill height in the table. Submit shop plans for alternate designs in accordance with Item "Precast Concrete Structural Members (Fabrication)."

HL93 LOADING

Texas Department of Transportation

Bridge Division Standard

SINGLE BOX CULVERTS PRECAST

5'-0" SPAN

SCP-5

FILE:	DN: TxDOT	CK: TxDOT	DW: TxDOT	CK: TxDOT
©TxDOT February 2020	CONT	SECT	JOB	HIGHWAY
REVISIONS	0914	05	222	RM 2243
	DIST	COUNTY		SHEET NO.
	AUS	WILLIAMSON		291

DISCLAIMER:
The use of this standard is governed by the "Texas Engineering Practice Act". No warranty of any kind is made by TxDOT for any purpose whatsoever. TxDOT assumes no responsibility for the conversion of this standard to other formats or for incorrect results or damages resulting from its use.

DATE: 4/10/2025 1:05:43 PM
FILE: G:\TXC\Projects\County_Williamson\7473-02 RM 2243 Phase 1A\03_CADD\01_Shts\06-DRNG\Srds\CD-SCP06-20.dgn

BOX DATA

SECTION DIMENSIONS					Fill Height	M (Min)	REINFORCING (sq. in. / ft.) (2)							(1) Lift Weight
S (ft.)	H (ft.)	TT (in.)	TB (in.)	TS (in.)	(ft.)	(in.)	AS1	AS2	AS3	AS4	AS5	AS7	AS8	(tons)
6	2	8	7	7	< 2	–	0.23	0.27	0.19	0.17	0.19	0.19	0.17	7.2
6	2	7	7	7	2 < 3	43	0.25	0.21	0.17	0.17	–	–	–	6.8
6	2	7	7	7	3 – 5	43	0.20	0.17	0.17	0.17	–	–	–	6.8
6	2	7	7	7	10	39	0.20	0.17	0.17	0.17	–	–	–	6.8
6	2	7	7	7	15	39	0.26	0.20	0.20	0.17	–	–	–	6.8
6	2	7	7	7	20	39	0.34	0.26	0.26	0.17	–	–	–	6.8
6	2	7	7	7	25	39	0.43	0.32	0.32	0.17	–	–	–	6.8
6	2	7	7	7	30	39	0.52	0.38	0.39	0.17	–	–	–	6.8
6	3	8	7	7	< 2	–	0.20	0.31	0.22	0.17	0.19	0.19	0.17	7.9
6	3	7	7	7	2 < 3	43	0.21	0.24	0.19	0.17	–	–	–	7.5
6	3	7	7	7	3 – 5	39	0.17	0.18	0.17	0.17	–	–	–	7.5
6	3	7	7	7	10	39	0.17	0.18	0.19	0.17	–	–	–	7.5
6	3	7	7	7	15	38	0.22	0.24	0.24	0.17	–	–	–	7.5
6	3	7	7	7	20	38	0.28	0.31	0.31	0.17	–	–	–	7.5
6	3	7	7	7	25	38	0.35	0.38	0.39	0.17	–	–	–	7.5
6	3	7	7	7	30	38	0.42	0.46	0.46	0.17	–	–	–	7.5
6	4	8	7	7	< 2	–	0.19	0.34	0.25	0.17	0.19	0.19	0.17	8.6
6	4	7	7	7	2 < 3	43	0.19	0.27	0.21	0.17	–	–	–	8.2
6	4	7	7	7	3 – 5	39	0.17	0.21	0.19	0.17	–	–	–	8.2
6	4	7	7	7	10	39	0.17	0.20	0.21	0.17	–	–	–	8.2
6	4	7	7	7	15	38	0.18	0.27	0.27	0.17	–	–	–	8.2
6	4	7	7	7	20	38	0.24	0.34	0.35	0.17	–	–	–	8.2
6	4	7	7	7	25	38	0.29	0.43	0.42	0.17	–	–	–	8.2
6	4	7	7	7	30	38	0.35	0.51	0.52	0.17	–	–	–	8.2
6	5	8	7	7	< 2	–	0.19	0.37	0.28	0.17	0.19	0.19	0.17	9.3
6	5	7	7	7	2 < 3	43	0.17	0.30	0.24	0.17	–	–	–	8.9
6	5	7	7	7	3 – 5	43	0.17	0.23	0.21	0.17	–	–	–	8.9
6	5	7	7	7	10	39	0.17	0.22	0.23	0.17	–	–	–	8.9
6	5	7	7	7	15	38	0.17	0.28	0.29	0.17	–	–	–	8.9
6	5	7	7	7	20	38	0.20	0.37	0.38	0.17	–	–	–	8.9
6	5	7	7	7	25	38	0.25	0.45	0.46	0.17	–	–	–	8.9
6	5	7	7	7	30	38	0.30	0.54	0.55	0.17	–	–	–	8.9
6	6	8	7	7	< 2	–	0.19	0.38	0.30	0.17	0.19	0.19	0.17	10
6	6	7	7	7	2 < 3	52	0.17	0.32	0.26	0.17	–	–	–	9.6
6	6	7	7	7	3 – 5	52	0.17	0.24	0.22	0.17	–	–	–	9.6
6	6	7	7	7	10	43	0.17	0.23	0.24	0.17	–	–	–	9.6
6	6	7	7	7	15	39	0.17	0.29	0.31	0.17	–	–	–	9.6
6	6	7	7	7	20	39	0.18	0.38	0.39	0.17	–	–	–	9.6
6	6	7	7	7	25	38	0.23	0.46	0.48	0.17	–	–	–	9.6
6	6	7	7	7	30	38	0.27	0.55	0.57	0.17	–	–	–	9.6

(1) For box length = 8'-0"

(2) AS1 thru AS4, AS7 and AS8 are minimum required areas of reinforcement per linear foot of box length. AS5 is minimum required area of reinforcement per linear foot of box width.

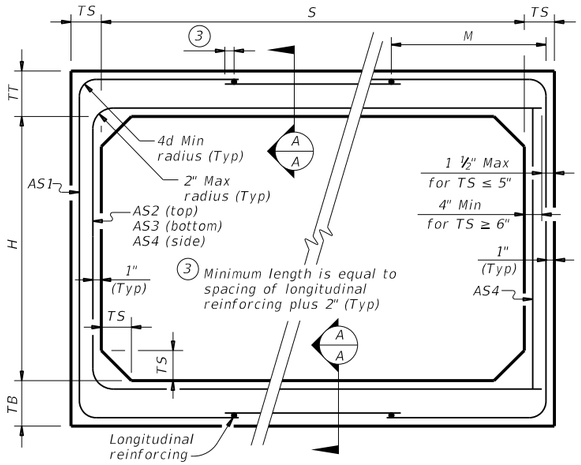

CORNER OPTION "A" CORNER OPTION "B"

FILL HEIGHT 2 FT AND GREATER

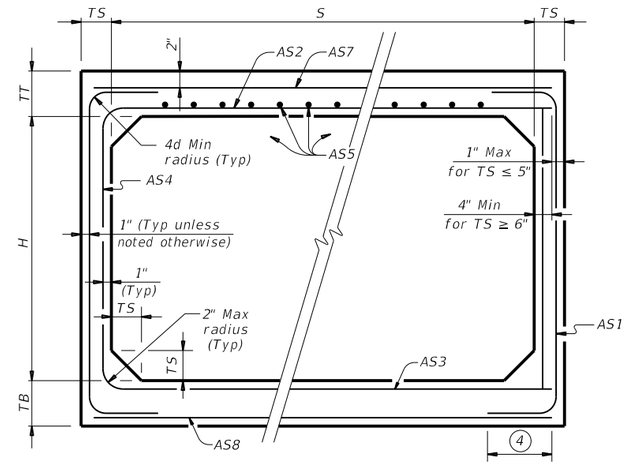

CORNER OPTION "A" CORNER OPTION "B"

FILL HEIGHT LESS THAN 2 FT

(4) Length is equal to spacing of longitudinal reinforcing plus 2". (10" Min) (Typ)

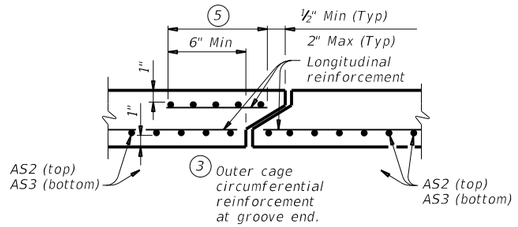

SECTION A-A

(Showing top and bottom slab joint reinforcement.)

MATERIAL NOTES:

Provide 0.03 sq. in./ft. minimum longitudinal reinforcement at each face in slabs and walls. This minimum requirement may be met by the transverse wires when wire mesh reinforcement is used.

Provide Class H concrete (f`c = 5,000 psi).

GENERAL NOTES:

Designs shown conform to ASTM C1577. Refer to ASTM C1577 for information or details not shown.

See Box Culverts Precast Miscellaneous Details (SCP-MD) standard sheet for details and notes not shown.

In lieu of furnishing the designs shown on this sheet, the contractor may furnish an alternate design that is equal to or exceeds the box design for the design fill height in the table. Submit shop plans for alternate designs in accordance with Item "Precast Concrete Structural Members (Fabrication)."

HL93 LOADING

Texas Department of Transportation

Bridge Division Standard

SINGLE BOX CULVERTS PRECAST

6'-0" SPAN

SCP-6

FILE:	DN: TxDOT	CK: TxDOT	DW: TxDOT	CK: TxDOT
©TxDOT February 2020	CONT	SECT	JOB	HIGHWAY
REVISIONS	0914	05	222	RM 2243
	DIST	COUNTY		SHEET NO.
	AUS	WILLIAMSON		292

DISCLAIMER:
The use of this standard is governed by the "Texas Engineering Practice Act". No warranty of any kind is made by TxDOT for any purpose whatsoever. TxDOT assumes no responsibility for the conversion of this standard to other formats or for incorrect results or damages resulting from its use.

DATE: 4/10/2025 1:05:44 PM
FILE: G:\TXC\Projects\County_Williamson\7473-02 RM 2243 Phase 1A\03_CADD\01_Shts\06-DRNG\Srds\CD-SCP07-20.dgn

BOX DATA

SECTION DIMENSIONS					Fill Height	M (Min)	REINFORCING (sq. in. / ft.) (2)							(1) Lift Weight
S (ft.)	H (ft.)	TT (in.)	TB (in.)	TS (in.)	(ft.)	(in.)	AS1	AS2	AS3	AS4	AS5	AS7	AS8	(tons)
7	3	8	8	8	< 2	–	0.23	0.31	0.22	0.19	0.19	0.19	0.19	9.6
7	3	8	8	8	2 < 3	47	0.27	0.25	0.24	0.19	–	–	–	9.6
7	3	8	8	8	3 – 5	43	0.19	0.19	0.19	0.19	–	–	–	9.6
7	3	8	8	8	10	43	0.21	0.20	0.21	0.19	–	–	–	9.6
7	3	8	8	8	15	43	0.28	0.26	0.27	0.19	–	–	–	9.6
7	3	8	8	8	20	43	0.36	0.34	0.35	0.19	–	–	–	9.6
7	3	8	8	8	25	43	0.45	0.42	0.43	0.19	–	–	–	9.6
7	3	8	8	8	30	43	0.54	0.50	0.51	0.19	–	–	–	9.6
7	4	8	8	8	< 2	–	0.21	0.34	0.25	0.19	0.19	0.19	0.19	10.4
7	4	8	8	8	2 < 3	43	0.23	0.28	0.28	0.19	–	–	–	10.4
7	4	8	8	8	3 – 5	43	0.19	0.22	0.19	0.19	–	–	–	10.4
7	4	8	8	8	10	43	0.19	0.23	0.23	0.19	–	–	–	10.4
7	4	8	8	8	15	41	0.24	0.30	0.30	0.19	–	–	–	10.4
7	4	8	8	8	20	41	0.31	0.38	0.39	0.19	–	–	–	10.4
7	4	8	8	8	25	41	0.38	0.47	0.48	0.19	–	–	–	10.4
7	4	8	8	8	30	41	0.46	0.57	0.57	0.19	–	–	–	10.4
7	5	8	8	8	< 2	–	0.19	0.36	0.27	0.19	0.19	0.19	0.19	11.2
7	5	8	8	8	2 < 3	47	0.21	0.31	0.31	0.19	–	–	–	11.2
7	5	8	8	8	3 – 5	43	0.19	0.24	0.21	0.19	–	–	–	11.2
7	5	8	8	8	10	43	0.19	0.25	0.26	0.19	–	–	–	11.2
7	5	8	8	8	15	41	0.21	0.32	0.33	0.19	–	–	–	11.2
7	5	8	8	8	20	41	0.27	0.41	0.42	0.19	–	–	–	11.2
7	5	8	8	8	25	41	0.33	0.51	0.52	0.19	–	–	–	11.2
7	5	8	8	8	30	41	0.40	0.61	0.62	0.19	–	–	–	11.2
7	6	8	8	8	< 2	–	0.19	0.38	0.30	0.19	0.19	0.19	0.19	12.0
7	6	8	8	8	2 < 3	59	0.19	0.33	0.34	0.19	–	–	–	12.0
7	6	8	8	8	3 – 5	47	0.19	0.25	0.23	0.19	–	–	–	12.0
7	6	8	8	8	10	43	0.19	0.26	0.27	0.19	–	–	–	12.0
7	6	8	8	8	15	41	0.19	0.34	0.35	0.19	–	–	–	12.0
7	6	8	8	8	20	41	0.24	0.43	0.45	0.19	–	–	–	12.0
7	6	8	8	8	25	41	0.29	0.53	0.55	0.19	–	–	–	12.0
7	6	8	8	8	30	41	0.35	0.64	0.65	0.19	–	–	–	12.0
7	7	8	8	8	< 2	–	0.19	0.40	0.33	0.19	0.19	0.19	0.19	12.8
7	7	8	8	8	2 < 3	59	0.19	0.36	0.37	0.19	–	–	–	12.8
7	7	8	8	8	3 – 5	59	0.19	0.27	0.25	0.19	–	–	–	12.8
7	7	8	8	8	10	47	0.19	0.27	0.29	0.19	–	–	–	12.8
7	7	8	8	8	15	43	0.19	0.35	0.37	0.19	–	–	–	12.8
7	7	8	8	8	20	43	0.22	0.44	0.46	0.19	–	–	–	12.8
7	7	8	8	8	25	43	0.27	0.54	0.57	0.19	–	–	–	12.8
7	7	8	8	8	30	41	0.32	0.65	0.67	0.19	–	–	–	12.8

(1) For box length = 8'-0"

(2) AS1 thru AS4, AS7 and AS8 are minimum required areas of reinforcement per linear foot of box length. AS5 is minimum required area of reinforcement per linear foot of box width.

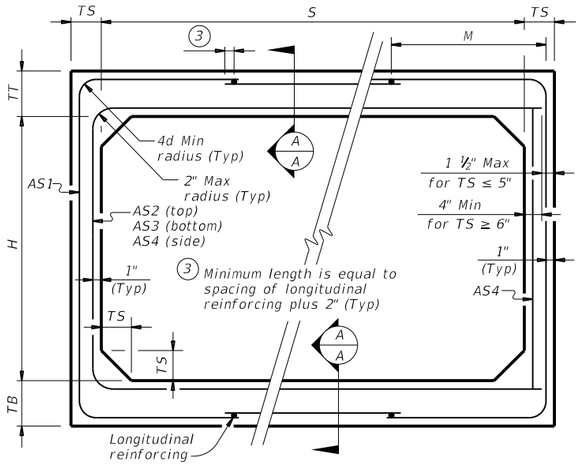

CORNER OPTION "A" CORNER OPTION "B"

FILL HEIGHT 2 FT AND GREATER

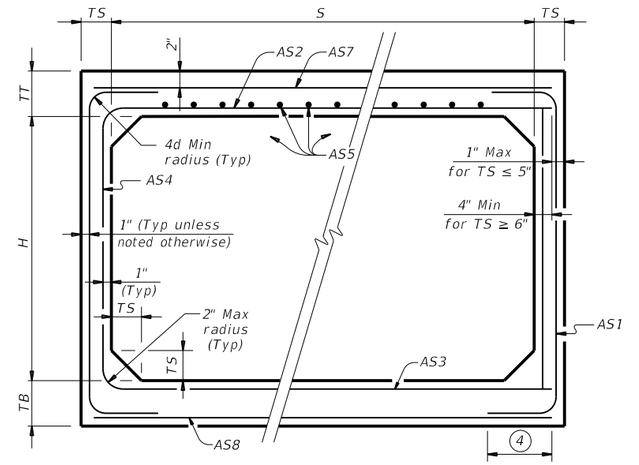

CORNER OPTION "A" CORNER OPTION "B"

FILL HEIGHT LESS THAN 2 FT

(4) Length is equal to spacing of longitudinal reinforcing plus 2". (10" Min) (Typ)

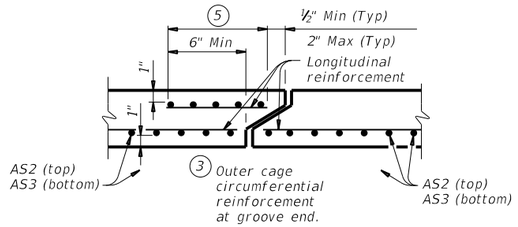

SECTION A-A

(Showing top and bottom slab joint reinforcement.)

MATERIAL NOTES:

Provide 0.03 sq. in./ft. minimum longitudinal reinforcement at each face in slabs and walls. This minimum requirement may be met by the transverse wires when wire mesh reinforcement is used.

Provide Class H concrete (f`c = 5,000 psi).

GENERAL NOTES:

Designs shown conform to ASTM C1577. Refer to ASTM C1577 for information or details not shown.

See Box Culverts Precast Miscellaneous Details (SCP-MD) standard sheet for details and notes not shown.

In lieu of furnishing the designs shown on this sheet, the contractor may furnish an alternate design that is equal to or exceeds the box design for the design fill height in the table. Submit shop plans for alternate designs in accordance with Item "Precast Concrete Structural Members (Fabrication)."

HL93 LOADING

Texas Department of Transportation

Bridge Division Standard

SINGLE BOX CULVERTS PRECAST

7'-0" SPAN

SCP-7

FILE:	DN: TxDOT	CK: TxDOT	DW: TxDOT	CK: TxDOT
©TxDOT February 2020	CONT	SECT	JOB	HIGHWAY
REVISIONS	0914	05	222	RM 2243
	DIST	COUNTY		SHEET NO.
	AUS	WILLIAMSON		293

DISCLAIMER:
The use of this standard is governed by the "Texas Engineering Practice Act". No warranty of any kind is made by TxDOT for any purpose whatsoever. TxDOT assumes no responsibility for the conversion of this standard to other formats or for incorrect results or damages resulting from its use.

DATE: 4/10/2025 1:05:46 PM
FILE: G:\TXC\Projects\County_Williamson\7473-02 RM 2243 Phase 1A\03_CADD\01_Shts\06-DRNG\Srds\CD-SCP08-20.dgn

BOX DATA

SECTION DIMENSIONS					Fill Height	M (Min)	REINFORCING (sq. in. / ft.) (2)							(1) Lift Weight
S (ft.)	H (ft.)	TT (in.)	TB (in.)	TS (in.)	(ft.)	(in.)	AS1	AS2	AS3	AS4	AS5	AS7	AS8	(tons)
8	3	8	8	8	< 2	–	0.31	0.35	0.25	0.19	0.19	0.19	0.19	10.4
8	3	8	8	8	2 < 3	55	0.35	0.29	0.28	0.19	–	–	–	10.4
8	3	8	8	8	3 – 5	50	0.28	0.23	0.24	0.19	–	–	–	10.4
8	3	8	8	8	10	45	0.29	0.25	0.26	0.19	–	–	–	10.4
8	3	8	8	8	15	45	0.39	0.33	0.34	0.19	–	–	–	10.4
8	3	8	8	8	20	45	0.51	0.43	0.44	0.19	–	–	–	10.4
8	3	8	8	8	25	45	0.63	0.53	0.54	0.19	–	–	–	10.4
8	4	8	8	8	< 2	–	0.27	0.38	0.29	0.19	0.19	0.19	0.19	11.2
8	4	8	8	8	2 < 3	50	0.31	0.34	0.32	0.19	–	–	–	11.2
8	4	8	8	8	3 – 5	50	0.25	0.27	0.27	0.19	–	–	–	11.2
8	4	8	8	8	10	45	0.26	0.28	0.29	0.19	–	–	–	11.2
8	4	8	8	8	15	41	0.34	0.37	0.38	0.19	–	–	–	11.2
8	4	8	8	8	20	41	0.44	0.48	0.49	0.19	–	–	–	11.2
8	5	8	8	8	< 2	–	0.24	0.40	0.32	0.19	0.19	0.19	0.19	12.0
8	5	8	8	8	2 < 3	50	0.28	0.37	0.35	0.19	–	–	–	12.0
8	5	8	8	8	3 – 5	45	0.23	0.29	0.30	0.19	–	–	–	12.0
8	5	8	8	8	10	45	0.23	0.31	0.32	0.19	–	–	–	12.0
8	5	8	8	8	15	41	0.30	0.41	0.42	0.19	–	–	–	12.0
8	5	8	8	8	20	41	0.39	0.52	0.54	0.19	–	–	–	12.0
8	6	8	8	8	< 2	–	0.22	0.42	0.35	0.19	0.19	0.19	0.19	12.8
8	6	8	8	8	2 < 3	50	0.25	0.40	0.38	0.19	–	–	–	12.8
8	6	8	8	8	3 – 5	50	0.21	0.32	0.33	0.19	–	–	–	12.8
8	6	8	8	8	10	45	0.22	0.33	0.34	0.19	–	–	–	12.8
8	6	8	8	8	15	41	0.28	0.43	0.45	0.19	–	–	–	12.8
8	6	8	8	8	20	41	0.36	0.55	0.57	0.19	–	–	–	12.8
8	7	8	8	8	< 2	–	0.20	0.44	0.37	0.19	0.19	0.19	0.19	13.6
8	7	8	8	8	2 < 3	55	0.23	0.43	0.41	0.19	–	–	–	13.6
8	7	8	8	8	3 – 5	55	0.19	0.34	0.35	0.19	–	–	–	13.6
8	7	8	8	8	10	50	0.20	0.34	0.36	0.19	–	–	–	13.6
8	7	8	8	8	15	41	0.26	0.45	0.47	0.19	–	–	–	13.6
8	7	8	8	8	20	41	0.33	0.57	0.60	0.19	–	–	–	13.6
8	8	8	8	8	< 2	–	0.20	0.45	0.40	0.19	0.19	0.19	0.19	14.4
8	8	8	8	8	2 < 3	65	0.21	0.45	0.44	0.19	–	–	–	14.4
8	8	8	8	8	3 – 5	65	0.19	0.36	0.38	0.19	–	–	–	14.4
8	8	8	8	8	10	55	0.19	0.35	0.38	0.19	–	–	–	14.4
8	8	8	8	8	15	45	0.24	0.46	0.49	0.19	–	–	–	14.4
8	8	8	8	8	20	45	0.31	0.59	0.62	0.19	–	–	–	14.4

(1) For box length = 8'-0"

(2) AS1 thru AS4, AS7 and AS8 are minimum required areas of reinforcement per linear foot of box length. AS5 is minimum required area of reinforcement per linear foot of box width.

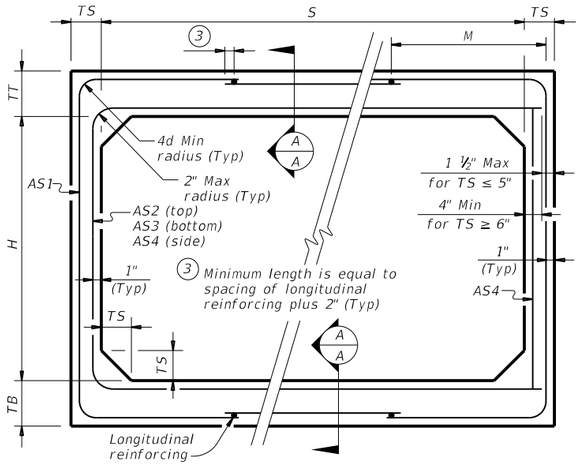

CORNER OPTION "A" CORNER OPTION "B"

FILL HEIGHT 2 FT AND GREATER

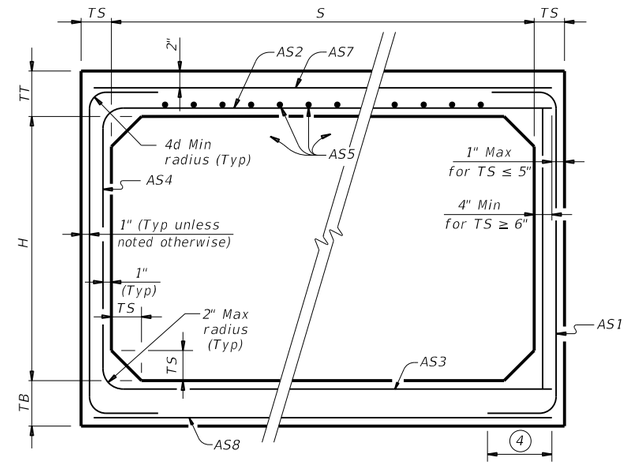

CORNER OPTION "A" CORNER OPTION "B"

FILL HEIGHT LESS THAN 2 FT

(4) Length is equal to spacing of longitudinal reinforcing plus 2". (10" Min) (Typ)

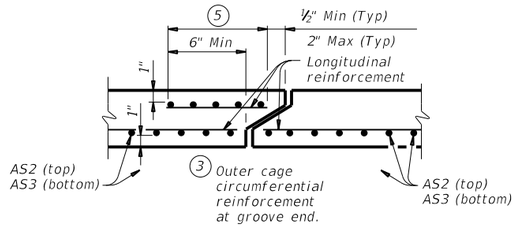

SECTION A-A

(Showing top and bottom slab joint reinforcement.)

MATERIAL NOTES:

Provide 0.03 sq. in./ft. minimum longitudinal reinforcement at each face in slabs and walls. This minimum requirement may be met by the transverse wires when wire mesh reinforcement is used.

Provide Class H concrete (f`c = 5,000 psi).

GENERAL NOTES:

Designs shown conform to ASTM C1577. Refer to ASTM C1577 for information or details not shown.

See Box Culverts Precast Miscellaneous Details (SCP-MD) standard sheet for details and notes not shown.

In lieu of furnishing the designs shown on this sheet, the contractor may furnish an alternate design that is equal to or exceeds the box design for the design fill height in the table. Submit shop plans for alternate designs in accordance with Item "Precast Concrete Structural Members (Fabrication)".

HL93 LOADING

Texas Department of Transportation

Bridge Division Standard

SINGLE BOX CULVERTS PRECAST

8'-0" SPAN

SCP-8

FILE:	DN: TxDOT	CK: TxDOT	DW: TxDOT	CK: TxDOT
©TxDOT February 2020	CONT	SECT	JOB	HIGHWAY
REVISIONS	0914	05	222	RM 2243
	DIST	COUNTY		SHEET NO.
	AUS	WILLIAMSON		294

DISCLAIMER:
The use of this standard is governed by the "Texas Engineering Practice Act". No warranty of any kind is made by TxDOT for any purpose whatsoever. TxDOT assumes no responsibility for the conversion of this standard to other formats or for incorrect results or damages resulting from its use.

DATE: 4/10/2025 1:05:47 PM
FILE: G:\TXC\Projects\County_Williamson\7473-02 RM 2243 Phase 1A\03_CADD\01_Shts\06-DRNG\Srds\CD-SCP09-20.dgn

BOX DATA

SECTION DIMENSIONS					Fill Height	M (Min)	REINFORCING (sq. in. / ft.) (2)							(1) Lift Weight
S (ft.)	H (ft.)	TT (in.)	TB (in.)	TS (in.)	(ft.)	(in.)	AS1	AS2	AS3	AS4	AS5	AS7	AS8	(tons)
9	4	9	9	9	< 2	–	0.30	0.36	0.28	0.22	0.22	0.22	0.22	13.7
9	4	9	9	9	2 < 3	54	0.35	0.34	0.31	0.22	–	–	–	13.7
9	4	9	9	9	3 – 5	50	0.28	0.27	0.27	0.22	–	–	–	13.7
9	4	9	9	9	10	49	0.31	0.30	0.31	0.22	–	–	–	13.7
9	4	9	9	9	15	49	0.40	0.40	0.41	0.22	–	–	–	13.7
9	4	9	9	9	20	44	0.52	0.51	0.52	0.22	–	–	–	13.7
9	4	9	9	9	25	44	0.65	0.64	0.65	0.22	–	–	–	13.7
9	5	9	9	9	< 2	–	0.28	0.38	0.31	0.22	0.22	0.22	0.22	14.6
9	5	9	9	9	2 < 3	54	0.32	0.38	0.34	0.22	–	–	–	14.6
9	5	9	9	9	3 – 5	49	0.25	0.30	0.30	0.22	–	–	–	14.6
9	5	9	9	9	10	49	0.28	0.33	0.34	0.22	–	–	–	14.6
9	5	9	9	9	15	44	0.36	0.43	0.45	0.22	–	–	–	14.6
9	5	9	9	9	20	44	0.47	0.56	0.57	0.22	–	–	–	14.6
9	5	9	9	9	25	44	0.58	0.69	0.71	0.22	–	–	–	14.6
9	6	9	9	9	< 2	–	0.25	0.40	0.34	0.22	0.22	0.22	0.22	15.5
9	6	9	9	9	2 < 3	54	0.29	0.41	0.38	0.22	–	–	–	15.5
9	6	9	9	9	3 – 5	49	0.23	0.33	0.33	0.22	–	–	–	15.5
9	6	9	9	9	10	49	0.26	0.35	0.37	0.22	–	–	–	15.5
9	6	9	9	9	15	44	0.33	0.46	0.48	0.22	–	–	–	15.5
9	6	9	9	9	20	44	0.42	0.60	0.61	0.22	–	–	–	15.5
9	6	9	9	9	25	44	0.52	0.74	0.75	0.22	–	–	–	15.5
9	7	9	9	9	< 2	–	0.23	0.42	0.36	0.22	0.22	0.22	0.22	16.4
9	7	9	9	9	2 < 3	59	0.26	0.44	0.41	0.22	–	–	–	16.4
9	7	9	9	9	3 – 5	54	0.22	0.35	0.35	0.22	–	–	–	16.4
9	7	9	9	9	10	49	0.24	0.37	0.39	0.22	–	–	–	16.4
9	7	9	9	9	15	44	0.31	0.48	0.51	0.22	–	–	–	16.4
9	7	9	9	9	20	44	0.39	0.62	0.65	0.22	–	–	–	16.4
9	8	9	9	9	< 2	–	0.22	0.43	0.39	0.22	0.22	0.22	0.22	17.3
9	8	9	9	9	2 < 3	59	0.24	0.46	0.43	0.22	–	–	–	17.3
9	8	9	9	9	3 – 5	59	0.22	0.37	0.38	0.22	–	–	–	17.3
9	8	9	9	9	10	54	0.22	0.39	0.41	0.22	–	–	–	17.3
9	8	9	9	9	15	44	0.29	0.50	0.53	0.22	–	–	–	17.3
9	8	9	9	9	20	44	0.36	0.64	0.67	0.22	–	–	–	17.3
9	9	9	9	9	< 2	–	0.22	0.44	0.42	0.22	0.22	0.22	0.22	18.2
9	9	9	9	9	2 < 3	72	0.23	0.49	0.46	0.22	–	–	–	18.2
9	9	9	9	9	3 – 5	72	0.22	0.39	0.40	0.22	–	–	–	18.2
9	9	9	9	9	10	59	0.22	0.40	0.43	0.22	–	–	–	18.2
9	9	9	9	9	15	49	0.27	0.51	0.55	0.22	–	–	–	18.2
9	9	9	9	9	20	49	0.34	0.66	0.69	0.22	–	–	–	18.2

(1) For box length = 8'-0"

(2) AS1 thru AS4, AS7 and AS8 are minimum required areas of reinforcement per linear foot of box length. AS5 is minimum required area of reinforcement per linear foot of box width.

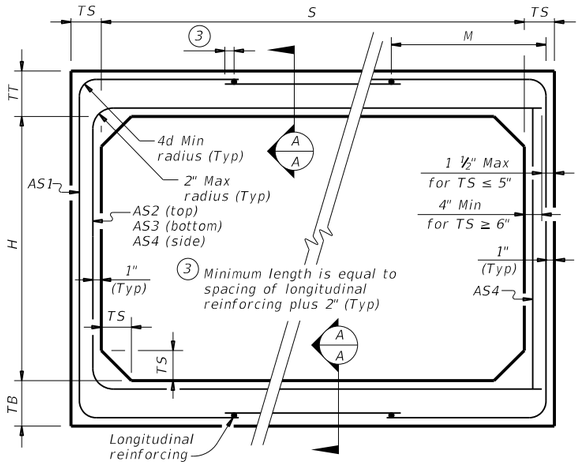

CORNER OPTION "A" CORNER OPTION "B"

FILL HEIGHT 2 FT AND GREATER

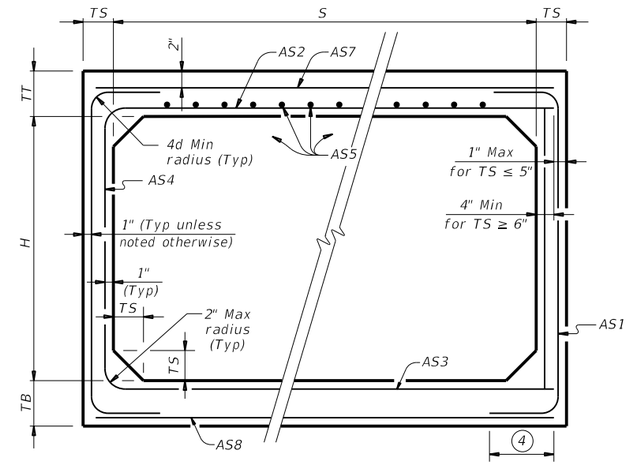

CORNER OPTION "A" CORNER OPTION "B"

FILL HEIGHT LESS THAN 2 FT

(4) Length is equal to spacing of longitudinal reinforcing plus 2". (10" Min) (Typ)

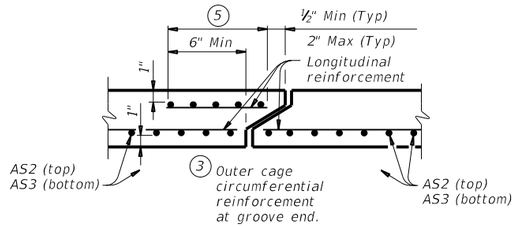

SECTION A-A

(Showing top and bottom slab joint reinforcement.)

MATERIAL NOTES:

Provide 0.03 sq. in./ft. minimum longitudinal reinforcement at each face in slabs and walls. This minimum requirement may be met by the transverse wires when wire mesh reinforcement is used.

Provide Class H concrete (f`c = 5,000 psi).

GENERAL NOTES:

Designs shown conform to ASTM C1577. Refer to ASTM C1577 for information or details not shown.

See Box Culverts Precast Miscellaneous Details (SCP-MD) standard sheet for details and notes not shown.

In lieu of furnishing the designs shown on this sheet, the contractor may furnish an alternate design that is equal to or exceeds the box design for the design fill height in the table. Submit shop plans for alternate designs in accordance with Item "Precast Concrete Structural Members (Fabrication)."

HL93 LOADING

Texas Department of Transportation

Bridge Division Standard

SINGLE BOX CULVERTS PRECAST

9'-0" SPAN

SCP-9

FILE:	DN: TxDOT	CK: TxDOT	DW: TxDOT	CK: TxDOT
©TxDOT February 2020	CONT	SECT	JOB	HIGHWAY
REVISIONS	0914	05	222	RM 2243
	DIST	COUNTY		SHEET NO.
	AUS	WILLIAMSON		295

DISCLAIMER:
The use of this standard is governed by the "Texas Engineering Practice Act". No warranty of any kind is made by TxDOT for any purpose whatsoever. TxDOT assumes no responsibility for the conversion of this standard to other formats or for incorrect results or damages resulting from its use.

DATE: 4/10/2025 1:05:48 PM
FILE: G:\TxC\Projects\County_Williamson\7473-02 RM 2243 Phase 1A\03_CADD\01_Shts\06-DRNG\Stds\CD-MC-MD-20.dgn

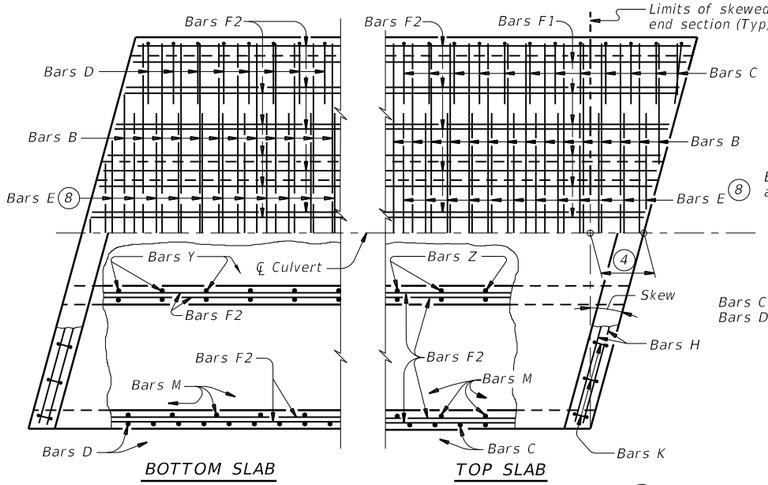

PLAN OF SKEWED ENDS ~ FROM 0° TO 15° 7

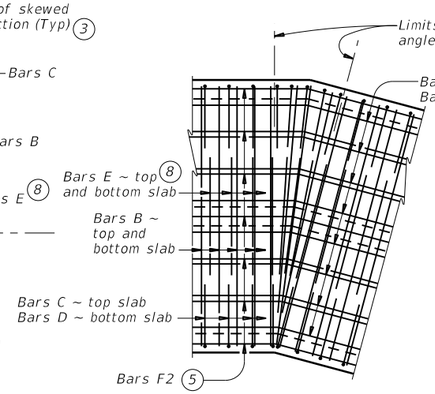

PLAN OF ANGLE SECTION ~ FROM 0° TO 15°

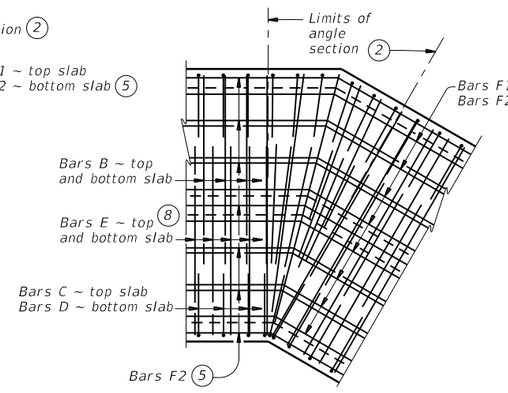

PLAN OF ANGLE SECTION ~ OVER 15° TO 30°

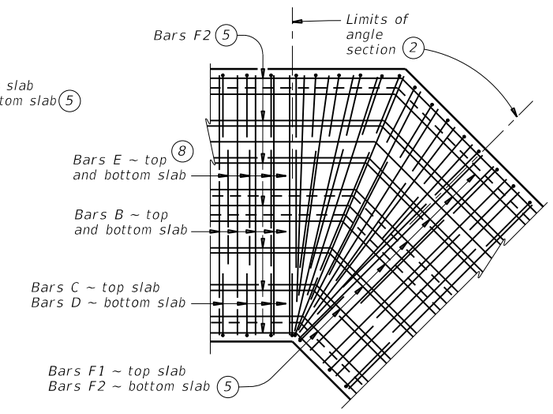

PLAN OF ANGLE SECTION ~ OVER 30° TO 45°

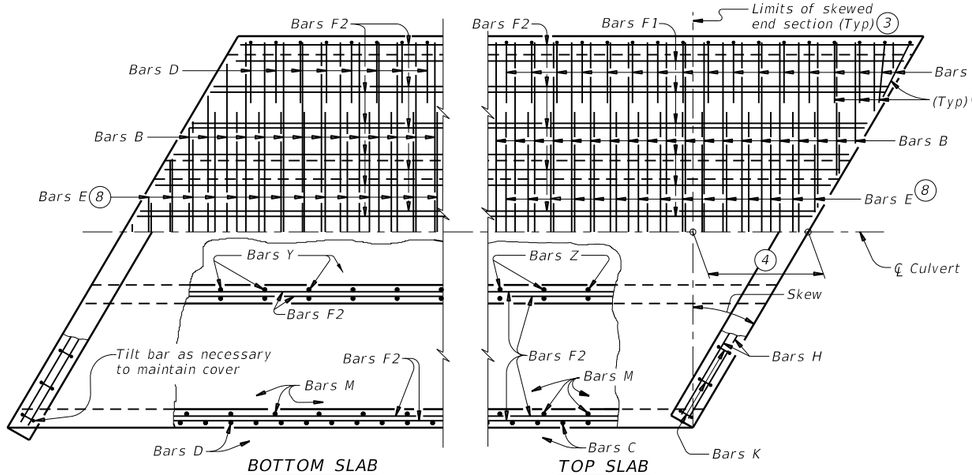

PLAN OF SKEWED ENDS ~ OVER 15° TO 30°

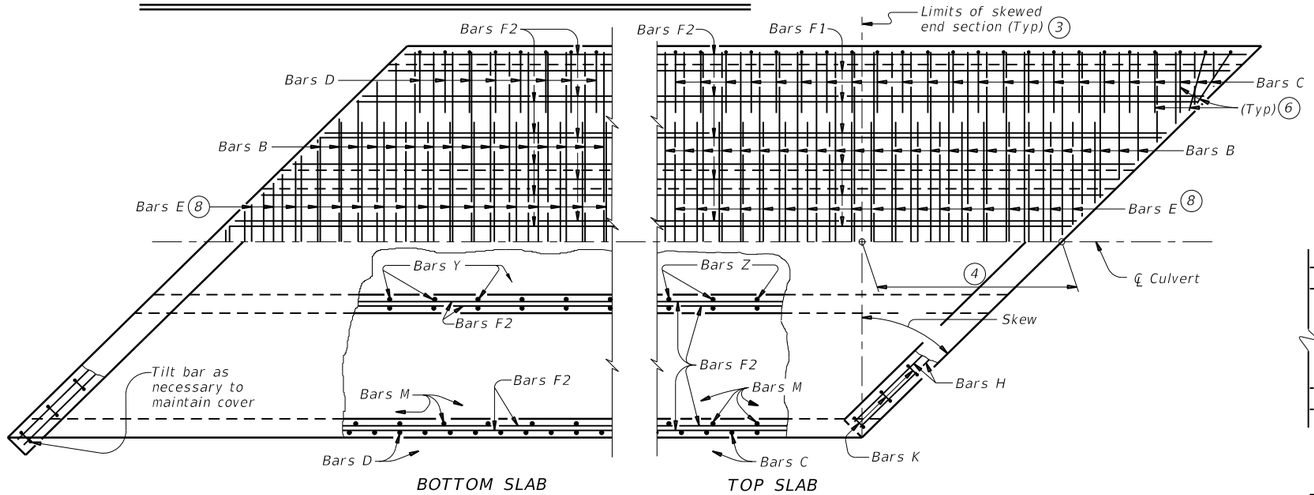

PLAN OF SKEWED ENDS ~ OVER 30° TO 45°

(1) For skewed box culverts with less than 2'-0" of fill, break back the top slab to provide a 1'-10" minimum lap of the existing longitudinal bars with the longitudinal bars in the extension.

For non-skewed box culverts with less than 2'-0" of fill and for skewed or non-skewed culverts with a fill depth of 2'-0" or greater, break back the top slab to provide a 1'-10" minimum lap of the existing longitudinal bars with the longitudinal bars in the extension. Alternatively, if the box is non-skewed, embed #6 anchor bars with a Type III, Class C, D, E, or F anchor adhesive into the existing walls, top and bottom slab at 1'-6" center-to-center spacing. Minimum embedment depth is 8". Anchor adhesive chosen must be able to achieve a basic bond strength in tension, Nba, of 26.4 kips. Submit signed and sealed calculations or the manufacturer's published literature showing the proposed anchor adhesive's ability to develop this load to the Engineer for approval prior to use. Anchor installation, including hole size, drilling, and clean out, must be in accordance with Item 450, "Railing." Test adhesive anchors in accordance with Item 450.3.3, "Tests." Test 3 anchors per 100 anchors installed.

Break back wings and apron as necessary to install the extension. Clean and extend the exposed wingwall and apron reinforcing into the extension. When lengthening existing box culverts with dimensions different than current standard dimensions, form horizontal and vertical transitions as directed by the Engineer. Match bottom slabs to maintain an uninterrupted flow line. Field bend existing and new reinforcing into transitions and maintain specified cover requirements. For top slabs of culverts with overlay, with 1-to-2 course surface treatment, or with the top slab as the final riding surface, adjust the "H" dimension to provide a smooth riding surface.

(2) When the spacing between Bars B or Bars E becomes less than half of the normal spacing, cut bars to avoid conflict.

(3) The length of Bars B and Bars E will vary in the skewed end sections.

(4) [One half of overall width] x [tangent of the skew angle]

(5) Place Bars F1 and F2 continuously through the angle section. Bend Bars F1 and F2 to remain parallel to the walls of the box culvert.

(6) When necessary to avoid conflict in acute corners, shorten the slab extension leg of Bars C and Bars D to a minimum of 1'-6" for skews of 30° thru 45°.

(7) At the Contractor's option, for skews of 15° or less, place Bars B, C, D, and E parallel to the skewed end while maintaining spacing along centerline of box. Increase lengths of Bars B and Bars E shown on the Multiple Box Culverts Cast-In-Place (MC) standard sheets to accommodate the skew.

(8) Extend Bars E as shown on the MC standard sheet for direct traffic culverts.

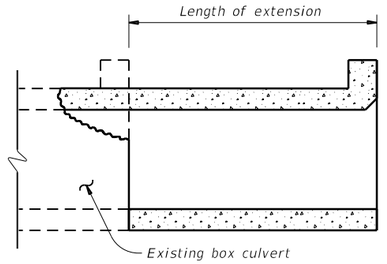

LENGTHENING DETAIL (1)

CONSTRUCTION NOTES:

Do not use permanent forms.
When required, lap Bars H 1'-8" for uncoated or galvanized bars.
Provide a minimum of 1 ½" clear cover.

MATERIAL NOTES:

Provide Grade 60 reinforcing steel.
Provide galvanized reinforcing steel, if required elsewhere in the plans.
Provide Class C concrete (f'c = 3,600 psi) with these exceptions: provide Class S concrete (f'c = 4,000 psi) for top slabs of culverts with overlay, with 1-to-2 course surface treatment, or with the top slab as the final riding surface.

GENERAL NOTES:

Designed according to AASHTO LRFD Bridge Design Specifications.
Refer to Multiple Box Culverts Cast-in-Place (MC) standard sheets for details of straight sections of culvert.
For skewed sections and angle sections, refer to Multiple Box Culverts Cast-in-Place (MC) standard sheets for slab and wall dimensions, bar sizes, maximum bar spacing, and any other details not shown.
For skewed ends with curbs, adjust length of Bars H, number of Bars K, curb concrete volume, and reinforcing steel weight by dividing the values shown on the Multiple Box Culverts Cast-In-Place (MC) standard sheets by the cosine of the skew angle.

Cover dimensions are clear dimensions, unless noted otherwise.

HL93 LOADING

Texas Department of Transportation

Bridge Division Standard

MULTIPLE BOX CULVERTS CAST-IN-PLACE MISCELLANEOUS DETAILS

MC-MD

FILE:	DN: TxDOT	CK: TxDOT	DW: TxDOT	CK: TxDOT
©TxDOT February 2020	CONT	SECT	JOB	HIGHWAY
REVISIONS	0914	05	222	RM 2243
	DIST	COUNTY		SHEET NO.
	AUS	WILLIAMSON		296

DISCLAIMER:
The use of this standard is governed by the "Texas Engineering Practice Act". No warranty of any kind is made by TxDOT for any purpose whatsoever. TxDOT assumes no responsibility for the conversion of this standard to other formats or for incorrect results or damages resulting from its use.

DATE: 4/10/2025 1:05:50 PM
FILE: G:\TxDC\Projects\County_Williamson\7473-02 RM 2243 Phase 1A\03_CADD\01_Shts\06-DRNG\Stds\CD-MC520-20.dgn

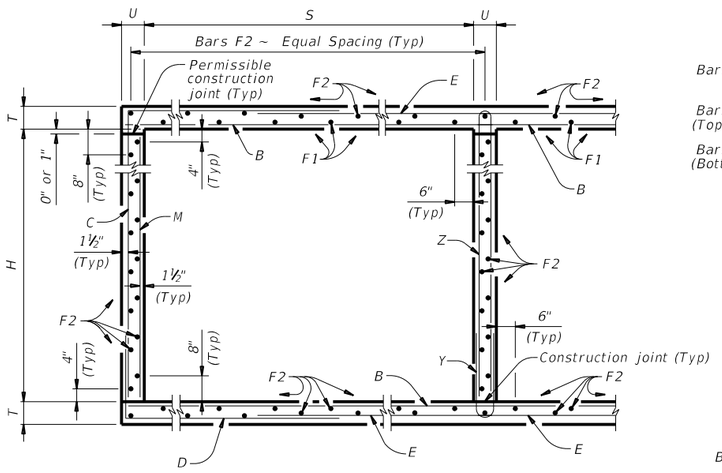

TYPICAL SECTION

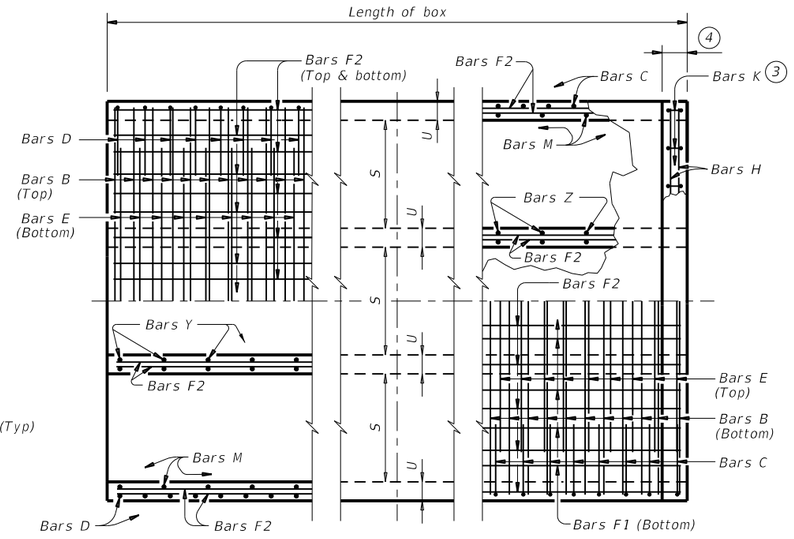

BOTTOM SLAB TOP SLAB

PART PLANS

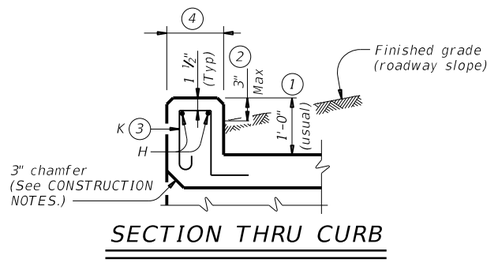

SECTION THRU CURB

TABLE OF BAR DIMENSIONS		
H	"X"	"Y"
2'-0"	2'-6 ½"	3'-8 ½"
3'-0"	3'-6 ½"	3'-8 ½"
4'-0"	4'-6 ½"	3'-8 ½"
5'-0"	5'-6 ½"	3'-8 ½"

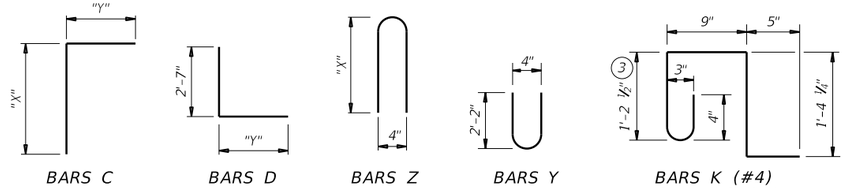

1. 0" Min to 5'-0" Max. Estimated curb heights are shown elsewhere in the plans. For structures with pedestrian rail or curbs taller than 1'-0", refer to the Extended Curb Details (ECD) standard sheet. For structures with T631 or T631LS bridge rail, refer to the Mounting Details for T631 & T631LS Rails (T631-CM) standard sheet. Refer to the Rail Anchorage Curb (RAC) standard sheet for structures with bridge rail other than T631 or T631LS.

2. For vehicle safety, the following requirements must be met:
   - For structures without bridge rail, construct curbs no more than 3" above finished grade.
   - For structures with bridge rail, construct curbs flush with finished grade.

   Reduce curb heights, if necessary, to meet the above requirements. No changes will be made in quantities and no additional compensation will be allowed for this work.

3. For curbs less than 1'-0" high, tilt Bars K or reduce bar height as necessary to maintain cover. For curbs less than 3" high, Bars K may be omitted.

4. 1'-0" typical. 2'-3" when the Rail Anchorage Curb (RAC) standard sheet is referred to elsewhere in the plans.

The Contractor may replace Bars B, C, D, E, F1, F2, M, Y, and/or Z with deformed welded wire reinforcement (WWR) meeting the requirements of ASTM A1064. The area of required reinforcement may be reduced by the ratio of 60 ksi / 70 ksi. Spacing of WWR is limited to 4" Min and 18" Max. When required, provide lap splices in the WWR of the same length required for the equivalent bar size, rounded up for wire sizes between conventional bar sizes. The lap length required for WWR is never less than the lap length required for uncoated #4 bars.

Example conversion: Replacing No. 6 Gr 60 at 6" Spacing with WWR
Required WWR = (0.44 sq. in. per 0.5 ft.) x (60 ksi / 70 ksi) = 0.755 sq. in. per ft.
If D30.6 wire is used to meet the 0.755 sq. in. per ft. requirement in this example, the required spacing = (0.306 sq. in.) / (0.755 sq. in. per ft.) x (12 in. per ft.) = 4.86" Max spacing. Required lap length for the provided D30.6 wire is 2'-1" (the same minimum lap length required for uncoated #5 bars, as listed under MATERIAL NOTES).

CONSTRUCTION NOTES:

Do not use permanent forms.
Chamfer the bottom edge of the top slab 3" at the entrance.
Optionally, raise construction joints shown at the flow line by a maximum of 6". If this option is taken, Bars M may be cut off or raised, Bars C and D may be reversed, and Bars Y and Z may be reversed.

MATERIAL NOTES:

Provide Grade 60 reinforcing steel.
Provide galvanized reinforcing steel if required elsewhere in the plans.
Provide Class C concrete (f'c = 3,600 psi) for culvert barrel and curb, with the following exceptions: provide Class S concrete (f'c = 4,000 psi) for top slabs of:
- culverts with overlay,
- culverts with 1-to-2 course surface treatment, or
- culverts with the top slab as the final riding surface.

Provide bar laps, where required, as follows:
- Uncoated or galvanized ~ #4 = 1'-8" Min
- Uncoated or galvanized ~ #5 = 2'-1" Min
- Uncoated or galvanized ~ #6 = 2'-6" Min

GENERAL NOTES:

Designed according to AASHTO LRFD Bridge Design Specifications for the range of fill heights shown.
See the Multiple Box Culverts Cast-In-Place Miscellaneous Detail (MC-MD) standard sheet for details pertaining to skewed ends, angle sections, and lengthening.

Cover dimensions are clear dimensions, unless noted otherwise.
Reinforcing bar dimensions shown are out-to-out of bar.

HL93 LOADING SHEET 1 OF 2

Texas Department of Transportation — Bridge Division Standard

MULTIPLE BOX CULVERTS CAST-IN-PLACE
5'-0" SPAN
0' TO 20' FILL
MC-5-20

FILE:	DN: TBE	CK: BMP	DW: TxDOT	CK: TxDOT
©TxDOT February 2020	CONT	SECT	JOB	HIGHWAY
REVISIONS	0914	05	222	RM 2243
	DIST	COUNTY		SHEET NO.
	AUS	WILLIAMSON		297

DISCLAIMER:
The use of this standard is governed by the "Texas Engineering Practice Act". No warranty of any kind is made by TxDOT for any purpose whatsoever. TxDOT assumes no responsibility for the conversion of this standard to other formats or for incorrect results or damages resulting from its use.

DATE: 4/10/2025 1:05:51 PM
FILE: G:\TxC\Projects\County_Williamson\7473-02 RM 2243 Phase 1A\03_CADD\01_Shts\06-DRNG\Shts\CD-MC520-20.dgn

NUMBER OF SPANS	SECTION DIMENSIONS				BILLS OF REINFORCING STEEL (For Box Length = 40 feet)																														QUANTITIES					
					Bars B					Bars C & D							Bars E					Bars F1 ~ #4				Bars F2 ~ #4				Bars M ~ #4				Bars Y & Z ~ #4								Bars H 4 ~ #4		Bars K		Per Foot of Barrel		Curb		Total	
												Bars C		Bars D																				Bars Y		Bars Z											
	S	H	T	U	No.	Size	Spa	Length	Wt	No.	Size	Spa	Length	Wt	Length	Wt	No.	Size	Spa	Length	Wt	No.	Spa	Length	Wt	No.	Spa	Length	Wt	No.	Spa	Length	Wt	No.	Spa	Length	Wt	Length	Wt	Length	Wt	No.	Wt	Conc (CY)	Renf (Lb)	Conc (CY)	Renf (Lb)	Conc (CY)	Renf (Lb)
2	5' – 0"	2' – 0"	8"	7"	108	#5	9"	11' – 6"	1,295	108	#5	9"	6' – 3"	704	6' – 4"	713	108	#5	9"	8' – 8"	976	8	18"	39' – 9"	212	38	18"	39' – 9"	1,009	108	9"	2' – 0"	144	54	9"	4' – 7"	165	5' – 3"	189	11' – 6"	31	26	72	0.710	135.2	0.9	103	29.3	5,510
3	5' – 0"	2' – 0"	8"	7"	108	#5	9"	17' – 1"	1,924	108	#5	9"	6' – 3"	704	6' – 4"	713	108	#5	9"	14' – 3"	1,605	12	18"	39' – 9"	319	54	18"	39' – 9"	1,434	108	9"	2' – 0"	144	108	9"	4' – 7"	331	5' – 3"	379	17' – 1"	46	38	106	1.029	188.8	1.3	152	42.4	7,705
4	5' – 0"	2' – 0"	8"	7"	108	#5	9"	22' – 8"	2,553	108	#5	9"	6' – 3"	704	6' – 4"	713	108	#5	9"	19' – 10"	2,234	16	18"	39' – 9"	425	70	18"	39' – 9"	1,859	108	9"	2' – 0"	144	162	9"	4' – 7"	496	5' – 3"	568	22' – 8"	61	48	134	1.348	242.4	1.7	195	55.6	9,891
5	5' – 0"	2' – 0"	8"	7"	108	#5	9"	28' – 3"	3,182	108	#5	9"	6' – 3"	704	6' – 4"	713	108	#5	9"	25' – 5"	2,863	20	18"	39' – 9"	531	86	18"	39' – 9"	2,284	108	9"	2' – 0"	144	216	9"	4' – 7"	661	5' – 3"	758	28' – 3"	75	60	167	1.667	296.0	2.1	242	68.8	12,082
6	5' – 0"	2' – 0"	8"	7"	108	#5	9"	33' – 10"	3,811	108	#5	9"	6' – 3"	704	6' – 4"	713	108	#5	9"	31' – 0"	3,492	24	18"	39' – 9"	637	102	18"	39' – 9"	2,708	108	9"	2' – 0"	144	270	9"	4' – 7"	827	5' – 3"	947	33' – 10"	90	70	195	1.986	349.6	2.5	285	82.0	14,268
2	5' – 0"	3' – 0"	8"	7"	108	#6	9"	11' – 6"	1,865	108	#5	9"	7' – 3"	817	6' – 4"	713	108	#5	9"	8' – 8"	976	8	18"	39' – 9"	212	44	18"	39' – 9"	1,168	108	9"	3' – 0"	216	54	9"	4' – 7"	165	7' – 3"	262	11' – 6"	31	26	72	0.775	159.9	0.9	103	31.9	6,497
3	5' – 0"	3' – 0"	8"	7"	108	#6	9"	17' – 1"	2,771	108	#5	9"	7' – 3"	817	6' – 4"	713	108	#5	9"	14' – 3"	1,605	12	18"	39' – 9"	319	62	18"	39' – 9"	1,646	108	9"	3' – 0"	216	108	9"	4' – 7"	331	7' – 3"	523	17' – 1"	46	38	106	1.115	223.5	1.3	152	45.9	9,093
4	5' – 0"	3' – 0"	8"	7"	108	#6	9"	22' – 8"	3,677	108	#5	9"	7' – 3"	817	6' – 4"	713	108	#5	9"	19' – 10"	2,234	16	18"	39' – 9"	425	80	18"	39' – 9"	2,124	108	9"	3' – 0"	216	162	9"	4' – 7"	496	7' – 3"	785	22' – 8"	61	48	134	1.456	287.2	1.7	195	59.9	11,682
5	5' – 0"	3' – 0"	8"	7"	108	#6	9"	28' – 3"	4,583	108	#5	9"	7' – 3"	817	6' – 4"	713	108	#5	9"	25' – 5"	2,863	20	18"	39' – 9"	531	98	18"	39' – 9"	2,602	108	9"	3' – 0"	216	216	9"	4' – 7"	661	7' – 3"	1,046	28' – 3"	75	60	167	1.796	350.8	2.1	242	73.9	14,274
6	5' – 0"	3' – 0"	8"	7"	108	#6	9"	33' – 10"	5,488	108	#5	9"	7' – 3"	817	6' – 4"	713	108	#5	9"	31' – 0"	3,492	24	18"	39' – 9"	637	116	18"	39' – 9"	3,080	108	9"	3' – 0"	216	270	9"	4' – 7"	827	7' – 3"	1,308	33' – 10"	90	70	195	2.137	414.5	2.5	285	88.0	16,863
2	5' – 0"	4' – 0"	8"	7"	108	#6	9"	11' – 6"	1,865	108	#5	9"	8' – 3"	929	6' – 4"	713	108	#5	9"	8' – 8"	976	8	18"	39' – 9"	212	44	18"	39' – 9"	1,168	108	9"	4' – 0"	289	54	9"	4' – 7"	165	9' – 3"	334	11' – 6"	31	26	72	0.840	166.3	0.9	103	34.5	6,754
3	5' – 0"	4' – 0"	8"	7"	108	#6	9"	17' – 1"	2,771	108	#5	9"	8' – 3"	929	6' – 4"	713	108	#5	9"	14' – 3"	1,605	12	18"	39' – 9"	319	62	18"	39' – 9"	1,646	108	9"	4' – 0"	289	108	9"	4' – 7"	331	9' – 3"	667	17' – 1"	46	38	106	1.202	231.8	1.3	152	49.4	9,422
4	5' – 0"	4' – 0"	8"	7"	108	#6	9"	22' – 8"	3,677	108	#5	9"	8' – 3"	929	6' – 4"	713	108	#5	9"	19' – 10"	2,234	16	18"	39' – 9"	425	80	18"	39' – 9"	2,124	108	9"	4' – 0"	289	162	9"	4' – 7"	496	9' – 3"	1,001	22' – 8"	61	48	134	1.564	297.2	1.7	195	64.3	12,083
5	5' – 0"	4' – 0"	8"	7"	108	#6	9"	28' – 3"	4,583	108	#5	9"	8' – 3"	929	6' – 4"	713	108	#5	9"	25' – 5"	2,863	20	18"	39' – 9"	531	98	18"	39' – 9"	2,602	108	9"	4' – 0"	289	216	9"	4' – 7"	661	9' – 3"	1,335	28' – 3"	75	60	167	1.926	362.7	2.1	242	79.1	14,748
6	5' – 0"	4' – 0"	8"	7"	108	#6	9"	33' – 10"	5,488	108	#5	9"	8' – 3"	929	6' – 4"	713	108	#5	9"	31' – 0"	3,492	24	18"	39' – 9"	637	116	18"	39' – 9"	3,080	108	9"	4' – 0"	289	270	9"	4' – 7"	827	9' – 3"	1,668	33' – 10"	90	70	195	2.288	428.1	2.5	285	94.0	17,408
2	5' – 0"	5' – 0"	8"	7"	108	#6	9"	11' – 6"	1,865	108	#5	9"	9' – 3"	1,042	6' – 4"	713	108	#5	9"	8' – 8"	976	8	18"	39' – 9"	212	50	18"	39' – 9"	1,328	108	9"	5' – 0"	361	54	9"	4' – 7"	165	11' – 3"	406	11' – 6"	31	26	72	0.904	176.7	0.9	103	37.0	7,171
3	5' – 0"	5' – 0"	8"	7"	108	#6	9"	17' – 1"	2,771	108	#5	9"	9' – 3"	1,042	6' – 4"	713	108	#5	9"	14' – 3"	1,605	12	18"	39' – 9"	319	70	18"	39' – 9"	1,859	108	9"	5' – 0"	361	108	9"	4' – 7"	331	11' – 3"	812	17' – 1"	46	38	106	1.288	245.3	1.3	152	52.8	9,965
4	5' – 0"	5' – 0"	8"	7"	108	#6	9"	22' – 8"	3,677	108	#5	9"	9' – 3"	1,042	6' – 4"	713	108	#5	9"	19' – 10"	2,234	16	18"	39' – 9"	425	90	18"	39' – 9"	2,390	108	9"	5' – 0"	361	162	9"	4' – 7"	496	11' – 3"	1,217	22' – 8"	61	48	134	1.672	313.9	1.7	195	68.6	12,750
5	5' – 0"	5' – 0"	8"	7"	108	#6	9"	28' – 3"	4,583	108	#5	9"	9' – 3"	1,042	6' – 4"	713	108	#5	9"	25' – 5"	2,863	20	18"	39' – 9"	531	110	18"	39' – 9"	2,921	108	9"	5' – 0"	361	216	9"	4' – 7"	661	11' – 3"	1,623	28' – 3"	75	60	167	2.056	382.5	2.1	242	84.3	15,540
6	5' – 0"	5' – 0"	8"	7"	108	#6	9"	33' – 10"	5,488	108	#5	9"	9' – 3"	1,042	6' – 4"	713	108	#5	9"	31' – 0"	3,492	24	18"	39' – 9"	637	130	18"	39' – 9"	3,452	108	9"	5' – 0"	361	270	9"	4' – 7"	827	11' – 3"	2,029	33' – 10"	90	70	195	2.439	451.0	2.5	285	100.1	18,326

HL93 LOADING SHEET 2 OF 2

Texas Department of Transportation | Bridge Division Standard

MULTIPLE BOX CULVERTS CAST-IN-PLACE

5'-0" SPAN
0' TO 20' FILL
MC-5-20

FILE:	DN: TBE	CK: BMP	DW: TxDOT	CK: TxDOT
©TxDOT February 2020	CONT	SECT	JOB	HIGHWAY
REVISIONS	0914	05	222	RM 2243
	DIST	COUNTY		SHEET NO.
	AUS	WILLIAMSON		298

DISCLAIMER:
The use of this standard is governed by the "Texas Engineering Practice Act". No warranty of any kind is made by TxDOT for any purpose whatsoever. TxDOT assumes no responsibility for the conversion of this standard to other formats or for incorrect results or damages resulting from its use.

DATE: 4/10/2025 1:05:52 PM
FILE: G:\TXC\Projects\County_Williamson\7473-02 RM 2243 Phase 1A\03_CADD\01_Shts\06-DRNG\Stds\CD-MC616-20.dgn

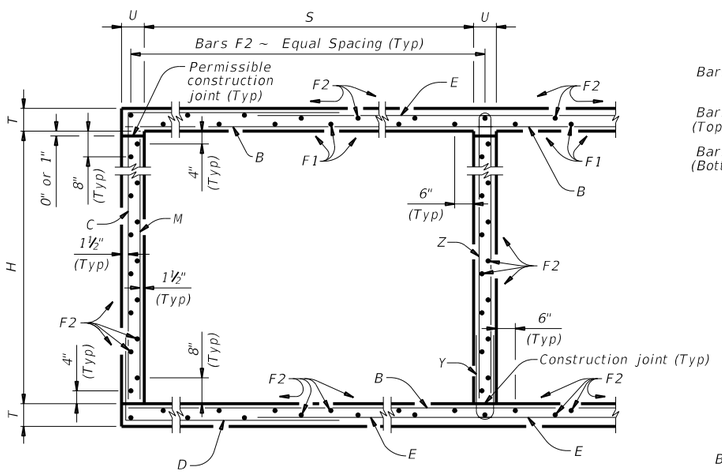

TYPICAL SECTION

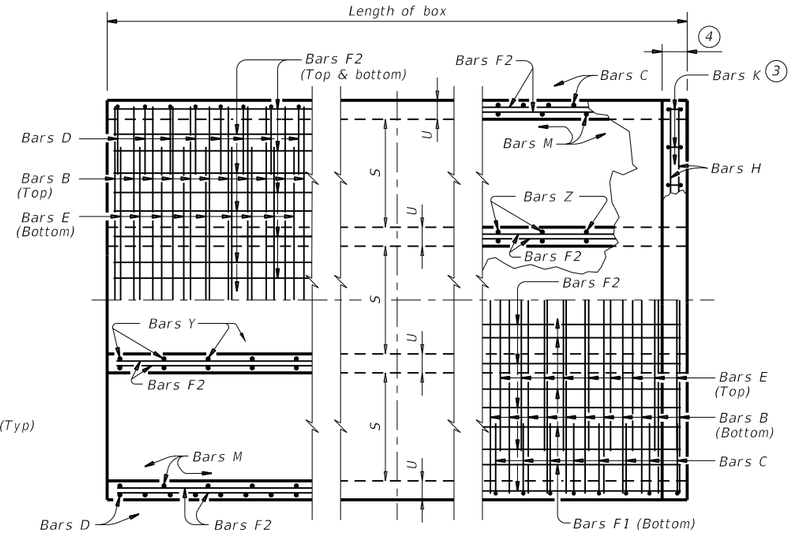

BOTTOM SLAB TOP SLAB

PART PLANS

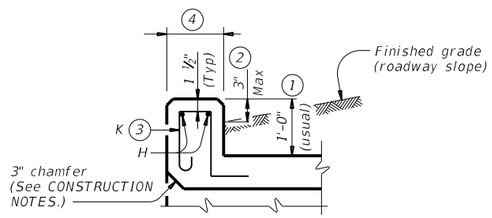

SECTION THRU CURB

TABLE OF BAR DIMENSIONS		
H	"X"	"Y"
2'-0"	2'-7 ½"	4'-1"
3'-0"	3'-7 ½"	4'-1"
4'-0"	4'-7 ½"	4'-1"
5'-0"	5'-7 ½"	4'-1"
6'-0"	6'-7 ½"	4'-1"

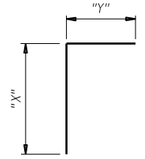

BARS C

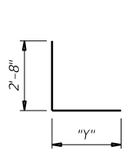

BARS D

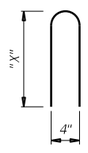

BARS Z

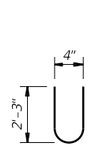

BARS Y

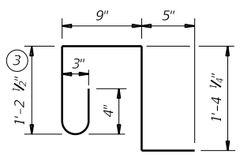

BARS K (#4)
(Spa = 1'-0" Max)
(Length = 4'-2")

1 0" Min to 5'-0" Max. Estimated curb heights are shown elsewhere in the plans. For structures with pedestrian rail or curbs taller than 1'-0", refer to the Extended Curb Details (ECD) standard sheet. For structures with T631 or T631LS bridge rail, refer to the Mounting Details for T631 & T631LS Rails (T631-CM) standard sheet. Refer to the Rail Anchorage Curb (RAC) standard sheet for structures with bridge rail other than T631 or T631LS.

2 For vehicle safety, the following requirements must be met:
- For structures without bridge rail, construct curbs no more than 3" above finished grade.
- For structures with bridge rail, construct curbs flush with finished grade.

Reduce curb heights, if necessary, to meet the above requirements. No changes will be made in quantities and no additional compensation will be allowed for this work.

3 For curbs less than 1'-0" high, tilt Bars K or reduce bar height as necessary to maintain cover. For curbs less than 3" high, Bars K may be omitted.

4 1'-0" typical. 2'-3" when the Rail Anchorage Curb (RAC) standard sheet is referred to elsewhere in the plans.

The Contractor may replace Bars B, C, D, E, F1, F2, M, Y, and/or Z with deformed welded wire reinforcement (WWR) meeting the requirements of ASTM A1064. The area of required reinforcement may be reduced by the ratio of 60 ksi / 70 ksi. Spacing of WWR is limited to 4" Min and 18" Max. When required, provide lap splices in the WWR of the same length required for the equivalent bar size, rounded up for wire sizes between conventional bar sizes. The lap length required for WWR is never less than the lap length required for uncoated #4 bars.

Example conversion: Replacing No. 6 Gr 60 at 6" Spacing with WWR
Required WWR = (0.44 sq. in. per 0.5 ft.) x (60 ksi / 70 ksi) = 0.755 sq. in. per ft.
If D30.6 wire is used to meet the 0.755 sq. in. per ft. requirement in this example, the required spacing = (0.306 sq. in.) / (0.755 sq. in. per ft.) x (12 in. per ft.) = 4.86" Max spacing. Required lap length for the provided D30.6 wire is 2'-1" (the same minimum lap length required for uncoated #5 bars, as listed under MATERIAL NOTES).

CONSTRUCTION NOTES:

Do not use permanent forms.
Chamfer the bottom edge of the top slab 3" at the entrance.
Optionally, raise construction joints shown at the flow line by a maximum of 6". If this option is taken, Bars M may be cut off or raised, Bars C and D may be reversed, and Bars Y and Z may be reversed.

MATERIAL NOTES:

Provide Grade 60 reinforcing steel.
Provide galvanized reinforcing steel if required elsewhere in the plans.
Provide Class C concrete (f'c = 3,600 psi) for culvert barrel and curb, with the following exceptions: provide Class S concrete (f'c = 4,000 psi) for top slabs of:
- culverts with overlay,
- culverts with 1-to-2 course surface treatment, or
- culverts with the top slab as the final riding surface.

Provide bar laps, where required, as follows:
- Uncoated or galvanized ~ #4 = 1'-8" Min
- Uncoated or galvanized ~ #5 = 2'-1" Min
- Uncoated or galvanized ~ #6 = 2'-6" Min

GENERAL NOTES:

Designed according to AASHTO LRFD Bridge Design Specifications for the range of fill heights shown.
See the Multiple Box Culverts Cast-In-Place Miscellaneous Detail (MC-MD) standard sheet for details pertaining to skewed ends, angle sections, and lengthening.

Cover dimensions are clear dimensions, unless noted otherwise.
Reinforcing bar dimensions shown are out-to-out of bar.

HL93 LOADING SHEET 1 OF 2

Texas Department of Transportation — Bridge Division Standard

MULTIPLE BOX CULVERTS CAST-IN-PLACE
6'-0" SPAN
0' TO 16' FILL
MC-6-16

FILE:	DN: TBE	CK: BMP	DW: TxDOT	CK: TxDOT
©TxDOT February 2020	CONT	SECT	JOB	HIGHWAY
REVISIONS	0914	05	222	RM 2243
	DIST	COUNTY		SHEET NO.
	AUS	WILLIAMSON		299

DISCLAIMER:
The use of this standard is governed by the "Texas Engineering Practice Act". No warranty of any kind is made by TxDOT for any purpose whatsoever. TxDOT assumes no responsibility for the conversion of this standard to other formats or for incorrect results or damages resulting from its use.

DATE: 4/10/2025 1:05:53 PM
FILE: G:\TxC\Projects\County_Williamson\7473-02 RM 2243 Phase 1A\03_CADD\01_Shts\06-DRNG\Shts\CD-MC616-20.dgn

NUMBER OF SPANS	SECTION DIMENSIONS				BILLS OF REINFORCING STEEL (For Box Length = 40 feet)																														QUANTITIES					
					Bars B					Bars C & D							Bars E					Bars F1 ~ #4				Bars F2 ~ #4				Bars M ~ #4				Bars Y & Z ~ #4							Bars H 4 ~ #4		Bars K		Per Foot of Barrel		Curb		Total	
	S	H	T	U	No.	Size	Spa	Length	Wt	No.	Size	Spa	Bars C Length	Bars C Wt	Bars D Length	Bars D Wt	No.	Size	Spa	Length	Wt	No.	Spa	Length	Wt	No.	Spa	Length	Wt	No.	Spa	Length	Wt	No.	Spa	Bars Y Length	Bars Y Wt	Bars Z Length	Bars Z Wt	Length	Wt	No.	Wt	Conc (CY)	Renf (Lb)	Conc (CY)	Renf (Lb)	Conc (CY)	Renf (Lb)
2	6' – 0"	2' – 0"	9"	7"	108	#6	9"	13' – 6"	2,190	108	#5	9"	6' – 8"	751	6' – 9"	760	108	#6	9"	10' – 2"	1,649	10	18"	39' – 9"	266	44	18"	39' – 9"	1,168	108	9"	2' – 0"	144	54	9"	4' – 9"	171	5' – 5"	195	13' – 6"	36	30	84	0.894	182.4	1.0	120	36.8	7,414
3	6' – 0"	2' – 0"	9"	7"	108	#6	9"	20' – 1"	3,258	108	#5	9"	6' – 8"	751	6' – 9"	760	108	#6	9"	16' – 9"	2,717	15	18"	39' – 9"	398	63	18"	39' – 9"	1,673	108	9"	2' – 0"	144	108	9"	4' – 9"	343	5' – 5"	391	20' – 1"	54	44	122	1.302	260.9	1.5	176	53.6	10,611
4	6' – 0"	2' – 0"	9"	7"	108	#6	9"	26' – 8"	4,326	108	#5	9"	6' – 8"	751	6' – 9"	760	108	#6	9"	23' – 4"	3,785	20	18"	39' – 9"	531	82	18"	39' – 9"	2,177	108	9"	2' – 0"	144	162	9"	4' – 9"	514	5' – 5"	586	26' – 8"	71	56	156	1.711	339.4	2.0	227	70.4	13,801
5	6' – 0"	2' – 0"	9"	7"	108	#6	9"	33' – 3"	5,394	108	#5	9"	6' – 8"	751	6' – 9"	760	108	#6	9"	29' – 11"	4,853	25	18"	39' – 9"	664	101	18"	39' – 9"	2,682	108	9"	2' – 0"	144	216	9"	4' – 9"	685	5' – 5"	782	33' – 3"	89	70	195	2.120	417.9	2.5	284	87.3	16,999
6	6' – 0"	2' – 0"	9"	7"	108	#6	9"	39' – 10"	6,462	108	#5	9"	6' – 8"	751	6' – 9"	760	108	#6	9"	36' – 6"	5,921	30	18"	39' – 9"	797	120	18"	39' – 9"	3,186	108	9"	2' – 0"	144	270	9"	4' – 9"	857	5' – 5"	977	39' – 10"	106	82	228	2.529	496.4	3.0	334	104.1	20,189
2	6' – 0"	3' – 0"	9"	7"	108	#6	9"	13' – 6"	2,190	108	#5	9"	7' – 8"	864	6' – 9"	760	108	#6	9"	10' – 2"	1,649	10	18"	39' – 9"	266	50	18"	39' – 9"	1,328	108	9"	3' – 0"	216	54	9"	4' – 9"	171	7' – 5"	268	13' – 6"	36	30	84	0.958	192.8	1.0	120	39.3	7,832
3	6' – 0"	3' – 0"	9"	7"	108	#6	9"	20' – 1"	3,258	108	#5	9"	7' – 8"	864	6' – 9"	760	108	#6	9"	16' – 9"	2,717	15	18"	39' – 9"	398	71	18"	39' – 9"	1,885	108	9"	3' – 0"	216	108	9"	4' – 9"	343	7' – 5"	535	20' – 1"	54	44	122	1.389	274.4	1.5	176	57.1	11,152
4	6' – 0"	3' – 0"	9"	7"	108	#6	9"	26' – 8"	4,326	108	#5	9"	7' – 8"	864	6' – 9"	760	108	#6	9"	23' – 4"	3,785	20	18"	39' – 9"	531	92	18"	39' – 9"	2,443	108	9"	3' – 0"	216	162	9"	4' – 9"	514	7' – 5"	803	26' – 8"	71	56	156	1.819	356.1	2.0	227	74.7	14,469
5	6' – 0"	3' – 0"	9"	7"	108	#6	9"	33' – 3"	5,394	108	#5	9"	7' – 8"	864	6' – 9"	760	108	#6	9"	29' – 11"	4,853	25	18"	39' – 9"	664	113	18"	39' – 9"	3,000	108	9"	3' – 0"	216	216	9"	4' – 9"	685	7' – 5"	1,070	33' – 3"	89	70	195	2.250	437.7	2.5	284	92.5	17,790
6	6' – 0"	3' – 0"	9"	7"	108	#6	9"	39' – 10"	6,462	108	#5	9"	7' – 8"	864	6' – 9"	760	108	#6	9"	36' – 6"	5,921	30	18"	39' – 9"	797	134	18"	39' – 9"	3,558	108	9"	3' – 0"	216	270	9"	4' – 9"	857	7' – 5"	1,338	39' – 10"	106	82	228	2.681	519.3	3.0	334	110.2	21,107
2	6' – 0"	4' – 0"	9"	7"	108	#6	9"	13' – 6"	2,190	108	#5	9"	8' – 8"	976	6' – 9"	760	108	#6	9"	10' – 2"	1,649	10	18"	39' – 9"	266	50	18"	39' – 9"	1,328	108	9"	4' – 0"	289	54	9"	4' – 9"	171	9' – 5"	340	13' – 6"	36	30	84	1.023	199.2	1.0	120	41.9	8,089
3	6' – 0"	4' – 0"	9"	7"	108	#6	9"	20' – 1"	3,258	108	#5	9"	8' – 8"	976	6' – 9"	760	108	#6	9"	16' – 9"	2,717	15	18"	39' – 9"	398	71	18"	39' – 9"	1,885	108	9"	4' – 0"	289	108	9"	4' – 9"	343	9' – 5"	679	20' – 1"	54	44	122	1.475	282.6	1.5	176	60.5	11,481
4	6' – 0"	4' – 0"	9"	7"	108	#6	9"	26' – 8"	4,326	108	#5	9"	8' – 8"	976	6' – 9"	760	108	#6	9"	23' – 4"	3,785	20	18"	39' – 9"	531	92	18"	39' – 9"	2,443	108	9"	4' – 0"	289	162	9"	4' – 9"	514	9' – 5"	1,019	26' – 8"	71	56	156	1.927	366.1	2.0	227	79.1	14,870
5	6' – 0"	4' – 0"	9"	7"	108	#6	9"	33' – 3"	5,394	108	#5	9"	8' – 8"	976	6' – 9"	760	108	#6	9"	29' – 11"	4,853	25	18"	39' – 9"	664	113	18"	39' – 9"	3,000	108	9"	4' – 0"	289	216	9"	4' – 9"	685	9' – 5"	1,359	33' – 3"	89	70	195	2.380	449.5	2.5	284	97.7	18,264
6	6' – 0"	4' – 0"	9"	7"	108	#6	9"	39' – 10"	6,462	108	#5	9"	8' – 8"	976	6' – 9"	760	108	#6	9"	36' – 6"	5,921	30	18"	39' – 9"	797	134	18"	39' – 9"	3,558	108	9"	4' – 0"	289	270	9"	4' – 9"	857	9' – 5"	1,698	39' – 10"	106	82	228	2.832	533.0	3.0	334	116.2	21,652
2	6' – 0"	5' – 0"	9"	7"	108	#6	9"	13' – 6"	2,190	108	#5	9"	9' – 8"	1,089	6' – 9"	760	108	#6	9"	10' – 2"	1,649	10	18"	39' – 9"	266	56	18"	39' – 9"	1,487	108	9"	5' – 0"	361	54	9"	4' – 9"	171	11' – 5"	412	13' – 6"	36	30	84	1.088	209.6	1.0	120	44.5	8,505
3	6' – 0"	5' – 0"	9"	7"	108	#6	9"	20' – 1"	3,258	108	#5	9"	9' – 8"	1,089	6' – 9"	760	108	#6	9"	16' – 9"	2,717	15	18"	39' – 9"	398	79	18"	39' – 9"	2,098	108	9"	5' – 0"	361	108	9"	4' – 9"	343	11' – 5"	824	20' – 1"	54	44	122	1.562	296.2	1.5	176	64.0	12,024
4	6' – 0"	5' – 0"	9"	7"	108	#6	9"	26' – 8"	4,326	108	#5	9"	9' – 8"	1,089	6' – 9"	760	108	#6	9"	23' – 4"	3,785	20	18"	39' – 9"	531	102	18"	39' – 9"	2,708	108	9"	5' – 0"	361	162	9"	4' – 9"	514	11' – 5"	1,235	26' – 8"	71	56	156	2.035	382.7	2.0	227	83.4	15,536
5	6' – 0"	5' – 0"	9"	7"	108	#6	9"	33' – 3"	5,394	108	#5	9"	9' – 8"	1,089	6' – 9"	760	108	#6	9"	29' – 11"	4,853	25	18"	39' – 9"	664	125	18"	39' – 9"	3,319	108	9"	5' – 0"	361	216	9"	4' – 9"	685	11' – 5"	1,647	33' – 3"	89	70	195	2.509	469.3	2.5	284	102.8	19,056
6	6' – 0"	5' – 0"	9"	7"	108	#6	9"	39' – 10"	6,462	108	#5	9"	9' – 8"	1,089	6' – 9"	760	108	#6	9"	36' – 6"	5,921	30	18"	39' – 9"	797	148	18"	39' – 9"	3,930	108	9"	5' – 0"	361	270	9"	4' – 9"	857	11' – 5"	2,059	39' – 10"	106	82	228	2.983	555.9	3.0	334	122.3	22,570
2	6' – 0"	6' – 0"	9"	7"	108	#6	9"	13' – 6"	2,190	108	#5	9"	10' – 8"	1,202	6' – 9"	760	108	#6	9"	10' – 2"	1,649	10	18"	39' – 9"	266	62	18"	39' – 9"	1,646	108	9"	6' – 0"	433	54	9"	4' – 9"	171	13' – 5"	484	13' – 6"	36	30	84	1.153	220.0	1.0	120	47.1	8,921
3	6' – 0"	6' – 0"	9"	7"	108	#6	9"	20' – 1"	3,258	108	#5	9"	10' – 8"	1,202	6' – 9"	760	108	#6	9"	16' – 9"	2,717	15	18"	39' – 9"	398	87	18"	39' – 9"	2,310	108	9"	6' – 0"	433	108	9"	4' – 9"	343	13' – 5"	968	20' – 1"	54	44	122	1.648	309.7	1.5	176	67.4	12,565
4	6' – 0"	6' – 0"	9"	7"	108	#6	9"	26' – 8"	4,326	108	#5	9"	10' – 8"	1,202	6' – 9"	760	108	#6	9"	23' – 4"	3,785	20	18"	39' – 9"	531	112	18"	39' – 9"	2,974	108	9"	6' – 0"	433	162	9"	4' – 9"	514	13' – 5"	1,452	26' – 8"	71	56	156	2.144	399.4	2.0	227	87.7	16,204
5	6' – 0"	6' – 0"	9"	7"	108	#6	9"	33' – 3"	5,394	108	#5	9"	10' – 8"	1,202	6' – 9"	760	108	#6	9"	29' – 11"	4,853	25	18"	39' – 9"	664	137	18"	39' – 9"	3,638	108	9"	6' – 0"	433	216	9"	4' – 9"	685	13' – 5"	1,936	33' – 3"	89	70	195	2.639	489.1	2.5	284	108.0	19,849
6	6' – 0"	6' – 0"	9"	7"	108	#6	9"	39' – 10"	6,462	108	#5	9"	10' – 8"	1,202	6' – 9"	760	108	#6	9"	36' – 6"	5,921	30	18"	39' – 9"	797	162	18"	39' – 9"	4,302	108	9"	6' – 0"	433	270	9"	4' – 9"	857	13' – 5"	2,420	39' – 10"	106	82	228	3.134	578.9	3.0	334	128.3	23,488

HL93 LOADING SHEET 2 OF 2

Texas Department of Transportation | Bridge Division Standard

MULTIPLE BOX CULVERTS CAST-IN-PLACE

6'-0" SPAN
0' TO 16' FILL

MC-6-16

FILE:	DN: TBE	CK: BMP	DW: TxDOT	CK: TxDOT
©TxDOT February 2020	CONT	SECT	JOB	HIGHWAY
REVISIONS	0914	05	222	RM 2243
	DIST	COUNTY		SHEET NO.
	AUS	WILLIAMSON		300

DISCLAIMER:
The use of this standard is governed by the "Texas Engineering Practice Act". No warranty of any kind is made by TxDOT for any purpose whatsoever. TxDOT assumes no responsibility for the conversion of this standard to other formats or for incorrect results or damages resulting from its use.

DATE: 4/10/2025 1:05:54 PM
FILE: G:\TXC\Projects\County_Williamson\7473-02 RM 2243 Phase 1A\03_CADD\01_Shts\06-DRNG\Stds\CD-MC710-20.dgn

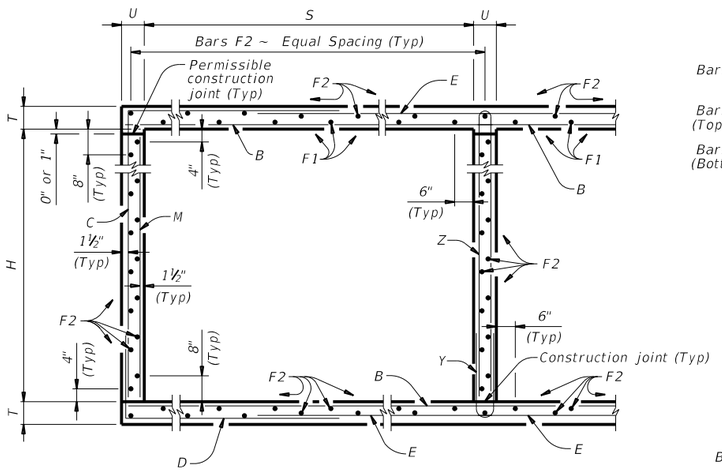

TYPICAL SECTION

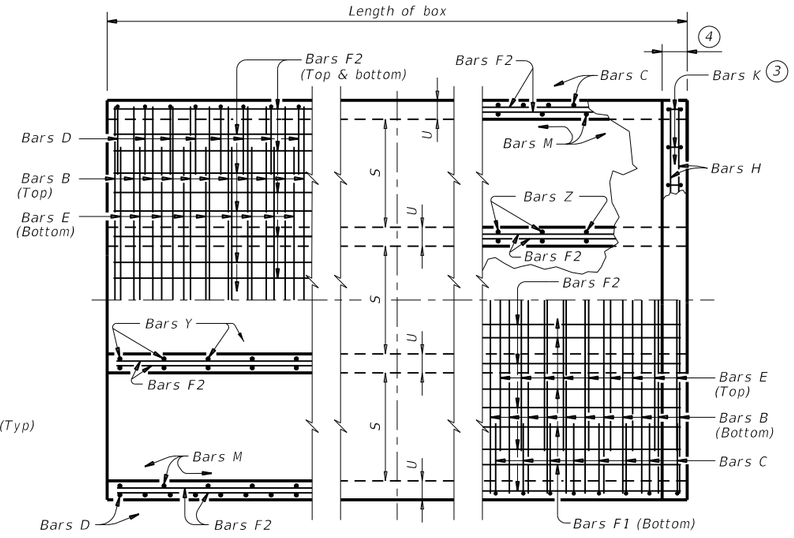

BOTTOM SLAB TOP SLAB

PART PLANS

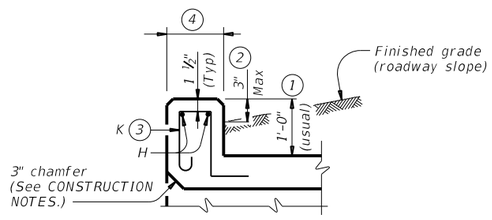

SECTION THRU CURB

TABLE OF BAR DIMENSIONS		
H	"X"	"Y"
3'-0"	3'-6 ½"	4'-5"
4'-0"	4'-6 ½"	4'-5"
5'-0"	5'-6 ½"	4'-5"
6'-0"	6'-6 ½"	4'-5"
7'-0"	7'-6 ½"	4'-5"

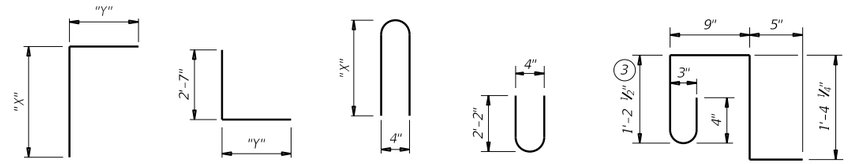

BARS C BARS D BARS Z BARS Y BARS K (#4)
(Spa = 1'-0" Max)
(Length = 4'-2")

1 0" Min to 5'-0" Max. Estimated curb heights are shown elsewhere in the plans. For structures with pedestrian rail or curbs taller than 1'-0", refer to the Extended Curb Details (ECD) standard sheet. For structures with T631 or T631LS bridge rail, refer to the Mounting Details for T631 & T631LS Rails (T631-CM) standard sheet. Refer to the Rail Anchorage Curb (RAC) standard sheet for structures with bridge rail other than T631 or T631LS.

2 For vehicle safety, the following requirements must be met:
- For structures without bridge rail, construct curbs no more than 3" above finished grade.
- For structures with bridge rail, construct curbs flush with finished grade.

Reduce curb heights, if necessary, to meet the above requirements. No changes will be made in quantities and no additional compensation will be allowed for this work.

3 For curbs less than 1'-0" high, tilt Bars K or reduce bar height as necessary to maintain cover. For curbs less than 3" high, Bars K may be omitted.

4 1'-0" typical. 2'-3" when the Rail Anchorage Curb (RAC) standard sheet is referred to elsewhere in the plans.

The Contractor may replace Bars B, C, D, E, F1, F2, M, Y, and/or Z with deformed welded wire reinforcement (WWR) meeting the requirements of ASTM A1064. The area of required reinforcement may be reduced by the ratio of 60 ksi / 70 ksi. Spacing of WWR is limited to 4" Min and 18" Max. When required, provide lap splices in the WWR of the same length required for the equivalent bar size, rounded up for wire sizes between conventional bar sizes. The lap length required for WWR is never less than the lap length required for uncoated #4 bars.

Example conversion: Replacing No. 6 Gr 60 at 6" Spacing with WWR
Required WWR = (0.44 sq. in. per 0.5 ft.) x (60 ksi / 70 ksi) = 0.755 sq. in. per ft.
If D30.6 wire is used to meet the 0.755 sq. in. per ft. requirement in this example, the required spacing = (0.306 sq. in.) / (0.755 sq. in. per ft.) x (12 in. per ft.) = 4.86" Max spacing. Required lap length for the provided D30.6 wire is 2'-1" (the same minimum lap length required for uncoated #5 bars, as listed under MATERIAL NOTES).

CONSTRUCTION NOTES:

Do not use permanent forms.
Chamfer the bottom edge of the top slab 3" at the entrance.
Optionally, raise construction joints shown at the flow line by a maximum of 6". If this option is taken, Bars M may be cut off or raised, Bars C and D may be reversed, and Bars Y and Z may be reversed.

MATERIAL NOTES:

Provide Grade 60 reinforcing steel.
Provide galvanized reinforcing steel if required elsewhere in the plans.
Provide Class C concrete (f'c = 3,600 psi) for culvert barrel and curb, with the following exceptions: provide Class S concrete (f'c = 4,000 psi) for top slabs of:
- culverts with overlay,
- culverts with 1-to-2 course surface treatment, or
- culverts with the top slab as the final riding surface.

Provide bar laps, where required, as follows:
- Uncoated or galvanized ~ #4 = 1'-8" Min
- Uncoated or galvanized ~ #5 = 2'-1" Min
- Uncoated or galvanized ~ #6 = 2'-6" Min

GENERAL NOTES:

Designed according to AASHTO LRFD Bridge Design Specifications for the range of fill heights shown.
See the Multiple Box Culverts Cast-In-Place Miscellaneous Detail (MC-MD) standard sheet for details pertaining to skewed ends, angle sections, and lengthening.

Cover dimensions are clear dimensions, unless noted otherwise.
Reinforcing bar dimensions shown are out-to-out of bar.

HL93 LOADING SHEET 1 OF 2

Texas Department of Transportation — Bridge Division Standard

MULTIPLE BOX CULVERTS CAST-IN-PLACE
7'-0" SPAN
0' TO 10' FILL
MC-7-10

FILE:	DN: TBE	CK: BMP	DW: TxDOT	CK: TxDOT
©TxDOT February 2020 REVISIONS	CONT	SECT	JOB	HIGHWAY
	0914	05	222	RM 2243
	DIST	COUNTY		SHEET NO.
	AUS	WILLIAMSON		301

DISCLAIMER:
The use of this standard is governed by the "Texas Engineering Practice Act". No warranty of any kind is made by TxDOT for any purpose whatsoever. TxDOT assumes no responsibility for the conversion of this standard to other formats or for incorrect results or damages resulting from its use.

DATE: 4/10/2025 1:05:55 PM
FILE: G:\TxC\Projects\County_Williamson\7473-02 RM 2243 Phase 1A\03_CADD\01_Shts\06-DRNG\Shts\CD-MC710-20.dgn

BILLS OF REINFORCING STEEL (For Box Length = 40 feet)

NUMBER OF SPANS	SECTION DIMENSIONS				Bars B					Bars C & D							Bars E					Bars F1 ~ #4				Bars F2 ~ #4				Bars M ~ #4				Bars Y & Z ~ #4						Bars H 4 ~ #4		Bars K		QUANTITIES: Per Foot of Barrel		QUANTITIES: Curb		QUANTITIES: Total	
													Bars C		Bars D																					Bars Y		Bars Z													
	S	H	T	U	No.	Size	Spa	Length	Wt	No.	Size	Spa	Length	Wt	Length	Wt	No.	Size	Spa	Length	Wt	No.	Spa	Length	Wt	No.	Spa	Length	Wt	No.	Spa	Length	Wt	No.	Spa	Length	Wt	Length	Wt	No.	Wt	Conc (CY)	Renf (Lb)	Conc (CY)	Renf (Lb)	Conc (CY)	Renf (Lb)
2	7'-0"	3'-0"	8"	7"	108	#6	9"	15'-6"	2,514	162	#5	6"	7'-11"	1,338	7'-0"	1,183	108	#6	9"	11'-5"	1,852	10	18"	39'-9"	266	54	18"	39'-9"	1,434	108	9"	3'-0"	216	54	9"	4'-7"	165	7'-3"	262	15'-6"	41	34	95	0.972	230.8	1.2	136	40.0	9,366
3	7'-0"	3'-0"	8"	7"	108	#6	9"	23'-1"	3,744	162	#5	6"	7'-11"	1,338	7'-0"	1,183	108	#6	9"	19'-0"	3,082	15	18"	39'-9"	398	77	18"	39'-9"	2,045	108	9"	3'-0"	216	108	9"	4'-7"	331	7'-3"	523	23'-1"	62	50	139	1.412	321.5	1.7	201	58.2	13,061
4	7'-0"	3'-0"	8"	7"	108	#6	9"	30'-8"	4,975	162	#5	6"	7'-11"	1,338	7'-0"	1,183	108	#6	9"	26'-7"	4,312	20	18"	39'-9"	531	100	18"	39'-9"	2,655	108	9"	3'-0"	216	162	9"	4'-7"	496	7'-3"	785	30'-8"	82	64	178	1.851	412.3	2.3	260	76.3	16,751
5	7'-0"	3'-0"	8"	7"	108	#6	9"	38'-3"	6,205	162	#5	6"	7'-11"	1,338	7'-0"	1,183	108	#6	9"	34'-2"	5,542	25	18"	39'-9"	664	123	18"	39'-9"	3,266	108	9"	3'-0"	216	216	9"	4'-7"	661	7'-3"	1,046	38'-3"	102	80	223	2.290	503.0	2.8	325	94.4	20,446
6	7'-0"	3'-0"	8"	7"	108	#6	9"	45'-10"	7,435	162	#5	6"	7'-11"	1,338	7'-0"	1,183	108	#6	9"	41'-9"	6,773	30	18"	39'-9"	797	146	18"	39'-9"	3,877	108	9"	3'-0"	216	270	9"	4'-7"	827	7'-3"	1,308	45'-10"	122	94	262	2.729	593.9	3.4	384	112.6	24,138
2	7'-0"	4'-0"	8"	7"	108	#6	9"	15'-6"	2,514	162	#5	6"	8'-11"	1,507	7'-0"	1,183	108	#6	9"	11'-5"	1,852	10	18"	39'-9"	266	54	18"	39'-9"	1,434	108	9"	4'-0"	289	54	9"	4'-7"	165	9'-3"	334	15'-6"	41	34	95	1.037	238.6	1.2	136	42.6	9,680
3	7'-0"	4'-0"	8"	7"	108	#6	9"	23'-1"	3,744	162	#5	6"	8'-11"	1,507	7'-0"	1,183	108	#6	9"	19'-0"	3,082	15	18"	39'-9"	398	77	18"	39'-9"	2,045	108	9"	4'-0"	289	108	9"	4'-7"	331	9'-3"	667	23'-1"	62	50	139	1.498	331.2	1.7	201	61.6	13,447
4	7'-0"	4'-0"	8"	7"	108	#6	9"	30'-8"	4,975	162	#5	6"	8'-11"	1,507	7'-0"	1,183	108	#6	9"	26'-7"	4,312	20	18"	39'-9"	531	100	18"	39'-9"	2,655	108	9"	4'-0"	289	162	9"	4'-7"	496	9'-3"	1,001	30'-8"	82	64	178	1.959	423.7	2.3	260	80.6	17,209
5	7'-0"	4'-0"	8"	7"	108	#6	9"	38'-3"	6,205	162	#5	6"	8'-11"	1,507	7'-0"	1,183	108	#6	9"	34'-2"	5,542	25	18"	39'-9"	664	123	18"	39'-9"	3,266	108	9"	4'-0"	289	216	9"	4'-7"	661	9'-3"	1,335	38'-3"	102	80	223	2.420	516.3	2.8	325	99.6	20,977
6	7'-0"	4'-0"	8"	7"	108	#6	9"	45'-10"	7,435	162	#5	6"	8'-11"	1,507	7'-0"	1,183	108	#6	9"	41'-9"	6,773	30	18"	39'-9"	797	146	18"	39'-9"	3,877	108	9"	4'-0"	289	270	9"	4'-7"	827	9'-3"	1,668	45'-10"	122	94	262	2.881	608.9	3.4	384	118.6	24,740
2	7'-0"	5'-0"	8"	7"	108	#6	9"	15'-6"	2,514	162	#5	6"	9'-11"	1,676	7'-0"	1,183	108	#6	9"	11'-5"	1,852	10	18"	39'-9"	266	60	18"	39'-9"	1,593	108	9"	5'-0"	361	54	9"	4'-7"	165	11'-3"	406	15'-6"	41	34	95	1.102	250.4	1.2	136	45.2	10,152
3	7'-0"	5'-0"	8"	7"	108	#6	9"	23'-1"	3,744	162	#5	6"	9'-11"	1,676	7'-0"	1,183	108	#6	9"	19'-0"	3,082	15	18"	39'-9"	398	85	18"	39'-9"	2,257	108	9"	5'-0"	361	108	9"	4'-7"	331	11'-3"	812	23'-1"	62	50	139	1.584	346.1	1.7	201	65.1	14,045
4	7'-0"	5'-0"	8"	7"	108	#6	9"	30'-8"	4,975	162	#5	6"	9'-11"	1,676	7'-0"	1,183	108	#6	9"	26'-7"	4,312	20	18"	39'-9"	531	110	18"	39'-9"	2,921	108	9"	5'-0"	361	162	9"	4'-7"	496	11'-3"	1,217	30'-8"	82	64	178	2.067	441.8	2.3	260	85.0	17,932
5	7'-0"	5'-0"	8"	7"	108	#6	9"	38'-3"	6,205	162	#5	6"	9'-11"	1,676	7'-0"	1,183	108	#6	9"	34'-2"	5,542	25	18"	39'-9"	664	135	18"	39'-9"	3,585	108	9"	5'-0"	361	216	9"	4'-7"	661	11'-3"	1,623	38'-3"	102	80	223	2.549	537.5	2.8	325	104.8	21,825
6	7'-0"	5'-0"	8"	7"	108	#6	9"	45'-10"	7,435	162	#5	6"	9'-11"	1,676	7'-0"	1,183	108	#6	9"	41'-9"	6,773	30	18"	39'-9"	797	160	18"	39'-9"	4,248	108	9"	5'-0"	361	270	9"	4'-7"	827	11'-3"	2,029	45'-10"	122	94	262	3.032	633.2	3.4	384	124.7	25,713
2	7'-0"	6'-0"	8"	7"	108	#6	9"	15'-6"	2,514	162	#5	6"	10'-11"	1,845	7'-0"	1,183	108	#6	9"	11'-5"	1,852	10	18"	39'-9"	266	66	18"	39'-9"	1,752	108	9"	6'-0"	433	54	9"	4'-7"	165	13'-3"	478	15'-6"	41	34	95	1.167	262.2	1.2	136	47.8	10,624
3	7'-0"	6'-0"	8"	7"	108	#6	9"	23'-1"	3,744	162	#5	6"	10'-11"	1,845	7'-0"	1,183	108	#6	9"	19'-0"	3,082	15	18"	39'-9"	398	93	18"	39'-9"	2,469	108	9"	6'-0"	433	108	9"	4'-7"	331	13'-3"	956	23'-1"	62	50	139	1.671	361.0	1.7	201	68.6	14,642
4	7'-0"	6'-0"	8"	7"	108	#6	9"	30'-8"	4,975	162	#5	6"	10'-11"	1,845	7'-0"	1,183	108	#6	9"	26'-7"	4,312	20	18"	39'-9"	531	120	18"	39'-9"	3,186	108	9"	6'-0"	433	162	9"	4'-7"	496	13'-3"	1,434	30'-8"	82	64	178	2.175	459.9	2.3	260	89.3	18,655
5	7'-0"	6'-0"	8"	7"	108	#6	9"	38'-3"	6,205	162	#5	6"	10'-11"	1,845	7'-0"	1,183	108	#6	9"	34'-2"	5,542	25	18"	39'-9"	664	147	18"	39'-9"	3,903	108	9"	6'-0"	433	216	9"	4'-7"	661	13'-3"	1,912	38'-3"	102	80	223	2.679	558.7	2.8	325	110.0	22,673
6	7'-0"	6'-0"	8"	7"	108	#6	9"	45'-10"	7,435	162	#5	6"	10'-11"	1,845	7'-0"	1,183	108	#6	9"	41'-9"	6,773	30	18"	39'-9"	797	174	18"	39'-9"	4,620	108	9"	6'-0"	433	270	9"	4'-7"	827	13'-3"	2,390	45'-10"	122	94	262	3.183	657.6	3.4	384	130.7	26,687
2	7'-0"	7'-0"	8"	7"	108	#6	9"	15'-6"	2,514	162	#5	6"	11'-11"	2,014	7'-0"	1,183	108	#6	9"	11'-5"	1,852	10	18"	39'-9"	266	66	18"	39'-9"	1,752	108	9"	7'-0"	505	54	9"	4'-7"	165	15'-3"	550	15'-6"	41	34	95	1.231	270.0	1.2	136	50.4	10,937
3	7'-0"	7'-0"	8"	7"	108	#6	9"	23'-1"	3,744	162	#5	6"	11'-11"	2,014	7'-0"	1,183	108	#6	9"	19'-0"	3,082	15	18"	39'-9"	398	93	18"	39'-9"	2,469	108	9"	7'-0"	505	108	9"	4'-7"	331	15'-3"	1,100	23'-1"	62	50	139	1.757	370.7	1.7	201	72.0	15,027
4	7'-0"	7'-0"	8"	7"	108	#6	9"	30'-8"	4,975	162	#5	6"	11'-11"	2,014	7'-0"	1,183	108	#6	9"	26'-7"	4,312	20	18"	39'-9"	531	120	18"	39'-9"	3,186	108	9"	7'-0"	505	162	9"	4'-7"	496	15'-3"	1,650	30'-8"	82	64	178	2.283	471.3	2.3	260	93.6	19,112
5	7'-0"	7'-0"	8"	7"	108	#6	9"	38'-3"	6,205	162	#5	6"	11'-11"	2,014	7'-0"	1,183	108	#6	9"	34'-2"	5,542	25	18"	39'-9"	664	147	18"	39'-9"	3,903	108	9"	7'-0"	505	216	9"	4'-7"	661	15'-3"	2,200	38'-3"	102	80	223	2.809	571.9	2.8	325	115.2	23,202
6	7'-0"	7'-0"	8"	7"	108	#6	9"	45'-10"	7,435	162	#5	6"	11'-11"	2,014	7'-0"	1,183	108	#6	9"	41'-9"	6,773	30	18"	39'-9"	797	174	18"	39'-9"	4,620	108	9"	7'-0"	505	270	9"	4'-7"	827	15'-3"	2,750	45'-10"	122	94	262	3.334	672.6	3.4	384	136.8	27,288

HL93 LOADING SHEET 2 OF 2

Texas Department of Transportation — Bridge Division Standard

MULTIPLE BOX CULVERTS CAST-IN-PLACE

7'-0" SPAN
0' TO 10' FILL
MC-7-10

FILE:	DN: TBE	CK: BMP	DW: TxDOT	CK: TxDOT
©TxDOT February 2020	CONT	SECT	JOB	HIGHWAY
REVISIONS	0914	05	222	RM 2243
	DIST	COUNTY		SHEET NO.
	AUS	WILLIAMSON		302

DISCLAIMER:
The use of this standard is governed by the "Texas Engineering Practice Act". No warranty of any kind is made by TxDOT for any purpose whatsoever. TxDOT assumes no responsibility for the conversion of this standard to other formats or for incorrect results or damages resulting from its use.

DATE: 4/10/2025 1:05:56 PM
FILE: G:\TXC\Projects\County_Williamson\7473-02 RM 2243 Phase 1A\03_CADD\01_Shts\06-DRNG\Stds\CD-MC813-20.dgn

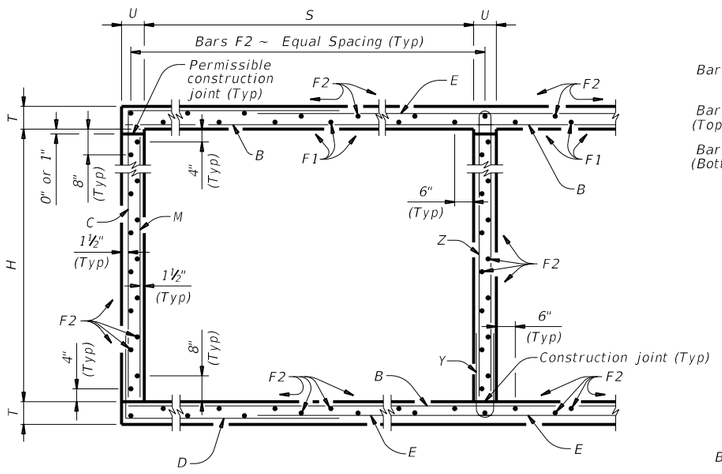

TYPICAL SECTION

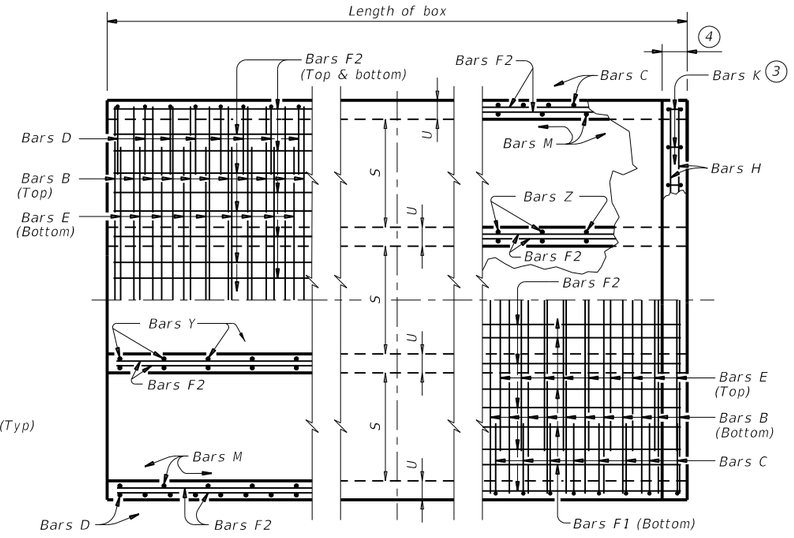

BOTTOM SLAB TOP SLAB

PART PLANS

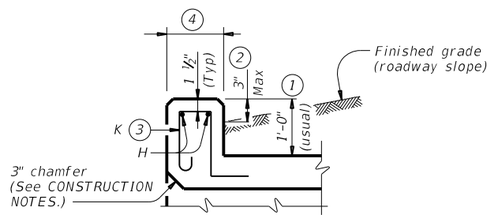

SECTION THRU CURB

TABLE OF BAR DIMENSIONS		
H	"X"	"Y"
3'-0"	3'-6 ½"	5'-1"
4'-0"	4'-6 ½"	5'-1"
5'-0"	5'-6 ½"	5'-1"
6'-0"	6'-6 ½"	5'-1"
7'-0"	7'-6 ½"	5'-1"
8'-0"	8'-6 ½"	5'-1"

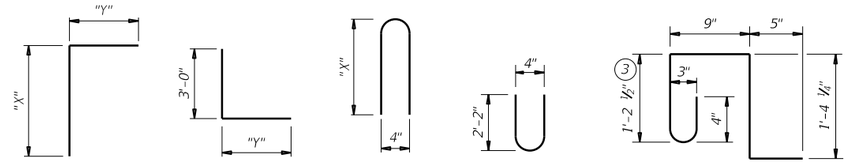

1 0" Min to 5'-0" Max. Estimated curb heights are shown elsewhere in the plans. For structures with pedestrian rail or curbs taller than 1'-0", refer to the Extended Curb Details (ECD) standard sheet. For structures with T631 or T631LS bridge rail, refer to the Mounting Details for T631 & T631LS Rails (T631-CM) standard sheet. Refer to the Rail Anchorage Curb (RAC) standard sheet for structures with bridge rail other than T631 or T631LS.

2 For vehicle safety, the following requirements must be met:
- For structures without bridge rail, construct curbs no more than 3" above finished grade.
- For structures with bridge rail, construct curbs flush with finished grade.

Reduce curb heights, if necessary, to meet the above requirements. No changes will be made in quantities and no additional compensation will be allowed for this work.

3 For curbs less than 1'-0" high, tilt Bars K or reduce bar height as necessary to maintain cover. For curbs less than 3" high, Bars K may be omitted.

4 1'-0" typical. 2'-3" when the Rail Anchorage Curb (RAC) standard sheet is referred to elsewhere in the plans.

The Contractor may replace Bars B, C, D, E, F1, F2, M, Y, and/or Z with deformed welded wire reinforcement (WWR) meeting the requirements of ASTM A1064. The area of required reinforcement may be reduced by the ratio of 60 ksi / 70 ksi. Spacing of WWR is limited to 4" Min and 18" Max. When required, provide lap splices in the WWR of the same length required for the equivalent bar size, rounded up for wire sizes between conventional bar sizes. The lap length required for WWR is never less than the lap length required for uncoated #4 bars.

Example conversion: Replacing No. 6 Gr 60 at 6" Spacing with WWR
Required WWR = (0.44 sq. in. per 0.5 ft.) x (60 ksi / 70 ksi) = 0.755 sq. in. per ft.
If D30.6 wire is used to meet the 0.755 sq. in. per ft. requirement in this example, the required spacing = (0.306 sq. in.) / (0.755 sq. in. per ft.) x (12 in. per ft.) = 4.86" Max spacing. Required lap length for the provided D30.6 wire is 2'-1" (the same minimum lap length required for uncoated #5 bars, as listed under MATERIAL NOTES).

CONSTRUCTION NOTES:

Do not use permanent forms.
Chamfer the bottom edge of the top slab 3" at the entrance.
Optionally, raise construction joints shown at the flow line by a maximum of 6". If this option is taken, Bars M may be cut off or raised, Bars C and D may be reversed, and Bars Y and Z may be reversed.

MATERIAL NOTES:

Provide Grade 60 reinforcing steel.
Provide galvanized reinforcing steel if required elsewhere in the plans.
Provide Class C concrete (f'c = 3,600 psi) for culvert barrel and curb, with the following exceptions: provide Class S concrete (f'c = 4,000 psi) for top slabs of:
- culverts with overlay,
- culverts with 1-to-2 course surface treatment, or
- culverts with the top slab as the final riding surface.

Provide bar laps, where required, as follows:
- Uncoated or galvanized ~ #4 = 1'-8" Min
- Uncoated or galvanized ~ #5 = 2'-1" Min
- Uncoated or galvanized ~ #6 = 2'-6" Min

GENERAL NOTES:

Designed according to AASHTO LRFD Bridge Design Specifications for the range of fill heights shown.
See the Multiple Box Culverts Cast-In-Place Miscellaneous Detail (MC-MD) standard sheet for details pertaining to skewed ends, angle sections, and lengthening.

Cover dimensions are clear dimensions, unless noted otherwise.
Reinforcing bar dimensions shown are out-to-out of bar.

HL93 LOADING SHEET 1 OF 2

Texas Department of Transportation — Bridge Division Standard

MULTIPLE BOX CULVERTS CAST-IN-PLACE
8'-0" SPAN
0' TO 13' FILL
MC-8-13

FILE:	DN: TBE	CK: BMP	DW: TxDOT	CK: TxDOT
©TxDOT February 2020	CONT	SECT	JOB	HIGHWAY
REVISIONS	0914	05	222	RM 2243
	DIST	COUNTY		SHEET NO.
	AUS	WILLIAMSON		303

DISCLAIMER:
The use of this standard is governed by the "Texas Engineering Practice Act". No warranty of any kind is made by TxDOT for any purpose whatsoever. TxDOT assumes no responsibility for the conversion of this standard to other formats or for incorrect results or damages resulting from its use.

DATE: 4/10/2025 1:05:57 PM
FILE: G:\TXC\Projects\County_Williamson\7473-02 RM 2243 Phase 1A\03_CADD\01_Shts\06-DRNG\Stds\CD-MC813-20.dgn

BILLS OF REINFORCING STEEL (For Box Length = 40 feet)

NUMBER OF SPANS	SECTION DIMENSIONS				Bars B					Bars C & D							Bars E					Bars F1 ~ #4				Bars F2 ~ #4				Bars M ~ #4				Bars Y & Z ~ #4								Bars H 4 ~ #4		Bars K		QUANTITIES				
													Bars C		Bars D																						Bars Y		Bars Z								Per Foot of Barrel		Curb		Total	
	S	H	T	U	No.	Size	Spa	Length	Wt	No.	Size	Spa	Length	Wt	Length	Wt	No.	Size	Spa	Length	Wt	No.	Spa	Length	Wt	No.	Spa	Length	Wt	No.	Spa	Length	Wt	No.	Spa	Length	Wt	Length	Wt	Length	Wt	Length	Wt	No.	Wt	Conc (CY)	Renf (Lb)	Conc (CY)	Renf (Lb)	Conc (CY)	Renf (Lb)
2	8' – 0"	3' – 0"	8"	7"	162	#6	6"	17' – 6"	4,258	108	#6	9"	8' – 8"	1,406	8' – 2"	1,325	162	#6	6"	12' – 9"	3,102	12	18"	39' – 9"	319	56	18"	39' – 9"	1,487	108	9"	3' – 0"	216	54	9"	4' – 7"	165	7' – 3"	262	17' – 6"	47	38	106	1.071	313.5	1.3	153	44.2	12,693
3	8' – 0"	3' – 0"	8"	7"	162	#6	6"	26' – 1"	6,347	108	#6	9"	8' – 8"	1,406	8' – 2"	1,325	162	#6	6"	21' – 4"	5,191	18	18"	39' – 9"	478	80	18"	39' – 9"	2,124	108	9"	3' – 0"	216	108	9"	4' – 7"	331	7' – 3"	523	26' – 1"	70	56	156	1.560	448.5	1.9	226	64.3	18,167
4	8' – 0"	3' – 0"	8"	7"	162	#6	6"	34' – 8"	8,435	108	#6	9"	8' – 8"	1,406	8' – 2"	1,325	162	#6	6"	29' – 11"	7,279	24	18"	39' – 9"	637	104	18"	39' – 9"	2,762	108	9"	3' – 0"	216	162	9"	4' – 7"	496	7' – 3"	785	34' – 8"	93	72	200	2.048	583.5	2.6	293	84.5	23,634
5	8' – 0"	3' – 0"	8"	7"	162	#6	6"	43' – 3"	10,524	108	#6	9"	8' – 8"	1,406	8' – 2"	1,325	162	#6	6"	38' – 6"	9,368	30	18"	39' – 9"	797	128	18"	39' – 9"	3,399	108	9"	3' – 0"	216	216	9"	4' – 7"	661	7' – 3"	1,046	43' – 3"	116	90	251	2.537	718.6	3.2	367	104.7	29,109
6	8' – 0"	3' – 0"	8"	7"	162	#6	6"	51' – 10"	12,612	108	#6	9"	8' – 8"	1,406	8' – 2"	1,325	162	#6	6"	47' – 1"	11,457	36	18"	39' – 9"	956	152	18"	39' – 9"	4,036	108	9"	3' – 0"	216	270	9"	4' – 7"	827	7' – 3"	1,308	51' – 10"	138	106	295	3.026	853.6	3.8	433	124.9	34,576
2	8' – 0"	4' – 0"	8"	7"	162	#6	6"	17' – 6"	4,258	108	#6	9"	9' – 8"	1,568	8' – 2"	1,325	162	#6	6"	12' – 9"	3,102	12	18"	39' – 9"	319	56	18"	39' – 9"	1,487	108	9"	4' – 0"	289	54	9"	4' – 7"	165	9' – 3"	334	17' – 6"	47	38	106	1.136	321.2	1.3	153	46.8	13,000
3	8' – 0"	4' – 0"	8"	7"	162	#6	6"	26' – 1"	6,347	108	#6	9"	9' – 8"	1,568	8' – 2"	1,325	162	#6	6"	21' – 4"	5,191	18	18"	39' – 9"	478	80	18"	39' – 9"	2,124	108	9"	4' – 0"	289	108	9"	4' – 7"	331	9' – 3"	667	26' – 1"	70	56	156	1.646	458.0	1.9	226	67.8	18,546
4	8' – 0"	4' – 0"	8"	7"	162	#6	6"	34' – 8"	8,435	108	#6	9"	9' – 8"	1,568	8' – 2"	1,325	162	#6	6"	29' – 11"	7,279	24	18"	39' – 9"	637	104	18"	39' – 9"	2,762	108	9"	4' – 0"	289	162	9"	4' – 7"	496	9' – 3"	1,001	34' – 8"	93	72	200	2.156	594.8	2.6	293	88.8	24,085
5	8' – 0"	4' – 0"	8"	7"	162	#6	6"	43' – 3"	10,524	108	#6	9"	9' – 8"	1,568	8' – 2"	1,325	162	#6	6"	38' – 6"	9,368	30	18"	39' – 9"	797	128	18"	39' – 9"	3,399	108	9"	4' – 0"	289	216	9"	4' – 7"	661	9' – 3"	1,335	43' – 3"	116	90	251	2.667	731.7	3.2	367	109.9	29,633
6	8' – 0"	4' – 0"	8"	7"	162	#6	6"	51' – 10"	12,612	108	#6	9"	9' – 8"	1,568	8' – 2"	1,325	162	#6	6"	47' – 1"	11,457	36	18"	39' – 9"	956	152	18"	39' – 9"	4,036	108	9"	4' – 0"	289	270	9"	4' – 7"	827	9' – 3"	1,668	51' – 10"	138	106	295	3.177	868.5	3.8	433	130.9	35,171
2	8' – 0"	5' – 0"	8"	7"	162	#6	6"	17' – 6"	4,258	108	#6	9"	10' – 8"	1,730	8' – 2"	1,325	162	#6	6"	12' – 9"	3,102	12	18"	39' – 9"	319	62	18"	39' – 9"	1,646	108	9"	5' – 0"	361	54	9"	4' – 7"	165	11' – 3"	406	17' – 6"	47	38	106	1.201	332.8	1.3	153	49.4	13,465
3	8' – 0"	5' – 0"	8"	7"	162	#6	6"	26' – 1"	6,347	108	#6	9"	10' – 8"	1,730	8' – 2"	1,325	162	#6	6"	21' – 4"	5,191	18	18"	39' – 9"	478	88	18"	39' – 9"	2,337	108	9"	5' – 0"	361	108	9"	4' – 7"	331	11' – 3"	812	26' – 1"	70	56	156	1.733	472.8	1.9	226	71.3	19,138
4	8' – 0"	5' – 0"	8"	7"	162	#6	6"	34' – 8"	8,435	108	#6	9"	10' – 8"	1,730	8' – 2"	1,325	162	#6	6"	29' – 11"	7,279	24	18"	39' – 9"	637	114	18"	39' – 9"	3,027	108	9"	5' – 0"	361	162	9"	4' – 7"	496	11' – 3"	1,217	34' – 8"	93	72	200	2.264	612.7	2.6	293	93.1	24,800
5	8' – 0"	5' – 0"	8"	7"	162	#6	6"	43' – 3"	10,524	108	#6	9"	10' – 8"	1,730	8' – 2"	1,325	162	#6	6"	38' – 6"	9,368	30	18"	39' – 9"	797	140	18"	39' – 9"	3,717	108	9"	5' – 0"	361	216	9"	4' – 7"	661	11' – 3"	1,623	43' – 3"	116	90	251	2.796	752.7	3.2	367	115.1	30,473
6	8' – 0"	5' – 0"	8"	7"	162	#6	6"	51' – 10"	12,612	108	#6	9"	10' – 8"	1,730	8' – 2"	1,325	162	#6	6"	47' – 1"	11,457	36	18"	39' – 9"	956	166	18"	39' – 9"	4,408	108	9"	5' – 0"	361	270	9"	4' – 7"	827	11' – 3"	2,029	51' – 10"	138	106	295	3.328	892.6	3.8	433	137.0	36,138
2	8' – 0"	6' – 0"	8"	7"	162	#6	6"	17' – 6"	4,258	108	#6	9"	11' – 8"	1,893	8' – 2"	1,325	162	#6	6"	12' – 9"	3,102	12	18"	39' – 9"	319	68	18"	39' – 9"	1,806	108	9"	6' – 0"	433	54	9"	4' – 7"	165	13' – 3"	478	17' – 6"	47	38	106	1.265	344.5	1.3	153	51.9	13,932
3	8' – 0"	6' – 0"	8"	7"	162	#6	6"	26' – 1"	6,347	108	#6	9"	11' – 8"	1,893	8' – 2"	1,325	162	#6	6"	21' – 4"	5,191	18	18"	39' – 9"	478	96	18"	39' – 9"	2,549	108	9"	6' – 0"	433	108	9"	4' – 7"	331	13' – 3"	956	26' – 1"	70	56	156	1.819	487.6	1.9	226	74.7	19,729
4	8' – 0"	6' – 0"	8"	7"	162	#6	6"	34' – 8"	8,435	108	#6	9"	11' – 8"	1,893	8' – 2"	1,325	162	#6	6"	29' – 11"	7,279	24	18"	39' – 9"	637	124	18"	39' – 9"	3,293	108	9"	6' – 0"	433	162	9"	4' – 7"	496	13' – 3"	1,434	34' – 8"	93	72	200	2.372	630.6	2.6	293	97.5	25,518
5	8' – 0"	6' – 0"	8"	7"	162	#6	6"	43' – 3"	10,524	108	#6	9"	11' – 8"	1,893	8' – 2"	1,325	162	#6	6"	38' – 6"	9,368	30	18"	39' – 9"	797	152	18"	39' – 9"	4,036	108	9"	6' – 0"	433	216	9"	4' – 7"	661	13' – 3"	1,912	43' – 3"	116	90	251	2.926	773.7	3.2	367	120.3	31,316
6	8' – 0"	6' – 0"	8"	7"	162	#6	6"	51' – 10"	12,612	108	#6	9"	11' – 8"	1,893	8' – 2"	1,325	162	#6	6"	47' – 1"	11,457	36	18"	39' – 9"	956	180	18"	39' – 9"	4,780	108	9"	6' – 0"	433	270	9"	4' – 7"	827	13' – 3"	2,390	51' – 10"	138	106	295	3.479	916.8	3.8	433	143.0	37,106
2	8' – 0"	7' – 0"	8"	7"	162	#6	6"	17' – 6"	4,258	108	#6	9"	12' – 8"	2,055	8' – 2"	1,325	162	#6	6"	12' – 9"	3,102	12	18"	39' – 9"	319	68	18"	39' – 9"	1,806	108	9"	7' – 0"	505	54	9"	4' – 7"	165	15' – 3"	550	17' – 6"	47	38	106	1.330	352.1	1.3	153	54.5	14,238
3	8' – 0"	7' – 0"	8"	7"	162	#6	6"	26' – 1"	6,347	108	#6	9"	12' – 8"	2,055	8' – 2"	1,325	162	#6	6"	21' – 4"	5,191	18	18"	39' – 9"	478	96	18"	39' – 9"	2,549	108	9"	7' – 0"	505	108	9"	4' – 7"	331	15' – 3"	1,100	26' – 1"	70	56	156	1.905	497.0	1.9	226	78.1	20,107
4	8' – 0"	7' – 0"	8"	7"	162	#6	6"	34' – 8"	8,435	108	#6	9"	12' – 8"	2,055	8' – 2"	1,325	162	#6	6"	29' – 11"	7,279	24	18"	39' – 9"	637	124	18"	39' – 9"	3,293	108	9"	7' – 0"	505	162	9"	4' – 7"	496	15' – 3"	1,650	34' – 8"	93	72	200	2.480	641.9	2.6	293	101.8	25,968
5	8' – 0"	7' – 0"	8"	7"	162	#6	6"	43' – 3"	10,524	108	#6	9"	12' – 8"	2,055	8' – 2"	1,325	162	#6	6"	38' – 6"	9,368	30	18"	39' – 9"	797	152	18"	39' – 9"	4,036	108	9"	7' – 0"	505	216	9"	4' – 7"	661	15' – 3"	2,200	43' – 3"	116	90	251	3.056	786.8	3.2	367	125.5	31,838
6	8' – 0"	7' – 0"	8"	7"	162	#6	6"	51' – 10"	12,612	108	#6	9"	12' – 8"	2,055	8' – 2"	1,325	162	#6	6"	47' – 1"	11,457	36	18"	39' – 9"	956	180	18"	39' – 9"	4,780	108	9"	7' – 0"	505	270	9"	4' – 7"	827	15' – 3"	2,750	51' – 10"	138	106	295	3.631	931.7	3.8	433	149.1	37,700
2	8' – 0"	8' – 0"	8"	7"	162	#6	6"	17' – 6"	4,258	108	#6	9"	13' – 8"	2,217	8' – 2"	1,325	162	#6	6"	12' – 9"	3,102	12	18"	39' – 9"	319	74	18"	39' – 9"	1,965	108	9"	8' – 0"	577	54	9"	4' – 7"	165	17' – 3"	622	17' – 6"	47	38	106	1.395	363.8	1.3	153	57.1	14,703
3	8' – 0"	8' – 0"	8"	7"	162	#6	6"	26' – 1"	6,347	108	#6	9"	13' – 8"	2,217	8' – 2"	1,325	162	#6	6"	21' – 4"	5,191	18	18"	39' – 9"	478	104	18"	39' – 9"	2,762	108	9"	8' – 0"	577	108	9"	4' – 7"	331	17' – 3"	1,244	26' – 1"	70	56	156	1.992	511.8	1.9	226	81.6	20,698
4	8' – 0"	8' – 0"	8"	7"	162	#6	6"	34' – 8"	8,435	108	#6	9"	13' – 8"	2,217	8' – 2"	1,325	162	#6	6"	29' – 11"	7,279	24	18"	39' – 9"	637	134	18"	39' – 9"	3,558	108	9"	8' – 0"	577	162	9"	4' – 7"	496	17' – 3"	1,867	34' – 8"	93	72	200	2.588	659.8	2.6	293	106.1	26,684
5	8' – 0"	8' – 0"	8"	7"	162	#6	6"	43' – 3"	10,524	108	#6	9"	13' – 8"	2,217	8' – 2"	1,325	162	#6	6"	38' – 6"	9,368	30	18"	39' – 9"	797	164	18"	39' – 9"	4,355	108	9"	8' – 0"	577	216	9"	4' – 7"	661	17' – 3"	2,489	43' – 3"	116	90	251	3.185	807.8	3.2	367	130.6	32,680
6	8' – 0"	8' – 0"	8"	7"	162	#6	6"	51' – 10"	12,612	108	#6	9"	13' – 8"	2,217	8' – 2"	1,325	162	#6	6"	47' – 1"	11,457	36	18"	39' – 9"	956	194	18"	39' – 9"	5,151	108	9"	8' – 0"	577	270	9"	4' – 7"	827	17' – 3"	3,111	51' – 10"	138	106	295	3.782	955.8	3.8	433	155.1	38,666

HL93 LOADING SHEET 2 OF 2

Texas Department of Transportation | Bridge Division Standard

MULTIPLE BOX CULVERTS CAST-IN-PLACE

8'-0" SPAN
0' TO 13' FILL

MC-8-13

FILE:	DN: TBE	CK: BMP	DW: TxDOT	CK: TxDOT
©TxDOT February 2020	CONT	SECT	JOB	HIGHWAY
REVISIONS	0914	05	222	RM 2243
	DIST	COUNTY		SHEET NO.
	AUS	WILLIAMSON		304

DISCLAIMER:
The use of this standard is governed by the "Texas Engineering Practice Act". No warranty of any kind is made by TxDOT for any purpose whatsoever. TxDOT assumes no responsibility for the conversion of this standard to other formats or for incorrect results or damages resulting from its use.

DATE: 4/10/2025 1:05:58 PM
FILE: G:\TXC\Projects\County_Williamson\7473-02 RM 2243 Phase 1A\03_CADD\01_Shts\06-DRNG\Stds\CD-MC910-20.dgn

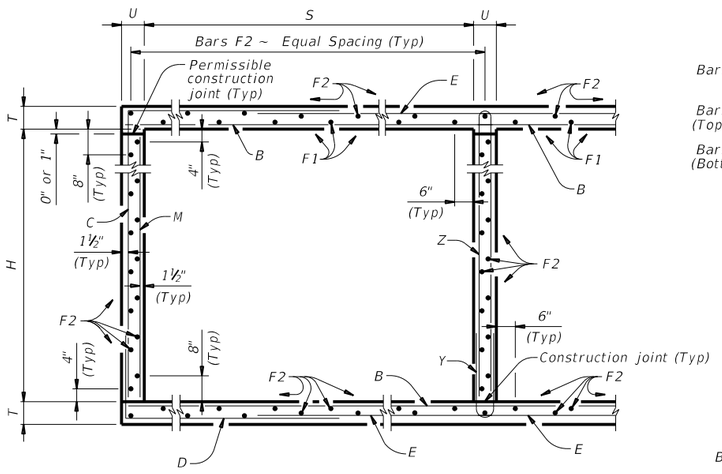

TYPICAL SECTION

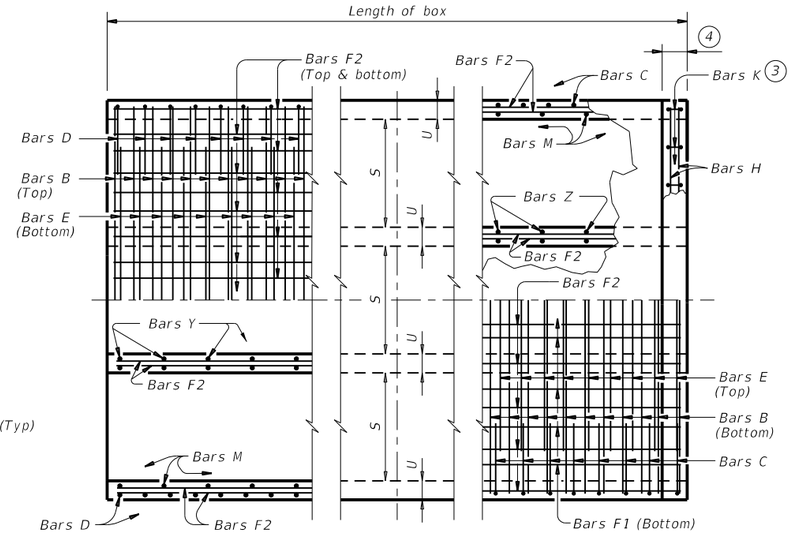

BOTTOM SLAB TOP SLAB

PART PLANS

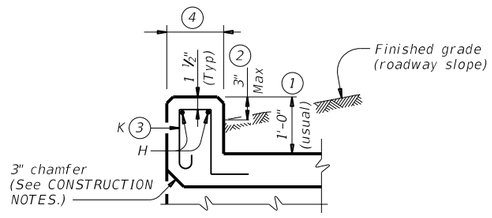

SECTION THRU CURB

TABLE OF BAR DIMENSIONS		
H	"X"	"Y"
4'-0"	4'-7 ½"	5'-5"
5'-0"	5'-7 ½"	5'-5"
6'-0"	6'-7 ½"	5'-5"
7'-0"	7'-7 ½"	5'-5"
8'-0"	8'-7 ½"	5'-5"
9'-0"	9'-7 ½"	5'-5"

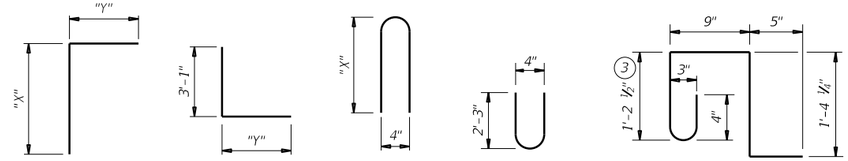

BARS C BARS D BARS Z BARS Y

BARS K (#4)
(Spa = 1'-0" Max)
(Length = 4'-2")

1 0" Min to 5'-0" Max. Estimated curb heights are shown elsewhere in the plans. For structures with pedestrian rail or curbs taller than 1'-0", refer to the Extended Curb Details (ECD) standard sheet. For structures with T631 or T631LS bridge rail, refer to the Mounting Details for T631 & T631LS Rails (T631-CM) standard sheet. Refer to the Rail Anchorage Curb (RAC) standard sheet for structures with bridge rail other than T631 or T631LS.

2 For vehicle safety, the following requirements must be met:
- For structures without bridge rail, construct curbs no more than 3" above finished grade.
- For structures with bridge rail, construct curbs flush with finished grade.

Reduce curb heights, if necessary, to meet the above requirements. No changes will be made in quantities and no additional compensation will be allowed for this work.

3 For curbs less than 1'-0" high, tilt Bars K or reduce bar height as necessary to maintain cover. For curbs less than 3" high, Bars K may be omitted.

4 1'-0" typical. 2'-3" when the Rail Anchorage Curb (RAC) standard sheet is referred to elsewhere in the plans.

The Contractor may replace Bars B, C, D, E, F1, F2, M, Y, and/or Z with deformed welded wire reinforcement (WWR) meeting the requirements of ASTM A1064. The area of required reinforcement may be reduced by the ratio of 60 ksi / 70 ksi. Spacing of WWR is limited to 4" Min and 18" Max. When required, provide lap splices in the WWR of the same length required for the equivalent bar size, rounded up for wire sizes between conventional bar sizes. The lap length required for WWR is never less than the lap length required for uncoated #4 bars.

Example conversion: Replacing No. 6 Gr 60 at 6" Spacing with WWR
Required WWR = (0.44 sq. in. per 0.5 ft.) x (60 ksi / 70 ksi) = 0.755 sq. in. per ft.
If D30.6 wire is used to meet the 0.755 sq. in. per ft. requirement in this example, the required spacing = (0.306 sq. in.) / (0.755 sq. in. per ft.) x (12 in. per ft.) = 4.86" Max spacing. Required lap length for the provided D30.6 wire is 2'-1" (the same minimum lap length required for uncoated #5 bars, as listed under MATERIAL NOTES).

CONSTRUCTION NOTES:

Do not use permanent forms.
Chamfer the bottom edge of the top slab 3" at the entrance.
Optionally, raise construction joints shown at the flow line by a maximum of 6". If this option is taken, Bars M may be cut off or raised, Bars C and D may be reversed, and Bars Y and Z may be reversed.

MATERIAL NOTES:

Provide Grade 60 reinforcing steel.
Provide galvanized reinforcing steel if required elsewhere in the plans.
Provide Class C concrete (f'c = 3,600 psi) for culvert barrel and curb, with the following exceptions: provide Class S concrete (f'c = 4,000 psi) for top slabs of:
- culverts with overlay,
- culverts with 1-to-2 course surface treatment, or
- culverts with the top slab as the final riding surface.

Provide bar laps, where required, as follows:
- Uncoated or galvanized ~ #4 = 1'-8" Min
- Uncoated or galvanized ~ #5 = 2'-1" Min
- Uncoated or galvanized ~ #6 = 2'-6" Min

GENERAL NOTES:

Designed according to AASHTO LRFD Bridge Design Specifications for the range of fill heights shown.
See the Multiple Box Culverts Cast-In-Place Miscellaneous Detail (MC-MD) standard sheet for details pertaining to skewed ends, angle sections, and lengthening.

Cover dimensions are clear dimensions, unless noted otherwise.
Reinforcing bar dimensions shown are out-to-out of bar.

HL93 LOADING SHEET 1 OF 2

Texas Department of Transportation — Bridge Division Standard

MULTIPLE BOX CULVERTS CAST-IN-PLACE
9'-0" SPAN
0' TO 10' FILL
MC-9-10

FILE:	DN: TBE	CK: BMP	DW: TxDOT	CK: TxDOT
©TxDOT February 2020	CONT	SECT	JOB	HIGHWAY
REVISIONS	0914	05	222	RM 2243
	DIST	COUNTY		SHEET NO.
	AUS	WILLIAMSON		305

DISCLAIMER:
The use of this standard is governed by the "Texas Engineering Practice Act". No warranty of any kind is made by TxDOT for any purpose whatsoever. TxDOT assumes no responsibility for the conversion of this standard to other formats or for incorrect results or damages resulting from its use.

DATE: 4/10/2025 1:05:59 PM
FILE: G:\TXC\Projects\County_Williamson\7473-02 RM 2243 Phase 1A\03_CADD\01_Shts\06-DRNG\Stds\CD-MC910-20.dgn

BILLS OF REINFORCING STEEL (For Box Length = 40 feet)

NUMBER OF SPANS	SECTION DIMENSIONS				Bars B					Bars C & D							Bars E					Bars F1 ~ #4				Bars F2 ~ #4				Bars M ~ #4				Bars Y & Z ~ #4						Bars H 4 ~ #4		Bars K		QUANTITIES					
													Bars C		Bars D																				Bars Y		Bars Z								Per Foot of Barrel		Curb		Total	
	S	H	T	U	No.	Size	Spa	Length	Wt	No.	Size	Spa	Length	Wt	Length	Wt	No.	Size	Spa	Length	Wt	No.	Spa	Length	Wt	No.	Spa	Length	Wt	No.	Spa	Length	Wt	No.	Spa	Length	Wt	Length	Wt	No.	Wt	Conc (CY)	Renf (Lb)	Conc (CY)	Renf (Lb)	Conc (CY)	Renf (Lb)
2	9' - 0"	4' - 0"	9"	7"	162	#6	6"	19' - 6"	4,745	108	#6	9"	10' - 1"	1,636	8' - 7"	1,392	162	#6	6"	14' - 1"	3,427	14	18"	39' - 9"	372	62	18"	39' - 9"	1,646	108	9"	4' - 0"	289	54	9"	4' - 9"	171	9' - 5"	340	19' - 6"	52	42	117	1.356	350.5	1.5	169	55.7	14,187
3	9' - 0"	4' - 0"	9"	7"	162	#6	6"	29' - 1"	7,077	108	#6	9"	10' - 1"	1,636	8' - 7"	1,392	162	#6	6"	23' - 8"	5,759	21	18"	39' - 9"	558	89	18"	39' - 9"	2,363	108	9"	4' - 0"	289	108	9"	4' - 9"	343	9' - 5"	679	29' - 1"	78	62	173	1.975	502.4	2.2	251	81.2	20,347
4	9' - 0"	4' - 0"	9"	7"	162	#6	6"	38' - 8"	9,409	108	#6	9"	10' - 1"	1,636	8' - 7"	1,392	162	#6	6"	33' - 3"	8,091	28	18"	39' - 9"	743	116	18"	39' - 9"	3,080	108	9"	4' - 0"	289	162	9"	4' - 9"	514	9' - 5"	1,019	38' - 8"	103	80	223	2.594	654.3	2.9	326	106.6	26,499
5	9' - 0"	4' - 0"	9"	7"	162	#6	6"	48' - 3"	11,740	108	#6	9"	10' - 1"	1,636	8' - 7"	1,392	162	#6	6"	42' - 10"	10,422	35	18"	39' - 9"	929	143	18"	39' - 9"	3,797	108	9"	4' - 0"	289	216	9"	4' - 9"	685	9' - 5"	1,359	48' - 3"	129	100	278	3.213	806.2	3.6	407	132.1	32,656
6	9' - 0"	4' - 0"	9"	7"	162	#6	6"	57' - 10"	14,072	108	#6	9"	10' - 1"	1,636	8' - 7"	1,392	162	#6	6"	52' - 5"	12,754	42	18"	39' - 9"	1,115	170	18"	39' - 9"	4,514	108	9"	4' - 0"	289	270	9"	4' - 9"	857	9' - 5"	1,698	57' - 10"	155	118	328	3.832	958.2	4.3	483	157.6	38,810
2	9' - 0"	5' - 0"	9"	7"	162	#6	6"	19' - 6"	4,745	108	#6	9"	11' - 1"	1,798	8' - 7"	1,392	162	#6	6"	14' - 1"	3,427	14	18"	39' - 9"	372	68	18"	39' - 9"	1,806	108	9"	5' - 0"	361	54	9"	4' - 9"	171	11' - 5"	412	19' - 6"	52	42	117	1.421	362.1	1.5	169	58.3	14,653
3	9' - 0"	5' - 0"	9"	7"	162	#6	6"	29' - 1"	7,077	108	#6	9"	11' - 1"	1,798	8' - 7"	1,392	162	#6	6"	23' - 8"	5,759	21	18"	39' - 9"	558	97	18"	39' - 9"	2,576	108	9"	5' - 0"	361	108	9"	4' - 9"	343	11' - 5"	824	29' - 1"	78	62	173	2.062	517.2	2.2	251	84.6	20,939
4	9' - 0"	5' - 0"	9"	7"	162	#6	6"	38' - 8"	9,409	108	#6	9"	11' - 1"	1,798	8' - 7"	1,392	162	#6	6"	33' - 3"	8,091	28	18"	39' - 9"	743	126	18"	39' - 9"	3,346	108	9"	5' - 0"	361	162	9"	4' - 9"	514	11' - 5"	1,235	38' - 8"	103	80	223	2.702	672.2	2.9	326	111.0	27,215
5	9' - 0"	5' - 0"	9"	7"	162	#6	6"	48' - 3"	11,740	108	#6	9"	11' - 1"	1,798	8' - 7"	1,392	162	#6	6"	42' - 10"	10,422	35	18"	39' - 9"	929	155	18"	39' - 9"	4,116	108	9"	5' - 0"	361	216	9"	4' - 9"	685	11' - 5"	1,647	48' - 3"	129	100	278	3.343	827.3	3.6	407	137.3	33,497
6	9' - 0"	5' - 0"	9"	7"	162	#6	6"	57' - 10"	14,072	108	#6	9"	11' - 1"	1,798	8' - 7"	1,392	162	#6	6"	52' - 5"	12,754	42	18"	39' - 9"	1,115	184	18"	39' - 9"	4,886	108	9"	5' - 0"	361	270	9"	4' - 9"	857	11' - 5"	2,059	57' - 10"	155	118	328	3.983	982.4	4.3	483	163.6	39,777
2	9' - 0"	6' - 0"	9"	7"	162	#6	6"	19' - 6"	4,745	108	#6	9"	12' - 1"	1,960	8' - 7"	1,392	162	#6	6"	14' - 1"	3,427	14	18"	39' - 9"	372	74	18"	39' - 9"	1,965	108	9"	6' - 0"	433	54	9"	4' - 9"	171	13' - 5"	484	19' - 6"	52	42	117	1.486	373.7	1.5	169	60.9	15,118
3	9' - 0"	6' - 0"	9"	7"	162	#6	6"	29' - 1"	7,077	108	#6	9"	12' - 1"	1,960	8' - 7"	1,392	162	#6	6"	23' - 8"	5,759	21	18"	39' - 9"	558	105	18"	39' - 9"	2,788	108	9"	6' - 0"	433	108	9"	4' - 9"	343	13' - 5"	968	29' - 1"	78	62	173	2.148	532.0	2.2	251	88.1	21,529
4	9' - 0"	6' - 0"	9"	7"	162	#6	6"	38' - 8"	9,409	108	#6	9"	12' - 1"	1,960	8' - 7"	1,392	162	#6	6"	33' - 3"	8,091	28	18"	39' - 9"	743	136	18"	39' - 9"	3,611	108	9"	6' - 0"	433	162	9"	4' - 9"	514	13' - 5"	1,452	38' - 8"	103	80	223	2.810	690.1	2.9	326	115.3	27,931
5	9' - 0"	6' - 0"	9"	7"	162	#6	6"	48' - 3"	11,740	108	#6	9"	12' - 1"	1,960	8' - 7"	1,392	162	#6	6"	42' - 10"	10,422	35	18"	39' - 9"	929	167	18"	39' - 9"	4,434	108	9"	6' - 0"	433	216	9"	4' - 9"	685	13' - 5"	1,936	48' - 3"	129	100	278	3.472	848.3	3.6	407	142.5	34,338
6	9' - 0"	6' - 0"	9"	7"	162	#6	6"	57' - 10"	14,072	108	#6	9"	12' - 1"	1,960	8' - 7"	1,392	162	#6	6"	52' - 5"	12,754	42	18"	39' - 9"	1,115	198	18"	39' - 9"	5,257	108	9"	6' - 0"	433	270	9"	4' - 9"	857	13' - 5"	2,420	57' - 10"	155	118	328	4.134	1,006.5	4.3	483	169.6	40,743
2	9' - 0"	7' - 0"	9"	7"	162	#6	6"	19' - 6"	4,745	108	#6	9"	13' - 1"	2,122	8' - 7"	1,392	162	#6	6"	14' - 1"	3,427	14	18"	39' - 9"	372	74	18"	39' - 9"	1,965	108	9"	7' - 0"	505	54	9"	4' - 9"	171	15' - 5"	556	19' - 6"	52	42	117	1.551	381.4	1.5	169	63.5	15,424
3	9' - 0"	7' - 0"	9"	7"	162	#6	6"	29' - 1"	7,077	108	#6	9"	13' - 1"	2,122	8' - 7"	1,392	162	#6	6"	23' - 8"	5,759	21	18"	39' - 9"	558	105	18"	39' - 9"	2,788	108	9"	7' - 0"	505	108	9"	4' - 9"	343	15' - 5"	1,112	29' - 1"	78	62	173	2.235	541.4	2.2	251	91.6	21,907
4	9' - 0"	7' - 0"	9"	7"	162	#6	6"	38' - 8"	9,409	108	#6	9"	13' - 1"	2,122	8' - 7"	1,392	162	#6	6"	33' - 3"	8,091	28	18"	39' - 9"	743	136	18"	39' - 9"	3,611	108	9"	7' - 0"	505	162	9"	4' - 9"	514	15' - 5"	1,668	38' - 8"	103	80	223	2.918	701.4	2.9	326	119.6	28,381
5	9' - 0"	7' - 0"	9"	7"	162	#6	6"	48' - 3"	11,740	108	#6	9"	13' - 1"	2,122	8' - 7"	1,392	162	#6	6"	42' - 10"	10,422	35	18"	39' - 9"	929	167	18"	39' - 9"	4,434	108	9"	7' - 0"	505	216	9"	4' - 9"	685	15' - 5"	2,224	48' - 3"	129	100	278	3.602	861.3	3.6	407	147.7	34,860
6	9' - 0"	7' - 0"	9"	7"	162	#6	6"	57' - 10"	14,072	108	#6	9"	13' - 1"	2,122	8' - 7"	1,392	162	#6	6"	52' - 5"	12,754	42	18"	39' - 9"	1,115	198	18"	39' - 9"	5,257	108	9"	7' - 0"	505	270	9"	4' - 9"	857	15' - 5"	2,781	57' - 10"	155	118	328	4.285	1,021.4	4.3	483	175.7	41,338
2	9' - 0"	8' - 0"	9"	7"	162	#6	6"	19' - 6"	4,745	108	#6	9"	14' - 1"	2,285	8' - 7"	1,392	162	#6	6"	14' - 1"	3,427	14	18"	39' - 9"	372	80	18"	39' - 9"	2,124	108	9"	8' - 0"	577	54	9"	4' - 9"	171	17' - 5"	628	19' - 6"	52	42	117	1.616	393.0	1.5	169	66.1	15,890
3	9' - 0"	8' - 0"	9"	7"	162	#6	6"	29' - 1"	7,077	108	#6	9"	14' - 1"	2,285	8' - 7"	1,392	162	#6	6"	23' - 8"	5,759	21	18"	39' - 9"	558	113	18"	39' - 9"	3,000	108	9"	8' - 0"	577	108	9"	4' - 9"	343	17' - 5"	1,257	29' - 1"	78	62	173	2.321	556.2	2.2	251	95.0	22,499
4	9' - 0"	8' - 0"	9"	7"	162	#6	6"	38' - 8"	9,409	108	#6	9"	14' - 1"	2,285	8' - 7"	1,392	162	#6	6"	33' - 3"	8,091	28	18"	39' - 9"	743	146	18"	39' - 9"	3,877	108	9"	8' - 0"	577	162	9"	4' - 9"	514	17' - 5"	1,885	38' - 8"	103	80	223	3.026	719.3	2.9	326	123.9	29,099
5	9' - 0"	8' - 0"	9"	7"	162	#6	6"	48' - 3"	11,740	108	#6	9"	14' - 1"	2,285	8' - 7"	1,392	162	#6	6"	42' - 10"	10,422	35	18"	39' - 9"	929	179	18"	39' - 9"	4,753	108	9"	8' - 0"	577	216	9"	4' - 9"	685	17' - 5"	2,513	48' - 3"	129	100	278	3.731	882.4	3.6	407	152.8	35,703
6	9' - 0"	8' - 0"	9"	7"	162	#6	6"	57' - 10"	14,072	108	#6	9"	14' - 1"	2,285	8' - 7"	1,392	162	#6	6"	52' - 5"	12,754	42	18"	39' - 9"	1,115	212	18"	39' - 9"	5,629	108	9"	8' - 0"	577	270	9"	4' - 9"	857	17' - 5"	3,141	57' - 10"	155	118	328	4.437	1,045.6	4.3	483	181.8	42,305
2	9' - 0"	9' - 0"	9"	7"	162	#6	6"	19' - 6"	4,745	108	#6	9"	15' - 1"	2,447	8' - 7"	1,392	162	#6	6"	14' - 1"	3,427	14	18"	39' - 9"	372	86	18"	39' - 9"	2,284	108	9"	9' - 0"	649	54	9"	4' - 9"	171	19' - 5"	700	19' - 6"	52	42	117	1.681	404.7	1.5	169	68.7	16,356
3	9' - 0"	9' - 0"	9"	7"	162	#6	6"	29' - 1"	7,077	108	#6	9"	15' - 1"	2,447	8' - 7"	1,392	162	#6	6"	23' - 8"	5,759	21	18"	39' - 9"	558	121	18"	39' - 9"	3,213	108	9"	9' - 0"	649	108	9"	4' - 9"	343	19' - 5"	1,401	29' - 1"	78	62	173	2.407	571.0	2.2	251	98.4	23,090
4	9' - 0"	9' - 0"	9"	7"	162	#6	6"	38' - 8"	9,409	108	#6	9"	15' - 1"	2,447	8' - 7"	1,392	162	#6	6"	33' - 3"	8,091	28	18"	39' - 9"	743	156	18"	39' - 9"	4,142	108	9"	9' - 0"	649	162	9"	4' - 9"	514	19' - 5"	2,101	38' - 8"	103	80	223	3.134	737.2	2.9	326	128.2	29,814
5	9' - 0"	9' - 0"	9"	7"	162	#6	6"	48' - 3"	11,740	108	#6	9"	15' - 1"	2,447	8' - 7"	1,392	162	#6	6"	42' - 10"	10,422	35	18"	39' - 9"	929	191	18"	39' - 9"	5,072	108	9"	9' - 0"	649	216	9"	4' - 9"	685	19' - 5"	2,802	48' - 3"	129	100	278	3.861	903.5	3.6	407	158.0	36,545
6	9' - 0"	9' - 0"	9"	7"	162	#6	6"	57' - 10"	14,072	108	#6	9"	15' - 1"	2,447	8' - 7"	1,392	162	#6	6"	52' - 5"	12,754	42	18"	39' - 9"	1,115	226	18"	39' - 9"	6,001	108	9"	9' - 0"	649	270	9"	4' - 9"	857	19' - 5"	3,502	57' - 10"	155	118	328	4.588	1,069.7	4.3	483	187.8	43,272

HL93 LOADING SHEET 2 OF 2

Texas Department of Transportation | Bridge Division Standard

MULTIPLE BOX CULVERTS CAST-IN-PLACE

9'-0" SPAN
0' TO 10' FILL
MC-9-10

FILE:	DN: TBE	CK: BMP	DW: TxDOT	CK: TxDOT
©TxDOT February 2020	CONT	SECT	JOB	HIGHWAY
REVISIONS	0914	05	222	RM 2243
	DIST	COUNTY		SHEET NO.
	AUS	WILLIAMSON		306

DISCLAIMER:
The use of this standard is governed by the "Texas Engineering Practice Act". No warranty of any kind is made by TxDOT for any purpose whatsoever. TxDOT assumes no responsibility for the conversion of this standard to other formats or for incorrect results or damages resulting from its use.

DATE: 4/10/2025 1:06:00 PM
FILE: G:\TXC\Projects\County_Williamson\7473-02 RM 2243 Phase 1A\03_CADD\01_Shts\06-DRNG\Srds\CD-ECD-20.dgn

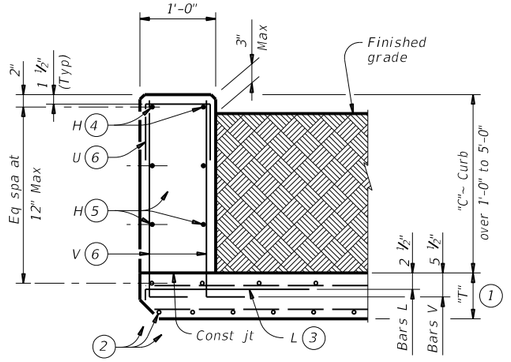

TYPICAL SECTION

Used for curbs over 1'–0" to 5'–0"

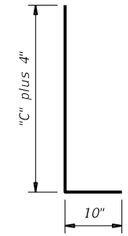

BARS V (#5) (6)
Spaced at 12" Max

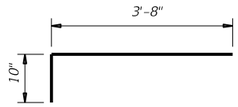

BARS L (#5) (3)
Spaced at 12" Max

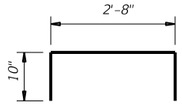

OPTIONAL BARS L (#5) (3) (7)
Spaced at 12" Max

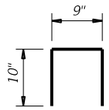

BARS U (#4) (6)
Spaced at 12" Max

(1) "T" is equal to the culvert top slab thickness. For precast boxes with slabs less than 8" thick, see SCP-MD standard for additional details.

(2) Adjust normal culvert slab bars as necessary to clear obstructions.

(3) Place bars L as shown. Tilt hook as necessary to maintain cover.

(4) Place normal culvert curb bars H(#4) as shown. Adjust as necessary to clear obstructions.

(5) Additional bars H(#4) as required to maintain 12" Max spacing.

(6) Replace normal culvert curb bars K with one bar U and two bars V as shown spaced at 12" Max. Adjust length of bars V as necessary to maintain clear cover.

(7) Optional bars L are to be used only for precast box culverts with 3'–0" closure pour.

(8) Quantities shown are for Contractor's information only. Quantities are per linear foot of curb length. The value in table can be interpolated for intermediate values of curb height, "C". Quantity includes bars K (when applicable).

TABLE OF ESTIMATED CURB QUANTITIES (8)

Curb Height "C"	Conc (CY/LF)	Reinf Steel (Lb/LF)
1'–0"	0.037	10.4
1'–6"	0.056	14.5
2'–0"	0.074	15.6
2'–6"	0.093	18.0
3'–0"	0.111	19.0
3'–6"	0.130	21.3
4'–0"	0.148	22.4
4'–6"	0.167	24.8
5'–0"	0.185	25.9

CONSTRUCTION NOTES:

Adjust reinforcing steel as necessary to provide 1 ½" cover.
For vehicle safety, top of the curb must not project more than 3" above the finished grade.

MATERIAL NOTES:

Provide Grade 60 reinforcing steel.
Provide galvanized reinforcing steel if required elsewhere in the plans.
Provide Class "C" concrete (f'_c = 3,600 psi) minimum for curbs.
Provide bar laps, where required, as follows:
- Uncoated or galvanized ~ #4 = 1'–8" Min

GENERAL NOTES:

Designed according to AASHTO LRFD Bridge Design Specifications.
These extended curb details have sufficient strength to allow for future retrofit of Type T631 or T631LS railing. These details are suitable for use with PR11, PR22 and PR3 type rails. These details are not suitable for the mounting of other rail types. For new construction using T631 or T631LS railing, use the T631-CM standard.
This Curb is considered as part of the Box Culvert for payment.

Cover dimensions are clear dimensions, unless noted otherwise.
Reinforcing bar dimensions shown are out-to-out of bar.

Texas Department of Transportation

Bridge Division Standard

EXTENDED CURB DETAILS FOR BOX CULVERTS WITH CURBS OVER 1'-0" TO 5'-0" TALL

ECD

FILE:	DN: GAF	CK: TxDOT	DW: TxDOT	CK: GAF
©TxDOT February 2020	CONT	SECT	JOB	HIGHWAY
REVISIONS	0914	05	222	RM 2243
	DIST	COUNTY		SHEET NO.
	AUS	WILLIAMSON		307

DISCLAIMER:
The use of this standard is governed by the "Texas Engineering Practice Act". No warranty of any kind is made by TxDOT for any purpose whatsoever. TxDOT assumes no responsibility for the conversion of this standard to other formats or for incorrect results or damages resulting from its use.

DATE: 4/10/2025 1:06:01 PM
FILE: G:\TxDC\Projects\County_Williamson\7473-02 RM 2243 Phase 1A\03_CADD\01_Snts\06-DRNG\Snts\CD-PW-20.dgn

TABLE OF DIMENSIONS AND REINFORCING STEEL
(Wings for one structure end)

Dimensions					Variable Reinforcing				Estimated Quantities per ft of wing (2~wings) (4)		Estimated Quantities per ft of Toewall (1~toewall)	
					Bars J1		Bars J2					
Maximum Wingwall Height Hw	W	X	Y	Z	Size	Spa	Size	Spa	Reinf Lb/Ft)	Conc (CY/Ft)	Reinf (Lb/Ft)	Conc (CY/Ft)
2'-6"	2'-10"	10"	1'-0"	7"	#4	1'-0"	#4	1'-0"	48.64	0.406	6.85	0.071
2'-9"	2'-10"	10"	1'-0"	7"	#4	1'-0"	#4	1'-0"	49.31	0.424	6.85	0.071
3'-0"	2'-10"	10"	1'-0"	7"	#4	1'-0"	#4	1'-0"	49.98	0.444	6.85	0.071
3'-3"	2'-10"	10"	1'-0"	7"	#4	1'-0"	#4	1'-0"	53.32	0.462	6.85	0.071
3'-6"	2'-10"	10"	1'-0"	7"	#4	1'-0"	#4	1'-0"	53.98	0.480	6.85	0.071
4'-0"	3'-2"	1'-2"	1'-0"	7"	#4	1'-0"	#4	1'-0"	55.77	0.532	6.85	0.071
4'-6"	3'-2"	1'-2"	1'-0"	7"	#4	1'-0"	#4	1'-0"	59.77	0.568	6.85	0.071
5'-0"	3'-9"	1'-7"	1'-2"	7"	#4	1'-0"	#4	1'-0"	63.45	0.632	6.96	0.075
5'-6"	3'-9"	1'-7"	1'-2"	7"	#4	1'-0"	#4	1'-0"	67.46	0.668	6.96	0.075
6'-0"	4'-4"	2'-0"	1'-4"	7"	#5	1'-0"	#5	1'-0"	80.67	0.730	7.07	0.078
6'-6"	4'-4"	2'-0"	1'-4"	7"	#5	1'-0"	#5	1'-0"	85.05	0.768	7.07	0.078
7'-0"	5'-0"	2'-3"	1'-9"	8"	#5	1'-0"	#5	1'-0"	92.15	0.864	8.07	0.093
7'-6"	5'-0"	2'-3"	1'-9"	8"	#5	1'-0"	#5	1'-0"	96.54	0.902	8.07	0.093
8'-0"	5'-6"	2'-8"	1'-10"	8"	#5	6"	#5	6"	139.04	0.962	8.13	0.095
8'-6"	5'-6"	2'-8"	1'-10"	8"	#5	6"	#5	6"	144.47	1.000	8.13	0.095
9'-6"	6'-0"	2'-10"	2'-2"	9"	#5	6"	#5	6"	156.93	1.136	8.41	0.110
10'-6"	6'-5"	3'-0"	2'-5"	9"	#6	6"	#5	6"	196.27	1.234	8.57	0.117
11'-6"	7'-2"	3'-6"	2'-8"	11"	#6	6"	#6	6"	230.13	1.438	9.52	0.140
12'-6"	7'-8"	3'-9"	2'-11"	1'-0"	#7	6"	#6	6"	283.41	1.592	9.74	0.157
13'-6"	8'-2"	4'-0"	3'-2"	1'-2"	#8	6"	#6	6"	348.72	1.804	10.02	0.186
14'-6"	8'-10"	4'-5"	3'-5"	1'-4"	#9	6"	#6	6"	432.94	2.046	10.30	0.218
15'-6"	9'-6"	4'-10"	3'-8"	1'-6"	#9	6"	#7	6"	489.52	2.302	11.24	0.253
16'-0"	9'-11"	5'-0"	3'-11"	1'-7"	#9	6"	#7	6"	505.72	2.448	11.47	0.279

TABLE OF WINGWALL REINFORCING
(2~wings)

Bar	Size	No.	Spa
D1	#6	~	1'-0"
D2	#6	~	1'-0"
E1	#4	~	1'-0"
F	#4	~	1'-0"
G	#6	~	8"
M1	#4	4	~
P	#4	~	1'-0"
V	#4	~	1'-0"

TABLE OF TOEWALL REINFORCING

Bar	Size	No.	Spa
J3	#4	~	1'-0"
M2	#4	2	~
E2	#4	~	1'-0"

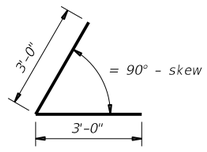

BARS D1

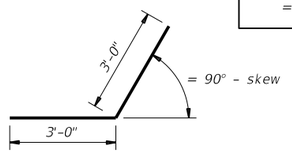

BARS D2

WING DIMENSION FORMULAS:
(All values are in feet.)

Hw = H + T + C
Lw = (Hw) (SL) ÷ cosine (θ) for Type PW-1
= (Hw - 1') (SL) ÷ cosine (θ) for Type PW-2 and Hw ≥ 4'
= (Hw - 0.5') (SL) ÷ cosine (θ) for Type PW-2 and Hw < 4'

For cast-in-place culverts:
Ltw = [(N) (S) + (N + 1) (U)] ÷ cosine (θ)

For precast culverts:
Ltw = [(N) (2 U + S) + (N - 1) (0.5')] ÷ cosine (θ)
Total Wingwall Area (two wings ~ SF)
= (2)(Hw)(Lw) for Type PW-1
= (2)(Hw)(Lw) - 6 SF for Type PW-2 and Hw ≥ 4'
= (2)(Hw)(Lw) - 1.5 SF for Type PW-2 and Hw < 4'

Hw = Height of wingwall
Lw = Length of wingwall
Ltw = Culvert toewall length
N = Number of culvert spans
SL:1 = Channel slope ratio. (horizontal: 1 vertical, usual value is 2:1)
θ = Culvert skew

See applicable box culvert standard sheet for S, H, T, and U values.

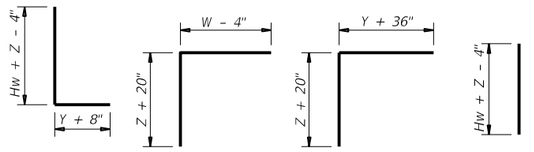

BARS J1 BARS J2 BARS J3 BARS V

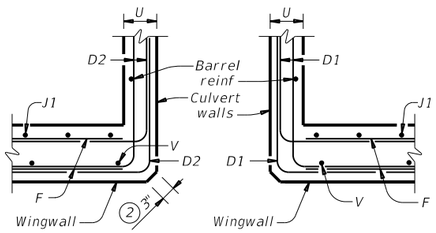

SECTION C-C - PW-1

1. Skew = 0°
2. At discharge end, chamfer may be ¾" minimum.
3. For 15° skew ~ 1"
   For 30° skew ~ 2"
   For 45° skew ~ 3"
4. Quantities shown are for two Type PW-1 wings. Adjust concrete volume for Type PW-2 wings. To determine estimated quantities for two wings, multiply the tabulated values by Lw. Quantities shown do not include weight of Bars D.
5. Provide weepholes for Hw = 5'-0" and greater. Fill around weepholes with coarse gravel.
6. Extend Bars E2 1'-6" minimum into the wingwall footing.
7. Lap Bars M1 1'-6" minimum with Bars M2.
8. Place Bars G as shown, equally spaced at 8" maximum. Provide at least two pairs of Bars G per wing.
9. 0" Min to 5'-0" Max. Estimated curb heights are shown elsewhere in the plans. For structures with pedestrian rail or curbs taller than 1'-0, refer to the Extended Curb Details (ECD) standard sheet. For structures with T631 or T631LS bridge rail, refer to the Mounting Details for T631 & T631LS Rails (T631-CM) standard sheet. Refer to the Box Culvert Rail Mounting Details (RAC) standard sheet for structures with bridge rail other than T631 or T631LS.
10. For vehicle safety, the following requirements must be met:
    - For structures without bridge rail, construct curbs no more than 3" above finished grade.
    - For structures with bridge rail, construct curbs flush with finished grade.

    Reduce curb heights, if necessary, to meet the above requirements. No changes will be made in quantities and no additional compensation will be allowed for this work.
11. 1'-0" typical. 2'-3" when the Box Culvert Rail Mounting Details (RAC) standard sheet is referred to elsewhere in the plans.
12. 3'-0" for Hw < 4'.
13. 6" for Hw < 4'.

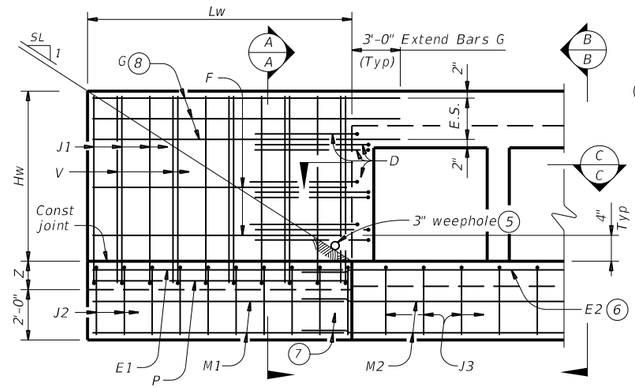

PARTIAL ELEVATION - PW-1

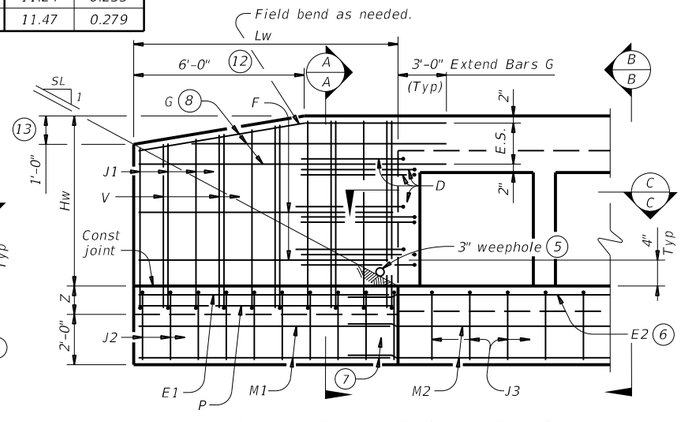

PARTIAL ELEVATION - PW-2

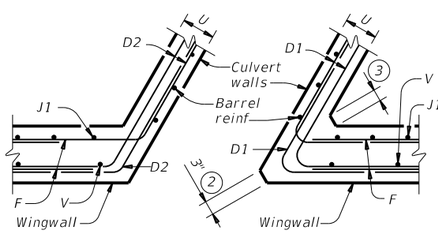

SECTION C-C - PW-2

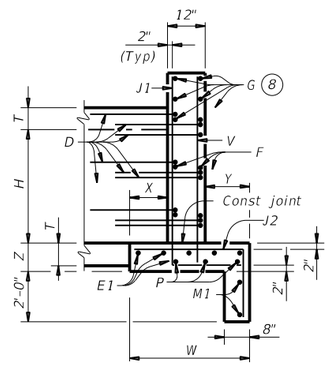

SECTION A-A
(Showing wing reinforcement.)

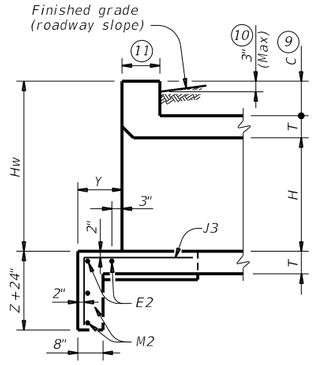

SECTION B-B
(Showing wing reinforcement.)

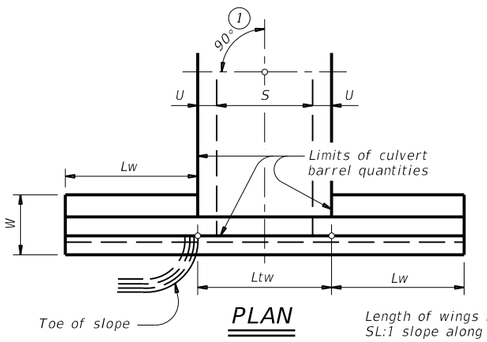

PLAN

DETAILS FOR NON-SKEWED BOX CULVERTS

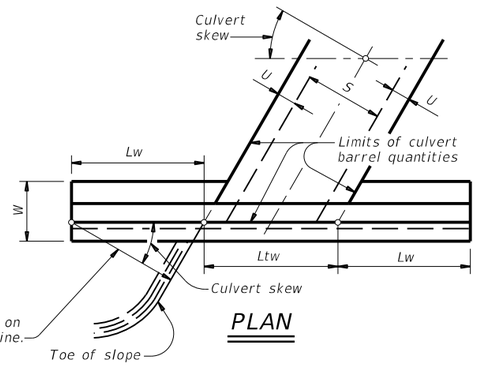

PLAN

DETAILS FOR SKEWED BOX CULVERTS
(Showing 30° skew.)

DESIGNER NOTES:
Type PW-1 can be used for all applications and must be used if railing is to be mounted to the wingwall.
Type PW-2 can only be used for applications without a railing mounted to the wingwall.

MATERIAL NOTES:
Provide Class C concrete (f'c=3,600 psi).
Provide Grade 60 reinforcing steel.
Provide galvanized reinforcing steel if required elsewhere in the plans.

GENERAL NOTES:
Designed in accordance with AASHTO LRFD Bridge Design Specifications.
Depth of toewalls for wingwalls and culverts may be reduced or eliminated when founded on solid rock, when directed by the Engineer.
See Box Culvert Supplement (BCS) standard sheet for wingwall type and additional dimensions and information.
Quantities for concrete and reinforcing steel resulting from the formulas given on this sheet are for the Contractor's information only.

Cover dimensions are clear dimensions, unless noted otherwise. Reinforcing dimensions are out-to-out of bars.

Texas Department of Transportation
Bridge Division Standard

CONCRETE WINGWALLS
WITH PARALLEL WINGS FOR BOX CULVERTS
TYPES PW-1 AND PW-2

PW

FILE:	DN: GAF	CK: CAT	DW: TxDOT	CK: TxDOT
©TxDOT February 2020	CONT	SECT	JOB	HIGHWAY
REVISIONS	0914	05	222	RM 2243
	DIST	COUNTY		SHEET NO.
	AUS	WILLIAMSON		308

DISCLAIMER:
The use of this standard is governed by the "Texas Engineering Practice Act". No warranty of any kind is made by TxDOT for any purpose whatsoever. TxDOT assumes no responsibility for the conversion of this standard to other formats or for incorrect results or damages resulting from its use.

DATE: 4/10/2025 1:06:03 PM
FILE: G:\TXC\Projects\County_Williamson\7473-02 RM 2243 Phase 1A\03_CADD\01_Shts\06-DRNG\Sfds\CD-SETB-FW0-20.dgn

TABLE OF DIMENSIONS AND REINFORCING STEEL
(Wings for One Structure End)

Maximum Wingwall Height Hw (9)	Dimensions W	X	Y	Z	Variable Reinforcing Bars J1 Size	Bars J1 Spa	Bars J2 Size	Bars J2 Spa	Estimated Quantities (3) per ft of wing length (Two~Wings) Reinf (Lb/Ft)	Conc (CY/Ft)
2'-6"	2'- 5"	1'- 0"	9"	7"	#4	1'-0"	#4	1'-0"	33.73	0.248
3'-0"	2'- 5"	1'- 0"	9"	7"	#4	1'-0"	#4	1'-0"	37.07	0.261
3'-6"	2'- 5"	1'- 0"	9"	7"	#4	1'-0"	#4	1'-0"	37.74	0.273
4'-0"	2'- 5"	1'- 0"	9"	7"	#4	1'-0"	#4	1'-0"	38.41	0.285
4'-6"	3'- 2"	1'- 6"	1'- 0"	7"	#4	1'-0"	#4	1'-0"	41.75	0.330
5'-0"	3'- 2"	1'- 6"	1'- 0"	7"	#4	1'-0"	#4	1'-0"	45.09	0.343
5'-6"	3'- 2"	1'- 6"	1'- 0"	7"	#4	1'-0"	#4	1'-0"	45.75	0.355
6'-0"	3'- 2"	1'- 6"	1'- 0"	7"	#4	1'-0"	#4	1'-0"	46.42	0.367
7'-0"	3'- 8"	1'- 9"	1'- 3"	7"	#4	1'-0"	#4	1'-0"	52.77	0.414
8'-0"	4'- 2"	2'- 0"	1'- 6"	8"	#5	1'-0"	#4	1'-0"	60.19	0.486
9'-0"	4'- 8"	2'- 3"	1'- 9"	8"	#4	6"	#4	6"	81.49	0.535
10'-0"	5'- 2"	2'- 6"	2'- 0"	8"	#5	6"	#4	6"	97.25	0.584
11'-0"	5'- 8"	2'- 9"	2'- 3"	8"	#6	6"	#5	6"	133.65	0.634
12'-0"	6'- 2"	3'- 0"	2'- 6"	9"	#7	6"	#5	6"	162.29	0.721

TABLE OF WING WALL REINFORCING (Two~Wings)

Bar	Size	No.	Spa
D	#5	~	1'-0"
E	#4	~	1'-0"
F	#4	~	1'-0"
G	#6	4	~
M	#4	4	~
P	#4	~	1'-0"
R	#5	6	~
V	#4	~	1'-0"

TABLE OF ESTIMATED CULVERT TOEWALL QUANTITIES

Bar	Size	No.	Spa
L	#4	~	1'-6"
Q	#4	1	~
Reinf (Lb/Ft)			2.45
Conc (CY/Ft)			0.037

TABLE OF ESTIMATED ANCHOR TOEWALL QUANTITIES

Bar	Size	No.	Spa
K	#4	~	1'-0"
N	#5	6	~
OL	#4	6	~
Reinf (Lb/Ft)			9.82
Conc (CY/Ft)			0.074

(1) Extend Bars P 3'-0" Min into bottom slab of box culvert.

(2) Adjust to fit as necessary to maintain 1 1#2" clear cover and 4" Min between bars.

(3) Quantities shown are based on an average wing height for two wings (one structure end). To determine total quantities for two wings multiply the tabulated values by Lw.

(4) Recommended values of slope are: 3:1, 4:1, and 6:1. Provide 3:1 or flatter slope.

(5) When shown elsewhere on the plans, construct 5" deep concrete riprap. Payment for riprap is as required by Item 432, "Riprap," Unless otherwise shown on the plans or directed by the Engineer, extend construction joints or grooved joints, oriented in the direction of flow, across the full distance of the riprap, at intervals of approximately 20'. When such riprap is provided, the culvert toewall shown in SECTION B-B is not required.

(6) At Contractor's option, end the culvert toewall flush with wingwall toewall. Adjust reinforcing as needed.

(7) 3" Min to 5'-0" Max. Estimated curb heights are shown elsewhere in the plans. For structures without railing and curbs taller than 1'-0", refer to the Extend Curb Details (ECD) standard sheet.

(8) For vehicle safety, reduce curb heights, if necessary, to provide a maximum 3" projection above finished grade. No changes will be made in quantities and no additional compensation will be allowed for this work.

(9) See Table of Maximum Wing Heights for various slopes. Height is limited based on a 33'-6" maximum safety pipe runner length.

TABLE OF MAXIMUM WING HEIGHTS (9)

Side Slope	Hw Max
3:1	11'- 5"
4:1	8'-10"
6:1	6'- 1"

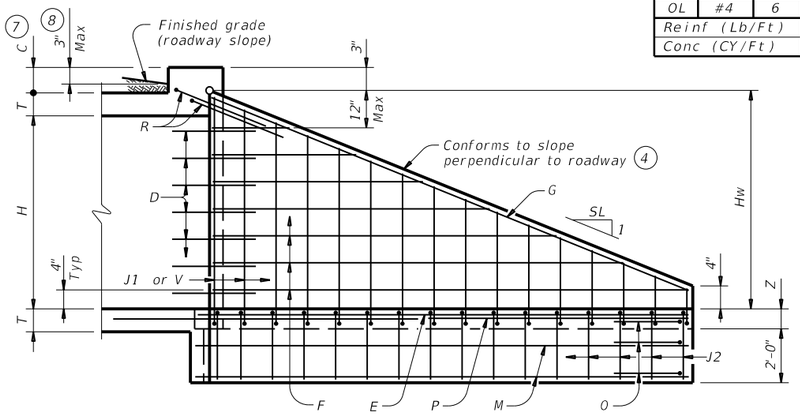

INSIDE ELEVATION OF WINGWALL

(Showing reinforcing. Culvert and culvert toewall reinforcing not shown for clarity.)

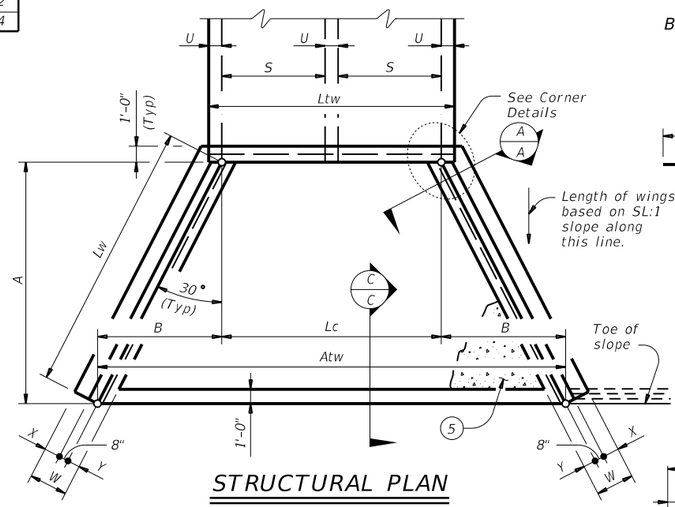

STRUCTURAL PLAN

(Showing dimensions.)

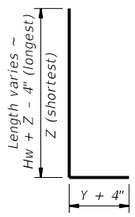

BARS J1

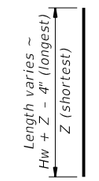

BARS V

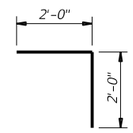

BARS L

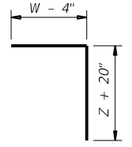

BARS J2

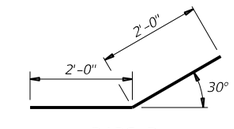

BARS D

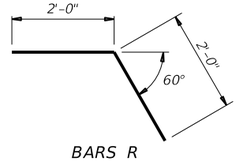

BARS R

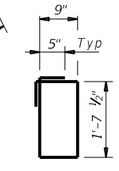

BARS K
(Length = 5'-5")

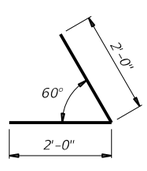

BARS OL

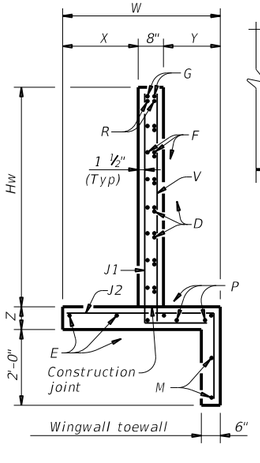

SECTION A-A

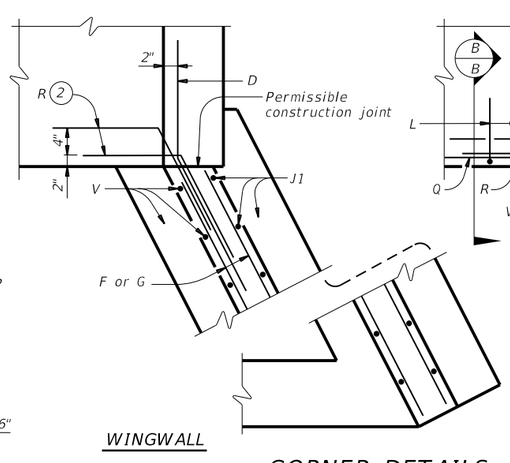

WINGWALL

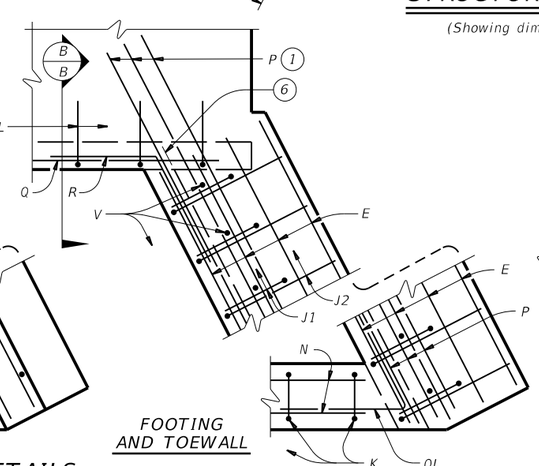

FOOTING AND TOEWALL

CORNER DETAILS

(Culvert and culvert toewall reinforcing not shown for clarity.)

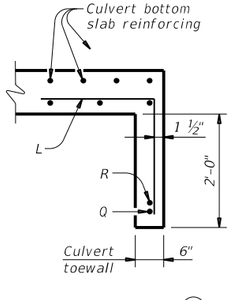

SECTION B-B (5)

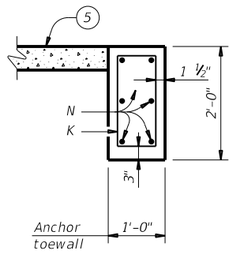

SECTION C-C

WING DIMENSION CALCULATIONS:

Hw = H + T + C - 0.250' (9)
A = (Hw - 0.333') (SL)
B = (A) (tan (30°))
Lw = (A) ÷ cos (30°))

For cast-in-place culverts:
Ltw = (N) (S) + (N + 1) (U)
For precast culverts:
Ltw = (N) (2U + S) + (N - 1) (0.500')

Lc = (Ltw) - (2U)
Atw = (Lc) + (2B)
Total Wingwall Area (two wings ~ SF) = (Hw + 0.333') (Lw)

Hw = Height of wingwall (feet)
Atw = Anchor toewall length (feet)
Lw = Length of wingwall (feet)
N = Number of culvert barrels
SL:1 = Side slope ratio (horizontal : 1 vertical)
Ltw = Culvert toewall length (feet)
Lc = Culvert curb between wings (feet)

See applicable box culvert standard for H, S, T, and U values.
See Table of Maximum Wall Heights for limits on Hw.

MATERIAL NOTES:

Provide Grade 60 reinforcing steel.
Provide galvanized reinforcing steel if required elsewhere in the plans.
Synthetic fibers listed on the "Fibers for Concrete" Material Producer List (MPL) may be used in lieu of steel reinforcing in riprap concrete unless noted otherwise.
Provide Class "C" concrete (f'c = 3,600 psi).
Adjust reinforcing as necessary to provide a minimum clear cover of 1 ½".
Provide pipe runners and anchor pipes meeting the requirements of ASTM A53 (Type E or S, Gr B), ASTM A500 Gr B, or API 5LX52.
Provide ASTM A307 bolts and nuts.
Provide ASTM A36 steel plates.
Galvanize all steel components, except reinforcing unless required elsewhere in the plans, after fabrication.
Repair galvanizing damaged during transport or construction in accordance with the Item 445, "Galvanizing."
For optional adhesive anchors, install adhesive anchorages in accordance with the manufacturer's instructions including hole size, drilling equipment and method, hole cleaning equipment and method, mixing and dispensing adhesive, and anchor insertion. Do not alter the manufacturer's mixing nozzle or dispenser. Provide anchorage rods that are clean and free of grease, oil, or any other foreign material. Demonstrate hole cleaning method to the Engineer for approval and continue the approved process for all anchorage locations. Test adhesive anchors in accordance with Item 450.3.3, "Tests." Test 3 anchors per 100 anchors installed.

GENERAL NOTES:

Designed according to AASHTO LRFD Bridge Design Specifications.
The safety end treatments shown herein are intended for use in those installations where out of control vehicles are likely to traverse the openings approximately perpendicular to the pipe runners.
Pipe runners are designed for a traversing load of 1,800 pounds at yield as recommended by Research Report 280-1, "Safety Treatment of Roadside Cross-Drainage Structures", Texas Transportation Institute, March 1981.
When structure is founded on solid rock, depth of toewalls for culverts and wingwalls may be reduced or eliminated as directed by the Engineer.
All bolts, nuts, washers, brackets, angles, and pipe runners are considered parts of the safety end treatment for payment.
The quantities for pipe runners, reinforcing steel, and concrete, resulting from the formulas given herein are for Contractor's information only.
See the Box Culvert Supplement (BCS) standard sheet for additional dimensions and information.

Cover dimensions are clear dimensions, unless noted otherwise.
Reinforcing dimensions are out-to-out of bars.

Texas Department of Transportation

Bridge Division Standard

SAFETY END TREATMENT WITH FLARED WINGS
FOR 0° SKEW BOX CULVERTS
TYPE I ~ CROSS DRAINAGE

SETB-FW-0

FILE:	DN: GAF	CK: CAT	DW: TxDOT	CK: TxDOT
©TxDOT February 2020 REVISIONS	CONT	SECT	JOB	HIGHWAY
	0914	05	222	RM 2243
	DIST	COUNTY		SHEET NO.
	AUS	WILLIAMSON		309

DISCLAIMER:
The use of this standard is governed by the "Texas Engineering Practice Act". No warranty of any kind is made by TxDOT for any purpose whatsoever. TxDOT assumes no responsibility for the conversion of this standard to other formats or for incorrect results or damages resulting from its use.

DATE: 4/10/2025 1:06:04 PM
FILE: G:\TxC\Projects\County_Williamson\7473-02 RM 2243 Phase 1A\03_CADD\01_Stds\06-DRNG\Stds\CD-SETB-FW0-20.dgn

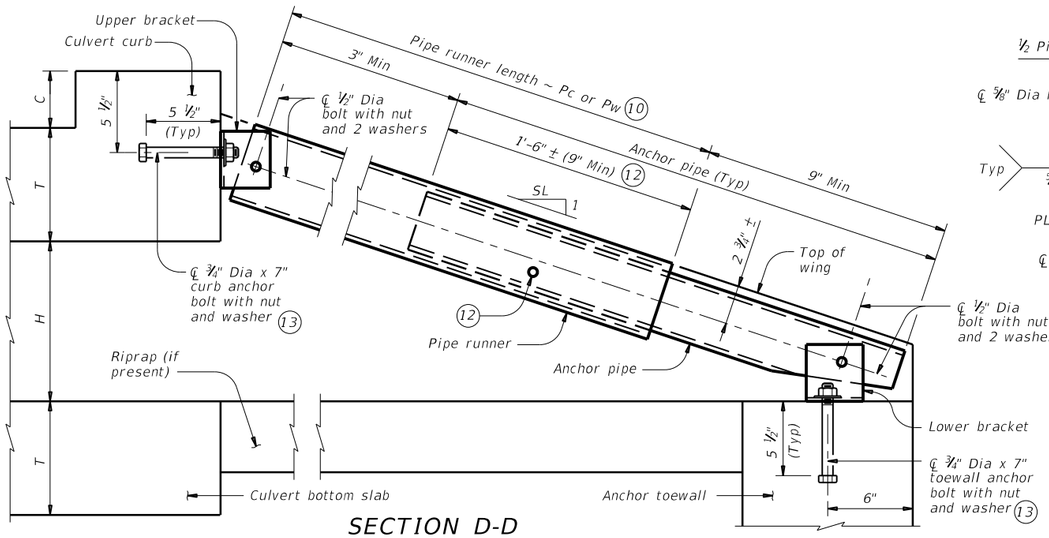

SECTION D-D

(Showing curb pipe runner. Except for upper bracket, wingwall pipe runners are similar.)

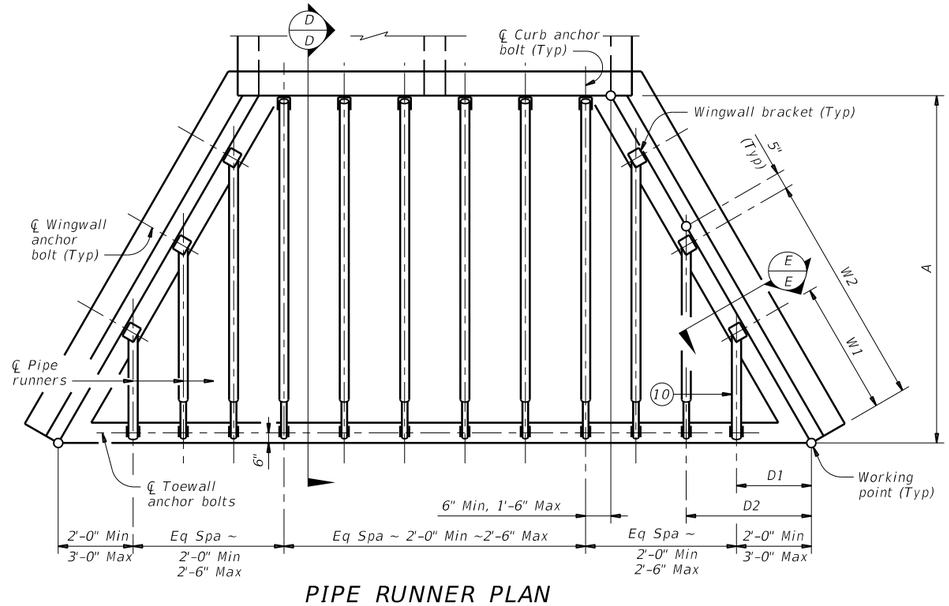

PIPE RUNNER PLAN

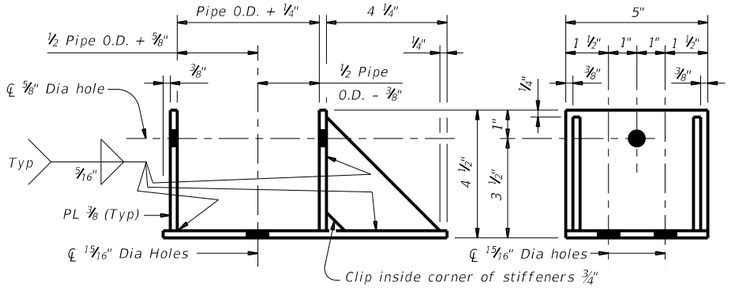

ELEVATION SIDE VIEW

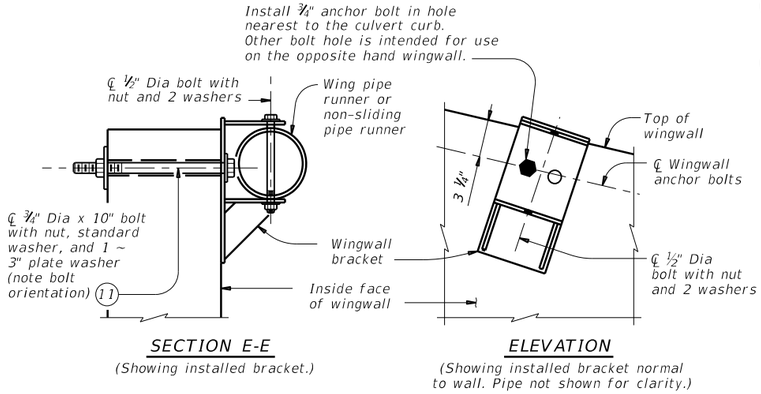

SECTION E-E
(Showing installed bracket.)

ELEVATION
(Showing installed bracket normal to wall. Pipe not shown for clarity.)

Note: Match wingwall bracket to the upper curb bracket size.

WINGWALL BRACKET DETAILS

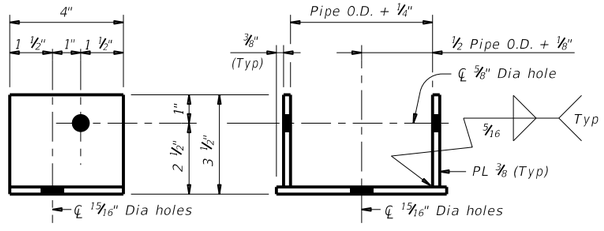

SIDE VIEW ELEVATION

Note: Match upper and lower brackets, except for the brackets used with non-sliding pipe runners, to the required pipe diameters as shown in the table.

UPPER AND LOWER BRACKET DETAILS

MAXIMUM PIPE RUNNER LENGTHS AND REQUIRED PIPE RUNNER SIZES

Maximum Pipe Runner Length (Pc or Pw)	Required Pipe Runner Size			Required Anchor Pipe Size		
	Pipe Size	Pipe O.D.	Pipe I.D.	Pipe Size	Pipe O.D.	Pipe I.D.
9'-4"	3" STD	3.500"	3.068"	2" STD	2.375"	2.067"
19'-0"	4" STD	4.500"	4.026"	3" STD	3.500"	3.068"
33'-6"	5" STD	5.563"	5.047"	4" STD	4.500"	4.026"

(10) If pipe runner length (Pw) is 1'-9" or less replace the normal pipe runner and anchor pipe with a single non-sliding pipe runner. See Non-Sliding Pipe Runner Details for additional information.

(11) At Contractor's option, ⅞" diameter hole may be formed or cored drilled. Percussion drilling is not permitted. Adjust placement of reinforcing steel as necessary to avoid bolt holes.

(12) After installation of pipe runner, use the ½" inspection hole to ensure that the lap of the anchor pipe with the pipe runner is adequate.

(13) At Contractor's option, an adhesive anchor may be used. Provide ¾" Dia adhesive anchors that meet the requirements of ASTM A307 Gr A fully threaded rods. Embed threaded rods into curb, wingwalls, and toewall using a Type III, Class C, D, E, or F anchor adhesive. Minimum embedment depth is 5 ½". Provide anchor adhesive able to achieve a basic bond strength in tension, Nba, of 20 kips. Submit signed and sealed calculations or the manufacturer's published literature showing the proposed anchor adhesive's ability to develop this load to the Engineer for approval prior to use.

PIPE RUNNER DIMENSION CALCULATIONS:

Wn = (2.000) (Dn) - (0.416')
Pwn = (Dn) (K2) - (2.063')
Pw1 Non-Sliding Pipe Runner (If required) = (D1) (K2) - (0.563')
Pc = (A) (K1) - (1.688')

Wn = Distance from working point to centerline anchor bolt measured along bottom inside face of wing (feet)
Dn = Distance from working point to centerline pipe runner measured along outside face of anchor toewall (feet)
Pw = Wingwall pipe runner length (feet)
Pc = Curb pipe runner length (feet)
K = Constant values for use in formulas

Slope SL:1	K1	K2
3:1	~ 1.054	~ 1.826
4:1	~ 1.031	~ 1.785
6:1	~ 1.014	~ 1.756

n = Wing pipe runner number

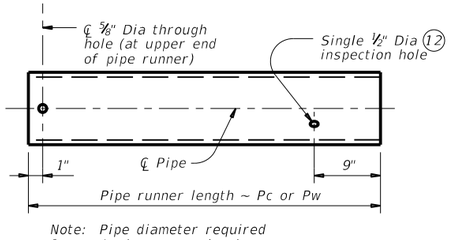

Note: Pipe diameter required for curb pipe runner is also used for wingwall pipe runner.

PIPE RUNNER DETAILS

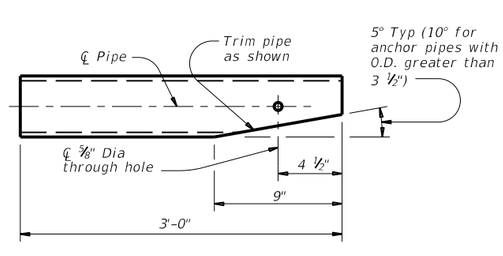

ANCHOR PIPE DETAILS

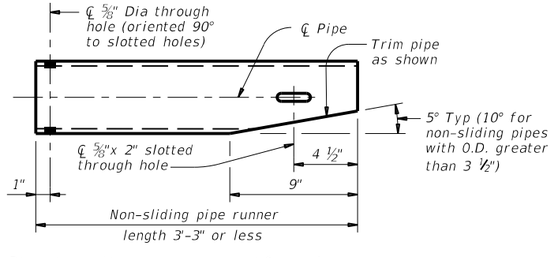

Note: Pipe size is the same as required for curb pipe runner. Adjust the corresponding lower bracket accordingly.

NON-SLIDING PIPE RUNNER DETAILS

Texas Department of Transportation

Bridge Division Standard

SAFETY END TREATMENT WITH FLARED WINGS

FOR 0° SKEW BOX CULVERTS TYPE I ~ CROSS DRAINAGE

SETB-FW-0

FILE:	DN: GAF	CK: CAT	DW: TxDOT	CK: TxDOT
©TxDOT February 2020	CONT	SECT	JOB	HIGHWAY
REVISIONS	0914	05	222	RM 2243
	DIST	COUNTY		SHEET NO.
	AUS	WILLIAMSON		310

Culvert Station and/or Creek name followed by applicable end (Lt, Rt or Both) (14)	Lc	L1	L2			D1	L3			W1	L4			L5	Curb Pipe Runner (Pc)		Longest Wing Pipe Runner (Pw)	Shortest Wing Pipe Runner (Pw)	Non-Sliding Wing Pipe Runner (if applicable)	Curb, Wing, and/or Non-Sliding Pipe Runners		3'-0" Anchor Pipe	
			No. Spa	Spa at	Overall Length		No. Spa	Spa at	Overall Length		No. Spa	Spa at	Overall Length		No.	Length				Size (3",4" or 5")	Total Length (14)	Size (2",3" or 4")	Total Length (14)
	(Ft)	(Ft)		(Ft)	(Ft)	(Ft)		(Ft)	(Ft)	(Ft)		(Ft)	(Ft)	(Ft)		(Ft)	(Ft)	(Ft)	(Ft)				
CULVERT 03 STA 521+58.54 (Rt)	12.583'	0.500'	5	2.317'	11.583'	3.000'	5	2.026'	10.130'	5.583'	4	4.052'	16.207'	3.468'	6	20.500'	17.438'	3.208'	N/A	5"	226.229'	4"	48.000'
CULVERT 08 STA 600+61.99 (Rt)	16.583'	0.500'	7	2.226'	15.583'	3.000'	3	1.777'	5.330'	NG'	NG	NG'	NG'	NG'	NG	NG'	NG'	N/A	#VALUE!##	NG	NG'	NG	NG'
CULVERT 09A STA 2001+14.89 (Lt)	16.583'	0.500'	7	2.226'	15.583'	3.000'	2	1.763'	3.526'	NG'	NG	NG'	NG'	NG'	NG	NG'	NG'	N/A	#VALUE!##	NG	NG'	NG	NG'
CULVERT 09A STA 2001+14.89 (Rt)	16.583'	0.500'	7	2.226'	15.583'	3.000'	2	1.962'	3.923'	NG'	NG	NG'	NG'	NG'	NG	NG'	NG'	N/A	#VALUE!##	NG	NG'	NG	NG'
CULVERT 10 STA 669+25.38 (Lt)	6.000'	0.500'	2	2.500'	5.000'	3.000'	3	2.486'	7.459'	5.583'	2	4.973'	9.946'	4.390'	3	16.104'	12.167'	3.292'	N/A	4"	94.688'	3"	27.000'
CULVERT 10 STA 669+25.38 (Rt)	6.000'	0.500'	2	2.500'	5.000'	3.000'	3	1.733'	5.198'	NG'	NG	NG'	NG'	NG'	NG	NG'	NG'	N/A	#VALUE!##	NG	NG'	NG	NG'
CULVERT 06B STA 578+67.50 (Rt)	5.000'	0.500'	2	2.000'	4.000'	3.000'	4	2.021'	8.085'	5.583'	3	4.042'	12.127'	3.459'	3	17.208'	14.125'	3.292'	N/A	4"	121.292'	3"	33.000'

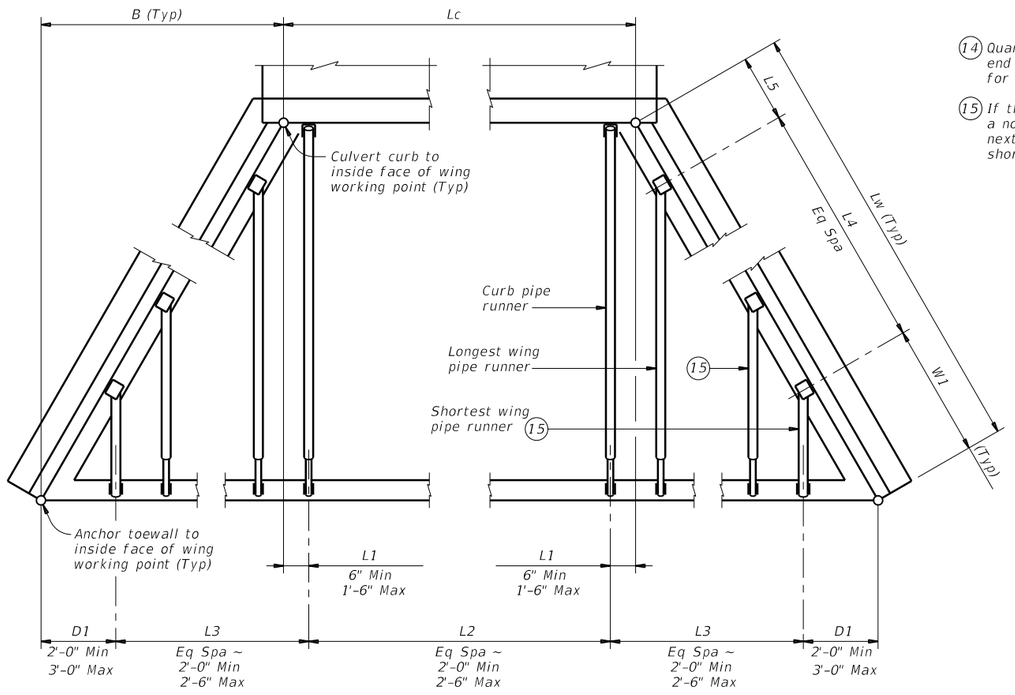

PIPE RUNNER LAYOUT

(14) Quantities shown are for one structure end if Lt or Rt. Quantities shown are for two structure ends if Both.

(15) If the outermost wing pipe runner is a non-sliding pipe runner, consider the next outermost wing pipe runner as the shortest.

STATE OF TEXAS
VANESSA MOLINA
141173
LICENSED
PROFESSIONAL ENGINEER

SHEET 3 OF 3

Texas Department of Transportation

Bridge Division Standard

SAFETY END TREATMENT WITH FLARED WINGS

FOR 0° SKEW BOX CULVERTS TYPE I ~ CROSS DRAINAGE

SETB-FW-0

FILE:	DN: TxDOT	CK: TxDOT	DW: TxDOT	CK: TxDOT
©TxDOT February 2020	CONT	SECT	JOB	HIGHWAY
REVISIONS	0914	05	222	RM 2243
	DIST	COUNTY		SHEET NO.
	AUS	WILLIAMSON		311

DISCLAIMER:
The use of this standard is governed by the "Texas Engineering Practice Act". No warranty of any kind is made by TxDOT for any purpose whatsoever. TxDOT assumes no responsibility for the conversion of this standard to other formats or for incorrect results or damages resulting from its use.

DATE: 4/10/2025 1:06:05 PM
FILE: G:\TxC\Projects\County_Williamson\7473-02 RM 2243 Phase 1A\03_CADD\01_Shts\06-DRNG\Stds\CD-SETB-FW0-20.dgn

DISCLAIMER:
The use of this standard is governed by the "Texas Engineering Practice Act". No warranty of any kind is made by TxDOT for any purpose whatsoever. TxDOT assumes no responsibility for the conversion of this standard to other formats or for incorrect results or damages resulting from its use.

DATE: 4/10/2025 1:06:06 PM
FILE: G:\TXC\Projects\County_Williamson\7473-02 RM 2243 Phase 1A\03_CADD\01_Shts\06-DRNG\Stds\CD-SETB-FWS-20.dgn

TABLE OF DIMENSIONS AND REINFORCING STEEL
(Wings for One Structure End)

Maximum Wingwall Height (10) Hw	W	X	Y	Z	Variable Reinforcing Bars J1 Size	Bars J1 Spa	Bars J2 Size	Bars J2 Spa	Estimated Quantities (3) per ft of wing length (Two~Wings) Reinf (Lb/Ft)	Conc (CY/Ft)
2'-6"	2'- 5"	1'- 0"	9"	7"	#4	1'-0"	#4	1'-0"	33.73	0.248
3'-0"	2'- 5"	1'- 0"	9"	7"	#4	1'-0"	#4	1'-0"	37.07	0.261
3'-6"	2'- 5"	1'- 0"	9"	7"	#4	1'-0"	#4	1'-0"	37.74	0.273
4'-0"	2'- 5"	1'- 0"	9"	7"	#4	1'-0"	#4	1'-0"	38.41	0.285
4'-6"	3'- 2"	1'- 6"	1'- 0"	7"	#4	1'-0"	#4	1'-0"	41.75	0.330
5'-0"	3'- 2"	1'- 6"	1'- 0"	7"	#4	1'-0"	#4	1'-0"	45.09	0.343
5'-6"	3'- 2"	1'- 6"	1'- 0"	7"	#4	1'-0"	#4	1'-0"	45.75	0.355
6'-0"	3'- 2"	1'- 6"	1'- 0"	7"	#4	1'-0"	#4	1'-0"	46.42	0.367
7'-0"	3'- 8"	1'- 9"	1'- 3"	7"	#4	1'-0"	#4	1'-0"	52.77	0.414
8'-0"	4'- 2"	2'- 0"	1'- 6"	8"	#5	1'-0"	#4	1'-0"	60.19	0.486
9'-0"	4'- 8"	2'- 3"	1'- 9"	8"	#4	6"	#4	6"	81.49	0.535
10'-0"	5'- 2"	2'- 6"	2'- 0"	8"	#5	6"	#4	6"	97.25	0.584
11'-0"	5'- 8"	2'- 9"	2'- 3"	8"	#6	6"	#5	6"	133.65	0.634
12'-0"	6'- 2"	3'- 0"	2'- 6"	9"	#7	6"	#5	6"	162.29	0.721

TABLE OF WINGWALL REINFORCING (Two~Wings)

Bar	Size	No.	Spa
DL & DS	#5	~	1'-0"
E	#4	~	1'-0"
F	#4	~	1'-0"
G	#6	4	~
M	#4	4	~
P	#4	~	1'-0"
RL	#5	3	~
RS	#5	3	~
V	#4	~	1'-0"

TABLE OF ESTIMATED CULVERT TOEWALL QUANTITIES

Bar	Size	No.	Spa
L	#4	~	1'-6"
Q	#4	1	~
Reinf (Lb/Ft)			2.45
Conc (CY/Ft)			0.037

TABLE OF ESTIMATED ANCHOR TOEWALL QUANTITIES

Bar	Size	No.	Spa
K	#4	~	1'-0"
N	#5	6	~
OL	#4	3	~
OS	#4	3	~
Reinf (Lb/Ft)			9.82
Conc (CY/Ft)			0.074

(1) Extend Bars P 3'-0" Min into bottom slab of box culvert.

(2) Adjust to fit as necessary to maintain 11#2" clearcover and 4" Min between bars.

(3) Quantities shown are based on an average wing height for two wings (one structure end). To determine total quantities for two wings multiply the tabulated values by 0.5 (A+Lw).

(4) Recommended values of slope are: 3:1, 4:1, and 6:1. Provide 3:1 or flatter slope.

(5) When shown elsewhere on the plans, construct 5" deep concrete riprap. Payment for riprap is as required by Item 432, "Riprap." Unless otherwise shown on the plans or directed by the Engineer, extend construction joints or grooved joints, oriented in the direction of flow, across the full distance of the riprap, at intervals of approximately 20'. When such riprap is provided, the culvert toewall shown in SECTION B-B is not required.

(6) At Contractor's option, end the culvert toewall flush with wingwall toewall. Adjust reinforcing as needed.

(7) 3" Min to 5'-0" Max. Estimated curb heights are shown elsewhere in the plans. For structures without railing and curbs taller than 1'-0", refer to the Extended Curb Details (ECD) standard sheet.

(8) For vehicle safety, reduce curb heights, if necessary, to provide a maximum 3" projection above finished grade. No changes will be made in quantities and no additional compensation will be allowed for this work.

(9) Culvert skew (limit to 15° or 30°)

(10) See Table of Maximum Wing Heights for various slopes. Height is limited based on a 33'-6" maximum safety pipe runner length.

(11) Typical wingwall angle for all skews.

TABLE OF MAXIMUM WING HEIGHTS (10)

Side Slope	Hw Max
3:1	11'- 5"
4:1	8'-10"
6:1	6'- 1"

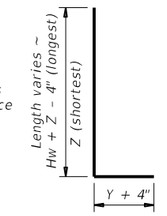

BARS J1

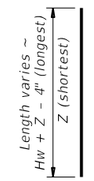

BARS V

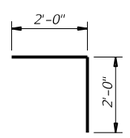

BARS L

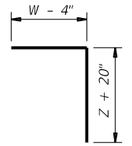

BARS J2

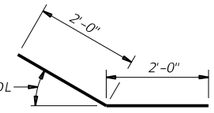

BARS DS and DL
(DS ~ Short wing and DL ~ Long wing)

Angle = Culvert Skew for Bars DS and 15° for Bars DL

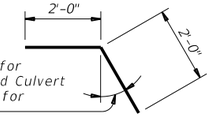

BARS RS and RL
(RS ~ Short wing and RL ~ Long wing)

Angle = 0° for Bars RS and Culvert Skew + 15° for Bars RL

WING DIMENSION CALCULATIONS:

Formulas:

Hw = H + T + C - 0.250' (10)
A = (Hw - 0.333') (SL)
B = (A) [tan (θ + 15°)]
Lw = (A) ÷ [cos (θ + 15°)]

For cast-in-place culverts:

Ltw = [(N) (S) + (N + 1) (U)] ÷ (cos θ)

For precast culverts:

Ltw = [(N) (2U + S) + (N - 1) (0.500')] ÷ (cos θ)

Lc = (Ltw) - (2U) ÷ (cos θ)
Atw = (Lc) + (B)
Total Wingwall Area (two wings ~ S.F.) = (0.5) (Hw + 0.333') (Lw + A)

Hw = Height of wingwall (feet)
SL:1 = Side slope ratio (horizontal : 1 vertical)
Lw = Length of wingwall (feet)
Ltw = Culvert toewall length (feet)
Lc = Culvert curb between wings (feet)
Atw = Anchor toewall length (feet)
N = Number of culvert spans
θ = Culvert skew

See applicable box culvert standard for H, S, T, and U values.
See Table of Maximum Wall Heights for limits on Hw.

MATERIAL NOTES:

Provide Grade 60 reinforcing steel.
Provide galvanized reinforcing steel if required elsewhere in the plans.
Synthetic fibers listed on the "Fibers for Concrete" Material Producer List (MPL) may be used in lieu of steel reinforcing in riprap concrete unless noted otherwise.
Provide Class "C" concrete (f`c = 3,600 psi).
Adjust reinforcing as necessary to provide a minimum clear cover of 1 ½".
Provide pipe runners and anchor pipes meeting the requirements of ASTM A53 (Type E or S, Gr B), ASTM A500 Gr B, or API 5LX52.
Provide ASTM A307 bolts and nuts.
Provide ASTM A36 steel plates.
Galvanize all steel components, except reinforcing unless required elsewhere in the plans, after fabrication.
Repair galvanizing damaged during transport or construction in accordance with the Item 445, "Galvanizing."
For optional adhesive anchors, install adhesive anchorages in accordance with the manufacturer's instructions including hole size, drilling equipment and method, hole cleaning equipment and method, mixing and dispensing adhesive, and anchor insertion. Do not alter the manufacturer's mixing nozzle or dispenser. Provide anchorage rods that are clean and free of grease, oil, or any other foreign material. Demonstrate hole cleaning method to the Engineer for approval and continue the approved process for all anchorage locations. Test adhesive anchors in accordance with Item 450.3.3, "Tests." Test 3 anchors per 100 anchors installed.

GENERAL NOTES:

Designed according to AASHTO LRFD Bridge Design Specifications.
The safety end treatments shown herein are intended for use in those installations where out of control vehicles are likely to traverse the openings approximately perpendicular to the pipe runners.
Pipe runners are designed for a traversing load of 1,800 pounds at yield as recommended by Research Report 280-1, "Safety Treatment of Roadside Cross-Drainage Structures", Texas Transportation Institute, March 1981.
When structure is founded on solid rock, depth of toewalls for culverts and wingwalls may be reduced or eliminated as directed by the Engineer.
All bolts, nuts, washers, brackets, angles, and pipe runners are considered parts of the safety end treatment for payment
The quantities for pipe runners, reinforcing steel, and concrete, resulting from the formulas given herein are for Contractor's information only.
See Box Culvert Supplement (BCS) standard sheet for additional dimensions and information.

Cover dimensions are clear dimensions, unless noted otherwise.
Reinforcing dimensions are out-to-out of bars.

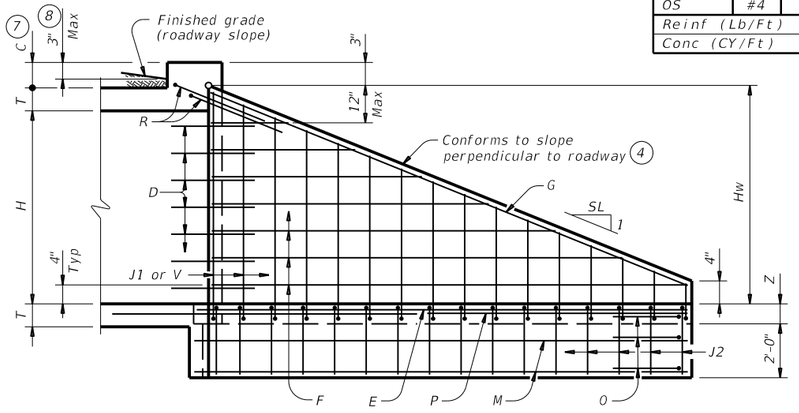

INSIDE ELEVATION OF WINGWALL

(Showing reinforcing. Culvert and culvert toewall reinforcing not shown for clarity.)

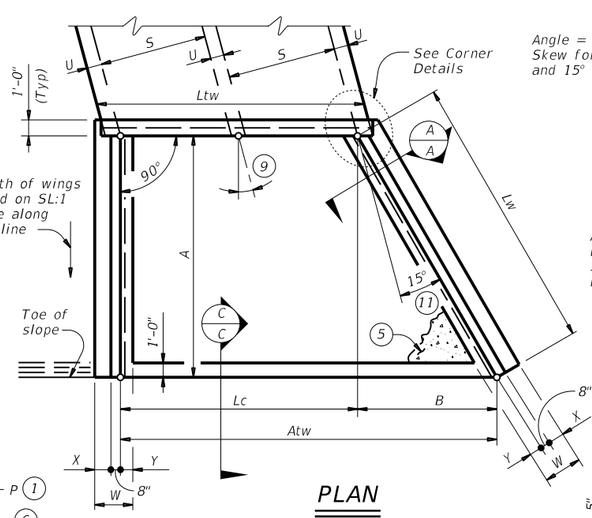

PLAN

(Showing dimensions and 15° skew.)

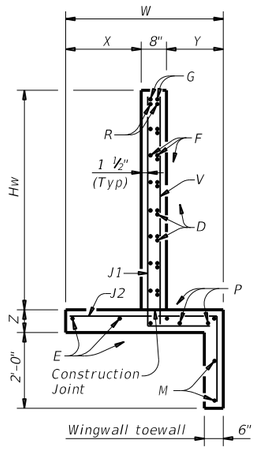

SECTION A-A

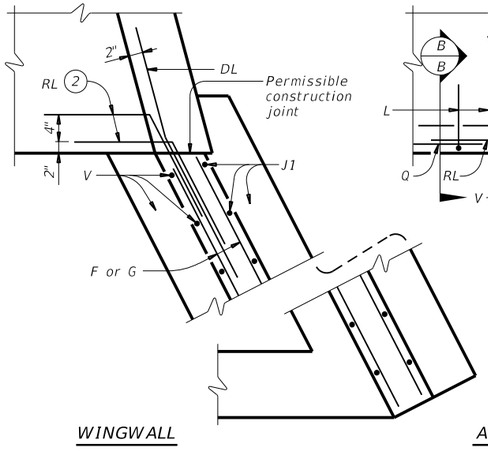

WINGWALL

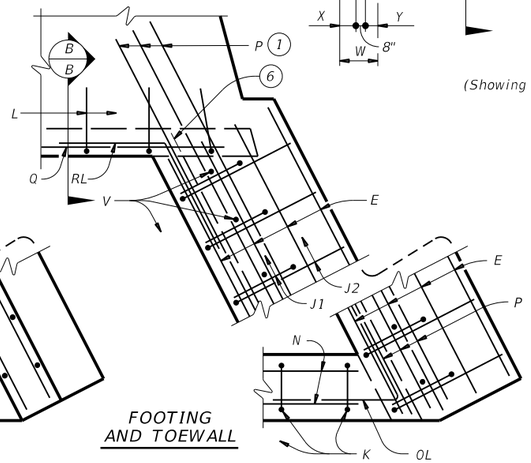

FOOTING AND TOEWALL

CORNER DETAILS

(Culvert and culvert toewall reinforcing not shown for clarity.)

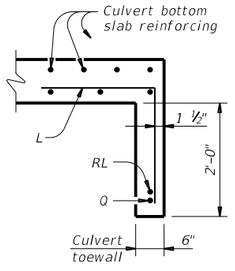

SECTION B-B (5)

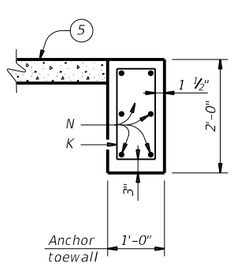

SECTION C-C

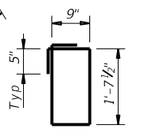

BARS K
(Length = 5'-5")

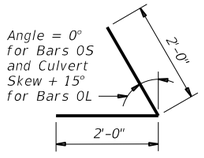

BARS OS and OL
(OS ~ Short wing and OL ~ Long wing)

Texas Department of Transportation | Bridge Division Standard

SAFETY END TREATMENT WITH FLARED WINGS
FOR 15° & 30° SKEW BOX CULVERTS
TYPE I ~ CROSS DRAINAGE

SETB-FW-S

FILE:	DN: GAF	CK: CAT	DW: TxDOT	CK: TxDOT
©TxDOT February 2020	CONT	SECT	JOB	HIGHWAY
REVISIONS	0914	05	222	RM 2243
	DIST	COUNTY		SHEET NO.
	AUS	WILLIAMSON		312

DISCLAIMER:
The use of this standard is governed by the "Texas Engineering Practice Act". No warranty of any kind is made by TxDOT for any purpose whatsoever. TxDOT assumes no responsibility for the conversion of this standard to other formats or for incorrect results or damages resulting from its use.

DATE: 4/10/2025 1:06:07 PM
FILE: G:\TXC\Projects\County_Williamson\7473-02 RM 2243 Phase 1A\03_CADD\01_Shts\06-DRNG\Shts\CD-SETB-FWS-20.dgn

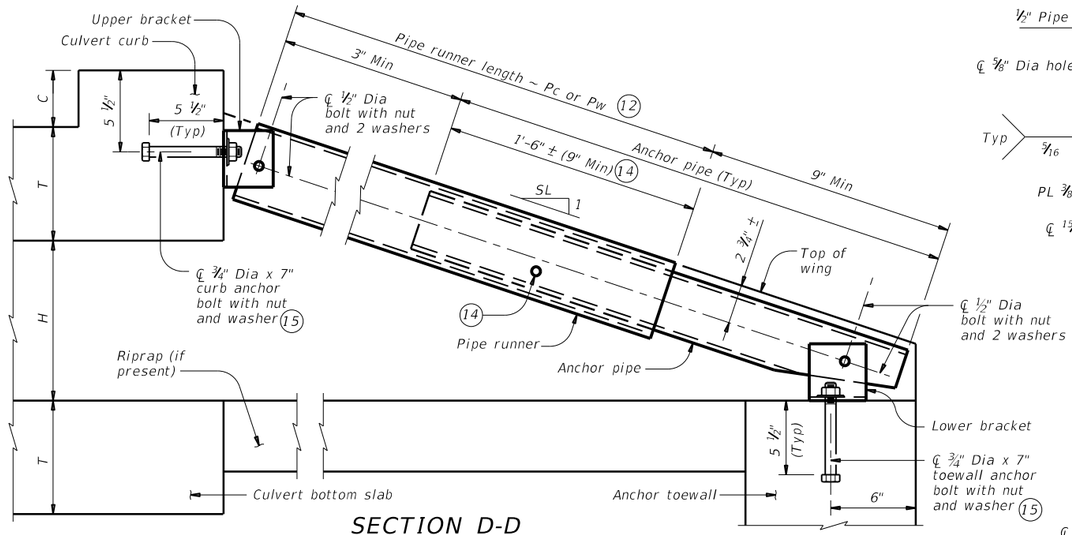

SECTION D-D

(Showing curb pipe runner. Except for upper bracket, wingwall pipe runners are similar.)

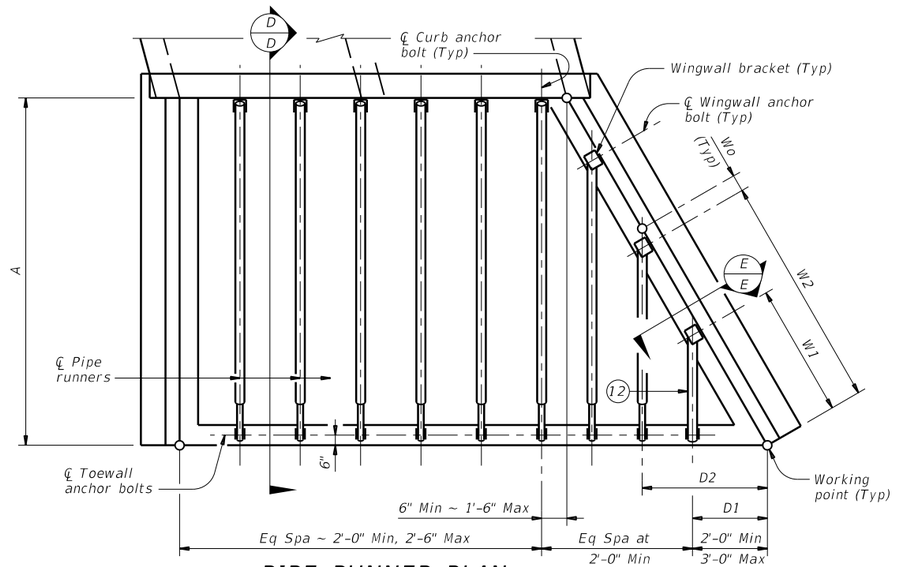

PIPE RUNNER PLAN

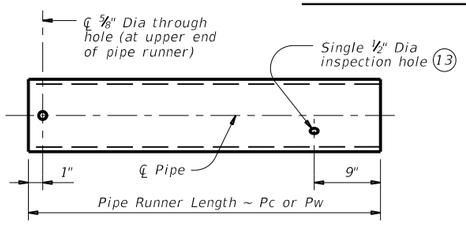

Note: Use pipe diameter required for curb pipe runner for wingwall pipe runner.

PIPE RUNNER DETAILS

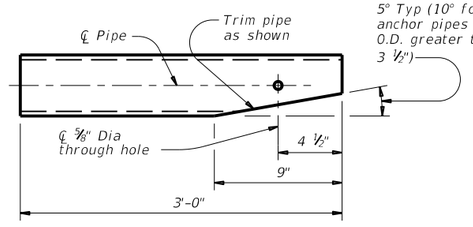

ANCHOR PIPE DETAILS

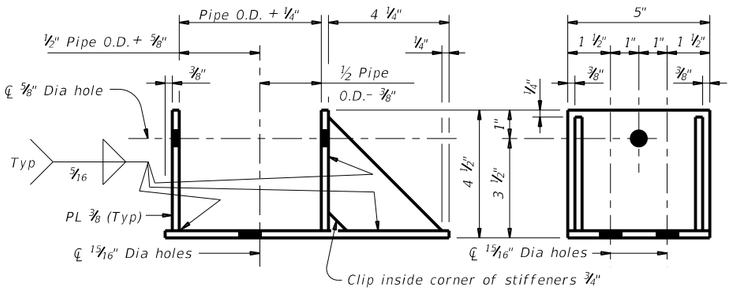

ELEVATION

SIDE VIEW

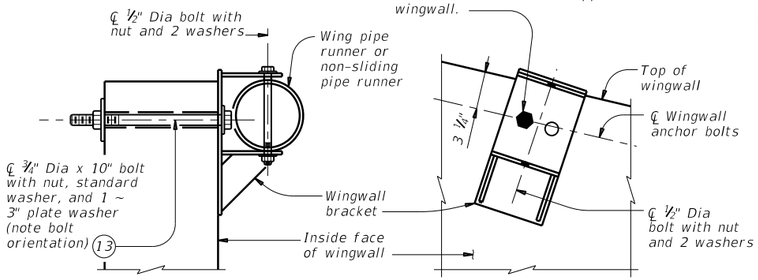

SECTION E-E

(Showing installed bracket.)

ELEVATION

(Showing installed bracket normal to wall. Pipe not shown for clarity.)

Note: Match wingwall bracket to the upper curb bracket size.

WINGWALL BRACKET DETAILS

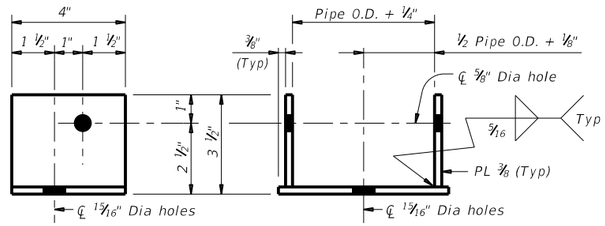

SIDE VIEW

ELEVATION

Note: Match upper and lower brackets, except for the brackets used with non-sliding pipe runners, to the required pipe diameters as shown in the table.

UPPER AND LOWER BRACKET DETAILS

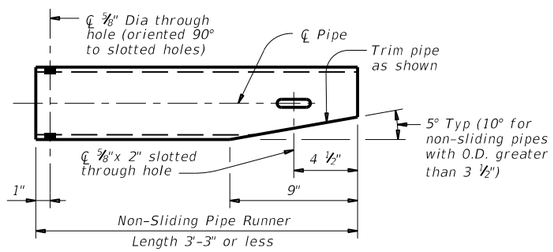

Note: Pipe size is the same as required for curb pipe runner. Adjust the corresponding lower bracket accordingly.

NON-SLIDING PIPE RUNNER DETAILS

MAXIMUM PIPE RUNNER LENGTHS AND REQUIRED PIPE RUNNER AND ANCHOR PIPE SIZES

Maximum Pipe Runner Length (Pc or Pw)	Required Pipe Runner Size			Required Anchor Pipe Size		
	Pipe Size	Pipe O.D.	Pipe I.D.	Pipe Size	Pipe O.D.	Pipe I.D.
9'-4"	3" STD	3.500"	3.068"	2" STD	2.375"	2.067"
19'-0"	4" STD	4.500"	4.026"	3" STD	3.500"	3.068"
33'-6"	5" STD	5.563"	5.047"	4" STD	4.500"	4.026"

(12) If pipe runner length (Pw) is 1'-9" or less, replace the normal pipe runner and anchor pipe with a single non-sliding pipe runner. See Non-Sliding Pipe Runner Details for additional information.

(13) At Contractor's option, ⅞" diameter hole may be formed or cored drilled. Percussion drilling is not permitted. Adjust placement of reinforcing steel as necessary to avoid bolt holes.

(14) After installation of pipe runner, use the ½" inspection hole to ensure that the lap of the anchor pipe with the pipe runner is adequate.

(15) At Contractor's option, an adhesive anchor may be used. Provide ¾" Dia adhesive anchors that meet the requirements of ASTM A307, Gr A fully threaded rods. Embed threaded rods into curb, wingwalls, and toewall using a Type III, Class C, D, E, or F anchor adhesive. Minimum embedment depth is 5 ½". Provide anchor adhesive able to achieve a basic bond strength in tension, Nba, of 20 kips. Submit signed and sealed calculations or the manufacturer's published literature showing the proposed anchor adhesive's ability to develop this load to the Engineer for approval prior to use.

PIPE RUNNER DIMENSION CALCULATIONS:

Wn = (K3) (Dn) – (Wo)
Pwn = (Dn) (K2) – (2.063')
Pw1 Non-Sliding Pipe Runner (If required) = (D1) (K2) – (0.563')
Pc = (A) (K1) – (1.688')

Wn = Distance from working point to centerline anchor bolt measured along bottom inside face of wing (feet)
Dn = Distance from working point to centerline pipe runner measured along outside face of anchor toewall (feet)
Pw = Wingwall pipe runner length (feet)
Pc = Curb pipe runner length (feet)
K = Constant values for use in formulas

Slope SL:1	K1	K2–15° Skew	K2–30° Skew
3:1	1.054	1.826	1.054
4:1	1.031	1.785	1.031
6:1	1.014	1.756	1.014

K3 = 15° Skew ~ 2.000
30° Skew ~ 1.414
n = Wing pipe runner number
Wo = 15° Skew ~ 5"
30° Skew ~ 2 ½"

Texas Department of Transportation

Bridge Division Standard

SAFETY END TREATMENT WITH FLARED WINGS

FOR 15° & 30° SKEW BOX CULVERTS TYPE I ~ CROSS DRAINAGE

SETB-FW-S

FILE:	DN: GAF	CK: CAT	DW: TxDOT	CK: TxDOT
©TxDOT February 2020 REVISIONS	CONT	SECT	JOB	HIGHWAY
	0914	05	222	RM 2243
	DIST	COUNTY		SHEET NO.
	AUS	WILLIAMSON		313

Culvert Station and/or Creek name followed by applicable end (Lt, Rt or Both) (16)	Lc	L1	L2			D1	L3			W1	L4			L5	Curb Pipe Runner (Pc)		Longest Wing Pipe Runner (Pw)	Shortest Wing Pipe Runner (Pw)	Non-Sliding Wing Pipe Runner (if applicable)	Curb, Wing, and/or Non-Sliding Pipe Runners		3'-0" Anchor Pipe	
			No. Spa	Spa at	Overall Length		No. Spa	Spa at	Overall Length		No. Spa	Spa at	Overall Length		No.	Length				Size (3",4" or 5")	Total (16) Length	Size (2",3" or 4")	Total (16) Length
	(Ft)	(Ft)		(Ft)	(Ft)	(Ft)		(Ft)	(Ft)	(Ft)		(Ft)	(Ft)	(Ft)		(Ft)	(Ft)	(Ft)	(Ft)				
CULVERT 02 STA 509+37.92 (Lt)	26.658'	0.500'	11	2.378'	26.158'	3.000'	3	2.166'	6.497'	5.583'	2	4.331'	8.663'	3.748'	11	14.375'	11.021'	3.292'	N/A	4"	179.594'	3"	42.000'
CULVERT 02 STA 509+37.92 (Rt)	26.658'	0.500'	11	2.378'	26.158'	3.000'	2	1.541'	3.081'	NG'	NG	NG'	NG'	NG'	NG	NG'	NG'	N/A	NG'	NG	NG'	NG	NG'
CULVERT 04 STA 543+37.25 (Rt)	34.352'	0.500'	14	2.418'	33.852'	3.000'	8	2.219'	17.750'	4.034'	7	3.137'	21.961'	2.643'	14	19.188'	17.042'	3.313'	2.521'	5"	342.385'	4"	63.000'
CULVERT 05 STA 565+22.78 (Rt)	16.839'	0.500'	7	2.334'	16.339'	3.000'	4	2.250'	9.000'	4.034'	3	3.182'	9.545'	2.685'	7	10.438'	8.208'	3.479'	2.604'	4"	93.198'	3"	30.000'
CULVERT 07 STA 586+68.50 (Lt)	19.843'	0.500'	8	2.418'	19.343'	3.000'	3	2.114'	6.341'	5.583'	2	4.227'	8.454'	3.644'	8	14.458'	11.125'	3.417'	N/A	4"	137.479'	3"	33.000'
CULVERT 07 STA 586+68.50 (Rt)	19.843'	0.500'	8	2.418'	19.343'	3.000'	3	2.342'	7.026'	5.583'	2	4.684'	9.368'	4.101'	8	15.042'	11.438'	3.208'	N/A	4"	142.302'	3"	33.000'
CULVERT 09 STA 631+00 (Lt)	43.590'	0.500'	18	2.394'	43.090'	3.000'	10	2.438'	24.375'	4.034'	9	3.447'	31.020'	2.954'	18	26.646'	24.229'	3.667'	2.604'	5"	607.760'	4"	81.000'
CULVERT 09 STA 631+00 (Rt)	43.590'	0.500'	18	2.394'	43.090'	3.000'	6	2.125'	12.750'	4.034'	5	3.005'	15.024'	2.509'	18	14.396'	12.292'	3.333'	2.604'	4"	300.792'	3"	69.000'

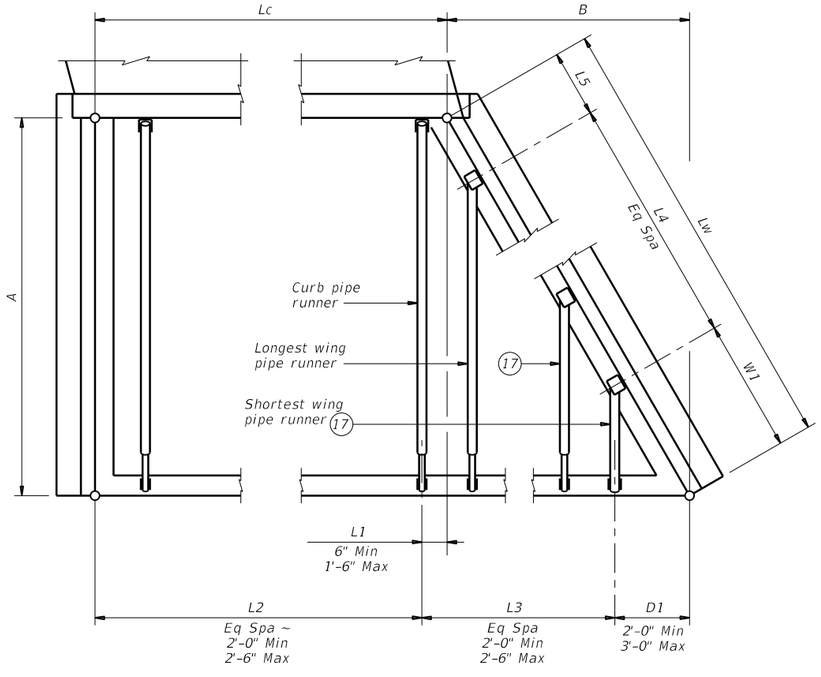

PIPE RUNNER LAYOUT

Note: Right forward culvert skew shown, actual culvert skew may be opposite hand.

(16) Quantities shown are for one structure end if Lt or Rt. Quantities shown are for two structure ends if Both.

(17) If the outermost wing pipe runner is a non-sliding pipe runner, consider the next outermost wing pipe runner as the shortest.

STATE OF TEXAS
VANESSA MOLINA
141173
PROFESSIONAL LICENSED ENGINEER

SHEET 3 OF 3

Texas Department of Transportation

Bridge Division Standard

SAFETY END TREATMENT WITH FLARED WINGS

FOR 15° & 30° SKEW BOX CULVERTS TYPE I ~ CROSS DRAINAGE

SETB-FW-S

FILE:	DN: TxDOT	CK: TxDOT	DW: TxDOT	CK: TxDOT
©TxDOT February 2020	CONT	SECT	JOB	HIGHWAY
REVISIONS	0914	05	222	RM 2243
	DIST	COUNTY		SHEET NO.
	AUS	WILLIAMSON		314

DISCLAIMER:
The use of this standard is governed by the "Texas Engineering Practice Act". No warranty of any kind is made by TxDOT for any purpose whatsoever. TxDOT assumes no responsibility for the conversion of this standard to other formats or for incorrect results or damages resulting from its use.

DATE: 4/10/2025 1:06:08 PM
FILE: G:\TXC\Projects\County_Williamson\7473-02 RM 2243 Phase 1A\03_CADD\01_Shts\06-DRNG\Stds\CD-SETB-FWS-20.dgn

DISCLAIMER:
The use of this standard is governed by the "Texas Engineering Practice Act". No warranty of any kind is made by TxDOT for any purpose whatsoever. TxDOT assumes no responsibility for the conversion of this standard to other formats or for incorrect results or damages resulting from its use.

DATE: 4/10/2025 1:06:09 PM
FILE: G:\TxC\Projects\County_Williamson\7473-02 RM 2243 Phase IA\03_CADD\01_Shts\06-DRNG\Stds\CD-SETP-PD-20.dgn

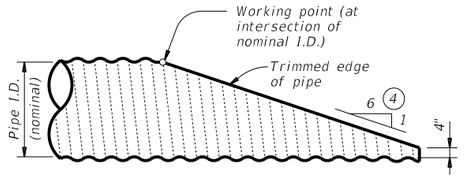

NOTE: All cross pipes, calculations, and dimensions are based on the pipe culverts mitered as shown in this detail. Alternate styles of mitered ends will require that appropriate adjustments be made to the values presented on this standard.

SIDE ELEVATION OF TYPICAL PIPE CULVERT MITER

(Showing corrugated metal pipe (CMP) culvert Details at reinforced concrete pipe (RCP) culvert are similar.)

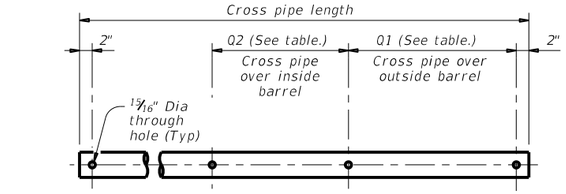

PIPE WITH BOLTED ANCHOR

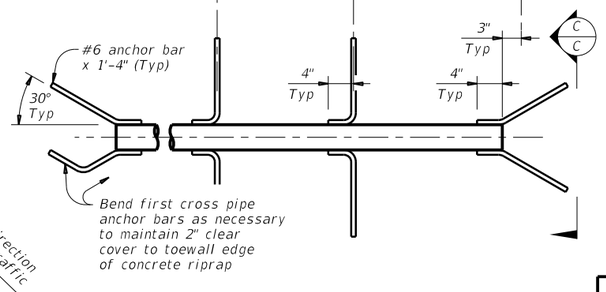

PIPE WITH ANCHOR BARS

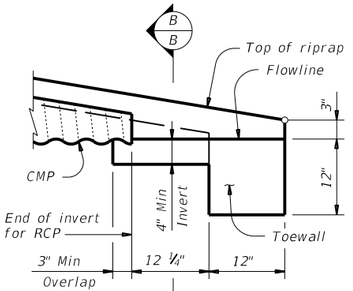

DETAIL "A"

(Showing invert with corrugated metal pipe (CMP) culvert. Reinforced concrete pipe (RCP) culvert details are similar. Cross pipes not shown for clarity.)

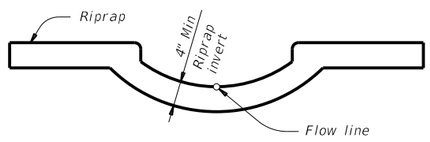

SECTION B-B

(Cross pipes not shown for clarity.)

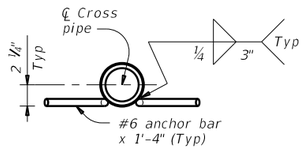

SECTION C-C

CROSS PIPE DETAILS

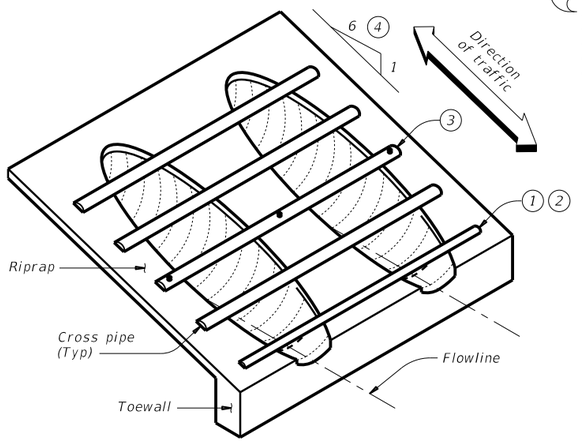

ISOMETRIC VIEW OF TYPICAL INSTALLATION

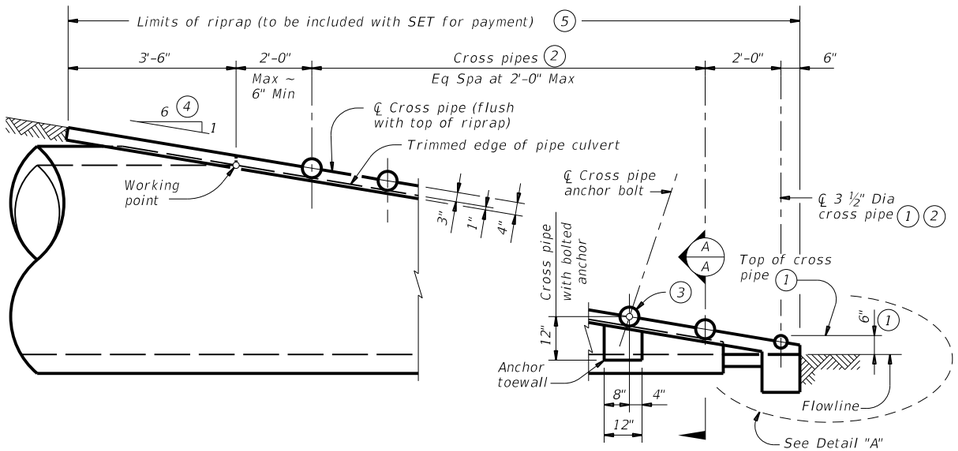

SIDE ELEVATION OF CAST-IN-PLACE CONCRETE

(Showing reinforced concrete pipe (RCP) culvert. Details at corrugated metal pipe (CMP) culvert are similar.)

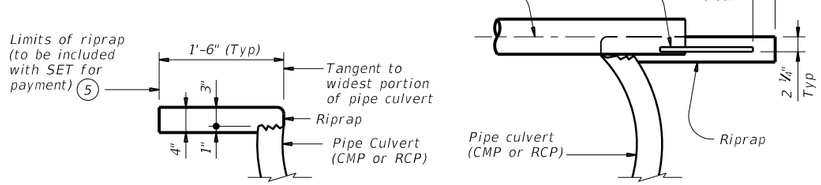

SHOWING CROSS PIPE WITH ANCHOR BAR

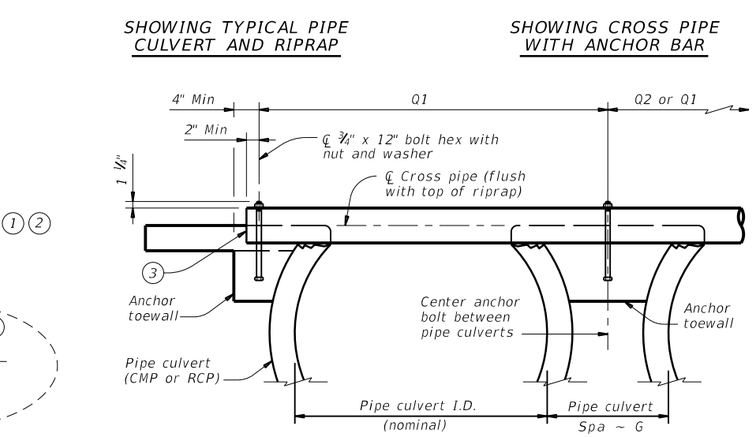

SHOWING CROSS PIPE WITH BOLTED ANCHOR

SHOWING TYPICAL PIPE CULVERT AND RIPRAP

SECTION A-A

CROSS PIPE LENGTHS, REQUIRED PIPE SIZES, AND RIPRAP QUANTITIES (2)

Nominal Culvert I.D.	Conc Riprap (CY) (6)	Pipe Culvert Spa ~ G	Single Barrel ~ Q1	Multi-Barrel ~ Q1	Q2	Conditions for Use of Cross Pipes	Cross Pipe Sizes
12"	0.6	0' - 9"	N/A	2' - 1"	1' - 9"	3 or more pipe culverts	3" Std (3.500" O.D.)
15"	0.7	0' - 11"	N/A	2' - 5"	2' - 2"		
18"	0.8	1' - 2"	N/A	2' - 10"	2' - 8"		
21"	0.9	1' - 4"	N/A	3' - 2"	3' - 1"		
24"	0.9	1' - 7"	N/A	3' - 6"	3' - 7"		
27"	1.0	1' - 8"	N/A	3' - 10"	3' - 11"	3 or more pipe culverts	3 1/2" Std (4.000" O.D.)
30"	1.1	1' - 10"	N/A	4' - 2"	4' - 4"	2 or more pipe culverts	
33"	1.2	1' - 11"	4' - 2"	4' - 5"	4' - 8"	All pipe culverts	
36"	1.3	2' - 1"	4' - 5"	4' - 9"	5' - 1"	All pipe culverts	4" Std (4.500" O.D.)
42"	1.5	2' - 4"	4' - 11"	5' - 5"	5' - 10"		
48"	1.7	2' - 7"	5' - 5"	6' - 0"	6' - 7"	All pipe culverts	5" Std (5.563" O.D.)
54"	2.0	3' - 0"	5' - 11"	6' - 9"	7' - 6"		
60"	2.2	3' - 3"	6' - 5"	7' - 4"	8' - 3"		
66"	2.4	3' - 3"	6' - 11"	7' - 10"	8' - 9"		
72"	2.7	3' - 4"	7' - 5"	8' - 5"	9' - 4"		

(1) The proper installation of the first cross pipe is critical for vehicle safety. Place the top of the first cross pipe no more than 6" above the flow line.

(2) Provide cross pipes, except the first bottom pipe, of the size shown in the table. Provide a 3 1#2" standard pipe (4" O.D.) for the first bottom pipe.

(3) Install the third cross pipe from the bottom of the culvert using a bolted connection. Ensure that riprap concrete does not flow into the cross pipe so as to permit disassembly of the bolted connection to allow cleanout access. At the Contractor's option, install all other cross pipes using the bolted connection details.

(4) Match cross slope as shown elsewhere in the plans. Cross slope of 6:1 or flatter is required for vehicle safety.

(5) Riprap placed beyond the limits shown will be paid for as concrete riprap in accordance with Item 432, "Riprap."

(6) Quantities shown are for one end of one reinforced concrete pipe (RCP) culvert. For multiple pipe culverts or for corrugated metal pipe (CMP) culverts, quantities will need to be adjusted. Riprap quantities are for contractor's information only.

MATERIAL NOTES:

Synthetic fibers listed on the "Fibers for Concrete" Material Producer List (MPL) may be used in lieu of steel reinforcing in riprap concrete unless noted otherwise.

Provide cross pipes that meet the requirements of ASTM A53 (Type E or S, Gr B), ASTM A500 (Gr B), or API 5LX52.

Provide ASTM A307 bolts and nuts.

Galvanize all steel components, except concrete reinforcing, after fabrication. Repair galvanizing damaged during transport or construction in accordance with the specifications.

GENERAL NOTES:

Cross pipes are designed for a traversing load of 10,000 pounds at yield as recommended by Research Report 280-2F, "Safety Treatment of Roadside Parallel-Drainage Structures", Texas Transportation Institute, March 1981.

Safety end treatments (SET) shown herein are intended for use in those installations where out of control vehicles are likely to traverse the openings approximately perpendicular to the cross pipes.

Construct concrete riprap and all necessary inverts in accordance with the requirements of Item 432, "Riprap."

Payment for riprap and toewall is included in the Price Bid for each Safety End Treatment.

Texas Department of Transportation

Bridge Division Standard

SAFETY END TREATMENT
FOR 12" DIA TO 72" DIA PIPE CULVERTS
TYPE II ~ PARALLEL DRAINAGE

SETP-PD

FILE:	DN: GAF	CK: CAT	DW: JRP	CK: GAF
©TxDOT February 2020 REVISIONS	CONT	SECT	JOB	HIGHWAY
	0914	05	222	RM 2243
	DIST	COUNTY		SHEET NO.
	AUS	WILLIAMSON		315

DISCLAIMER:
The use of this standard is governed by the "Texas Engineering Practice Act". No warranty of any kind is made by TxDOT for any purpose whatsoever. TxDOT assumes no responsibility for the conversion of this standard to other formats or for incorrect results or damages resulting from its use.

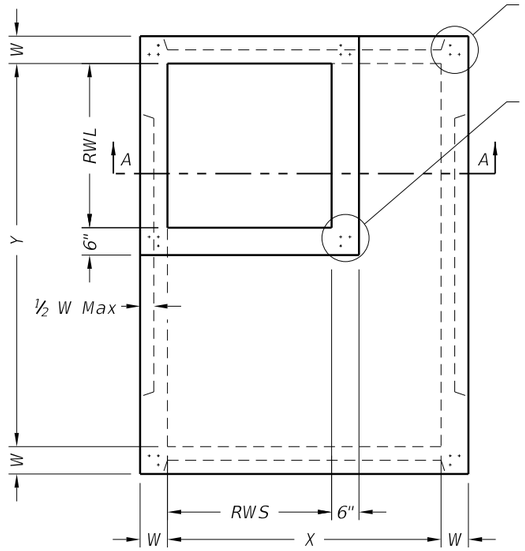

PLAN VIEW "A"

SQUARE REDUCED RISER OPTION

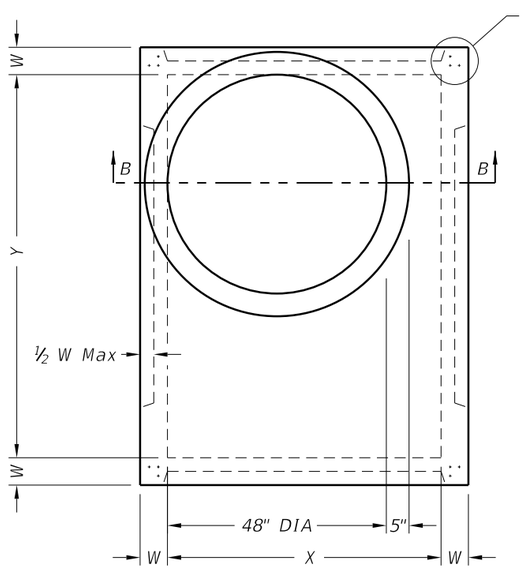

PLAN VIEW "B"

ROUND REDUCED RISER OPTION

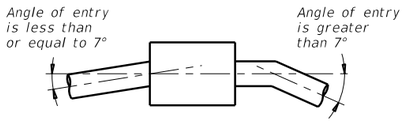

PIPE CONNECTION DETAIL

Connect pipes within 7° of normal to PB wall.
If necessary, use pipe elbow or curved
approach alignment to stay within this limit.

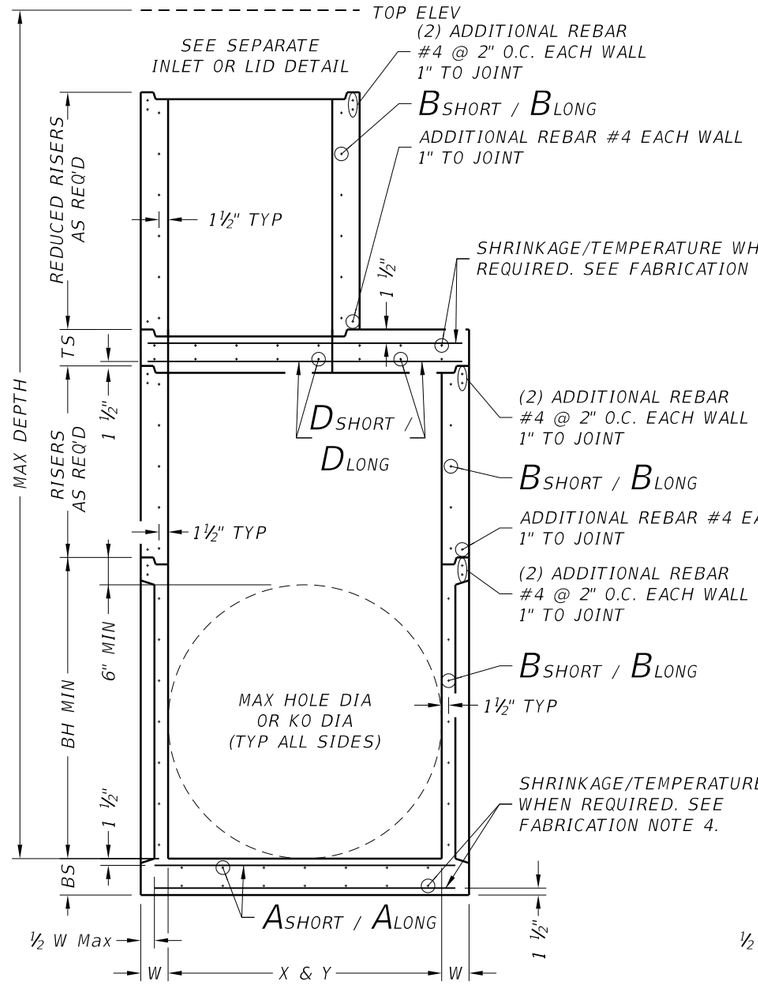

SECTION A-A

SQUARE REDUCED RISER OPTION

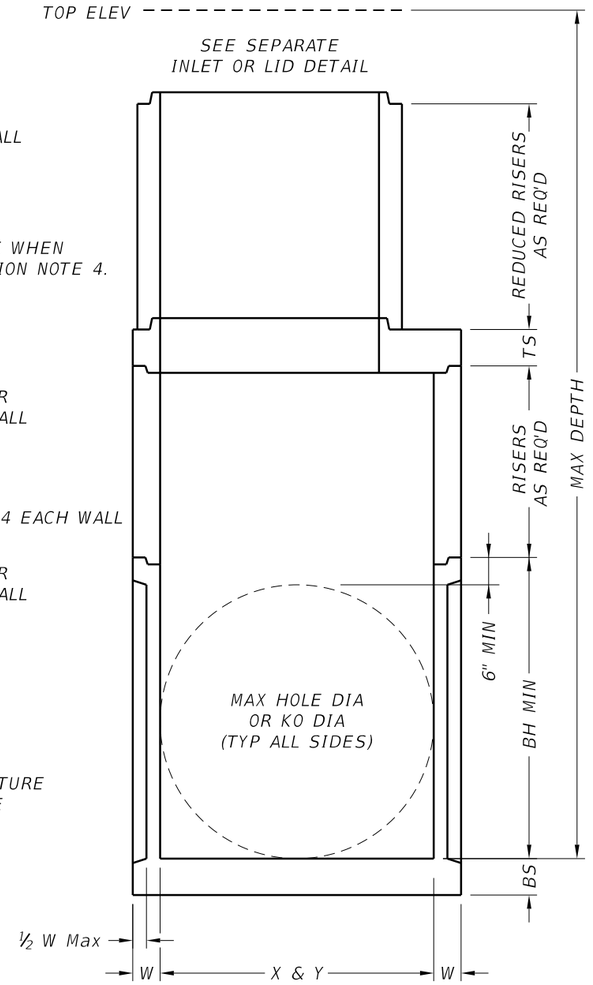

SECTION B-B

ROUND REDUCED RISER OPTION

FABRICATION NOTES:

1. Provide Class "H" concrete in accordance with Item 421 and having a minimum compressive strength of 5,000 psi.
2. Provide Grade 60 reinforcing steel or equivalent area of WWR.
3. Provide typical clear cover of 1 ½" to reinforcing steel at interior or exterior walls.
4. Walls or slabs with a thickness of 8" or greater require shrinkage and temperature reinforcing steel. Provide steel area = 0.11 in^2/ft each way.
5. No substitution is allowed for vertical and horizontal #4 bars in corners.
6. Manufacture base and risers to nearest 3" increment.
7. Design tongue and groove joints for full closure on both shoulders. Minimum spigot depth is ¾".
8. Provide lifting devices in conformance with Manufacturer's recommendations.
9. See sheet PDD for sizes, dimensions, and reinforcing steel not shown.

INSTALLATION NOTES:

1. If required elsewhere. Inverts (benching) to be provided by Contractor. Concrete or mortar used for invert is subsidiary to specified inlet or manhole.
2. Seal tongue and groove joints with preformed or bulk mastic in conformance with Manufacturer's recommendations. Tongue and groove joints may be grouted no more than 1" between each section, or ½ the joint depth, whichever is greater.
3. Do not grout rubber gasket joints without Manufacturer's recommendation.
4. For rigid pipe, cut hole in thin wall panel (KO) 4" Max, 2" Min larger than pipe OD.
5. For flexible pipe, consult boot/seal Manufacturer's specification for placement tolerance and hole size. Center pipe in hole and install boot/seal per Manufacturer's specification.

GENERAL NOTES:

1. Precast Base consists of base slab, base unit, risers (as required), reducing slab (as required), and reduced risers (as required). See sheet PDD for sizes.
2. Designed according to ASTM C913.
3. Payment for precast base is subsidiary to the specified inlet, per Item 465, "Junction Boxes, Manholes, and Inlets."

Cover dimensions are clear dimensions, unless noted otherwise.

HL93 LOADING

Texas Department of Transportation

Bridge Division Standard

PRECAST BASE

PB

FILE:	DN: TxDOT	CK: TxDOT	DW: TxDOT	CK: TxDOT
©TxDOT February 2020	CONT	SECT	JOB	HIGHWAY
REVISIONS	0914	05	222	RM 2243
	DIST	COUNTY		SHEET NO.
	AUS	WILLIAMSON		316

DATE:
FILE:

DISCLAIMER:
The use of this standard is governed by the "Texas Engineering Practice Act". No warranty of any kind is made by TxDOT for any purpose whatsoever. TxDOT assumes no responsibility for the conversion of this standard to other formats or for incorrect results or damages resulting from its use.

DATE: 4/10/2025 1:06:11 PM
FILE: G:\TXC\Projects\County_Williamson\7473-02 RM 2243 Phase 1A\03_CADD\01_Shts\06-DRNG\Stds\CD-PJB-20.dgn

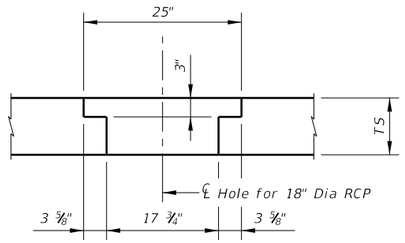

DETAIL "B"

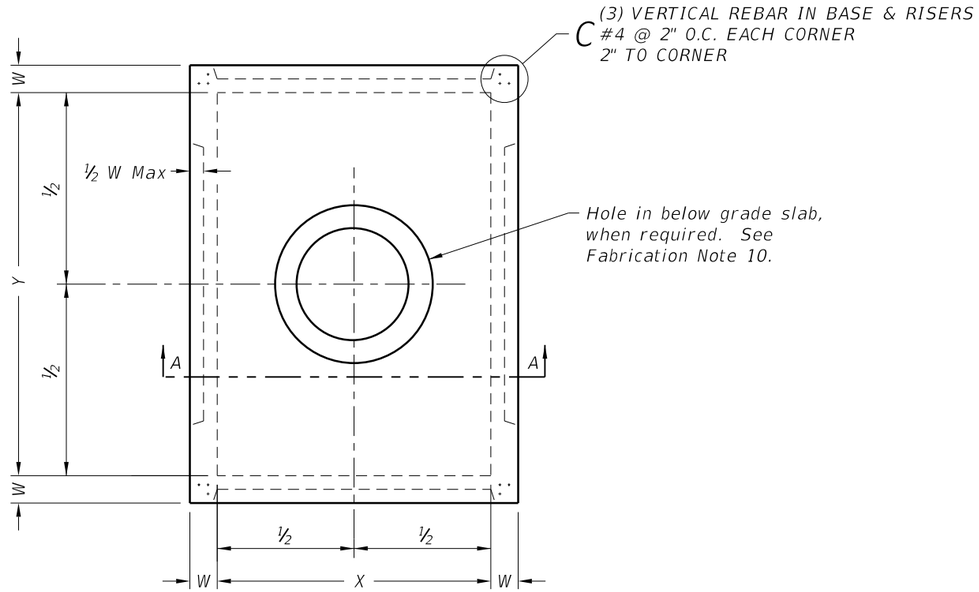

PLAN VIEW

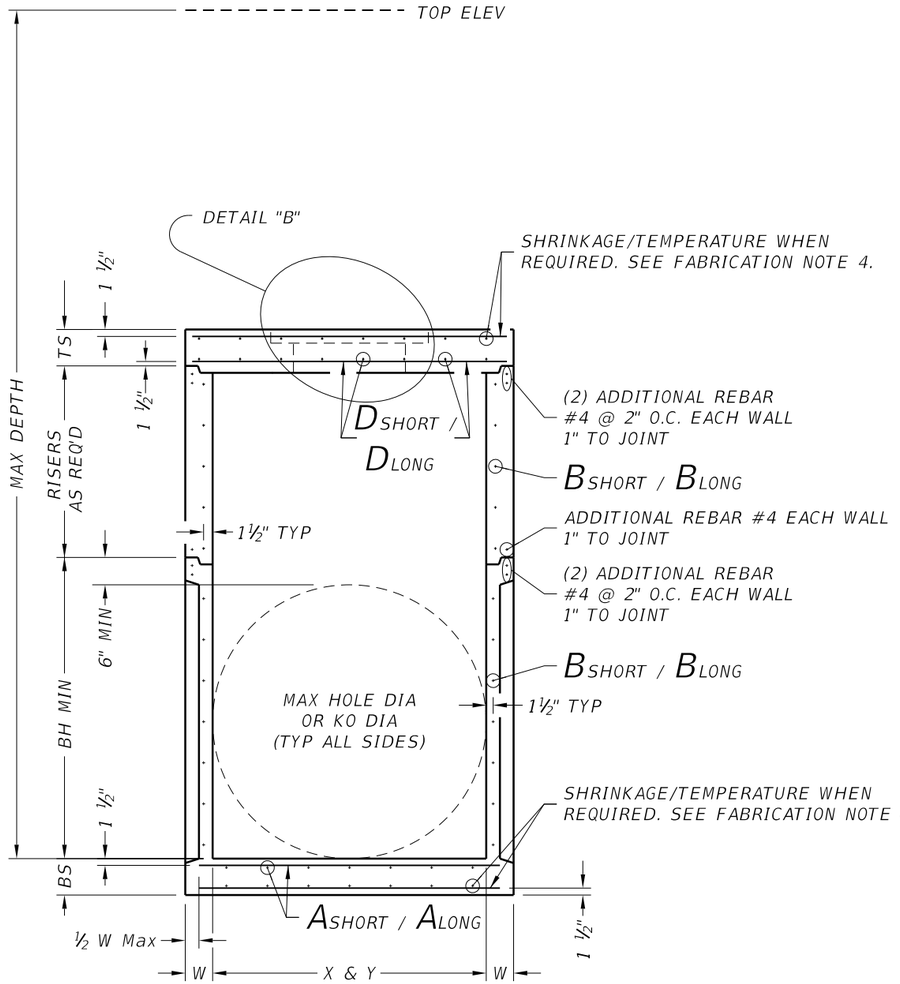

SECTION A-A

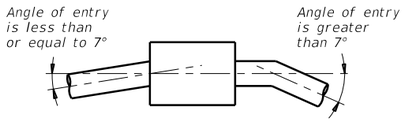

PIPE CONNECTION DETAIL

Connect pipes within 7° of normal to PJB wall.
If necessary, use pipe elbow or curved approach
alignment to stay within this limit.

FABRICATION NOTES:

1. Provide Class "H" concrete in accordance with Item 421 and having a minimum compressive strength of 5,000 psi.
2. Provide Grade 60 reinforcing steel or equivalent area of WWR.
3. Provide typical clear cover of 1 ½" to reinforcing steel at interior or exterior walls.
4. Walls or slabs with a thickness of 8" or greater require shrinkage and temperature reinforcing steel. Provide steel area = 0.11 in²/ft each way.
5. No substitution is allowed for vertical and horizontal #4 bars in corners.
6. Manufacture base and risers to nearest 3" increment.
7. Design tongue and groove joints for full closure on both shoulders. Minimum spigot depth is ¾".
8. Provide lifting devices in conformance with Manufacturer's recommendations.
9. See sheet PDD for sizes, dimensions, and reinforcing steel not shown.
10. Provide hole in below grade slab only when PJB is installed with inlet type POD.

INSTALLATION NOTES:

1. Inverts (benching) to be provided by Contractor. Concrete or mortar used for invert is subsidiary to junction box.
2. Seal tongue and groove joints with preformed or bulk mastic in conformance with Manufacturer's recommendations. Tongue and groove joints may be grouted no more than 1" between each section, or ½ the joint depth, whichever is greater.
3. Do not grout rubber gasket joints without Manufacturer's recommendation.
4. For rigid pipe, cut hole in thin wall panel (KO) 4" Max, 2" Min larger than pipe OD.
5. For flexible pipe, consult boot/seal Manufacturer's specification for placement tolerance and hole size. Center pipe in hole and install boot/seal per Manufacturer's specification.

GENERAL NOTES:

1. Precast Junction Box consists of base slab, base unit, risers (as required), and below grade slab. See sheet PDD for sizes.
2. Designed according to ASTM C913.
3. Payment for junction box is per Item 465 "Junction Boxes, Manholes, and Inlets" by type and size.

Cover dimensions are clear dimensions, unless noted otherwise.

HL93 LOADING

Texas Department of Transportation | Bridge Division Standard

PRECAST JUNCTION BOX

PJB

FILE:	DN: TxDOT	CK: TxDOT	DW: TxDOT	CK: TxDOT
©TxDOT February 2020	CONT	SECT	JOB	HIGHWAY
REVISIONS	0914	05	222	RM 2243
	DIST	COUNTY		SHEET NO.
	AUS	WILLIAMSON		317

DISCLAIMER:
The use of this standard is governed by the "Texas Engineering Practice Act". No warranty of any kind is made by TxDOT for any purpose whatsoever. TxDOT assumes no responsibility for the conversion of this standard to other formats or for incorrect results or damages resulting from its use.

DATE: 4/10/2025 1:06:12 PM
FILE: G:\TXC\Projects\County_Williamson\7473-02 RM 2243 Phase 1A\03_CADD\01_Shts\06-DRNG\Stds\CD-PDD-20.dgn

	Size	MAX DEPTH = 15 ft. to top of BASE SLAB										MAX DEPTH = 25 ft. to top of BASE SLAB										Min Height (See Gen Note 3)	Max HOLE DIA (See Fab Note 2)	Max KO DIA (See Fab Note 2)
		Base Slab			Base Unit or Riser Walls			Below Grade Slab (w/PJB) Reducing Slab (w/PB)				Base Slab			Base Unit or Riser Walls			Below Grade Slab (w/PJB) Reducing Slab (w/PB)						
		Short Span Reinf Steel Area	Long Span Reinf Steel Area	Thickness	Short Span Reinf Steel Area	Long Span Reinf Steel Area	Thickness	Reduced Riser Size	Short Span Reinf Steel Area	Long Span Reinf Steel Area	Thickness	Short Span Reinf Steel Area	Long Span Reinf Steel Area	Thickness	Short Span Reinf Steel Area	Long Span Reinf Steel Area	Thickness	Reduced Riser Size	Short Span Reinf Steel Area	Long Span Reinf Steel Area	Thickness			
	X x Y	Ashort	Along	BS	Bshort	Blong	W	RWSxRWL or ID	Dshort	Dlong	TS	Ashort	Along	BS	Bshort	Blong	W	RWSxRWL or ID	Dshort	Dlong	TS	BH MIN	HOLE DIA	KO DIA
	ft.	in^2/ft	in^2/ft	in.	in^2/ft	in^2/ft	in.	ft. **	in^2/ft	in^2/ft	in.	in^2/ft	in^2/ft	in.	in^2/ft	in^2/ft	in.	ft. **	in^2/ft	in^2/ft	in.	ft.	in.	in.
Precast Junction Box (PJB)	3x3	0.23	0.23	6	0.19	0.19	6	N/A	0.37	0.37	9	0.29	0.29	6	0.24	0.24	6	N/A	0.37	0.37	9	3.5	36	36
	4x4	0.29	0.29	6	0.24	0.24	6	N/A	0.41	0.41	9	0.47	0.47	6	0.38	0.38	6	N/A	0.41	0.41	9	4.5	48	48
	3x5	0.29	0.18	6	0.19	0.35	6	N/A	0.48	0.48	9	0.39	0.18	6	0.23	0.59	6	N/A	0.48	0.48	9	3.5	36/60	36/60
	4x5	0.36	0.18	6	0.22	0.34	6	N/A	0.42	0.42	9	0.53	0.26	6	0.39	0.59	6	N/A	0.42	0.42	9	4.5	48/60	48/60
	5x5	0.36	0.36	6	0.34	0.34	6	N/A	0.43	0.43	9	0.62	0.62	6	0.59	0.59	6	N/A	0.43	0.43	9	5.5	60	60
	5x6	0.27	0.27	9	0.34	0.45	6	N/A	0.48	0.48	9	0.47	0.45	9	0.38	0.54	8	N/A	0.48	0.48	9	5.5	60/72	60/72
	6x6	0.27	0.27	9	0.45	0.45	6	N/A	0.56	0.56	9	0.52	0.52	9	0.54	0.54	8	N/A	0.56	0.56	9	6.5	72	72
	8x8	0.46	0.46	9	0.51	0.51	8	N/A	0.45	0.45	12	0.87	0.87	9	0.59	0.59	10	N/A	0.45	0.45	12	8.5	96	72
Precast Base (PB)	3x3	0.23	0.23	6	0.19	0.19	6	N/A	N/A	N/A	N/A	0.29	0.29	6	0.24	0.24	6	N/A	N/A	N/A	N/A	3.5	36	36
	4x4	0.29	0.29	6	0.24	0.24	6	N/A	N/A	N/A	N/A	0.47	0.47	6	0.38	0.38	6	N/A	N/A	N/A	N/A	4.5	48	48
	3x5	0.29	0.18	6	0.19	0.35	6	3x3	0.30	0.34	9	0.39	0.18	6	0.23	0.59	6	3x3	0.40	0.40	9	3.5	36/60	36/60
	4x5	0.36	0.18	6	0.22	0.34	6	3x3	0.30	0.30	9	0.53	0.26	6	0.39	0.59	6	3x3	0.46	0.37	9	4.5	48/60	48/60
	4x5	0.36	0.18	6	0.22	0.34	6	4x4	0.30	0.30	9	0.53	0.26	6	0.39	0.59	6	4x4	0.39	0.39	9	4.5	48/60	48/60
	4x5	0.36	0.18	6	0.22	0.34	6	48"	0.39	0.39	9	0.53	0.26	6	0.39	0.59	6	48"	0.47	0.47	9	4.5	48/60	48/60
	4x5	0.36	0.18	6	0.22	0.34	6	3x5	0.33	0.40	9	0.53	0.26	6	0.39	0.59	6	3x5	0.48	0.48	9	4.5	48/60	48/60
	5x5	0.36	0.36	6	0.34	0.34	6	3x3	0.34	0.34	9	0.62	0.62	6	0.59	0.59	6	3x3	0.53	0.53	9	5.5	60	60
	5x5	0.36	0.36	6	0.34	0.34	6	4x4	0.36	0.36	9	0.62	0.62	6	0.59	0.59	6	4x4	0.64	0.64	9	5.5	60	60
	5x5	0.38	0.38	6	0.34	0.34	6	48"	0.36	0.36	9	0.62	0.62	6	0.59	0.59	6	48"	0.64	0.64	9	5.5	60	60
	5x5	0.36	0.36	6	0.34	0.34	6	3x5	0.34	0.40	9	0.62	0.62	6	0.59	0.59	6	3x5	0.53	0.53	9	5.5	60	60
	5x6	0.31	0.31	9	0.34	0.45	6	3x3	0.34	0.34	9	0.47	0.45	9	0.38	0.54	8	3x3	0.61	0.50	9	5.5	60/72	60/72
	5x6	0.27	0.27	9	0.34	0.45	6	4x4	0.36	0.45	9	0.47	0.45	9	0.38	0.54	8	4x4	0.74	0.57	9	5.5	60/72	60/72
	5x6	0.29	0.29	9	0.34	0.45	6	48"	0.36	0.45	9	0.47	0.45	9	0.38	0.54	8	48"	0.74	0.57	9	5.5	60/72	60/72
	5x6	0.29	0.29	9	0.34	0.45	6	3x5	0.45	0.45	9	0.47	0.45	9	0.38	0.54	8	3x5	0.61	0.61	9	5.5	60/72	60/72
	6x6	0.29	0.29	9	0.45	0.45	6	3x3	0.41	0.41	9	0.52	0.52	9	0.54	0.54	8	3x3	0.74	0.74	9	6.5	72	72
	6x6	0.27	0.27	9	0.45	0.45	6	4x4	0.45	0.45	9	0.52	0.52	9	0.54	0.54	8	4x4	0.87	0.87	9	6.5	72	72
	6x6	0.29	0.29	9	0.45	0.45	6	48"	0.45	0.45	9	0.52	0.52	9	0.54	0.54	8	48"	0.87	0.87	9	6.5	72	72
	6x6	0.29	0.29	9	0.45	0.45	6	3x5	0.45	0.45	9	0.52	0.52	9	0.54	0.54	8	3x5	0.87	0.87	9	6.5	72	72
	8x8	0.52	0.52	9	0.51	0.51	8	3x3	0.61	0.61	12	0.91	0.91	9	0.70	0.70	10	3x3	0.85	0.85	12	8.5	96	72
	8x8	0.52	0.52	9	0.51	0.51	8	4x4	0.70	0.70	12	0.87	0.87	9	0.70	0.70	10	4x4	1.01	1.01	12	8.5	96	72
	8x8	0.52	0.52	9	0.51	0.51	8	48"	0.70	0.70	12	0.87	0.87	9	0.70	0.70	10	48"	1.01	1.01	12	8.5	96	72
	8x8	0.52	0.52	9	0.51	0.51	8	3x5	0.70	0.85	12	0.87	0.87	9	0.70	0.70	10	3x5	1.01	1.01	12	8.5	96	72

** Unless otherwise indicated.

FABRICATION NOTES:
1. Maximum spacing of reinforcement is 8".
2. At manufacturer's option, provide cast or cored holes or thin wall panels (KO) to the maximum diameter shown for each. When no penetration is required, it is acceptable to provide a wall with no sectional reduction.

GENERAL NOTES:
1. Precast Junction Box consists of base slab, base unit, risers (as required), and below grade slab. See sheet PJB for details.
2. Precast Base consists of base slab, base unit, risers (as required), reducing slab (as required), and reduced risers (as required). See sheet PB for details.
3. Min Height shown is for stock base units. Use stock base units whenever practical. Smaller height base units can be used in special installation circumstances, when noted elsewhere in the plans. Absolute minimum height of base units is 2'-6".

HL93 LOADING

Texas Department of Transportation

Bridge Division Standard

DESIGN DATA FOR PRECAST BASE AND JUNCTION BOX

PDD

FILE:	DN: TxDOT	CK: TxDOT	DW: TxDOT	CK: TxDOT
©TxDOT February 2020	CONT	SECT	JOB	HIGHWAY
REVISIONS	0914	05	222	RM 2243
	DIST	COUNTY		SHEET NO.
	AUS	WILLIAMSON		318

DISCLAIMER:
The use of this standard is governed by the "Texas Engineering Practice Act". No warranty of any kind is made by TxDOT for any purpose whatsoever. TxDOT assumes no responsibility for the conversion of this standard to other formats or for incorrect results or damages resulting from its use.

DATE: 4/10/2025 1:06:13 PM
FILE: G:\TXC\Projects\County_Williamson\7473-02 RM 2243 Phase 1A\03_CADD\01_Shts\06-DRNG\Srds\CD-PCU-23.dgn

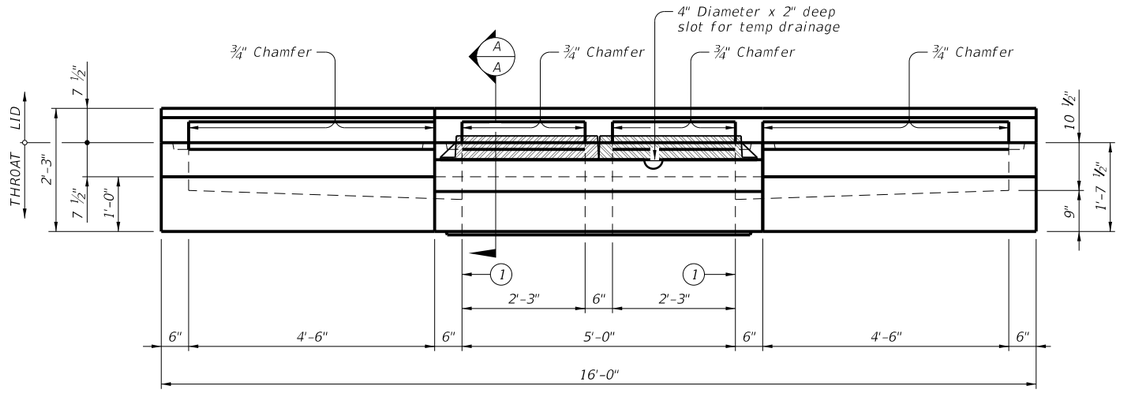

FRONT VIEW

(Showing left and right extensions)

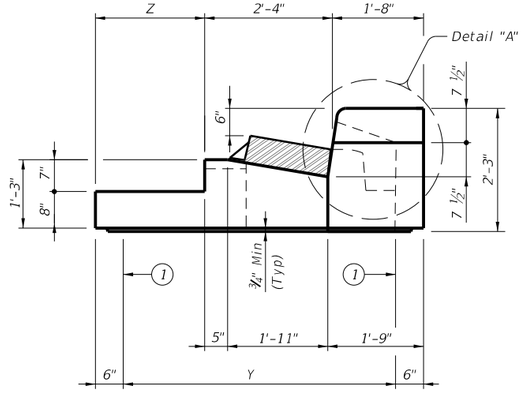

SECTION A-A

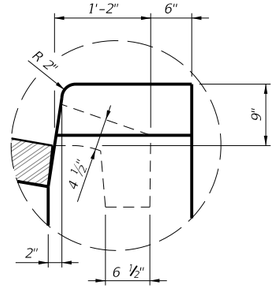

DETAIL "A"

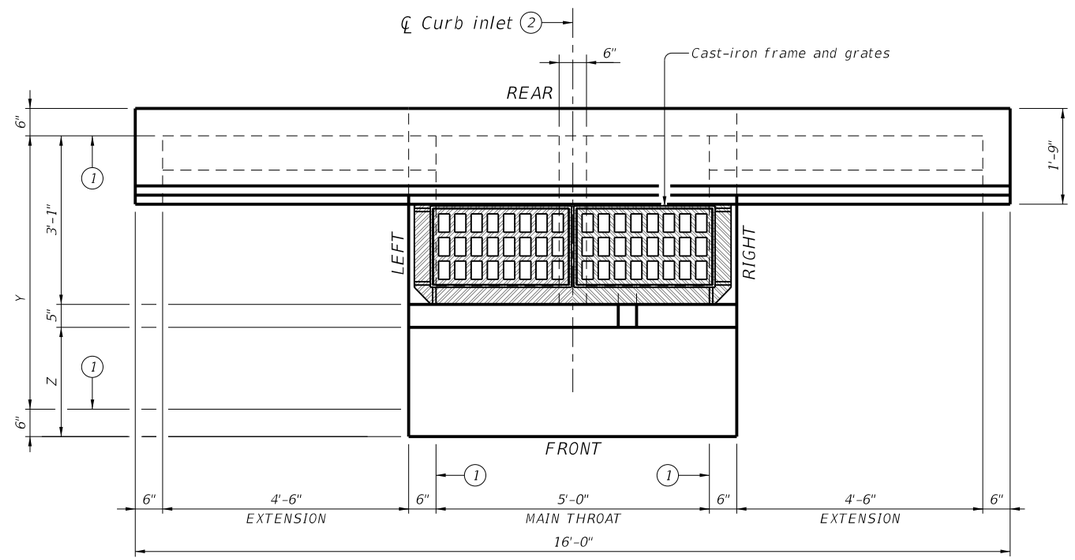

PLAN VIEW

(Showing left and right extensions)

TABLE OF VARIABLE DIMENSIONS	
Size (Y)	Z
3'	0'
4'	1'
5'	2'
6'	3'

(1) Matches inside face of wall of precast base or riser below inlet.

(2) Reference point is located where the ℄ of the main throat intersects the normal gutter line. See Curb and Gutter Transition Details for PCO Inlet (CGT-PCO) standard for more information.

HS20 LOADING SHEET 1 OF 2

Texas Department of Transportation — Bridge Division Standard

PRECAST CURB INLET UNDER ROADWAY

PCU

FILE:	DN: TxDOT	CK: TxDOT	DW: TxDOT	CK: TxDOT
©TxDOT February 2020	CONT	SECT	JOB	HIGHWAY
REVISIONS	0914	05	222	RM 2243
06-2023: Added reference point.	DIST	COUNTY		SHEET NO.
	AUS	WILLIAMSON		319

DISCLAIMER:
The use of this standard is governed by the "Texas Engineering Practice Act". No warranty of any kind is made by TxDOT for any purpose whatsoever. TxDOT assumes no responsibility for the conversion of this standard to other formats or for incorrect results or damages resulting from its use.

DATE: 4/10/2025 1:06:14 PM
FILE: G:\TXC\Projects\County_Williamson\7473-02 RM 2243 Phase 1A\03_CADD\01_Shts\06-DRNG\Srds\CD-PCU-23.dgn

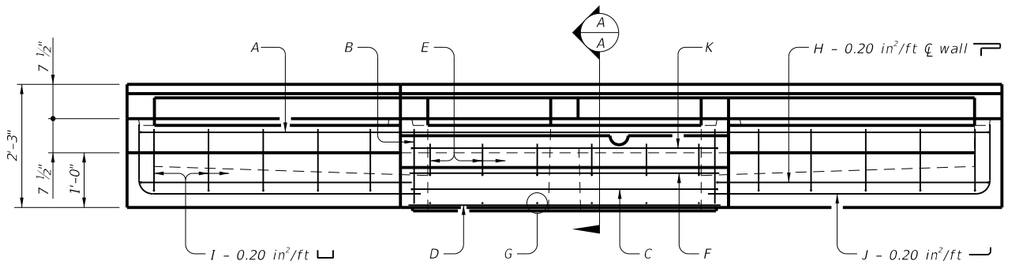

FRONT VIEW

(Showing left and right extensions)

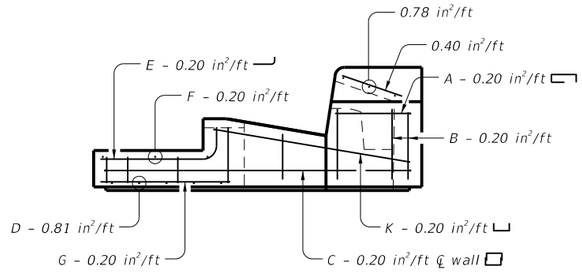

SECTION A-A

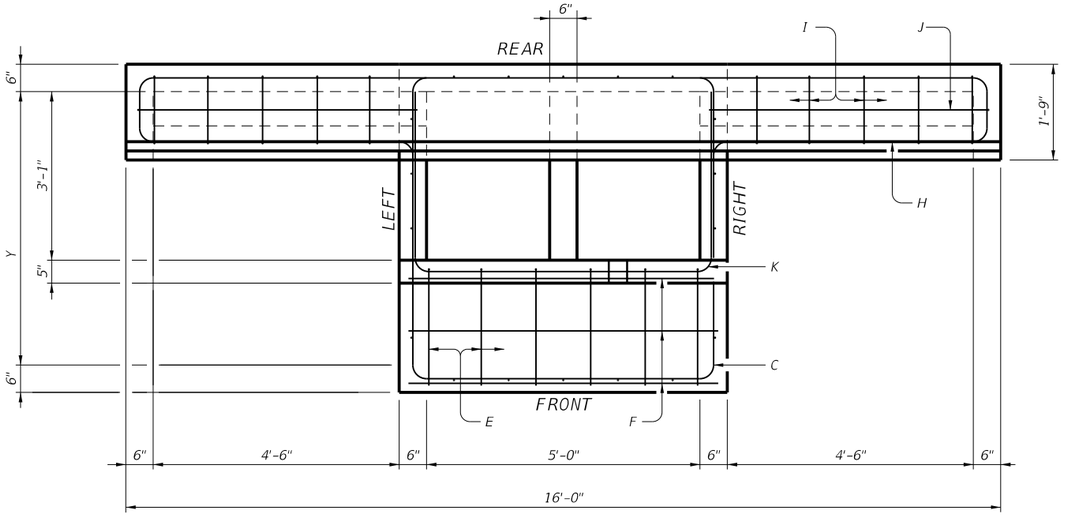

PLAN VIEW

(Showing left and right extensions)

FABRICATION NOTES:

1. Provide Class "H" concrete in accordance with Item 421 and having a minimum compressive strength of 5,000 psi.
2. Provide Grade 60 reinforcing steel or equivalent area of WWR.
3. Provide typical clear cover of 1 ½" to reinforcing steel from surface of concrete or lower outside shoulder.
4. Extensions may be right, left, both or none. Provide extensions as specified elsewhere in plans.
5. Design tongue and groove joints for full closure on both shoulders. Minimum spigot depth is ¾". Top slab may employ a butt joint with dowels at the Contractor's option.
6. Provide lifting devices in conformance with Manufacturer's recommendations.
7. Chamfer vertical edges on inlet lid ¾" as shown in Front View, sheet 1.

INSTALLATION NOTES:

1. Inlet throat is placed under roadway and intended for direct traffic. Inlet lid is not for direct traffic. Do not place Inlet lid in roadway.
2. Seal tongue and groove joints and butt joints with preformed or bulk mastic in conformance with Manufacturer's recommendations. Tongue and groove joints may be grouted no more than 1" between each section, or ½ the joint depth, whichever is greater.
3. Do not grout rubber gasket joints without Manufacturer's recommendation.

GENERAL NOTES:

1. Designed according to ASTM C913.
2. Open area of main throat = 324 sq in. Open area of one extension throat = 324 sq in.
3. Payment for inlet is per Item 465, "Junction Boxes, Manholes and Inlets" by type, size and extension placement. Extensions are subsidiary to inlet.

HS20 LOADING

Texas Department of Transportation

Bridge Division Standard

PRECAST CURB INLET UNDER ROADWAY

PCU

FILE:	DN: TxDOT	CK: TxDOT	DW: TxDOT	CK: TxDOT
©TxDOT February 2020	CONT	SECT	JOB	HIGHWAY
REVISIONS	0914	05	222	RM 2243
06-2023: Added reference point.	DIST	COUNTY		SHEET NO.
	AUS	WILLIAMSON		320

DISCLAIMER:
The use of this standard is governed by the "Texas Engineering Practice Act". No warranty of any kind is made by TxDOT for any purpose whatsoever. TxDOT assumes no responsibility for the conversion of this standard to other formats or for incorrect results or damages resulting from its use.

DATE: 4/10/2025 1:06:15 PM
FILE: G:\TXC\Projects\County_Williamson\7473-02 RM 2243 Phase 1A\03_CADD\01_Shts\06-DRNG\Stds\CD-CGT-PCU-23.dgn

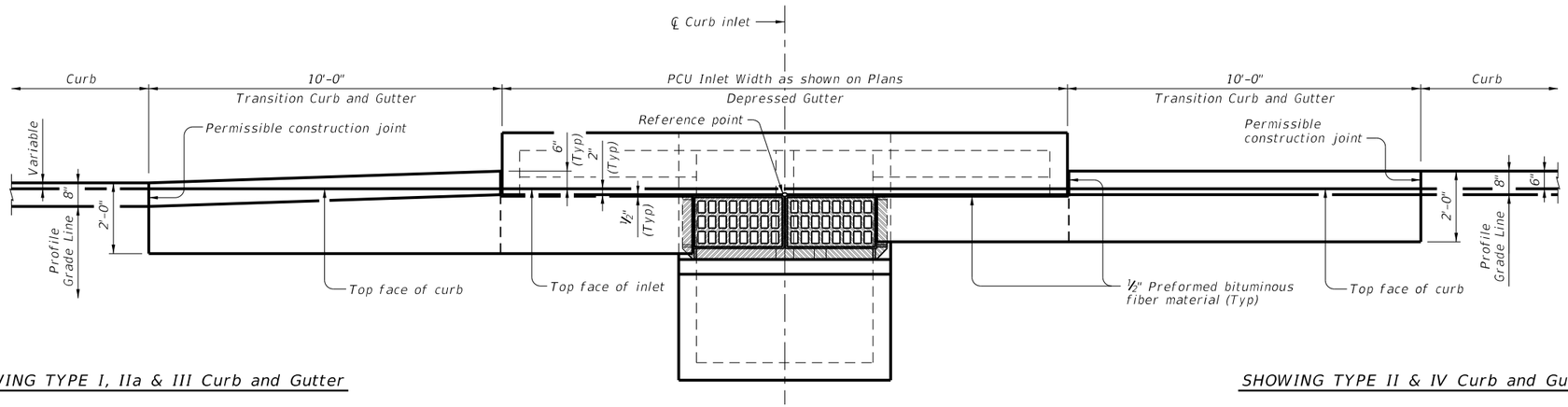

SHOWING TYPE I, IIa & III Curb and Gutter

SHOWING TYPE II & IV Curb and Gutter

PLAN

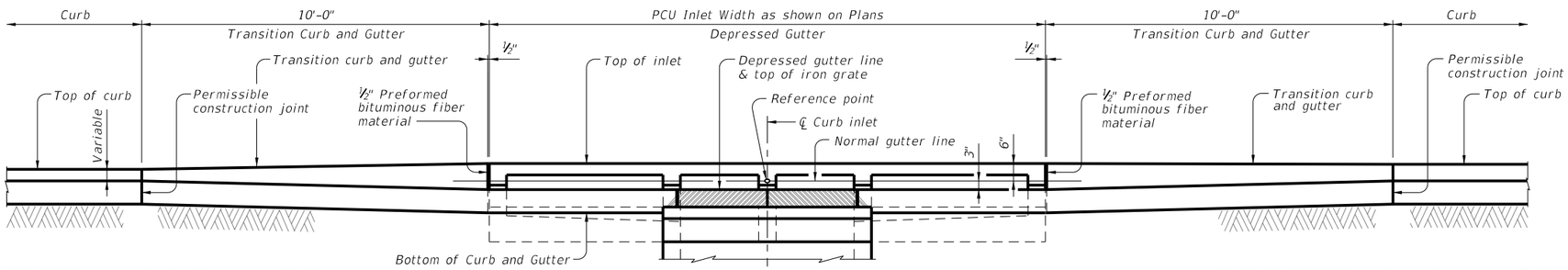

SHOWING TYPE I, IIa & III Curb and Gutter

SHOWING TYPE II & IV Curb and Gutter

ELEVATION

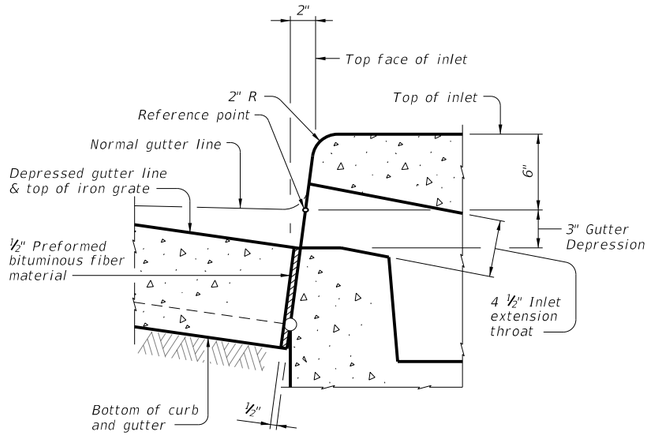

SECTION AT GUTTER AND INLET

(Reinforcing steel not shown for clarity.)

CONSTRUCTION NOTES:

Align top face of curb with PCU Inlet as shown.

MATERIAL NOTES:

Provide ½" Preformed Bituminous Fiber Material.

GENERAL NOTES:

Reference point is located where the ℄ of the main throat intersects the normal gutter line.

See Precast Curb Inlet Under Roadway standard PCU for details and notes not shown.

See Concrete Curb and Curb and Gutter standard CCCG-22 for details and notes not shown.

Curb and Gutter Transitions is paid for and in accordance with Item 529, "Concrete Curb, Gutter, and Combined Curb and Gutter."

Preformed Bituminous Fiber Material is subsidiary to PCU Inlet.

Texas Department of Transportation

Bridge Division Standard

CURB AND GUTTER TRANSITION DETAILS FOR PCU INLET

CGT-PCU

FILE:	DN: TxDOT	CK: AES	DW: JTR	CK: AES
©TxDOT February 2020	CONT	SECT	JOB	HIGHWAY
REVISIONS	0914	05	222	RM 2243
06-2023: Added reference point.	DIST	COUNTY		SHEET NO.
	AUS	WILLIAMSON		321

DISCLAIMER:
The use of this standard is governed by the "Texas Engineering Practice Act". No warranty of any kind is made by TxDOT for any purpose whatsoever. TxDOT assumes no responsibility for the conversion of this standard to other formats or for incorrect results or damages resulting from its use.

DATE: 4/10/2025 1:06:17 PM
FILE: G:\TxC\Projects\County_Williamson\7473-02 RM 2243 Phase 1A\03_CADD\01_Shts\06-DRNG\Strds\CD-PSL-20.dgn

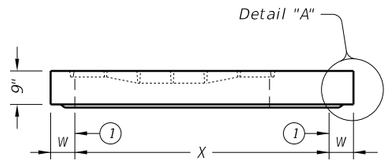

STYLE 'FG'

ORIENT TAPER TO CORRESPOND WITH ROADWAY CROSS-SLOPE.

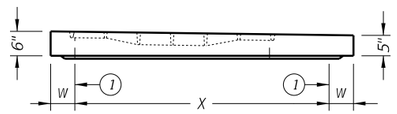

STYLE 'SFG'
ELEVATION VIEW

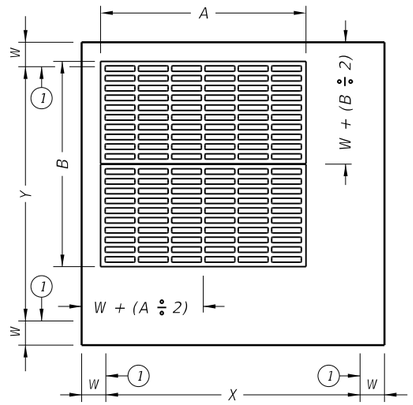

PLAN VIEW
CAST-IN FRAME & GRATE
STYLES 'FG' & 'SFG'

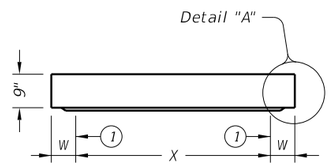

ELEVATION VIEW

STYLE 'SL'

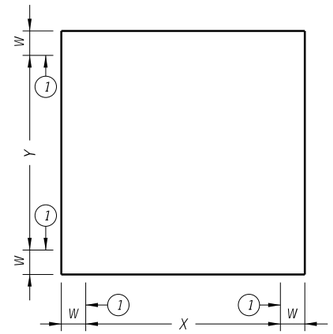

PLAN VIEW
NO OPENINGS

STYLE 'SL'

ELEVATION VIEW

STYLE 'SH'

PLAN VIEW
SHIP LOOSE FRAME & GRATE

STYLE 'SH'

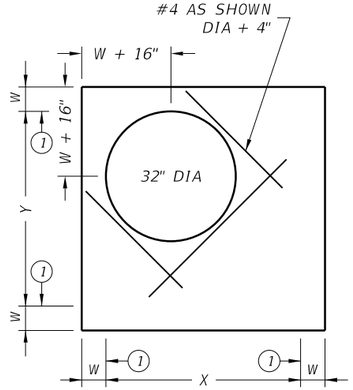

PLAN VIEW
SHIP LOOSE RING & COVER

STYLE 'RH'

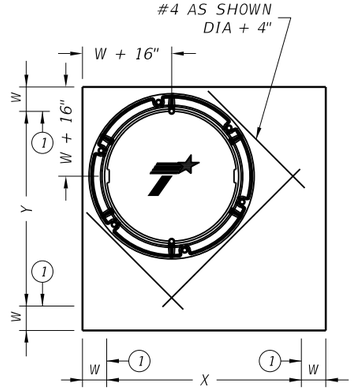

PLAN VIEW
32" DIA CAST-IN RING & COVER

STYLE 'RC'

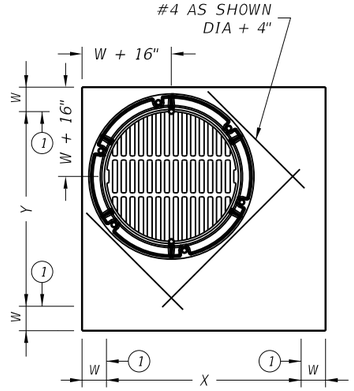

PLAN VIEW
32" DIA CAST-IN RING & GRATE

STYLE 'RG'

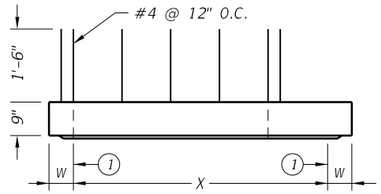

ELEVATION VIEW

STYLE 'S1'

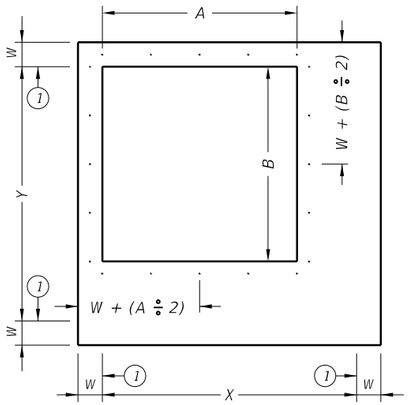

PLAN VIEW
EXPOSED REBAR

STYLE 'S1'

(1) Matches inside face of wall of precast base or riser below inlet.

HL93 LOADING SHEET 1 OF 2

Texas Department of Transportation

Bridge Division Standard

PRECAST SLAB LID

PSL

FILE:	DN: TxDOT	CK: TxDOT	DW: TxDOT	CK: TxDOT
©TxDOT February 2020	CONT	SECT	JOB	HIGHWAY
REVISIONS	0914	05	222	RM 2243
	DIST	COUNTY		SHEET NO.
	AUS	WILLIAMSON		322

DISCLAIMER:
The use of this standard is governed by the "Texas Engineering Practice Act". No warranty of any kind is made by TxDOT for any purpose whatsoever. TxDOT assumes no responsibility for the conversion of this standard to other formats or for incorrect results or damages resulting from its use.

DATE: 4/10/2025 1:06:17 PM
FILE: G:\TXC\Projects\County_Williamson\7473-02 RM 2243 Phase 1A\03_CADD\01_Shts\06-DRNG\Srds\CD-PSL-20.dgn

Style	Size (X x Y)	W (2)	A x B (nominal)	Short Span Reinf Steel Area	Long Span Reinf Steel Area
SL	3'x3'	6"	n/a	0.37 in²/ft	0.37 in²/ft
RH,RC,RG,SH,S1,FG	3'x3'	6"	3'x3' or 32" Dia	0.37 in²/ft	0.37 in²/ft
SFG	3'x3'	6"	3'x3'	0.32 in²/ft	0.32 in²/ft
SL	4'x4'	6"	n/a	0.34 in²/ft	0.34 in²/ft
RH,RC,RG,SH,S1,FG	4'x4'	6"	3'x3' or 32" Dia	0.41 in²/ft	0.41 in²/ft
SH,S1,FG	4'x4'	6"	4'x4'	0.41 in²/ft	0.41 in²/ft
SFG	4'x4'	6"	4'x4'	0.32 in²/ft	0.32 in²/ft
SL	3'x5'	6"	n/a	0.39 in²/ft	0.39 in²/ft
RH,RC,RG,SH,S1,FG	3'x5'	6"	3'x3' or 32" Dia	0.48 in²/ft	0.48 in²/ft
SH,S1,FG	3'x5'	6"	3'x5'	0.48 in²/ft	0.48 in²/ft
SFG	3'x5'	6"	3'x5'	0.32 in²/ft	0.32 in²/ft
SL	4'x5'	6"	n/a	0.42 in²/ft	0.42 in²/ft
RH,RC,RG,SH,S1,FG	4'x5'	6"	3'x3' or 32" Dia	0.42 in²/ft	0.42 in²/ft
SH,S1,FG	4'x5'	6"	4'x4'	0.63 in²/ft	0.63 in²/ft
SH,S1,FG	4'x5'	6"	3'x5'	0.66 in²/ft	0.66 in²/ft
SL	5'x5'	6"	n/a	0.36 in²/ft	0.36 in²/ft
RH,RC,RG,SH,S1,FG	5'x5'	6"	3'x3' or 32" Dia	0.43 in²/ft	0.43 in²/ft
SH,S1,FG	5'x5'	6"	4'x4'	0.63 in²/ft	0.63 in²/ft
SH,S1,FG	5'x5'	6"	3'x5'	0.63 in²/ft	0.63 in²/ft
SL	5'x6'	6"/8"	n/a	0.48 in²/ft	0.48 in²/ft
RH,RC,RG,SH,S1,FG	5'x6'	6"/8"	3'x3' or 32" Dia	0.48 in²/ft	0.48 in²/ft
SH,S1,FG	5'x6'	6"/8"	4'x4'	0.60 in²/ft	0.60 in²/ft
SH,S1,FG	5'x6'	6"/8"	3'x5'	0.60 in²/ft	0.60 in²/ft
SL	6'x6'	6"/8"	n/a	0.43 in²/ft	0.43 in²/ft
RH,RC,RG,SH,S1,FG	6'x6'	6"/8"	3'x3' or 32" Dia	0.56 in²/ft	0.56 in²/ft
SH,S1,FG	6'x6'	6"/8"	4'x4'	0.56 in²/ft	0.56 in²/ft
SH,S1,FG	6'x6'	6"/8"	3'x5'	0.59 in²/ft	0.59 in²/ft
SL	8'x8'	8"/10"	n/a	0.45 in²/ft	0.45 in²/ft
RH,RC,RG,SH,S1,FG	8'x8'	8"/10"	3'x3' or 32" Dia	0.45 in²/ft	0.45 in²/ft
SH,S1,FG	8'x8'	8"/10"	4'x4'	0.45 in²/ft	0.45 in²/ft
SH,S1,FG	8'x8'	8"/10"	3'x5'	0.45 in²/ft	0.45 in²/ft

(2) See sheet PDD for corresponding wall thickness (W) of base unit or riser.

Construct cast-in-place reinforced concrete apron, when shown elsewhere in plans. Use Class "A" concrete. Apron is subsidiary to PSL. Apron is 1'-6" Min width around precast zone drain.

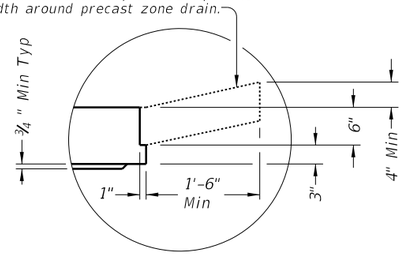

DETAIL "A"

(Reinforcing not shown for clarity)

When an apron is to be cast around PSL, use detail above to create an apron ledge on all 4 sides.

FABRICATION NOTES:

1. Locate penetration (Style 'RH'), ring and cover (Style 'RC'), ring and grate (Style 'RG'), and frame and grate (Style 'FG') in a corner. Only one penetration is allowed per slab lid.
2. Provide Class "H" concrete in accordance with Item 421 and having a minimum compressive strength of 5,000 psi.
3. Provide Grade 60 reinforcing steel or equivalent area of WWR.
4. Provide clear cover of ¾" to reinforcing from lower outside shoulder of slab for structural reinforcement, and 2" from top of slab for shrinkage and temperature reinforcement. Place short span reinforcing closest to surface.
5. Slabs with a thickness of 8" or greater require shrinkage and temperature reinforcing. Provide steel area = 0.11 in²/ft each way.
6. No substitution is allowed for diagonal #4 bars around openings.
7. Design tongue and groove joints for full closure on both shoulders. Minimum spigot depth is ¾".
8. Provide lifting devices in conformance with Manufacturer's recommendations.

INSTALLATION NOTES:

1. Precast slab lids are intended for direct traffic and may be placed in roadway.
2. Seal tongue and groove joints with preformed or bulk mastic in conformance with Manufacturer's recommendations. Tongue and groove joints may be grouted no more than 1" between each section, or ½ the joint depth, whichever is greater.
3. Do not grout rubber gasket joints without Manufacturer's recommendation.
4. Initial installation of grade adjustment rings for Styles 'RH' and 'SH' is limited to 1'-0" Max as shown.
5. Grade adjustment rings for Styles 'RH' and 'SH' may be increased to 2'-0" Max when future construction affects final grade of structure. Make adjustments greater than 2'-0" with additional risers. Adjustments can be made up to Max depth shown on sheet PDD. Structure must be evaluated if Max depth will be exceeded.
6. Orient long dimension of grate slots perpendicular to traffic, unless noted otherwise on plans

GENERAL NOTES:

1. Designed according to ASTM C913.
2. Payment for lid is per Item 465, "Junction Boxes, Manholes, and Inlets" by type, style, size, and opening size (when applicable).

Cover dimensions are clear dimensions, unless noted otherwise.

Texas Department of Transportation | Bridge Division Standard

PRECAST SLAB LID

PSL

FILE:	DN: TxDOT	CK: TxDOT	DW: TxDOT	CK: TxDOT
©TxDOT February 2020	CONT	SECT	JOB	HIGHWAY
REVISIONS	0914	05	222	RM 2243
	DIST	COUNTY		SHEET NO.
	AUS	WILLIAMSON		323

DISCLAIMER :
THE USE OF THIS STANDARD IS GOVERNED BY THE "TEXAS ENGINEERING PRACTICE ACT". NO WARRANTY OF ANY KIND IS MADE BY TXDOT FOR ANY PURPOSE WHATSOEVER. TXDOT ASSUMES NO RESPONSIBILITY FOR THE CONVERSION OF THIS STANDARD TO OTHER FORMATS OR FOR INCORRECT RESULTS OR DAMAGES RESULTING FROM ITS USE.

http://www.dot.state.tx.us/ftw/specinfo/standard.htm
4/10/2025 1:06:19 PM
$PATH$
G:\TXC\Projects\County_Williamson\7473-02 RM 2243 Phase 1A\03_CADD\01_Shts\06-DRNG\Stds\irwf-ftw.dgn

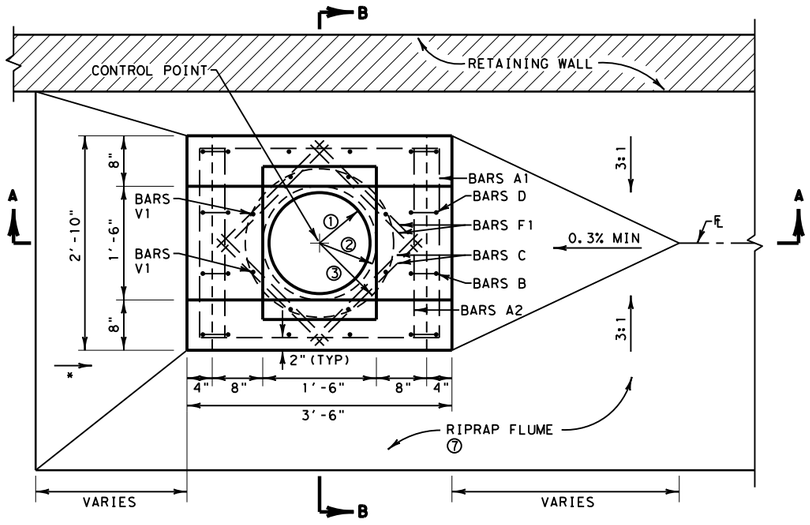

PLAN VIEW
(SHOWING ONLY INLET BOX FOR CLARITY)

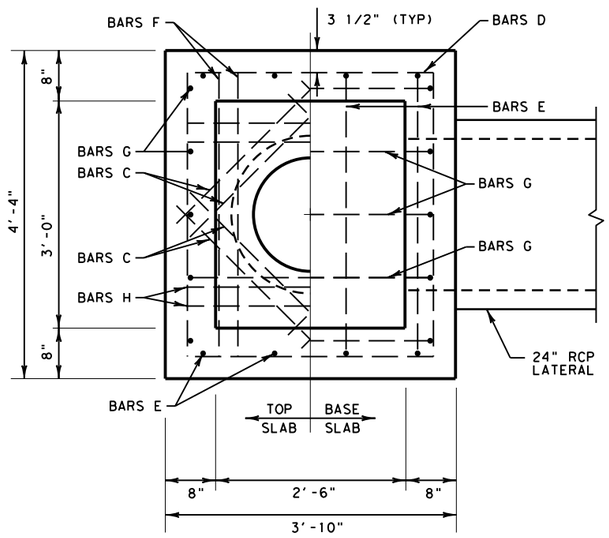

PLAN VIEW
(SHOWING ONLY JUNCTION BOX FOR CLARITY)
N.T.S.

* SLOPE VARIES

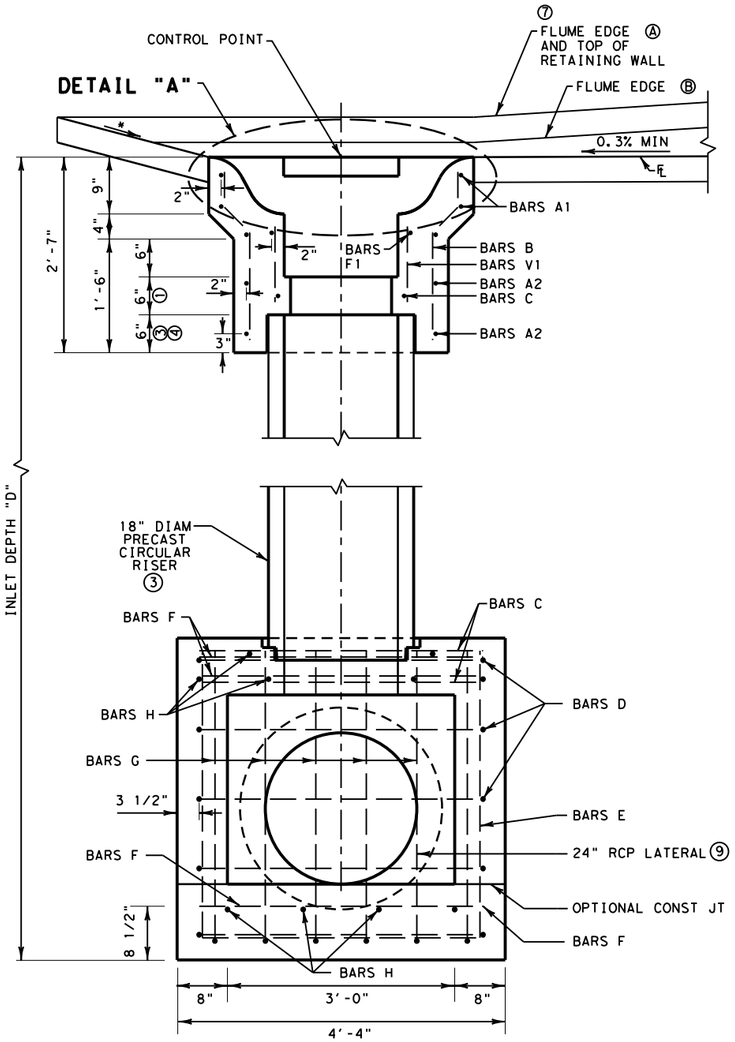

SECTION A-A
N.T.S.

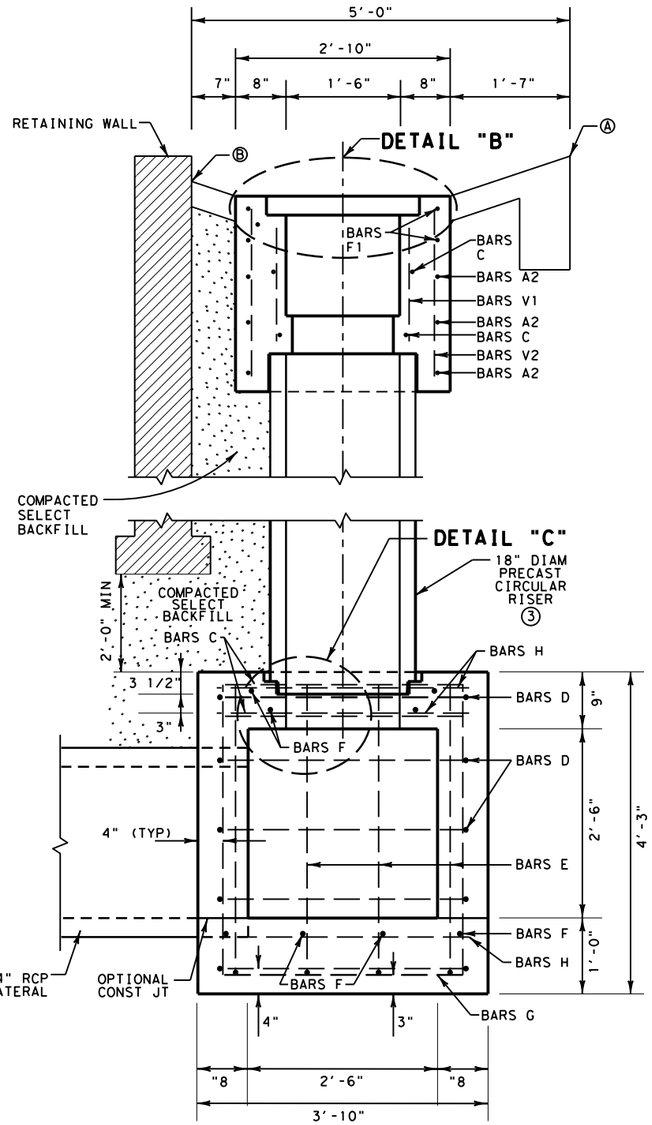

SECTION B-B
N.T.S.

① 16" DIAM BLOCKOUT
② 18" RCP RISER
③ 23 1/2" DIAM BLOCKOUT
④ PRECAST RISER TO EXTEND 4" MINIMUM ABOVE BOTTOM OF INLET BOX
⑤ 18" DIAM BLOCKOUT
⑥ PLACE 3 BARS P (L=32") AS SHOWN AT LATERAL WITH 2" MIN CLEAR CLEAR COVER FROM PIPE
⑦ SEE MISCELLANEOUS DRAINAGE DETAILS (MDD(FTW)) FOR ADDITIONAL INFORMATION
⑧ PRECAST RISER TO BE PLUMB AND VERTICAL
⑨ IF NOT UNDER PAVEMENT, 18"RCP MAY BE USED

SEE SHEET 2 OF 2 FOR ADDITIONAL DETAILS, BILL OF REINFORCING STEEL, SUMMARY OF QUANTITIES, AND GENERAL NOTES.

©2022 by Texas Department of Transportation; All Rights Reserved

Texas Department of Transportation
Fort Worth District Standard

INLET DETAILS TYPE RWF (RETAINING WALL FLUME)

I-RWF (FTW)

ORIGINAL DRAWING: 05/2019	irwf-ftw.dgn	FED.RD. DIV.NO.	PROJECT NO.	SHEET NO.
DATE	REVISIONS	6		324
05/2019	NEW STANDARD	STATE	STATE DIST.NO.	COUNTY
07/2022	REVISE JUNCTION BOX SIZE	TEXAS	FTW	WILLIAMSON
		CONT.	SECT.	JOB / HIGHWAY NO.
		0914	05	222 / RM 2243

DISCLAIMER :
THE USE OF THIS STANDARD IS GOVERNED BY THE "TEXAS ENGINEERING PRACTICE ACT". NO WARRANTY OF ANY KIND IS MADE BY TXDOT FOR ANY PURPOSE WHATSOEVER. TXDOT ASSUMES NO RESPONSIBILITY FOR THE CONVERSION OF THIS STANDARD TO OTHER FORMATS OR FOR INCORRECT RESULTS OR DAMAGES RESULTING FROM ITS USE.

http://www.dot.state.tx.us/ftw/specinfo/standard.htm
4/10/2025 1:06:19 PM
$PATH$
G:\TXC\Projects\County_Williamson\7473-02 RM 2243 Phase 1A\03_CADD\01_Shts\06-DRNG\Stds\irwf-ftw.dgn

BILL OF REINFORCING STEEL

Bars A1			Bars A2			Bars B			Bars C			Bars D			Bars E			Bars F			Bars G			Bars H			Bars V1			Bars V2		
#5			#5			#5			#5			#5			#5			#5			#5			#5			#5			#5		
No	Length	Wt	No	Length	Wt	No	Length	Wt	No	Length	Wt	No	Length	Wt	No	Length	Wt	No	Length	Wt	No	Length	Wt	No	Length	Wt	No	Length	Wt	No	Length	Wt
2	12.333	26	3	11.000	34	8	2.333	19	16	2.667	45	5	15.000	78	4	11.250	47	8	3.833	32	6	10.833	68	10	3.333	35	8	1.500	13	4	2.250	9

SUMMARY OF QUANTITIES

Total Reinf Steel	Class "C" Concrete
Weight	
(Lb)	(CY)
281	2.18

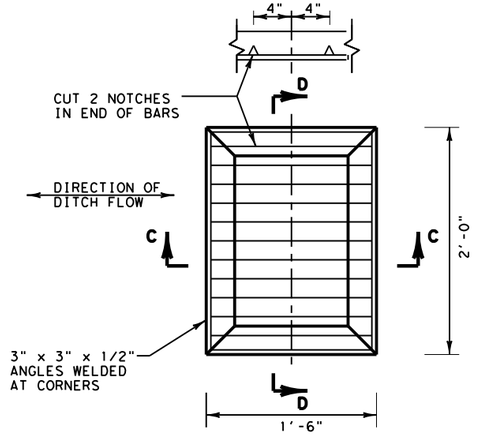

PLAN VIEW

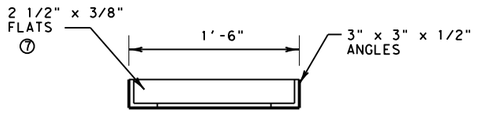

SECTION C-C

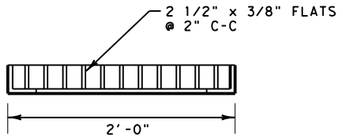

SECTION D-D

⑦ WELD FLATS TO LEGS OF ANGLES
⑧ BLOCKOUT TO CONFORM TO TONGUE END OF RCP RISER.

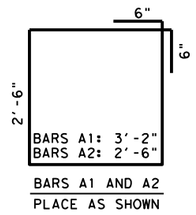

BARS A1 AND A2
PLACE AS SHOWN

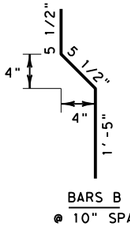

BARS B
@ 10" SPA

BARS C: 2'-8"
BARS F: 3'-10"
BARS H: 3'-4"

BARS C, F & H
PLACE AS SHOWN

BARS V1: 1'-6"
BARS V2: 2'-3"

BARS V1 AND V2
PLACE AS SHOWN

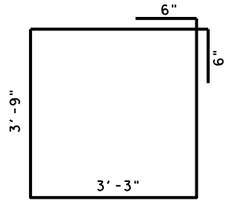

BARS H
@ 11" SPA

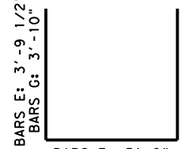

BARS E: 3'-8"
BARS G: 3'-2"

BARS E & G
E @ 12" SPA
G @ 10" SPA

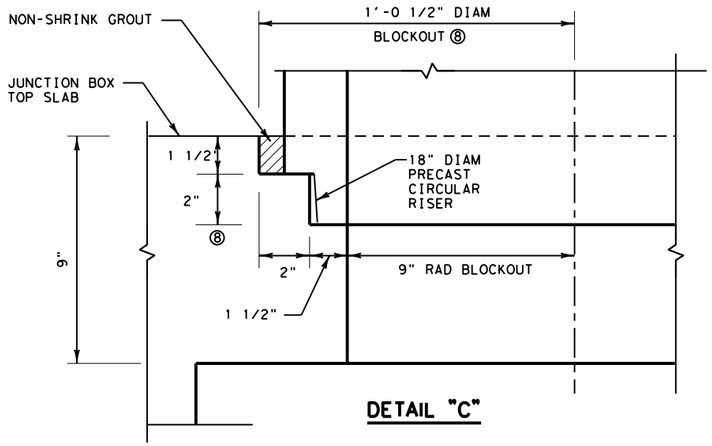

DETAIL "C"

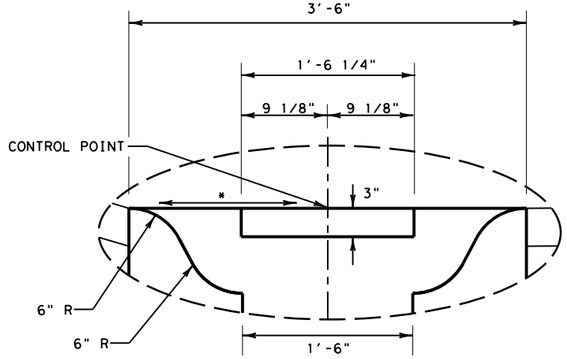

DETAIL "A"

*TOP OF INLET TO BE LEVEL

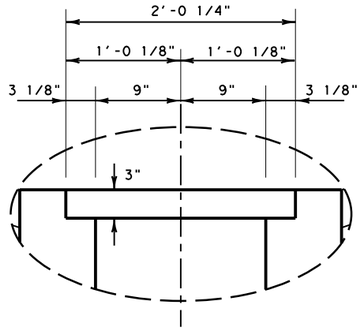

DETAIL "B"

GENERAL NOTES

1. DESIGNED FOR AASHTO LRFD HL 93 LOADING.
2. INLETS ARE NOT TO BE USED IN SERIES, USING CONDUIT PARALLEL TO WALL. CONNECT TO TRUNK SYSTEM USING LATERAL UNDER WALL AS SHOWN.
3. INLET EXCLUDING PIPE RISER, MAY BE EITHER CAST-IN-PLACE OR PRECAST.
4. ALL CONCRETE FOR CAST-IN-PLACE STRUCTURES SHALL BE CLASS "C", WITH A MINIMUM COMPRESSIVE STRENGTH OF 3600 PSI. CONCRETE FOR PRECAST STRUCTURES SHALL BE CLASS "H", WITH A MINIMUM COMPRESSIVE STRENGTH OF 5000 PSI.
5. CIRCULAR PRECAST RISER SHALL CONFORM TO ASTM C478. RISER WILL NOT BE PAID FOR DIRECTLY, BUT WILL BE CONSIDERED SUBSIDIARY TO THE COMPLETED INLET.
6. ALL REINFORCING SHALL BE GRADE 60, #5 BARS, UNLESS OTHERWISE SHOWN.
7. DIMENSIONS RELATING TO REINFORCING STEEL ARE TO THE CENTERS OF BARS.
8. FIELD CUT OR BEND REINFORCING AS NECESSARY TO ACCOMMODATE STORM DRAIN PIPE OR RISER.
9. GRATE SHALL BE WELDED STEEL, IN CONFORMANCE WITH ITEM 471.
10. INLET IS NOT TO BE USED IN OR ADJACENT TO AREAS DESIGNATED FOR PEDESTRIAN OR BICYCLE ACCESS.
11. FOR PIPE CONNECTIONS TO PRECAST STRUCTURES, SEE STANDARD DETAIL SHEET PBGC.
12. ENSURE THAT TOP OF LOWER JUNCTION BOX AND BLOCKOUTS TO RECEIVE PRECAST RISER ARE LEVEL SO THAT RISER IS PLUMB AND VERTICAL.
13. THE LOCATION OF INLET AS SHOWN IN THE PLANS REFERS TO THE CONTROL POINT SHOWN ON THIS SHEET.
14. PAYMENT INCLUDES INLET BOX, PRECAST CICULAR RISER AND JUNCTION BOX.

©2022 by Texas Department of Transportation; All Rights Reserved

Texas Department of Transportation

Fort Worth District Standard

INLET DETAILS TYPE RWF (RETAINING WALL FLUME)

I-RWF (FTW)

ORIGINAL DRAWING: 05/2019	irwf-ftw.dgn	FED.RD. DIV.NO.	PROJECT NO.		SHEET NO.
DATE	REVISIONS	6			325
05/2019	NEW STANDARD	STATE	STATE DIST.NO.	COUNTY	
07/2022	REVISE REINFORCING STEEL; ADD GENERAL NOTE 2 - REQUIRE LATERAL TO TRUNK	TEXAS	FTW	WILLIAMSON	
		CONT.	SECT.	JOB	HIGHWAY NO.
		0914	05	222	RM 2243

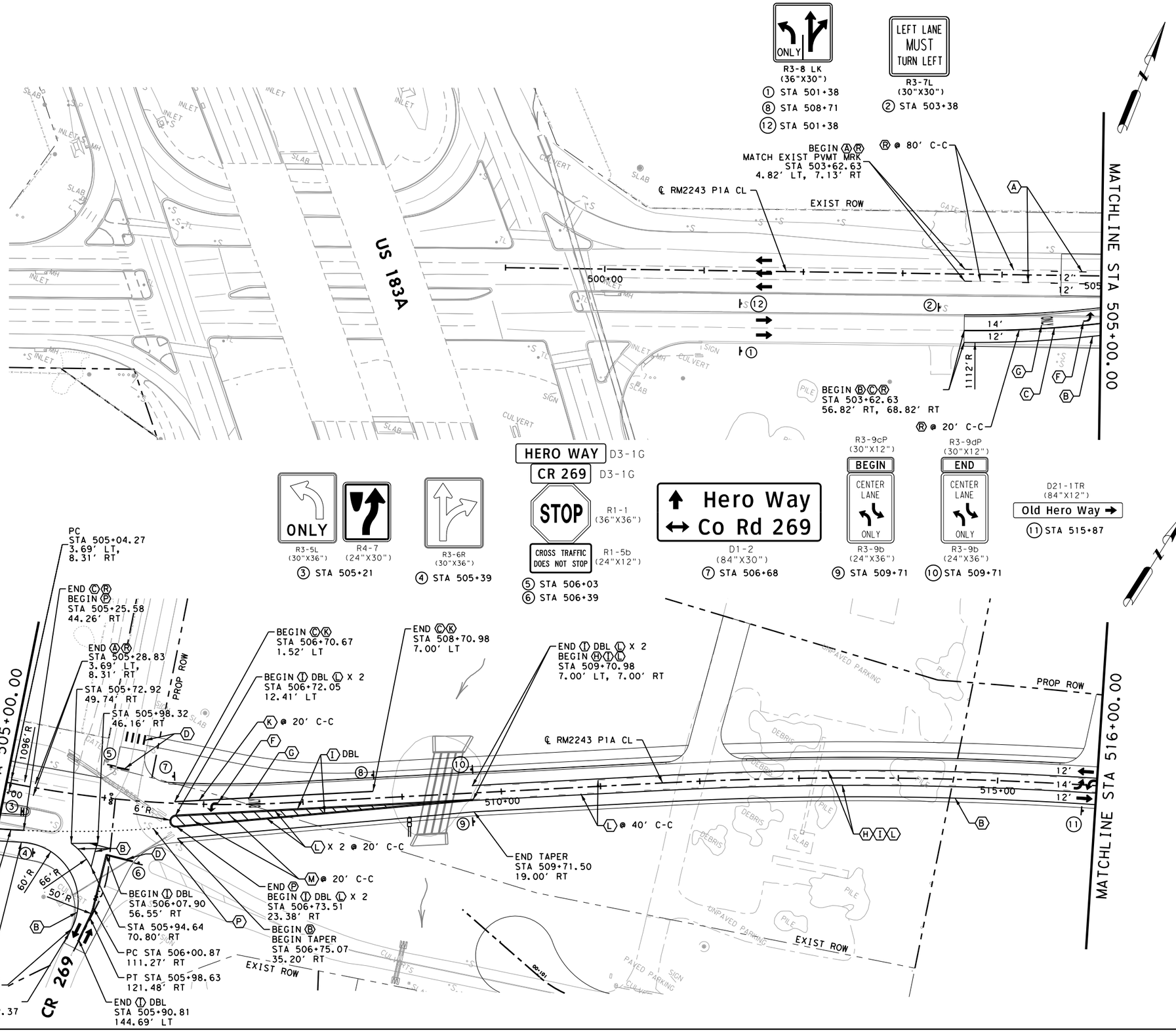

LEGEND

Ⓐ	W 6" BRK (TY I & II)
Ⓑ	W 6" SOLID (TY I & II)
Ⓒ	W 8" SOLID (TY I & II)
Ⓓ	W 24" SOLID (TY I & II)
Ⓔ	W 8" DOT (TY I & II)
Ⓕ	W ARROW
Ⓖ	W WORD
Ⓗ	Y 6" BRK (TY I & II)
Ⓘ	Y 6" SOLID (TY I & II)
Ⓙ	Y 12" SOLID (TY I & II)
Ⓚ	TY I-C
Ⓛ	TY II-A-A
Ⓜ	Y 24" SOLID (TY I & II)
Ⓝ	W DBL ARROW
Ⓞ	W 6" DOT
Ⓟ	Y 6" DOT
Ⓠ	W 36" YLD TRIANGLE
Ⓡ	TY II-C-R

OBJECT MARKER (OM-2X) (WC) (GND)

PROPOSED SIGN POST

DELINEATOR (D-SW) (SZ1) (BRF) (GF2) (BI)

DELINEATOR (D-SW) (SZ) (BRF) (CTB) (BI)

DIRECTION OF TRAFFIC

STATE OF TEXAS
JOSHUA T. RICHTER
141234
LICENSED
PROFESSIONAL ENGINEER

4/10/2025

WILCO TEXAS

BGE, Inc.
101 W Louis Henna Blvd, Suite 400, Austin, TX 78728
Tel: 512-879-0400 ● www.bgeinc.com
TBPE Registration No. F-1046

RM 2243

SIGNING AND PAVEMENT MARKING

SHEET 1 OF 10

FED.RD. DIV.NO.	PROJECT NO.		SHEET NO.
6			326
STATE	DIST.	COUNTY	
TEXAS	AUS	WILLIAMSON	
CONT.	SECT.	JOB	HIGHWAY NO.
0914	05	222	RM 2243

4/10/2025 1:06:22 PM pdf.pltcfg
G:\TXC\Projects\County\Williamson\7473-02 RM 2243 Phase 1A\03*CADD\01*Shts\08-SPMD\RM2243*P1A*SPMD*01.dgn

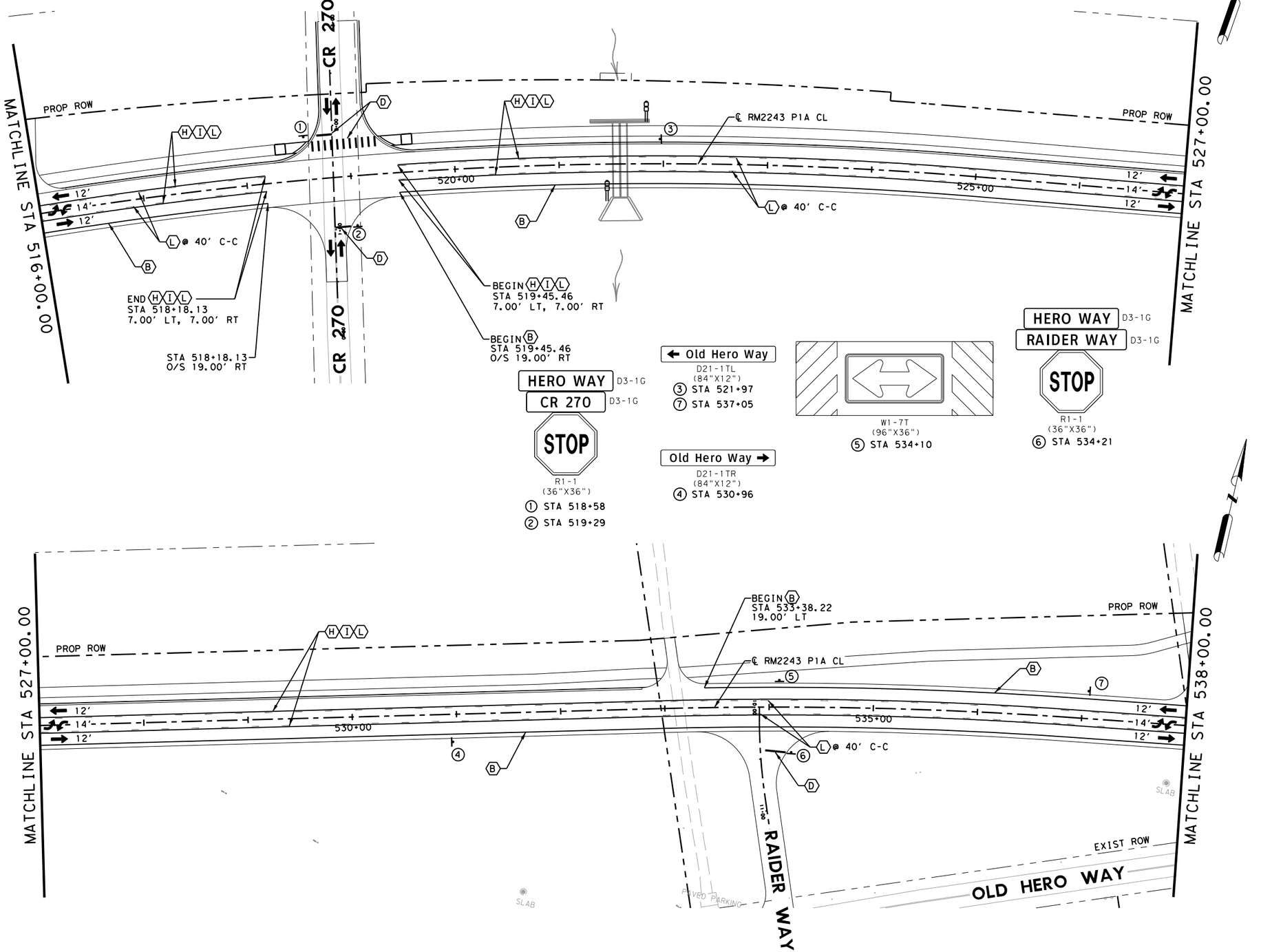

LEGEND

A	W 6" BRK (TY I & II)
B	W 6" SOLID (TY I & II)
C	W 8" SOLID (TY I & II)
D	W 24" SOLID (TY I & II)
E	W 8" DOT (TY I & II)
F	W ARROW
G	W WORD
H	Y 6" BRK (TY I & II)
I	Y 6" SOLID (TY I & II)
J	Y 12" SOLID (TY I & II)
K	TY I-C
L	TY II-A-A
M	Y 24" SOLID (TY I & II)
N	W DBL ARROW
O	W 6" DOT
P	Y 6" DOT
Q	W 36" YLD TRIANGLE
R	TY II-C-R

OBJECT MARKER (OM-2X) (WC) (GND)

PROPOSED SIGN POST

DELINEATOR (D-SW) (SZ1) (BRF) (GF2) (BI)

DELINEATOR (D-SW) (SZ) (BRF) (CTB) (BI)

DIRECTION OF TRAFFIC

0 50 100

SCALE: 1"=100'

STATE OF TEXAS
JOSHUA T. RICHTER
141234
LICENSED
PROFESSIONAL ENGINEER

4/10/2025

WILCO TEXAS

BGE, Inc.
101 W Louis Henna Blvd, Suite 400, Austin, TX 78728
Tel: 512-879-0400 • www.bgeinc.com
TBPE Registration No. F-1046

RM 2243

SIGNING AND PAVEMENT MARKING

SHEET 2 OF 10

FED.RD. DIV.NO.	PROJECT NO.		SHEET NO.
6			327
STATE	DIST.	COUNTY	
TEXAS	AUS	WILLIAMSON	
CONT.	SECT.	JOB	HIGHWAY NO.
0914	05	222	RM 2243

4/10/2025 1:06:24 PM pdf.pltcfg
G:\TXC\Projects\County\Williamson\7473-02 RM 2243 Phase 1A\03*CADD\01*Shts\08-SPMD\RM2243*P1A*SPMD*02.dgn

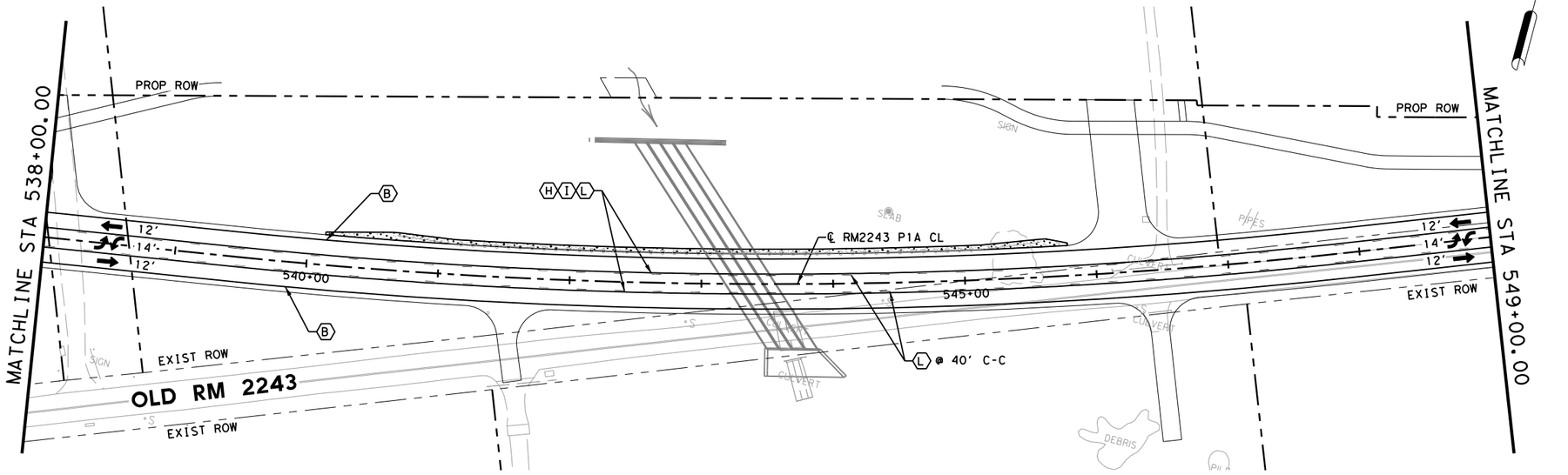

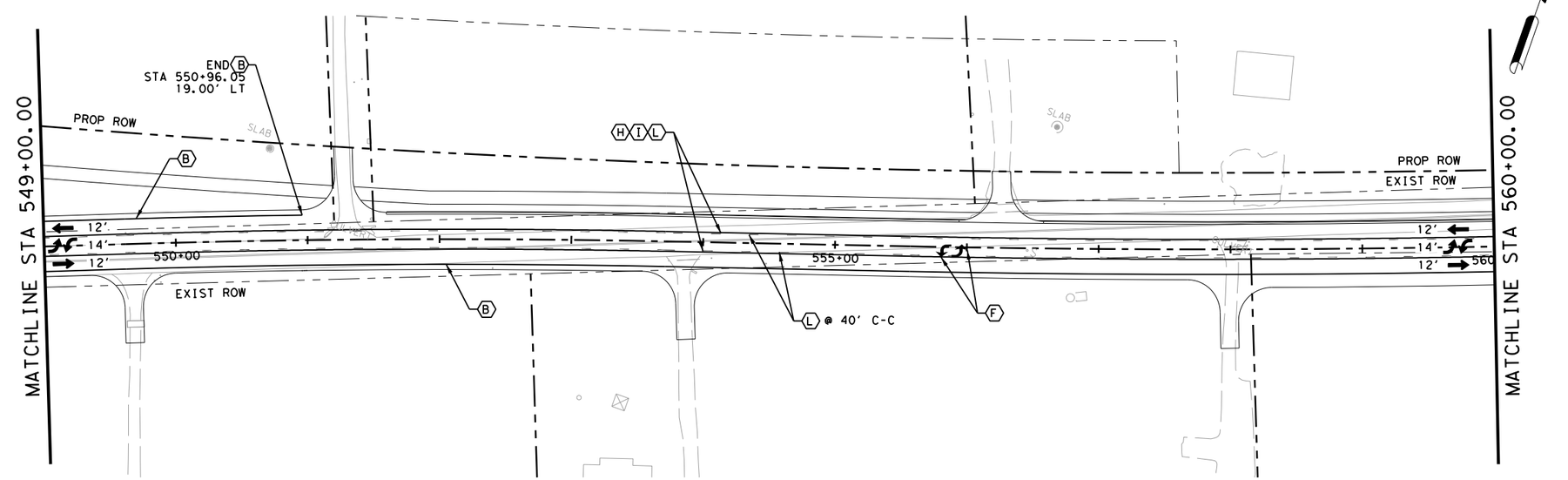

LEGEND

A	W 6" BRK (TY I & II)
B	W 6" SOLID (TY I & II)
C	W 8" SOLID (TY I & II)
D	W 24" SOLID (TY I & II)
E	W 8" DOT (TY I & II)
F	W ARROW
G	W WORD
H	Y 6" BRK (TY I & II)
I	Y 6" SOLID (TY I & II)
J	Y 12" SOLID (TY I & II)
K	TY I-C
L	TY II-A-A
M	Y 24" SOLID (TY I & II)
N	W DBL ARROW
O	W 6" DOT
P	Y 6" DOT
Q	W 36" YLD TRIANGLE
R	TY II-C-R

OBJECT MARKER (OM-2X) (WC) (GND)

PROPOSED SIGN POST

DELINEATOR (D-SW) (SZ1) (BRF) (GF2) (BI)

DELINEATOR (D-SW) (SZ) (BRF) (CTB) (BI)

DIRECTION OF TRAFFIC

0 50 100

SCALE: 1"=100'

STATE OF TEXAS
JOSHUA T. RICHTER
141234
LICENSED
PROFESSIONAL ENGINEER

4/10/2025

WILCO TEXAS

BGE, Inc.
101 W Louis Henna Blvd, Suite 400, Austin, TX 78728
Tel: 512-879-0400 • www.bgeinc.com
TBPE Registration No. F-1046

RM 2243

SIGNING AND PAVEMENT MARKING

SHEET 3 OF 10

FED.RD. DIV.NO.	PROJECT NO.		SHEET NO.
6			328
STATE	DIST.	COUNTY	
TEXAS	AUS	WILLIAMSON	
CONT.	SECT.	JOB	HIGHWAY NO.
0914	05	222	RM 2243

4/10/2025 1:06:25 PM pdf.pltcfg
G:\TXC\Projects\County\Williamson\7473-02 RM 2243 Phase 1A\03*CADD\01*Shts\08-SPMD\RM2243*P1A*SPMD*03.dgn

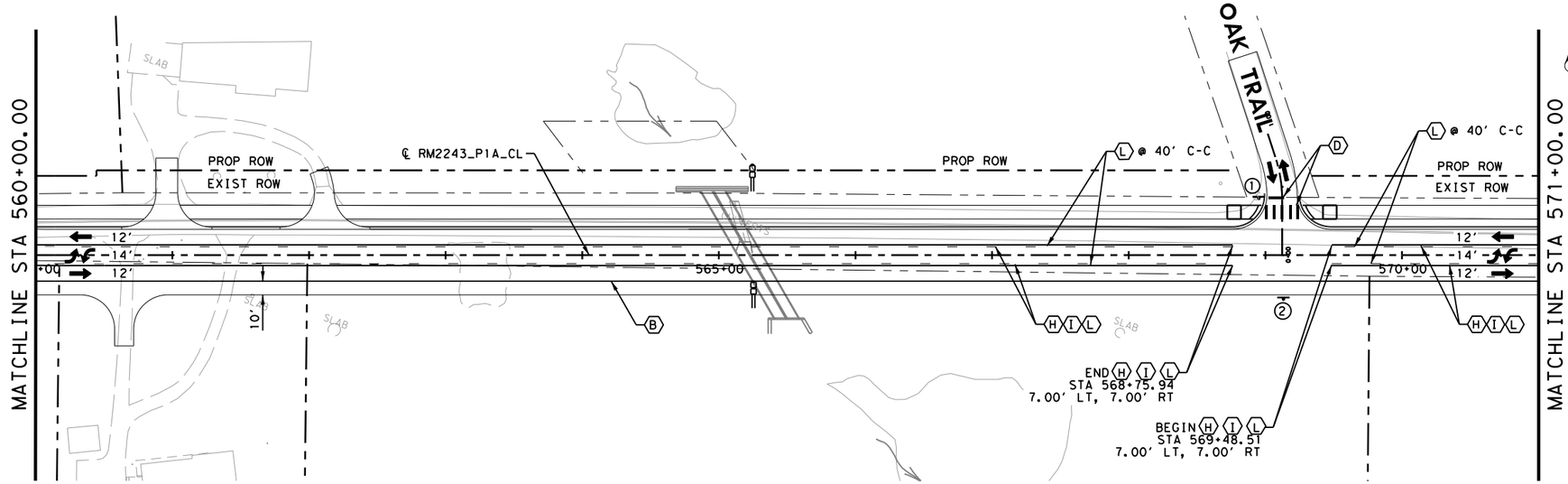

D3-1G HERO WAY
D3-1G WINDING OAK TRAIL
STOP
R1-1 (36"X36")
① STA 568+95

W1-7T (96"X36")
② STA 569+13

Ronald Reagan Blvd
D21-1T (DBL) (120"X12")
③ STA 575+01

BEGIN
CENTER LANE ONLY
R3-9cP (30"X12")
R3-9b (24"X36")
④ STA 578+00

ONLY | ONLY | ONLY
R3-8b (48"X30")
⑤ STA 578+00

RIGHT LANE MUST TURN RIGHT
R3-7R (30"X30")
⑥ STA 579+99

SPEED LIMIT 45
R2-1 (24"X30")
⑦ STA 580+00

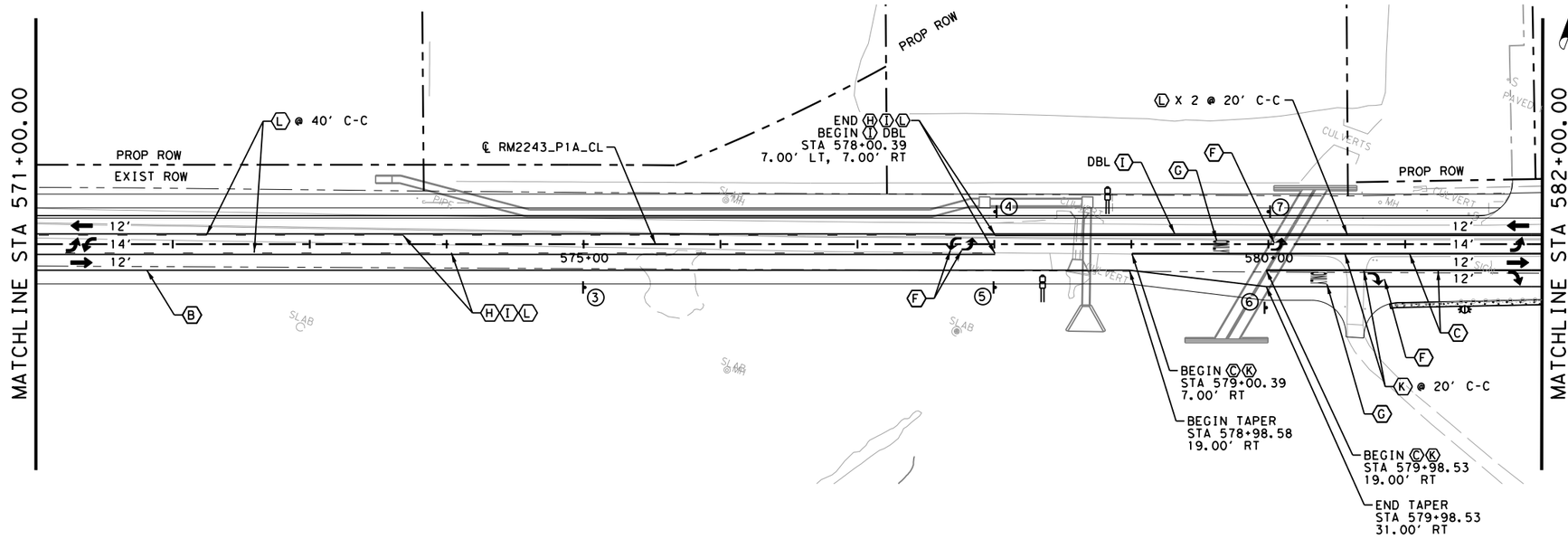

LEGEND

A	W 6" BRK (TY I & II)
B	W 6" SOLID (TY I & II)
C	W 8" SOLID (TY I & II)
D	W 24" SOLID (TY I & II)
E	W 8" DOT (TY I & II)
F	W ARROW
G	W WORD
H	Y 6" BRK (TY I & II)
I	Y 6" SOLID (TY I & II)
J	Y 12" SOLID (TY I & II)
K	TY I-C
L	TY II-A-A
M	Y 24" SOLID (TY I & II)
N	W DBL ARROW
O	W 6" DOT
P	Y 6" DOT
Q	W 36" YLD TRIANGLE
R	TY II-C-R

OBJECT MARKER (OM-2X) (WC) (GND)
PROPOSED SIGN POST
DELINEATOR (D-SW) (SZ1) (BRF) (GF2) (BI)
DELINEATOR (D-SW) (SZ) (BRF) (CTB) (BI)
DIRECTION OF TRAFFIC

0 50 100
SCALE: 1"=100'

STATE OF TEXAS
JOSHUA T. RICHTER
141234
LICENSED
PROFESSIONAL ENGINEER
4/10/2025

WILCO TEXAS

BGE, Inc.
101 W Louis Henna Blvd, Suite 400, Austin, TX 78728
Tel: 512-879-0400 • www.bgeinc.com
TBPE Registration No. F-1046

RM 2243

SIGNING AND PAVEMENT MARKING

SHEET 4 OF 10

FED.RD. DIV.NO.	PROJECT NO.	SHEET NO.
6		329

STATE	DIST.	COUNTY	
TEXAS	AUS	WILLIAMSON	
CONT.	SECT.	JOB	HIGHWAY NO.
0914	05	222	RM 2243

4/10/2025 1:06:26 PM pdf.pltcfg
G:\TXC\Projects\County\Williamson\7473-02 RM 2243 Phase 1A\03*CADD\01*Shts\08-SPMD\RM2243*P1A*SPMD*04.dgn

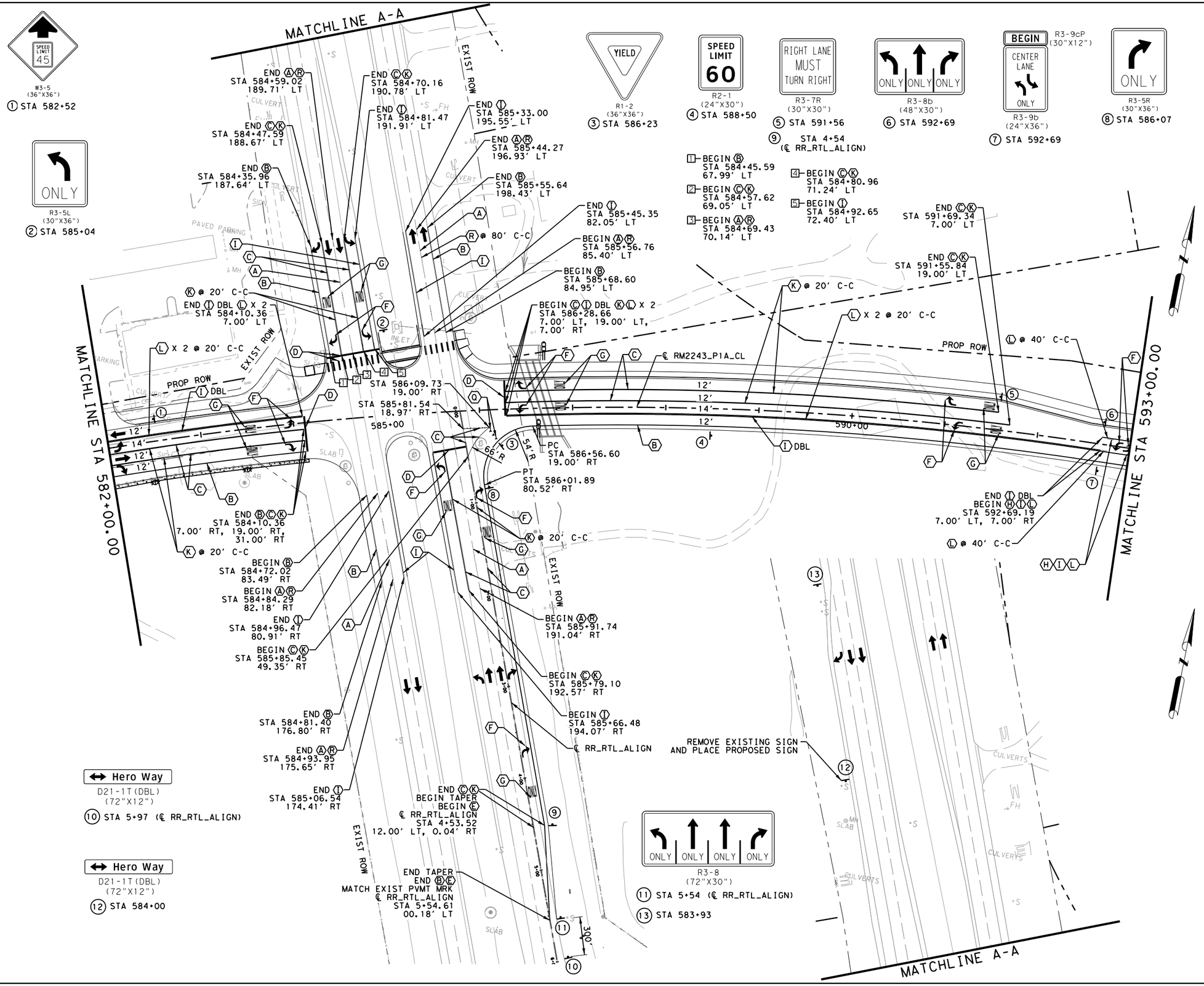

LEGEND

Ⓐ	W 6" BRK (TY I & II)
Ⓑ	W 6" SOLID (TY I & II)
Ⓒ	W 8" SOLID (TY I & II)
Ⓓ	W 24" SOLID (TY I & II)
Ⓔ	W 8" DOT (TY I & II)
Ⓕ	W ARROW
Ⓖ	W WORD
Ⓗ	Y 6" BRK (TY I & II)
Ⓘ	Y 6" SOLID (TY I & II)
Ⓙ	Y 12" SOLID (TY I & II)
Ⓚ	TY I-C
Ⓛ	TY II-A-A
Ⓜ	Y 24" SOLID (TY I & II)
Ⓝ	W DBL ARROW
Ⓞ	W 6" DOT
Ⓟ	Y 6" DOT
Ⓠ	W 36" YLD TRIANGLE
Ⓡ	TY II-C-R

OBJECT MARKER (OM-2X) (WC) (GND)

PROPOSED SIGN POST

DELINEATOR (D-SW) (SZ1) (BRF) (GF2) (BI)

DELINEATOR (D-SW) (SZ) (BRF) (CTB) (BI)

DIRECTION OF TRAFFIC

0 50 100

SCALE: 1"=100'

STATE OF TEXAS
JOSHUA T. RICHTER
141234
LICENSED PROFESSIONAL ENGINEER

4/10/2025

WILCO TEXAS

BGE, Inc.
101 W Louis Henna Blvd, Suite 400, Austin, TX 78728
Tel: 512-879-0400 • www.bgeinc.com
TBPE Registration No. F-1046

RM 2243

SIGNING AND PAVEMENT MARKING

SHEET 5 OF 10

FED.RD. DIV.NO.	PROJECT NO.		SHEET NO.
6			330
STATE	DIST.	COUNTY	
TEXAS	AUS	WILLIAMSON	
CONT.	SECT.	JOB	HIGHWAY NO.
0914	05	222	RM 2243

4/10/2025 1:06:28 PM pdf.pltcfg
G:\TXC\Projects\County\Williamson\7473-02 RM 2243 Phase 1A\03*CADD\01*Shts\08-SPMD\RM2243*P1A*SPMD*05.dgn

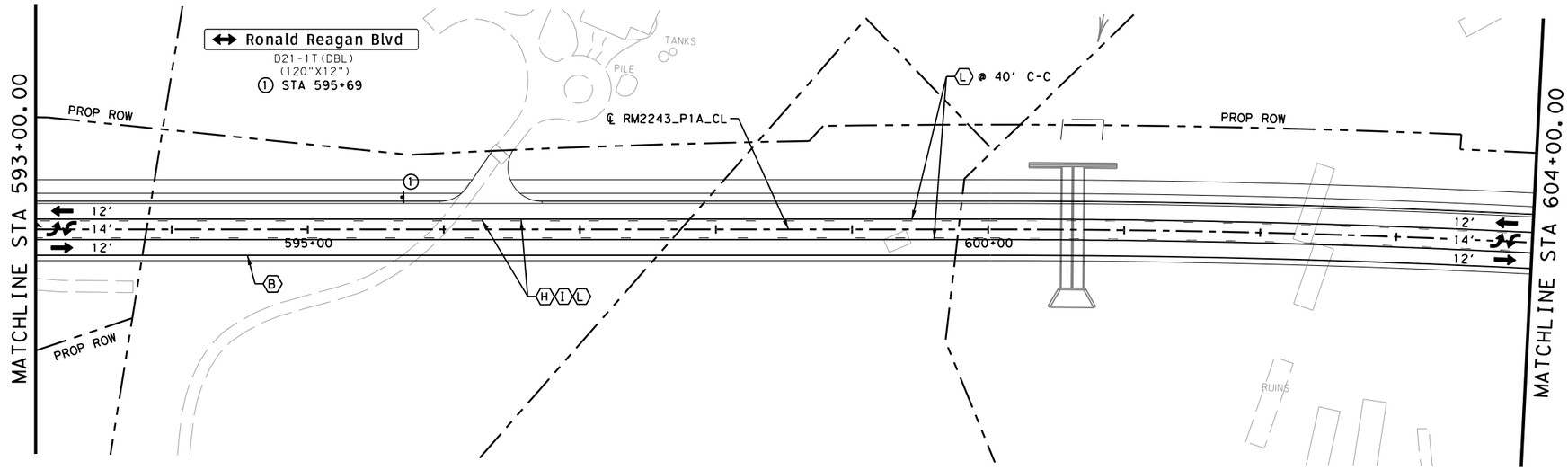

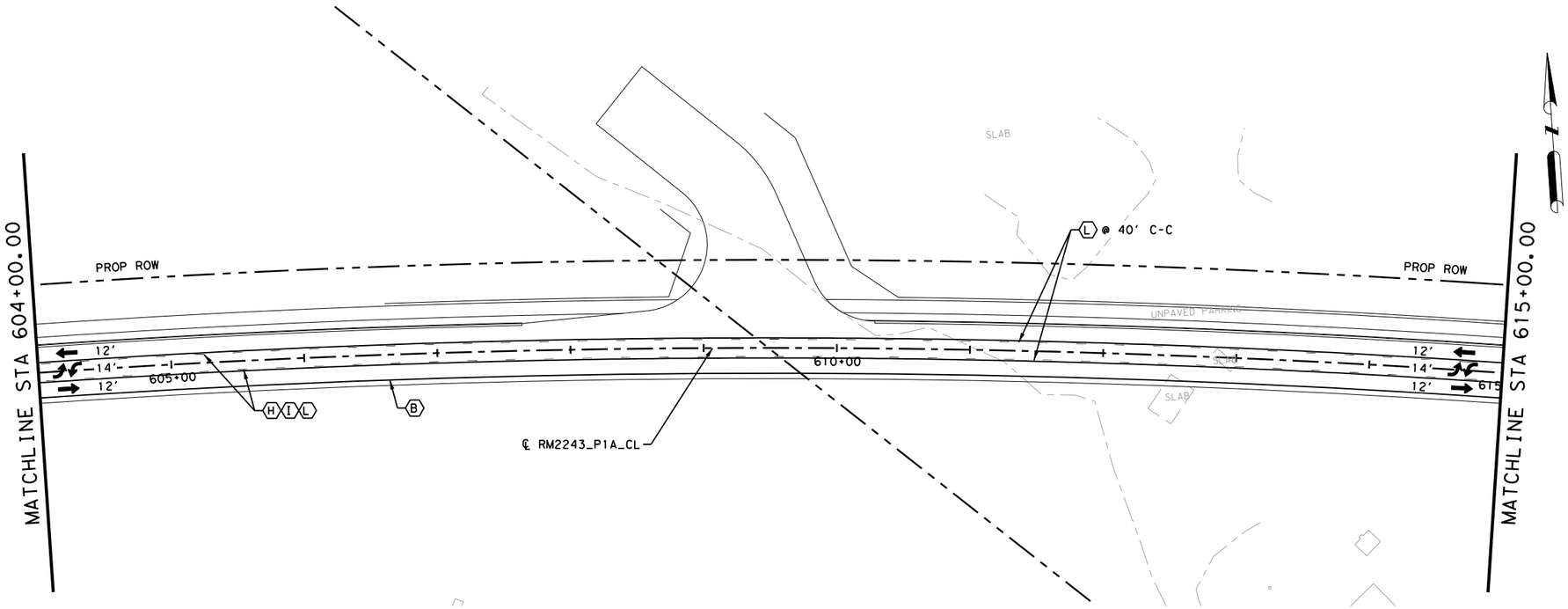

LEGEND

Ⓐ	W 6" BRK (TY I & II)
Ⓑ	W 6" SOLID (TY I & II)
Ⓒ	W 8" SOLID (TY I & II)
Ⓓ	W 24" SOLID (TY I & II)
Ⓔ	W 8" DOT (TY I & II)
Ⓕ	W ARROW
Ⓖ	W WORD
Ⓗ	Y 6" BRK (TY I & II)
Ⓘ	Y 6" SOLID (TY I & II)
Ⓙ	Y 12" SOLID (TY I & II)
Ⓚ	TY I-C
Ⓛ	TY II-A-A
Ⓜ	Y 24" SOLID (TY I & II)
Ⓝ	W DBL ARROW
Ⓞ	W 6" DOT
Ⓟ	Y 6" DOT
Ⓠ	W 36" YLD TRIANGLE
Ⓡ	TY II-C-R

OBJECT MARKER (OM-2X) (WC) (GND)

PROPOSED SIGN POST

DELINEATOR (D-SW) (SZ1) (BRF) (GF2) (BI)

DELINEATOR (D-SW) (SZ) (BRF) (CTB) (BI)

DIRECTION OF TRAFFIC

0 50 100

SCALE: 1"=100'

STATE OF TEXAS
JOSHUA T. RICHTER
141234
LICENSED
PROFESSIONAL ENGINEER

4/10/2025

WILCO TEXAS

BGE, Inc.
101 W Louis Henna Blvd, Suite 400, Austin, TX 78728
Tel: 512-879-0400 • www.bgeinc.com
TBPE Registration No. F-1046

RM 2243

SIGNING AND PAVEMENT MARKING

SHEET 6 OF 10

FED.RD. DIV.NO.	PROJECT NO.		SHEET NO.
6			331
STATE	DIST.	COUNTY	
TEXAS	AUS	WILLIAMSON	
CONT.	SECT.	JOB	HIGHWAY NO.
0914	05	222	RM 2243

4/10/2025 1:06:29 PM pdf.pltcfg
G:\TXC\Projects\County\Williamson\7473-02 RM 2243 Phase 1A\03*CADD\01*Shts\08-SPMD\RM2243*P1A*SPMD*06.dgn

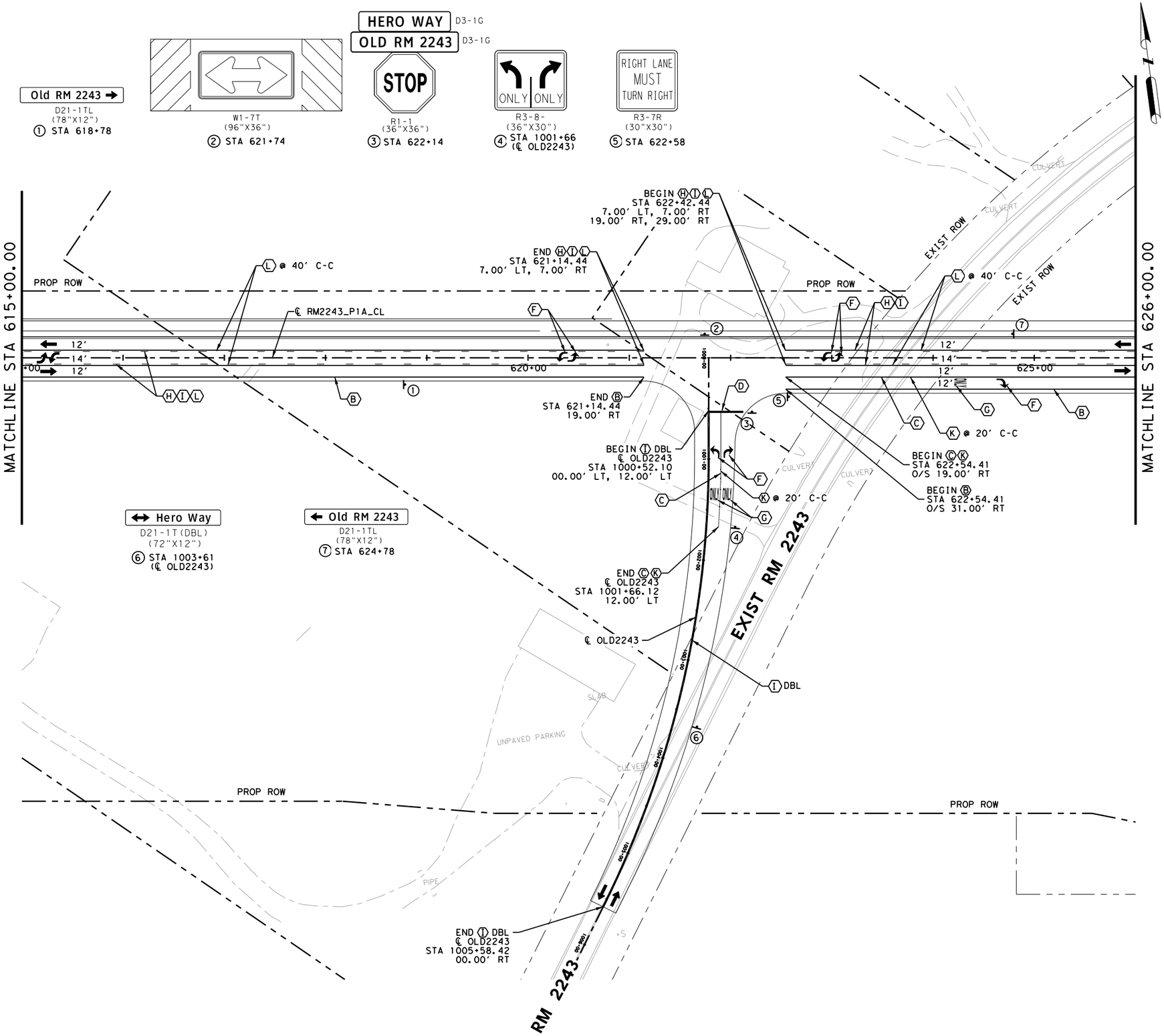

LEGEND

A	W 6" BRK (TY I & II)
B	W 6" SOLID (TY I & II)
C	W 8" SOLID (TY I & II)
D	W 24" SOLID (TY I & II)
E	W 8" DOT (TY I & II)
F	W ARROW
G	W WORD
H	Y 6" BRK (TY I & II)
I	Y 6" SOLID (TY I & II)
J	Y 12" SOLID (TY I & II)
K	TY I-C
L	TY II-A-A
M	Y 24" SOLID (TY I & II)
N	W DBL ARROW
O	W 6" DOT
P	Y 6" DOT
Q	W 36" YLD TRIANGLE
R	TY II-C-R

OBJECT MARKER (OM-2X) (WC) (GND)

PROPOSED SIGN POST

DELINEATOR (D-SW) (SZ1) (BRF) (GF2) (BI)

DELINEATOR (D-SW) (SZ) (BRF) (CTB) (BI)

DIRECTION OF TRAFFIC

0 50 100

SCALE: 1"=100'

STATE OF TEXAS
JOSHUA T. RICHTER
141234
LICENSED
PROFESSIONAL ENGINEER

4/10/2025

WILCO TEXAS

BGE, Inc.
101 W Louis Henna Blvd, Suite 400, Austin, TX 78728
Tel: 512-879-0400 • www.bgeinc.com
TBPE Registration No. F-1046

RM 2243

SIGNING AND PAVEMENT MARKING

SHEET 7 OF 10

FED.RD. DIV.NO.	PROJECT NO.		SHEET NO.
6			332
STATE	DIST.	COUNTY	
TEXAS	AUS	WILLIAMSON	
CONT.	SECT.	JOB	HIGHWAY NO.
0914	05	222	RM 2243

4/10/2025 1:06:30 PM pdf.pltcfg
G:\TxC\Projects\County\Williamson\7473-02 RM 2243 Phase 1A\03-CADD\01-Shts\08-SPMD\RM2243-P1A-SPMD-07.dgn

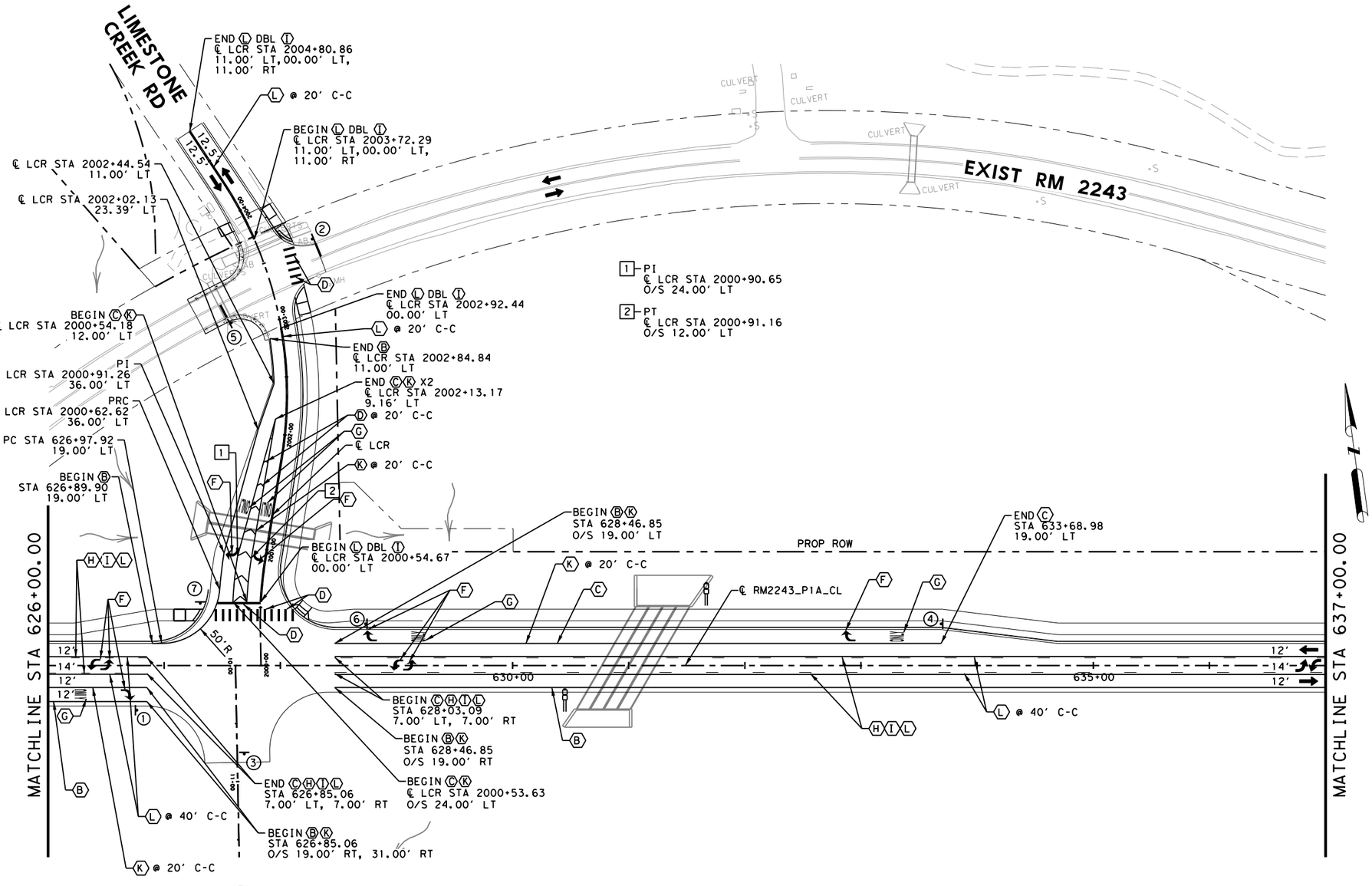

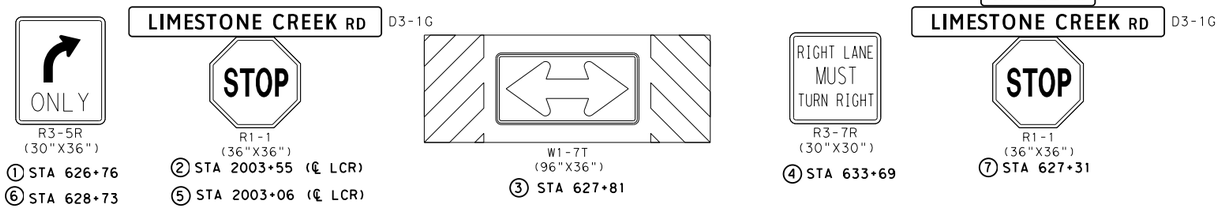

LEGEND

Ⓐ	W 6" BRK (TY I & II)
Ⓑ	W 6" SOLID (TY I & II)
Ⓒ	W 8" SOLID (TY I & II)
Ⓓ	W 24" SOLID (TY I & II)
Ⓔ	W 8" DOT (TY I & II)
Ⓕ	W ARROW
Ⓖ	W WORD
Ⓗ	Y 6" BRK (TY I & II)
Ⓘ	Y 6" SOLID (TY I & II)
Ⓙ	Y 12" SOLID (TY I & II)
Ⓚ	TY I-C
Ⓛ	TY II-A-A
Ⓜ	Y 24" SOLID (TY I & II)
Ⓝ	W DBL ARROW
Ⓞ	W 6" DOT
Ⓟ	Y 6" DOT
Ⓠ	W 36" YLD TRIANGLE
Ⓡ	TY II-C-R

OBJECT MARKER (OM-2X) (WC) (GND)

PROPOSED SIGN POST

DELINEATOR (D-SW) (SZ1) (BRF) (GF2) (BI)

DELINEATOR (D-SW) (SZ) (BRF) (CTB) (BI)

DIRECTION OF TRAFFIC

0 50 100

SCALE: 1"=100'

STATE OF TEXAS
JOSHUA T. RICHTER
141234
LICENSED
PROFESSIONAL ENGINEER

4/10/2025

WILCO TEXAS

BGE, Inc.
101 W Louis Henna Blvd, Suite 400, Austin, TX 78728
Tel: 512-879-0400 ● www.bgeinc.com
TBPE Registration No. F-1046

RM 2243

SIGNING AND PAVEMENT MARKING

SHEET 8 OF 10

FED.RD. DIV.NO.	PROJECT NO.		SHEET NO.
6			333
STATE	DIST.	COUNTY	
TEXAS	AUS	WILLIAMSON	
CONT.	SECT.	JOB	HIGHWAY NO.
0914	05	222	RM 2243

4/10/2025 1:06:39 PM pdf.pltcfg
G:\TXC\Projects\County\Williamson\7473-02 RM 2243 Phase 1A\03*CADD\01*Shts\08-SPMD\RM2243*P1A*SPMD*08.dgn

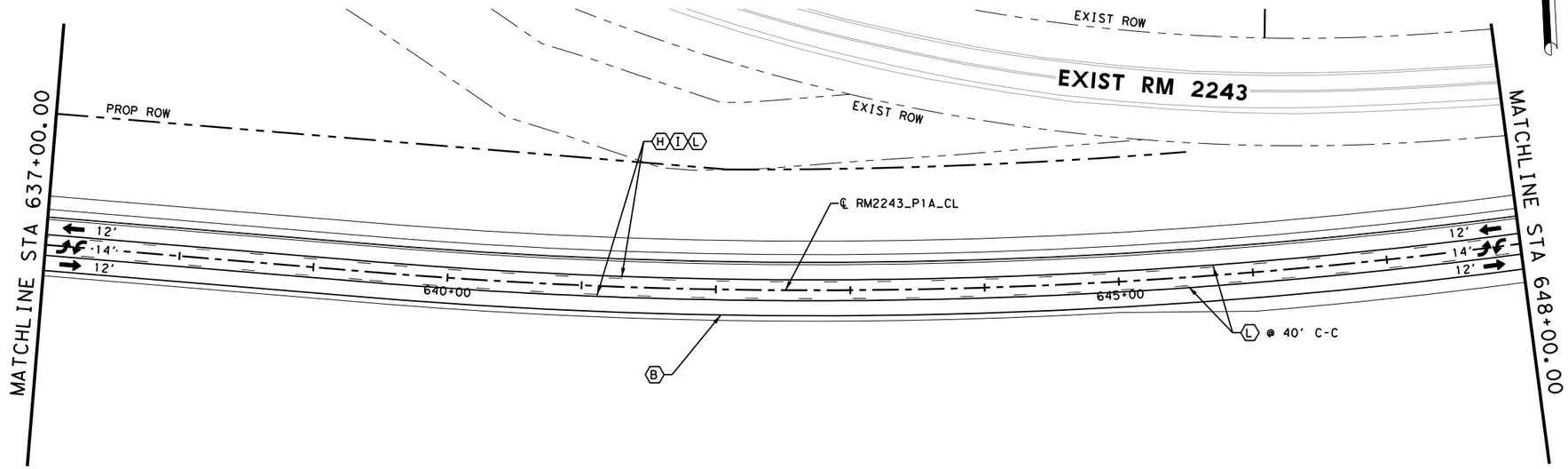

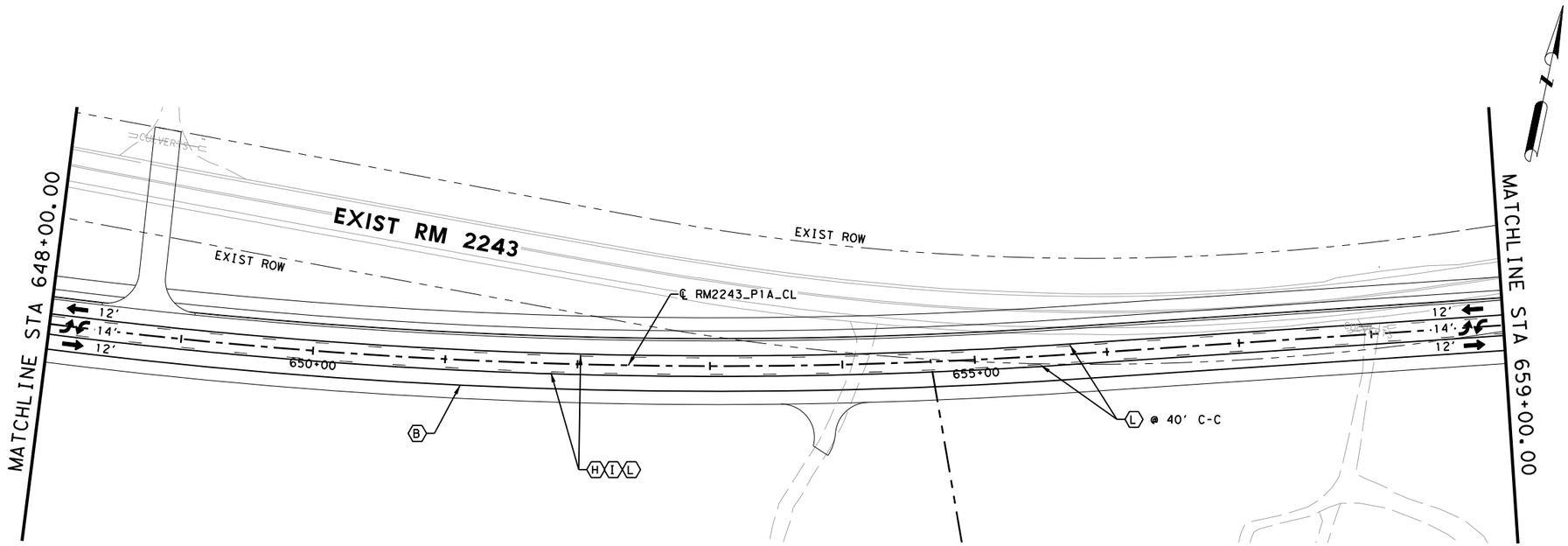

LEGEND

A	W 6" BRK (TY I & II)
B	W 6" SOLID (TY I & II)
C	W 8" SOLID (TY I & II)
D	W 24" SOLID (TY I & II)
E	W 8" DOT (TY I & II)
F	W ARROW
G	W WORD
H	Y 6" BRK (TY I & II)
I	Y 6" SOLID (TY I & II)
J	Y 12" SOLID (TY I & II)
K	TY I-C
L	TY II-A-A
M	Y 24" SOLID (TY I & II)
N	W DBL ARROW
O	W 6" DOT
P	Y 6" DOT
Q	W 36" YLD TRIANGLE
R	TY II-C-R

OBJECT MARKER (OM-2X) (WC) (GND)

PROPOSED SIGN POST

DELINEATOR (D-SW) (SZ1) (BRF) (GF2) (BI)

DELINEATOR (D-SW) (SZ) (BRF) (CTB) (BI)

DIRECTION OF TRAFFIC

0 50 100

SCALE: 1"=100'

STATE OF TEXAS
JOSHUA T. RICHTER
141234
LICENSED
PROFESSIONAL ENGINEER

4/10/2025

WILCO TEXAS

BGE, Inc.
101 W Louis Henna Blvd, Suite 400, Austin, TX 78728
Tel: 512-879-0400 • www.bgeinc.com
TBPE Registration No. F-1046

RM 2243

SIGNING AND PAVEMENT MARKING

FED.RD. DIV.NO.	PROJECT NO.		SHEET NO.
6			334
STATE	DIST.	COUNTY	
TEXAS	AUS	WILLIAMSON	
CONT.	SECT.	JOB	HIGHWAY NO.
0914	05	222	RM 2243

4/10/2025 1:06:40 PM pdf.pltcfg
G:\TXC\Projects\County\Williamson\7473-02 RM 2243 Phase 1A\03\CADD\01\Shts\08-SPMD\RM2243_P1A_SPMD09.dgn

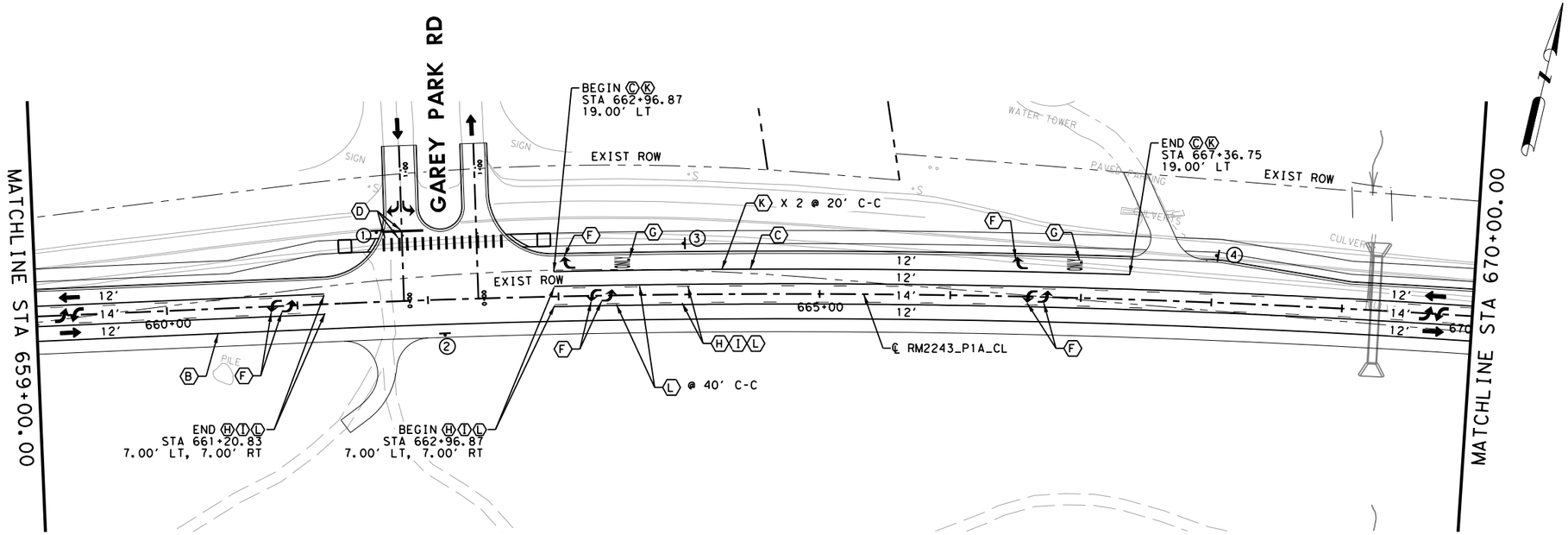

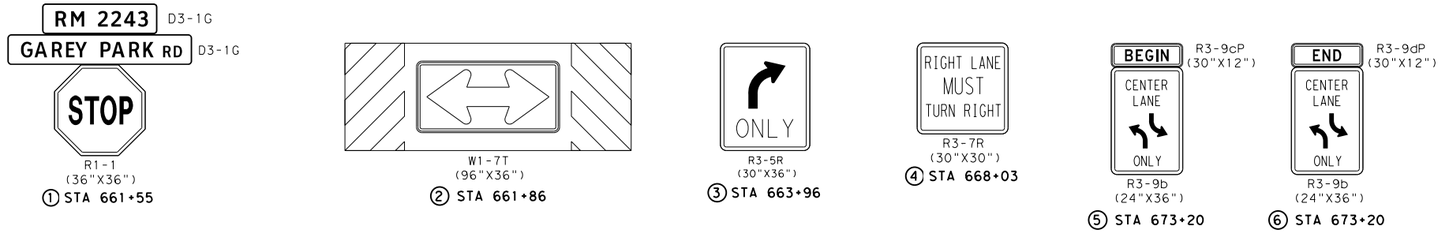

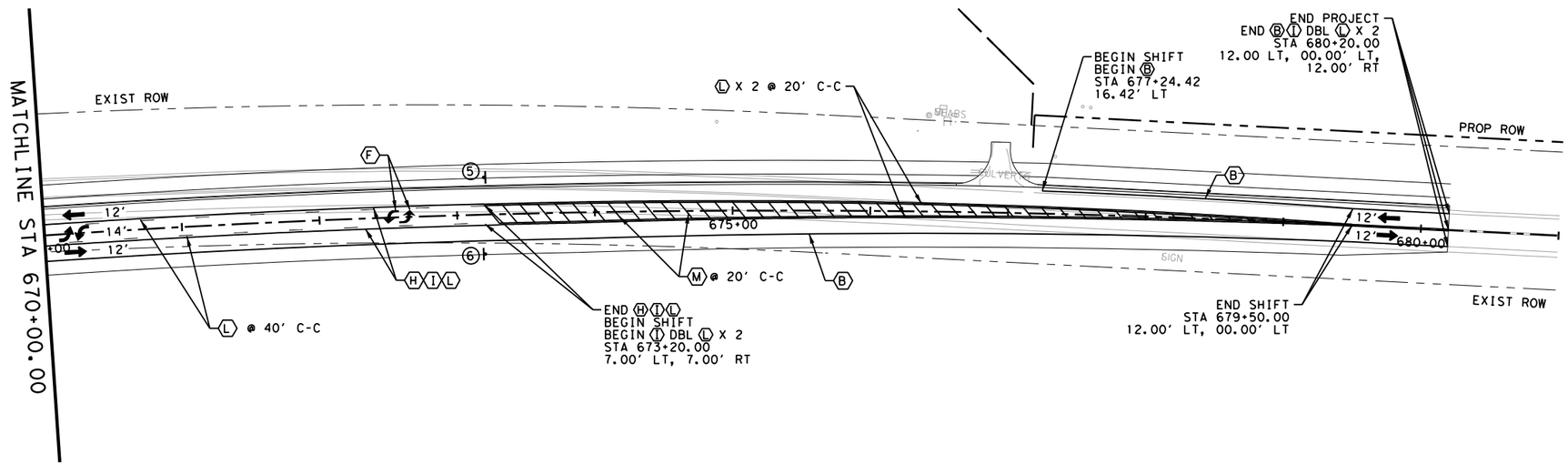

LEGEND

Ⓐ	W 6" BRK (TY I & II)
Ⓑ	W 6" SOLID (TY I & II)
Ⓒ	W 8" SOLID (TY I & II)
Ⓓ	W 24" SOLID (TY I & II)
Ⓔ	W 8" DOT (TY I & II)
Ⓕ	W ARROW
Ⓖ	W WORD
Ⓗ	Y 6" BRK (TY I & II)
Ⓘ	Y 6" SOLID (TY I & II)
Ⓙ	Y 12" SOLID (TY I & II)
Ⓚ	TY I-C
Ⓛ	TY II-A-A
Ⓜ	Y 24" SOLID (TY I & II)
Ⓝ	W DBL ARROW
Ⓞ	W 6" DOT
Ⓟ	Y 6" DOT
Ⓠ	W 36" YLD TRIANGLE
Ⓡ	TY II-C-R

OBJECT MARKER (OM-2X) (WC) (GND)

PROPOSED SIGN POST

DELINEATOR (D-SW) (SZ1) (BRF) (GF2) (BI)

DELINEATOR (D-SW) (SZ) (BRF) (CTB) (BI)

DIRECTION OF TRAFFIC

0 50 100

SCALE: 1"=100'

STATE OF TEXAS
JOSHUA T. RICHTER
141234
LICENSED
PROFESSIONAL ENGINEER

4/10/2025

WILCO TEXAS

BGE, Inc.
101 W Louis Henna Blvd, Suite 400, Austin, TX 78728
Tel: 512-879-0400 • www.bgeinc.com
TBPE Registration No. F-1046

RM 2243

SIGNING AND PAVEMENT MARKING

SHEET 10 OF 10

FED.RD. DIV.NO.	PROJECT NO.		SHEET NO.
6			335
STATE	DIST.	COUNTY	
TEXAS	AUS	WILLIAMSON	
CONT.	SECT.	JOB	HIGHWAY NO.
0914	05	222	RM 2243

4/10/2025 1:06:41 PM pdf.pltcfg
G:\TXC\Projects\County*Williamson\7473-02 RM 2243 Phase 1A\03*CADD\01*Shts\08-SPMD\RM2243*P1A*SPMD*10.dgn

SHEET 1 SIGNS 5 & 6, SHEET 2 SIGNS 1, 2 & 6, SHEET 4 SIGN 1, SHEET 7 SIGN 3

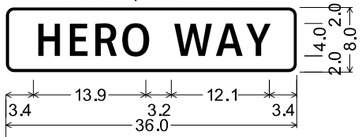

D3-1G(1) 4in;
1.0" Radius, 0.4" Border, White on Green;
"HERO WAY", ClearviewHwy-3-W;

SHEET 8 SIGN 7, SHEET 10 SIGN 1

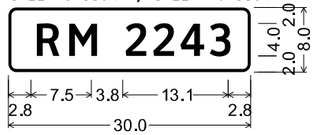

D3-1G(3) 4in;
1.0" Radius, 0.4" Border, White on Gre
"RM 2243", ClearviewHwy-4-W;

SHEET 1 SIGNS 5 & 6

D3-1G(1) 4 n;
1.0" Radius, 0.4" Border, White on Green;
"CR 269", ClearviewHwy-3-W;

SHEET 1 SIGN 7

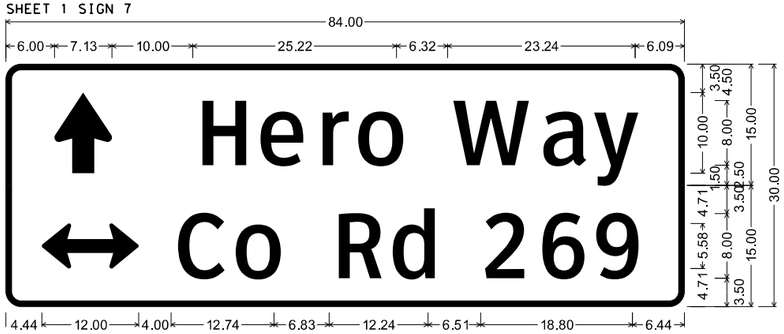

D1-2 8in UP-LT;

1.88" Radius, 0.75" Border, White on Green;
Standard Arrow 10.00" X 7.13" 90°; "Hero Way", ClearviewHwy-3-W;

1.88" Radius, 0.75" Border, White on Green;
Double Headed Arrow 1 - 12.00" 0°; "Co Rd 269", ClearviewHwy-3-W;

SHEET 1 SIGN 11, SHEET 2 SIGN 4

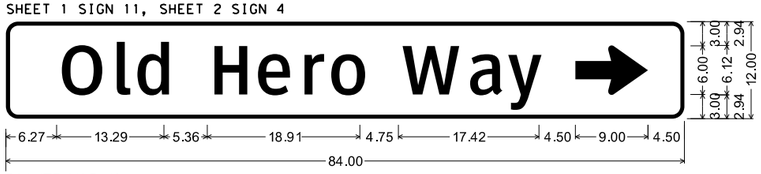

D21-1TR_VARx12;
1.50" Radius, 0.50" Border, White on Green;
"Old Hero Way", ClearviewHwy-3-W; Standard Arrow 9.00" X 6.13" 0°;

SHEET 2 SIGNS 1 & 2

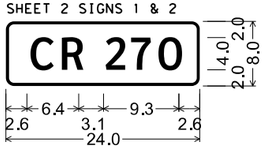

D3-1G(1) 4in;
1.0" Radius, 0.4" Border, White on Green;
"CR 270", ClearviewHwy-3-W;

SHEET 2 SIGNS 3 & 7

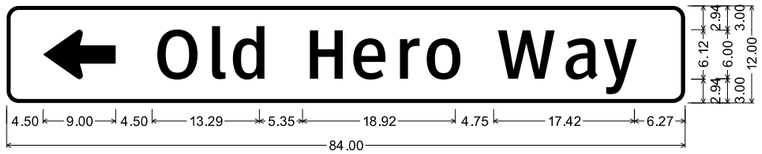

D21-1TL_VARx12;
1.50" Radius, 0.50" Border, White on Green;
Standard Arrow 9.00" X 6.13" 180°; "Old Hero Way", ClearviewHwy-3-W;

SHEET 2 SIGN 6

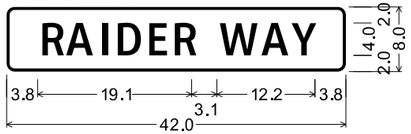

D3-1G(1) 4in;
1.0" Radius, 0.4" Border, White on Green;
"RAIDER WAY", ClearviewHwy-3-W;

SHEET 4 SIGN 1

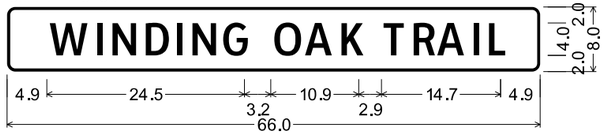

D3-1G(1) 4in;
1.0" Radius, 0.4" Border, White on Green;
"WINDING OAK TRAIL", ClearviewHwy-3-W;

SHEET 4 SIGN 3, SHEET 6 SIGN 1

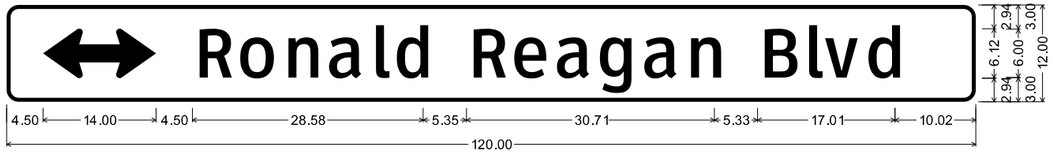

D21-1T(DBL)_VARx12;
1.50" Radius, 0.50" Border, White on Green;
Double Headed Arrow Custom - 14.00" 0°; "Ronald Reagan Blvd", ClearviewHwy-3-W;

SHEET 5 SIGNS 11 & 13, SHEET 7 SIGN 6

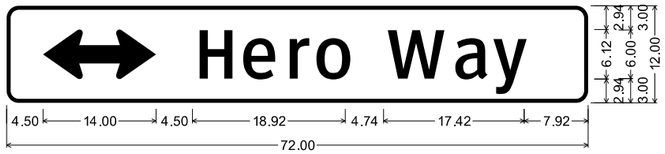

D21-1T(DBL)_VARx12;
1.50" Radius, 0.50" Border, White on Green;
Double Headed Arrow Custom - 14.00" 0°; "Hero Way", ClearviewHwy-3-W;

0 50 100

SCALE: 1"=100'

STATE OF TEXAS
JOSHUA T. RICHTER
141234
LICENSED
PROFESSIONAL ENGINEER

4/10/2025

WILCO TEXAS

BGE, Inc.
101 W Louis Henna Blvd, Suite 400, Austin, TX 78728
Tel: 512-879-0400 • www.bgeinc.com
TBPE Registration No. F-1046

RM 2243

SMALL SIGN DETAILS

SHEET 1 OF 2

FED.RD. DIV.NO.	PROJECT NO.	SHEET NO.
6		336

STATE	DIST.	COUNTY	
TEXAS	AUS	WILLIAMSON	
CONT.	SECT.	JOB	HIGHWAY NO.
0914	05	222	RM 2243

4/10/2025 1:06:43 PM pdf.pltcfg
G:\TXC\Projects\County\Williamson\7473-02 RM 2243 Phase 1A\03*CADD\01*Shts\08-SPMD\RM2243*P1A*SIGNING*DETAIL*01.dgn

SHEET 7 SIGN 1

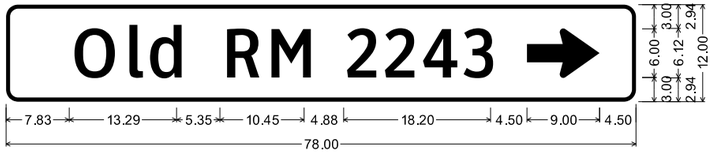

D21-1TR_VARx12;
1.50" Radius, 0.50" Border, White on Green;
"Old RM 2243", ClearviewHwy-3-W; Standard Arrow 9.00" X 6.13" 0°;

SHEET 7 SIGN 3

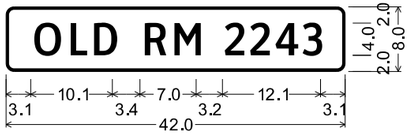

D3-1G(1) 4in;
1.0" Radius, 0.4" Border, White on Green;
"OLD RM 2243", ClearviewHwy-3-W;

SHEET 7 SIGN 7

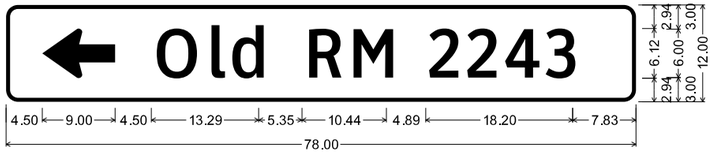

D21-1TL_VARx12;
1.50" Radius, 0.50" Border, White on Green;
Standard Arrow 9.00" X 6.13" 180°; "Old RM 2243", ClearviewHwy-3-W;

SHEET 8 SIGNS 2, 5 & 7

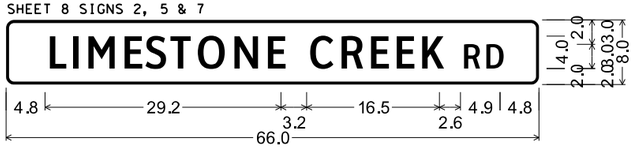

D3-1G(1) 4in;
1.0" Radius, 0.4" Border, White on Green;
"LIMESTONE CREEK RD", ClearviewHwy-3-W;

SHEET 10 SIGN 1

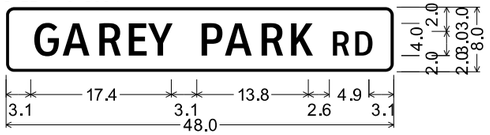

D3-1G(1) 4in;
1.0" Radius, 0.4" Border, White on Green;
"GAREY PARK RD", ClearviewHwy-3-W;

0 50 100
SCALE: 1"=100'

STATE OF TEXAS
JOSHUA T. RICHTER
141234
LICENSED
PROFESSIONAL ENGINEER

4/10/2025

WILCO
TEXAS

BGE, Inc.
101 W Louis Henna Blvd, Suite 400, Austin, TX 78728
Tel: 512-879-0400 • www.bgeinc.com
TBPE Registration No. F-1046

RM 2243

SMALL SIGN DETAILS

SHEET 2 OF 2

FED.RD. DIV.NO.	PROJECT NO.	SHEET NO.
6		337

STATE	DIST.	COUNTY	
TEXAS	AUS	WILLIAMSON	
CONT.	SECT.	JOB	HIGHWAY NO.
0914	05	222	RM 2243

4/10/2025 1:06:44 PM pdf.pltcfg
G:\TXC\Projects\County\Williamson\7473-02 RM 2243 Phase 1A\03*CADD\01*Shts\08-SPMD\RM2243*P1A*SIGNING*DETAIL*02.dgn

DISCLAIMER:
The use of this standard is governed by the "Texas Engineering Practice Act". No warranty of any kind is made by TxDOT for any purpose whatsoever. TxDOT assumes no responsibility for the conversion of this standard to other formats or for incorrect results or damages resulting from its use.

DATE: 4/10/2025 1:06:45 PM
FILE: G:\TXC\Projects\County_Williamson\7473-02 RM 2243 Phase 1A\03_CADD\02_SMAs\08-SMA\Standards\dom1-20.dgn

REFLECTOR UNIT SIZES FOR DELINEATORS AND OBJECT MARKERS

	SIZE 1	SIZE 2	SIZE 3	SIZE 4
DEVICE	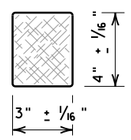	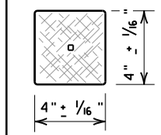	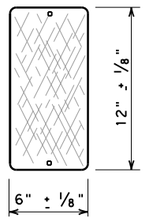	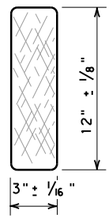
SHEETING	Yellow, White or Red Type B or C reflective sheeting			
NOTE	1. Size 1 and 4 - Direct applied reflective sheeting for use on flexible post (flx). 2. Size 2 and 3 - For use on wing channel (wc) post only. Use approved metal, plastic or fiberglass backplate with 17/64" mounting holes.			

DELINEATORS

	SINGLE		DOUBLE	
DEVICE	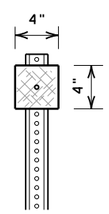	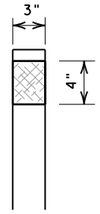	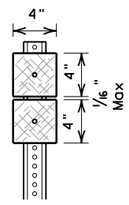	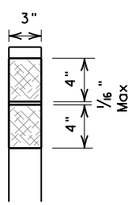
	1-Size 2 reflector unit	1-Size 1 reflector unit	2-Size 2 reflector units	2-Size 1 reflector units
SHEETING	Yellow, White or Red Type B or C Reflective Sheeting			
POST TYPE	WC	YFLX, WFLX	WC	YFLX, WFLX
MOUNT TYPE	GND	GND, SRF	GND	GND, SRF

D & OM DESCRIPTIVE CODES

INSTL DEL ASSM (D-XX)SZ X (XXXX)XXX(XX)

NUMBER OF REFLECTORS
S = Single
D = Double

COLOR OF REFLECTORS
W = White
Y = Yellow
R = Red

REFLECTOR UNIT SIZE
1 or 2

TYPE OF POST OR DELINEATOR
WC = Wing Channel Post
YFLX = Yellow Flexible Post
WFLX = White Flexible Post
BRF = Barrier Reflector

TYPE OF MOUNT
GND = Embedded (drivable or set in concrete)
CTB = Concrete Barrier Mount
GF1 or GF2 = Guard Fence Attachment
SRF = Surface Mount

DIRECTION
If Required
BI = Bi-Directional
BR = Bi-Directional with red on back

INSTL OM ASSM (OM-XX) (XXXX)XXX(XX)

TYPE OF OBJECT MARKER
1, 2, 3, or 4

NUMBER OF REFLECTORS OR DIRECTION
X = 3-Size 2 reflector units (Type 2 only)
Y = 1-Size 3 reflector unit (Type 2 only)
Z = 3-Size 1 or 1-Size 4 reflector unit(s) (Type 2 only)
L = Left Side (Type 3 Object Marker only)
R = Right Side (Type 3 Object Marker only)
C = Center (Type 3 Object Marker only)

TYPE OF POST
WC = Wing Channel Post
WFLX = White Flexible Post
TWT = Thin Walled Tubing

TYPE OF MOUNT
GND = Embedded (drivable)
SRF = Surface Mount
WAS = Wedge Anchor Steel
WAP = Wedge Anchor Plastic

DIRECTION
If Required
BI = Bi-Directional

OBJECT MARKERS

	Type 1 (OM-1)	Type 2 (OM-2)			Type 3 (OM-3)			Type 4 (OM-4)
	OM-1	OM-2X	OM-2Y	OM-2Z	OM-3L	OM-3R	OM-3C	OM-4
DEVICE	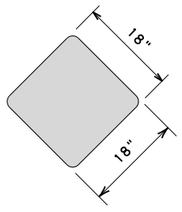	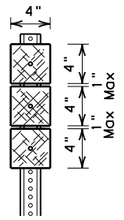	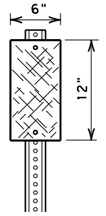	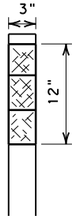	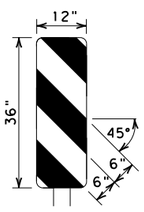	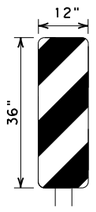	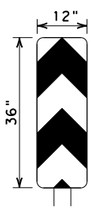	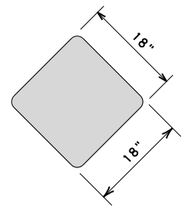
		3-Size 2 reflector units	1-Size 3 reflector unit	3-Size 1 reflector units or 1-Size 4 reflector unit				
SHEETING	Yellow-Type B_{FL} or C_{FL} Sheeting	Yellow - Type B or C Sheeting			Alternating acrylic black and retroflective yellow - Type B_{FL} or C_{FL} Sheeting			Red -Type B_{FL} or C_{FL} Sheeting
POST TYPE	TWT	WC	WC	WFLX	TWT			TWT
MOUNT TYPE	WAS, WAP	GND	GND	GND, SRF	WAS, WAP			WAS, WAP

DEPARTMENTAL MATERIAL SPECIFICATIONS

FLEXIBLE DELINEATOR & OBJECT MARKER POSTS (EMBEDDED & SURFACE MOUNT TYPES)	DMS-4400
SIGN FACE MATERIALS	DMS-8300
DELINEATORS, OBJECT MARKERS AND BARRIER REFLECTORS	DMS-8600

BARRIER REFLECTORS (BRF)

	GF1	GF2	CTB
DEVICE	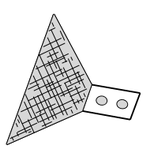	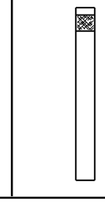	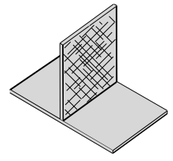
	1. Barrier reflectors shall meet the requirements of DMS 8600. 2. Approved Barrier Reflectors are listed on the "Barrier Reflectors" Material Producer List at: www.txdot.gov.		
SHEETING	Yellow, White, Red		
NOTE	1. Reflective sheeting shall have a minimum dimension of 3 inches and minimum surface area of 9 square inches.		

CHEVRONS

DEVICE

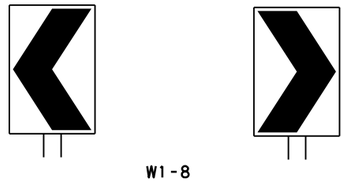

W1-8

SIZE (W x L)	18"x 24" (Conventional)	24"x 30" (Conventional Oversize)	30"x 36" (Expressway)	36" x 48" (Freeway)
MOUNTING HEIGHT	4'-0" or 7'-0"		7'-0" Only	

NOTE
1. CHEVRON (W1-8) signs and ONE DIRECTION LARGE ARROW (W1-6) Signs shall be installed per Sign Mounting Details (SMD) Standard Sheets and paid under Item 644 (Small Roadside Sign Assemblies).
2. When there is a need to increase conspicuity, the Texas version of the ONE DIRECTION LARGE ARROW sign (W1-9T) may be used instead of the ONE DIRECTION LARGE ARROW (W1-6).

ONE DIRECTION LARGE ARROW

DEVICE

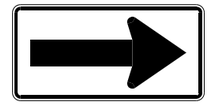

W1-6

SIZE (W x L)	48" x 24" (Conventional)	60" x 30" (Expressway & Freeway)
MOUNTING HEIGHT	7'-0"	

NOTE:
Delineator and object marker substrates and sign substrates shall be 0.080" Aluminum sign blank to conform to ASTM B-209 Alloy 6061-T6 or approved alternative.

Texas Department of Transportation

Traffic Safety Division Standard

DELINEATOR & OBJECT MARKER MATERIAL DESCRIPTION

D & OM(1)-20

FILE: dom1-20.dgn	DN: TXDOT	CK: TXDOT	DW: TXDOT	CK: TXDOT
©TxDOT August 2004	CONT	SECT	JOB	HIGHWAY
REVISIONS	0914	05	222	RM 2243
10-09 3-15	DIST	COUNTY		SHEET NO.
4-10 7-20	AUS	WILLIAMSON		338

20A

POST TYPE AND SUPPORT FOUNDATION DETAILS

WING CHANNEL (WC)

GND

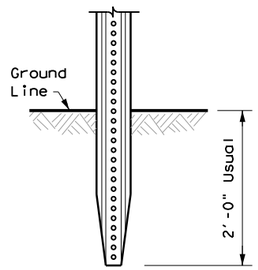

NOTES

1. Embedded Wing Channel (WC) post option may be used for Type 2 Object Markers and Delineators only.
2. 1.12 lbs/ft steel per ASTM A 1011 SS Gr. 50, or ASTM A499.

FLEXIBLE POSTS (YFLX, WFLX)

GND

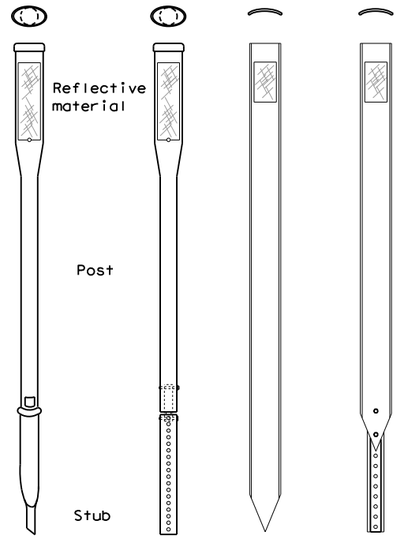

EMBEDDED

SRF

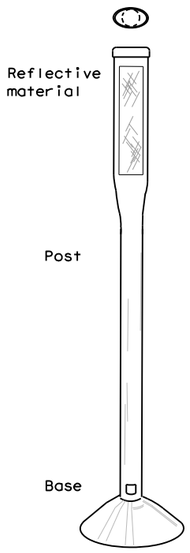

SURFACE MOUNT

NOTES

1. See "Flexible Delineator and Object Marker Posts" Material Producer List for approved devices.
2. Install per manufacturer's recommendations.
3. Post length may vary to meet field conditions.
4. When using yellow delineators with flexible posts to separate opposing direction of travel, such as centerline or median use, the flexible posts shall be yellow.

WEDGE ANCHOR SYSTEMS

WAS

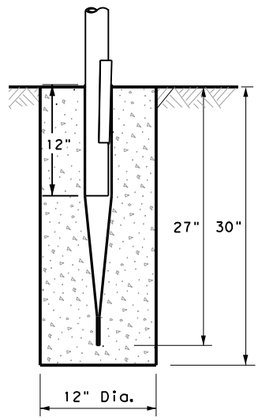

STEEL

WAP

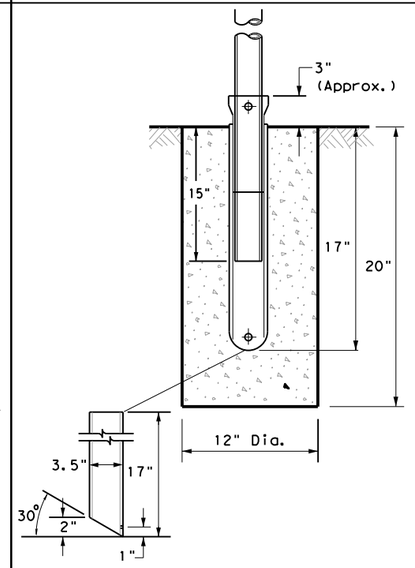

PLASTIC

NOTE

1. Install per manufacturer's recommendations.

TYPE OF BARRIER MOUNTS

GUARD FENCE ATTACHMENT

GF1

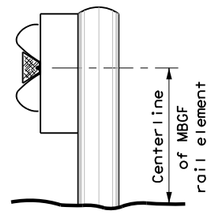

GF2

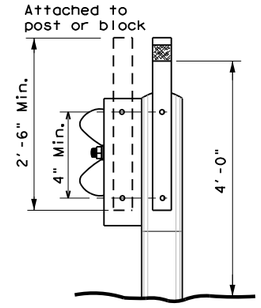

CONCRETE TRAFFIC BARRIER (CTB)

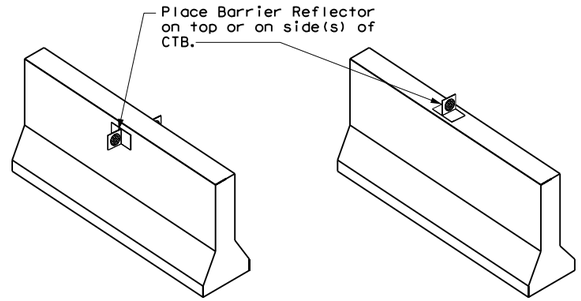

GENERAL NOTES

1. Place delineators on a section of roadway at a consistent distance from the edge of pavement.
2. Where a restriction prevents consistent placement from the pavement edge, place the affected object markers in line with the innermost edge of the obstruction.
3. When Type 2 object markers and delineators are more than 8'-0" from the edge of the pavement, it may not be possible to maintain a height of approximately 4'-0". If this is the case, place the object marker or delineator as close to the desired height as possible.
4. Install all delineators, object markers and barrier reflectors in accordance with the manufacturer's recommendation.
5. Barrier reflectors should be installed a minimum of 18 inches above the edge of the pavement surface.
6. Diagonal stripes on Type 3 object markers shall slope down toward the intended travel lane.

TYPES 1, 3, AND 4 OBJECT MARKERS AND CHEVRONS

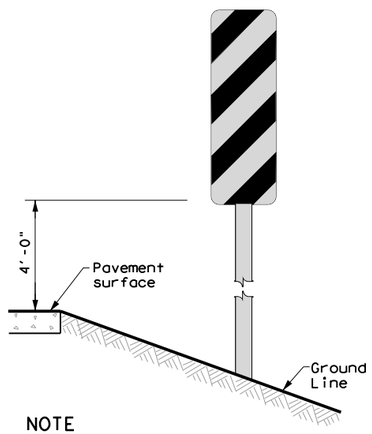

NOTE

Mounting at 4 feet to the bottom of the chevron is permitted for chevrons that will not exceed a height of 6'-6" to the top of the chevron (sizes 24" x 30" and smaller)

CHEVRONS AND ONE DIRECTION LARGE ARROW SIGN

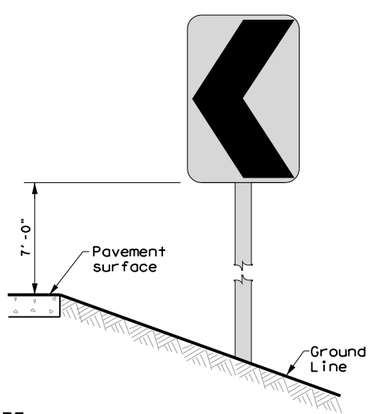

NOTE

Chevrons 30" x 36" and larger shall be mounted at a height of 7' to the bottom of the chevron. Chevron sign and ONE DIRECTION LARGE ARROW sign (W1-9T) shall be installed per SMD standard sheets and paid under item 644.

DELINEATORS AND TYPE 2 OBJECT MARKERS

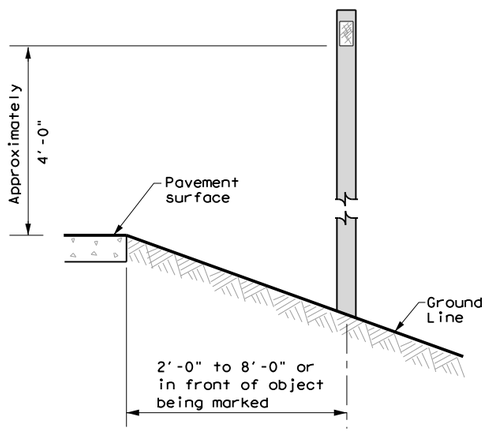

See general notes 1, 2 and 3.

Texas Department of Transportation

Traffic Safety Division Standard

DELINEATOR & OBJECT MARKER INSTALLATION

D & OM(2)-20

FILE: dom2-20.dgn	DN: TXDOT	CK: TXDOT	DW: TXDOT	CK: TXDOT
© TxDOT August 2004	CONT	SECT	JOB	HIGHWAY
REVISIONS	0914	05	222	RM 2243
10-09 3-15	DIST		COUNTY	SHEET NO.
4-10 7-20	AUS		WILLIAMSON	339

20B

DISCLAIMER:
The use of this standard is governed by the "Texas Engineering Practice Act". No warranty of any kind is made by TxDOT for any purpose whatsoever. TxDOT assumes no responsibility for the conversion of this standard to other formats or for incorrect results or damages resulting from its use.

DATE: 4/10/2025 1:06:46 PM
FILE: G:\TXC\Projects\County_Williamson\7473-02 RM 2243 Phase 1A\03_CADD\01_Plans\08-SMD\SMD_DOM2-20.dgn

DISCLAIMER:
The use of this standard is governed by the "Texas Engineering Practice Act". No warranty of any kind is made by TxDOT for any purpose whatsoever. TxDOT assumes no responsibility for the conversion of this standard to other formats or for incorrect results or damages resulting from its use.

MINIMUM WARNING DEVICES AT CURVES WITH ADVISORY SPEEDS

Amount by which Advisory Speed is less than Posted Speed	Curve Advisory Speed	
	Turn (30 MPH or less)	Curve (35 MPH or more)
5 MPH & 10 MPH	• RPMs	• RPMs
15 MPH & 20 MPH	• RPMs and One Direction Large Arrow sign	• RPMs and Chevrons; or • RPMs and One Direction Large Arrow sign where geometric conditions or roadside obstacles prevent the installation of chevrons.
25 MPH & more	• RPMs and Chevrons; or • RPMs and One Direction Large Arrow sign where geometric conditions or roadside obstacles prevent the installation of chevrons	• RPMs and Chevrons

SUGGESTED SPACING FOR DELINEATORS ON HORIZONTAL CURVES

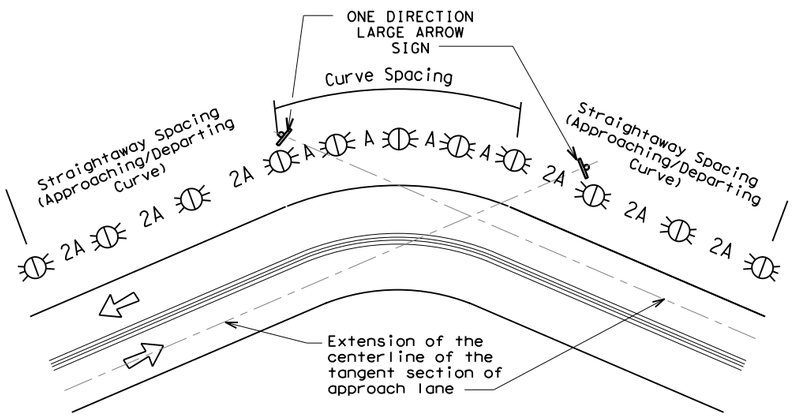

NOTE

ONE DIRECTION LARGE ARROW (W1-6) sign should be located at approximately and perpendicular to the extension of the centerline of the tangent section of approach lane.

SUGGESTED SPACING FOR CHEVRONS ON HORIZONTAL CURVES

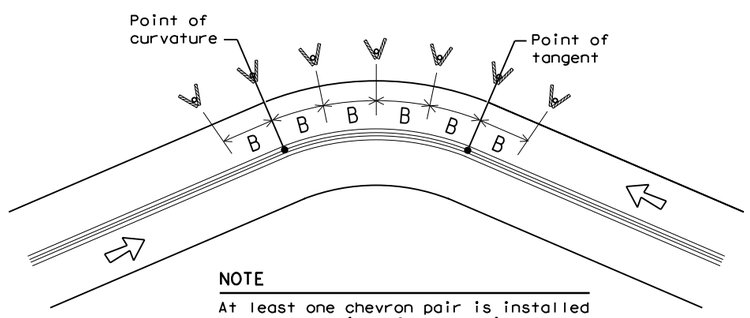

NOTE

At least one chevron pair is installed beyond the point of tangent in tangent section.

DELINEATOR AND CHEVRON SPACING

WHEN DEGREE OF CURVE OR RADIUS IS KNOWN

Degree of Curve	FEET			
	Radius of Curve	Spacing in Curve	Spacing in Straightaway	Chevron Spacing in Curve
		A	2A	B
1	5730	225	450	——
2	2865	160	320	——
3	1910	130	260	200
4	1433	110	220	160
5	1146	100	200	160
6	955	90	180	160
7	819	85	170	160
8	716	75	150	160
9	637	75	150	120
10	573	70	140	120
11	521	65	130	120
12	478	60	120	120
13	441	60	120	120
14	409	55	110	80
15	382	55	110	80
16	358	55	110	80
19	302	50	100	80
23	249	40	80	80
29	198	35	70	40
38	151	30	60	40
57	101	20	40	40

Curve delineator approach and departure spacing should include 3 delineators spaced at 2A. This spacing should be used during design preparation or when the degree of curve is known.

DELINEATOR AND CHEVRON SPACING

WHEN DEGREE OF CURVE OR RADIUS IS NOT KNOWN

Advisory Speed (MPH)	Spacing in Curve	Spacing in Straightaway	Chevron Spacing in Curve
	A	2xA	B
65	130	260	200
60	110	220	160
55	100	200	160
50	85	170	160
45	75	150	120
40	70	140	120
35	60	120	120
30	55	110	80
25	50	100	80
20	40	80	80
15	35	70	40

If the degree of curve is not known, delineator spacing may be determined based on the Advisory Speed of the curve. Use the delineator curve spacing for each Advisory Speed (MPH).

DELINEATOR AND OBJECT MARKER APPLICATION AND SPACING

CONDITION	REQUIRED TREATMENT	MINIMUM SPACING
Frwy./Exp. Tangent	RPMs	See PM-series and FPM-series standard sheets
Frwy./Exp. Curve	Single delineators on right side	See delineator spacing table
Frwy/Exp.Ramp	Single delineators on at least one side of ramp (should be on outside of curves) (see Detail 3 on D&OM(4))	100 feet on ramp tangents Use delineator spacing table for ramp curves ("straightway spacing" does not apply to ramp curves)
Acceleration/Deceleration Lane	Double delineators (see Detail 3 on D&OM(4))	100 feet (See Detail 3 on D & OM (4))
Truck Escape Ramp	Single red delineators on both sides	50 feet
Bridge Rail (steel or concrete)and Metal Beam Guard Fence	Bi-Directional Delineators when undivided with one lane each direction Single Delineators when multiple lanes each direction	Equal spacing (100'max) but not less than 3 delineators
Concrete Traffic Barrier (CTB) or Steel Traffic Barrier	Barrier reflectors matching the color of the edge line	Equal spacing 100' max
Cable Barrier	Reflectors matching the color of the edge line	Every 5th cable barrier post (up to 100'max)
Guard Rail Terminus/Impact Head	Divided highway - Object marker on approach end Undivided 2-lane highways - Object marker on approach and departure end	Requires reflective sheeting provided by manufacturer per D & OM (VIA) or a Type 3 Object Marker (OM-3) in front of the terminal end See D & OM (5) and D & OM (6)
Bridges with no Approach Rail	Type 3 Object Marker (OM-3) at end of rail and 3 single delineators approaching rail	See D & OM(5)
Reduced Width Approaches to Bridge Rail	Type 2 and Type 3 Object Markers (OM-3) and 3 single delineators approaching bridge	Requires reflective sheeting provided by manufacturer per D & OM (VIA) or a Type 3 Object Marker (OM-3) in front of the terminal end See D & OM (5)
Culverts without MBGF	Type 2 Object Markers	See Detail 2 on D & OM(4)
Crossovers	Double yellow delineators and RPMs	See Detail 1 on D & OM (4)
Pavement Narrowing (lane merge) on Freeways/Expressway	Single delineators adjacent to affected lane for full length of transition	100 feet

NOTES

1. Unless indicated otherwise, the delineator or barrier reflector color shall conform to the color of the pavement edge line on the side of the road where the delineators or barrier reflectors are placed.
2. Barrier reflectors may be used to replace required delineators.
3. Single red delineators may be mounted on the back side of delineator posts for wrong way driver applications

LEGEND

	Bi-directional Delineator
	Delineator
	Sign

Texas Department of Transportation — Traffic Safety Division Standard

DELINEATOR & OBJECT MARKER PLACEMENT DETAILS

D & OM(3)-20

FILE: dom3-20.dgn	DN: TXDOT	CK: TXDOT	DW: TXDOT	CK: TXDOT
© TxDOT August 2004	CONT	SECT	JOB	HIGHWAY
REVISIONS	0914	05	222	RM 2243
3-15 8-15	DIST	COUNTY		SHEET NO.
8-15 7-20	AUS	WILLIAMSON		340

20C

DATE: 4/10/2025 1:06:53 PM
FILE: G:\TXC\Projects\County_Williamson\7473-02 RM 2243 Phase 1A\03_CADD\0915AUS340_dom3-20.dgn

CROSSOVERS

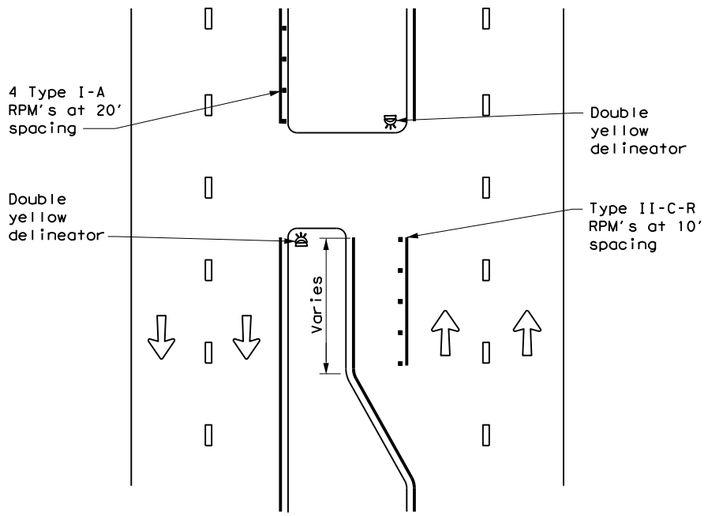

DETAIL 1

FOR CULVERTS WITHOUT MBGF

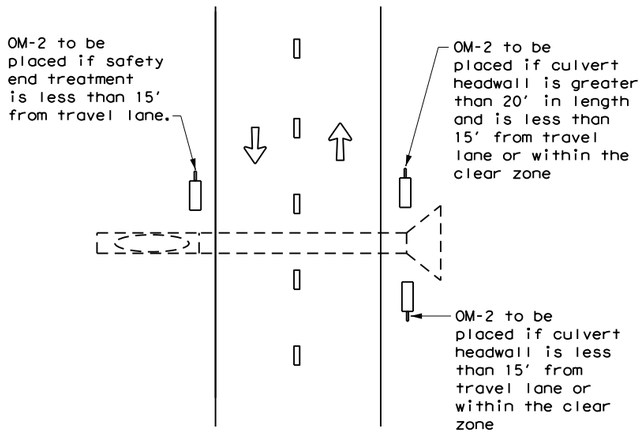

DETAIL 2

FREEWAY DELINEATION FOR RAMPS AND ACCELERATION/DECELERATION LANES

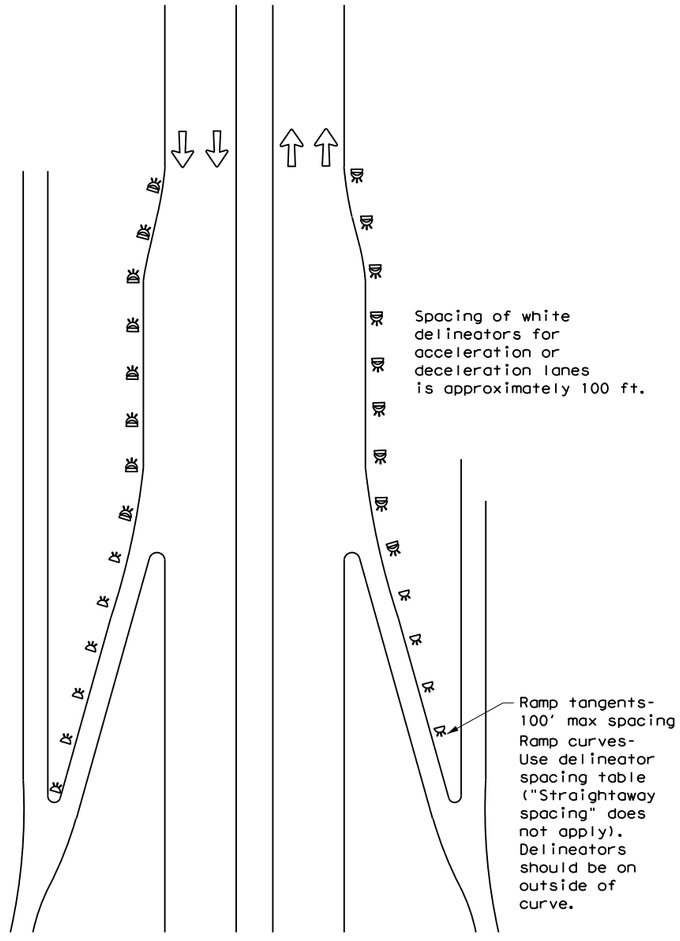

DETAIL 3

TYPICAL APPLICATION OF DEAD END BARRICADE

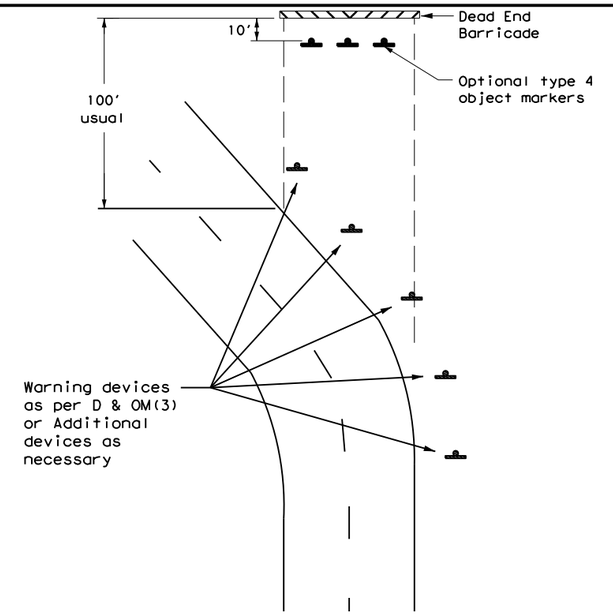

DETAIL 4

TYPICAL DEAD END BARRICADE INSTALLATION

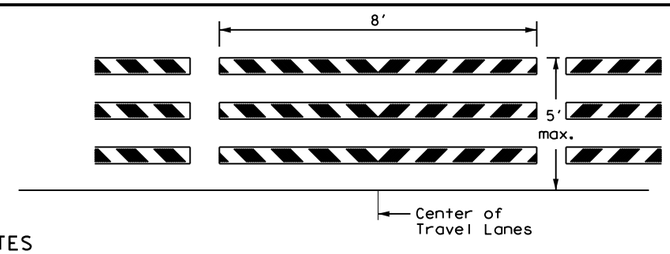

NOTES

1. Barricade striping shall be red and white reflective sheeting for all permanent road closures.
2. Barricade striping is red and white sloping toward the center of the roadway.
3. Type 3 Barricade Supports should be anchored to soil or pavement as described in compliant Work Zone Traffic Control Devices List, section D.2.f and D.2.g.

DETAIL 5

LEGEND

	Bidirectional Delineator
	Delineator
	OM-3
	Barricade
	Sign
	OM-2
	Double Delineator

Texas Department of Transportation

Traffic Safety Division Standard

DELINEATOR & OBJECT MARKER PLACEMENT DETAILS

D & OM(4)-20

FILE: dom4-20.dgn	DN: TXDOT	CK: TXDOT	DW: TXDOT	CK: TXDOT
© TxDOT August 2004	CONT	SECT	JOB	HIGHWAY
REVISIONS 3-15 7-20	0914	05	222	RM 2243
	DIST		COUNTY	SHEET NO.
	AUS		WILLIAMSON	341

20D

DISCLAIMER:
The use of this standard is governed by the "Texas Engineering Practice Act". No warranty of any kind is made by TxDOT for any purpose whatsoever. TxDOT assumes no responsibility for the conversion of this standard to other formats or for incorrect results or damages resulting from its use.

DATE: 4/10/2025 1:06:54 PM
FILE: G:\TXC\Projects\County_Williamson\7473-02 RM 2243 Phase 1A\03_CADD\01_Sheets\08-SHMDS\dom4-20.dgn

TWO-WAY, TWO LANE ROADWAY WITH REDUCED WIDTH APPROACH RAIL

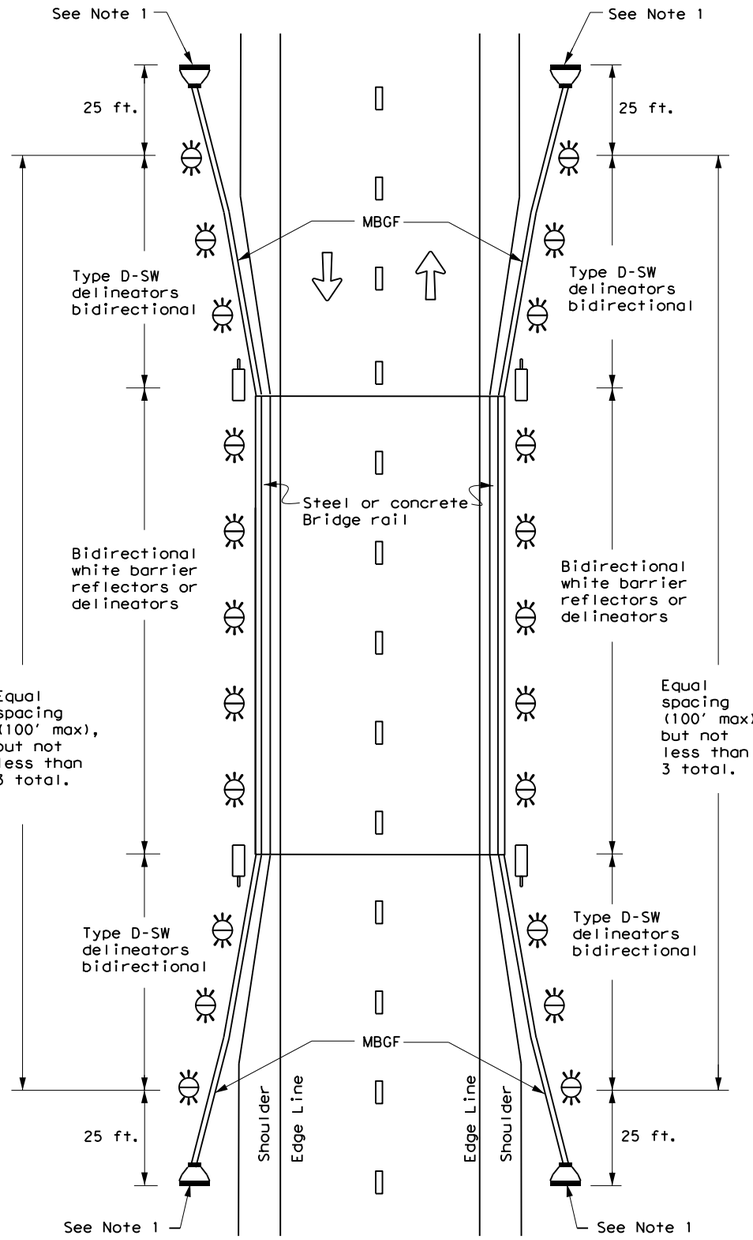

NOTE:

1. Terminal ends require reflective sheeting provided by manufacturer per D & OM (VIA) or a Type 3 Object Marker (OM-3) in front of the terminal end.

TWO-WAY, TWO LANE ROADWAY WITH METAL BEAM GUARD FENCE (MBGF)

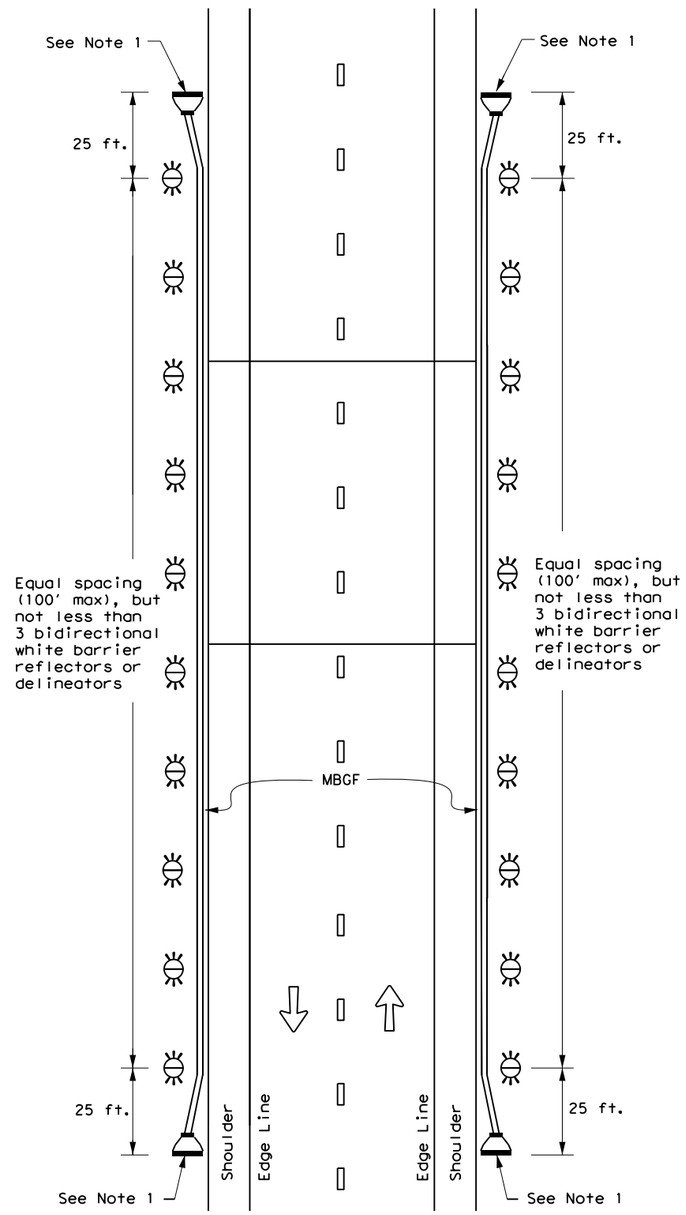

NOTE:

1. Terminal ends require reflective sheeting provided by manufacturer per D & OM (VIA) or a Type 3 Object Marker (OM-3) in front of the terminal end.

TWO-WAY, TWO LANE ROADWAY BRIDGE WITH NO APPROACH RAIL

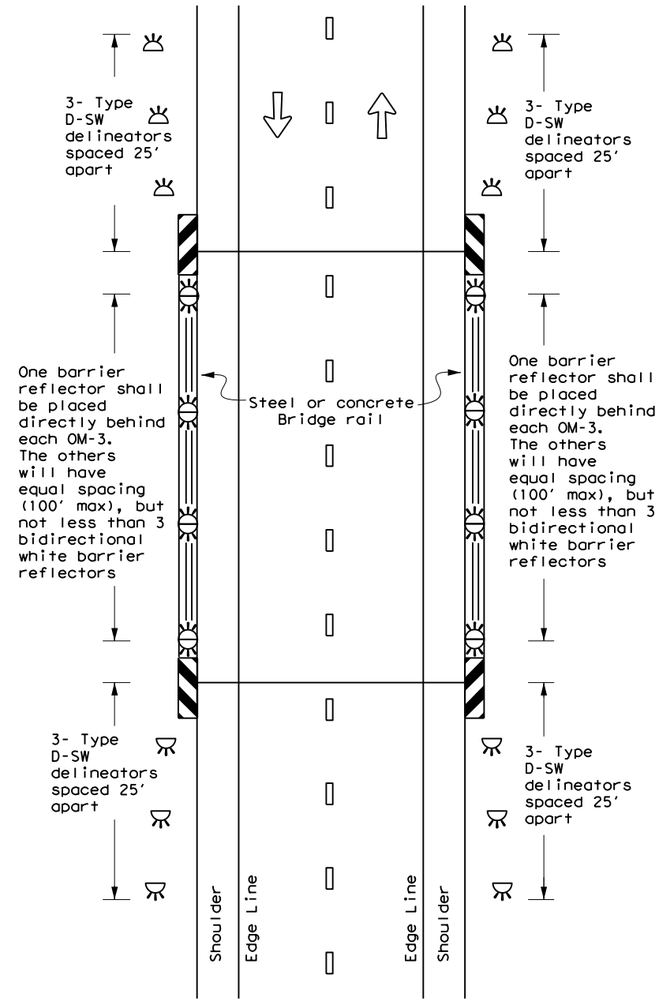

LEGEND

	Bidirectional Delineator
	Delineator
	OM-3
	OM-2
	Terminal End
	Traffic Flow

Texas Department of Transportation

Traffic Safety Division Standard

DELINEATOR & OBJECT MARKER PLACEMENT DETAILS

D & OM(5)-20

FILE: dom5-20.dgn	DN: TxDOT	CK: TxDOT	DW: TxDOT	CK: TxDOT
© TxDOT August 2015	CONT	SECT	JOB	HIGHWAY
REVISIONS	0914	05	222	RM 2243
7-20	DIST		COUNTY	SHEET NO.
	AUS		WILLIAMSON	342

20E

DISCLAIMER:
The use of this standard is governed by the "Texas Engineering Practice Act". No warranty of any kind is made by TxDOT for any purpose whatsoever. TxDOT assumes no responsibility for the conversion of this standard to other formats or for incorrect results or damages resulting from its use.

DATE: 4/10/2025 1:06:55 PM
FILE: G:\TXC\Projects\County_Williamson\7473-02 RM 2243 Phase 1A\03_CADD\01_Sht\08_SHMDS\dom5-20.dgn

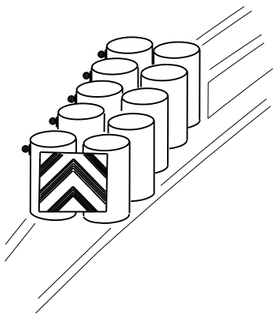

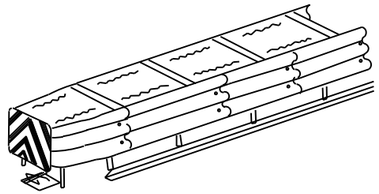

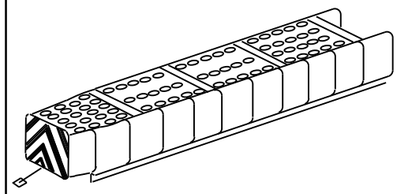

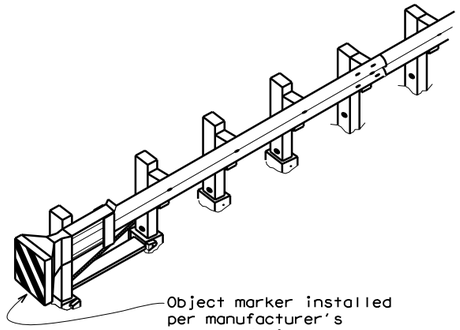

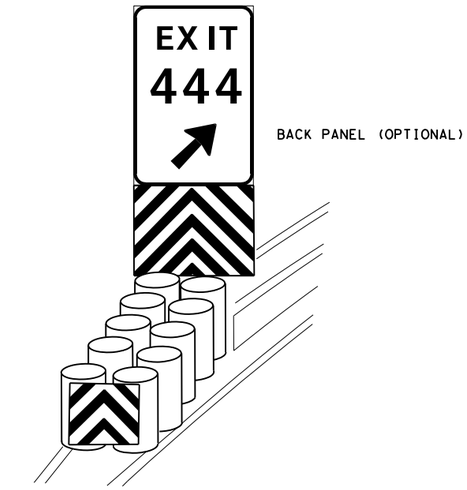

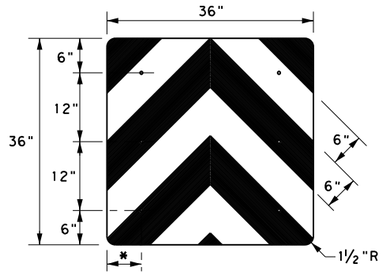

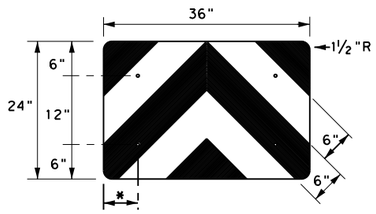

* Adjust to fit attenuator per manufacturer's recommendation, or as directed by the Engineer

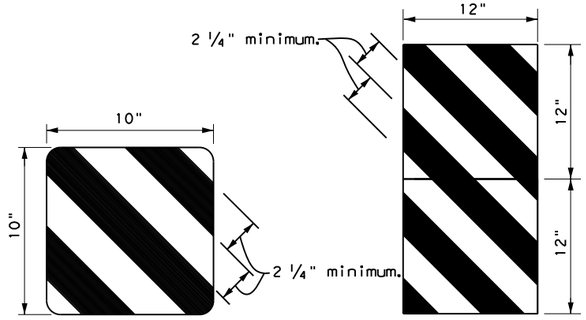

OBJECT MARKERS SMALLER THAN 3 FT^2

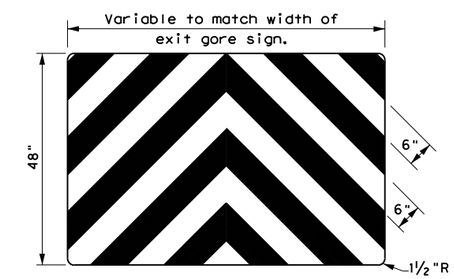

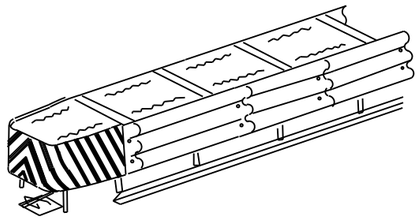

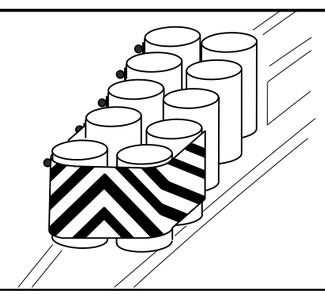

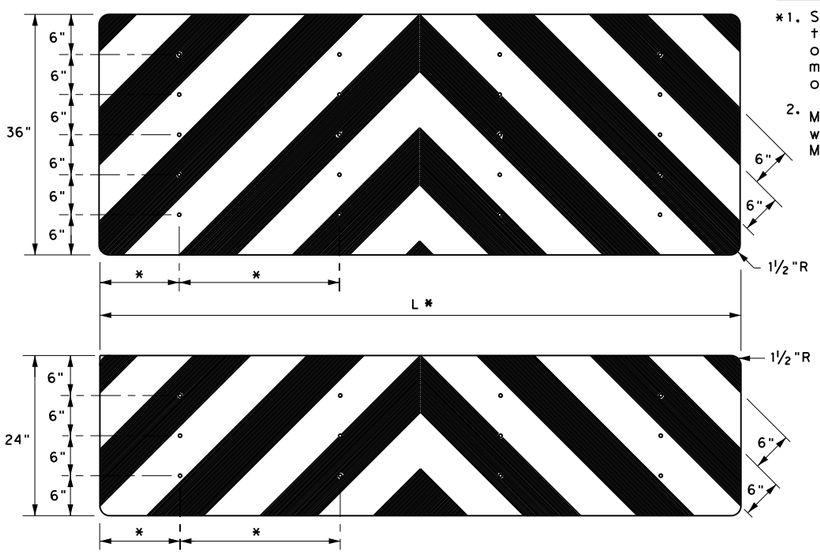

NOTES

*1. Spacing should be adjusted to attach through centerline of drum, per attenuator manufacturers recommendation, or as directed by the Engineer.

2. Mounting should be flush with top of attenuator. Minimum size 96" x 24".

NOTES

1. Object Markers shall conform to the Texas MUTCD and meet the color and reflectivity requirement of Department Material Specification DMS 8300. Background shall be yellow reflective sheeting (Type B or C) and Chevron shall be black.
2. Object Markers may be fabricated from adhesive backed reflective sheeting applied directly to guardrail end treatment, or applied directly to an "end cap" as per the manufacturer's recommendation. Direct applied sheeting shall provide a smooth surface and have no wrinkles, air bubbles, cuts or tears. A radius at the corners is not required for direct applied sheeting.
3. Object Marker size may be reduced to fit smaller devices. Width of alternating black and yellow stripes are typically 6". Object Markers smaller than 3ft may have reduced width stripes of a minimum of 2 ¼".
4. Pop rivets, screws, or nuts and bolts may be used to attach object markers and reflectors. Holes, slots or other openings may be cut or drilled through object markers to allow cable or other attachments.
5. Object Marker at nose of attenuator is subsidiary to the attenuator.
6. See D & OM (1-4) for required barrier reflectors.

Texas Department of Transportation

Traffic Safety Division Standard

DELINEATOR & OBJECT MARKER FOR VEHICLE IMPACT ATTENUATORS

D & OM(VIA)-20

FILE: domvia20.dgn	DN: TXDOT	CK: TXDOT	DW: TXDOT	CK: TXDOT
© TxDOT December 1989	CONT	SECT	JOB	HIGHWAY
REVISIONS	0914	05	222	RM 2243
4-92 8-04	DIST		COUNTY	SHEET NO.
8-95 3-15	AUS		WILLIAMSON	343
4-98 7-20				

20G

DISCLAIMER:
The use of this standard is governed by the "Texas Engineering Practice Act". No warranty of any kind is made by TxDOT for any purpose whatsoever. TxDOT assumes no responsibility for the conversion of this standard to other formats or for incorrect results or damages resulting from its use.

DATE: 4/10/2025 1:06:56 PM
FILE: G:\TXC\Projects\County_Williamson\7473-02 RM 2243 Phase 1A\03_CADD\01_SHTS\08-STMD\DOM(VIA)20.dgn

DISCLAIMER:
The use of this standard is governed by the "Texas Engineering Practice Act". No warranty of any kind is made by TxDOT for any purpose whatsoever. TxDOT assumes no responsibility for the conversion of this standard to other formats or for incorrect results or damages resulting from its use.

DATE: 4/10/2025 1:06:57 PM
FILE: G:\TXC\Projects\County_Williamson\7473-02 RM 2243 Phase 1A\03_CADD\01_Shts\08-SHMDS\pm1-22.dgn

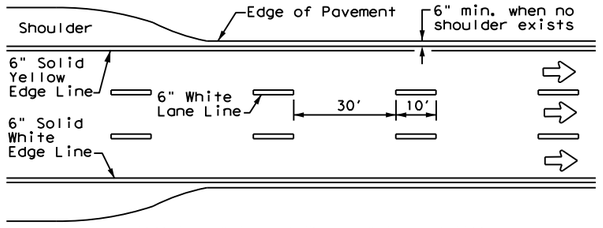

EDGE LINE AND LANE LINES ONE-WAY ROADWAY WITH OR WITHOUT SHOULDERS

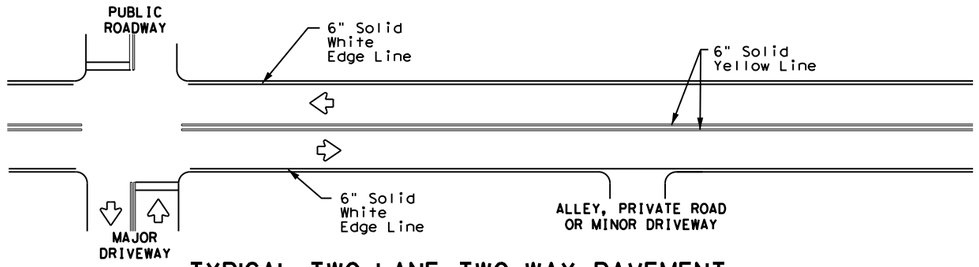

TYPICAL TWO-LANE, TWO-WAY PAVEMENT MARKINGS THROUGH INTERSECTIONS

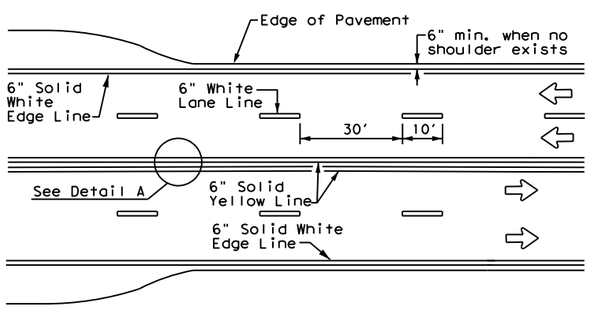

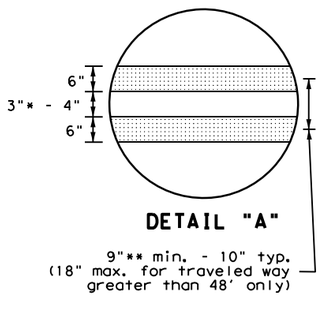

DETAIL "A"

9"** min. - 10" typ.
(18" max. for traveled way greater than 48' only)

CENTERLINE AND LANE LINES FOUR LANE TWO-WAY ROADWAY WITH OR WITHOUT SHOULDERS

* 2" minimum for restripe projects when approved by the Engineer.

** 8" minimum for restripe projects when approved by the Engineer.

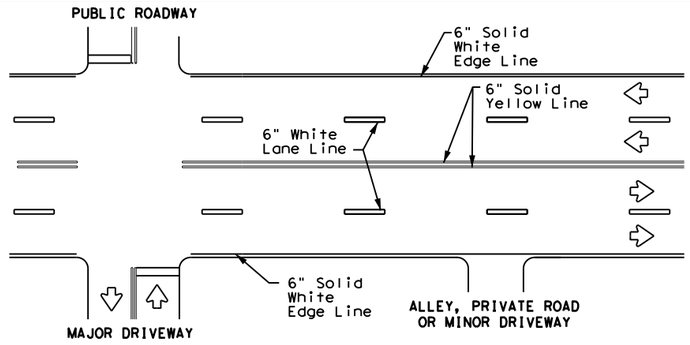

TYPICAL MULTI-LANE, TWO-WAY PAVEMENT MARKINGS THROUGH INTERSECTIONS

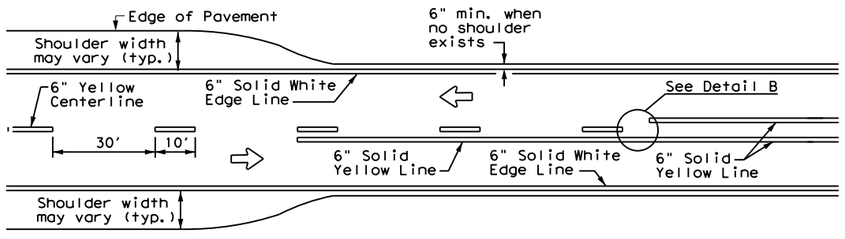

TWO LANE TWO-WAY ROADWAY WITH OR WITHOUT SHOULDERS

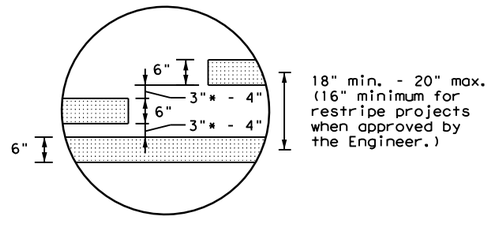

18" min. - 20" max.
(16" minimum for restripe projects when approved by the Engineer.)

DETAIL "B"

* 2" minimum for restripe projects when approved by the Engineer.

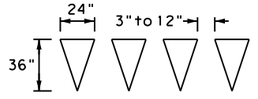

For posted speed on road being marked equal to or greater than 45 MPH.

YIELD LINES

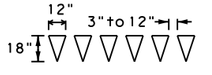

For posted speed on road being marked equal to or less than 40 MPH.

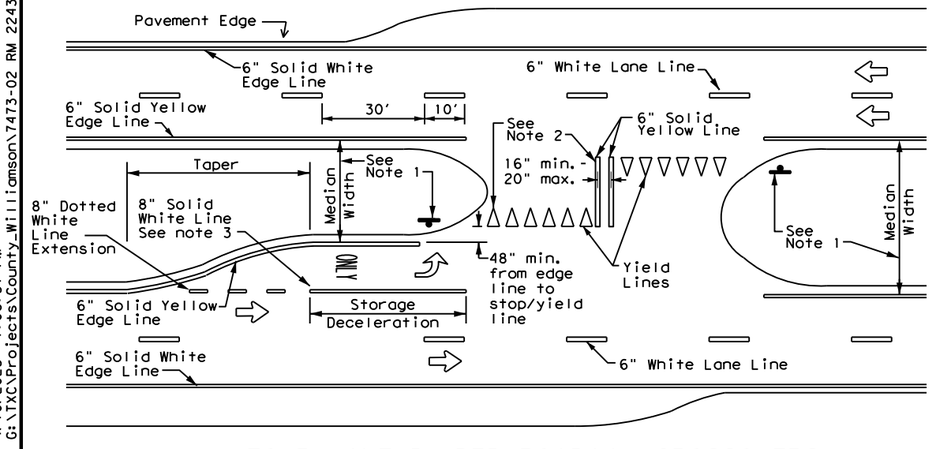

FOUR LANE DIVIDED ROADWAY CROSSOVERS

NOTES

1. Where divided highways are separated by median widths at the median opening itself of 30 feet or more, median openings shall be signed as two separate intersections. Each median opening has two width measurements, with one measurement for each approach. The narrow median width will be the controlling width to determine if signs are required. Yield signs are the typical intersection control. Stop signs and stop bars are optional as determined by the Engineer.
2. Install median striping (double yellow centerlines and stop lines/yield lines) when a 50' or greater median centerline can be placed. Stop lines shall only be used with stop signs. Yield lines shall only be used with yield signs.
3. Length of turn bays, including taper, deceleration, and storage lengths shall be as shown on the plans or as directed by the Engineer.

GENERAL NOTES

1. Edge line striping shall be as shown in the plans or as directed by the Engineer. The edge line should not be placed less than 6 inches from the edge of pavement. This distance may vary due to pavement raveling or other conditions. Edge lines are not required in curb and gutter sections of roadways.
2. The traveled way includes only that portion of the roadway used for vehicular travel. It does not include the parking lanes, sidewalks, berms and shoulders. The traveled ways shall be measured from the center of edge line to the center of edge line of a two lane roadway.

MATERIAL SPECIFICATIONS	
PAVEMENT MARKERS (REFLECTORIZED)	DMS-4200
EPOXY AND ADHESIVES	DMS-6100
BITUMINOUS ADHESIVE FOR PAVEMENT MARKERS	DMS-6130
TRAFFIC PAINT	DMS-8200
HOT APPLIED THERMOPLASTIC	DMS-8220
PERMANENT PREFABRICATED PAVEMENT MARKINGS	DMS-8240

All pavement marking materials shall meet the required Departmental Material Specifications as specified by the plans.

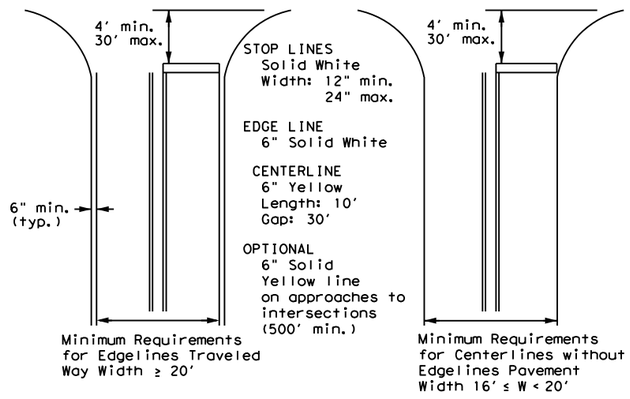

NOTE: Traveled way is exclusive of shoulder widths. Refer to General Note 2 for additional details.

GUIDE FOR PLACEMENT OF STOP LINES, EDGE LINE & CENTERLINE

Based on Traveled Way and Pavement Widths for Undivided Roadways

Texas Department of Transportation

Traffic Safety Division Standard

TYPICAL STANDARD PAVEMENT MARKINGS

PM(1)-22

FILE: pm1-22.dgn	DN:	CK:	DW:	CK:
©TxDOT December 2022	CONT	SECT	JOB	HIGHWAY
REVISIONS 11-78 8-00 6-20 8-95 3-03 12-22 5-00 2-12	0914	05	222	RM 2243
	DIST	COUNTY		SHEET NO.
	AUS	WILLIAMSON		344

22A

REFLECTIVE RAISED PAVEMENT MARKERS FOR VEHICLE POSITIONING GUIDANCE

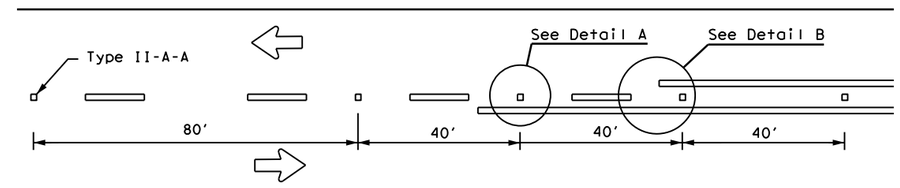

CENTERLINE FOR ALL TWO LANE TWO-WAY ROADWAYS

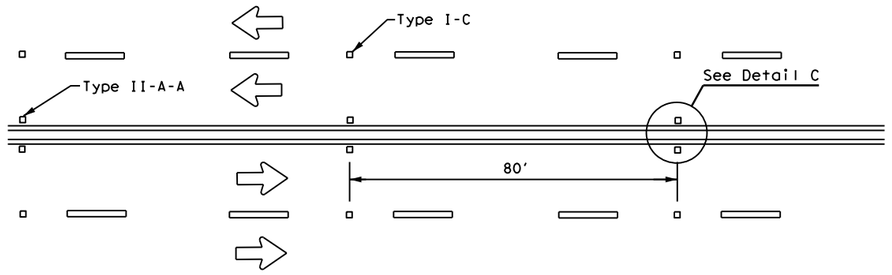

CENTERLINE & LANE LINES FOR FOUR LANE TWO-WAY ROADWAYS

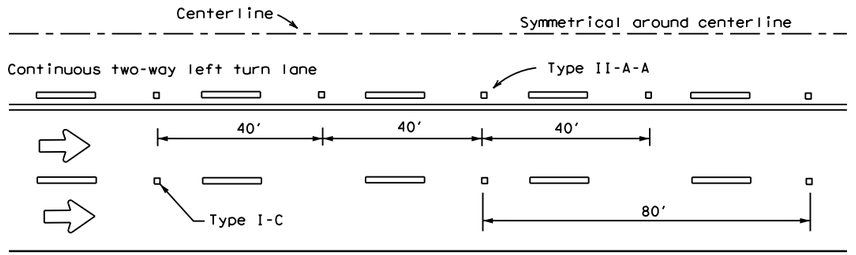

CENTERLINE AND LANE LINES FOR TWO-WAY LEFT TURN LANE

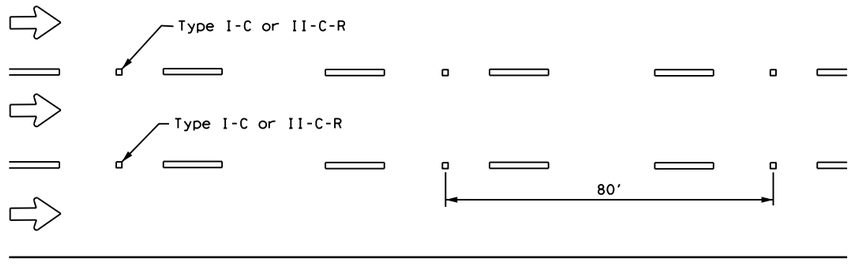

LANE LINES FOR ONE-WAY ROADWAY (NON-FREEWAY FACILITIES)

Raised pavement markers Type II-C-R shall have clear face toward normal traffic and red face toward wrong-way traffic.

See Note 3.

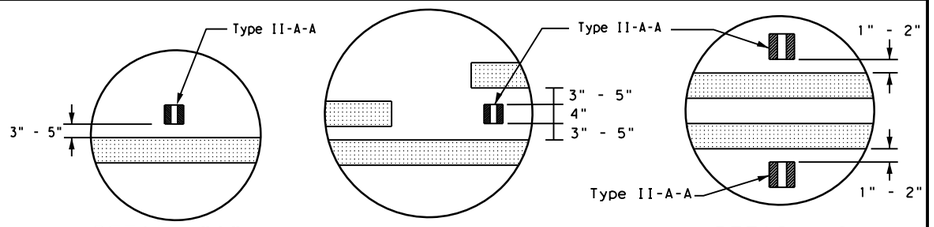

DETAIL "A" DETAIL "B" DETAIL "C"

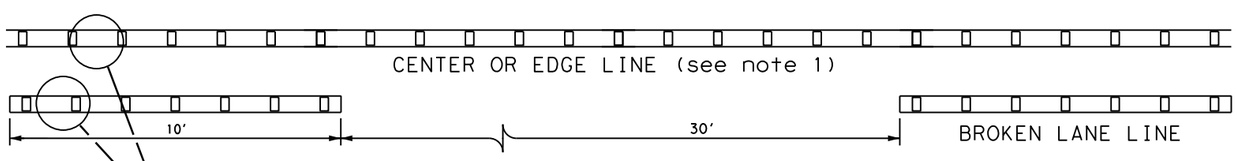

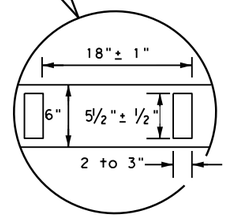

6" EDGE LINE, 6" CENTERLINE OR 6" LANE LINE

REFLECTORIZED PROFILE PATTERN DETAIL

USING REFLECTIVE PROFILE PAVEMENT MARKINGS

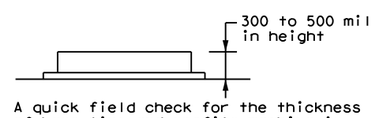

A quick field check for the thickness of base line and profile marking is approximately equal to a stack of 5 quarters to a maximum height of 7 quarters.

NOTES

1. Edge lines should typically be 6" wide and the materials shall be specified in the plans.
2. Profile markings shall not be placed on roadways with a posted speed limit of 45 MPH or less.

GENERAL NOTES

1. All raised pavement markers placed along broken lines shall be placed in line with and midway between the stripes.
2. On concrete pavements, the raised pavement markers should be placed to one side of the longitudinal joints.
3. Use raised pavement marker Type I-C with undivided roadways, flush medians, and two way left turn lanes. Use raised pavement marker Type II-C-R with divided highways and raised medians.

MATERIAL SPECIFICATIONS	
PAVEMENT MARKERS (REFLECTORIZED)	DMS-4200
EPOXY AND ADHESIVES	DMS-6100
BITUMINOUS ADHESIVE FOR PAVEMENT MARKERS	DMS-6130
TRAFFIC PAINT	DMS-8200
HOT APPLIED THERMOPLASTIC	DMS-8220
PERMANENT PREFABRICATED PAVEMENT MARKINGS	DMS-8240

All pavement marking materials shall meet the required Departmental Material Specifications as specified by the plans.

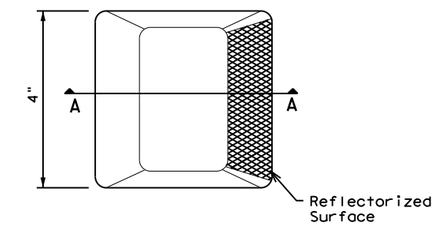

Type I (Top View)

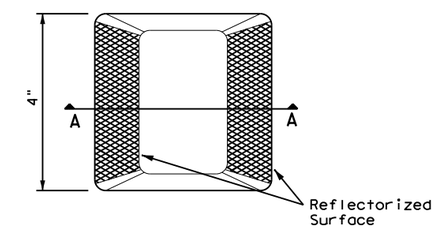

Type II (Top View)

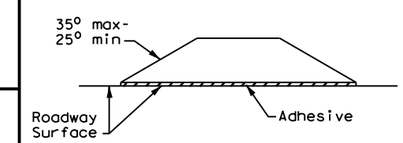

SECTION A

RAISED PAVEMENT MARKERS

Texas Department of Transportation

Traffic Safety Division Standard

POSITION GUIDANCE USING RAISED MARKERS REFLECTORIZED PROFILE MARKINGS PM(2)-22

FILE: pm2-22.dgn	DN:	CK:	DW:	CK:
©TxDOT December 2022	CONT	SECT	JOB	HIGHWAY
REVISIONS 4-77 8-00 6-20 4-92 2-10 12-22 5-00 2-12	0914	05	222	RM 2243
	DIST		COUNTY	SHEET NO.
	AUS		WILLIAMSON	345

228

DISCLAIMER:
The use of this standard is governed by the "Texas Engineering Practice Act". No warranty of any kind is made by TxDOT for any purpose whatsoever. TxDOT assumes no responsibility for the conversion of this standard to other formats or for incorrect results or damages resulting from its use.

DATE: 4/10/2025 1:06:58 PM
FILE: G:\TXC\Projects\County_Williamson\7473-02 RM 2243 Phase 1A\03_CADD\01_Sheets\PM2-22.dgn

DISCLAIMER:
The use of this standard is governed by the "Texas Engineering Practice Act". No warranty of any kind is made by TxDOT for any purpose whatsoever. TxDOT assumes no responsibility for the conversion of this standard to other formats or for incorrect results or damages resulting from its use.

DATE: 4/10/2025 1:06:59 PM
FILE: G:\TxDOT\Projects\County_Williamson\7473-02 RM 2243 Phase 1A\03_CADD\DGN\PM3-22.dgn

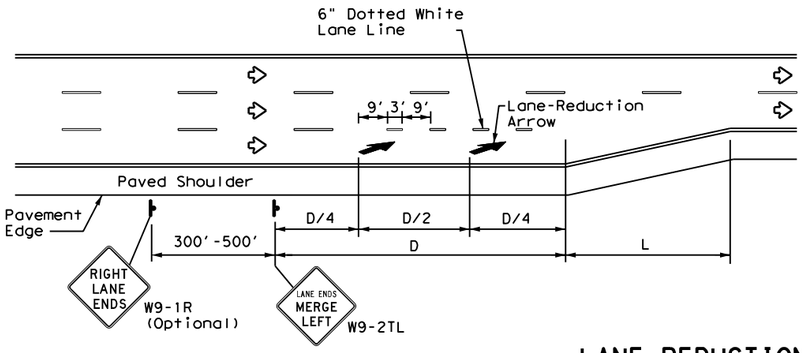

LANE REDUCTION

NOTES

1. Lane reduction pavement markings are used where the number of through lanes is reduced because of narrowing of the roadway or because of a section of on-street parking in what would otherwise be a through lane. For Texas Super 2 Passing Lanes, see TS2(PL) standard sheets.
2. On divided highways, an additional RIGHT LANE ENDS (W9-1R) sign may be installed in the median aligned with the W9-1R sign on the right side of the highway.
3. Lane reduction arrows are required for speeds of 45 mph or greater. An optional third lane reduction arrow may be added based on engineering judgement. If used, the optional third lane reduction arrow should be centered between the first and last lane reduction arrows.
4. For lane reductions on Freeways and Expressways, signing shall conform to the TxDOT Freeway Signing Handbook.

ADVANCED WARNING SIGN DISTANCE (D)		
Posted Speed	D (ft)	L (ft)
30 MPH	460	$L=\frac{WS^2}{60}$
35 MPH	565	
40 MPH	670	
45 MPH	775	L=WS
50 MPH	885	
55 MPH	990	
60 MPH	1,100	
65 MPH	1,200	
70 MPH	1,250	
75 MPH	1,350	

GENERAL NOTES

1. Lane use word and arrow markings shall be used where through lanes approaching an intersection become mandatory turn lanes. Lane use word and arrow markings should be used in auxiliary lanes of substantial length. Lane use arrow markings or word and arrow markings may be used in other lanes and turn bays for emphasis. Details for words and arrows are as shown in the Standard Highway Sign Designs for Texas.
2. When lane-use words and arrow markings are used, two sets of arrows should be used if the length of the bay is greater than 180 feet. When a single lane use arrow or word and arrow marking is used for a short turn lane, it should be located at or near the upstream end of the full-width turn lane.
3. Use raised pavement marker Type I-C with undivided highways, flush medians and two way left turn lanes. Use raised pavement marker Type II-C-R with divided highways and raised medians.
4. Length of turn bays, including taper, deceleration, and storage lengths shall be as shown on the plans or as directed by the Engineer. See Chapter 3 of the Roadway Design Manual for additional information on turning lanes or storage lengths.

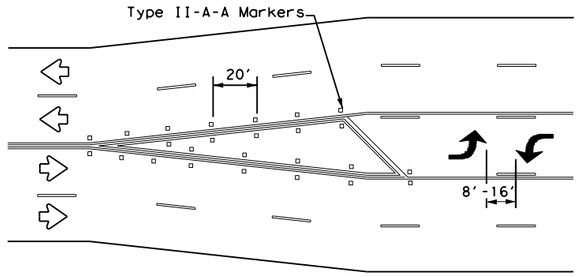

A two-way left-turn (TWLT) lane-use arrow pavement marking should be used at or just downstream from the beginning of a two-way left-turn lane within a corridor. Repeating the marking after each intersection or dedicated turn bay is not required unless stated elsewhere in the plans.

TYPICAL TRANSITION FOR TWLTL AND DIVIDED HIGHWAY

MATERIAL SPECIFICATIONS	
PAVEMENT MARKERS (REFLECTORIZED)	DMS-4200
EPOXY AND ADHESIVES	DMS-6100
BITUMINOUS ADHESIVE FOR PAVEMENT MARKERS	DMS-6130
TRAFFIC PAINT	DMS-8200
HOT APPLIED THERMOPLASTIC	DMS-8220
PERMANENT PREFABRICATED PAVEMENT MARKINGS	DMS-8240

All pavement marking materials shall meet the required Departmental Material Specifications as specified by the plans.

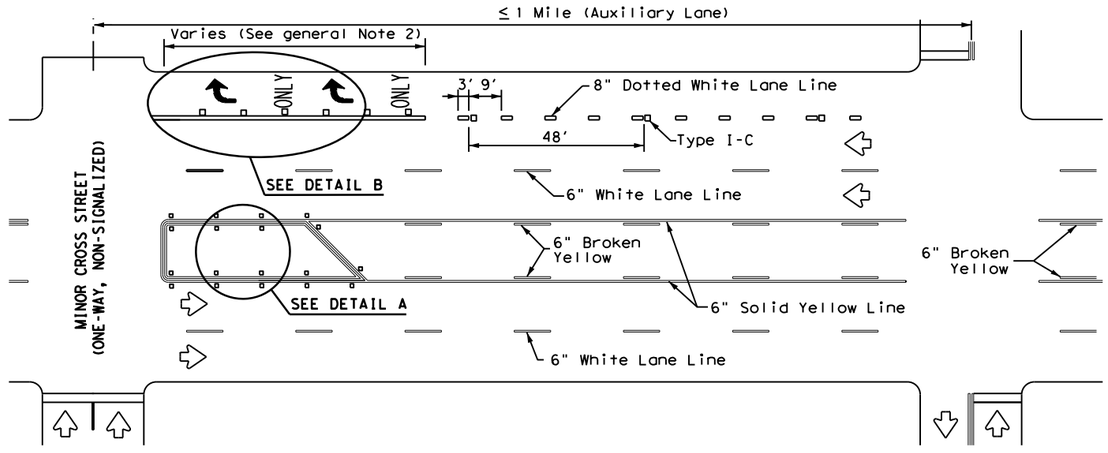

TYPICAL TWLTL AT ONE-WAY STREET AND RIGHT TURN AUXILIARY LANE

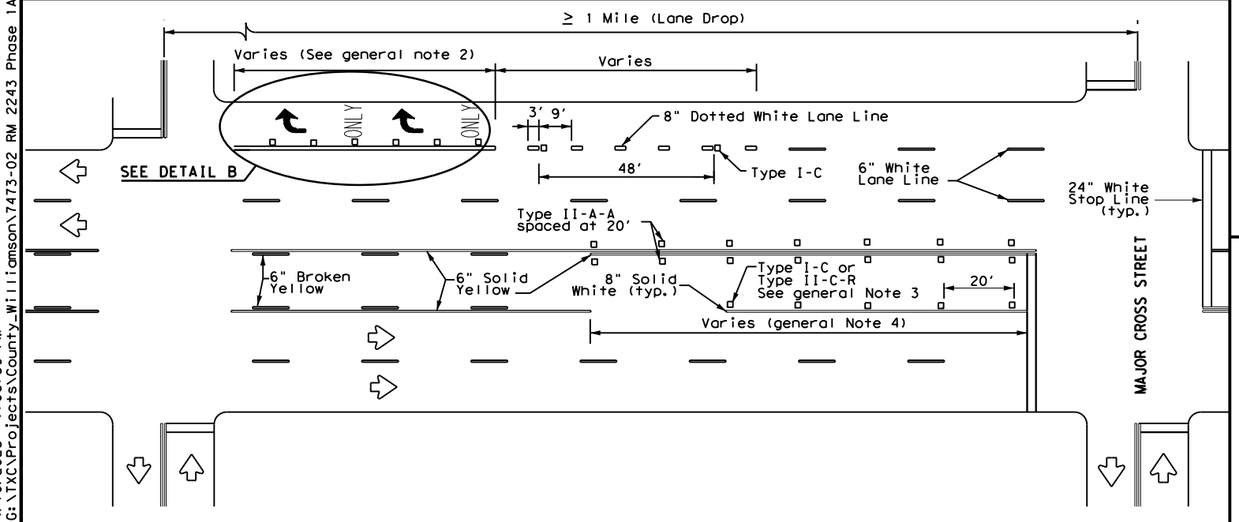

TYPICAL TWLTL AT TWO-WAY CROSS STREET AND RIGHT TURN LANE DROP

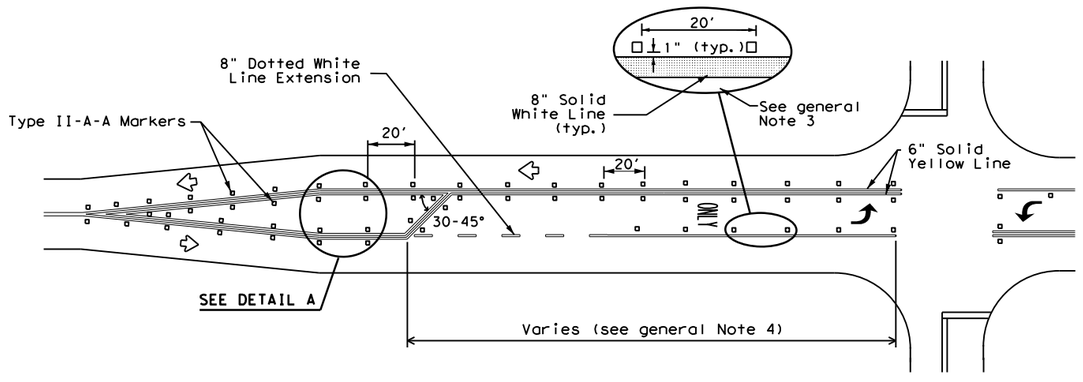

TYPICAL TWO-LANE ROADWAY INTERSECTION WITH LEFT TURN BAYS

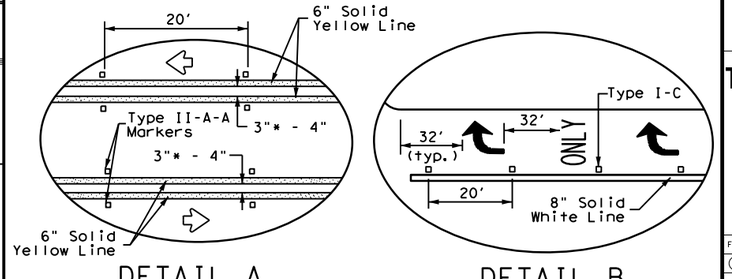

* 2" minimum allowed for restripe projects when approved by the Engineer.

Texas Department of Transportation

Traffic Safety Division Standard

TWO-WAY LEFT TURN LANES, RURAL LEFT TURN BAYS, AND LANE REDUCTION PAVEMENT MARKINGS

PM(3)-22

FILE: pm3-22.dgn	DN:	CK:	DW:	CK:
© TxDOT December 2022	CONT	SECT	JOB	HIGHWAY
REVISIONS 4-98 3-03 6-20 5-00 2-10 12-22 8-00 2-12	0914	05	222	RM 2243
	DIST	COUNTY		SHEET NO.
	AUS	WILLIAMSON		346

22C

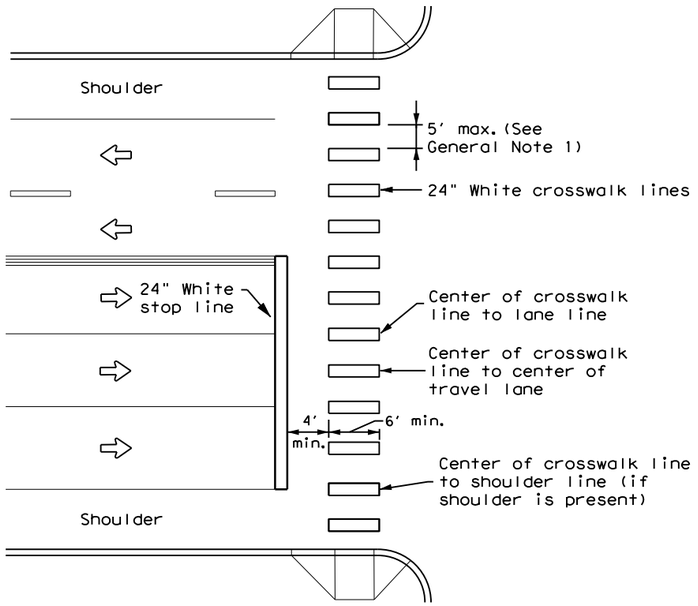

HIGH-VISIBILITY LONGITUDINAL CROSSWALK AT CONTROLLED APPROACH

GENERAL NOTES

1. Longitudinal crosswalk lines should not be placed in the wheel path of vehicles. Center the crosswalk lines on travel lanes, lane lines, and shoulder lines (if present).
2. A minimum 6" clear distance shall be provided to the curb face. If the last crosswalk line falls into this distance it must be omitted.
3. For divided roadways, adjustments in spacing of the crosswalk lines should be made in the median so that the crosswalk lines are maintained in their proper location across the travel portion of the roadway.
4. At skewed crosswalks, the crosswalk lines are to remain parallel to the lane lines.
5. Each crosswalk shall be a minimum of 6' wide.
6. The High-Visibility Longitudinal Crosswalk is the preferred crosswalk pattern on State Highways. Other crosswalk patterns as shown in the "Texas Manual on Uniform Traffic Control Devices" may be used. All crosswalk designs and dimension shall comply with the "Texas Manual on Uniform Traffic Control Devices."
7. Final placement of Stop Bar and Crosswalk shall be approved by the Engineer in the field.

MATERIAL SPECIFICATIONS	
PAVEMENT MARKERS (REFLECTORIZED)	DMS-4200
EPOXY AND ADHESIVES	DMS-6100
BITUMINOUS ADHESIVE FOR PAVEMENT MARKERS	DMS-6130
TRAFFIC PAINT	DMS-8200
HOT APPLIED THERMOPLASTIC	DMS-8220
PERMANENT PREFABRICATED PAVEMENT MARKINGS	DMS-8240

All pavement marking materials shall meet the required Departmental Material Specifications as specified by the plans.

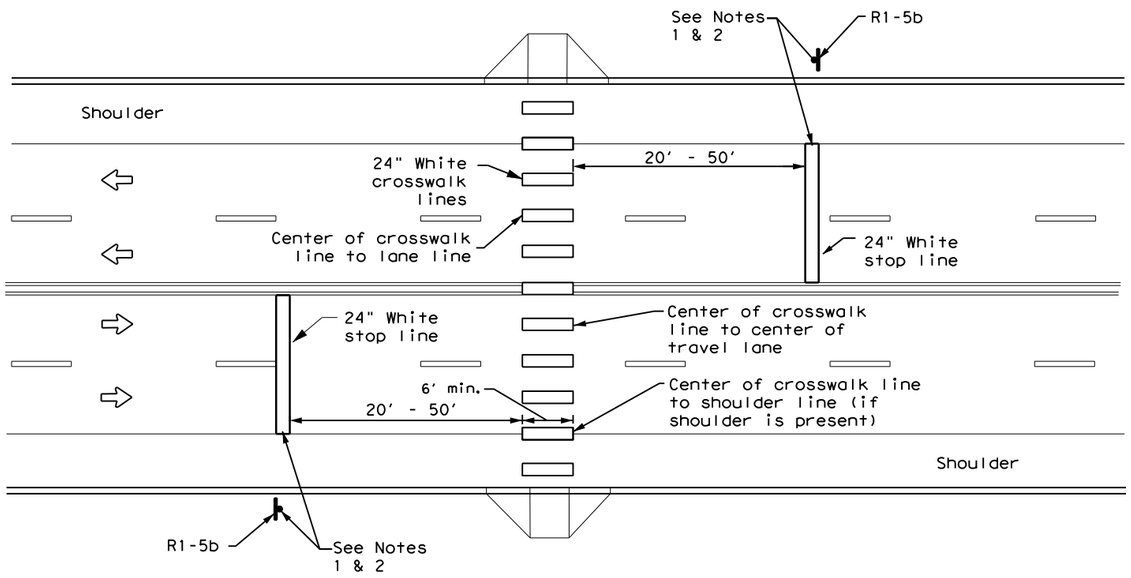

UNSIGNALIZED MIDBLOCK HIGH-VISIBILITY LONGITUDINAL CROSSWALK

NOTES:

1. Use stop bars with Stop Here For Pedestrians (R1-5b) signs at unsignalized midblock cross walks.
2. Use stop bars with STOP HERE ON RED (R10-6 or R10-6a) signs at mid block crosswalks controlled by traffic signals or pedestrian hybrid beacons.

Texas Department of Transportation | Traffic Safety Division Standard

CROSSWALK PAVEMENT MARKINGS

PM(4)-22A

FILE: pm4-22a.dgn	DN:	CK:	DW:	CK:
© TxDOT December 2022	CONT	SECT	JOB	HIGHWAY
REVISIONS 6-20 6-22 12-22 22D	0914	05	222	RM 2243
	DIST		COUNTY	SHEET NO.
	AUS		WILLIAMSON	347

DISCLAIMER:
The use of this standard is governed by the "Texas Engineering Practice Act". No warranty of any kind is made by TxDOT for any purpose whatsoever. TxDOT assumes no responsibility for the conversion of this standard to other formats or for incorrect results or damages resulting from its use.

DATE: 4/10/2025 1:07:00 PM
FILE: G:\TXC\Projects\County_Williamson\7473-02 RM 2243 Phase 1A\03_CADD\01-Sheets\03-SHMD\Sheets\pm4-22a.dgn

DISCLAIMER: The use of this standard is governed by the "Texas Engineering Practice Act". No warranty of any kind is made by TxDOT for any purpose whatsoever. TxDOT assumes no responsibility for the conversion of this standard to other formats or for incorrect results or damages resulting from its use.

DATE: 4/10/2025 1:07:01 PM
FILE: G:\TxCV\Projects\County\Williamson\7473-02 RM 2243 Phase 1A\03*CADD\01*Snts\08-SPMD\Stds\smdgen.dgn

SIGN SUPPORT DESCRIPTIVE CODES

(Descriptive Codes correspond to project estimate and quantities sheets)

SM RD SGN ASSM TY XXXXX(X)XX(X-XXXX)

Post Type

FRP = Fiberglass Reinforced Plastic Pipe (see SMD(FRP))
TWT = Thin-Walled Tubing (see SMD(TWT))
10BWG = 10 BWG Tubing (see SMD(SLIP-1) to (SLIP-3))
S80 = Schedule 80 Pipe (see SMD(SLIP-1) to (SLIP-3))

Number of Posts (1 or 2)

Anchor Type

UA = Universal Anchor - Concreted (see SMD(FRP) and (TWT))
UB = Universal Anchor - Bolted down (see SMD(FRP) and (TWT))
WS = Wedge Anchor Steel - (see SMD(TWT))
WP = Wedge Anchor Plastic (see SMD(TWT))
SA = Slipbase - Concreted (see SMD(SLIP-1) to (SLIP-3))
SB = Slipbase - Bolted Down (see SMD(SLIP-1) to (SLIP-3))

Sign Mounting Designation

P = Prefab. "Plain" (see SMD(SLIP-1) to (SLIP-3), (TWT), (FRP))
T = Prefab. "T" (see SMD(SLIP-1) to (SLIP-3), (TWT))
U = Prefab. "U" (see SMD(SLIP-1) to (SLIP-3))
IF REQUIRED
1EXT or 2EXT = Number of Extensions (see SMD(SLIP-1) to (SLIP-3), (TWT))
BM = Extruded Wind Beam (see SMD(SLIP-1) to (SLIP-3))
WC = 1.12 #/ft Wing Channel (see SMD(SLIP-1) to (SLIP-3))
EXAL = Extruded Aluminum Sign Panels (see SMD(SLIP-1) to (SLIP-3))

REQUIRED CLEARANCE FOR BREAKAWAY SUPPORT

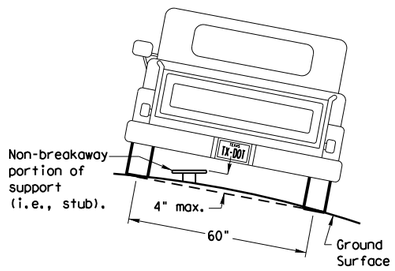

To avoid vehicle undercarriage snagging, any substantial remains of a breakaway support, when it is broken away, should not project more than 4 inches above a 60-inch chord (i.e., typical space between wheel paths).

SIGN LOCATION

PAVED SHOULDERS

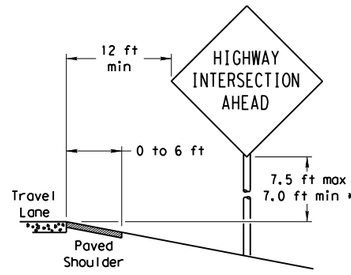

LESS THAN 6 FT. WIDE

When the shoulder is 6 ft. or less in width, the sign must be placed at least 12 ft. from the edge of the travel lane.

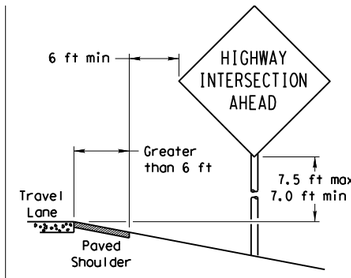

GREATER THAN 6 FT. WIDE

When the shoulder is greater than 6 ft in width, the sign must be placed at least 6 ft. from the edge of the shoulder.

BEHIND BARRIER

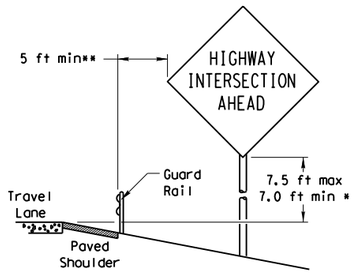

BEHIND GUARDRAIL

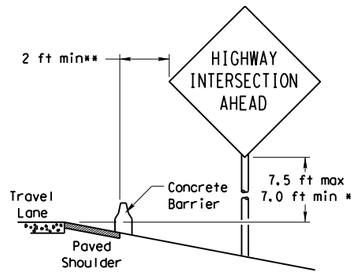

BEHIND CONCRETE BARRIER

**Sign clearance based on distance required for proper guard rail or concrete barrier performance.

T-INTERSECTION

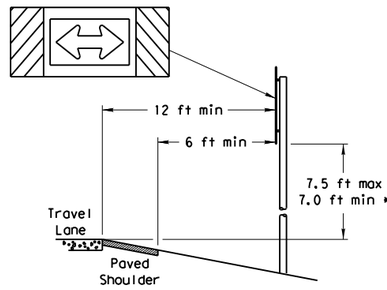

When this sign is needed at the end of a two-lane, two way roadway, the right edge of the sign should be in line with the centerline of the roadway. Place as close to ROW as practical.

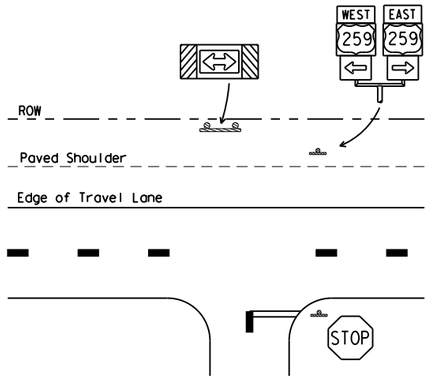

* Signs shall be mounted using the following condition that results in the greatest sign elevation:

(1) a minimum of 7 to a maximum of 7.5 feet above the edge of the travel lane or

(2) a minimum of 7 to a maximum of 7.5 feet above the grade at the base of the support when sign is installed on the backslope.

The maximum values may be increased when directed by the Engineer.

See the Traffic Operations Division website for detailed drawings of sign clamps, Triangular Slipbase System components and Wedge Anchor System components.

The website address is:
http://www.txdot.gov/publications/traffic.htm

No more than 2 sign posts should be located within a 7 ft. circle.

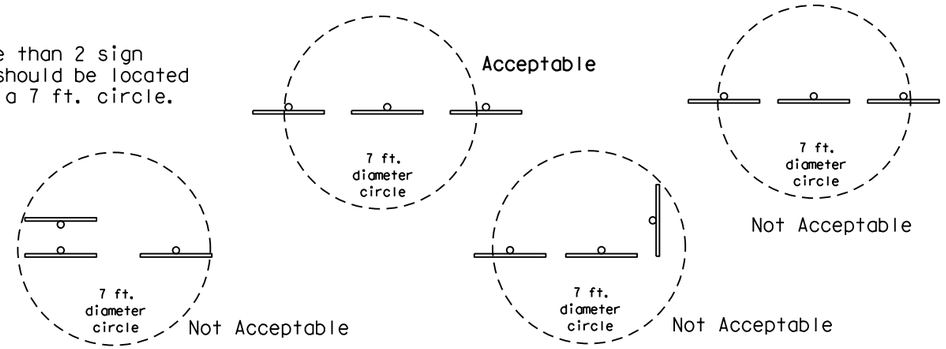

TYPICAL SIGN ATTACHMENT DETAIL

Single Signs

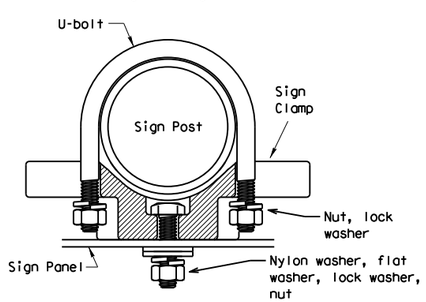

Bolts used to mount sign panels to the clamp are 5/16-18 UNC galvanized square head with nut, nylon washer, flat washer and lock washer. The bolt length is 1 inch for aluminum.

When two sign clamps are used to mount signs back-to-back, use a 5/16-18 UNC galvanized hex head per ASTM A307 with nut and helical-spring lock washer. The approximate bolt lengths for various post sizes and sign clamp types are given in the table at right. The bolt length may need to be adjusted depending upon field conditions.

Sign clamps may be either the specific size clamp or the universal clamp.

Back-to-Back Signs

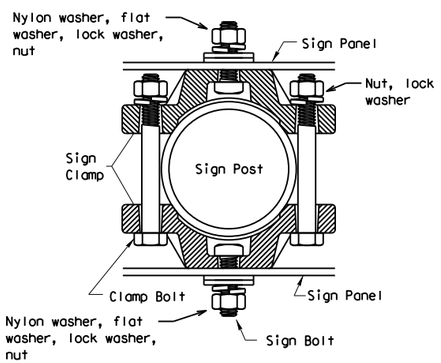

Pipe Diameter	Approximate Bolt Length	
	Specific Clamp	Universal Clamp
2" nominal	3"	3 or 3 1/2"
2 1/2" nominal	3 or 3 1/2"	3 1/2 or 4"
3" nominal	3 1/2 or 4"	4 1/2"

SIGNS WITH PLAQUES

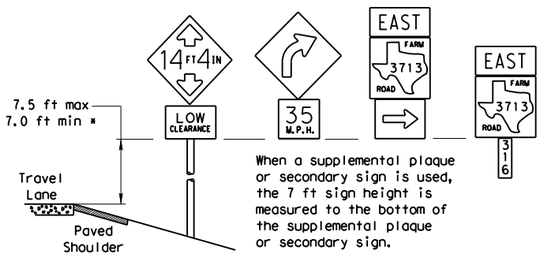

When a supplemental plaque or secondary sign is used, the 7 ft sign height is measured to the bottom of the supplemental plaque or secondary sign.

CURB & GUTTER OR RAISED ISLAND

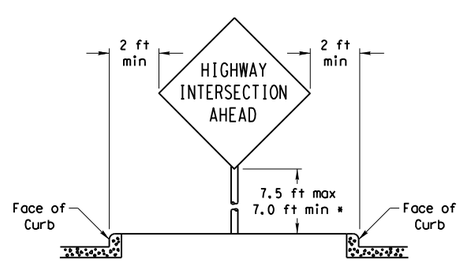

RESTRICTED RIGHT-OF-WAY

(When 6 ft min. is not possible.)

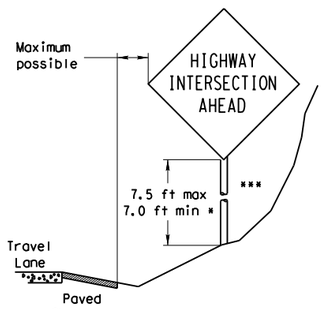

Right-of-way restrictions may be created by rocks, water, vegetation, forest, buildings, a narrow island, or other factors.

In situations where a lateral restriction prevents the minimum horizontal clearance from the edge of the travel lane, signs should be placed as far from the travel lane as practical.

*** Post may be shorter if protected by guardrail or if Engineer determines the post could not be hit due to extreme slope.

Texas Department of Transportation
Traffic Operations Division

SIGN MOUNTING DETAILS SMALL ROADSIDE SIGNS GENERAL NOTES & DETAILS

SMD(GEN)-08

©TxDOT July 2002

REVISIONS	DN: TXDOT	CK: TXDOT	DW: TXDOT	CK: TXDOT
9-08	CONT	SECT	JOB	HIGHWAY
	0914	05	222	RM 2243
	DIST	COUNTY		SHEET NO.
	AUS	WILLIAMSON		348

DISCLAIMER: The use of this standard is governed by the "Texas Engineering Practice Act". No warranty of any kind is made by TxDOT for any purpose whatsoever. TxDOT assumes no responsibility for the conversion of this standard to other formats or for incorrect results or damages resulting from its use.

DATE: 4/10/2025 1:07:02 PM
FILE: G:\TXC\Projects\County\Williamson\7473-02 RM 2243 Phase 1A\03*CADD\01*Shts\08-SPMD\Strds\smdsl.dgn

TRIANGULAR SLIPBASE INSTALLATION GENERAL REQUIREMENTS

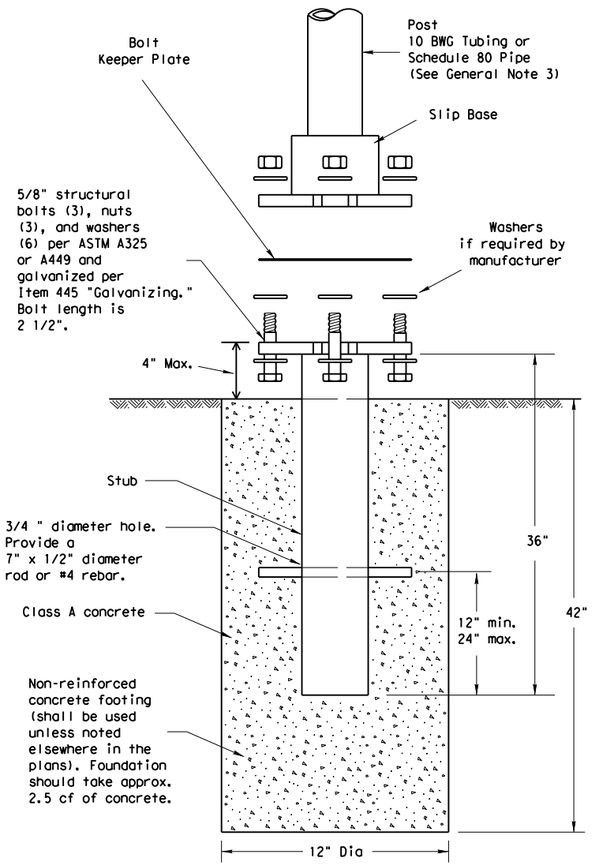

SM RD SGN ASSM TY XXXXX(X)SA(X-XXXX)

NOTE

There are various devices approved for the Triangular Slipbase System. Please reference the Material Producer List for approved slip base systems. http://www.txdot.gov/business/producer_list.htm The devices shall be installed per manufacturers' recommendations. Installation procedures shall be provided to the Engineer by Contractor.

GENERAL NOTES:

1. Slip base shall be permanently marked to indicate manufacturer. Method, design, and location of marking are subject to approval of the TxDOT Traffic Standards Engineer.
2. Material used as post with this system shall conform to the following specifications:
   10 BWG Tubing (2.875" outside diameter)
   - 0.134" nominal wall thickness
   - Seamless or electric-resistance welded steel tubing or pipe
   - Steel shall be HSLAS Gr 55 per ASTM A1011 or ASTM A1008
   - Other steels may be used if they meet the following:
     - 55,000 PSI minimum yield strength
     - 70,000 PSI minimum tensile strength
     - 20% minimum elongation in 2"
   - Wall thickness (uncoated) shall be within the range of 0.122" to 0.138"
   - Outside diameter (uncoated) shall be within the range of 2.867" to 2.883"
   - Galvanization per ASTM A123 or ASTM A653 G210. For precoated steel tubing (ASTM A653), recoat tube outside diameter weld seam by metallizing with zinc wire per ASTM B833.

   Schedule 80 Pipe (2.875" outside diameter)
   - 0.276" nominal wall thickness
   - Steel tubing per ASTM A500 Gr C
   - Other seamless or electric-resistance welded steel tubing or pipe with equivalent outside diameter and wall thickness may be used if they meet the following:
     - 46,000 PSI minimum yield strength
     - 62,000 PSI minimum tensile strength
     - 21% minimum elongation in 2"
   - Wall thickness (uncoated) shall be within the range of 0.248" to 0.304"
   - Outside diameter (uncoated) shall be within the range of 2.855" to 2.895"
   - Galvanization per ASTM A123
3. See the Traffic Operations Division website for detailed drawings of sign clamps and Texas Universal Triangular Slipbase System components. The website address is: http://www.txdot.gov/publications/traffic.htm
4. Sign supports shall not be spliced except where shown. Sign support posts shall not be spliced.

ASSEMBLY PROCEDURE

Foundation
1. Prepare 12-inch diameter by 42-inch deep hole. If solid rock is encountered, the depth of the foundation may be reduced such that it is embedded a minimum of 18 inches into the solid rock.
2. The Engineer may permit batches of concrete less than 2 cubic yards to be mixed with a portable, motor-driven concrete mixer. For small placements less than 0.5 cubic yards, hand mixing in a suitable container may be allowed by Engineer. Concrete shall be Class A.
3. Push the pipe end of the slip base stub into the center of the concrete. Rotate the stub back and forth while pushing it down into the concrete to assure good contact between the concrete and stub. Continue to work the stub into the concrete until it is between 2 to 4 inches above the ground.
4. Plumb the stub. Allow a minimum of 4 days to set, unless otherwise directed by the Engineer.
5. The triangular slipbase system is multidirectional and is designed to release when struck from any direction.

Support
1. Cut support so that the bottom of the sign will be 7 to 7.5 feet above the edge of the travelway (i.e., edge of the closest lane) when slip plate is below the edge of pavement or 7 to 7.5 feet above slip plate when the slip plate is above the edge of the travelway. The cut shall be plumb and straight.
2. Attach sign to support using connections shown. When multiple signs are installed on the same support, ensure the minimum clearance between each sign is maintained. See SMD(SLIP-2) for clearances based on sign types.

CONCRETE ANCHOR

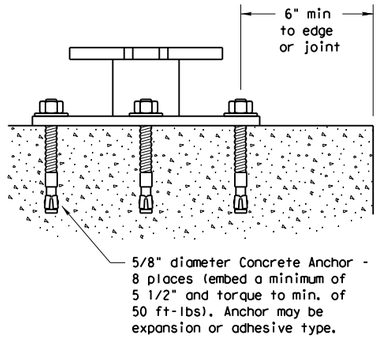

SM RD SGN ASSM TY XXXXX(X)SB(X-XXXX)

Concrete anchor consists of 5/8" diameter stud bolt with UNC series bolt threads on the upper end. Heavy hex nut per ASTM A563, and hardened washer per ASTM F436. The stud bolt shall have a minimum yield and ultimate tensile strength of 50 and 75 KSI, respectively. Nuts, bolts and washers shall be galvanized per Item 445, "Galvanizing." Adhesive type anchors shall have stud bolts installed with Type III epoxy per DMS-6100, "Epoxies and Adhesives." Adhesive anchors may be loaded after adequate epoxy cure time per the manufacturer's recommendations. Top of bolt shall extend at least flush with top of the nut when installed. The anchor, when installed in 4000 psi normal-weight concrete with a 5 1/2" minimum embedment, shall have a minimum allowable tension and shear of 3900 and 3100 psi, respectively.

Texas Department of Transportation
Traffic Operations Division

SIGN MOUNTING DETAILS
SMALL ROADSIDE SIGNS
TRIANGULAR SLIPBASE SYSTEM
SMD(SLIP-1)-08

©TxDOT July 2002

REVISIONS	DN: TXDOT	CK: TXDOT	DW: TXDOT	CK: TXDOT
9-08	CONT	SECT	JOB	HIGHWAY
	0914	05	222	RM 2243
	DIST	COUNTY		SHEET NO.
	AUS	WILLIAMSON		349

DISCLAIMER: The use of this standard is governed by the "Texas Engineering Practice Act". No warranty of any kind is made by TxDOT for any purpose whatsoever. TxDOT assumes no responsibility for the conversion of this standard to other formats or for incorrect results or damages resulting from its use.

DATE: 4/10/2025 1:07:03 PM
FILE: G:\TXC\Projects\County\Williamson\7473-02 RM 2243 Phase 1A\03\CADD\01\Shts\08-SPMD\Stds\smds2.dgn

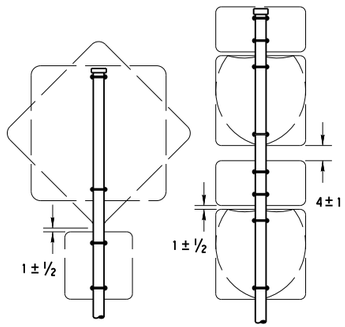

SM RD SGN ASSM TY XXXXX(1)XX(P)

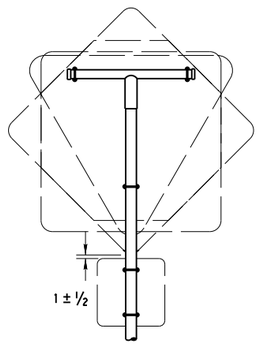

SM RD SGN ASSM TY XXXXX(1)XX(T)

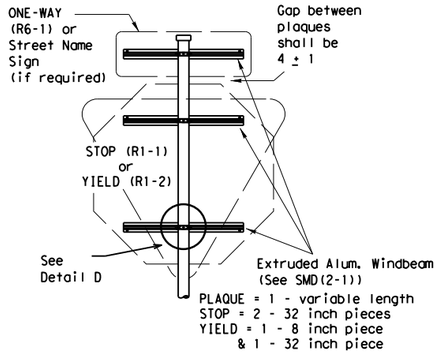

SM RD SGN ASSM TY XXXXX(1)XX(P-BM)

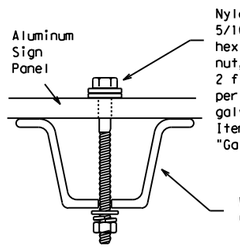

Detail A

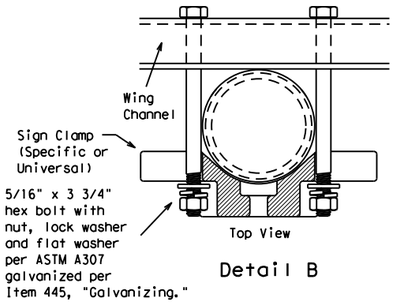

Detail B

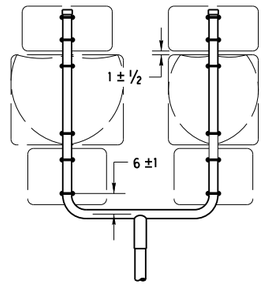

SM RD SGN ASSM TY XXXXX(1)XX(U)

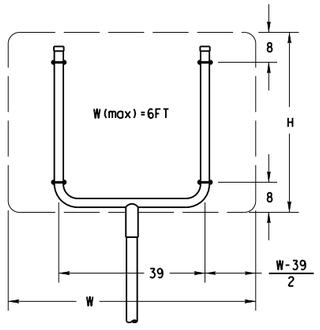

SM RD SGN ASSM TY XXXXX(1)XX(U)

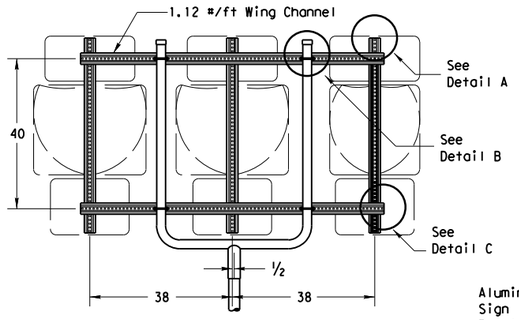

SM RD SGN ASSM TY XXXXX(1)XX(U-WC)
(See Note 11)

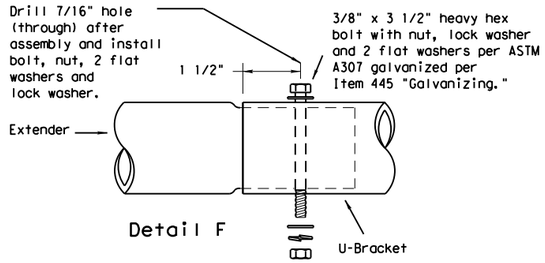

Detail F

Splices shall only be allowed behind the sign substrate.

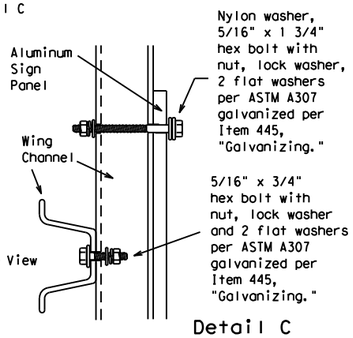

Detail C

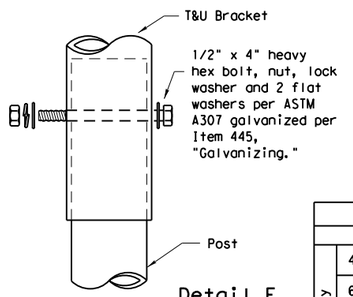

Detail E

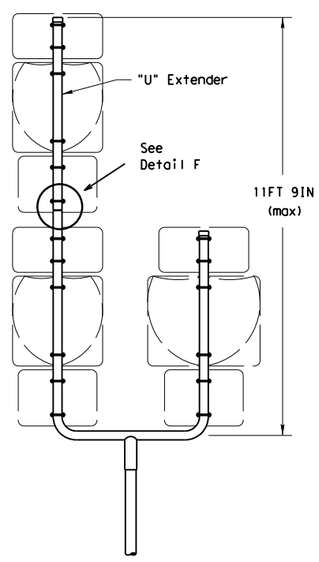

SM RD SGN ASSM TY S80(1)XX(U-1EXT)

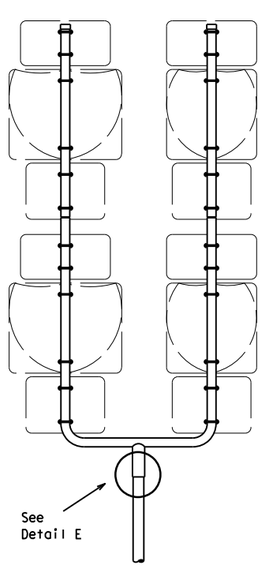

SM RD SGN ASSM TY S80(1)XX(U-2EXT)

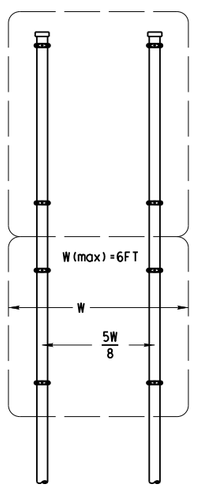

SM RD SGN ASSYM TY XXXXX(2)XX(P)

SIDE VIEW

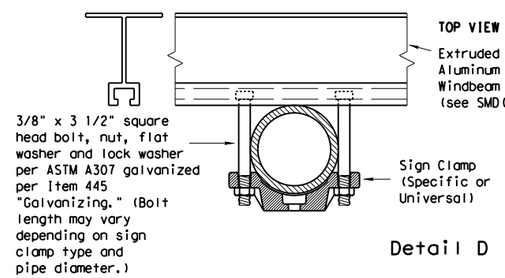

Detail D

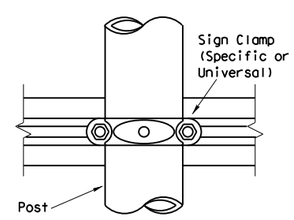

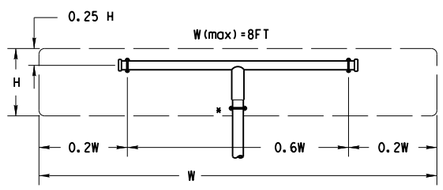

SM RD SGN ASSM TY XXXXX(1)XX(T)
(* - See Note 12)

All dimensions are in english unless detailed otherwise.

FRICTION CAP DETAIL

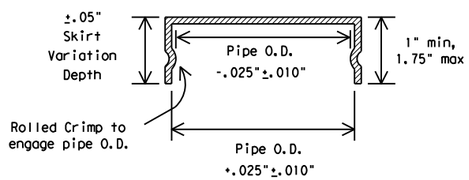

Friction caps may be manufactured from hot rolled or cold rolled steel sheets. The minimum sheet metal thickness shall be 24 gauge for all cap sizes.

The rim edges shall be reasonably straight and smooth. Caps shall be sized and formed in such a manner as to produce a drive-on friction fit and have no tendency to rock when seated on the pipe. The depth shall be sufficient to give positive protection against entrance of rainwater. They shall be free of sharp creases or indentations and show no evidence of metal fracture.

Caps shall have an electrodeposited coating of zinc in accordance with the requirements of ASTM B633 Class FE/ZN 8.

GENERAL NOTES:

1.

SIGN SUPPORT	# OF POSTS	MAX. SIGN AREA
10 BWG	1	16 SF
10 BWG	2	32 SF
Sch 80	1	32 SF
Sch 80	2	64 SF

2. The Engineer may require that a Schedule 80 post be used in place of a 10 BWG where a sign height is abnormally high due to a fill slope.
3. Sign supports shall not be spliced except where shown. Sign support posts shall not be spliced.
4. Aluminum sign blanks shall conform to Departmental Material Specifications DMS-7110 and shall have the following minimum thicknesses: 0.080 for signs less than 7.5 sq. ft., 0.100 for signs 7.5 to 15 sq. ft., and 0.125 for signs greater than 15 sq. ft.
5. Signs that require specific supports due to reasons in addition to windloading are indicated on the "REQUIRED SUPPORT" table on this sheet.
6. For horizontal rectangular signs fabricated from flat aluminum, T-brackets are used for signs 24 inches or less in height. U-brackets are used for signs of greater height.
7. When two triangular slipbase supports are used to support a single sign, they shall not be "rigidly" connected to each other except through the sign panel. This will allow each support to act independently when impacted by an errant vehicle.
8. Wing channel shall meet ASTM A 1011 SS Gr 50 and be galvanized per ASTM A 123.
9. Excess pipe, wing channel, or windbeam shall be cut off so that it does not extend beyond the sign panel (i.e., excess support shall not be visible when the sign is viewed from the front.) Repair galvanized coating at cut support ends per Item 445, "Galvanizing."
10. Additional route markers may be added vertically, provided the total sign area does not exceed the maximum allowable amount per Note 1.
11. Additional sign clamp required on the "T-bracket" post for 24 inch height signs. Place the clamp 3 inches above bottom of sign when possible.
12. Post open ends shall be fitted with Friction Caps.
13. Sign blanks shall be the sizes and shapes shown on the plans.

REQUIRED SUPPORT

	SIGN DESCRIPTION	SUPPORT
Regulatory	48-inch STOP sign (R1-1)	TY 10BWG(1)XX(T) TY 10BWG(1)XX(P-BM)
	60-inch YIELD sign (R1-2)	TY 10BWG(1)XX(T) TY 10BWG(1)XX(P-BM)
	48x16-inch ONE-WAY sign (R6-1)	TY 10BWG(1)XX(T) TY 10BWG(1)XX(P-BM)
	36x48, 48x36, and 48x48-inch signs	TY 10BWG(1)XX(T)
	48x60-inch signs	TY S80(1)XX(T)
Warning	48x48-inch signs (diamond or square)	TY 10BWG(1)XX(T)
	48x60-inch signs	TY S80(1)XX(T)
	48-inch Advance School X-ing sign (S1-1)	TY 10BWG(1)XX(T)
	48-inch School X-ing sign (S2-1)	TY 10BWG(1)XX(T)
	Large Arrow sign (W1-6 & W1-7)	TY 10BWG(1)XX(T)

Texas Department of Transportation
Traffic Operations Division

SIGN MOUNTING DETAILS SMALL ROADSIDE SIGNS TRIANGULAR SLIPBASE SYSTEM

SMD(SLIP-2)-08

©TxDOT July 2002

DN: TXDOT	CK: TXDOT	DW: TXDOT	CK: TXDOT

CONT	SECT	JOB	HIGHWAY
0914	05	222	RM 2243

DIST	COUNTY	SHEET NO.
AUS	WILLIAMSON	350

9-08 REVISIONS

DISCLAIMER: The use of this standard is governed by the "Texas Engineering Practice Act". No warranty of any kind is made by TxDOT for any purpose whatsoever. TxDOT assumes no responsibility for the conversion of this standard to other formats or for incorrect results or damages resulting from its use.

DATE: 4/10/2025 1:07:04 PM
FILE: G:\TXC\Projects\County\Williamson\7473-02 RM 2243 Phase 1A\03\CADD\01\Shts\08-SPMD\Stds\smds3.dgn

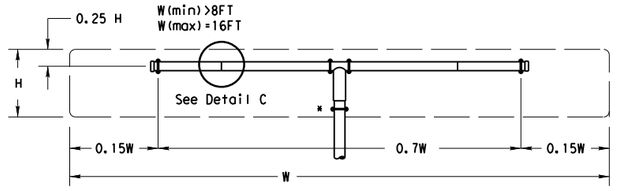

SM RD SGN ASSM TY XXXXX(1)XX(T-2EXT)
(* - See Note 12)

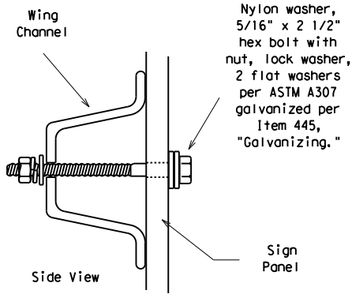

Detail B

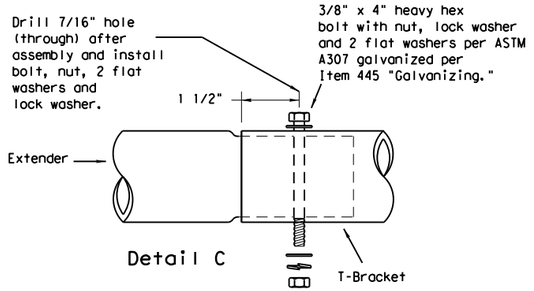

Detail C

Splices shall only be allowed behind the sign substrate.

GENERAL NOTES:

SIGN SUPPORT	# OF POSTS	MAX. SIGN AREA
10 BWG	1	16 SF
10 BWG	2	32 SF
Sch 80	1	32 SF
Sch 80	2	64 SF

1. See table above.
2. The Engineer may require that a Schedule 80 post be used in place of a 10 BWG where a sign height is abnormally high due to a fill slope.
3. Sign supports shall not be spliced except where shown. Sign support posts shall not be spliced.
4. Aluminum sign blanks shall conform to Departmental Material Specifications DMS-7110 and shall have the following minimum thicknesses: 0.080 for signs less than 7.5 sq. ft., 0.100 for signs 7.5 to 15 sq. ft., and 0.125 for signs greater than 15 sq. ft.
5. Signs that require specific supports due to reasons in addition to windloading are indicated on the "REQUIRED SUPPORT" table on this sheet.
6. For horizontal rectangular signs fabricated from flat aluminum, T-brackets are used for signs 24 inches or less in height. U-brackets are used for signs of greater height.
7. When two triangular slipbase supports are used to support a single sign, they shall not be "rigidly" connected to each other except through the sign panel. This will allow each support to act independently when impacted by an errant vehicle.
8. Wing channel shall meet ASTM A 1011 SS Gr 50 and be galvanized per ASTM A 123.
9. Excess pipe, wing channel, or windbeam shall be cut off so that it does not extend beyond the sign panel (i.e., excess support shall not be visible when the sign is viewed from the front.) Repair galvanized coating at cut support ends per Item 445, "Galvanizing."
10. Sign blanks shall be the sizes and shapes shown on the plans.
11. Additional sign clamp required on the "T-bracket" post for 24 inch high signs. Place the clamp 3 inches above bottom of sign when possible.
12. Post open ends shall be fitted with Friction Caps.

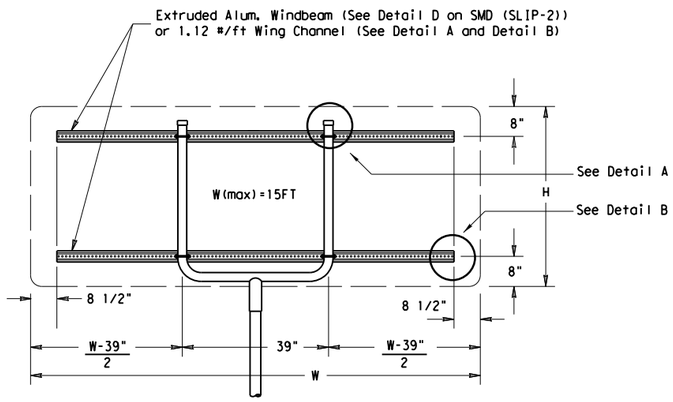

SM RD SGN ASSM TY XXXXX(1)XX(U-XX)

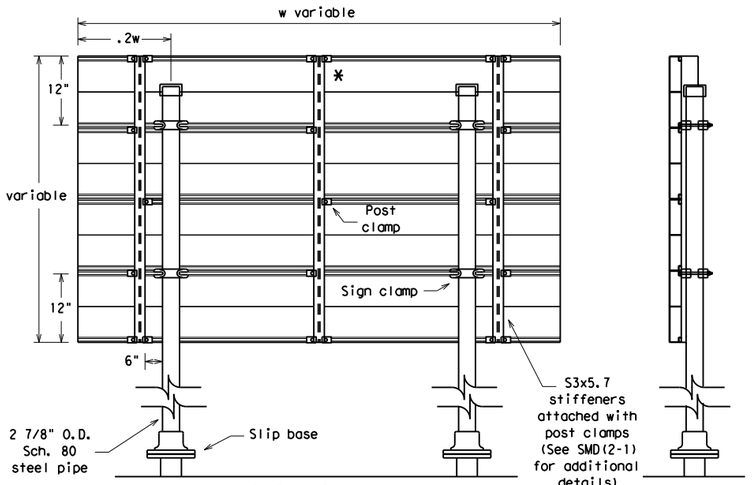

Typical Sign Mount

SM RD SGN ASSM TY S80(2)XX(P-EXAL)

* Additional stiffener placed at approximate center of signs when sign width is greater than 10'.

See Detail E
for clamp installation

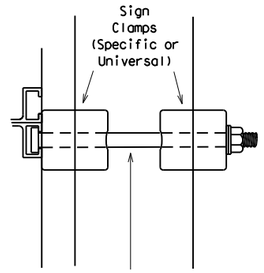

Detail E

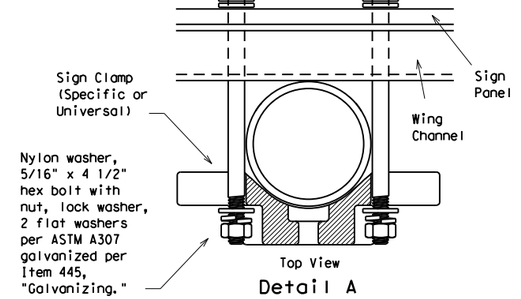

Detail A

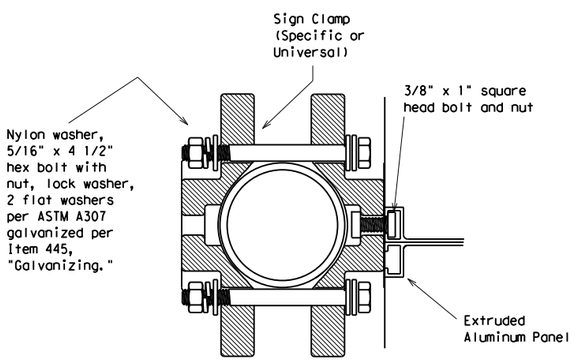

Detail D
EXTRUDED ALUMINUM SIGN WITH T BRACKET

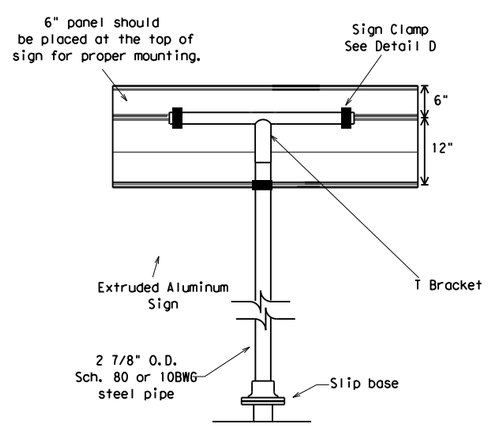

Extruded Aluminum Sign
With T Bracket

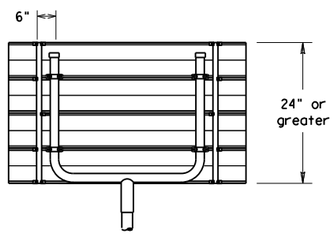

Use Extruded Alum. Windbeam as stiffeners
See SMD (2-1) for additional details

See Detail E
for clamp installation

REQUIRED SUPPORT		
	SIGN DESCRIPTION	SUPPORT
Regulatory	48-inch STOP sign (R1-1)	TY 10BWG(1)XX(T) TY 10BWG(1)XX(P-BM)
	60-inch YIELD sign (R1-2)	TY 10BWG(1)XX(T) TY 10BWG(1)XX(P-BM)
	48x16-inch ONE-WAY sign (R6-1)	TY 10BWG(1)XX(T) TY 10BWG(1)XX(P-BM)
	36x48, 48x36, and 48x48-inch signs	TY 10BWG(1)XX(T)
	48x60-inch signs	TY S80(1)XX(T)
Warning	48x48-inch signs (diamond or square)	TY 10BWG(1)XX(T)
	48x60-inch signs	TY S80(1)XX(T)
	48-inch Advance School X-ing sign (S1-1)	TY 10BWG(1)XX(T)
	48-inch School X-ing sign (S2-1)	TY 10BWG(1)XX(T)
	Large Arrow sign (W1-6 & W1-7)	TY 10BWG(1)XX(T)

Texas Department of Transportation
Traffic Operations Division

SIGN MOUNTING DETAILS SMALL ROADSIDE SIGNS TRIANGULAR SLIPBASE SYSTEM

SMD(SLIP-3)-08

© TxDOT July 2002

REVISIONS	DN: TXDOT	CK: TXDOT	DW: TXDOT	CK: TXDOT
9-08	CONT	SECT	JOB	HIGHWAY
	0914	05	222	RM 2243
	DIST	COUNTY		SHEET NO.
	AUS	WILLIAMSON		351

DISCLAIMER:
The use of this standard is governed by the "Texas Engineering Practice Act". No warranty of any kind is made by TxDOT for any purpose whatsoever. TxDOT assumes no responsibility for the conversion of this standard to other formats or for incorrect results or damages resulting from its use.

DATE: 4/10/2025 1:07:05 PM
FILE: G:\TXC\Projects\County\Williamson\7473-02 RM 2243 Phase 1A\03*CADD\01*Snts\08-SPMD\Stds\smdtwr.dgn

Wedge Anchor Steel System

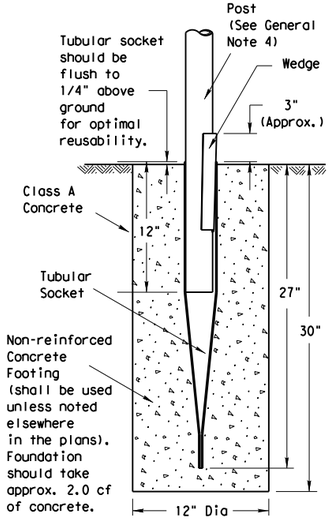

SM RD SGN ASSM TY TWT(X)WS(X)

Wedge Anchor High Density Polyethylene (HDPE) System

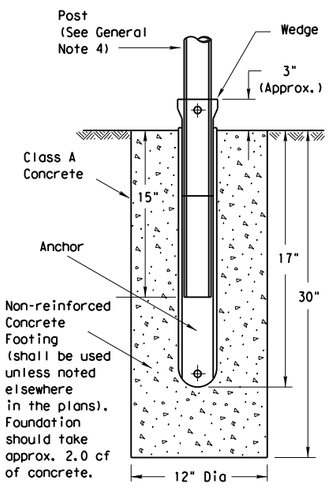

SMD RD SGN ASSM TY TWT(X)WP(X)

Universal Anchor System with Thin-Walled Tubing Post

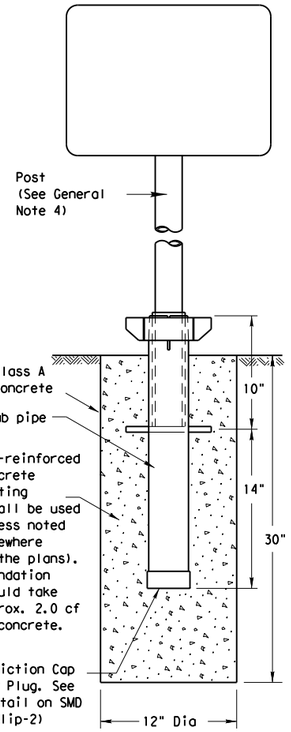

SM RD SGN ASSM TY TWT(X)UA(P)

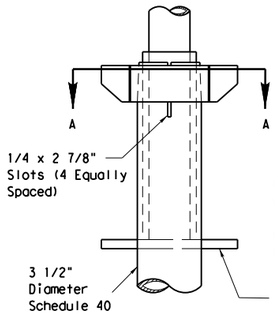

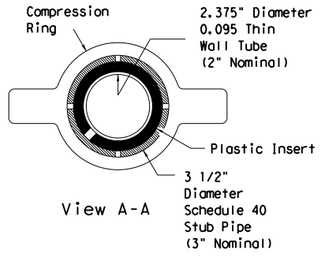

View A-A

Plastic insert must be used when using the TWT with either the Universal Anchor System or the Bolt Down Universal Anchor System. The insert should be approx. 10" long and cover the tubing from just above the top of the stub pipe to the bottom of the sign post when using the Universal Anchor System. The insert should be cut to approx. 4 1/2" when used with the Bolt Down Universal Anchor System.

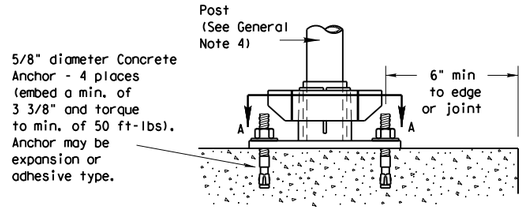

Concrete anchor consists of 5/8" diameter stud bolt with UNC series bolt threads on the upper end. A heavy hex nut per ASTM A563 and hardened washer per ASTM F436. The stud bolt shall have minimum yield and ultimate tensile strengths of 50 and 75 ksi, respectively. Nuts, bolts and washers shall be galvanized per Item 445, "Galvanizing." Top of bolt shall extend at least flush with top of nut when installed. The anchor, when installed in 4000 psi normal-weight concrete with a 3 3/8" minimum embedment, shall have a minimum allowable tension and shear of 2450 and 1525 psi, respectively. Adhesive type anchors shall have stud bolts installed with Type III epoxy per DMS-6100, "Epoxies and Adhesives." Adhesive anchors may be loaded after adequate epoxy cure time per the manufacturer's recommendations.

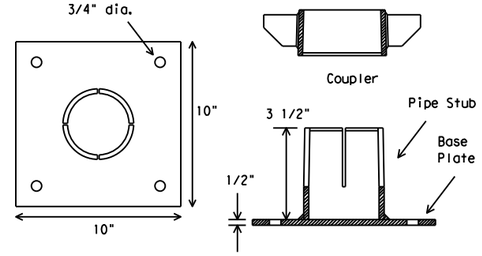

SM RD SGN ASSM TY TWT(X)UB(P)

Sign Installation Using a Prefabricated T-Bracket for Thin-Wall Tubing Post

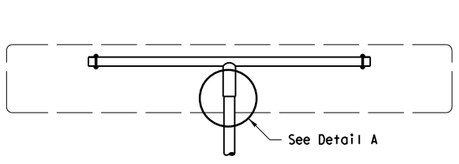

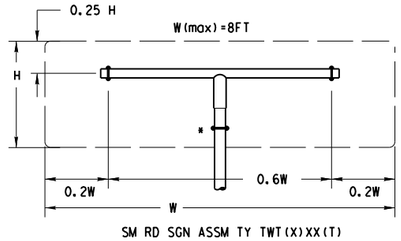

SM RD SGN ASSM TY TWT(X)XX(T)
(* - See General Note 6)

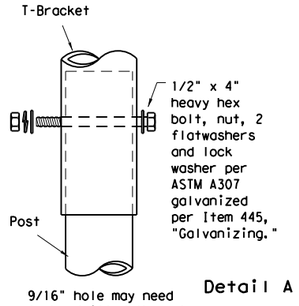

Detail A

9/16" hole may need to be drilled through post to accommodate bolt.

NOTE

The devices shall be installed per manufacturer's recommendations.
Installation procedures shall be provided to the Engineer by Contractor.

GENERAL NOTES:

1. The Wedge Anchor System and the Universal Anchor System with thin wall tubing post may be used to support up to 10 square feet of sign area.
2. The tubular socket, wedge and prefabricated T-bracket shall be permanently marked to indicate manufacturer. Method, design, and location of marking are subject to the approval of the TxDOT Traffic Standards Engineer.
3. Except for posts (13 BWG Tubing), clamps, nuts and bolts, all components shall be prequalified. A list of prequalified vendors may be obtained from the Material Producer List web page. The website address is: http://www.txdot.gov/business/producer list.htm
4. Material used as post with this system shall conform to the following specifications:
   13 BWG Tubing (2.375" outside diameter) (TWT)
   0.095" nominal wall thickness
   Seamless or electric-resistance welded steel tubing
   Steel shall be HSLAS Gr 55 per ASTM A1011 or ASTM A1008
   Other steels may be used if they meet the following:
   55,000 PSI minimum yield strength
   70,000 PSI minimum tensile strength
   18% minimum elongation in 2"
   Wall thickness (uncoated) shall be within the range of .083" to .099"
   Outside diameter (uncoated) shall be within the range of 2.369" to 2.381"
   Galvanization per ASTM 123 or ASTM A653 G210. For precoated steel tubing (ASTM A653), recoat tube outside diameter weld seam by metallizing with zinc wire per ASTM B833.
5. Sign blanks shall be the sizes and shapes shown on the plans.
6. Additional sign clamp required on the "T-bracket" post for 24" high signs. Place clamp at least 3" above bottom of sign when possible.
7. Sign supports shall not be spliced except where shown. Sign support posts shall not be spliced.
8. See the Traffic Operations Division website for detailed drawings of sign clamps and Wedge Anchor System components. The website address is: http://www.txdot.gov/publications/traffic.htm

WEDGE ANCHOR SYSTEM INSTALLATION PROCEDURE

1. Dig foundation hole. Where solid rock is encountered at ground level, the foundation shall be a minimum depth of 18". When solid rock is encountered below ground level, the foundation shall extend in the solid rock a minimum depth of 18" or provide a minimum foundation depth of 30". If solid rock is encountered, the socket/stub may be reduced in length as required to a minimum length of 18". Any material removed from the socket/stub shall be from the bottom and the clearance requirements given on SMD(GEN) must be followed. The inner surfaces of the socket/stub must remain free of concrete or other debris.
2. The Engineer may permit batches of concrete less than 2 cubic yards to be mixed with a portable, motor driven concrete mixer. For small placements less than 0.5 cubic yards, hand mixing in a suitable container may be allowed by Engineer. Place concrete into hole until it is approximately flush with the ground. Concrete shall be Class A.
3. Insert tubular socket into concrete until top of socket is approximaely 1/4 " above the concrete footing.
4. Plumb the socket. Allow a minimum 4 days for concrete to set, unless otherwise directed by Engineer..
5. Attach the sign to the sign post.
6. Insert the sign post into socket and align sign face with roadway.
7. Drive the wedge into the socket to secure post. This will leave approximately 3 inches of the wedge exposed.

UNIVERSAL ANCHOR SYSTEM INSTALLATION PROCEDURE

1. Dig foundation hole. Where solid rock is encountered at ground level, the foundation shall be a minimum depth of 18". When solid rock is encountered below ground level, the foundation shall extend in the solid rock a minimum depth of 18" or provide a minimum foundation depth of 30". If solid rock is encountered, the socket/stub may be reduced in length as required to a minimum length of 18". Any material removed from the socket/stub shall be from the bottom and the clearance requirements given on SMD(GEN) must be followed. The inner surfaces of the socket/stub must remain free of concrete or other debris.
2. Insert base post in hole to depths shown and backfill hole with concrete.
3. Level and plumb the base post using a torpedo level and allow concrete adequate time to set. The bottom of the slots provided in the stub pipe shall remain above the top of the concrete foundation.
4. Attach the sign to the sign post.
5. Install plastic insert around bottom of post.
6. Insert sign post into base post. Lower until the post comes to rest on steel rod.
7. Seat compression ring using a hammer. Typically, the top of compression ring will be approximately level with top of stub post when optimally installed.
8. Check sign post by hand to ensure it is unable to turn. If loose, increase the tightening of the compression ring.

Texas Department of Transportation
Traffic Operations Division

SIGN MOUNTING DETAILS SMALL ROADSIDE SIGNS WEDGE & UNIVERSAL ANCHOR WITH THIN WALL TUBING POST

SMD(TWT)-08

©TxDOT July 2002

DN: TXDOT	CK: TXDOT	DW: TXDOT	CK: TXDOT

9-08 REVISIONS

CONT	SECT	JOB	HIGHWAY
0914	05	222	RM 2243

DIST	COUNTY	SHEET NO.
AUS	WILLIAMSON	352

DISCLAIMER:
The use of this standard is governed by the "Texas Engineering Practice Act". No warranty of any kind is made by TxDOT for any purpose whatsoever. TxDOT assumes no responsibility for the conversion of this standard to other formats or for incorrect results or damages resulting from its use.

DATE: 4/10/2025 1:07:06 PM
FILE: G:\TXC\Projects\County_Williamson\7473-02 RM 2243 Phase 1A\03_CADD\02\SHEETS\08-SMD\SHDGNFILES\tsr3-13.dgn

REQUIREMENTS FOR INDEPENDENT MOUNTED ROUTE SIGNS

SHEETING REQUIREMENTS		
USAGE	COLOR	SIGN FACE MATERIAL
BACKGROUND	WHITE	TYPE A SHEETING
BACKGROUND	ALL OTHERS	TYPE B OR C SHEETING
LEGEND & BORDERS	WHITE	TYPE A SHEETING
LEGEND & BORDERS	BLACK	ACRYLIC NON-REFLECTIVE FILM
LEGEND & BORDERS	ALL OTHERS	TYPE B or C SHEETING

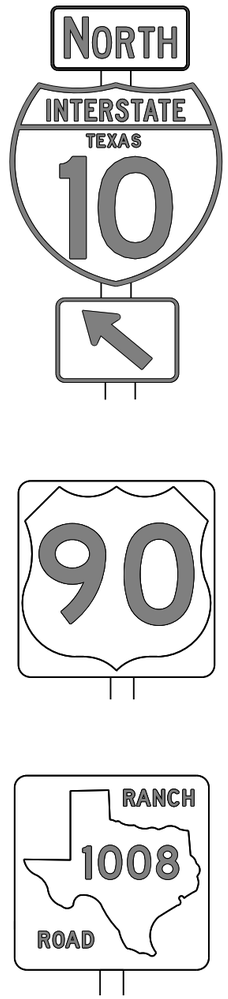

TYPICAL EXAMPLES

REQUIREMENTS FOR BLUE, BROWN & GREEN D AND I SERIES GUIDE SIGNS

SHEETING REQUIREMENTS		
USAGE	COLOR	SIGN FACE MATERIAL
BACKGROUND	ALL	TYPE B OR C SHEETING
LEGEND & BORDERS	WHITE	TYPE D SHEETING
LEGEND, SYMBOLS & BORDERS	ALL OTHERS	TYPE B OR C SHEETING

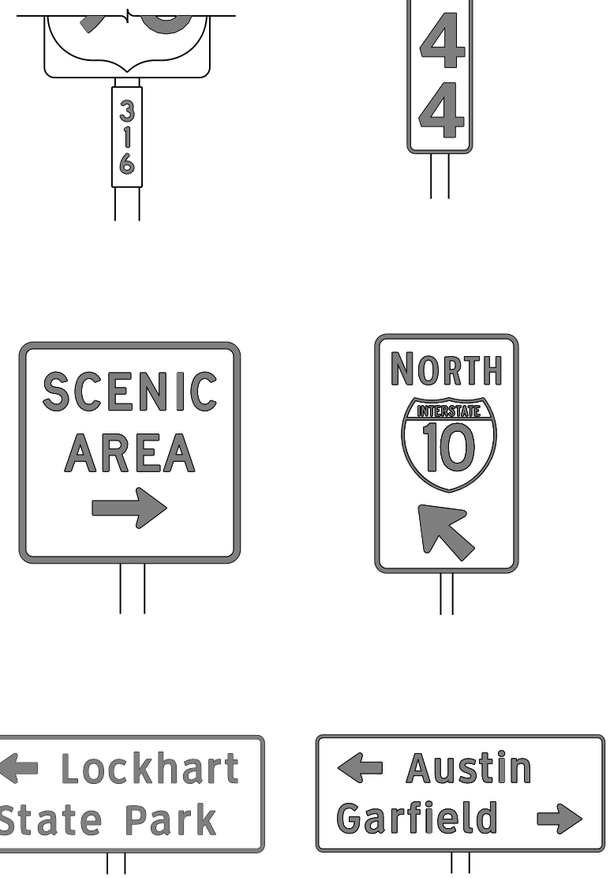

TYPICAL EXAMPLES

GENERAL NOTES

1. Signs to be furnished shall be as detailed elsewhere in the plans and/or as shown on sign tabulation sheet. Standard sign designs and arrow dimensions can be found in the "Standard Highway Sign Designs for Texas" (SHSD).

2. White legend shall use the Clearview Alphabet. The following Clearview fonts shall be used to replace the existing white Federal Highway Administration (FHWA) Standard Highway Alphabets, when not specified in the SHSD, or in the plans.

B	CV-1W
C	CV-2W
D	CV-3W
E	CV-4W
Emod	CV-5WR
F	CV-6W

3. Route sign legend (ie. IH, US, SH and FM shields) shall use the Federal Highway Administration (FHWA) Standard Highway Alphabets B, C, D, E, Emod or F).

4. Lateral spacing between letters and numerals shall conform with the SHSD, and any approved changes thereto. Lateral spacing of legend shall provide a balanced appearance when spacing is not shown.

5. Independent mounted route sign with white or colored legend and borders shall be applied by screening process with transparent color ink, transparent colored overlay film to white background sheeting or cut-out white sheeting to colored background sheeting, or combination thereof. White legend, symbols and borders on all other signs shall be cut-out white sheeting applied to colored background sheeting.

6. Information regarding borders and radii for signs is found in the "Standard Highway Sign Designs for Texas". Dimensions shown and described for borders and corner radii on parent sign are nominal. Borders may vary in width as much as 1/2 inch. Corner radii above 3 inches may vary in width as much as 1 inch. Borders and corner radii within a parent sign must be of matching widths. The sign area outside the corner radius should be trimmed or rounded.

7. Sign substrate shall be any material that meets the Departmental Material Specification requirements of DMS-7110 or approved alternative.

8. Mounting details of roadside signs are shown in the "SMD series" Standard Plan Sheets.

DEPARTMENTAL MATERIAL SPECIFICATIONS	
ALUMINUM SIGN BLANKS	DMS-7110
SIGN FACE MATERIALS	DMS-8300

ALUMINUM SIGN BLANKS THICKNESS	
Square Feet	Minimum Thickness
Less than 7.5	0.080
7.5 to 15	0.100
Greater than 15	0.125

The Standard Highway Sign Designs for Texas (SHSD) can be found at the following website.

http://www.txdot.gov/

Texas Department of Transportation

Traffic Operations Division Standard

TYPICAL SIGN REQUIREMENTS

TSR(3)-13

FILE: tsr3-13.dgn	DN: TxDOT	CK: TxDOT	DW: TxDOT	CK: TxDOT
©TxDOT October 2003	CONT	SECT	JOB	HIGHWAY
REVISIONS	0914	05	222	RM 2243
12-03 7-13	DIST	COUNTY		SHEET NO.
9-08	AUS	WILLIAMSON		353

DISCLAIMER:
The use of this standard is governed by the "Texas Engineering Practice Act". No warranty of any kind is made by TxDOT for any purpose whatsoever. TxDOT assumes no responsibility for the conversion of this CADD file for use with other systems or for incorrect results or damages resulting from its use.

DATE: 4/10/2025 1:07:07 PM
FILE: G:\TXC\Projects\County_Williamson\7473-02 RM 2243 Phase 1A\03_CADD\02_SMD\tsr4-13.dgn

REQUIREMENTS FOR RED BACKGROUND REGULATORY SIGNS

(STOP, YIELD, DO NOT ENTER AND WRONG WAY SIGNS)

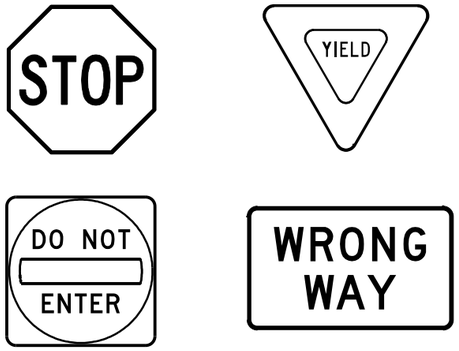

REQUIREMENTS FOR FOUR SPECIFIC SIGNS ONLY

SHEETING REQUIREMENTS		
USAGE	COLOR	SIGN FACE MATERIAL
BACKGROUND	RED	TYPE B OR C SHEETING
BACKGROUND	WHITE	TYPE B OR C SHEETING
LEGEND & BORDERS	WHITE	TYPE B OR C SHEETING
LEGEND	RED	TYPE B OR C SHEETING

REQUIREMENTS FOR WHITE BACKGROUND REGULATORY SIGNS

(EXCLUDING STOP, YIELD, DO NOT ENTER AND WRONG WAY SIGNS)

TYPICAL EXAMPLES

SHEETING REQUIREMENTS		
USAGE	COLOR	SIGN FACE MATERIAL
BACKGROUND	WHITE	TYPE A SHEETING
BACKGROUND	ALL OTHERS	TYPE B OR C SHEETING
LEGEND, BORDERS AND SYMBOLS	BLACK	ACRYLIC NON-REFLECTIVE FILM
LEGEND, BORDERS AND SYMBOLS	ALL OTHER	TYPE B OR C SHEETING

REQUIREMENTS FOR WARNING SIGNS

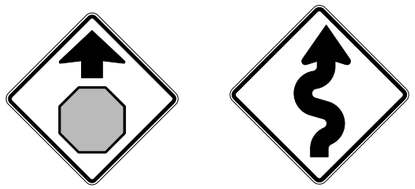

TYPICAL EXAMPLES

SHEETING REQUIREMENTS		
USAGE	COLOR	SIGN FACE MATERIAL
BACKGROUND	FLOURESCENT YELLOW	TYPE B_{FL} OR C_{FL} SHEETING
LEGEND & BORDERS	BLACK	ACRYLIC NON-REFLECTIVE FILM
LEGEND & SYMBOLS	ALL OTHER	TYPE B OR C SHEETING

REQUIREMENTS FOR SCHOOL SIGNS

TYPICAL EXAMPLES

SHEETING REQUIREMENTS		
USAGE	COLOR	SIGN FACE MATERIAL
BACKGROUND	WHITE	TYPE A SHEETING
BACKGROUND	FLOURESCENT YELLOW GREEN	TYPE B_{FL} OR C_{FL} SHEETING
LEGEND, BORDERS AND SYMBOLS	BLACK	ACRYLIC NON-REFLECTIVE FILM
SYMBOLS	RED	TYPE B OR C SHEETING

GENERAL NOTES

1. Signs to be furnished shall be as detailed elsewhere in the plans and/or as shown on sign tabulation sheet. Standard sign designs and arrow dimensions can be found in the "Standard Highway Sign Designs for Texas" (SHSD).
2. Sign legend shall use the Federal Highway Administration (FHWA) Standard Highway Alphabets (B, C, D, E, Emod or F).
3. Lateral spacing between letters and numerals shall conform with the SHSD, and any approved changes thereto. Lateral spacing of legend shall provide a balanced appearance when spacing is not shown.
4. Black legend and borders shall be applied by screening process or cut-out acrylic non-reflective black film to background sheeting, or combination thereof.
5. White legend and borders shall be applied by screening process with transparent colored ink, transparent colored overlay film to white background sheeting or cut-out white sheeting to colored background sheeting, or combination thereof.
6. Colored legend shall be applied by screening process with transparent colored ink, transparent colored overlay film or colored sheeting to background sheeting, or combination thereof.
7. Sign substrate shall be any material that meets the Departmental Material Specification requirements of DMS-7110 or approved alternative.
8. Mounting details for roadside mounted signs are shown in the "SMD series" Standard Plan Sheets.

ALUMINUM SIGN BLANKS THICKNESS	
Square Feet	Minimum Thickness
Less than 7.5	0.080
7.5 to 15	0.100
Greater than 15	0.125

DEPARTMENTAL MATERIAL SPECIFICATIONS	
ALUMINUM SIGN BLANKS	DMS-7110
SIGN FACE MATERIALS	DMS-8300

The Standard Highway Sign Designs for Texas (SHSD) can be found at the following website.

http://www.txdot.gov/

Texas Department of Transportation

Traffic Operations Division Standard

TYPICAL SIGN REQUIREMENTS

TSR(4)-13

FILE: tsr4-13.dgn	DN: TxDOT	CK: TxDOT	DW: TxDOT	CK: TxDOT
© TxDOT October 2003	CONT	SECT	JOB	HIGHWAY
REVISIONS	0914	05	222	RM 2243
12-03 7-13 9-08	DIST	COUNTY		SHEET NO.
	AUS	WILLIAMSON		354

EXISTING ROADSIDE SIGNS
TO BE REMOVED

S3

EXISTING ROADSIDE SIGNS
TO REMAIN

S1

S2, S4

EXISTING SIGNAL HEADS
TO BE REMOVED

SIGNAL HEAD
14

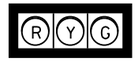

SIGNAL HEADS
12, 13

EXISTING SIGNAL HEADS
TO REMAIN

SIGNAL HEAD
7

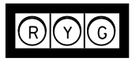

SIGNAL HEADS
8, 9, 15, 16

SIGNAL HEAD
17

EXISTING LEGEND

- EXIST GROUND BOX
- EXIST LUMINAIRE
- EXIST DIRECTION OF TRAFFIC
- EXIST SIGNAL POLE & MAST ARM
- EXIST SIGNAL HEAD
- EXIST GROUND MOUNTED CONTROLLER

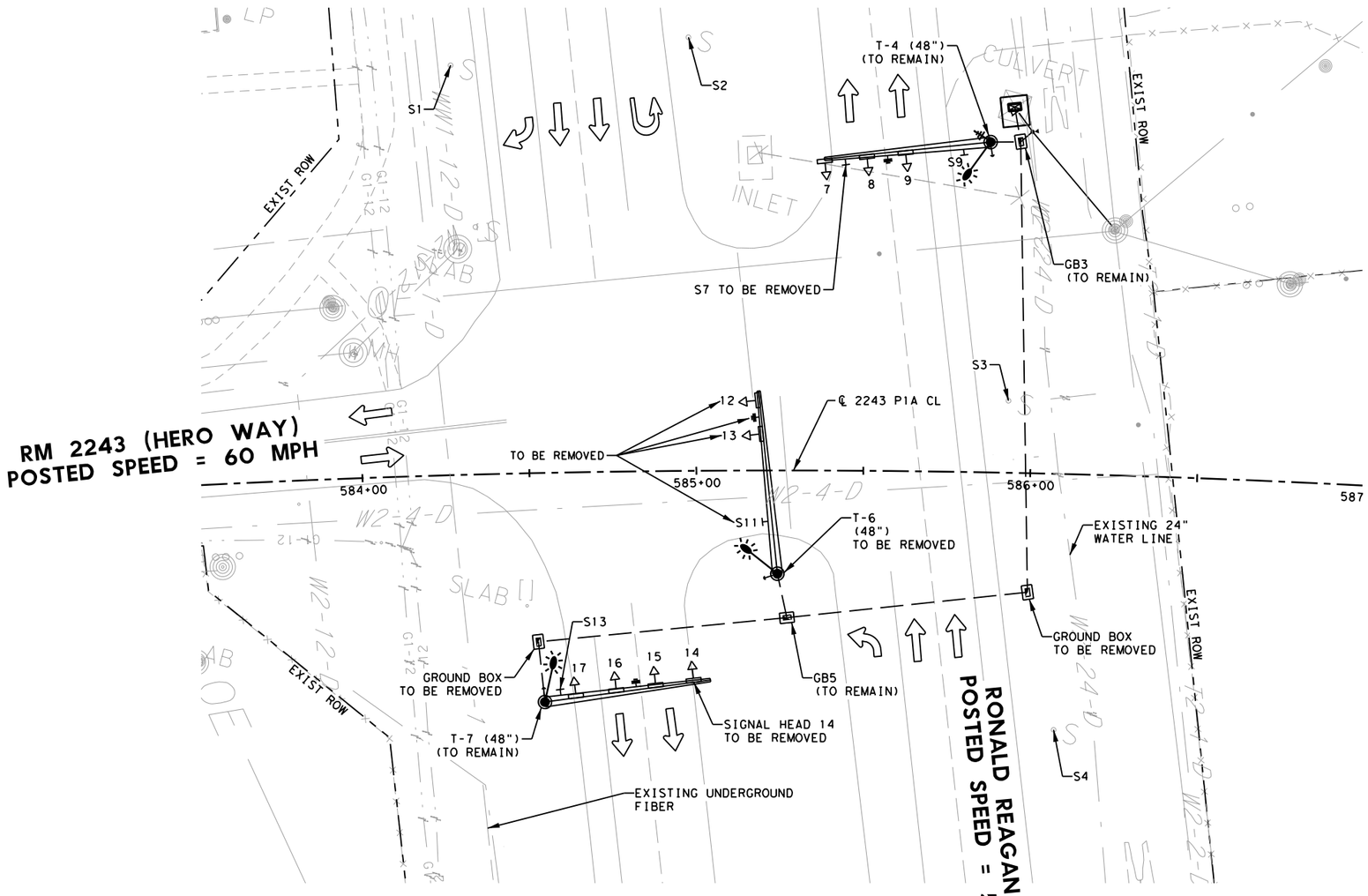

0 20 40
SCALE: 1"=40'

NOTE:
ALL EXISTING CONFLICTING PAVEMENT MARKINGS TO BE REMOVED. SEE REMOVAL LAYOUTS.

EXISTING MAST ARM SIGNS
TO BE REMOVED

S7

S11

EXISTING MAST ARM SIGNS
TO REMAIN

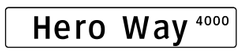

S9, S13

STATE OF TEXAS
MORGAN M. KELLEY
150127
LICENSED
PROFESSIONAL ENGINEER
4/10/2025

WILCO
TEXAS

BGE, Inc.
101 W Louis Henna Blvd, Suite 400, Austin, TX 78728
Tel: 512-879-0400 • www.bgeinc.com
TBPE Registration No. F-1046

RM 2243

EXISTING SIGNAL LAYOUT
(RM 2243 @ RONALD REAGAN)

SHEET 1 OF 1

FED.RD. DIV.NO.	PROJECT NO.		SHEET NO.
6			355
STATE	DIST.	COUNTY	
TEXAS	AUS	WILLIAMSON	
CONT.	SECT.	JOB	HIGHWAY NO.
0914	05	222	RM 2243

4/10/2025 1:07:12 PM pdf.pltcfg
G:\TXC\Projects\County\Williamson\7473-02 RM 2243 Phase 1A\03*CADD\01*Shts\13-SIGNAL\RM2243*RR*EXIST*SIGNAL.dgn

PROPOSED SIGNAL HEADS

SIGNAL HEADS
1, 2, 3, 10

SIGNAL HEADS
4, 11, 14

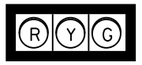

SIGNAL HEADS
5, 6, 12, 13

EXISTING SIGNAL HEADS TO REMAIN

SIGNAL HEAD
7

SIGNAL HEADS
8, 9, 15, 16

SIGNAL HEAD
17

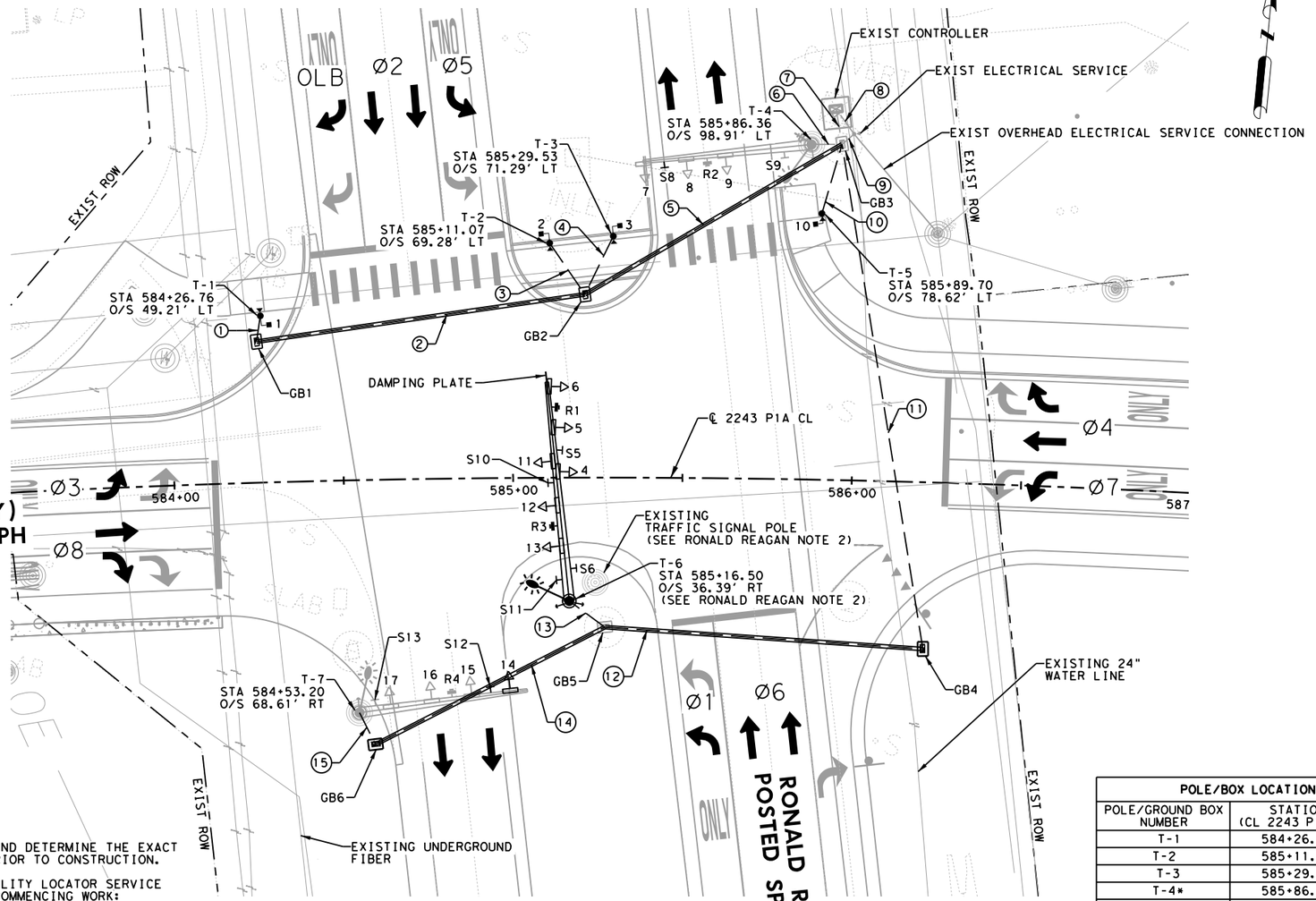

PROPOSED LEGEND

- GROUND MOUNTED CONTROLLER
- GROUND BOX
- MAST ARM POLE
- PEDESTRIAN SIGNAL POLE
- HORIZONTAL SIGNAL HEAD
- RADAR DETECTOR (PRESENCE & ADVANCE)
- PEDESTRIAN SIGNAL HEAD
- PEDESTRIAN PUSH BUTTON
- LUMINAIRE
- OVERHEAD SIGN
- RED-LIGHT CONFIRMATION LIGHT
- EXIST. ELECTRICAL SERVICE/METER
- EXIST. ANTENNA
- PROPOSED CONDUIT TRENCH
- PROPOSED CONDUIT BORE
- (#) RUN NUMBER

0 20 40
SCALE: 1"=40'

GENERAL SIGNAL NOTES:

1. THE CONTRACTOR SHALL VERIFY AND DETERMINE THE EXACT LOCATION OF ALL UTILITIES PRIOR TO CONSTRUCTION.
2. THE CONTRACTOR SHALL CALL UTILITY LOCATOR SERVICE AT LEAST 48 HOURS PRIOR TO COMMENCING WORK: TEXAS "ONE-CALL" SYSTEM: 1-800-345-4545.
3. THE CONTRACTOR IS FULLY RESPONSIBLE FOR ANY DAMAGES CAUSED BY THE FAILURE TO LOCATE AND PRESERVE THE UNDERGROUND FACILITIES.
4. LOCATION OF SIGNAL POLES, CABINET, AND ELECTRICAL SERVICE SHALL BE VERIFIED AND APPROVED BY THE COUNTY PRIOR TO CONSTRUCTION.
5. CONTRACTOR SHALL CONNECT FIELD WIRING TO CONTROLLER.
6. SIGNAL HEADS SHALL HAVE A MINIMUM OF 17.5 FEET CLEARANCE ABOVE ROADWAY SURFACE UNLESS NOTED OTHERWISE.
7. CONTRACTOR SHALL POTHOLE ALL SIGNAL POLE FOUNDATIONS NEAR UNDERGROUND FACILITIES PRIOR TO INSTALLING POLE FOUNDATIONS.
8. CONTRACTOR SHALL CONTACT THE COUNTY TRAFFIC ENGINEER A MINIMUM OF SEVEN (7) DAYS PRIOR TO BEGINNING OF CONSTRUCTION.
9. CONTRACTOR SHALL CONTACT THE COUNTY TRAFFIC ENGINEER A MINIMUM OF FOURTEEN (14) DAYS PRIOR TO THE TRAFFIC SIGNAL TURN-ON.
10. CONTRACTOR SHALL EXTEND SIDEWALK UP TO SIGNAL POLES AS NEEDED TO PROVIDE ACCESS TO PEDESTRIAN PUSH BUTTONS.

POLE/BOX LOCATION CHART

POLE/GROUND BOX NUMBER	STATION (CL 2243 P1A CL)	OFFSET
T-1	584+26.76	49.21' LT
T-2	585+11.07	69.28' LT
T-3	585+29.53	71.29' LT
T-4*	585+86.36	98.91' LT
T-5	585+89.70	78.62' LT
T-6	585+16.50	36.39' RT
T-7*	584+53.20	68.61' RT
GB1	584+25.44	41.62' LT
GB2	585+21.29	54.09' LT
GB3*	585+95.09	99.15' LT
GB4	586+22.40	49.18' RT
GB5*	585+27.13	44.11' RT
GB6	584+57.84	78.09' RT

*DENOTES EXISTING TO REMAIN

RONALD REAGAN SIGNAL NOTES:

1. ALL EXISTING CONFLICTING PAVEMENT MARKINGS TO BE REMOVED. SEE REMOVAL LAYOUTS.
2. EXISTING EASTBOUND TRAFFIC SIGNAL TO REMAIN IN OPERATION WHILE PROPOSED T-6 POLE IS INSTALLED. T-6 MAST ARM TO BE PLACED AT 19' MINIMUM (OR THE MINIMUM HEIGHT REQUIRED TO KEEP EXISTING EASTBOUND SIGNAL HEADS VISIBLE). EXISTING EASTBOUND SIGNAL EQUIPMENT MAY BE REUSED AND TRANSFERRED TO PROPOSED T-6 MAST ARM AT THE DIRECTION OF THE COUNTY ENGINEER OR THEIR REPRESENTATIVE.

STATE OF TEXAS
MORGAN M. KELLEY
150127
LICENSED
PROFESSIONAL ENGINEER
4/10/2025

WILCO
TEXAS

BGE, Inc.
101 W Louis Henna Blvd, Suite 400, Austin, TX 78728
Tel: 512-879-0400 • www.bgeinc.com
TBPE Registration No. F-1046

RM 2243

PROPOSED SIGNAL LAYOUT (RM 2243 @ RONALD REAGAN)

SHEET 1 OF 1

FED.RD. DIV.NO.	PROJECT NO.		SHEET NO.
6			356
STATE	DIST.	COUNTY	
TEXAS	AUS	WILLIAMSON	
CONT.	SECT.	JOB	HIGHWAY NO.
0914	05	222	RM 2243

4/10/2025 1:07:15 PM pdf.pltcfg
G:\TXC\Projects\County*Williamson\7473-02 RM 2243 Phase 1A\03*CADD\01*Shts\13-SIGNAL\RM2243*RR*PROP*SIGNAL.dgn

PROPOSED MAST ARM SIGNS

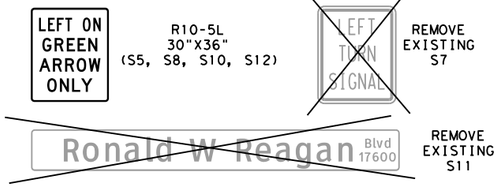

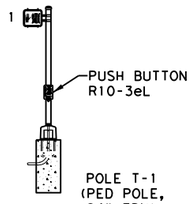

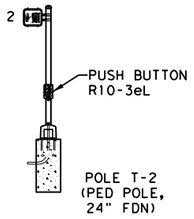

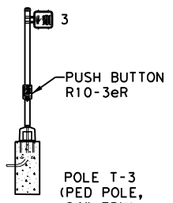

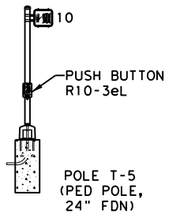

EXISTING MAST ARM SIGNS

TO REMAIN

S9, S13

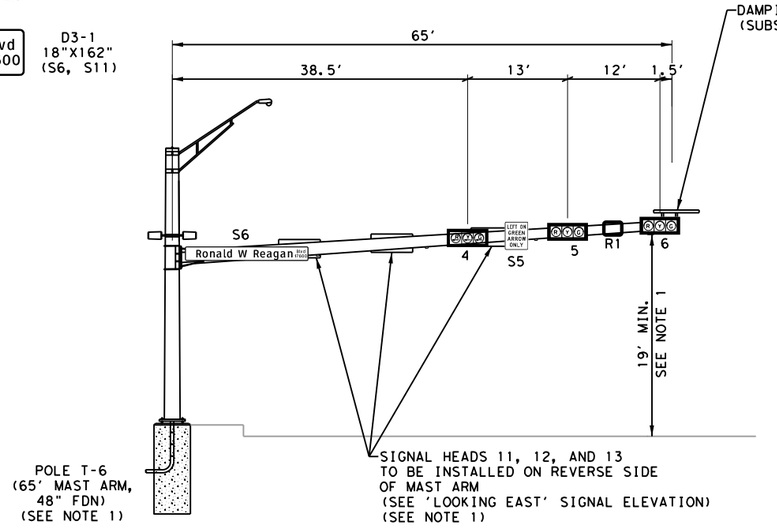

LOOKING WEST ON RM 2243 (HERO WAY)

N.T.S

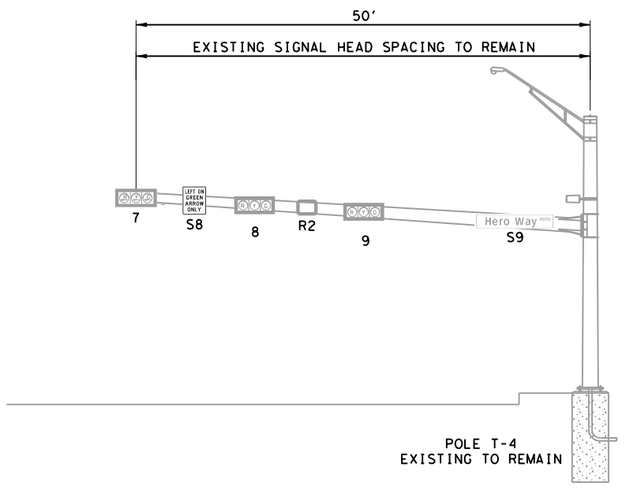

LOOKING NORTH ON RONALD REAGAN

N.T.S

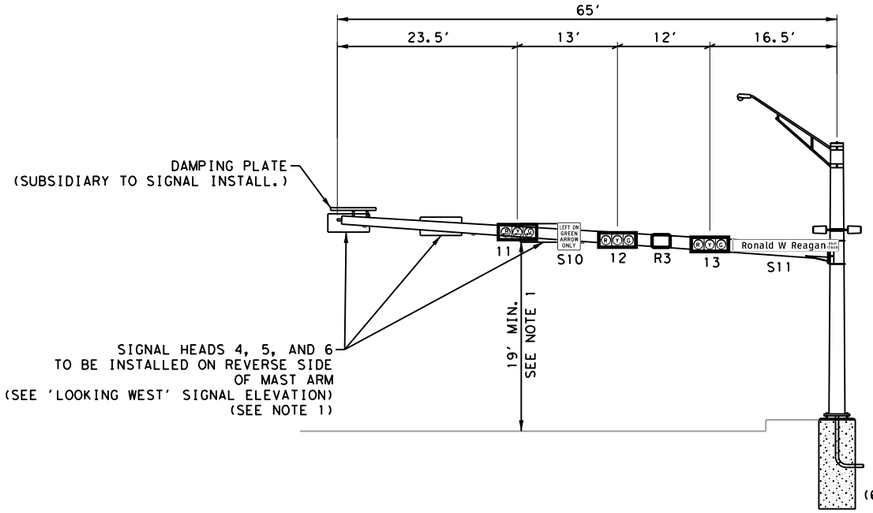

LOOKING EAST ON RM 2243 (HERO WAY)

N.T.S

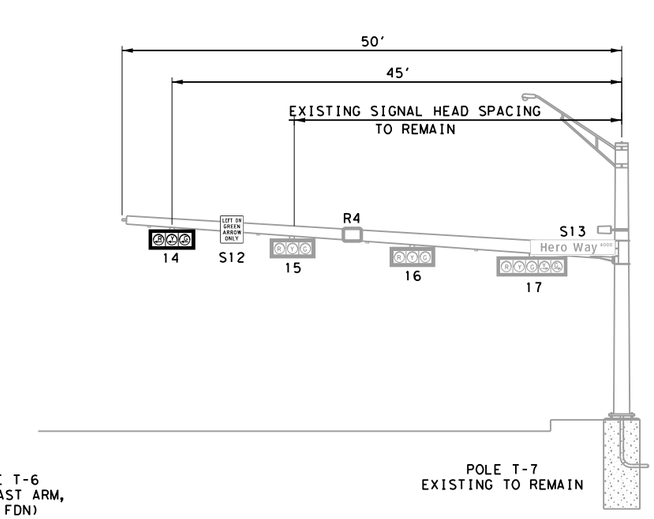

LOOKING SOUTH ON RONALD REAGAN

N.T.S

SIGNAL HEAD SCHEDULE

SH 4, 11, 14
(3 EA)

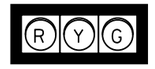

SH 5, 6, 12, 13
(4 EA)

SH 7
(1 EA)
(EXISTING TO REMAIN)

SH 8, 9, 15, 16
(4 EA)
(EXISTING TO REMAIN)

SH 17
(1 EA)
(EXISTING TO REMAIN)

SH 1, 2, 3, 10
(4 EA)

REMOVE EXISTING
SH 12, 13

REMOVE EXISTING
SH 14
(U-TURN)

NOTES:

1. EXISTING EASTBOUND TRAFFIC SIGNAL TO REMAIN IN OPERATION WHILE PROPOSED T-6 POLE IS INSTALLED. T-6 MAST ARM TO BE PLACED AT 19' MINIMUM (OR THE MINIMUM HEIGHT REQUIRED TO KEEP EXISTING EASTBOUND SIGNAL HEADS VISIBLE). EXISTING EASTBOUND SIGNAL EQUIPMENT MAY BE REUSED AND TRANSFERRED TO PROPOSED T-6 MAST ARM AT THE DIRECTION OF THE COUNTY ENGINEER OR THEIR REPRESENTATIVE.

WILCO TEXAS

BGE, Inc.
101 W Louis Henna Blvd, Suite 400, Austin, TX 78728
Tel: 512-879-0400 • www.bgeinc.com
TBPE Registration No. F-1046

RM 2243

PROPOSED SIGNAL ELEVATIONS (RM 2243 @ RONALD REAGAN)

SHEET 1 OF 1

FED.RD. DIV.NO.	PROJECT NO.		SHEET NO.
6			357
STATE	DIST.	COUNTY	
TEXAS	AUS	WILLIAMSON	
CONT.	SECT.	JOB	HIGHWAY NO.
0914	05	222	RM 2243

4/10/2025 1:07:17 PM pdf.pltcfg
G:\TXC\Projects\County\Williamson\7473-02 RM 2243 Phase 1A\03*CADD\01*Shts\13-SIGNAL\RM2243*RR*SIGNAL*ELEVATION.dgn

SUMMARY OF CABLE

RUN NO.	CONDUIT SIZE PROP. 2"	PROP. 3"	EXIST. 2"	EXIST. 3"	LENGTH (FT)	TRENCH (T) BORE (B) RIGID (RMC) EXIST (EX)	RADAR	16 CONDR 14 AWG	7 CONDR 14 AWG	1 CONDR 8 AWG INSULATED (LUMINAIRE)	2 CONDR 12 AWG	1 COND 8 AWG BARE	RED-LIGHT CONFIRM. CABLE
1		1			10	T			1		1	1	
2		3			105	B			1		1	3	
3		1			25	T			1		1	1	
4		1			25	T			1		1	1	
5		3			95	B			3		3	3	
6			1	2	10	EX	EXISTING CABLING TO REMAIN						
7*				3	15	EX	3	3	4		4	3	3
8			1		15	EX	EXISTING CABLING TO REMAIN						
9			1		10	EX				6		1	
10		1			25	T			1		1	1	
11		3			155	T	3	3		4		3	3
12		3			100	B	3	3		4		3	3
13	1	2			20	T	2	2		2		3	2
14		3			80	B	1	1		2		3	1
15	1	2			15	T	1	1		2		3	1
PROP 2" CONDUIT TOTAL (LF)					35	CABLE TOTALS (LF)	945	945	535	1310	535	1850	945
PROP 3" CONDUIT TOTAL (LF)					1760								

* CABLES LISTED FOR CONDUIT RUN NUMBER 7 ARE IN ADDITION TO THE CABLES TO REMAIN FROM POLE T-4

RADAR CABLES SHALL BE SUBSIDIARY TO ITEM 6008-7003

GROUND BOX SUMMARY

GROUND BOX NUMBER	GROUND BOX TYPE
GB1, GB2, GB4, GB6	TYPE D W/ APRON
(GB3, GB5)*	TYPE D W/ APRON

*DENOTES EXISTING GROUND BOX TO REMAIN

PEDESTRIAN PUSH BUTTON

POLE	R10-3eL	R10-3eR
T-1	1	
T-2	1	
T-3		1
T-5	1	
TOTAL PROPOSED	**3**	**1**

CABLE TERMINATION CHART

	CONDR. COLOR	CABLE 1 FROM T-4 TO CNTRL	CABLE 2 FROM T-6 TO CNTRL 16 CNDR	CABLE 3 FROM T-6 TO CNTRL 16 CNDR	CABLE 4 FROM T-7 TO CNTRL 16 CNDR	CABLE 5 FROM T-1 TO CNTRL 7 CNDR	CABLE 6 FROM T-2 TO CNTRL 7 CNDR	CABLE 7 FROM T-3 TO CNTRL 7 CNDR	CABLE 8 FROM T-5 TO CNTRL 7 CNDR
1	BLACK	EXISTING TO REMAIN	SPARE	SPARE	SPARE	SPARE	SPARE	SPARE	SPARE
2	WHITE		SIG COMMON	SIG COMMON	SIG COMMON	SIG COMMON	SIG COMMON	SIG COMMON	SIG COMMON
3	RED		SH 5, 6 Ø4 R	SH 12, 13 Ø8 R	SH 15, 16, 17 Ø2 R	SH 1 Ø4 W	SH 2 Ø4 W	SH 3 Ø4 W	SH 10 Ø4 W
4	GREEN		SH 5, 6 Ø4 G	SH 12, 13 Ø8 G	SH 15, 16, 17 Ø2 G	SH 1 Ø4 DW	SH 2 Ø4 DW	SH 3 Ø4 DW	SH 10 Ø4 DW
5	ORANGE		SH 5, 6 Ø4 Y	SH 12, 13 Ø8 Y	SH 15, 16, 17 Ø2 Y	SPARE	SPARE	SPARE	SPARE
6	BLUE		SPARE	SPARE	SPARE	SPARE	SPARE	SPARE	SPARE
7	WHITE/BLACK		SPARE	SPARE	SPARE	SPARE	SPARE	SPARE	SPARE
8	RED/BLACK		SH 4 Ø7 ←R	SH 11 Ø3 ←R	SH 14 Ø5 ←R				
9	GREEN/BLACK		SH 4 Ø7 ←G	SH 11 Ø3 ←G	SH 14 Ø5 ←G				
10	ORANGE/BLACK		SH 4 Ø7 ←Y	SH 11 Ø3 ←Y	SH 14 Ø5 ←Y				
11	BLUE/BLACK		SPARE	SPARE	SPARE				
12	BLACK/WHITE		SPARE	SPARE	SPARE				
13	RED/WHITE		SPARE	SPARE	SH 17 OLB Y→				
14	GREEN/WHITE		SPARE	SPARE	SH 17 OLB G→				
15	BLUE/WHITE		SPARE	SPARE	SPARE				
16	BLACK/RED		SPARE	SPARE	SPARE				

SIGNAL POLE CHART

POLE NUMBER	T-1	T-2	T-3	T-4			T-5	T-6						T-7			
MAST ARM LENGTH	-	-	-	EXISTING			-	65'						EXISTING			
FOUNDATION TYPE	24-A	24-A	24-A				24-A	48-A									
WITH LUMINAIRES	NO	NO	NO	YES			NO	YES						YES			
SIZE OF LENS	-	-	-	12"			-	12"						12"			
SIGNAL FACE NO.	1	2	3	7	8	9	10	4	5	6	11	12	13	14	15	16	17
SIGNAL INDICATIONS	DW	DW	DW	← R	R	R	DW	← R	R	R	← R	R	R	← R	R	R	R
	W	W	W	← Y	Y	Y	W	← Y	Y	Y	← Y	Y	Y	← Y	Y	Y	Y
				← G	G	G		← G	G	G	← G	G	G	← G	G	G	G
																	R →
																	Y →

WIRE INSIDE POLE AND MAST ARMS (FT)

POLE NUMBER	RADAR	7 CONDR 14 AWG	1 CONDR 8 AWG (INSULATED)	2 CONDR 12 AWG	RED-LIGHT CONFIRMATION CABLE
T-1		10		5	
T-2		10		5	
T-3		10		5	
T-4	EXISTING CABLING TO REMAIN				
T-5		10		5	
T-6	130	160	100		50
T-7	50	70	100		25
TOTAL PROPOSED	180	270	200	20	75

RADAR CABLES SHALL BE SUBSIDIARY TO ITEM 6008-7003

MINIMUM PEDESTRIAN TIMING

PHASE	SIGNAL HEAD #	WALK	FLASHING DON'T WALK	TOTAL (SEC)
Ø4	1, 2, 3, 10	7	25	32

PROPOSED SIGNAL HEAD SUMMARY

SIGNAL HEAD NO.	12" INDICATION BACKPLATE 3 SEC (EA)	5 SEC (EA)	VEHICLE SIGNAL SECTIONS RED BALL	YELLOW BALL	GREEN BALL	RED ARROW	YELLOW ARROW	GREEN ARROW	PED SIGNAL SECTION
4, 5, 6, 11, 12, 13, 14	7		4	4	4	3	3	3	
1, 2, 3, 10									4

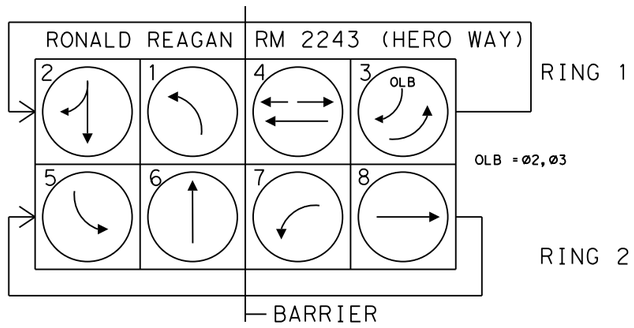

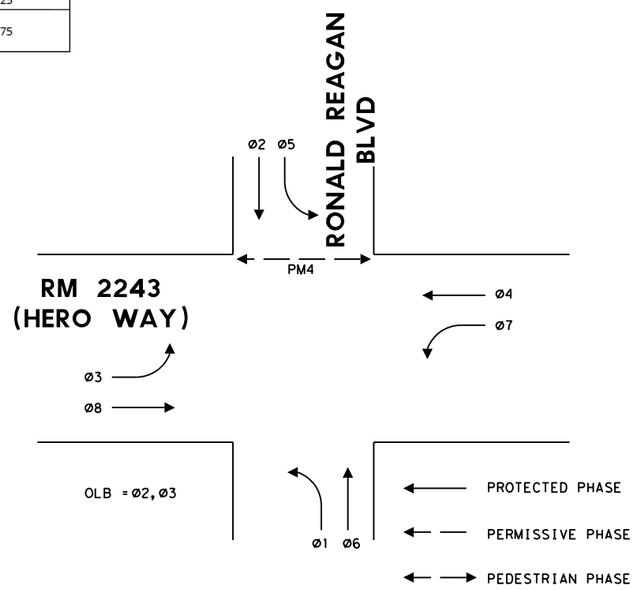

STATE OF TEXAS
MORGAN M. KELLEY
150127
LICENSED
PROFESSIONAL ENGINEER
4/10/2025

WILCO TEXAS

BGE, Inc.
101 W Louis Henna Blvd, Suite 400, Austin, TX 78728
Tel: 512-879-0400 ● www.bgeinc.com
TBPE Registration No. F-1046

RM 2243

PROPOSED SIGNAL SCHEDULE & PHASING (RM 2243 @ RONALD REAGAN)

SHEET 1 OF 1

FED. RD. DIV. NO.	PROJECT NO.	SHEET NO.
6		358

STATE	DIST.	COUNTY	
TEXAS	AUS	WILLIAMSON	
CONT.	SECT.	JOB	HIGHWAY NO.
0914	05	222	RM 2243

4/10/2025 1:07:18 PM pdf.pltcfg
G:\TXC\Projects\County*Williamson\7473-02 RM 2243 Phase 1A\03*CADD\01*Shts\13-SIGNAL\RM2243*RR*SIGNAL*SCHEDULE.dgn

PROPOSED SIGNAL HEADS

SIGNAL HEADS
1, 5, 9, 16

SIGNAL HEADS
2, 6, 10, 13

SIGNAL HEADS
3, 4, 7, 8,
11, 12, 14, 15

PROPOSED LEGEND

- GROUND MOUNTED CONTROLLER
- GROUND BOX
- MAST ARM POLE
- PEDESTRIAN SIGNAL POLE
- HORIZONTAL SIGNAL HEAD (TO BE DELIVERED TO STORAGE)
- RADAR DETECTOR (PRESENCE & ADVANCE) (TO BE DELIVERED TO STORAGE)
- PEDESTRIAN SIGNAL HEAD (TO BE DELIVERED TO STORAGE)
- PEDESTRIAN PUSH BUTTON (TO BE DELIVERED TO STORAGE)
- LUMINAIRE
- OVERHEAD SIGN
- RED-LIGHT CONFIRMATION LIGHT
- ELECTRICAL SERVICE/METER
- PROPOSED CONDUIT TRENCH
- PROPOSED CONDUIT BORE
- RUN NUMBER

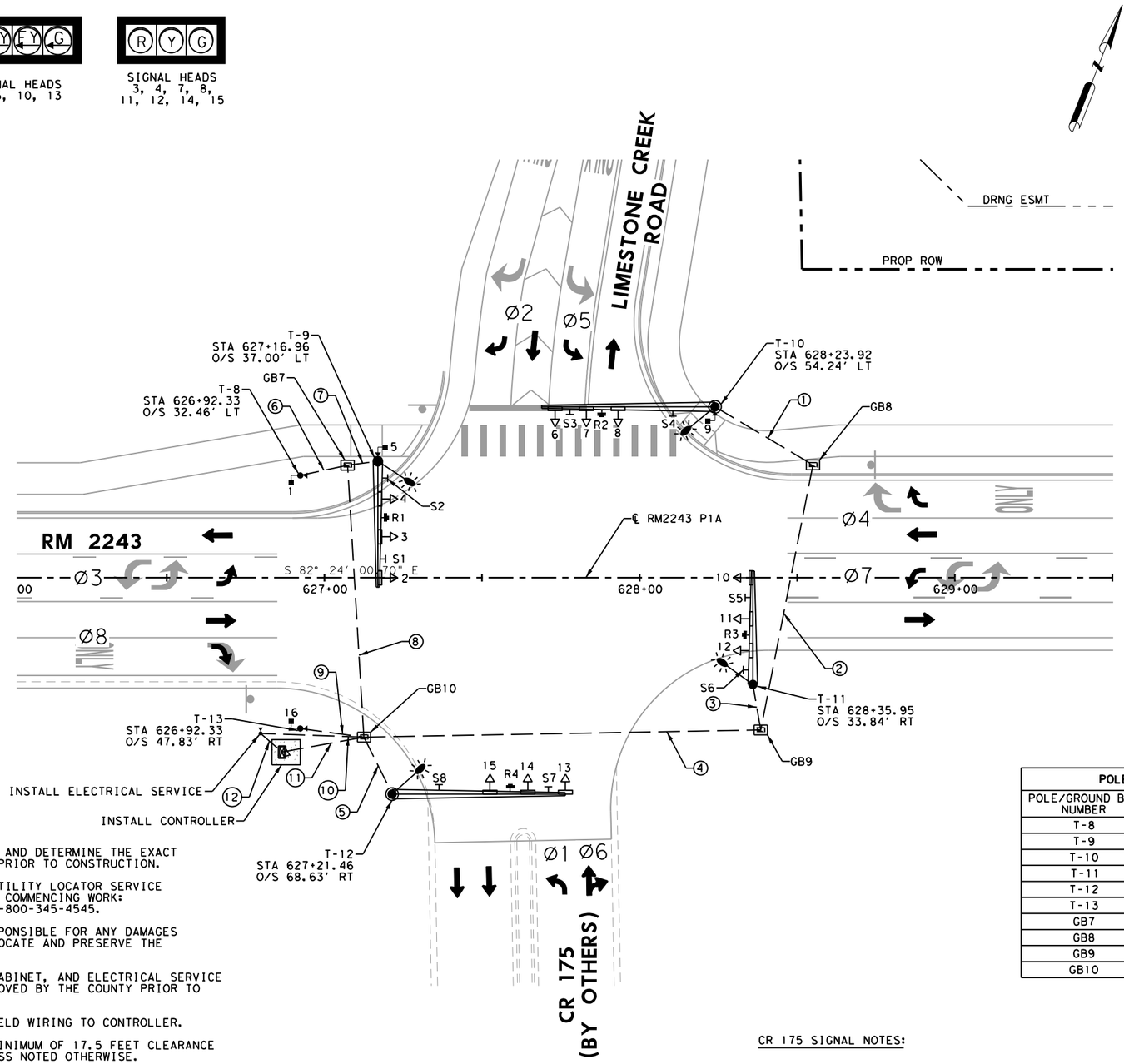

0 20 40
SCALE: 1"=40'

GENERAL SIGNAL NOTES:

1. THE CONTRACTOR SHALL VERIFY AND DETERMINE THE EXACT LOCATION OF ALL UTILITIES PRIOR TO CONSTRUCTION.
2. THE CONTRACTOR SHALL CALL UTILITY LOCATOR SERVICE AT LEAST 48 HOURS PRIOR TO COMMENCING WORK: TEXAS "ONE-CALL" SYSTEM: 1-800-345-4545.
3. THE CONTRACTOR IS FULLY RESPONSIBLE FOR ANY DAMAGES CAUSED BY THE FAILURE TO LOCATE AND PRESERVE THE UNDERGROUND FACILITIES.
4. LOCATION OF SIGNAL POLES, CABINET, AND ELECTRICAL SERVICE SHALL BE VERIFIED AND APPROVED BY THE COUNTY PRIOR TO CONSTRUCTION.
5. CONTRACTOR SHALL CONNECT FIELD WIRING TO CONTROLLER.
6. SIGNAL HEADS SHALL HAVE A MINIMUM OF 17.5 FEET CLEARANCE ABOVE ROADWAY SURFACE UNLESS NOTED OTHERWISE.
7. CONTRACTOR SHALL POTHOLE ALL SIGNAL POLE FOUNDATIONS NEAR UNDERGROUND FACILITIES PRIOR TO INSTALLING POLE FOUNDATIONS.
8. CONTRACTOR SHALL REMOVE EXISTING STOP SIGNS WHEN TRAFFIC SIGNAL BECOMES OPERATIONAL.
9. CONTRACTOR SHALL CONTACT THE COUNTY TRAFFIC ENGINEER A MINIMUM OF SEVEN (7) DAYS PRIOR TO BEGINNING OF CONSTRUCTION.
10. CONTRACTOR SHALL CONTACT THE COUNTY TRAFFIC ENGINEER A MINIMUM OF FOURTEEN (14) DAYS PRIOR TO THE TRAFFIC SIGNAL TURN-ON.
11. CONTRACTOR SHALL EXTEND SIDEWALK UP TO SIGNAL POLES AS NEEDED TO PROVIDE ACCESS TO PEDESTRIAN PUSH BUTTONS.

POLE/BOX LOCATION CHART		
POLE/GROUND BOX NUMBER	STATION (CL RM2243 P1A)	OFFSET
T-8	626+92.33	32.46' LT
T-9	627+16.96	37.00' LT
T-10	628+23.92	54.24' LT
T-11	628+35.95	33.84' RT
T-12	627+21.46	68.63' RT
T-13	626+92.33	47.83' RT
GB7	627+07.33	35.70' LT
GB8	628+54.98	35.80' LT
GB9	628+38.40	48.30' RT
GB10	627+12.54	50.59' RT

CR 175 SIGNAL NOTES:

1. DIRECTIONAL ARROWS SHOWN REFLECT THE ULTIMATE INTERSECTION LANE CONFIGURATIONS.
2. CONTRACTOR TO INSTALL SIGNAL FOUNDATIONS, POLES (INCLUDING LUMINAIRES), MAST ARMS, CONDUITS, GROUND BOXES, CABINETS, AND MAST ARM STREET NAME SIGNS AT THE TIME OF ROADWAY CONSTRUCTION.
3. CONTRACTOR TO INSTALL SIGNAL CABLING ONLY UP TO BASE OF POLE WITH THE EXCEPTION OF CABLING FOR LUMINAIRES. CABLING FOR LUMINAIRES TO BE INSTALLED UP TO THE FULL LUMINAIRE HEIGHT. LUMINAIRES WILL BE OPERATIONAL AT CONSTRUCTION COMPLETION.
4. EQUIPMENT ATTACHED TO MAST ARMS AND PEDESTRIAN POLES (EXCLUDING MAST ARM STREET NAME SIGNS) TO BE DELIVERED TO WILLIAMSON COUNTY FOR STORAGE. THIS EQUIPMENT TO BE INSTALLED ON MAST ARMS BY OTHERS ONCE TRAFFIC SIGNAL WARRANTS ARE MET. CALL WILLIAMSON COUNTY TO COORDINATE MATERIAL DROP OFF AND STORAGE.

STATE OF TEXAS
MORGAN M. KELLEY
150127
LICENSED PROFESSIONAL ENGINEER
4/10/2025

WILCO
TEXAS

BGE, Inc.
101 W Louis Henna Blvd, Suite 400, Austin, TX 78728
Tel: 512-879-0400 • www.bgeinc.com
TBPE Registration No. F-1046

RM 2243

PROPOSED SIGNAL LAYOUT (RM 2243 @ LIMESTONE CREEK)

SHEET 1 OF 1

FED.RD. DIV.NO.	PROJECT NO.		SHEET NO.
6			359
STATE	DIST.	COUNTY	
TEXAS	AUS	WILLIAMSON	
CONT.	SECT.	JOB	HIGHWAY NO.
0914	05	222	RM 2243

4/10/2025 1:07:26 PM pdf.pltcfg
G:\TXC\Projects\County\Williamson\7473-02 RM 2243 Phase 1A\03*CADD\01*Shts\13-SIGNAL\RM2243*CR 175*PROP*SIGNAL.dgn

PROPOSED MAST ARM SIGNS

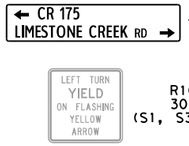

D3-1G
114"x24"
(S2)

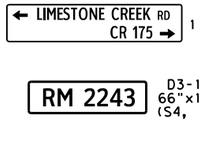

D3-1G
114"x24"
(S6)

R10-17T
30"x30"
(S1, S3, S5, S7)

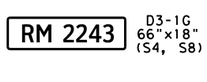

D3-1G
66"x18"
(S4, S8)

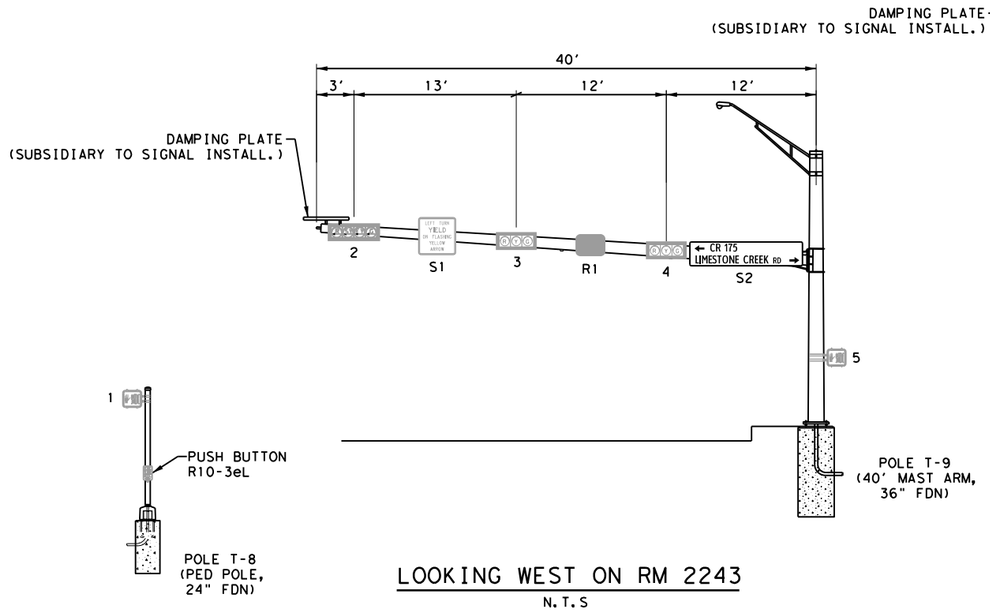

LOOKING WEST ON RM 2243

N.T.S

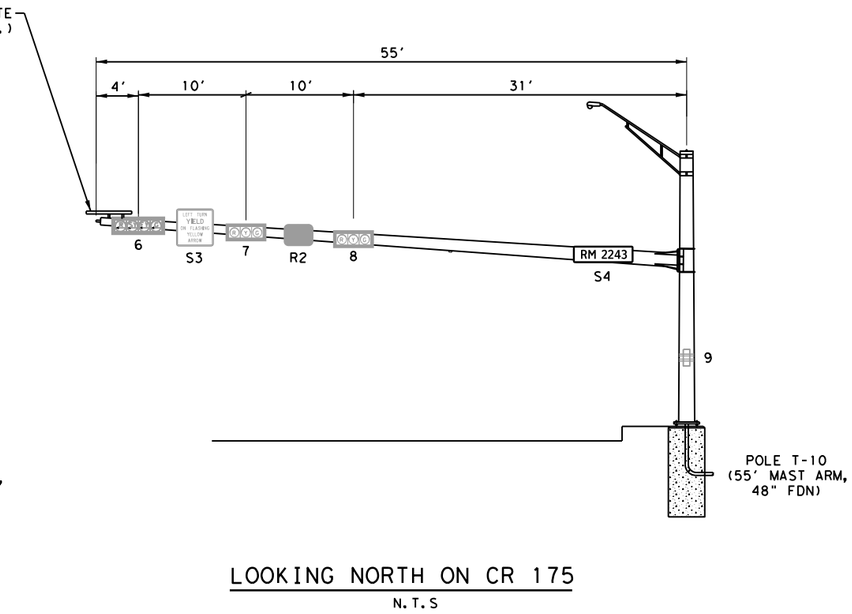

LOOKING NORTH ON CR 175

N.T.S

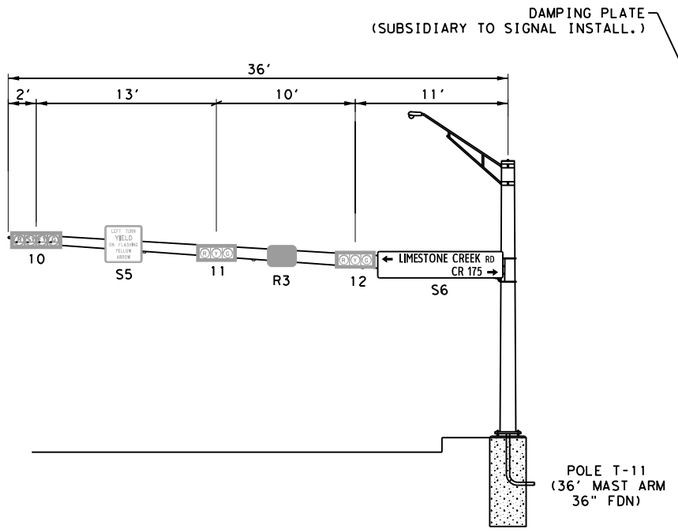

LOOKING EAST ON RM 2243

N.T.S

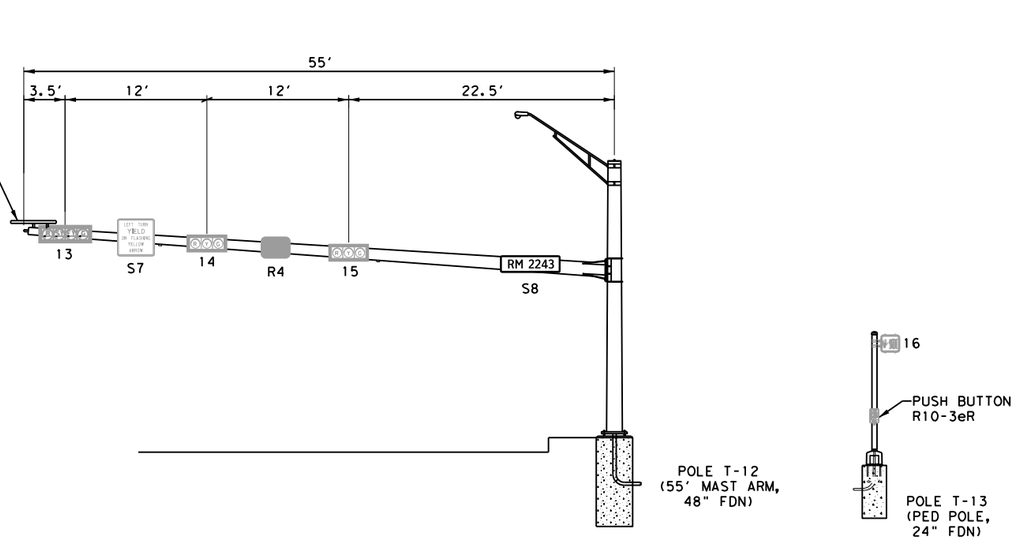

LOOKING SOUTH ON LIMESTONE CREEK RD

N.T.S

SIGNAL HEAD SCHEDULE

TO BE INSTALLED LATER

SH 2, 6, 10, 13
(4 EA)

SH 3, 4, 7, 8,
11, 12, 14, 15
(8 EA)

SH 1, 5, 9, 16
(4 EA)

NOTES:

1. CONTRACTOR TO INSTALL SIGNAL FOUNDATIONS, POLES (INCLUDING LUMINAIRES), MAST ARMS, CONDUITS, GROUND BOXES, CABINETS, AND MAST ARM STREET NAME SIGNS AT THE TIME OF ROADWAY CONSTRUCTION.
2. CONTRACTOR TO INSTALL SIGNAL CABLING ONLY UP TO BASE OF POLE WITH THE EXCEPTION OF CABLING FOR LUMINAIRES. CABLING FOR LUMINAIRES TO BE INSTALLED UP TO THE FULL LUMINAIRE HEIGHT. LUMINAIRES WILL BE OPERATIONAL AT CONSTRUCTION COMPLETION.
3. EQUIPMENT ATTACHED TO MAST ARMS AND PEDESTRIAN POLES (EXCLUDING MAST ARM STREET NAME SIGNS) TO BE DELIVERED TO WILLIAMSON COUNTY FOR STORAGE. THIS EQUIPMENT TO BE INSTALLED ON MAST ARMS BY OTHERS ONCE TRAFFIC SIGNAL WARRANTS ARE MET. CALL WILLIAMSON COUNTY TO COORDINATE MATERIAL DROP OFF AND STORAGE.

STATE OF TEXAS
MORGAN M. KELLEY
150127
LICENSED
PROFESSIONAL ENGINEER
4/10/2025

WILCO
TEXAS

BGE, Inc.
101 W Louis Henna Blvd, Suite 400, Austin, TX 78728
Tel: 512-879-0400 • www.bgeinc.com
TBPE Registration No. F-1046

RM 2243

PROPOSED SIGNAL ELEVATIONS (RM 2243 @ LIMESTONE CREEK)

SHEET 1 OF 1

FED.RD. DIV.NO.	PROJECT NO.		SHEET NO.
6			360
STATE	DIST.	COUNTY	
TEXAS	AUS	WILLIAMSON	
CONT.	SECT.	JOB	HIGHWAY NO.
0914	05	222	RM 2243

4/10/2025 1:07:28 PM pdf.pltcfg
G:\TXC\Projects\County\Williamson\7473-02 RM 2243 Phase 1A\03\CADD\01\Shts\13-SIGNAL\RM2243\CR 175\SIGNAL\ELEVATION.dgn

SUMMARY OF CABLE

RUN NO.	CONDUIT SIZE PROP. 2"	CONDUIT SIZE PROP. 3"	CONDUIT LENGTH (FT)	TRENCH (T) BORE (B) RIGID (RMC) EXIST (EX)	RADAR	16 CONDR 14 AWG	7 CONDR 14 AWG	1 CONDR 8 AWG INSULATED (LUMINAIRE)	2 CONDR 12 AWG	1 COND 8 AWG BARE	1 COND 6 AWG XHHW
1	1	2	40	T	1	1		2	1	3	
2		3	90	T	1	1		2	1	3	
3	1	2	20	T	1	1		2		3	
4		3	130	T	2	2		4	1	3	
5	1	2	25	T	1	1		2		3	
6		1	20	T			1		1	1	
7	1	2	15	T	1	1		2	1	3	
8		3	90	T	1	1	1	2	2	3	
9		1	25	T			1		1	1	
10	1		35	T				8		1	
11		3	30	T	4	4	2		4	3	
12	1		15	T						1	2
PROP 2" CONDUIT TOTAL (LF)			150	CABLE TOTALS (LF)	660	660	195	1360	620	1415	30
PROP 3" CONDUIT TOTAL (LF)			1265								

RADAR CABLES SHALL BE SUBSIDIARY TO ITEM 6008-7003

GROUND BOX SUMMARY

GROUND BOX NUMBER	GROUND BOX TYPE
GB7, GB8, GB9, GB10	TYPE D W/ APRON

PEDESTRIAN PUSH BUTTON

POLE	R10-3eL	R10-3eR
T-8	1	
T-9	1	
T-10	1	
T-13		1
TOTAL PROPOSED	**3**	**1**

CABLE TERMINATION CHART

	CONDR. COLOR	CABLE 1 FROM T-9 TO CNTRL 16 CNDR	CABLE 2 FROM T-10 TO CNTRL 16 CNDR	CABLE 3 FROM T-11 TO CNTRL 16 CNDR	CABLE 4 FROM T-12 TO CNTRL 16 CNDR	CABLE 5 FROM T-8 TO CNTRL 7 CNDR	CABLE 6 FROM T-13 TO CNTRL 7 CNDR
1	BLACK	SPARE	SPARE	SPARE	SPARE	SPARE	SPARE
2	WHITE	SIG COMMON	SIG COMMON	SIG COMMON	SIG COMMON	SIG COMMON	SIG COMMON
3	RED	SH 3, 4 Ø4 R	SH 7, 8 Ø6 R	SH 11, 12 Ø8 R	SH 14, 15 Ø2 R	SH 1 Ø2 W	SH 16 Ø2 W
4	GREEN	SH 3, 4 Ø4 G	SH 7, 8 Ø6 G	SH 11, 12 Ø8 G	SH 14, 15 Ø2 G	SH 1 Ø2 DW	SH 16 Ø2 DW
5	ORANGE	SH 3, 4 Ø4 Y	SH 7, 8 Ø6 Y	SH 11, 12 Ø8 Y	SH 14, 15 Ø2 Y	SPARE	SPARE
6	BLUE	SPARE	SPARE	SPARE	SPARE	SPARE	SPARE
7	WHITE/BLACK	SPARE	SPARE	SPARE	SPARE	SPARE	SPARE
8	RED/BLACK	SH 2 Ø7 ←R	SH 6 Ø1 ←R	SH 10 Ø3 ←R	SH 13 Ø5 ←R		
9	GREEN/BLACK	SH 2 Ø7 ←G	SH 6 Ø1 ←G	SH 10 Ø3 ←G	SH 13 Ø5 ←G		
10	ORANGE/BLACK	SH 2 Ø7 ←Y	SH 6 Ø1 ←Y	SH 10 Ø3 ←Y	SH 13 Ø5 ←Y		
11	BLUE/BLACK	SH 2 Ø7 ←FY	SH 6 Ø1 ←FY	SH 10 Ø3 ←FY	SH 13 Ø5 ←FY		
12	BLACK/WHITE	SPARE	SPARE	SPARE	SPARE		
13	RED/WHITE	SH 5 Ø4 W	SH 9 Ø4 W	SPARE	SPARE		
14	GREEN/WHITE	SH 5 Ø4 DW	SH 9 Ø4 DW	SPARE	SPARE		
15	BLUE/WHITE	SPARE	SPARE	SPARE	SPARE		
16	BLACK/RED	SPARE	SPARE	SPARE	SPARE		

SIGNAL POLE CHART

POLE NUMBER	T-8	T-9				T-10				T-11			T-12				T-13
MAST ARM LENGTH	-	40'				55'				36'			55'				-
FOUNDATION TYPE	24-A	36-A				48-A				36-A			48-A				24-A
WITH LUMINAIRES	NO	YES				YES				YES			YES				NO
SIZE OF LENS	-	12"			-	12"			-	12"			12"				-
SIGNAL FACE NO.	1	2	3	4	5	6	7	8	9	10	11	12	13	14	15		16
SIGNAL INDICATIONS	DW	←R	R	R	DW	←R	R	R	DW	←R	R	R	←R	R	R		DW
	W	←Y	Y	Y	W	←Y	Y	Y	W	←Y	Y	Y	←Y	Y	Y		W
		←FY	G	G		←FY	G	G		←FY	G	G	←FY	G	G		
		←G				←G				←G			←G				

MINIMUM PEDESTRIAN TIMING

PHASE	SIGNAL HEAD #	WALK	FLASHING DON'T WALK	TOTAL (SEC)
Ø2	1, 16	7	24	31
Ø4	5, 9	7	35	42

WIRE INSIDE POLE AND MAST ARMS (FT)

POLE NUMBER	RADAR	7 CONDR 14 AWG	1 CONDR 8 AWG (INSULATED)	2 CONDR 12 AWG
T-8		10		5
T-9	40	60	100	5
T-10	60	75	100	5
T-11	40	60	100	
T-12	50	70	100	
T-13		10		5
TOTAL PROPOSED	190	285	400	20

RADAR CABLES SHALL BE SUBSIDIARY TO ITEM 6008-7003

PROPOSED SIGNAL HEAD SUMMARY

SIGNAL HEAD NO.	12" INDICATION BACKPLATE 3 SEC (EA)	12" INDICATION BACKPLATE 4 SEC (EA)	VEHICLE SIGNAL SECTIONS RED BALL	YELLOW BALL	GREEN BALL	RED ARROW	YELLOW ARROW	GREEN ARROW	PED SIGNAL SECTION
2, 6, 10, 13		4				4	8	4	
3, 4, 7, 8, 11, 12, 14, 15	8		8	8	8				
1, 5, 9, 16									4

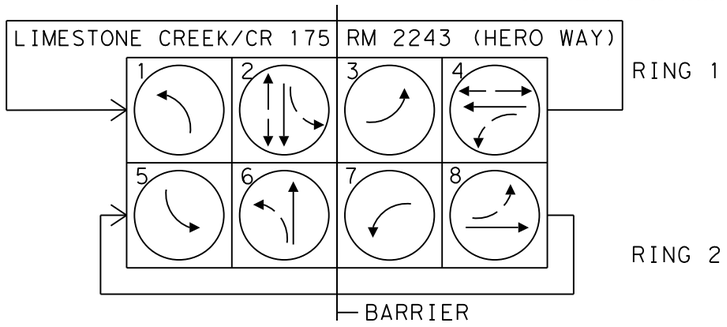

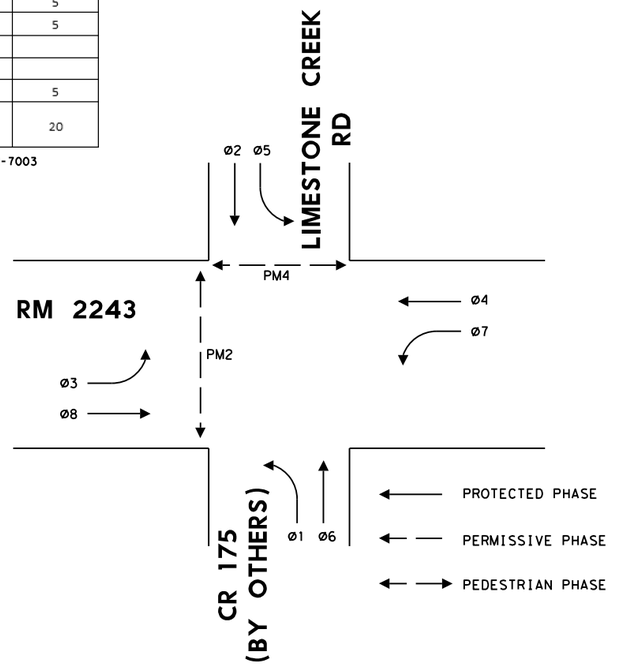

ELECTRICAL SERVICE DATA - RM 2243 & LIMESTONE CREEK RD

ELECTRICAL SERVICE DESCRIPTION	SERVICE CONDUIT SIZE	SERVICE CONDUCTORS NO./SIZE	SAFETY SWITCH AMPS	MAIN CKT. BKR. POLE/AMPS	TWO-POLE CONTRACTOR AMPS	PANELBD/LOADCENTER AMP RATING	BRANCH CIRCUIT ID	BRANCH CKT. BKR. POLE/AMPS	BRANCH CIRCUIT AMPS	KVA LOAD
ELC SRV TY D (120/240)060(NS)AL(E)SP(U)	2"	3/#6	N/A	2P/60	N/A	100	SIGNAL CONTROLLER	1P/30	23	<7
					30		LUMINAIRES	2P/20	9	

STATE OF TEXAS
MORGAN M. KELLEY
150127
LICENSED
PROFESSIONAL ENGINEER
4/10/2025

WILCO TEXAS

BGE, Inc.
101 W Louis Henna Blvd, Suite 400, Austin, TX 78728
Tel: 512-879-0400 • www.bgeinc.com
TBPE Registration No. F-1046

RM 2243

PROPOSED SIGNAL SCHEDULE & PHASING (RM 2243 @ LIMESTONE CREEK)

SHEET 1 OF 1

FED.RD. DIV.NO.	PROJECT NO.	SHEET NO.
6		361

STATE	DIST.	COUNTY	
TEXAS	AUS	WILLIAMSON	
CONT.	SECT.	JOB	HIGHWAY NO.
0914	05	222	RM 2243

4/10/2025 1:07:29 PM pdf.pltcfg
G:\TXC\Projects\County\Williamson\7473-02 RM 2243 Phase 1A\03*CADD\01*Shts\13-SIGNAL\RM2243*CR 175*SIGNAL*SCHEDULE.dgn

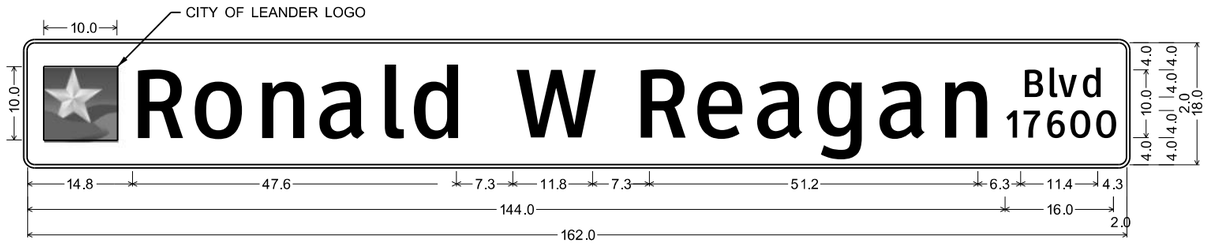

S6, S11 (RONALD REAGAN)

D3-1G(6) 10in;
1.5" Radius, 0.5" Border, White on Green;
"Ronald W Reagan", ClearviewHwy-3-W; "Blvd", ClearviewHwy-3-W; "17600", ClearviewHwy-3-W;

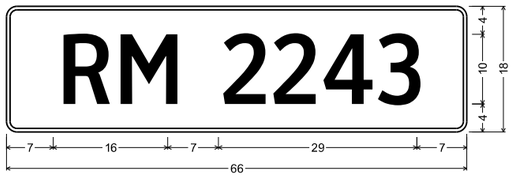

S4, S8 (LIMESTONE CREEK RD)

1.5"Radius, 1" Border, White on Green;
"RM 2243", ClearviewHwy-3-W 60% spacing;

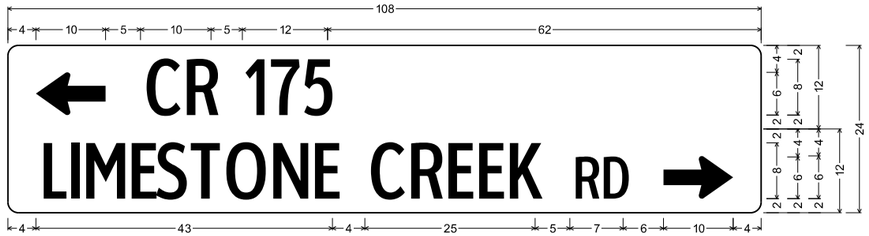

S2 (LIMESTONE CREEK RD)

D3-1G(5) 8in (2 Lines);

1.5"Radius, No border, None on Green;
Standard Arrow 10" X 6" 180° White; "CR 175" White, ClearviewHwy-2-W 40% spacing;

1.5"Radius, No border, None on Green;
"LIMESTONE CREEK" White, ClearviewHwy-2-W 40% spacing; "RD" White, ClearviewHwy-2-W 40% spacing;
Standard Arrow 2.25 10" X 6" 0° White;

S6 (LIMESTONE CREEK RD)

D3-1G(5) 8in (2 Lines);

1.5"Radius, No border, None on Green;
Standard Arrow 10" X 6" 180° White; "LIMESTONE CREEK" White, ClearviewHwy-2-W 40% spacing;
"RD" White, ClearviewHwy-2-W 40% spacing;

1.5"Radius, No border, None on Green;
"CR 175" White, ClearviewHwy-2-W 40% spacing; Standard Arrow 2.25 10" X 6" 0° White;

STATE OF TEXAS
MORGAN M. KELLEY
150127
LICENSED
PROFESSIONAL ENGINEER
4/10/2025

WILCO TEXAS

BGE, Inc.
101 W Louis Henna Blvd, Suite 400, Austin, TX 78728
Tel: 512-879-0400 • www.bgeinc.com
TBPE Registration No. F-1046

RM 2243

PROPOSED SIGNAL SMALL SIGN DETAILS

SHEET 1 OF 1

FED.RD. DIV.NO.	PROJECT NO.		SHEET NO.
6			362
STATE	DIST.	COUNTY	
TEXAS	AUS	WILLIAMSON	
CONT.	SECT.	JOB	HIGHWAY NO.
0914	05	222	RM 2243

4/10/2025 1:07:34 PM pdf.pltcfg
G:\TXC\Projects\County*Williamson\7473-02 RM 2243 Phase 1A\03*CADD\01*Shts\13-SIGNAL\RM2243*SIGNAL*SIGNING*DETAIL.dgn

DISCLAIMER:
The use of this standard is governed by the "Texas Engineering Practice Act". No warranty of any kind is made by TxDOT for any purpose whatsoever. TxDOT assumes no responsibility for the conversion of this standard to other formats or for incorrect results or damages resulting from its use.

DATE: 4/10/2025 1:07:36 PM
FILE: G:\TXC\Projects\County_Williamson\7473-02 RM 2243 Phase 1A\03_CADD\02_SHEETS\windice.dgn

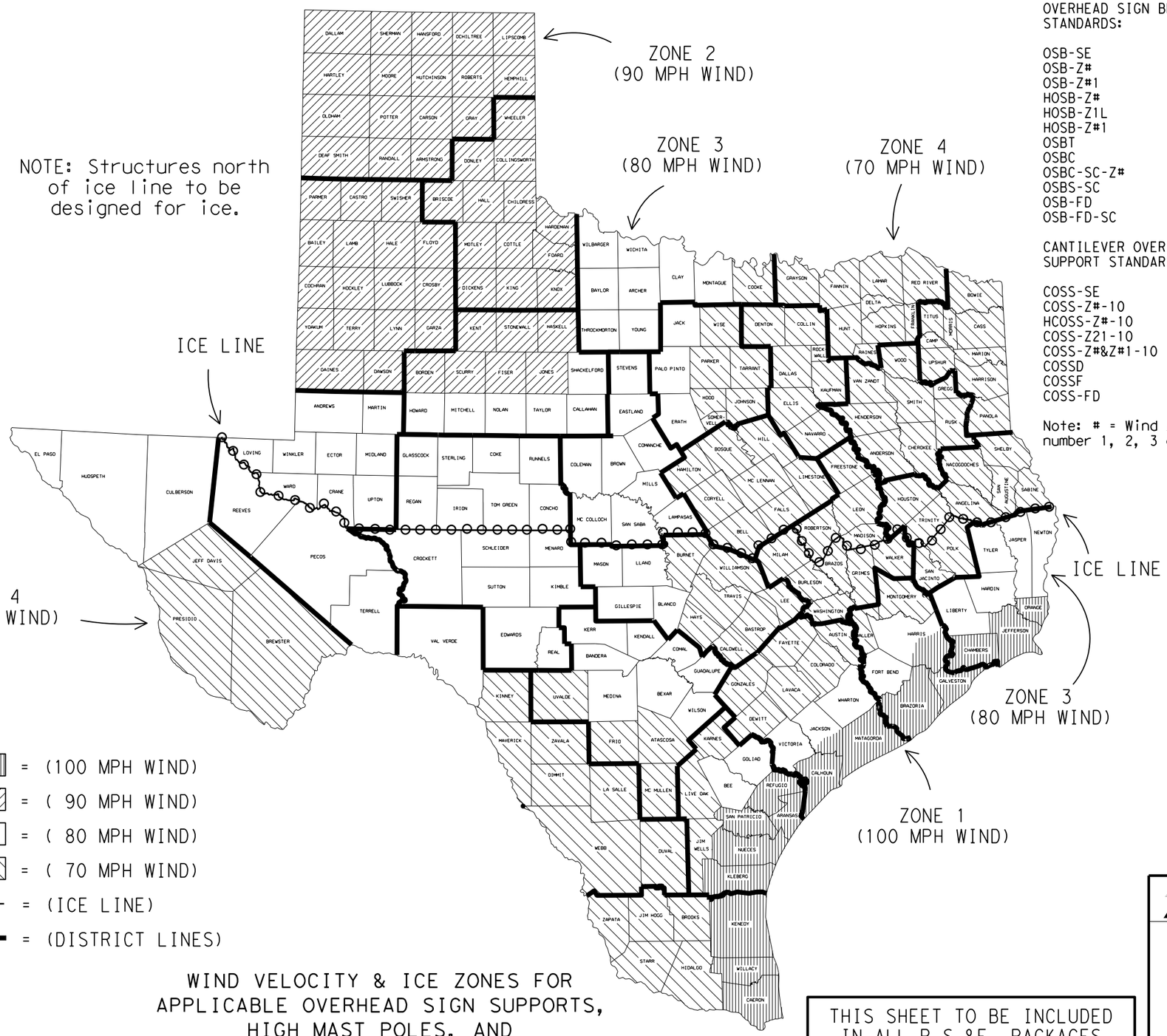

LEGEND

ZONE 1 - = (100 MPH WIND)
ZONE 2 - = (90 MPH WIND)
ZONE 3 - = (80 MPH WIND)
ZONE 4 - = (70 MPH WIND)
= (ICE LINE)
= (DISTRICT LINES)

APPLICABLE STANDARDS SHEETS

OVERHEAD SIGN BRIDGE STANDARDS:

OSB-SE
OSB-Z#
OSB-Z#1
HOSB-Z#
HOSB-Z1L
HOSB-Z#1
OSBT
OSBC
OSBC-SC-Z#
OSBS-SC
OSB-FD
OSB-FD-SC

CANTILEVER OVERHEAD SIGN SUPPORT STANDARDS:

COSS-SE
COSS-Z#-10
HCOSS-Z#-10
COSS-Z21-10
COSS-Z#&Z#1-10
COSSD
COSSF
COSS-FD

Note: # = Wind Zone number 1, 2, 3 or 4

HIGH MAST ILLUMINATION POLE STANDARDS:

HMIP-98
HMIF-98

WALKWAYS AND BRACKETS STANDARDS:

SWW
SB(SWL-1)

TRAFFIC SIGNAL POLE STANDARDS:

SP-80
SP-100
SMA-80
SMA-100
DMA-80
DMA-100
MA-C
MAC(ILSN)
MAD-D
TS-FD
LUM-A
CFA
LMA
TS-C
MA-DPD

FOR HARRIS CO. ONLY
Zone line is just North of US 90, around on the North, West and South sides of IH 610 and down the West side of SH 288.

FOR JACKSON CO. ONLY
Zone line is just North of SH 616.

WIND VELOCITY & ICE ZONES FOR APPLICABLE OVERHEAD SIGN SUPPORTS, HIGH MAST POLES, AND TRAFFIC SIGNAL POLES

Based on 50 Year Mean Recurrence Interval of Fastest Mile Wind Velocity at 33 feet height.

THIS SHEET TO BE INCLUDED IN ALL P.S.&E. PACKAGES CONTAINING ONE OR MORE OF THE APPLICABLE STANDARD SHEETS LISTED HEREON

Texas Department of Transportation

Traffic Operations Division Standard

WIND VELOCITY AND ICE ZONES

WV & IZ-14

FILE: windice.dgn	DN: TxDOT	CK: TxDOT	DW: TxDOT	CK: TxDOT
© TxDOT April 1996	CONT	SECT	JOB	HIGHWAY
REVISIONS	0914	05	222	RM 2243
8-14-Added list of applicable standards, restricting use to structures designed for Fastest Mile wind speeds.	DIST	COUNTY		SHEET NO.
	AUS	WILLIAMSON		363

DISCLAIMER:
The use of this standard is governed by the "Texas Engineering Practice Act". No warranty of any kind is made by TxDOT for any purpose whatsoever. TxDOT assumes no responsibility for the conversion of this standard to other formats or for incorrect results or damages resulting from its use.

DATE: 4/10/2025 1:07:37 PM
FILE: G:\TXC\Projects\County_Williamson\7473-02 RM 2243 Phase 1A\03_CADD\02-Shts\ed1-14.dgn

GENERAL NOTES FOR ALL ELECTRICAL WORK

1. The location of all conduits, junction boxes, ground boxes, and electrical services is diagrammatic and may be shifted to accommodate field conditions.

2. Provide new and unused materials. Ensure that all materials and installations comply with the applicable articles of the National Electrical Code (NEC), TxDOT standards and specifications, National Electrical Manufacturers Association (NEMA), and are listed by Underwriters Laboratories (UL) or a Nationally Recognized Testing Lab (NRTL). NRTLs such as Canadian Standard Association (CSA), Intertek Testing Services NA Inc., or FM Approvals LLC can be considered equivalent to UL. Where reference is made to NEMA listed devices, International Electrotechnical Commission (IEC) listed devices will not be considered an acceptable equal to a NEMA listed device. Acceptable devices may have both a NEMA and IEC listing. Faulty fabrication or poor workmanship in any material, equipment, or installation is justification for rejection. Replace or reinstall rejected material or equipment at no additional cost to the Department.

3. Miscellaneous nuts, bolts and hardware, except for high strength bolts, may be stainless steel when plans specify galvanized, provided the bolt size is ½ in. or less in diameter.

4. Provide the following test equipment as required by the Engineer to confirm compliance with the contract and the NEC: voltmeter, ammeter, megohm meter (1000 volt DC), ground resistance tester, torque wrenches, and torque screwdrivers. Ensure all equipment has been properly calibrated within the last year. Provide calibration certification to the Engineer upon request. Operate test equipment during inspection as requested by the Engineer.

5. Install grounding as shown on the plans and in accordance with the NEC. Ensure all metallic conduits; metal poles; luminaires; and metal enclosures are bonded to the equipment grounding conductor. Provide stranded bare copper or green insulated grounding conductors. Ground rods, connectors, and bonding jumpers are subsidiary to the various bid items.

6. When required by the Engineer, notify the Department in writing of materials from the Material Producers List (MPL) intended for use on each project. Prequalified materials are listed on the MPL on TxDOT's website under "Roadway Illumination and Electrical Supplies." No substitutions will be allowed for materials on this list.

CONDUIT

A. MATERIALS

1. Provide conduit, junction boxes, fittings, and hardware as per TxDOT Departmental Material Specification (DMS) 11030 "Conduit" and Item 618 "Conduit" of TxDOT's "Standard Specifications For Construction And Maintenance Of Highways, Streets, And Bridges," latest edition. Provide conduits listed under Item 618 on the MPL under "Roadway Illumination and Electrical Supplies." Provide conduit types according to the descriptive code or as shown on the plans. Do not substitute other types of conduits for those shown. Provide liquidtight flexible metal conduit (LFMC) when flexible conduit is called for on galvanized steel rigid metallic conduit (RMC) systems. Provide liquidtight flexible nonmetallic conduit (LFNC) when flexible conduit is called for on polyvinyl chloride (PVC) systems.

2. Provide galvanized steel RMC for all exposed conduits, unless otherwise shown on the plans. Properly bond all metal conduits.

3. Unless otherwise shown on the plans, provide junction boxes with a minimum size as shown in the following table, which applies to the greatest number of conductors entering the box through one conduit with no more than four conduits per box. When a mixture of conductor sizes is present, count the conductors as if all are of the larger size. For situations not applicable to the table, size junction boxes in accordance with NEC.

AWG	3 CONDUCTORS	5 CONDUCTORS	7 CONDUCTORS
#1	10" x 10" x 4"	12" x 12" x 4"	16" x 16" x 4"
#2	8" x 8" x 4"	10" x 10" x 4"	12" x 12" x 4"
#4	8" x 8" x 4"	10" x 10" x 4"	10" x 10" x 4"
#6	8" x 8" x 4"	8" x 8" x 4"	10" x 10" x 4"
#8	8" x 8" x 4"	8" x 8" x 4"	8" x 8" x 4"

4. Junction boxes with an internal volume of less than 100 cu. in. and supported by entering raceways must have threaded entries or hubs identified for the intended purpose and supported by connection of two or more rigid metal conduits. Secure conduit within 3 ft. of the enclosure or within 18 in. of the enclosure if all conduit entries are on the same side. Mechanically secure all junction boxes with an internal volume greater than 100 cu. inches.

5. Provide hot dipped galvanized cast iron or sand cast aluminum outlet boxes for junction boxes containing only 10 AWG or 12 AWG conductors. Do not use die cast aluminum boxes. Size outlet boxes according to the NEC.

6. Do not use intermediate metal conduit (IMC) or electrical metallic tubing (EMT) unless specifically required by the plan sheets. When EMT is called for, provide junction boxes made from galvanized steel sheeting, listed and approved for outdoor use, unless otherwise noted on the plans. Size all galvanized steel junction boxes in accordance with the NEC. Provide junction boxes for IMC conduit systems that meet the same requirements for junction boxes used with RMC systems.

7. Provide PVC junction boxes intended for outdoor use on PVC conduit systems, unless otherwise noted on the plans.

8. Provide PVC elbows in PVC conduit systems, unless otherwise shown on the plans. Use only a flat, high tensile strength polyester fiber pull tape for pulling conductors through the PVC conduit system. When galvanized steel RMC elbows are specifically called for in the plans and any portion of the RMC elbow is buried less than 18 in., ground the RMC elbow by means of a grounding bushing on a rigid metal extension. Grounding of the rigid metal elbow is not required if the entire RMC elbow is encased in a minimum of 2 in. of concrete. PVC extensions are allowed on these concrete encased rigid metal elbows. RMC or PVC elbows are subsidiary to various bid items.

9. When required, provide High-Density Polyethylene (HDPE) conduit with factory installed internal conductors according to Item 622 "Duct Cable." At the Contractor's request and with approval by the Engineer, substitute HDPE conduit with no conductors for bored schedule 40 or schedule 80 PVC conduit bid under Item 618. Ensure bored HDPE substituted for PVC is schedule 40 and of the same size PVC called for in the plans. Ensure the substituted HDPE meets the requirements of Item 622, except that the conduit is supplied without factory-installed conductors. Make the transition of the HDPE conduit to PVC (or RMC elbow when required) at the bore pit. Provide conduit of the size and schedule as shown on the plans. Do not extend substituted conduit into ground boxes or foundations. Provide PVC or galvanized steel RMC elbows as called for at all ground boxes and foundations.

10. Use two-hole straps when supporting 2 in. and larger conduits. On electrical service poles, properly sized stainless steel or hot dipped galvanized one-hole standoff straps are allowed on the service riser conduit.

B. CONSTRUCTION METHODS

1. Provide and install expansion joint conduit fittings on all structure-mounted conduits at the structure's expansion joints to allow for movement of the conduit. In addition, provide and install expansion joint fittings on all continuous runs of galvanized steel RMC conduit externally exposed on structures such as bridges at maximum intervals of 150 ft. When requested by the project Engineer, supply manufacturer's specification sheet for expansion joint conduit fittings. Repair or replace expansion joint fittings that do not allow for movement at no additional cost to the Department. Provide the method of determining the amount of expansion to the Engineer upon request. Do not use LFMC or LFNC as a substitute for the required expansion conduit fittings.

2. Space all conduit supports at maximum intervals of 5 ft. Install conduit spacers when attaching metal conduit to surface of concrete structures. See "Conduit Mounting Options" on ED(2). Install conduit support within 3 ft. of all enclosures and conduit terminations.

3. Do not attach conduit supports directly to pre-stressed concrete beams except as shown specifically in the plans or as approved by the Engineer.

4. Unless otherwise shown on the plans, jack or bore conduit placed beneath existing roadways, driveways, sidewalks, or after the base or surfacing operation has begun. Backfill and compact the bore pits below the conduit per Item 476 "Jacking, Boring, or Tunneling Pipe or Box" prior to installing conduit or duct cable to prevent bending of the connections.

5. When placing conduit in the sub-grade of new roadways, backfill all trenches with excavated material unless otherwise noted on the plans. When placing conduit in the sub-base of new roadways, backfill all trenches with cement-stabilized base as per requirements of Items 110 "Excavation", 400 "Excavation and Backfill for Structures", 401 "Flowable Backfill", 402 "Trench Excavation Protection", and 403 "Temporary Special Shoring."

6. Provide and place warning tape approximately 10 in. above all trenched conduit as per Item 618.

7. During construction, temporarily cap or plug open ends of all conduit and raceways immediately after installation to prevent entry of dirt, debris and animals. Temporary caps constructed of durable duct tape are allowed. Tightly fix the tape to the conduit opening. Clean out the conduit and prove it clear in accordance with Item 618 prior to installing any conductors.

8. Ensure conduit entry into the top of any enclosure is waterproof by installing conduit sealing hubs or using boxes with threaded bosses. This includes surface mounted safety switches, meter cans, service enclosures, auxiliary enclosures and junction boxes. Grounding bushings on water tight sealing hubs are not required.

9. Fit the ends of all PVC conduit terminations with bushings or bell end fittings. Provide and install a grounding type bushing on all metal conduit terminations.

10. Install a bonding jumper from each grounding bushing to the nearest ground rod, grounding lug, or equipment grounding conductor. Ensure all bonding jumpers are the same size as the equipment grounding conductor. Bonding of conduit used as a casing under roadways for duct cable is not required, if the duct extends the full length through the casing.

11. At all electrical services, install a 6 AWG solid copper grounding electrode conductor.

12. Place conduits entering ground boxes so that the conduit openings are between 3 in. and 6 in. from the bottom of the box. See the ground box detail on sheet ED(4).

13. Seal ends of all conduits with duct seal, expandable foam, or by other methods approved by the Engineer. Seal conduit immediately after completion of conductor installation and pull tests. Do not use duct tape as a permanent conduit sealant. Do not use silicone caulk as a conduit sealant.

14. File smooth the cut ends of all mounting strut and conduit. Before installing, paint the field cut ends of all mounting strut and RMC (threaded or non-threaded) with zinc rich paint (94% or more zinc content) to alleviate overspray. Use zinc rich paint to touch up galvanized material as allowed under Item 445 "Galvanizing." Do not paint non-galvanized material with a zinc rich paint as an alternative for materials required to be galvanized.

Texas Department of Transportation

Traffic Operations Division Standard

ELECTRICAL DETAILS CONDUITS & NOTES

ED(1)-14

FILE:	ed1-14.dgn	DN:	CK:	DW:	CK:
© TxDOT	October 2014	CONT	SECT	JOB	HIGHWAY
REVISIONS		0914	05	222	RM 2243
		DIST	COUNTY		SHEET NO.
		AUS	WILLIAMSON		364

DISCLAIMER:
The use of this standard is governed by the "Texas Engineering Practice Act". No warranty of any kind is made by TxDOT for any purpose whatsoever. TxDOT assumes no responsibility for the conversion of this standard to other formats or for incorrect results or damages resulting from its use.

DATE: 4/10/2025 1:07:39 PM
FILE: G:\TXC\Projects\County_Williamson\7473-02 RM 2243 Phase 1A\03_CADD\02SHEETS\ed2-14.dgn

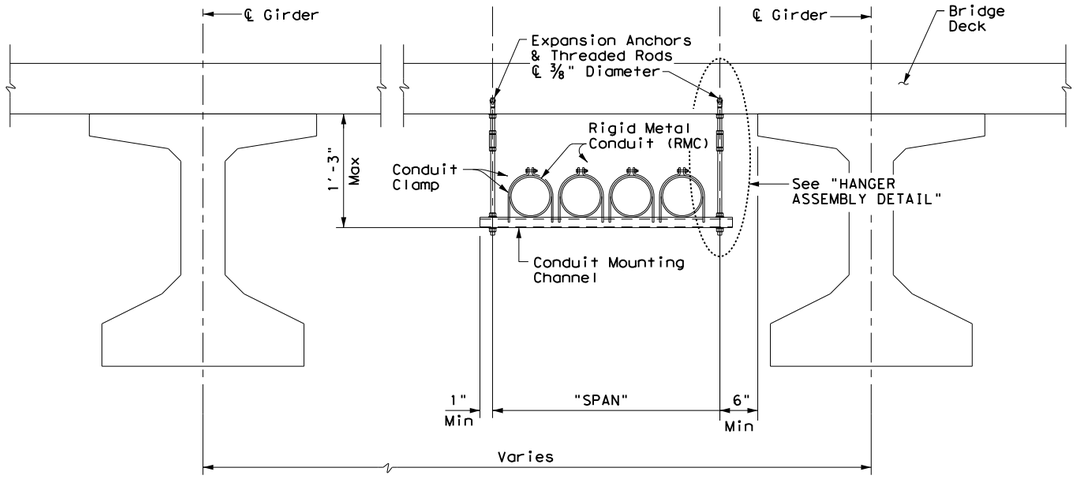

CONDUIT HANGING DETAIL

CONDUIT MOUNTING CHANNEL		
"SPAN"	"W" x "H"	"T"
less than 2'	1 5/8" x 1 3/8"	12 Ga.
2'-0" to 2'-6"	1 5/8" x 1 5/8"	12 Ga.
>2'-6" to 3'-0"	1 5/8" x 2 7/16"	12 Ga.

Channels with round or short slotted hole patterns are allowed, if the load carrying capacity is not reduced by more than 15%.

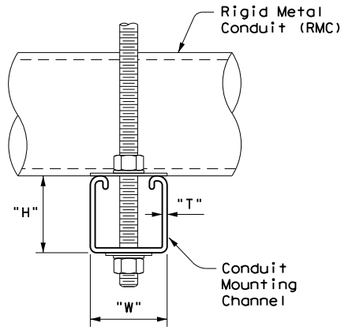

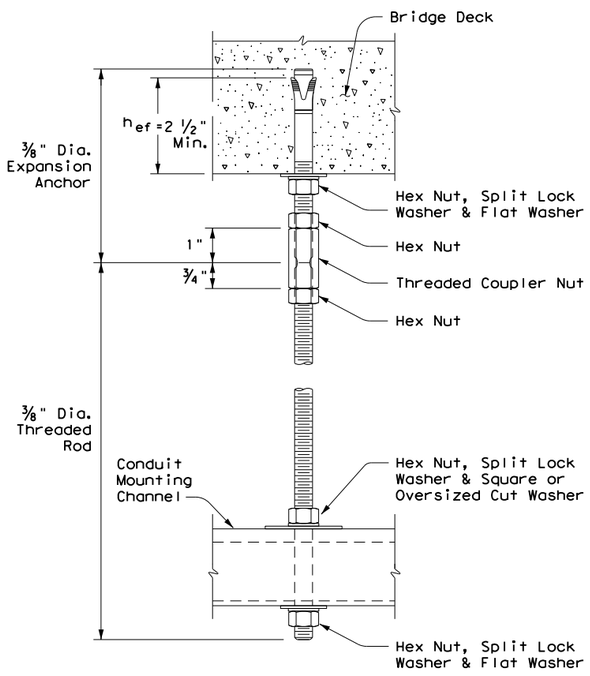

HANGER ASSEMBLY DETAIL

ELECTRIC CONDUIT TO BRIDGE DECK ATTACHMENT

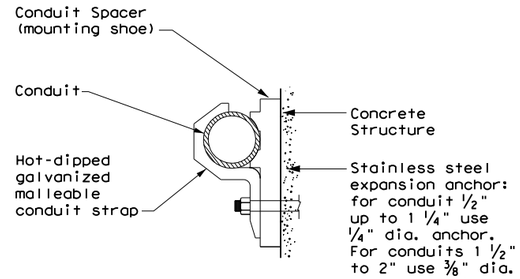

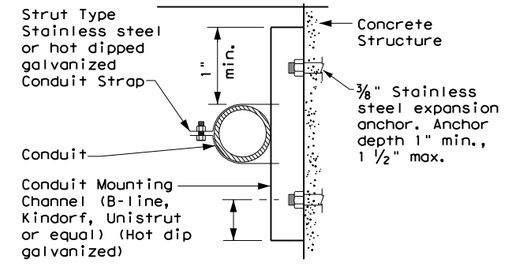

CONDUIT MOUNTING OPTIONS

Attachment to concrete surfaces
See ED(1)B.2

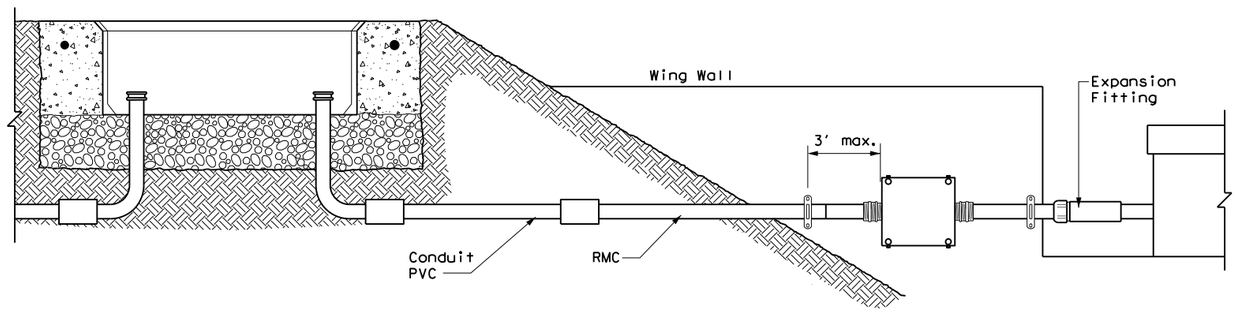

TYPICAL CONDUIT ENTRY TO BRIDGE STRUCTURE DETAIL

EXPANSION ANCHOR NOTES FOR BRIDGE DECK ATTACHMENT

1. Use torque controlled mechanical expansion anchors that are approved for use in cracked concrete by the International Code Council, Evaluation Service (ICC-ES). The chosen anchor product shall have a designated ICC-ES Evaluation Report number, and its approval status shall be maintained on the ICC-ES website under Division 031600 for Concrete Anchors.

2. Unless otherwise approved by the Engineer: do not use adhesive anchors; do not use expansion anchors that are not included in the ICC-ES approval list; and do not use expansion anchors that are only approved for use in uncracked concrete.

3. Use anchors manufactured with stainless steel expansion wedges. Anchors manufactured with carbon steel expansion wedges are not allowed. Anchor bodies can be either zinc-plated carbon steel or stainless steel. For application in marine environment, both the anchor body and expansion wedge shall be stainless steel.

4. Install anchors as shown on the plans and in accordance with the anchor manufacturer's published installation instructions. Arrange a field demonstration test to evaluate the procedures and tools. The test shall be witnessed and approved by the Engineer prior to furnishing anchors on the structure.

5. Prior to hole drilling, use rebar locator to ensure clearing of existing deck strands or reinforcement. Install anchors to ensure a minimum effective embedment depth, (h_{ef}), as shown. Increase (h_{ef})as needed to ensure sufficient thread length for proper torqueing and tightening of anchors.

6. Use anchors of minimum 1600 Lbs tensile capacity (minimum of steel, concrete breakout, and concrete pullout strengths as determined by ACI 318 Appendix D) at the required minimum embedment depth (h_{ef}). No lateral loads shall be introduced after conduit installation.

Texas Department of Transportation

Traffic Operations Division Standard

ELECTRICAL DETAILS
CONDUIT SUPPORTS

ED(2)-14

FILE: ed2-14.dgn	DN: TxDOT	CK: TxDOT	DW: TxDOT	CK: TxDOT
©TxDOT October 2014	CONT	SECT	JOB	HIGHWAY
REVISIONS	0914	05	222	RM 2243
	DIST	COUNTY		SHEET NO.
	AUS	WILLIAMSON		365

DISCLAIMER:
The use of this standard is governed by the "Texas Engineering Practice Act". No warranty of any kind is made by TxDOT for any purpose whatsoever. TxDOT assumes no responsibility for the conversion of this standard to other formats or for incorrect results or damages resulting from its use.

DATE: 4/10/2025 1:07:40 PM
FILE: G:\TxDOT\Projects\County_Williamson\7473-02 RM 2243 Phase 1A\03_CADD\0_PSAM\SA_ISY-SYSTEM\ALL\DS\ED3-14.dgn

ELECTRICAL CONDUCTORS

A. MATERIAL INFORMATION

1. Provide Type XHHW insulated conductors in accordance with Departmental Material Specification (DMS)11040 "Conductors" and Item 620 "Electrical Conductors." Provide conductors as listed on the Material Producers List (MPL) on the Department web site under "Roadway Illumination and Electrical Supplies" Item 620. Color code insulated conductors in conformance with the NEC. Identify grounded (neutral) conductors with white insulation. Identify grounding conductors (ground wires) with green insulation or bare conductors. Identify ungrounded (hot) conductors with any color insulation except green, white, or gray. Keep color scheme consistent throughout the wiring system. Identify conductors 6 American Wire Gauge (AWG) and smaller by continuous color jacket. Identify electrical conductors 4 AWG and larger by continuous color jacket or by colored tape. When identifying conductors with colored tape, mark at least 6 in. of the conductor's insulation with half laps of tape.

2. Provide a solid copper 6 AWG grounding electrode conductor to bond the electrical service equipment to the concrete encased grounding electrode or the ground rod at the service location. Connect the grounding electrode conductor to the ground rod with a UL listed connector in accordance with DMS 11040. Connect the grounding electrode conductor to the concrete encased grounding electrode as shown in the plans.

3. Where two or more circuits are present in one conduit or enclosure, permanently identify the conductors of each branch circuit by attaching a non-metallic tag around both circuit conductors at each accessible location. Provide tags with two straps, large enough to indicate circuit number, letter, or other identification as shown in the plans. Print circuit identification on the tag with a permanent marker.

4. Use listed compression or screw type pressure connectors, terminal blocks, or split bolt connectors for splicing as specified in DMS 11040. Use hot melt adhesive tape to fill the gap and seal the ends of heat shrink tubing. Provide UL listed gel-filled insulating splice covers. Splicing materials, insulating materials, breakaway disconnects, splice covers, and fuse holders are subsidiary to various bid items.

B. CONSTRUCTION METHODS

1. Use only a flat, high tensile strength polyester fiber pull tape for pulling conductors through the conduit system. After installing conductors in conduit, perform conductor pull test. If a conductor cannot be freely pulled, make any needed alterations or repairs at no additional cost to the department. Perform insulation resistance tests in accordance with Item 620. Coordinate with the Engineer to witness the tests.

2. Leave 2 ft. minimum, 3 ft. maximum length for each conductor up to the splice in ground boxes. Leave 3 ft. minimum, 4 ft. maximum length of conductor in ground boxes when pulled through with no splice. Leave 1 ft. minimum, 1.5 ft. maximum length of conductor at enclosures, weatherheads and pole bases.

3. Make splices only in junction boxes, ground boxes, pole bases, or electrical enclosures and use only listed compression or screw type pressure connectors, terminal blocks, or split bolt connectors. Insulate splices with heavy wall heat shrink tubing or gel-filled insulating splice covers to provide a watertight splice. Overlap conductor insulation with heat shrink tubing a minimum of 2 in. past both sides of the splice. Where heat shrink tubing may not shrink sufficiently to provide a watertight seal around the individual conductors, prior to heating the tubing, increase the diameter of the conductor insulation using hot melt adhesive tape to provide a watertight seal between the individual conductors and the heat shrink tubing. Ensure the tape extends past the heat shrink tubing. Use hot melt adhesive tape to fill the gap and seal the ends of heat shrink tubing. Heat shrink tubing that appears to have been burned, or overheated, is considered defective and must be replaced.

4. Size and install gel-filled insulating splice covers according to manufacturer's specifications when used in place of heat shrink tubing.

5. Wire nuts with factory applied waterproof sealant may be used for 8 AWG or smaller conductors in above ground junction boxes, but not in pole bases or ground boxes. Install wire nuts in an upright position to prevent the accumulation of water.

6. Support conductors in illumination poles with a J-hook at the top of the pole.

7. When terminating conductors, remove the insulation and jacketing material without nicking the individual strands of the conductor. Conductors with nicked individual conductor strands or removed strands will be considered damaged.

8. Replace conductors and cables that are damaged beyond repair or that fail an insulation resistance test at no additional cost to the department.

9. Do not repair damaged conductors with duct tape, electrical tape, or wire nuts. Use only approved splicing methods.

10. Do not terminate more than one conductor under a single connector, unless the connector is rated for multiple conductors. Do not exceed the pressure connector's listing for maximum number and size of conductors allowed.

11. Install breakaway connectors on conductors bid under Item 620 whenever those conductors pass through a breakaway support device. Follow manufacturer's instructions when terminating conductors to breakaway connectors. Properly torque threaded connections. Proper terminations are critical to the safe operation of breakaway devices. Trim waterproofing boots on breakaway connectors to fit snugly around the conductor to ensure waterproof connection. Only one conductor may enter a single opening in a boot. Provide waterproof boots with the correct number of openings. Leave unused openings factory sealed. Use prequalified breakaway connectors as shown on the MPL.

12. Provide and install a separate stranded equipment grounding conductor (EGC) in all conduits that contain circuit wiring of 50 volts or more. Unless shown elsewhere, size the EGC to be the same size as the largest current carrying conductor contained in the conduit. Ensure all EGCs are bonded together at every accessible location. For traffic signal installations, provide a minimum size 8 AWG EGC. The EGC is paid for under Item 620.

C. TEMPORARY WIRING

1. Install temporary conductors and electrical equipment in accordance with the NEC article "Temporary Installations" and Department standard sheets.

2. Provide a ground fault circuit interrupter (GFCI) for power outlets for portable electrical equipment, power tools, ice machines, ice storage bins and refrigerators located outdoors at grade. GFCI may be any one of the following: molded cord and plug set, receptacle, or circuit breaker type.

3. Use listed wire nuts with factory applied sealant for temporary wiring where approved.

4. Enclose conductor splices within a listed enclosure or ground box, or ensure the splices are more than 10 ft. above grade vertically and more than 5 ft. horizontally from any metal structure. Where installing temporary conductors in areas subject to vehicle traffic or mobile construction equipment, ensure the vertical clearance to ground is at least 18 ft. when measured at the lowest point. Ground messenger wires that support power conductors in conformance with the NEC.

5. Protect and when necessary repair any existing electrical conduits uncovered during the construction process in a timely manner and in conformance with the NEC.

GROUND RODS & GROUNDING ELECTRODES

A. MATERIAL INFORMATION

1. Provide and install a grounding electrode at electrical services. Provide ground rods according to DMS 11040 and the plans. Larger diameter or longer length rods may be called for in some specific locations, see the individual plans sheets. Concrete encased grounding electrodes may be called for in specific locations including electrical service, see individual plan sheets.

B. CONSTRUCTION METHODS

1. Furnish auxiliary ground rods for lightning protection and install in soil, concrete, or both, as called for in the plans. For ground rods installed in concrete, ensure the connection of the conductor to the ground rod is readily accessible for inspection or repairs. For ground rods installed in soil, ensure that the upper end is between 2 to 4 in. below finished grade.

2. Do not place ground rods in the same drilled hole as a timber pole.

3. Install ground rods so the imprinted part number is at the upper end of the rod.

4. Remove all non-conductive coatings such as concrete splatter from the rod at the clamp location.

5. Route all conductors as short and straight as possible for connection to lightning protection ground rods. When a bend is required, ensure a minimum radius bend of four inches for these conductors.

6. Unless otherwise called for in the plans, protect grounding electrode conductors with non-metallic conduit. When protecting grounding electrode conductors with metal conduit, provide and install a grounding type bushing and properly sized bonding jumper on each end of the metal conduit.

7. Written authorization is required before installing a ground rod in a horizontal trench for rocky soil or a solid rock bottom.

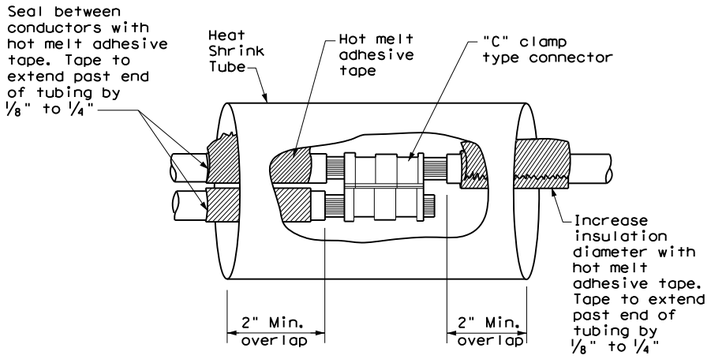

SPLICE OPTION 1
Compression Type

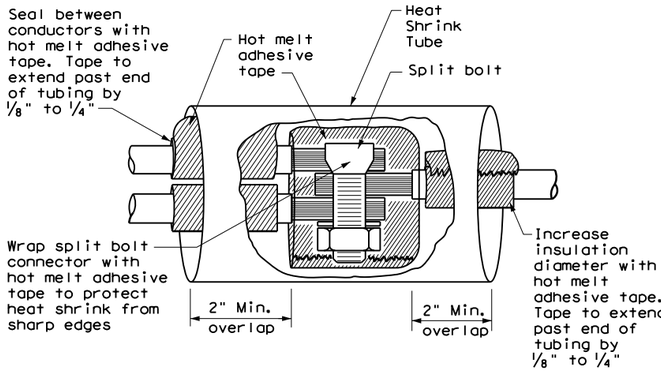

SPLICE OPTION 2
Split Bolt Type

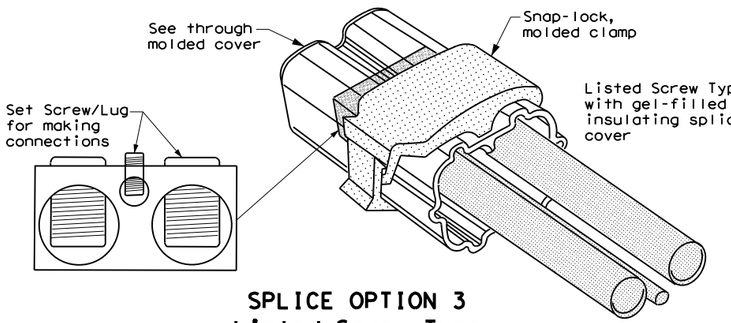

SPLICE OPTION 3
Listed Screw Type

Texas Department of Transportation

Traffic Operations Division Standard

ELECTRICAL DETAILS CONDUCTORS

ED(3)-14

FILE: ed3-14.dgn	DN: TxDOT	CK: TxDOT	DW: TxDOT	CK: TxDOT
© TxDOT October 2014	CONT	SECT	JOB	HIGHWAY
REVISIONS	0914	05	222	RM 2243
	DIST	COUNTY		SHEET NO.
	AUS	WILLIAMSON		366

71C

DISCLAIMER:
The use of this standard is governed by the "Texas Engineering Practice Act". No warranty of any kind is made by TxDOT for any purpose whatsoever. TxDOT assumes no responsibility for the conversion of this standard to other formats or for incorrect results or damages resulting from its use.

DATE: 4/10/2025 1:07:42 PM
FILE: G:\TXC\Projects\County_Williamson\7473-02 RM 2243 Phase 1A\03_CADD\OPS\ms\sys-SIGNAL\NS_RDWY\ed4-14.dgn

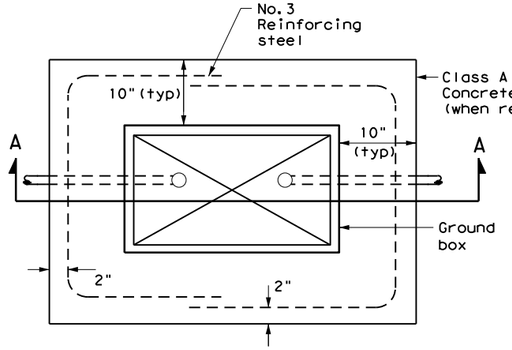

PLAN VIEW

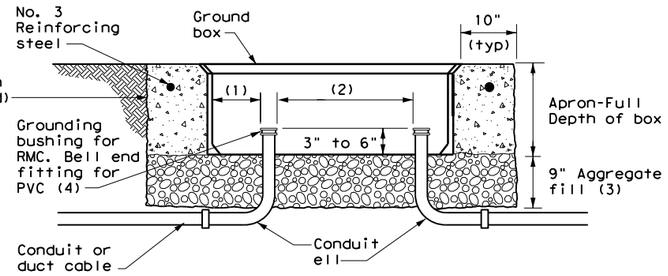

SECTION A - A

APRON FOR GROUND BOX

(1) Uniformly space ends of conduits within the ground box. Position ends of conduits so that ground box walls do not interfere with the installation of grounding bushings or bell end fittings.

(2) Maintain sufficient space between conduits to allow for proper installation of bushing.

(3) Place aggregate under the box, not in the box. Aggregate should not encroach on the interior volume of the box.

(4) Install a grounding bushing on the upper end of all RMC terminating in a ground box. Ground RMC elbows when any part of the elbow is less than 18 in. below the bottom of the ground box. Install a PVC bushing or bell end fitting on the upper end of all PVC conduits terminating in a ground box.

GROUND BOX DIMENSIONS	
TYPE	OUTSIDE DIMENSIONS (INCHES) (Width x Length X Depth)
A	12 X 23 X 11
B	12 X 23 X 22
C	16 X 29 X 11
D	16 X 29 X 22
E	12 X 23 X 17

GROUND BOX COVER DIMENSIONS								
TYPE	DIMENSIONS (INCHES)							
	H	I	J	K	L	M	N	P
A, B & E	23 1/4	23	13 3/4	13 1/2	9 7/8	5 1/8	1 3/8	2
C & D	30 1/2	30 1/4	17 1/2	17 1/4	13 1/4	6 3/4	1 3/8	2

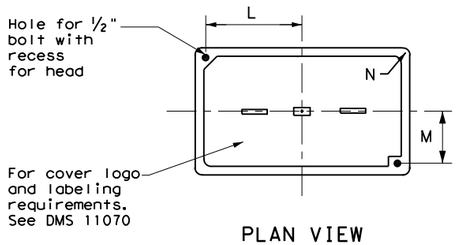

PLAN VIEW

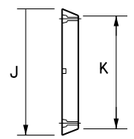

END

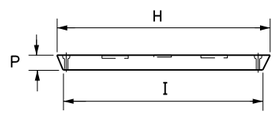

SIDE

GROUND BOX COVER

GROUND BOXES

A. MATERIALS

1. Provide polymer concrete ground boxes measuring 16x30x24 in. (WxLxD) or smaller in accordance with Departmental Material Specification (DMS) 11070 "Ground Boxes" and Item 624 "Ground Boxes."

2. Provide Type A, B, C, D, and E ground boxes as shown in the plans, and as listed on the Material Producers List (MPL) on the Department web site under "Roadway Illumination and Electrical Supplies," Item 624.

3. Ensure ground box cover is correctly labeled in accordance with DMS 11070.

4. Provide larger ground boxes in accordance with Item 624 and as shown in the plans.

B. CONSTRUCTION METHODS

1. Remove all gravel and dirt from conduit. Cap all conduits prior to placing aggregate and setting ground box. Provide Grade 3 or 4 coarse aggregate as shown on Table 2 of Item 302 "Aggregates for Surface Treatments." Ensure aggregate bed is in place and at least 9 inches deep, prior to setting the ground box. Install ground box on top of aggregate.

2. Cast ground box aprons in place. Reinforcing steel may be field bent. Ensure the depth of concrete for the apron extends from finished grade to the top of the aggregate bed under the box. Ground box aprons, including concrete and reinforcing steel, are subsidiary to ground boxes when called for by descriptive code.

3. Keep bolt holes in the box clear of dirt. Bolt covers down when not working in ground boxes.

4. Install all conduits and ells in a neat and workmanlike manner. Uniformly space conduits so grounding bushings and bell end fittings can easily be installed.

5. Temporarily seal all conduits in the ground box until conductors are installed.

6. Permanently seal conduits immediately after the completion of conductor installation and pull tests. Permanently seal the ends of all conduits with duct seal, expandable foam, or other method as approved. Do not use duct tape as a permanent conduit sealant. Do not use silicone caulk as a sealant.

7. When a ground rod is present in a ground box, bond all equipment grounding conductors together and to the ground rod with listed connectors.

8. When a type B or D ground box is stacked to meet volume requirements, it is allowable to cut an appropriately sized hole for conduit entry in the side wall at least 18 inches below grade.

9. If an existing ground box in the contract has a metal cover, bond the cover to the equipment grounding conductor with a 3 ft. long stranded bonding jumper the same size as the grounding conductor. The bonding jumper is subsidiary to various bid items. Verify existing ground boxes with metal covers are shown on the plans, with notes fully describing the work required.

10. If other ground boxes with metal covers are within the project limits but are not part of the contract, the Engineer may direct the Contractor to bond the metal covers, identifying the specific boxes in writing. This work will be paid for separately.

11. Bond metal ground box covers to the grounding conductor with a tank ground type lug.

Texas Department of Transportation

Traffic Operations Division Standard

ELECTRICAL DETAILS
GROUND BOXES

ED(4)-14

FILE: ed4-14.dgn	DN: TxDOT	CK: TxDOT	DW: TxDOT	CK: TxDOT
© TxDOT October 2014	CONT	SECT	JOB	HIGHWAY
REVISIONS	0914	05	222	RM 2243
	DIST	COUNTY		SHEET NO.
	AUS	WILLIAMSON		367

71D

DISCLAIMER:
The use of this standard is governed by the "Texas Engineering Practice Act". No warranty of any kind is made by TxDOT for any purpose whatsoever. TxDOT assumes no responsibility for the conversion by TxDOT for any purpose whatsoever. TxDOT assumes no responsibility for incorrect results or damages resulting from its use.

DATE: 4/10/2025 1:07:43 PM
FILE: G:\TXC\Projects\County_Williamson\7473-02 RM 2243 Phase 1A\03_CADD\PSAM\SA_1945_SIGNAL_NOTES_ED5_14.dgn

ELECTRICAL SERVICES NOTES

1. Provide new materials. Ensure installation and materials comply with the applicable provisions of the National Electrical Code (NEC) and National Electrical Manufacturers Association (NEMA) standards. Ensure material is Underwriters Laboratories (UL) listed. Provide and install electrical service conduits, conductors, disconnects, contactors, circuit breaker panels, and branch circuit breakers as shown on the Electrical Service Data chart in the plans. Faulty fabrication or poor workmanship in material, equipment, or installation is justification for rejection. Where manufacturers provide warranties and guarantees as a customary trade practice, furnish these to the State.

2. Provide electrical services in accordance with Electrical Details standard sheets, Departmental Material Specification (DMS) 11080 "Electrical Services,"DMS 11081 "Electrical Services-Type A," DMS 11082 "Electrical Services-Type C," DMS 11083 "Electrical Services-Type D," DMS 11084 "Electrical Services-Type T," DMS 11085 "Electrical Services-Pedestal (PS)", and Item 628 "Electrical Services" of the Standard Specifications. Provide electrical service types A, C, and D, as listed on the Material Producers List (MPL) on the Department web site under "Roadway Illumination and Electrical Supplies," Item 628. Provide other service types as detailed on the plans.

3. Provide all work, materials, services, and any incidentals needed to install a complete electrical service as specified in the plans.

4. Coordinate with the Engineer and the utility provider for metering and compliance with utility requirements. Primary line extensions, connection charges, meter charges, and other charges by the utility company to provide power to the location are paid for in accordance with Item 628. Get approval for the costs associated with these charges prior to engaging the utility company to do the work. Consult with the utility provider to determine costs and requirements, and coordinate the work as approved.

5. The enclosure manufacturer will provide Master Lock Type 2 with brass tumblers keyed #2195 for all custom electrical enclosures. Installing Contractor is to provide Master Lock #2195 Type 2 with brass tumblers for "off the shelf" enclosures. Master Lock #2195 keys and locks become property of the State. Unless otherwise approved, do not energize electrical service equipment until locks are installed.

6. Enclosures with external disconnects that de-energize all equipment inside the enclosure do not need a dead front trim. Protect incoming line terminations from incidental contact as required by the NEC.

7. When galvanized is specified for nuts, screws, bolts or miscellaneous hardware, stainless steel may be used.

8. Provide wiring and electrical components rated for 75°C. Provide red, black, and white colored XHHW service entrance conductors of minimum size 6 American Wire Gauge (AWG). Identify size 6 AWG conductors by continuous color jacket. Identify electrical conductors sized 4 AWG and larger by continuous color jacket or by colored tape. Mark at least 6 inches of the conductor's insulation with half laps of colored tape, when identifying conductors. Ensure each service entrance conductor exits through a separately bushed non-metallic opening in the weatherhead. The lengths of the conductors outside the weatherhead are to be 12 inches minimum, 18 inches maximum, or as required by utility.

9. All electrical service conduit and conductors attached to the electrical service including the riser or the elbow below ground are subsidiary to the electrical service. For an underground utility feed, all service conduit and conductors after the elbow, including service conduit and conductors for the utility pole riser when furnished by the Contractor, will be paid for separately.

10. Provide rigid metal conduit (RMC) for all conduits on service, except for the ½ in. PVC conduit containing the electrical service grounding electrode conductor. Size the service entrance conduit as shown in the plans. Ensure conduit for branch circuit entry to enclosure is the same size as that shown on the layout sheets for branch circuit conduit. Extend all rigid metal conduits a minimum of 6 inches underground and then couple to the type and schedule of the conduit shown on the layout for that particular branch circuit. Install a grounding bushing on the RMC where it terminates in the service enclosure.

11. Use of liquidtight flexible metal conduit (LFMC) is allowed between the meter and service enclosure when they are mounted 90 to 180 degrees to each other. Size the LFMC the same size as service entrance conduit. LFMC must not exceed 3 feet in length. Strap LFMC within 1 foot of each end. LFMC less than 12 inches in length need not be strapped. Each end of LFMC must have a grounding bushing or be terminated with a grounding fitting. The LFMC must contain a grounded (neutral) conductor. Ensure any bend in LFMC never exceeds 180 degrees. A pull test is required on all installed conductors, with at least six inches of free conductor movement demonstrated to the satisfaction of the Engineer.

12. Ensure all mounting hardware and installation details of services conform to utility company specifications.

13. For all electrical service enclosures listed under Item 628 on the MPL, the UL 508 enclosure manufacturers will prepare and submit a schematic drawing unique to each service. Before shipment to the job site, place the applicable laminated schematic drawings and the laminated plan sheet showing the electrical service data chart used to build the enclosure in the enclosure's data pocket. The installing contractor will copy and laminate the actual project plan sheets detailing all equipment and branch circuits supplied by that service. The laminated plan sheets are to be placed in the service enclosure's document pocket. Reduce 11 in. x 17 in. plan sheets to 8 ½ in. x 11 in. before laminating. If the installation differs from the plan sheets, the installing contractor is to redline plan sheets before laminating.

14. When providing an "Off The Shelf" Type D or Type T service, provide laminated plan sheets detailing equipment and branch circuits supplied by that service. Reduce 11 in. x 17 in. plan sheets to 8 ½ in. x 11 in before laminating. Deliver these drawings before completion of the work to the Engineer, instead of placing in enclosure that has no door pocket.

15. Do not install conduit in the back wall of a service enclosure where it would penetrate the equipment mounting panel inside the enclosure. Provide grounding bushings on all metal conduits, and terminate bonding jumpers to grounding bus. Grounding bushings are not required when the end of the metal conduit is fitted with a conduit sealing hub or threaded boss, such as a meter base hub.

SERVICE ASSEMBLY ENCLOSURE

1. Provide threaded hub for all conduit entries into the top of enclosure.

2. Type galvanized steel (GS) enclosures may be used for Type C panelboards and for Type D and T services that do not use an enclosure mounted photocell or lighting contactor. Provide GS enclosures in accordance with DMS 11080, 11082, 11083, and 11084.

3. Provide aluminum (AL) and stainless steel (SS) enclosures for Types A, C, and D in accordance with DMS 11080, 11081, 11082, 11083, and 11084. Do not paint stainless steel.

4. Provide pedestal service (PS) enclosures in accordance with ED(9) and DMS 11080 and 11085. Do not provide GS pedestal services. If GS is shown in the PS descriptive code, provide an AL enclosure.

MAIN DISCONNECT & BRANCH CIRCUIT BREAKERS

1. Field drill flange-mounted remote operator handle if needed, to ensure handle is lockable in both the "On" and "Off" positions.

2. When the utility company provides a transformer larger than 50 KVA, verify that the available fault current is less than the circuit breaker's ampere interrupting capacity (AIC) rating and provide documentation from the electric utility provider to the Engineer.

PHOTOELECTRIC CONTROL

1. Provide photocell as listed on the MPL. Move, adjust, or shield the photocell from stray or ambient night time light to ensure proper operation. Mount photocell facing north when practical. Mount top of pole photocells as shown on Top Mounted Photocell Detail.

*ELECTRICAL SERVICE DATA

Elec. Service ID	Plan Sheet Number	Electrical Service Description	Service Conduit **Size	Service Conductors No./Size	Safety Switch Amps	Main Ckt. Bkr. Pole/Amps	Two-Pole Contractor Amps	Panelbd/ Loadcenter Amp Rating	Branch Circuit ID	Branch Ckt. Bkr. Pole/Amps	Branch Circuit Amps	KVA Load
SB 183	289	ELC SRV TY A 240/480 100(SS)AL(E)SF(U)	2"	3/#2	100	2P/100	100	N/A	Lighting NB	2P/40	26	28.1
									Lighting SB	2P/40	25	
									Underpass	1P/20	15	
NB Access	30	ELC SRV TY D 120/240 060(NS)SS(E)TS(O)	1 ¼"	3/#6	N/A	2P/60		100	Sig. Controller	1P/30	23	5.3
							30		Luminaires	2P/20	9	
									CCTV	1P/20	3	
2nd & Main	58	ELC SRV TY T 120/240 000(NS)GS(N)SP(O)	1 ¼"	3/#6	N/A	N/A	N/A	70	Flashing Beacon 1	1P/20	4	1.0
									Flashing Beacon 2	1P/20	4	

* Example only, not for construction. All new electrical services must have electrical service data chart specific to that service as shown in the plans.

** Verify service conduit size with utility. Size may change due to utility meter requirements. Ensure conduit size meets the National ELectrical Code.

EXPLANATION OF ELECTRICAL SERVICE DESCRIPTIVE CODE

ELEC SERV TY X XXX/XXX XXX (XX) XX (X) XX (X)

Schematic Type

Service Voltage V / V

Disconnect Amp Rating
000 indicates main lug only/
Typically Type T

(SS)= Safety Switch Ahead of Meter-Check with Utility
(NS)= No safety Switch Ahead of Meter-Check with Utility

Enclosure Type
GS= Galvanized steel("off the shelf")
SS= Stainless steel(Custom Enclosure)See MPL
AL= Aluminum (Custom Enclosure)See MPL

Photocell Mounting Location
(E)= Inside Service/Enclosure Mounted
(T)= Top of pole
(L)= Luminaire mounted
(N)= None/No Photocell or Lighting Contactor Required

Service Support Type
GC= Granite concrete
OC= Other concrete
TP= Timber pole
SP= Steel pole
SF= Steel frame
OT= Pole by others or paid for separately
EX= Existing pole
TS= Service on traffic signal pole
PS= Pedestal Service

O= Overhead Service Feed from Utility
U= Underground Service Feed from Utility

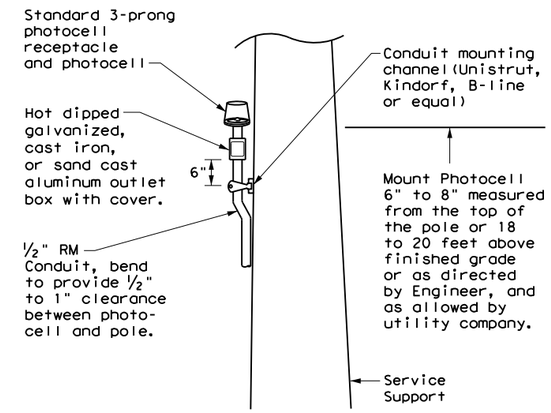

TOP MOUNTED PHOTOCELL

Install conduit strap maximum 3 feet from box. 5 foot maximum spacing between straps supporting conduit.

Texas Department of Transportation

Traffic Operations Division Standard

ELECTRICAL DETAILS SERVICE NOTES & DATA

ED(5)-14

FILE: ed5-14.dgn	DN: TxDOT	CK: TxDOT	DW: TxDOT	CK: TxDOT
©TxDOT October 2014	CONT	SECT	JOB	HIGHWAY
REVISIONS	0914	05	222	RM 2243
	DIST	COUNTY		SHEET NO.
	AUS	WILLIAMSON		368

DISCLAIMER:
The use of this standard is governed by the "Texas Engineering Practice Act". No warranty of any kind is made by TxDOT for any purpose whatsoever. TxDOT assumes no responsibility for the conversion of this standard to other formats or for incorrect results or damages resulting from its use.

DATE: 4/10/2025 1:07:44 PM
FILE: G:\TXC\Projects\County_Williamson\7473-02 RM 2243 Phase 1A\03_CADD\02SHTS\ed6-14.dgn

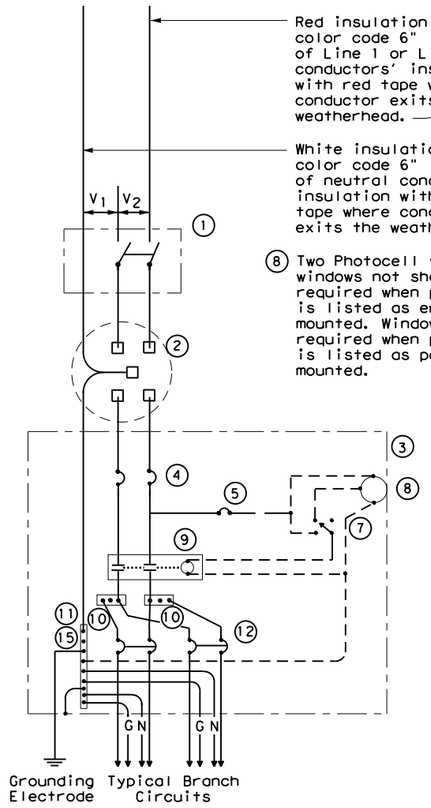

SCHEMATIC TYPE A
THREE WIRE

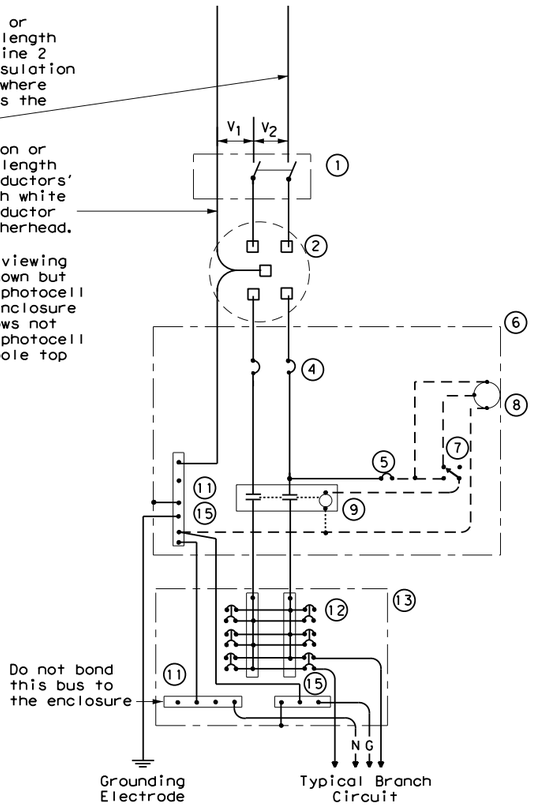

SCHEMATIC TYPE C
THREE WIRE

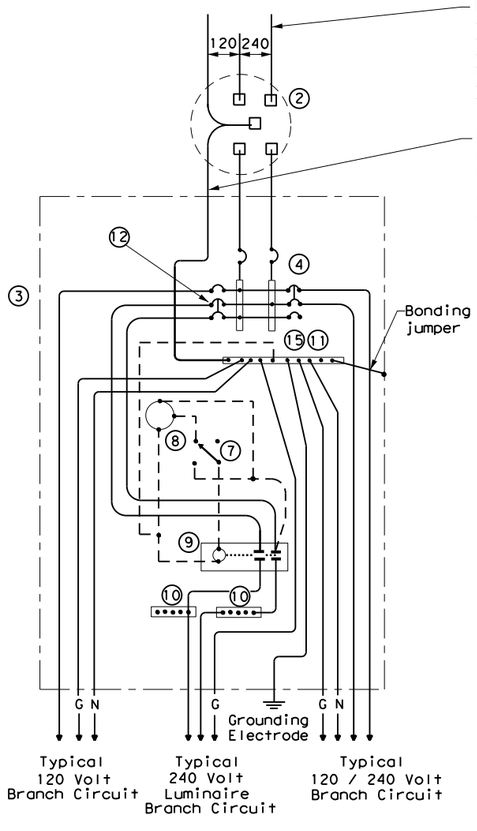

SCHEMATIC TYPE D - CUSTOM
120/240 VOLTS - THREE WIRE

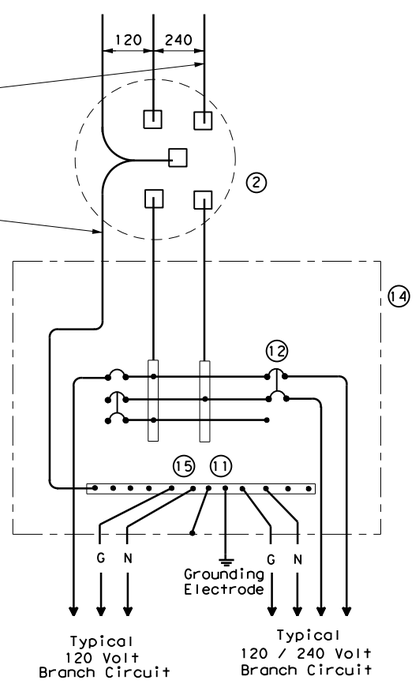

SCHEMATIC TYPE T
120/240 VOLTS - THREE WIRE

Galvanized steel-"Buy Off The Shelf" only. When required install photocell top of the pole or on luminaire only, no lighting contractor will be installed.

WIRING LEGEND	
———	Power Wiring
- - - -	Control Wiring
—N—	Neutral Conductor
—G—	Equipment grounding conductor-always required

SCHEMATIC LEGEND	
1	Safety Switch (when required)
2	Meter (when required-verify with electric utility provider)
3	Service Assembly Enclosure
4	Main Disconnect Breaker (See Electrical Service Data)
5	Circuit Breaker, 15 Amp (Control Circuit)
6	Auxiliary Enclosure
7	Control Station ("H-O-A" Switch)
8	Photo Electric Control (enclosure-mounted shown)
9	Lighting Contactor
10	Power Distribution Terminal Blocks
11	Neutral Bus
12	Branch Circuit Breaker (See Electrical Service Data)
13	Separate Circuit Breaker Panelboard
14	Load Center
15	Ground Bus

Texas Department of Transportation

Traffic Operations Division Standard

ELECTRICAL DETAILS SERVICE ENCLOSURE AND NOTES

ED(6)-14

FILE: ed6-14.dgn	DN: TxDOT	CK: TxDOT	DW: TxDOT	CK: TxDOT
©TxDOT October 2014	CONT	SECT	JOB	HIGHWAY
REVISIONS	0914	05	222	RM 2243
	DIST	COUNTY		SHEET NO.
	AUS	WILLIAMSON		369

71F

DISCLAIMER:
The use of this standard is governed by the "Texas Engineering Practice Act". No warranty of any kind is made by TxDOT for any purpose whatsoever. TxDOT assumes no responsibility for the conversion of this standard to other formats or for incorrect results or damages resulting from its use.

DATE: 4/10/2025 1:07:46 PM
FILE: G:\TXC\Projects\County_Williamson\7473-02 RM 2243 Phase 1A\03_CADD\02_PSH\SheetFiles\ed7-14.dgn

SUPPORT TYPE STEEL POLE (SP) AND STEEL FRAME (SF)

1. Provide steel pole and steel frame supports as per TxDOT Departmental Material Specification (DMS)11080 "Electrical Services." Mount all equipment and conduit on 12 gauge galvanized steel or stainless steel channel strut, 1 ½ in. or 1 5/8 in. wide by 1 in. up to 3 ¾ in. deep Unistrut, Kindorf, B-line or equal. Bolt or weld all channel and hardware to vertical members as approved. Do not stack channel. File smooth and paint field cut ends of all channel with zinc-rich paint before installing.

2. Provide poles for overhead service with an eyebolt or similar fitting for attachment of the service drop to the pole in conformance with the electric utility provider's specifications.

3. Provide and install galvanized ¾ in. x 18 in. x 4 in. (dia. x length x hook length) anchor bolts for underground service supports. Provide and install galvanized ¾ in. x 56 in. x 4 in. anchor bolts for overhead service supports. Ensure anchor bolts have 3 in of thread, with 3 ¼ in. to 3 ½ in. of the exposed anchor bolt projecting above finished foundation. Provide and install leveling nuts for all anchor bolts.

4. Bond one of the anchor bolts to the rebar cage with 6 AWG bare stranded copper conductor. Use listed mechanical connectors rated for embedment in concrete. See Inset B.

5. Furnish and install rigid metallic ells in all steel pole and steel frame foundations for all conduits entering the service from underground.

6. Use class C concrete for foundations. Ensure reinforcing steel is Grade 60 with 3" of unobstructed concrete cover.

7. Drill and tap steel poles and frames for ½ in. X 13 UNC tank ground fitting. For steel pole service supports, provide and install tank ground fitting 4 in. to 6 in. below electrical service enclosure. Provide properly sized hole through the bottom of the enclosure for the service grounding electrode conductor. Ensure electrical service grounding electrode conductor is as short and straight as possible from the enclosure to the tank ground fitting. For steel frame service supports, provide and install tank ground fitting on steel frame post. Install service grounding electrode conductor in a non-metallic conduit or tubing from the enclosure to the steel frame post. Connect electrical service grounding electrode conductor to the tank ground fitting. See steel frame and steel pole details and Inset A for more information. Size service entrance conduit and branch circuit conduit as shown in the plans. For underground conduit runs from the electrical service, extend RMC from the service enclosure to an RMC elbow, and then connect the schedule type and size of conduit shown in the plans. Provide and install grounding bushings where RMC terminates in the enclosure. Grounding bushings are not required when RMC is fitted into a sealing hub or threaded boss.

8. If Steel pole or frame is painted, bond each separate painted piece with a bonding jumper attached to a tapped hole.

9. Provide ¼" - 20 machine screws for bonding. Do not use sheet metal screws. Remove all non-conductive material at contact points. Terminate bonding jumpers with listed devices. Install minimum size 6 AWG stranded copper bonding jumpers. Make up all threaded bonding connections wrench tight.

10. Avoid contact of the service drop and service entrance conductors with the metal pole to prevent abrasion of the insulated conductors.

11. Shop drawings are not required for service support structure unless specifically stated elsewhere or directed by the Engineer.

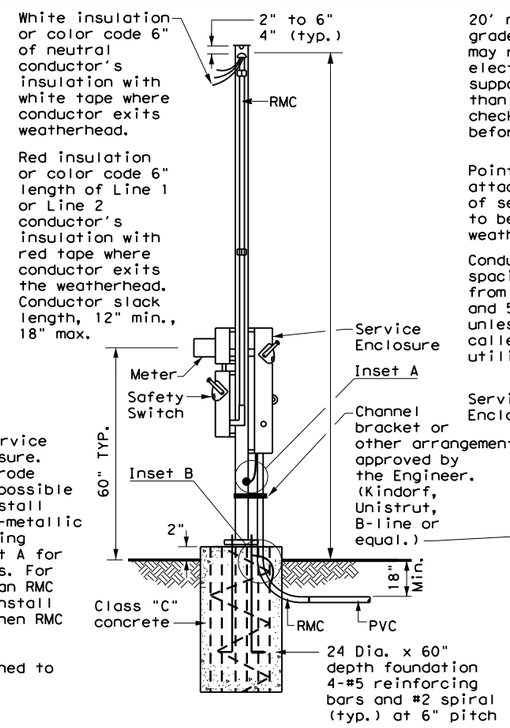

WITH SAFETY SWITCH

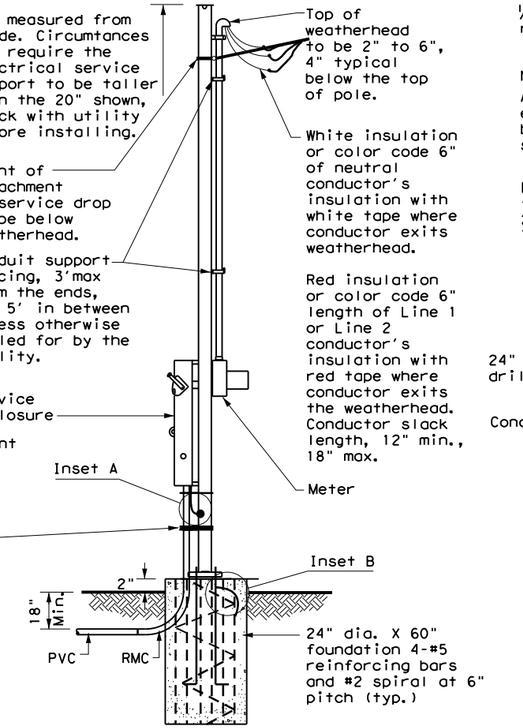

WITHOUT SAFETY SWITCH

SERVICE SUPPORT TYPE SP (O) - OVERHEAD SERVICE

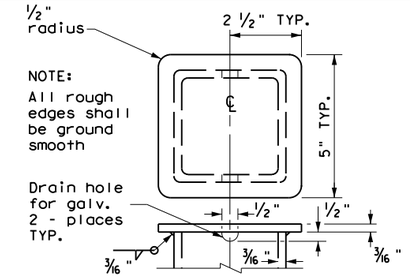

POLE TOP PLATE

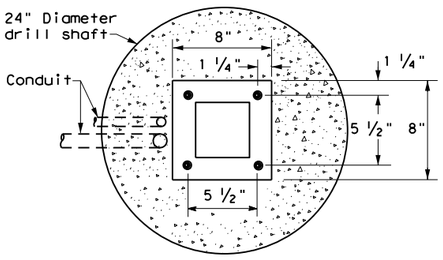

BASE PLATE DETAIL

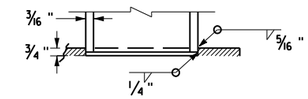

BOTTOM OF POLE

SERVICE SUPPORT TYPE SF & SP

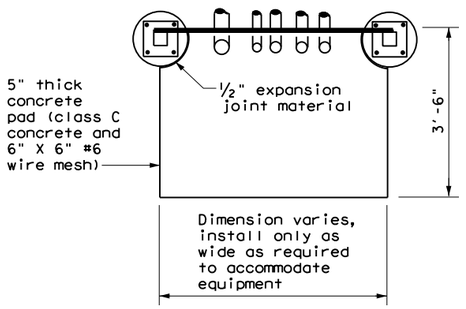

TOP VIEW

SERVICE SUPPORT TY SF (O) & SF (U)

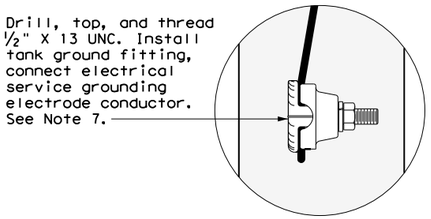

FRONT VIEW

INSET A

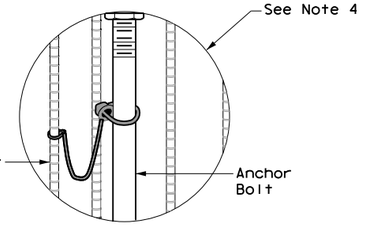

INSET B

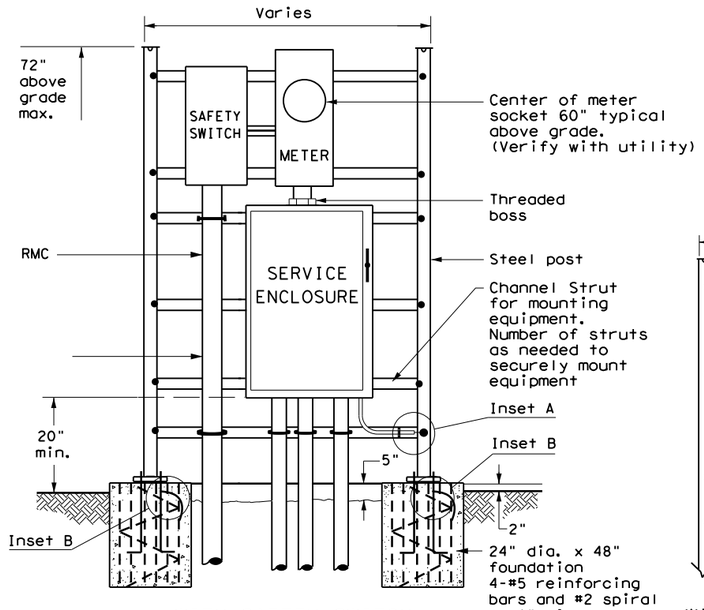

WITH SAFETY SWITCH

FRONT VIEW

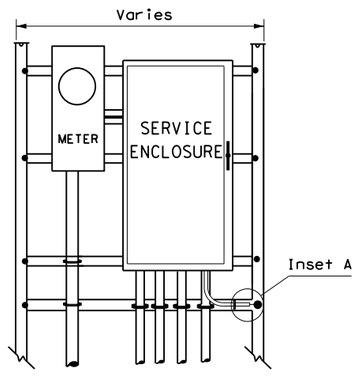

WITHOUT SAFETY SWITCH

SERVICE SUPPORT TYPE SF(U) - UNDERGROUND SERVICE

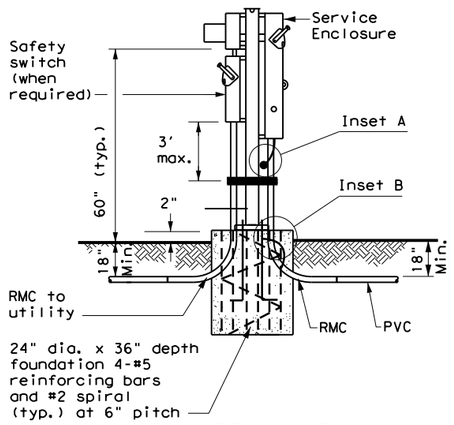

WITH SAFETY SWITCH

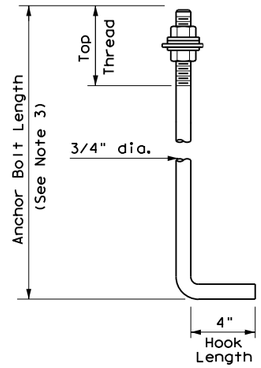

HOOKED ANCHOR DETAIL

SERVICE SUPPORT TYPE SP(U) - UNDERGROUND SERVICE

Texas Department of Transportation

Traffic Operations Division Standard

ELECTRICAL DETAILS SERVICE SUPPORT TYPES SF & SP

ED(7)-14

FILE: ed7-14.dgn	DN: TxDOT	CK: TxDOT	DW: TxDOT	CK: TxDOT
© TxDOT October 2014	CONT	SECT	JOB	HIGHWAY
REVISIONS	0914	05	222	RM 2243
	DIST	COUNTY		SHEET NO.
	AUS	WILLIAMSON		370

TRAFFIC SIGNAL NOTES

1. Do not pass luminaire conductors through the signal controller cabinet.
2. Include an equipment grounding conductor in all conduits throughout the electrical system. Bond all exposed metal parts to the grounding conductor.
3. Provide roadway luminaires, when required, in accordance with the material and construction sections of Item 610, "Roadway Illumination Assemblies," except for performance testing of luminaires. Test installed roadway luminaires for proper operation as a part of the associated traffic signal system test.
4. If internally illuminated street name signs are approved for use, ground the fixture to the pole with a 12 AWG green XHHW conductor.
5. Bond anchor bolts to rebar cage in two locations using #3 bars or 6 AWG stranded copper conductors. Use listed mechanical connectors rated for embedment in concrete. See TXDOT standard TS-FD for further details.
6. Drill and tap signal poles for ½ in. X 13 UNC tank ground fitting. Provide and install tank ground fitting 4 in. to 6 in. directly below electrical service enclosure. Provide properly sized hole through the bottom of the enclosure for the service grounding electrode conductor. Connect the electrical service grounding electrode conductor to the tank ground fitting. Ensure electrical service grounding electrode conductor is as short and straight as possible from the enclosure to the tank ground fitting. See Inset A detail for further information. Size service entrance conduit and branch circuit conduit as shown in the plans.
7. Mount electrical service enclosure and meter to signal pole with stainless steel bands. Ensure bands are a minimum width of ¾ in. Secure enclosures to bands using two-bolt brackets. Install brackets near top and bottom of each enclosure. Install properly sized stainless steel washers on each bolt in the enclosure. Band or drill and tap properly sized stand-off straps to signal pole for attaching conduit.
8. Conduct pull tests and insulation resistance tests on all illumination and power conductors as required in Item 620 "Electrical Conductors" and ED(3). To prevent electronics damage, do not conduct insulation resistance tests on traffic signal cables after termination.
9. Lock all enclosures and bolt down all ground box covers before applying power to the signal installation.
10. Terminate conduits entering the top of enclosures with a conduit-sealing hub or threaded boss such as meter hub. Install a grounding bushing on all metal conduits not connected to conduit-sealing hub or threaded boss. Bond the grounding bushing to the ground bus with a bonding jumper. Seal all conduits entering enclosures with duct seal or expanding foam. Do not use silicone to seal conduit ends.
11. For all conduits, ensure the burial depth is a minimum of 18". Ensure the minimum burial depth for conduit placed under a roadway is 24".

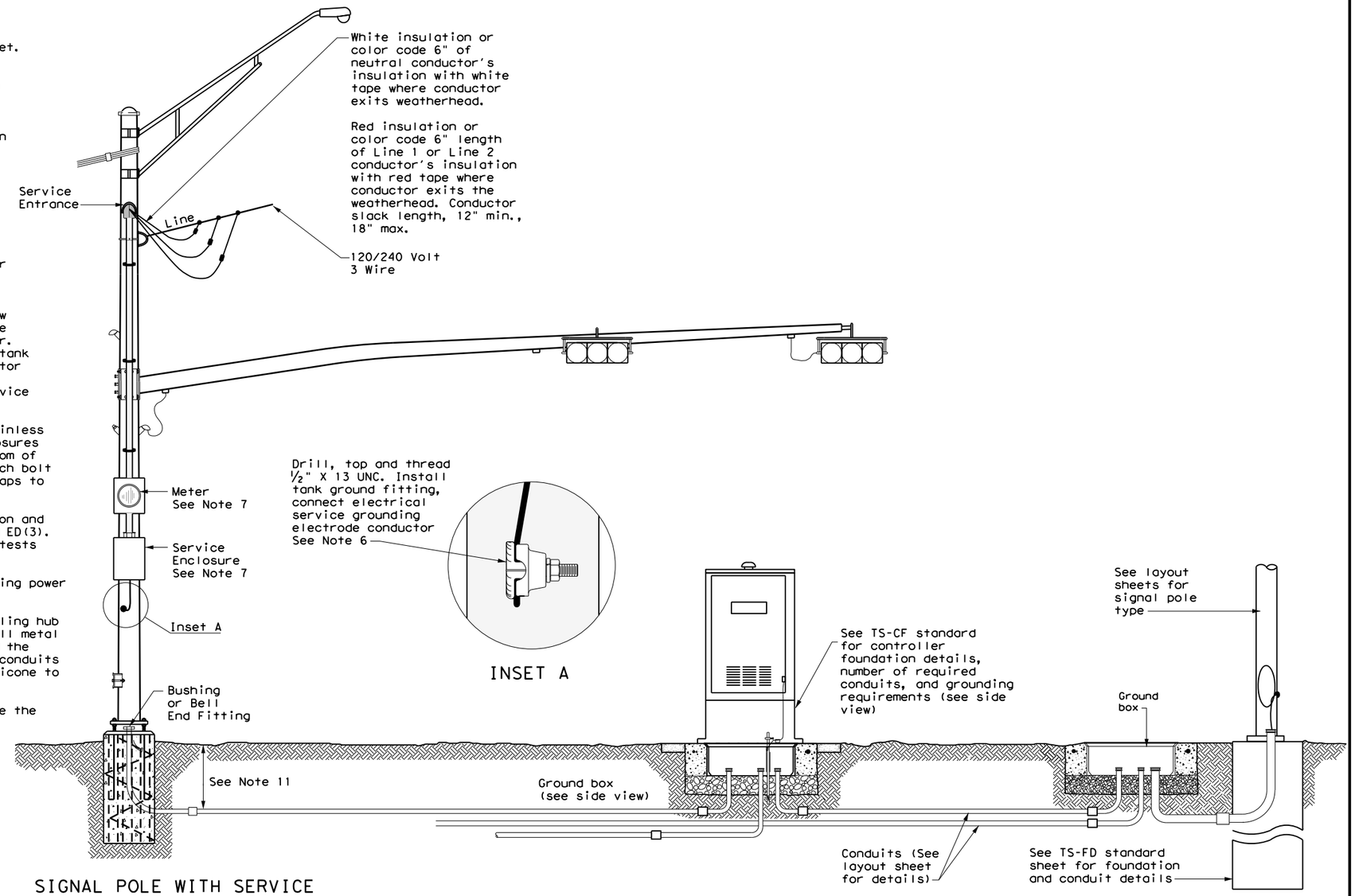

SIGNAL POLE WITH SERVICE

Type T electrical service mounted on signal pole shown as an example. See electrical details, layout sheets, and electrical service data chart for additional details.

SIGNAL CONTROLLER FRONT VIEW

SIGNAL POLE

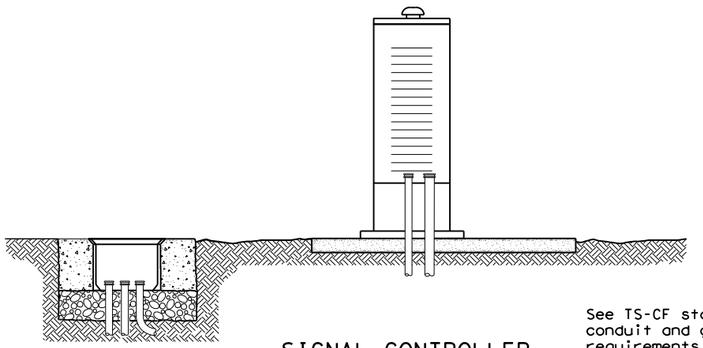

SIGNAL CONTROLLER SIDE VIEW

See TS-CF standard for conduit and grounding requirements. See layout sheets for ground box locations and any additional conduits that are required.

Texas Department of Transportation

Traffic Operations Division Standard

ELECTRICAL DETAILS TYPICAL TRAFFIC SIGNAL SYSTEM DETAILS

ED(8)-14

FILE: ed8-14.dgn	DN: TxDOT	CK: TxDOT	DW: TxDOT	CK: TxDOT
© TxDOT October 2014	CONT	SECT	JOB	HIGHWAY
REVISIONS	0914	05	222	RM 2243
	DIST		COUNTY	SHEET NO.
	AUS		WILLIAMSON	371

71H

DISCLAIMER:
The use of this standard is governed by the "Texas Engineering Practice Act". No warranty of any kind is made by TxDOT for any purpose whatsoever. TxDOT assumes no responsibility for the conversion of this standard to other formats or for incorrect results or damages resulting from its use.

DATE: 4/10/2025 1:07:47 PM
FILE: G:\TXC\Projects\County_Williamson\7473-02 RM 2243 Phase 1A\03_CADD\01_Sheets\TS-FD\ED8-14.dgn

PEDESTAL SERVICE NOTES

1. Manufacture pedestal electrical services in accordance with Departmental Material Specifications (DMS)11080 "Electrical Services", 11085 "Electrical Services-Pedestal (PS)" and Item 628 "Electrical Services. "Provide pedestal electrical services as listed on the Material Producers list (MPL) on the Department's web site under "Roadway Illumination and Electrical Supplies," Item 628. Ensure all mounting hardware and installation details of services meet utility company specifications. Contact the local utility company for approval of pedestal details prior to installing the electrical pedestal service. Submit any changes required by the utility company prior to manufacturing the pedestal enclosure.

2. When a meter socket is required, provide a socket with a minimum 100 amp rating that complies with local utility requirements.

3. Provide Class A or C concrete for pedestal service foundations in accordance with Item 420, "Concrete Substructures," except that concrete will not be paid for directly but is considered subsidiary to Item 628.

4. Provide #4 reinforcing steel for foundations in accordance with Item 440, "Reinforcement for Concrete."

5. Install ½ in. X 2 1/16 in. minimum length concrete single expansion type anchors for mounting pedestal enclosure to foundation. Anchor location to match mounting holes in each corner of enclosure. Secure each of the four corners of the pedestal enclosure to the anchors in the foundation with a ½ in. galvanized or stainless steel machine thread bolt, a properly sized locknut and a flat washer.

6. Finish top of concrete foundation in a neat and workmanlike manner. If leveling washers are used, ensure no more than ⅛ in. gap at any corner. Do not exceed a maximum dip or rise in the foundation of ⅛ in. per foot. When properly installed, ensure the top of the service enclosure is level front to back and side to side within ¼ in. Repair rocking or movement of the service enclosure at no additional cost to the department.

7. Do not use liquidtight flexible metal conduit (LFMC) on pedestal type services.

8. Ensure all elbows in the foundation are sized as per utility provider's conduit requirements for underground conduit and feeders. PVC extensions may be installed provided the ends of the rigid metal conduits are more than 2 in. below the top of the concrete foundation. Where extension conduits are metal, grounding bushings must be installed with a bonding jumper properly terminated.

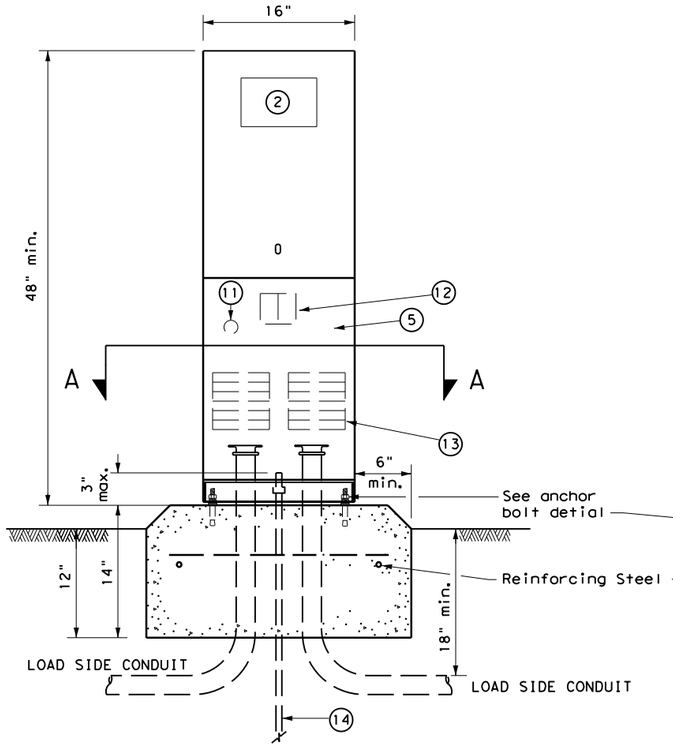

FRONT VIEW

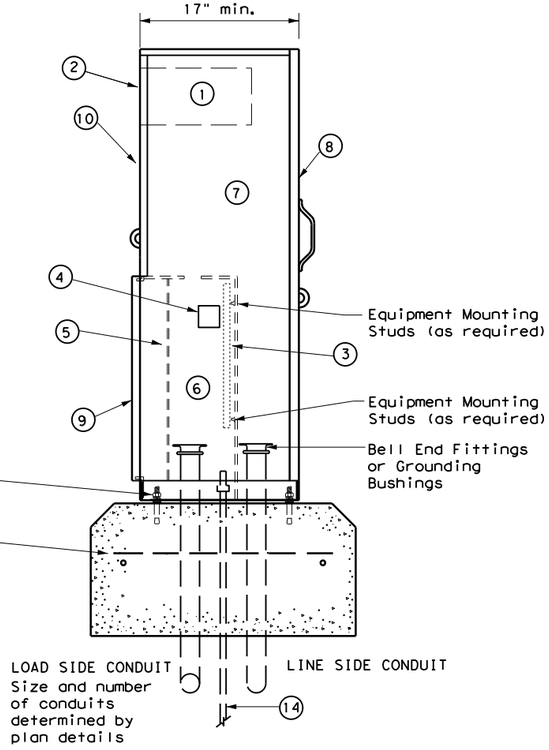

SIDE VIEW

TYPE C shown, TYPE A similar except that TYPE A shall have individual circuit breakers (CB) mounted on an equipment mounting panel. CB Handles shall protrude through hinged deadfront trim.

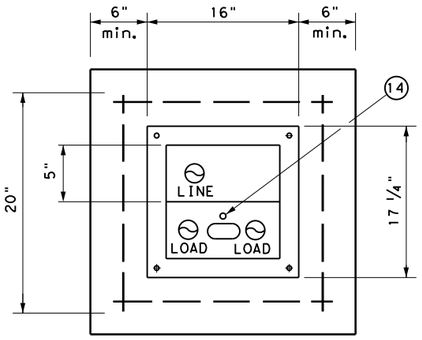

SECTION A-A

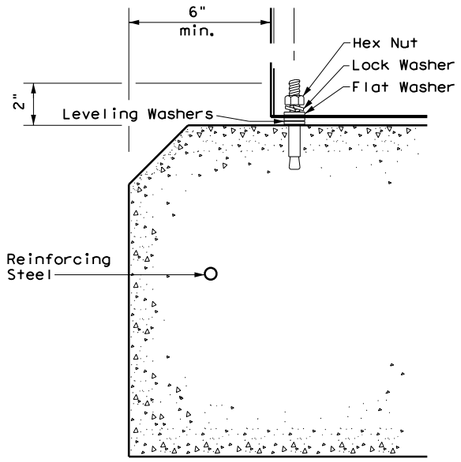

ANCHOR BOLT DETAIL

LEGEND	
1	Meter Socket, (when required)
2	Meter Socket Window, (when required)
3	Equipment Mounting Panel
4	Photo Electric Control Window, (When required)
5	Hinged Deadfront Trim
6	Load Side Conduit Trim
7	Line Side Conduit Area
8	Utility Access Door, with handle
9	Pedestal Door
10	Hinged Meter Access
11	Control Station (H-O-A Switch)
12	Main Disconnect
13	Branch Circuit Breakers
14	Copper Clad Ground Rod - 5/8" X 10'

Texas Department of Transportation

Traffic Operations Division Standard

ELECTRICAL DETAILS
ELECTRICAL SERVICE SUPPORT
PEDESTAL SERVICE TYPE PS

ED(9)-14

FILE: ed9-14.dgn	DN: TxDOT	CK: TxDOT	DW: TxDOT	CK: TxDOT
© TxDOT October 2014	CONT	SECT	JOB	HIGHWAY
REVISIONS	0914	05	222	RM 2243
	DIST		COUNTY	SHEET NO.
	AUS		WILLIAMSON	372

71J

DISCLAIMER:
The use of this standard is governed by the "Texas Engineering Practice Act". No warranty of any kind is made by TxDOT for any purpose whatsoever. TxDOT assumes no responsibility for the conversion of this standard to other formats or for incorrect results or damages resulting from its use.

DATE: 4/10/2025 1:07:48 PM
FILE: G:\TXC\Projects\County_Williamson\7473-02 RM 2243 Phase 1A\03_CADD\01_Sheets\ED9-14.dgn

DISCLAIMER:
The use of this standard is governed by the "Texas Engineering Practice Act". No warranty of any kind is made by TxDOT for any purpose whatsoever. TxDOT assumes no responsibility for the conversion of this standard for any purpose whatsoever. TxDOT assumes no responsibility for the conversion by others. TxDOT for any purpose whatsoever. TxDOT assumes no responsibility for incorrect results or damages resulting from its use.

DATE: 4/10/2025 1:07:50 PM
FILE: G:\TXC\Projects\County_Williamson\7473-02 RM 2243 Phase 1A\03_CADD\OPSHTS\ED10-14.dgn

TIMBER POLE (TP) SERVICE SUPPORT NOTES

1. Ensure electrical service support is a class 5 treated timber pole as per Item 627 "Treated Timber Poles." Embed timber pole to depth required in Item 627.
2. Conduit and electrical conductors attached to the electrical service pole and underground within 12 in. of service pole are not paid for directly but are subsidiary to the electrial service.
3. Install pole-top mounted photocell (T) on north side of pole, or in service enclosure (E) as required. See Electrical Service Data chart in plan set.
4. Gain pole as required to provide flat surface for each channel. Gain timber pole to 5/8 in. max. depth and 1 7/8 in. max. height. Gain pole in a neat and workmanlike manner.
5. Mount meter and service equipment on stainless steel or galvanized channel (Unistrut, Kindorf, or equal). Provide channel sized 1 in. to 3 3/4 in. maximum depth, and 1 1/2 in. to 1 5/8 in. maximum width. File smooth the cut ends of galvanized channel and paint with zinc rich paint before installing on pole. Secure each channel section to timber pole with two galvanized or SS lag bolts, 1/4 in. minimum diameter by 1 1/2 in. minimum length. Use a galvanized or SS flat washer on each lag bolt. Do not stack channel.
6. When excess length must be trimmed from poles, trim from the top end only.

(1) Class 5 pole, height as required

(2) Service drop from utility company (attached below weatherhead)

(3) Service conduit (RMC) and service entrance conductors - One Red, One Black, One White (See Electrical Service Data)

(4) Safety switch (when required)

(5) Meter (when required)

(6) Service enclosure

(7) 6 AWG bare grounding electrode conductor in 1/2 in. PVC to ground rod - extend 1/2 in. PVC 6 in. underground.

(8) 5/8 in. x 8 ft. Copper clad ground rod - drive ground rod to a depth of 2 in. to 4 in. below grade.

(9) RMC same size as branch circuit conduit.

(10) See pole-top mounted photocell detail on ED(5).

(11) When required by the serving utility provide bare 6 AWG copper conductor. Run wire from pole top to butt wrap or copper butt plate. Protect conductor with non-conductive material to a height of 8 ft. above finished grade.

(12) When required by utility, cut top of pole at an angle to enhance rain run off.

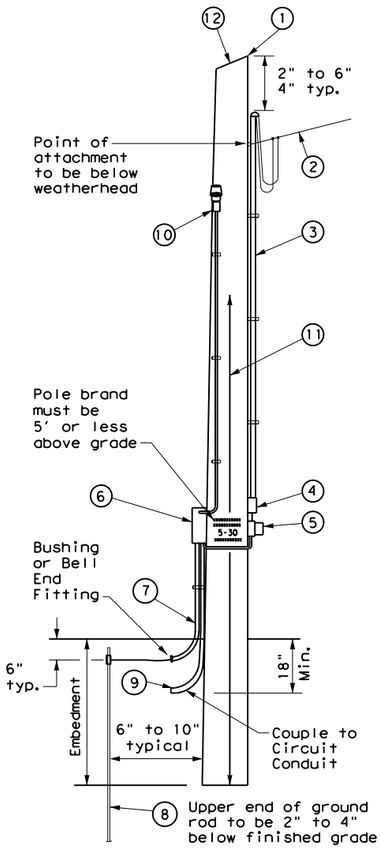

SERVICE SUPPORT TYPE TP (O)

GRANITE CONCRETE (GC) & OTHER CONCRETE (OC) NOTES

Ensure electrical service support structures bid as type Granite Concrete (GC) or Other Concrete (OC) meet the following requirements.

1. Provide GC and OC poles that meet the requirements of DMS 11080 "Electrical Services."
2. Provide prestressed concrete poles suitable for direct embedment into the ground without special foundations.
3. Verify poles are marked as required on DMS 11080. Location of marking should be approximately 4' above final grade. Use the two-point pickup locations when handling pole in horizontal position, and one-point pickup location for use in raising the pole to a vertical position. These marks are small but conspicuous.
4. Embed poles 42 in. or 10% of the length plus 2 ft., whichever is greater.
5. Ensure all installation details of services are in accordance with utility company specifications.
6. Install a one point rack or eye bolt bracket 6 inches to 12 inches below the weatherhead as an overhead service drop anchoring point for the electric utility.
7. Furnish and install galvanized or stainless steel channel strut 1 1/2 in. or 1 5/8 in. wide by 1 in. up to 3 3/4 in. deep (Unistrut, Kindorf, B-line or equal). Attach channel strut with stainless steel concrete anchors (max. 1" depth), square U-bolts or back to back channel strut with long bolts, or other secure mounting as approved by the Engineer. Ensure bolts are galvanized in accordance with ASTM A153. Do not stack channel struts.
8. Backfill the holes thoroughly by tamping in 6 in. lifts. After tamping to grade, place additional backfill material in a 6 inch high cone around the pole to allow for settling. Use material equal in composition and density to the surrounding area. Backfilling will not be paid for directly but is subsidiary to various bid items.

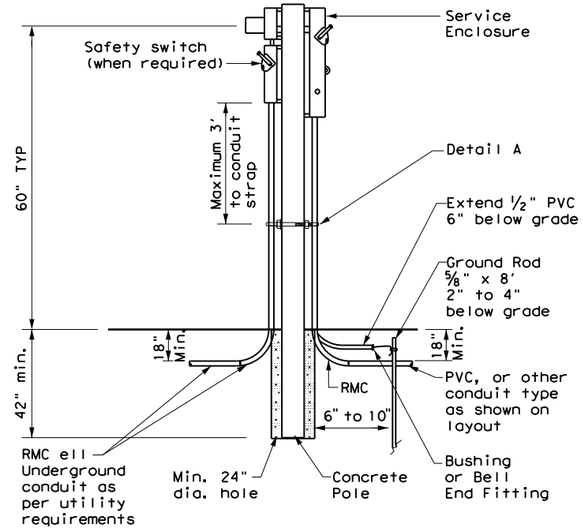

CONCRETE SERVICE SUPPORT

Underground (U)

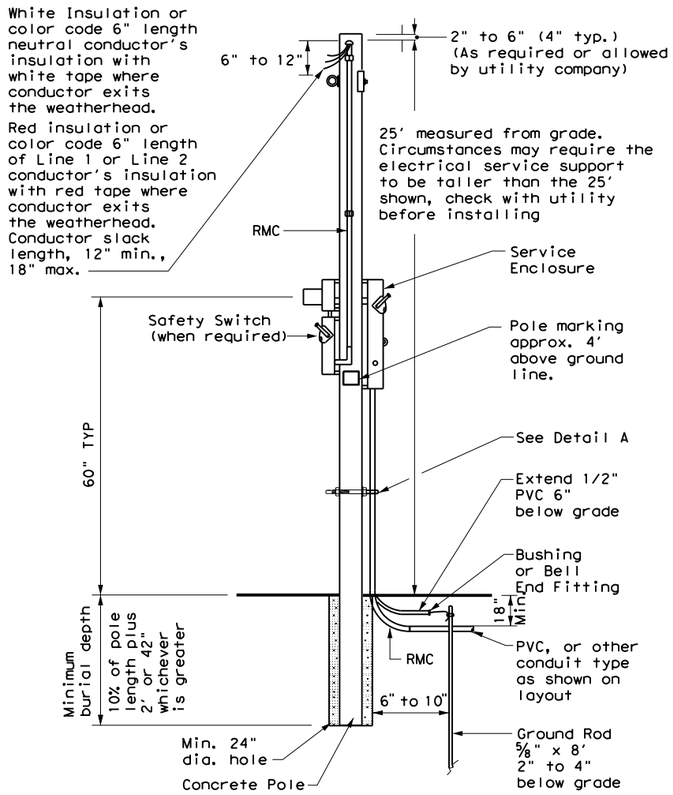

CONCRETE SERVICE SUPPORT

Overhead (O)

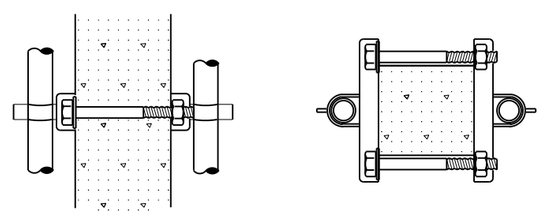

DETAIL A

See Note 7. Before installing channel that has been cut, file sharp edges and paint with zinc-rich paint. Ensure there is no paint splatter on the pole.

Texas Department of Transportation

Traffic Operations Division Standard

ELECTRICAL DETAILS SERVICE SUPPORT TYPES GC, OC, & TP

ED(10)-14

FILE: ed10-14.dgn	DN: TxDOT	CK: TxDOT	DW: TxDOT	CK: TxDOT
© TxDOT October 2014	CONT	SECT	JOB	HIGHWAY
REVISIONS	0914	05	222	RM 2243
	DIST	COUNTY		SHEET NO.
	AUS	WILLIAMSON		373

71K

DUCT CABLE & HDPE CONDUIT NOTES

1. Provide duct cable in accordance with Departmental Material Specification (DMS) 11060 "Duct Cable" and Item 622 "Duct Cable." Provide duct cable as listed on the Material Producer List (MPL) on the Department web site under "Roadway Illumination and Electrical Supplies" Item 622.

2. Provide High-Density Polyethylene (HDPE) conduit in accordance with DMS 11060 and Item 618, "Conduit." Provide HDPE as listed on the MPL on the Department web site under "Roadway Illumination and Electrical Supplies," Item 618.

3. Supply duct cable with a minimum 2 in. diameter, unless otherwise shown in the plans. Provide duct cable and HDPE conduit as shown by descriptive code or on the plans. Bend duct cable and HDPE conduit as recommended by the manufacturer, with a minimum bending radius of 26 in. for 2 in. duct. Follow manufacturers' recommendations when handling duct cable and HDPE conduit reels and during installation of duct cable and HDPE conduit.

4. Do not splice conductors within duct cable or HDPE conduit. Couple duct cable and HDPE entering a ground box or foundation to a PVC elbow. When galvanized steel RMC elbows are called for in the plans and any portion of the RMC elbow is buried less than 18" from possible contact, ground the RMC elbow.

5. Furnish and install duct cable with factory installed conductors, sized as shown in the plans and as required by the National Electrical Code (NEC). The NEC contains specific requirements for duct cable in Article, "Nonmetallic Underground Conduit with Conductors: Type NUCC."

6. When conduit casing is called for in the plans, extend duct cable or HDPE conduit through the conduit casing in one continuous length without connection to the casing.

7. Seal the ends of duct cable or HDPE conduit with duct seal, expandable foam, or other approved method after completing the pull tests required by Item 622.

8. Provide minimum cover of 24 in. under roadways, 18 in. in other locations, or as shown on the plans.

9. Furnish and install listed fittings to couple duct cable or HDPE conduit to other types of conduit. Duct cable and HDPE conduit may be field-threaded and spliced with PVC or RMC threaded couplings; connected with listed tie-wrap fittings; connected using listed coupling made of HDPE with stainless steel external banding clamps and locking rings; connected with approved electrofusion conduit couplings; or connected using an approved chemical fusion method using an epoxy or adhesive specifically designed for HDPE couplings and connectors all installed in accordance with their manufacturer's instructions. Do not use PVC glue on HDPE. Do not use water pipe fittings, or connect conduit with heat shrink tubing.

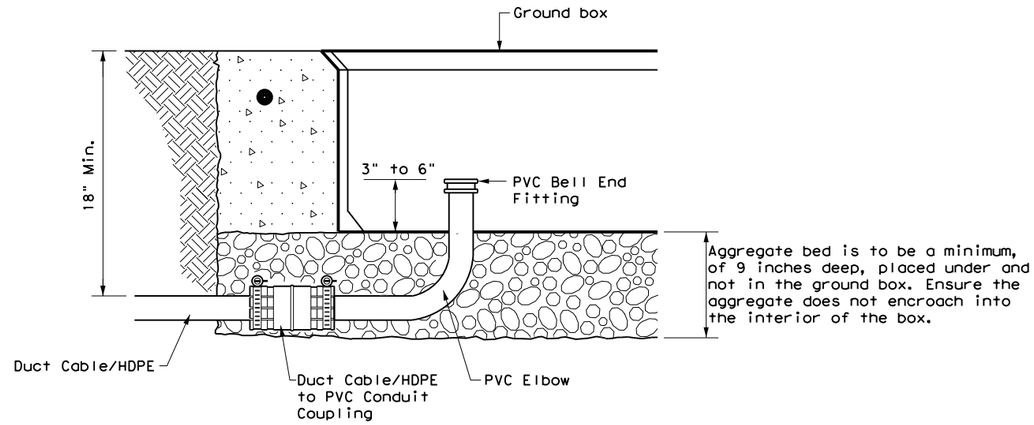

DUCT CABLE/HDPE AT GROUND BOX

When the upper end of an RMC Ell does not enter the ground box, it may be extended with a SCH-40 PVC conduit nipple and bell end, provided there is a minimum of 18" of cover over all parts of the elbow. If not, a rigid extension and ground bushing is required.

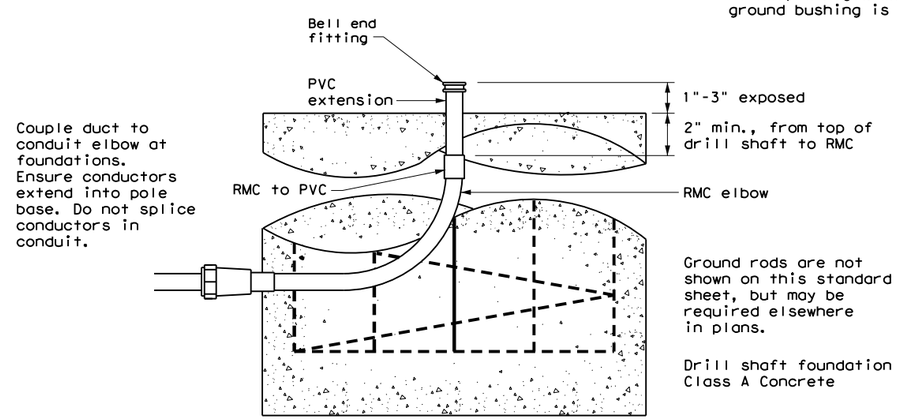

DUCT CABLE / HDPE AT FOUNDATION

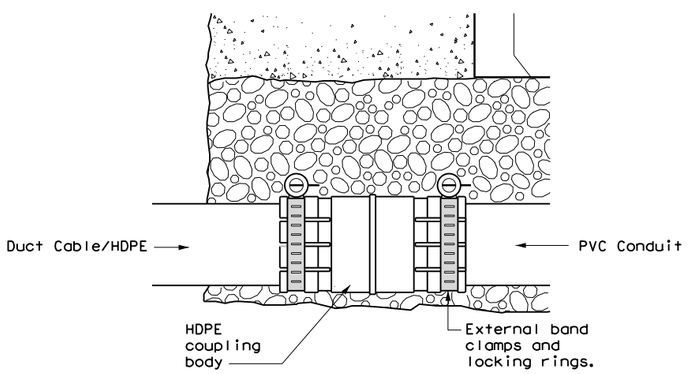

DUCT CABLE/HDPE TO PVC

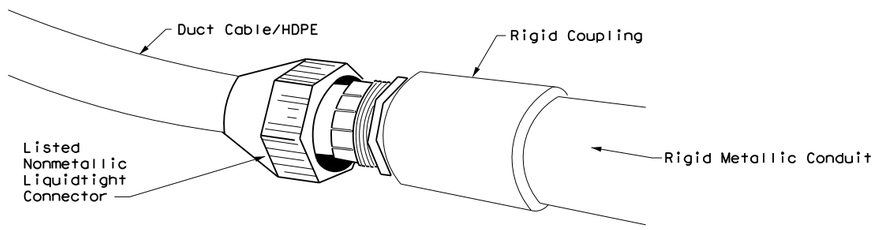

DUCT CABLE/HDPE TO RMC

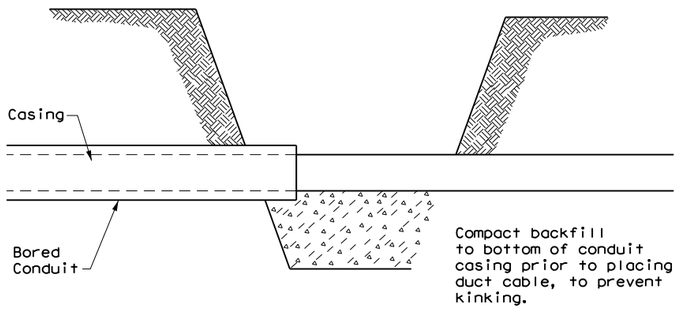

BORE PIT DETAIL

Texas Department of Transportation

Traffic Operations Division Standard

ELECTRICAL DETAILS DUCT CABLE/ HDPE CONDUIT

ED(11)-14

FILE: ed11-14.dgn	DN: TxDOT	CK: TxDOT	DW: TxDOT	CK: TxDOT
© TxDOT October 2014	CONT	SECT	JOB	HIGHWAY
REVISIONS	0914	05	222	RM 2243
	DIST		COUNTY	SHEET NO.
	AUS		WILLIAMSON	374

71L

DISCLAIMER:
The use of this standard is governed by the "Texas Engineering Practice Act". No warranty of any kind is made by TxDOT for any purpose whatsoever. TxDOT assumes no responsibility for the conversion of this standard to other formats or for incorrect results or damages resulting from its use.

DATE: 4/10/2025 1:07:51 PM
FILE: G:\TXC\Projects\County_Williamson\7473-02 RM 2243 Phase 1A\03_CADD\0915-05-01 ED11-14.dgn

BATTERY BOX GROUND BOXES NOTES

A. MATERIALS

1. Provide polymer concrete or fiberglass reinforced plastic (FRP) battery box ground box and cover in accordance with Departmental Material Specification (DMS) 11071 "Battery Box Ground Boxes." Battery box will accommodate up to 4 batteries, each measuring 8 in. x 13.5 in. x 10 in. (W x L x D). Label battery box ground box cover in accordance with DMS 11071.

2. Supply a marine grade batteries with covers. Secure the marine grade batteries with covers to the stainless steel rack in the bottom of the ground box with tie down straps.

B. CONSTRUCTION METHODS

1. Ensure conduit entry will not interfere with placement of the batteries in the battery box ground box.

2. Remove all gravel and dirt from conduit. Cap all conduits prior to placing aggregate and setting battery box ground box. Provide Grade 3 or 4 coarse aggregate as shown on Table 2 of Item 302 "Aggregates for Surface Treatments." Ensure the aggregate bed is in place and is a minimum of 9 in. deep prior to setting the box. Install battery box ground box on top of aggregate.

3. Cast battery box aprons in place. Reinforcing steel may be field bent. Ensure the depth of concrete for the apron extends from finished grade to the top of the aggregate bed under the box. Battery box ground box aprons, including concrete and reinforcing steel, are subsidiary to battery box ground boxes when called for by descriptive code.

4. Bolt covers down when not working in battery box ground boxes. Keep bolt holes in the box clear of dirt.

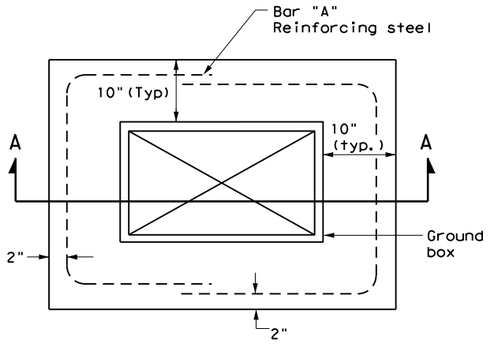

PLAN VIEW

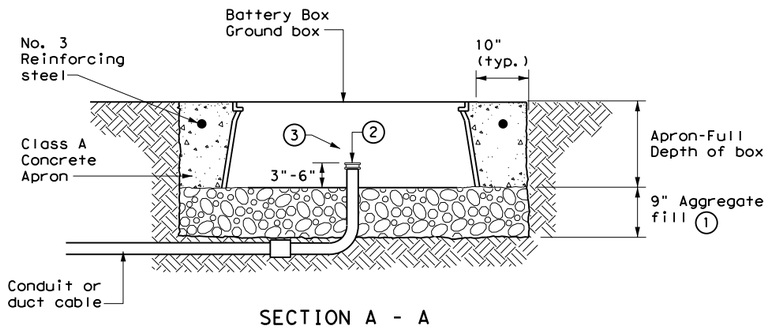

SECTION A - A

APRON FOR BATTERY BOX GROUND BOXES

1. Place aggregate under the box and not in the box. Aggregate should not encroach on the interior volume of the box.

2. Install bushing or bell end fitting on the upper end of all ells.

3. Install all conduits in a neat and workmanlike manner.

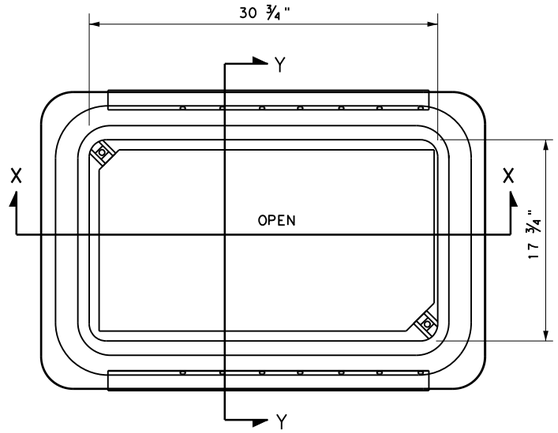

BATTERY BOX TOP VIEW

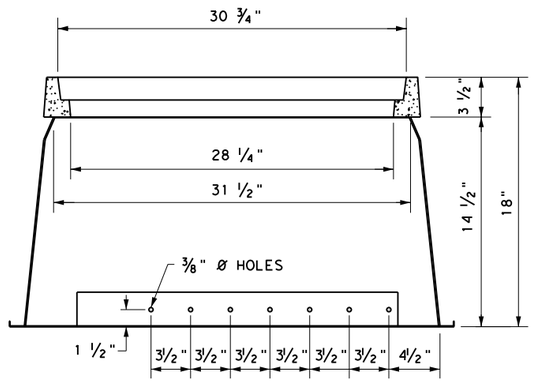

SECTION X-X

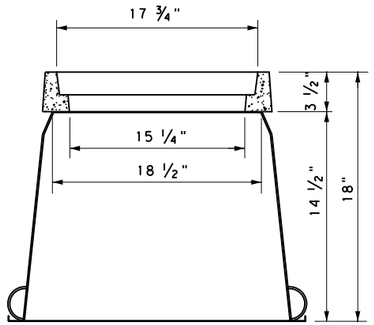

SECTION Y-Y

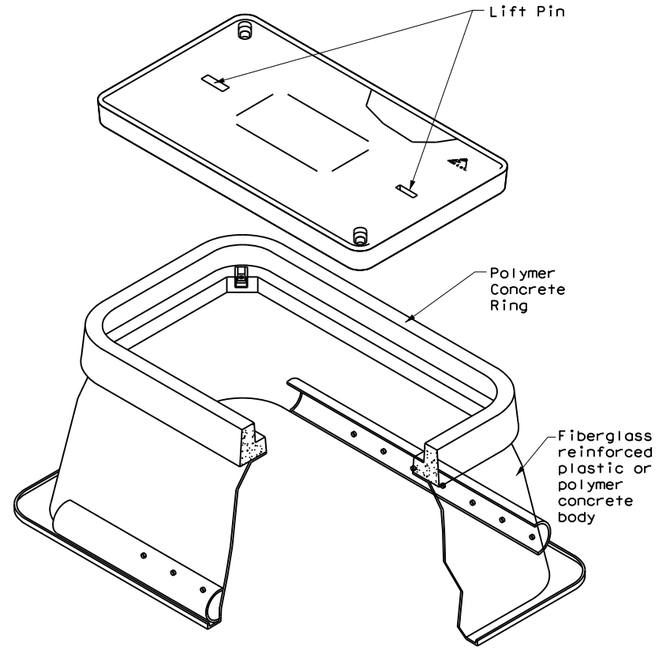

Texas Department of Transportation

Traffic Operations Division Standard

ELECTRICAL DETAILS BATTERY BOX GROUND BOXES

ED(12)-14

FILE: ed12-14.dgn	DN: TxDOT	CK: TxDOT	DW: TxDOT	CK: TxDOT
© TxDOT October 2014	CONT	SECT	JOB	HIGHWAY
REVISIONS	0914	05	222	RM 2243
	DIST		COUNTY	SHEET NO.
	AUS		WILLIAMSON	375

71M

DISCLAIMER:
The use of this standard is governed by the "Texas Engineering Practice Act". No warranty of any kind is made by TxDOT for any purpose whatsoever. TxDOT assumes no responsibility for the conversion of this standard to other formats or for incorrect results or damages resulting from its use.

DATE: 4/10/2025 1:07:52 PM
FILE: G:\TXC\Projects\County_Williamson\7473-02 RM 2243 Phase 1A\03_CADD\0 Sheets\ED(12)-14.dgn

DISCLAIMER: The use of this standard is governed by the "Texas Engineering Practice Act". No warranty of any kind is made by TxDOT for any purpose whatsoever. TxDOT assumes no responsibility for the conversion of this standard to other formats or for incorrect results or damages resulting from its use.

DATE: 4/10/2025 1:07:54 PM
FILE: G:\TXC\Projects\County*Williamson\7473-02 RM 2243 Phase 1A\03*CADD\01*Shts\13-SIGNALS\STDS\sma-80.dgn

Arm Length	ROUND POLES					POLYGONAL POLES					Foundation Type
	D_B	D_{19}	D_{24}	D_{30}	① thk	D_B	D_{19}	D_{24}	D_{30}	① thk	
ft.	in.	in.	in.	in.	in.	in.	in.	in.	in.	in.	
20	10.5	7.8	7.1	6.3	.179	11.5	8.5	7.7	6.8	.179	30-A
24	11.0	8.3	7.6	6.8	.179	12.0	9.0	8.2	7.3	.179	30-A
28	11.5	8.8	8.1	7.3	.179	12.5	9.5	8.7	7.8	.179	30-A
32	12.5	9.8	9.1	8.3	.179	12.0	9.0	8.2	7.3	.239	30-A
36	12.0	9.3	8.6	7.8	.239	12.5	9.5	8.7	7.8	.239	36-A
40	12.0	9.3	8.6	7.8	.239	13.5	10.5	9.7	8.8	.239	36-A
44	12.5	9.8	9.1	8.3	.239	14.0	11.0	10.2	9.3	.239	36-A
48	13.0	10.3	9.6	8.8	.239	15.0	12.0	11.2	10.3	.239	36-A

Arm Length	ROUND ARMS					POLYGONAL ARMS				
	L_1	D_1	D_2	① thk	Rise	L_1	D_1	② D_2	① thk	Rise
ft.	ft.	in.	in.	in.		ft.	in.	in.	in.	
20	19.1	6.5	3.8	.179	1'-9"	19.1	7.0	3.5	.179	1'-8"
24	23.1	7.5	4.3	.179	1'-10"	23.1	7.5	3.5	.179	1'-9"
28	27.1	8.0	4.2	.179	1'-11"	27.1	8.0	3.5	.179	1'-10"
32	31.0	9.0	4.7	.179	2'-1"	31.0	9.0	3.5	.179	2'-0"
36	35.0	9.5	4.6	.179	2'-4"	35.0	10.0	3.5	.179	2'-1"
40	39.0	9.5	4.1	.239	2'-8"	39.0	9.5	3.5	.239	2'-3"
44	43.0	10.0	4.1	.239	2'-11"	43.0	10.0	3.5	.239	2'-6"
48	47.0	10.5	4.1	.239	3'-4"	47.0	11.0	3.5	.239	2'-9"

D_B = Pole Base O.D.
D_{19} = Pole Top O.D. with no Luminaire and no ILSN
D_{24} = Pole Top O.D. with ILSN w/out Luminaire
D_{30} = Pole Top O.D. with Luminaire
D_1 = Arm Base O.D.
D_2 = Arm End O.D.
L_1 = Shaft Length
L = Nominal Arm Length

① Thickness shown are minimums, thicker materials may be used.

② D_2 may be increased by up to 1" for polygonal arms.

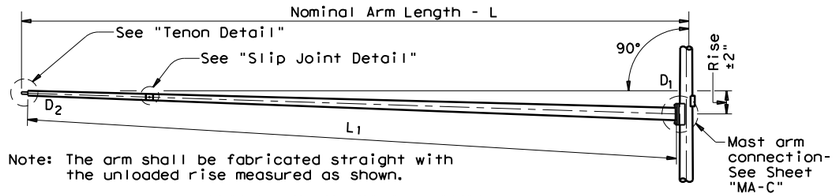

Note: The arm shall be fabricated straight with the unloaded rise measured as shown.

TRAFFIC SIGNAL ARM

(Fixed Mount)

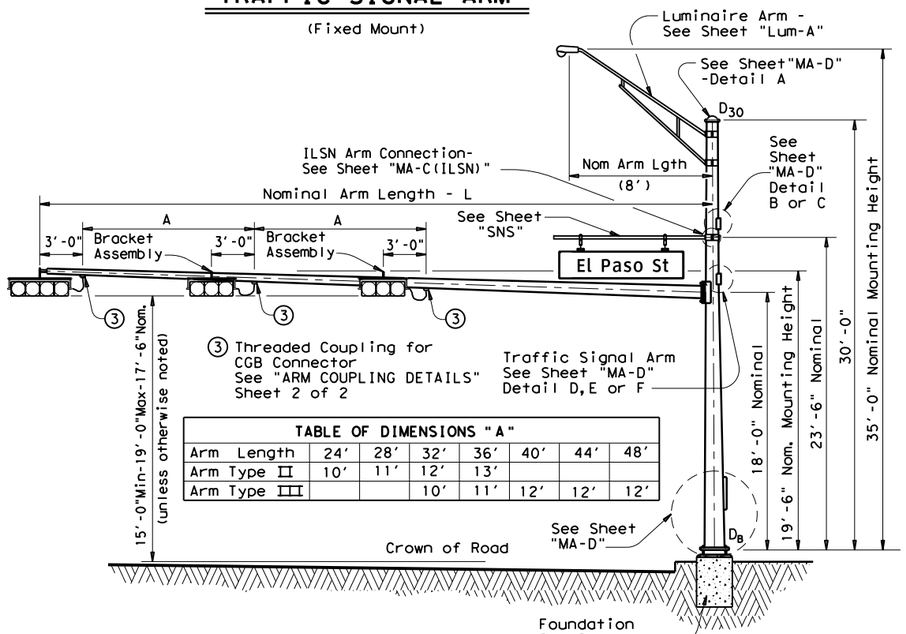

TABLE OF DIMENSIONS "A"

Arm Length	24'	28'	32'	36'	40'	44'	48'
Arm Type II	10'	11'	12'	13'			
Arm Type III			10'	11'	12'	12'	12'

STRUCTURE ASSEMBLY

SHIPPING PARTS LIST

Ship each pole with the following attached: enlarged hand hole, pole cap, fixed-arm connection bolts and washers and any additional hardware listed in the table.

Nominal Arm Length	30' Poles With Luminaire		24' Poles With ILSN		19' Poles With No Luminaire and No ILSN	
	Above hardware plus: One (or two if ILSN attached) small hand hole, clamp-on simplex		Above hardware plus one small hand hole		See note above	
ft	Designation	Quantity	Designation	Quantity	Designation	Quantity
20	20L-80		20S-80		20-80	
24	24L-80		24S-80		24-80	
28	28L-80		28S-80		28-80	
32	32L-80		32S-80		32-80	
36	36L-80	1	36S-80		36-80	
40	40L-80	1	40S-80		40-80	
44	44L-80		44S-80		44-80	
48	48L-80		48S-80		48-80	

Traffic Signal Arms (1 per Pole) Ship each arm with the listed equipment attached

Nominal Arm Length	Type I Arm (1 Signal)		Type II Arm (2 Signals)		Type III Arm (3 Signals)	
	1 CGB connector		1 Bracket Assembly and 2 CGB Connectors		2 Bracket Assemblies and 3 CGB Connectors	
ft	Designation	Quantity	Designation	Quantity	Designation	Quantity
20	20I-80					
24	24I-80		24II-80			
28	28I-80		28II-80			
32			32II-80		32III-80	
36			36II-80		36III-80	1
40					40III-80	1
44					44III-80	
48					48III-80	

Luminaire Arms (1 per 30' pole)

Nominal Arm Length	Quantity
8' Arm	2

ILSN Arm (Max. 2 per pole) Ship with clamps, bolts and washers

Nominal Arm Length	Quantity
7' Arm	
9' Arm	

Anchor Bolt Assemblies (1 per pole)

Anchor Bolt Diameter	Anchor Bolt Length	Quantity
1 ½"	3'-4"	
1 ¾"	3'-10"	2

Each anchor bolt assembly consists of the following: Top and Bottom templates, 4 anchor bolts, 8 nuts, 8 flat washers, and 4 nut anchor devices (Type 2) per Standard Drawing "TS-FD".

Templates may be removed for shipment.

SHEET 1 OF 2

Texas Department of Transportation
Traffic Operations Division

TRAFFIC SIGNAL SUPPORT STRUCTURES

SINGLE MAST ARM ASSEMBLY

(80 MPH WIND ZONE)

SMA-80(1)-12

© TxDOT August 1995

DN: MS	CK: JSY	DW: MMF	CK: JSY

REVISIONS
5-96
11-99
1-12

CONT	SECT	JOB	HIGHWAY
0914	05	222	RM 2243
DIST	COUNTY		SHEET NO.
AUS	WILLIAMSON		376

122A

DISCLAIMER: The use of this standard is governed by the "Texas Engineering Practice Act". No warranty of any kind is made by TxDOT for any purpose whatsoever. TxDOT assumes no responsibility for the conversion of this standard to other formats or for incorrect results or damages resulting from its use.

DATE: 4/10/2025 1:07:55 PM
FILE: G:\TXC\Projects\County\Williamson\7473-02 RM 2243 Phase 1A\03\CADD\01\Shts\13-SIGNAL\STDS\sma-80.dgn

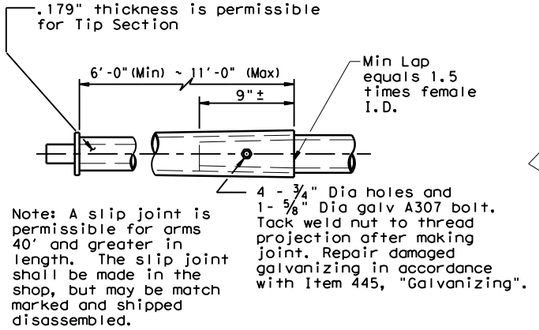

SLIP JOINT DETAIL

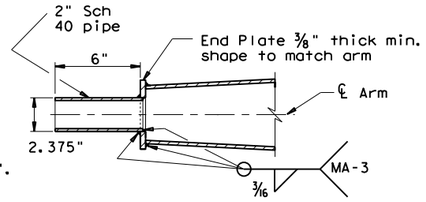

TENON DETAIL

VIBRATION WARNING

Mast Arms of SMA and DMA structures and clamp-on Arms of LMA structures of approximately 40 ft or longer are subject to harmonic vertical vibrations in light wind conditions due to the aeroelastic characteristics of a few of the myriads of possible combinations of the following: signal numbers, weights and positions; existence/solidity of backplates; presence of additional attachments to the arm, such as signs and cameras; arm-wind orientation; and arm-pole stiffness.

Such vibrations may cause fatigue damage to the structure and may lead to galloping in moderate wind conditions which may further damage the structure and alarm the public. Tests have indicated that when wind is blowing toward the back side of signal heads having un-vented backplates attached the probability of unacceptable harmonic vibration and/or galloping is rather high.

If backplates are not required for improved visibility they should not be applied to the signal heads or, if they must be applied, they should be vented as a first and inexpensive measure to mitigate vibrations.

The traffic signal mast arms shall be visually inspected in 5 to 20 mph wind conditions after installation of signal heads and any attachments, including any required backpates. If vertical movements with a total excursion (maximum upward excursion to maximum downward excursion) of more than approximately 8" are observed at the arm tip, a damping plate shall be fitted to the arm. See "Damping Plate Mounting Details" on standard sheet, MA-DPD-10.

This visual inspection shall be repeated after each modification of the structure that could affect its aeroelastic response. Excessive vibrations shall not be allowed to continue for more than two days.

Stainless steel bands (or Cables) and cast bracket as in "Astro-Brac", "Sky Bracket" or "Easy Bracket" with 1 ½" Dia Threaded Coupling.

BRACKET ASSEMBLY

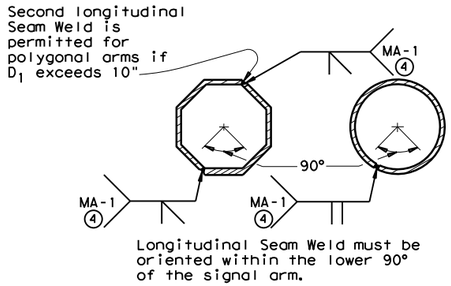

ARM WELD DETAIL

④ 60% Min. penetration 100% pemetration within 6" of circumferential base welds.

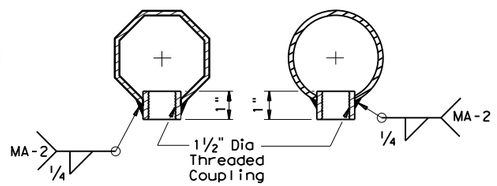

ARM COUPLING DETAILS

GENERAL NOTES:

Design conforms to 1994 AASHTO Standard Specifications for Structural Supports for Highway Signs, Luminaires, and Traffic Signals and Interim Specifications thereto. Design Wind Speed equals 80 mph plus a 1.3 gust factor.

Poles are designed to support one 8'-0" luminaire arm, one 9'-0" internally lighted street name sign and one traffic signal arm with a length as tabulated. The specified luminaire load applied at the end of the luminaire arm equals 60 lbs vertical dead load plus the horizontal wind load on an effective projected area of 1.6 sq ft. The specified internally lighted street name sign load applied 4.5 ft from the centerline of the pole equals 85 lbs vertical dead load plus horizontal wind load on an effective projected area of 11.5 sq ft. The specified signal load applied at the end of the traffic signal arm equals 180 lbs vertical dead load plus the horizontal wind load on an effective projected area of 32.4 sq ft (actual area times drag coefficient).

See Standard Sheet "MA-D" for pole details, "MA-C" for traffic signal arm connection details, "MA-C (ILSN)" for internally lighted street name sign arm connection details, "LUM-A" for luminaire arm and connection details, "SNS" for internally lighted street name sign details, and "TS-FD" for anchor bolt and foundation details. See "MA-C" for material specifications.

Fabrication shall be in accordance with Item 686, "Traffic Signal Pole Assemblies (Steel)" and with the details, dimensions, and weld procedures shown herein. Weld references call for preapproved weld procedures which the Fabricator must obtain prior to fabrication. Materials, fabrication tolerances, and shipping practices shall meet the requirements of this sheet and Item 686, "Traffic Signal Pole Assemblies (Steel)".

Unless otherwise noted, all parts shall be galvanized in accordance with Item 445, "Galvanizing", after fabrication.

Deviation from the details and dimensions shown herein require submission of shop drawings in accordance with Item 441, "Steel Structures". Alternate designs are not acceptable.

Texas Department of Transportation
Traffic Operations Division

TRAFFIC SIGNAL SUPPORT STRUCTURES

SINGLE MAST ARM ASSEMBLY

(80 MPH WIND ZONE)

SMA-80(2)-12

© TxDOT August 1995

DN: MS	CK: JSY	DW: MMF	CK: JSY

REVISIONS
5-96
1-12

CONT	SECT	JOB	HIGHWAY
0914	05	222	RM 2243
DIST	COUNTY		SHEET NO.
AUS	WILLIAMSON		377

122B

DISCLAIMER: The use of this standard is governed by the "Texas Engineering Practice Act". No warranty of any kind is made by TxDOT for any purpose whatsoever. TxDOT assumes no responsibility for the conversion of this standard to other formats or for incorrect results or damages resulting from its use.

DATE:
FILE:

ARM SIZE D_1	ARM SIZE ϕ	A	B	C	D	E	CONN BOLT DIA
in.	in.	in.	in.	in.	in.	in.	in.
6.5	.179	12	9	9	6	1 ¾	1
7.5	.179	13	9	10	6	1 ¾	1
8.0	.179	14	10	11	7	2	1 ¼
9.0	.179	16	11	13	8	2	1 ¼
9.5	.179	17	12	14	9	2	1 ¼
9.5	.239	18	12	15	9	2	1 ¼
10.0	.239	18	12	15	9	2	1 ¼
10.5	.239	18	13	15	10	3	1 ½
11.0	.239	18	13	15	10	3	1 ½

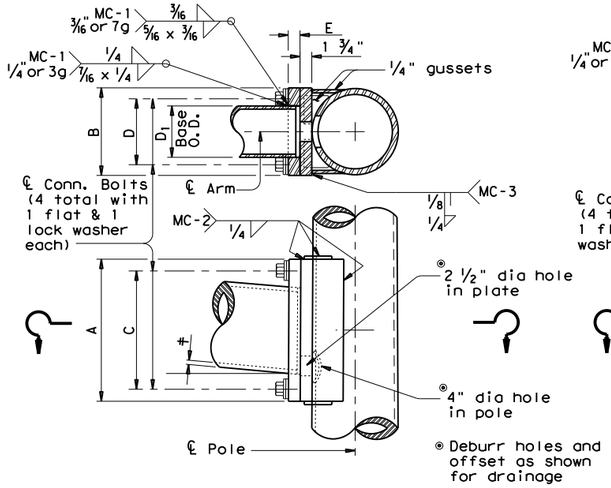

FIXED MOUNT DETAIL 1

ARM SIZE D_1	ARM SIZE ϕ	A	F	CONN. BOLTS No.	CONN. BOLTS Dia	PIN BOLTS No.	PIN BOLTS Dia
in.	in.	in.	in.	ea.	in.	ea.	in.
6.5	.179	12	6	4	1	2	5/8
7.5	.179	14	8	4	1	2	5/8
8.0	.179	14	8	4	1	2	5/8
9.0	.179	16	10	4	1	2	5/8
9.5	.179	18	12	4	1 1/4	3	5/8
9.5	.239	18	12	4	1 1/4	3	5/8
10.0	.239	18	12	4	1 1/4	3	5/8

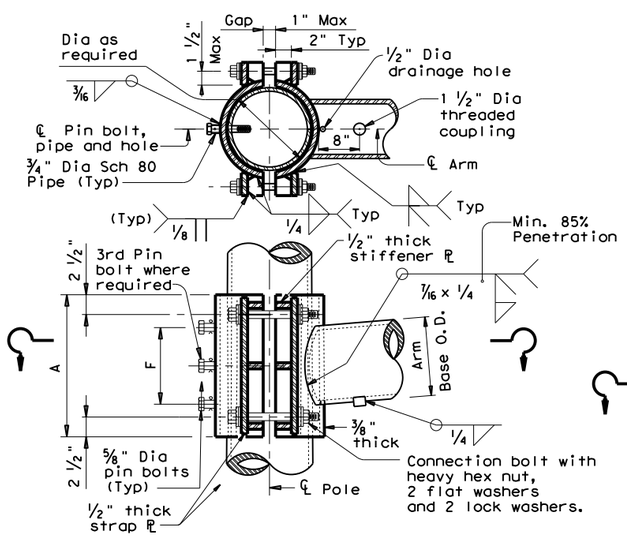

CLAMP-ON DETAIL 1

ARM SIZE D_1	ARM SIZE ϕ	A	F	T	CONN. BOLTS No.	CONN. BOLTS Dia	PIN BOLTS No.	PIN BOLTS Dia
in.	in.	in.	in.	in.	ea.	in.	ea.	in.
7.0	.179	12	6	3/4	4	3/4	2	5/8
7.5	.179	14	8	3/4	4	3/4	2	5/8
8.0	.179	14	8	3/4	4	3/4	2	5/8
9.0	.179	16	10	7/8	4	1	2	5/8
10.0	.179	18	10	7/8	4	1	2	5/8
9.5	.239	18	10	1	6	1	3	5/8
10.0	.239	18	10	1	6	1	3	5/8

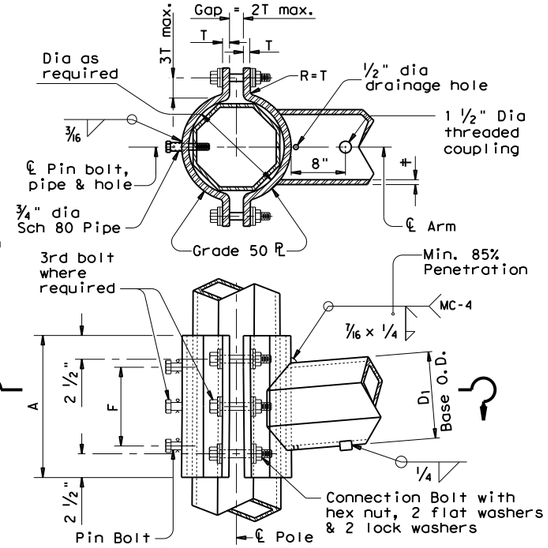

CLAMP-ON DETAIL 2

ARM SIZE D_1	ARM SIZE ϕ	A	F	CONN. BOLTS No.	CONN. BOLTS Dia	PIN BOLTS No.	PIN BOLTS Dia
in.	in.	in.	in.	ea.	in.	ea.	in.
6.5	.179	12	6	4	1	2	5/8
7.5	.179	14	8	4	1	2	5/8
8.0	.179	14	8	4	1	2	5/8
9.0	.179	16	10	4	1	2	5/8
9.5	.179	18	12	6	1	3	5/8
9.5	.239	18	12	6	1	3	5/8
10.0	.239	18	12	6	1	3	5/8

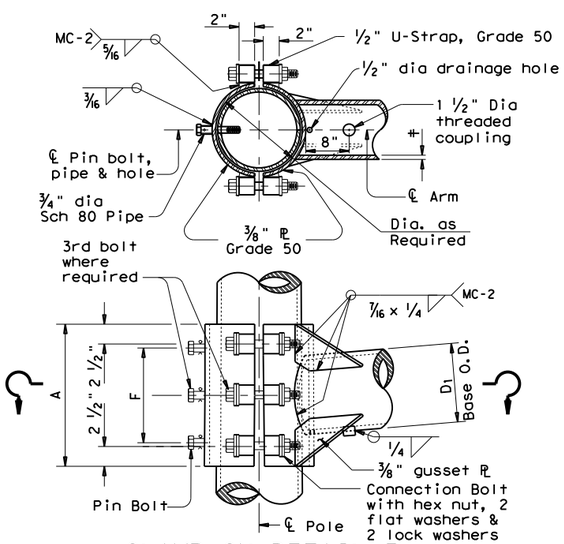

ARM BASE WELD DETAILS

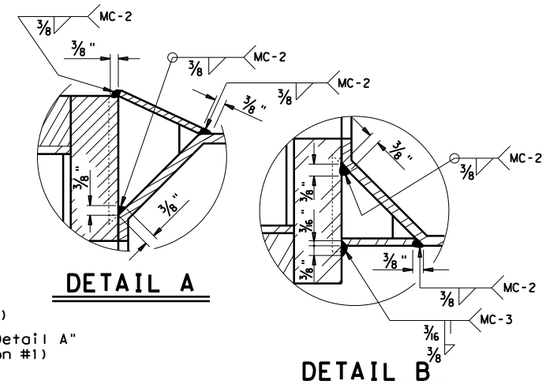

DETAIL A

DETAIL B

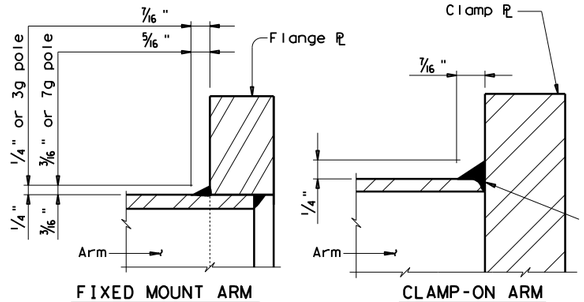

MATERIALS	
Round Shafts or Polygonal Shafts ①	ASTM A595 Gr.A, A588, A1008 HSLAS Gr.50 Class 2, A1011 HSLAS Gr.50 Class 2, A572 Gr.50 or A1011 SS Gr.50 ②
Plates ①	ASTM A36, A588, or A572 Gr.50
Connection Bolts	ASTM A325 or A449, except where noted
Pin Bolts	ASTM A325
Pipe ①	ASTM A53 Gr.B, A501, A1008 HSLAS-F Gr.50, A1011 HSLAS-F Gr.50
Misc. Hardware	Galvanized steel or stainless steel or as noted

① ASTM A572, A1008 HSLAS, A1011 HSLAS, A1008 HSLAS-F, A1011 HSLAS-F or A1011 SS may have higher yield strengths but shall not have less elongation than the grade indicated.

② ASTM A1011 SS Gr.50 material shall also have a minimum elongation of 18 percent in 8 inches or 23 percent in 2 inches. Material thickness in excess of those stipulated under A1011 SS will be acceptable providing the material meets all other A1011 SS requirements and the requirements of this item.

GENERAL NOTES:

Clamp-on details are used for the second arm on dual mast arm assemblies. A Maximum 1 ½" wide vertical slotted hole shall be cut in the front clamp plate to facilitate drainage during galvanizing. The slot shall be centered behind the arm and shall be no longer than the arm diameter minus 1"

Fixed mount details are used for single mast arm assemblies and for the first arm on dual mast arm assemblies.

Where duplicate parts occur on a detail, welds shown for one part shall apply to all similar parts on the detail.

Pin bolts are required to prevent rotation of clamp-on arms under design wind forces.

NOTE:

Pin bolts shall be A325 with threads excluded from the shear plane. Pin bolt and ¾" dia pipe shall have 9/16" dia holes for a ⅛" dia galvanized cotter pin. Back clamp plate shall be furnished with a ¾" dia hole for each pin bolt. An 11/16" dia hole for each pin bolt shall be field drilled through the pole after arm orientations have been approved by the Engineer.

Texas Department of Transportation
Traffic Operations Division

STANDARD ASSEMBLY FOR TRAFFIC SIGNAL SUPPORT STRUCTURES

MAST ARM CONNECTIONS

MA-C-12

©TxDOT August 1995

DN: MS	CK: JSY	DW: MMF	CK: JSY

REVISIONS
5-96
5-09
1-12

CONT	SECT	JOB	HIGHWAY
0914	05	222	RM 2243

DIST	COUNTY	SHEET NO.
AUS	WILLIAMSON	378

DISCLAIMER: The use of this standard is governed by the "Texas Engineering Practice Act". No warranty of any kind is made by TxDOT for any purpose whatsoever. TxDOT assumes no responsibility for the conversion of this standard to other formats or for incorrect results or damages resulting from its use.

DATE:
FILE:

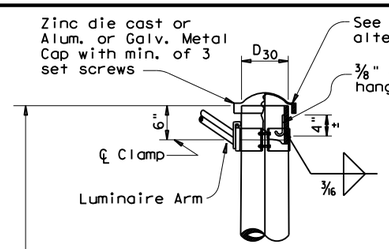

DETAIL A

(for pole with luminaire)

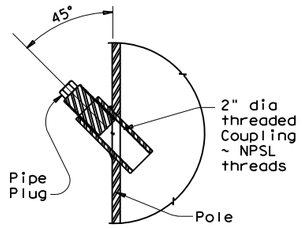

POLE COUPLING DETAIL

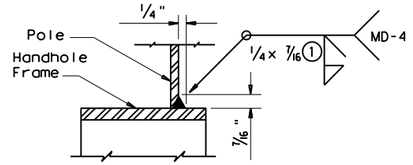

DETAIL G

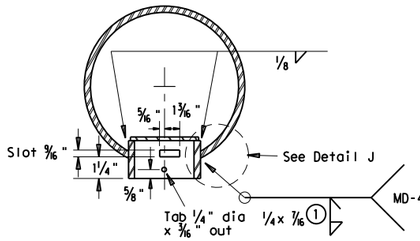

SECTION X-X

Opening for access compartment shall be no more than 1/16 inch wider than the access compartment itself.

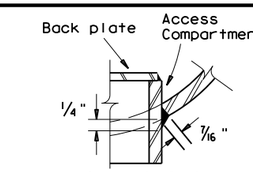

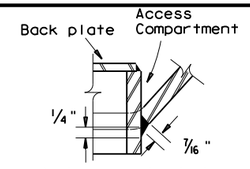

DETAIL J

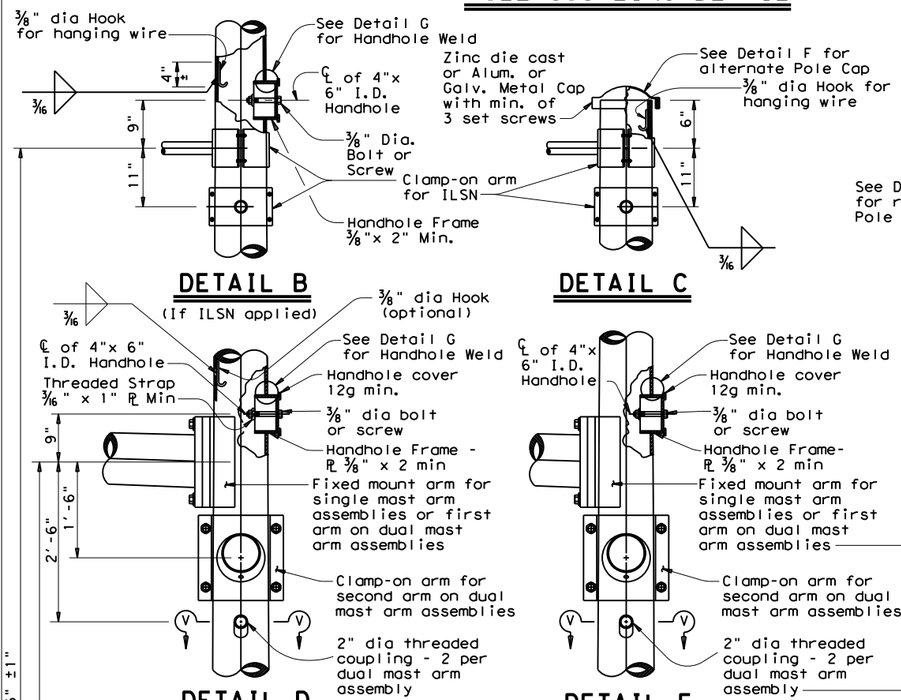

DETAIL B

(If ILSN applied)

DETAIL C

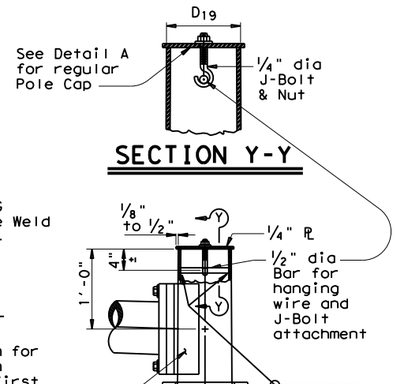

SECTION Y-Y

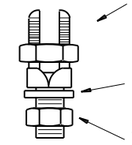

COPPER GROUND CONNECTOR

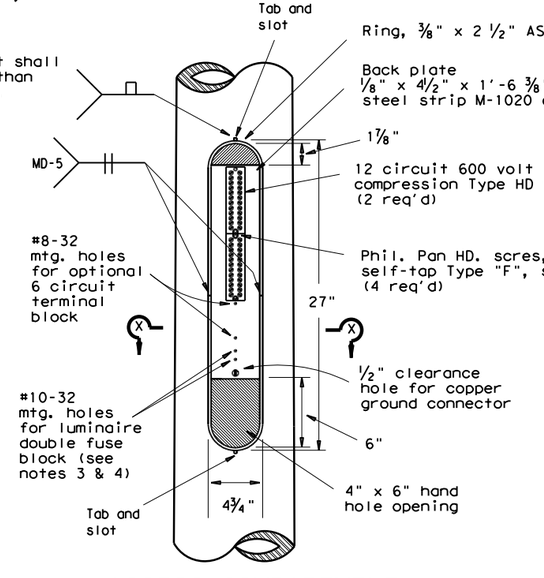

ACCESS COMPARTMENT

DETAIL D

(for 30' pole with luminaire and ILSN sign)

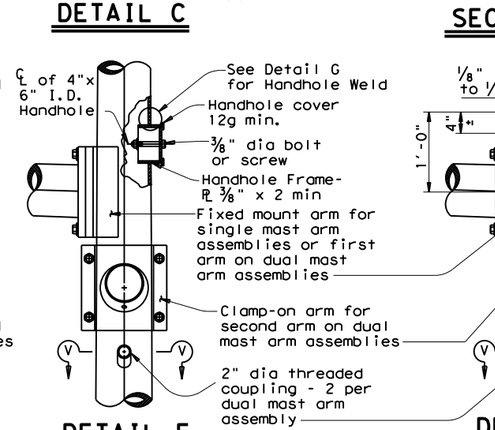

DETAIL E

(for 24' pole with ILSN sign and no luminaire)

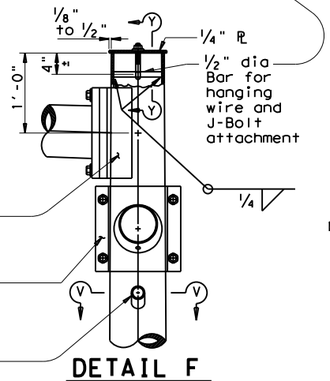

DETAIL F

(for 19' pole with no ILSN sign and no luminaire)

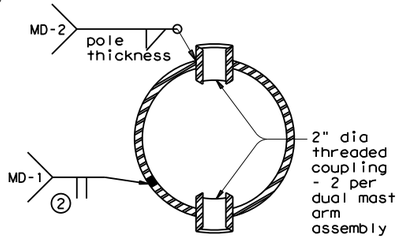

SECTION V-V

Anchor Bolt Diameter	Bolt Hole Diameter	Slot Length	Bolt Circle Diameter	Base ℞ Dim. L x T	Adjust. Range
1 1/2"	1 3/4"	3 1/2"	17"	18" x 1 1/2"	13.4°
1 3/4"	2"	4"	19"	20" x 1 3/4"	13.5°
2"	2 1/4"	4 1/2"	21"	22" x 2"	13.6°
2 1/4"	2 1/2"	5"	23"	24" x 2 1/4"	13.7°

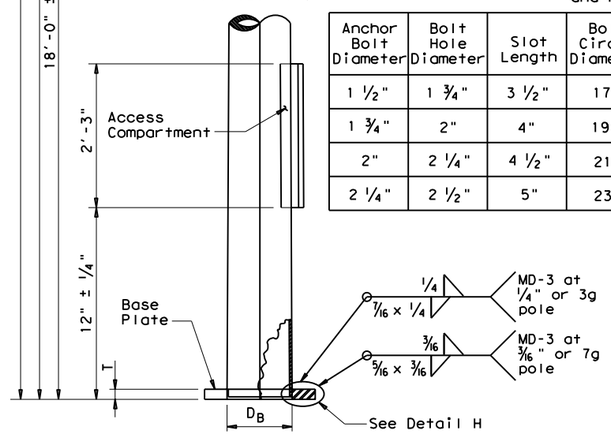

POLE ELEVATION

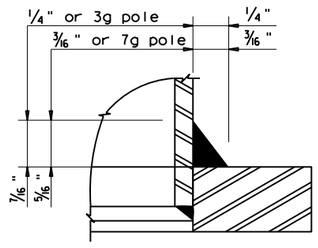

DETAIL H

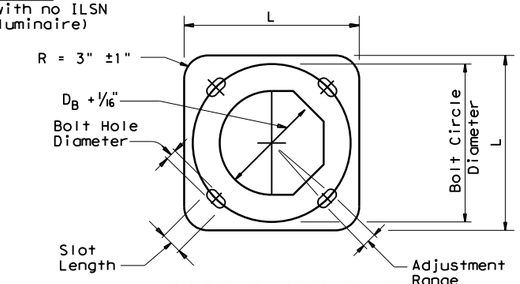

BASE PLATE PLAN

(1) 85% Min. penetration

(2) 60% Min. penetration 100% pemetration within 6" of circumferential base welds.

NOTES:

1. The cover shall be one piece formed from ABS plastic, shall be a pearl gray color, and shall be suitable for exposure to harsh sunlight and extreme weather. Cover shall latch with two screw latches and shall fit tightly to the enclosure ring to create a rainproof seal. Latch screws shall be 1/4-20 stainless flat socket head screws with tamper proof feature.
2. The pole manufacturer shall provide with each pole a separate kit consisting of: one cover with two latching assemblies, two terminal strips (Marathon #985GP12CU or approved equal), four #8-32 x 1 1/4" self tapping type "F" stainless steel pan head screws, and one ground connector (Blackburn TTC, Burndy KC22J12T13, or Ilsco SSS-5). The traffic signal contractor shall install the kit items in the field.
3. The screw hole spacing on the enclosure back plate shall be for two Marathon #985GP12 terminal strips, one Marathon #985GP06CU terminal strip, and one Bussmann #BM6032B fuse block.
4. Install one Bussmann #BM6032B, Littelfuse #L60030M-2C, or Ferraz-Shawmut #30352 fuse block for poles where luminaires are to be installed.

Texas Department of Transportation
Traffic Operations Division

TRAFFIC SIGNAL SUPPORT STRUCTURES MAST ARM POLE DETAILS

MA-D-12

© TxDOT August 1995

DN: MS	CK: JSY	DW: FDN	CK: CAL

REVISIONS
8-99
1-12

CONT	SECT	JOB	HIGHWAY
0914	05	222	RM 2243
DIST	COUNTY		SHEET NO.
AUS	WILLIAMSON		379

DISCLAIMER: The use of this standard is governed by the "Texas Engineering Practice Act". No warranty of any kind is made by TxDOT for any purpose whatsoever. TxDOT assumes no responsibility for the conversion of this standard to other formats or for incorrect results or damages resulting from its use.

DATE:
FILE:

FOUNDATION DESIGN TABLE

FDN TYPE	DRILLED SHAFT DIA	REINFORCING STEEL		EMBEDDED DRILLED SHAFT LENGTH-ft ④, ⑤, ⑥			ANCHOR BOLT DESIGN ①				FOUNDATION DESIGN LOAD ②		TYPICAL APPLICATION
		VERT BARS	SPIRAL & PITCH	TEXAS CONE PENETROMETER N blows/ft 10	15	40	ANCHOR BOLT DIA	Fy (ksi)	BOLT CIR DIA	ANCHOR TYPE	MOMENT K-ft	SHEAR Kips	
24-A	24"	4- #5	#2 at 12"	5.7	5.3	4.5	¾"	36	12 ¾"	1	10	1	Pedestal pole, pedestal mounted controller.
30-A	30"	8- #9	#3 at 6"	11.3	10.3	8.0	1 ½"	55	17"	2	87	3	Mast arm assembly. (see Selection Table)
36-A	36"	10- #9	#3 at 6"	13.2	12.0	9.4	1 ¾"	55	19"	2	131	5	Mast arm assembly. (see Selection Table) 30' strain pole with or without luminaire.
36-B	36"	12- #9	#3 at 6"	15.2	13.6	10.4	2"	55	21"	2	190	7	Mast arm assembly. (see Selection Table) Strain pole taller than 30' & strain pole with mast arm
42-A	42"	14- #9	#3 at 6"	17.4	15.6	11.9	2 ¼"	55	23"	2	271	9	Mast arm assembly. (see Selection Table)

NOTES:

① Anchor bolt design develops the foundation capacity given under Foundation Design Loads.

② Foundation Design Loads are the allowable moments and shears at the base of the structure.

③ Foundations may be listed separately or grouped according to similarity of location and type. Quantities are for the Contractor's information only.

④ Field Penetrometer readings at a depth of approximately 3 to 5 feet may be used to adjust shaft lengths.

⑤ If rock is encountered, the Drilled Shaft shall extend a minimum of two diameters into solid rock.

⑥ Decimal lengths in Design Table are to allow interpolation for other penetrometer values. Round to nearest foot for entry into Summary Table.

FOUNDATION SUMMARY TABLE ③

LOCATION IDENTIFICATION	AVG. N BLOW /ft.	FDN TYPE	NO. EA	DRILLED SHAFT LENGTH ⑥ (FEET) 24-A	30-A	36-A	36-B	42-A
T-1	10	24-A	1	6				
T-2	10	24-A	1	6				
T-3	10	24-A	1	6				
T-5	10	24-A	1	6				
T-8	10	24-A	1	6				
T-9	10	36-A	1			14		
T-11	10	36-A	1			14		
T-13	10	24-A	1	6				
TOTAL DRILLED SHAFT LENGTHS				36*		28		

*SUBSIDIARY TO ITEM 687: PEDESTAL POLE ASSEMBLIES

FOUNDATION SELECTION TABLE FOR STANDARD MAST ARM PLUS ILSN SUPPORT ASSEMBLIES (ft)

		FDN 30-A	FDN 36-A	FDN 36-B	FDN 42-A
80 MPH DESIGN WIND SPEED	MAX SINGLE ARM LENGTH	32'	48'		
	MAXIMUM DOUBLE ARM LENGTH COMBINATIONS	24' X 24'			
		28' X 28'			
		32' X 28'	32' X 32'		
			36' X 36'		
			40' X 36'		
			44' X 28'	44' X 36'	
100 MPH DESIGN WIND SPEED	MAX SINGLE ARM LENGTH		36'	44'	
	MAXIMUM DOUBLE ARM LENGTH COMBINATIONS		24' X 24'		
			28' X 28'		
			32' X 24'	32' X 32'	
				36' X 36'	
				40' x24'	40' X 36'
					44' x 36'

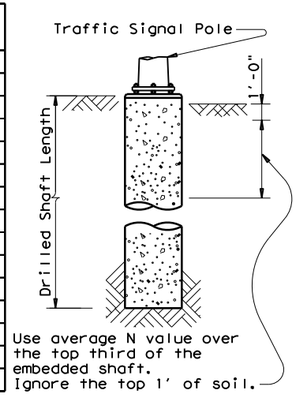

Use average N value over the top third of the embedded shaft. Ignore the top 1' of soil.

ANCHOR BOLT & TEMPLATE SIZES

BOLT DIA IN.	⑦ BOLT LENGTH	TOP THREAD	BOTTOM THREAD	BOLT CIRCLE	R2	R1
¾"	1'-6"	3"	—	12 ¾"	7 ⅛"	5 ⅝"
1 ½"	3'-4"	6"	4"	17"	10"	7"
1 ¾"	3'-10"	7"	4 ½"	19"	11 ¼"	7 ¾"
2"	4'-3"	8"	5"	21"	12 ½"	8 ½"
2 ¼"	4'-9"	9"	5 ½"	23"	13 ¾"	9 ¼"

⑦ Min dimensions given, longer bolts are acceptable.

EXAMPLE:
1. For 80mph design wind speed, foundation 30-A can support up to a 32' arm with another arm up to 28'
2. For 100mph design wind speed, foundation 36-A can support a single 36' mast arm.

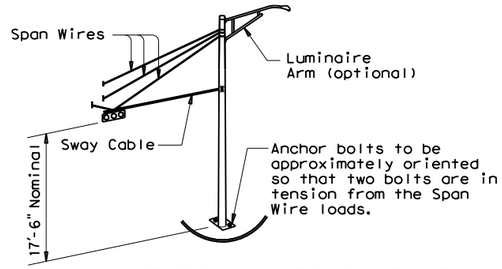

TYPICAL STRAIN POLE ASSEMBLY

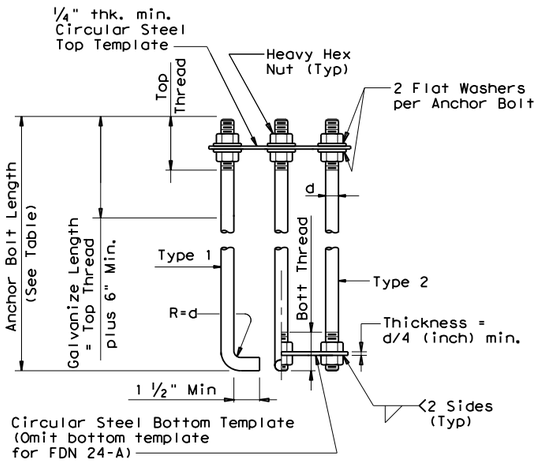

HOOKED ANCHOR (TYPE 1) NUT ANCHOR (TYPE 2)

ANCHOR BOLT ASSEMBLY

⑧ Orient anchor bolts orthogonal with the fixed arm direction to ensure that two bolts are in tension under dead load.

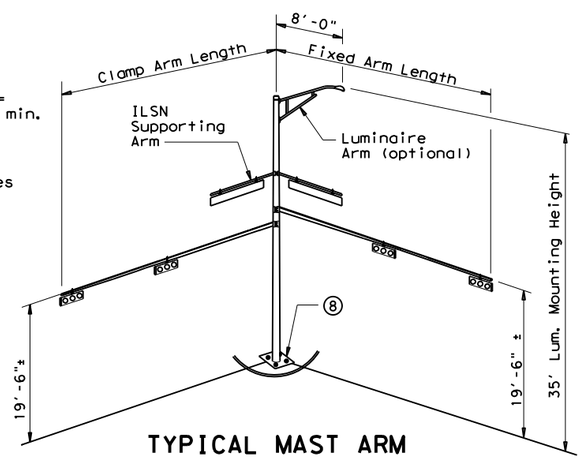

TYPICAL MAST ARM ASSEMBLY

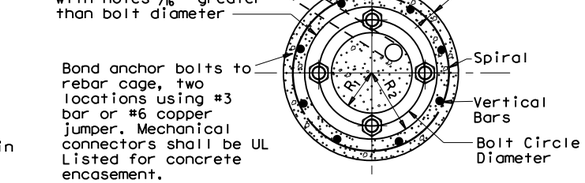

TOP VIEW

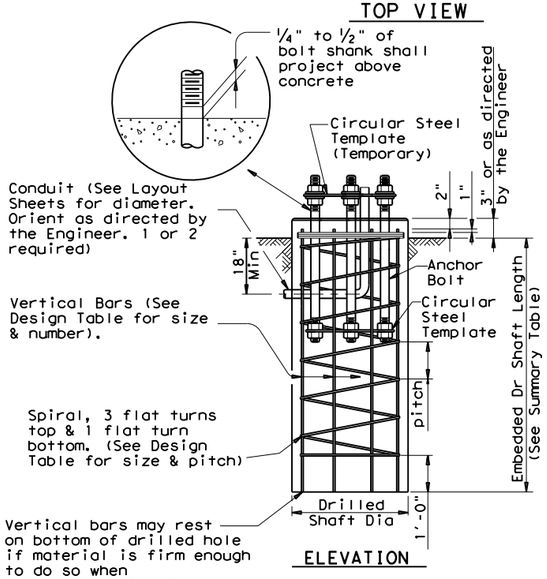

ELEVATION

FOUNDATION DETAILS

*SUBSIDIARY TO ITEM 687: PEDESTAL POLE ASSEMBLIES

GENERAL NOTES:

Design conforms to 1994 AASHTO Standard Specifications for Structural Supports for Highway Signs, Luminaires and Traffic Signals and interim revisions thereto.

Reinforcing steel shall conform to Item 440, "Reinforcing Steel".

Concrete shall be Class "C".

Threads for anchor bolts and nuts shall be rolled or cut threads of 8UN series up to 2" in diameter or UNC series for all sizes. Bolts and nuts shall have Class 2A and 2B fit tolerances. Galvanized nuts shall be tapped after galvanizing.

Anchor bolts that are larger than 1" in diameter shall conform to "alloy steel" or "medium-strength mild steel" per Item 449, "Anchor Bolts". Anchor bolts that are 1" in diameter or less shall conform to ASTM A36. Galvanize a minimum of the top end thread length plus 6" for all anchor bolts unless otherwise noted. Exposed washers and exposed nuts shall be galvanized. All galvanizing shall be in accordance with Item 445, "Galvanizing".

Templates and embedded nuts need not be galvanized. Lubricate and tighten anchor bolts when erecting the structure in accordance with Item 449, "Anchor Bolts".

Texas Department of Transportation
Traffic Operations Division

TRAFFIC SIGNAL POLE FOUNDATION

TS-FD-12

©TxDOT August 1995

REVISIONS	DN: MS	CK: JSY	DW: MAO/MMF	CK: JSY/TEB
5-96 11-99 1-12	CONT	SECT	JOB	HIGHWAY
	0914	05	222	RM 2243
	DIST	COUNTY		SHEET NO.
	AUS	WILLIAMSON		380

DISCLAIMER: The use of this standard is governed by the "Texas Engineering Practice Act". No warranty of any kind is made by TxDOT for any purpose whatsoever. TxDOT assumes no responsibility for the conversion of this standard to other formats or for incorrect results or damages resulting from its use.

DATE:
FILE:

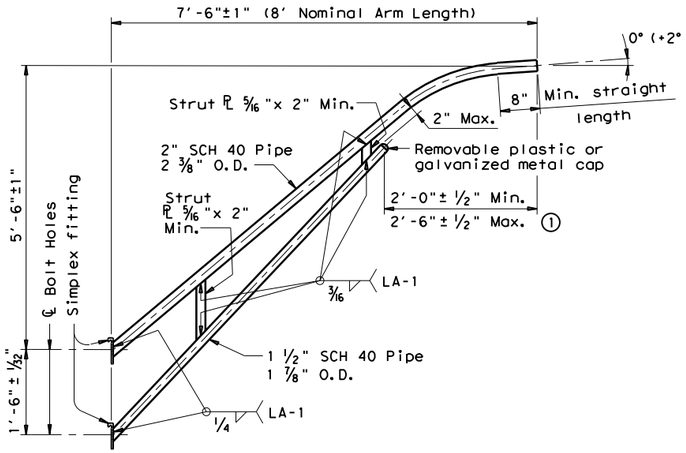

8-FOOT LUMINAIRE ARM

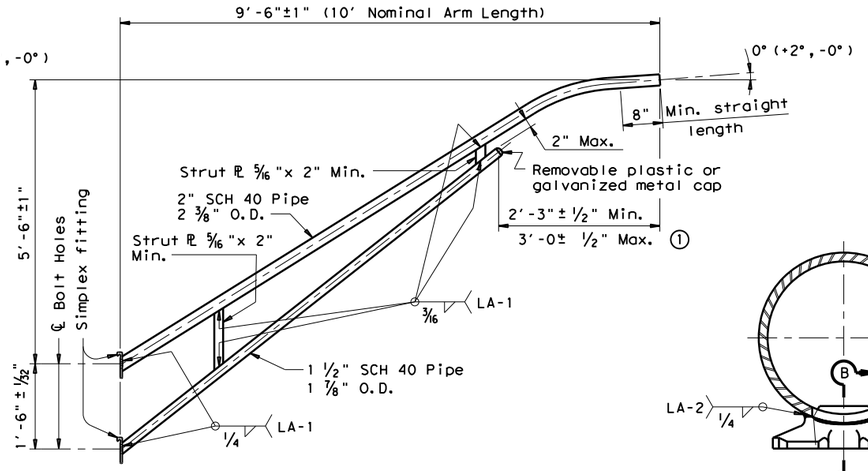

10-FOOT LUMINAIRE ARM

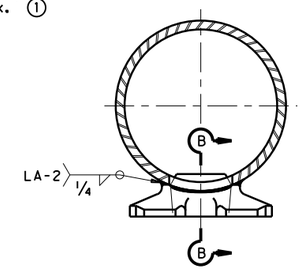

DIRECT ATTACHMENT DETAIL

MATERIALS	
Pole or Arm Simplex	ASTM A27 Gr.65-35 or A148 Gr.80-50, A576 Gr.1021 (3), or A36 (Arm only)
Arm Pipes	ASTM A53 Gr.B, A501, A1008 HSLAS-F Gr.50 (4), or A1011 HSLAS-F Gr.50 (4)
Arm Strut Plates (2)	ASTM A36, A572 Gr.50 (4), or A588
Misc.	ASTM designations as noted

(1) Dimensional limits are given to show acceptable variation in design. All of a Fabricator's production of a particular arm length shall have the same dimensions within specified tolerances.

(2) Any of the materials listed for plates may be used where the drawings do not specify a particular ASTM designation.

(3) A576 must be suitable for forging and also meet minimum tensile strength of 65 ksi, minimum yield of 35 ksi, and elongation in 2 inches of 22 percent.

(4) ASTM A572, A1008 HSLAS-F, and A1011 HSLAS-F may have higher yield strengths but shall not have less elongation than the grade indicated.

GENERAL NOTES:

Design conforms to 1994 AASHTO Standard Specifications for Structural Supports for Highway Signs, Luminaires, and Traffic Signals and Interim Revisions thereto. Design Wind Speed equals 90 mph plus a 1.3 gust factor. Arms are designed to support a 60 lb. luminaire having an effective projected area (actual area times drag coefficient) of 1.6 sq. ft.

Materials and fabrication shall be in accordance with Item 686, "Traffic Signal Pole Assemblies (Steel)" and with the details, dimensions, and weld procedures shown herein. Weld references call for preapproved weld procedures which the Fabricator must obtain prior to fabrication. In the absense of specified Fabricaton tolerances, dimensions shall be within the tolerances generally obtainable in normal fabrication practice.

Unless otherwise noted, all parts shall be galvanized after fabrication in accordance with Item 445, "Galvanizing".

Deviation from the details and dimensions shown herein require submission of shop drawings in accordance with Item 441, "Steel Structures". Alternate designs are not acceptable.

Each pole simplex fitting shall be supplied with 2 ASTM A325 bolts and 2 lock washers of the size specified. The bolts and lock washers shall be secured to the pole with the other hardware items called for in the plans. When clamp attachment is specified, the Fabricator shall ship the clamp assembly securely attached to the pole at the location shown on the plans.

If clamp assemblies are ordered without poles, the Fabricator shall ship one upper and one lower clamp assembly together in a single package, including all nuts and washers required for the clamps and simplex fittings.

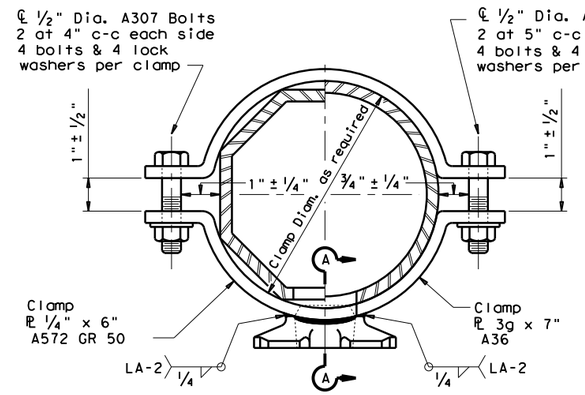

CLAMP ATTACHMENT DETAIL NO. 1 (HALF SECTION)

CLAMP ATTACHMENT DETAIL NO. 2 (HALF SECTION)

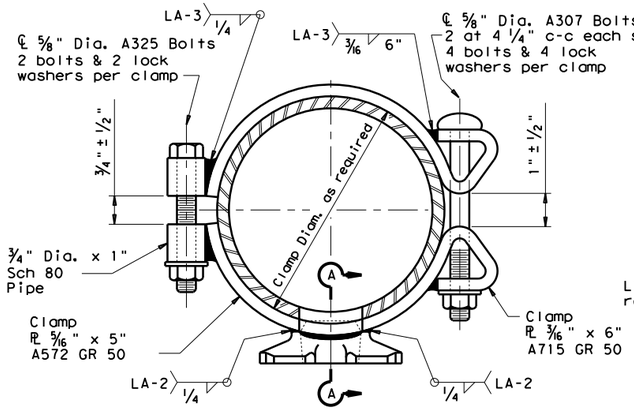

CLAMP ATTACHMENT DETAIL NO. 3 (HALF SECTION)

CLAMP ATTACHMENT DETAIL NO. 4 (HALF SECTION)

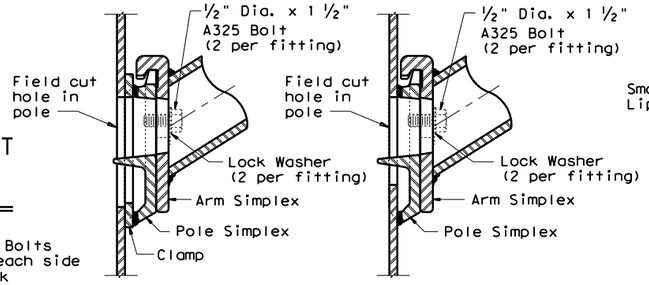

UPPER SIMPLEX FITTING

UPPER SIMPLEX FITTING

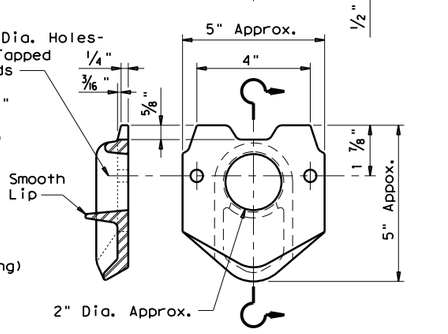

POLE SIMPLEX DETAIL

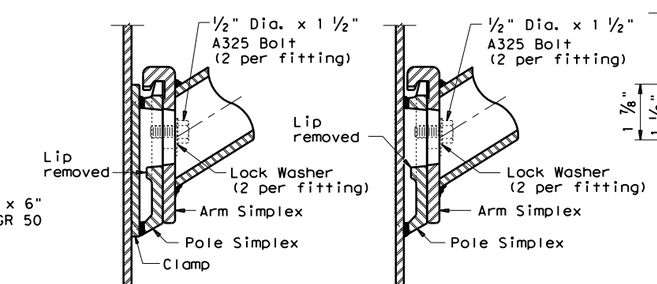

LOWER SIMPLEX FITTING

LOWER SIMPLEX FITTING

SECTON A-A

SECTON B-B

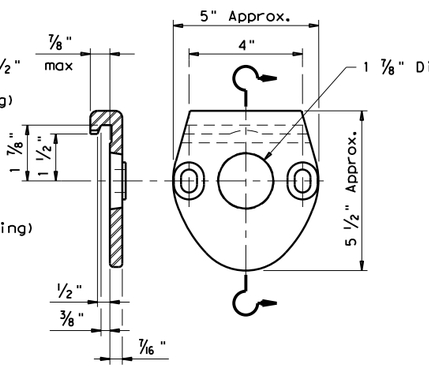

ARM SIMPLEX DETAIL

Texas Department of Transportation
Traffic Operations Division

STANDARD ASSEMBLY DRAWINGS FOR LUMINAIRE SUPPORT STRUCTURES

ARM DETAILS

LUM-A-12

© TxDOT August 1995

DN: LEH.	CK: JSY.	DW: LII.	CK: IEB.

REVISIONS	CONT	SECT	JOB	HIGHWAY
5-96	0914	05	222	RM 2243
1-99	DIST	COUNTY		SHEET NO.
1-12	AUS	WILLIAMSON		381

DISCLAIMER: The use of this standard is governed by the "Texas Engineering Practice Act". No warranty of any kind is made by TxDOT for any purpose whatsoever. TxDOT assumes no responsibility for the conversion of this standard to other formats or for incorrect results or damages resulting from its use.

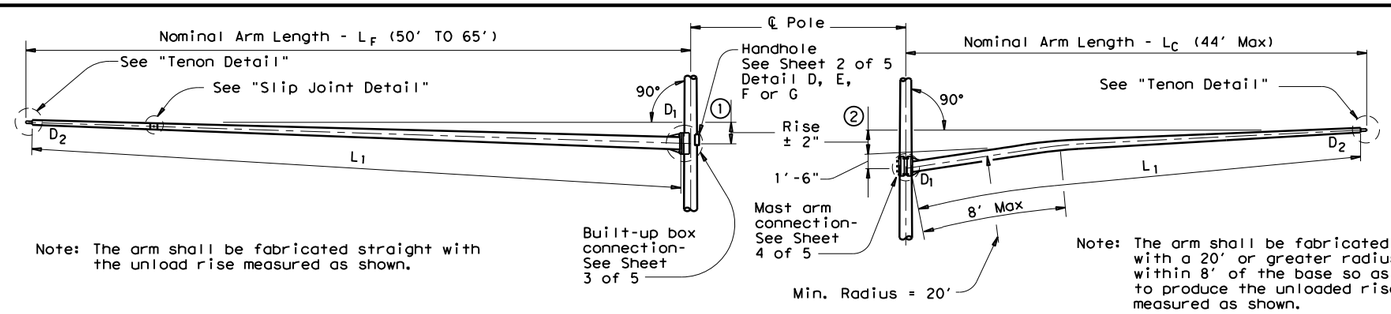

FIXED MOUNT TRAFFIC SIGNAL ARM

① See Sheet 3 of 5 for Arm Rise

CLAMP-ON TRAFFIC SIGNAL ARM (IF REQUIRED)

② See Sheet 4 of 5 for Arm Rise and Clamp-on Arm Details

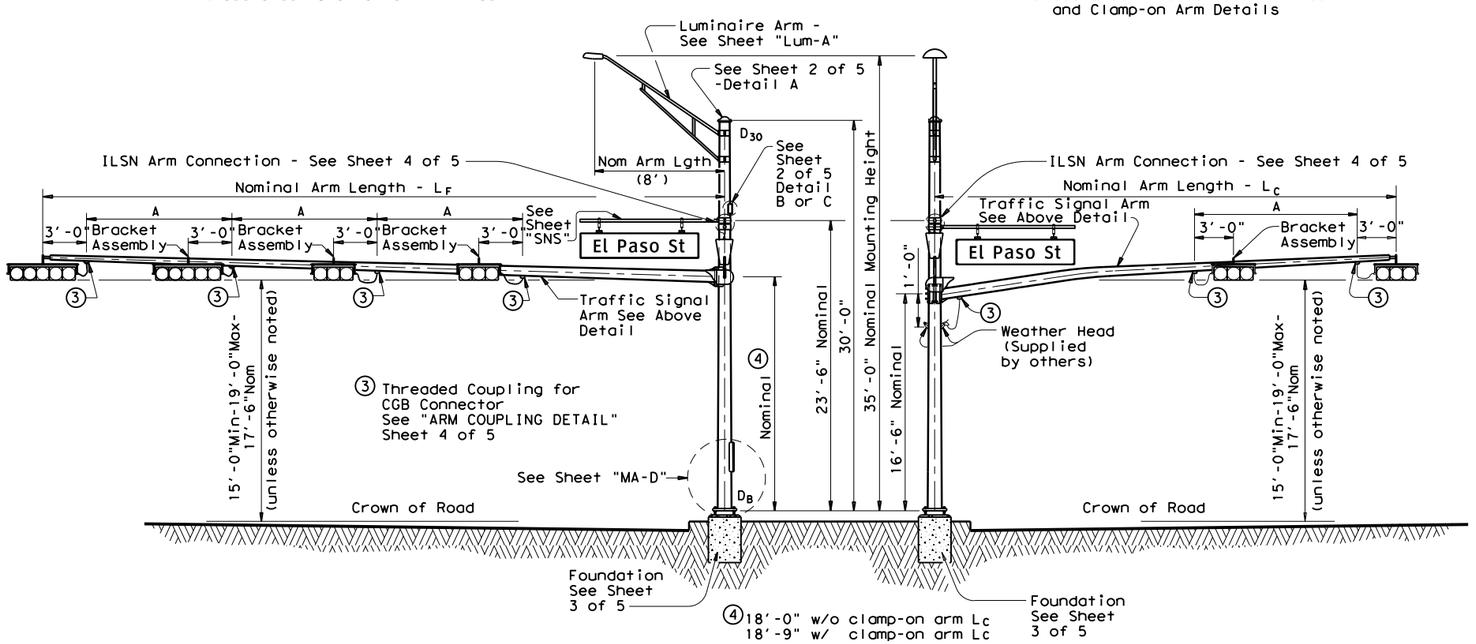

ELEVATION
(Showing fixed mount arm)

STRUCTURE ASSEMBLY

ELEVATION
(Showing clamp-on arm)

TABLE OF DIMENSIONS "A"										
Arm Length	24'	28'	32'	36'	40'	44'	50'	55'	60'	65'
Arm Type II	10'	11'	12'	13'						
Arm Type III			10'	11'	12'	12'				
Arm Type IV							12'	12'	12'	12'

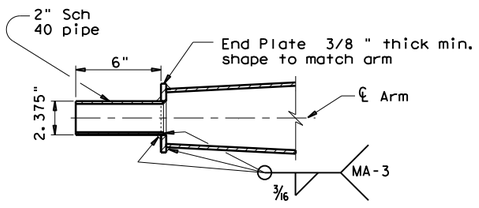

TENON DETAIL

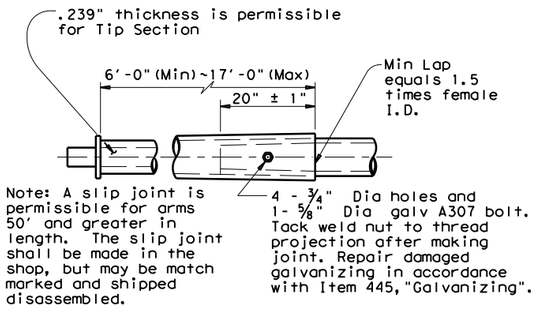

Note: A slip joint is permissible for arms 50' and greater in length. The slip joint shall be made in the shop, but may be match marked and shipped disassembled.

SLIP JOINT DETAIL (FIXED MOUNT ARM)

GENERAL NOTES:

Design conforms to 1994 AASHTO Standard Specifications for Structural Supports for Highway Signs, Luminaires, and Traffic Signals and Interim Specifications thereto. Design Wind Speed can be either 100 mph or 80 mph plus a 1.3 gust factor. If clamp-on traffic signal is required, designs are based on an arm included angle of 90 degrees or more. Angles of less than approximately 75 degrees will require a special design.

Poles are designed to support one 8'-0" luminaire arm, two 9'-0" internally lighted street name (ILSN) signs and two traffic signal arms with limited length combinations.

Each arm with its related attachment is shown below

Arm	Equivalent DL ⑤	WL EPA ⑤⑥
8' Luminaire Arm	Luminaire 60 lbs	1.6 sq ft
9' ILSN Arm	Sign 85 lbs	11.5 sq ft
50' to 65' Fixed Mount Arm	Signal Loads 310 lbs	52 sq ft
Up to 44' Clamp-on Arm	Signal Loads 180 lbs	32.4 sq ft

⑤ Equivalent dead load plus horizontal wind load applied at the end of arm except ILSN arm, which applied 4.5' from the centerline of the pole.

⑥ Effective projected area (actual area times drag coefficient) for the application of horizontal wind load.

Except as noted in Sheet 1 thru 5 of 5, other details not covered shall refer to Standard Sheet "MA-D" for pole details, "LUM-A" for luminaire arm and connection details, "SNS" for internally lighted street name sign details, and "TS-FD" for anchor bolt and foundation details.

Fabrication shall be in accordance with Item 686, "Traffic Signal Pole Assemblies (Steel)" and with the details, dimensions, and weld procedures shown herein. Weld references call for preapproved weld procedures which the Fabricator must obtain prior to fabrication. Material, fabrication tolerances, and shipping practices shall also meet the requirements of this sheet and Item 686, "Traffic Signal Pole Assemblies (Steel)".

Unless otherwise noted, all parts shall be galvanized in accordance with Item 445, "Galvanizing" after fabrication.

Deviations from the details and dimensions shown herein require submission of shop drawings in accordance with the Item 441, "Steel Structures". Alternate designs are not acceptable.

Installation of damping plate for the long mast arm is not recommended.

Provision of the bracket assembly used to support the traffic signal heads shall be under the direction of the Engineer for approval.

Design also conforms to NCHRP Report 412 for fatigue resistance except that there are no stiffeners at the base plate. TxDOT is conducting tests to determine if stiffeners at the base plate will or will not result in optimal performance; depending upon the results of the tests, poles may need a retrofit to ensure optimal fatigue performance.

Texas Department of Transportation
Traffic Operations Division

TRAFFIC SIGNAL SUPPORT STRUCTURES
LONG MAST ARM ASSEMBLY (50 TO 65 FT) (80 AND 100 MPH WIND ZONE)
LMA(1)-12

Sheet 1 of 5

© TxDOT July 2000

DN: TxDOT	CK: TxDOT	DW: TxDOT	CK: TxDOT

REVISIONS
4-20-01
1-12

CONT	SECT	JOB	HIGHWAY
0914	05	222	RM 2243
DIST	COUNTY		SHEET NO.
AUS	WILLIAMSON		382

131A

DATE: 4/10/2025 11:08:01 AM
FILE: G:\TXC\Projects\Country\Williamson\N74703-022-RAW 22243 PRoject\AA0039660D0001\95hsts\1355SGMALS1355smacdgn

DISCLAIMER: The use of this standard is governed by the "Texas Engineering Practice Act". No warranty of any kind is made by TxDOT for any purpose whatsoever. TxDOT assumes no responsibility for the conversion of this standard to other formats or for incorrect results or damages resulting from its use.

DATE: 4/10/2025 1:08:02 PM
FILE: G:\TXC\Projects\County\Williamson\7473-02 RM 2243 Phase 1A\03\CADD\01\Shts\13-SIGNAL\STDS\lma.dgn

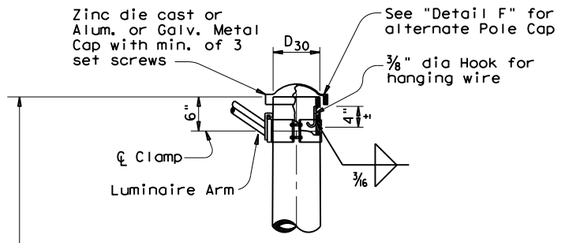

DETAIL A

(for pole with luminaire)

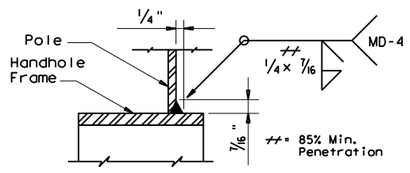

DETAIL H

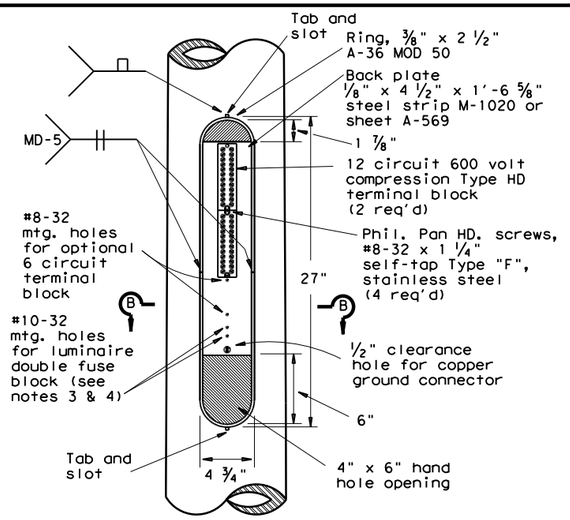

ACCESS COMPARTMENT

MATERIALS	
Round Shafts or Polygonal Shafts (7)	ASTM A595 Gr.A, A588, A1008 HSLAS Gr.50 Class 2, A1011 HSLAS Gr.50 Class 2, A572 Gr.50 or A1011 SS Gr.50 (8)
Plates (7)	ASTM A36, A588, or A572 Gr.50
Connection Bolts	ASTM A325, or A449 except where noted
Pin Bolts	ASTM A325
Pipe (7)	ASTM A53 Gr.B, A501, A1008 HSLAS-F Gr.50, A1011 HSLAS-F Gr.50
Misc. Hardware	Galvanized steel or stainless steel or as noted

(7) ASTM A572, A1008 HSLAS, A1011 HSLAS, A1008 HSLAS-F, A1011 HSLAS-F, or A1011 SS may have higher yield strengths but shall not have less elongation than the grade indicated.

(8) ASTM A1011 SS Gr.50 shall also have a minimum elongation of 18 percent in 8 inches or 23 percent in 2 inches. Material thickness in excess of those stipulated under A1011 SS will be acceptable providing the material meets all other A1011 SS requirements and the requirements of this item.

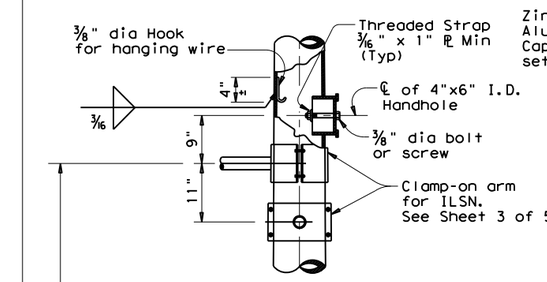

DETAIL B

(If ILSN applied)

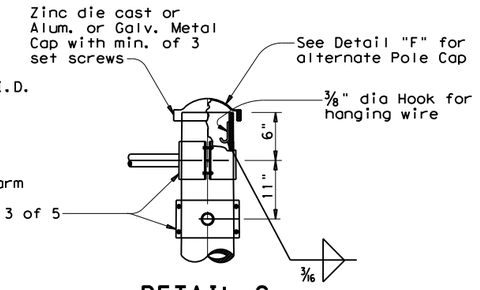

DETAIL C

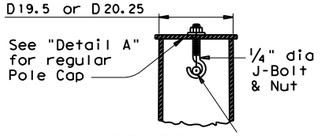

SECTION Y-Y

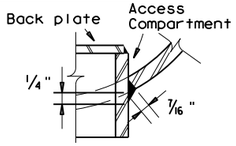

DETAIL J

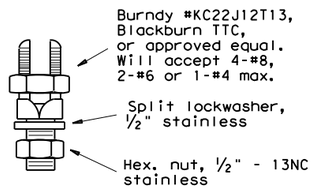

COPPER GROUND CONNECTOR

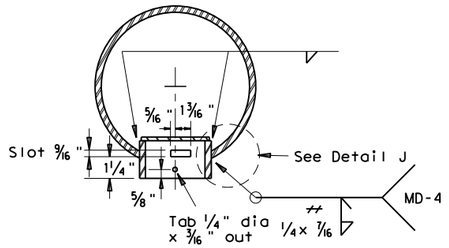

SECTION B-B

// = 85% Min. Penetration

Opening for access compartment shall be no more than 1/16 inch wider than the access compartment itself.

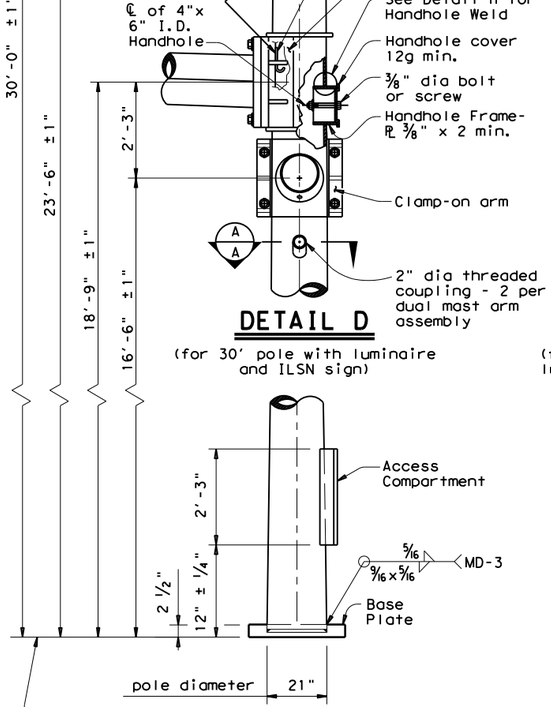

DETAIL D

(for 30' pole with luminaire and ILSN sign)

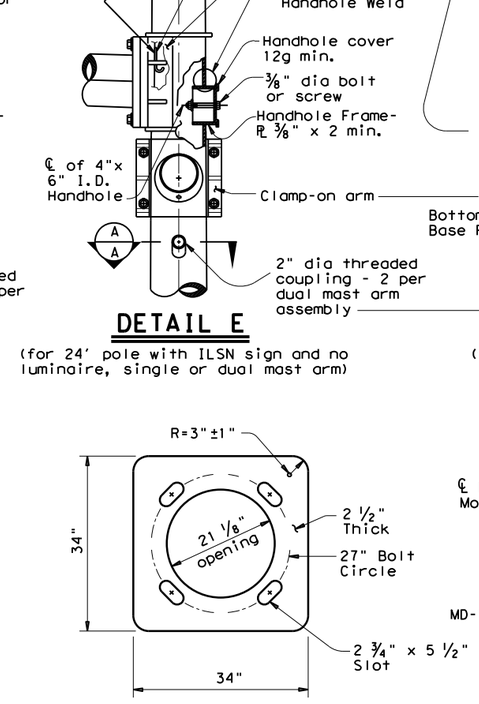

DETAIL E

(for 24' pole with ILSN sign and no luminaire, single or dual mast arm)

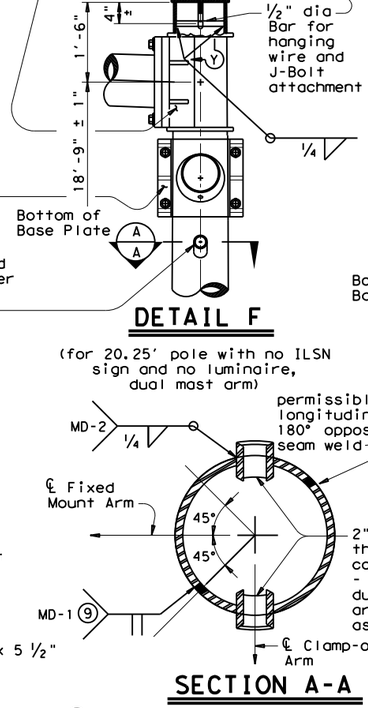

DETAIL F

(for 20.25' pole with no ILSN sign and no luminaire, dual mast arm)

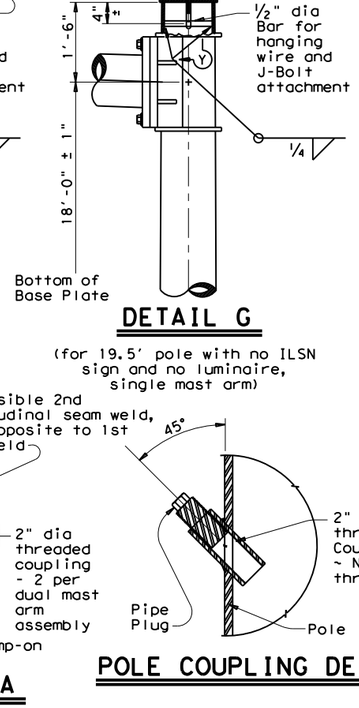

DETAIL G

(for 19.5' pole with no ILSN sign and no luminaire, single mast arm)

POLE ELEVATION

BASE PLATE

SECTION A-A

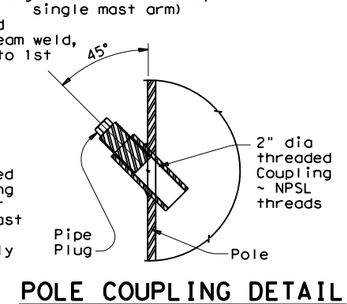

POLE COUPLING DETAIL

(9) Longitudinal seam weld must be oriented within 90° (45° rotation each side) along the fixed mount arm. 60% min penetration required, 100% penetration within 6" of circumferential base weld.

ACCESS COMPARTMENT NOTES:

1. The cover shall be one piece formed from ABS plastic, shall be a pearl gray color, and shall be suitable for exposure to harsh sunlight and extreme weather. Cover shall latch with two screw latches and shall fit tightly to the enclosure ring to create a rainproof seal. Latch screws shall be 1/4-20 stainless flat socket head screws with tamper proof feature.
2. The pole manufacturer shall provide with each pole a separate kit consisting of: one cover with two latching assemblies, two terminal strips (Marathon #985GP12CU or approved equal), four #8-32 x 1 1/4" self tapping type "F" stainless steel pan head screws, and one ground connector (Blackburn TTC, Burndy KC22J12T13, or Ilsco SSS-5). The traffic signal contractor shall install the kit items in the field.
3. The screw hole spacing on the enclosure back plate shall be for two Marathon #985GP12 terminal strips, one Marathon #985GP06CU terminal strip, and one Bussmann #BM6032B fuse block.
4. Install one Bussmann #BM6032B, Littelfuse #L60030M-2C, or Ferraz-Shawmut #30352 fuse block for poles where luminaires are to be installed.

Texas Department of Transportation
Traffic Operations Division

TRAFFIC SIGNAL SUPPORT STRUCTURES
LONG MAST ARM ASSEMBLY (50 TO 65 FT) (80 AND 100 MPH WIND ZONE)

Sheet 2 of 5

LMA(2)-12

© TxDOT July 2000

DN: JSY	CK: ARC	DW: TGG	CK: JSY

REVISIONS
4-20-01
1-12

CONT	SECT	JOB	HIGHWAY
0914	05	222	RM 2243
DIST	COUNTY		SHEET NO.
AUS	WILLIAMSON		383

131B

DISCLAIMER: The use of this standard is governed by the "Texas Engineering Practice Act". No warranty of any kind is made by TxDOT for any purpose whatsoever. TxDOT assumes no responsibility for the conversion of this standard to other formats or for incorrect results or damages resulting from its use.

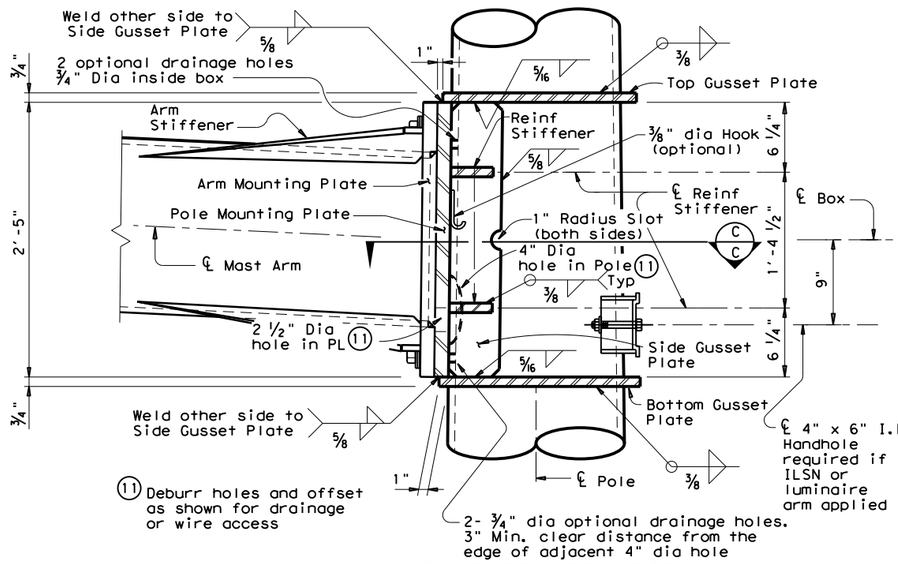

BUILT-UP BOX CONNECTION

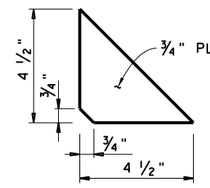

REINFORCING STIFFENER

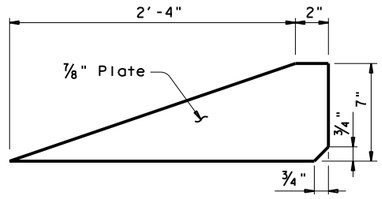

ARM STIFFENER
(Cut to match arm inclination and taper)

Provide Detail shown in SECTION F-F or equivalent 100% complete joint penetration weld from both sides.

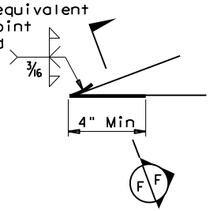

Only 4" length at tip of Arm Stiffener requires a complete joint penetration weld. Smooth weld radius to connect Stiffener. Only a fillet weld is required for the remaining weld length.

DETAIL "K"

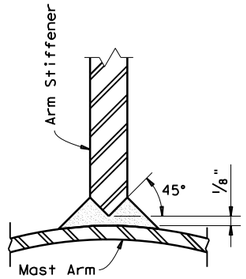

SECTION F-F

Fixed Mount Arm L_F	ROUND POLES (13)					Foundation Type
	D_B	$D_{19.5}$ or $D_{20.25}$	D_{24}	D_{30}	(12) thk	
ft.	in.	in.	in.	in.	in.	
50', 55' 60', 65'	21.0	18.2	17.6	16.8	.3125	48-A

Fixed Mount Arm L_F	ROUND ARMS (13)				
	L_1	D_1	D_2	(12) thk	Rise
ft.	ft.	in.	in.	in.	
50	49	18.5	11.7	.3125	3'- 3"
55	54	18.5	11.0	.3125	3'- 7"
60	59	18.5	10.3	.3125	3'-11"
65	64	18.5	9.6	.3125	4'- 4"

D_B = Pole Base O.D.
$D_{19.5}$ = Pole Top O.D. with no Luminaire and no ILSN (single mast arm)
$D_{20.25}$ = Pole Top O.D. with no Luminaire and no ILSN (dual mast arm)
D_{24} = Pole Top O.D. with ILSN w/out Luminaire
D_{30} = Pole Top O.D. with Luminaire
D_1 = Arm Base O.D.
D_2 = Arm End O.D.
L_1 = Shaft Length
L_F = Fixed Arm Length

(12) Thickness shown is minimum, thicker materials may be used.

(13) Shaft profile 16-sided or 18-sided is considered to be equivalent to round section.

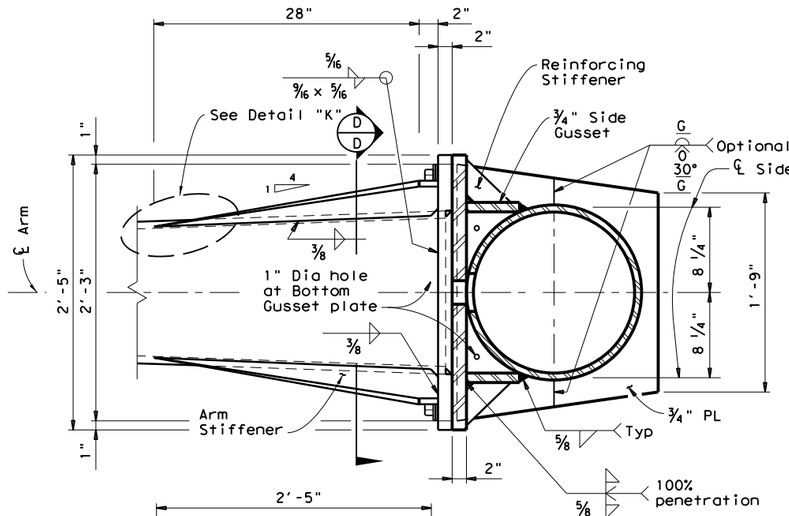

SECTION C-C

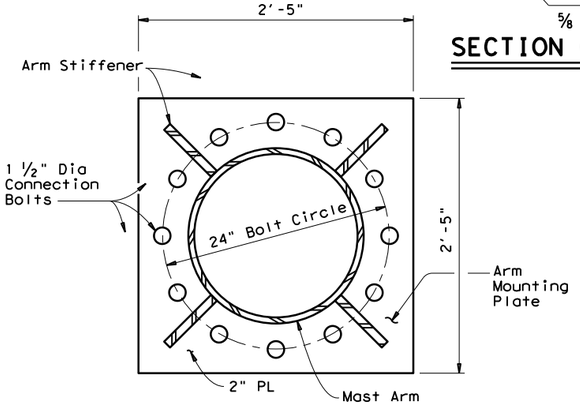

SECTION D-D

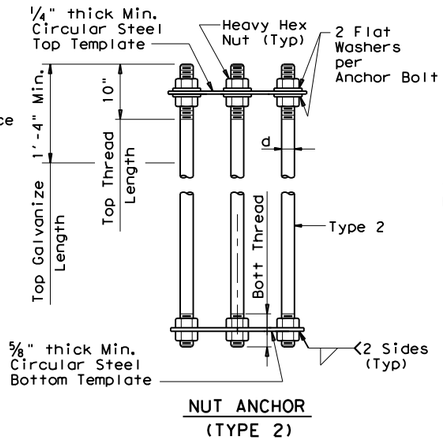

NUT ANCHOR
(TYPE 2)

ANCHOR BOLT ASSEMBLY

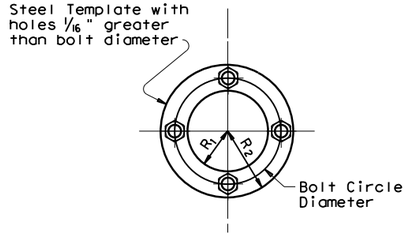

TEMPLATE DETAIL

ANCHOR BOLT & TEMPLATE SIZE						
Bolt Dia in.	Length ‡	Top Thread	Bottom Thread	Bolt Circle	R_2	R_1
2 1/2"	5'-2"	10"	6 1/2"	27"	16"	11"

‡ Min dimension given, longer bolts are acceptable.

FOUNDATION DESIGN TABLE													
FDN TYPE	DRILLED SHAFT DIA	REINFORCING STEEL		DRILLED SHAFT LENGTH-ft (16), (17), (18)			ANCHOR BOLT DESIGN (14)				FOUNDATION DESIGN LOAD (15)		TYPICAL APPLICATION
		VERT BARS	SPIRAL & PITCH	TEXAS CONE PENETROMETER N blows/ft			ANCHOR BOLT DIA	Fy (ksi)	BOLT CIR DIA	ANCHOR TYPE	MOMENT K-ft	SHEAR Kips	
				10	15	40							
48-A	48"	20 #9	#4 at 6"	21.9	19.5	14.7	2 1/2"	55	27"	2	490	10	50' to 65' Mast arm assembly.

SEE SHEET "TS-FD" FOR ADDITIONAL DETAILS.

(14) Anchor bolt design develops the foundation capacity given under Foundation Design Loads.

(15) Foundation Design Loads are the allowable moments and shears at the base of the structure.

(16) Field Penetrometer readings at a depth of approximately 3 to 5 feet may be used to adjust shaft lengths.

(17) If rock is encountered, the Drilled Shaft shall extend a minimum of two diameters into solid rock.

(18) Decimal lengths in Design Table are to allow interpolation for other penetrometer values. Round to nearest foot for entry into Summary Table.

GENERAL NOTES:

Built-up Box Connection: For the welded arm-to-pole connection as a build-up box configuration illustrated here is an example only, fabricators are required to submit a shop drawing of box connection for approval. The drawing shall specify the details of each box element, welds of arm-to-pole connection, arm-to-plate socket connection, and arm rise creation. Specify the proper location of drain holes along the pole. 2 1/2" dia hole in the pole mounting plate and 4" dia hole in the pole need to be aligned for wiring access or drainage. Arm stiffeners cut to match arm inclination and taper shall also be included.

The deviation from flat for either arm or pole mounting plate shall not exceed 1/32 in., which is measured along the center of mounting plate to a radial distance of 13.5 in. The deformed-from-flat connection between arm and pole mounting plates shall not be allowed if the center of both mounting plates cannot contact directly.

Fixed mount details are used for single mast arm assemblies and for the first arm on dual mast arm assemblies.

Texas Department of Transportation
Traffic Operations Division

TRAFFIC SIGNAL SUPPORT STRUCTURES
LONG MAST ARM ASSEMBLY (50 TO 65 FT) (80 AND 100 MPH WIND ZONE)

Sheet 3 of 5 LMA(3)-12

©TxDOT July 2000

DN: JSY	CK: ARC	DW: TGG	CK: JSY

REVISIONS
4-20-01
1-12

CONT	SECT	JOB	HIGHWAY
0914	05	222	RM 2243
DIST	COUNTY		SHEET NO.
AUS	WILLIAMSON		384

131C

DATE: 4/10/2025 1:08:03 PM
FILE: G:\TXC\Projects\County\Williamson\7473-02 RM 2243 Phase 1A\03*CADD\01*Shts\13-SIGNAL STDS\lma.dgn

DISCLAIMER: The use of this standard is governed by the "Texas Engineering Practice Act". No warranty of any kind is made by TxDOT for any purpose whatsoever. TxDOT assumes no responsibility for the conversion of this standard to other formats or for incorrect results or damages resulting from its use.

DATE: 4/10/2025 1:08:04 PM
FILE: G:\TXC\Projects\County\Williamson\7473-02 RM 2243 Phase 1A\03*CADD\01*Shts\13-SIGNALS\TDS\lma.dgn

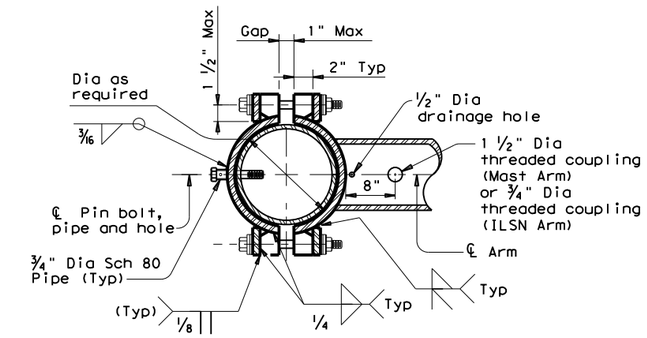

SECTION E-E

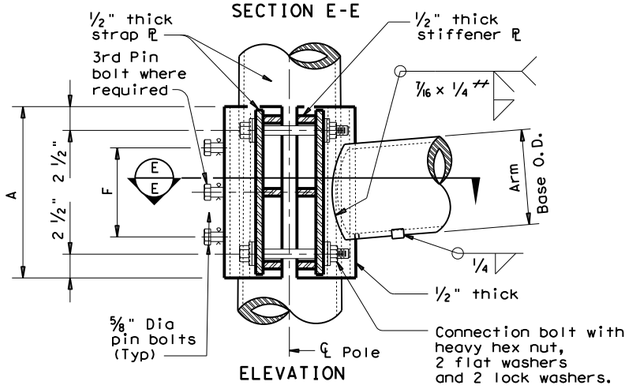

ELEVATION
(Mast Arm or ILSN Arm to pole)

= 85% Min. Penetration

CLAMP-ON CONNECTION

80 MPH WIND

Clamp-on Arm Lc	ROUND ARMS					POLYGONAL ARMS				
	L1	D1	D2	thk (12)	Rise	L1	D1	D2	thk (12)	Rise
ft.	ft.	in.	in.	in.		ft.	in.	in.	in.	
20	19.1	6.5	3.8	.179	1'-9"	19.1	7.0	3.5	.179	1'-8"
24	23.1	7.5	4.3	.179	1'-10"	23.1	7.5	3.5	.179	1'-9"
28	27.1	8.0	4.2	.179	1'-11"	27.1	8.0	3.5	.179	1'-10"
32	31.0	9.0	4.7	.179	2'-1"	31.0	9.0	3.5	.179	2'-0"
36	35.0	9.5	4.6	.179	2'-4"	35.0	10.0	3.5	.179	2'-1"
40	39.0	9.5	4.1	.239	2'-8"	39.0	9.5	3.5	.239	2'-3"
44	43.0	10.0	4.1	.239	2'-11"	43.0	10.0	3.5	.239	2'-6"

100 MPH WIND

Clamp-on Arm Lc	ROUND ARMS					POLYGONAL ARMS				
	L1	D1	D2	thk (12)	Rise	L1	D1	D2	thk (12)	Rise
ft.	ft.	in.	in.	in.		ft.	in.	in.	in.	
20	19.1	8.0	5.3	.179	1'-8"	19.1	8.0	3.5	.179	1'-7"
24	23.1	9.0	5.8	.179	1'-9"	23.1	9.0	3.5	.179	1'-8"
28	27.1	9.5	5.7	.179	1'-10"	27.1	10.0	3.5	.179	1'-9"
32	31.0	9.5	5.2	.239	1'-11"	31.0	9.5	3.5	.239	1'-10"
36	35.0	10.0	5.1	.239	2'-0"	35.0	10.0	3.5	.239	1'-11"
40	39.0	10.5	5.1	.239	2'-3"	39.0	11.0	3.5	.239	2'-1"
44	43.0	11.0	5.1	.239	2'-8"	43.0	11.5	4.0	.239	2'-3"

D1 = Arm Base O.D.
D2 = Arm End O.D.
L1 = Shaft Length
Lc = Clamp-on Arm Length

(12) Thickness shown is minimum, thicker materials may be used.

CLAMP-ON ARM CONNECTION

ILSN Arm Size		A	F	4 Conn. Bolts	⅝" Dia. Pin Bolts
Sch 40 pipe Dia	Thick			Dia	No.
in.	in.	in.	in.	in.	ea
3	.216	10	4	¾	2

Mast Arm Size		A	F	4 Conn. Bolts	⅝" Dia. Pin Bolts
Base Dia	Thick			Dia	No.
in.	in.	in.	in.	in.	ea
6.5	.179	12	6	1	2
7.5	.179	14	8	1	2
8.0	.179	14	8	1	2
9.0	.179	16	10	1	2
9.5	.179	18	12	1 ¼	3
9.5	.239	18	12	1 ¼	3
10.0	.239	18	12	1 ¼	3
10.5	.239	18	12	1 ¼	3
11.0	.239	18	12	1 ¼	3
11.5	.239	18	12	1 ¼	3

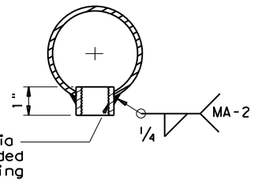

ARM COUPLING DETAIL

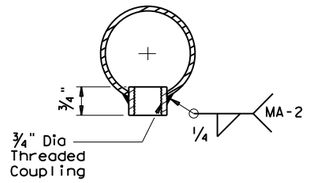

ILSN ARM COUPLING DETAIL

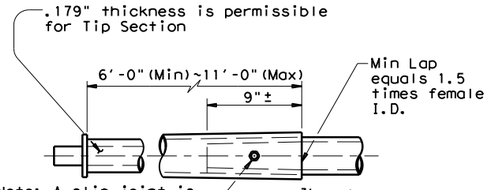

Note: A slip joint is permissible for arms 40' and greater in length. The slip joint shall be made in the shop, but may be match marked and shipped disassembled.

SLIP JOINT DETAIL (CLAMP-ON ARM)

Stainless steel bands (or Cables) and cast bracket as in "Astro-Brac", "Sky Bracket" or "Easy Bracket" with 1 ½" Dia Threaded Coupling.

BRACKET ASSEMBLY

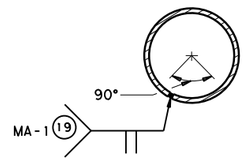

ARM WELD DETAIL

(19) Longitudinal Seam Weld must be oriented within the lower 90° of the signal arm.
60% Min penetration
100% penetration within 6" of circumferential base welds.

GENERAL NOTES:

Clamp-on details are used for the second arm on dual mast arm assemblies or ILSN arm support. For a clamp-on mast arm, a maximum 1 ½" wide vertical slotted hole may be cut in the front clamp plate to facilitate drainage during galvanizing. The slot shall be centered behind the arm and shall be no longer than the arm diameter minus 1". For an ILSN arm, a 1 ½" diameter hole shall be cut in the front clamp plate for wire access. A matched hole shall be field drilled through the pole to provide wire access after arm is oriented. Deburr both holes.

Where duplicate parts occur on a detail, welds shown for part shall apply to all similar parts on the detail.

Pin bolts are required to prevent rotation of clamp-on arms under design wind forces. Pin bolts shall be ASTM A325 with threads excluded from the shear plane. Pin bolt and ¾" diameter pipe shall have 3/16" diameter holes for a ⅛" diameter galvanized cotter pin. Back clamp plate shall be furnished with a ¾" diameter hole for each pin bolt. An 11/16" diameter hole for each pin bolt shall be field drilled through the pole after arm orientations have been approved by the Engineer.

Texas Department of Transportation
Traffic Operations Division

TRAFFIC SIGNAL SUPPORT STRUCTURES
LONG MAST ARM ASSEMBLY (50 TO 65 FT) (80 AND 100 MPH WIND ZONE)

Sheet 4 of 5 LMA(4)-12

© TxDOT November 2000

DN: JK	CK: GRB	DW: FDN	CK: CAL

REVISIONS
4-20-01
1-12

CONT	SECT	JOB	HIGHWAY
0914	05	222	RM 2243
DIST	COUNTY		SHEET NO.
AUS	WILLIAMSON		385

131D

DISCLAIMER: The use of this standard is governed by the "Texas Engineering Practice Act". No warranty of any kind is made by TxDOT for any purpose whatsoever. TxDOT assumes no responsibility for the conversion of this standard to other formats or for incorrect results or damages resulting from its use.

DATE: 4/10/2025 1:08:05 PM
FILE: G:\TXC\Projects\County*Williamson\7473-02 RM 2243 Phase 1A\03*CADD\01*Shts\13-SIGNAL\STDS\lma.dgn

Shipping Parts List

Ship each pole with the following attached: enlarged hand hole, pole cap, fixed arm connection bolts and washers, and any additional hardware listed in the table.

Nominal Arm Length	30' Poles with Luminaire: See note above plus: one (or two if ILSN attached) small hand hole, clamp-on simplex		24' Poles with ILSN: See note above plus one small hand hole		19.50' (Single Mast Arm) 20.25' (Dual Mast Arm) Poles with no Luminaire and no ILSN: See note above	
Single Mast Arm						
Lf ft.	Designation	Quantity	Designation	Quantity	Designation	Quantity
50	50L		50S		50	
55	55L	2	55S		55	
60	60L		60S		60	
65	65L	1	65S		65	
Dual Mast Arm						
Lf ft. / Lc ft.	Designation	Quantity	Designation	Quantity	Designation	Quantity
50 / 20	5020L		5020S		5020	
50 / 24	5024L		5024S		5024	
50 / 28	5028L		5028S		5028	
50 / 32	5032L		5032S		5032	
50 / 36	5036L		5036S		5036	
50 / 40	5040L		5040S		5040	
50 / 44	5044L		5044S		5044	
55 / 20	5520L		5520S		5520	
55 / 24	5524L		5524S		5524	
55 / 28	5528L		5528S		5528	
55 / 32	5532L		5532S		5532	
55 / 36	5536L		5536S		5536	
55 / 40	5540L		5540S		5540	
55 / 44	5544L		5544S		5544	
60 / 20	6020L		6020S		6020	
60 / 24	6024L		6024S		6024	
60 / 28	6028L		6028S		6028	
60 / 32	6032L		6032S		6032	
60 / 36	6036L		6036S		6036	
60 / 40	6040L		6040S		6040	
60 / 44	6044L		6044S		6044	
65 / 20	6520L		6520S		6520	
65 / 24	6524L		6524S		6524	
65 / 28	6528L		6528S		6528	
65 / 32	6532L		6532S		6532	
65 / 36	6536L		6536S		6536	
65 / 40	6540L		6540S		6540	
65 / 44	6544L		6544S		6544	

Foundation Summary Table **

Location Ident.	Avg. N Blow/ft.	No. Each	Drill Shaft *** Length (feet)
			48-A
T-6	10	1	22
T-10	10	1	22
T-12	10	1	22
Total Drill Shaft Length			66

Notes

** Foundations may be listed separately or grouped according to similarity of location and type. Quantities are for the Contractor's information only.

*** Decimal lengths in Design Table are to allow interpolation for other penetrometer values. Round to nearest foot for entry into Summary Table.

Shipping Parts List

Traffic Signal Arms (Fixed Mount) (1 per pole)
Ship each arm with listed equipment attached

Nominal Arm Length	Type IV Arm (4 Signals) 3 Bracket Assembly and 4 CGB Connectors	
ft.	Designation	Quantity
50	50IV	
55	55IV	2
60	60IV	
65	65IV	1

Luminaire Arms (1 per 30' pole)

Nominal Arm Length	Quantity
8' Arm	3

ILSN Arm (Max. 2 per pole) Ship with clamps, bolts and washers

Nominal Arm Length	Quantity
7' Arm	
9' Arm	

Traffic Signal Arms (80 MPH Clamp-On Mount) (1 per pole) Ship each arm with listed equipment attached

Nominal Arm Length	Type I Arm (1 Signal) 2 CGB connector and 1 clamp w/bolts and washers		Type II Arm (2 Signals) 1 Bracket Assembly and 3 CGB connectors, and 1 clamp w/bolts and washers		Type III Arm (3 Signals) 2 Bracket Assembly and 4 CGB connectors, and 1 clamp w/bolts and washers	
ft.	Designation	Quantity	Designation	Quantity	Designation	Quantity
20	20I-80					
24	24I-80		24II-80			
28	28I-80		28II-80			
32			32II-80		32III-80	
36			36II-80		36III-80	
40					40III-80	
44					44III-80	

Traffic Signal Arms (100 MPH Clamp-On Mount) (1 per pole) Ship each arm with listed equipment attached

Nominal Arm	Type I Arm (1 Signal) 2 CGB connector and 1 clamp w/bolts and washers		Type II Arm (2 Signals) 1 Bracket Assembly and 3 CGB connectors, and 1 clamp		Type III Arm (3 Signals) 2 Bracket Assembly and 4 CGB connectors, and 1 clamp	
ft.	Designation	Quantity	Designation	Quantity	Designation	Quantity
20	20I-100					
24	24I-100		24II-100			
28	28I-100		28II-100			
32			32II-100		32III-100	
36			36II-100		36III-100	
40					40III-100	
44					44III-100	

Anchor Bolt Assemblies (1 per pole)

Anchor Bolt Diameter	Anchor Bolt Length	Quantity
2 1/2 "	5' - 3"	3

Each anchor bolt assembly consists of the following: Top and bottom templates, 4 anchor bolts, 8 nuts, 8 flat washers and 4 nut anchor devices (type 2) per Standard Drawing "TS-FD". Templates may be removed for shipment.

Abbreviations
Lf= Fixed Arm Length
Lc= Clamp-on Arm Length (44' Max.)

Texas Department of Transportation
Traffic Operations Division

LONG MAST ARM ASSEMBLY PARTS LIST

LMA(5)-12

Sheet 5 of 5

© TxDOT November 2000

DN: JK	CK: GRB	DW: FDN	CK: CAL

REVISIONS
4-20-01
1-12

CONT	SECT	JOB	HIGHWAY
0914	05	222	RM 2243
DIST	COUNTY		SHEET NO.
AUS	WILLIAMSON		386

131E

DISCLAIMER:
The use of this standard is governed by the "Texas Engineering Practice Act". No warranty of any kind is made by TxDOT for any purpose whatsoever. TxDOT assumes no responsibility for the conversion of this standard to other formats or for incorrect results or damages resulting from its use.

DATE: 4/10/2025 1:08:07 PM
FILE: G:\TXC\Projects\County_Williamson\7473-02 RM 2243 Phase 1A\03_CADD\02\SMA\sht\SMAMA-DPD-2020.dgn

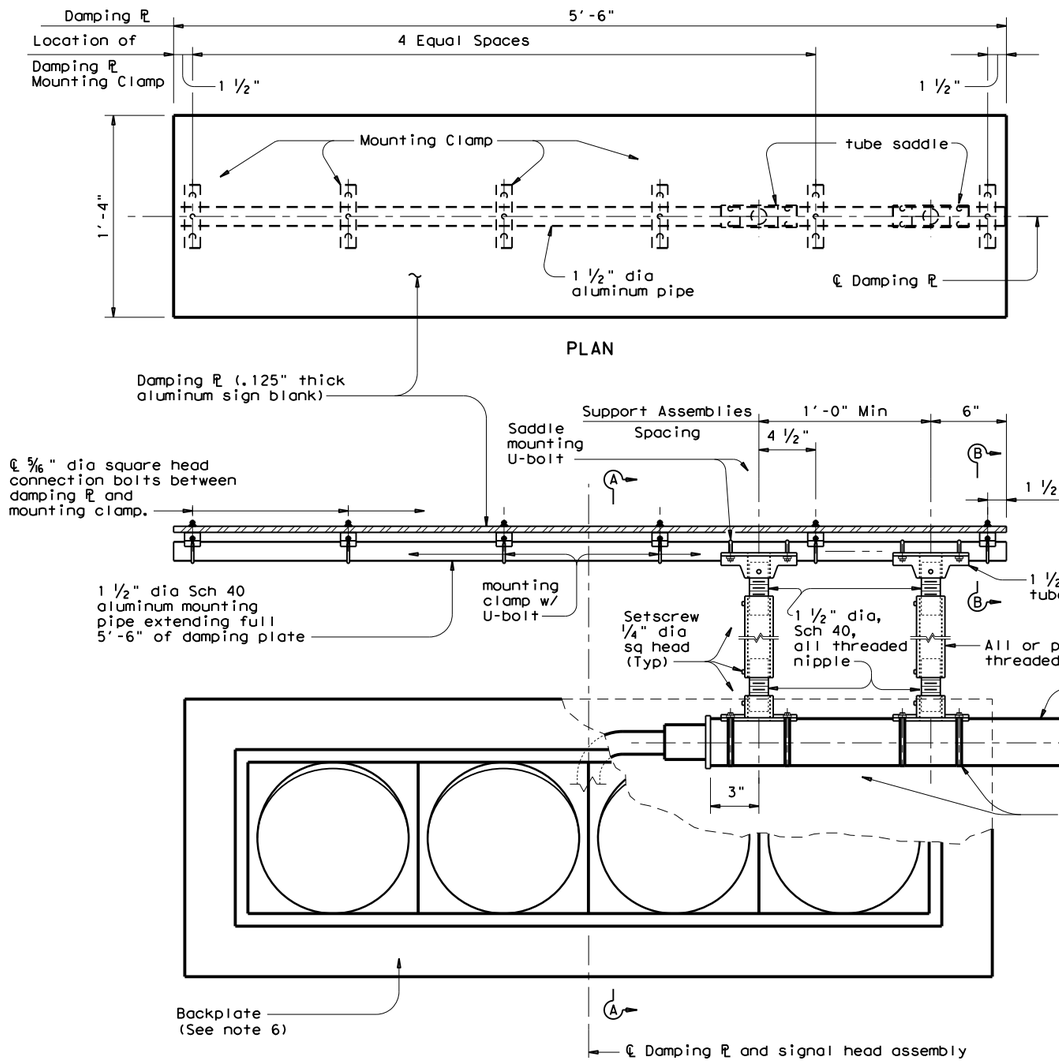

ELEVATION

PLAN

DAMPING PLATE MOUNTING DETAILS

(Showing alternate placement of signal head)

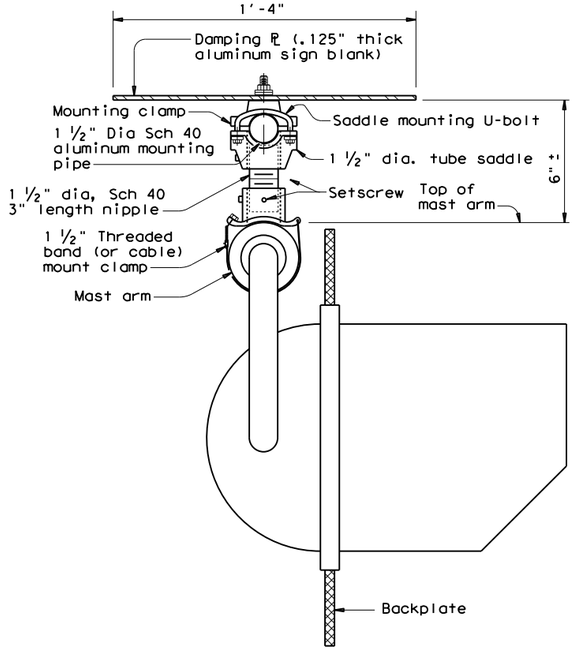

SECTION A-A

(Showing standard placement of signal head)

(Mounting clamp U-bolt is not shown for clarity)

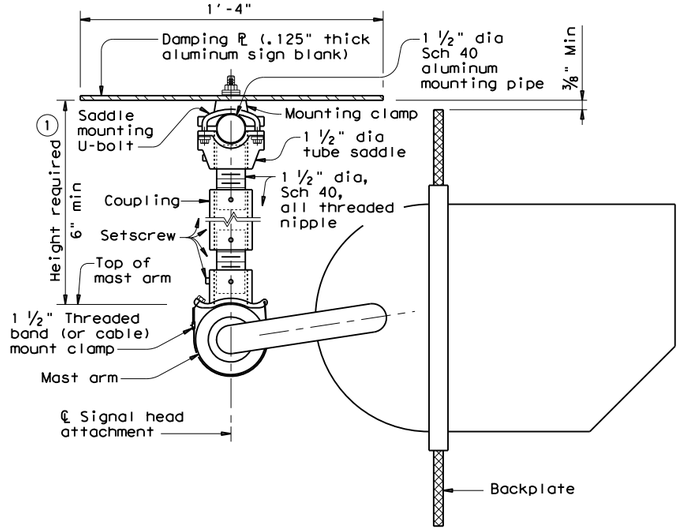

SECTION A-A

(Showing alternate placement of signal head)

(Mounting clamp U-bolt is not shown for clarity)

1 Recommended supporting assemblies to achieve required height for horizontal section heads			
Height required	One nipple each length	Two nipples each length plus	One coupling each length
6"-6 ¾"	3"	-	-
7"-8 ½"	4"	-	-
9"-10 ½"	6"	-	-
11"-15 ½"	-	4"	5"
16"-24"	-	6"	10"

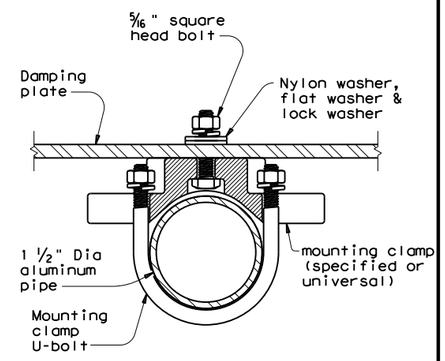

SECTION B-B

(Showing damping plate attachment)

GENERAL NOTES:

1. In accordance with the findings of TxDOT sponsored research, the installation of a damping plate in accordance with the details shown here at the end of signal mast arms of SMA and DMA standard structures reduces excessive harmonic vertical vibration, and thus fatigue damage. Any deviation from these details may reduce the effectiveness of this damping device.
2. Aluminum sign blank for damping plate will conform to Departmental Material Specifications DMS-7110. Materials for mast arm mounting clamp and tube saddle will be aluminum castings or aluminum alloys as in accordance with manufacturers' stipulations. Mounting pipe, pipe nipple and coupling will be aluminum alloy 6061-T6 or 6063-T6. Damping plate mounting clamp and u-bolt assemblies will conform to Standard sheet SMD(GEN). U-bolts for saddle mounting will have a minimum yield strength of 36 ksi.
3. Damping plate will be mounted horizontally. Position centerline of damping plate to align with centerline of mast arm or horizontal signal head assembly. Vertical clearance between signal head (with or without backing plate)and bottom of damping plate will be maintained as shown. The attachments shown here are examples only, other supporting details which meet both alignment and vertical clearance requirements are also acceptable.
4. Unless stipulated by the manufacturers, all steel parts will be galvanized finish in accordance with Standard Specification Item 445, "Galvanizing".
5. Contractor will verify applicable field dimensions before the installation.
6. Backplates are optional for traffic signals. When backplates are used, Backplates will have a 2-inch fluorescent yellow AASHTO Type B_{FL} or C_{FL} retroreflective border conforming to TxDOT DMS-8300 "Sign Face Materials." See Sheet TS-BP-20 for backplate details.

Texas Department of Transportation

Traffic Safety Division Standard

MAST ARM DAMPING PLATE DETAILS

MA-DPD-20

FILE: ma-dpd-20.dgn	DN: TxDOT	CK: TxDOT	DW: TxDOT	CK: TxDOT
©TxDOT January 2012	CONT	SECT	JOB	HIGHWAY
REVISIONS	0914	05	222	RM 2243
6-20	DIST	COUNTY		SHEET NO.
	AUS	WILLIAMSON		387

DISCLAIMER:
The use of this standard is governed by the "Texas Engineering Practice Act". No warranty of any kind is made by TxDOT for any purpose whatsoever. TxDOT assumes no responsibility for the conversion of this standard to other formats or for incorrect results or damages resulting from its use.

DATE: 4/10/2025 1:08:08 PM
FILE: G:\TXC\Projects\County_Williamson\7473-02 RM 2243 Phase 1A\03_CADD\02SHEETS\TS-BP-20.dgn

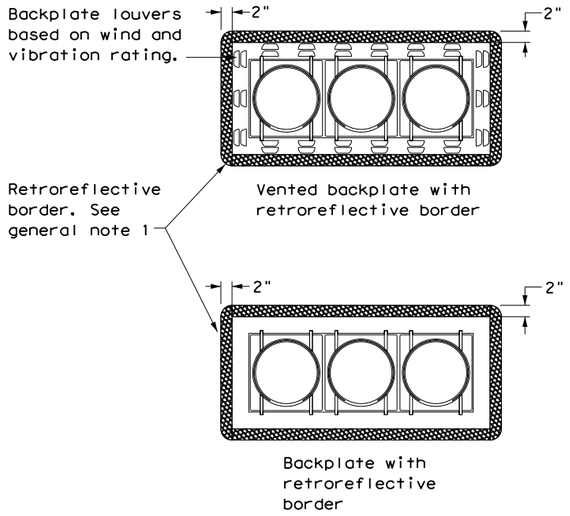

THREE-SECTION HEAD
HORIZONTAL OR VERTICAL

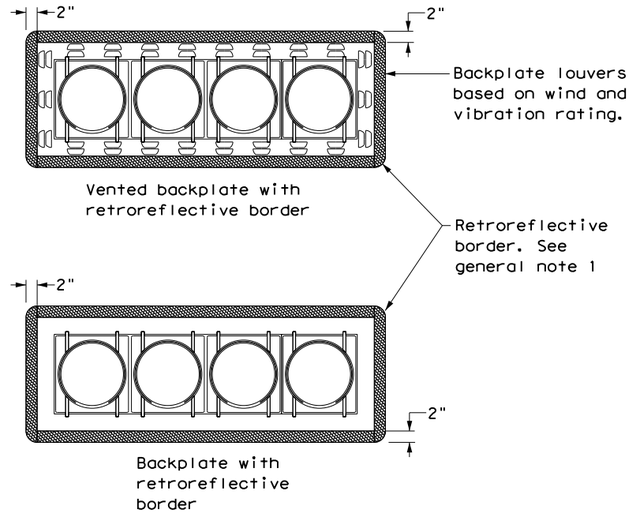

FOUR-SECTION HEAD
HORIZONTAL OR VERTICAL

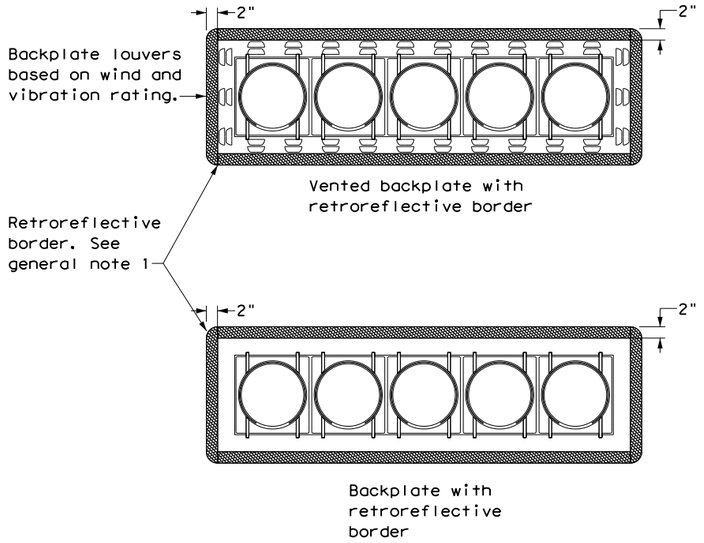

FIVE-SECTION HEAD
HORIZONTAL OR VERTICAL

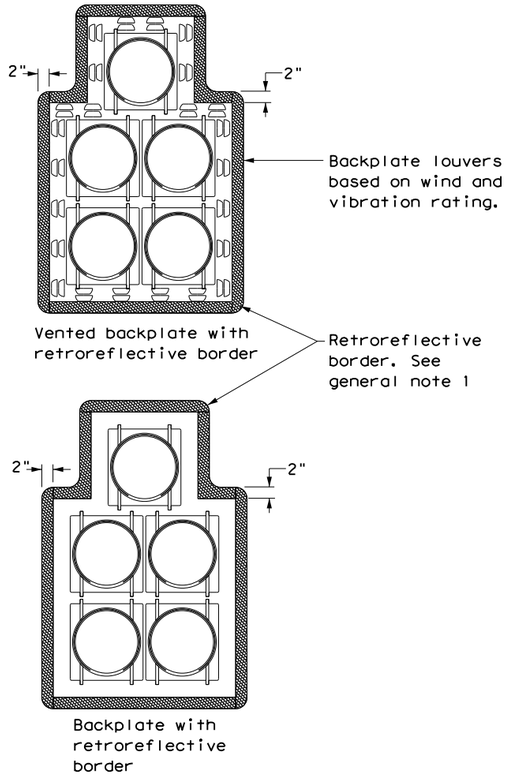

FIVE-SECTION HEAD
CLUSTER

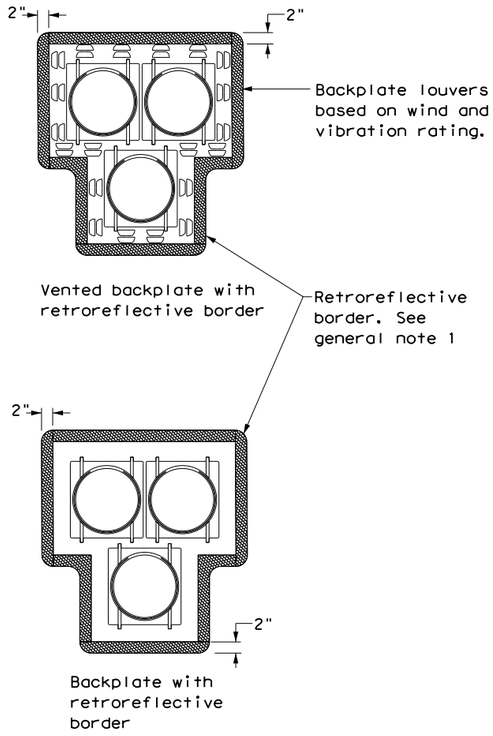

PEDESTRIAN HYBRID
BEACON

GENERAL NOTES:

1. Backplates are optional for traffic signals and pedestrian hybrid beacons. When backplates are used, a 2-inch wide fluorescent yellow AASHTO Type B_{FL} or C_{FL} retroreflective border conforming to TxDOT DMS-8300 is required. Place on all approaches when used.
2. Signal head and backplate compatability must be verified by the contractor prior to installation.
3. When using backplates on signal heads, venting is preferred to reduce cyclic vibration stress.
4. When a vented backplate is used, the retroreflective border must not be placed over the louvers.
5. This standard sheet applies to all signal heads with backplates, including but not limited to:
   - Pole mounted
   - Overhead mounted
   - Span wire mounted
   - Mast arm mounted
   - Vertical signal heads
   - Horizontal signal heads
   - Clustered signal heads
   - Pedestrian hybrid beacons

Texas Department of Transportation

Traffic Safety Division Standard

TRAFFIC SIGNAL HEAD WITH BACKPLATE

TS-BP-20

FILE: ts-bp-20.dgn	DN: TxDOT	CK: TxDOT	DW: TxDOT	CK: TxDOT
©TxDOT June 2020	CONT	SECT	JOB	HIGHWAY
REVISIONS	0914	05	222	RM 2243
	DIST	COUNTY		SHEET NO.
	AUS	WILLIAMSON		388

STORMWATER POLLUTION PREVENTION PLAN (SWP3):

This SWP3 has been developed in accordance with the TPDES Construction General Permit TXR150000 (CGP). The Texas Department of Transportation (TxDOT) ensures that project specifications include adequate best management practices (BMPs) for this project.

For all projects with soil disturbing activity and for projects that have Environmental, Permits, Issues, and Commitments (EPICs) dependent on stormwater controls and water quality measures TxDOT will maintain a SWP3 with all pertinent records, correspondence, environmental documents, etc. at the project field office, Area Office, or electronically.

This SWP3 is consistent with requirements specified in applicable stormwater plans and the projects environmental permits, issues, and commitments (EPICs). A copy of the CGP is included in Attachment 2.12 of the SWP3 binder.

1.0 SITE/PROJECT DESCRIPTION

1.1 PROJECT CONTROL SECTION JOB (CSJ):
0914-05-222

1.2 PROJECT LIMITS:
From: 183A

To: 980 FT WEST OF ESCALERA PARKWAY

1.3 PROJECT COORDINATES:
BEGIN: (Lat) 30.58744722° ,(Long) 97.83857778°

END: (Lat) 30.59545278° ,(Long) 97.78323056°

1.4 TOTAL PROJECT AREA (Acres): 222.73

1.5 TOTAL AREA TO BE DISTURBED (Acres): 50.10

1.6 NATURE OF CONSTRUCTION ACTIVITY:
CONSTRUCTION OF ROADWAY CONSISTING OF GRADING, BASE, HMAC SURFACING, EROSION CONTROL, AND DRAINAGE STRUCTURES.

1.7 MAJOR SOIL TYPES:

Soil Type	Description
EaD	Eckrant cobbly clay, 1 to 8 percent slopes
EeB	Eckrant stony clay, 0 to 3 percent slopes, stony
DoC	Doss silty clay, moist, 1 to 5 percent slopes
FaB	Fairlie clay, 1 to 2 percent slopes
DnB	Denton silty clay, 1 to 3 percent slopes
GsB	Georgetown stony clay loam, 1 to 3 percent slopes
CfB	Crawford clay, 1 to 3 percent slopes
DnC	Denton silty clay, 3 to 5 percent slopes

1.8 PROJECT SPECIFIC LOCATIONS (PSLs):
PSLs must be depicted on the Environmental Layout Sheets in Attachment 1.2 of this SWP3. PSLs may be identified during preconstruction meetings or during the construction process. Please choose from the options below:

☐ PSLs determined during preconstruction meeting
☐ PSLs determined during construction
☐ No PSLs planned for construction

Type	Sheet #s

All off-ROW PSLs required by the Contractor are the Contractor's responsibility. The Contractor shall secure all permits required by local, state, federal laws for off-ROW PSLs. The contractor shall provide diagrams, areas of disturbance, acreage, and BMPs for all off-ROW PSLs within one mile of the project.

1.9 CONSTRUCTION ACTIVITIES:
(Use the following list as a starting point when developing the Construction Activity Schedule and Ceasing Record in Attachment 2.5.)

☒ Mobilization
☒ Install sediment and erosion controls
☒ Blade existing topsoil into windrows, prep ROW, clear and grub
☒ Remove existing pavement
☒ Grading operations, excavation, and embankment
☒ Excavate and prepare subgrade for proposed pavement widening
☒ Remove existing culverts, safety end treatments (SETs)
☒ Remove existing metal beam guard fence (MBGF), bridge rail
☒ Install proposed pavement per plans
☒ Install culverts, culvert extensions, SETs
☒ Install mow strip, MBGF, bridge rail
☒ Place flex base
☒ Rework slopes, grade ditches
☒ Blade windrowed material back across slopes
☒ Revegetation of unpaved areas
☒ Achieve site stabilization and remove sediment and erosion control measures
☐ Other: _____
☐ Other: _____
☐ Other: _____

1.10 POTENTIAL POLLUTANTS AND SOURCES:

☒ Sediment laden stormwater from stormwater conveyance over disturbed area
☒ Fuels, oils, and lubricants from construction vehicles, equipment, and storage
☒ Solvents, paints, adhesives, etc. from various construction activities
☒ Transported soils from offsite vehicle tracking
☒ Construction debris and waste from various construction activities
☒ Contaminated water from excavation or dewatering pump-out water
☒ Sanitary waste from onsite restroom facilities
☒ Trash from various construction activities/receptacles
☒ Long-term stockpiles of material and waste
☒
☐ Other: _____
☐ Other: _____
☐ Other: _____

1.11 RECEIVING WATERS:
Receiving waters must be depicted on the Environmental Layout Sheets in Attachment 1.2 of this SWP3. Include Segment # for receiving waters.

Tributaries	Classified Waterbody
UNNAMED TRIBUTARY AND PONDS OF BRUSHY CREEK	BRUSHY CREEK (1244); IMPAIRED FOR BACTERIAL

* Add (*) for impaired waterbodies with pollutant in ().

1.12 ROLES AND RESPONSIBILITIES: TxDOT

☒ Development of plans and specifications
☒ Submit Notice of Intent (NOI) to TCEQ (≥5 acres)
☒ Post Construction Site Notice
☒ Submit NOI/CSN to local MS4
☒ Perform SWP3 inspections
☒ Maintain SWP3 records and update to reflect daily operations
☒ Complete and submit Notice of Termination to TCEQ
☒ Maintain SWP3 records for 3 years
☐ Other: _____
☐ Other: _____
☐ Other: _____

1.13 ROLES AND RESPONSIBILITIES: CONTRACTOR

☒ Day To Day Operational Control
☒ Submit Notice of Intent (NOI) to TCEQ (≥5 acres)
☒ Post Construction Site Notice
☒ Submit NOI/CSN to local MS4
☒ Maintain schedule of major construction activities
☒ Install, maintain and modify BMPs
☒ Complete and submit Notice of Termination to TCEQ
☒ Maintain SWP3 records for 3 years
☐ Other: _____
☐ Other: _____
☐ Other: _____

1.14 LOCAL MUNICIPAL SEPARATE STORM SEWER SYSTEM (MS4) OPERATOR COORDINATION:

MS4 Entity
LEANDER, CEDAR PARK, GEORGETOWN, ROUND ROCK

STORMWATER POLLUTION PREVENTION PLAN (SWP3)

© 2023

July 2023 Sheet 1 of 2

Texas Department of Transportation

FED. RD. DIV. NO.	PROJECT NO.		SHEET NO.
			389
STATE	STATE DIST.	COUNTY	
TEXAS	AUS	WILLIAMSON	
CONT.	SECT.	JOB	HIGHWAY NO.
			RM 2243

STORMWATER POLLUTION PREVENTION PLAN (SWP3):

2.0 BEST MANAGEMENT PRACTICES (BMPs) AND CONTROLS, INSPECTION, AND MAINTENANCE

The Contractor shall be the responsible party for implementing the BMPs described herein and for complying with the SWP3 for control of erosion and sedimentation during day-to-day operations. The Contractor shall implement changes to this SWP3 approved by TxDOT within the times specified in this SWP3 or the CGP.

2.1 EROSION CONTROL AND SOIL STABILIZATION BMPs:

T / P

- ☐ ☐ Protection of Existing Vegetation
- ☐ ☐ Vegetated Buffer Zones
- ☐ ☐ Soil Retention Blankets
- ☐ ☐ Geotextiles
- ☐ ☐ Mulching/ Hydromulching
- ☐ ☐ Soil Surface Treatments
- ☒ ☐ Temporary Seeding
- ☐ ☒ Permanent Planting, Sodding or Seeding
- ☒ ☐ Biodegradable Erosion Control Logs
- ☒ ☐ Rock Filter Dams/ Rock Check Dams
- ☒ ☐ Vertical Tracking
- ☐ ☐ Interceptor Swale
- ☐ ☒ Riprap
- ☐ ☐ Diversion Dike
- ☐ ☐ Temporary Pipe Slope Drain
- ☐ ☐ Embankment for Erosion Control
- ☐ ☐ Paved Flumes
- ☐ ☐ Other: _____
- ☐ ☐ Other: _____
- ☐ ☐ Other: _____
- ☐ ☐ Other: _____

2.2 SEDIMENT CONTROL BMPs:

T / P

- ☒ ☐ Biodegradable Erosion Control Logs
- ☒ ☐ Dewatering Controls
- ☒ ☐ Inlet Protection
- ☒ ☐ Rock Filter Dams/ Rock Check Dams
- ☐ ☐ Sandbag Berms
- ☒ ☐ Sediment Control Fence
- ☒ ☐ Stabilized Construction Exit
- ☐ ☐ Floating Turbidity Barrier
- ☐ ☐ Vegetated Buffer Zones
- ☐ ☒ Vegetated Filter Strips
- ☐ ☐ Other: _____
- ☐ ☐ Other: _____
- ☐ ☐ Other: _____
- ☐ ☐ Other: _____

Refer to the Environmental Layout Sheets/ SWP3 Layout Sheets located in Attachment 1.2 of this SWP3

Sediment control BMPs requiring design capacity calculations (See SWP3 Attachment 1.3.):

T / P

- ☐ ☐ Sediment Trap
  - ☐ Calculated volume runoff from 2-year, 24-hour storm for each acre of disturbed area
  - ☐ 3,600 cubic feet of storage per acre drained
- ☐ ☐ Sedimentation Basin
  - ☐ Not required (<10 acres disturbed)
  - ☐ Required (>10 acres) and implemented.
    - ☐ Calculated volume runoff from 2-year, 24-hour storm for each acre of disturbed area
    - ☐ 3,600 cubic feet of storage per acre drained
  - ☐ Required (>10 acres), but not feasible due to:
    - ☐ Available area/Site geometry
    - ☐ Site slope/Drainage patterns
    - ☐ Site soils/Geotechnical factors
    - ☐ Public safety
    - ☐ Other: _____

2.3 PERMANENT CONTROLS:

(Coordinate post-construction BMPs with appropriate TxDOT maintenance sections.)

BMPs To Be Left In Place Post Construction:

Type	Stationing	
	From	To

Refer to the Environmental Layout Sheets/ SWP3 Layout Sheets located in Attachment 1.2 of this SWP3

2.4 OFFSITE VEHICLE TRACKING CONTROLS:

- ☒ Excess dirt/mud on road removed daily
- ☒ Haul roads dampened for dust control
- ☒ Loaded haul trucks to be covered with tarpaulin
- ☒ Stabilized construction exit
- ☒ Daily street sweeping
- ☐ Other: _____
- ☐ Other: _____
- ☐ Other: _____
- ☐ Other: _____

2.5 POLLUTION PREVENTION MEASURES:

- ☒ Chemical Management
- ☒ Concrete and Materials Waste Management
- ☒ Debris and Trash Management
- ☒ Dust Control
- ☒ Sanitary Facilities
- ☐ Other: _____
- ☐ Other: _____
- ☐ Other: _____
- ☐ Other: _____
- ☐ Other: _____

2.6 VEGETATED BUFFER ZONES:

Natural vegetated buffers shall be maintained as feasible to protect adjacent surface waters. If vegetated natural buffer zones are not feasible due to site geometry, the appropriate additional sediment control measures have been incorporated into this SWP3.

Type	Stationing	
	From	To

Refer to the Environmental Layout Sheets/ SWP3 Layout Sheets located in Attachment 1.2 of this SWP3

2.7 ALLOWABLE NON-STORMWATER DISCHARGES:

- ☒ Fire hydrant flushings
- ☒ Irrigation drainage
- ☒ Pavement washwater (where spills or leaks have not occurred, and detergents are not used)
- ☒ Potable water sources
- ☒ Springs
- ☒ Uncontaminated groundwater
- ☒ Water used to wash vehicles or control dust
- ☒ Other allowable non-stormwater discharges as allowed by TPDES GP TXR150000.

2.8 DEWATERING:

Dewatering discharges of accumulated stormwater, groundwater, and surface water including discharges from dewatering of trenches, excavations, foundations, vaults, and other points of accumulation are prohibited unless managed by appropriate controls to prevent and minimize the offsite discharge of sediment and other pollutants.

2.9 INSPECTIONS:

All disturbed areas and erosion and sediment control devices shall be inspected at least once every seven (7) days. Inspections shall be performed by TxDOT as indicated on the Field Inspection and Maintenance Report Form 2118 and retained in Attachment 2.5 of this SWP3.

When dewatering activities are present, a daily inspection will be conducted once per day during those activities and documented in accordance with CGP and TxDOT requirements.

2.10 MAINTENANCE:

Control measures shall be properly installed according to specifications. If it is determined that a BMP or control measure is not operating effectively, maintenance must be accomplished as soon as possible and before the next anticipated rain event, but in no case later than 7 calendar days after being able to access the site. Maintenance shall be performed by the Contractor as indicated on the Field Inspection and Maintenance Report Form 2118 and retained in Attachment 2.5 of this SWP3.

STORMWATER POLLUTION PREVENTION PLAN (SWP3)

© 2023

July 2023 Sheet 2 of 2

Texas Department of Transportation

FED. RD. DIV. NO.	PROJECT NO.		SHEET NO.
			390
STATE	STATE DIST.	COUNTY	
TEXAS	AUS	WILLIAMSON	
CONT.	SECT.	JOB	HIGHWAY NO.
			RM 2243

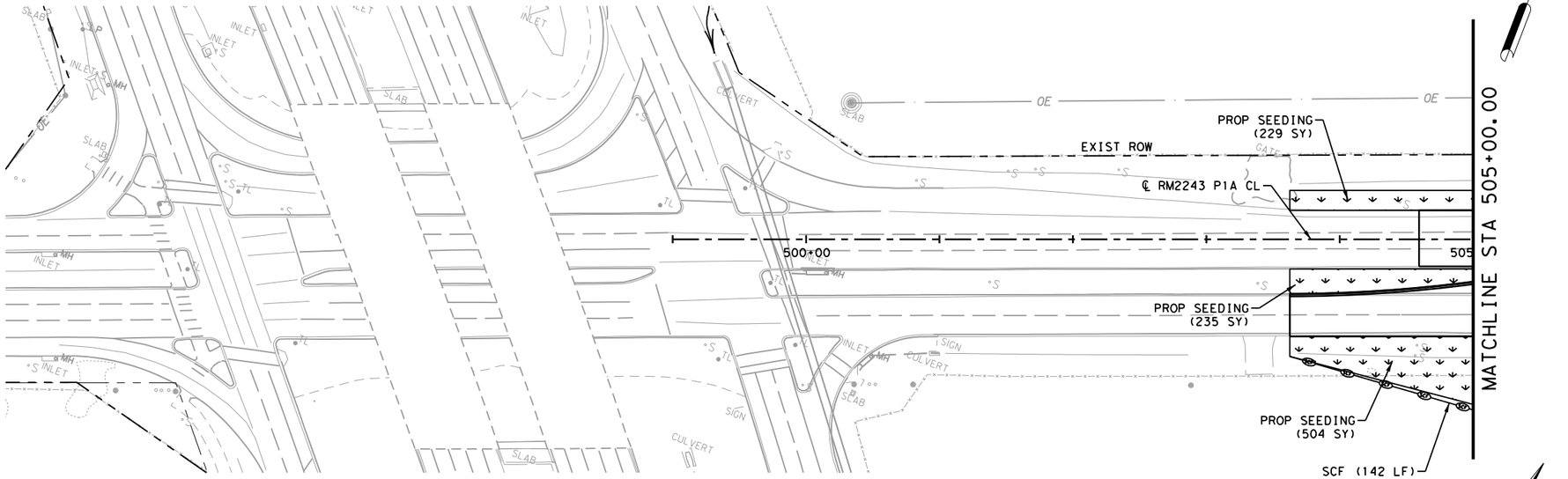

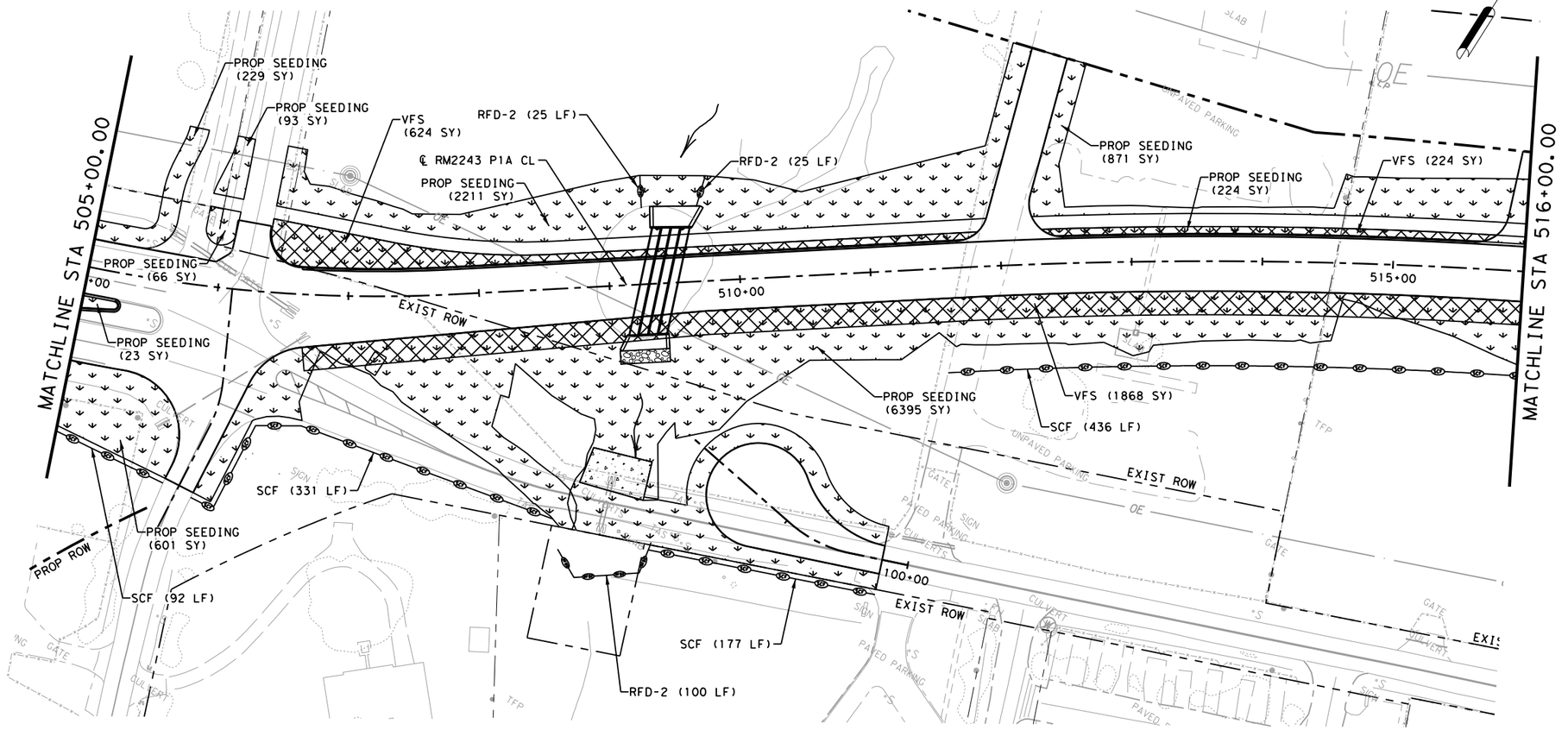

LEGEND

- SCF — SILT CONTROL FENCE
- CONSTRUCTION AREA
- CULVERT FLOW DIRECTION
- RFD2 — ROCK FILTER DAM
- ECL — EROSION CONTROL LOG
- TOPSOIL, SEEDING, & SOIL RETENTION BLANKET
- VEGETATIVE FILTER STRIP

NOTES:

1. ALL EROSION CONTROL MEASURES SHALL BE PLACED WITHIN COUNTY RIGHT-OF-WAY DURING CONSTRUCTION.
2. CONTRACTOR SHALL MAINTAIN EROSION CONTROL MEASURES.
3. CONSTRUCTION ENTRANCE / EXIT TO BE DETERMINED IN THE FIELD, AND APPROVED BY THE ENGINEER.
4. CONCRETE TRUCK CLEAN OUT LOCATIONS TO BE DETERMINED IN THE FIELD, AND APPROVED BY THE ENGINEER.
5. ALL EROSION CONTROL ELEMENTS SHALL BE IN PLACE PRIOR TO COMMENCING ANY SOIL DISTURBING ACTIVITIES.

0 50 100

SCALE: 1"=100'

STATE OF TEXAS
JOSHUA T. RICHTER
141234
LICENSED
PROFESSIONAL ENGINEER

4/10/2025

WILCO TEXAS

BGE, Inc.
101 W Louis Henna Blvd, Suite 400, Austin, TX 78728
Tel: 512-879-0400 ● www.bgeinc.com
TBPE Registration No. F-1046

RM 2243

SW3P LAYOUT

SHEET 1 OF 10

FED.RD. DIV.NO.	PROJECT NO.		SHEET NO.
6			391
STATE	DIST.	COUNTY	
TEXAS	AUS	WILLIAMSON	
CONT.	SECT.	JOB	HIGHWAY NO.
0914	05	222	RM 2243

4/10/2025 1:08:14 PM pdf.pltcfg
G:\TXC\Projects\County*Williamson\7473-02 RM 2243 Phase 1A\03*CADD\01*Shts\14-ENV\RM2243*P1A*SW3P*01.dgn

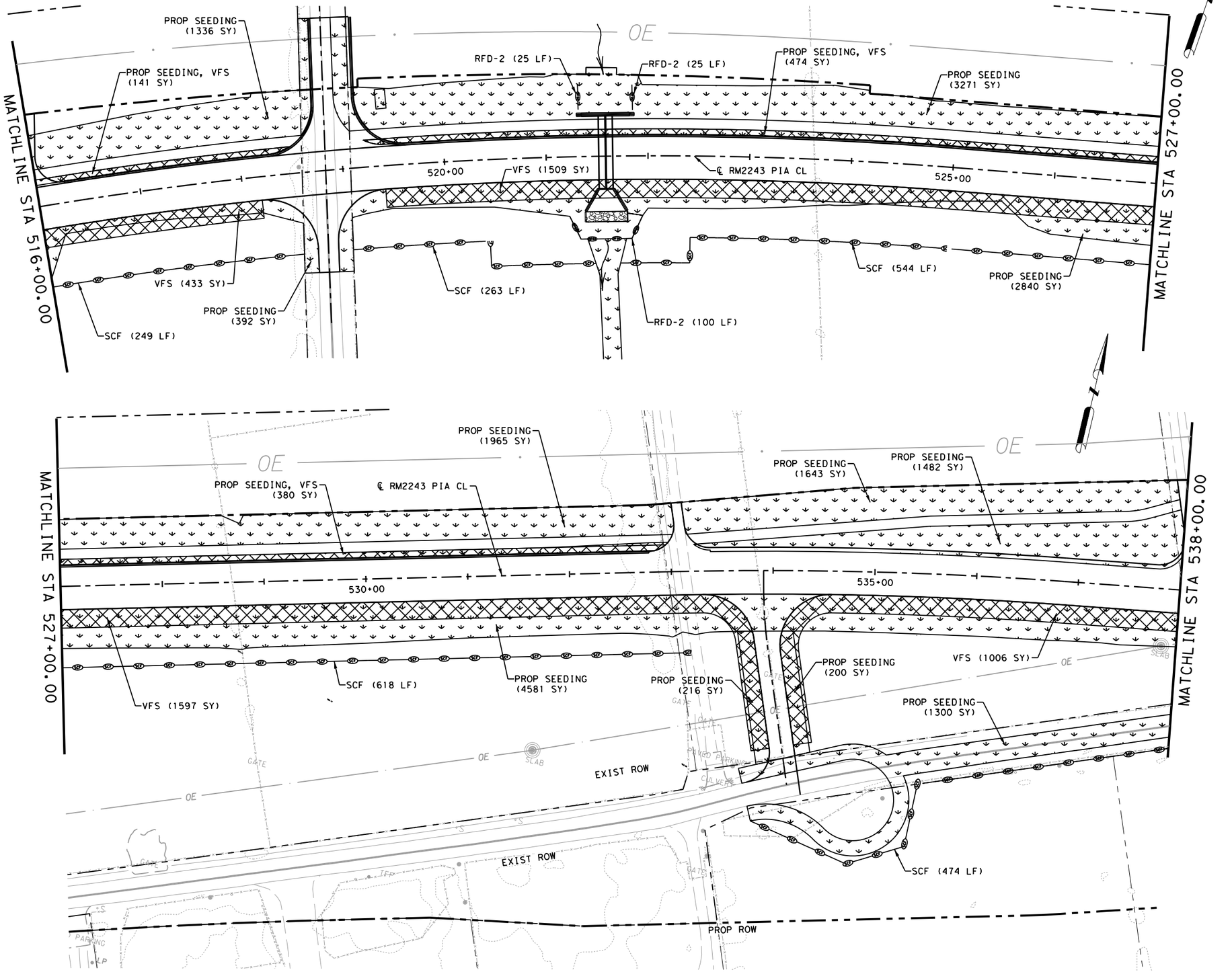

LEGEND

- SCF — SILT CONTROL FENCE
- CONSTRUCTION AREA
- CULVERT FLOW DIRECTION
- RFD2 — ROCK FILTER DAM
- ECL — EROSION CONTROL LOG
- TOPSOIL, SEEDING, & SOIL RETENTION BLANKET
- VEGETATIVE FILTER STRIP

NOTES:

1. ALL EROSION CONTROL MEASURES SHALL BE PLACED WITHIN COUNTY RIGHT-OF-WAY DURING CONSTRUCTION.
2. CONTRACTOR SHALL MAINTAIN EROSION CONTROL MEASURES.
3. CONSTRUCTION ENTRANCE / EXIT TO BE DETERMINED IN THE FIELD, AND APPROVED BY THE ENGINEER.
4. CONCRETE TRUCK CLEAN OUT LOCATIONS TO BE DETERMINED IN THE FIELD, AND APPROVED BY THE ENGINEER.
5. ALL EROSION CONTROL ELEMENTS SHALL BE IN PLACE PRIOR TO COMMENCING ANY SOIL DISTURBING ACTIVITIES.

0 50 100

SCALE: 1"=100'

STATE OF TEXAS
JOSHUA T. RICHTER
141234
LICENSED
PROFESSIONAL ENGINEER

4/10/2025

WILCO
TEXAS

BGE, Inc.
101 W Louis Henna Blvd, Suite 400, Austin, TX 78728
Tel: 512-879-0400 • www.bgeinc.com
TBPE Registration No. F-1046

RM 2243

SW3P LAYOUT

SHEET 2 OF 10

FED.RD. DIV.NO.	PROJECT NO.		SHEET NO.
6			392
STATE	DIST.	COUNTY	
TEXAS	AUS	WILLIAMSON	
CONT.	SECT.	JOB	HIGHWAY NO.
0914	05	222	RM 2243

4/10/2025 1:08:16 PM pdf.pltcfg
C:\TXC\Projects\County\Williamson\7473-02 RM 2243 Phase 1A\03*CADD\01*Shts\14-ENV\RM2243*P1A*SW3P*02.dgn

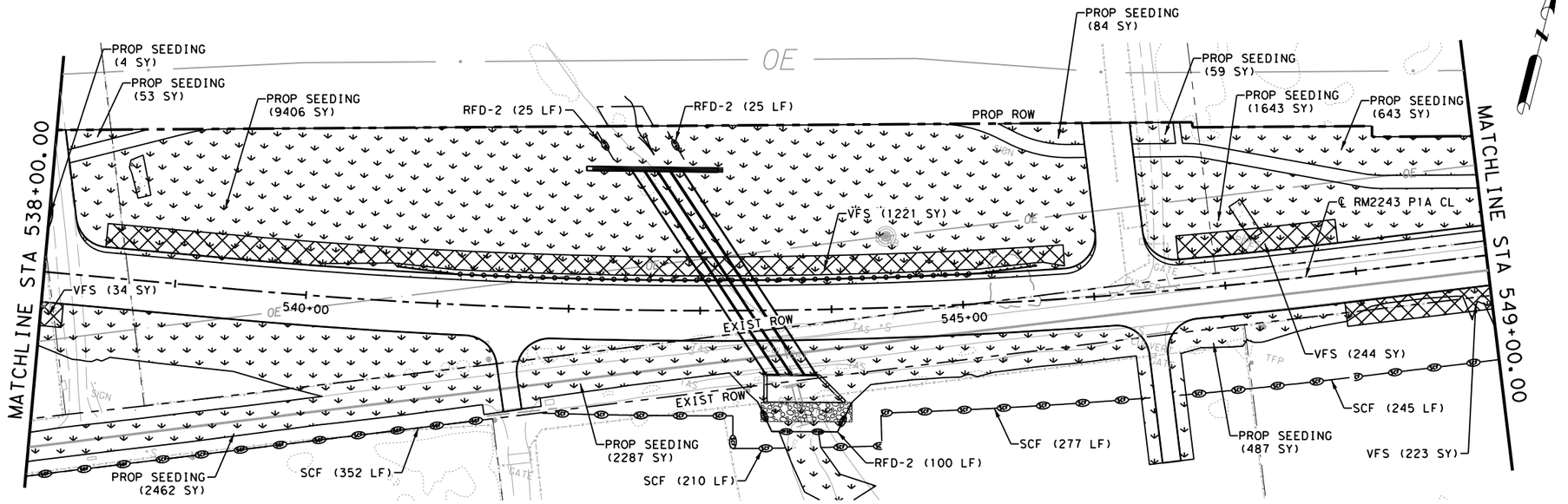

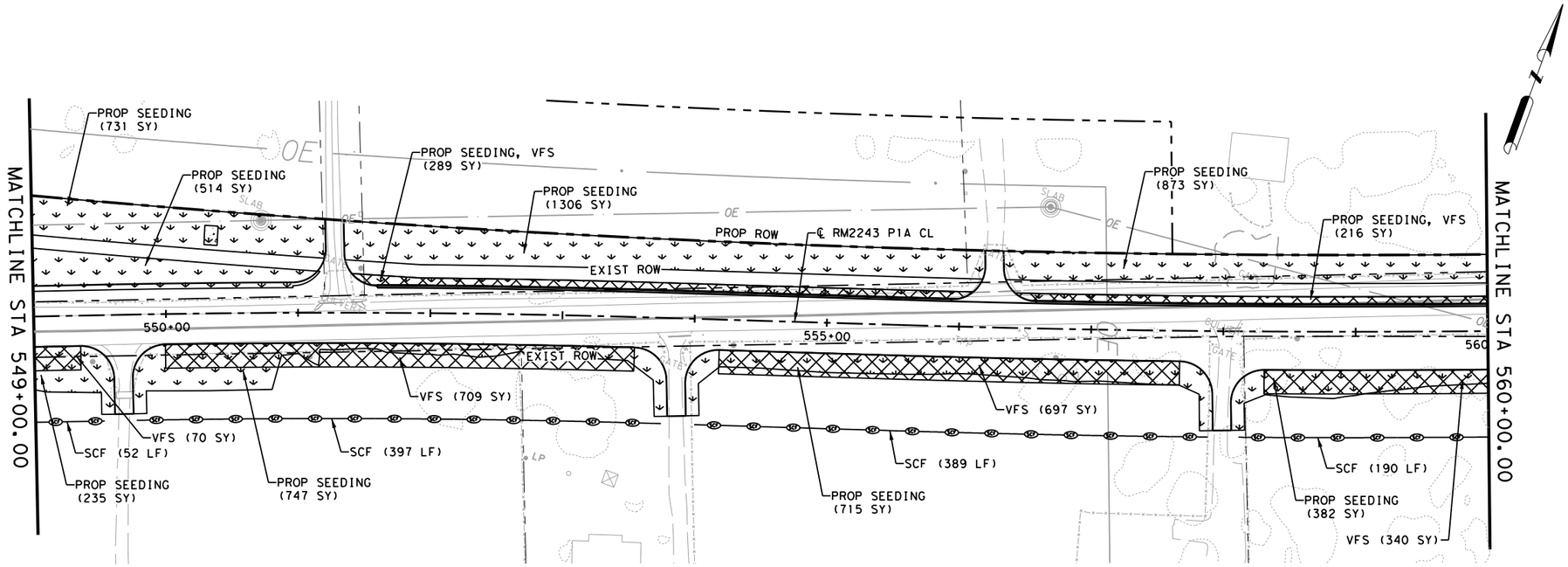

LEGEND

- SCF — SILT CONTROL FENCE
- CONSTRUCTION AREA
- CULVERT FLOW DIRECTION
- RFD2 — ROCK FILTER DAM
- ECL — EROSION CONTROL LOG
- TOPSOIL, SEEDING, & SOIL RETENTION BLANKET
- VEGETATIVE FILTER STRIP

NOTES:

1. ALL EROSION CONTROL MEASURES SHALL BE PLACED WITHIN COUNTY RIGHT-OF-WAY DURING CONSTRUCTION.
2. CONTRACTOR SHALL MAINTAIN EROSION CONTROL MEASURES.
3. CONSTRUCTION ENTRANCE / EXIT TO BE DETERMINED IN THE FIELD, AND APPROVED BY THE ENGINEER.
4. CONCRETE TRUCK CLEAN OUT LOCATIONS TO BE DETERMINED IN THE FIELD, AND APPROVED BY THE ENGINEER.
5. ALL EROSION CONTROL ELEMENTS SHALL BE IN PLACE PRIOR TO COMMENCING ANY SOIL DISTURBING ACTIVITIES.

0 50 100

SCALE: 1"=100'

STATE OF TEXAS
JOSHUA T. RICHTER
141234
LICENSED
PROFESSIONAL ENGINEER

4/10/2025

WILCO TEXAS

BGE, Inc.
101 W Louis Henna Blvd, Suite 400, Austin, TX 78728
Tel: 512-879-0400 ● www.bgeinc.com
TBPE Registration No. F-1046

RM 2243

SW3P LAYOUT

SHEET 3 OF 10

FED.RD. DIV.NO.	PROJECT NO.		SHEET NO.
6			393
STATE	DIST.	COUNTY	
TEXAS	AUS	WILLIAMSON	
CONT.	SECT.	JOB	HIGHWAY NO.
0914	05	222	RM 2243

4/10/2025 1:08:17 PM pdf.pltcfg
G:\TXC\Projects\County\Williamson\7473-02 RM 2243 Phase 1A\03*CADD\01*Shts\14-ENV\RM2243*P1A*SW3P*03.dgn

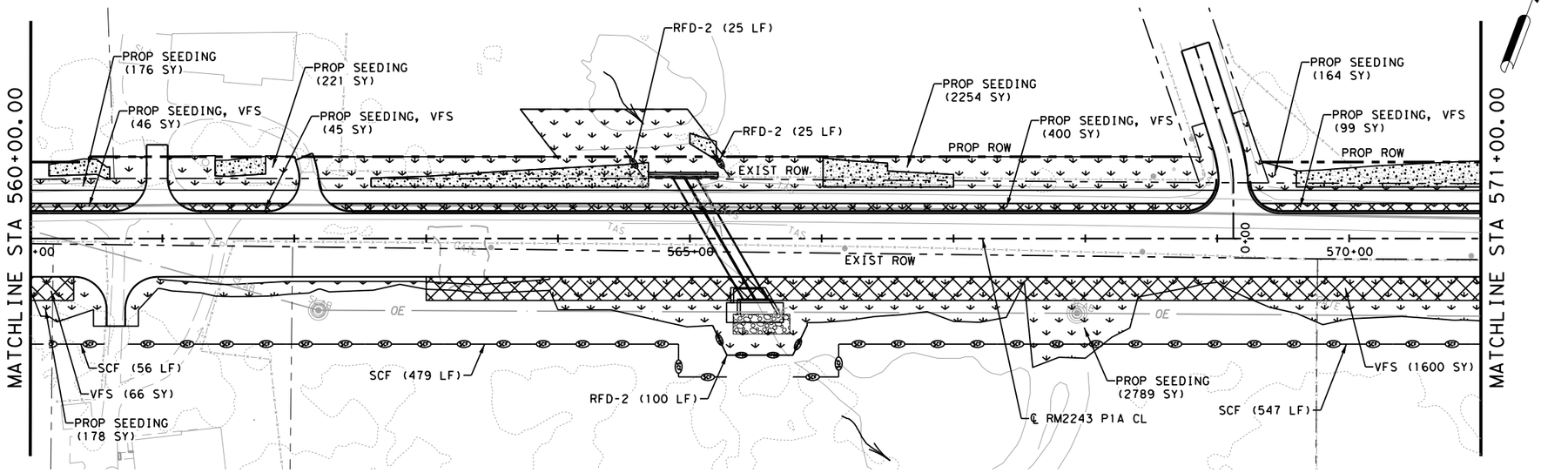

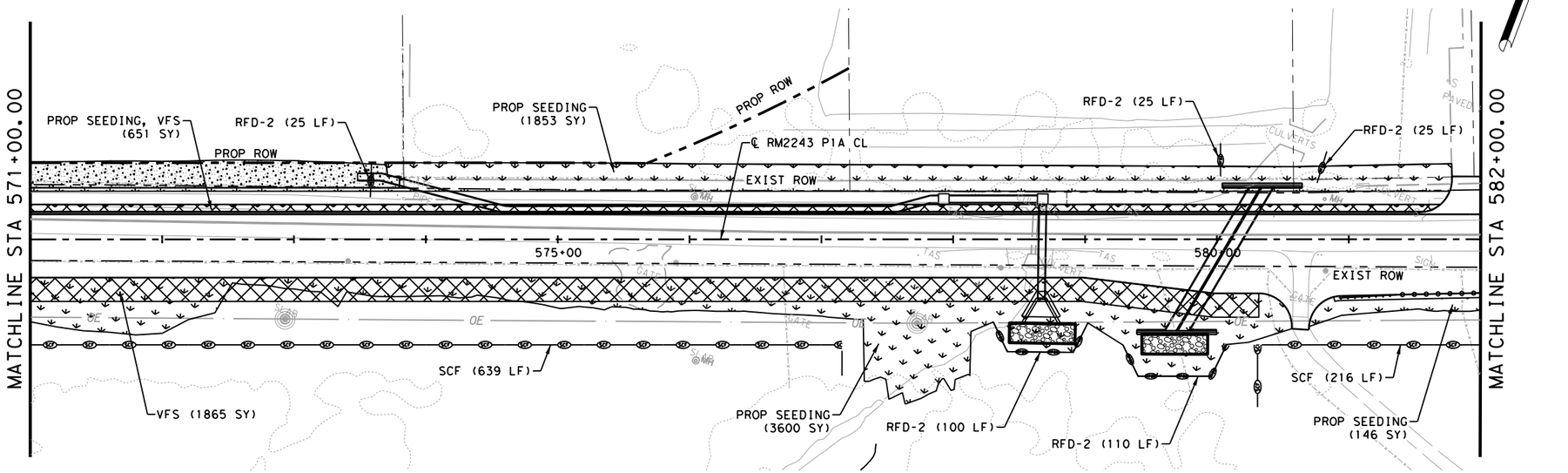

LEGEND

- SCF — SILT CONTROL FENCE
- CONSTRUCTION AREA
- CULVERT FLOW DIRECTION
- RFD2 — ROCK FILTER DAM
- ECL — EROSION CONTROL LOG
- TOPSOIL, SEEDING, & SOIL RETENTION BLANKET
- VEGETATIVE FILTER STRIP

NOTES:

1. ALL EROSION CONTROL MEASURES SHALL BE PLACED WITHIN COUNTY RIGHT-OF-WAY DURING CONSTRUCTION.
2. CONTRACTOR SHALL MAINTAIN EROSION CONTROL MEASURES.
3. CONSTRUCTION ENTRANCE / EXIT TO BE DETERMINED IN THE FIELD, AND APPROVED BY THE ENGINEER.
4. CONCRETE TRUCK CLEAN OUT LOCATIONS TO BE DETERMINED IN THE FIELD, AND APPROVED BY THE ENGINEER.
5. ALL EROSION CONTROL ELEMENTS SHALL BE IN PLACE PRIOR TO COMMENCING ANY SOIL DISTURBING ACTIVITIES.

0 50 100

SCALE: 1"=100'

STATE OF TEXAS
JOSHUA T. RICHTER
141234
LICENSED
PROFESSIONAL ENGINEER

4/10/2025

WILCO TEXAS

BGE, Inc.
101 W Louis Henna Blvd, Suite 400, Austin, TX 78728
Tel: 512-879-0400 ● www.bgeinc.com
TBPE Registration No. F-1046

RM 2243

SW3P LAYOUT

SHEET 4 OF 10

FED.RD. DIV.NO.	PROJECT NO.		SHEET NO.
6			394
STATE	DIST.	COUNTY	
TEXAS	AUS	WILLIAMSON	
CONT.	SECT.	JOB	HIGHWAY NO.
0914	05	222	RM 2243

4/10/2025 1:08:19 PM pdf.pltcfg
G:\TXC\Projects\County\Williamson\7473-02 RM 2243 Phase 1A\03*CADD\01*Shts\14-ENV\RM2243*P1A*SW3P*04.dgn

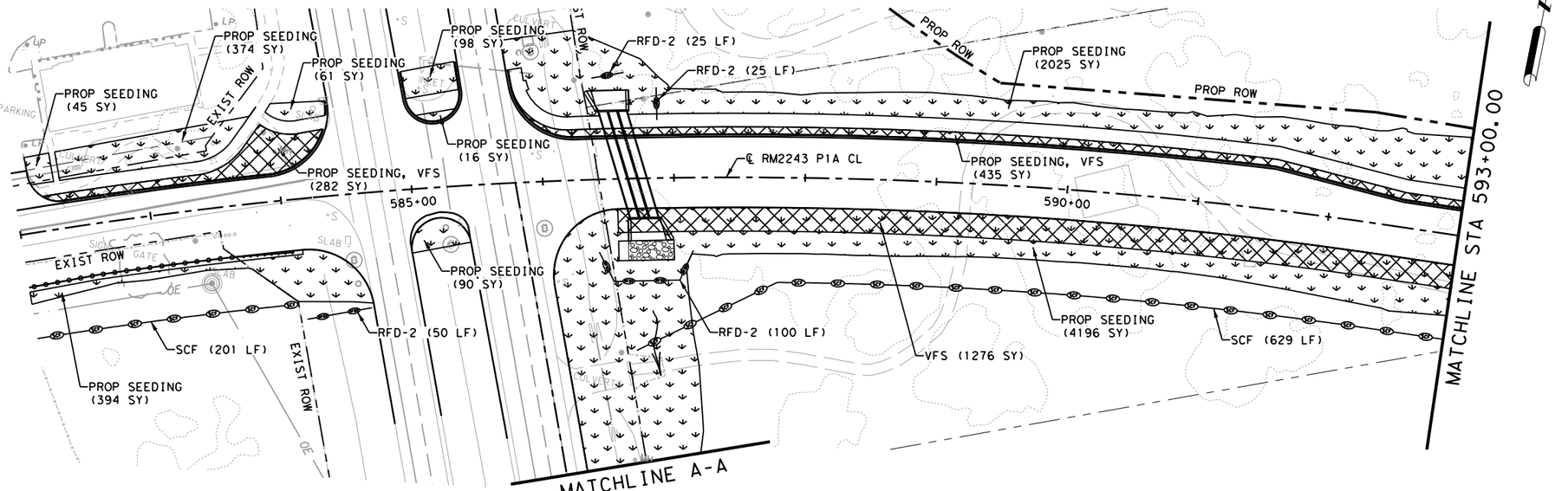

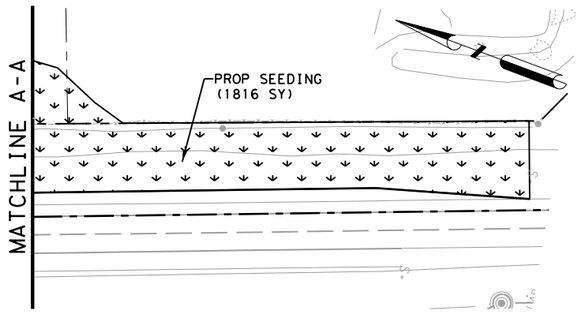

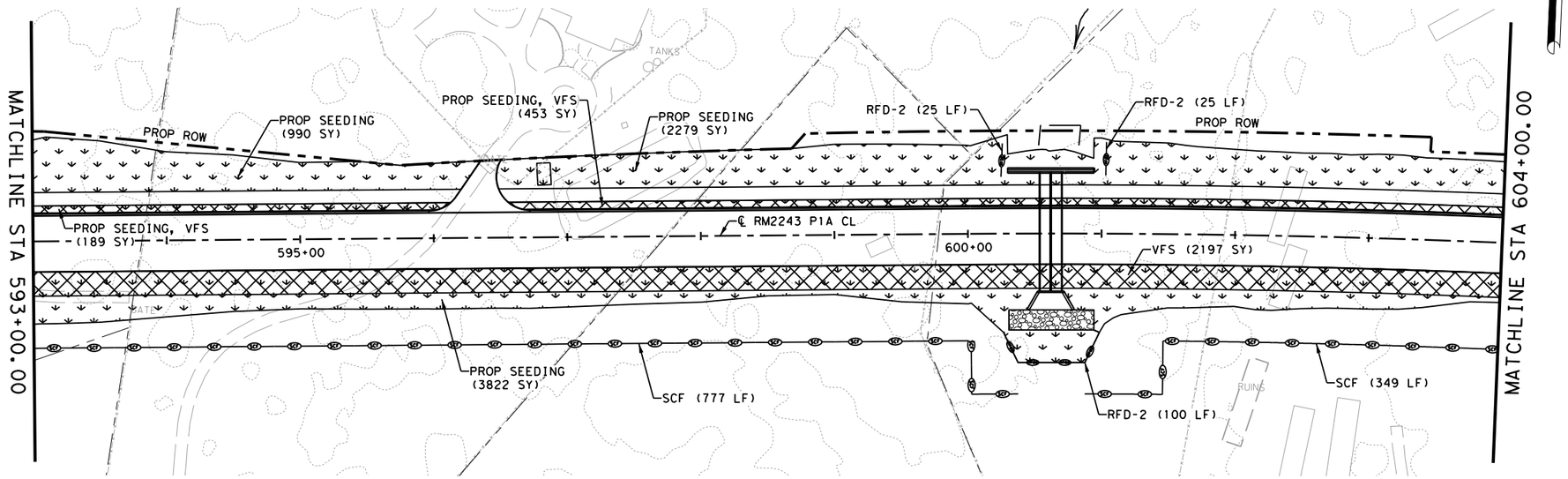

LEGEND

- SCF — SILT CONTROL FENCE
- CONSTRUCTION AREA
- CULVERT FLOW DIRECTION
- RFD2 — ROCK FILTER DAM
- ECL — EROSION CONTROL LOG
- TOPSOIL, SEEDING, & SOIL RETENTION BLANKET
- VEGETATIVE FILTER STRIP

NOTES:

1. ALL EROSION CONTROL MEASURES SHALL BE PLACED WITHIN COUNTY RIGHT-OF-WAY DURING CONSTRUCTION.
2. CONTRACTOR SHALL MAINTAIN EROSION CONTROL MEASURES.
3. CONSTRUCTION ENTRANCE / EXIT TO BE DETERMINED IN THE FIELD, AND APPROVED BY THE ENGINEER.
4. CONCRETE TRUCK CLEAN OUT LOCATIONS TO BE DETERMINED IN THE FIELD, AND APPROVED BY THE ENGINEER.
5. ALL EROSION CONTROL ELEMENTS SHALL BE IN PLACE PRIOR TO COMMENCING ANY SOIL DISTURBING ACTIVITIES.

0 50 100

SCALE: 1"=100'

STATE OF TEXAS
JOSHUA T. RICHTER
141234
LICENSED
PROFESSIONAL ENGINEER

4/10/2025

WILCO TEXAS

BGE, Inc.
101 W Louis Henna Blvd, Suite 400, Austin, TX 78728
Tel: 512-879-0400 • www.bgeinc.com
TBPE Registration No. F-1046

RM 2243

SW3P LAYOUT

SHEET 5 OF 10

FED.RD. DIV.NO.	PROJECT NO.		SHEET NO.
6			395
STATE	DIST.	COUNTY	
TEXAS	AUS	WILLIAMSON	
CONT.	SECT.	JOB	HIGHWAY NO.
0914	05	222	RM 2243

4/10/2025 1:08:21 PM pdf.pltcfg
G:\TXC\Projects\County\Williamson\7473-02 RM 2243 Phase 1A\03\CADD\01\Shts\14-ENV\RM2243_P1A_SW3P_05.dgn

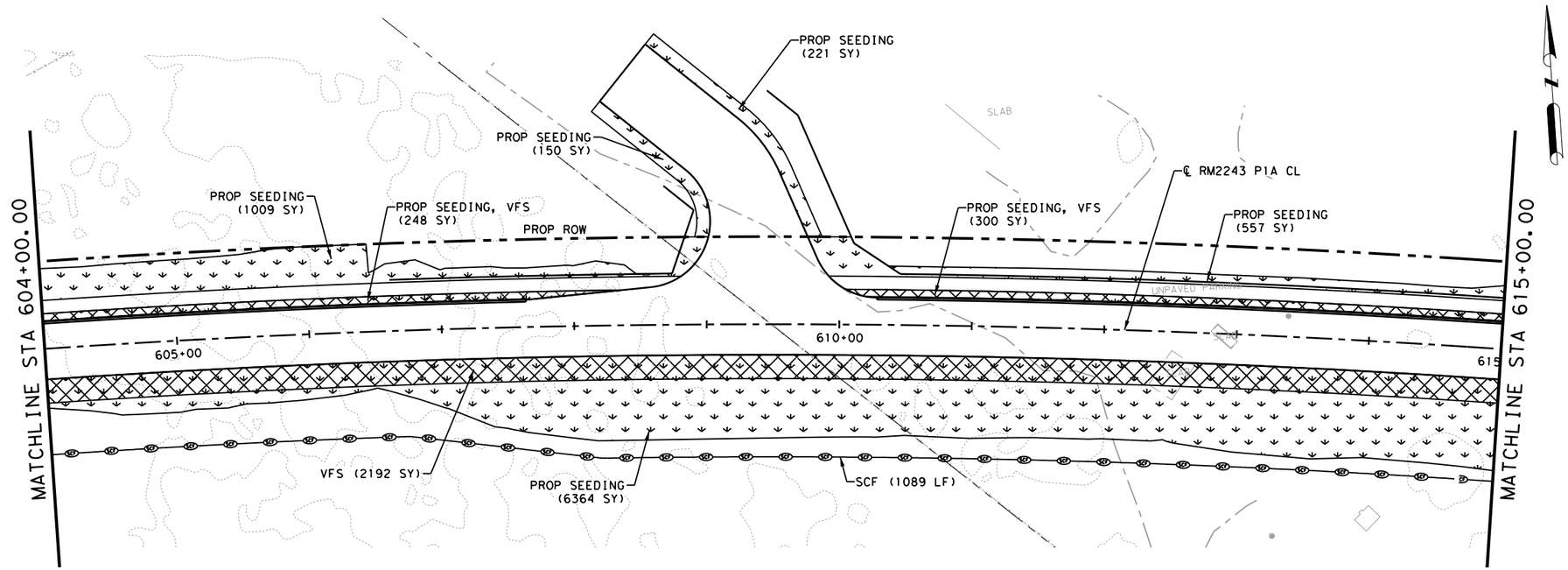

LEGEND

- SCF — SILT CONTROL FENCE
- CONSTRUCTION AREA
- CULVERT FLOW DIRECTION
- RFDZ — ROCK FILTER DAM
- ECL — EROSION CONTROL LOG
- TOPSOIL, SEEDING, & SOIL RETENTION BLANKET
- VEGETATIVE FILTER STRIP

NOTES:

1. ALL EROSION CONTROL MEASURES SHALL BE PLACED WITHIN COUNTY RIGHT-OF-WAY DURING CONSTRUCTION.
2. CONTRACTOR SHALL MAINTAIN EROSION CONTROL MEASURES.
3. CONSTRUCTION ENTRANCE / EXIT TO BE DETERMINED IN THE FIELD, AND APPROVED BY THE ENGINEER.
4. CONCRETE TRUCK CLEAN OUT LOCATIONS TO BE DETERMINED IN THE FIELD, AND APPROVED BY THE ENGINEER.
5. ALL EROSION CONTROL ELEMENTS SHALL BE IN PLACE PRIOR TO COMMENCING ANY SOIL DISTURBING ACTIVITIES.

0 50 100

SCALE: 1"=100'

STATE OF TEXAS
JOSHUA T. RICHTER
141234
LICENSED PROFESSIONAL ENGINEER

4/10/2025

WILCO TEXAS

BGE, Inc.
101 W Louis Henna Blvd, Suite 400, Austin, TX 78728
Tel: 512-879-0400 ● www.bgeinc.com
TBPE Registration No. F-1046

RM 2243

SW3P LAYOUT

SHEET 6 OF 10

FED.RD. DIV.NO.	PROJECT NO.	SHEET NO.
6		396

STATE	DIST.	COUNTY	
TEXAS	AUS	WILLIAMSON	
CONT.	SECT.	JOB	HIGHWAY NO.
0914	05	222	RM 2243

4/10/2025 1:08:22 PM pdf.pltcfg
G:\TXC\Projects\County\Williamson\7473-02 RM 2243 Phase 1A\03*CADD\01*Shts\14-ENV\RM2243*P1A*SW3P*06.dgn

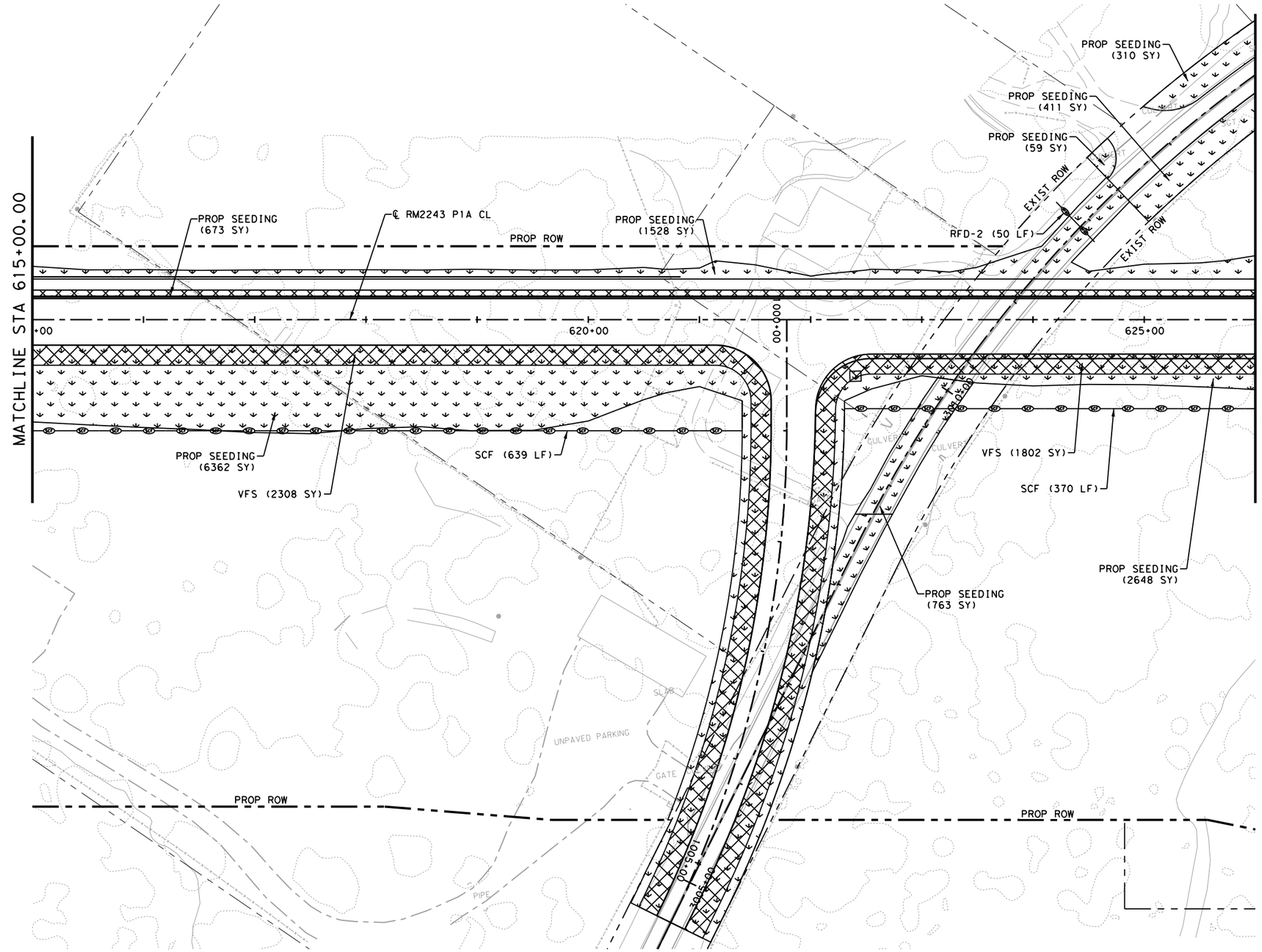

LEGEND

- SCF — SILT CONTROL FENCE
- CONSTRUCTION AREA
- CULVERT FLOW DIRECTION
- RFD2 — ROCK FILTER DAM
- ECL — EROSION CONTROL LOG
- TOPSOIL, SEEDING, & SOIL RETENTION BLANKET
- VEGETATIVE FILTER STRIP

NOTES:

1. ALL EROSION CONTROL MEASURES SHALL BE PLACED WITHIN COUNTY RIGHT-OF-WAY DURING CONSTRUCTION.
2. CONTRACTOR SHALL MAINTAIN EROSION CONTROL MEASURES.
3. CONSTRUCTION ENTRANCE / EXIT TO BE DETERMINED IN THE FIELD, AND APPROVED BY THE ENGINEER.
4. CONCRETE TRUCK CLEAN OUT LOCATIONS TO BE DETERMINED IN THE FIELD, AND APPROVED BY THE ENGINEER.
5. ALL EROSION CONTROL ELEMENTS SHALL BE IN PLACE PRIOR TO COMMENCING ANY SOIL DISTURBING ACTIVITIES.

0 50 100

SCALE: 1"=100'

STATE OF TEXAS
JOSHUA T. RICHTER
141234
LICENSED PROFESSIONAL ENGINEER

4/10/2025

WILCO TEXAS

BGE, Inc.
101 W Louis Henna Blvd, Suite 400, Austin, TX 78728
Tel: 512-879-0400 • www.bgeinc.com
TBPE Registration No. F-1046

RM 2243

SW3P LAYOUT

SHEET 7 OF 10

FED.RD. DIV.NO.	PROJECT NO.		SHEET NO.
6			397
STATE	DIST.	COUNTY	
TEXAS	AUS	WILLIAMSON	
CONT.	SECT.	JOB	HIGHWAY NO.
0914	05	222	RM 2243

4/10/2025 1:08:23 PM pdf.pltcfg
G:\TXC\Projects\County\Williamson\7473-02 RM 2243 Phase 1A\03*CADD\01*Shts\14-ENV\RM2243*P1A*SW3P*07.dgn

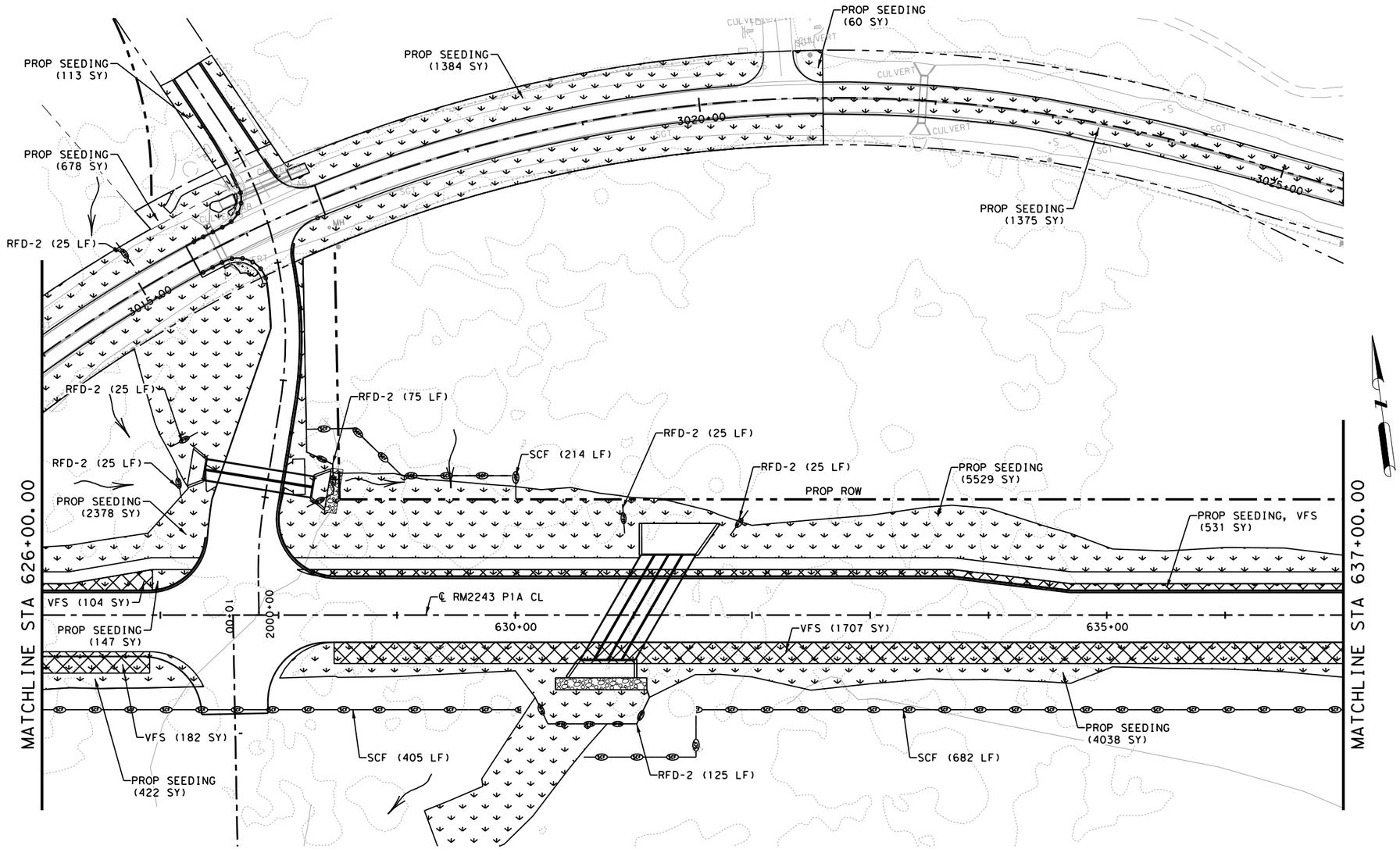

LEGEND

- SCF — SILT CONTROL FENCE
- CONSTRUCTION AREA
- CULVERT FLOW DIRECTION
- RFD2 — ROCK FILTER DAM
- ECL — EROSION CONTROL LOG
- TOPSOIL, SEEDING, & SOIL RETENTION BLANKET
- VEGETATIVE FILTER STRIP

NOTES:

1. ALL EROSION CONTROL MEASURES SHALL BE PLACED WITHIN COUNTY RIGHT-OF-WAY DURING CONSTRUCTION.
2. CONTRACTOR SHALL MAINTAIN EROSION CONTROL MEASURES.
3. CONSTRUCTION ENTRANCE / EXIT TO BE DETERMINED IN THE FIELD, AND APPROVED BY THE ENGINEER.
4. CONCRETE TRUCK CLEAN OUT LOCATIONS TO BE DETERMINED IN THE FIELD, AND APPROVED BY THE ENGINEER.
5. ALL EROSION CONTROL ELEMENTS SHALL BE IN PLACE PRIOR TO COMMENCING ANY SOIL DISTURBING ACTIVITIES.

0 50 100

SCALE: 1"=100'

STATE OF TEXAS
JOSHUA T. RICHTER
141234
LICENSED
PROFESSIONAL ENGINEER

4/10/2025

WILCO TEXAS

BGE, Inc.
101 W Louis Henna Blvd, Suite 400, Austin, TX 78728
Tel: 512-879-0400 ● www.bgeinc.com
TBPE Registration No. F-1046

RM 2243

SW3P LAYOUT

SHEET 8 OF 10

FED.RD. DIV.NO.	PROJECT NO.		SHEET NO.
6			398
STATE	DIST.	COUNTY	
TEXAS	AUS	WILLIAMSON	
CONT.	SECT.	JOB	HIGHWAY NO.
0914	05	222	RM 2243

4/10/2025 1:08:24 PM pdf.pltcfg
G:\TXC\Projects\County\Williamson\7473-02 RM 2243 Phase 1A\03\CADD\01\Shts\14-ENV\RM2243_P1A_SW3P_08.dgn

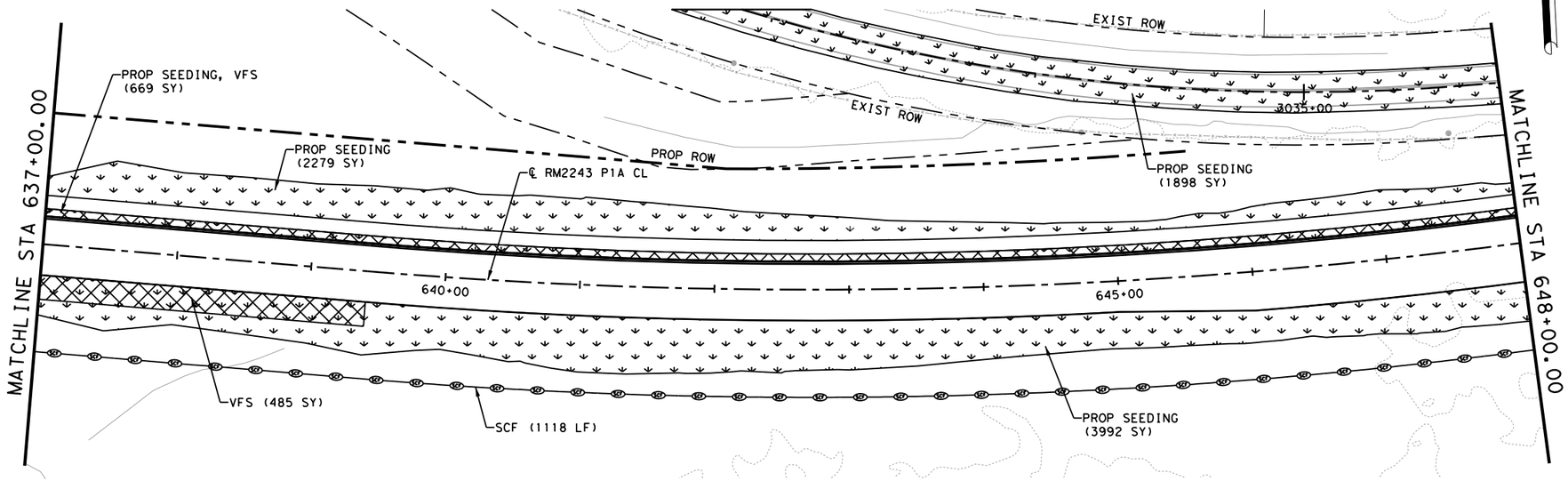

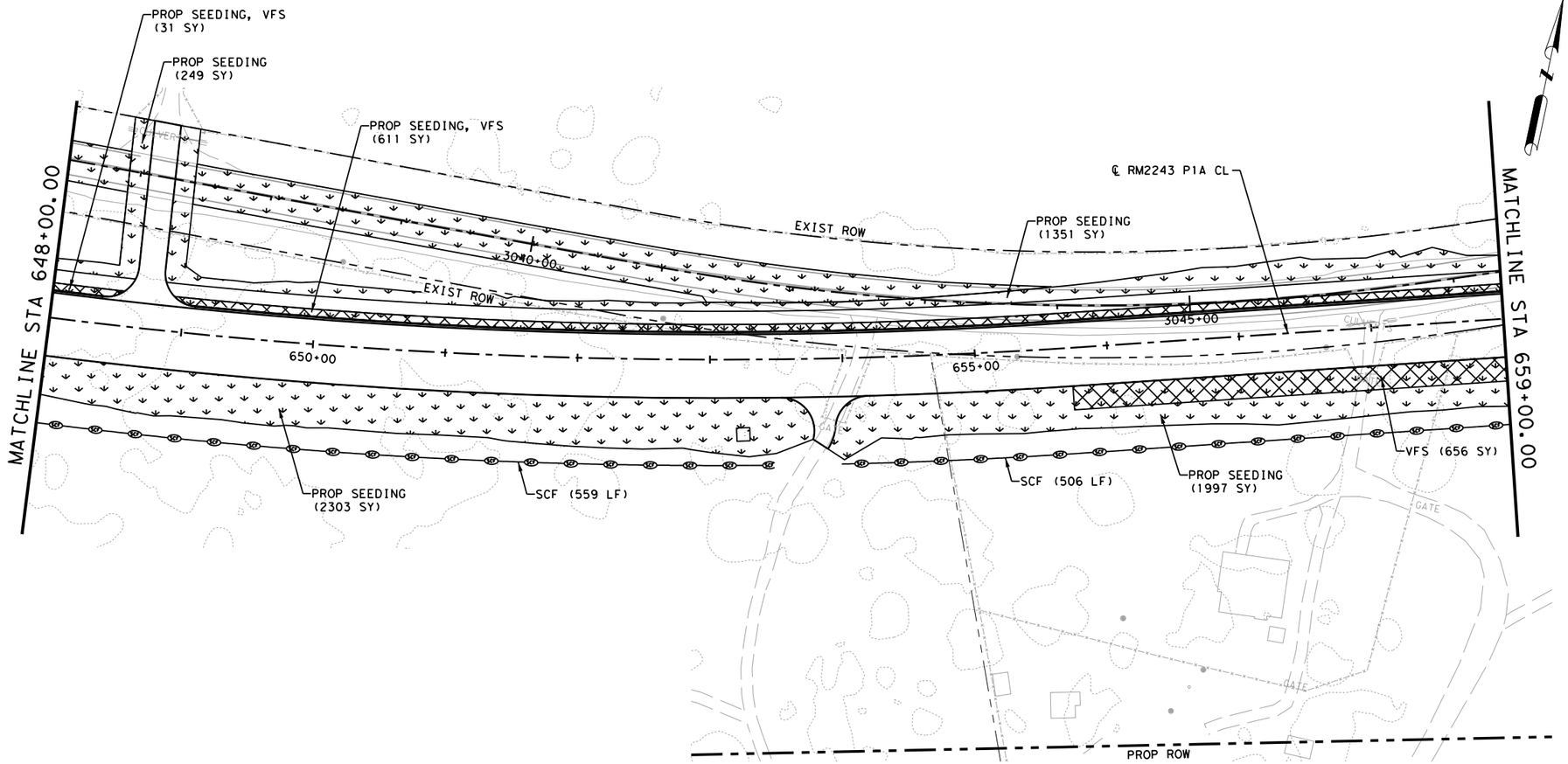

LEGEND

- SCF — SILT CONTROL FENCE
- CONSTRUCTION AREA
- CULVERT FLOW DIRECTION
- RFD2 — ROCK FILTER DAM
- ECL — EROSION CONTROL LOG
- TOPSOIL, SEEDING, & SOIL RETENTION BLANKET
- VEGETATIVE FILTER STRIP

NOTES:

1. ALL EROSION CONTROL MEASURES SHALL BE PLACED WITHIN COUNTY RIGHT-OF-WAY DURING CONSTRUCTION.
2. CONTRACTOR SHALL MAINTAIN EROSION CONTROL MEASURES.
3. CONSTRUCTION ENTRANCE / EXIT TO BE DETERMINED IN THE FIELD, AND APPROVED BY THE ENGINEER.
4. CONCRETE TRUCK CLEAN OUT LOCATIONS TO BE DETERMINED IN THE FIELD, AND APPROVED BY THE ENGINEER.
5. ALL EROSION CONTROL ELEMENTS SHALL BE IN PLACE PRIOR TO COMMENCING ANY SOIL DISTURBING ACTIVITIES.

0 50 100

SCALE: 1"=100'

STATE OF TEXAS
JOSHUA T. RICHTER
141234
LICENSED
PROFESSIONAL ENGINEER

4/10/2025

WILCO
TEXAS

BGE, Inc.
101 W Louis Henna Blvd, Suite 400, Austin, TX 78728
Tel: 512-879-0400 • www.bgeinc.com
TBPE Registration No. F-1046

RM 2243

SW3P LAYOUT

SHEET 9 OF 10

FED.RD. DIV.NO.	PROJECT NO.		SHEET NO.
6			399
STATE	DIST.	COUNTY	
TEXAS	AUS	WILLIAMSON	
CONT.	SECT.	JOB	HIGHWAY NO.
0914	05	222	RM 2243

4/10/2025 1:08:26 PM pdf.pltcfg
C:\TXC\Projects\County*Williamson\7473-02 RM 2243 Phase 1A\03*CADD\01*Shts\14-ENV\RM2243*P1A*SW3P*09.dgn

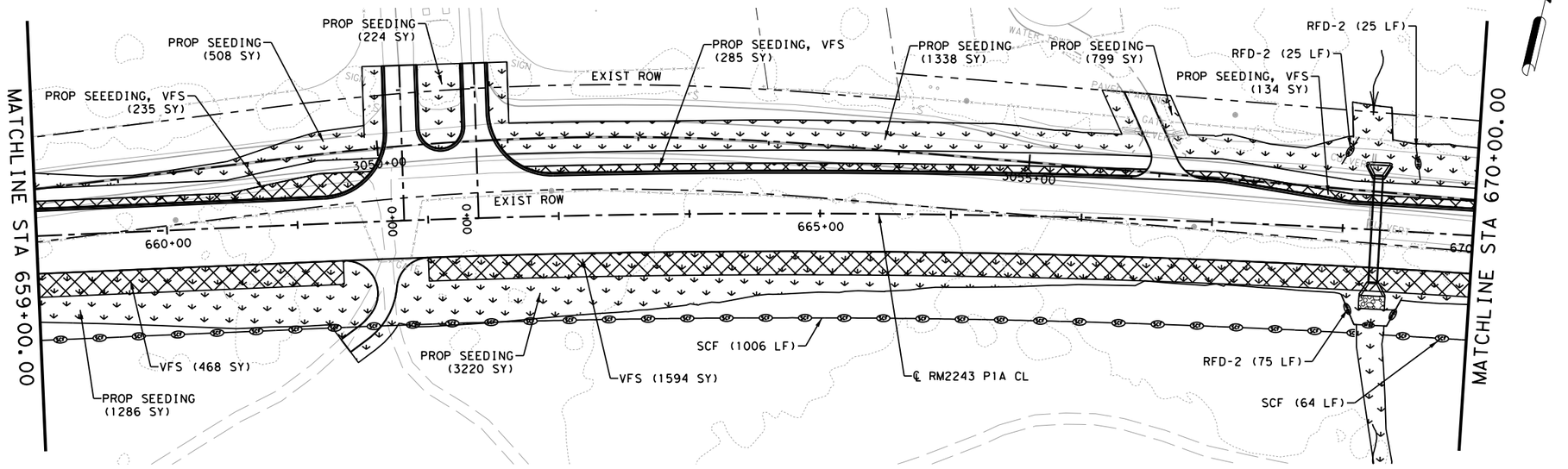

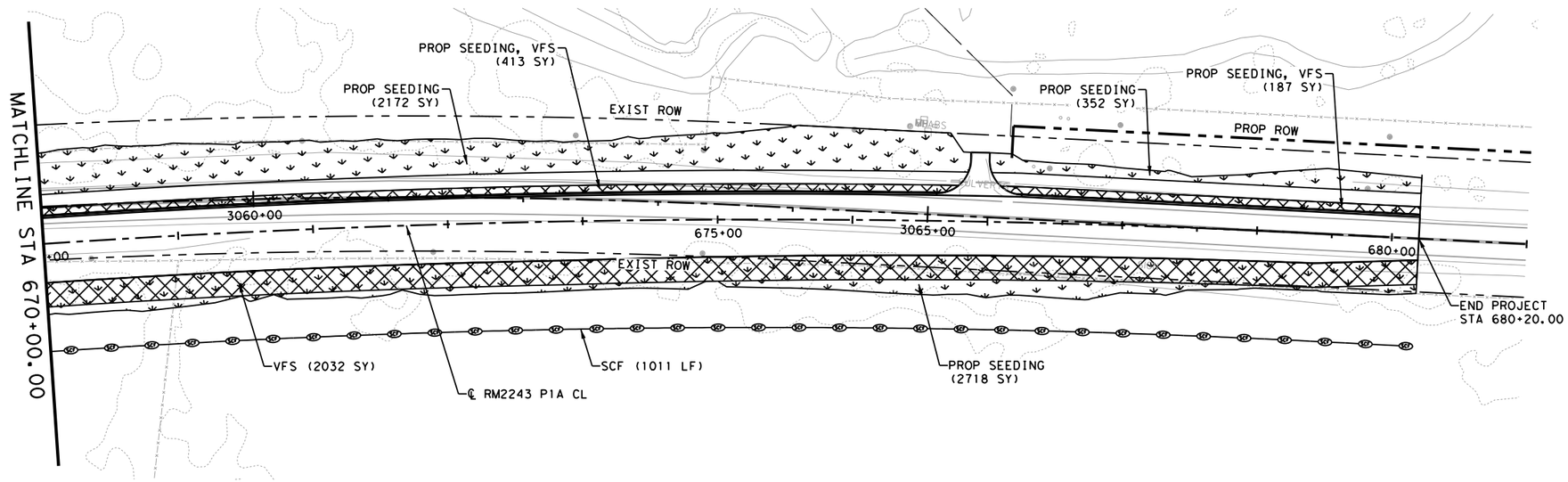

LEGEND

- SCF — SILT CONTROL FENCE
- CONSTRUCTION AREA
- CULVERT FLOW DIRECTION
- RFD2 — ROCK FILTER DAM
- ECL — EROSION CONTROL LOG
- TOPSOIL, SEEDING, & SOIL RETENTION BLANKET
- VEGETATIVE FILTER STRIP

NOTES:

1. ALL EROSION CONTROL MEASURES SHALL BE PLACED WITHIN COUNTY RIGHT-OF-WAY DURING CONSTRUCTION.
2. CONTRACTOR SHALL MAINTAIN EROSION CONTROL MEASURES.
3. CONSTRUCTION ENTRANCE / EXIT TO BE DETERMINED IN THE FIELD, AND APPROVED BY THE ENGINEER.
4. CONCRETE TRUCK CLEAN OUT LOCATIONS TO BE DETERMINED IN THE FIELD, AND APPROVED BY THE ENGINEER.
5. ALL EROSION CONTROL ELEMENTS SHALL BE IN PLACE PRIOR TO COMMENCING ANY SOIL DISTURBING ACTIVITIES.

0 50 100

SCALE: 1"=100'

STATE OF TEXAS
JOSHUA T. RICHTER
141234
LICENSED
PROFESSIONAL ENGINEER

4/10/2025

WILCO
TEXAS

BGE, Inc.
101 W Louis Henna Blvd, Suite 400, Austin, TX 78728
Tel: 512-879-0400 ● www.bgeinc.com
TBPE Registration No. F-1046

RM 2243

SW3P LAYOUT

SHEET 10 OF 10

FED.RD. DIV.NO.	PROJECT NO.		SHEET NO.
6			400
STATE	DIST.	COUNTY	
TEXAS	AUS	WILLIAMSON	
CONT.	SECT.	JOB	HIGHWAY NO.
0914	05	222	RM 2243

4/10/2025 1:08:28 PM pdf.pltcfg
G:\TXC\Projects\County\Williamson\7473-02 RM 2243 Phase 1A\03*CADD\01*Shts\14-ENV\RM2243*P1A*SW3P*10.dgn

DISCLAIMER:
The use of this standard is governed by the "Texas Engineering Practice Act". No warranty of any kind is made by TxDOT for any purpose whatsoever. TxDOT assumes no responsibility for the conversion of this standard to other formats or for incorrect results or damages resulting from its use.

DATE: 4/10/2025
FILE: G:\TXC\Projects\County_Williamson\7473-02 RM 2243 Phase 1A\03_CADD\01_Shts\14-ENV\Stds\epic.dgn

I. STORMWATER POLLUTION PREVENTION-CLEAN WATER ACT SECTION 402

TPDES TXR 150000: Stormwater Discharge Permit or Construction General Permit required for projects with 1 or more acres disturbed soil. Projects with any disturbed soil must protect for erosion and sedimentation in accordance with Item 506.

List MS4 Operator(s) that may receive discharges from this project. They may need to be notified prior to construction activities.

1. CITY OF LEANDER
2. CITY OF GEORGETOWN
3. CITY OF CEDAR PARK
4. CITY OF ROUND ROCK

☐ No Action Required ☒ Required Action

Action No.

1. Prevent stormwater pollution by controlling erosion and sedimentation in accordance with TPDES Permit TXR 150000
2. Comply with the SW3P and revise when necessary to control pollution or required by the Engineer.
3. Post Construction Site Notice (CSN) with SW3P information on or near the site, accessible to the public and TCEQ, EPA or other inspectors.
4. When Contractor project specific locations (PSL's) increase disturbed soil area to 5 acres or more, submit NOI to TCEQ and the Engineer.

II. WORK IN OR NEAR STREAMS, WATERBODIES AND WETLANDS CLEAN WATER ACT SECTIONS 401 AND 404

USACE Permit required for filling, dredging, excavating or other work in any water bodies, rivers, creeks, streams, wetlands or wet areas.

The Contractor must adhere to all of the terms and conditions associated with the following permit(s):

☐ No Permit Required
☒ Nationwide Permit 14 - PCN not Required (less than 1/10th acre waters or wetlands affected)
☐ Nationwide Permit 14 - PCN Required (1/10 to <1/2 acre, 1/3 in tidal waters)
☐ Individual 404 Permit Required
☐ Other Nationwide Permit Required: NWP# _____

Required Actions: List waters of the US permit applies to, location in project and check Best Management Practices planned to control erosion, sedimentation and post-project TSS.

1. Unnamed Tributary of Brushy Creek Sta. 543+50
2. Unnamed Tributary of Brushy Creek Sta. 565+20
3. Unnamed Pond Sta. 564+50
4. Unnamed Tributary of Brushy Creek Sta. 578+50
5. Unnamed Pond Sta. 580+00
6. Unnamed Tributary of Brushy Creek 633+20
7. Unnamed Tributary of Brushy Creek 632+50

The elevation of the ordinary high water marks of any areas requiring work to be performed in the waters of the US requiring the use of a nationwide permit can be found on the Bridge Layouts.

Best Management Practices:

Erosion	Sedimentation	Post-Construction TSS
☒ Temporary Vegetation	☒ Silt Fence	☒ Vegetative Filter Strips
☒ Blankets/Matting	☒ Rock Berm	☐ Retention/Irrigation Systems
☐ Mulch	☐ Triangular Filter Dike	☐ Extended Detention Basin
☐ Sodding	☐ Sand Bag Berm	☐ Constructed Wetlands
☐ Interceptor Swale	☐ Straw Bale Dike	☐ Wet Basin
☐ Diversion Dike	☐ Brush Berms	☐ Erosion Control Compost
☐ Erosion Control Compost	☐ Erosion Control Compost	☐ Mulch Filter Berm and Socks
☐ Mulch Filter Berm and Socks	☐ Mulch Filter Berm and Socks	☐ Compost Filter Berm and Socks
☐ Compost Filter Berm and Socks	☐ Compost Filter Berm and Socks	☒ Vegetation Lined Ditches
	☐ Stone Outlet Sediment Traps	☐ Sand Filter Systems
	☐ Sediment Basins	☐ Grassy Swales

III. CULTURAL RESOURCES

Refer to TxDOT Standard Specifications in the event historical issues or archeological artifacts are found during construction. Upon discovery of archeological artifacts (bones, burnt rock, flint, pottery, etc.) cease work in the immediate area and contact the Engineer immediately.

☐ No Action Required ☒ Required Action

Action No.

1. If unanticipated archaeological deposits are encountered during construction, work in the immediate area will cease, and TxDOT archaeological staff will be contacted to initiate post-review discovery procedures.

IV. VEGETATION RESOURCES

Preserve native vegetation to the extent practical.
Contractor must adhere to Construction Specification Requirements Specs 162, 164, 192, 193, 506, 730, 751, 752 in order to comply with requirements for invasive species, beneficial landscaping, and tree/brush removal commitments.

☐ No Action Required ☒ Required Action

Action No.

1. The amount of vegetation and topsoil disturbed shall be limited to only the areas needed to accomplish the project activity.
2. Avoid vegetation clearing activities during the general bird nesting season, March 1 through September 15, to minimize adverse impacts to birds.
3. All disturbed areas will be re-vegetated according to TxDOT's standard practices for urban areas, in compliance with Executive Order 13112 on Invasive Species (as amended by Executive Order 13751 on Safeguarding the Nation From the Impacts of Invasive Species), the Executive Memorandum on Beneficial Landscaping, the CGP, and the project-specific SW3P.

V. FEDERAL LISTED, PROPOSED THREATENED, ENDANGERED SPECIES, CRITICAL HABITAT, STATE LISTED SPECIES, CANDIDATE SPECIES AND MIGRATORY BIRDS.

☐ No Action Required ☒ Required Action

Action No.

1. Georgetown salamander (Eurycea naufragia); Jollyville Plateau salamander (Eurycea tonkawae); bone cave harvestman (Texella reyesi); golden-cheeked warbler (Setophaga chrysoparia); wood stork (Mycteria americana); zone-tailed hawk (Buteo albonotatus); coffin cave mold beetle (Batrisodes texanus); southern crawfish frog (Lithobates areolatus areolatus); strecker's chorus frog (Pseudacris streckeri); woodhouse's toad (Anaxyrus woodhousii); mountain plover (Charadrius montanus); western burrowing owl (Athene cunicularia hypugaea); big brown bat (Eptesicus fuscus); big free-tailed bat (Nyctinomops macrotis); cave myotis bat (Myotis velifer); eastern spotted skunk (Spilogale putorius); long-tailed weasel (Mustela frenata); mountain lion (Puma concolor); tricolored bat (Perimyotis subflavus); western hog-nosed skunk (Conepatus leuconotus); eastern box turtle (Terrapene carolina); slender glass lizard (Ophisaurus altenuatus); Texas garter snake (Thamnophis sirtalis annectens); timber (canebrake) rattlesnake (Crotalus horridus); western box turtle (Terrapene ornata); Heller's marbleseed (Onosmodium helleri); plateau milkvine (Matelea edwardsensis); scarlet leather-flower (Clematis texensis); Texas almond (Prunus minutiflora); Texas claret-cup cactus (Echinocereus coccineus var. paucispinus); Wright's milkvetch (Astragalus wrightii); bracted twistflower (Streptanthus bracteatus); chestnut-collared longspur (Calcarius ornatus); lark bunting (Calamospiza melanocorys); eastern red bat (Lasiurus borealis); hoary bat (Lasiurus cinereus); common garter snake (Thamnophis sirtalis); western chicken turtle (Deirochelys reticularia miaria).

If any of the listed species are observed, cease work in the immediate area, do not disturb species or habitat and contact the Engineer immediately. The work may not remove active nests from bridges and other structures during nesting season of the birds associated with the nests. If caves or sinkholes are discovered, cease work in the immediate area, and contact the Engineer immediately.

LIST OF ABBREVIATIONS

BMP:	Best Management Practice	SPCC:	Spill Prevention Control and Countermeasure
CGP:	Construction General Permit	SW3P:	Storm Water Pollution Prevention Plan
DSHS:	Texas Department of State Health Services	PCN:	Pre-Construction Notification
FHWA:	Federal Highway Administration	PSL:	Project Specific Location
MOA:	Memorandum of Agreement	TCEQ:	Texas Commission on Environmental Quality
MOU:	Memorandum of Understanding	TPDES:	Texas Pollutant Discharge Elimination System
MS4:	Municipal Separate Stormwater Sewer System	TPWD:	Texas Parks and Wildlife Department
MBTA:	Migratory Bird Treaty Act	TxDOT:	Texas Department of Transportation
NOT:	Notice of Termination	T&E:	Threatened and Endangered Species
NWP:	Nationwide Permit	USACE:	U.S. Army Corps of Engineers
NOI:	Notice of Intent	USFWS:	U.S. Fish and Wildlife Service

VI. HAZARDOUS MATERIALS OR CONTAMINATION ISSUES

General (applies to all projects):

Comply with the Hazard Communication Act (the Act) for personnel who will be working with hazardous materials by conducting safety meetings prior to beginning construction and making workers aware of potential hazards in the workplace. Ensure that all workers are provided with personal protective equipment appropriate for any hazardous materials used.

Obtain and keep on-site Material Safety Data Sheets (MSDS) for all hazardous products used on the project, which may include, but are not limited to the following categories: Paints, acids, solvents, asphalt products, chemical additives, fuels and concrete curing compounds or additives. Provide protected storage, off bare ground and covered, for products which may be hazardous. Maintain product labelling as required by the Act.

Maintain an adequate supply of on-site spill response materials, as indicated in the MSDS. In the event of a spill, take actions to mitigate the spill as indicated in the MSDS, in accordance with safe work practices, and contact the District Spill Coordinator immediately. The Contractor shall be responsible for the proper containment and cleanup of all product spills.

Contact the Engineer if any of the following are detected:

* Dead or distressed vegetation (not identified as normal)
* Trash piles, drums, canister, barrels, etc.
* Undesirable smells or odors
* Evidence of leaching or seepage of substances

Does the project involve any bridge class structure rehabilitation or replacements (bridge class structures not including box culverts)?

☐ Yes ☒ No

If "No", then no further action is required.
If "Yes", then TxDOT is responsible for completing asbestos assessment/inspection.

Are the results of the asbestos inspection positive (is asbestos present)?

☐ Yes ☐ No

If "Yes", then TxDOT must retain a DSHS licensed asbestos consultant to assist with the notification, develop abatement/mitigation procedures, and perform management activities as necessary. The notification form to DSHS must be postmarked at least 15 working days prior to scheduled demolition.

If "No", then TxDOT is still required to notify DSHS 15 working days prior to any scheduled demolition.

In either case, the Contractor is responsible for providing the date(s) for abatement activities and/or demolition with careful coordination between the Engineer and asbestos consultant in order to minimize construction delays and subsequent claims.

Any other evidence indicating possible hazardous materials or contamination discovered on site. Hazardous Materials or Contamination Issues Specific to this Project:

☒ No Action Required ☐ Required Action

Action No.

1.

VII. OTHER ENVIRONMENTAL ISSUES

(includes regional issues such as Edwards Aquifer District, etc.)

☐ No Action Required ☒ Required Action

Action No.

1. Temporary bridges, haul roads, matting, falsework piling, BMPs, debris or other temporary materials placed during construction operations that are not part of the finished work will be removed at the completion of construction activities.
2. No PSLs will be allowed in any WOTUS. Any PSLs outside of the ROW and project area are not within the scope of this consultation as they will be selected by, and under the control of, the contractor.
3. Provide an on-call construction monitor throughout ground-disturbing activities to inspect and report karst voids encountered during construction in accordance with the Void Discovery Oversight and Reporting protocol shall be implemented.
4. If standing, seeping, or flowing water is encountered, the Groundwater Flow Mitigation and Protection Measures shall be implemented.

Texas Department of Transportation — Design Division Standard

ENVIRONMENTAL PERMITS, ISSUES AND COMMITMENTS

EPIC

FILE: epic.dgn	DN: TxDOT	CK: RG	DW: VP	CK: AR		
©TxDOT: February 2015	CONT	SECT	JOB		HIGHWAY	
REVISIONS	0914	05	222		RM 2243	
12-12-2011 (DS)	DIST	COUNTY			SHEET NO.	
05-07-14 ADDED NOTE SECTION IV.	AUS	WILLIAMSON			401	
01-23-2015 SECTION I (CHANGED ITEM 1122 TO ITEM 506, ADDED GRASSY SWALES.						

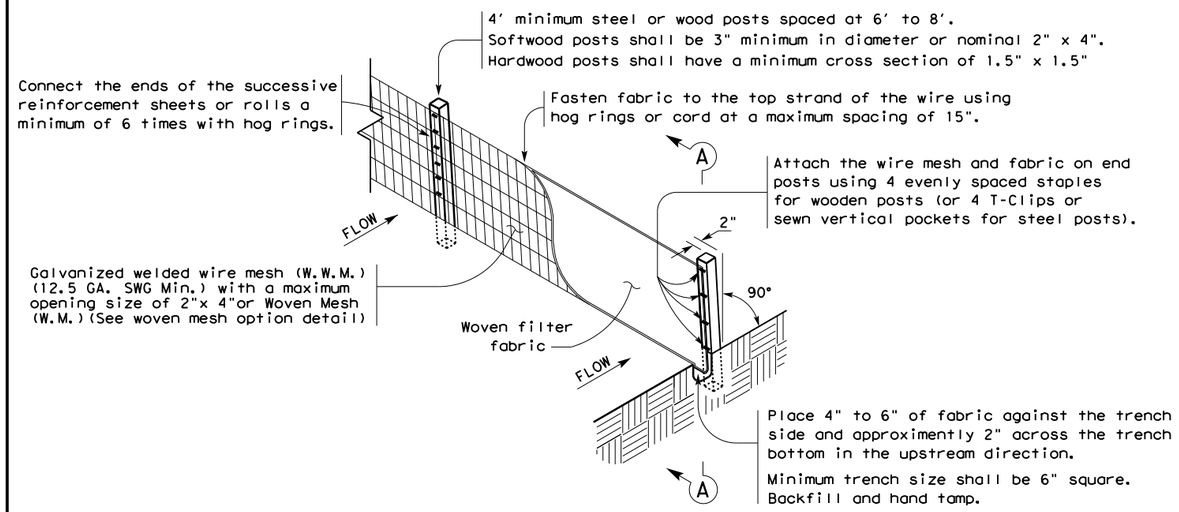

TEMPORARY SEDIMENT CONTROL FENCE

SCF

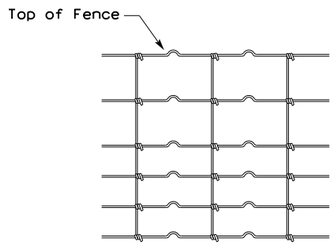

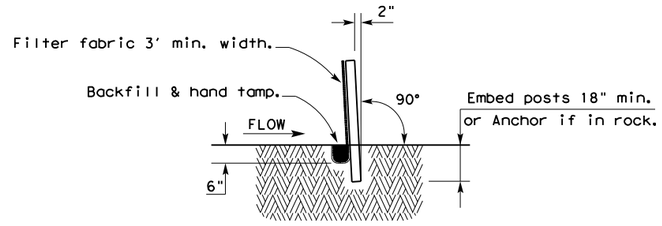

SECTION A-A

HINGE JOINT KNOT WOVEN MESH (OPTION) DETAIL

Galvanized hinge joint knot woven mesh (12.5 GA.SWG Min.) requires a minimum of five horizontal wires spaced at a maximum of 12 inches apart and all vertical wires spaced at a maximum of 12 inches apart.

SEDIMENT CONTROL FENCE USAGE GUIDELINES

A sediment control fence may be constructed near the downstream perimeter of a disturbed area along a contour to intercept sediment from overland runoff. A 2 year storm frequency may be used to calculate the flow rate to be filtered.

Sediment control fence should be sized to filter a maximum flow through rate of 100 GPM/FT^2. Sediment control fence is not recommended to control erosion from a drainage area larger than 2 acres.

LEGEND

Sediment Control Fence

SCF

GENERAL NOTES

1. Vertical tracking is required on projects where soil distributing activities have occurred unless otherwise approved.
2. Perform vertical tracking on slopes to temporarily stabilize soil.
3. Provide equipment with a track undercarriage capable of producing linear soil impressions measuring a minimum of 12" in length by 2" to 4" in width by 1/2" to 2" in depth.
4. Do not exceed 12" between track impressions.
5. Install continous linear track impressions where the minimum 12" length impressions are perpendicular to the slope or direction of water flow.

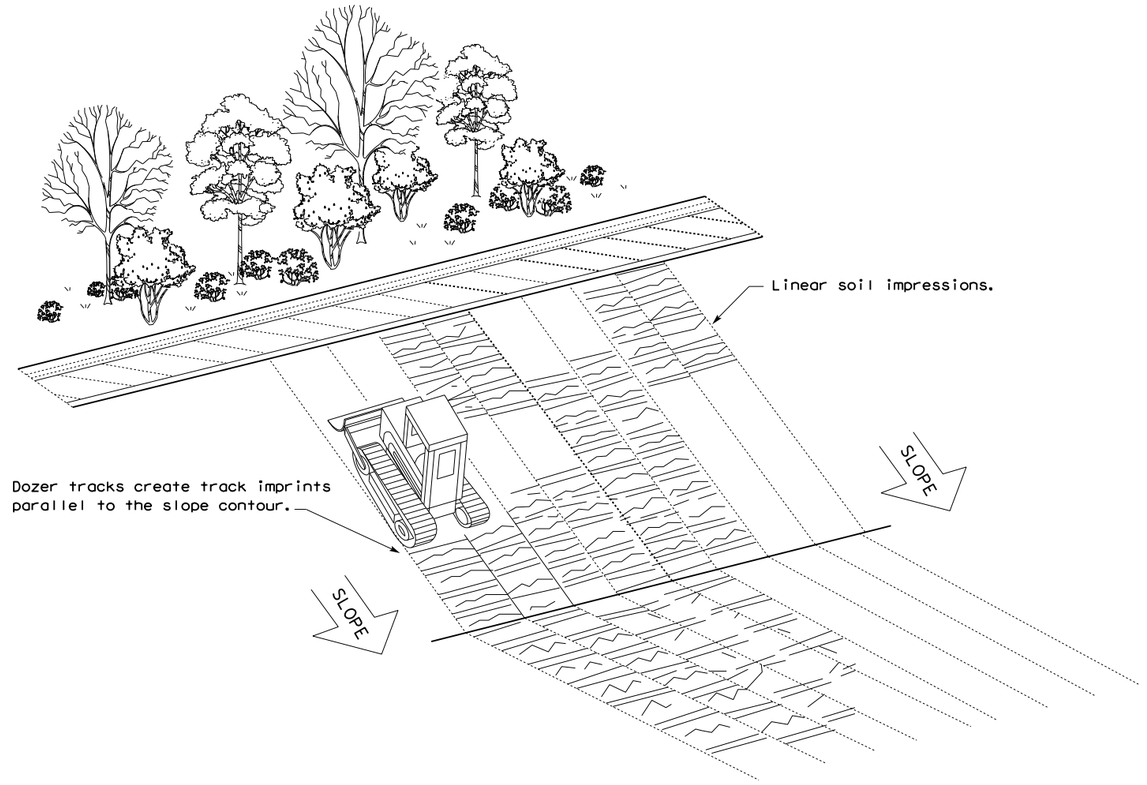

VERTICAL TRACKING

Texas Department of Transportation

Design Division Standard

TEMPORARY EROSION, SEDIMENT AND WATER POLLUTION CONTROL MEASURES

FENCE & VERTICAL TRACKING

EC(1)-16

FILE: ec116	DN: TxDOT	CK: KM	DW: VP	DN/CK: LS
© TxDOT: JULY 2016	CONT	SECT	JOB	HIGHWAY
REVISIONS	0914	05	222	RM 2243
	DIST		COUNTY	SHEET NO.
	AUS		WILLIAMSON	402

DISCLAIMER:
The use of this standard is governed by the "Texas Engineering Practice Act". No warranty of any kind is made by TxDOT for any purpose whatsoever. TxDOT assumes no responsibility for the conversion of this standard to other formats or for incorrect results or damages resulting from its use.

40AUG2025
GFILEC\Projects\County_Williamson\7473-02 RM 2243 Phase 1A\03_CADD\01_Shts\14-ENV\Stds\ec116.dgn

DISCLAIMER:
The use of this standard is governed by the "Texas Engineering Practice Act". No warranty of any kind is made by TxDOT for any purpose whatsoever. TxDOT assumes no responsibility for the conversion of this standard to other formats or for incorrect results or damages resulting from its use.

DATE: 4/10/2025
FILE: G:\TXC\Projects\County_Williamson\7473-02 RM 2243 Phase 1A\03_CADD\01_Shts\14-ENV\Stds\ec216.dgn

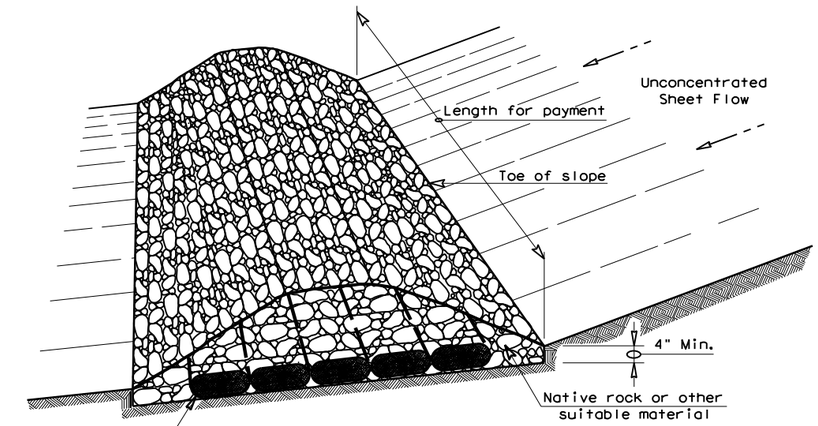

FILTER DAM AT TOE OF SLOPE

RFD1

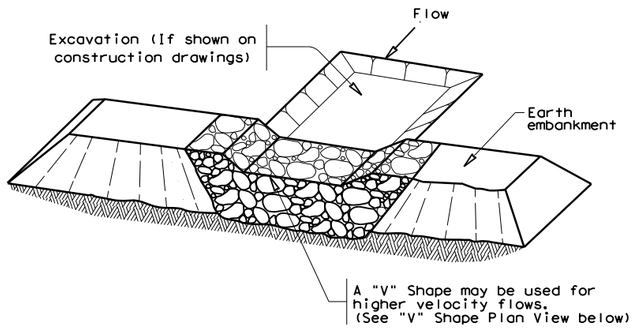

FILTER DAM AT SEDIMENT TRAP

RFD1 — OR — RFD2

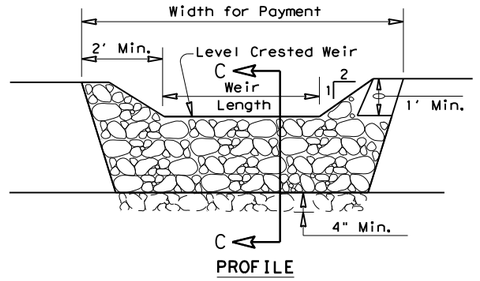

PROFILE

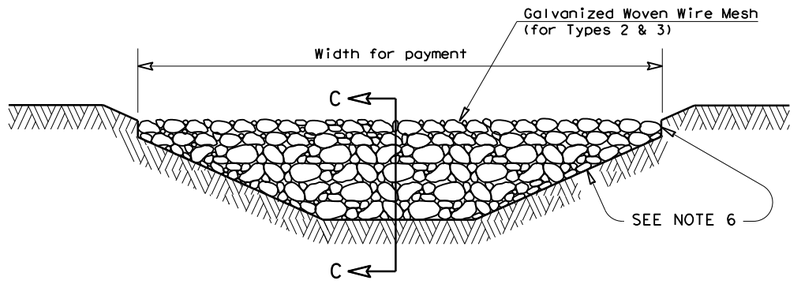

FILTER DAM AT CHANNEL SECTIONS

RFD1 — OR — RFD2 — OR — RFD3

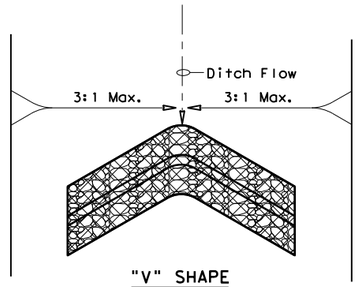

"V" SHAPE
PLAN VIEW

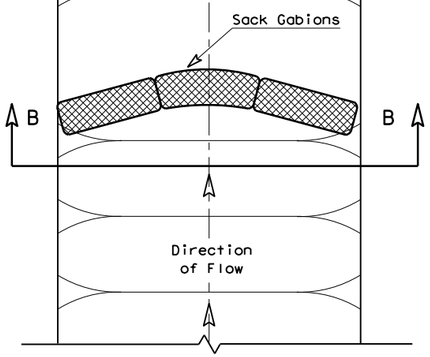

PLAN VIEW

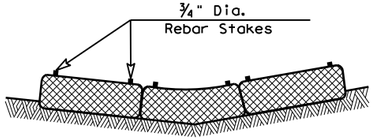

SECTION B-B

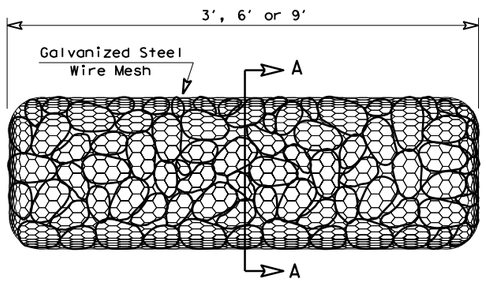

TYPE 4 (SACK GABIONS)

RFD4

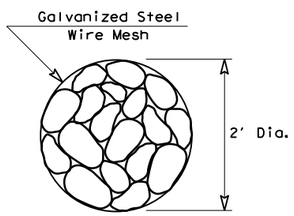

SECTION A-A

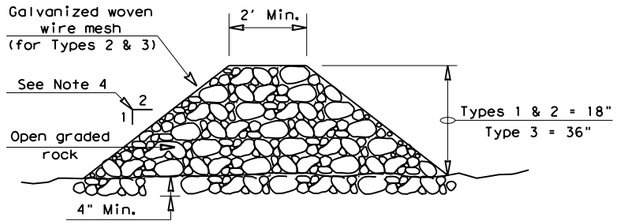

SECTION C-C

ROCK FILTER DAM USAGE GUIDELINES

Rock Filter Dams should be constructed downstream from disturbed areas to intercept sediment from overland runoff and/or concentrated flow. The dams should be sized to filter a maximum flow through rate of 60 GPM/FT^2 of cross sectional area. A 2 year storm frequency may be used to calculate the flow rate.

Type 1 (18" high with no wire mesh) (3" to 6" aggregate): Type 1 may be used at the toe of slopes, around inlets, in small ditches, and at dike or swale outlets. This type of dam is recommended to control erosion from a drainage area of 5 acres or less. Type 1 may not be used in concentrated high velocity flows (approximently 8 Ft/Sec or more) in which aggregate wash out may occur. Sandbags may be used at the embedded foundation (4" deep min.) for better filtering efficiency of low flows if called for on the plans or directed by the Engineer.

Type 2 (18" high with wire mesh) (3" to 6" aggregate): Type 2 may be used in ditches and at dike or swale outlets.

Type 3 (36" high with wire mesh) (4" to 8" aggregate): Type 3 may be used in stream flow and should be secured to the stream bed.

Type 4 (Sack gabions) (3" to 6" aggregate): Type 4 May be used in ditches and smaller channels to form an erosion control dam.

Type 5: Provide rock filter dams as shown on plans.

GENERAL NOTES

1. If shown on the plans or directed by the Engineer, filter dams should be placed near the toe of slopes where erosion is anticipated, upstream and/or downstream at drainage structures, and in roadway ditches and channels to collect sediment.
2. Materials (aggregate, wire mesh, sandbags, etc.) shall be as indicated by the specification for "Rock Filter Dams for Erosion and Sedimentation Control".
3. The rock filter dam dimensions shall be as indicated on the SW3P plans.
4. Side slopes should be 2:1 or flatter. Dams within the safety zone shall have sideslopes of 6:1 or flatter.
5. Maintain a minimum of 1' between top of rock filter dam weir and top of embankment for filter dams at sediment traps.
6. Filter dams should be embedded a minimum of 4" into existing ground.
7. The sediment trap for ponding of sediment laden runoff shall be of the dimensions shown on the plans.
8. Rock filter dam types 2 & 3 shall be secured with 20 gauge galvanized woven wire mesh with 1" diameter hexagonal openings. The aggregate shall be placed on the mesh to the height & slopes specified. The mesh shall be folded at the upstream side over the aggregate and tightly secured to itself on the downstream side using wire ties or hog rings. For in stream use, the mesh should be secured or staked to the stream bed prior to aggregate placement.
9. Sack Gabions should be staked down with ¾" dia. rebar stakes, and have a double-twisted hexagonal weave with a nominal mesh opening of 2 ½" x 3 ¼"
10. Flow outlet should be onto a stabilized area (vegetation, rock, etc.).
11. The guidelines shown hereon are suggestions only and may be modified by the Engineer.

PLAN SHEET LEGEND

Type 1 Rock Filter Dam	RFD1
Type 2 Rock Filter Dam	RFD2
Type 3 Rock Filter Dam	RFD3
Type 4 Rock Filter Dam	RFD4

Texas Department of Transportation — Design Division Standard

TEMPORARY EROSION, SEDIMENT AND WATER POLLUTION CONTROL MEASURES

ROCK FILTER DAMS

EC(2)-16

FILE: ec216	DN: TxDOT	CK: KM	DW: VP	DN/CK: LS
© TxDOT: JULY 2016	CONT	SECT	JOB	HIGHWAY
REVISIONS	0914	05	222	RM 2243
	DIST	COUNTY		SHEET NO.
	AUS	WILLIAMSON		403

DISCLAIMER:
The use of this standard is governed by the "Texas Engineering Practice Act". No warranty of any kind is made by TxDOT for any purpose whatsoever. TxDOT assumes no responsibility for the conversion of this standard to other formats or for incorrect results or damages resulting from its use.

DATE: 4/10/2025
FILE: G:\TXC\Projects\County_Williamson\7473-02 RM 2243 Phase 1A\03_CADD\01_Shts\14-ENV\Srds\ec316.dgn

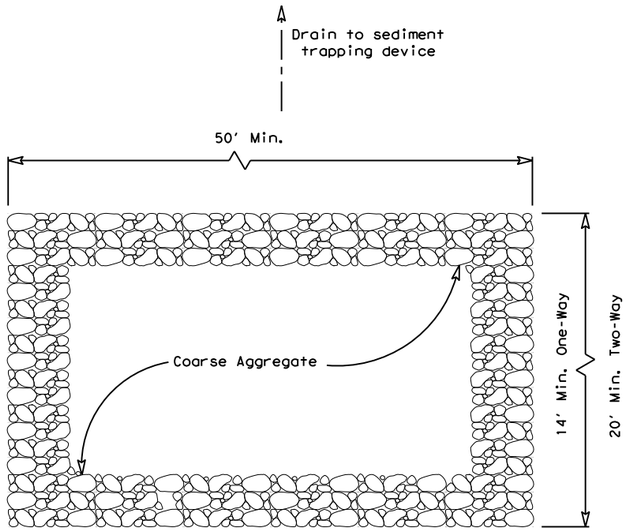

PLAN VIEW

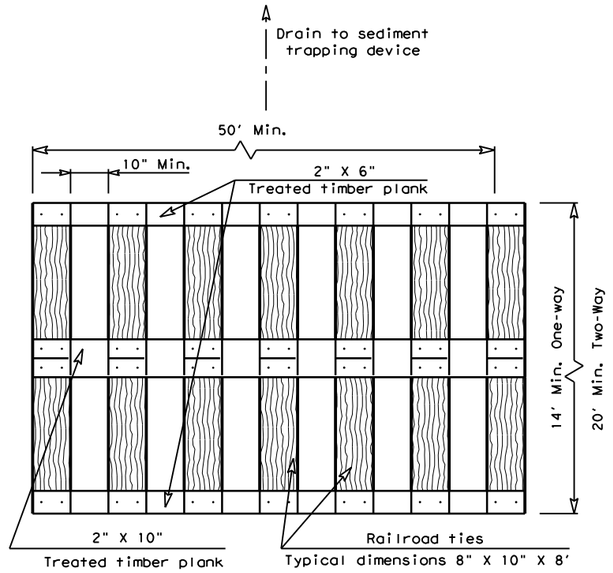

PLAN VIEW

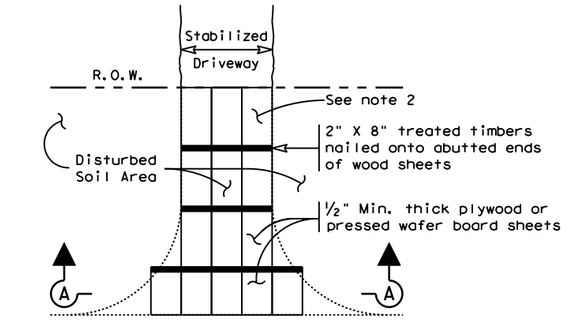

PLAN VIEW

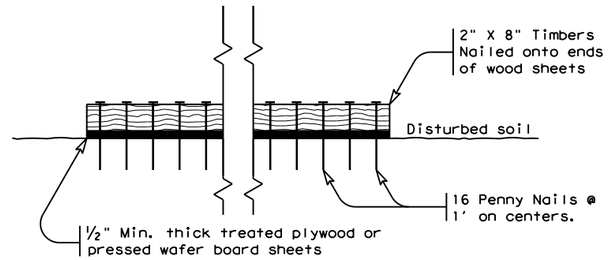

SECTION A-A

CONSTRUCTION EXIT (TYPE 3)

SHORT TERM

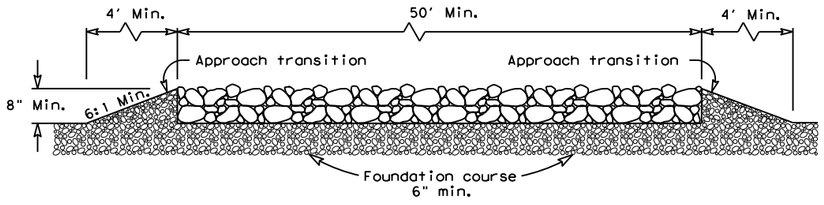

ELEVATION VIEW

CONSTRUCTION EXIT (TYPE 1)

ROCK CONSTRUCTION (LONG TERM)

GENERAL NOTES (TYPE 1)

1. The length of the type 1 construction exit shall be as indicated on the plans, but not less than 50'.
2. The coarse aggregate should be open graded with a size of 4" to 8".
3. The approach transitions should be no steeper than 6:1 and constructed as directed by the Engineer.
4. The construction exit foundation course shall be flexible base, bituminous concrete, portland cement concrete or other materialas approved by the Engineer.
5. The construction exit shall be graded to allow drainage to a sediment trapping device.
6. The guidelines shown hereon are suggestions only and may be modified by the Engineer.
7. Construct exits with a width of at least 14 ft. for one-way and 20 ft. for two-way traffic for the full width of the exit, or as directed by the engineer.

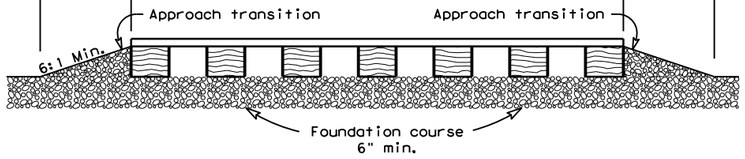

ELEVATION VIEW

CONSTRUCTION EXIT (TYPE 2)

TIMBER CONSTRUCTION (LONG TERM)

GENERAL NOTES (TYPE 2)

1. The length of the type 2 construction exit shall be as indicated on the plans, but not less than 50'.
2. The treated timber planks shall be attached to the railroad ties with ½"x 6" min. lag bolts. Other fasteners may be used as approved by the Engineer.
3. The treated timber planks shall be #2 grade min., and should be free from large and loose knots.
4. The approach transitions shall be no steeper than 6:1 and constructed as directed by the Engineer.
5. The construction exit foundation course shall be flexible base, bituminous concrete, portland cement concrete or other material as approved by the Engineer.
6. The construction exit should be graded to allow drainage to a sediment trapping device.
7. The guidelines shown hereon are suggestions only and may be modified by the Engineer.
8. Construct exits with a width of at least 14 ft. for one-way and 20 ft. for two-way traffic for the full width of the exit, or as directed by the engineer.

GENERAL NOTES (TYPE 3)

1. The length of the type 3 construction exit shall be as shown on the plans, or as directed by the Engineer.
2. The type 3 construction exit may be constructed from open graded crushed stone with a size of two to four inches spread a min. of 4" thick to the limits shown on the plans.
3. The treated timber planks shall be #2 grade min., and should be free from large and loose knots.
4. The guidelines shown hereon are suggestions only and may be modified by the Engineer.

Texas Department of Transportation

Design Division Standard

TEMPORARY EROSION, SEDIMENT AND WATER POLLUTION CONTROL MEASURES

CONSTRUCTION EXITS

EC(3)-16

FILE: ec316	DN: TxDOT	CK: KM	DW: VP	DN/CK: LS
©TxDOT: JULY 2016	CONT	SECT	JOB	HIGHWAY
REVISIONS	0914	05	222	RM 2243
	DIST	COUNTY		SHEET NO.
	AUS	WILLIAMSON		404

DISCLAIMER:
The use of this standard is governed by the "Texas Engineering Practice Act". No warranty of any kind is made by TxDOT for any purpose whatsoever. TxDOT assumes no responsibility for the conversion of this standard to other formats or for incorrect results or damages resulting from its use.

DATE: 4/10/2025
FILE: G:\TXCV\Projects\County_Williamson\7473-02 RM 2243 Phase 1A\03_CADD\01_Shts\14-ENV\Stds\ec916.dgn

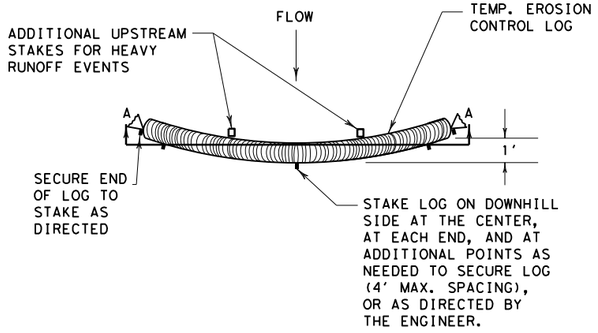

PLAN VIEW

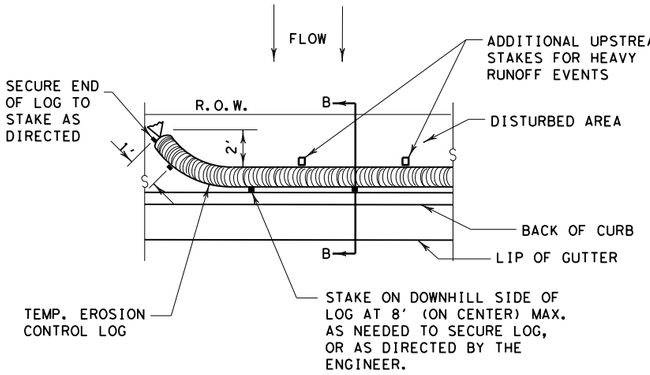

PLAN VIEW

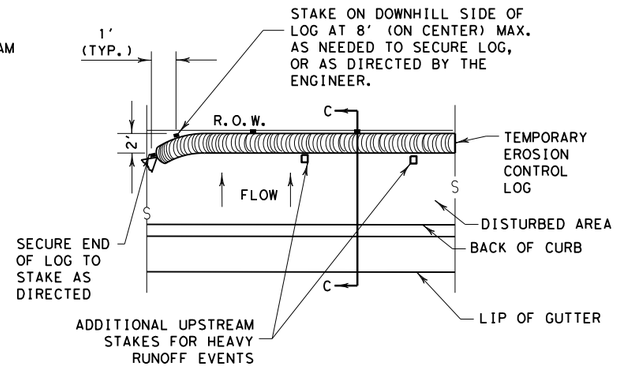

PLAN VIEW

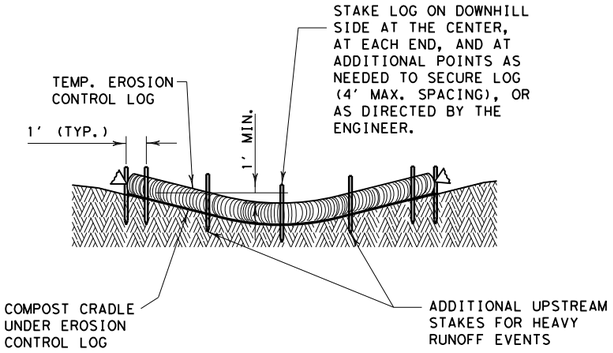

SECTION A-A

EROSION CONTROL LOG DAM

CL-D

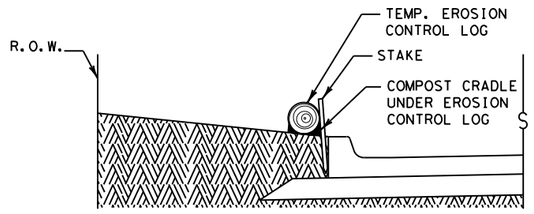

SECTION B-B

EROSION CONTROL LOG AT BACK OF CURB

CL-BOC

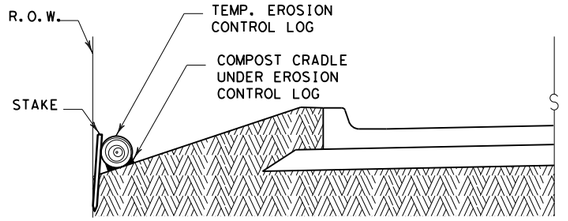

SECTION C-C

EROSION CONTROL LOG AT EDGE OF RIGHT-OF-WAY

CL-ROW

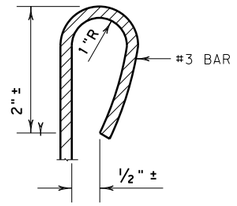

REBAR STAKE DETAIL

LEGEND

- CL-D — EROSION CONTROL LOG DAM
- CL-BOC — EROSION CONTROL LOG AT BACK OF CURB
- CL-ROW — EROSION CONTROL LOG AT EDGE OF RIGHT-OF-WAY
- CL-SST — EROSION CONTROL LOGS ON SLOPES STAKE AND TRENCHING ANCHORING
- CL-SSL — EROSION CONTROL LOGS ON SLOPES STAKE AND LASHING ANCHORING
- CL-DI — EROSION CONTROL LOG AT DROP INLET
- CL-CI — EROSION CONTROL LOG AT CURB INLET
- CL-GI — EROSION CONTROL LOG AT CURB & GRATE INLET

GENERAL NOTES:

1. EROSION CONTROL LOGS SHALL BE INSTALLED IN ACCORDANCE WITH MANFACTURER'S RECOMMENDATIONS, OR AS DIRECTED BY THE ENGINEER.
2. LENGTHS OF EROSION CONTROL LOGS SHALL BE IN ACCORDANCE WITH MANUFACTURER'S RECOMMENDATIONS AND AS REQUIRED FOR THE PURPOSE INTENDED.
3. UNLESS OTHERWISE DIRECTED, USE BIODEGRADABLE OR PHOTODEGRADABLE CONTAINMENT MESH ONLY WHERE LOG WILL REMAIN IN PLACE AS PART OF A VEGETATIVE SYSTEM. FOR TEMPORARY INSTALLATIONS, USE RECYCLABLE CONTAINMENT MESH.
4. FILL LOGS WITH SUFFICIENT FILTER MATERIAL TO ACHIEVE THE MINIMUM COMPACTED DIAMETER SPECIFIED IN THE PLANS WITHOUT EXCESSIVE DEFORMATION.
5. STAKES SHALL BE 2" X 2" WOOD OR #3 REBAR, 2'-4' LONG, EMBEDDED SUCH THAT 2" PROTRUDES ABOVE LOG, OR AS DIRECTED BY THE ENGINEER.
6. DO NOT PLACE STAKES THROUGH CONTAINMENT MESH.
7. COMPOST CRADLE MATERIAL IS INCIDENTAL & WILL NOT BE PAID FOR SEPARATELY.
8. SANDBAGS USED AS ANCHORS SHALL BE PLACED ON TOP OF LOGS & SHALL BE OF SUFFICIENT SIZE TO HOLD LOGS IN PLACE.
9. TURN THE ENDS OF EACH ROW OF LOGS UPSLOPE TO PREVENT RUNOFF FROM FLOWING AROUND THE LOG.
10. FOR HEAVY RUNOFF EVENTS, ADDITIONAL UPSTREAM STAKES MAY BE NECESSARY TO KEEP LOG FROM FOLDING IN ON ITSELF.

SEDIMENT BASIN & TRAP USAGE GUIDELINES

An erosion control log sediment trap may be used to filter sediment out of runoff draining from an unstabilized area.

Log Traps: The drainage area for a sediment trap should not exceed 5 acres. The trap capacity should be 1800 CF/Acre (0.5" over the drainage area).

Control logs should be placed in the following locations:

1. Within drainage ditches spaced as needed or min. 500' on center
2. Immediately preceding ditch inlets or drain inlets
3. Just before the drainage enters a water course
4. Just before the drainage leaves the right of way
5. Just before the drainage leaves the construction limits where drainage flows away from the project.

The logs should be cleaned when the sediment has accumulated to a depth of 1/2 the log diameter.

Cleaning and removal of accumulated sediment deposits is incidental and will not be paid for separately.

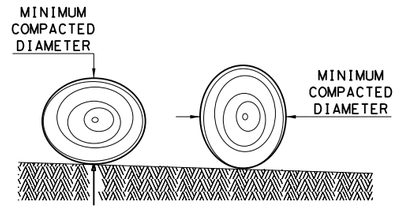

DIAMETER MEASUREMENTS OF EROSION CONTROL LOGS SPECIFIED IN PLANS

Texas Department of Transportation

Design Division Standard

TEMPORARY EROSION, SEDIMENT AND WATER POLLUTION CONTROL MEASURES

EROSION CONTROL LOG

EC(9)-16

FILE: ec916	DN: TxDOT		CK: KM		DW: LS/PT	CK: LS
© TxDOT: JULY 2016	CONT	SECT	JOB		HIGHWAY	
REVISIONS	0914	05	222		RM 2243	
	DIST	COUNTY			SHEET NO.	
	AUS	WILLIAMSON			405	

DISCLAIMER:
The use of this standard is governed by the "Texas Engineering Practice Act". No warranty of any kind is made by TxDOT for any purpose whatsoever. TxDOT assumes no responsibility for the conversion of this standard to other formats or for incorrect results or damages resulting from its use.

DATE: 4/10/2025
FILE: G:\TXC\Projects\County_Williamson\7473-02 RM 2243 Phase 1A\03_CADD\01_Shts\14-ENV\Stds\ec916.dgn

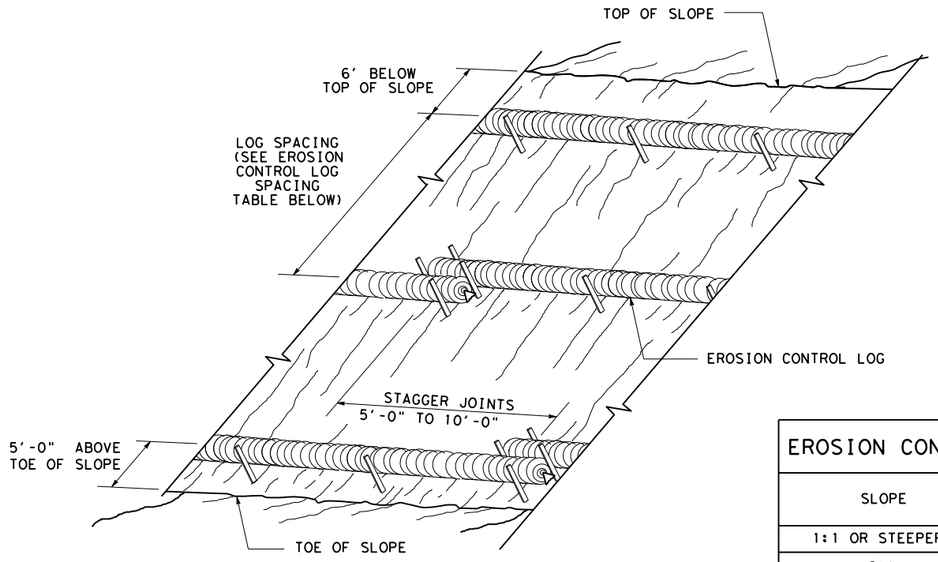

EROSION CONTROL LOGS ON SLOPES
STAKE AND TRENCHING ANCHORING

CL-SST

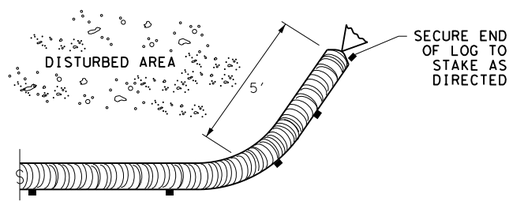

END SECTION RAP DETAIL

EROSION CONTROL LOG SPACING TABLE				
SLOPE	LOG DIAMETER			
	6"	8"	12"	18"
1:1 OR STEEPER	5'	10'	15'	20'
2:1	10'	20'	30'	40'
3:1	15'	30'	45'	60'
4:1 OR FLATTER	20'	40'	60'	80'

* ADJUSTMENTS CAN BE MADE FOR SOIL TYPE:
SOFT, LOAMY SOILS-ADJUST ROWS CLOSER TOGETHER;
HARD, ROCKY SOILS- ADJUST ROWS FARTHER APART

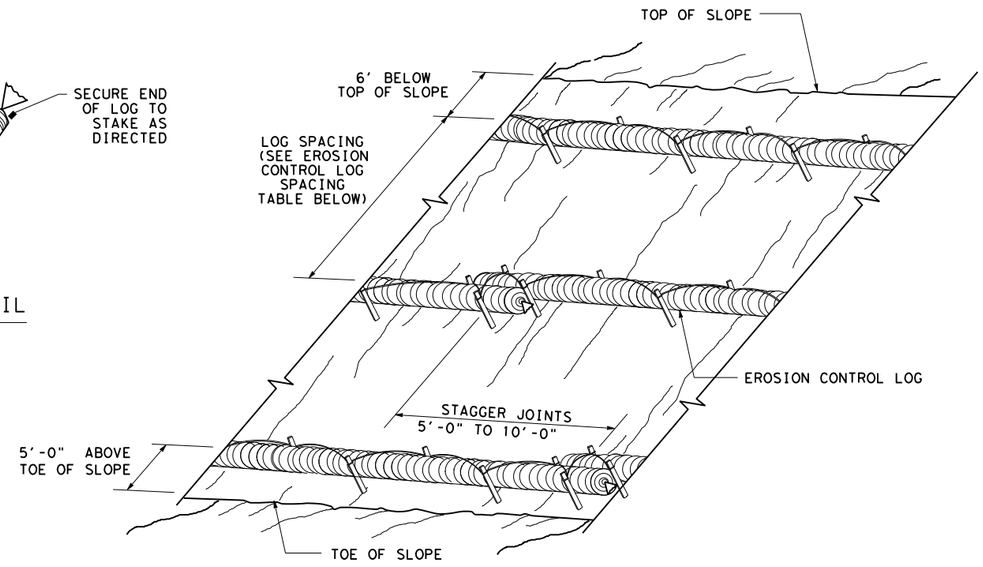

EROSION CONTROL LOGS ON SLOPES
STAKE AND LASHING ANCHORING

CL-SSL

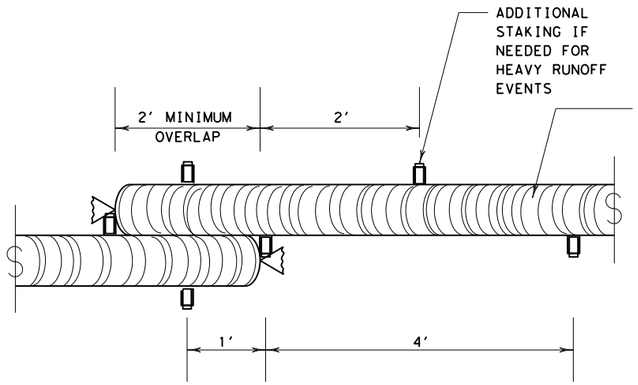

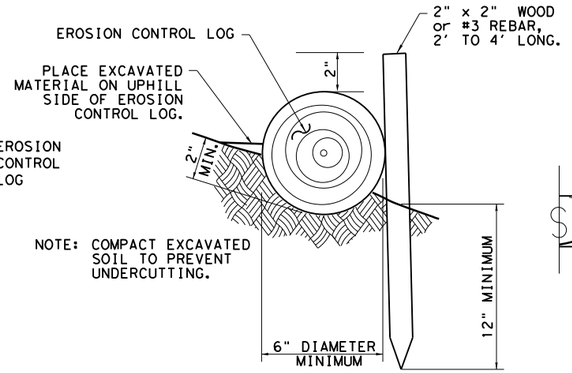

STAKE AND TRENCHING ANCHORING DETAIL

CL-SST

TRENCH DEPTH TABLE	
LOG DIAMETER	DEPTH
6"	2"
8"	3"
12"	4"
18"	5"

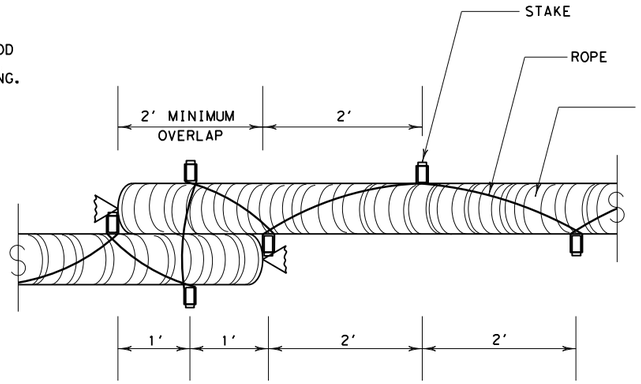

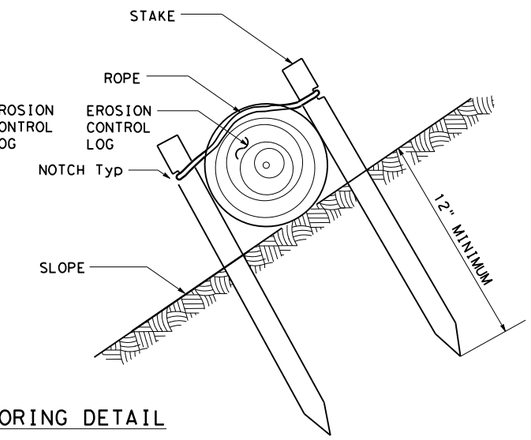

STAKE AND LASHING ANCHORING DETAIL

CL-SSL

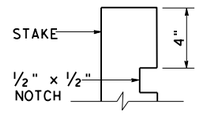

STAKE NOTCH DETAIL

SHEET 2 OF 3

Texas Department of Transportation | Design Division Standard

TEMPORARY EROSION, SEDIMENT AND WATER POLLUTION CONTROL MEASURES

EROSION CONTROL LOG

EC(9)-16

FILE: ec116	DN: TxDOT	CK: KM	DW: LS/PT	CK: LS
© TxDOT: JULY 2016	CONT	SECT	JOB	HIGHWAY
REVISIONS	0914	05	222	RM 2243
	DIST	COUNTY		SHEET NO.
	AUS	WILLIAMSON		406

DISCLAIMER:
The use of this standard is governed by the "Texas Engineering Practice Act". No warranty of any kind is made by TxDOT for any purpose whatsoever. TxDOT assumes no responsibility for the conversion of this standard to other formats or for incorrect results or damages resulting from its use.

DATE: 4/10/2025
FILE: G:\TXC\Projects\County_Williamson\7473-02 RM 2243 Phase 1A\03_CADD\01_Shts\14-ENV\Stds\ec916.dgn

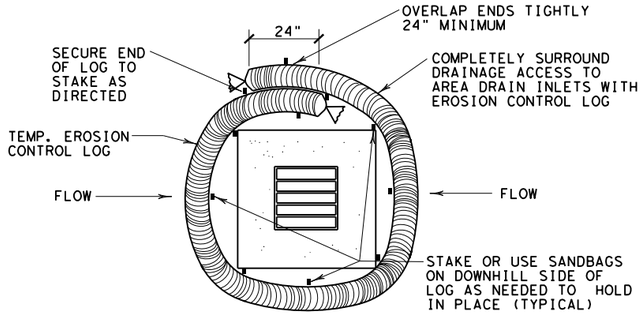

EROSION CONTROL LOG AT DROP INLET

CL-DI

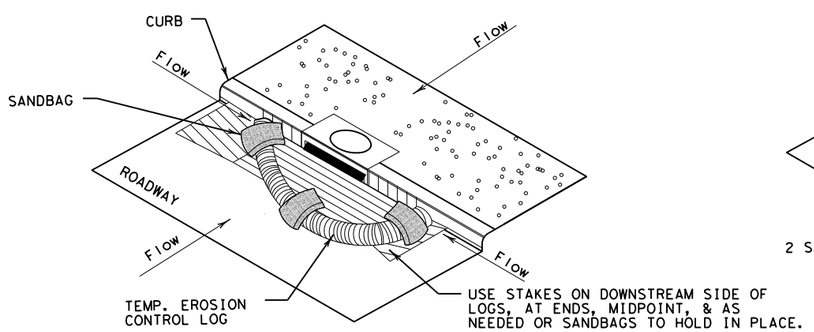

EROSION CONTROL LOG AT CURB INLET

CL-CI

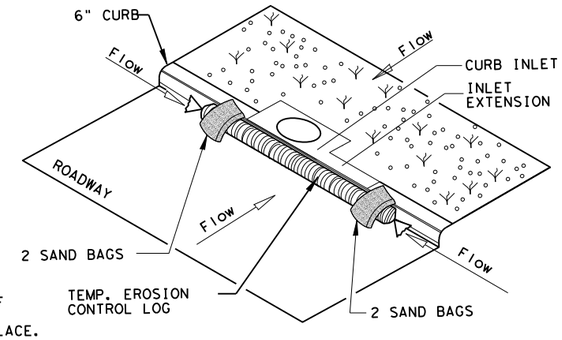

EROSION CONTROL LOG AT CURB INLET

CL-CI

NOTE:
EROSION CONTROL LOGS USED AT CURB INLETS SHOULD ONLY BE USED IF THEY WILL NOT IMPEDE TRAFFIC OR FLOOD THE ROADWAY OR WHEN THE STORM SEWER SYSTEM IS NOT FULLY FUNCTIONAL.

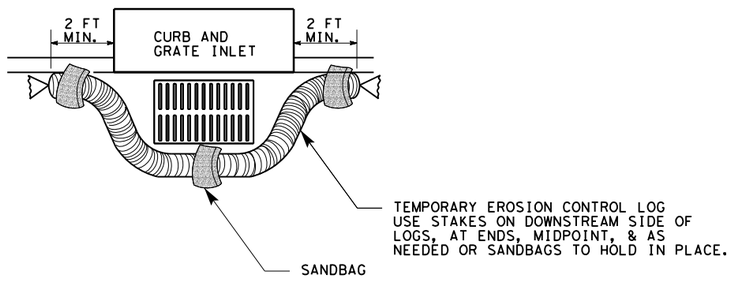

EROSION CONTROL LOG AT CURB & GRADE INLET

CL-GI

SECTION B-B

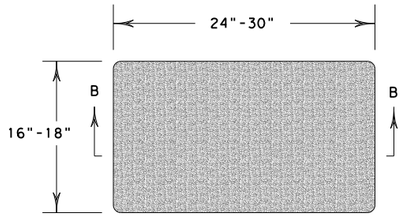

SANDBAG DETAIL

Texas Department of Transportation

Design Division Standard

TEMPORARY EROSION, SEDIMENT AND WATER POLLUTION CONTROL MEASURES

EROSION CONTROL LOG

EC(9)-16

FILE: ec916	DN: TxDOT	CK: KM	DW: LS/PT	CK: LS
© TxDOT: JULY 2016	CONT	SECT	JOB	HIGHWAY
REVISIONS	0914	05	222	RM 2243
	DIST	COUNTY		SHEET NO.
	AUS	WILLIAMSON		407

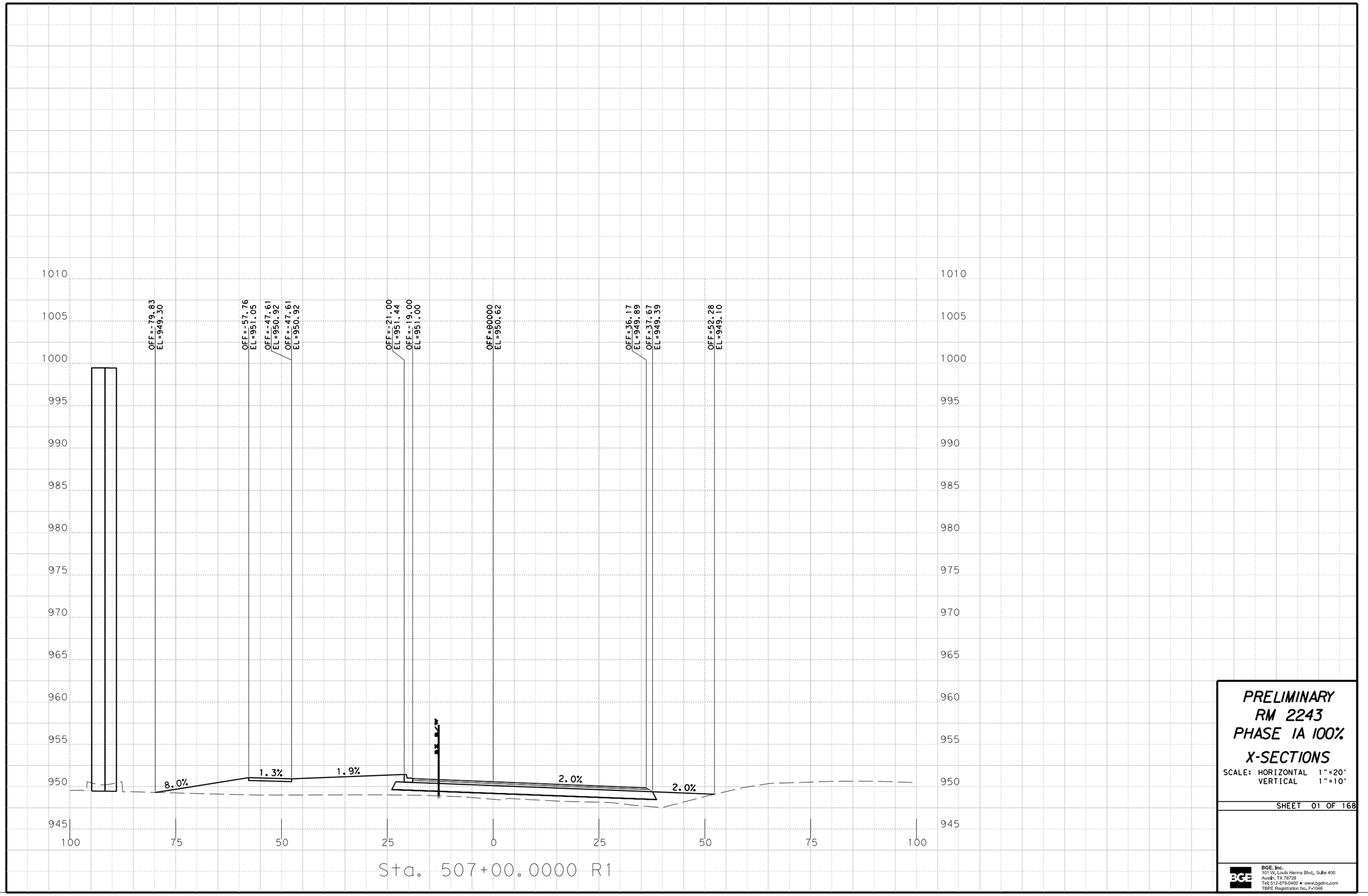

Sta. 507+00.0000 R1

PRELIMINARY
RM 2243
PHASE IA 100%
X-SECTIONS

SCALE: HORIZONTAL 1"=20'
VERTICAL 1"=10'

SHEET 01 OF 168

BGE, Inc.
101 W. Louis Henna Blvd., Suite 400
Austin, TX 78728
Tel: 512-879-0400 • www.bgeinc.com
TBPE Registration No. F-1046

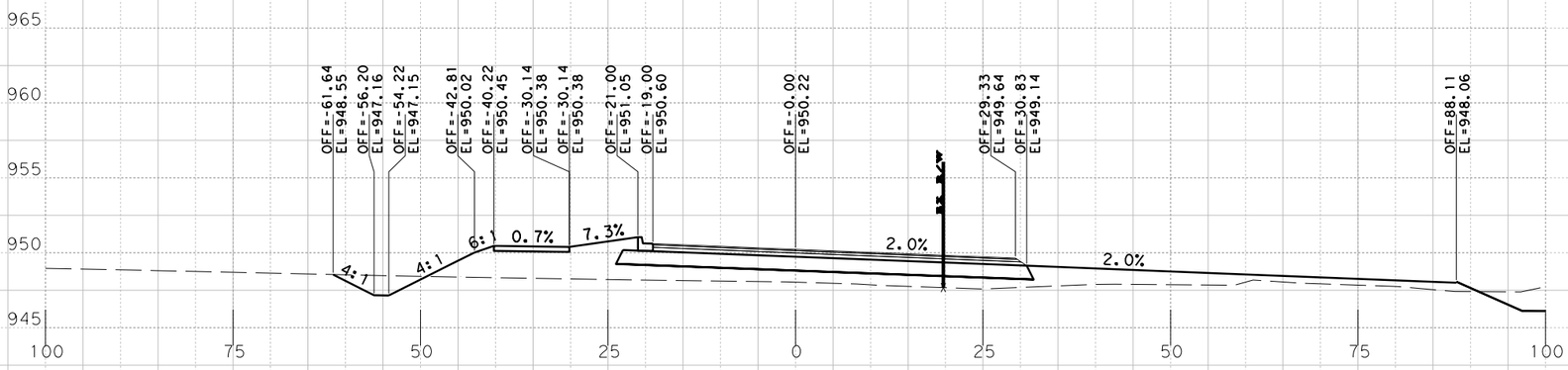

Sta. 508+00.0000 R1

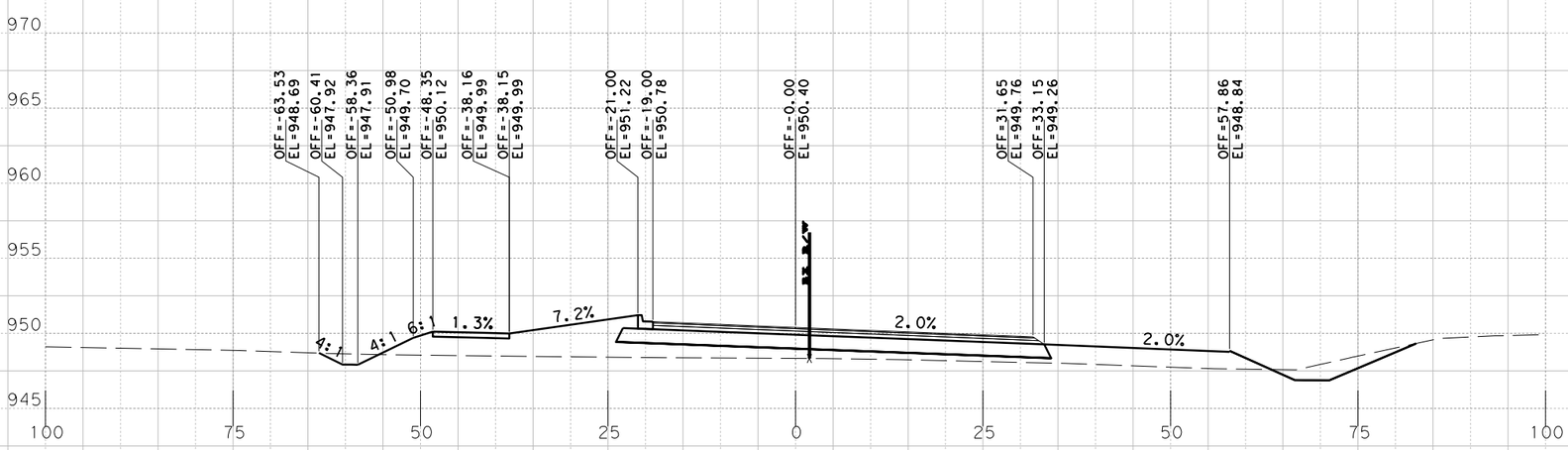

Sta. 507+50.0000 R1

PRELIMINARY
RM 2243
PHASE IA 100%

X-SECTIONS

SCALE: HORIZONTAL 1"=20'
VERTICAL 1"=10'

SHEET 02 OF 168

BGE, Inc.
101 W. Louis Henna Blvd., Suite 400
Austin, TX 78728
Tel: 512-879-0400 • www.bgeinc.com
TBPE Registration No. F-1046

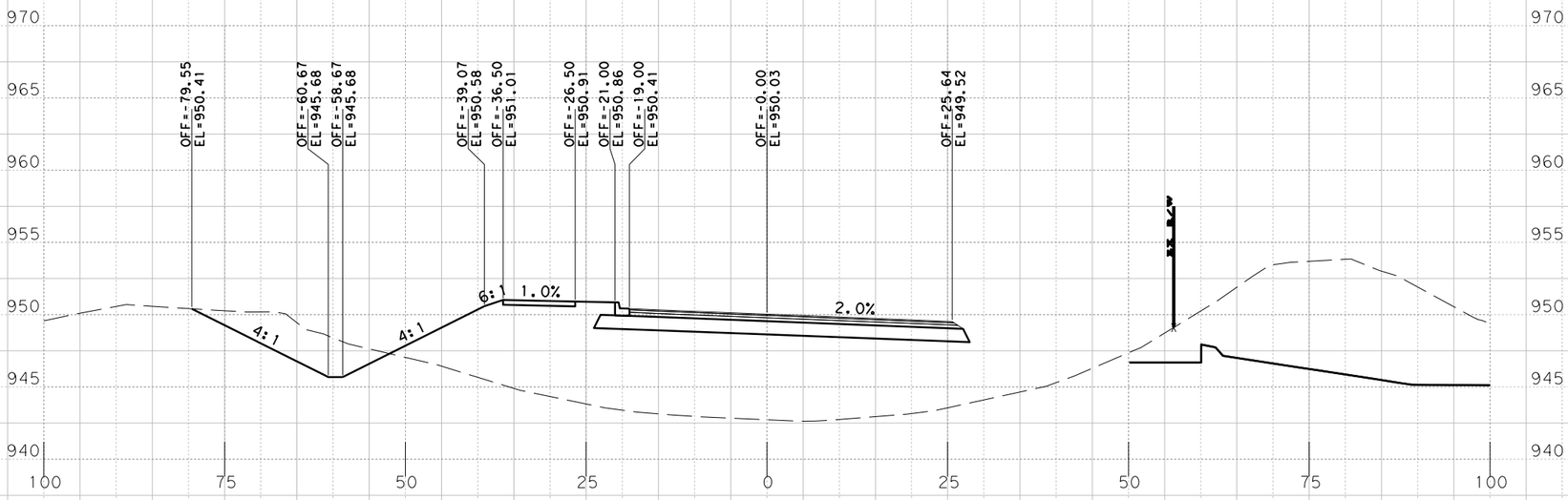

S+a. 509+00.0000 R1

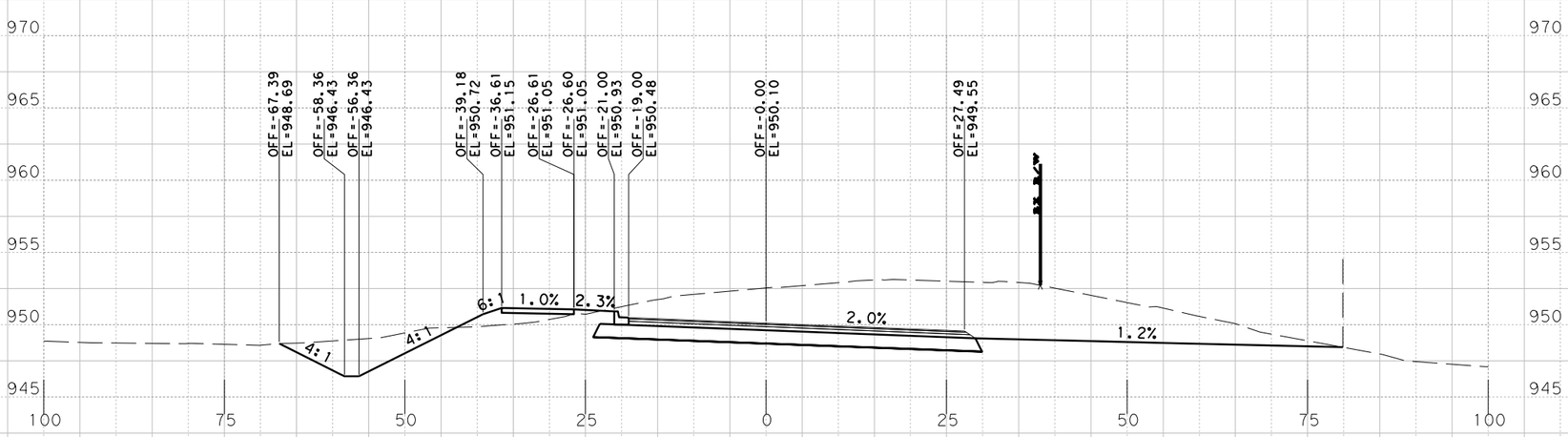

S+a. 508+50.0000 R1

PRELIMINARY
RM 2243
PHASE IA 100%
X-SECTIONS

SCALE: HORIZONTAL 1"=20'
VERTICAL 1"=10'

SHEET 03 OF 168

BGE, Inc.
101 W. Louis Henna Blvd., Suite 400
Austin, TX 78728
Tel: 512-879-0400 • www.bgeinc.com
TBPE Registration No. F-1046

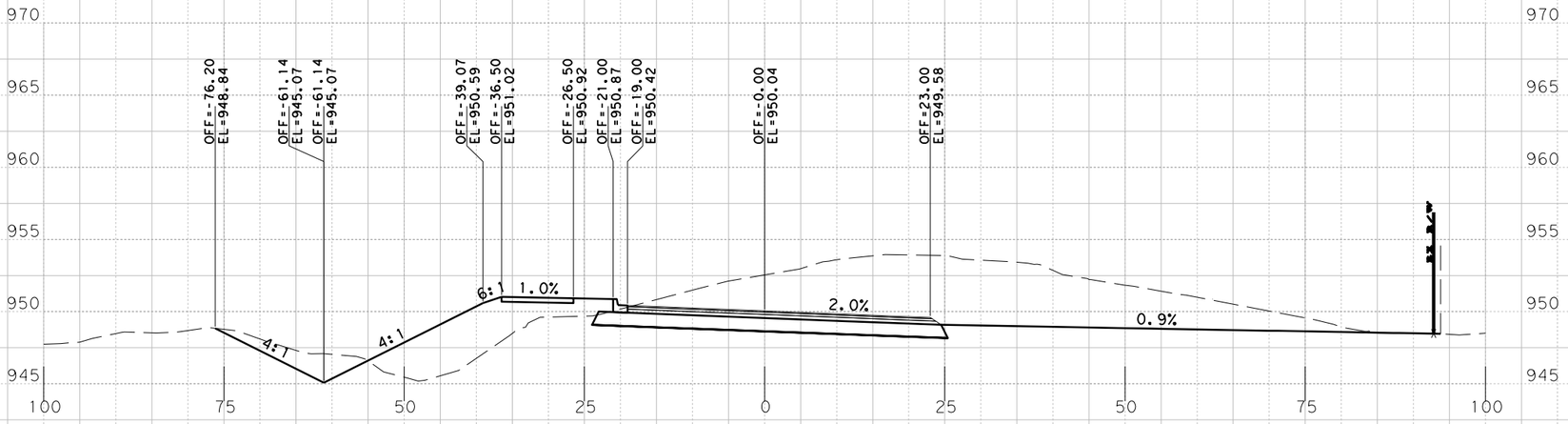

Sta. 510+00.0000 R1

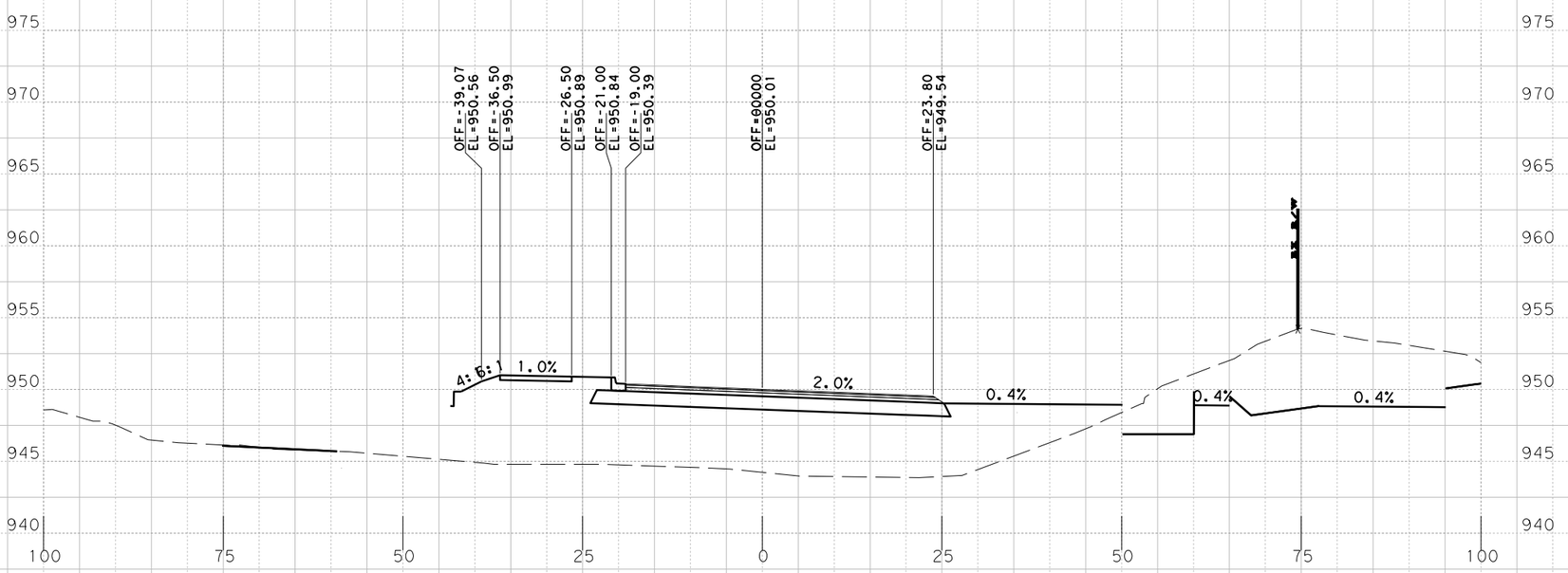

Sta. 509+50.0000 R1

PRELIMINARY
RM 2243
PHASE IA 100%

X-SECTIONS

SCALE: HORIZONTAL 1"=20'
VERTICAL 1"=10'

SHEET 04 OF 168

BGE, Inc.
101 W. Louis Henna Blvd., Suite 400
Austin, TX 78728
Tel: 512-879-0400 • www.bgeinc.com
TBPE Registration No. F-1046

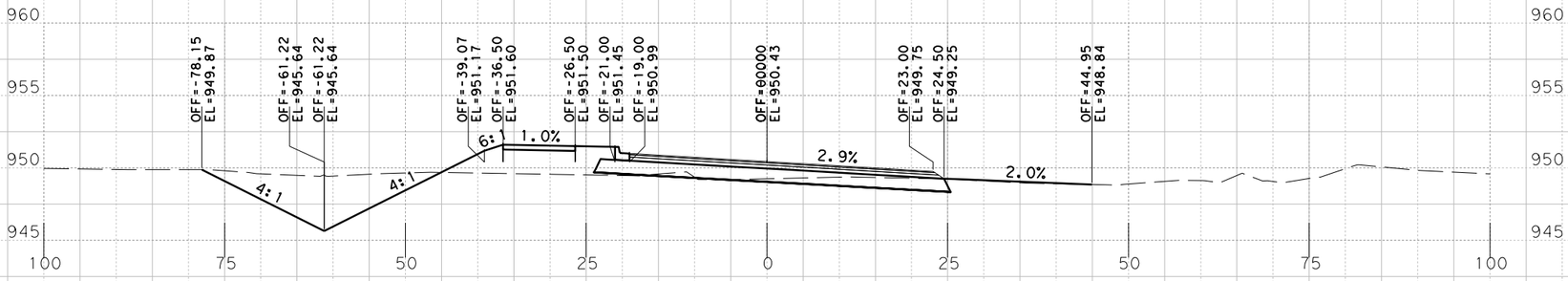

S+a. 511+50.0000 R1

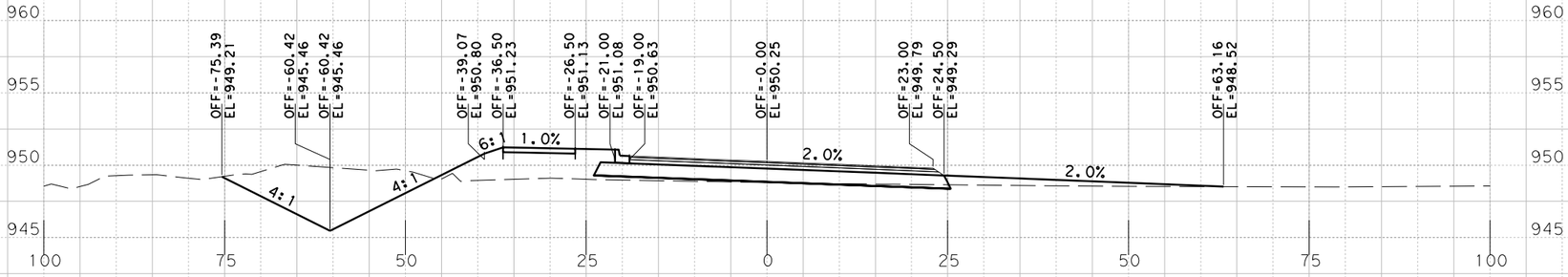

S+a. 511+00.0000 R1

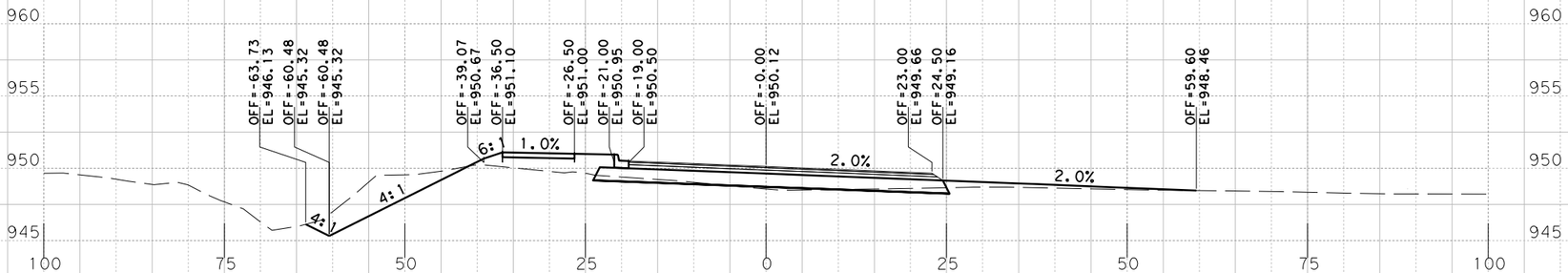

S+a. 510+50.0000 R1

PRELIMINARY
RM 2243
PHASE IA 100%

X-SECTIONS

SCALE: HORIZONTAL 1"=20'
VERTICAL 1"=10'

SHEET 05 OF 168

BGE, Inc.
101 W. Louis Henna Blvd., Suite 400
Austin, TX 78728
Tel: 512-879-0400 • www.bgeinc.com
TBPE Registration No. F-1046

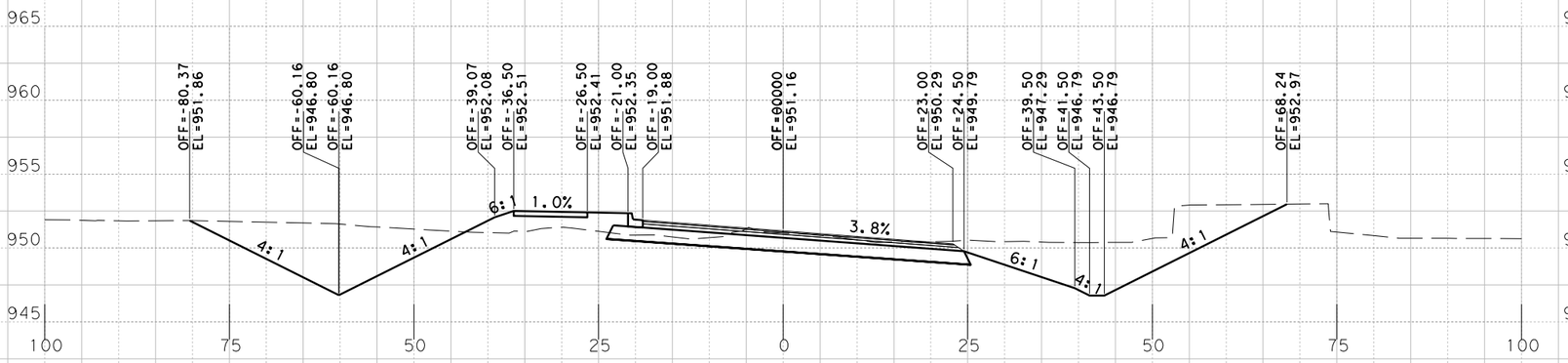

Sta. 513+00.0000 R1

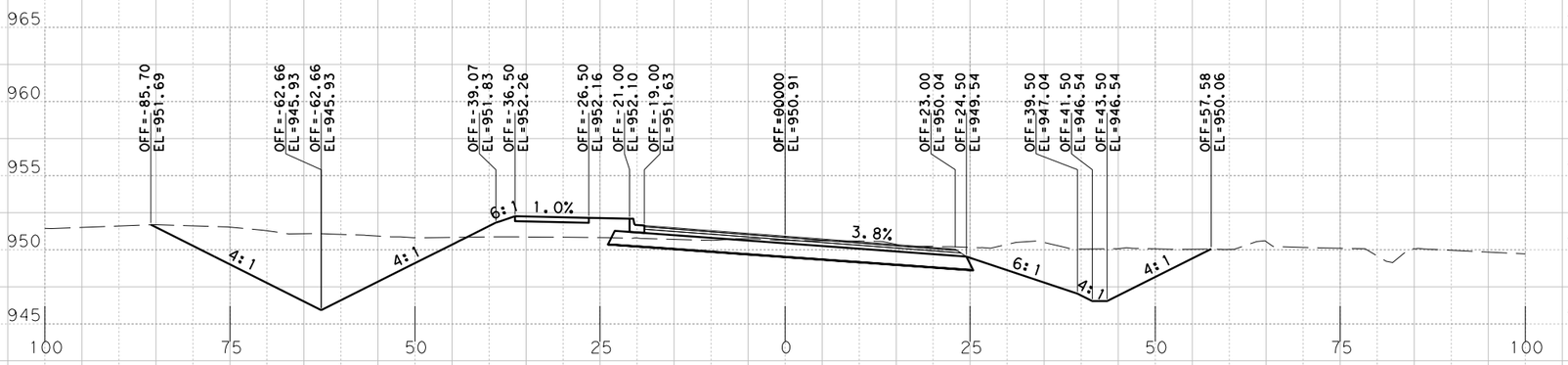

Sta. 512+50.0000 R1

DW# 02

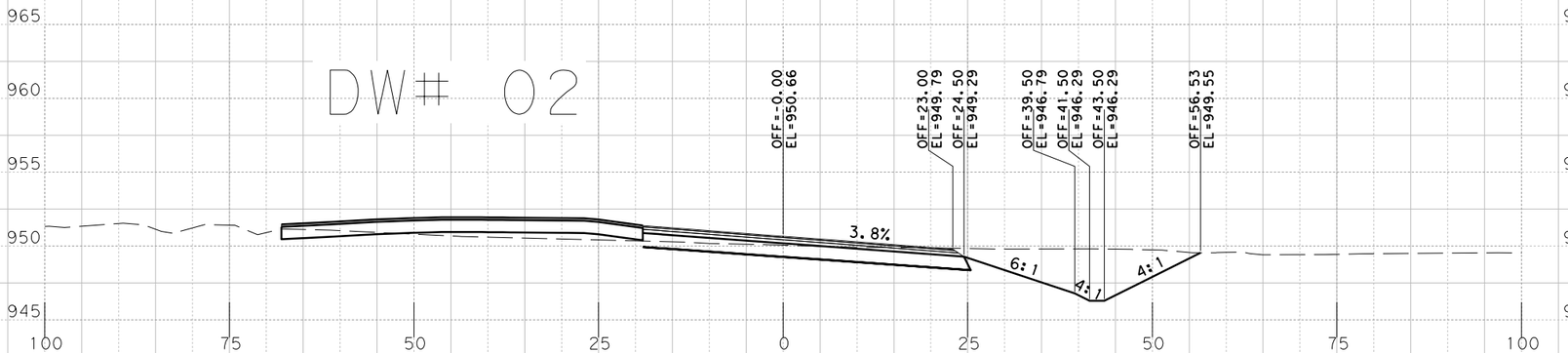

Sta. 512+00.0000 R1

PRELIMINARY
RM 2243
PHASE IA 100%

X-SECTIONS

SCALE: HORIZONTAL 1"=20'
VERTICAL 1"=10'

SHEET 06 OF 168

BGE, Inc.
101 W. Louis Henna Blvd., Suite 400
Austin, TX 78728
Tel: 512-879-0400 • www.bgeinc.com
TBPE Registration No. F-1046

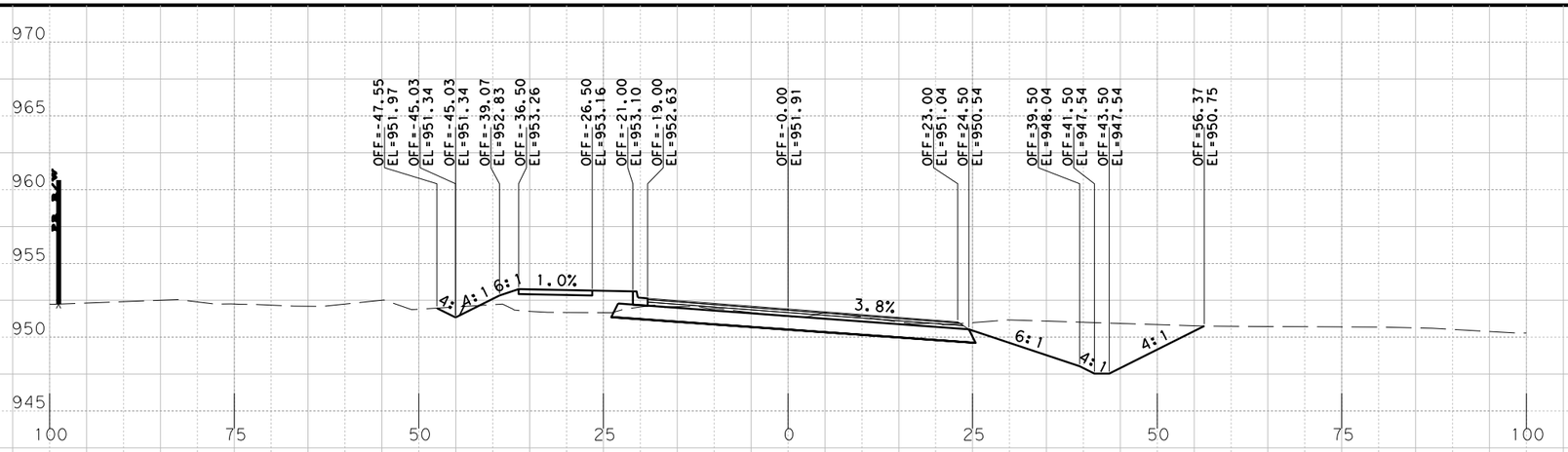

Sta. 514+50.0000 R1

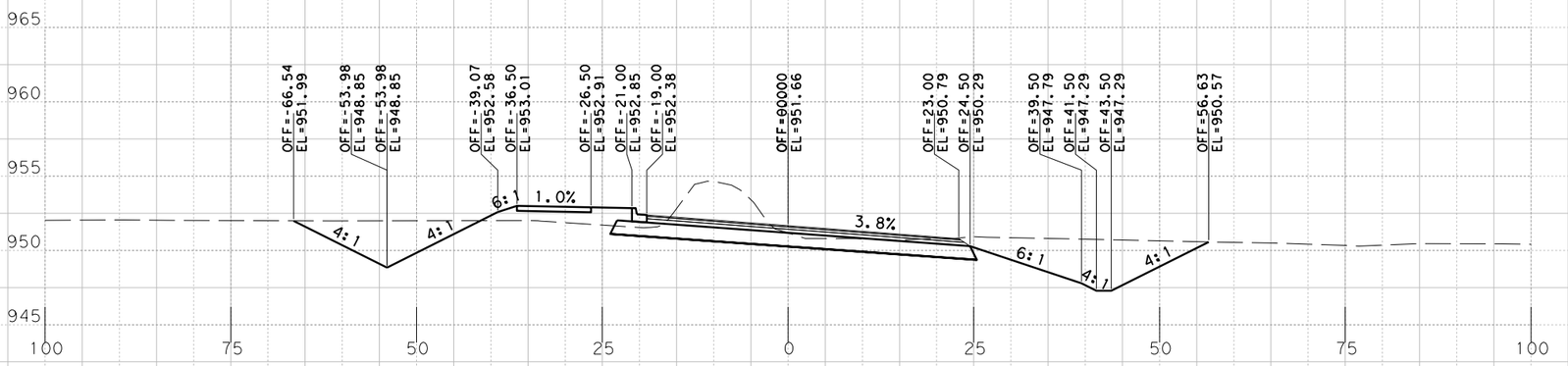

Sta. 514+00.0000 R1

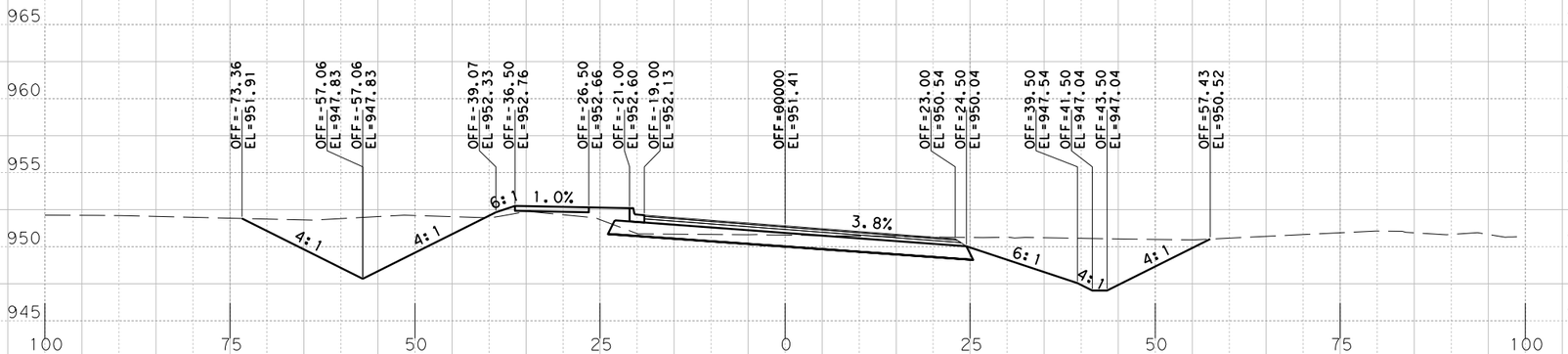

Sta. 513+50.0000 R1

PRELIMINARY
RM 2243
PHASE IA 100%

X-SECTIONS

SCALE: HORIZONTAL 1"=20'
VERTICAL 1"=10'

SHEET 07 OF 168

BGE, Inc.
101 W. Louis Henna Blvd., Suite 400
Austin, TX 78728
Tel: 512-879-0400 • www.bgeinc.com
TBPE Registration No. F-1046

Sta. 516+00.0000 R1

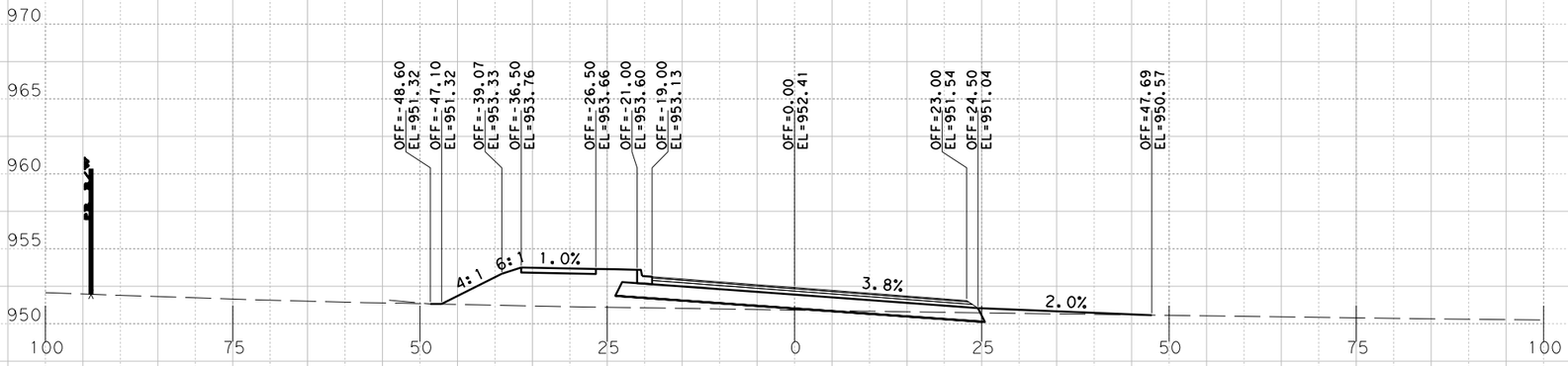

Sta. 515+50.0000 R1

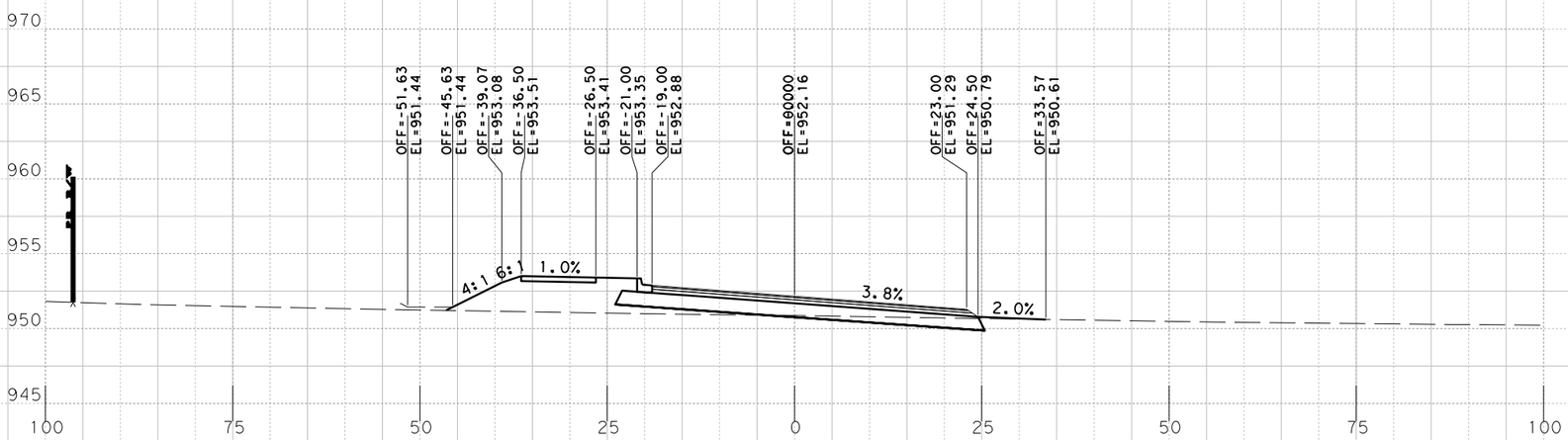

Sta. 515+00.0000 R1

PRELIMINARY
RM 2243
PHASE IA 100%

X-SECTIONS

SCALE: HORIZONTAL 1"=20'
VERTICAL 1"=10'

SHEET 08 OF 168

BGE, Inc.
101 W. Louis Henna Blvd., Suite 400
Austin, TX 78728
Tel: 512-879-0400 • www.bgeinc.com
TBPE Registration No. F-1046

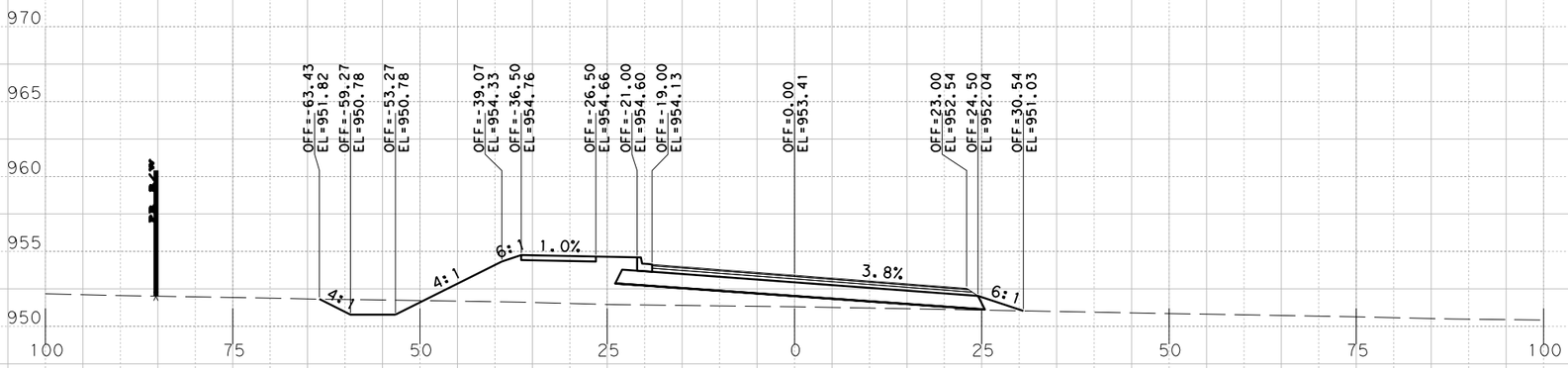

Sta. 517+50.0000 R1

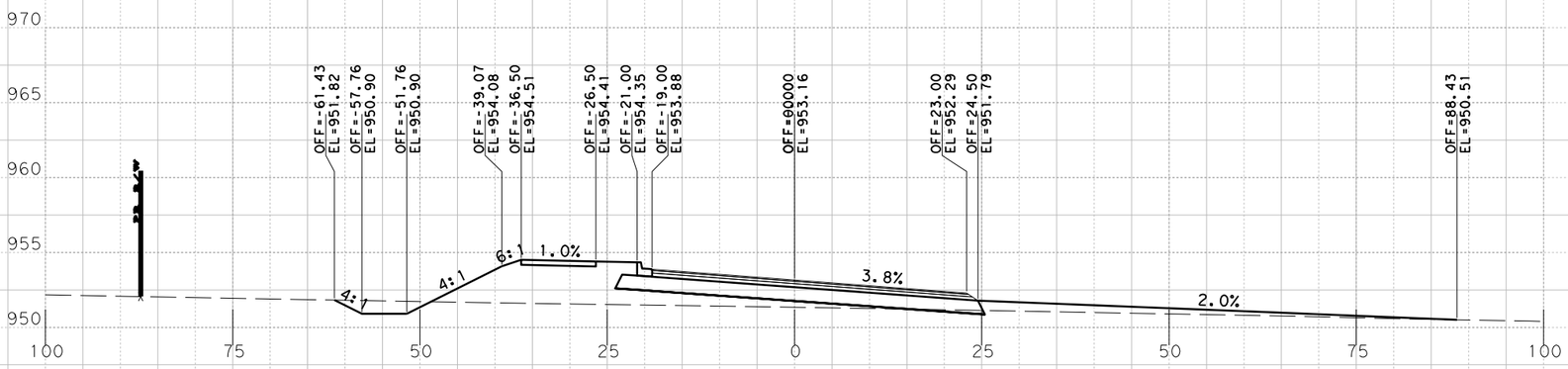

Sta. 517+00.0000 R1

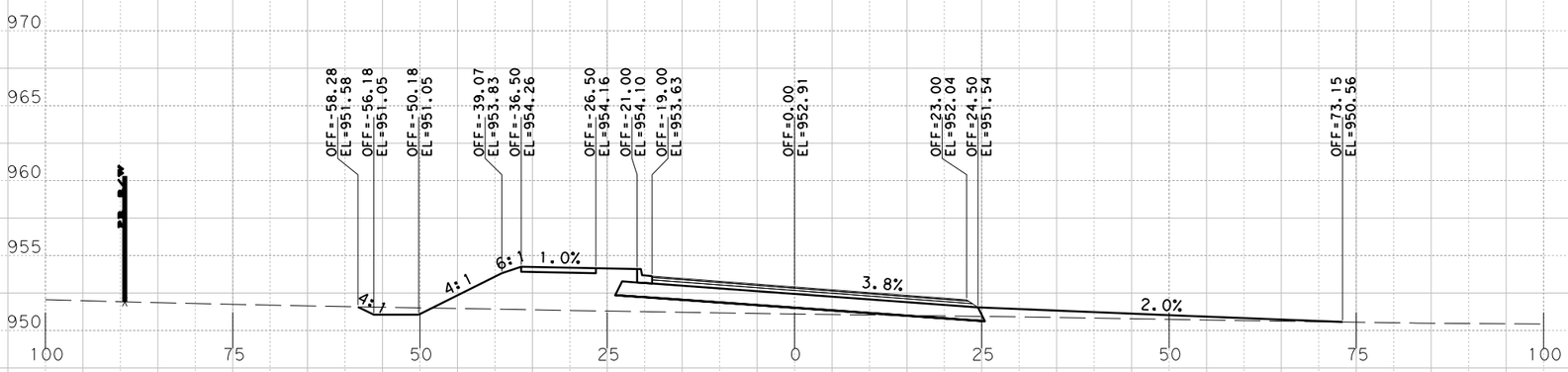

Sta. 516+50.0000 R1

PRELIMINARY
RM 2243
PHASE IA 100%

X-SECTIONS

SCALE: HORIZONTAL 1"=20'
VERTICAL 1"=10'

SHEET 09 OF 168

BGE, Inc.
101 W. Louis Henna Blvd., Suite 400
Austin, TX 78728
Tel: 512-879-0400 • www.bgeinc.com
TBPE Registration No. F-1046

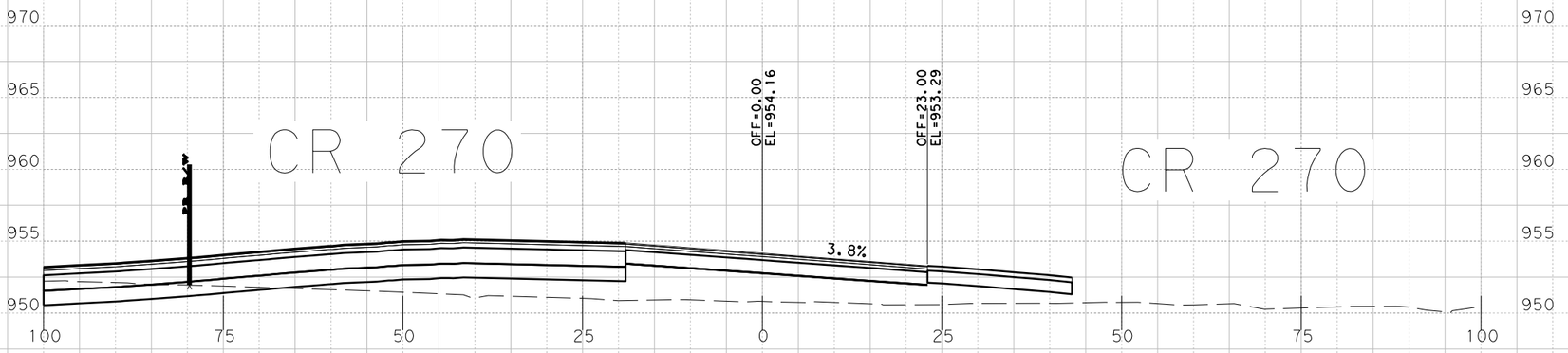

Sta. 519+00.0000 R1

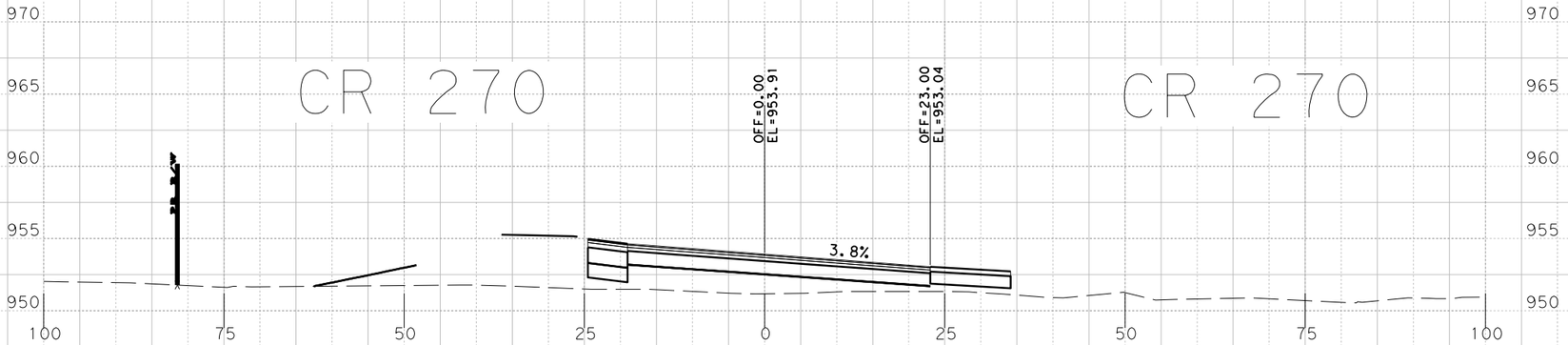

Sta. 518+50.0000 R1

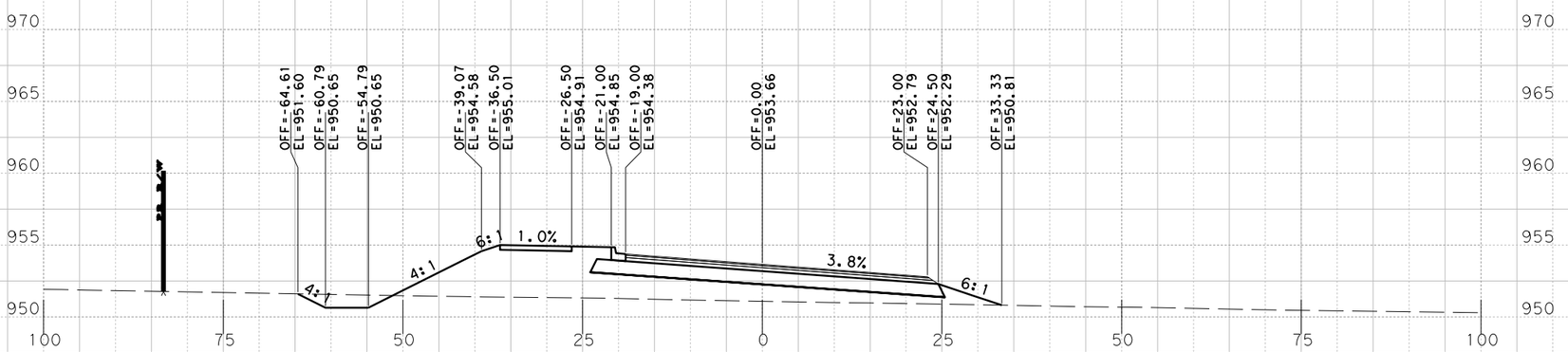

Sta. 518+00.0000 R1

PRELIMINARY
RM 2243
PHASE IA 100%

X-SECTIONS

SCALE: HORIZONTAL 1"=20'
VERTICAL 1"=10'

BGE, Inc.
101 W. Louis Henna Blvd., Suite 400
Austin, TX 78728
Tel: 512-879-0400 • www.bgeinc.com
TBPE Registration No. F-1046

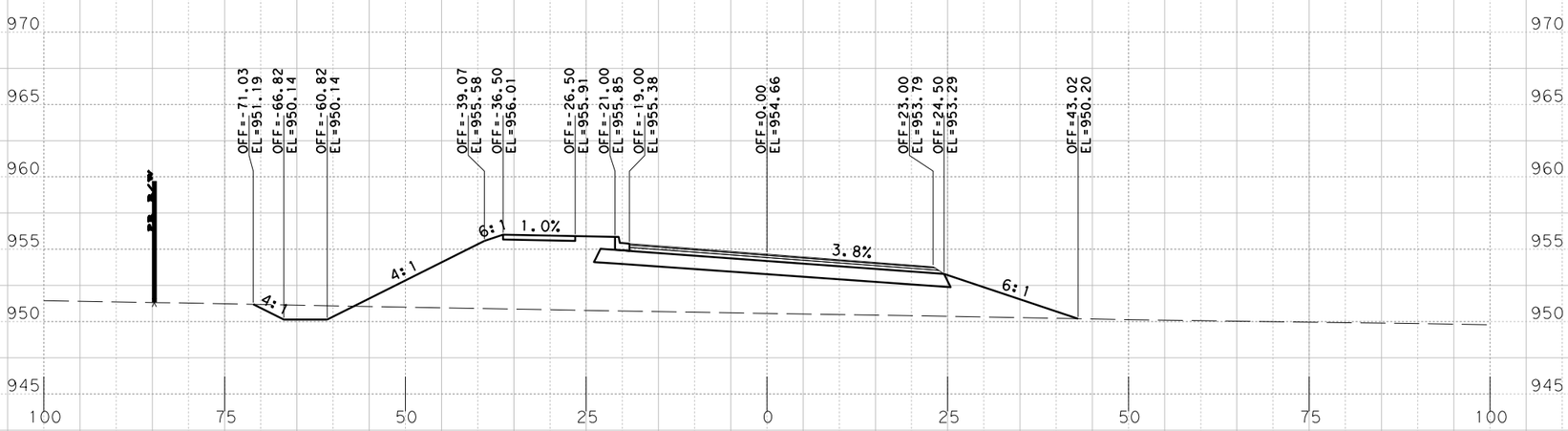

Sta. 520+00.0000 R1

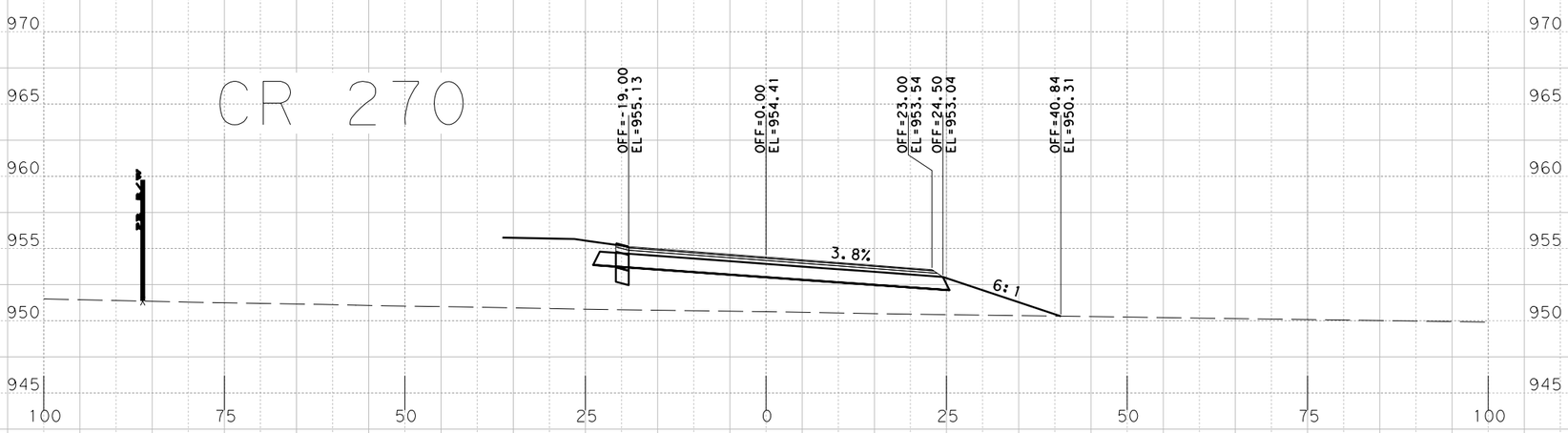

Sta. 519+50.0000 R1

PRELIMINARY
RM 2243
PHASE IA 100%
X-SECTIONS

SCALE: HORIZONTAL 1"=20'
VERTICAL 1"=10'

SHEET 11 OF 168

BGE, Inc.
101 W. Louis Henna Blvd., Suite 400
Austin, TX 78728
Tel: 512-879-0400 • www.bgeinc.com
TBPE Registration No. F-1046

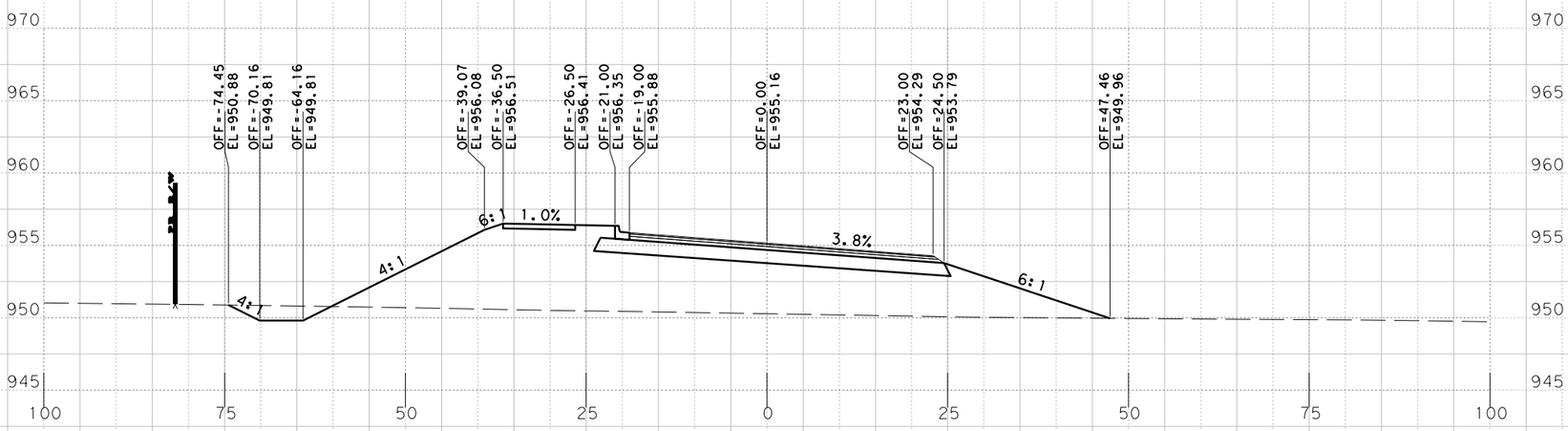

Sta. 521+00.0000 R1

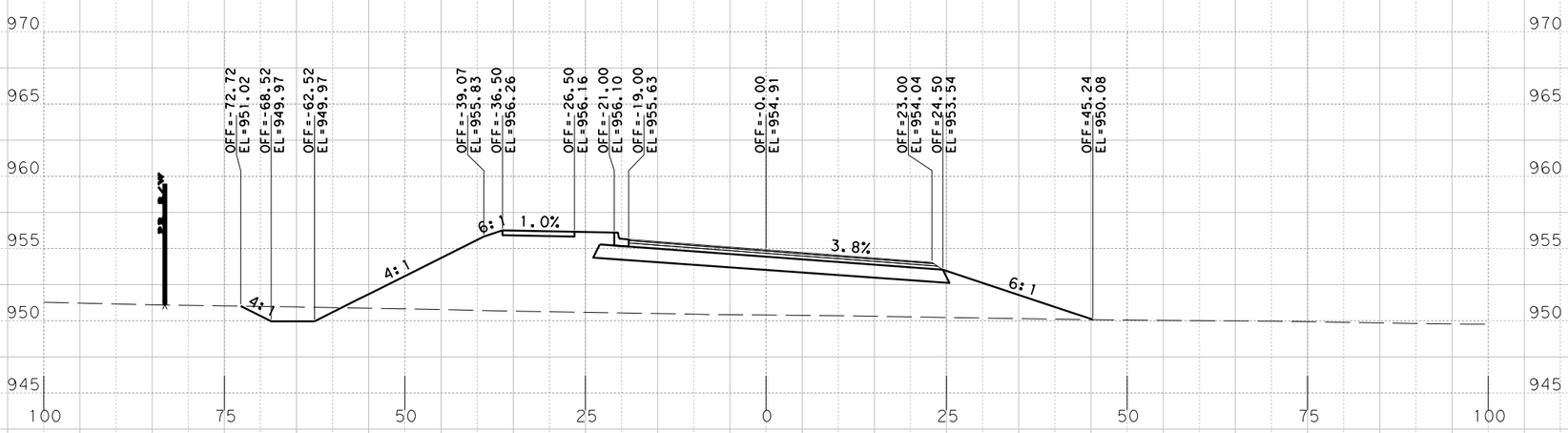

Sta. 520+50.0000 R1

PRELIMINARY
RM 2243
PHASE IA 100%
X-SECTIONS

SCALE: HORIZONTAL 1"=20'
VERTICAL 1"=10'

SHEET 12 OF 168

BGE, Inc.
101 W. Louis Henna Blvd., Suite 400
Austin, TX 78728
Tel: 512-879-0400 • www.bgeinc.com
TBPE Registration No. F-1046

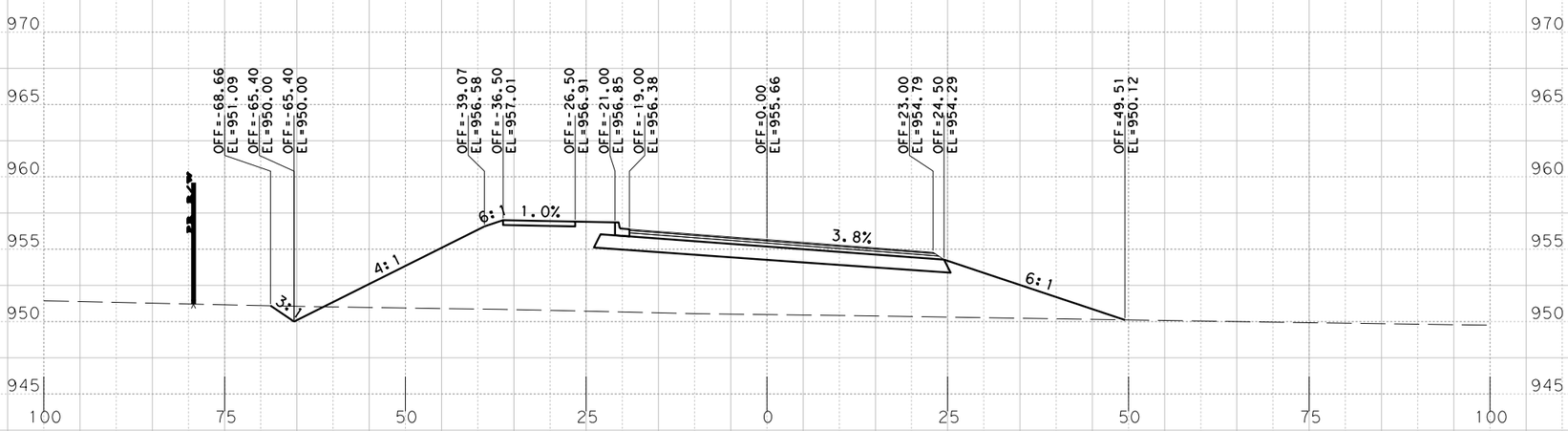

Sta. 522+00.0000 R1

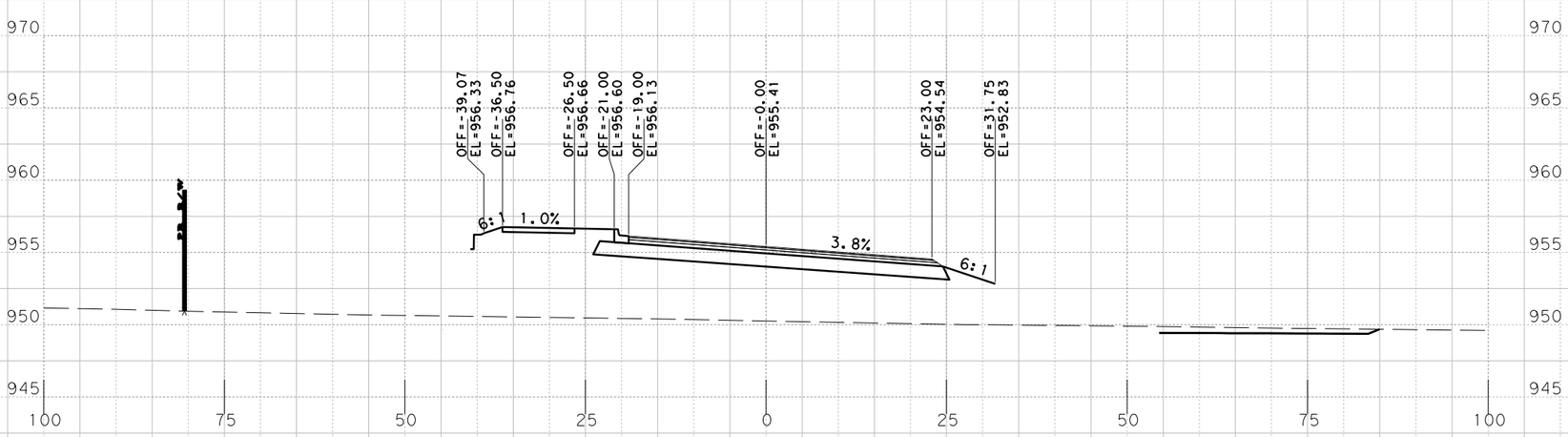

Sta. 521+50.0000 R1

PRELIMINARY
RM 2243
PHASE IA 100%
X-SECTIONS

SCALE: HORIZONTAL 1"=20'
VERTICAL 1"=10'

SHEET 13 OF 168

BGE, Inc.
101 W. Louis Henna Blvd., Suite 400
Austin, TX 78728
Tel: 512-879-0400 • www.bgeinc.com
TBPE Registration No. F-1046

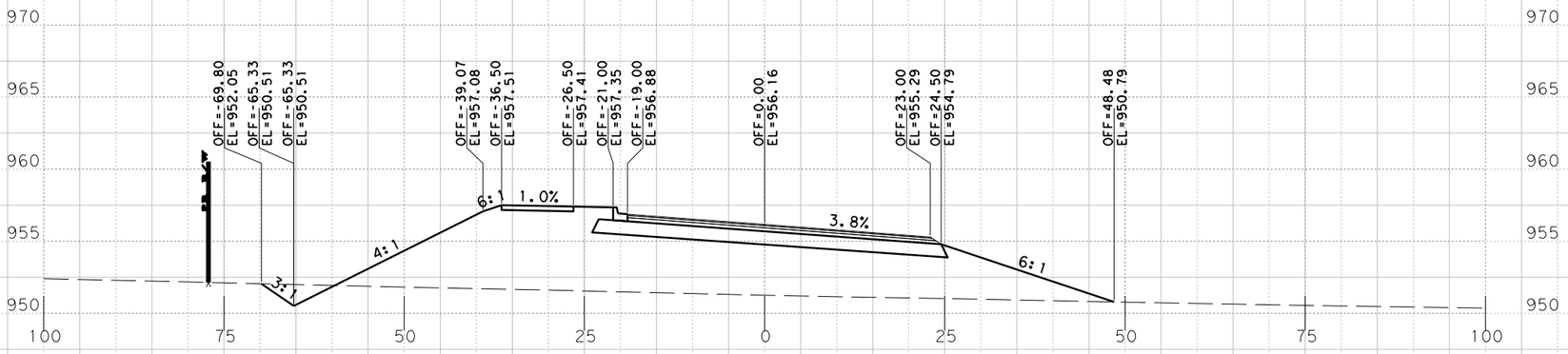

Sta. 523+00.0000 R1

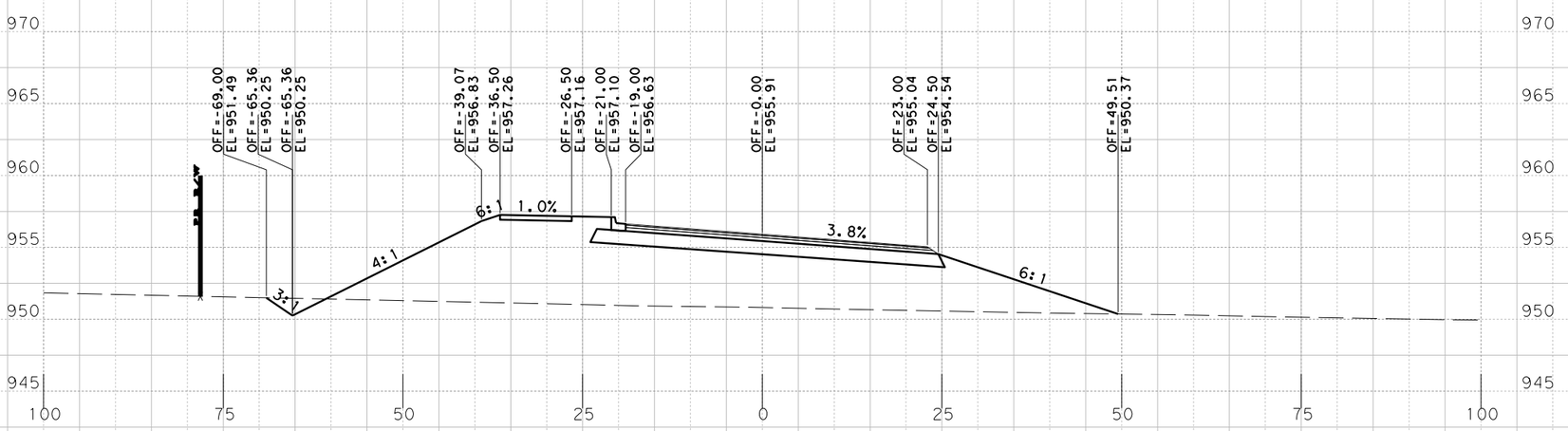

Sta. 522+50.0000 R1

PRELIMINARY
RM 2243
PHASE IA 100%
X-SECTIONS

SCALE: HORIZONTAL 1"=20'
VERTICAL 1"=10'

SHEET 14 OF 168

BGE, Inc.
101 W. Louis Henna Blvd., Suite 400
Austin, TX 78728
Tel: 512-879-0400 • www.bgeinc.com
TBPE Registration No. F-1046

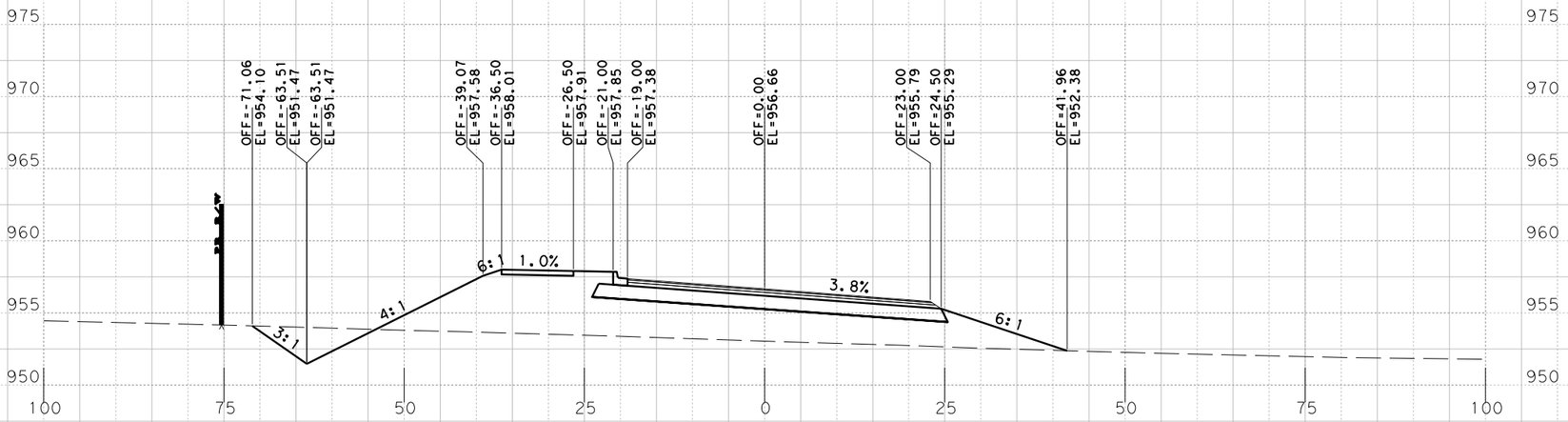

Sta. 524+00.0000 R1

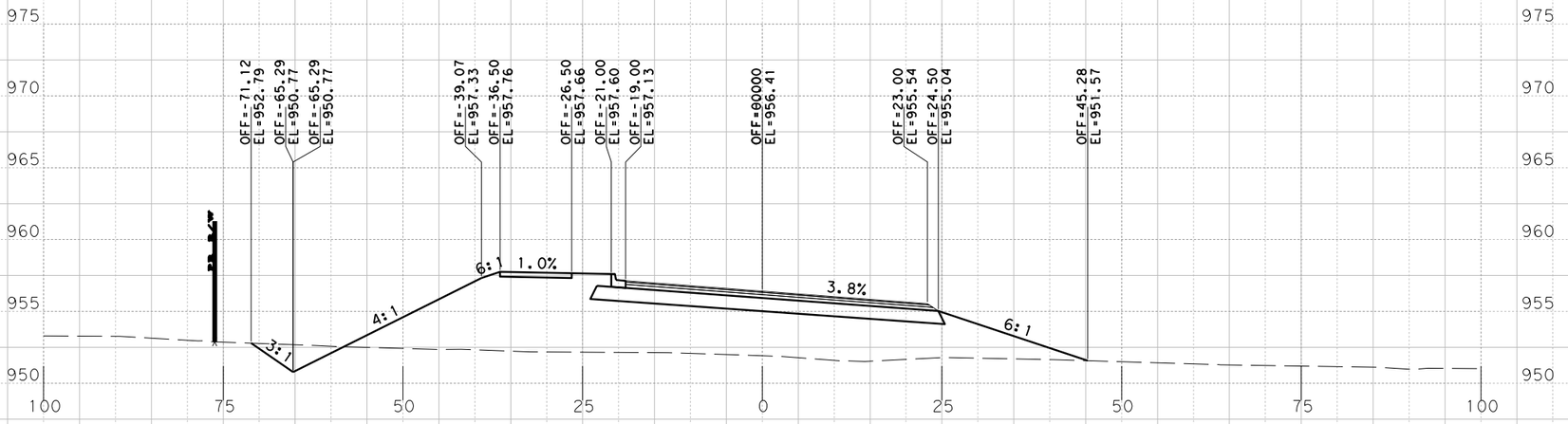

Sta. 523+50.0000 R1

PRELIMINARY
RM 2243
PHASE IA 100%

X-SECTIONS

SCALE: HORIZONTAL 1"=20'
VERTICAL 1"=10'

SHEET 15 OF 168

BGE, Inc.
101 W. Louis Henna Blvd., Suite 400
Austin, TX 78728
Tel: 512-879-0400 • www.bgeinc.com
TBPE Registration No. F-1046

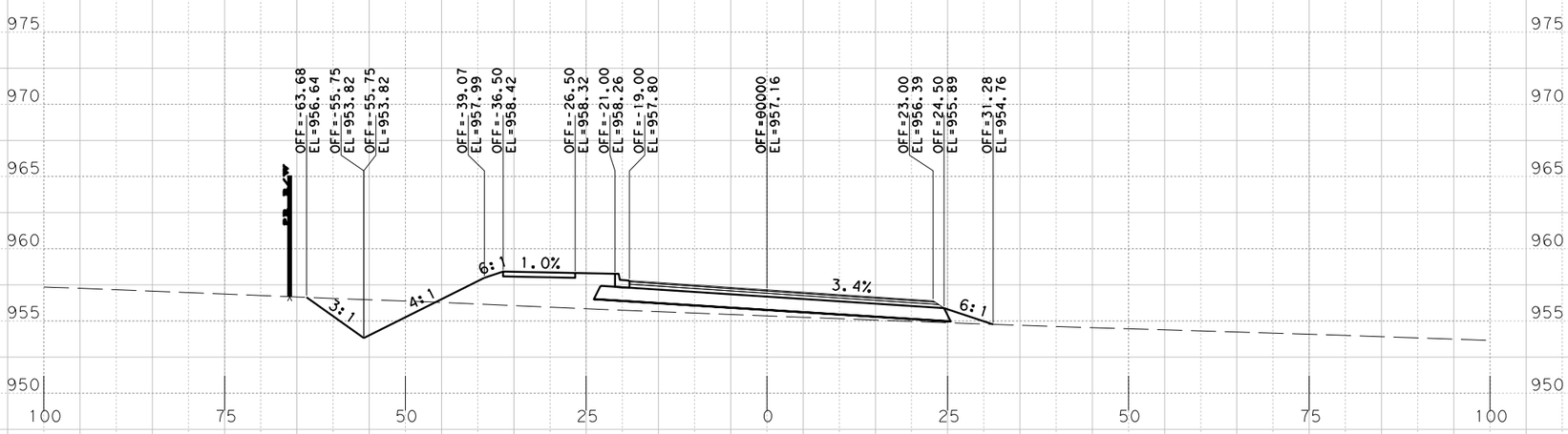

Sta. 525+00.0000 R1

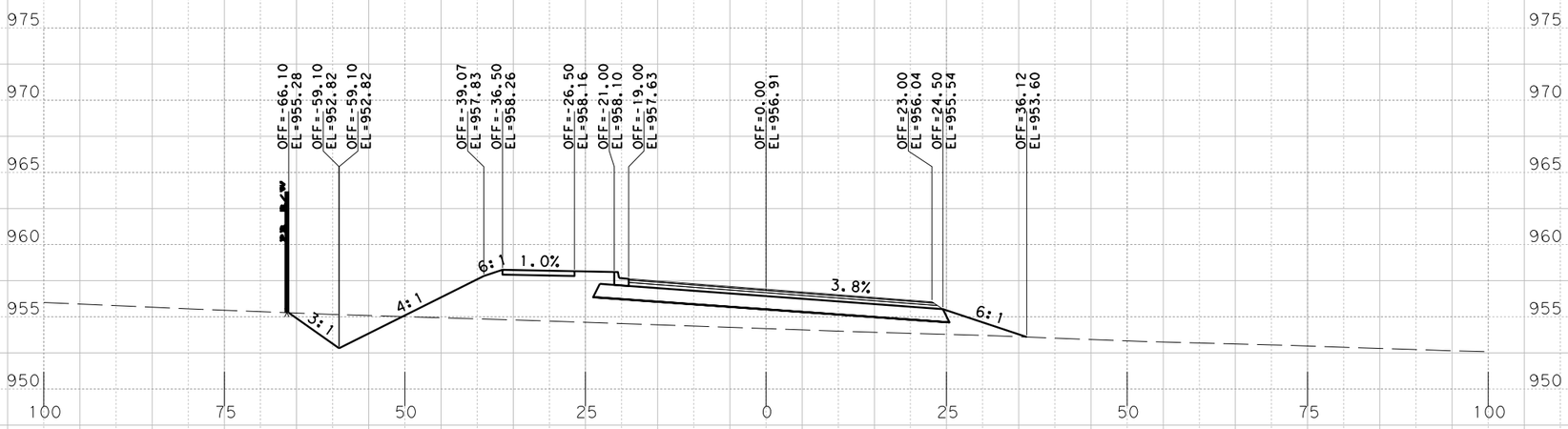

Sta. 524+50.0000 R1

PRELIMINARY
RM 2243
PHASE IA 100%

X-SECTIONS

SCALE: HORIZONTAL 1"=20'
VERTICAL 1"=10'

SHEET 16 OF 168

BGE, Inc.
101 W. Louis Henna Blvd., Suite 400
Austin, TX 78728
Tel: 512-879-0400 • www.bgeinc.com
TBPE Registration No. F-1046

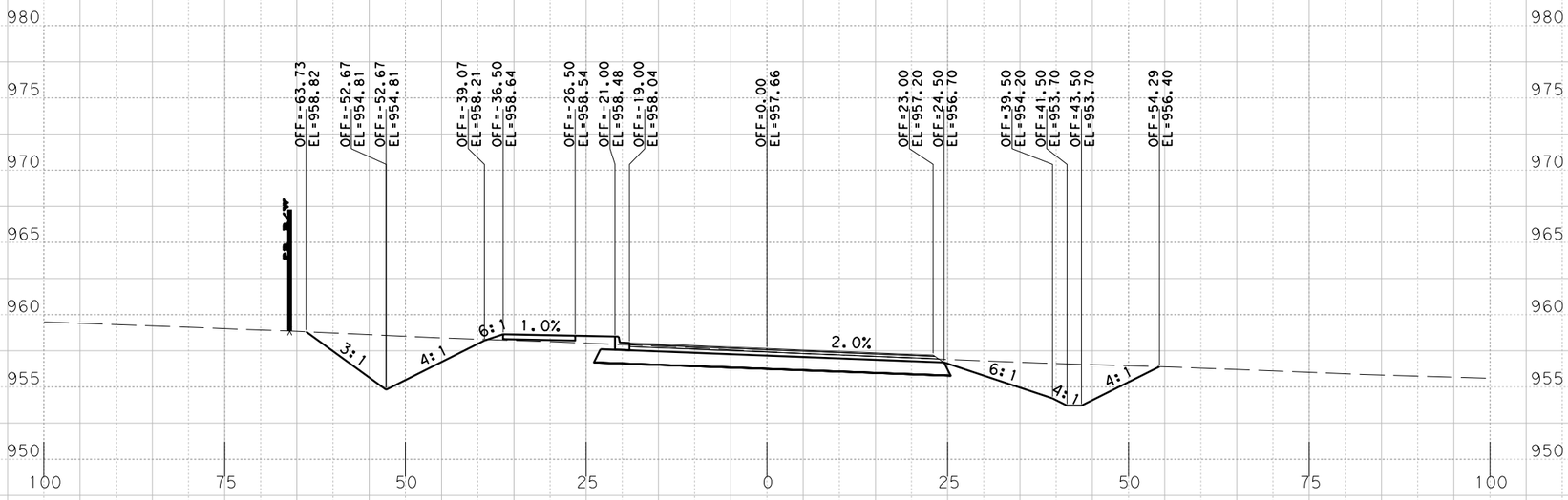

Sta. 526+00.0000 R1

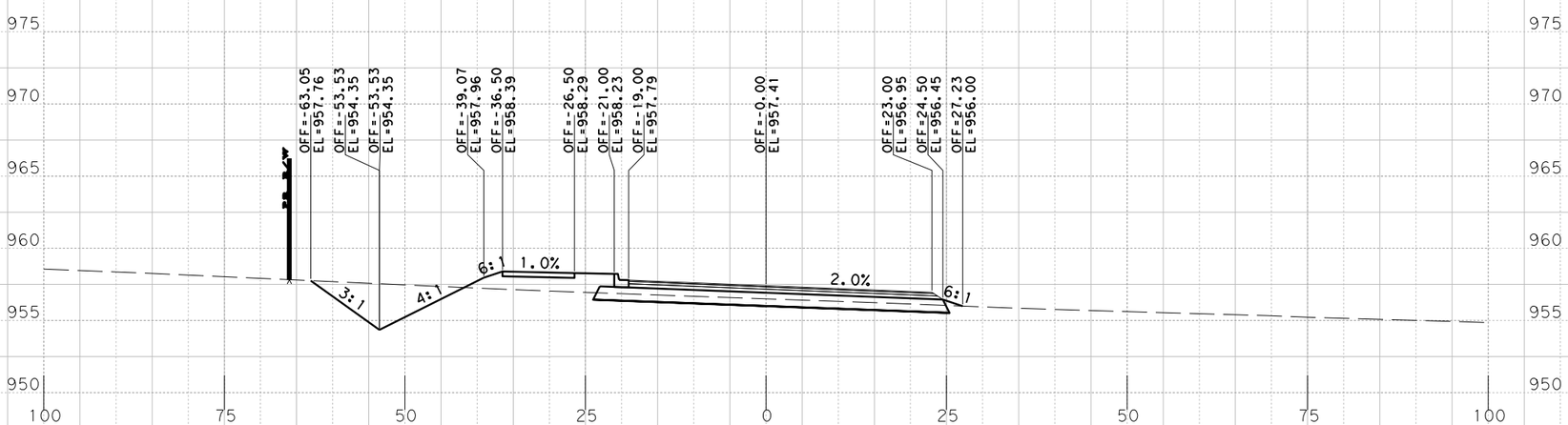

Sta. 525+50.0000 R1

PRELIMINARY
RM 2243
PHASE IA 100%

X-SECTIONS

SCALE: HORIZONTAL 1"=20'
VERTICAL 1"=10'

SHEET 17 OF 168

BGE, Inc.
101 W. Louis Henna Blvd., Suite 400
Austin, TX 78728
Tel: 512-879-0400 • www.bgeinc.com
TBPE Registration No. F-1046

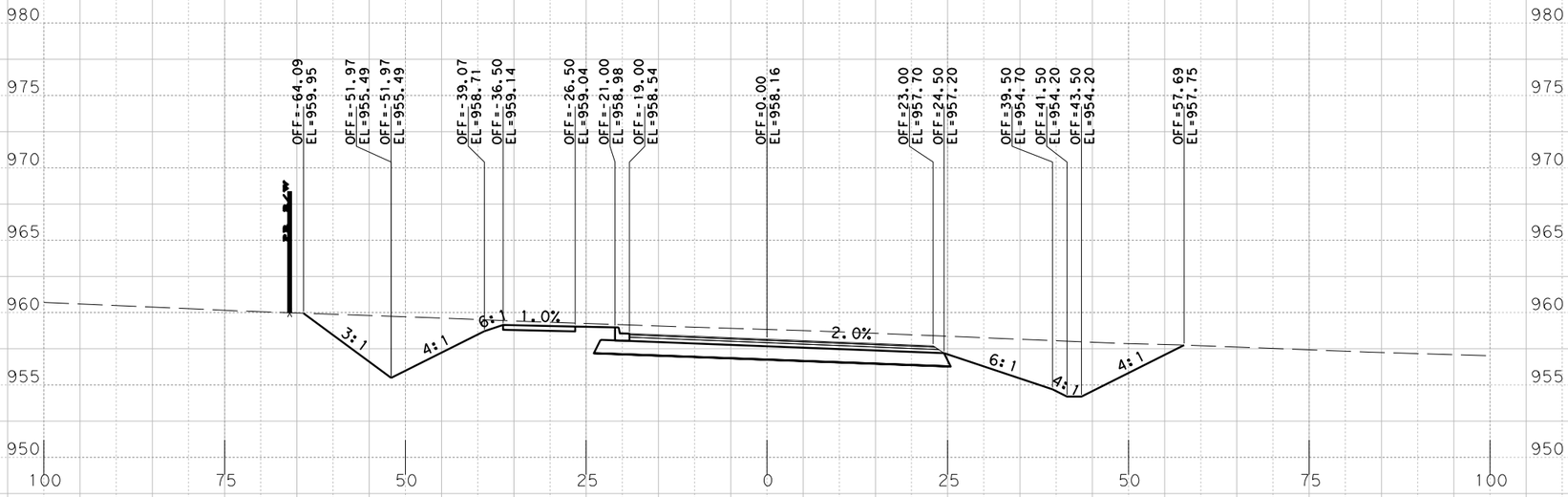

Sta. 527+00.0000 R1

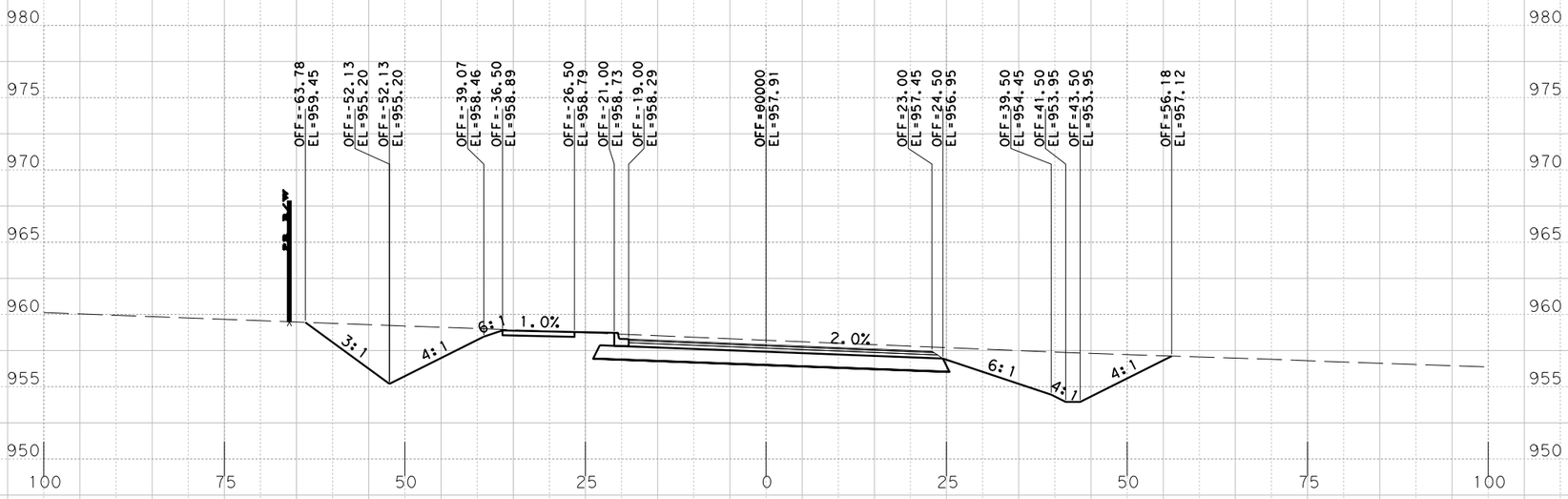

Sta. 526+50.0000 R1

PRELIMINARY
RM 2243
PHASE IA 100%

X-SECTIONS

SCALE: HORIZONTAL 1"=20'
VERTICAL 1"=10'

SHEET 18 OF 168

BGE, Inc.
101 W. Louis Henna Blvd., Suite 400
Austin, TX 78728
Tel: 512-879-0400 • www.bgeinc.com
TBPE Registration No. F-1046

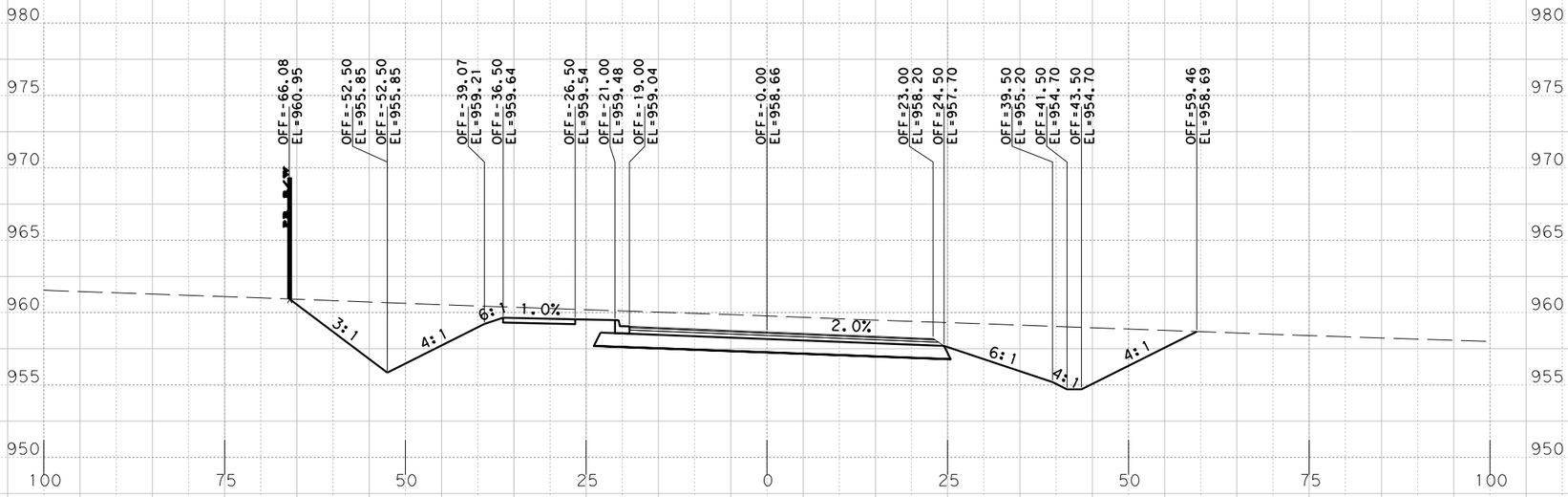

Sta. 528+00.0000 R1

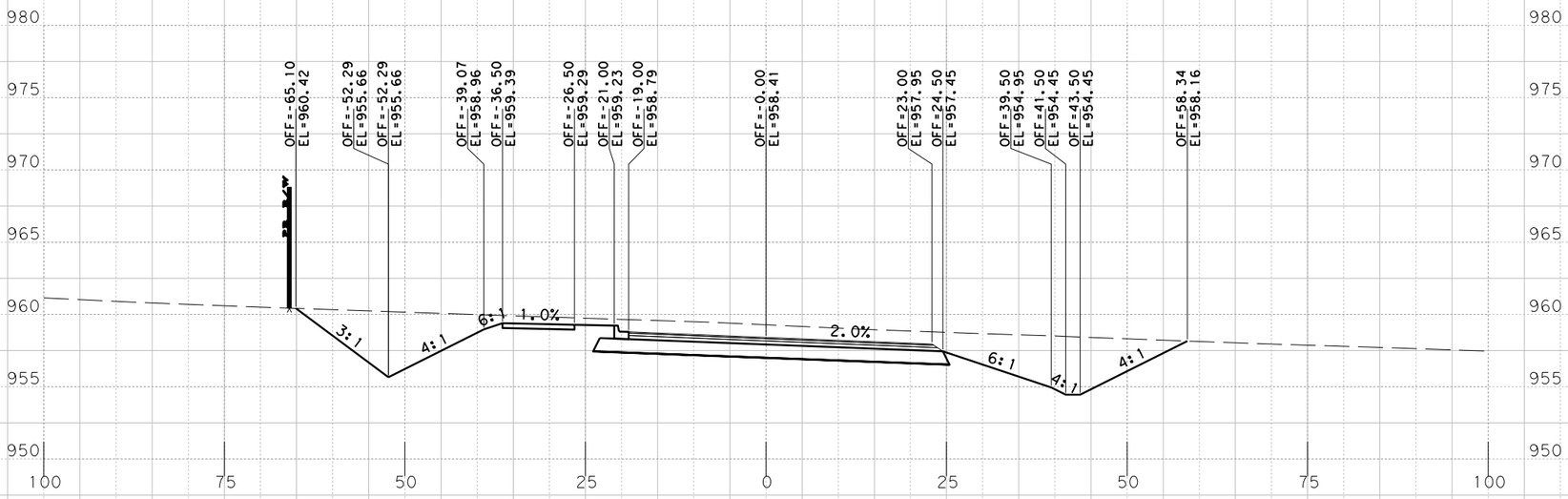

Sta. 527+50.0000 R1

PRELIMINARY
RM 2243
PHASE IA 100%

X-SECTIONS

SCALE: HORIZONTAL 1"=20'
VERTICAL 1"=10'

SHEET 19 OF 168

BGE, Inc.
101 W. Louis Henna Blvd., Suite 400
Austin, TX 78728
Tel: 512-879-0400 • www.bgeinc.com
TBPE Registration No. F-1046

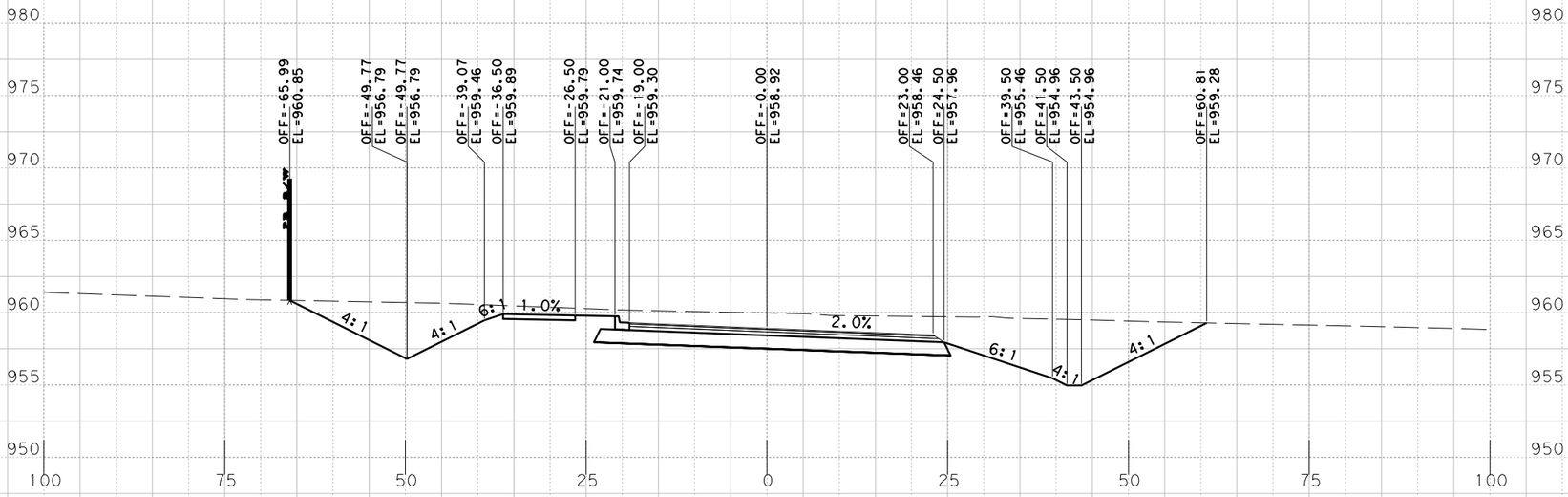

Sta. 529+00.0000 R1

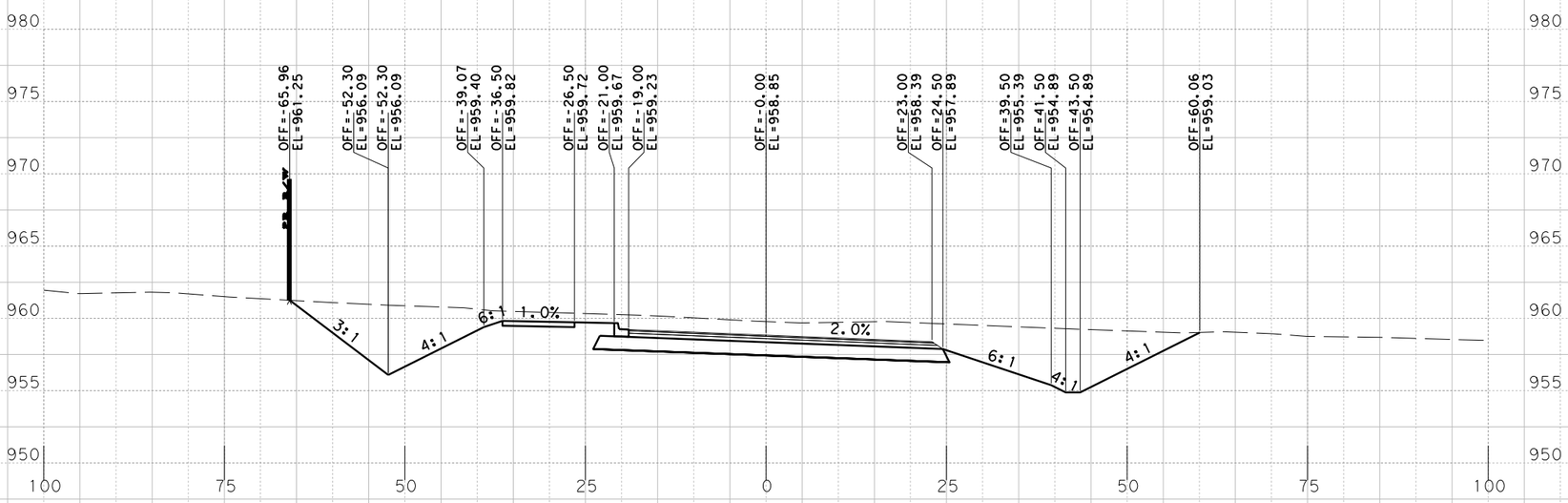

Sta. 528+50.0000 R1

PRELIMINARY
RM 2243
PHASE IA 100%
X-SECTIONS

SCALE: HORIZONTAL 1"=20'
VERTICAL 1"=10'

SHEET 20 OF 168

BGE, Inc.
101 W. Louis Henna Blvd., Suite 400
Austin, TX 78728
Tel: 512-879-0400 • www.bgeinc.com
TBPE Registration No. F-1046

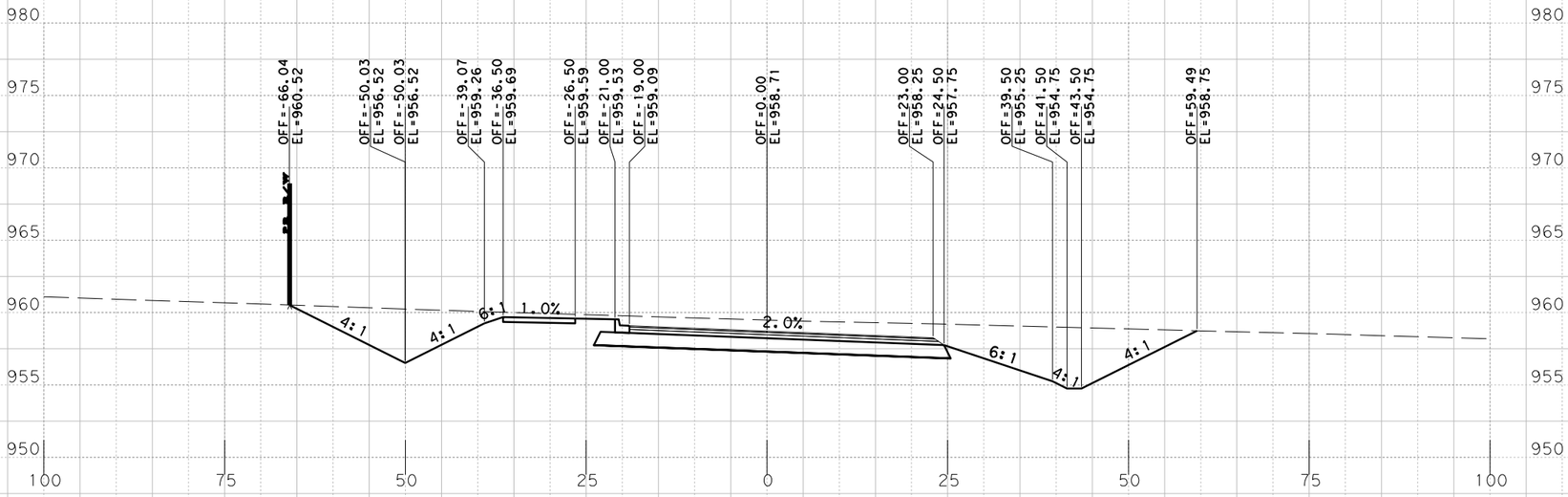

Sta. 530+00.0000 R1

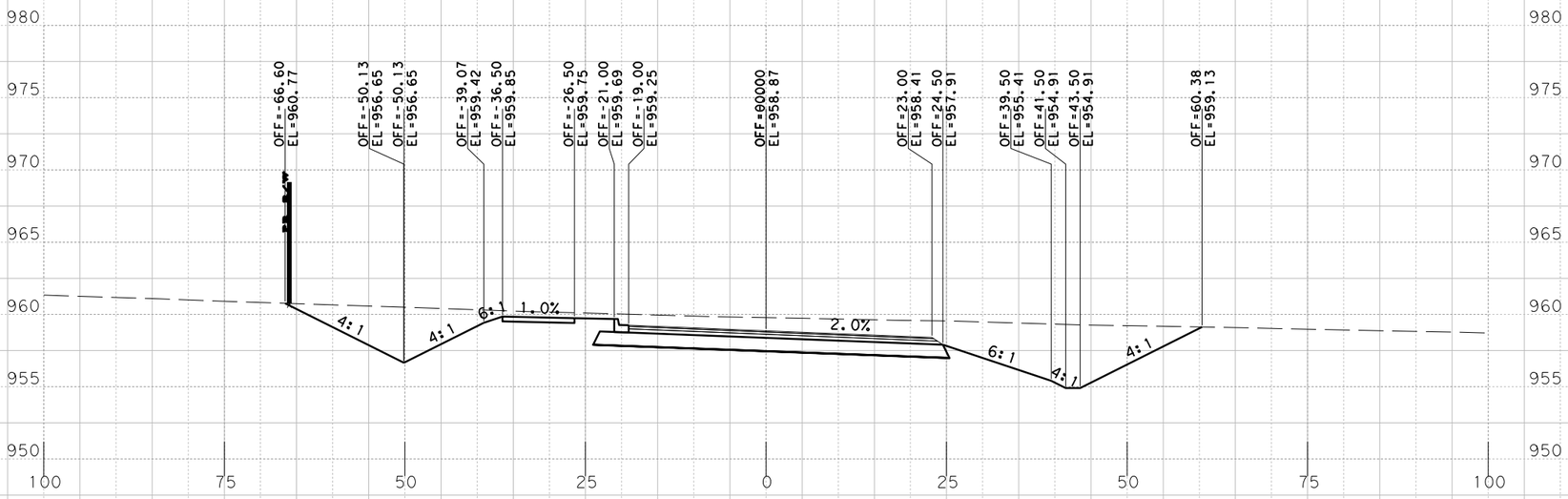

Sta. 529+50.0000 R1

PRELIMINARY
RM 2243
PHASE IA 100%

X-SECTIONS

SCALE: HORIZONTAL 1"=20'
VERTICAL 1"=10'

SHEET 21 OF 168

BGE, Inc.
101 W. Louis Henna Blvd., Suite 400
Austin, TX 78728
Tel: 512-879-0400 • www.bgeinc.com
TBPE Registration No. F-1046

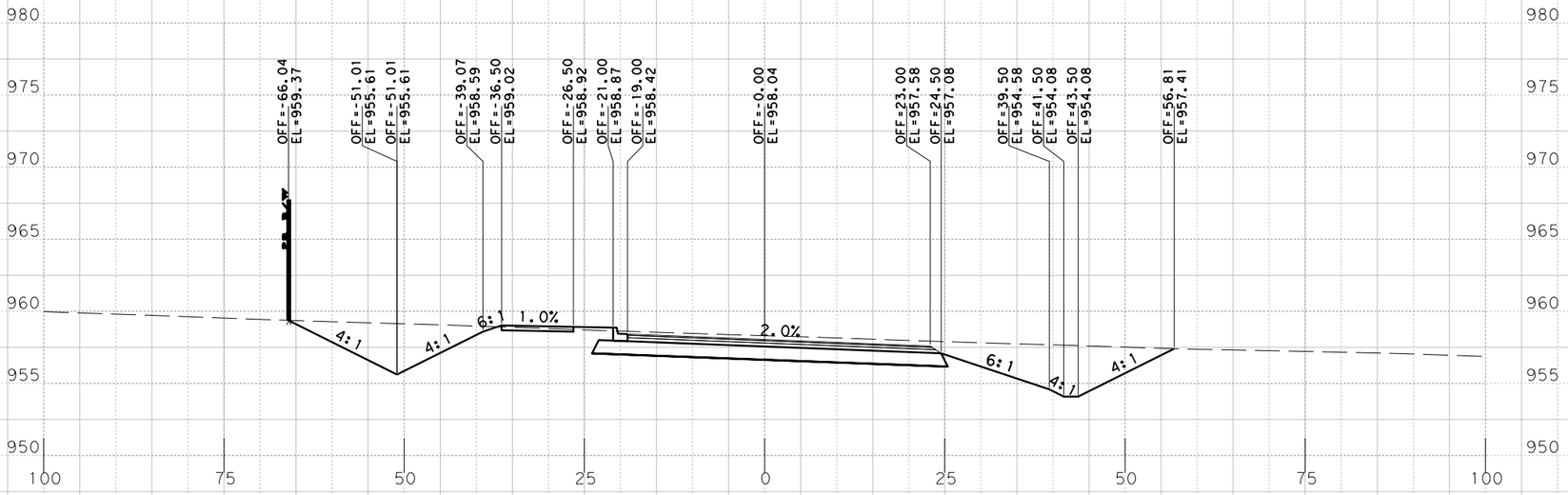

Sta. 531+00.0000 R1

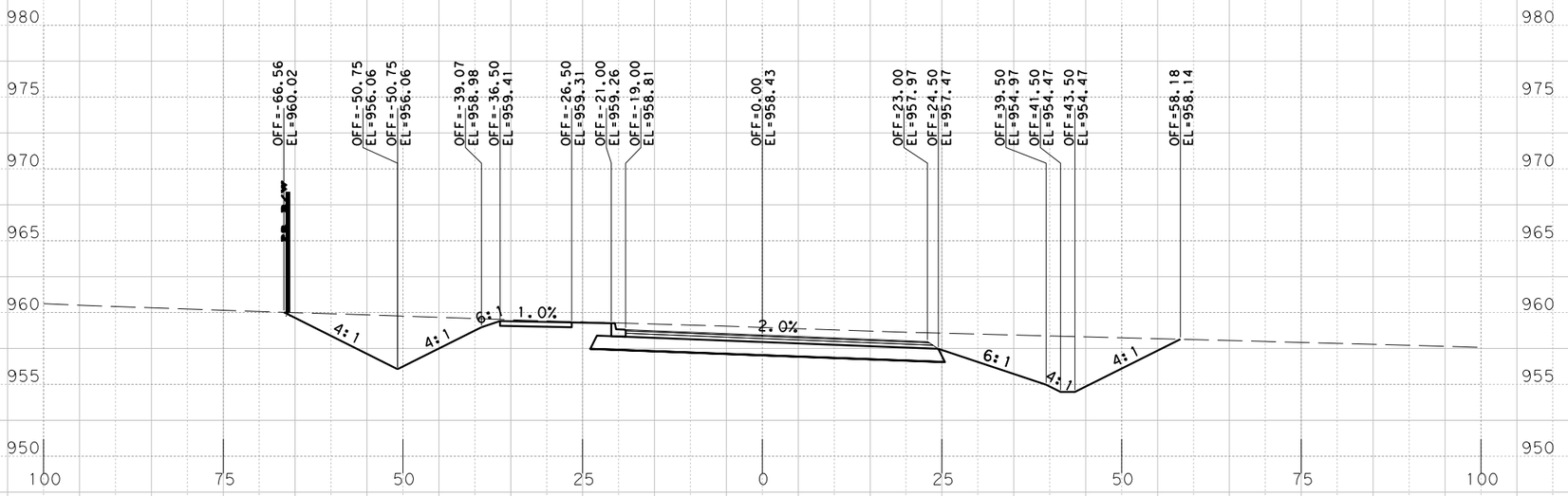

Sta. 530+50.0000 R1

PRELIMINARY
RM 2243
PHASE IA 100%

X-SECTIONS

SCALE: HORIZONTAL 1"=20'
VERTICAL 1"=10'

SHEET 22 OF 168

BGE, Inc.
101 W. Louis Henna Blvd., Suite 400
Austin, TX 78728
Tel: 512-879-0400 • www.bgeinc.com
TBPE Registration No. F-1046

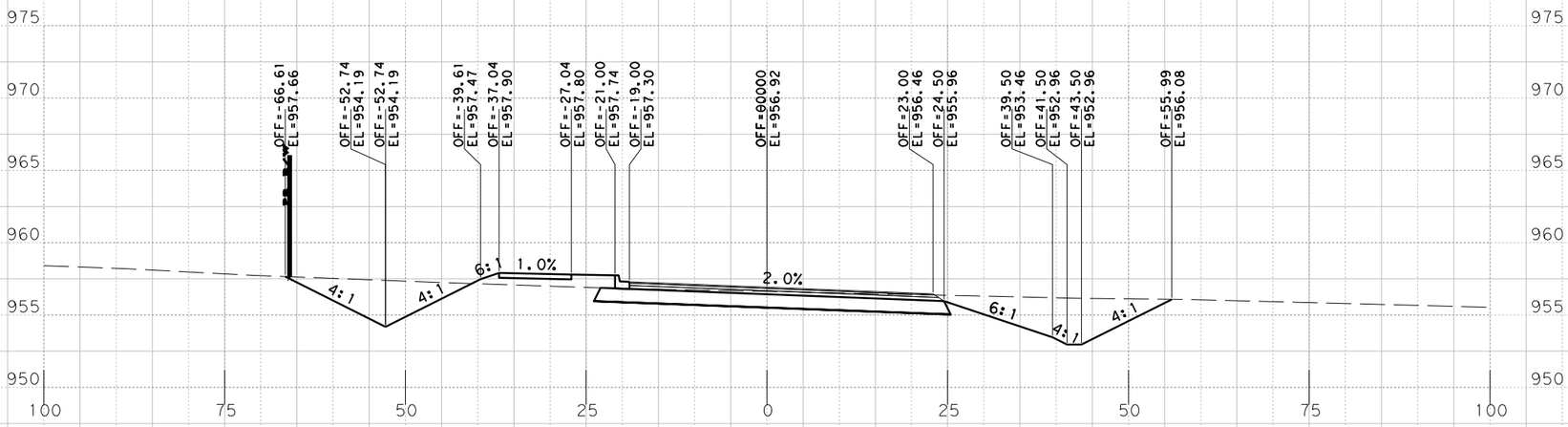

Sta. 532+00.0000 R1

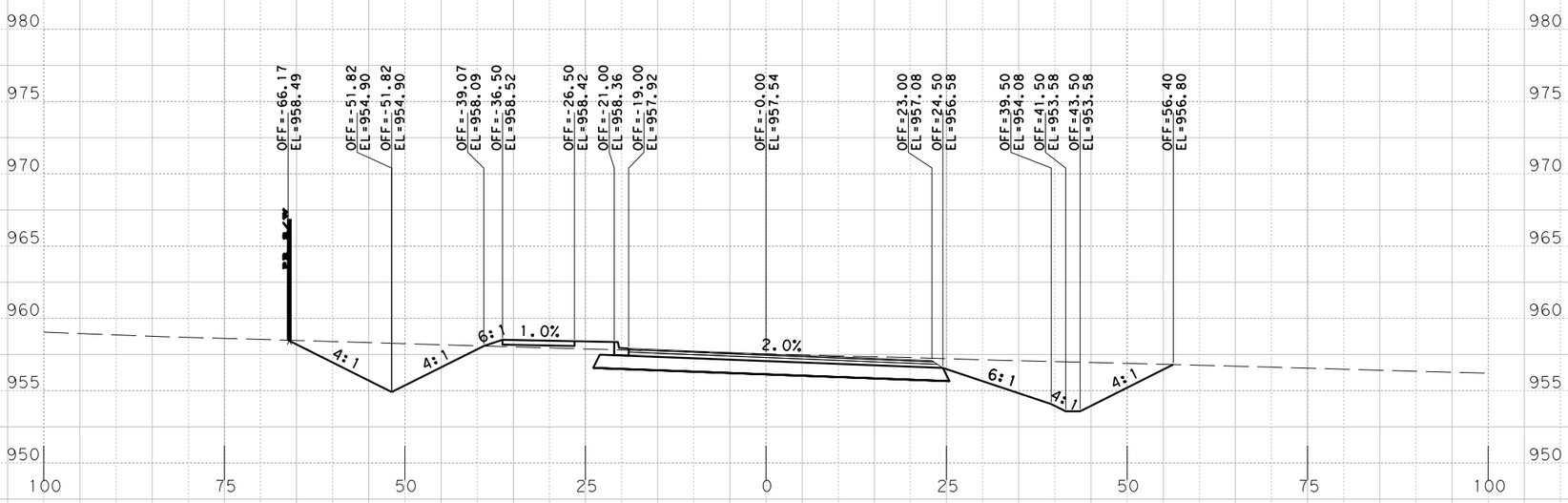

Sta. 531+50.0000 R1

PRELIMINARY
RM 2243
PHASE IA 100%
X-SECTIONS

SCALE: HORIZONTAL 1"=20'
VERTICAL 1"=10'

SHEET 23 OF 168

BGE, Inc.
101 W. Louis Henna Blvd., Suite 400
Austin, TX 78728
Tel: 512-879-0400 • www.bgeinc.com
TBPE Registration No. F-1046

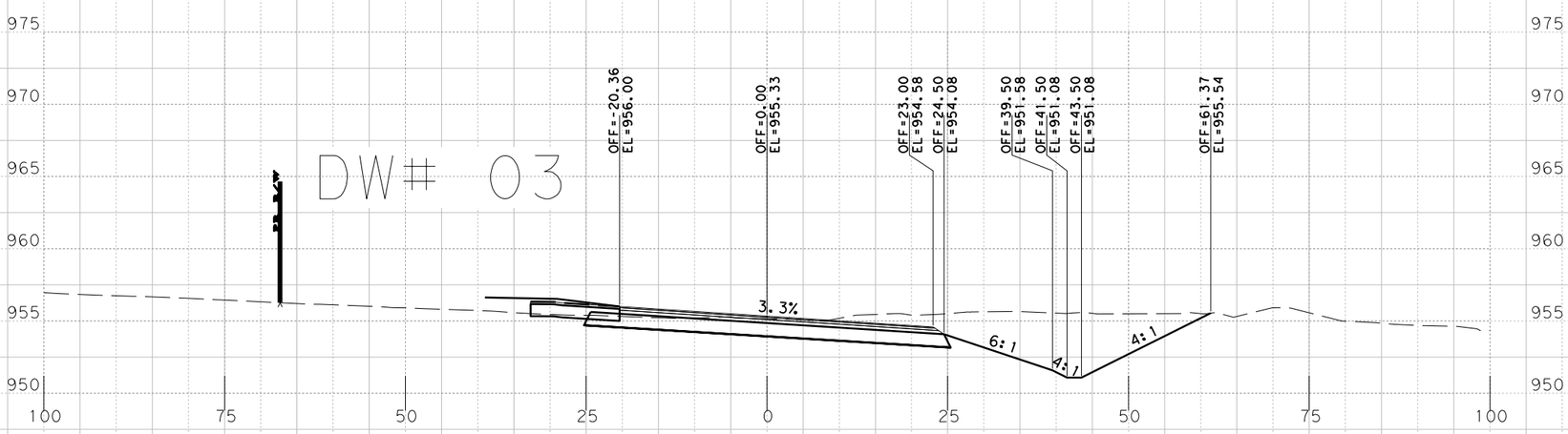

Sta. 533+00.0000 R1

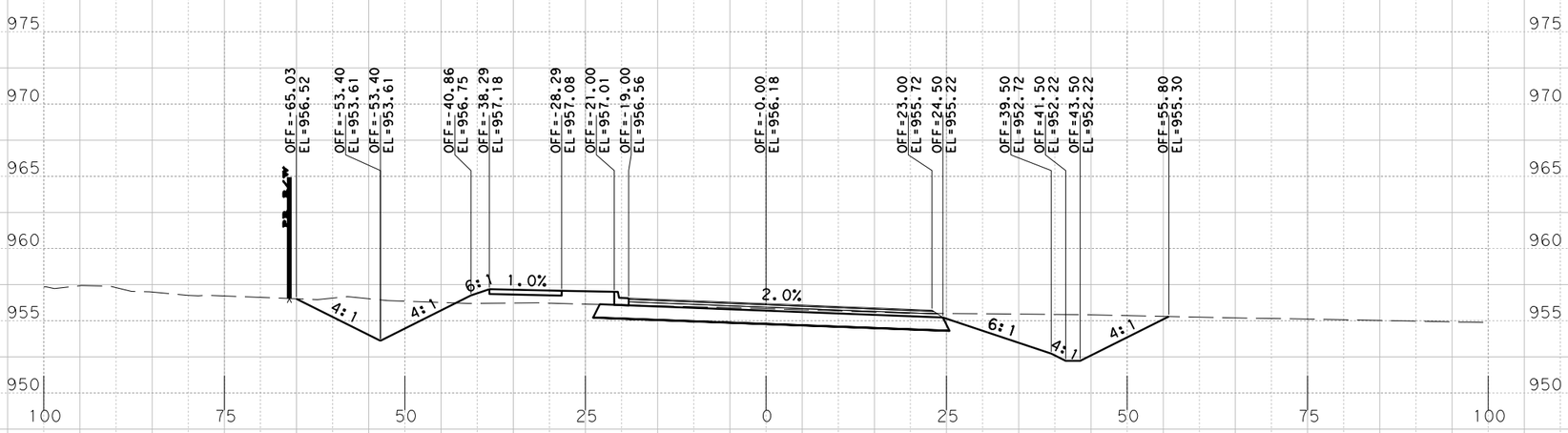

Sta. 532+50.0000 R1

PRELIMINARY
RM 2243
PHASE IA 100%
X-SECTIONS

SCALE: HORIZONTAL 1"=20'
VERTICAL 1"=10'

SHEET 24 OF 168

BGE, Inc.
101 W. Louis Henna Blvd., Suite 400
Austin, TX 78728
Tel: 512-879-0400 • www.bgeinc.com
TBPE Registration No. F-1046

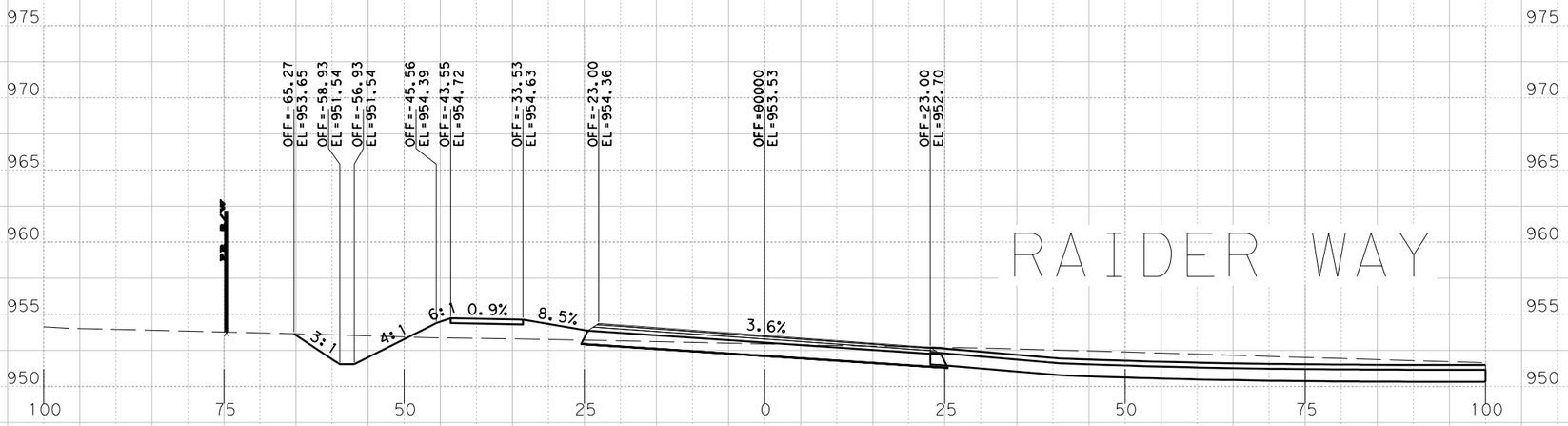

Sta. 534+00.0000 R1

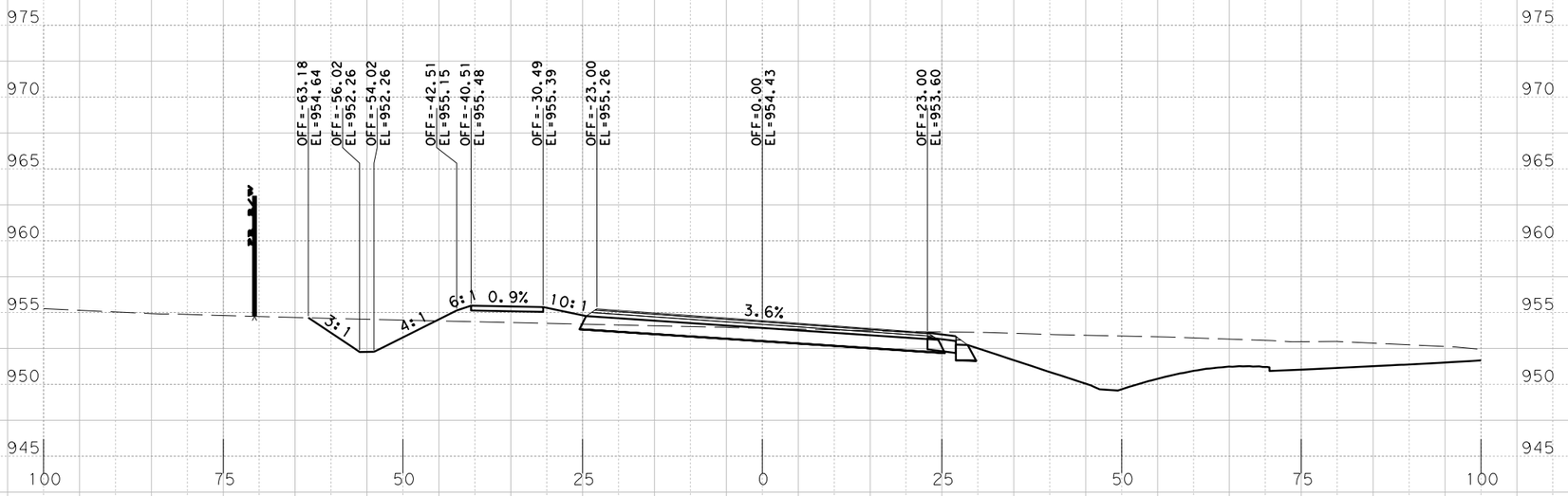

Sta. 533+50.0000 R1

PRELIMINARY
RM 2243
PHASE IA 100%

X-SECTIONS

SCALE: HORIZONTAL 1"=20'
VERTICAL 1"=10'

SHEET 25 OF 168

BGE, Inc.
101 W. Louis Henna Blvd., Suite 400
Austin, TX 78728
Tel: 512-879-0400 • www.bgeinc.com
TBPE Registration No. F-1046

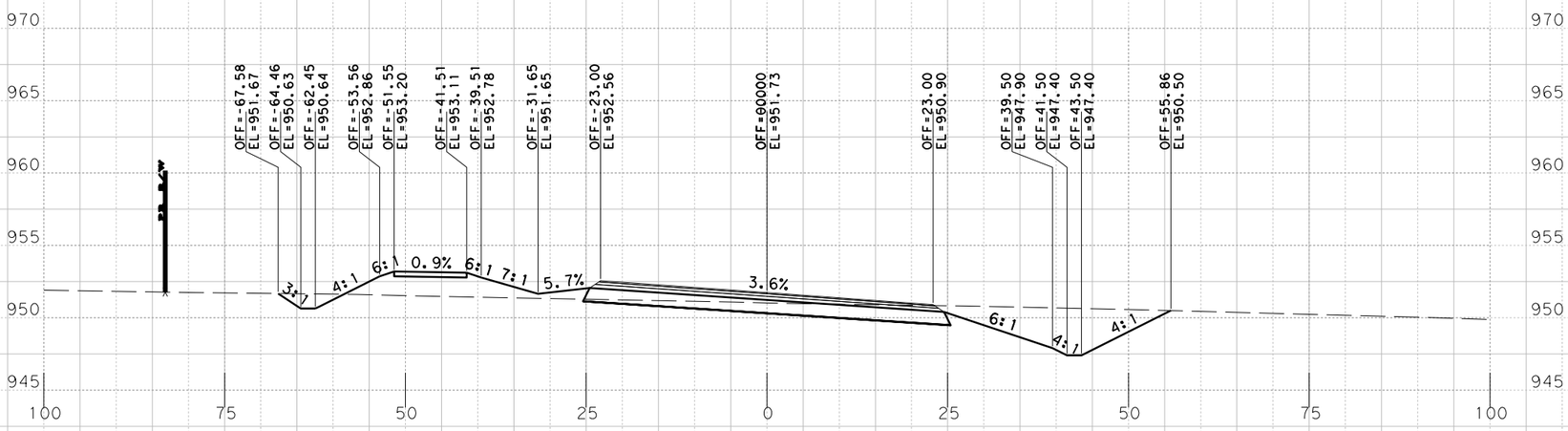

S†a. 535+00.0000 R1

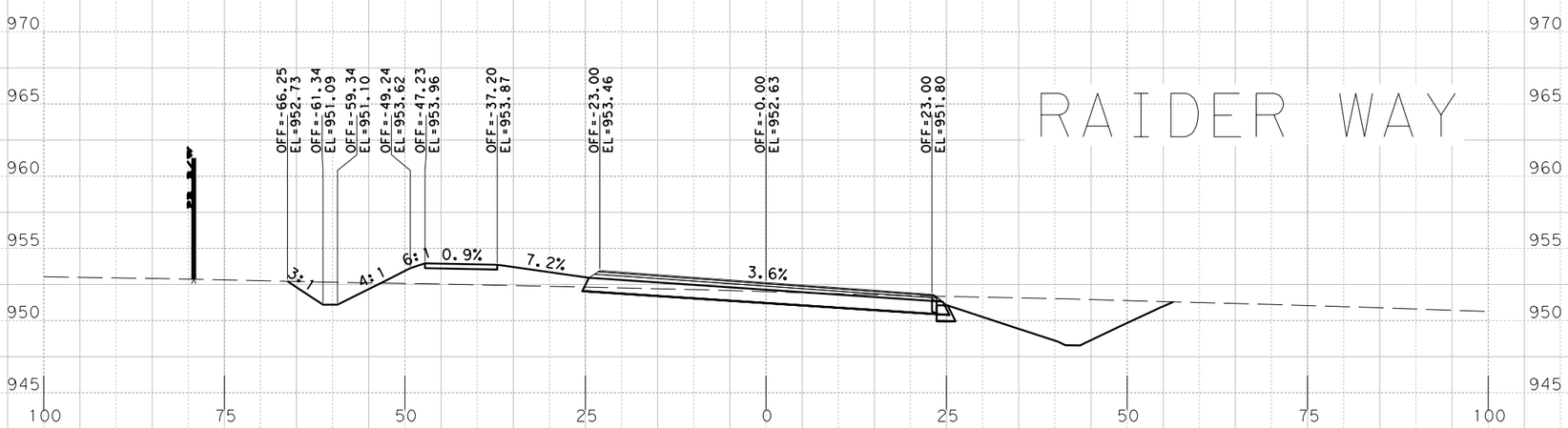

S†a. 534+50.0000 R1

RAIDER WAY

PRELIMINARY
RM 2243
PHASE IA 100%

X-SECTIONS

SCALE: HORIZONTAL 1"=20'
VERTICAL 1"=10'

SHEET 26 OF 168

BGE, Inc.
101 W. Louis Henna Blvd., Suite 400
Austin, TX 78728
Tel: 512-879-0400 • www.bgeinc.com
TBPE Registration No. F-1046

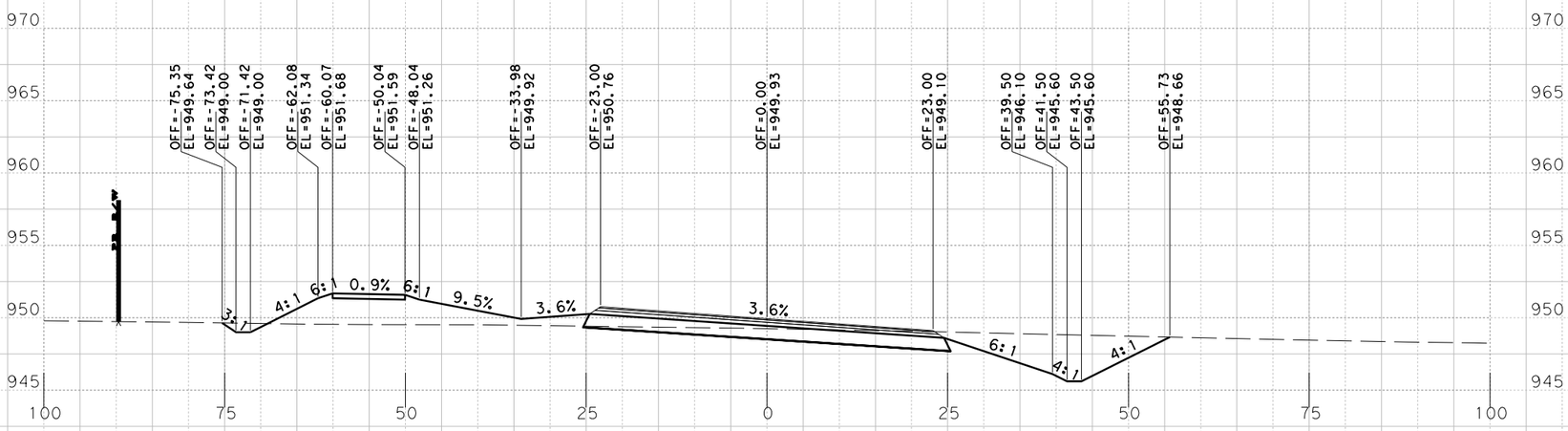

Sta. 536+00.0000 R1

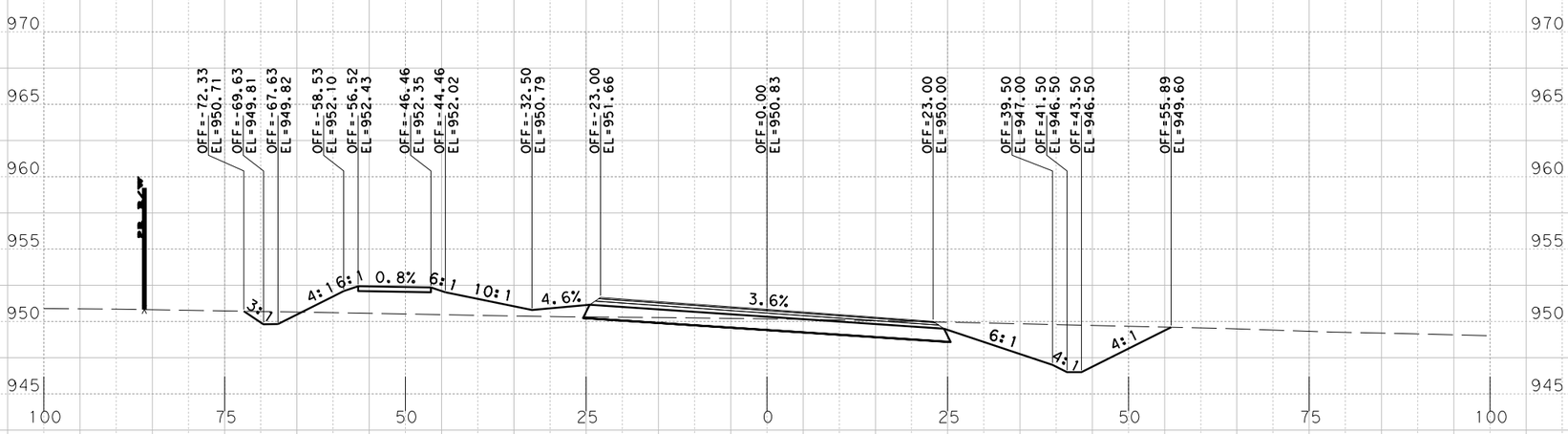

Sta. 535+50.0000 R1

PRELIMINARY
RM 2243
PHASE IA 100%

X-SECTIONS

SCALE: HORIZONTAL 1"=20'
VERTICAL 1"=10'

SHEET 27 OF 168

BGE, Inc.
101 W. Louis Henna Blvd., Suite 400
Austin, TX 78728
Tel: 512-879-0400 • www.bgeinc.com
TBPE Registration No. F-1046

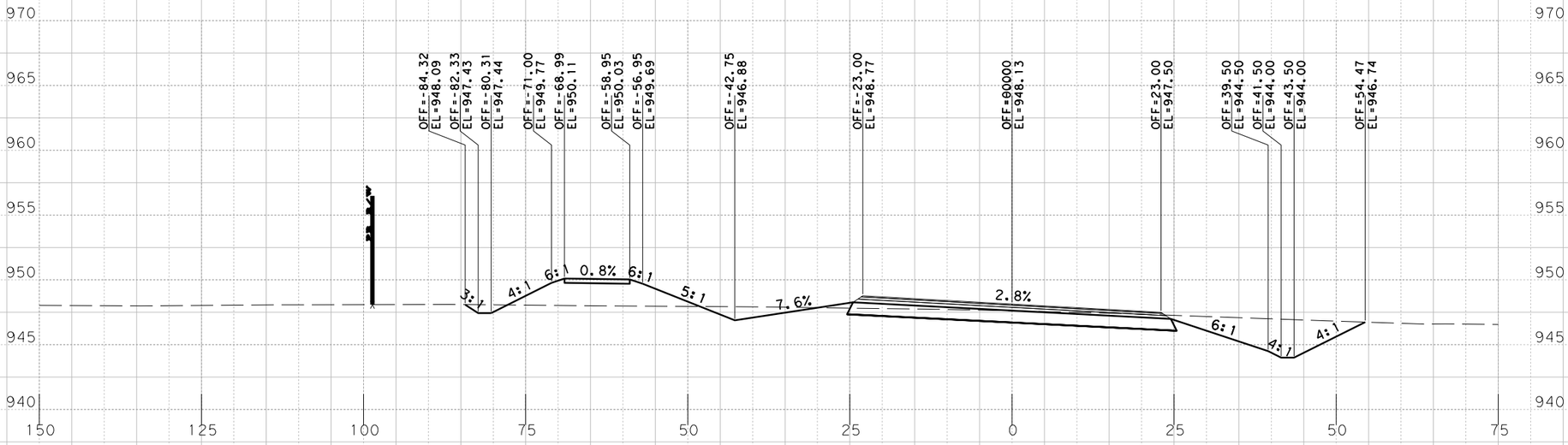

Sta. 537+00.0000 R1

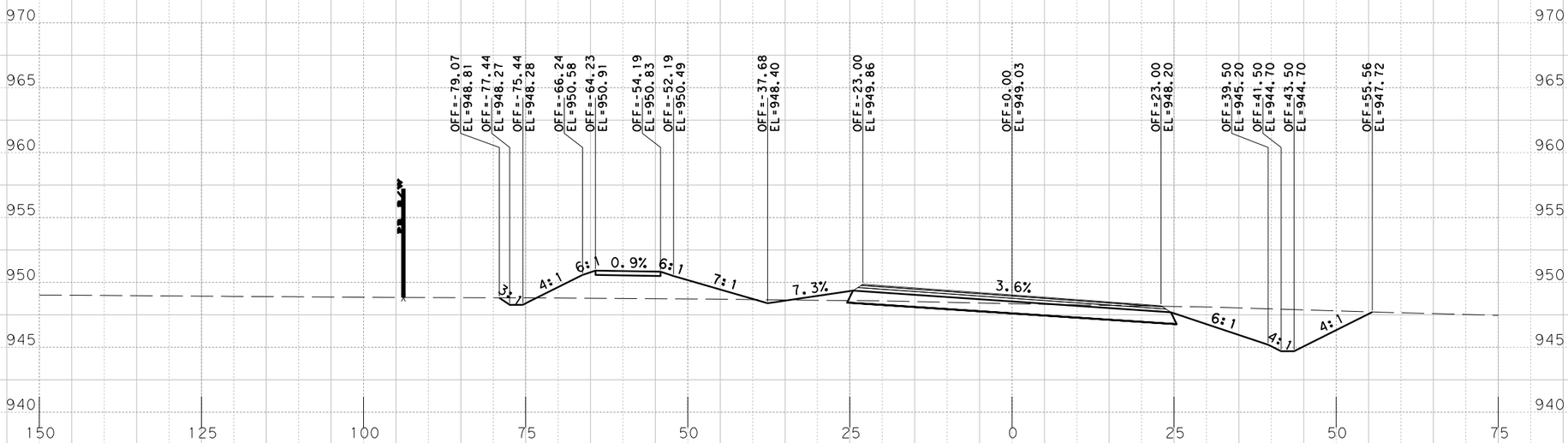

Sta. 536+50.0000 R1

PRELIMINARY
RM 2243
PHASE IA 100%

X-SECTIONS

SCALE: HORIZONTAL 1"=20'
VERTICAL 1"=10'

SHEET 28 OF 168

BGE, Inc.
101 W. Louis Henna Blvd., Suite 400
Austin, TX 78728
Tel: 512-879-0400 • www.bgeinc.com
TBPE Registration No. F-1046

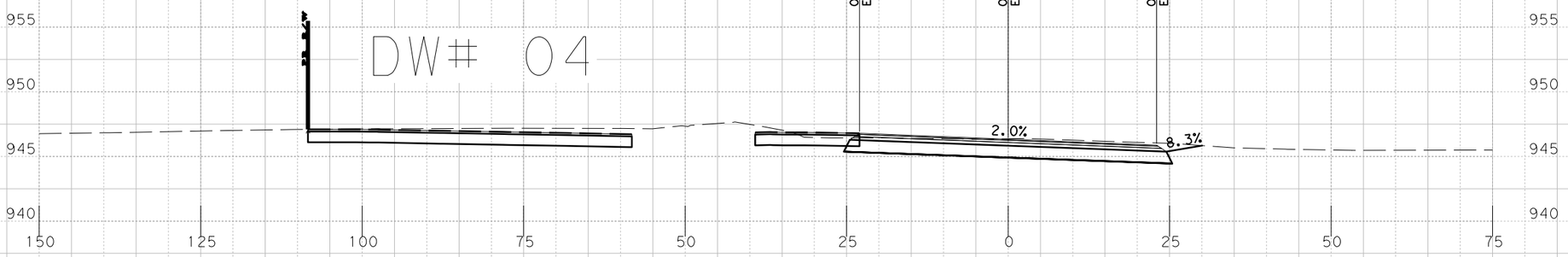

Sta. 538+00.0000 R1

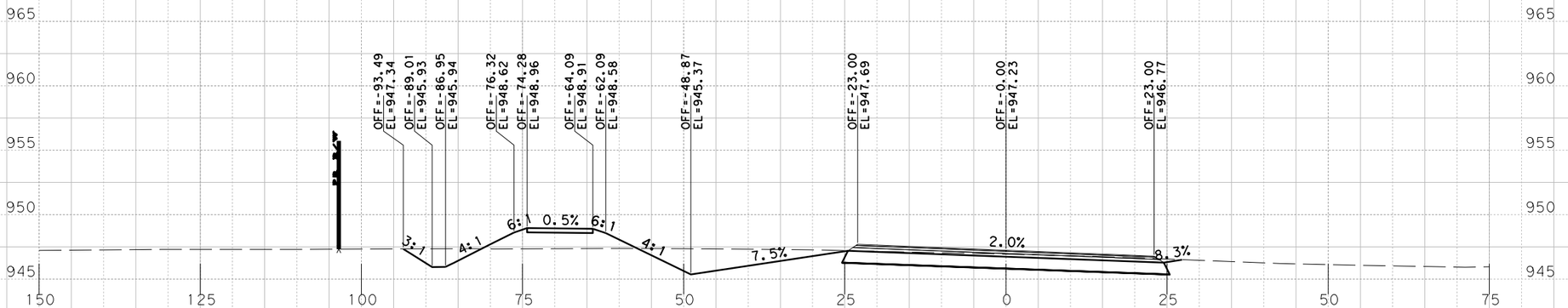

Sta. 537+50.0000 R1

PRELIMINARY
RM 2243
PHASE 1A 100%

X-SECTIONS

SCALE: HORIZONTAL 1"=20'
VERTICAL 1"=10'

SHEET 29 OF 168

BGE, Inc.
101 W. Louis Henna Blvd., Suite 400
Austin, TX 78728
Tel: 512-879-0400 • www.bgeinc.com
TBPE Registration No. F-1046

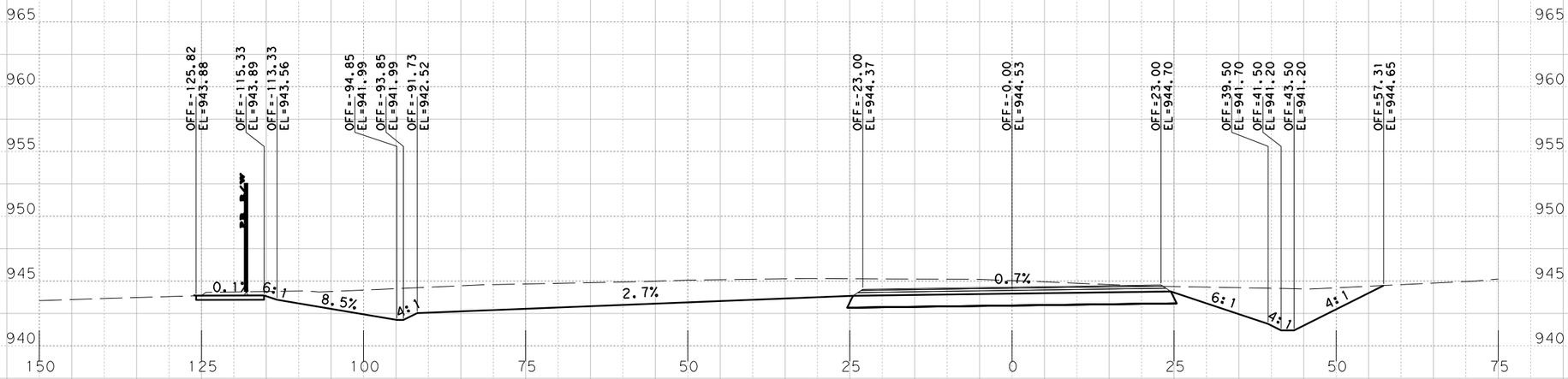

Sta. 539+00.0000 R1

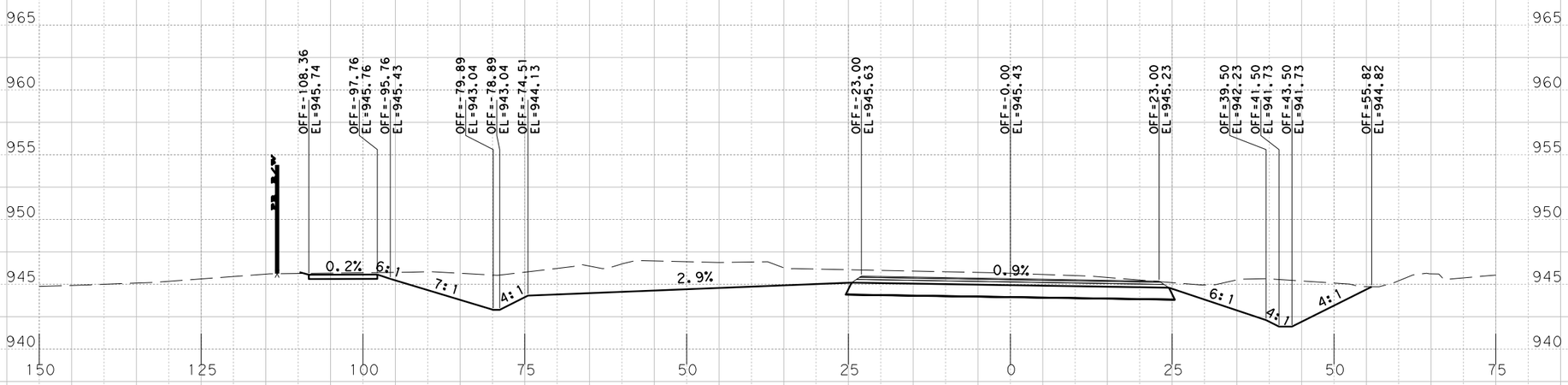

Sta. 538+50.0000 R1

PRELIMINARY
RM 2243
PHASE IA 100%

X-SECTIONS

SCALE: HORIZONTAL 1"=20'
VERTICAL 1"=10'

SHEET 30 OF 168

BGE, Inc.
101 W. Louis Henna Blvd., Suite 400
Austin, TX 78728
Tel: 512-879-0400 • www.bgeinc.com
TBPE Registration No. F-1046

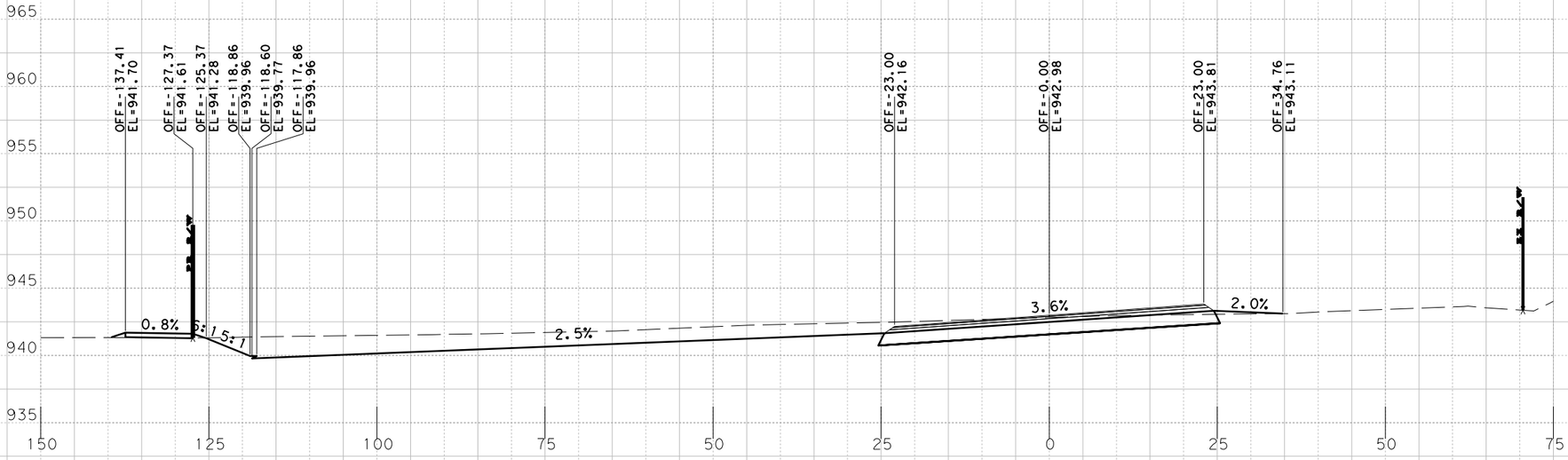

Sta. 540+00.0000 R1

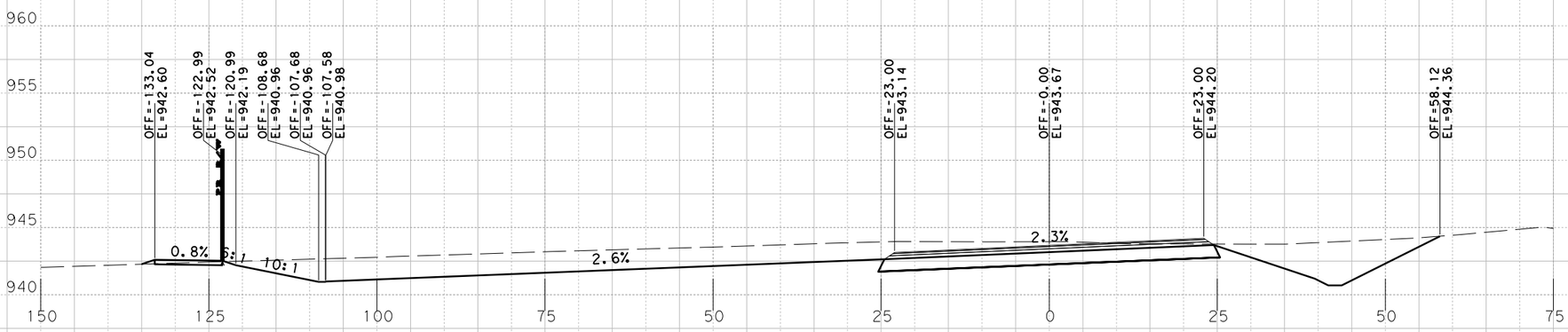

Sta. 539+50.0000 R1

PRELIMINARY
RM 2243
PHASE IA 100%

X-SECTIONS

SCALE: HORIZONTAL 1"=20'
VERTICAL 1"=10'

SHEET 31 OF 168

BGE, Inc.
101 W. Louis Henna Blvd., Suite 400
Austin, TX 78728
Tel: 512-879-0400 • www.bgeinc.com
TBPE Registration No. F-1046

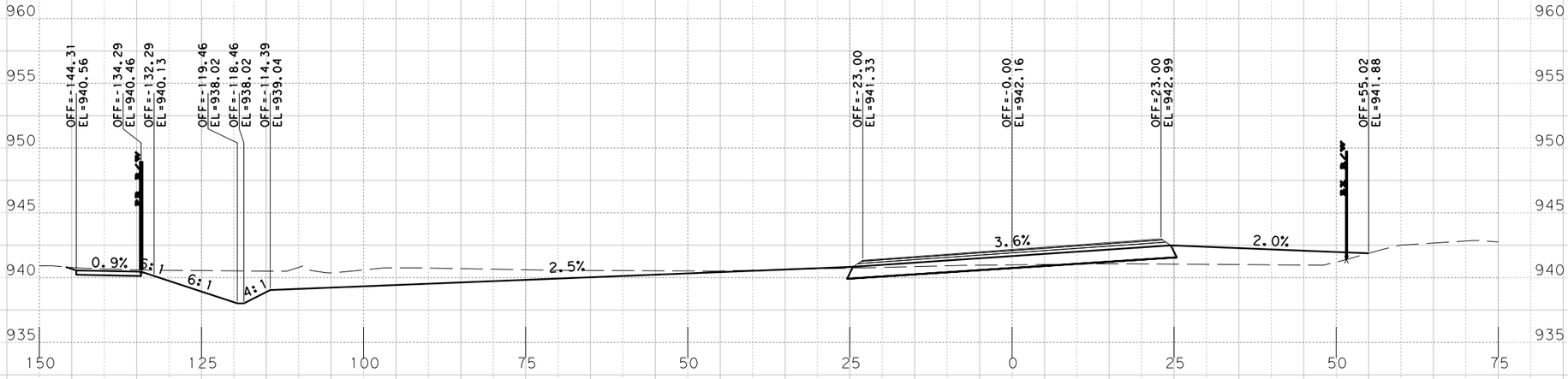

Sta. 541+00.0000 R1

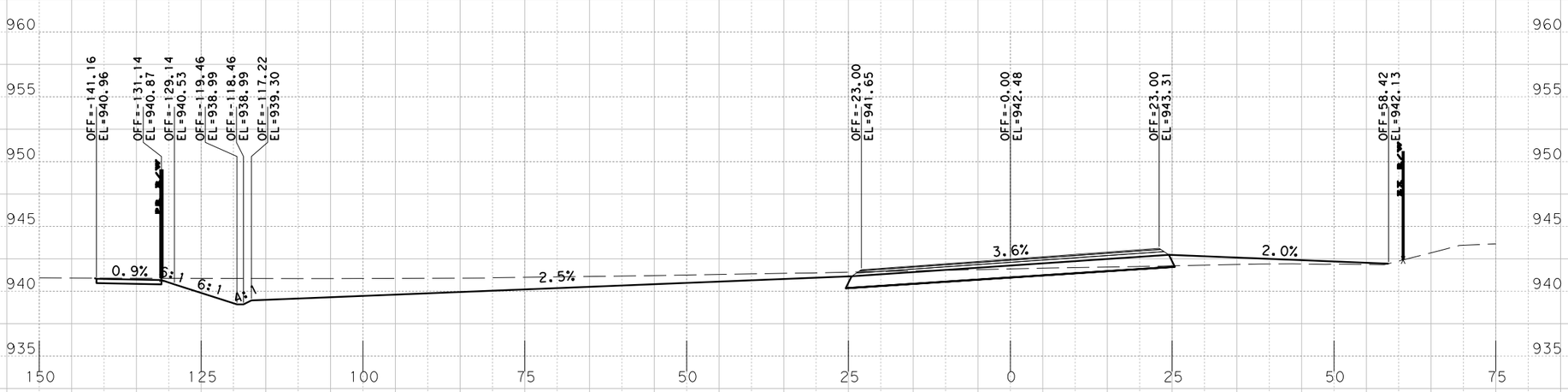

Sta. 540+50.0000 R1

PRELIMINARY
RM 2243
PHASE IA 100%

X-SECTIONS

SCALE: HORIZONTAL 1"=20'
VERTICAL 1"=10'

SHEET 32 OF 168

BGE, Inc.
101 W. Louis Henna Blvd., Suite 400
Austin, TX 78728
Tel: 512-879-0400 • www.bgeinc.com
TBPE Registration No. F-1046

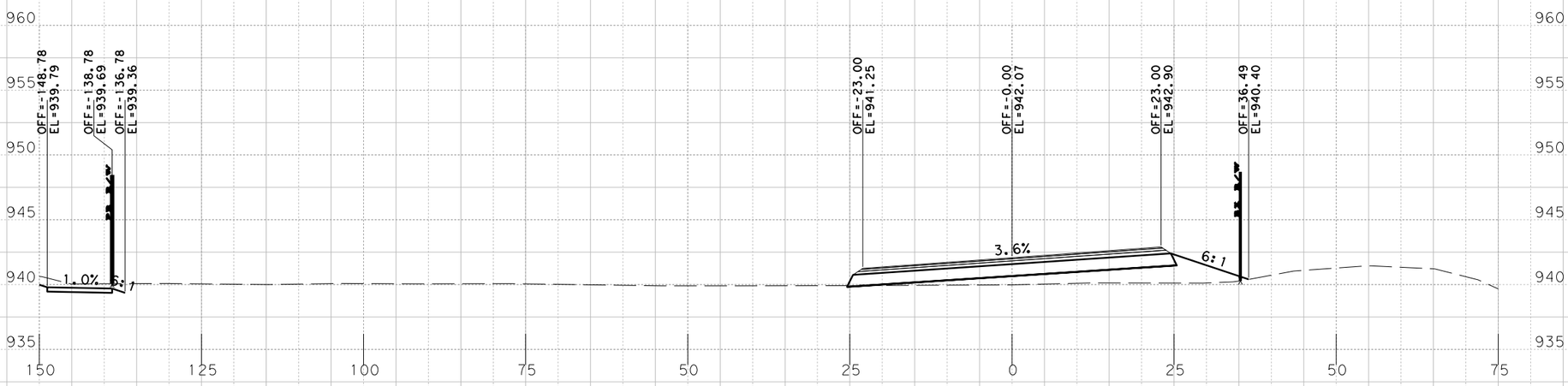

Sta. 542+00.0000 R1

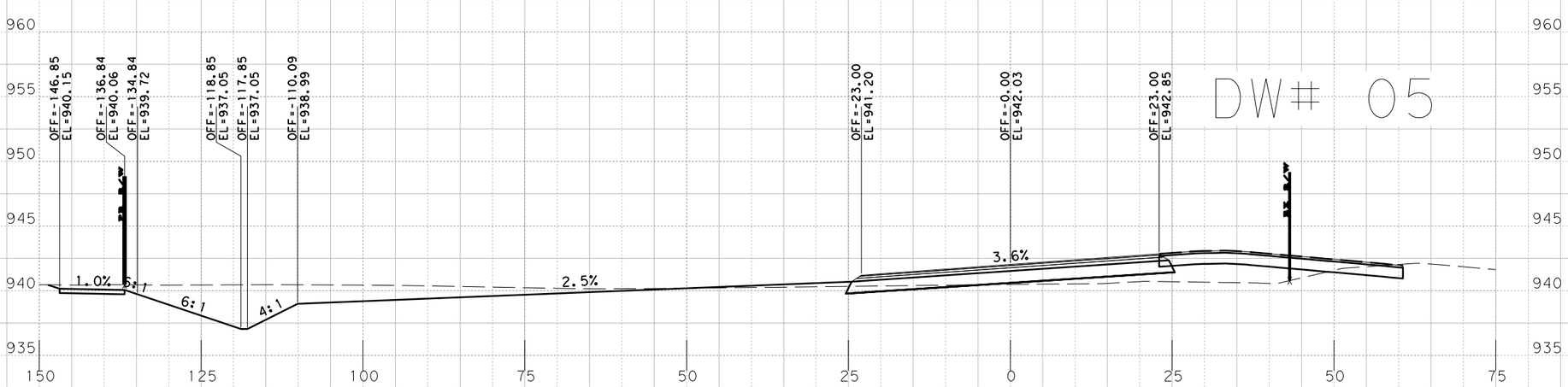

Sta. 541+50.0000 R1

PRELIMINARY
RM 2243
PHASE IA 100%

X-SECTIONS

SCALE: HORIZONTAL 1"=20'
VERTICAL 1"=10'

SHEET 33 OF 168

BGE, Inc.
101 W. Louis Henna Blvd., Suite 400
Austin, TX 78728
Tel: 512-879-0400 • www.bgeinc.com
TBPE Registration No. F-1046

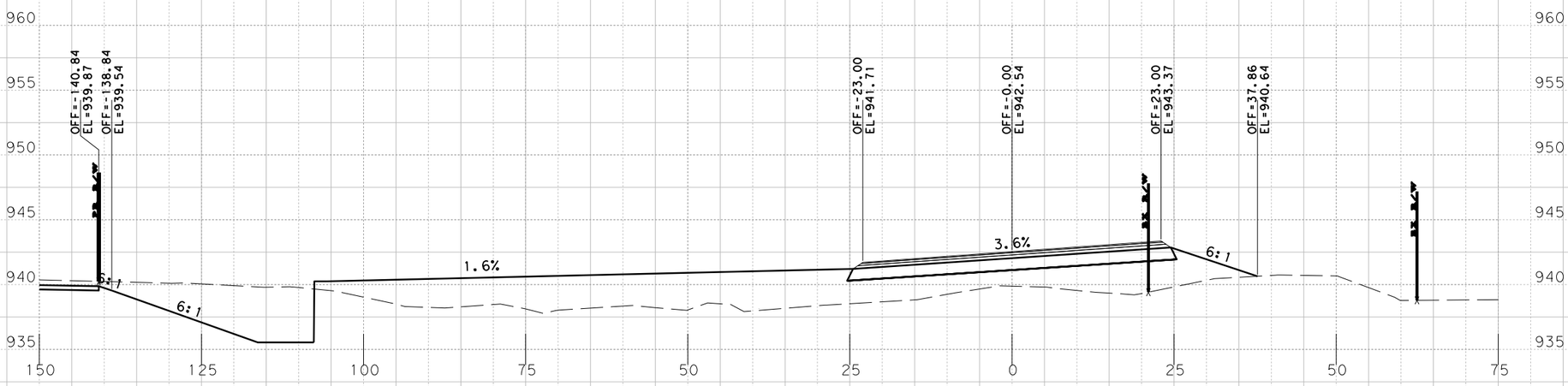

Sta. 543+00.0000 R1

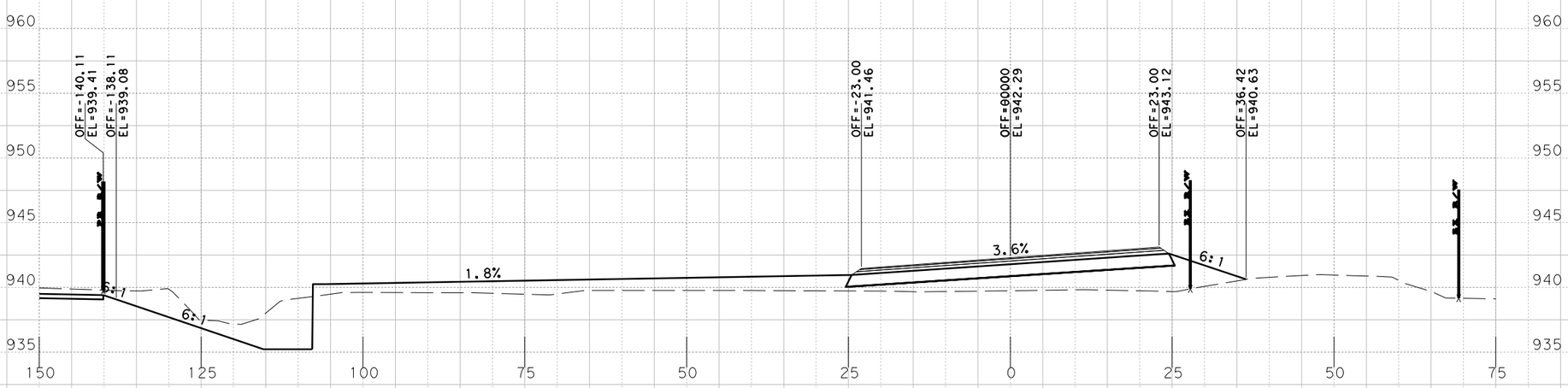

Sta. 542+50.0000 R1

PRELIMINARY
RM 2243
PHASE IA 100%

X-SECTIONS

SCALE: HORIZONTAL 1"=20'
VERTICAL 1"=10'

SHEET 34 OF 168

BGE, Inc.
101 W. Louis Henna Blvd., Suite 400
Austin, TX 78728
Tel: 512-879-0400 • www.bgeinc.com
TBPE Registration No. F-1046

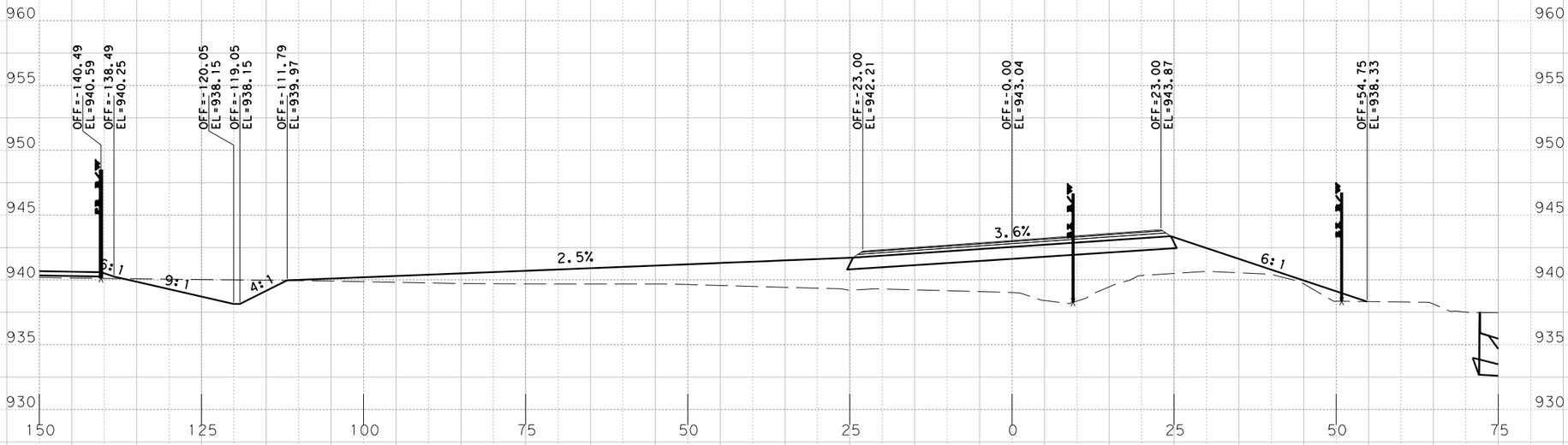

Sta. 544+00.0000 R1

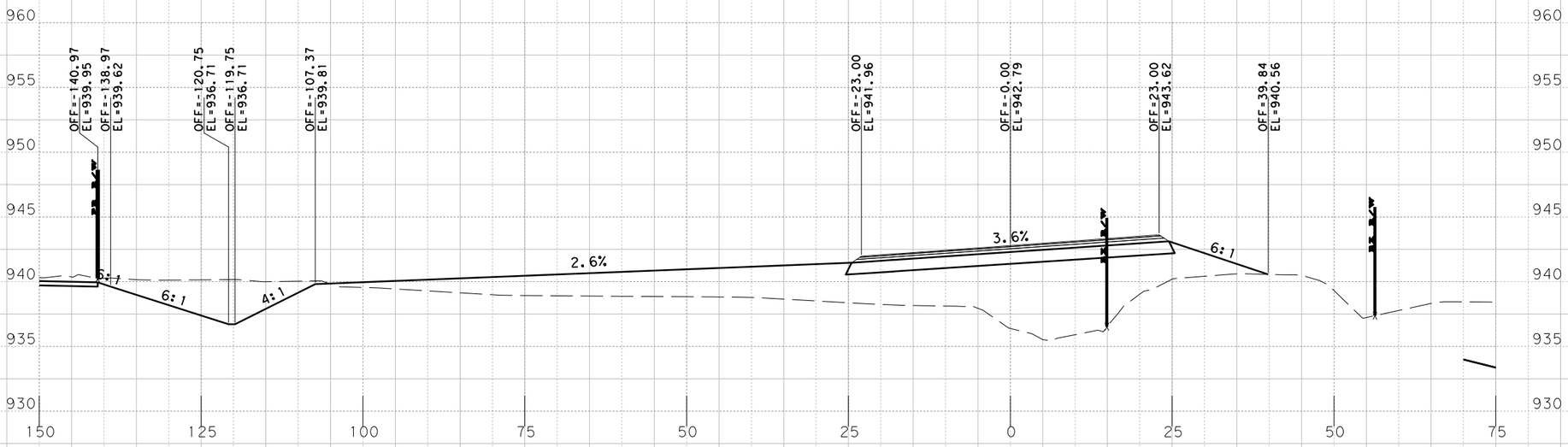

Sta. 543+50.0000 R1

PRELIMINARY
RM 2243
PHASE IA 100%
X-SECTIONS

SCALE: HORIZONTAL 1"=20'
VERTICAL 1"=10'

SHEET 35 OF 168

BGE, Inc.
101 W. Louis Henna Blvd., Suite 400
Austin, TX 78728
Tel: 512-879-0400 • www.bgeinc.com
TBPE Registration No. F-1046

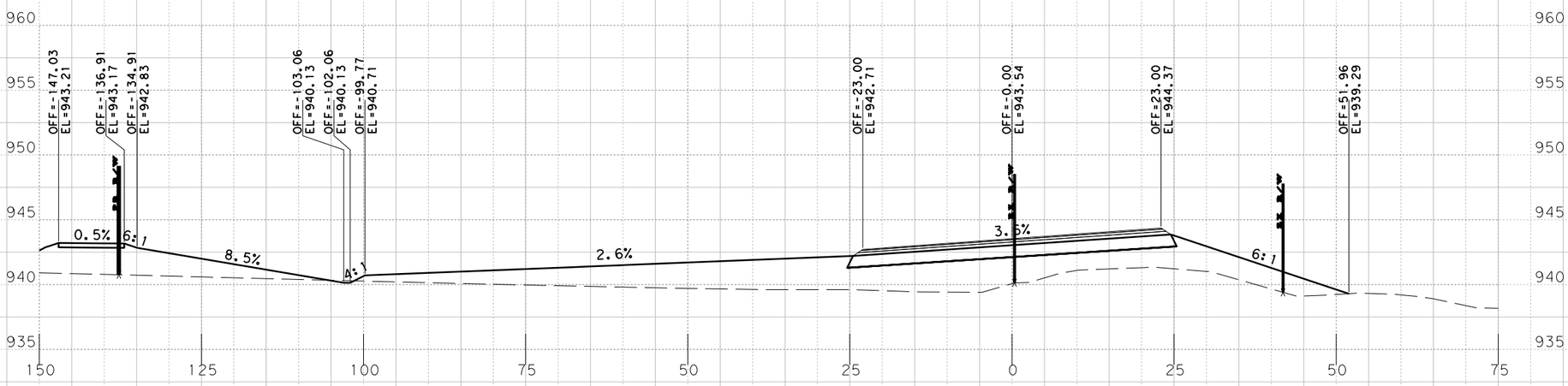

S†a. 545+00.0000 R1

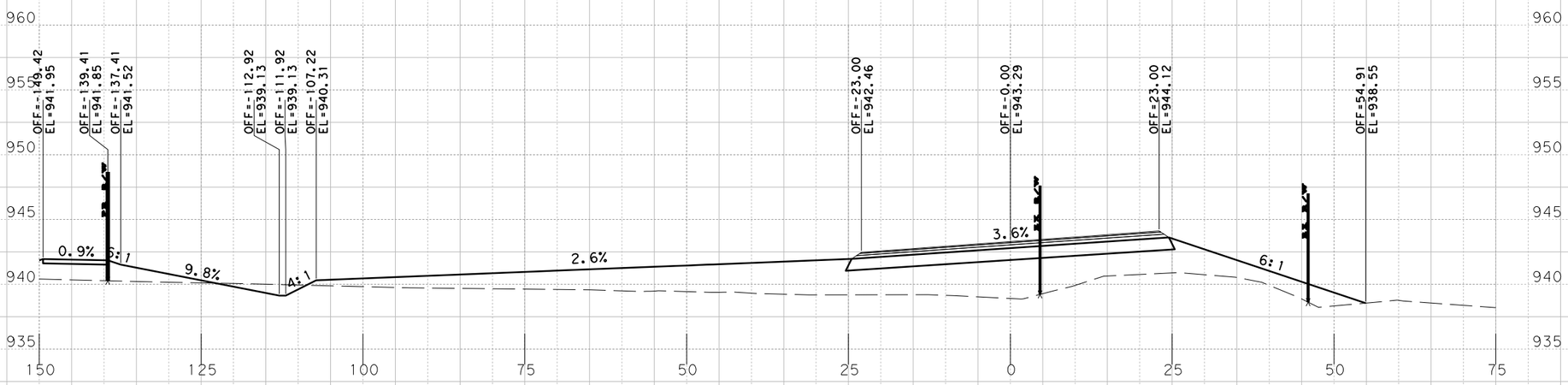

S†a. 544+50.0000 R1

PRELIMINARY
RM 2243
PHASE IA 100%

X-SECTIONS

SCALE: HORIZONTAL 1"=20'
VERTICAL 1"=10'

SHEET 36 OF 168

BGE, Inc.
101 W. Louis Henna Blvd., Suite 400
Austin, TX 78728
Tel: 512-879-0400 • www.bgeinc.com
TBPE Registration No. F-1046

DW# 06

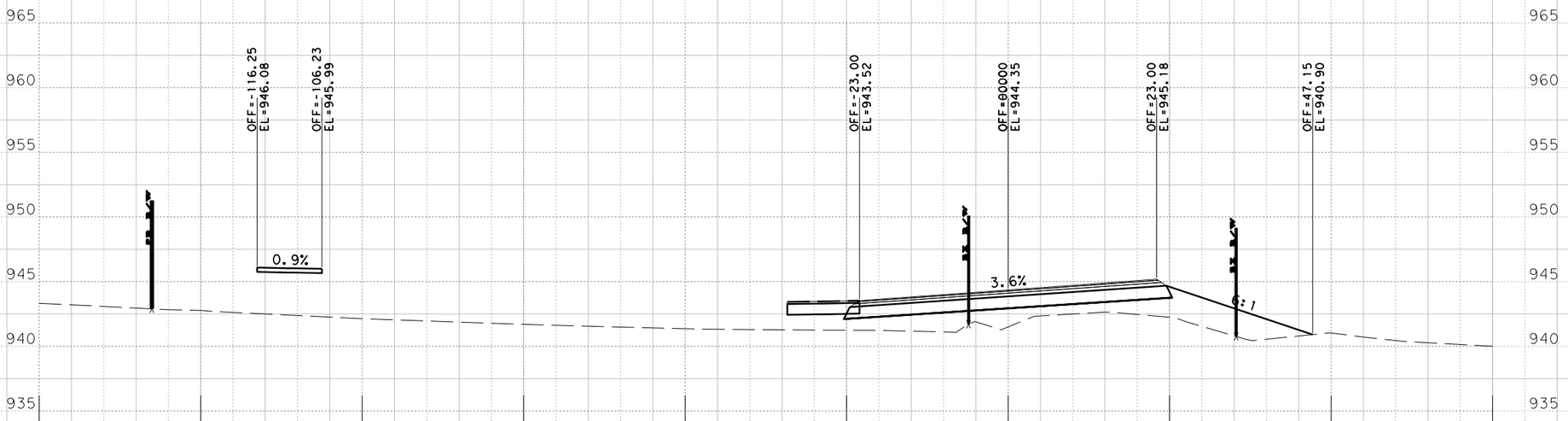

Sta. 546+00.0000 R1

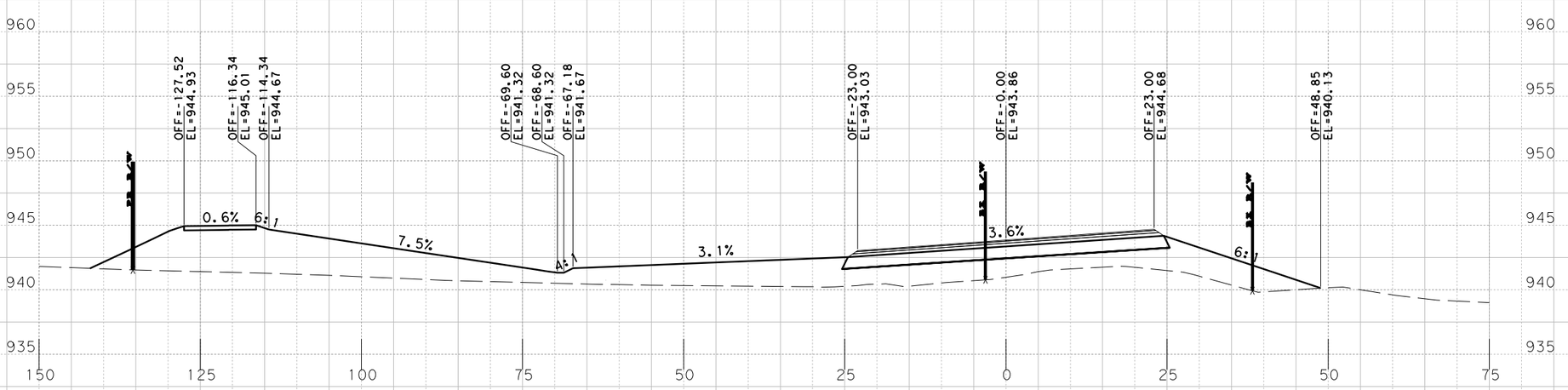

Sta. 545+50.0000 R1

PRELIMINARY
RM 2243
PHASE IA 100%
X-SECTIONS

SCALE: HORIZONTAL 1"=20'
VERTICAL 1"=10'

SHEET 37 OF 168

BGE, Inc.
101 W. Louis Henna Blvd., Suite 400
Austin, TX 78728
Tel: 512-879-0400 • www.bgeinc.com
TBPE Registration No. F-1046

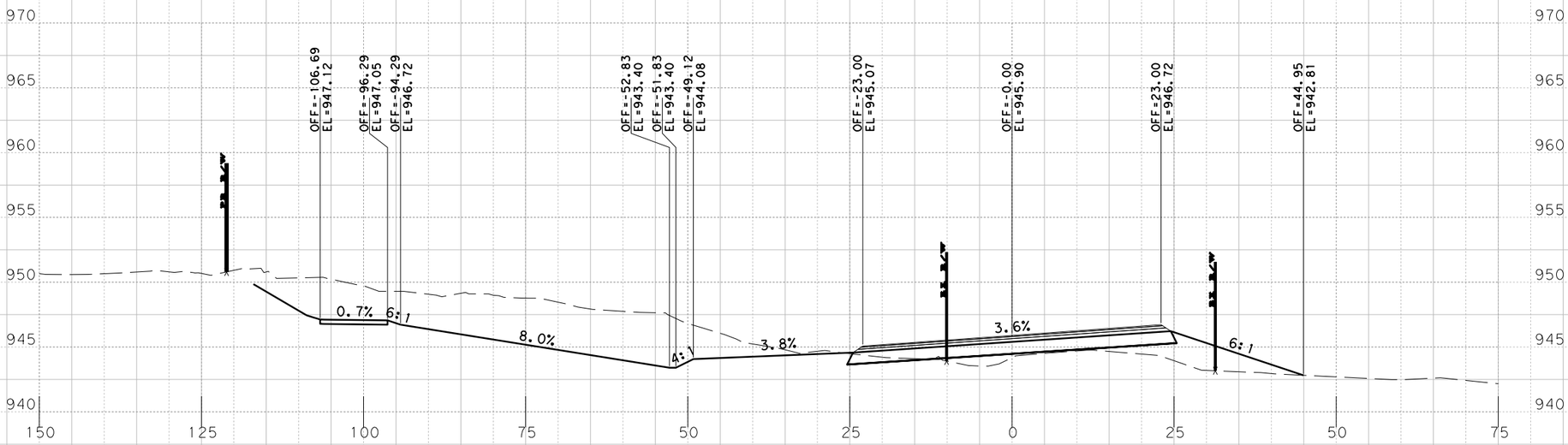

Sta. 547+00.0000 R1

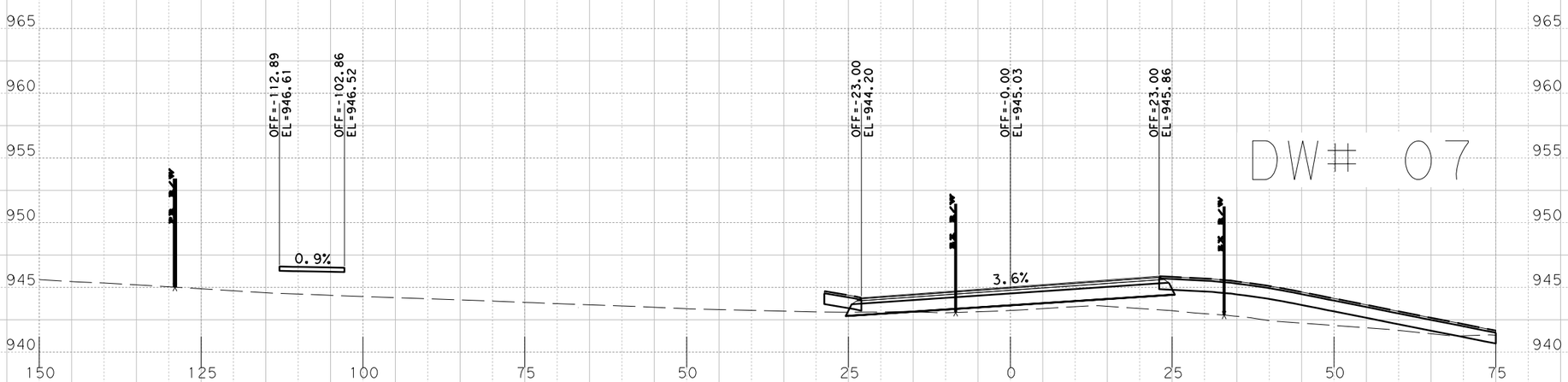

Sta. 546+50.0000 R1

DW# 07

PRELIMINARY
RM 2243
PHASE IA 100%

X-SECTIONS

SCALE: HORIZONTAL 1"=20'
VERTICAL 1"=10'

SHEET 38 OF 168

BGE, Inc.
101 W. Louis Henna Blvd., Suite 400
Austin, TX 78728
Tel: 512-879-0400 • www.bgeinc.com
TBPE Registration No. F-1046

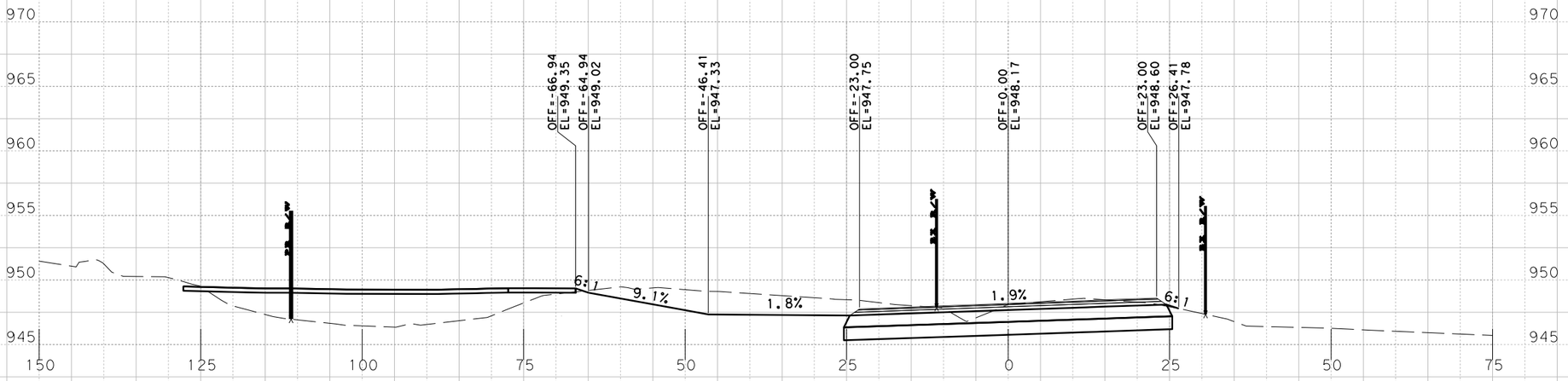

Sta. 548+00.0000 R1

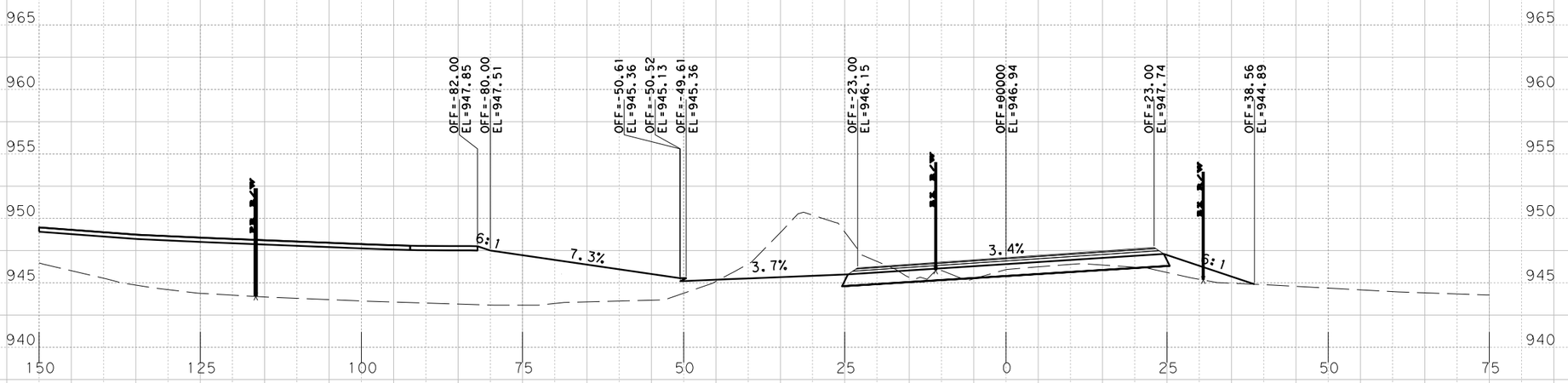

Sta. 547+50.0000 R1

PRELIMINARY
RM 2243
PHASE IA 100%

X-SECTIONS

SCALE: HORIZONTAL 1"=20'
VERTICAL 1"=10'

SHEET 39 OF 168

BGE, Inc.
101 W. Louis Henna Blvd., Suite 400
Austin, TX 78728
Tel: 512-879-0400 • www.bgeinc.com
TBPE Registration No. F-1046

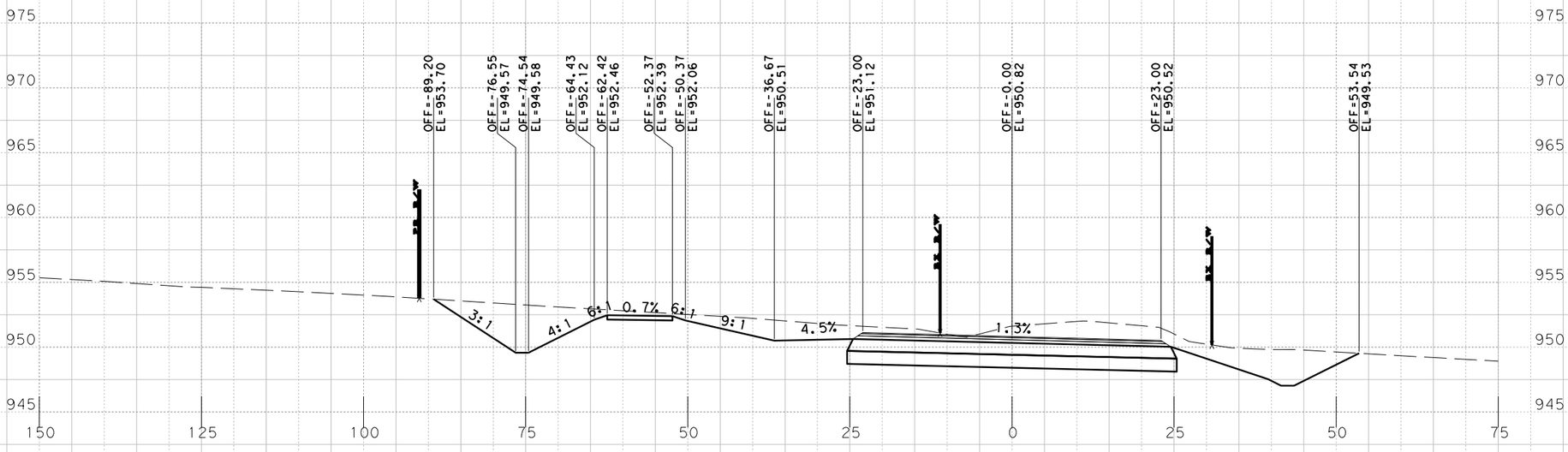

Sta. 549+00.0000 R1

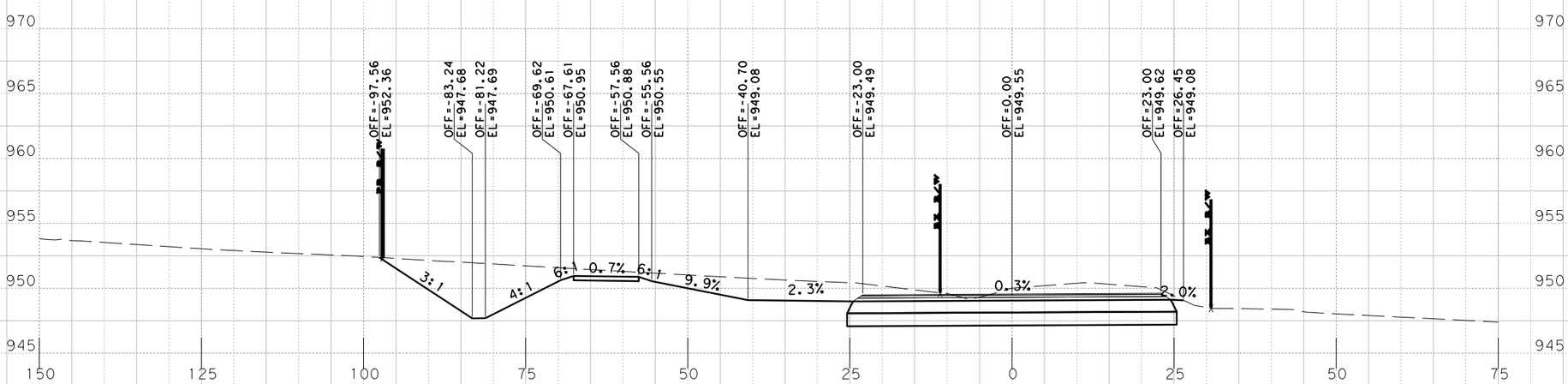

Sta. 548+50.0000 R1

PRELIMINARY
RM 2243
PHASE IA 100%
X-SECTIONS

SCALE: HORIZONTAL 1"=20'
VERTICAL 1"=10'

SHEET 40 OF 168

BGE, Inc.
101 W. Louis Henna Blvd., Suite 400
Austin, TX 78728
Tel: 512-879-0400 • www.bgeinc.com
TBPE Registration No. F-1046

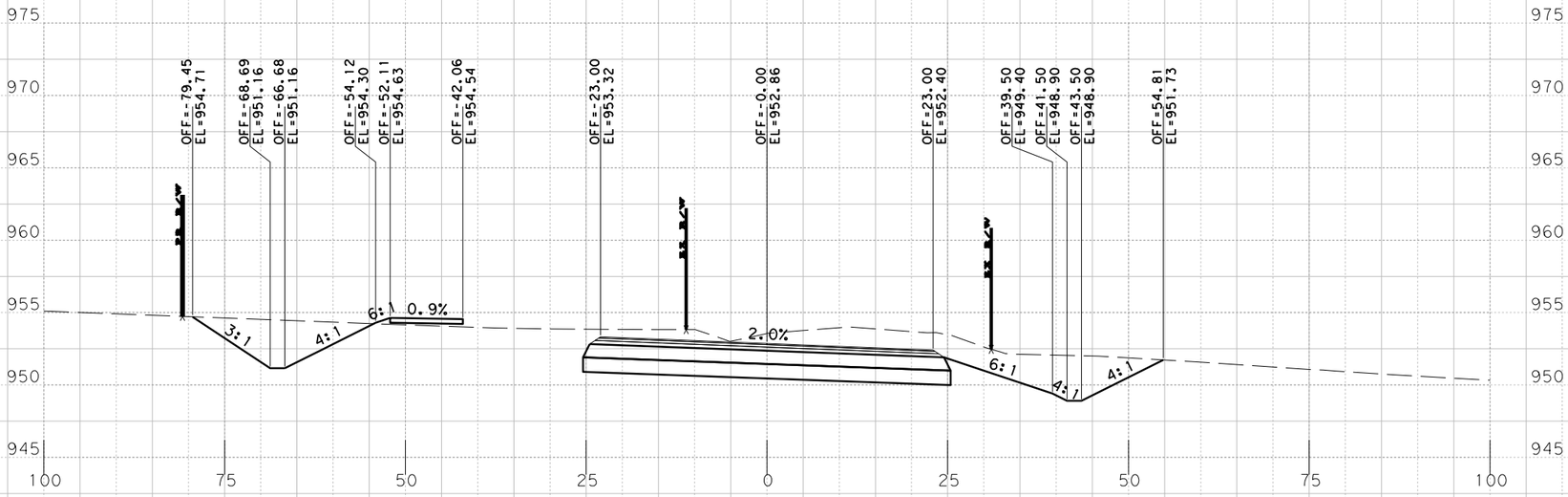

Sta. 550+00.0000 R1

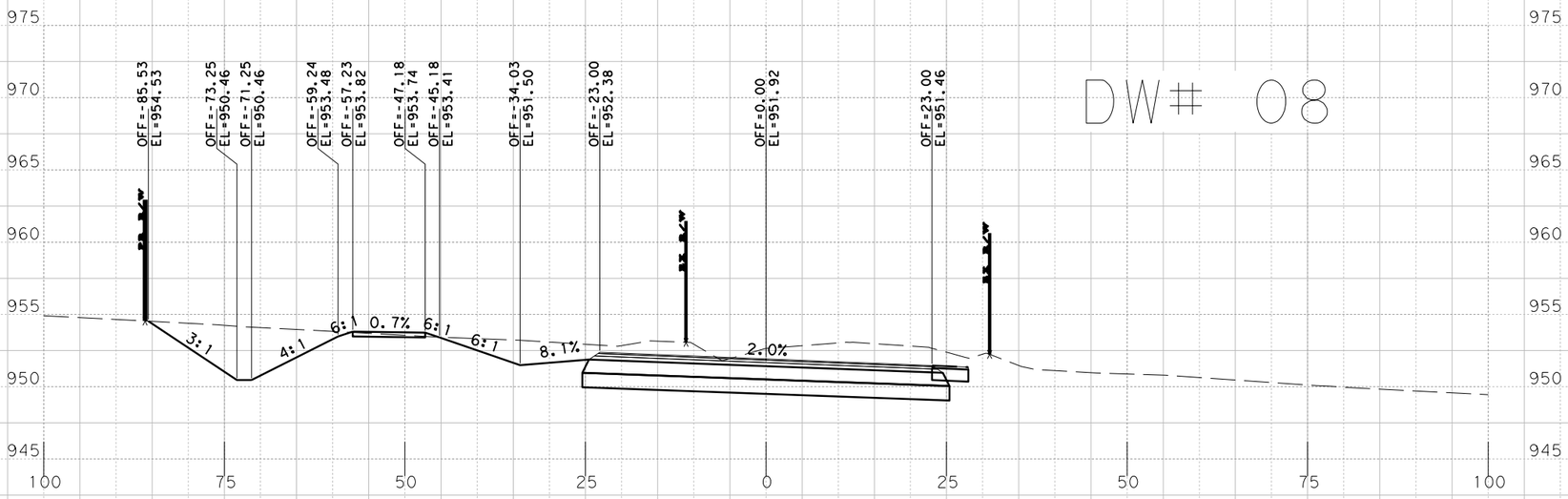

Sta. 549+50.0000 R1

DW# 08

PRELIMINARY
RM 2243
PHASE IA 100%

X-SECTIONS

SCALE: HORIZONTAL 1"=20'
VERTICAL 1"=10'

SHEET 41 OF 168

BGE, Inc.
101 W. Louis Henna Blvd., Suite 400
Austin, TX 78728
Tel: 512-879-0400 • www.bgeinc.com
TBPE Registration No. F-1046

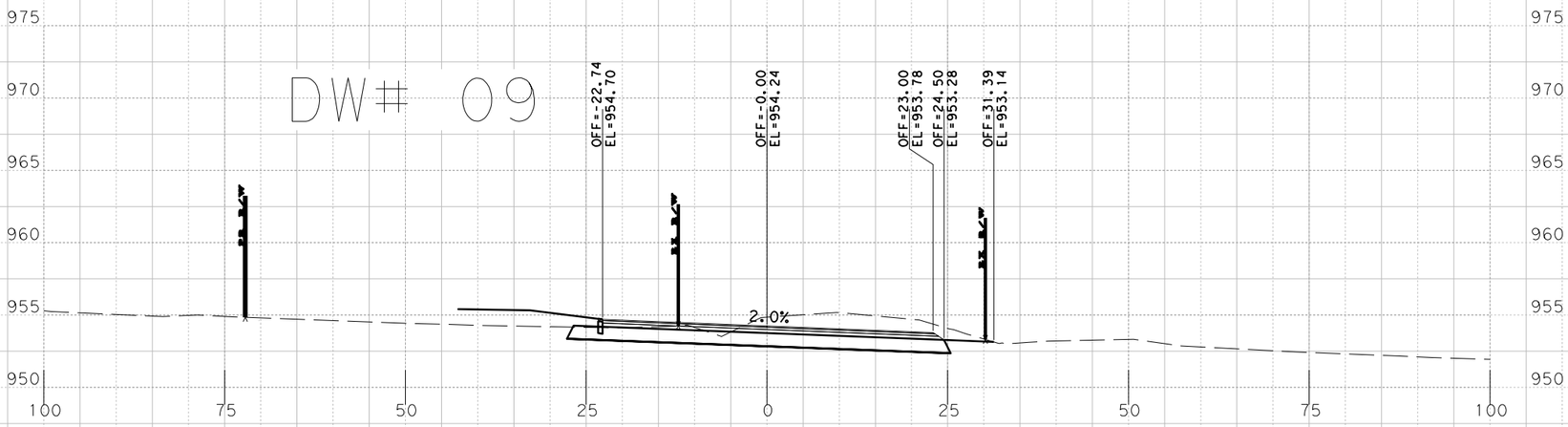

Sta. 551+00.0000 R1

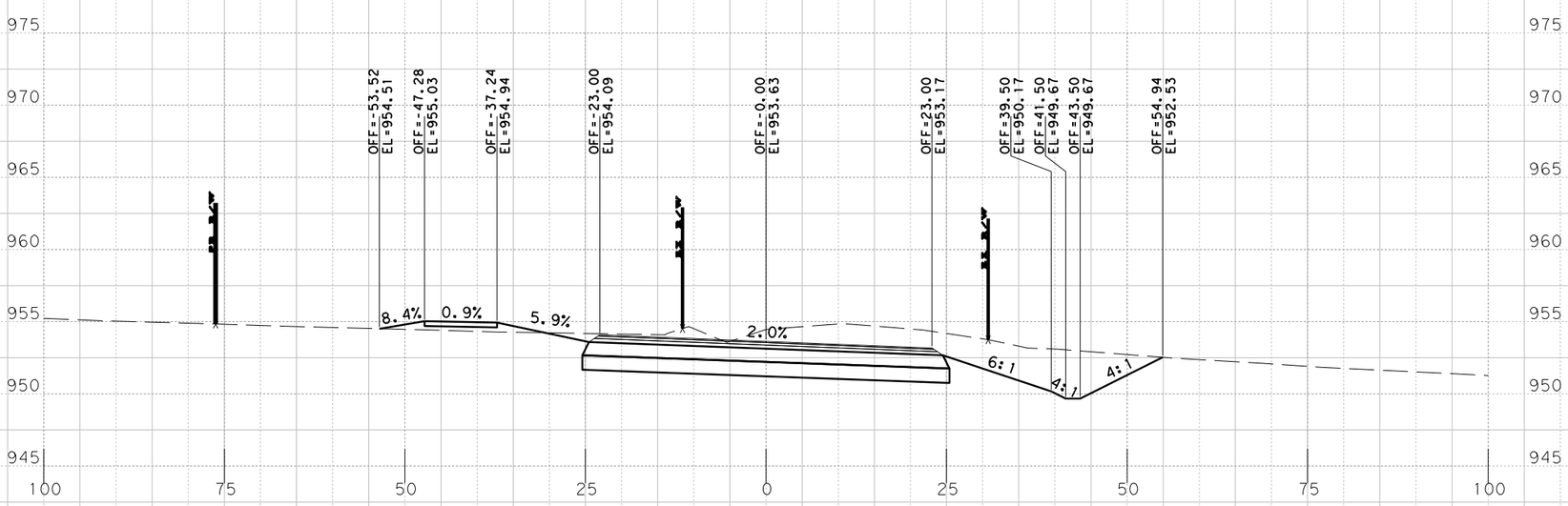

Sta. 550+50.0000 R1

PRELIMINARY
RM 2243
PHASE IA 100%

X-SECTIONS

SCALE: HORIZONTAL 1"=20'
VERTICAL 1"=10'

SHEET 42 OF 168

BGE, Inc.
101 W. Louis Henna Blvd., Suite 400
Austin, TX 78728
Tel: 512-879-0400 • www.bgeinc.com
TBPE Registration No. F-1046

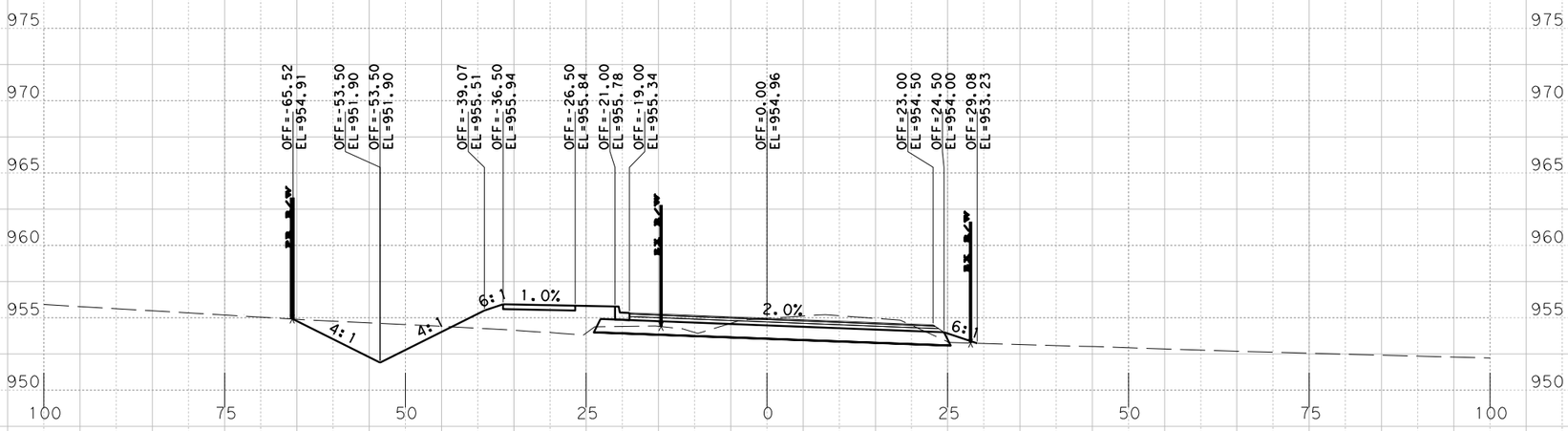

Sta. 552+00.0000 R1

DW# 09

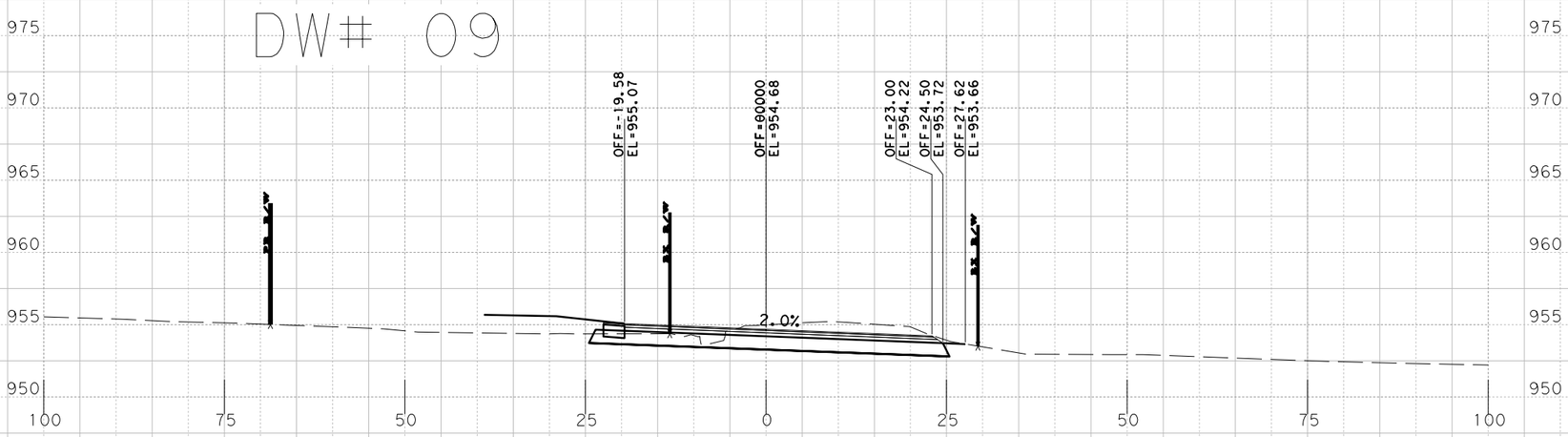

Sta. 551+50.0000 R1

PRELIMINARY
RM 2243
PHASE IA 100%

X-SECTIONS

SCALE: HORIZONTAL 1"=20'
VERTICAL 1"=10'

SHEET 43 OF 168

BGE, Inc.
101 W. Louis Henna Blvd., Suite 400
Austin, TX 78728
Tel: 512-879-0400 • www.bgeinc.com
TBPE Registration No. F-1046

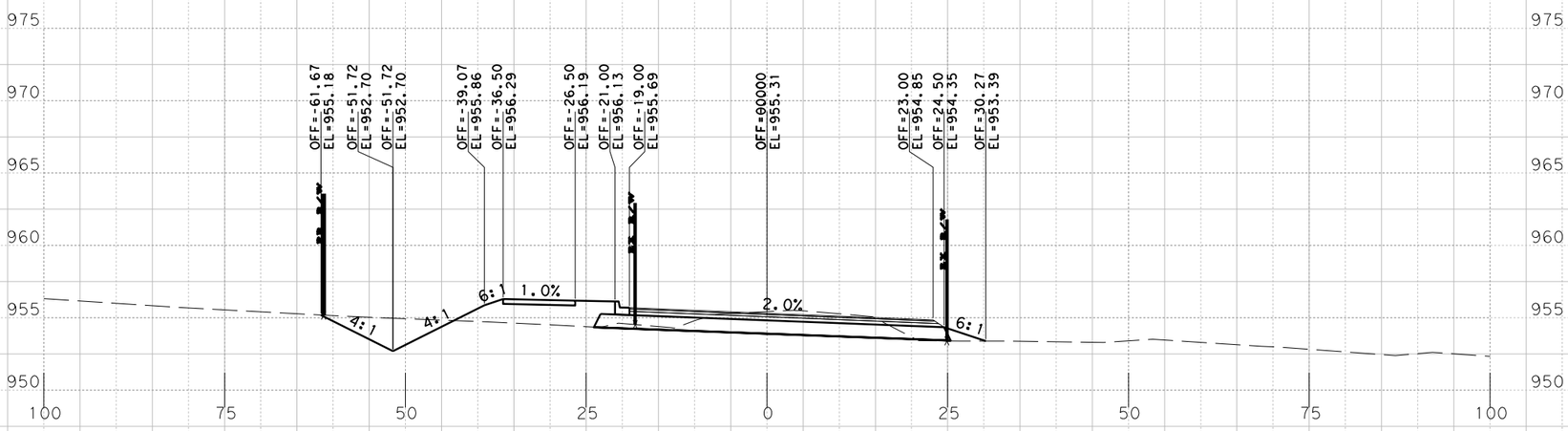

Sta. 553+00.0000 R1

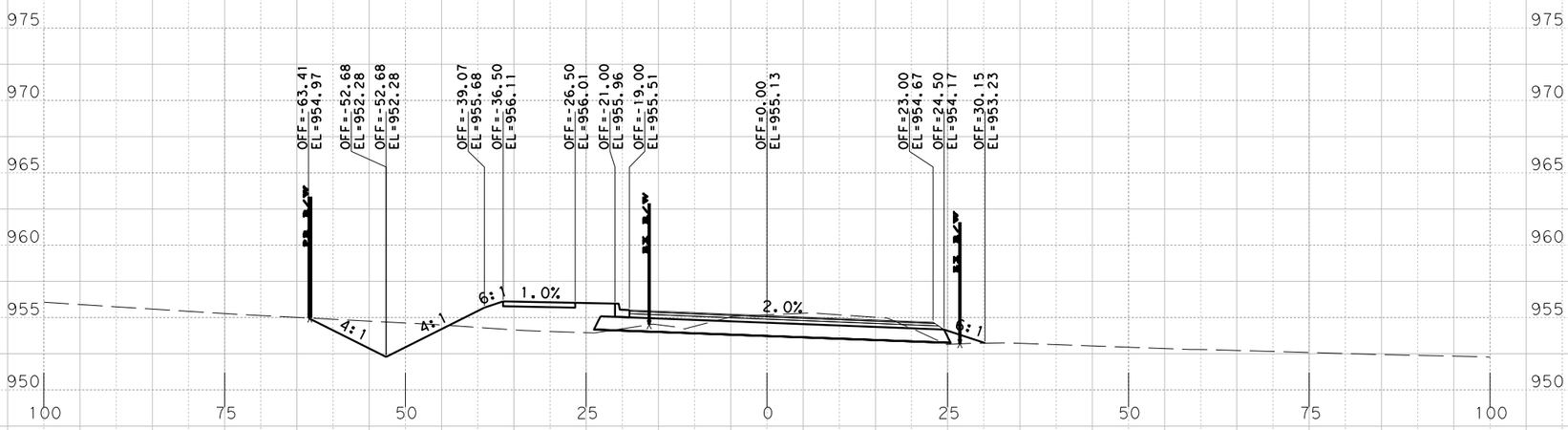

Sta. 552+50.0000 R1

PRELIMINARY
RM 2243
PHASE IA 100%

X-SECTIONS

SCALE: HORIZONTAL 1"=20'
VERTICAL 1"=10'

SHEET 44 OF 168

BGE, Inc.
101 W. Louis Henna Blvd., Suite 400
Austin, TX 78728
Tel: 512-879-0400 • www.bgeinc.com
TBPE Registration No. F-1046

DW# 10

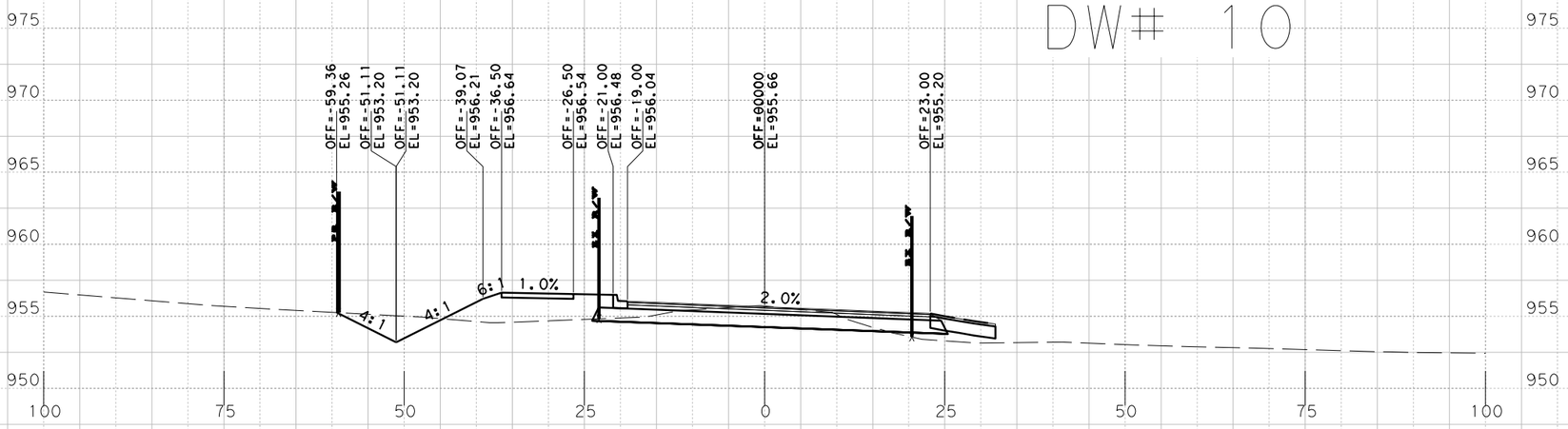

Sta. 554+00.0000 R1

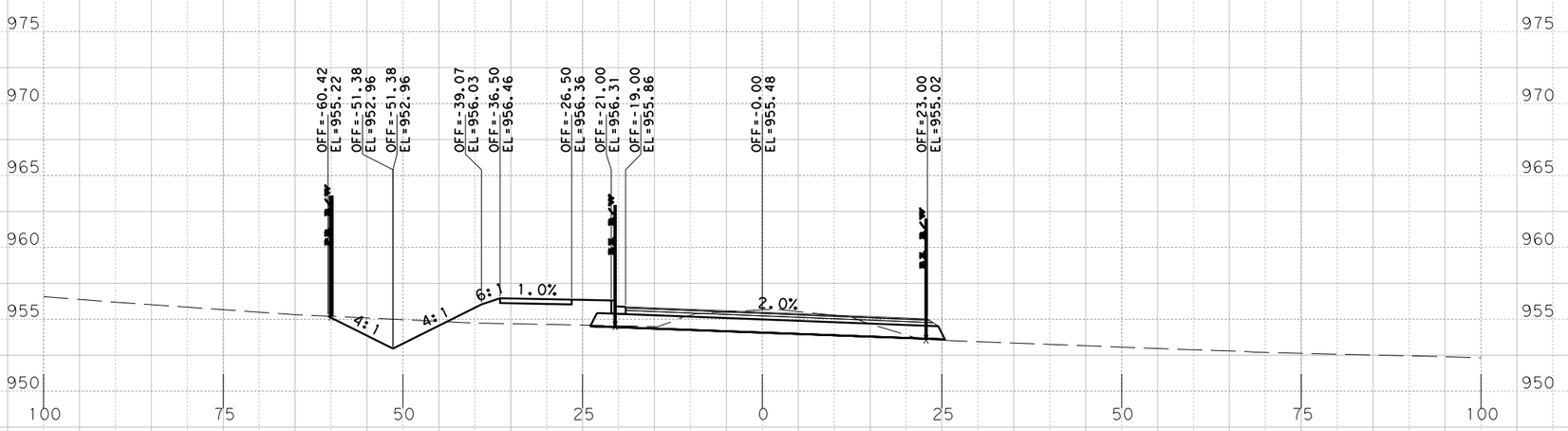

Sta. 553+50.0000 R1

PRELIMINARY
RM 2243
PHASE IA 100%
X-SECTIONS

SCALE: HORIZONTAL 1"=20'
VERTICAL 1"=10'

SHEET 45 OF 168

BGE, Inc.
101 W. Louis Henna Blvd., Suite 400
Austin, TX 78728
Tel: 512-879-0400 • www.bgeinc.com
TBPE Registration No. F-1046

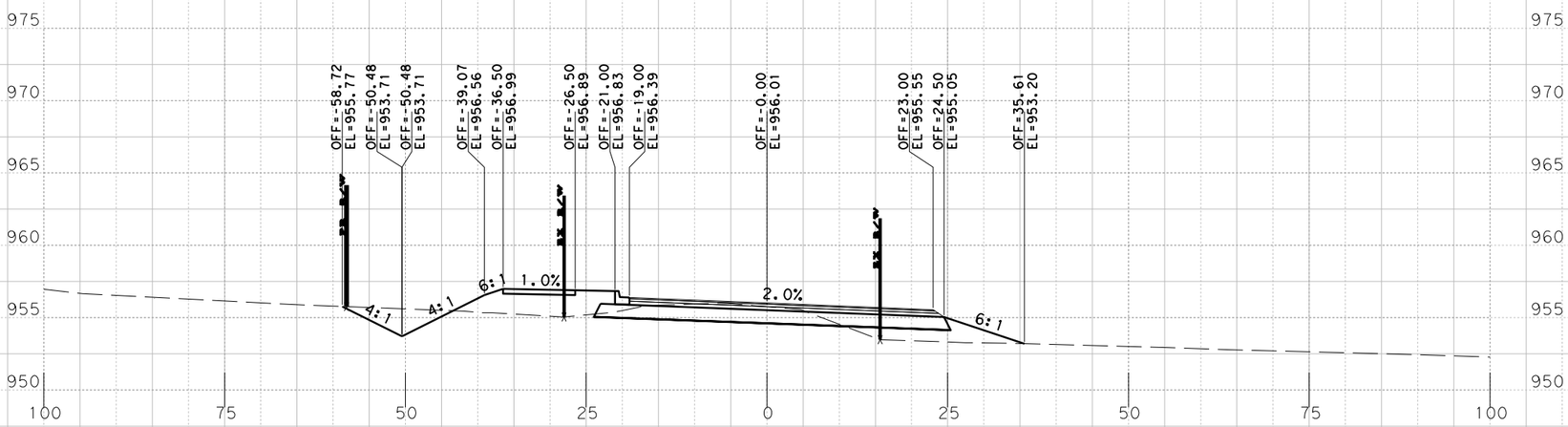

Sta. 555+00.0000 R1

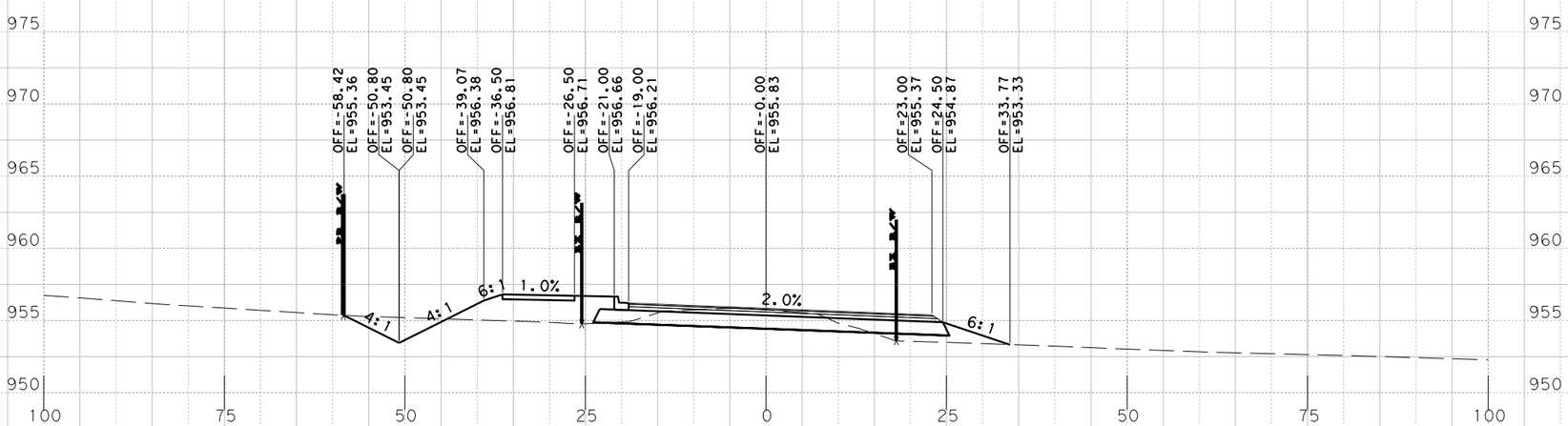

Sta. 554+50.0000 R1

PRELIMINARY
RM 2243
PHASE IA 100%

X-SECTIONS

SCALE: HORIZONTAL 1"=20'
VERTICAL 1"=10'

BGE, Inc.
101 W. Louis Henna Blvd., Suite 400
Austin, TX 78728
Tel: 512-879-0400 • www.bgeinc.com
TBPE Registration No. F-1046

DW# 11

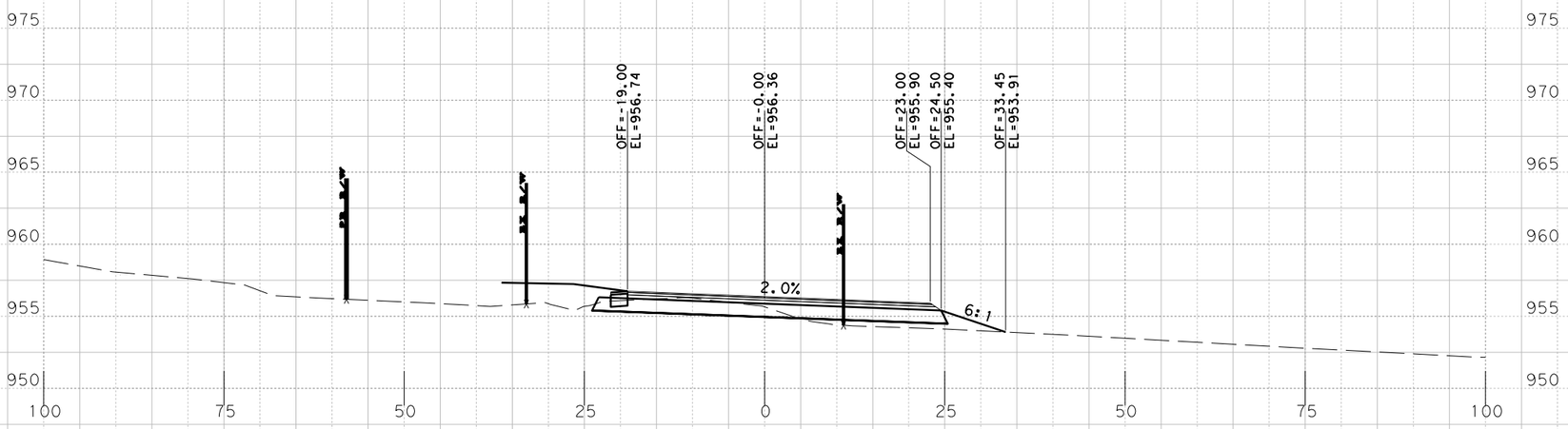

Sta. 556+00.0000 R1

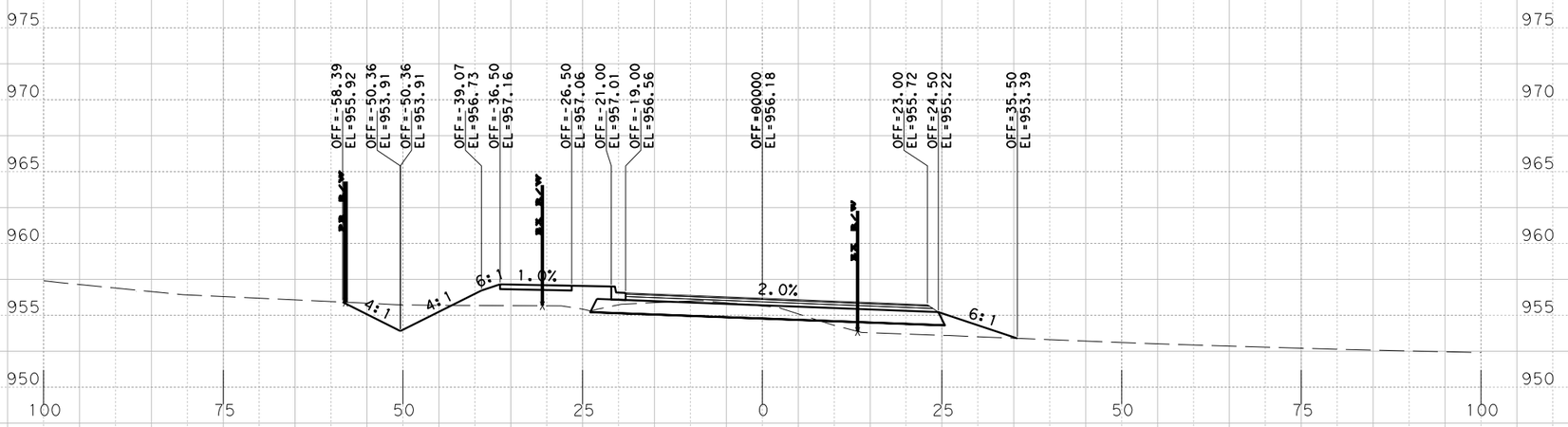

Sta. 555+50.0000 R1

PRELIMINARY
RM 2243
PHASE IA 100%

X-SECTIONS

SCALE: HORIZONTAL 1"=20'
VERTICAL 1"=10'

SHEET 47 OF 168

BGE, Inc.
101 W. Louis Henna Blvd., Suite 400
Austin, TX 78728
Tel: 512-879-0400 • www.bgeinc.com
TBPE Registration No. F-1046

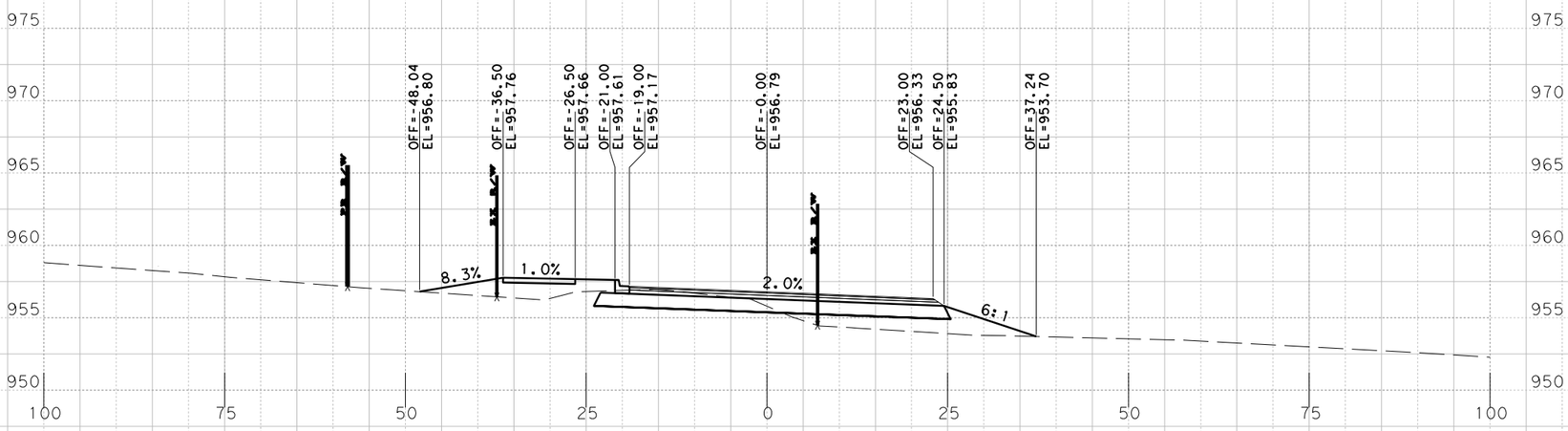

Sta. 557+00.0000 R1

DW# 11

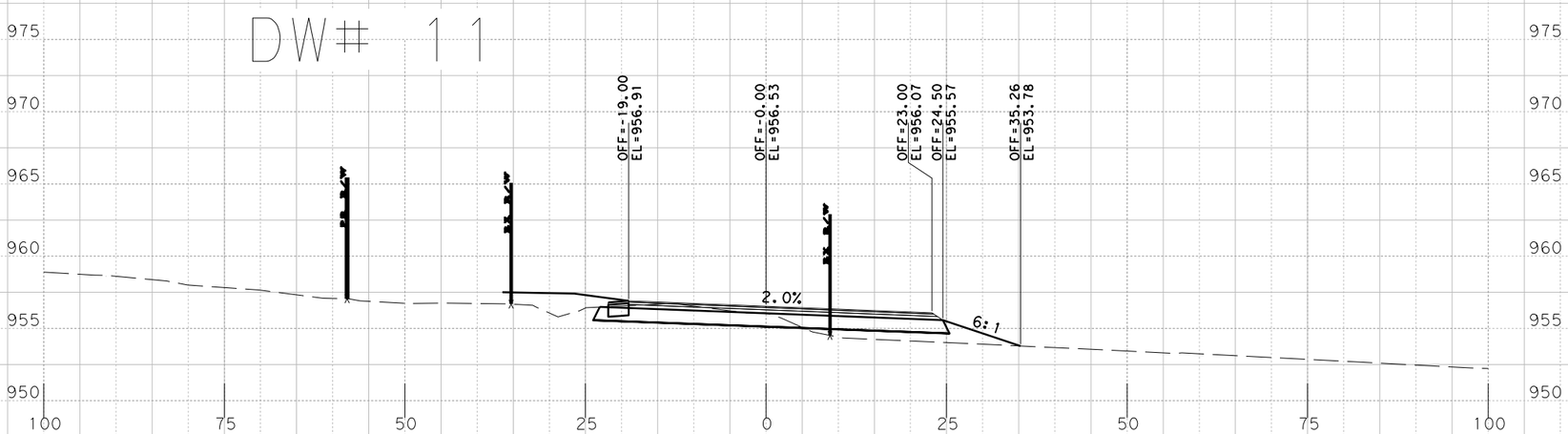

Sta. 556+50.0000 R1

PRELIMINARY
RM 2243
PHASE IA 100%

X-SECTIONS

SCALE: HORIZONTAL 1"=20'
VERTICAL 1"=10'

SHEET 48 OF 168

BGE, Inc.
101 W. Louis Henna Blvd., Suite 400
Austin, TX 78728
Tel: 512-879-0400 • www.bgeinc.com
TBPE Registration No. F-1046

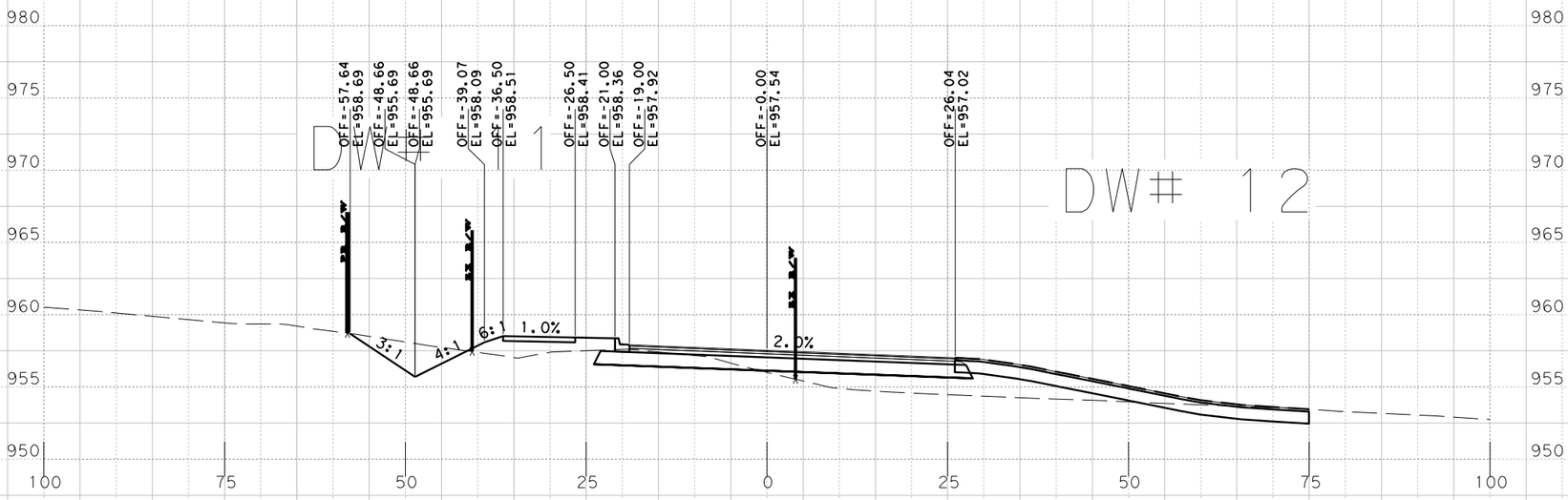

Sta. 558+00.0000 R1

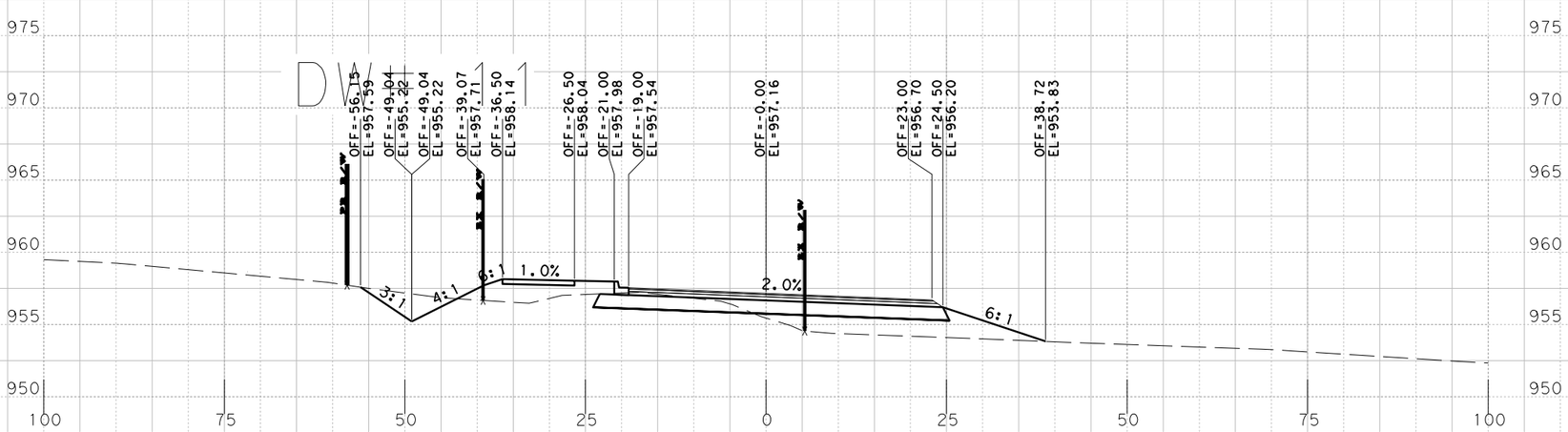

Sta. 557+50.0000 R1

PRELIMINARY
RM 2243
PHASE IA 100%

X-SECTIONS

SCALE: HORIZONTAL 1"=20'
VERTICAL 1"=10'

SHEET 49 OF 168

BGE, Inc.
101 W. Louis Henna Blvd., Suite 400
Austin, TX 78728
Tel: 512-879-0400 • www.bgeinc.com
TBPE Registration No. F-1046

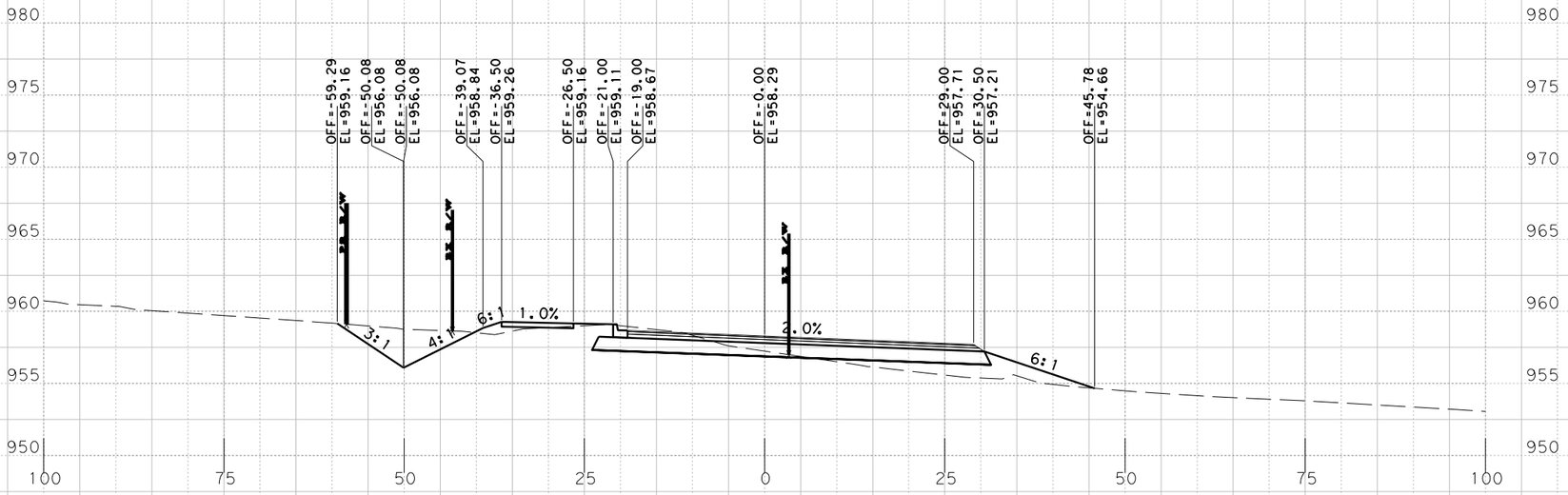

Sta. 559+00.0000 R1

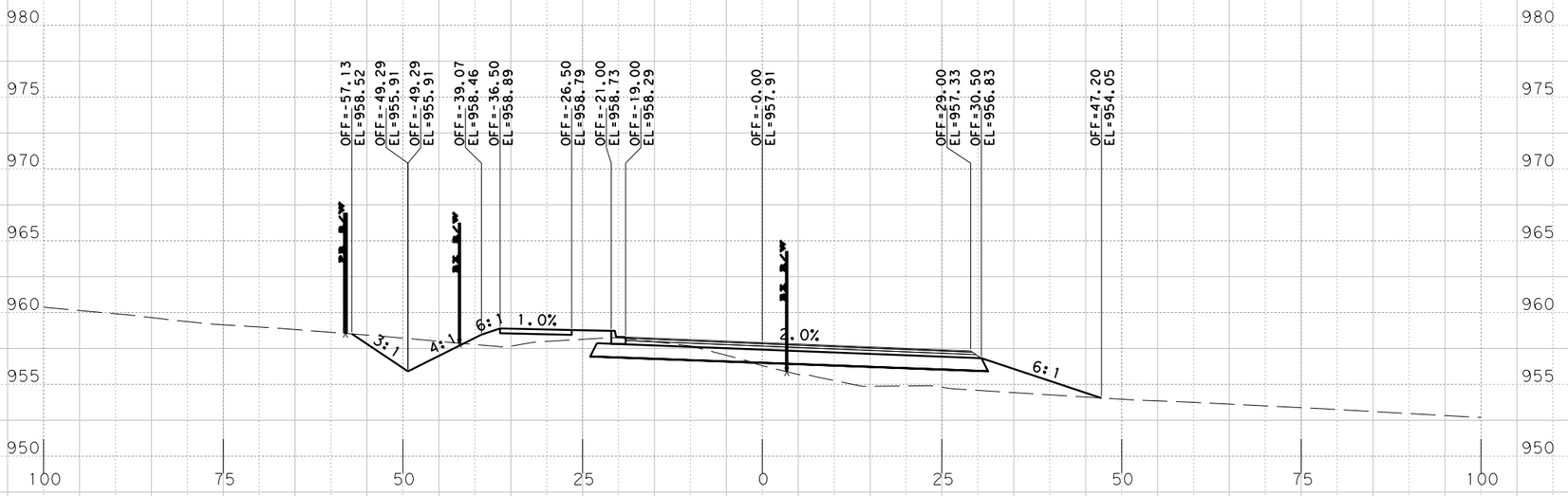

Sta. 558+50.0000 R1

PRELIMINARY
RM 2243
PHASE IA 100%
X-SECTIONS

SCALE: HORIZONTAL 1"=20'
VERTICAL 1"=10'

SHEET 50 OF 168

BGE, Inc.
101 W. Louis Henna Blvd., Suite 400
Austin, TX 78728
Tel: 512-879-0400 • www.bgeinc.com
TBPE Registration No. F-1046

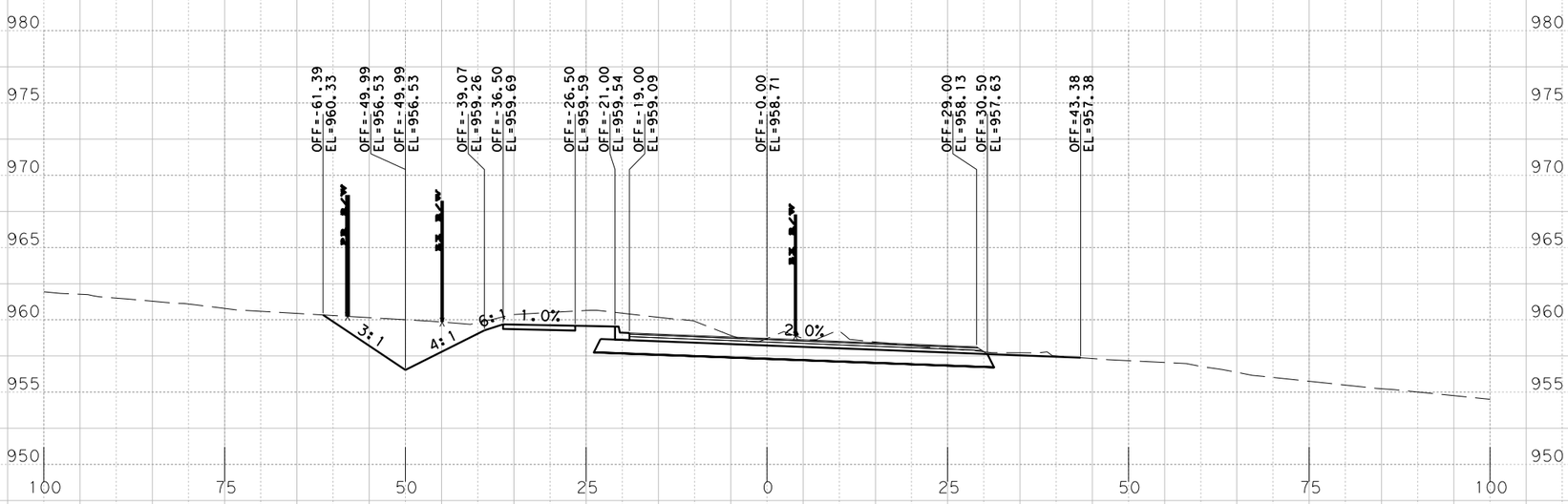

S+a. 560+00.0000 R1

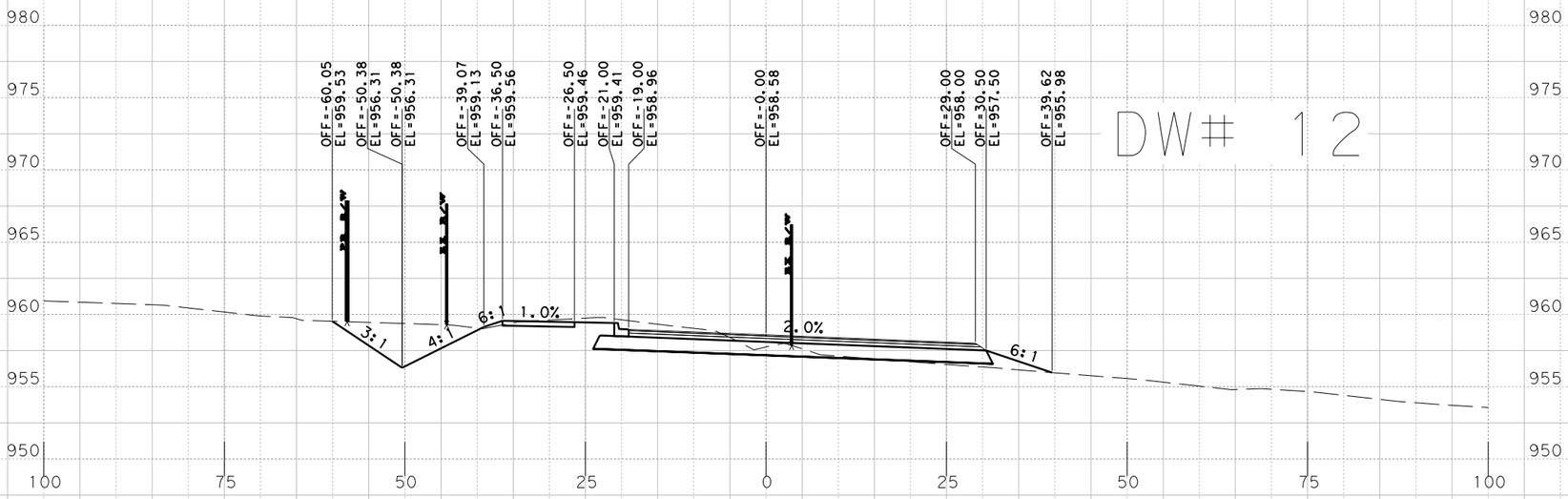

S+a. 559+50.0000 R1

DW# 12

PRELIMINARY
RM 2243
PHASE IA 100%

X-SECTIONS

SCALE: HORIZONTAL 1"=20'
VERTICAL 1"=10'

SHEET 51 OF 168

BGE, Inc.
101 W. Louis Henna Blvd., Suite 400
Austin, TX 78728
Tel: 512-879-0400 • www.bgeinc.com
TBPE Registration No. F-1046

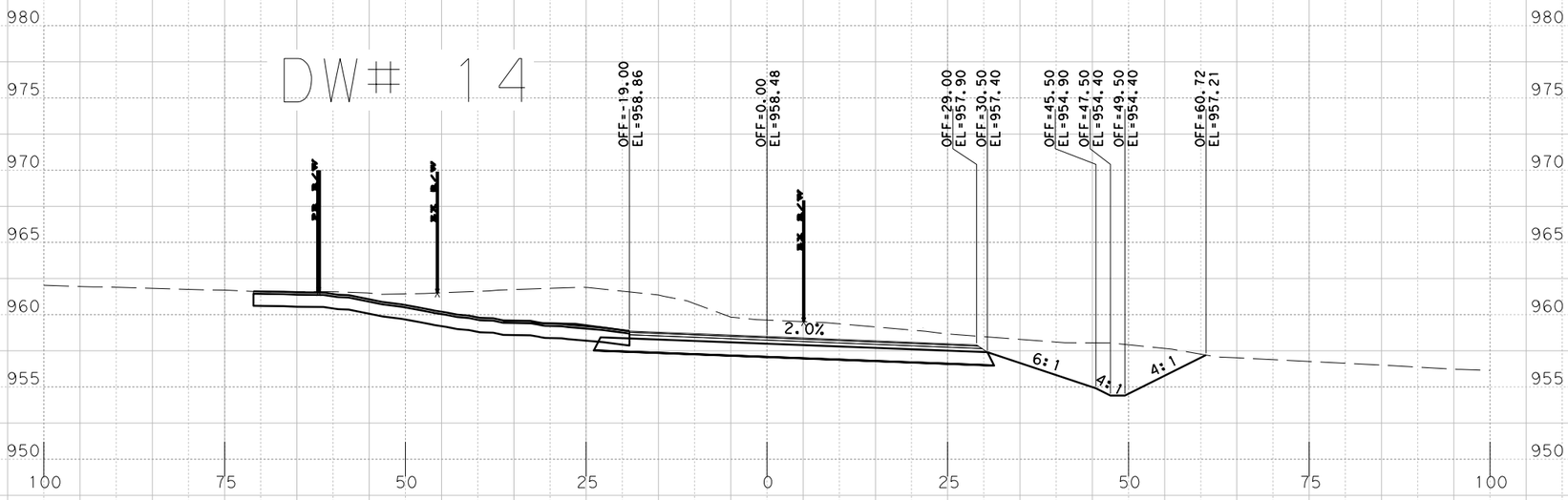

Sta. 561+00.0000 R1

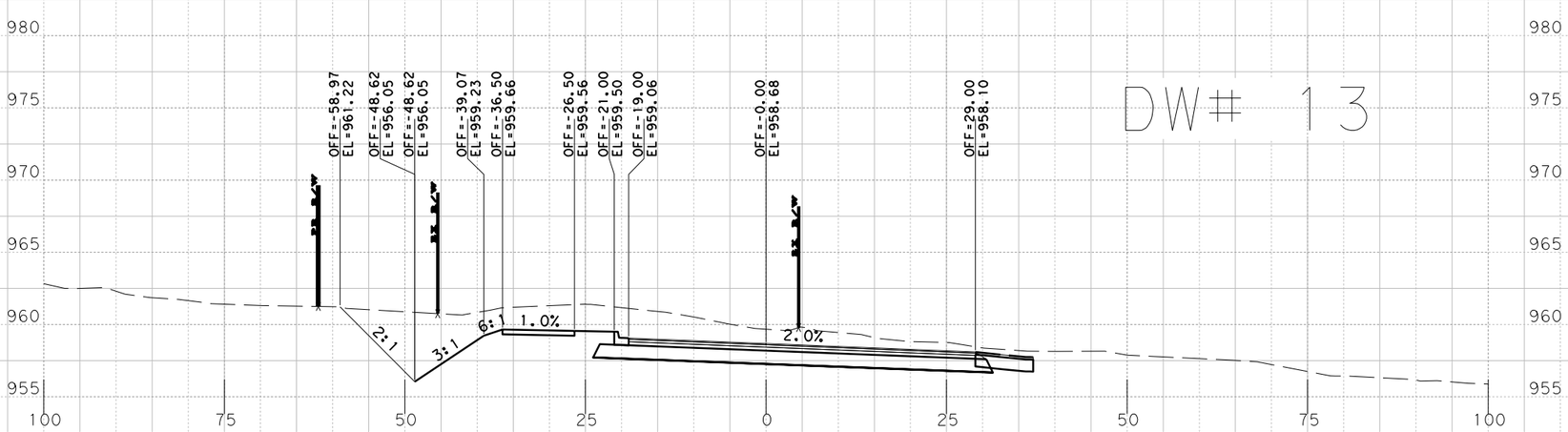

Sta. 560+50.0000 R1

PRELIMINARY
RM 2243
PHASE IA 100%

X-SECTIONS

SCALE: HORIZONTAL 1"=20'
VERTICAL 1"=10'

SHEET 52 OF 168

BGE, Inc.
101 W. Louis Henna Blvd., Suite 400
Austin, TX 78728
Tel: 512-879-0400 • www.bgeinc.com
TBPE Registration No. F-1046

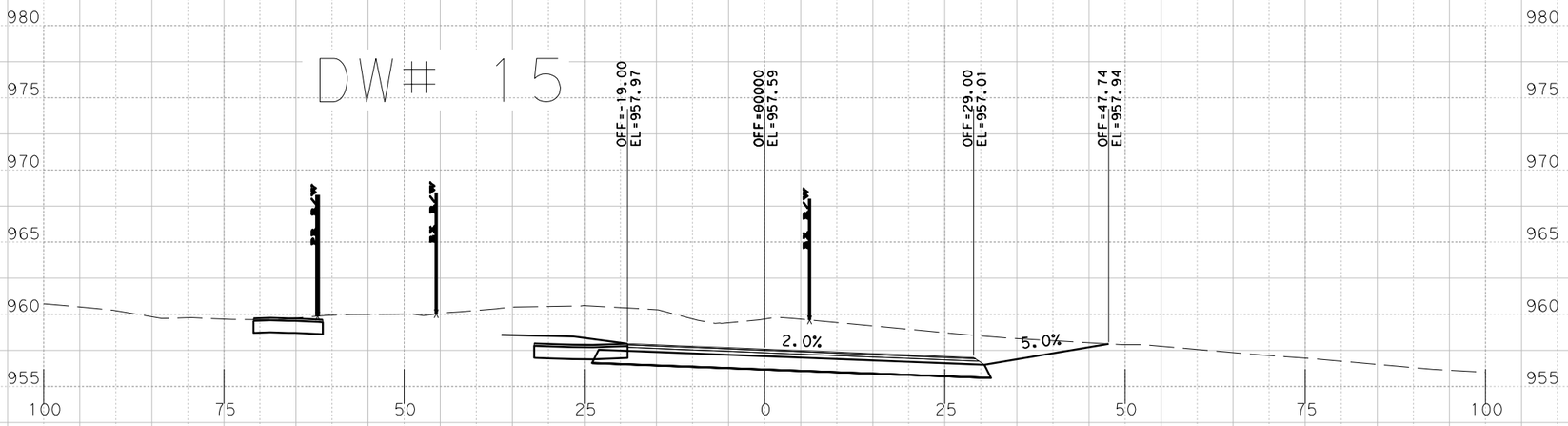

Sta. 562+00.0000 R1

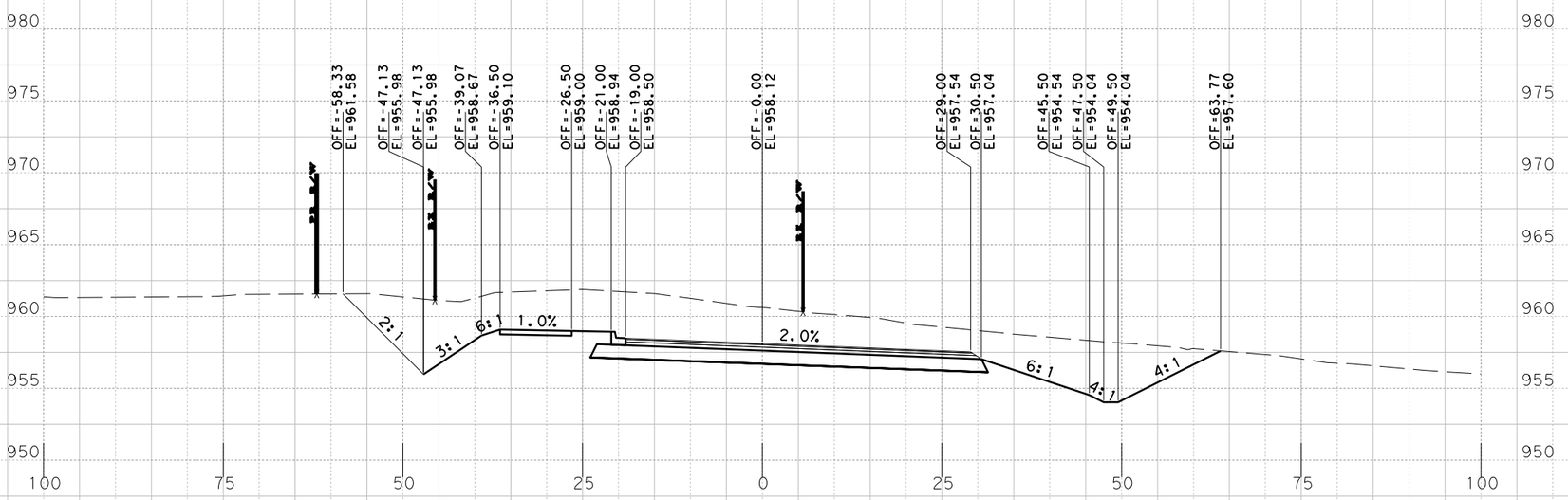

Sta. 561+50.0000 R1

PRELIMINARY
RM 2243
PHASE IA 100%

X-SECTIONS

SCALE: HORIZONTAL 1"=20'
VERTICAL 1"=10'

SHEET 53 OF 168

BGE, Inc.
101 W. Louis Henna Blvd., Suite 400
Austin, TX 78728
Tel: 512-879-0400 • www.bgeinc.com
TBPE Registration No. F-1046

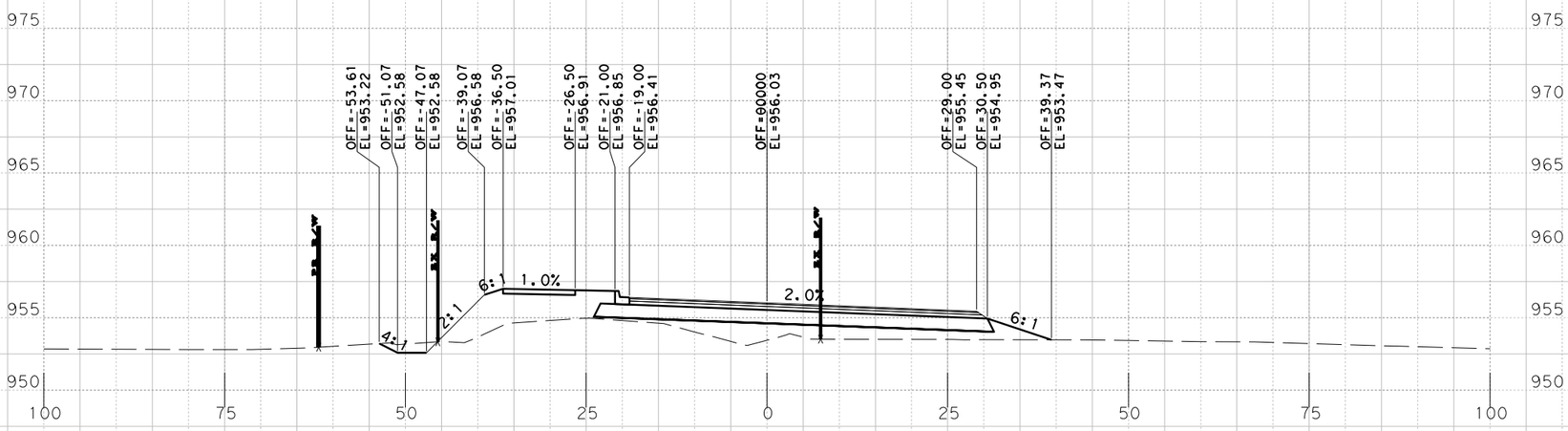

Sta. 563+00.0000 R1

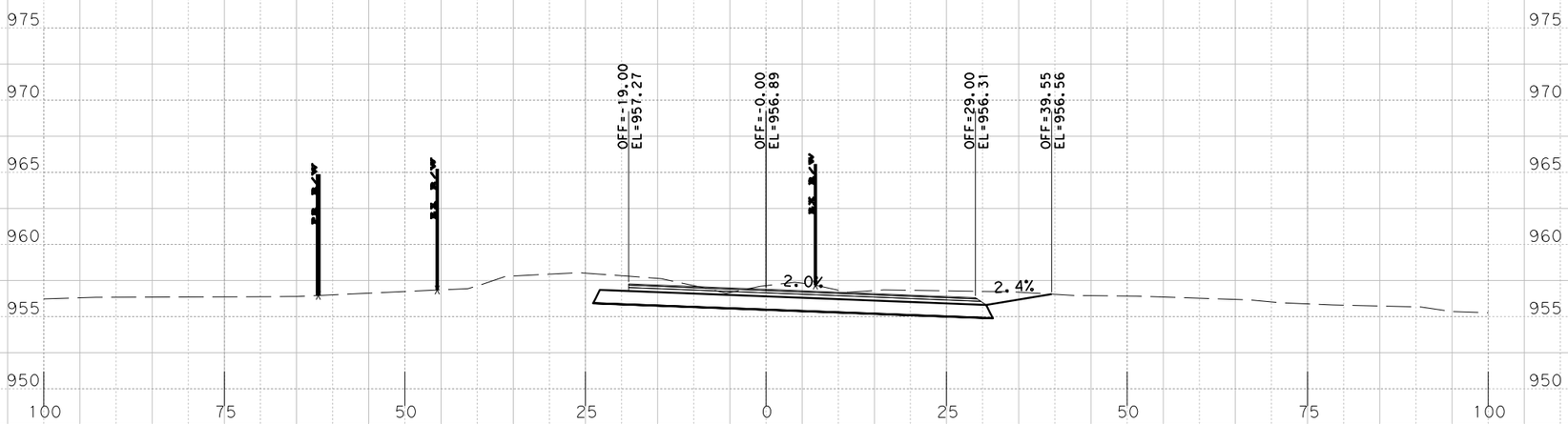

Sta. 562+50.0000 R1

PRELIMINARY
RM 2243
PHASE IA 100%

X-SECTIONS

SCALE: HORIZONTAL 1"=20'
VERTICAL 1"=10'

SHEET 54 OF 168

BGE, Inc.
101 W. Louis Henna Blvd., Suite 400
Austin, TX 78728
Tel: 512-879-0400 • www.bgeinc.com
TBPE Registration No. F-1046

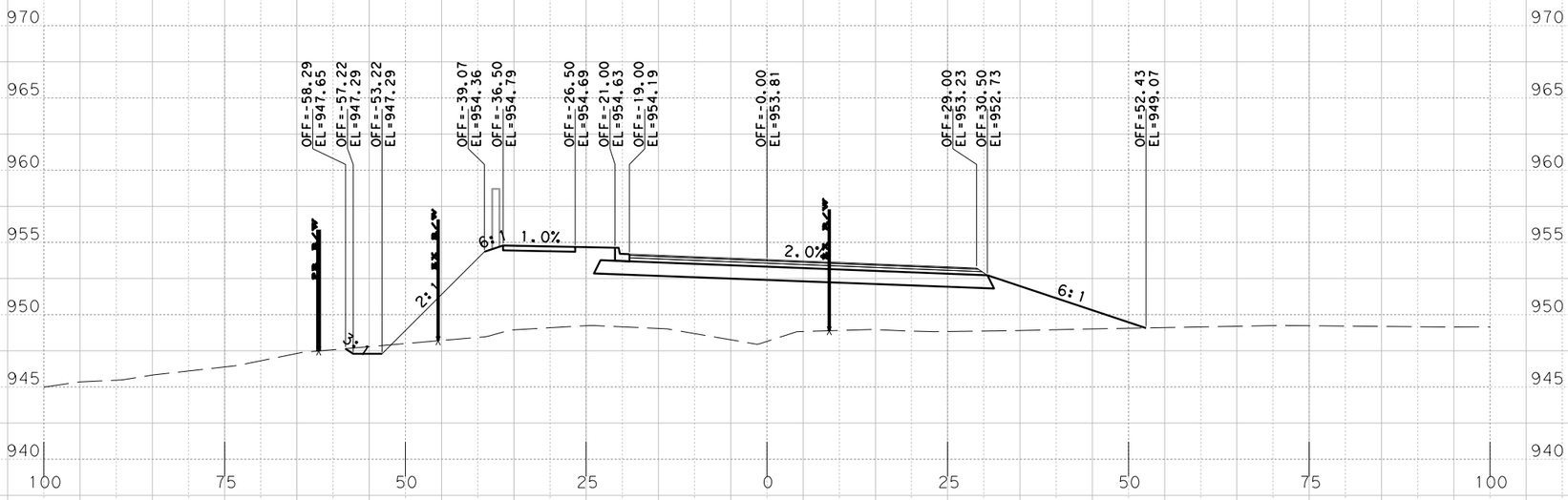

Sta. 564+00.0000 R1

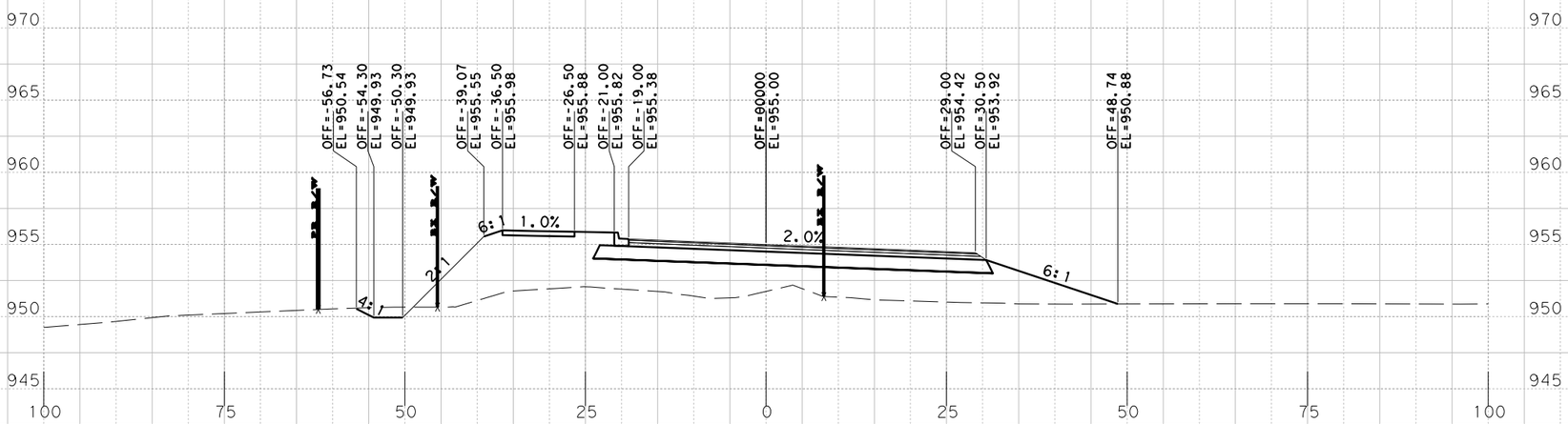

Sta. 563+50.0000 R1

PRELIMINARY
RM 2243
PHASE IA 100%

X-SECTIONS

SCALE: HORIZONTAL 1"=20'
VERTICAL 1"=10'

SHEET 85 OF 168

BGE, Inc.
101 W. Louis Henna Blvd., Suite 400
Austin, TX 78728
Tel: 512-879-0400 • www.bgeinc.com
TBPE Registration No. F-1046

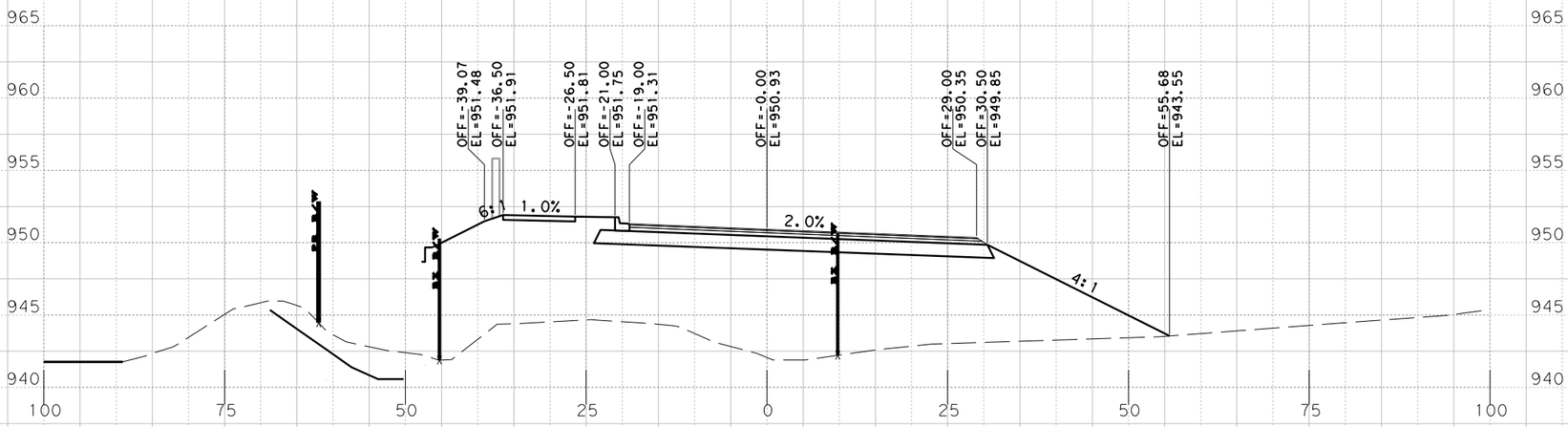

Sta. 565+00.0000 R1

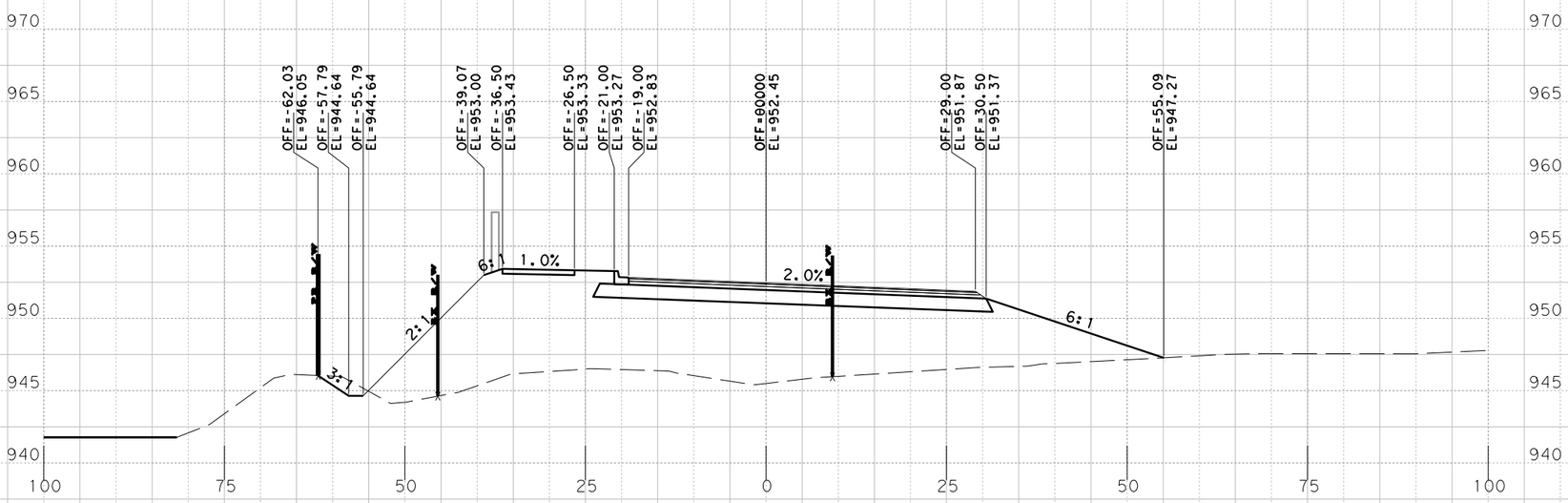

Sta. 564+50.0000 R1

PRELIMINARY
RM 2243
PHASE IA 100%

X-SECTIONS

SCALE: HORIZONTAL 1"=20'
VERTICAL 1"=10'

SHEET 56 OF 168

BGE, Inc.
101 W. Louis Henna Blvd., Suite 400
Austin, TX 78728
Tel: 512-879-0400 • www.bgeinc.com
TBPE Registration No. F-1046

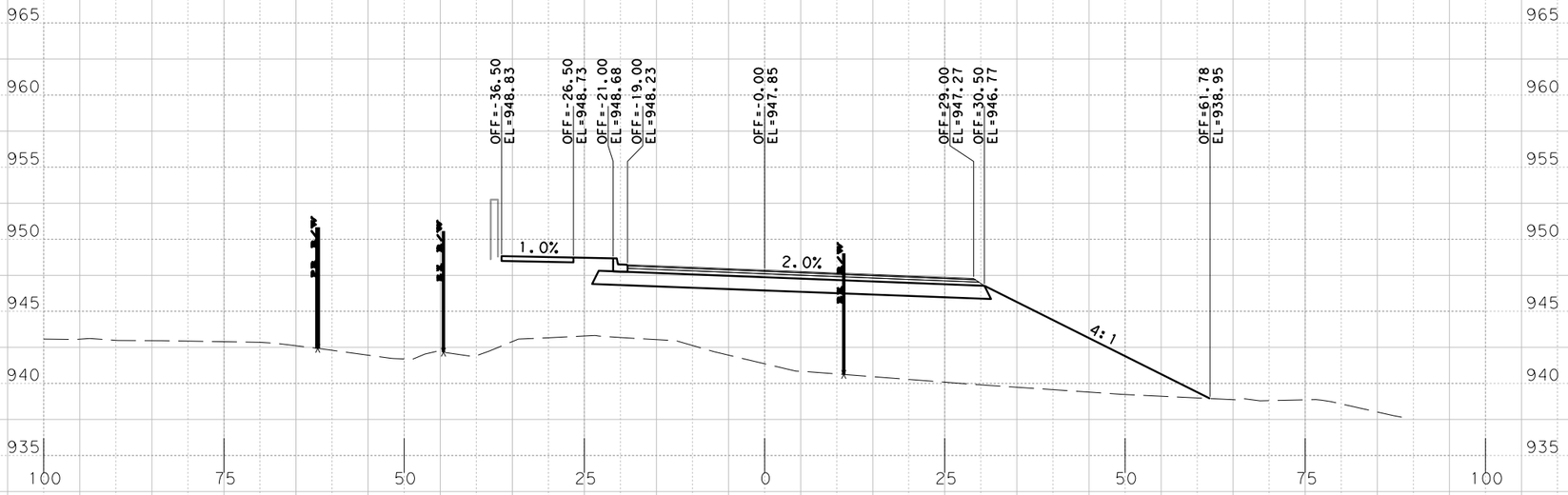

Sta. 566+00.0000 R1

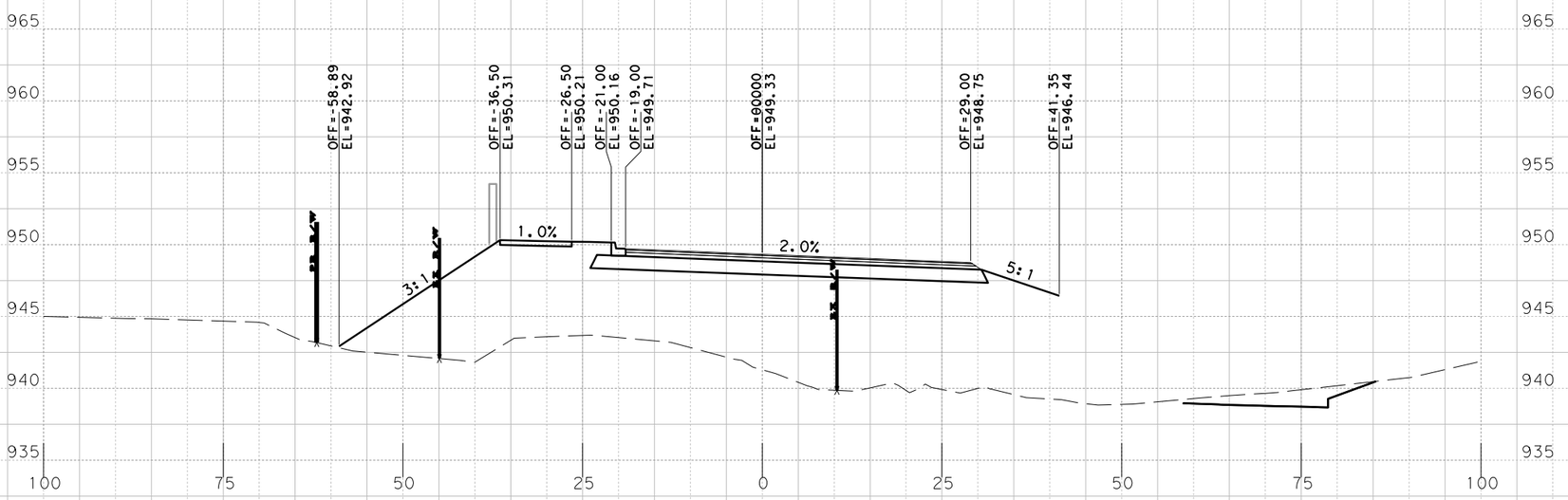

Sta. 565+50.0000 R1

PRELIMINARY
RM 2243
PHASE IA 100%

X-SECTIONS

SCALE: HORIZONTAL 1"=20'
VERTICAL 1"=10'

SHEET 57 OF 168

BGE, Inc.
101 W. Louis Henna Blvd., Suite 400
Austin, TX 78728
Tel: 512-879-0400 • www.bgeinc.com
TBPE Registration No. F-1046

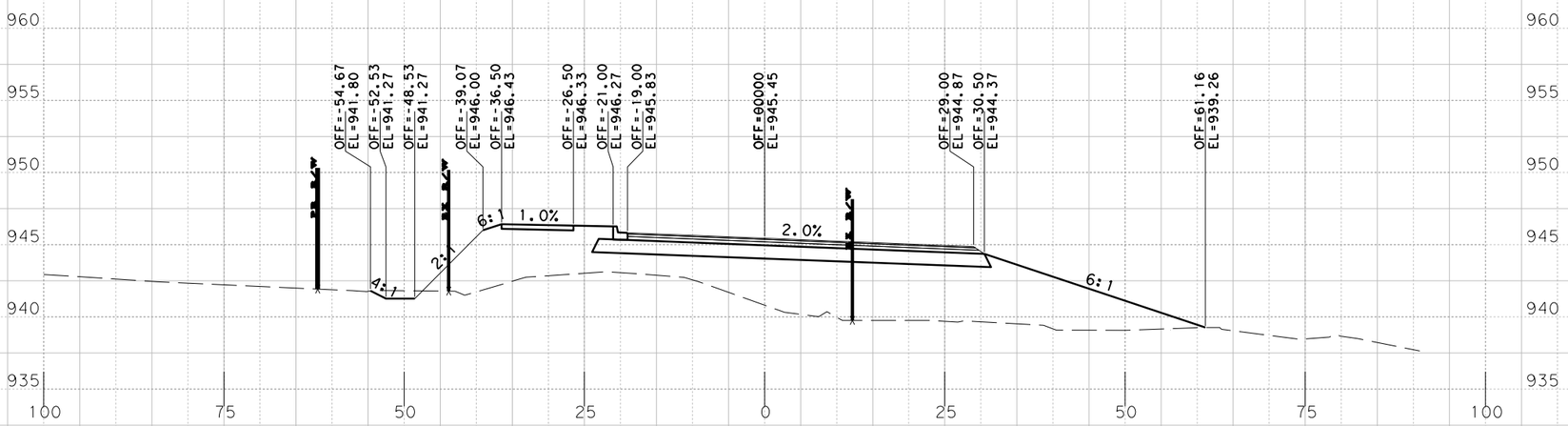

Sta. 567+00.0000 R1

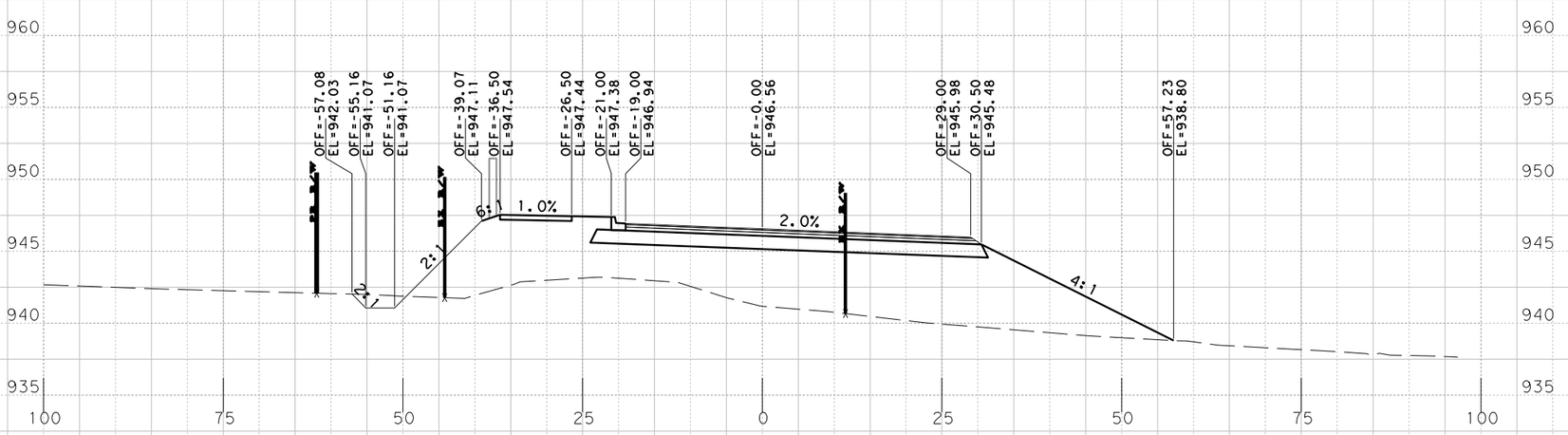

Sta. 566+50.0000 R1

PRELIMINARY
RM 2243
PHASE IA 100%

X-SECTIONS

SCALE: HORIZONTAL 1"=20'
VERTICAL 1"=10'

SHEET 58 OF 168

BGE, Inc.
101 W. Louis Henna Blvd., Suite 400
Austin, TX 78728
Tel: 512-879-0400 • www.bgeinc.com
TBPE Registration No. F-1046

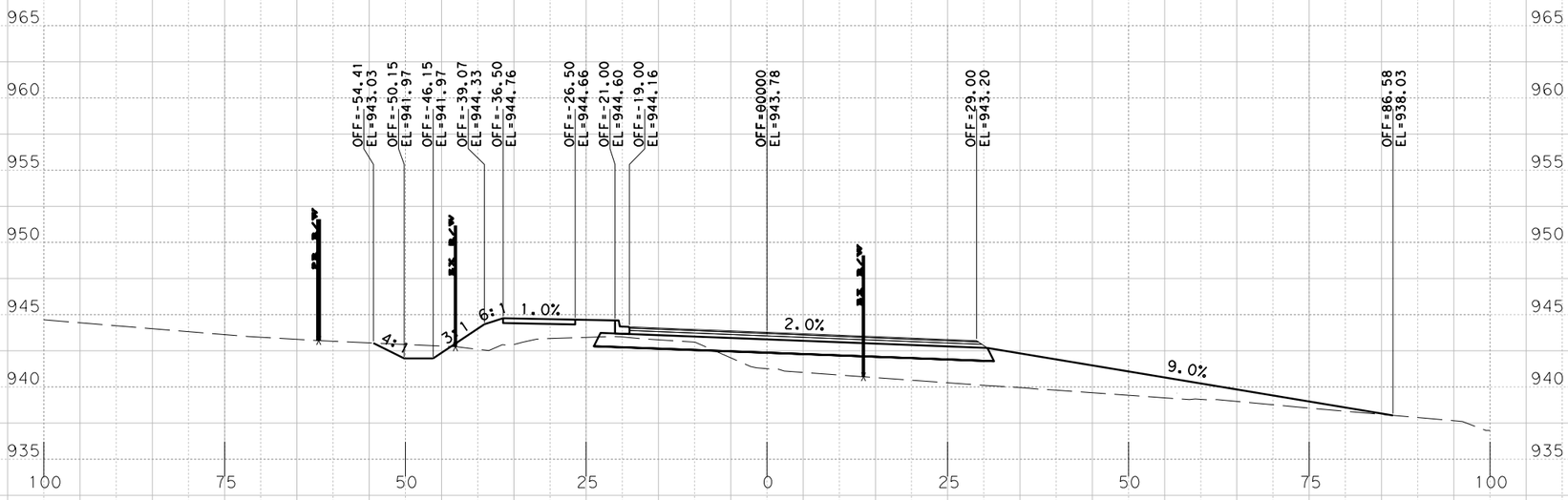

Sta. 568+00.0000 R1

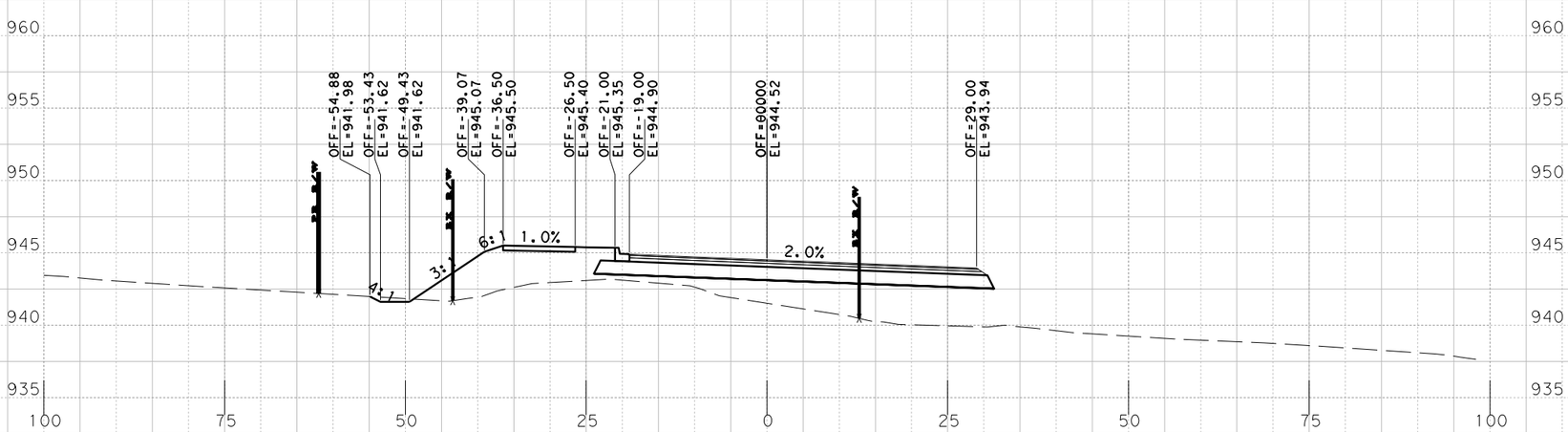

Sta. 567+50.0000 R1

PRELIMINARY
RM 2243
PHASE IA 100%

X-SECTIONS

SCALE: HORIZONTAL 1"=20'
VERTICAL 1"=10'

SHEET 59 OF 168

BGE, Inc.
101 W. Louis Henna Blvd., Suite 400
Austin, TX 78728
Tel: 512-879-0400 • www.bgeinc.com
TBPE Registration No. F-1046

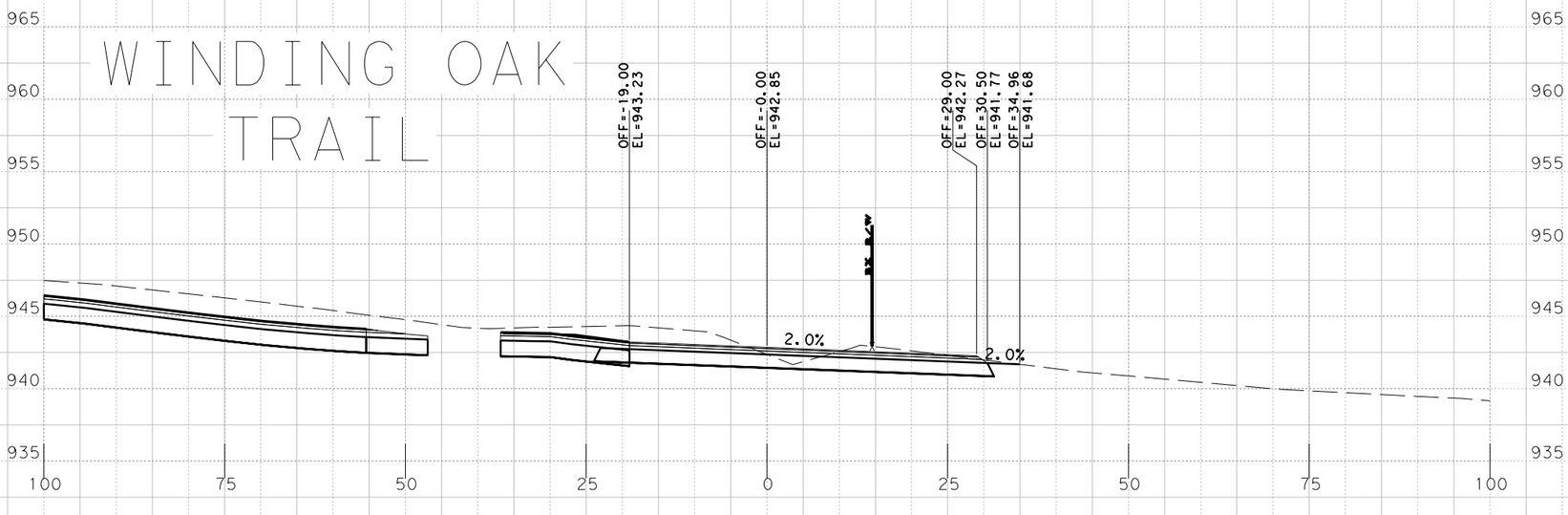

Sta. 569+00.0000 R1

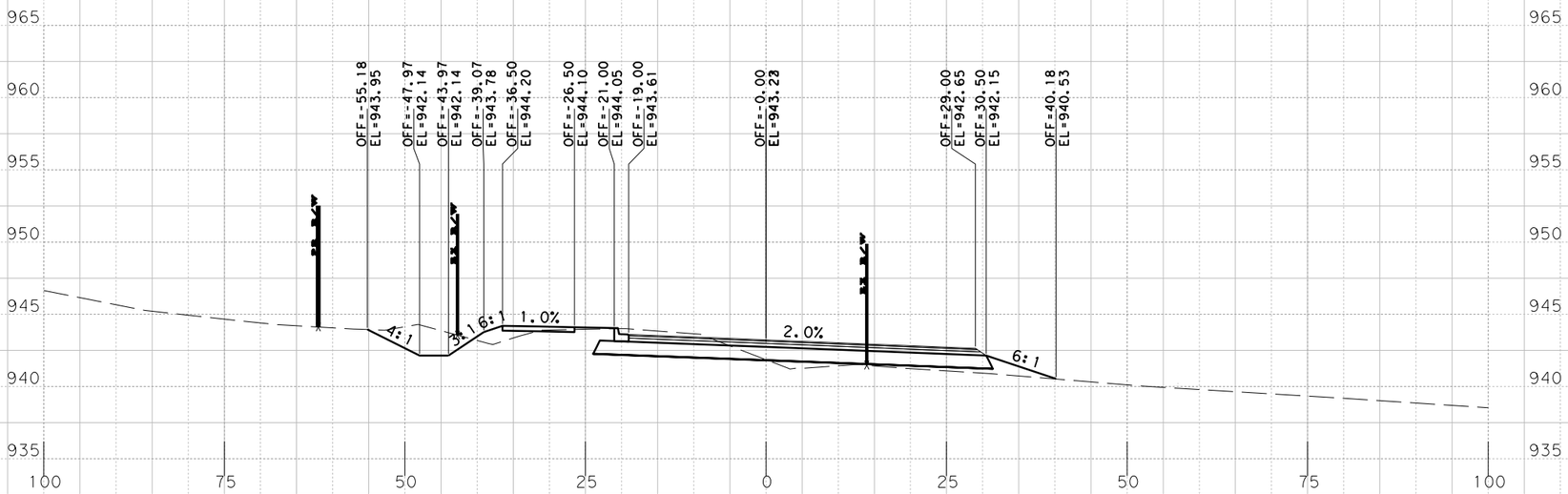

Sta. 568+50.0000 R1

PRELIMINARY
RM 2243
PHASE IA 100%

X-SECTIONS

SCALE: HORIZONTAL 1"=20'
VERTICAL 1"=10'

SHEET 68 OF 168

BGE, Inc.
101 W. Louis Henna Blvd., Suite 400
Austin, TX 78728
Tel: 512-879-0400 • www.bgeinc.com
TBPE Registration No. F-1046

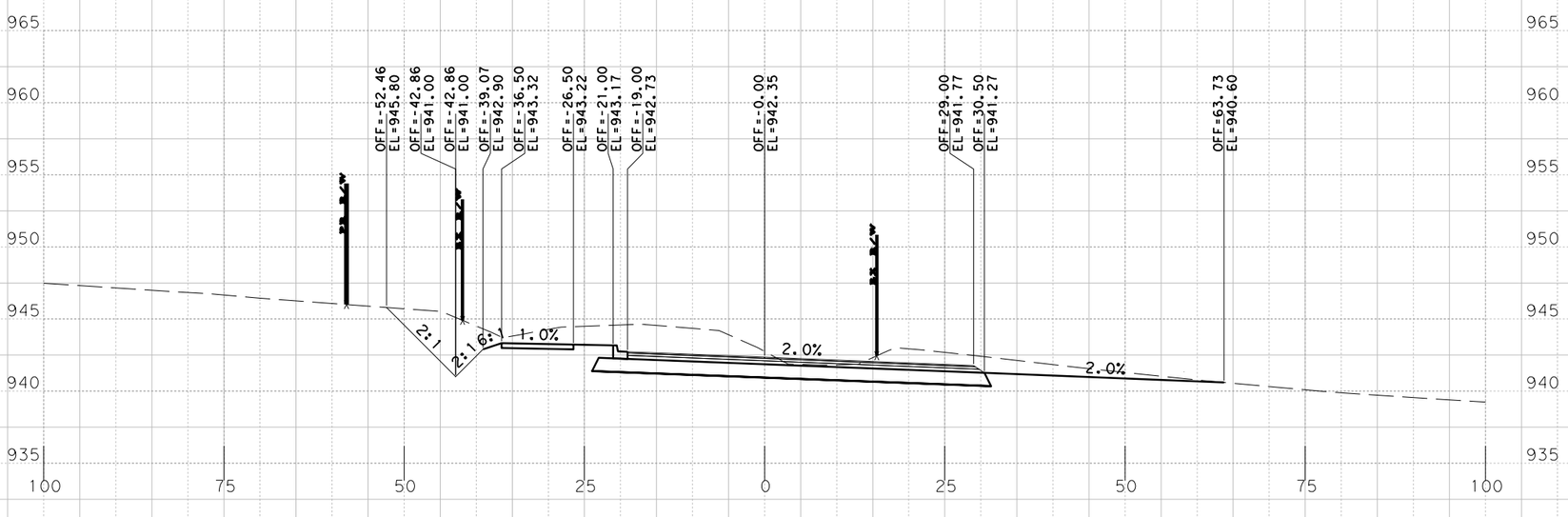

Sta. 570+00.0000 R1

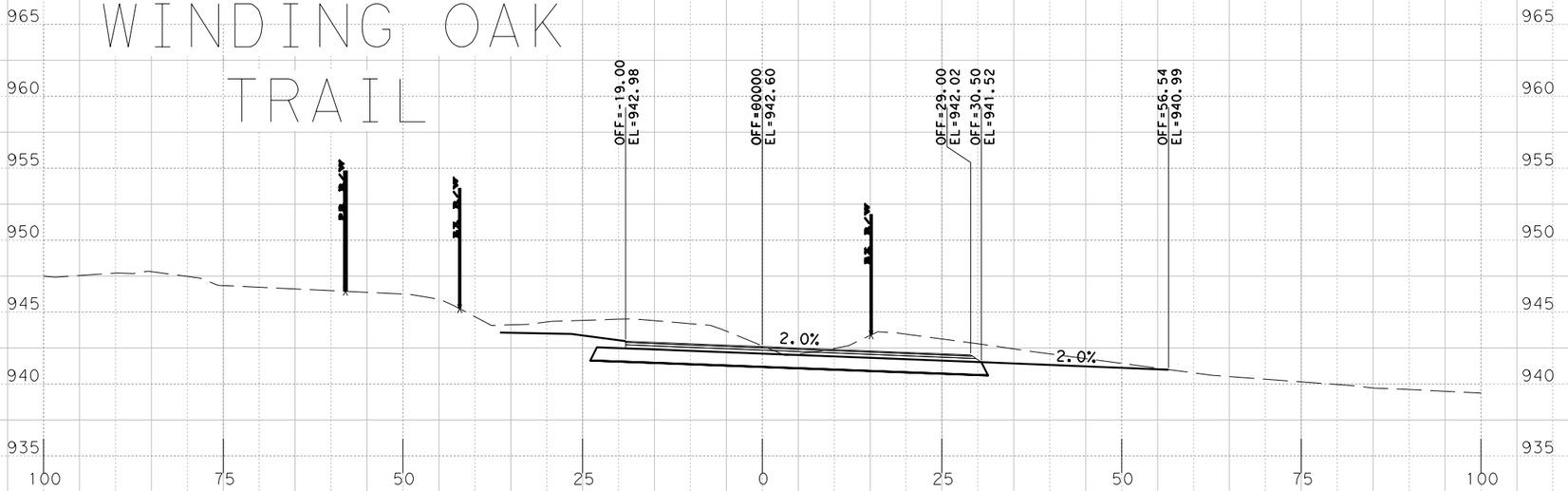

Sta. 569+50.0000 R1

PRELIMINARY
RM 2243
PHASE IA 100%
X-SECTIONS

SCALE: HORIZONTAL 1"=20'
VERTICAL 1"=10'

SHEET 61 OF 168

BGE, Inc.
101 W. Louis Henna Blvd., Suite 400
Austin, TX 78728
Tel: 512-879-0400 • www.bgeinc.com
TBPE Registration No. F-1046

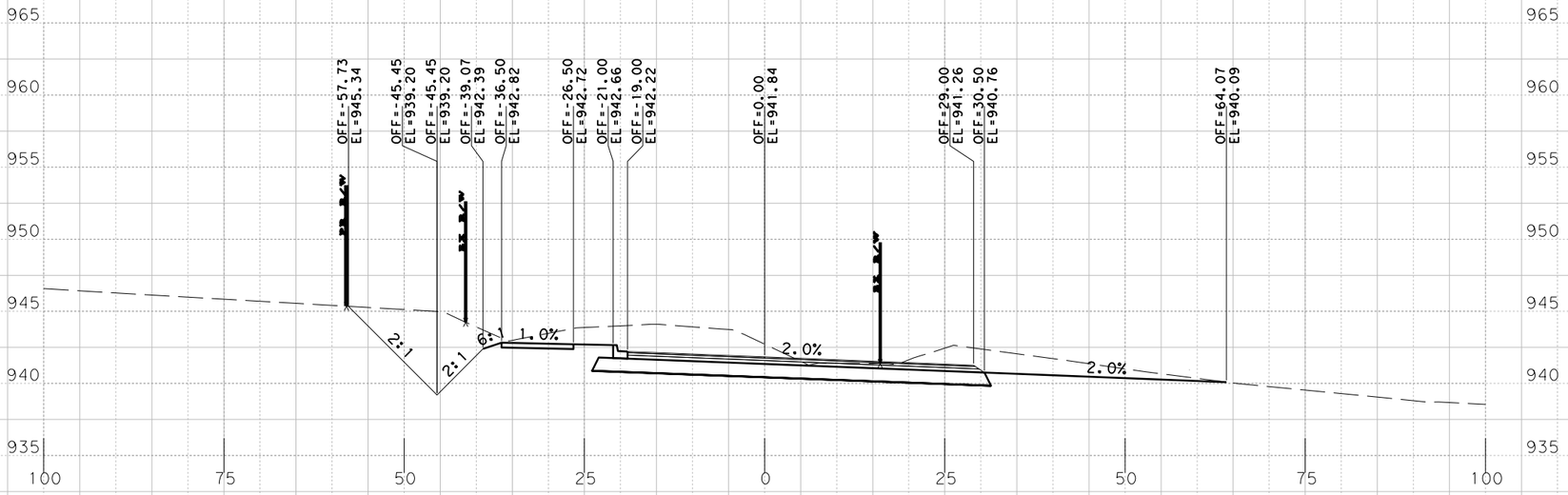

Sta. 571+00.0000 R1

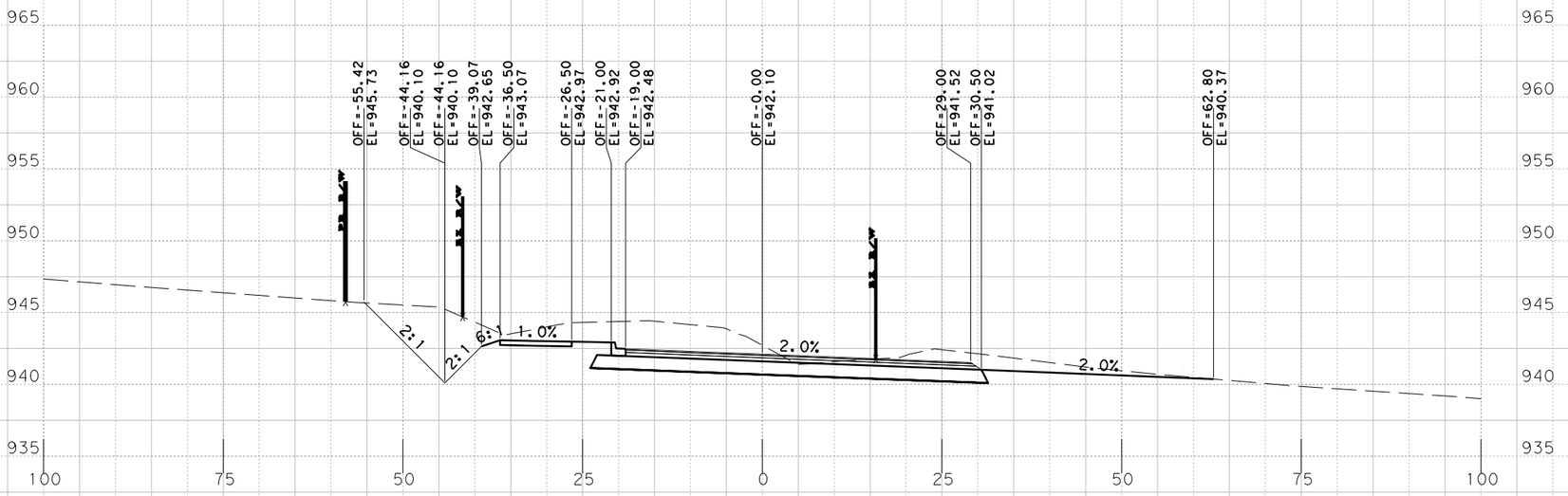

Sta. 570+50.0000 R1

PRELIMINARY
RM 2243
PHASE IA 100%

X-SECTIONS

SCALE: HORIZONTAL 1"=20'
VERTICAL 1"=10'

SHEET 62 OF 168

BGE, Inc.
101 W. Louis Henna Blvd., Suite 400
Austin, TX 78728
Tel: 512-879-0400 • www.bgeinc.com
TBPE Registration No. F-1046

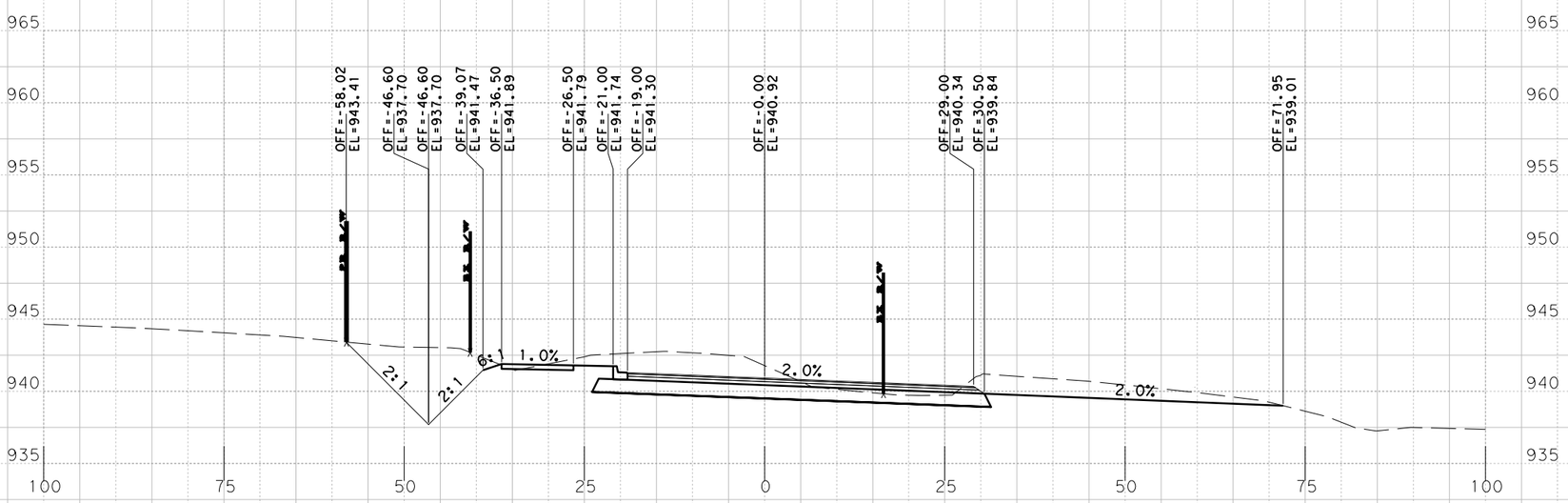

Sta. 572+00.0000 R1

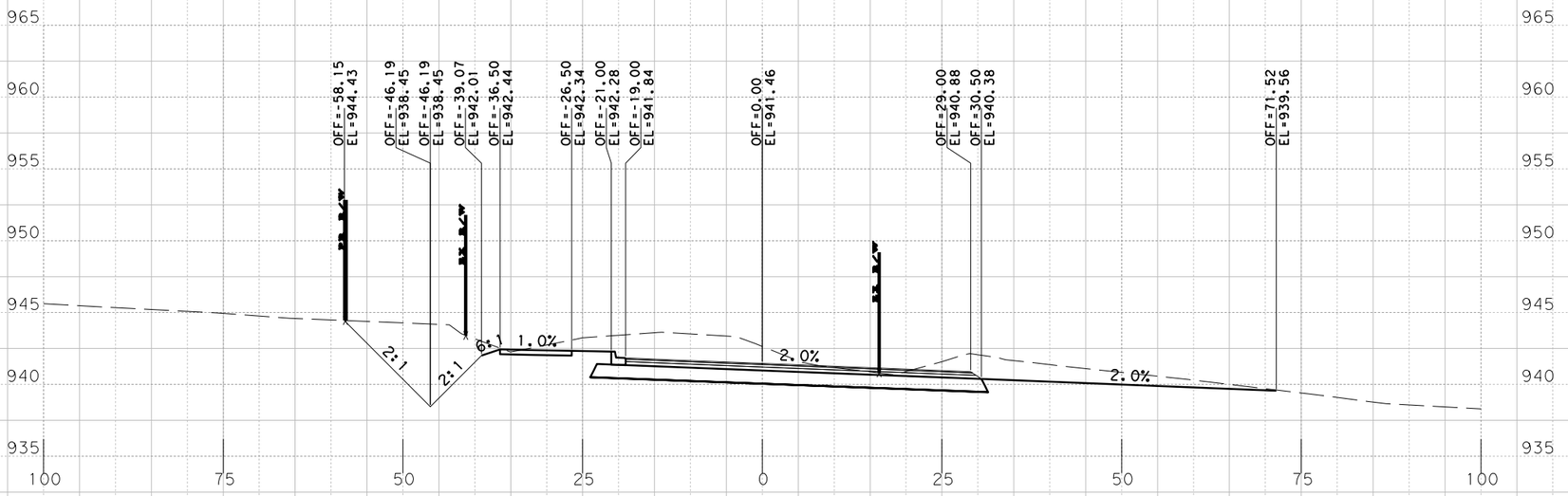

Sta. 571+50.0000 R1

PRELIMINARY
RM 2243
PHASE IA 100%
X-SECTIONS

SCALE: HORIZONTAL 1"=20'
VERTICAL 1"=10'

SHEET 63 OF 168

BGE, Inc.
101 W. Louis Henna Blvd., Suite 400
Austin, TX 78728
Tel: 512-879-0400 • www.bgeinc.com
TBPE Registration No. F-1046

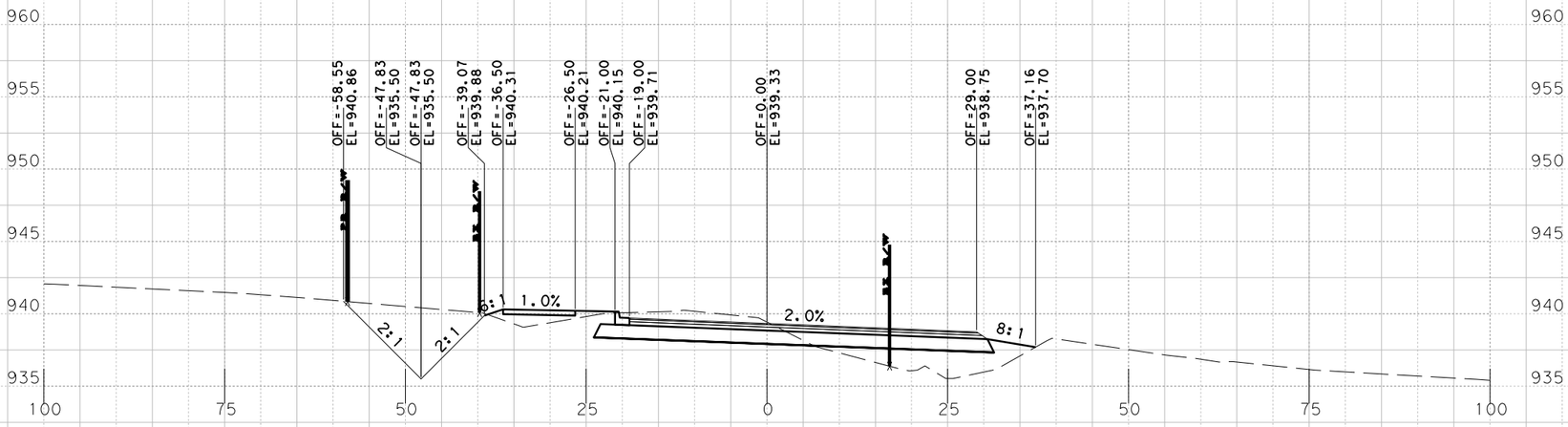

S+a. 573+00.0000 R1

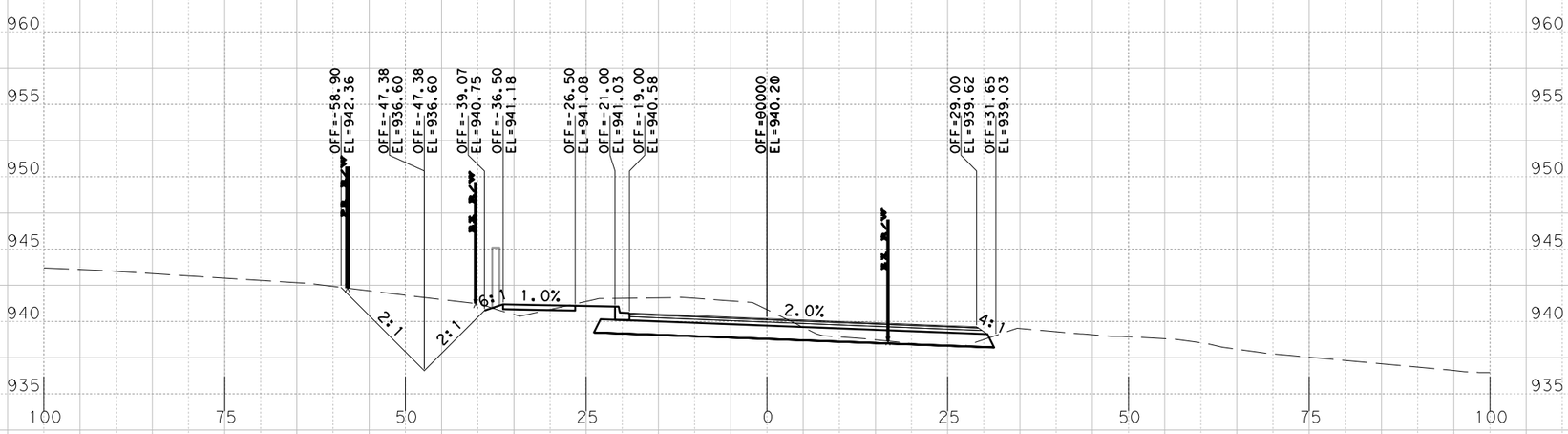

S+a. 572+50.0000 R1

PRELIMINARY
RM 2243
PHASE IA 100%
X-SECTIONS

SCALE: HORIZONTAL 1"=20'
VERTICAL 1"=10'

SHEET 64 OF 168

BGE, Inc.
101 W. Louis Henna Blvd., Suite 400
Austin, TX 78728
Tel: 512-879-0400 • www.bgeinc.com
TBPE Registration No. F-1046

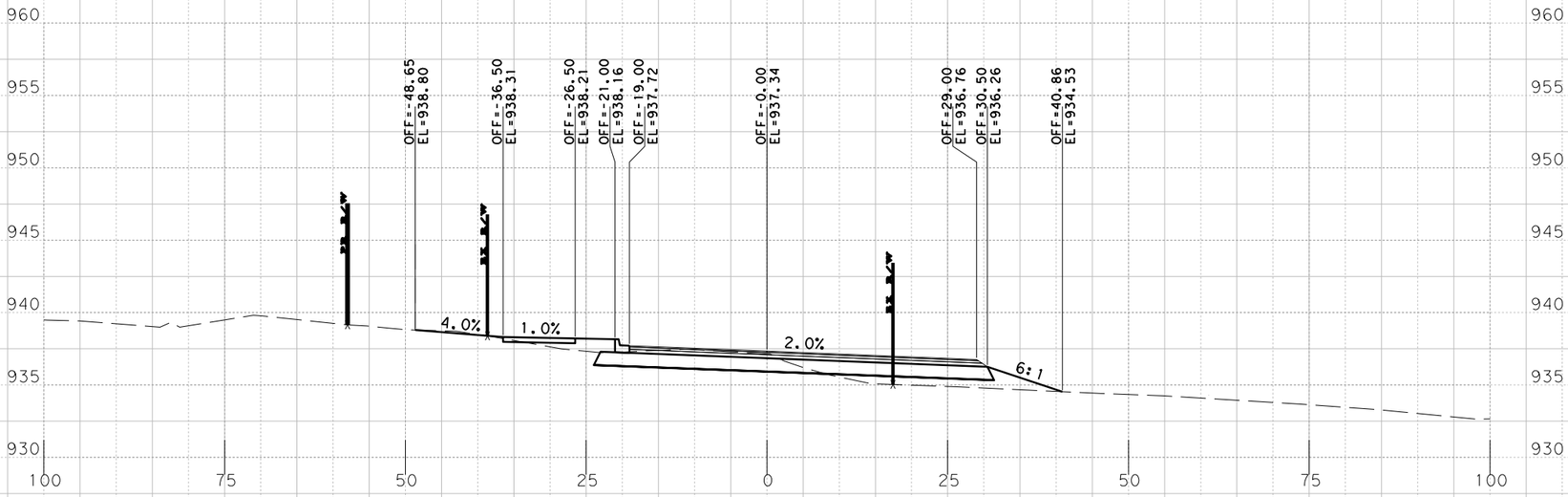

Sta. 574+00.0000 R1

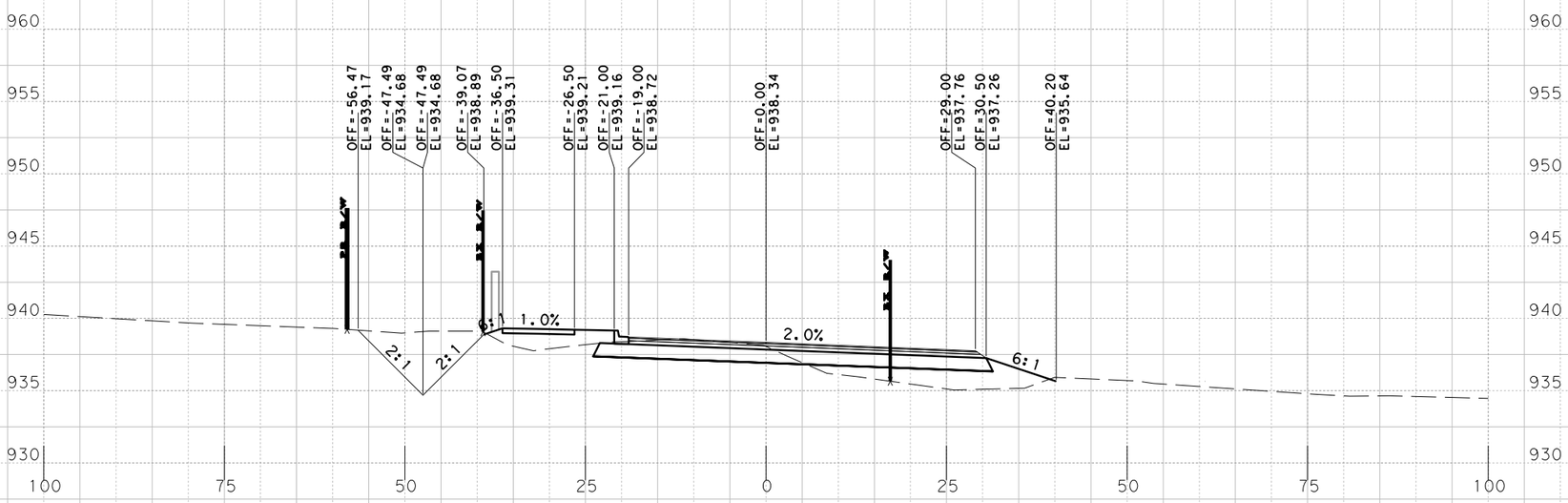

Sta. 573+50.0000 R1

PRELIMINARY
RM 2243
PHASE IA 100%

X-SECTIONS

SCALE: HORIZONTAL 1"=20'
VERTICAL 1"=10'

SHEET 65 OF 168

BGE, Inc.
101 W. Louis Henna Blvd., Suite 400
Austin, TX 78728
Tel: 512-879-0400 • www.bgeinc.com
TBPE Registration No. F-1046

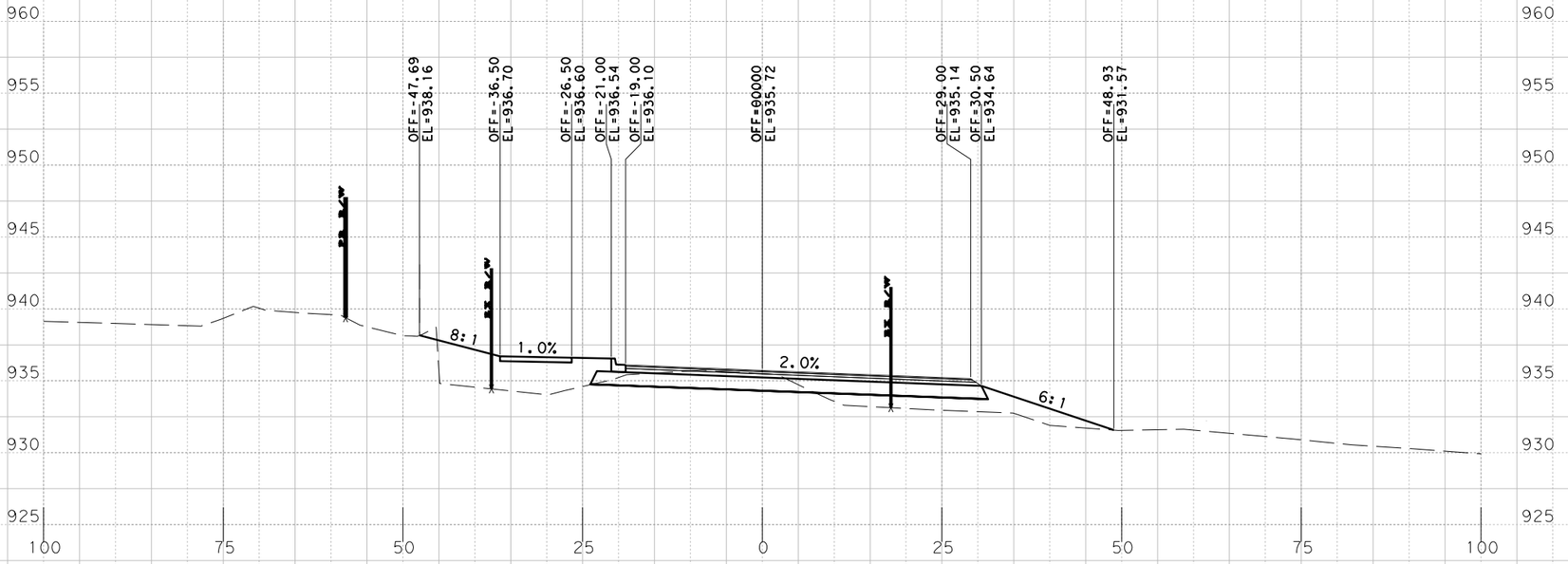

S+a. 575+00.0000 R1

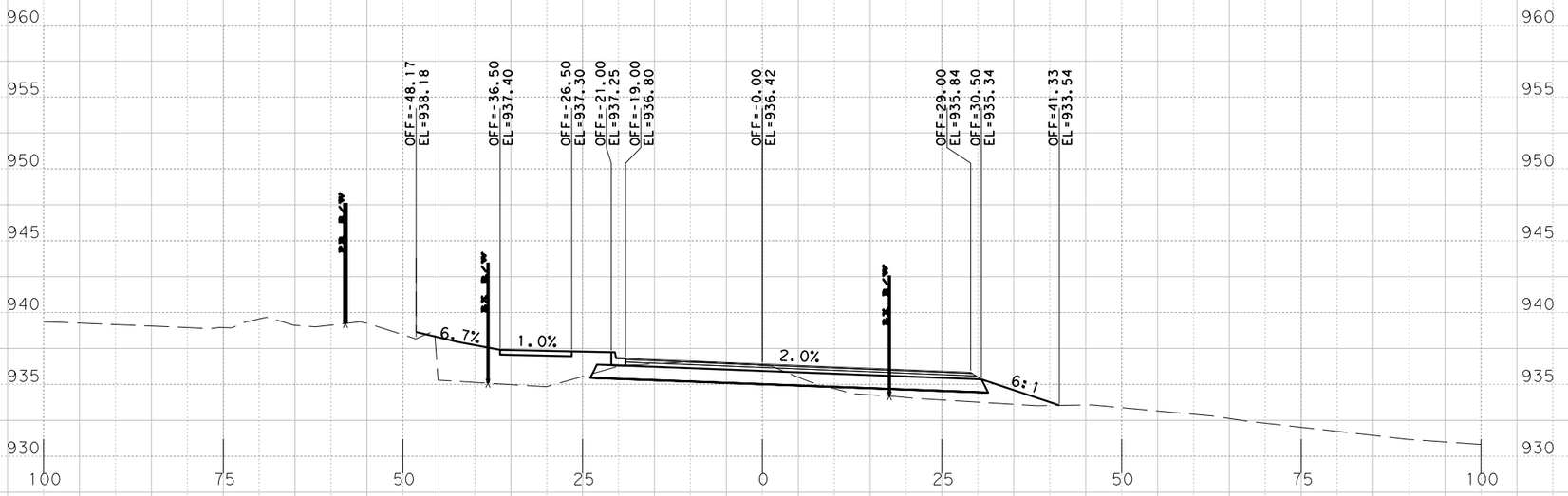

S+a. 574+50.0000 R1

PRELIMINARY
RM 2243
PHASE IA 100%
X-SECTIONS

SCALE: HORIZONTAL 1"=20'
VERTICAL 1"=10'

SHEET 66 OF 168

BGE, Inc.
101 W. Louis Henna Blvd., Suite 400
Austin, TX 78728
Tel: 512-879-0400 • www.bgeinc.com
TBPE Registration No. F-1046

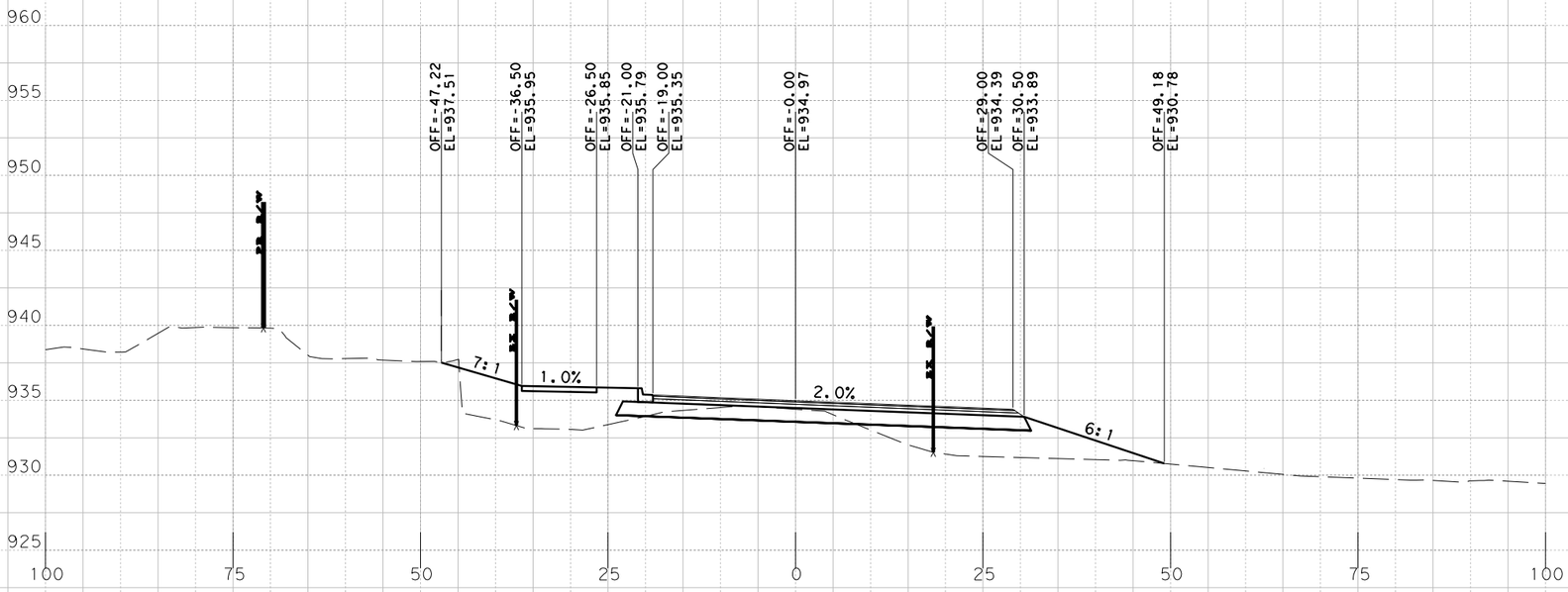

Sta. 576+00.0000 R1

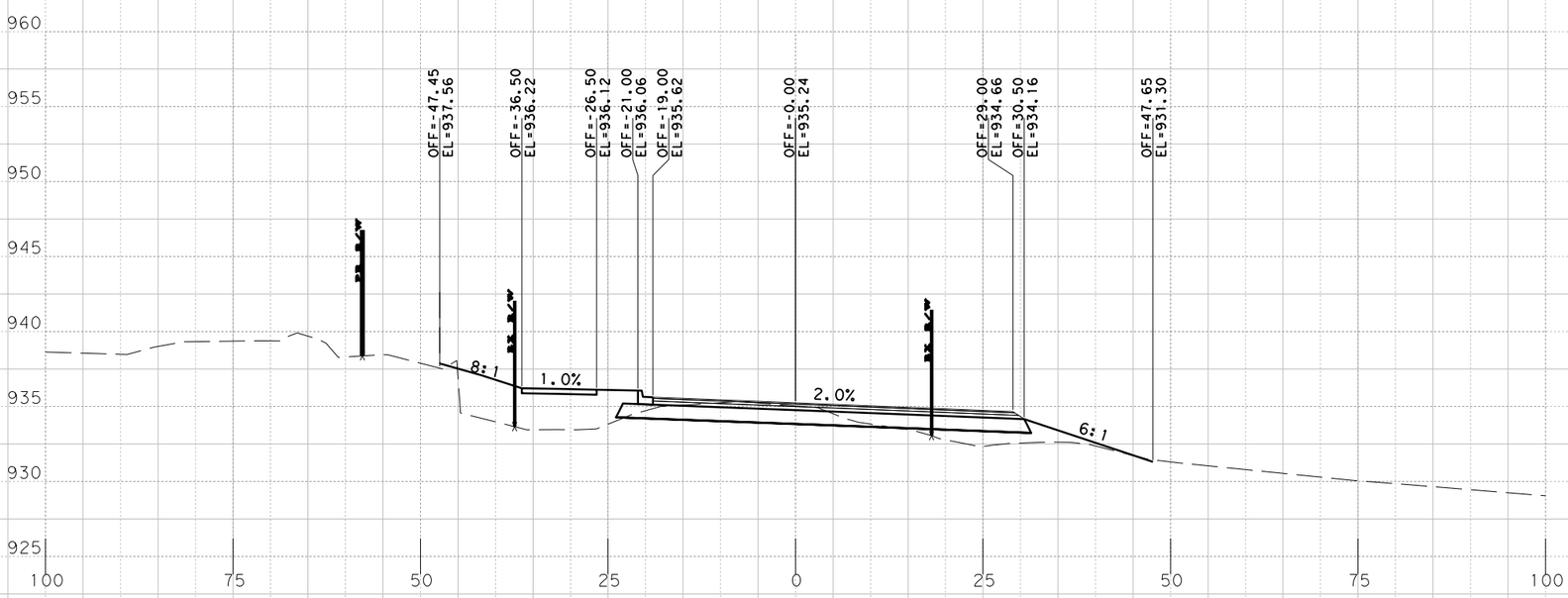

Sta. 575+50.0000 R1

PRELIMINARY
RM 2243
PHASE IA 100%

X-SECTIONS

SCALE: HORIZONTAL 1"=20'
VERTICAL 1"=10'

SHEET 67 OF 168

BGE, Inc.
101 W. Louis Henna Blvd., Suite 400
Austin, TX 78728
Tel: 512-879-0400 • www.bgeinc.com
TBPE Registration No. F-1046

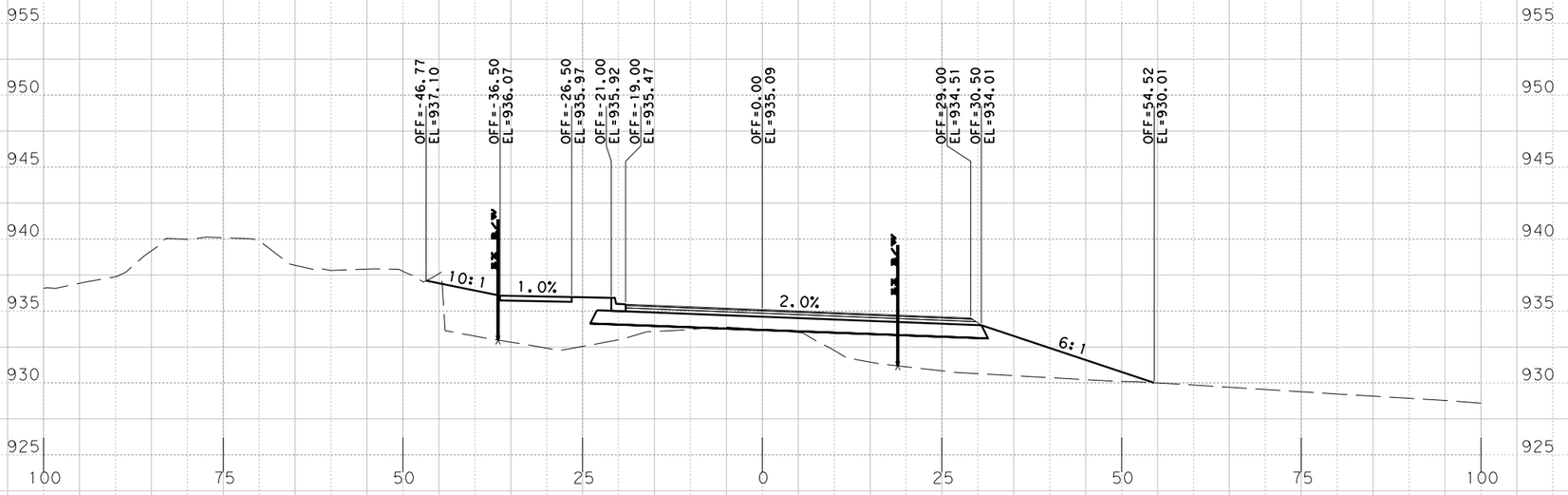

Sta. 577+00.0000 R1

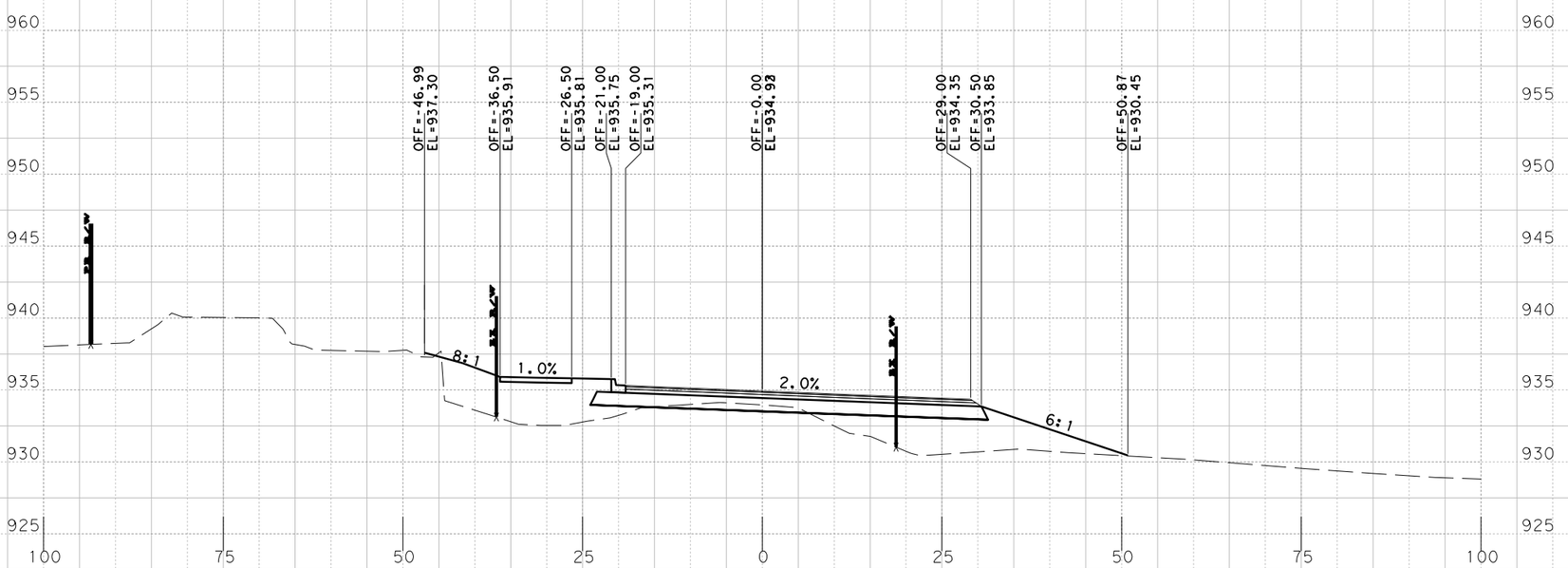

Sta. 576+50.0000 R1

PRELIMINARY
RM 2243
PHASE IA 100%

X-SECTIONS

SCALE: HORIZONTAL 1"=20'
VERTICAL 1"=10'

SHEET 68 OF 168

BGE, Inc.
101 W. Louis Henna Blvd., Suite 400
Austin, TX 78728
Tel: 512-879-0400 • www.bgeinc.com
TBPE Registration No. F-1046

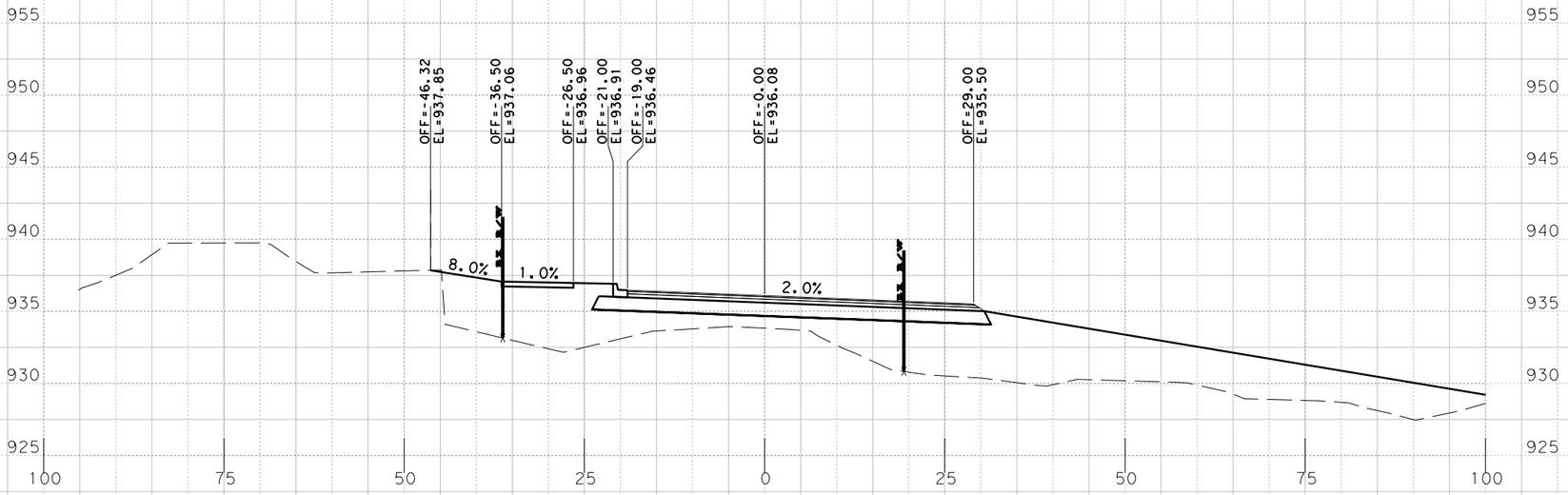

Sta. 578+00.0000 R1

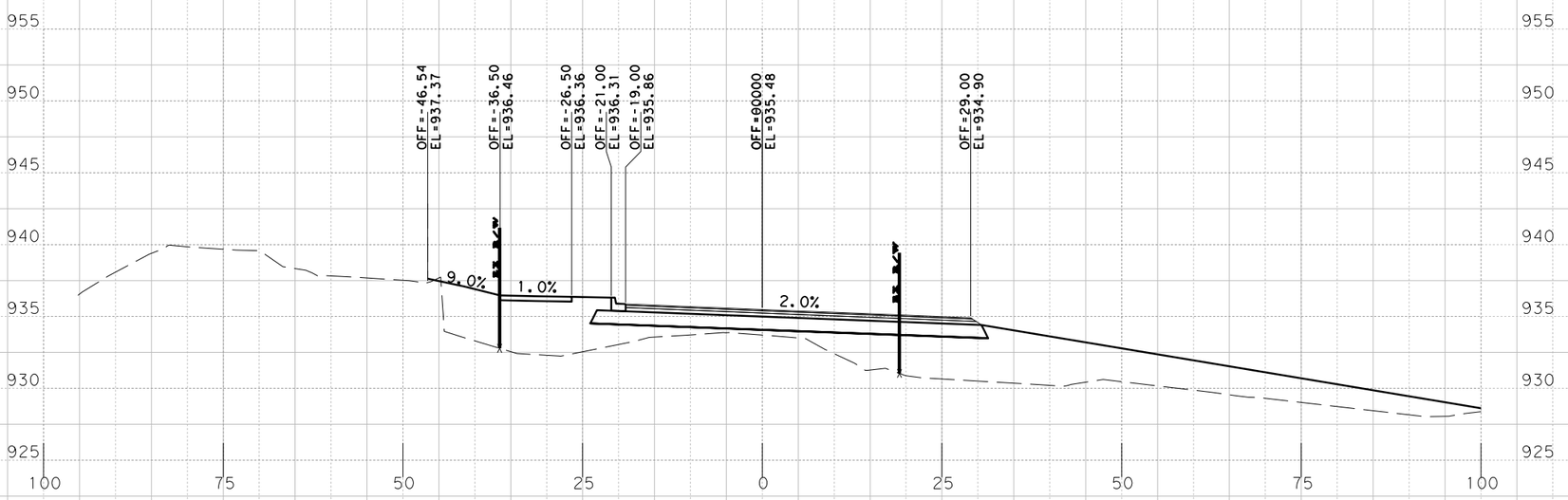

Sta. 577+50.0000 R1

PRELIMINARY
RM 2243
PHASE IA 100%

X-SECTIONS

SCALE: HORIZONTAL 1"=20'
VERTICAL 1"=10'

SHEET 69 OF 168

BGE, Inc.
101 W. Louis Henna Blvd., Suite 400
Austin, TX 78728
Tel: 512-879-0400 • www.bgeinc.com
TBPE Registration No. F-1046

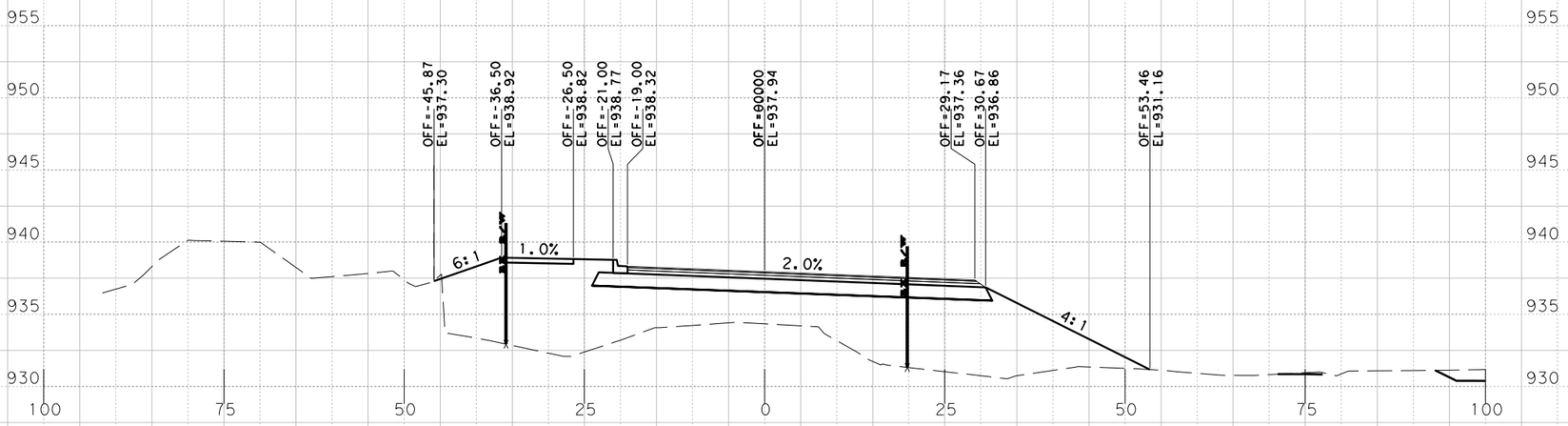

Sta. 579+00.0000 R1

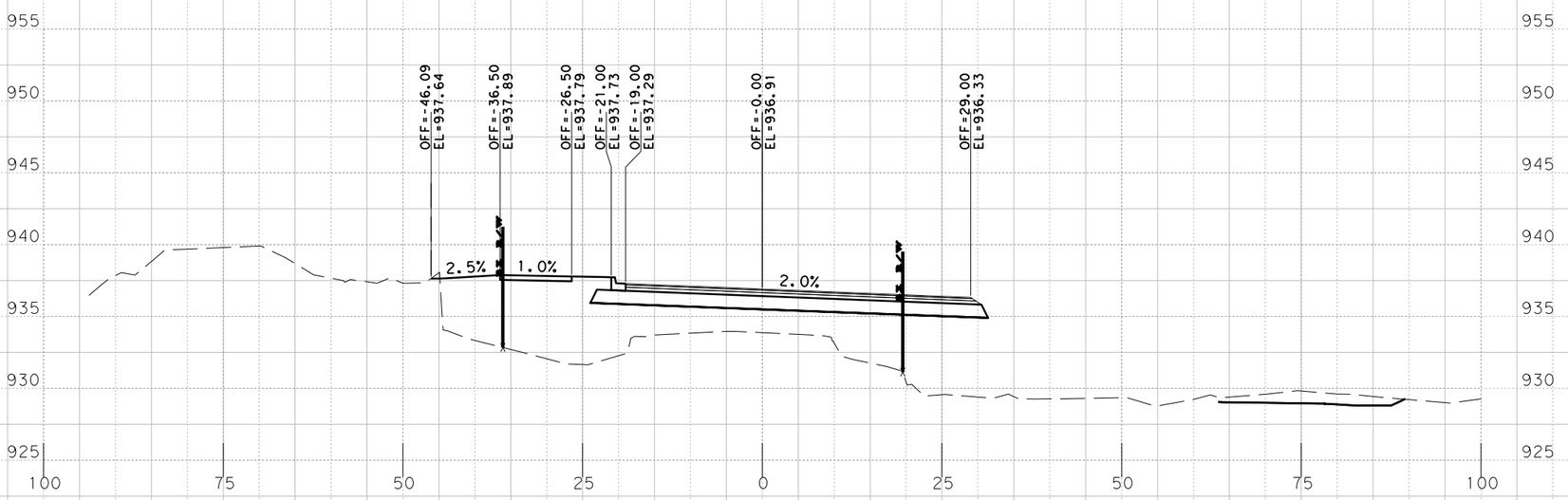

Sta. 578+50.0000 R1

PRELIMINARY
RM 2243
PHASE IA 100%

X-SECTIONS

SCALE: HORIZONTAL 1"=20'
VERTICAL 1"=10'

SHEET 70 OF 168

BGE, Inc.
101 W. Louis Henna Blvd., Suite 400
Austin, TX 78728
Tel: 512-879-0400 • www.bgeinc.com
TBPE Registration No. F-1046

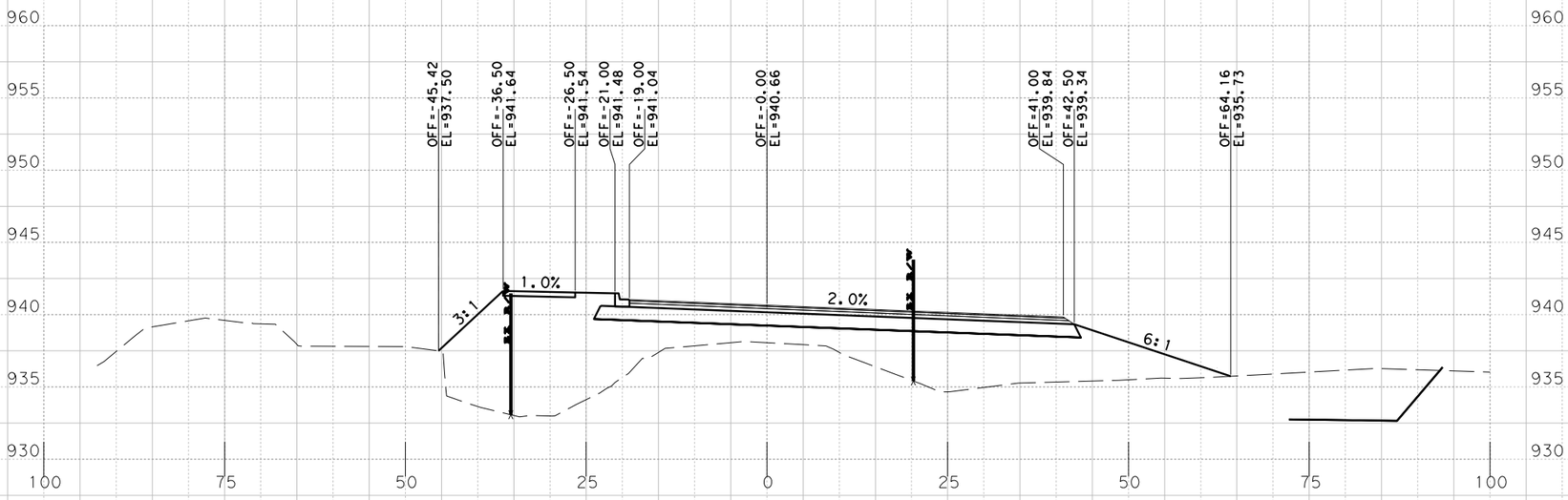

Sta. 580+00.0000 R1

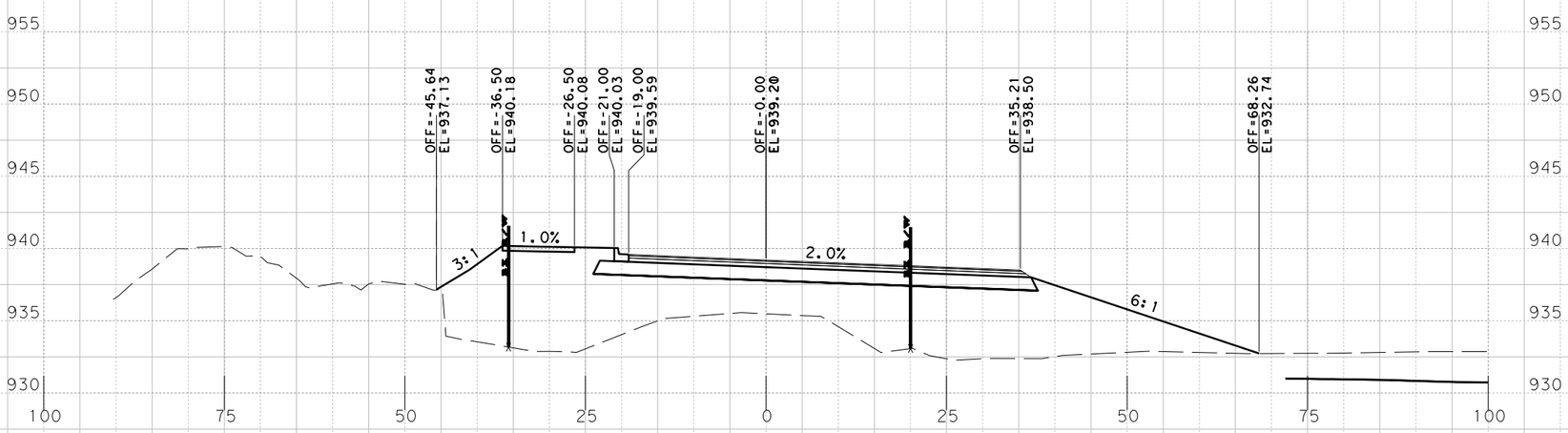

Sta. 579+50.0000 R1

PRELIMINARY
RM 2243
PHASE IA 100%
X-SECTIONS

SCALE: HORIZONTAL 1"=20'
VERTICAL 1"=10'

SHEET 71 OF 168

BGE, Inc.
101 W. Louis Henna Blvd., Suite 400
Austin, TX 78728
Tel: 512-879-0400 • www.bgeinc.com
TBPE Registration No. F-1046

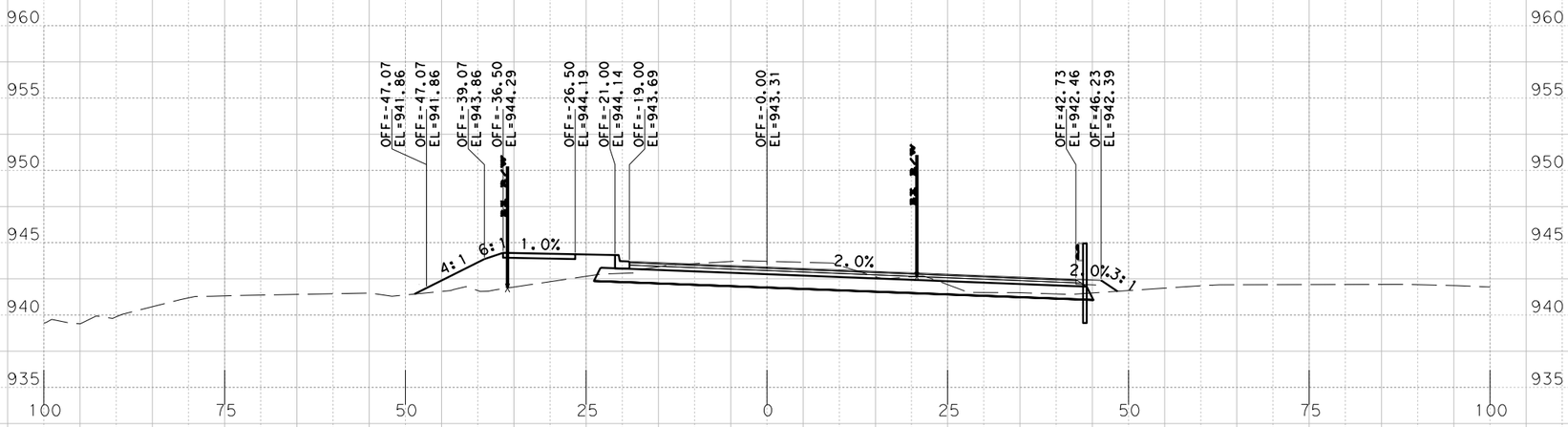

Sta. 581+00.0000 R1

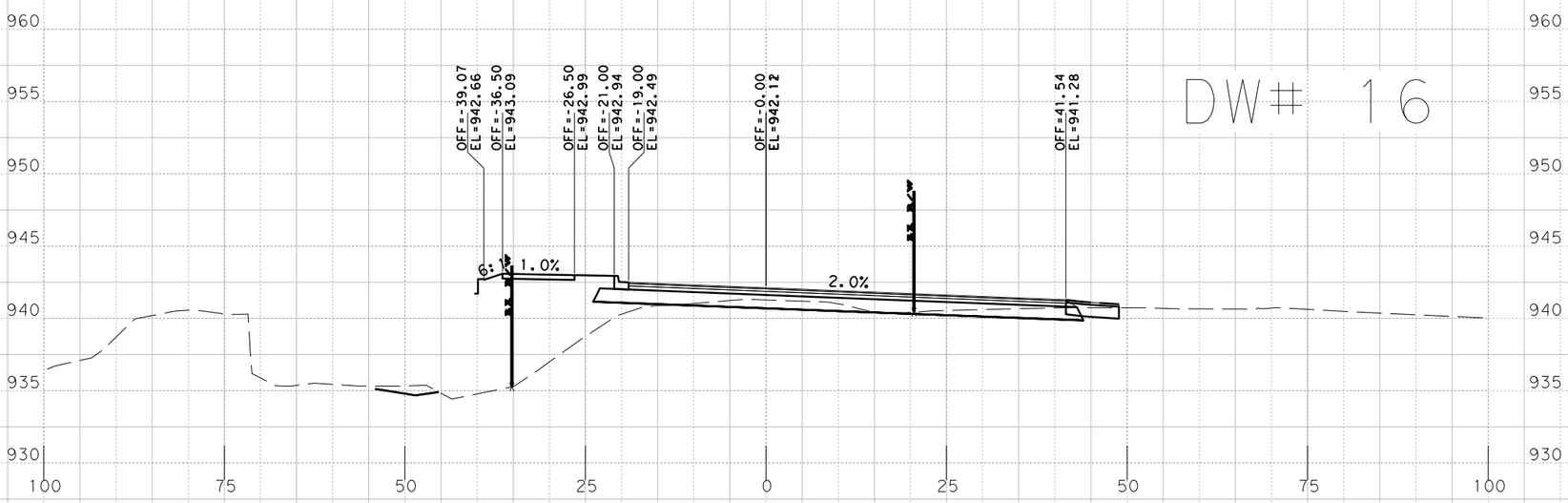

Sta. 580+50.0000 R1

DW# 16

PRELIMINARY
RM 2243
PHASE IA 100%

X-SECTIONS

SCALE: HORIZONTAL 1"=20'
VERTICAL 1"=10'

SHEET 72 OF 168

BGE, Inc.
101 W. Louis Henna Blvd., Suite 400
Austin, TX 78728
Tel: 512-879-0400 • www.bgeinc.com
TBPE Registration No. F-1046

DW# 17

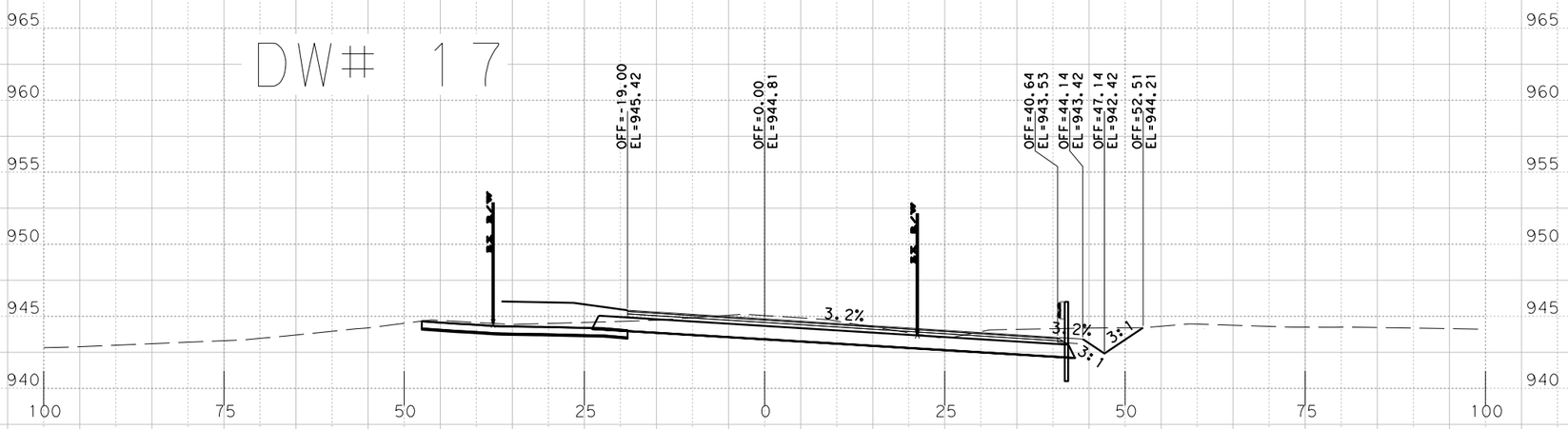

Sta. 582+00.0000 R1

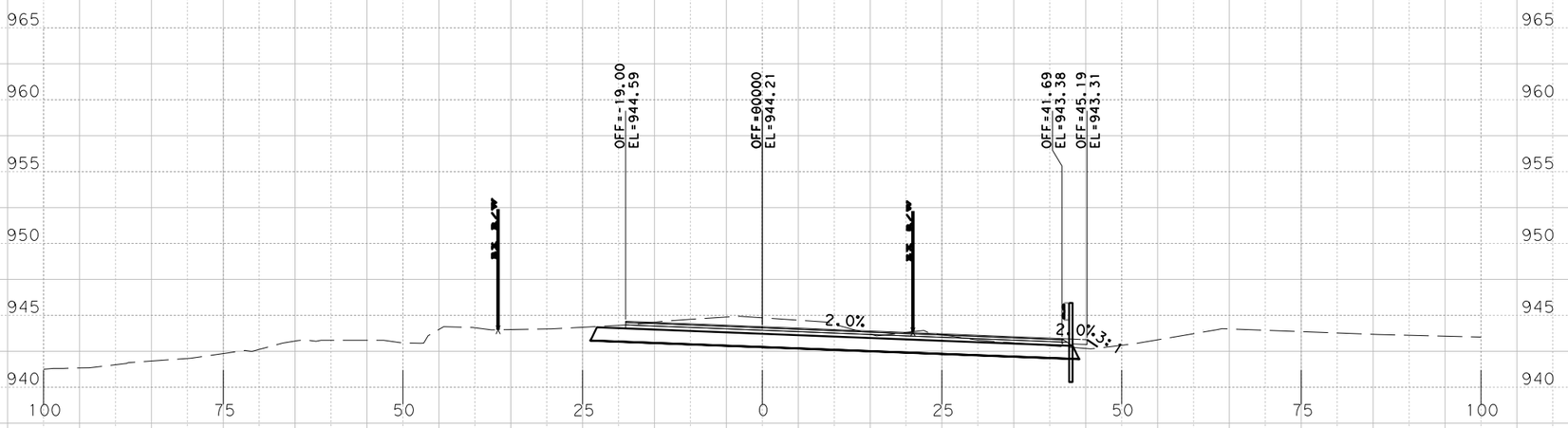

Sta. 581+50.0000 R1

PRELIMINARY
RM 2243
PHASE IA 100%

X-SECTIONS

SCALE: HORIZONTAL 1"=20'
VERTICAL 1"=10'

SHEET 73 OF 168

BGE, Inc.
101 W. Louis Henna Blvd., Suite 400
Austin, TX 78728
Tel: 512-879-0400 • www.bgeinc.com
TBPE Registration No. F-1046

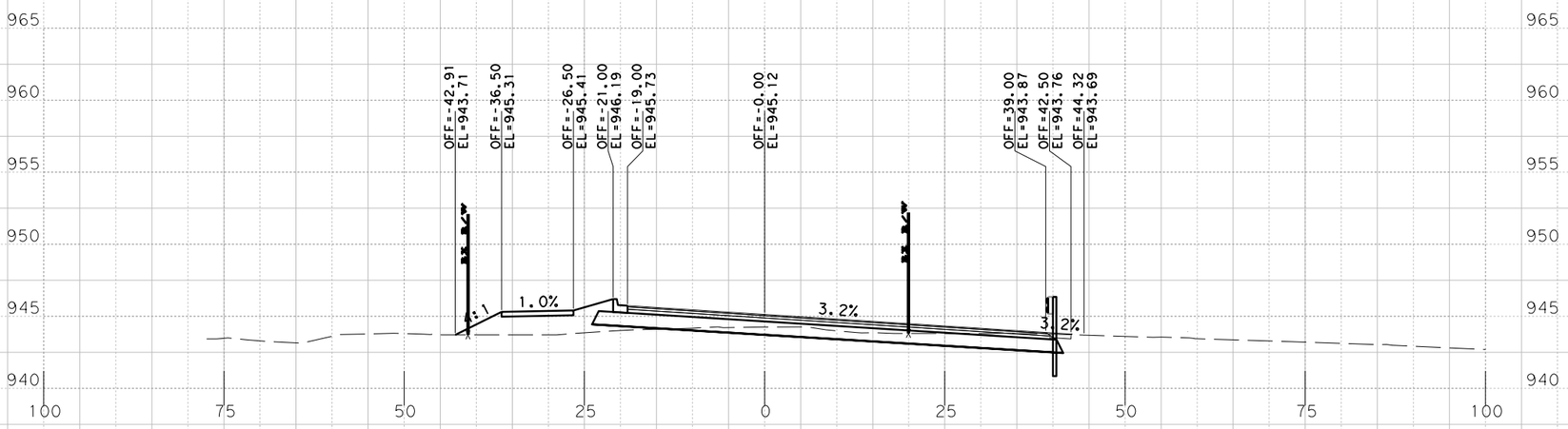

Sta. 583+00.0000 R1

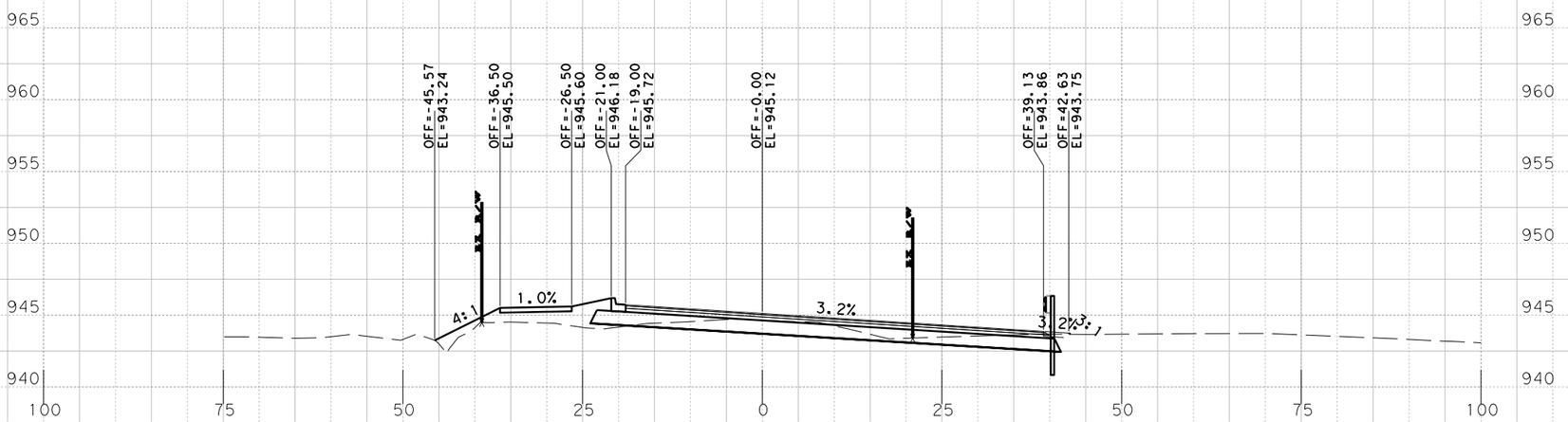

Sta. 582+50.0000 R1

PRELIMINARY
RM 2243
PHASE IA 100%

X-SECTIONS

SCALE: HORIZONTAL 1"=20'
VERTICAL 1"=10'

SHEET 74 OF 168

BGE, Inc.
101 W. Louis Henna Blvd., Suite 400
Austin, TX 78728
Tel: 512-879-0400 • www.bgeinc.com
TBPE Registration No. F-1046

RONALD REAGAN BLVD

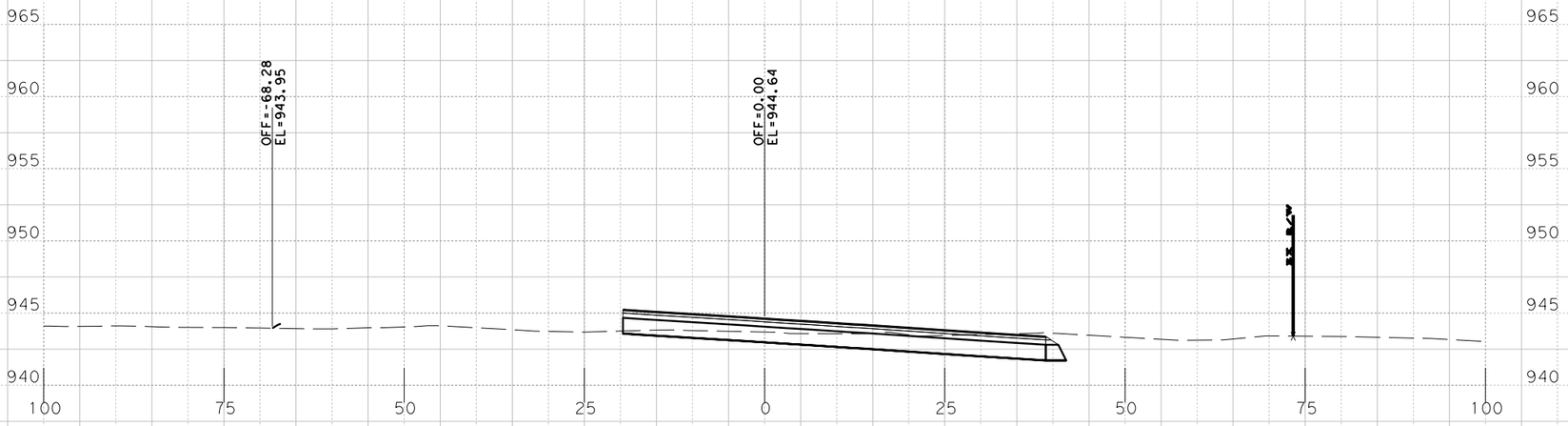

Sta. 584+00.0000 R1

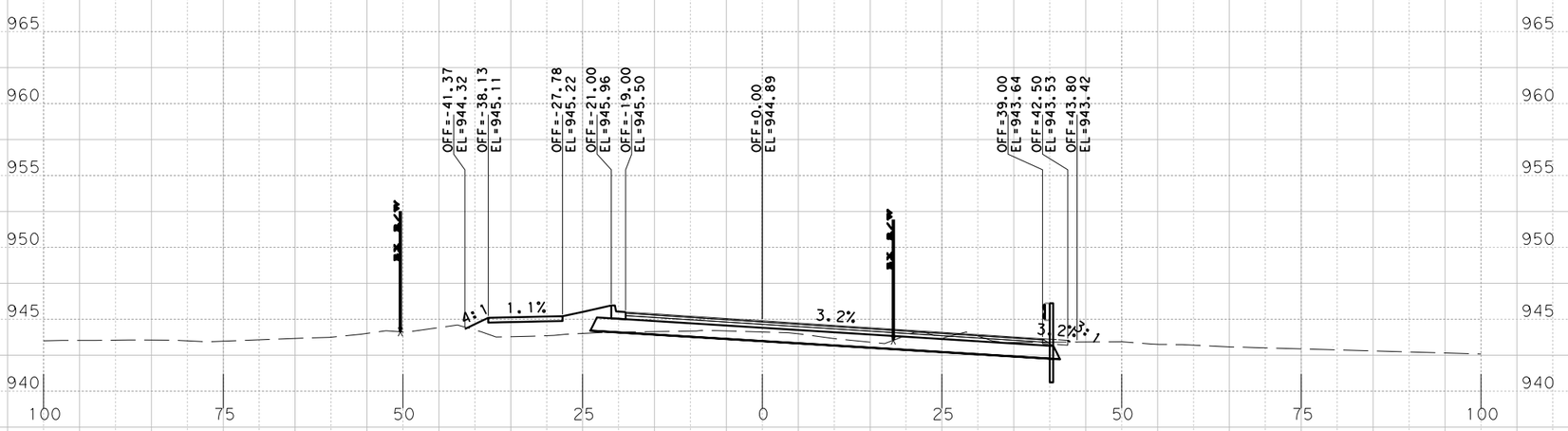

Sta. 583+50.0000 R1

PRELIMINARY
RM 2243
PHASE IA 100%

X-SECTIONS

SCALE: HORIZONTAL 1"=20'
VERTICAL 1"=10'

SHEET 75 OF 168

BGE, Inc.
101 W. Louis Henna Blvd., Suite 400
Austin, TX 78728
Tel: 512-879-0400 • www.bgeinc.com
TBPE Registration No. F-1046

RONALD REAGAN BLVD

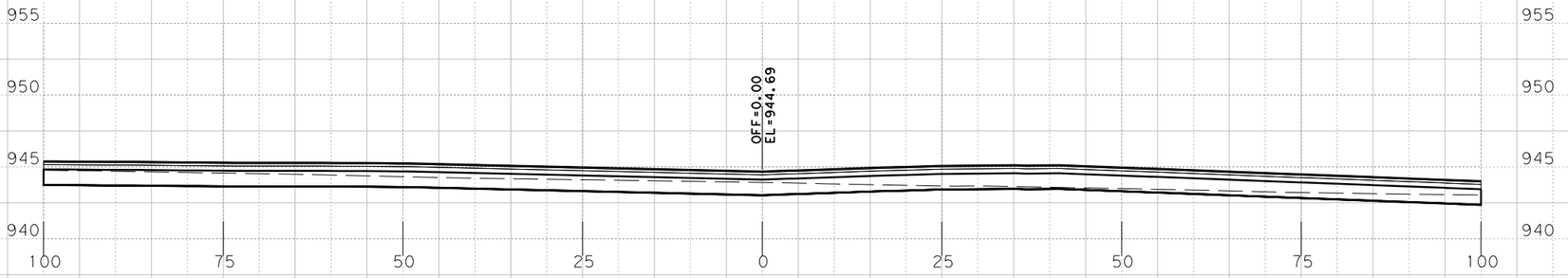

Sta. 585+50.0000 R1

RONALD REAGAN BLVD

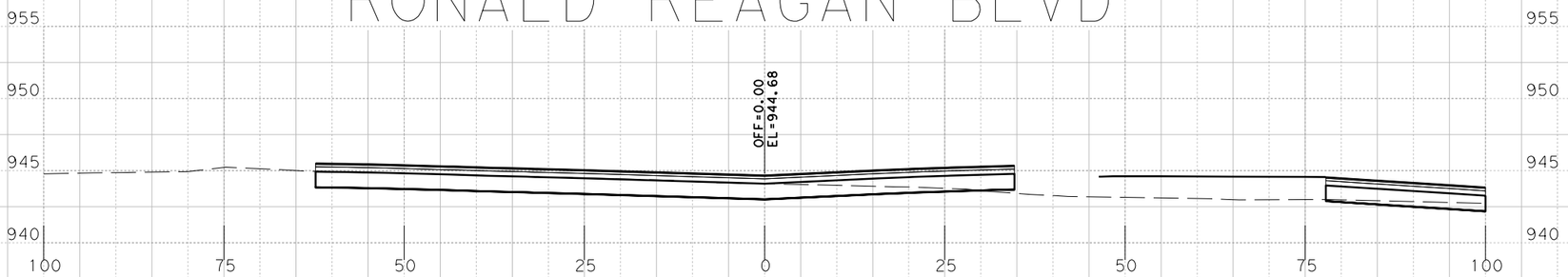

Sta. 585+00.0000 R1

RONALD REAGAN BLVD

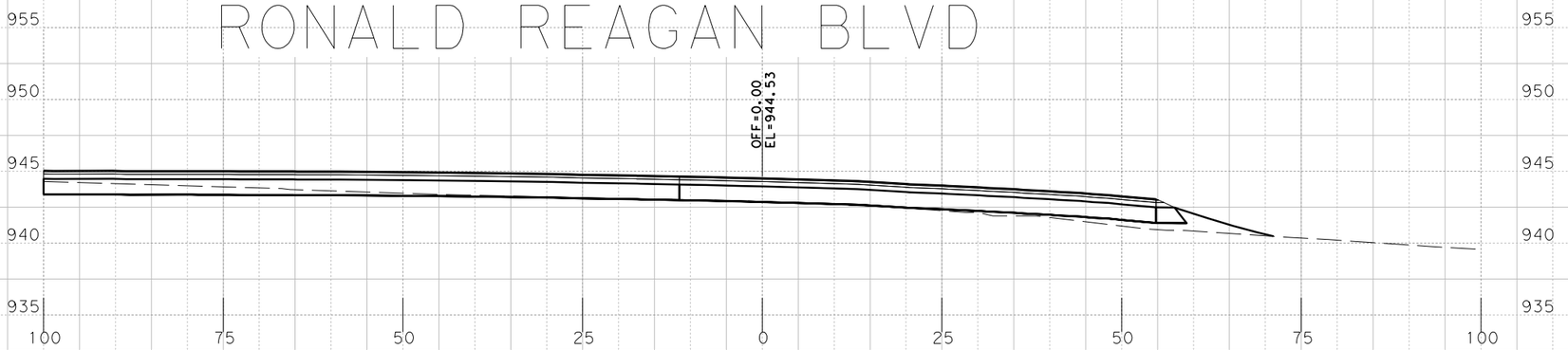

Sta. 584+50.0000 R1

PRELIMINARY
RM 2243
PHASE IA 100%

X-SECTIONS

SCALE: HORIZONTAL 1"=20'
VERTICAL 1"=10'

SHEET 76 OF 168

BGE, Inc.
101 W. Louis Henna Blvd., Suite 400
Austin, TX 78728
Tel: 512-879-0400 • www.bgeinc.com
TBPE Registration No. F-1046

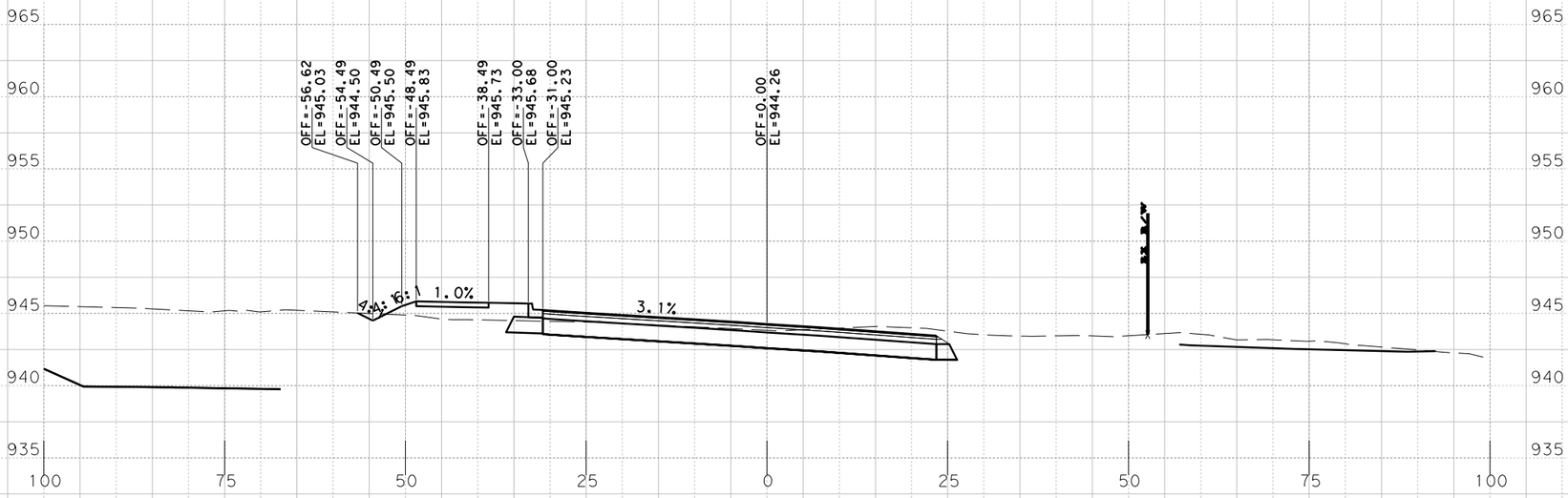

Sta. 586+50.0000 R1

RONALD REAGAN BLVD

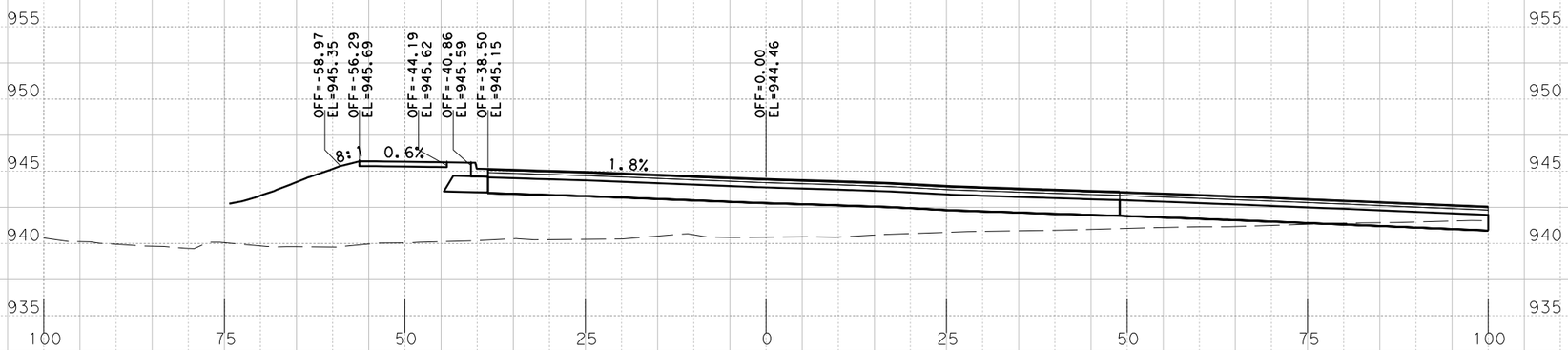

Sta. 586+00.0000 R1

PRELIMINARY
RM 2243
PHASE IA 100%

X-SECTIONS

SCALE: HORIZONTAL 1"=20'
VERTICAL 1"=10'

SHEET 77 OF 168

BGE, Inc.
101 N. Louis Henna Blvd., Suite 400
Austin, TX 78728
Tel: 512-879-0400 • www.bgeinc.com
TBPE Registration No. F-1046

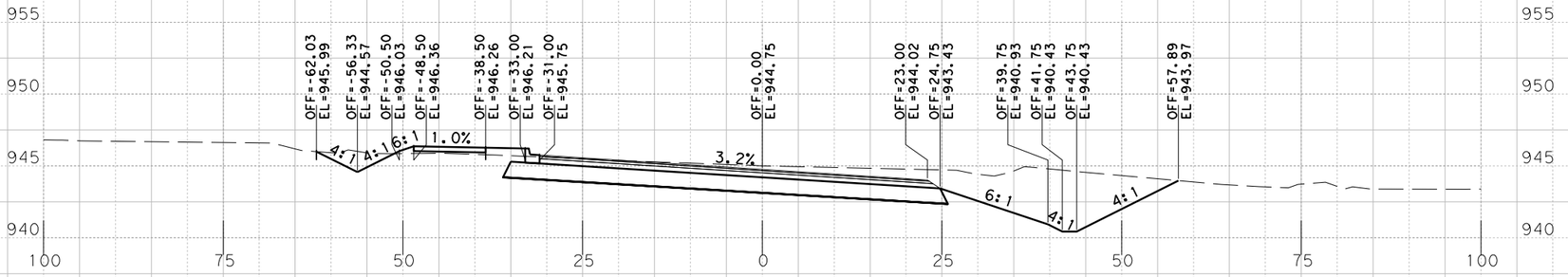

Sta. 588+00.0000 R1

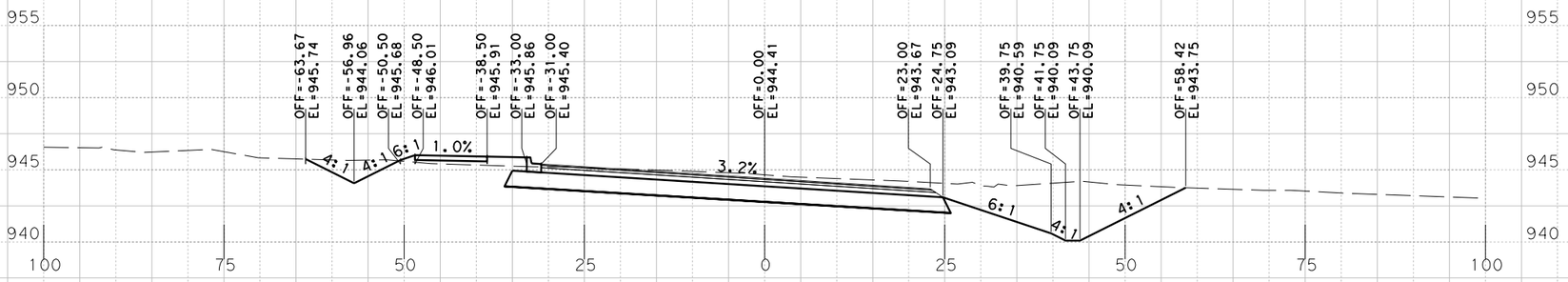

Sta. 587+50.0000 R1

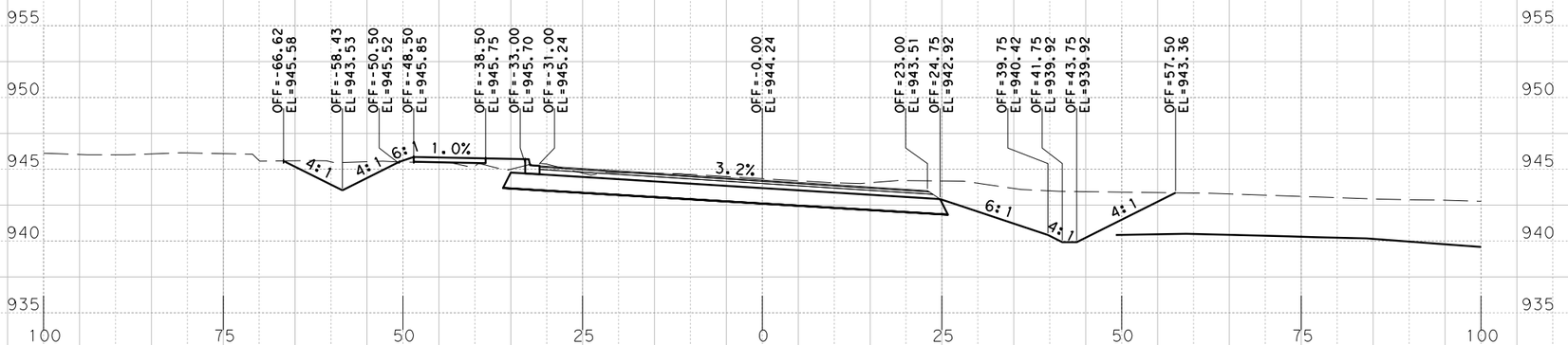

Sta. 587+00.0000 R1

PRELIMINARY
RM 2243
PHASE IA 100%

X-SECTIONS

SCALE: HORIZONTAL 1"=20'
VERTICAL 1"=10'

SHEET 78 OF 168

BGE, Inc.
101 W. Louis Henna Blvd., Suite 400
Austin, TX 78728
Tel: 512-879-0400 • www.bgeinc.com
TBPE Registration No. F-1046

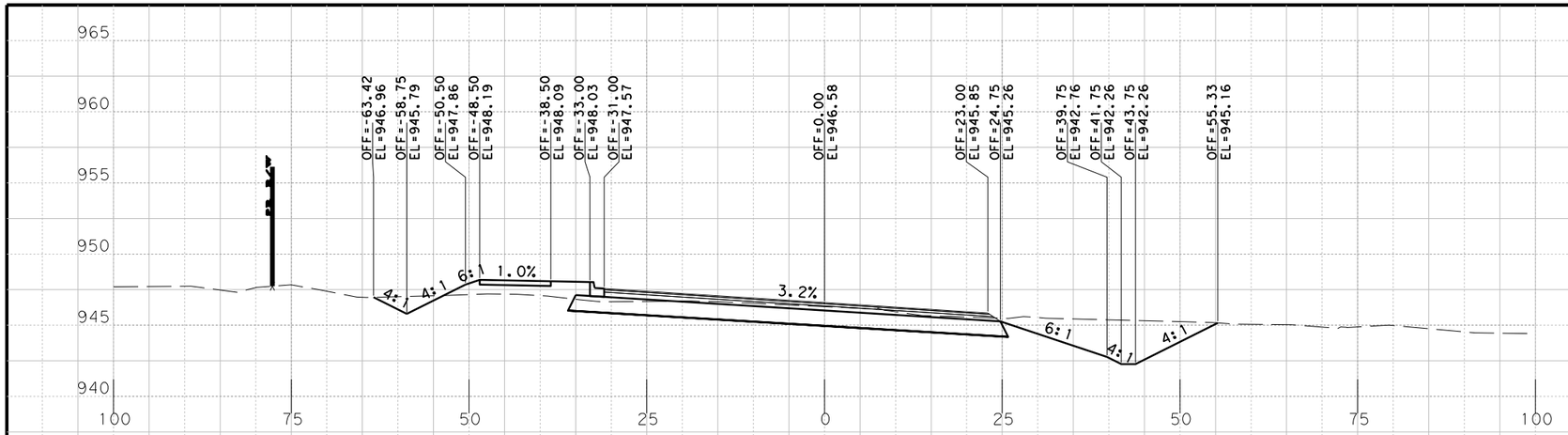

Sta. 589+50.0000 R1

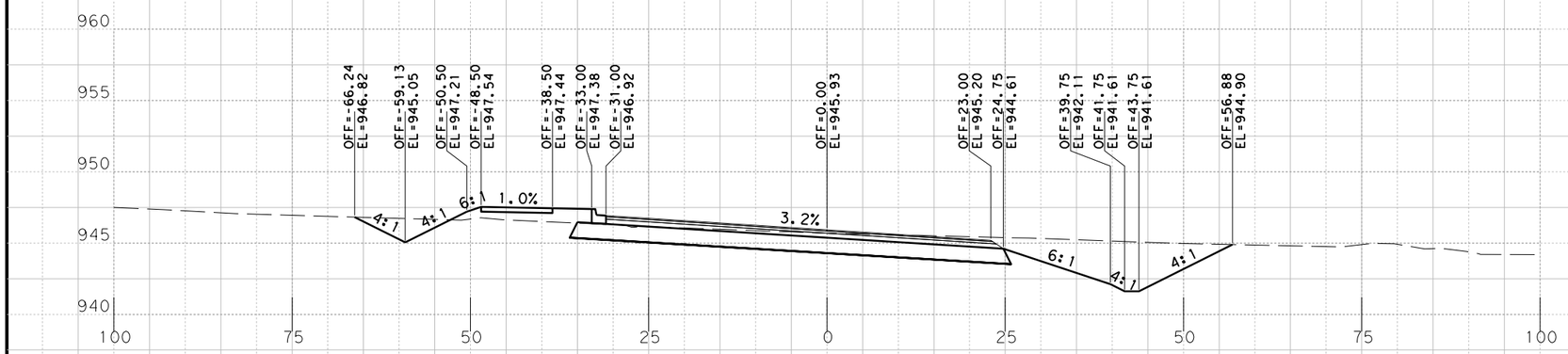

Sta. 589+00.0000 R1

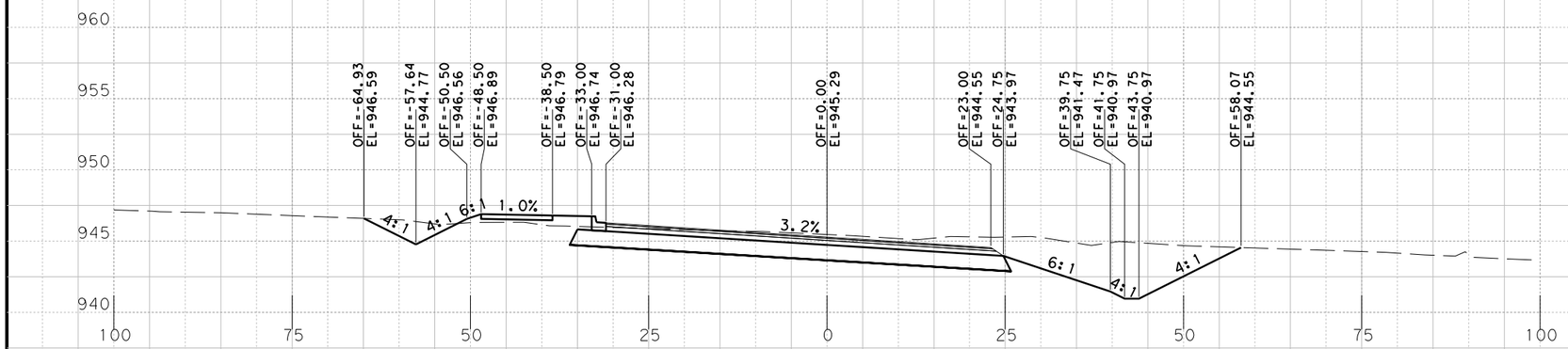

Sta. 588+50.0000 R1

PRELIMINARY
RM 2243
PHASE IA 100%

X-SECTIONS

SCALE: HORIZONTAL 1"=20'
VERTICAL 1"=10'

SHEET 79 OF 168

BGE, Inc.
101 W. Louis Henna Blvd., Suite 400
Austin, TX 78728
Tel: 512-879-0400 • www.bgeinc.com
TBPE Registration No. F-1046

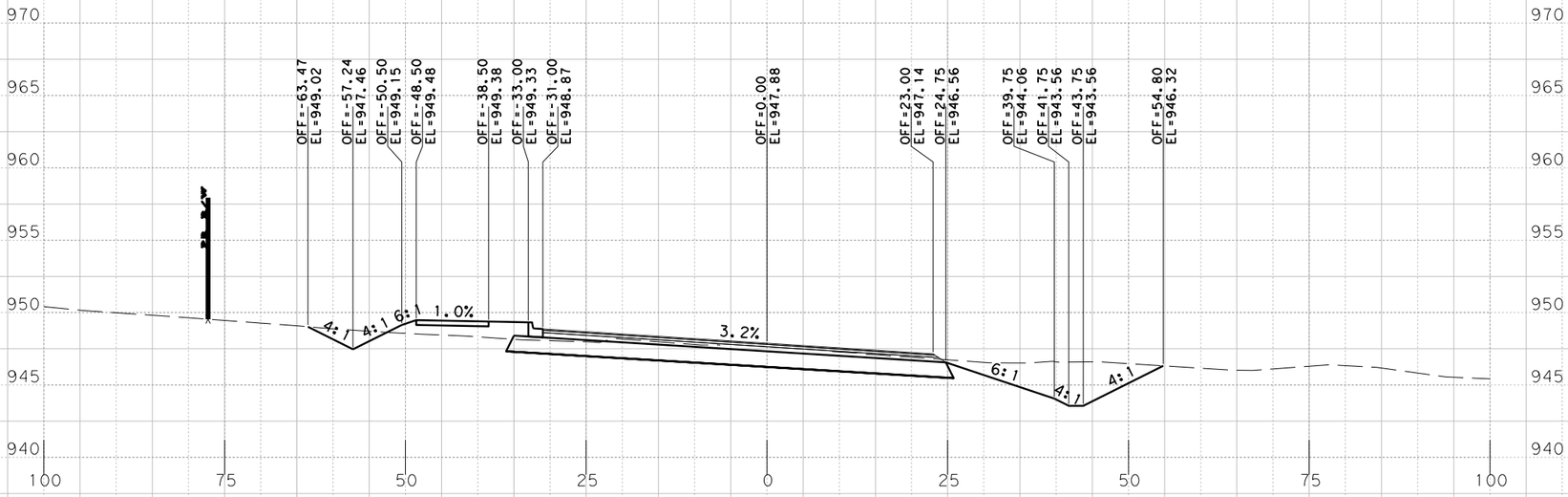

S+a. 590+50.0000 R1

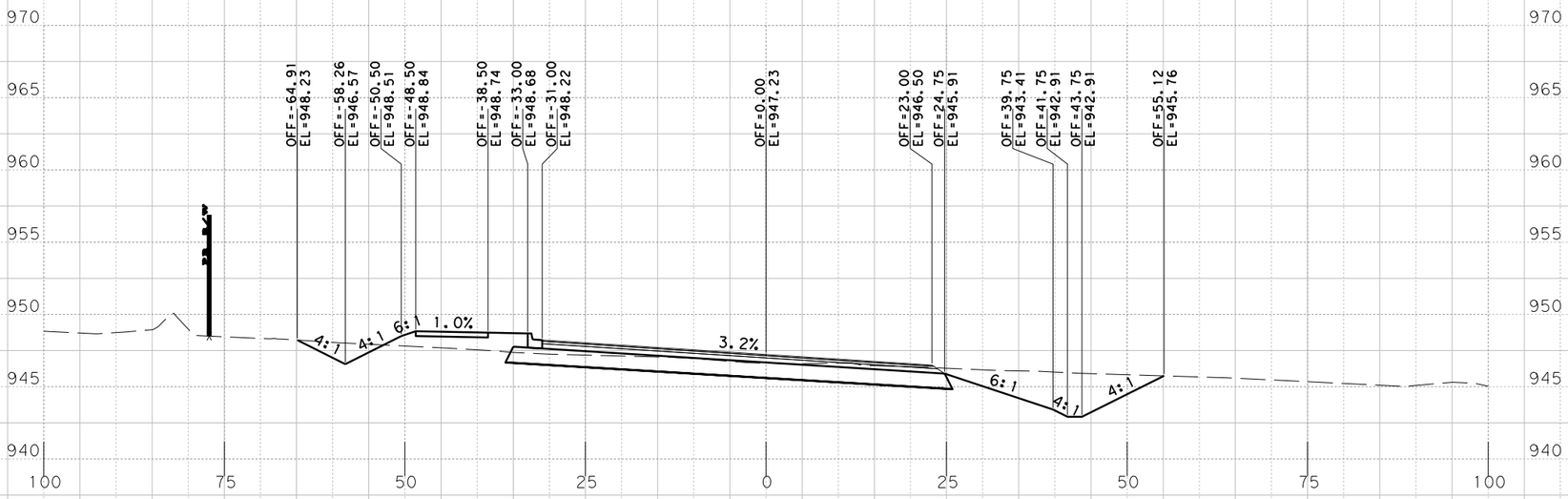

S+a. 590+00.0000 R1

PRELIMINARY
RM 2243
PHASE IA 100%

X-SECTIONS

SCALE: HORIZONTAL 1"=20'
VERTICAL 1"=10'

SHEET 80 OF 168

BGE, Inc.
101 W. Louis Henna Blvd., Suite 400
Austin, TX 78728
Tel: 512-879-0400 • www.bgeinc.com
TBPE Registration No. F-1046

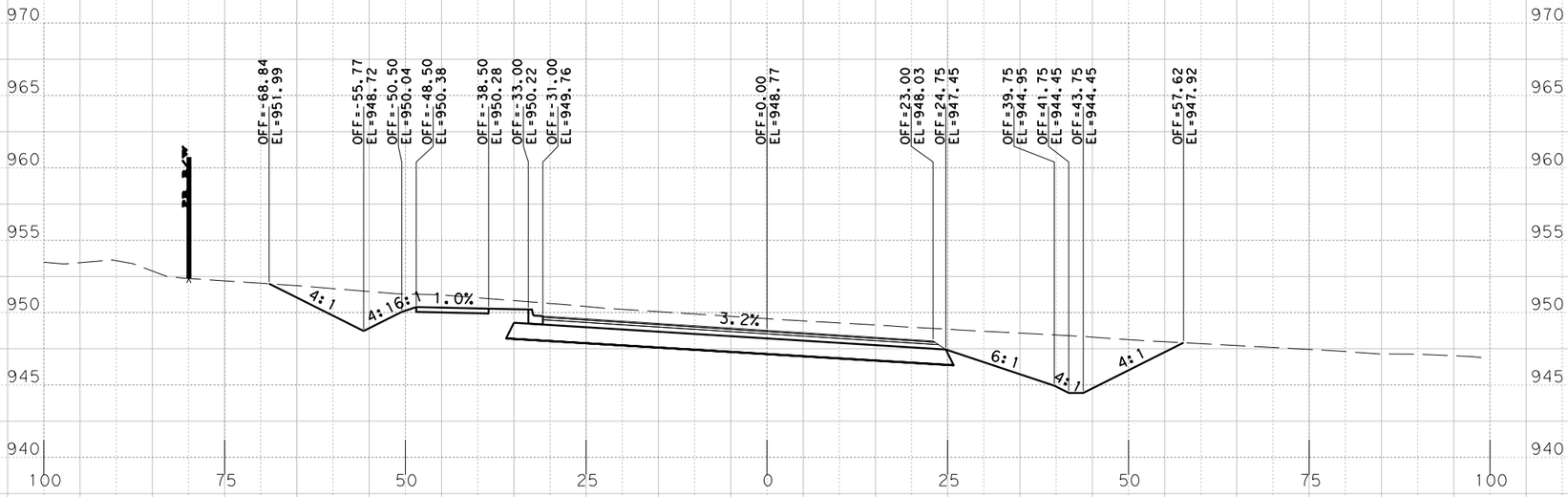

Sta. 591+50.0000 R1

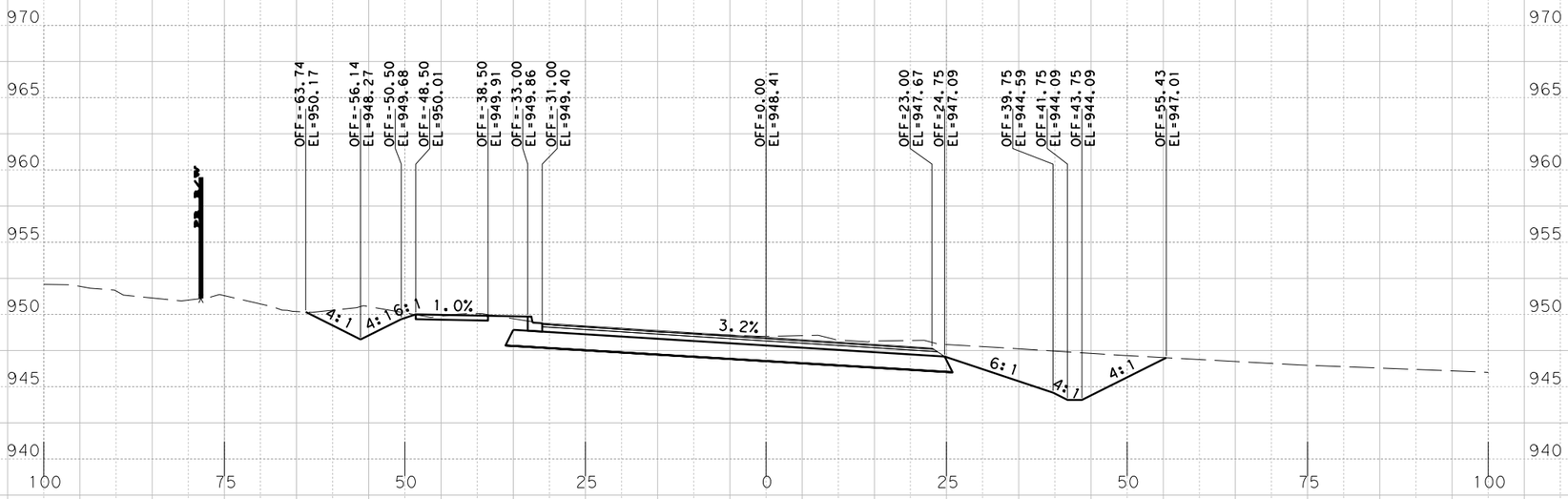

Sta. 591+00.0000 R1

PRELIMINARY
RM 2243
PHASE IA 100%

X-SECTIONS

SCALE: HORIZONTAL 1"=20'
VERTICAL 1"=10'

SHEET 81 OF 168

BGE, Inc.
101 W. Louis Henna Blvd., Suite 400
Austin, TX 78728
Tel: 512-879-0400 • www.bgeinc.com
TBPE Registration No. F-1046

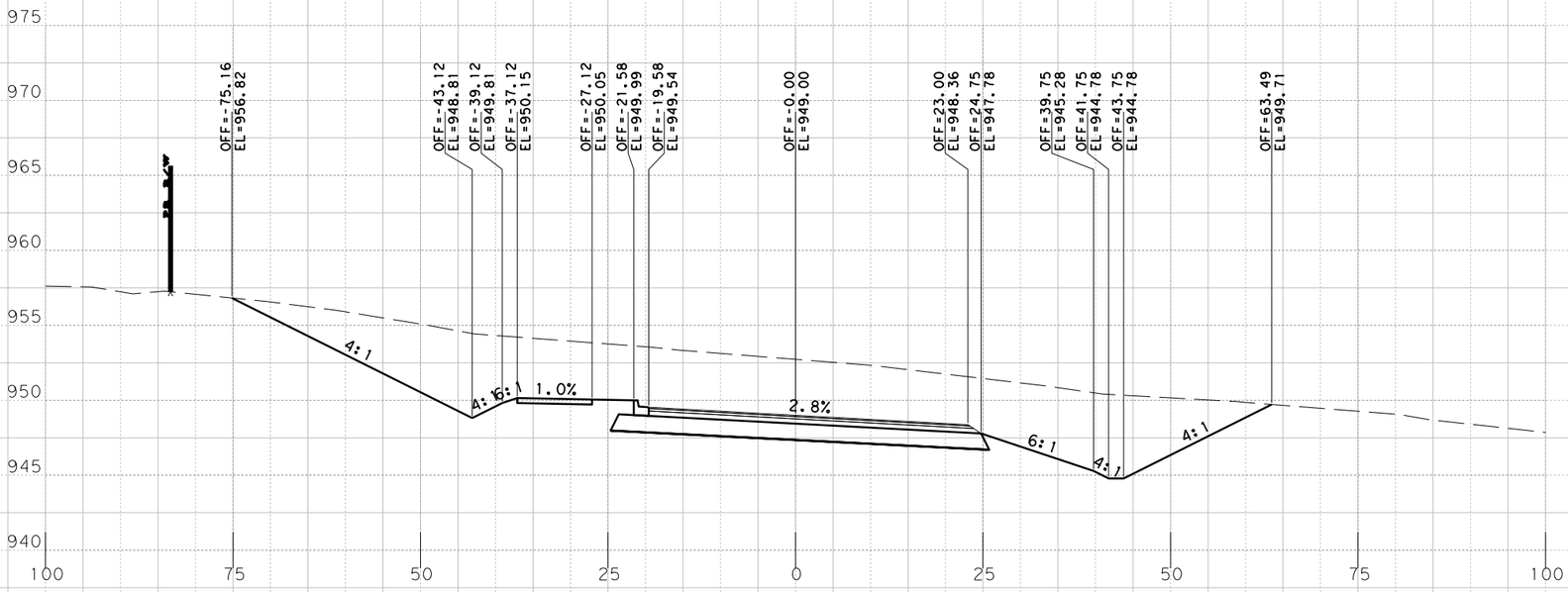

Sta. 592+50.0000 R1

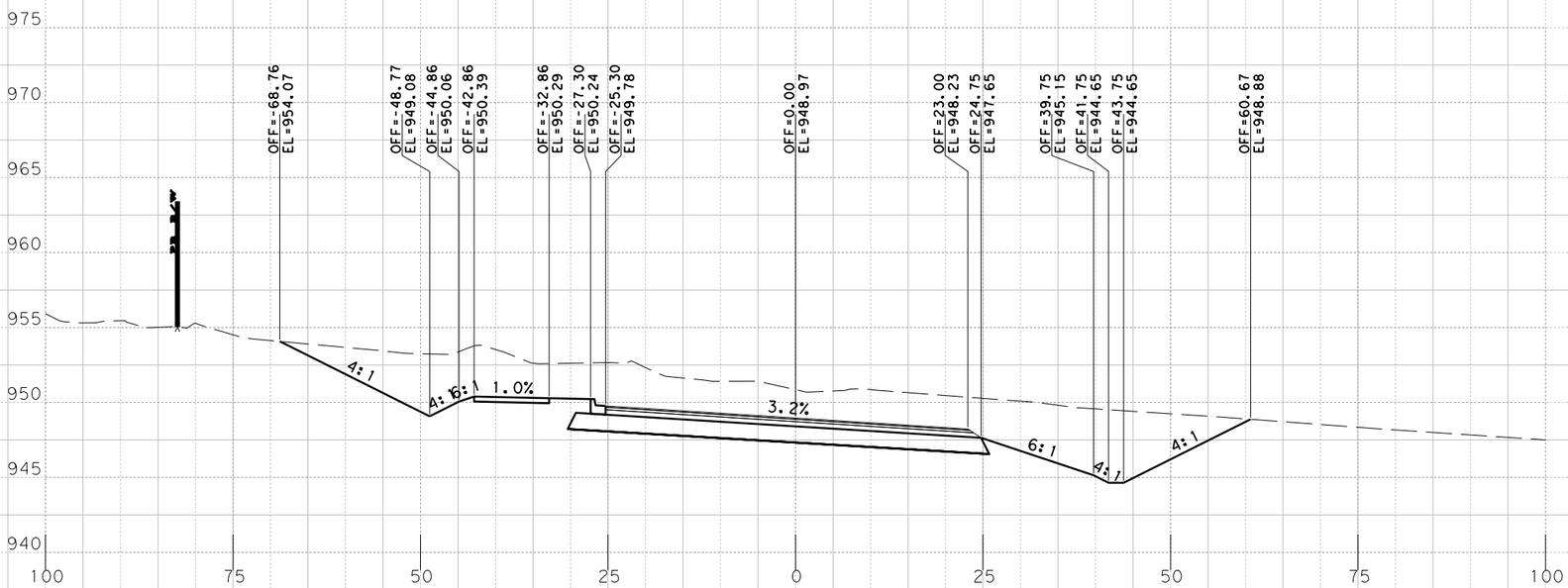

Sta. 592+00.0000 R1

PRELIMINARY
RM 2243
PHASE IA 100%

X-SECTIONS

SCALE: HORIZONTAL 1"=20'
VERTICAL 1"=10'

SHEET 82 OF 168

BGE, Inc.
101 W. Louis Henna Blvd., Suite 400
Austin, TX 78728
Tel: 512-879-0400 • www.bgeinc.com
TBPE Registration No. F-1046

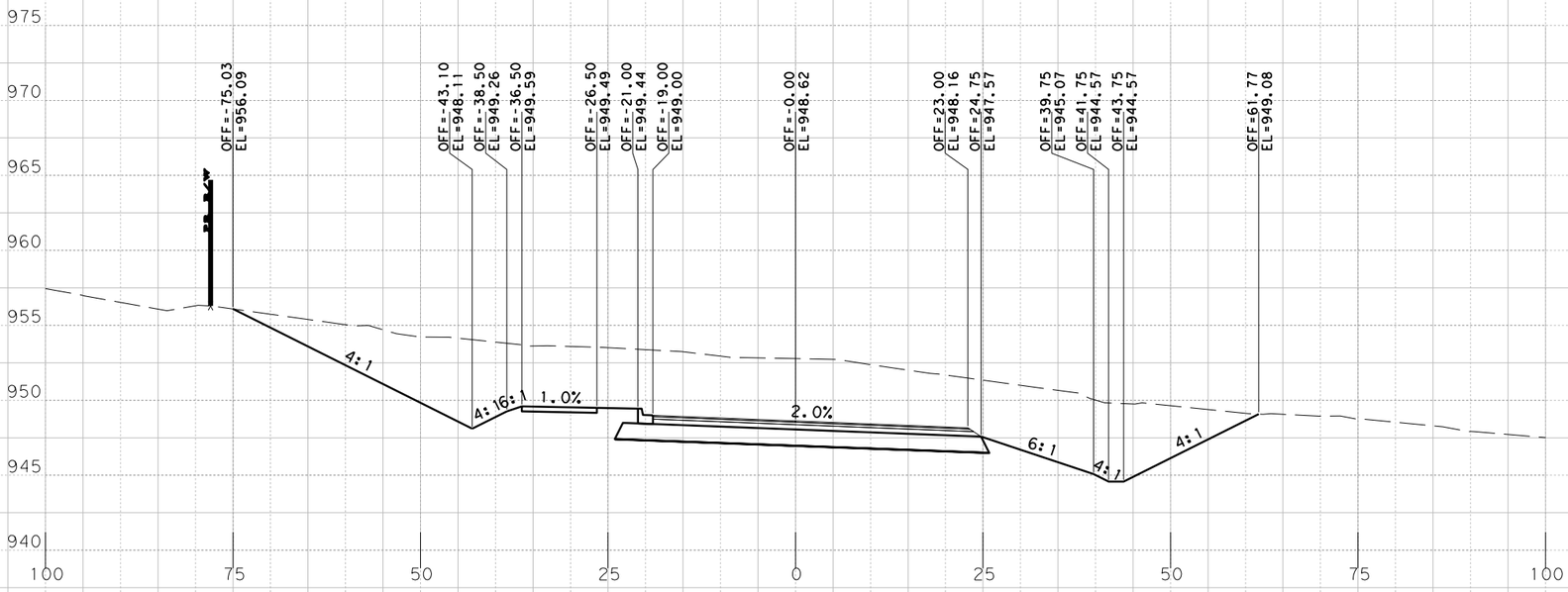

Sta. 593+50.0000 R1

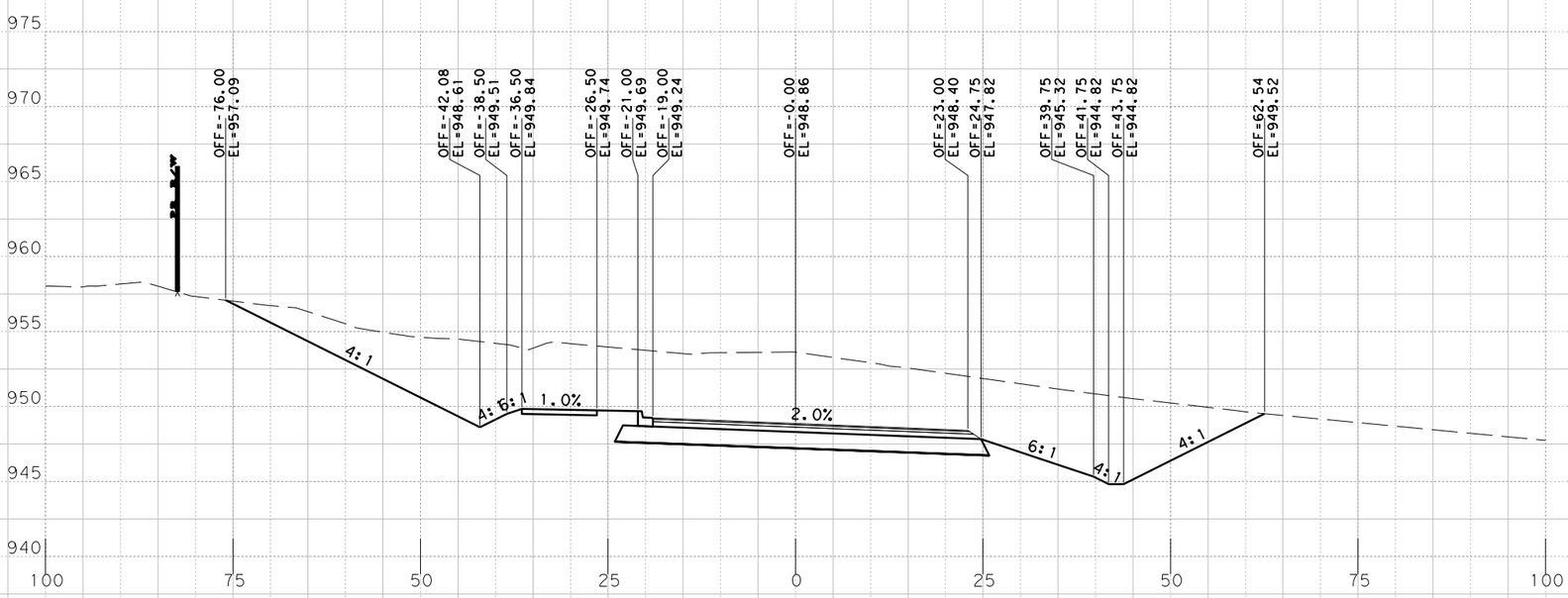

Sta. 593+00.0000 R1

PRELIMINARY
RM 2243
PHASE IA 100%
X-SECTIONS

SCALE: HORIZONTAL 1"=20'
VERTICAL 1"=10'

SHEET 83 OF 168

BGE, Inc.
101 W. Louis Henna Blvd., Suite 400
Austin, TX 78728
Tel: 512-879-0400 • www.bgeinc.com
TBPE Registration No. F-1046

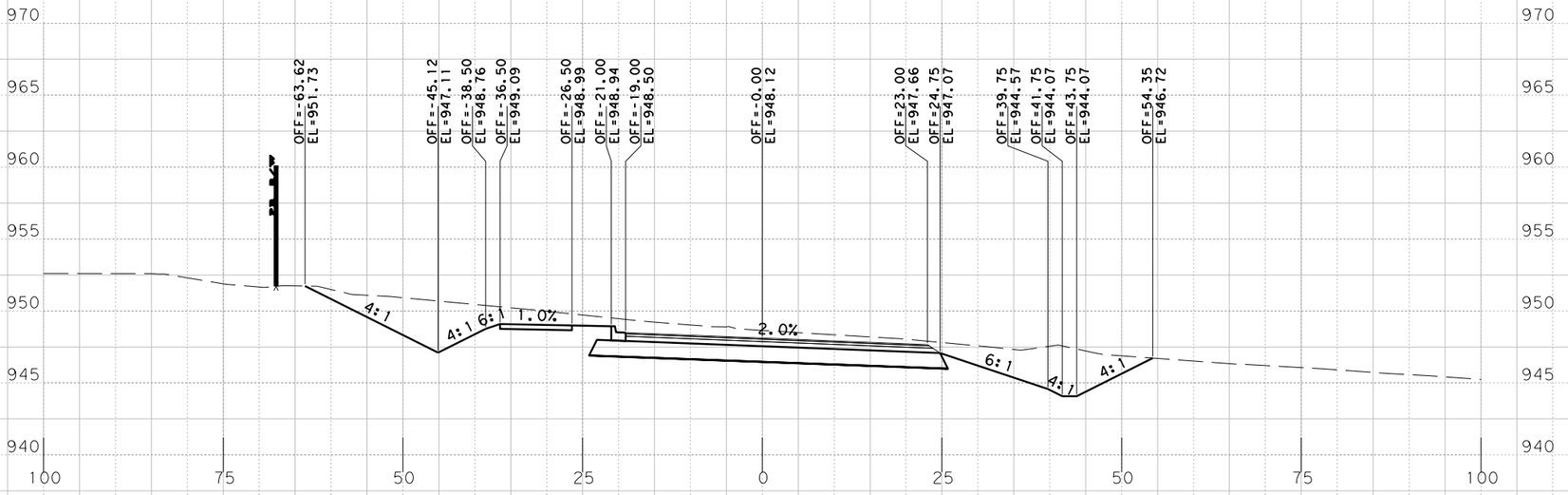

Sta. 594+50.0000 R1

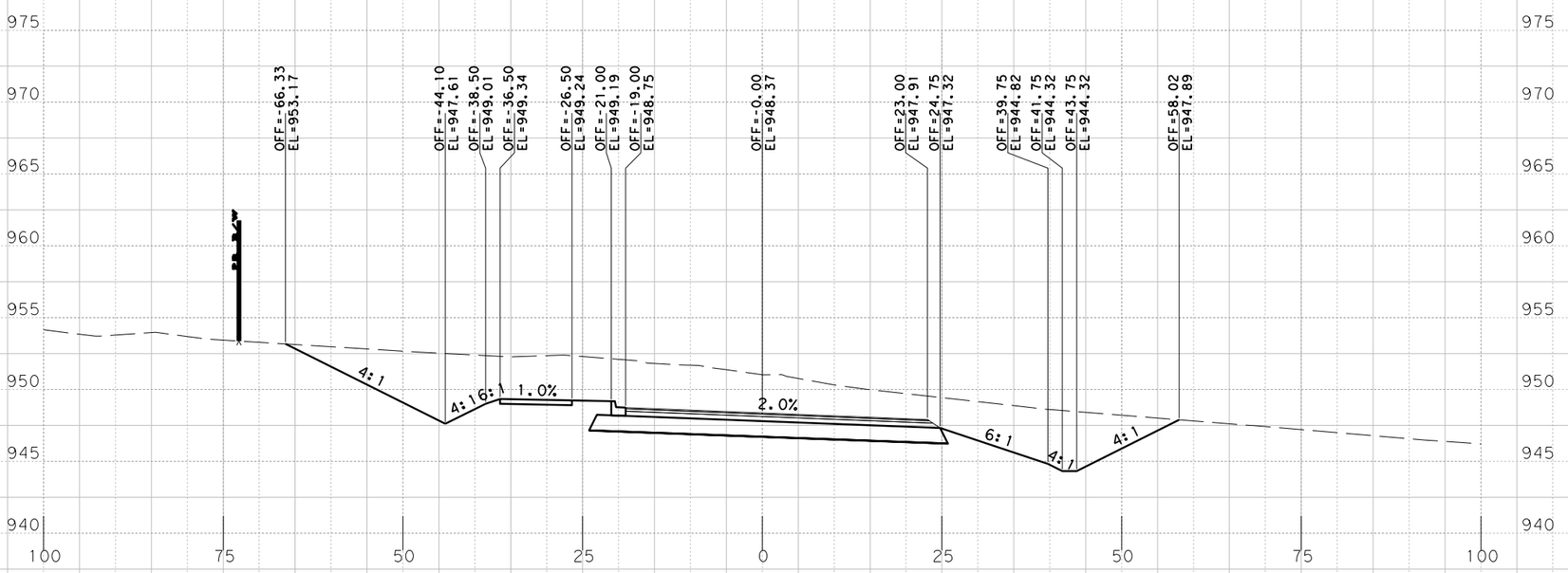

Sta. 594+00.0000 R1

PRELIMINARY
RM 2243
PHASE IA 100%

X-SECTIONS

SCALE: HORIZONTAL 1"=20'
VERTICAL 1"=10'

SHEET 84 OF 168

BGE, Inc.
101 W. Louis Henna Blvd., Suite 400
Austin, TX 78728
Tel: 512-879-0400 • www.bgeinc.com
TBPE Registration No. F-1046

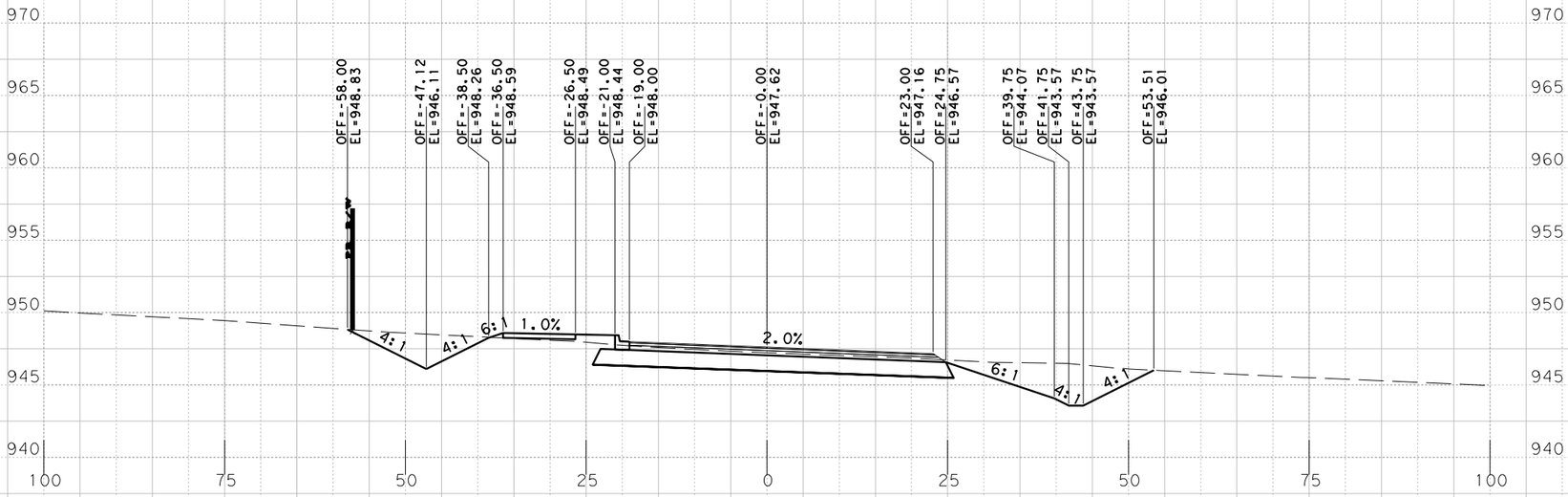

Sta. 595+50.0000 R1

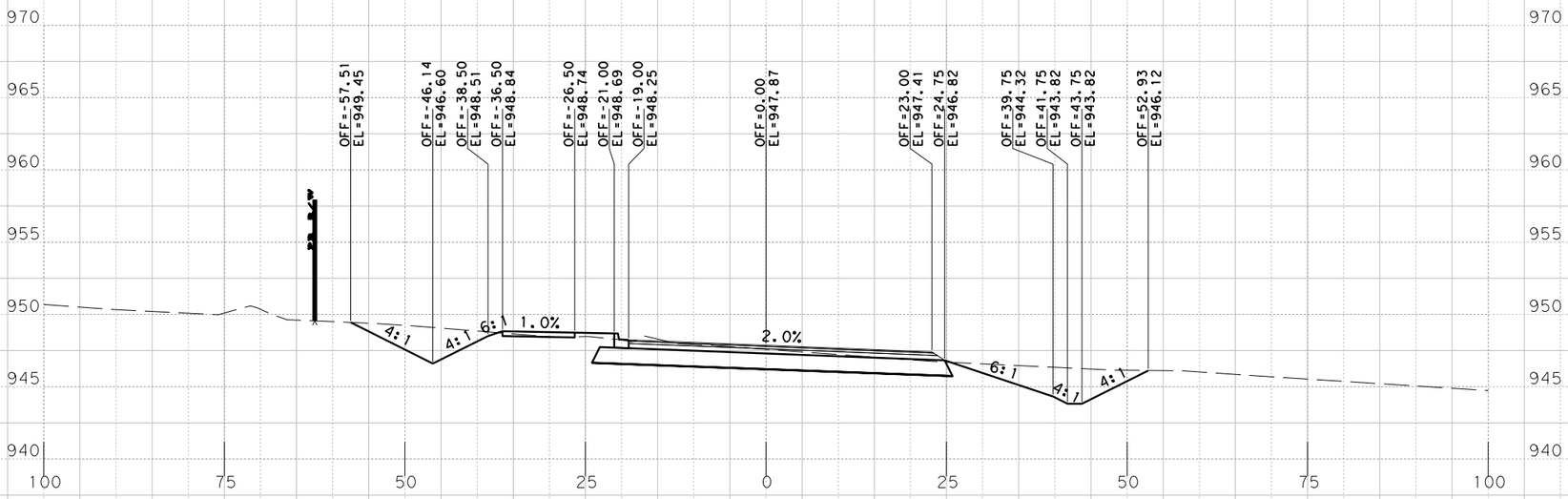

Sta. 595+00.0000 R1

PRELIMINARY
RM 2243
PHASE IA 100%

X-SECTIONS

SCALE: HORIZONTAL 1"=20'
VERTICAL 1"=10'

SHEET 85 OF 168

BGE, Inc.
101 W. Louis Henna Blvd., Suite 400
Austin, TX 78728
Tel: 512-879-0400 • www.bgeinc.com
TBPE Registration No. F-1046

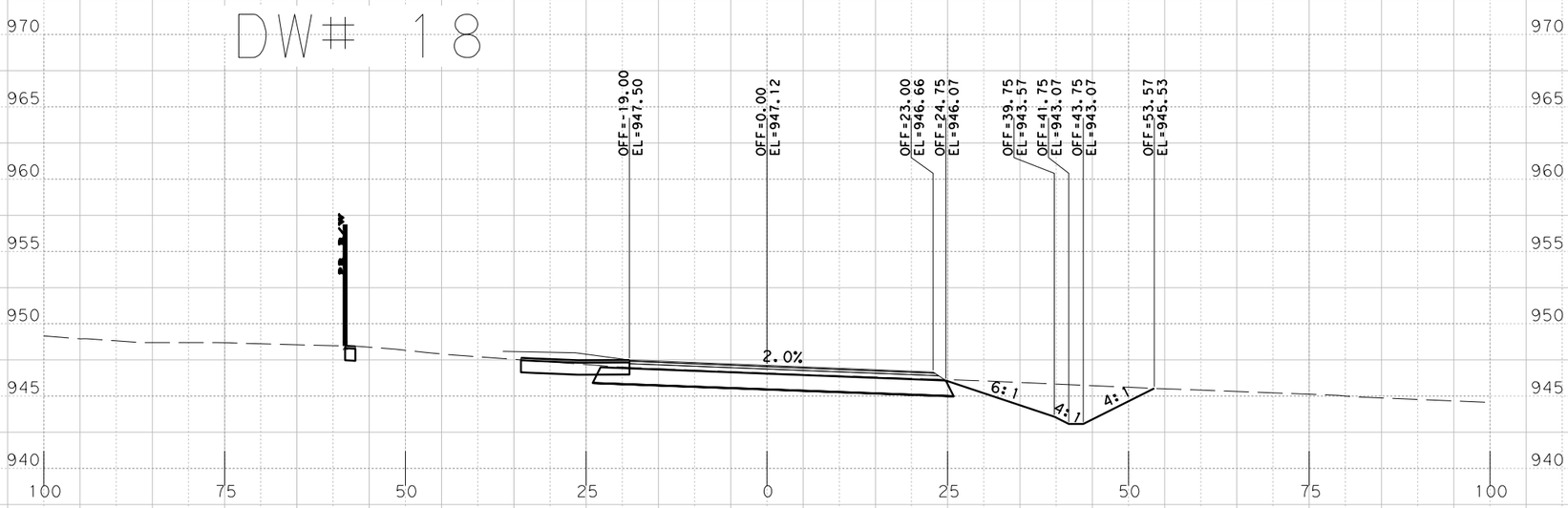

Sta. 596+50.0000 R1

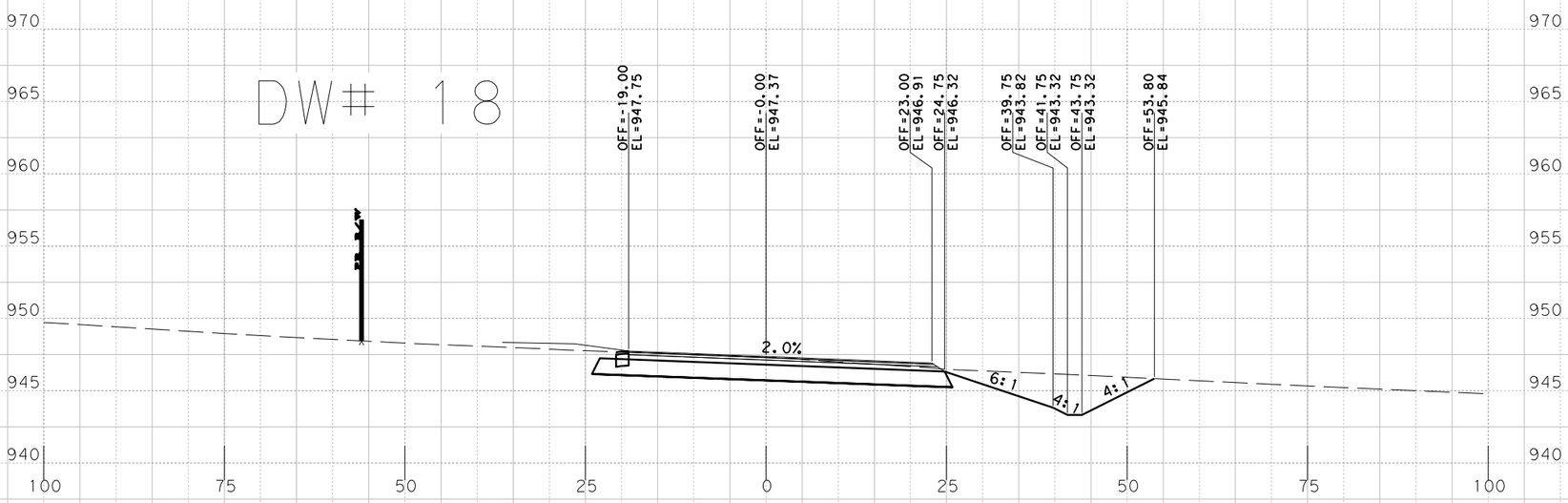

Sta. 596+00.0000 R1

PRELIMINARY
RM 2243
PHASE IA 100%

X-SECTIONS

SCALE: HORIZONTAL 1"=20'
VERTICAL 1"=10'

SHEET 86 OF 168

BGE, Inc.
101 W. Louis Henna Blvd., Suite 400
Austin, TX 78728
Tel: 512-879-0400 • www.bgeinc.com
TBPE Registration No. F-1046

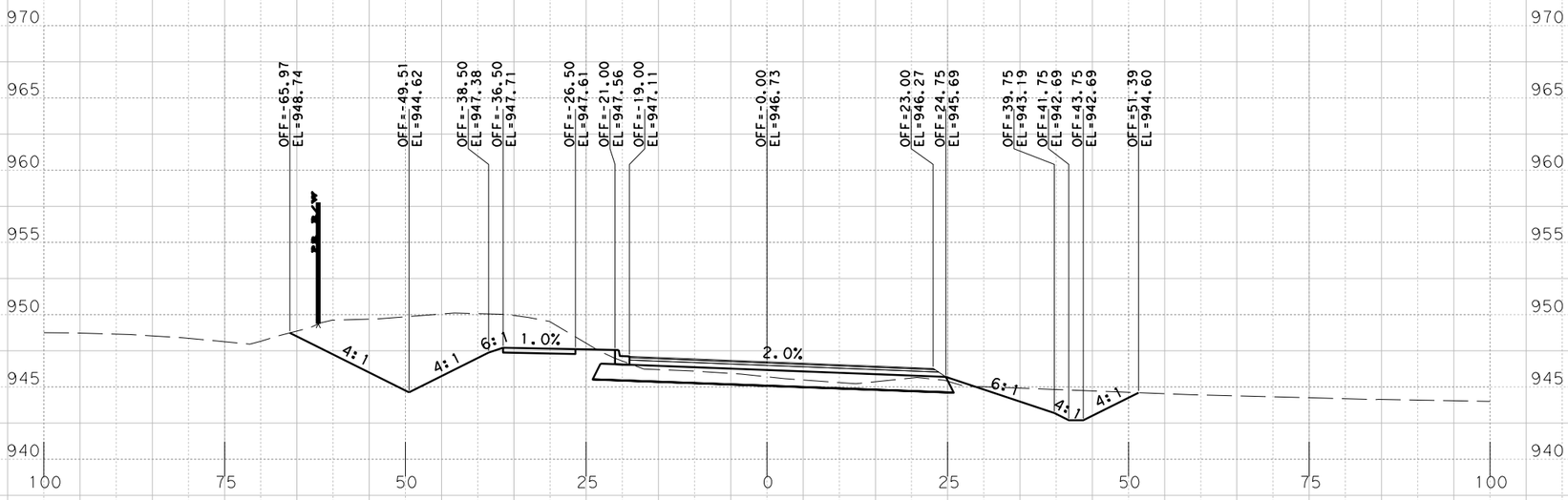

Sta. 597+50.0000 R1

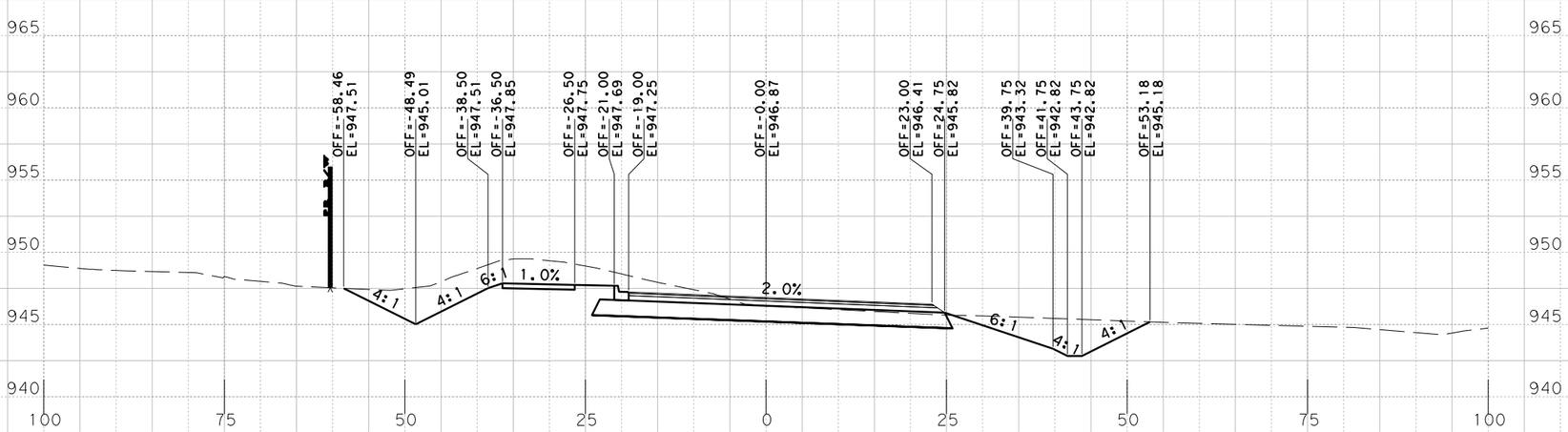

Sta. 597+00.0000 R1

PRELIMINARY
RM 2243
PHASE IA 100%

X-SECTIONS

SCALE: HORIZONTAL 1"=20'
VERTICAL 1"=10'

SHEET 87 OF 168

BGE, Inc.
101 W. Louis Henna Blvd., Suite 400
Austin, TX 78728
Tel: 512-879-0400 • www.bgeinc.com
TBPE Registration No. F-1046

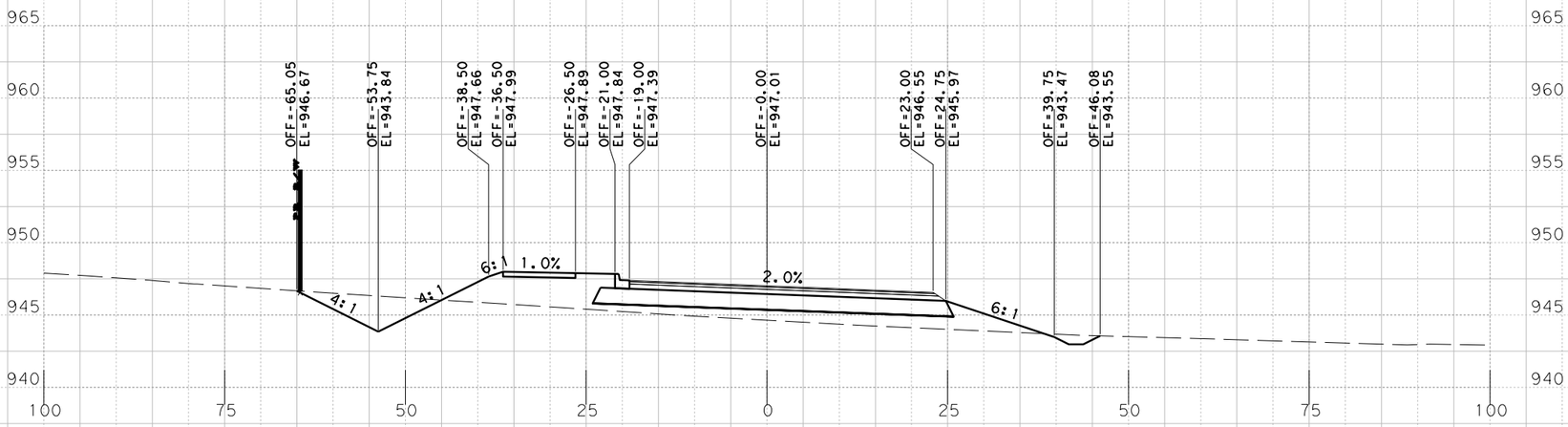

Sta. 598+50.0000 R1

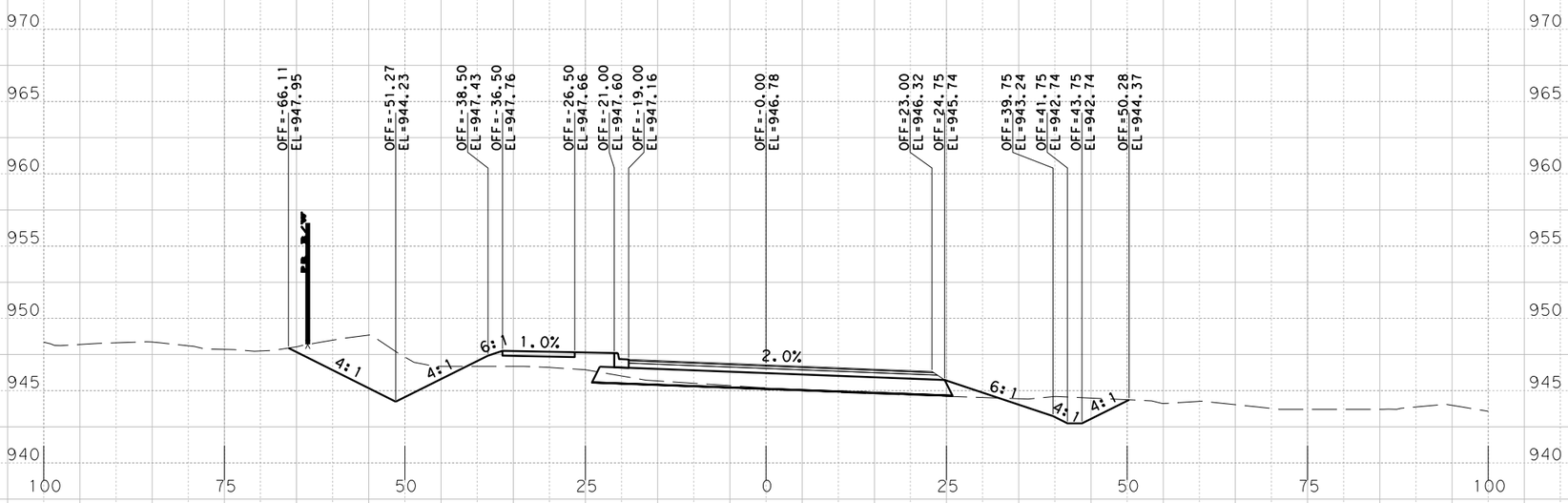

Sta. 598+00.0000 R1

PRELIMINARY
RM 2243
PHASE IA 100%

X-SECTIONS

SCALE: HORIZONTAL 1"=20'
VERTICAL 1"=10'

SHEET 88 OF 168

BGE, Inc.
101 W. Louis Henna Blvd., Suite 400
Austin, TX 78728
Tel: 512-879-0400 • www.bgeinc.com
TBPE Registration No. F-1046

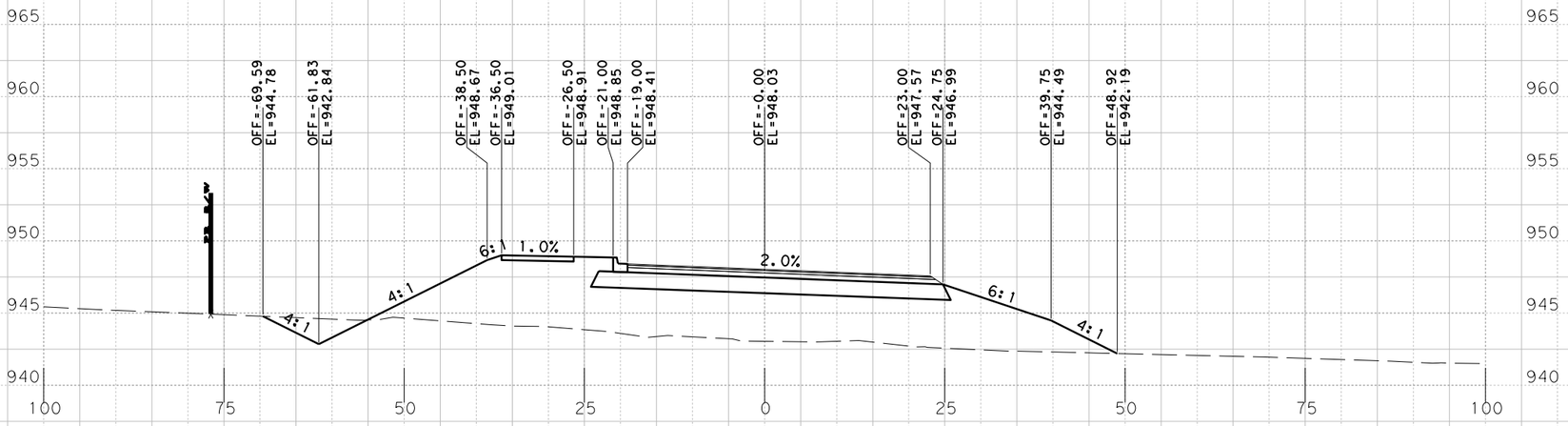

Sta. 599+50.0000 R1

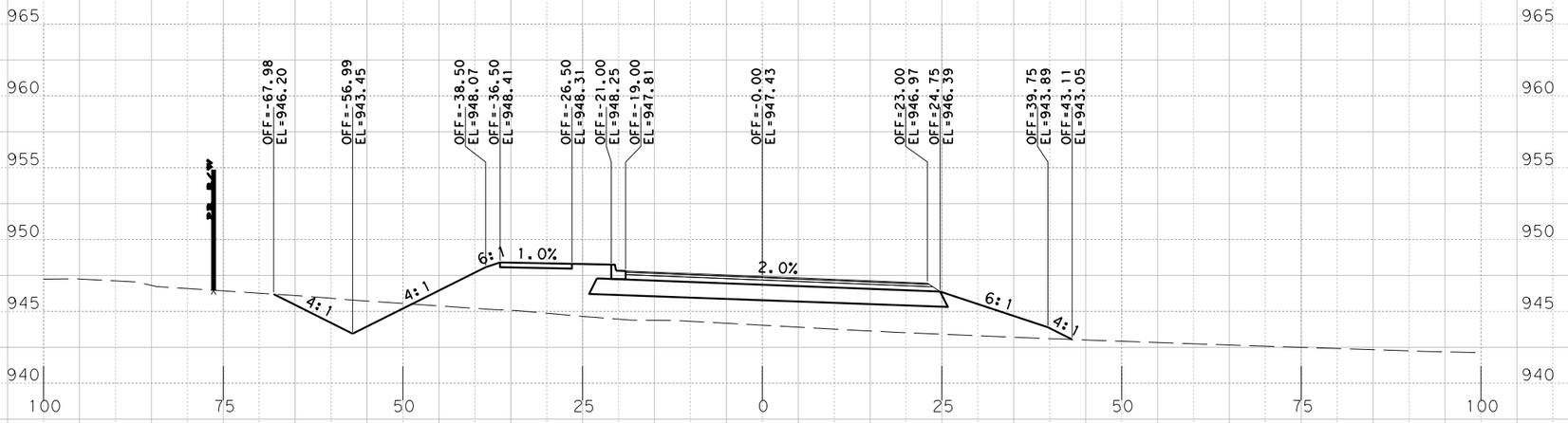

Sta. 599+00.0000 R1

PRELIMINARY
RM 2243
PHASE IA 100%

X-SECTIONS

SCALE: HORIZONTAL 1"=20'
VERTICAL 1"=10'

SHEET 89 OF 168

BGE, Inc.
101 W. Louis Henna Blvd., Suite 400
Austin, TX 78728
Tel: 512-879-0400 • www.bgeinc.com
TBPE Registration No. F-1046

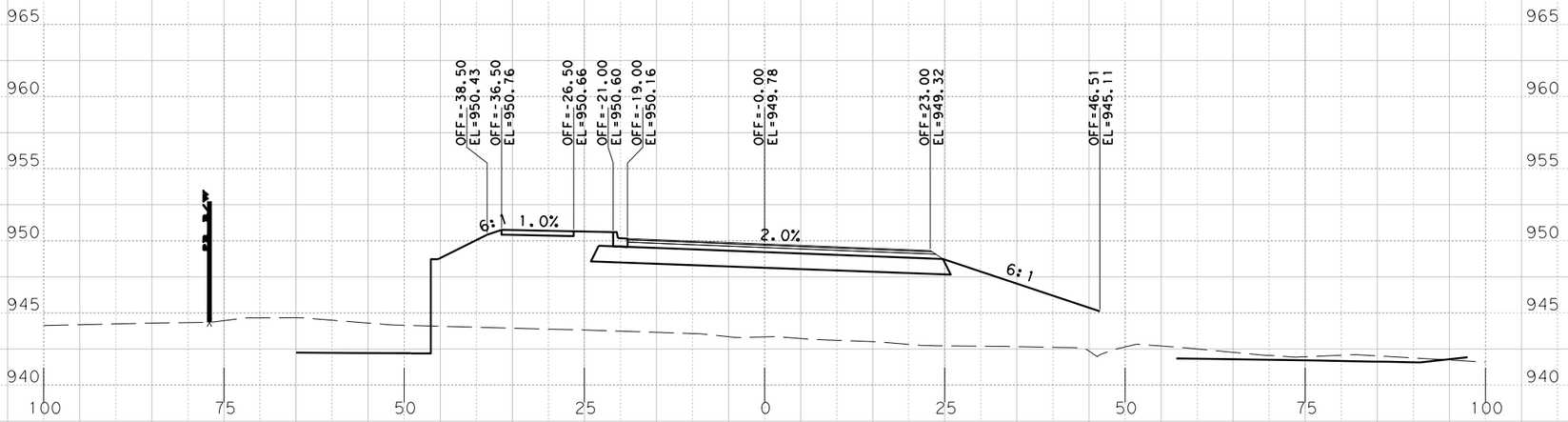

Sta. 600+50.0000 R1

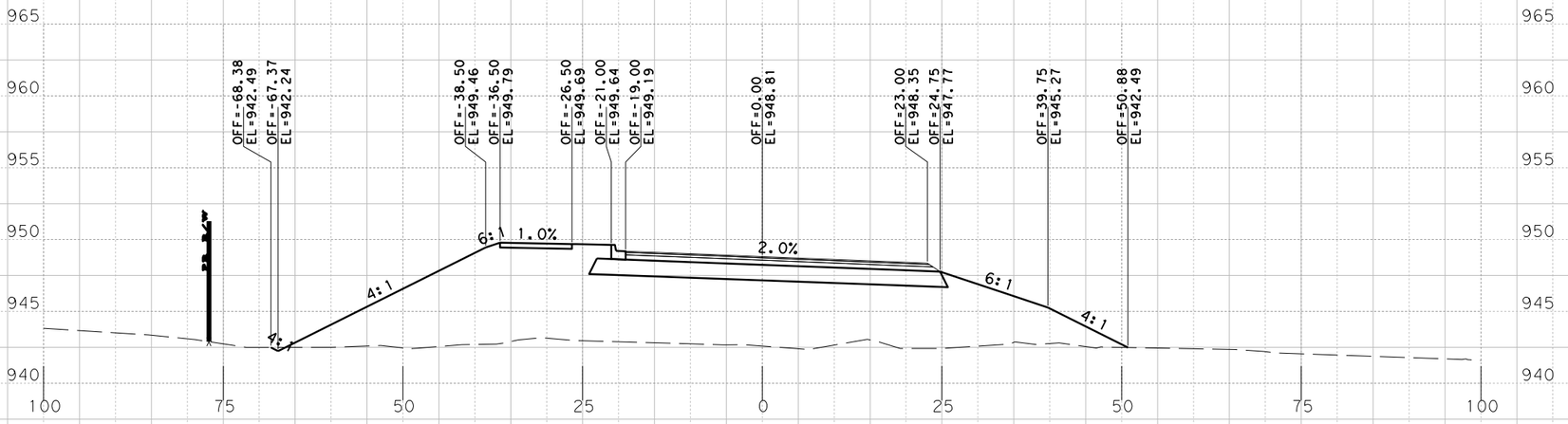

Sta. 600+00.0000 R1

PRELIMINARY
RM 2243
PHASE IA 100%

X-SECTIONS

SCALE: HORIZONTAL 1"=20'
VERTICAL 1"=10'

SHEET 90 OF 168

BGE, Inc.
101 W. Louis Henna Blvd., Suite 400
Austin, TX 78728
Tel: 512-879-0400 • www.bgeinc.com
TBPE Registration No. F-1046

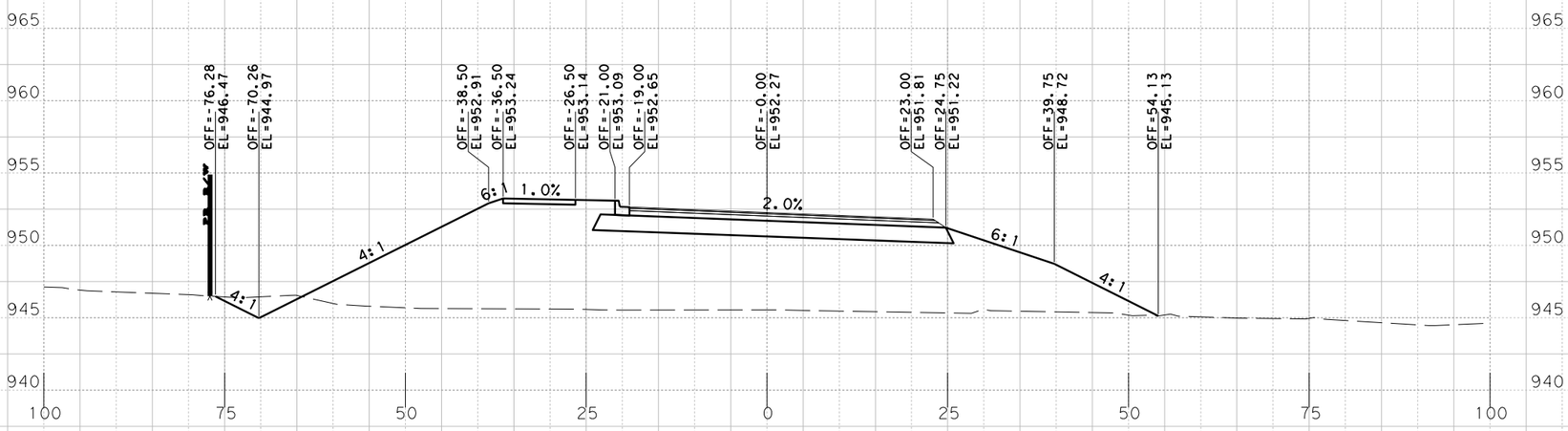

Sta. 601+50.0000 R1

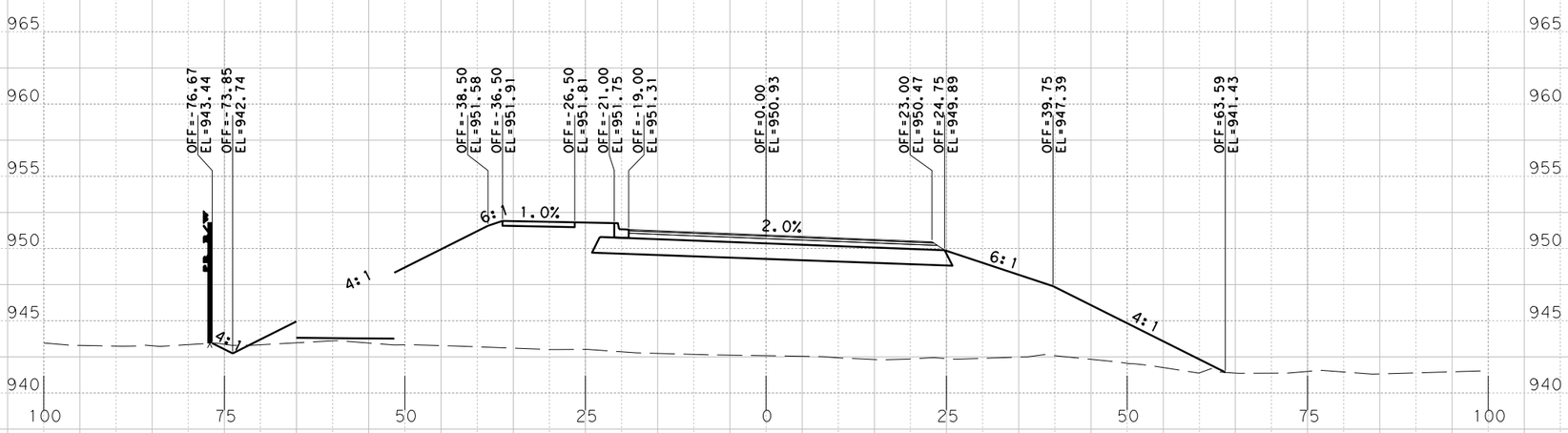

Sta. 601+00.0000 R1

PRELIMINARY
RM 2243
PHASE IA 100%

X-SECTIONS

SCALE: HORIZONTAL 1"=20'
VERTICAL 1"=10'

SHEET 91 OF 168

BGE, Inc.
101 W. Louis Henna Blvd., Suite 400
Austin, TX 78728
Tel: 512-879-0400 • www.bgeinc.com
TBPE Registration No. F-1046

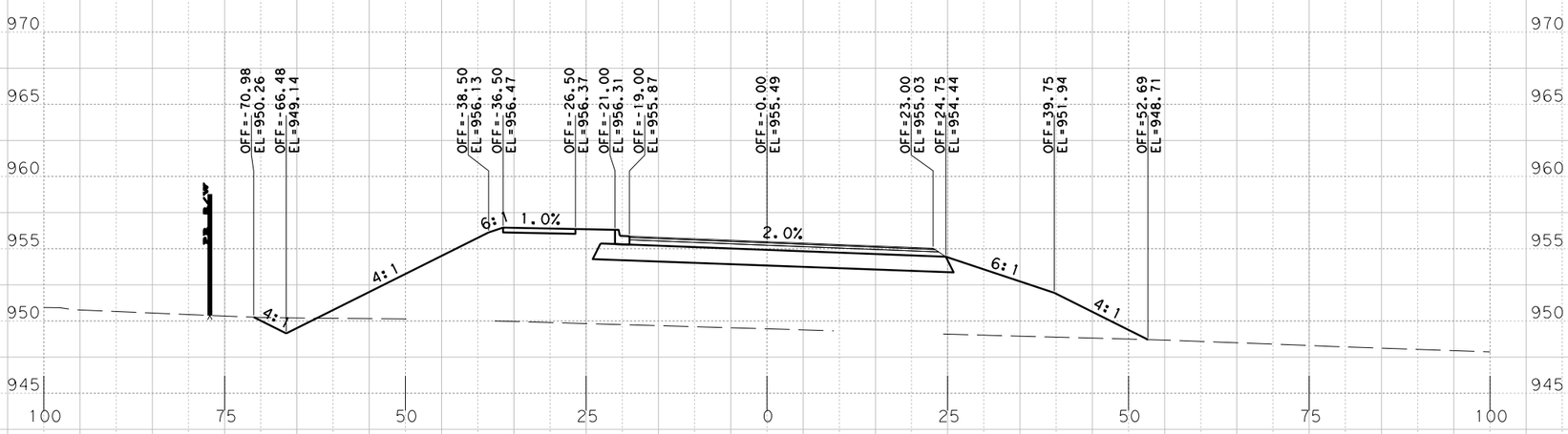

Sta. 602+50.0000 R1

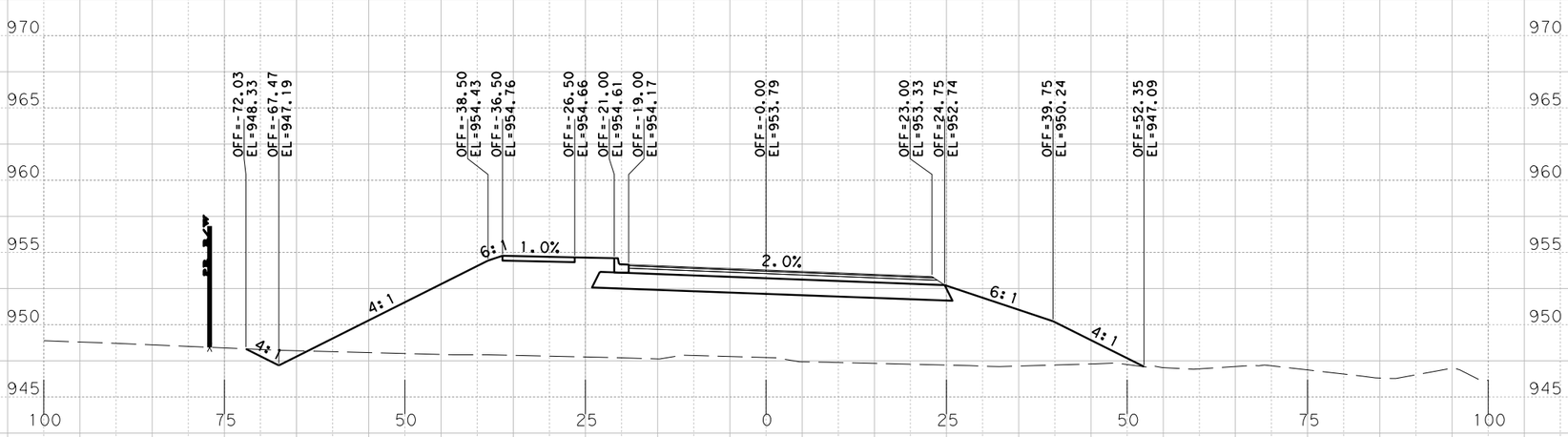

Sta. 602+00.0000 R1

PRELIMINARY
RM 2243
PHASE IA 100%
X-SECTIONS

SCALE: HORIZONTAL 1"=20'
VERTICAL 1"=10'

SHEET 92 OF 168

BGE, Inc.
101 W. Louis Henna Blvd., Suite 400
Austin, TX 78728
Tel: 512-879-0400 • www.bgeinc.com
TBPE Registration No. F-1046

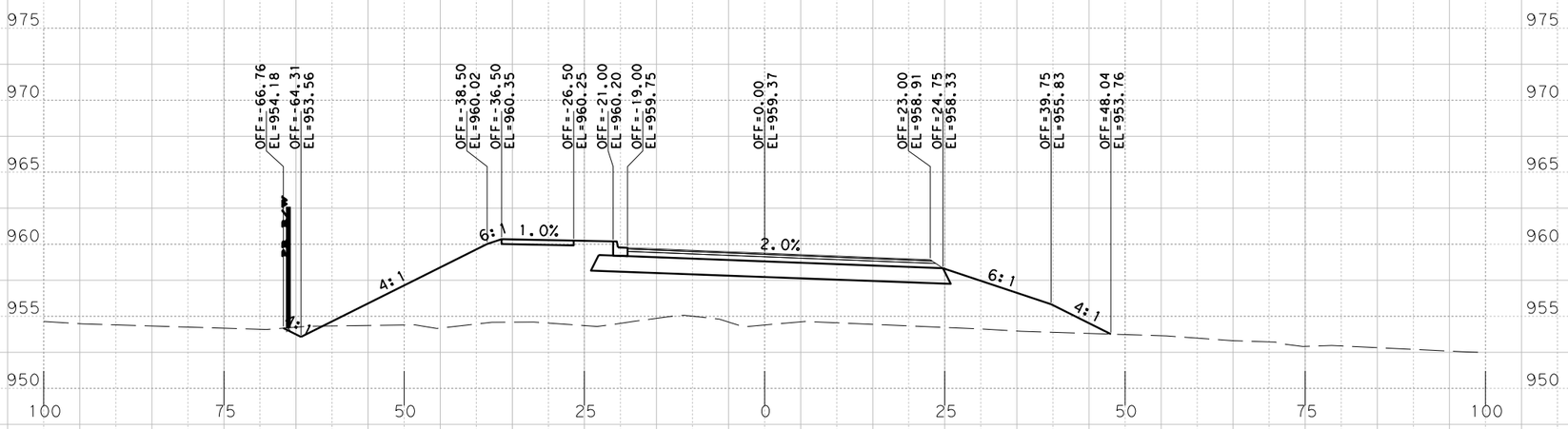

Sta. 603+50.0000 R1

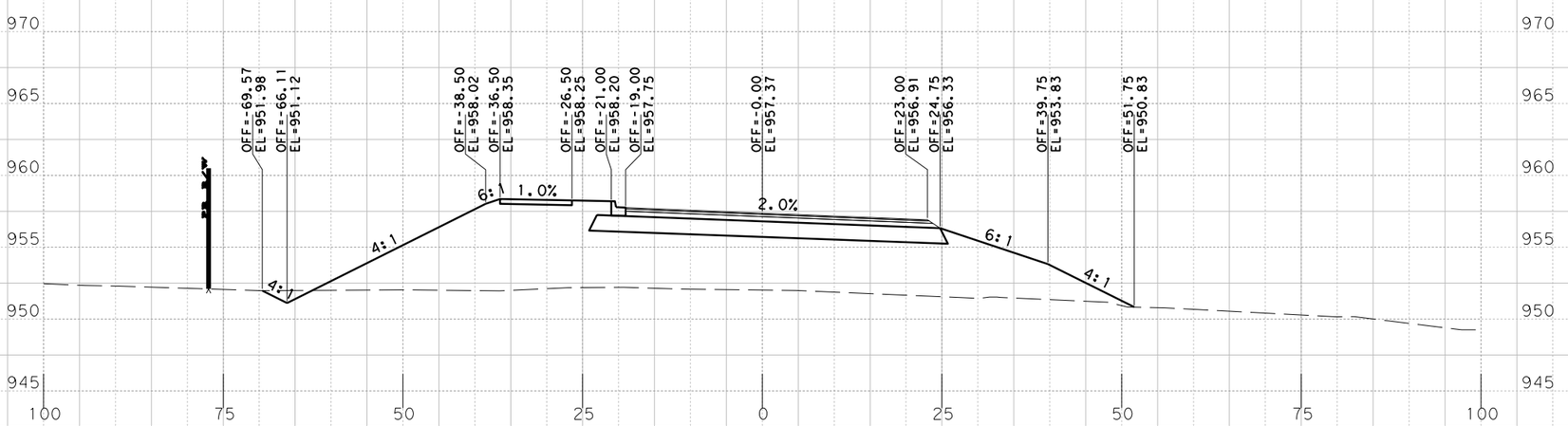

Sta. 603+00.0000 R1

PRELIMINARY
RM 2243
PHASE IA 100%

X-SECTIONS

SCALE: HORIZONTAL 1"=20'
VERTICAL 1"=10'

SHEET 93 OF 168

BGE, Inc.
101 W. Louis Henna Blvd., Suite 400
Austin, TX 78728
Tel: 512-879-0400 • www.bgeinc.com
TBPE Registration No. F-1046

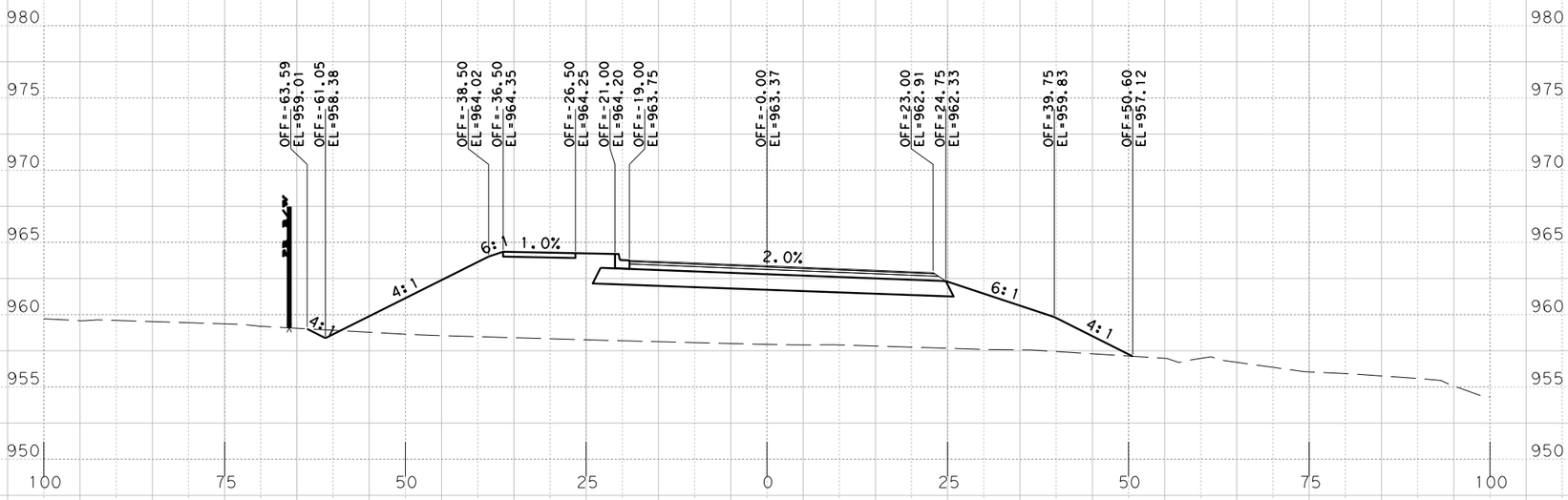

Sta. 604+50.0000 R1

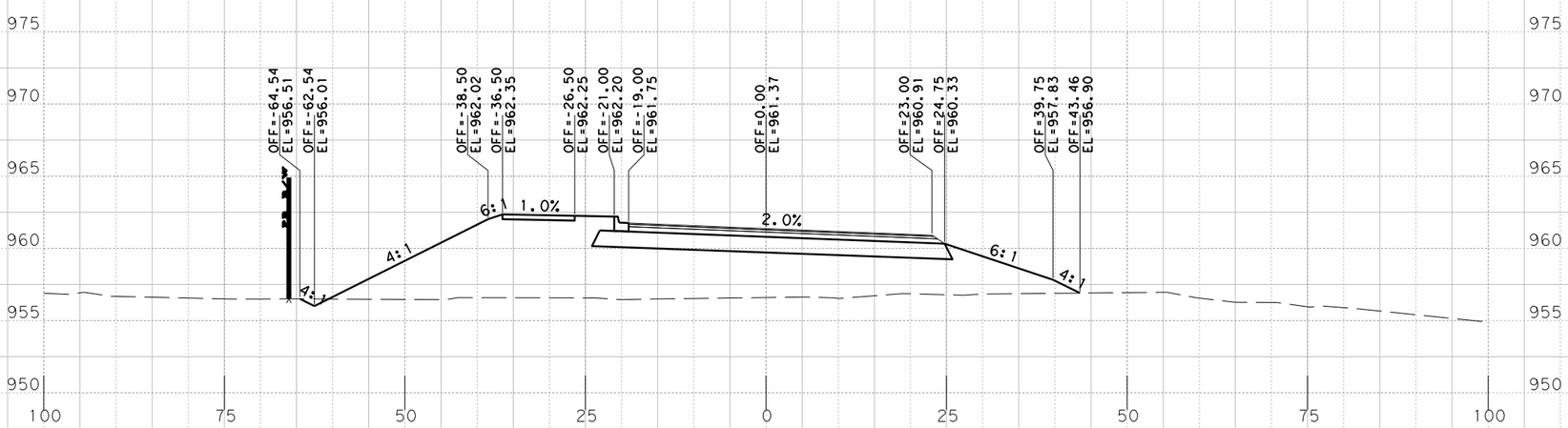

Sta. 604+00.0000 R1

PRELIMINARY
RM 2243
PHASE IA 100%

X-SECTIONS

SCALE: HORIZONTAL 1"=20'
VERTICAL 1"=10'

SHEET 94 OF 168

BGE, Inc.
101 W. Louis Henna Blvd., Suite 400
Austin, TX 78728
Tel: 512-879-0400 • www.bgeinc.com
TBPE Registration No. F-1046

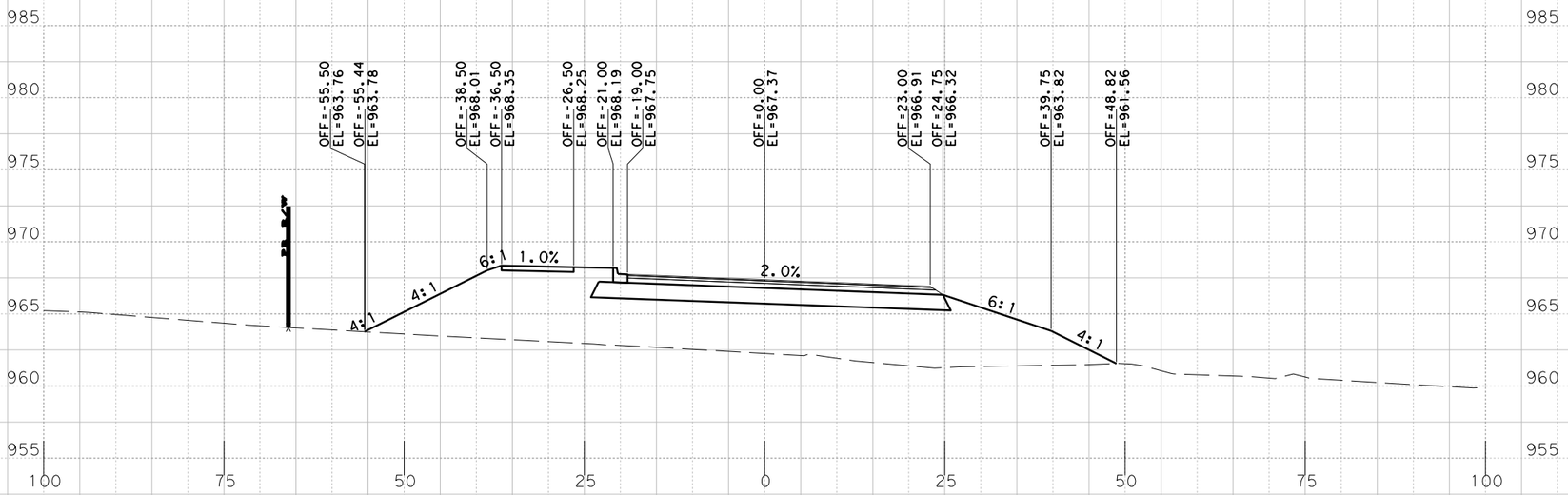

S†a. 605+50.0000 R1

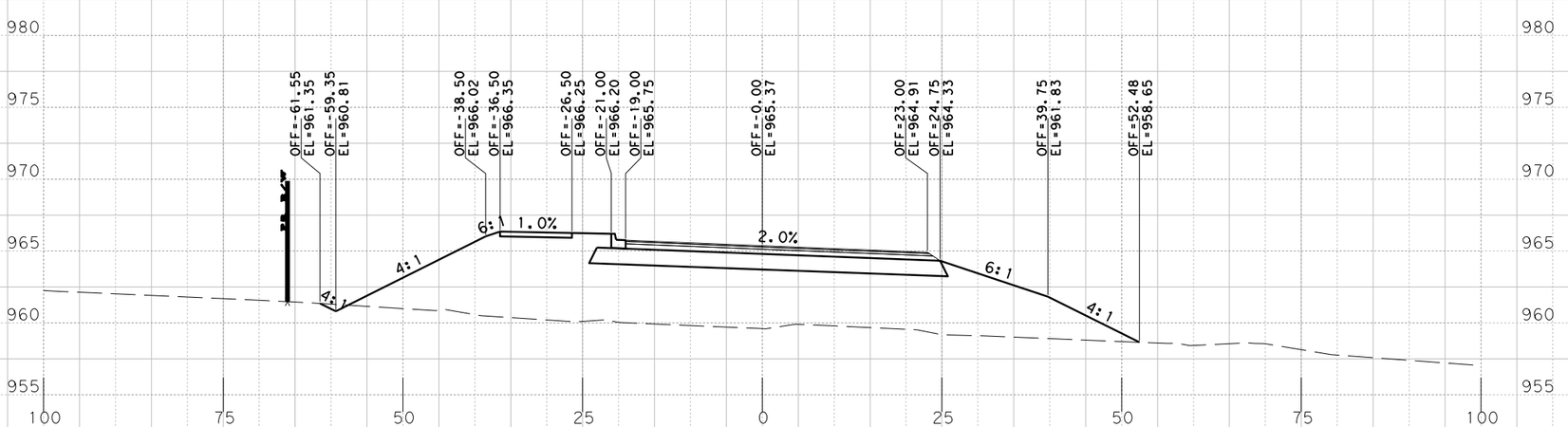

S†a. 605+00.0000 R1

PRELIMINARY
RM 2243
PHASE IA 100%

X-SECTIONS

SCALE: HORIZONTAL 1"=20'
VERTICAL 1"=10'

SHEET 95 OF 168

BGE, Inc.
101 W. Louis Henna Blvd., Suite 400
Austin, TX 78728
Tel: 512-879-0400 • www.bgeinc.com
TBPE Registration No. F-1046

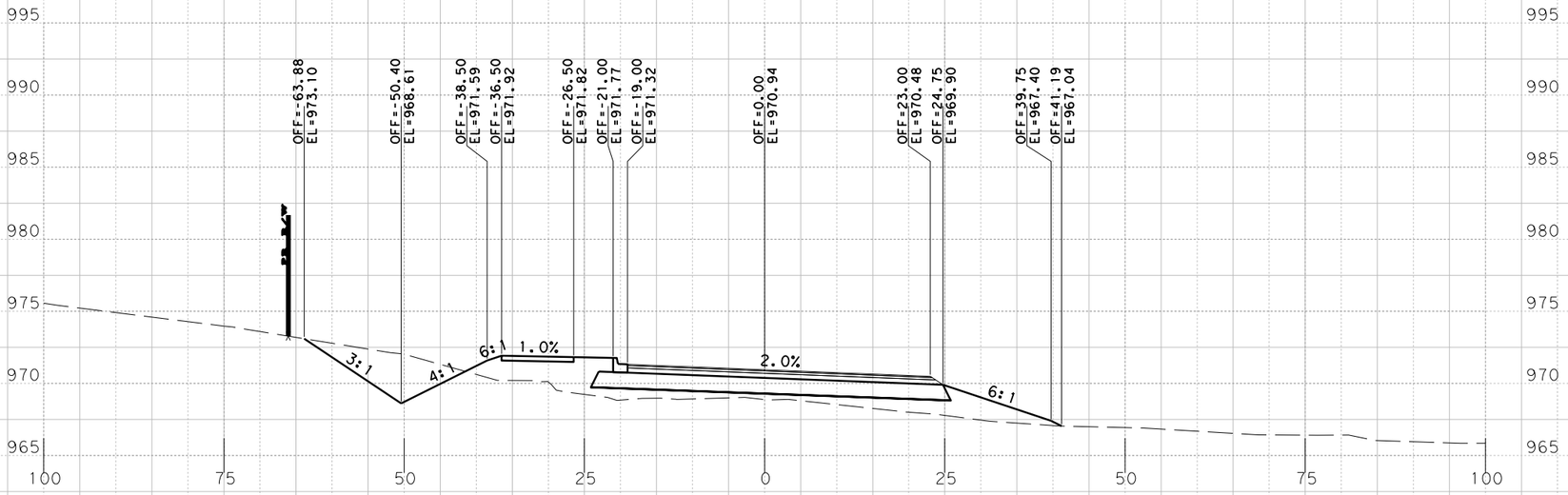

Sta. 606+50.0000 R1

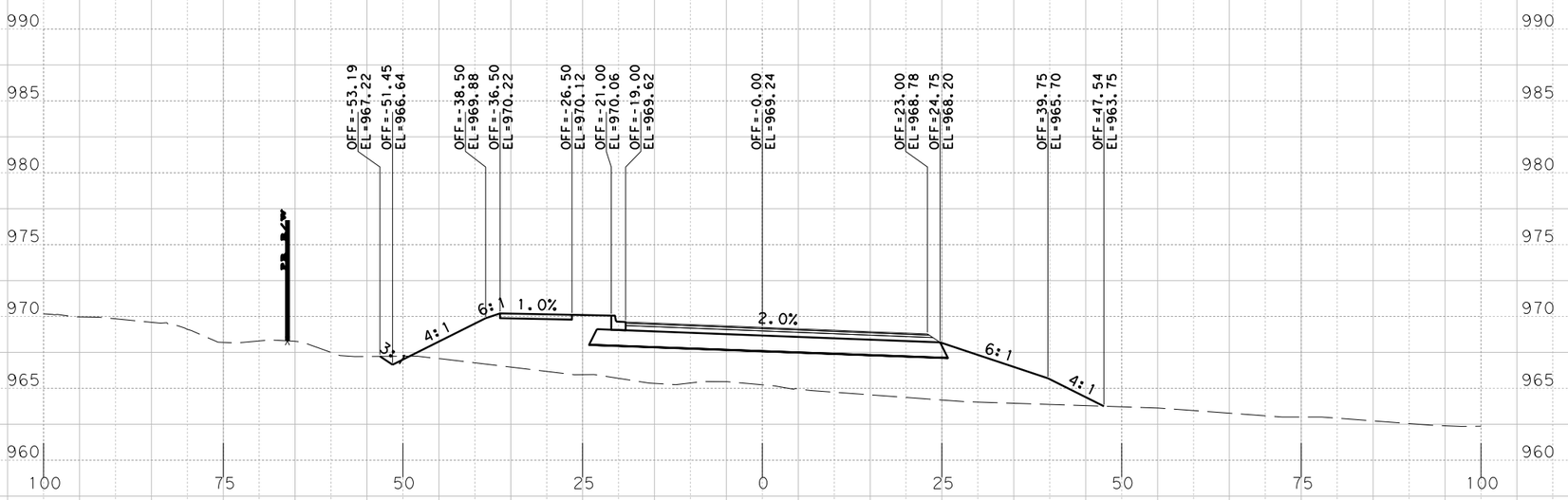

Sta. 606+00.0000 R1

PRELIMINARY
RM 2243
PHASE IA 100%

X-SECTIONS

SCALE: HORIZONTAL 1"=20'
VERTICAL 1"=10'

SHEET 96 OF 168

BGE, Inc.
101 W. Louis Henna Blvd., Suite 400
Austin, TX 78728
Tel: 512-879-0400 • www.bgeinc.com
TBPE Registration No. F-1046

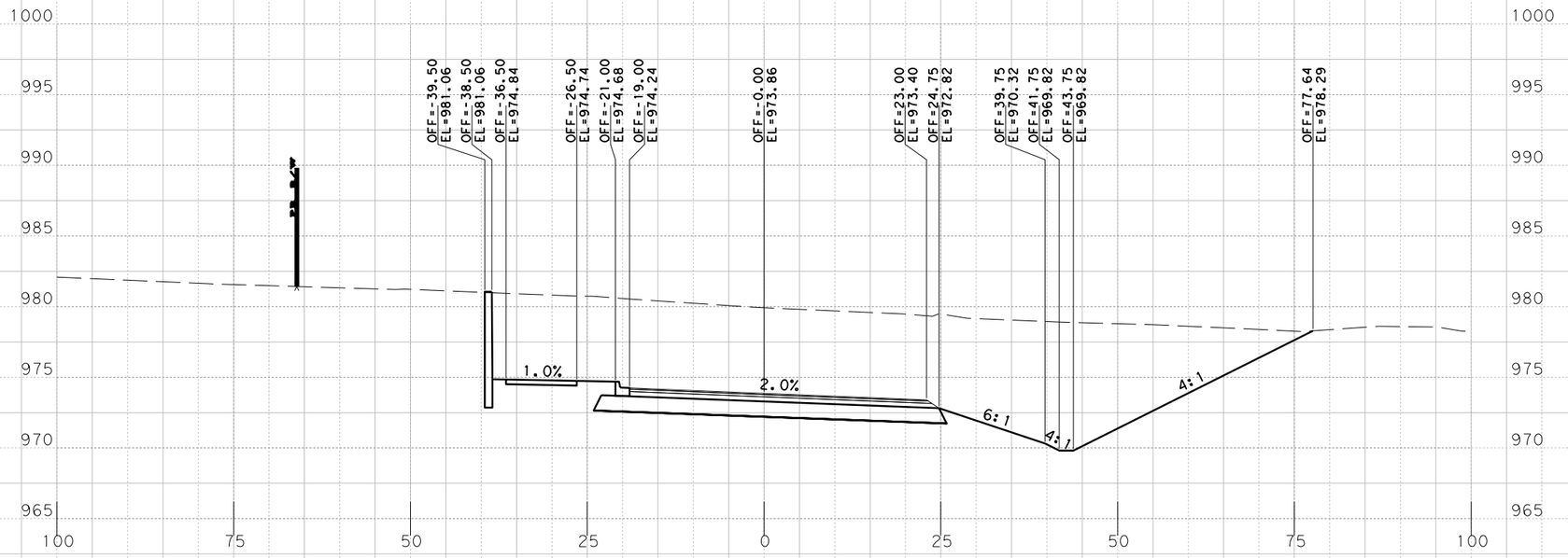

Sta. 607+50.0000 R1

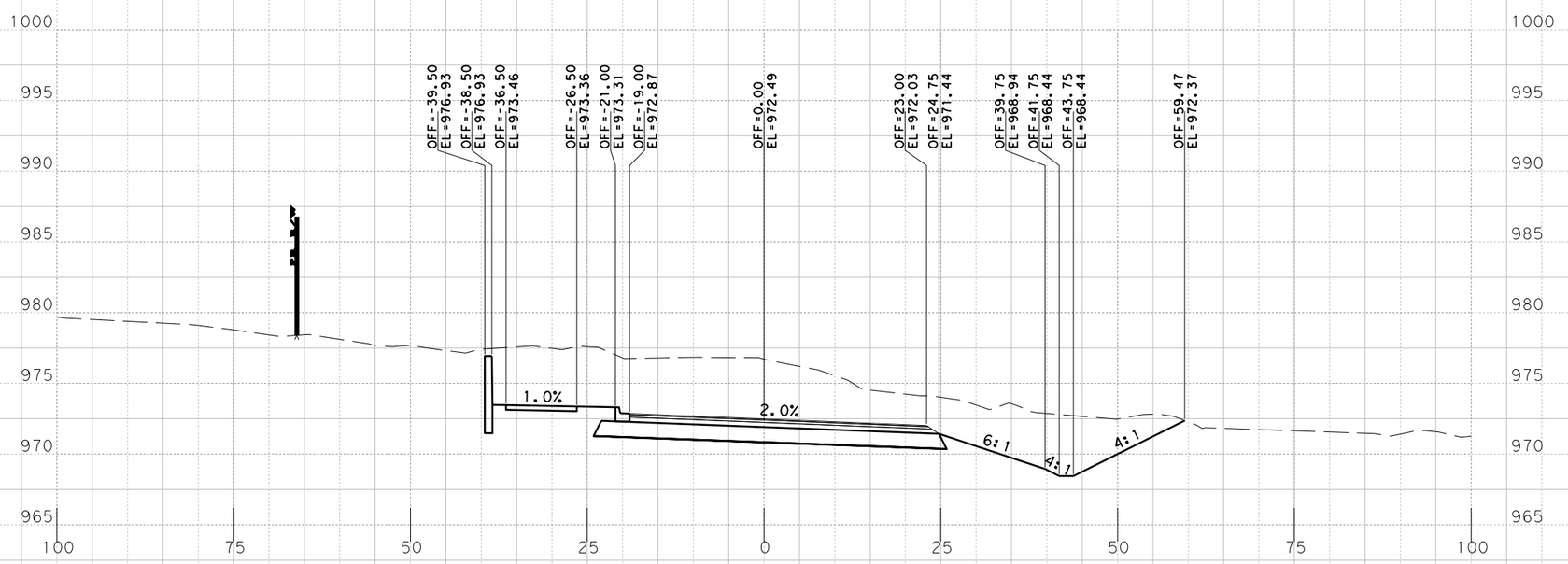

Sta. 607+00.0000 R1

PRELIMINARY
RM 2243
PHASE IA 100%

X-SECTIONS

SCALE: HORIZONTAL 1"=20'
VERTICAL 1"=10'

SHEET 97 OF 168

BGE, Inc.
101 W. Louis Henna Blvd., Suite 400
Austin, TX 78728
Tel: 512-879-0400 • www.bgeinc.com
TBPE Registration No. F-1046

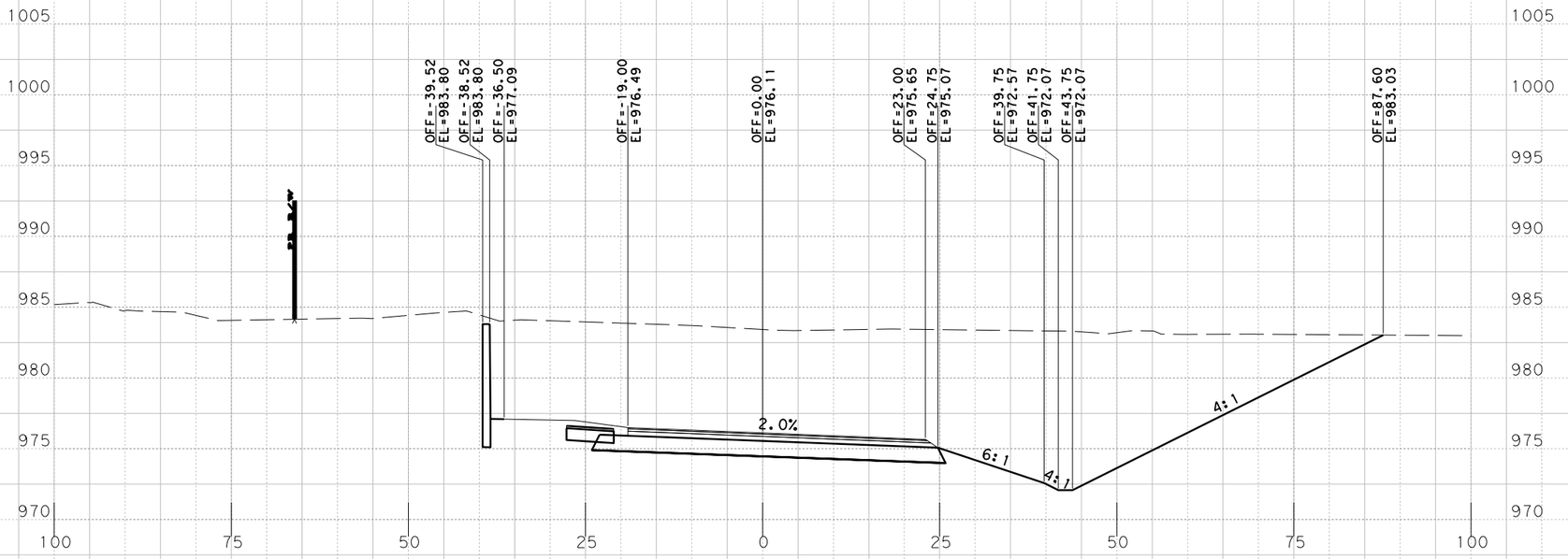

Sta. 608+50.0000 R1

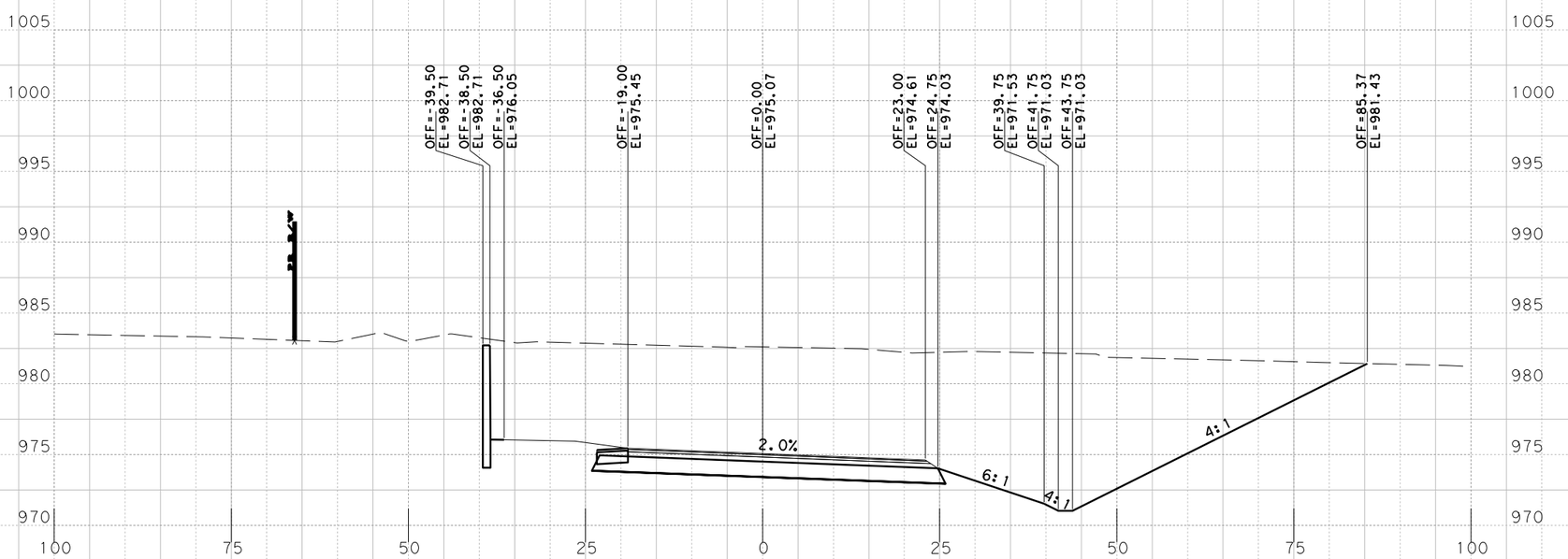

Sta. 608+00.0000 R1

PRELIMINARY
RM 2243
PHASE IA 100%

X-SECTIONS

SCALE: HORIZONTAL 1"=20'
VERTICAL 1"=10'

SHEET 98 OF 168

BGE, Inc.
101 W. Louis Henna Blvd., Suite 400
Austin, TX 78728
Tel: 512-879-0400 • www.bgeinc.com
TBPE Registration No. F-1046

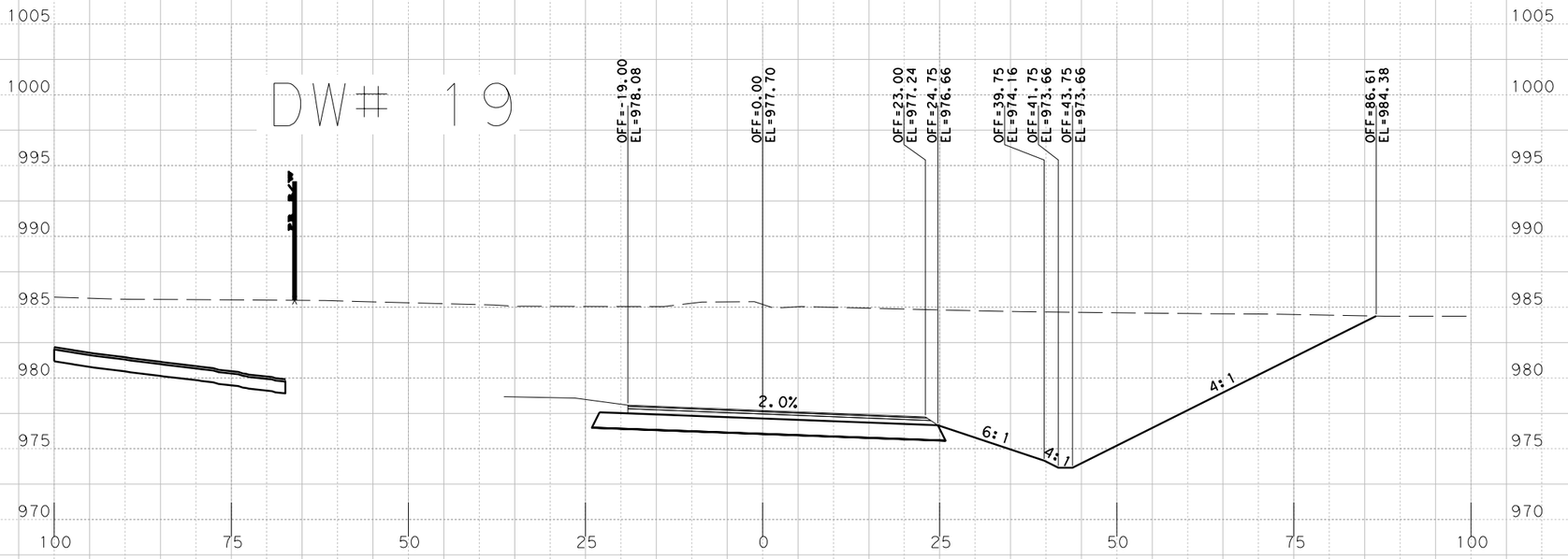

Sta. 609+50.0000 R1

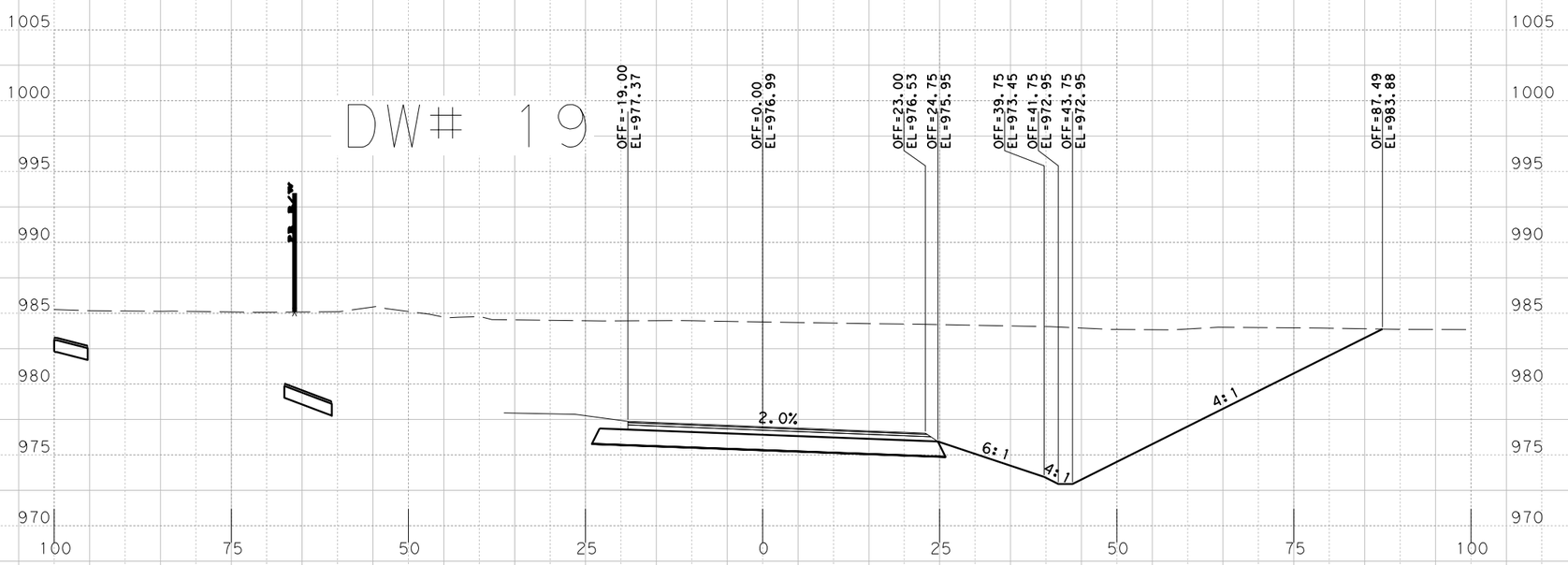

Sta. 609+00.0000 R1

PRELIMINARY
RM 2243
PHASE IA 100%

X-SECTIONS

SCALE: HORIZONTAL 1"=20'
VERTICAL 1"=10'

SHEET 99 OF 168

BGE, Inc.
101 W. Louis Henna Blvd., Suite 400
Austin, TX 78728
Tel: 512-879-0400 • www.bgeinc.com
TBPE Registration No. F-1046

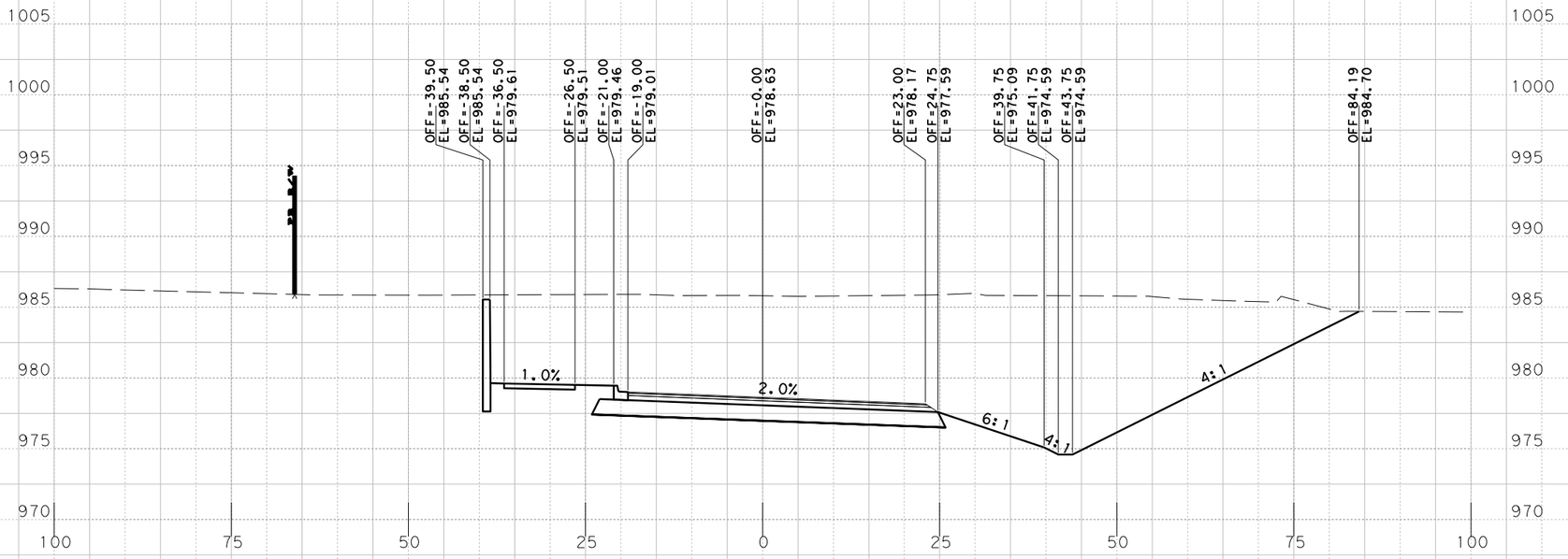

S+a. 610+50.0000 R1

DW# 19

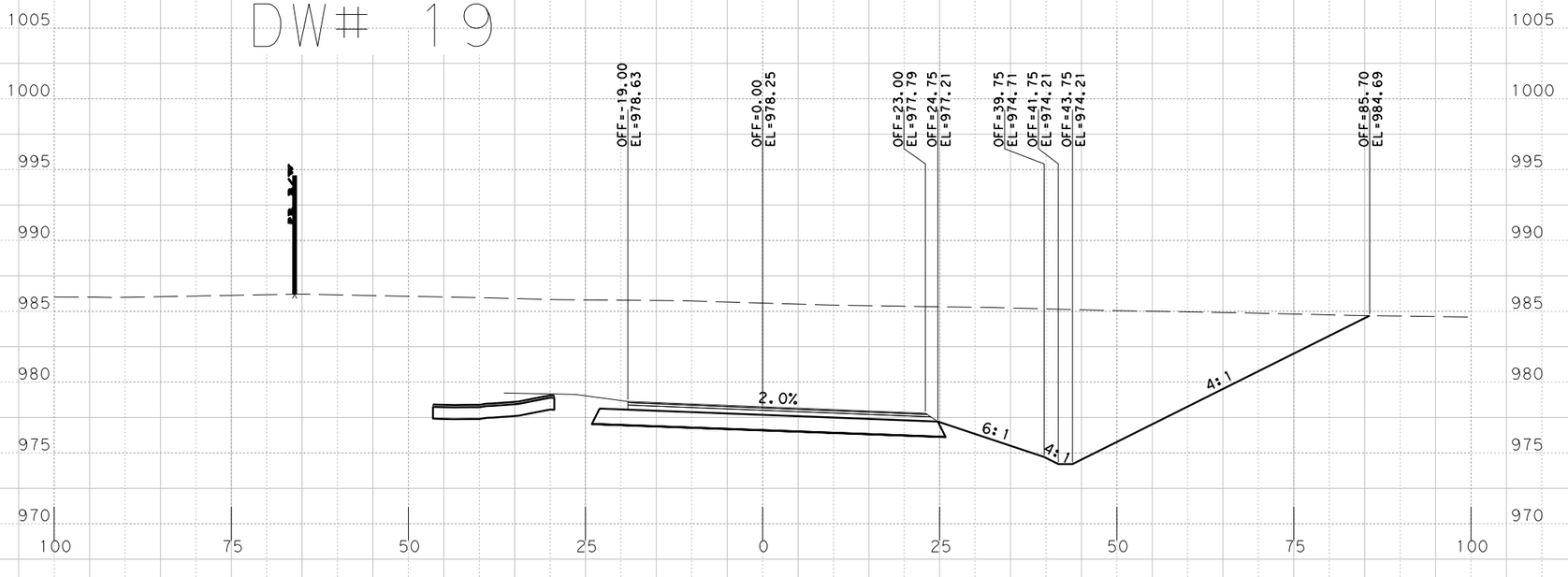

S+a. 610+00.0000 R1

PRELIMINARY
RM 2243
PHASE IA 100%
X-SECTIONS

SCALE: HORIZONTAL 1"=20'
VERTICAL 1"=10'

SHEET 100 OF 168

BGE, Inc.
101 W. Louis Henna Blvd., Suite 400
Austin, TX 78728
Tel: 512-879-0400 • www.bgeinc.com
TBPE Registration No. F-1046

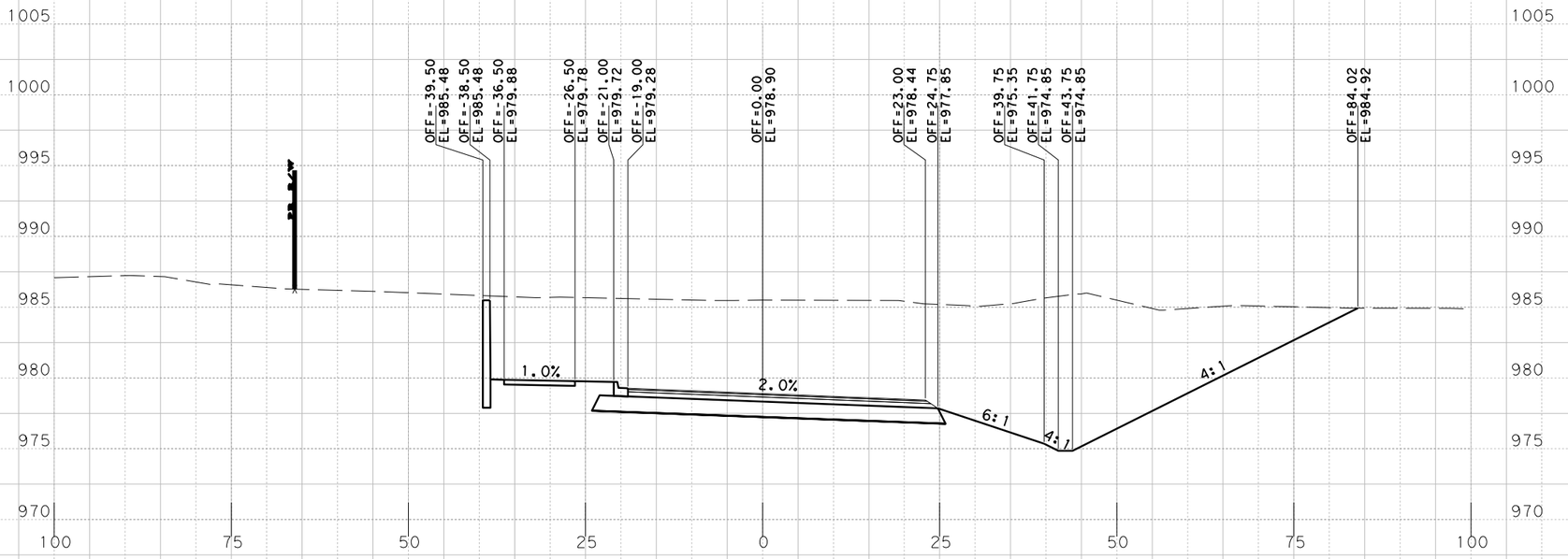

Sta. 611+50.0000 R1

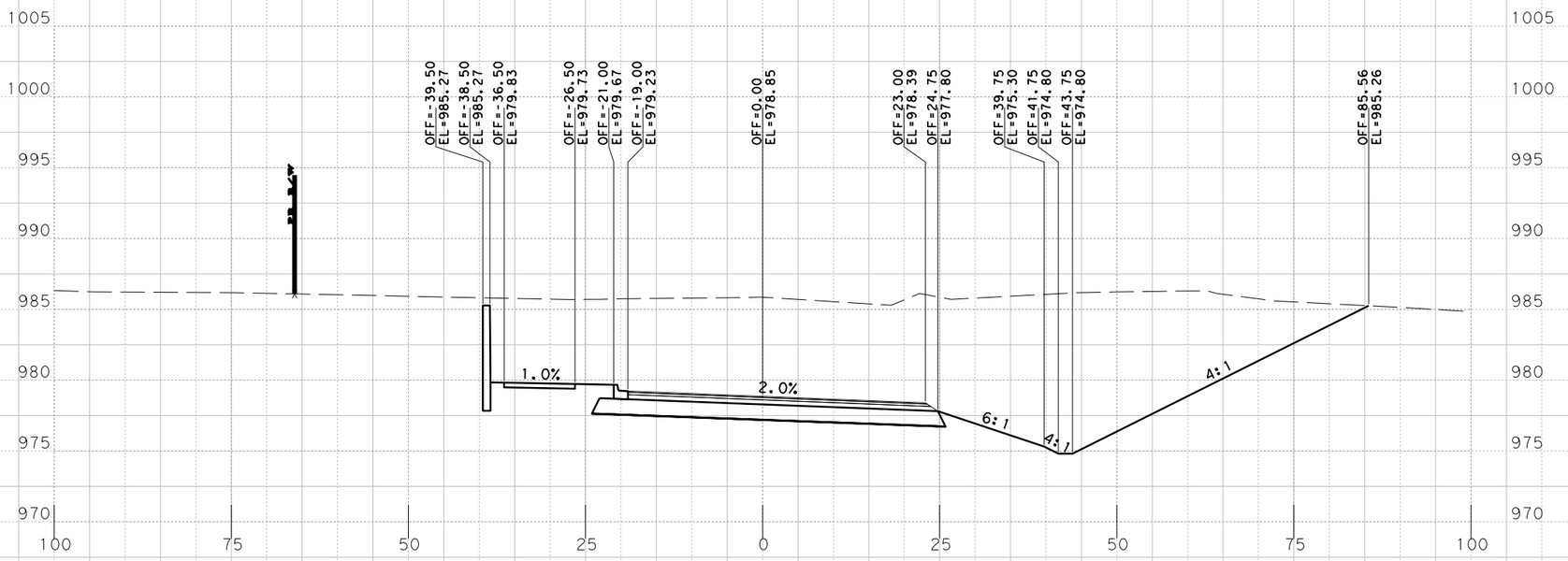

Sta. 611+00.0000 R1

PRELIMINARY
RM 2243
PHASE IA 100%

X-SECTIONS

SCALE: HORIZONTAL 1"=20'
VERTICAL 1"=10'

SHEET 101 OF 168

BGE, Inc.
101 W. Louis Henna Blvd., Suite 400
Austin, TX 78728
Tel: 512-879-0400 • www.bgeinc.com
TBPE Registration No. F-1046

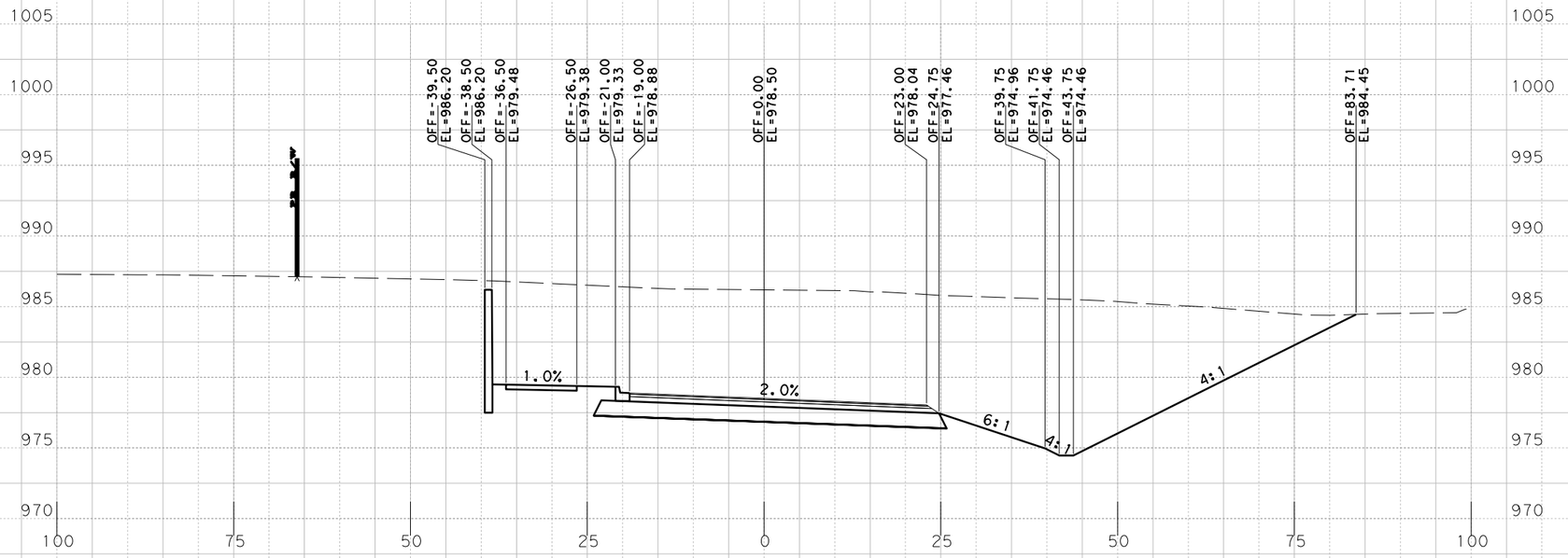

Sta. 612+50.0000 R1

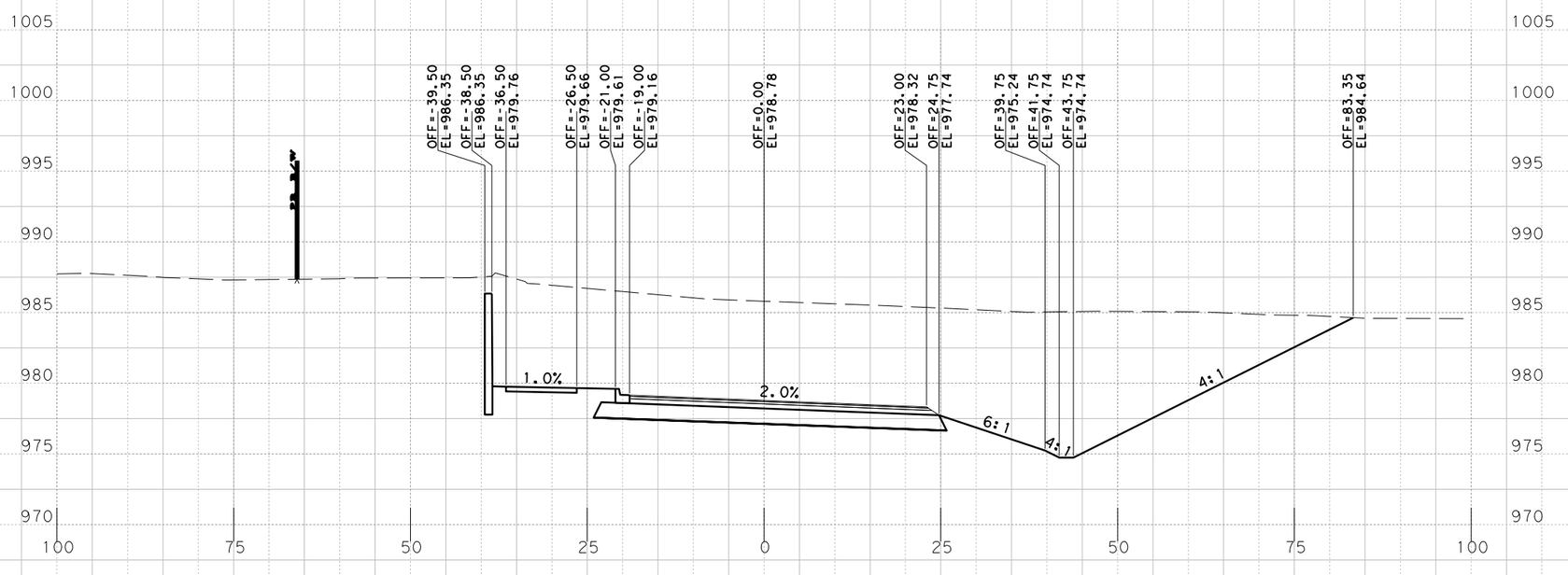

Sta. 612+00.0000 R1

PRELIMINARY
RM 2243
PHASE IA 100%

X-SECTIONS

SCALE: HORIZONTAL 1"=20'
VERTICAL 1"=10'

SHEET 102 OF 168

BGE, Inc.
101 W. Louis Henna Blvd., Suite 400
Austin, TX 78728
Tel: 512-879-0400 • www.bgeinc.com
TBPE Registration No. F-1046

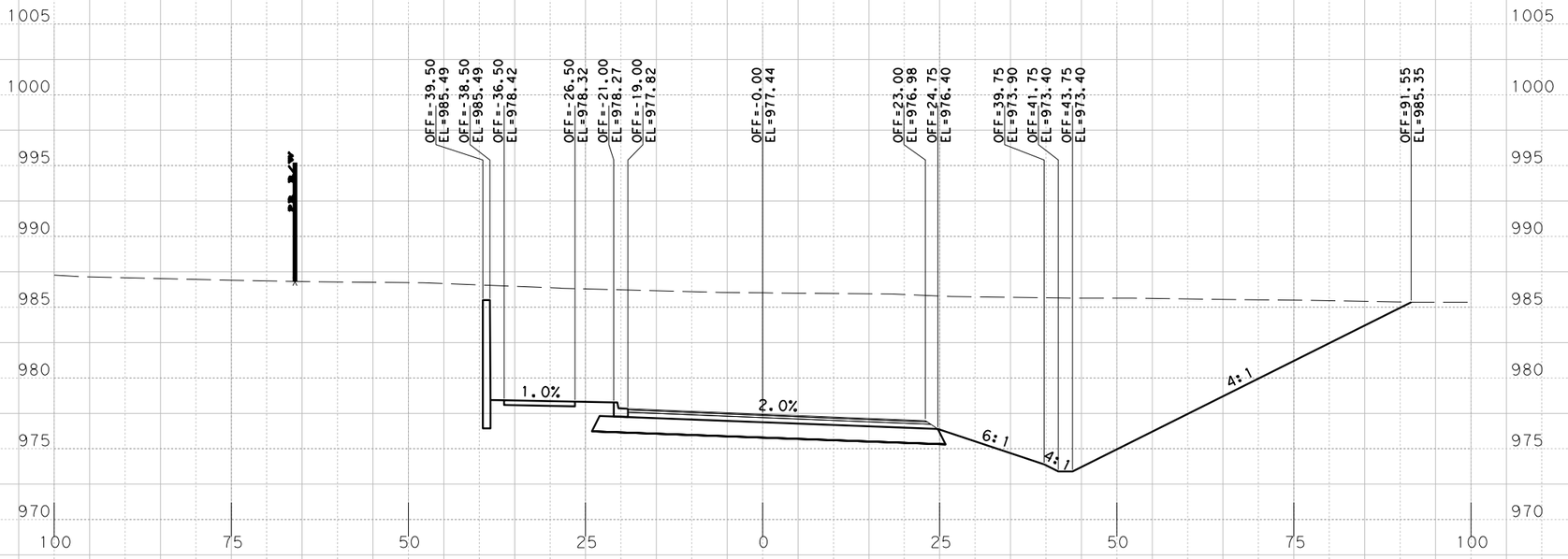

Sta. 613+50.0000 R1

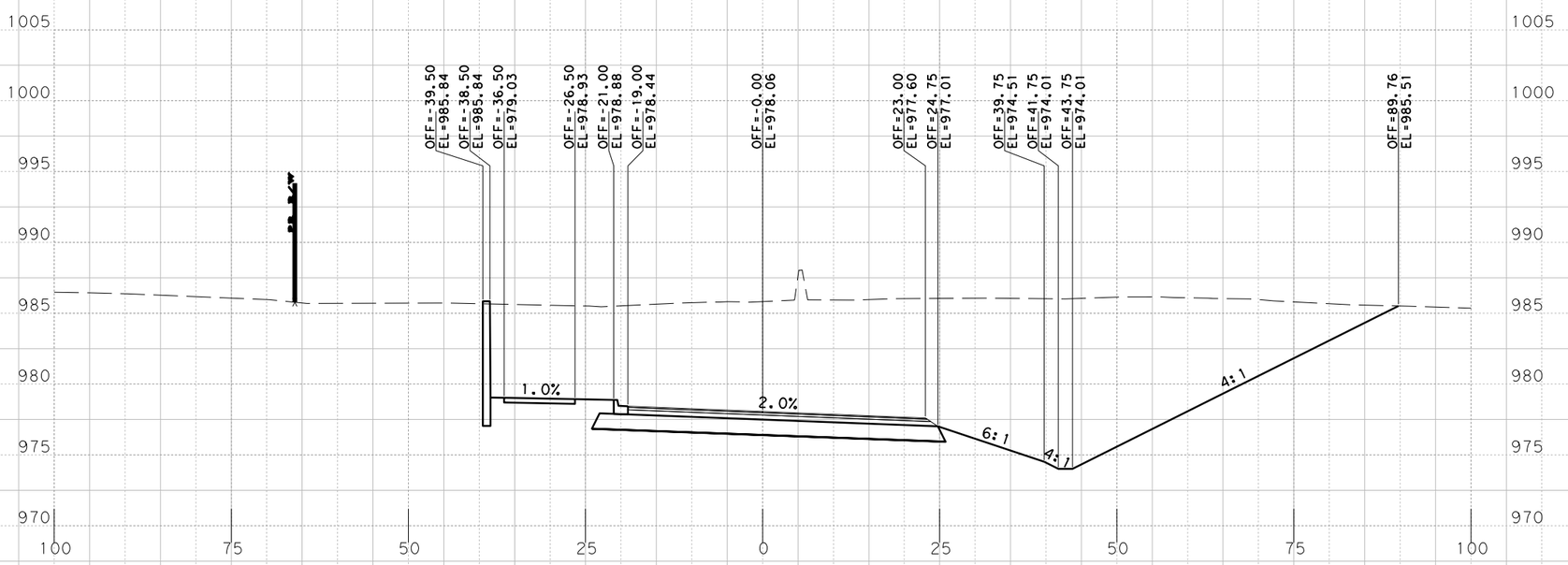

Sta. 613+00.0000 R1

PRELIMINARY
RM 2243
PHASE IA 100%

X-SECTIONS

SCALE: HORIZONTAL 1"=20'
VERTICAL 1"=10'

SHEET 103 OF 168

BGE, Inc.
101 W. Louis Henna Blvd., Suite 400
Austin, TX 78728
Tel: 512-879-0400 • www.bgeinc.com
TBPE Registration No. F-1046

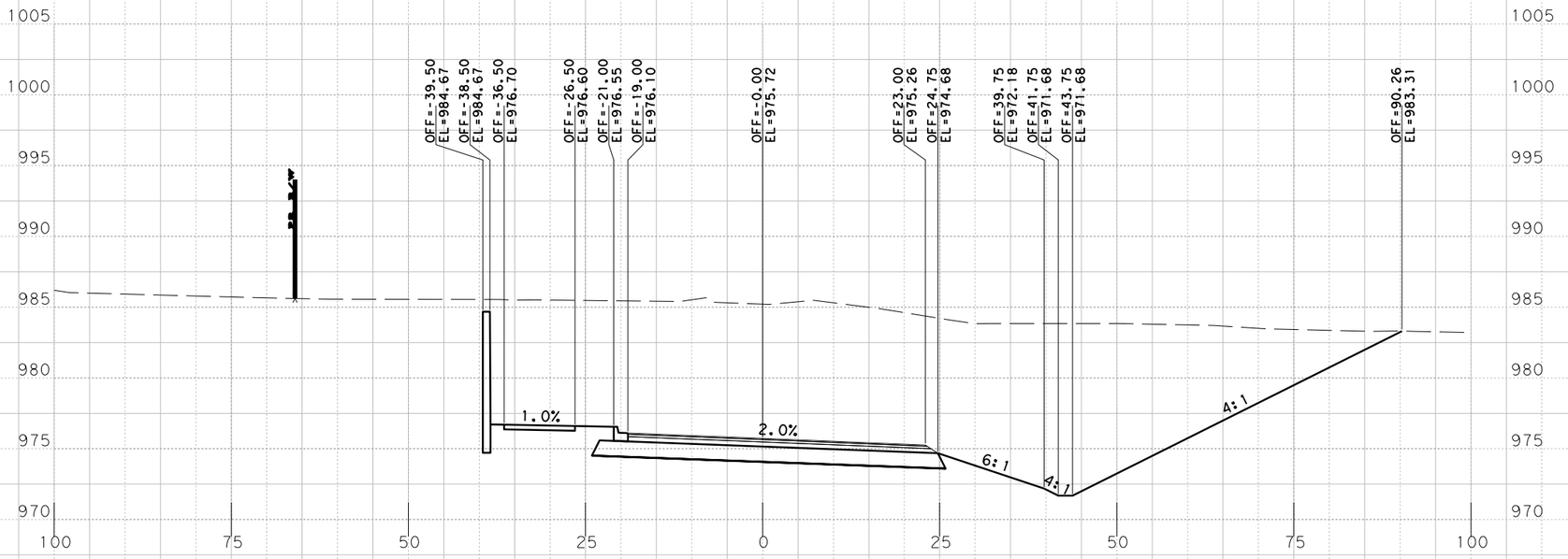

Sta. 614+50.0000 R1

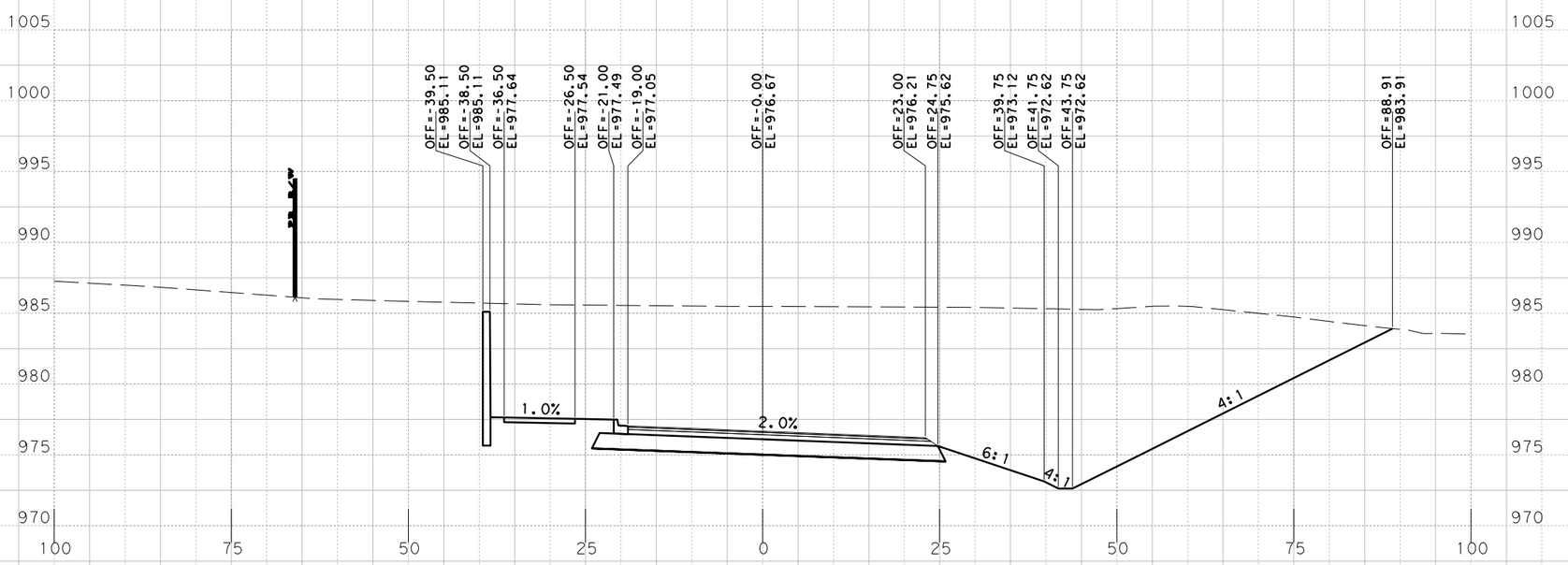

Sta. 614+00.0000 R1

PRELIMINARY
RM 2243
PHASE IA 100%

X-SECTIONS

SCALE: HORIZONTAL 1"=20'
VERTICAL 1"=10'

SHEET 104 OF 168

BGE, Inc.
101 W. Louis Henna Blvd., Suite 400
Austin, TX 78728
Tel: 512-879-0400 • www.bgeinc.com
TBPE Registration No. F-1046

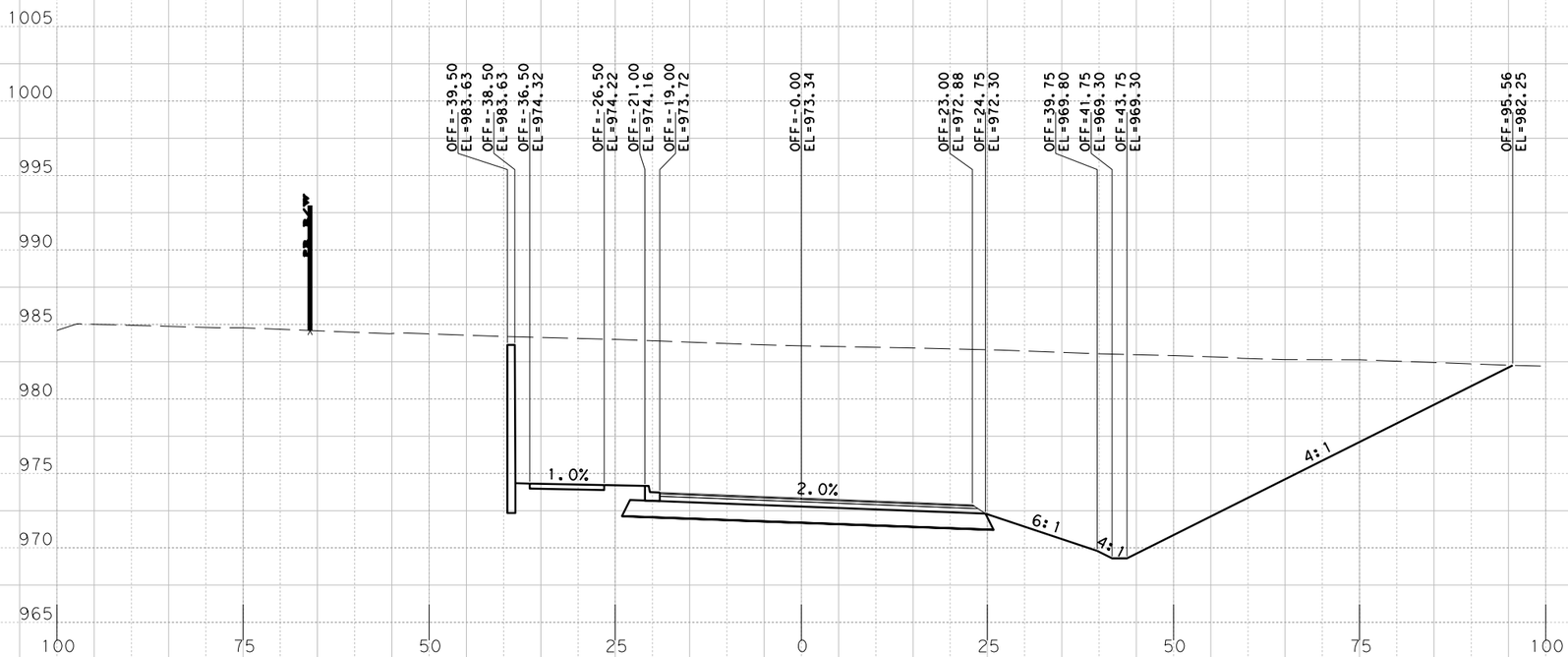

Sta. 615+50.0000 R1

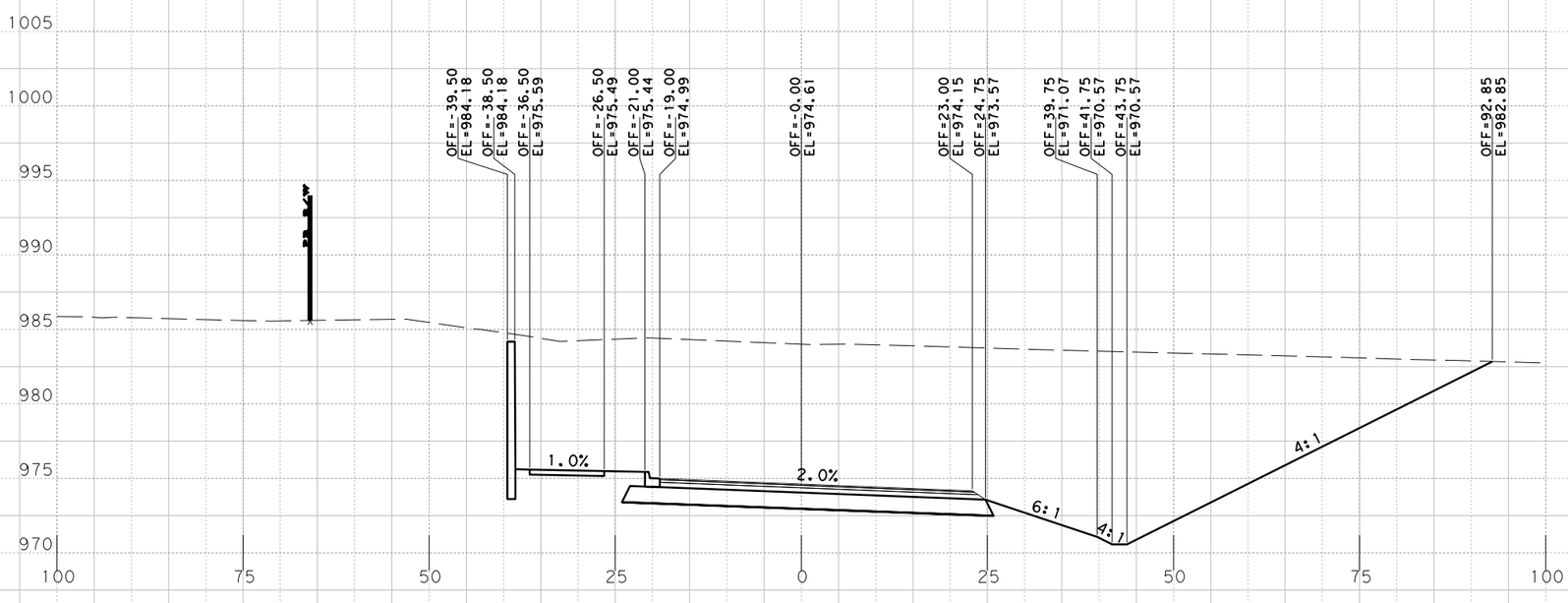

Sta. 615+00.0000 R1

PRELIMINARY
RM 2243
PHASE IA 100%

X-SECTIONS

SCALE: HORIZONTAL 1"=20'
VERTICAL 1"=10'

SHEET 105 OF 168

BGE, Inc.
101 W. Louis Henna Blvd., Suite 400
Austin, TX 78728
Tel: 512-879-0400 • www.bgeinc.com
TBPE Registration No. F-1046

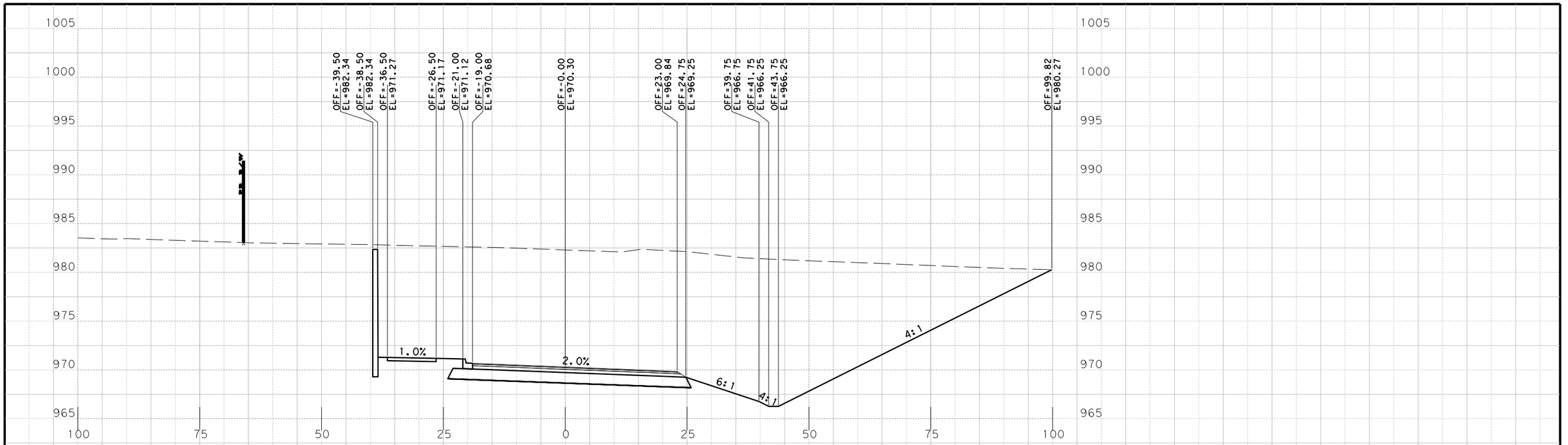

Sta. 616+50.0000 R1

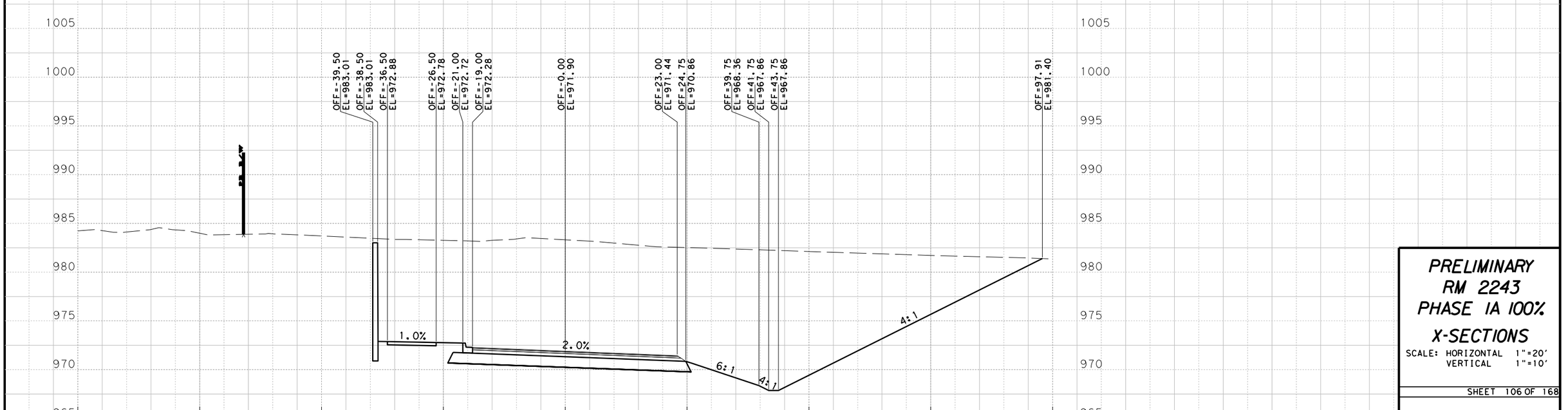

Sta. 616+00.0000 R1

PRELIMINARY
RM 2243
PHASE IA 100%

X-SECTIONS

SCALE: HORIZONTAL 1"=20'
VERTICAL 1"=10'

SHEET 106 OF 168

BGE, Inc.
101 W. Louis Henna Blvd., Suite 400
Austin, TX 78728
Tel: 512-879-0400 • www.bgeinc.com
TBPE Registration No. F-1046

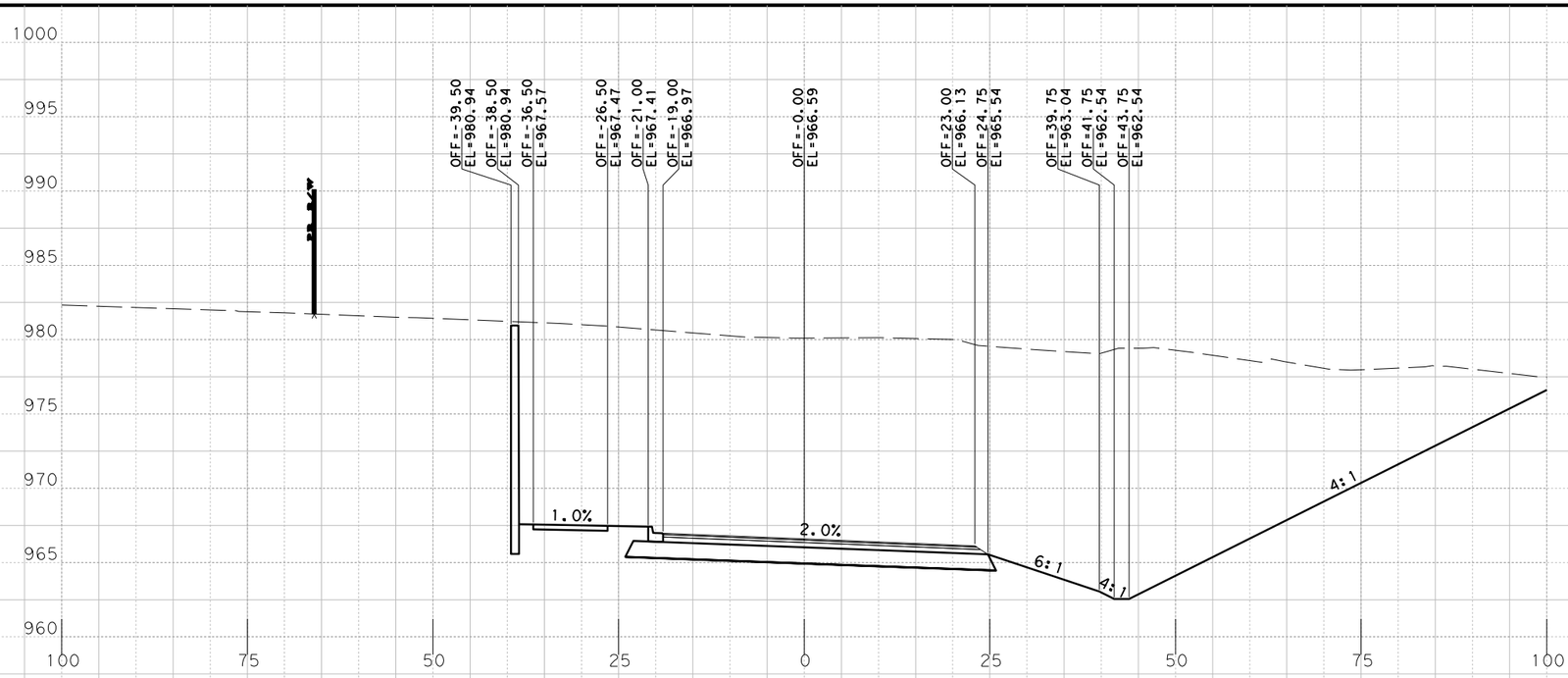

Sta. 617+50.0000 R1

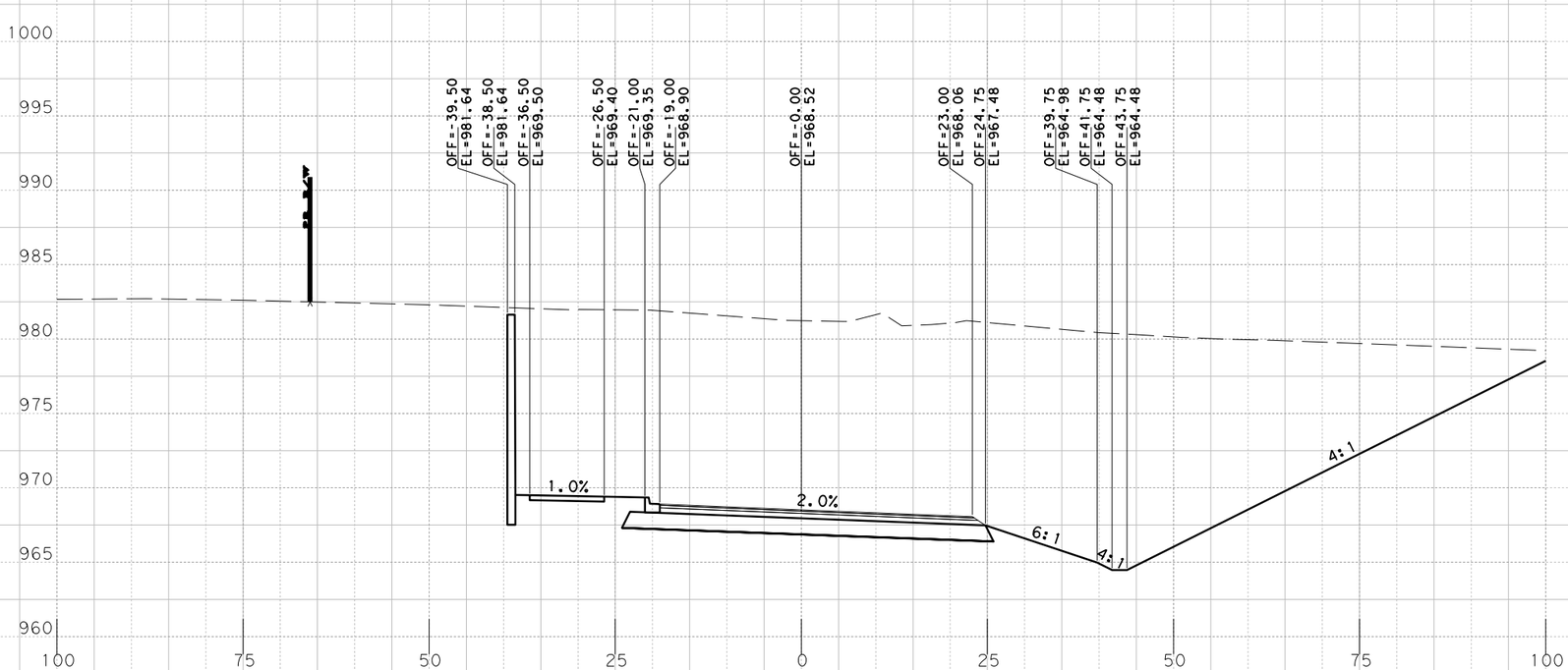

Sta. 617+00.0000 R1

PRELIMINARY
RM 2243
PHASE IA 100%

X-SECTIONS

SCALE: HORIZONTAL 1"=20'
VERTICAL 1"=10'

SHEET 107 OF 168

BGE, Inc.
101 W. Louis Henna Blvd., Suite 400
Austin, TX 78728
Tel: 512-879-0400 • www.bgeinc.com
TBPE Registration No. F-1046

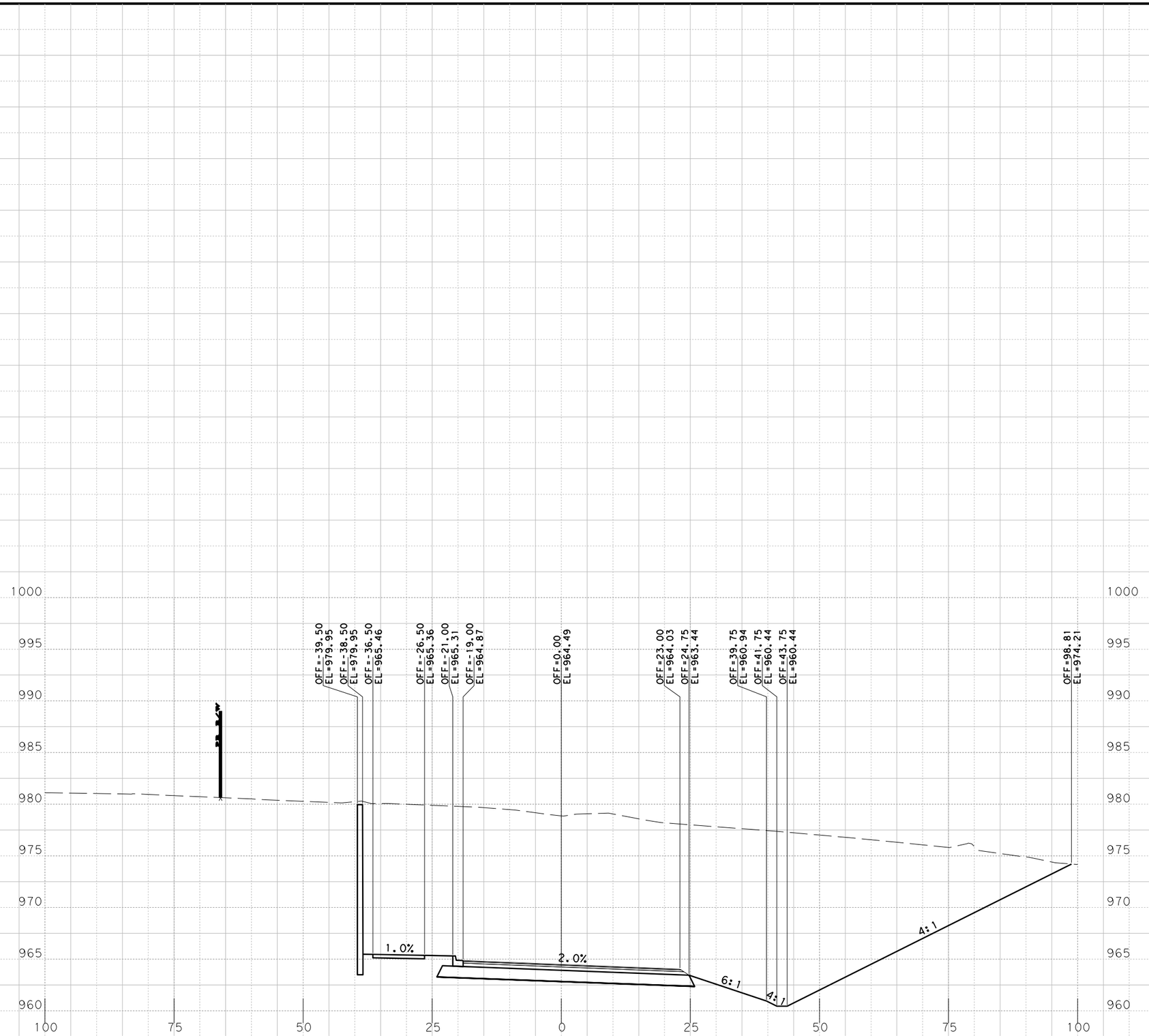

Sta. 618+00.0000 R1

PRELIMINARY
RM 2243
PHASE IA 100%

X-SECTIONS

SCALE: HORIZONTAL 1"=20'
VERTICAL 1"=10'

SHEET 108 OF 168

BGE, Inc.
101 W. Louis Henna Blvd., Suite 400
Austin, TX 78728
Tel: 512-879-0400 • www.bgeinc.com
TBPE Registration No. F-1046

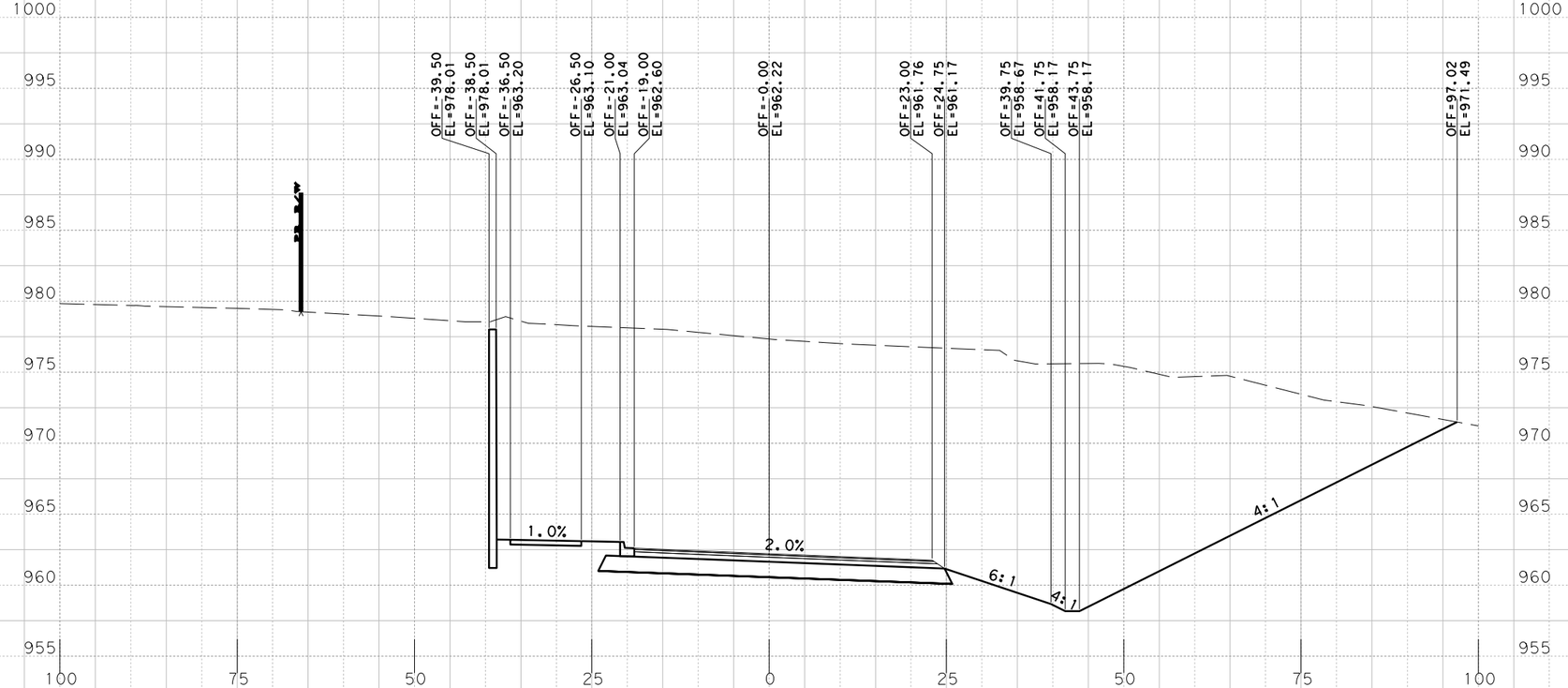

S†a. 618+50.0000 R1

PRELIMINARY
RM 2243
PHASE IA 100%

X-SECTIONS

SCALE: HORIZONTAL 1"=20'
VERTICAL 1"=10'

SHEET 109 OF 168

BGE, Inc.
101 W. Louis Henna Blvd., Suite 400
Austin, TX 78728
Tel: 512-879-0400 • www.bgeinc.com
TBPE Registration No. F-1046

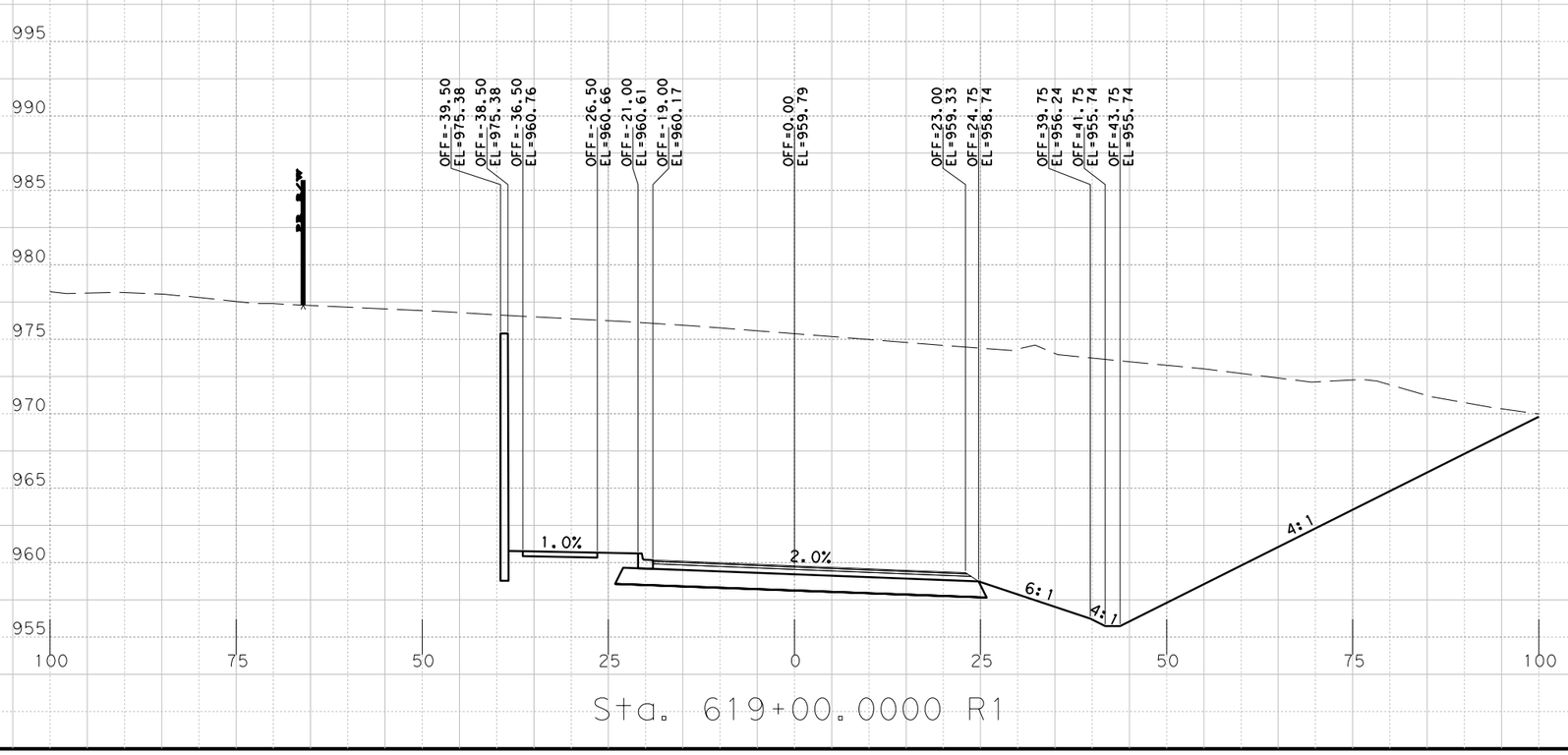

Sta. 619+00.0000 R1

PRELIMINARY
RM 2243
PHASE IA 100%

X-SECTIONS

SCALE: HORIZONTAL 1"=20'
VERTICAL 1"=10'

SHEET 110 OF 168

BGE, Inc.
101 W. Louis Henna Blvd., Suite 400
Austin, TX 78728
Tel: 512-879-0400 • www.bgeinc.com
TBPE Registration No. F-1046

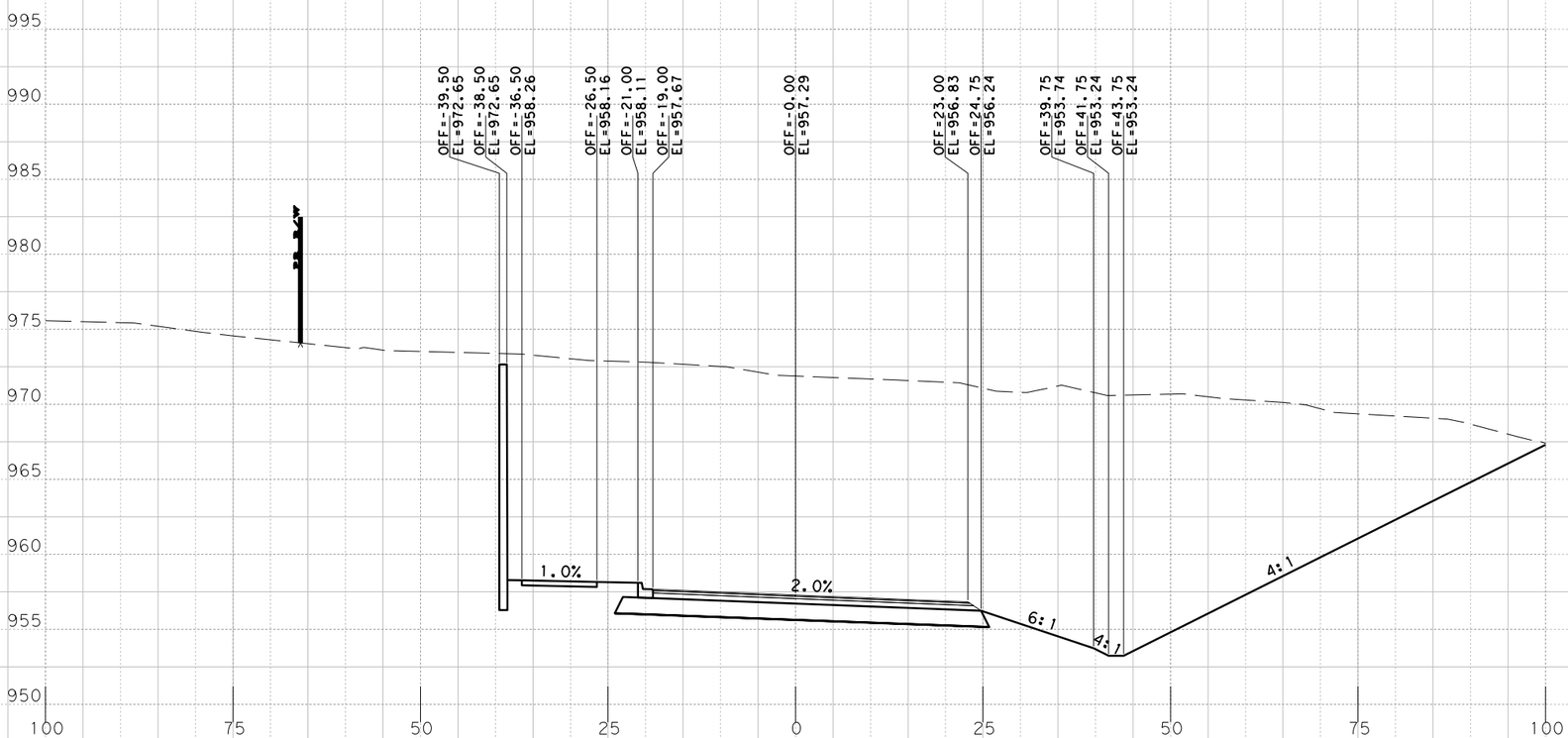

Sta. 619+50.0000 R1

PRELIMINARY
RM 2243
PHASE 1A 100%

X-SECTIONS

SCALE: HORIZONTAL 1"=20'
VERTICAL 1"=10'

SHEET 111 OF 168

BGE, Inc.
101 W. Louis Henna Blvd., Suite 400
Austin, TX 78728
Tel: 512-879-0400 • www.bgeinc.com
TBPE Registration No. F-1046

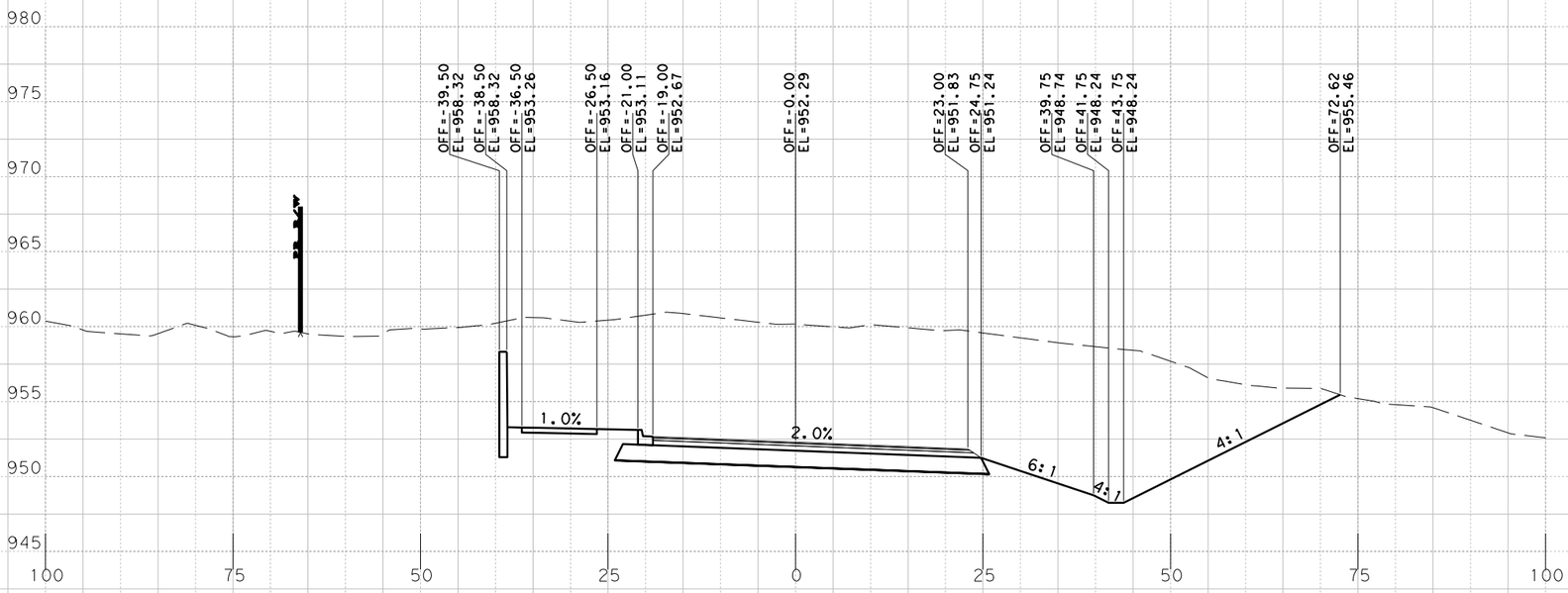

Sta. 620+50.0000 R1

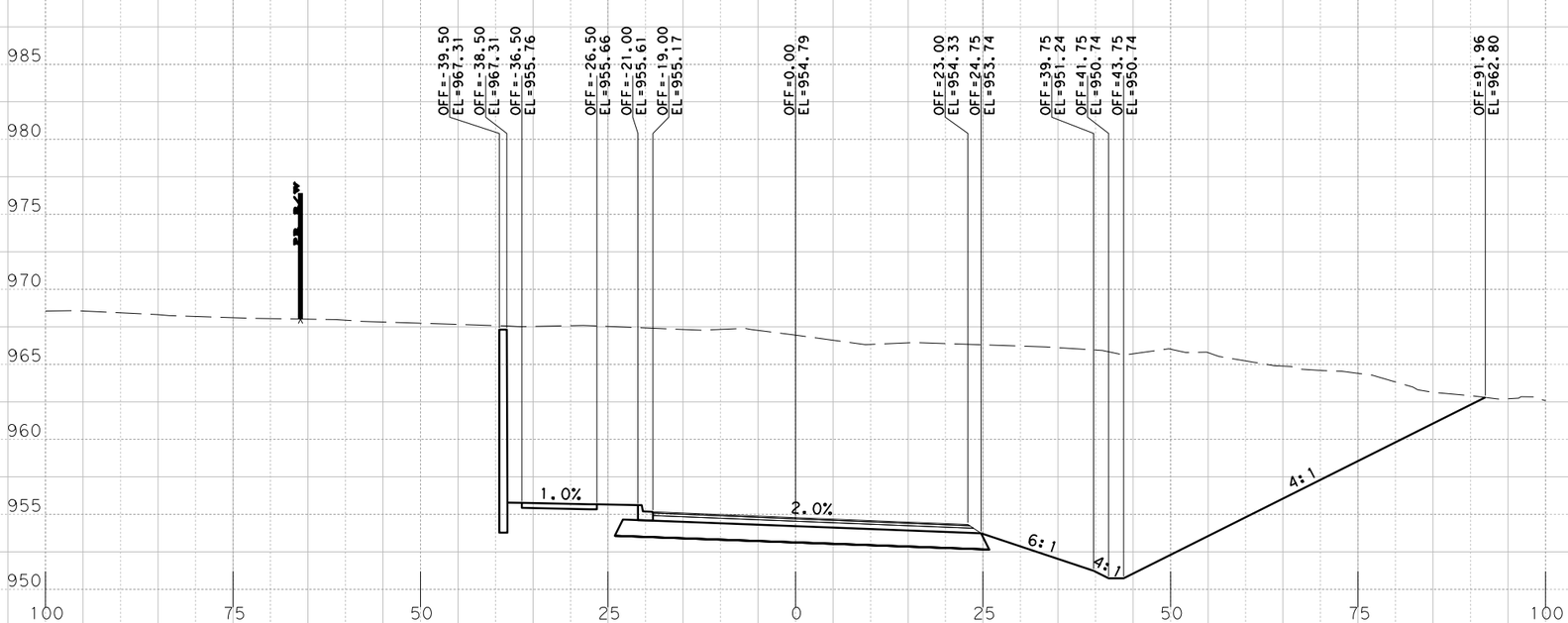

Sta. 620+00.0000 R1

PRELIMINARY
RM 2243
PHASE IA 100%

X-SECTIONS

SCALE: HORIZONTAL 1"=20'
VERTICAL 1"=10'

SHEET 112 OF 168

BGE, Inc.
101 W. Louis Henna Blvd., Suite 400
Austin, TX 78728
Tel: 512-879-0400 • www.bgeinc.com
TBPE Registration No. F-1046

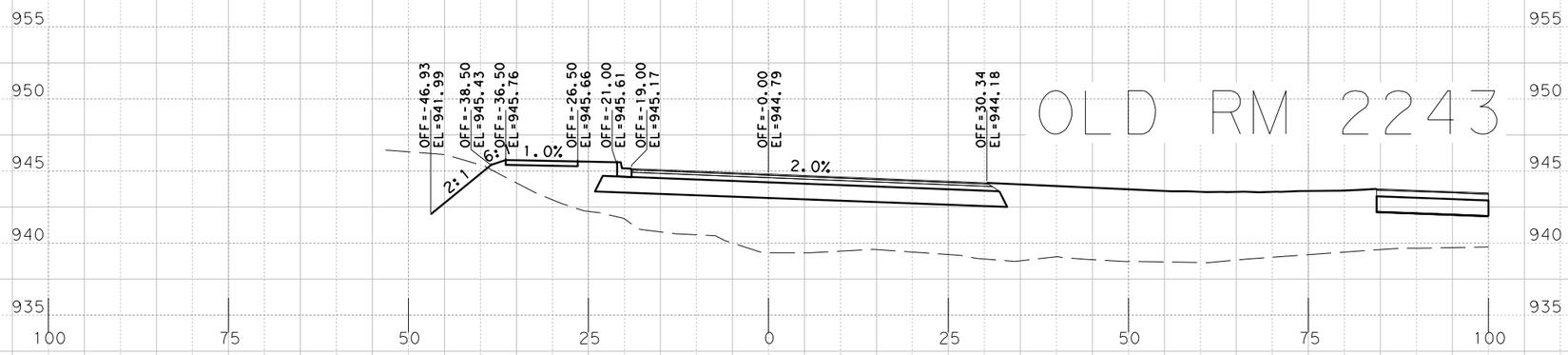

Sta. 622+00.0000 R1

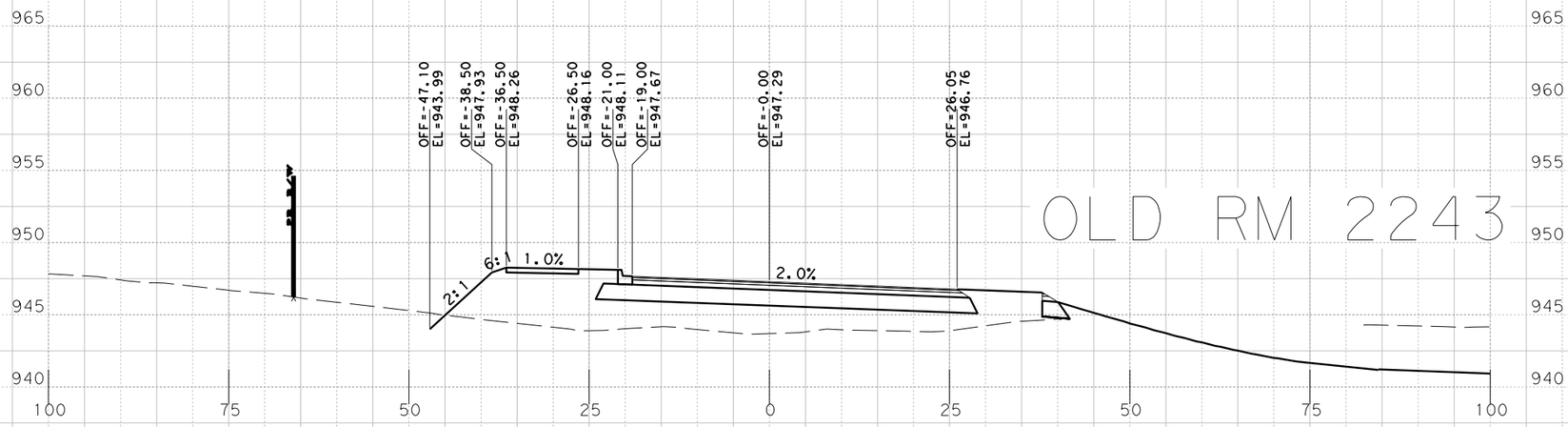

Sta. 621+50.0000 R1

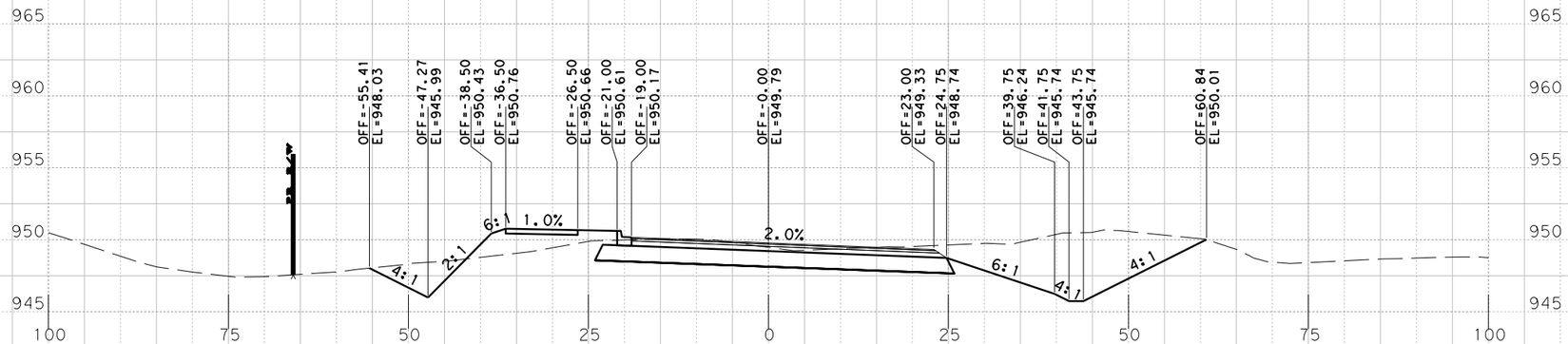

Sta. 621+00.0000 R1

PRELIMINARY
RM 2243
PHASE IA 100%

X-SECTIONS

SCALE: HORIZONTAL 1"=20'
VERTICAL 1"=10'

BGE, Inc.
101 W. Louis Henna Blvd., Suite 400
Austin, TX 78728
Tel: 512-879-0400 • www.bgeinc.com
TBPE Registration No. F-1046

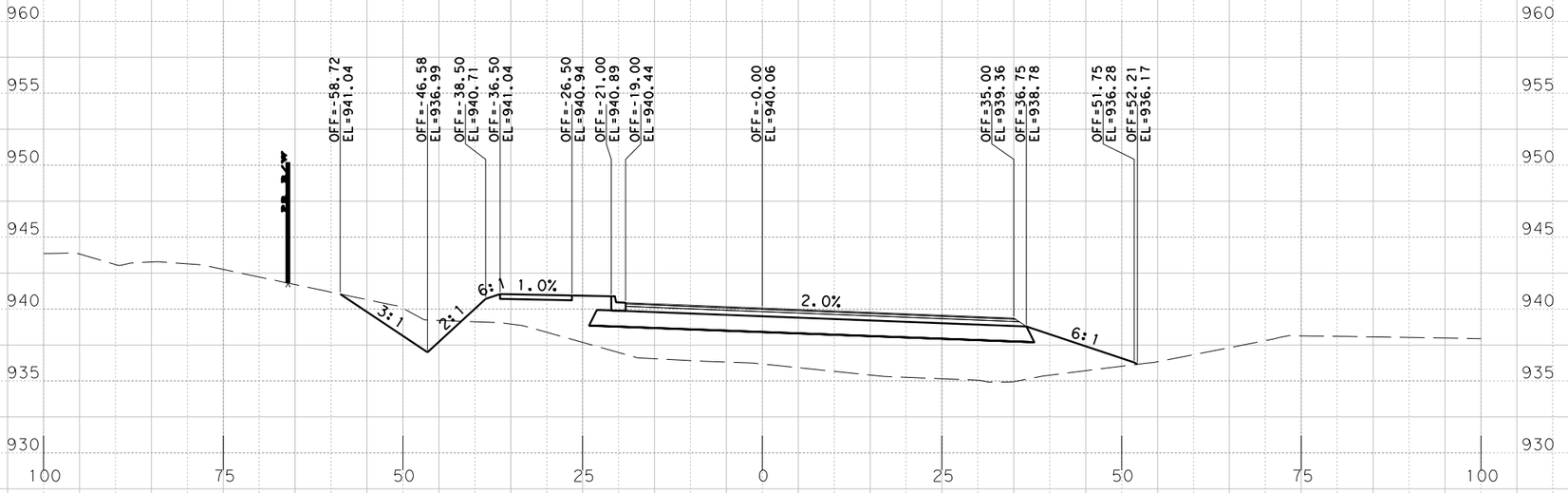

Sta. 623+00.0000 R1

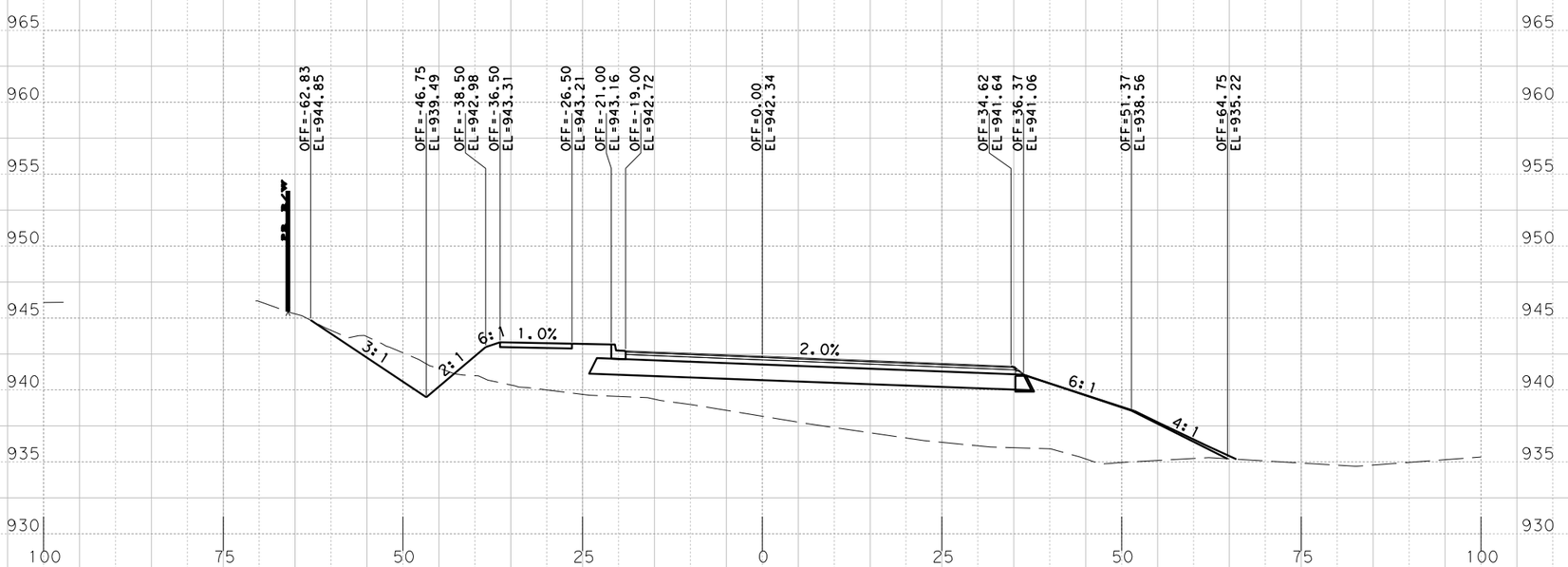

Sta. 622+50.0000 R1

PRELIMINARY
RM 2243
PHASE IA 100%
X-SECTIONS

SCALE: HORIZONTAL 1"=20'
VERTICAL 1"=10'

SHEET 114 OF 168

BGE, Inc.
101 W. Louis Henna Blvd., Suite 400
Austin, TX 78728
Tel: 512-879-0400 • www.bgeinc.com
TBPE Registration No. F-1046

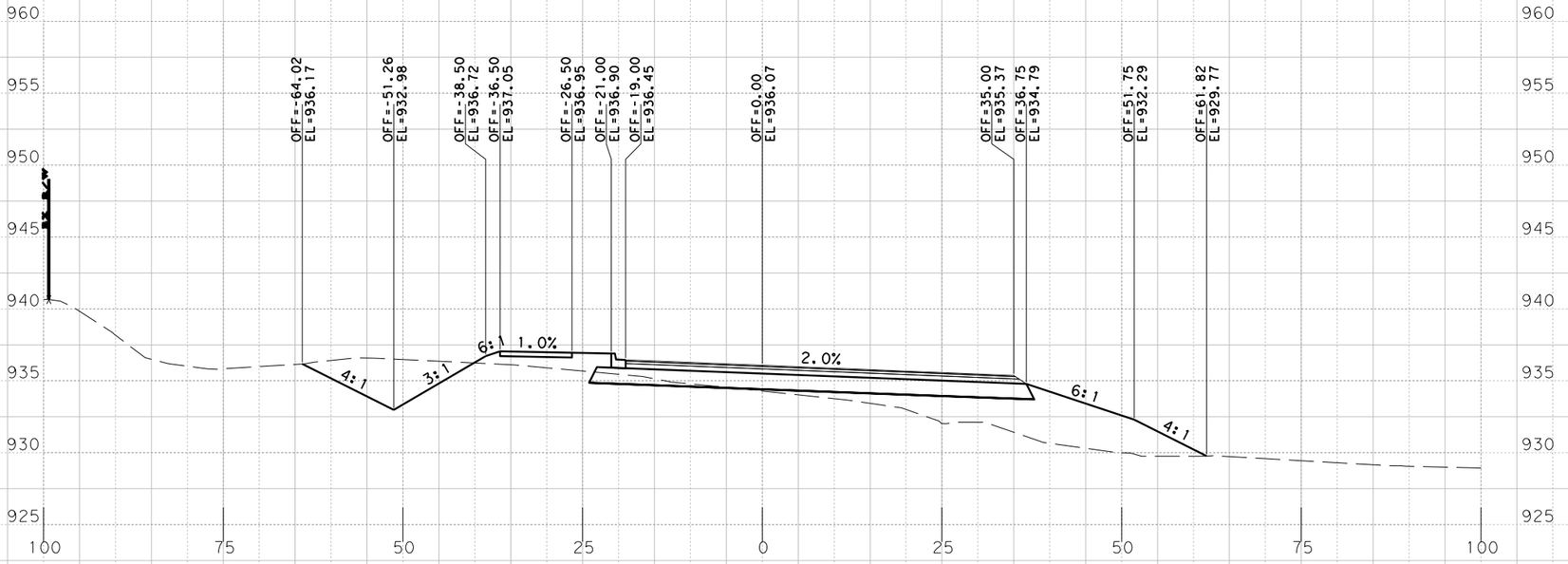

Sta. 624+00.0000 R1

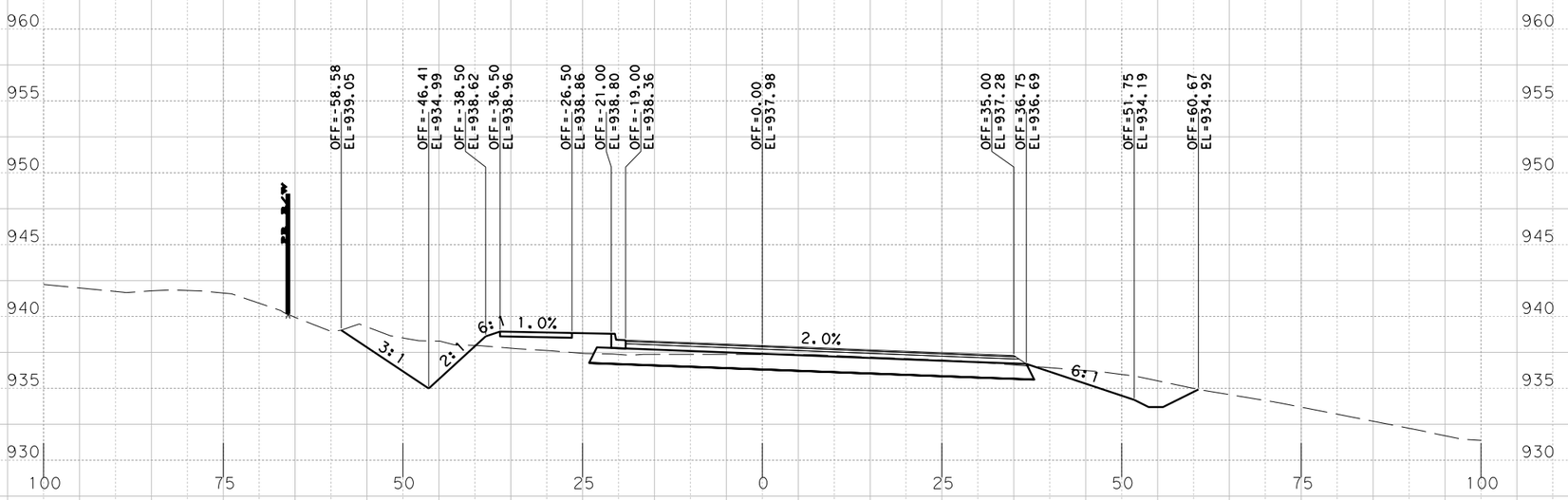

Sta. 623+50.0000 R1

PRELIMINARY
RM 2243
PHASE IA 100%

X-SECTIONS

SCALE: HORIZONTAL 1"=20'
VERTICAL 1"=10'

SHEET 115 OF 168

BGE, Inc.
101 W. Louis Henna Blvd., Suite 400
Austin, TX 78728
Tel: 512-879-0400 • www.bgeinc.com
TBPE Registration No. F-1046

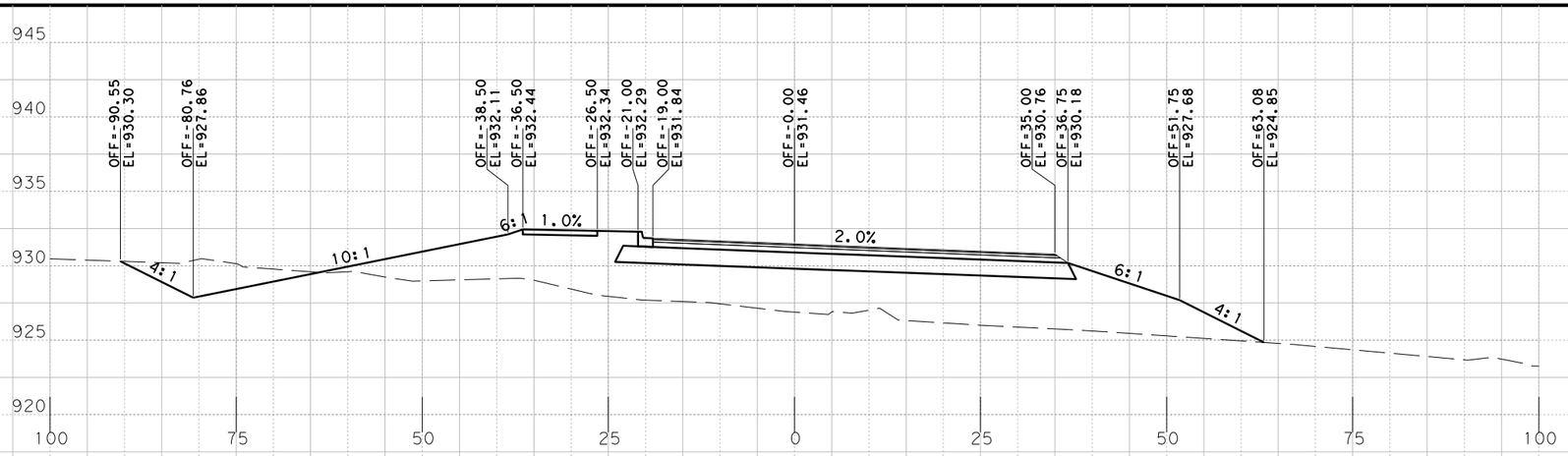

Sta. 625+50.0000 R1

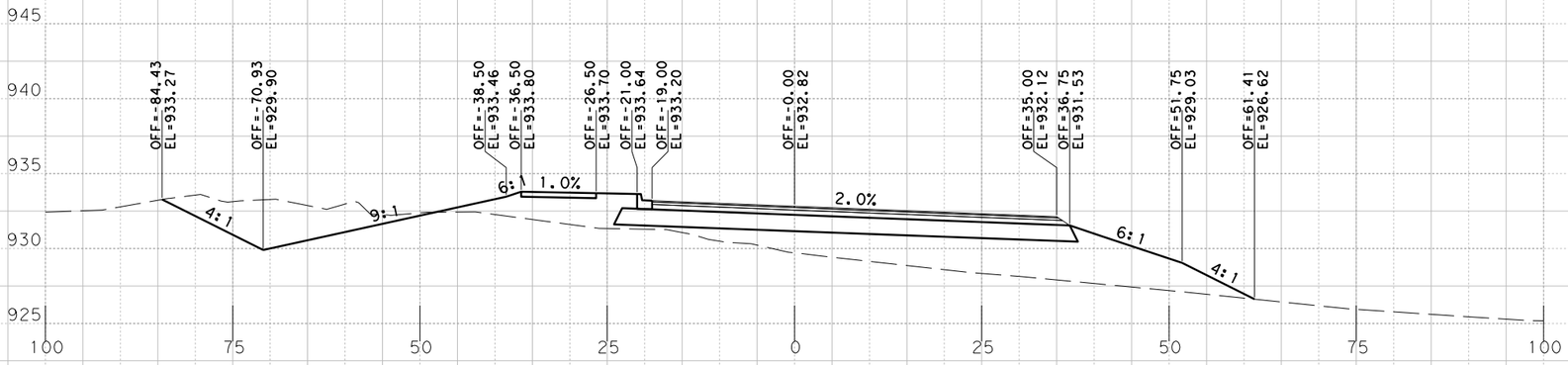

Sta. 625+00.0000 R1

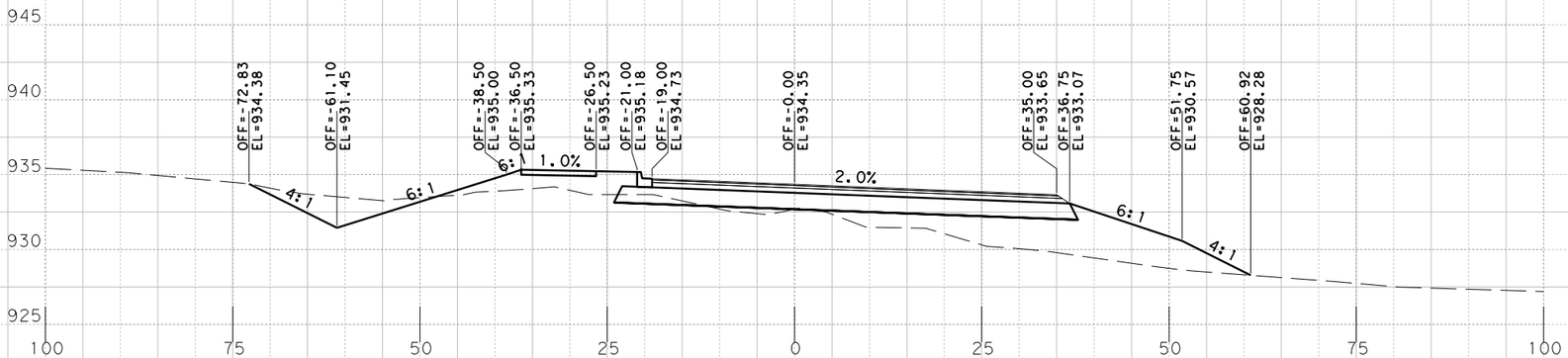

Sta. 624+50.0000 R1

PRELIMINARY
RM 2243
PHASE IA 100%

X-SECTIONS

SCALE: HORIZONTAL 1"=20'
VERTICAL 1"=10'

BGE, Inc.
101 W. Louis Henna Blvd., Suite 400
Austin, TX 78728
Tel: 512-879-0400 • www.bgeinc.com
TBPE Registration No. F-1046

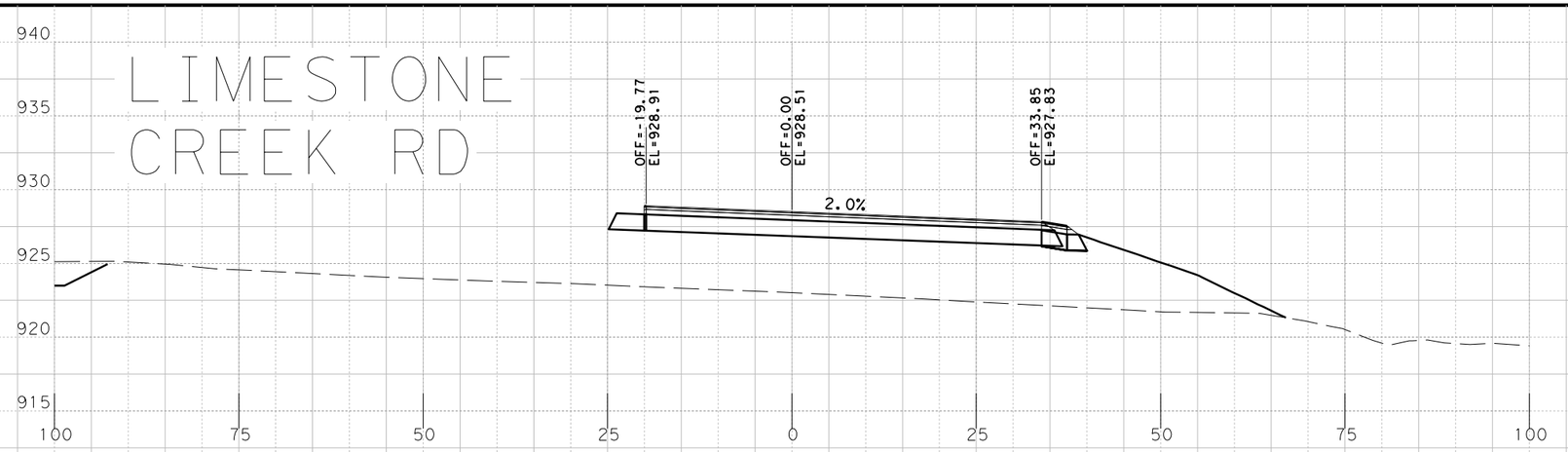

Sta. 627+00.0000 R1

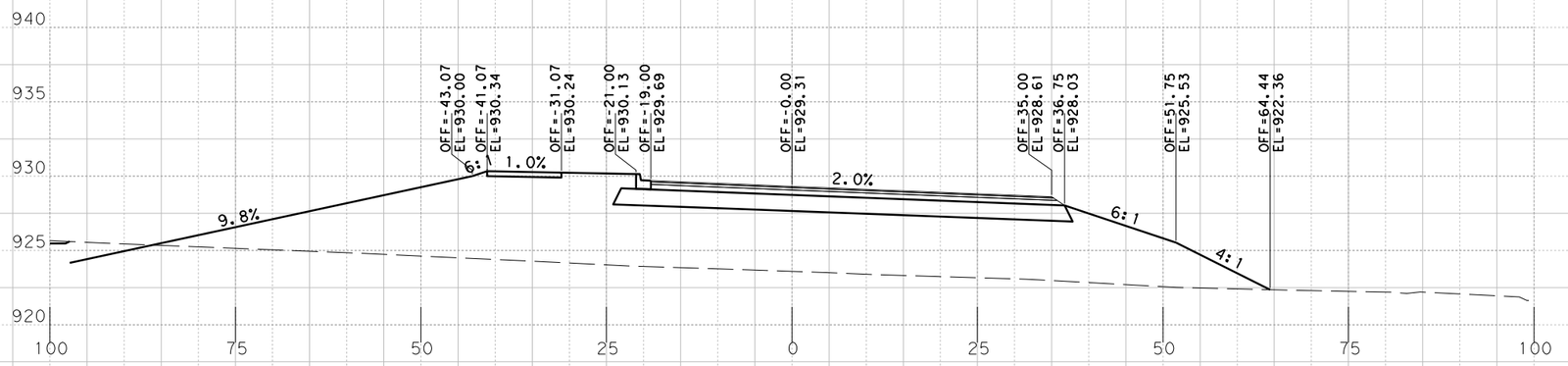

Sta. 626+50.0000 R1

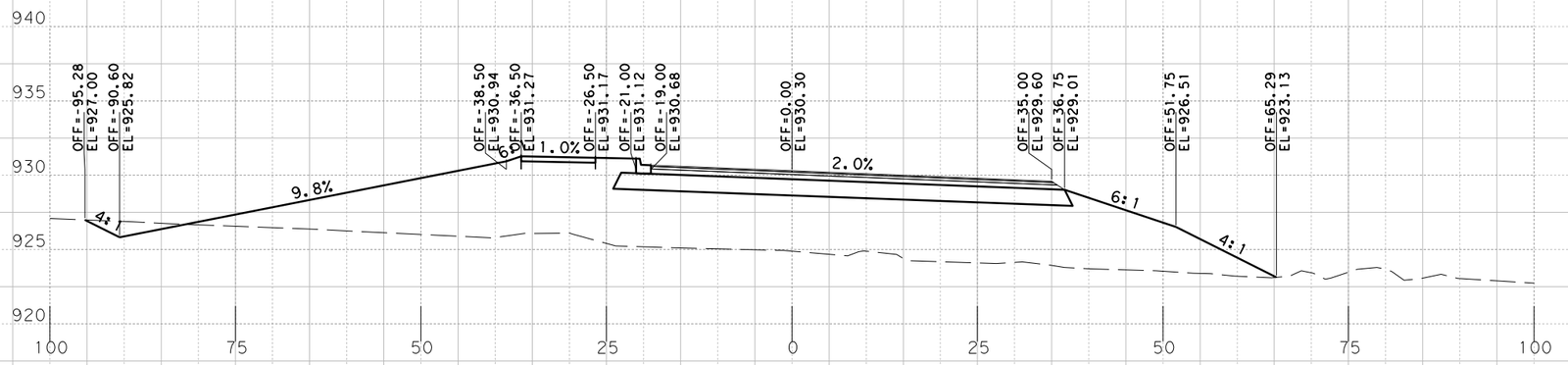

Sta. 626+00.0000 R1

PRELIMINARY
RM 2243
PHASE IA 100%

X-SECTIONS

SCALE: HORIZONTAL 1"=20'
VERTICAL 1"=10'

BGE, Inc.
101 W. Louis Henna Blvd., Suite 400
Austin, TX 78728
Tel: 512-879-0400 • www.bgeinc.com
TBPE Registration No. F-1046

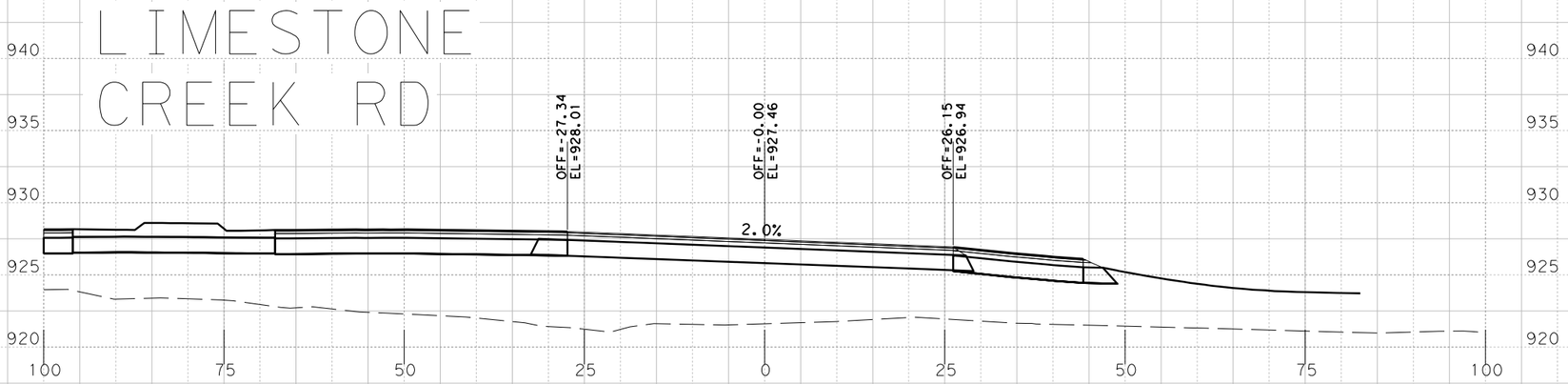

Sta. 628+00.0000 R1

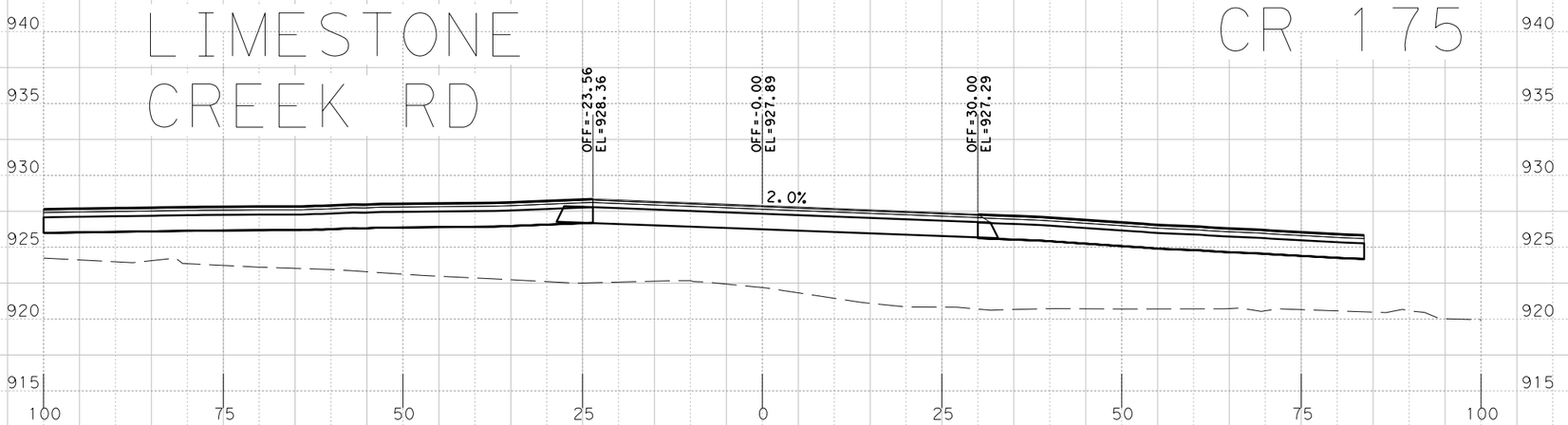

Sta. 627+50.0000 R1

PRELIMINARY
RM 2243
PHASE IA 100%

X-SECTIONS

SCALE: HORIZONTAL 1"=20'
VERTICAL 1"=10'

SHEET 118 OF 168

BGE, Inc.
101 W. Louis Henna Blvd., Suite 400
Austin, TX 78728
Tel: 512-879-0400 • www.bgeinc.com
TBPE Registration No. F-1046

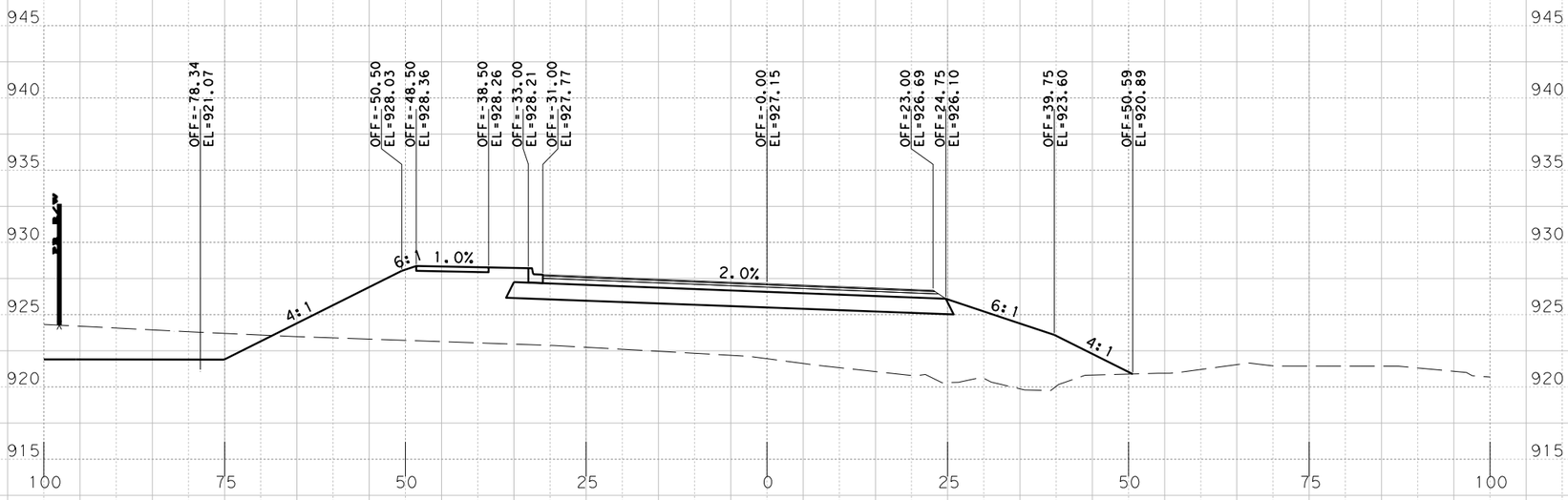

Sta. 629+00.0000 R1

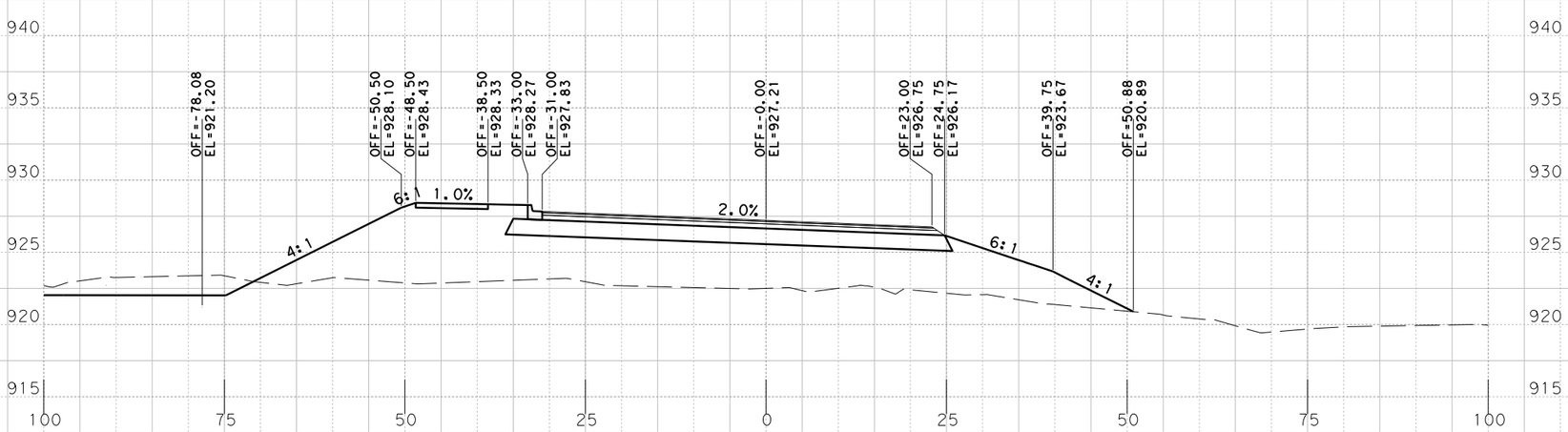

Sta. 628+50.0000 R1

PRELIMINARY
RM 2243
PHASE IA 100%

X-SECTIONS

SCALE: HORIZONTAL 1"=20'
VERTICAL 1"=10'

SHEET 119 OF 168

BGE, Inc.
101 W. Louis Henna Blvd., Suite 400
Austin, TX 78728
Tel: 512-879-0400 • www.bgeinc.com
TBPE Registration No. F-1046

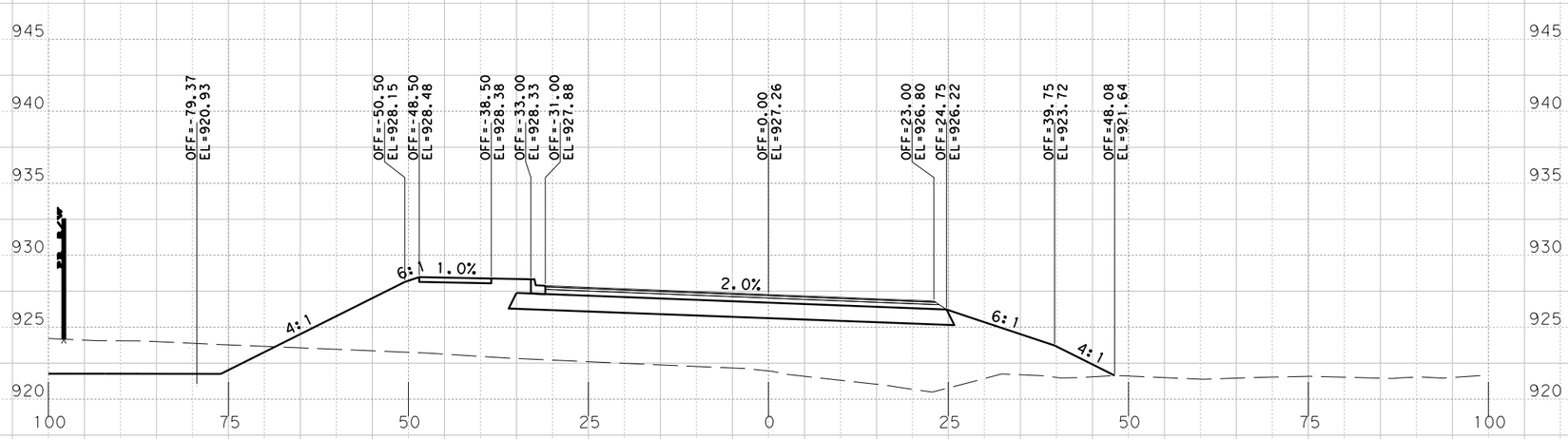

S+a. 629+50.0000 R1

PRELIMINARY
RM 2243
PHASE IA 100%

X-SECTIONS

SCALE: HORIZONTAL 1"=20'
VERTICAL 1"=10'

SHEET 120 OF 168

BGE, Inc.
101 W. Louis Henna Blvd., Suite 400
Austin, TX 78728
Tel: 512-879-0400 • www.bgeinc.com
TBPE Registration No. F-1046

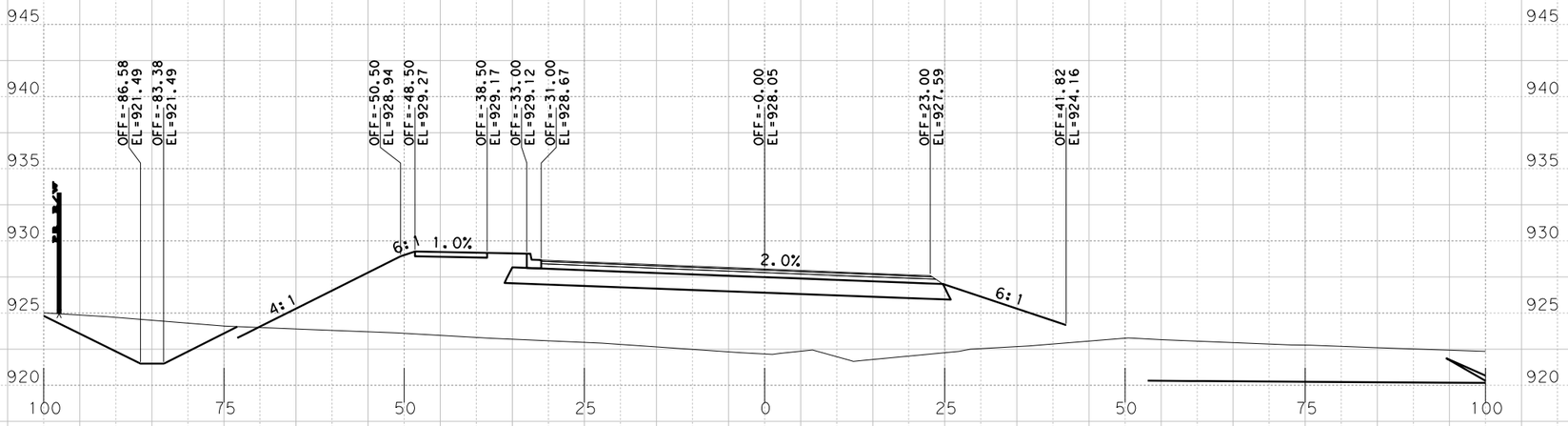

Sta. 630+50.0000 R1

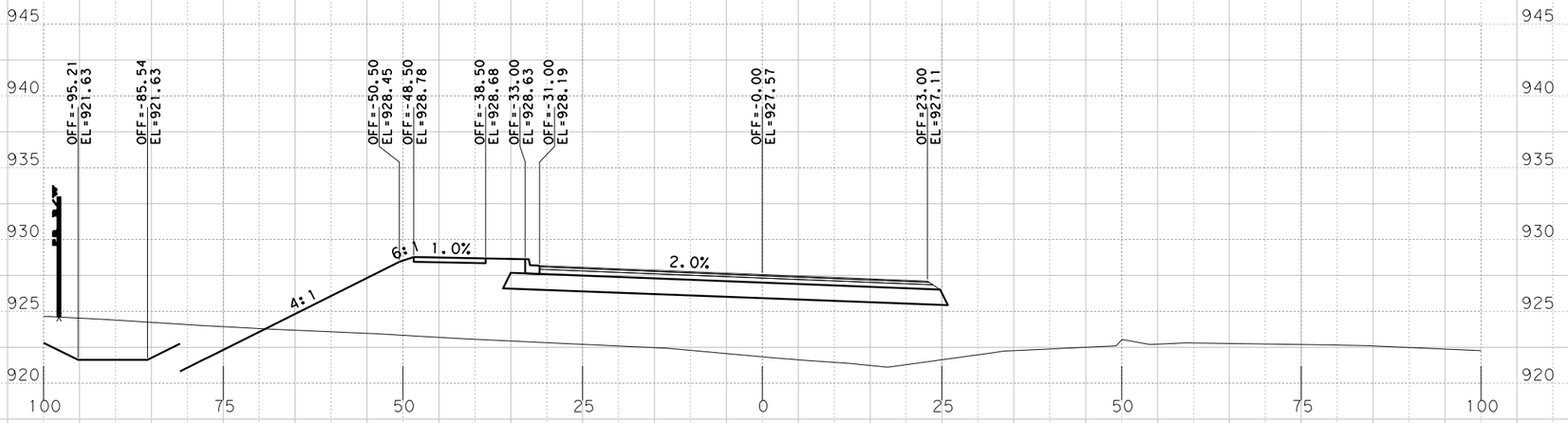

Sta. 630+00.0000 R1

PRELIMINARY
RM 2243
PHASE IA 100%

X-SECTIONS

SCALE: HORIZONTAL 1"=20'
VERTICAL 1"=10'

SHEET 121 OF 168

BGE, Inc.
101 W. Louis Henna Blvd., Suite 400
Austin, TX 78728
Tel: 512-879-0400 • www.bgeinc.com
TBPE Registration No. F-1046

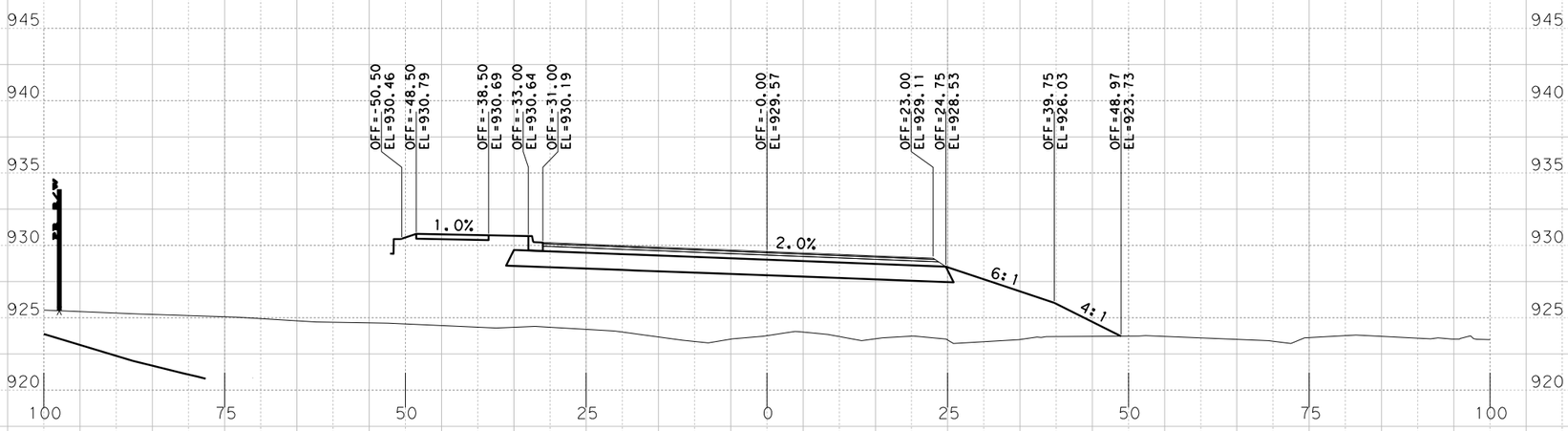

Sta. 631+50.0000 R1

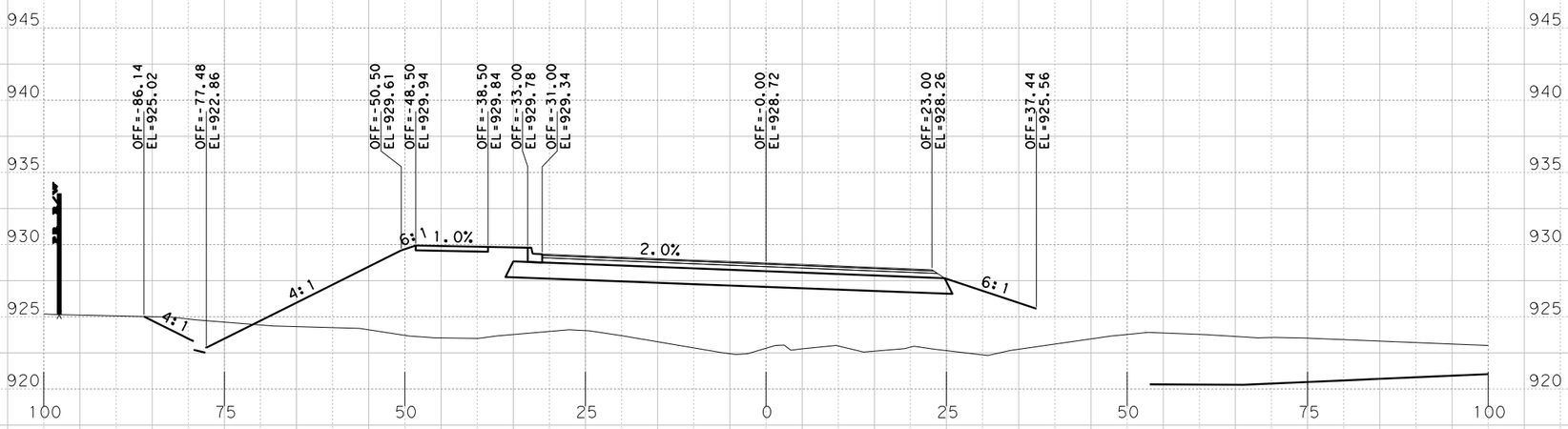

Sta. 631+00.0000 R1

PRELIMINARY
RM 2243
PHASE IA 100%

X-SECTIONS

SCALE: HORIZONTAL 1"=20'
VERTICAL 1"=10'

SHEET 122 OF 168

BGE, Inc.
101 W. Louis Henna Blvd., Suite 400
Austin, TX 78728
Tel: 512-879-0400 • www.bgeinc.com
TBPE Registration No. F-1046

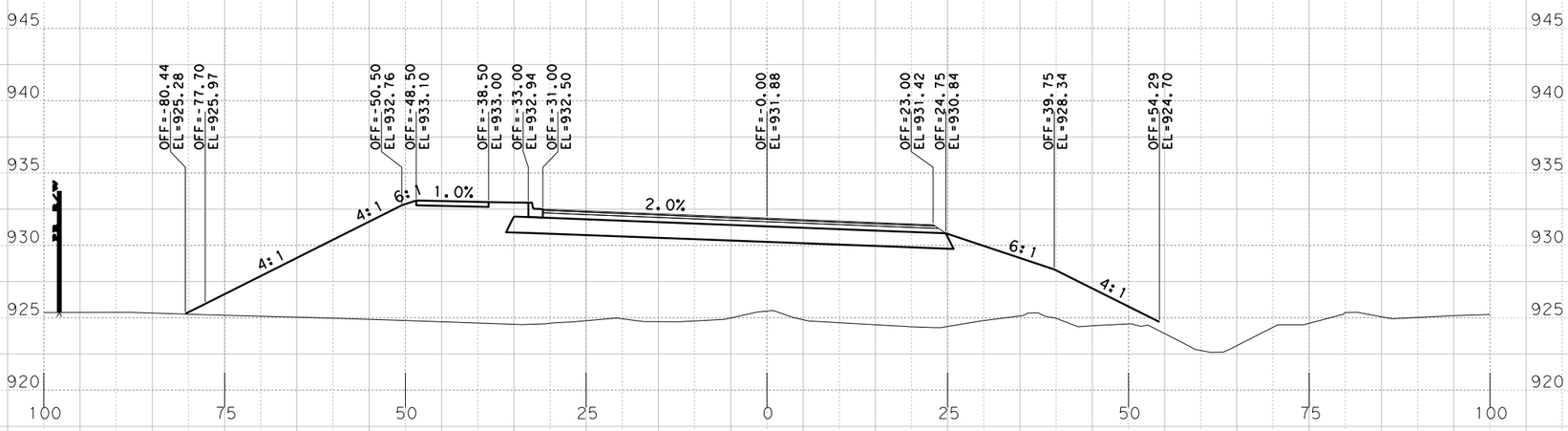

Sta. 632+50.0000 R1

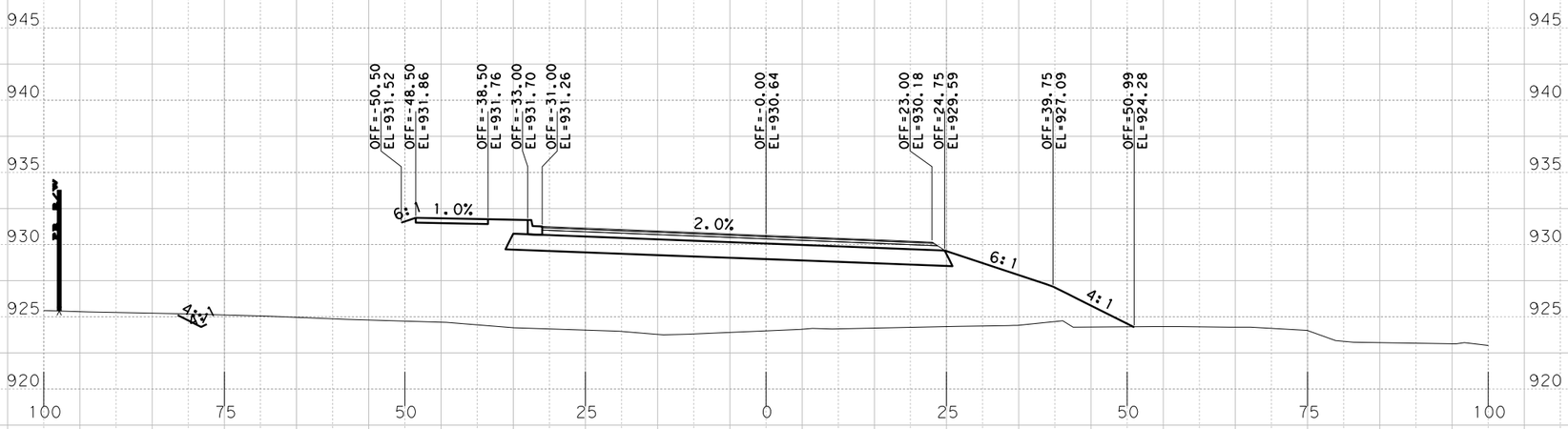

Sta. 632+00.0000 R1

PRELIMINARY
RM 2243
PHASE IA 100%

X-SECTIONS

SCALE: HORIZONTAL 1"=20'
VERTICAL 1"=10'

SHEET 123 OF 168

BGE, Inc.
101 W. Louis Henna Blvd., Suite 400
Austin, TX 78728
Tel: 512-879-0400 • www.bgeinc.com
TBPE Registration No. F-1046

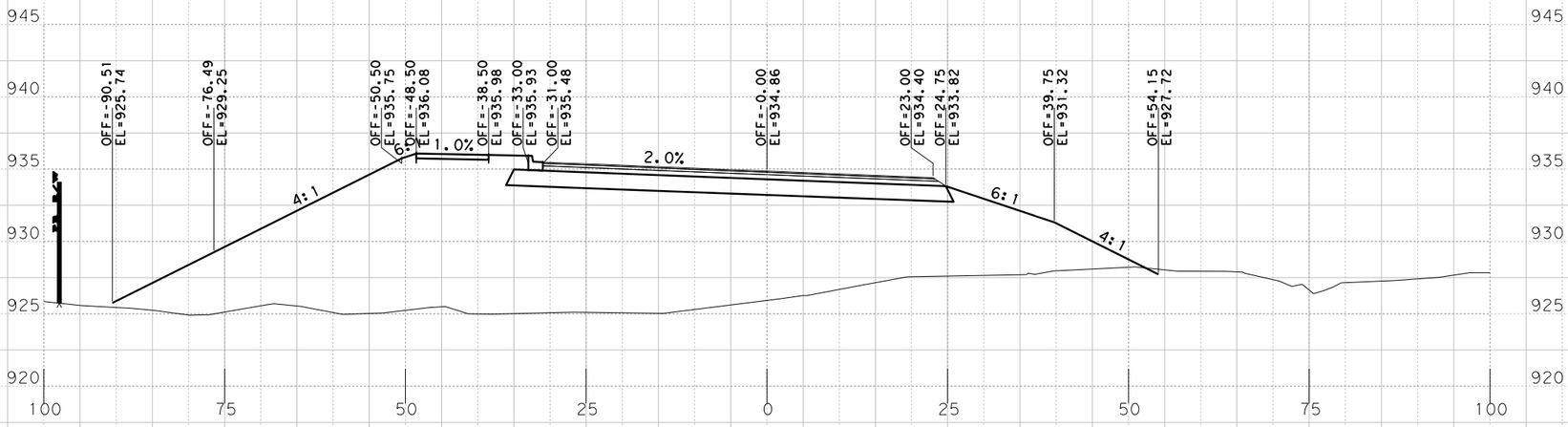

Sta. 633+50.0000 R1

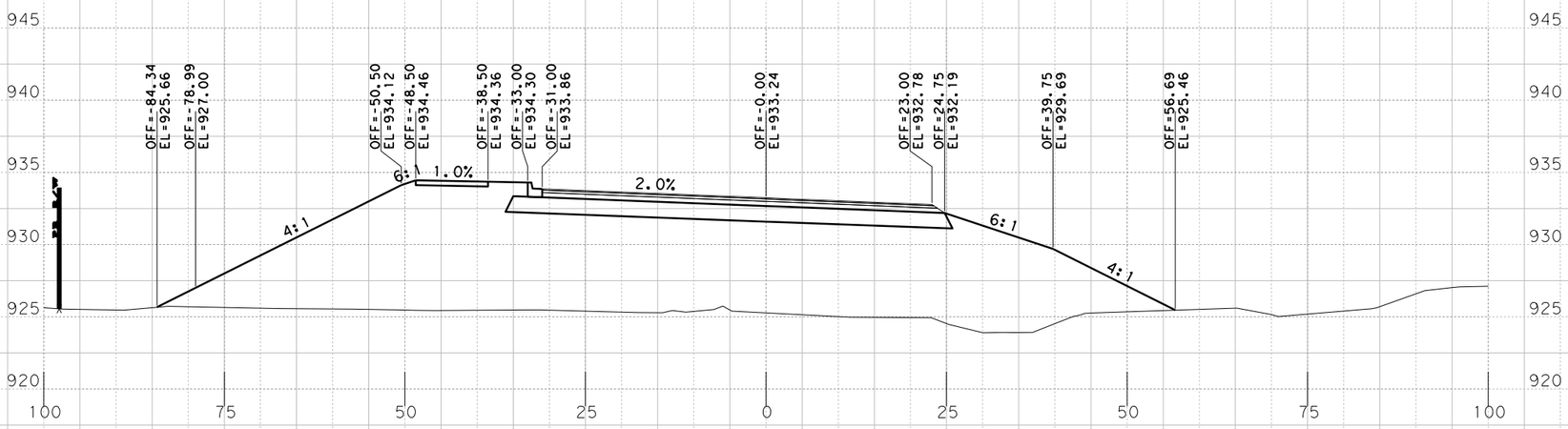

Sta. 633+00.0000 R1

PRELIMINARY
RM 2243
PHASE IA 100%

X-SECTIONS

SCALE: HORIZONTAL 1"=20'
VERTICAL 1"=10'

SHEET 124 OF 168

BGE, Inc.
101 W. Louis Henna Blvd., Suite 400
Austin, TX 78728
Tel: 512-879-0400 • www.bgeinc.com
TBPE Registration No. F-1046

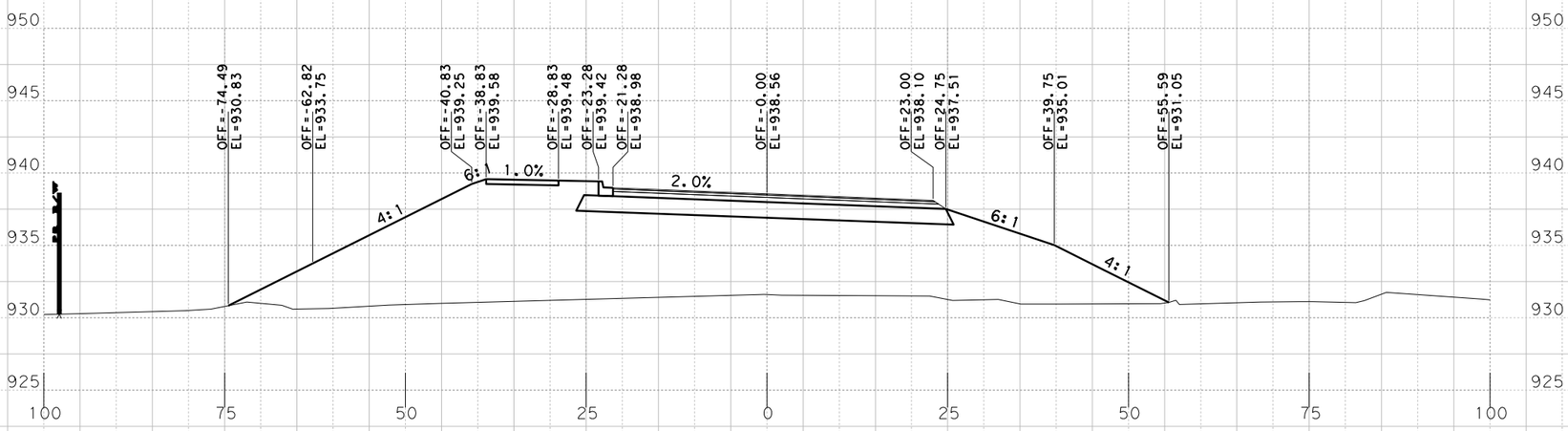

Sta. 634+50.0000 R1

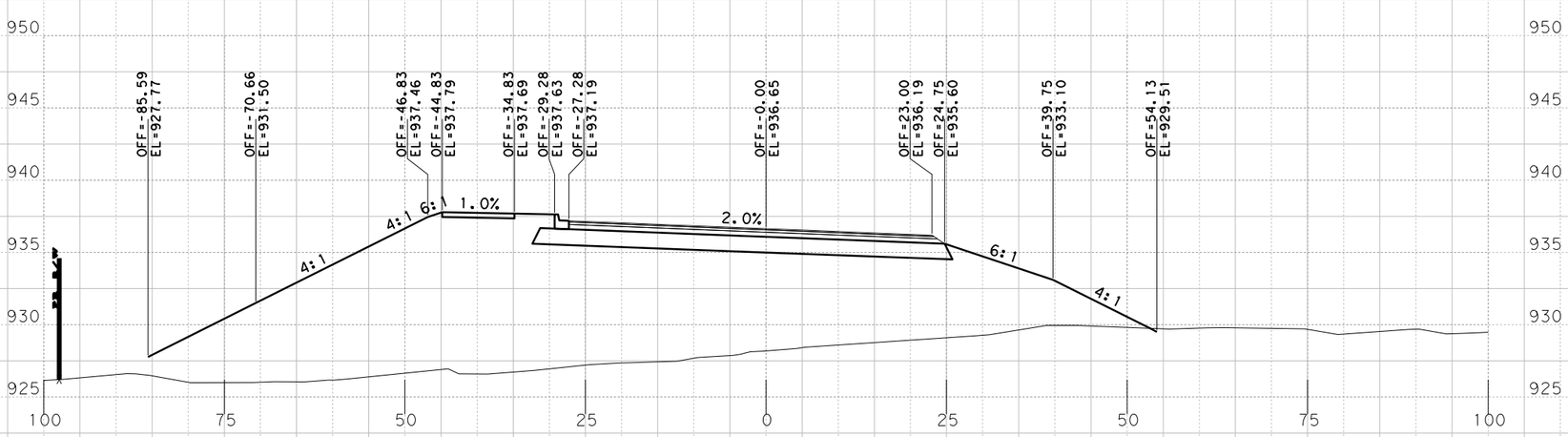

Sta. 634+00.0000 R1

PRELIMINARY
RM 2243
PHASE IA 100%
X-SECTIONS

SCALE: HORIZONTAL 1"=20'
VERTICAL 1"=10'

SHEET 125 OF 168

BGE, Inc.
101 W. Louis Henna Blvd., Suite 400
Austin, TX 78728
Tel: 512-879-0400 • www.bgeinc.com
TBPE Registration No. F-1046

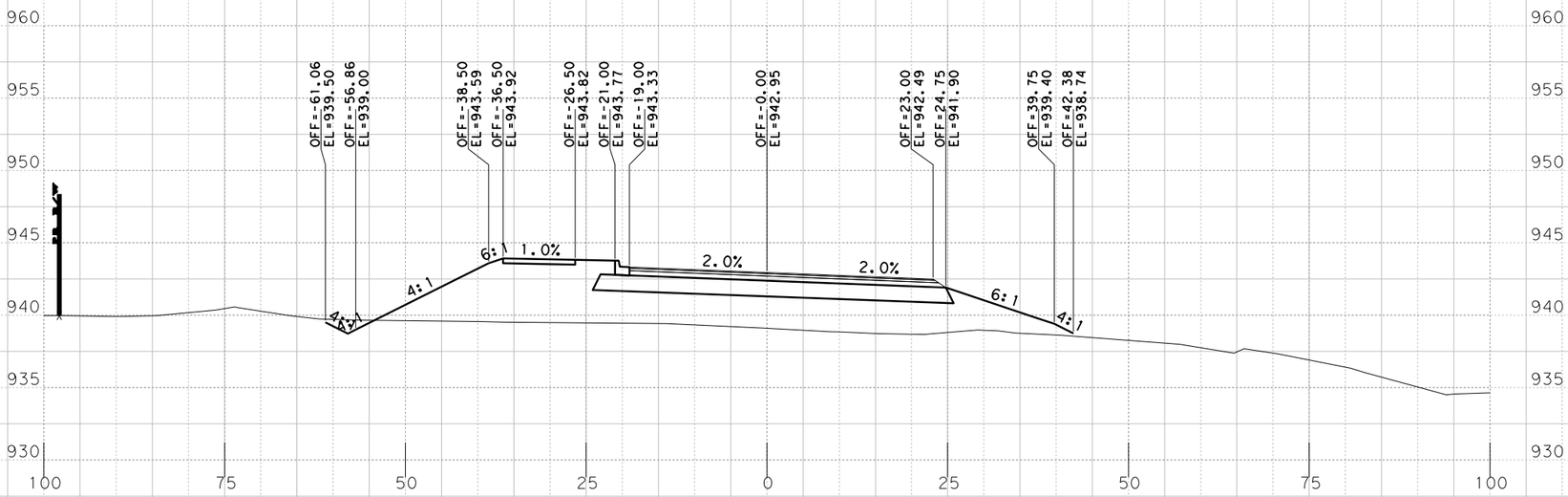

Sta. 635+50.0000 R1

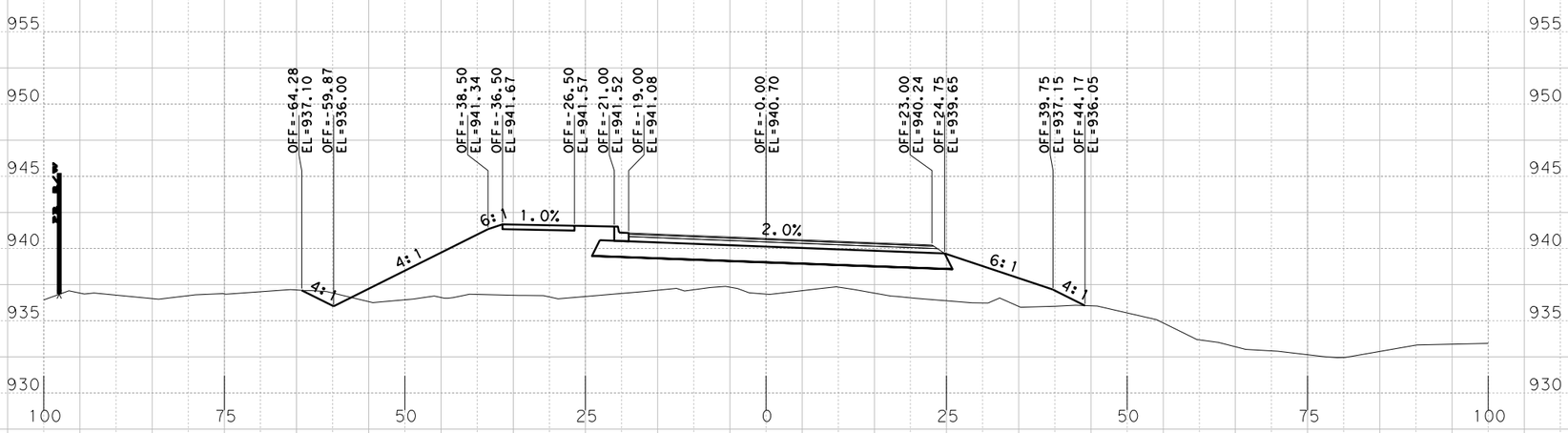

Sta. 635+00.0000 R1

PRELIMINARY
RM 2243
PHASE IA 100%

X-SECTIONS

SCALE: HORIZONTAL 1"=20'
VERTICAL 1"=10'

SHEET 126 OF 168

BGE, Inc.
101 W. Louis Henna Blvd., Suite 400
Austin, TX 78728
Tel: 512-879-0400 • www.bgeinc.com
TBPE Registration No. F-1046

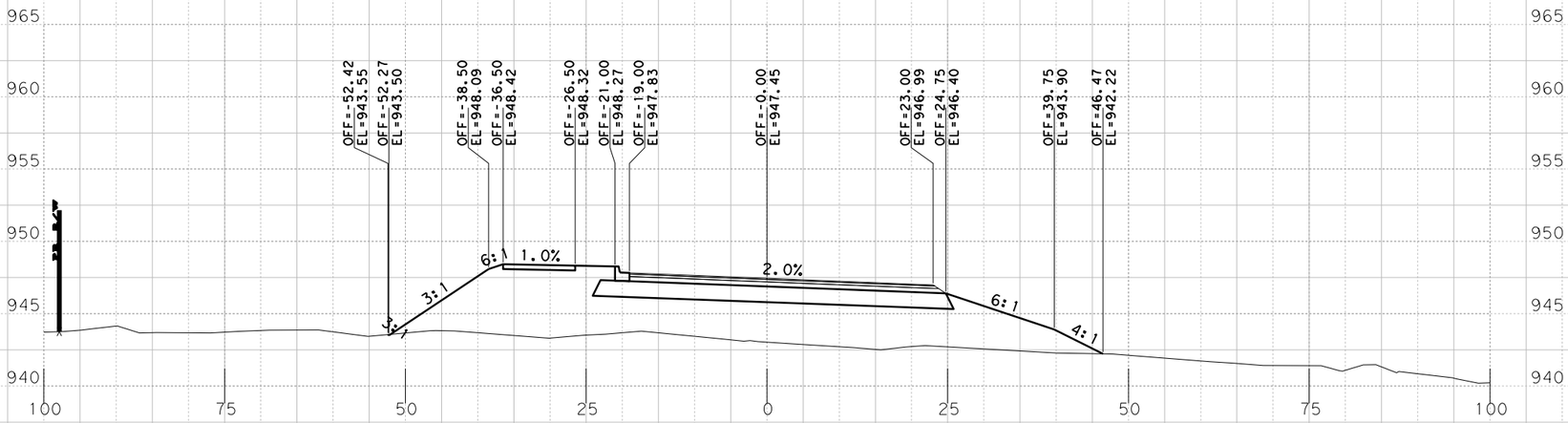

Sta. 636+50.0000 R1

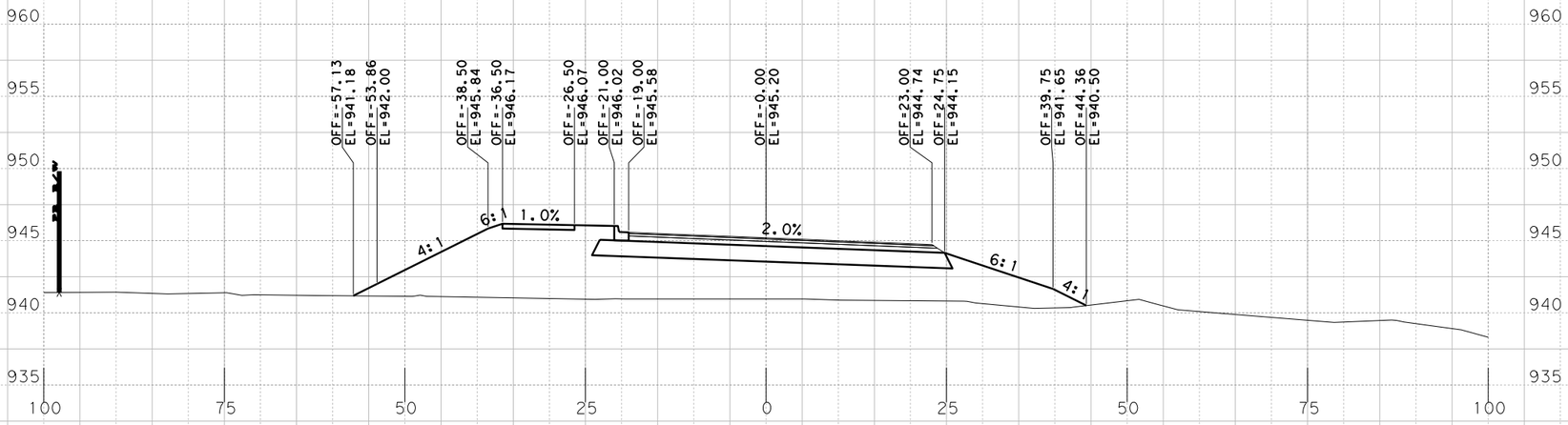

Sta. 636+00.0000 R1

PRELIMINARY
RM 2243
PHASE IA 100%

X-SECTIONS

SCALE: HORIZONTAL 1"=20'
VERTICAL 1"=10'

SHEET 127 OF 168

BGE, Inc.
101 W. Louis Henna Blvd., Suite 400
Austin, TX 78728
Tel: 512-879-0400 • www.bgeinc.com
TBPE Registration No. F-1046

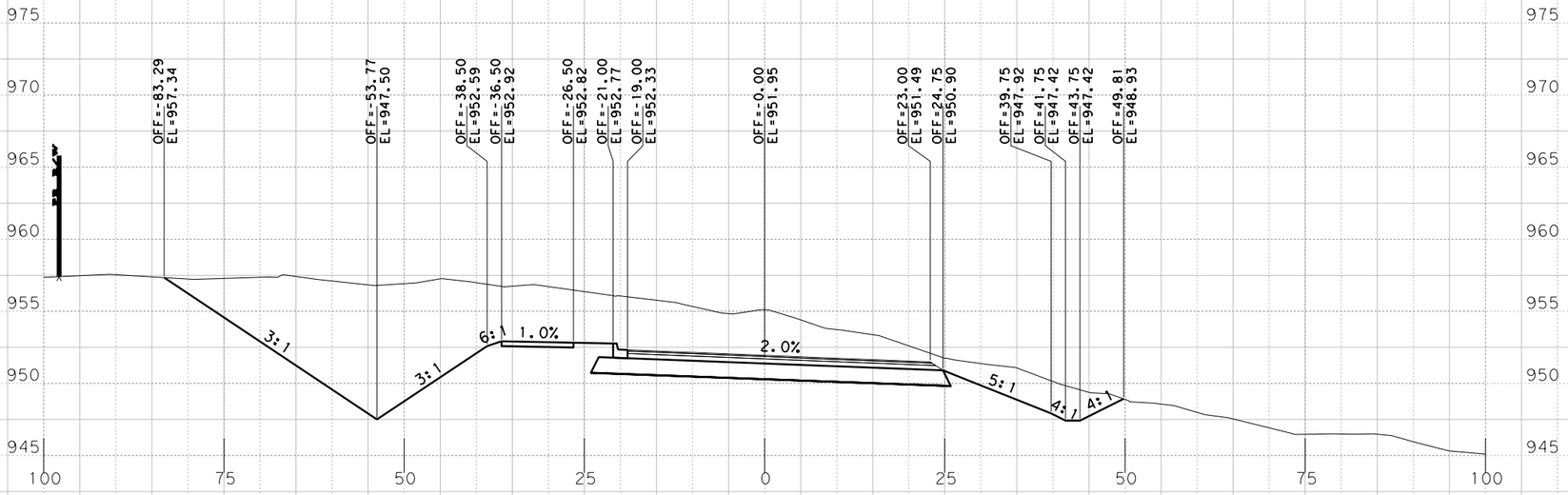

Sta. 637+50.0000 R1

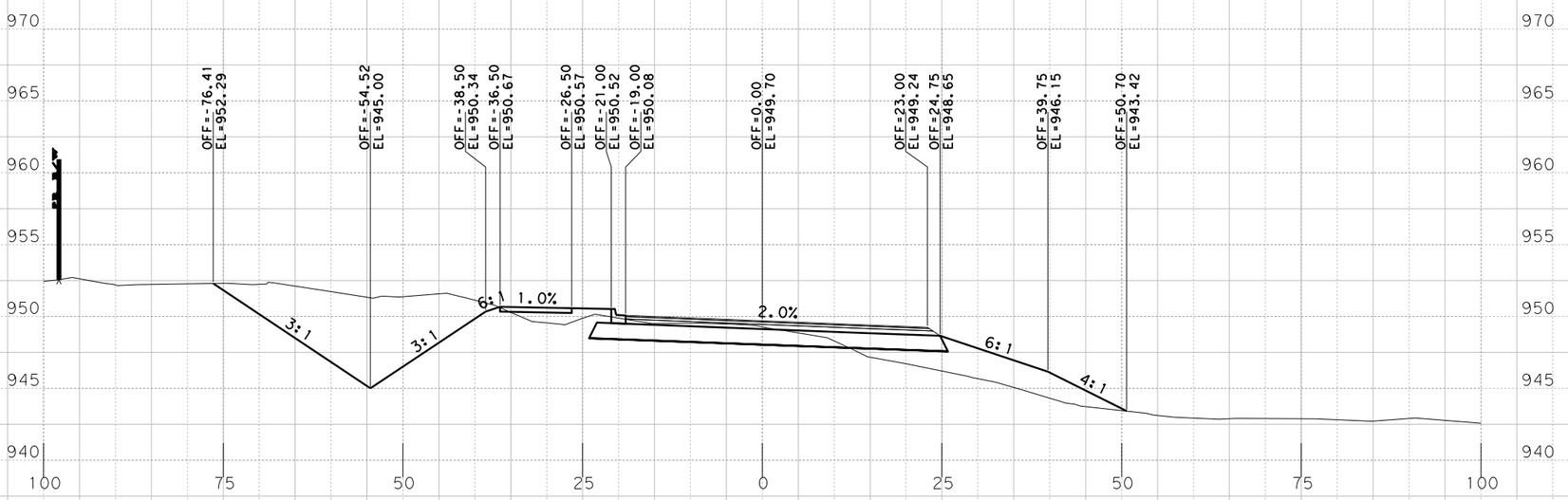

Sta. 637+00.0000 R1

PRELIMINARY
RM 2243
PHASE IA 100%
X-SECTIONS

SCALE: HORIZONTAL 1"=20'
VERTICAL 1"=10'

SHEET 128 OF 168

BGE, Inc.
101 W. Louis Henna Blvd., Suite 400
Austin, TX 78728
Tel: 512-879-0400 • www.bgeinc.com
TBPE Registration No. F-1046

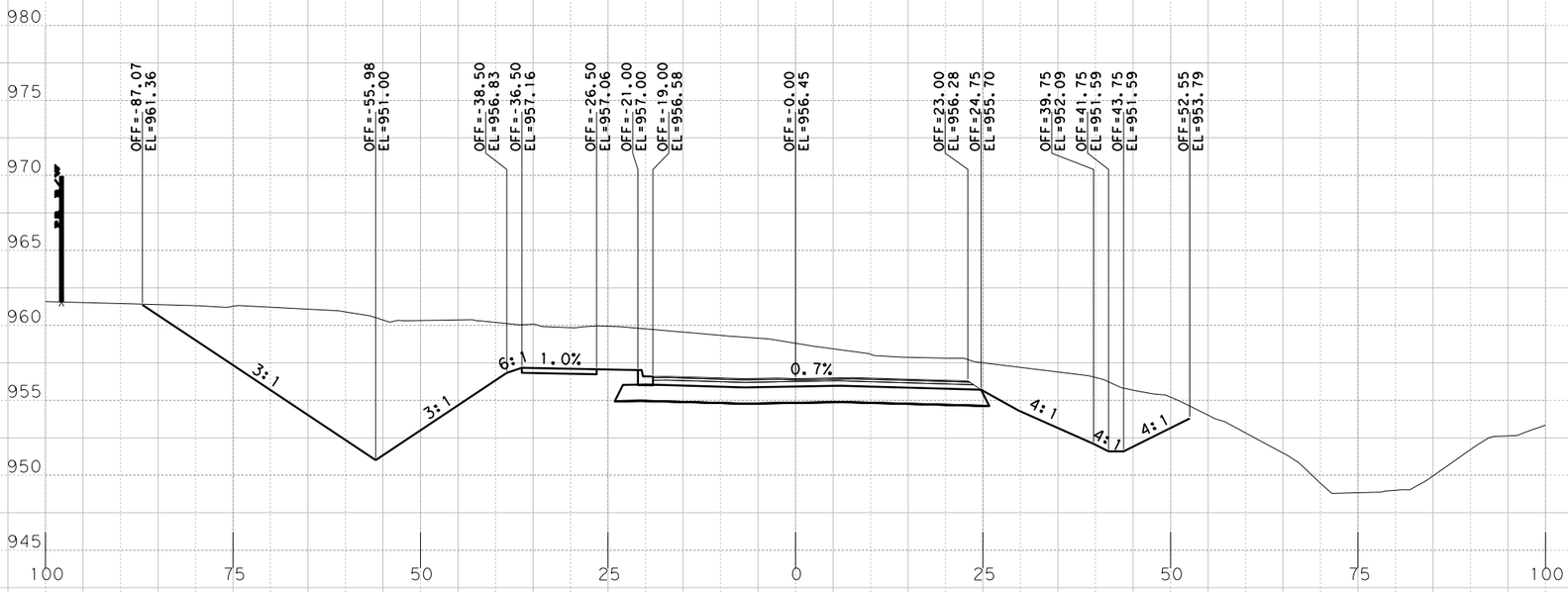

Sta. 638+50.0000 R1

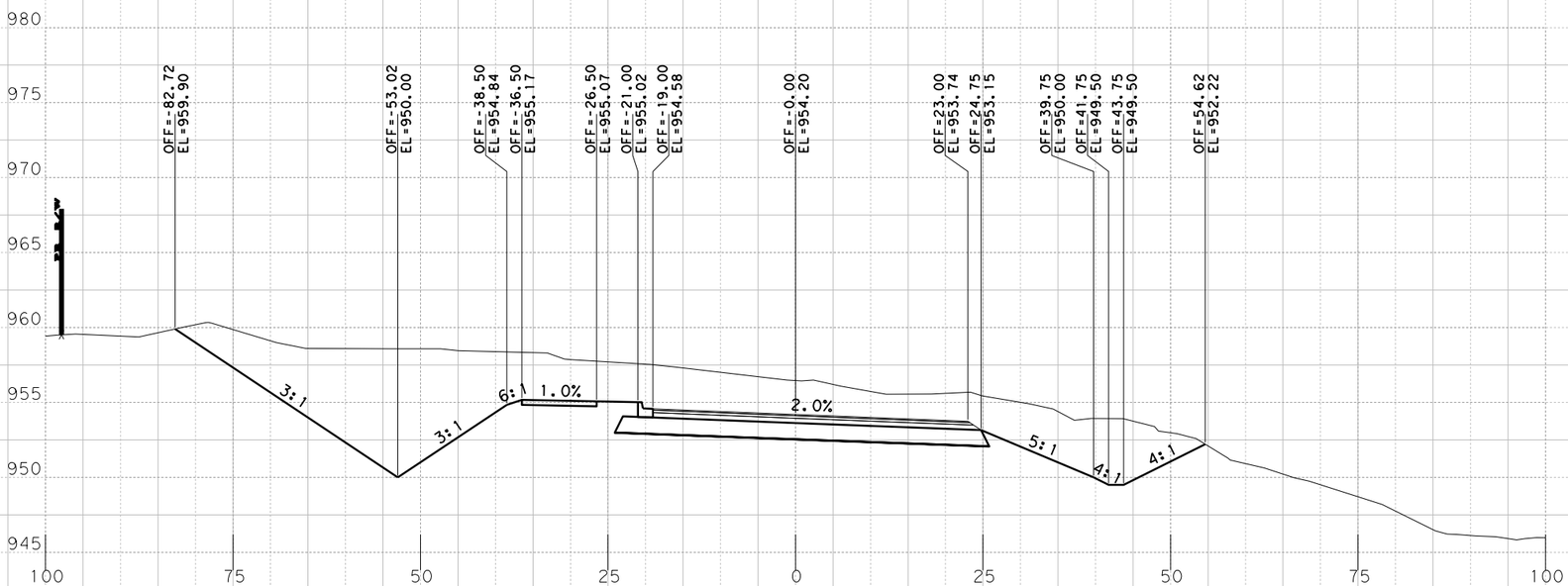

Sta. 638+00.0000 R1

PRELIMINARY
RM 2243
PHASE IA 100%

X-SECTIONS

SCALE: HORIZONTAL 1"=20'
VERTICAL 1"=10'

SHEET 129 OF 168

BGE, Inc.
101 W. Louis Henna Blvd., Suite 400
Austin, TX 78728
Tel: 512-879-0400 • www.bgeinc.com
TBPE Registration No. F-1046

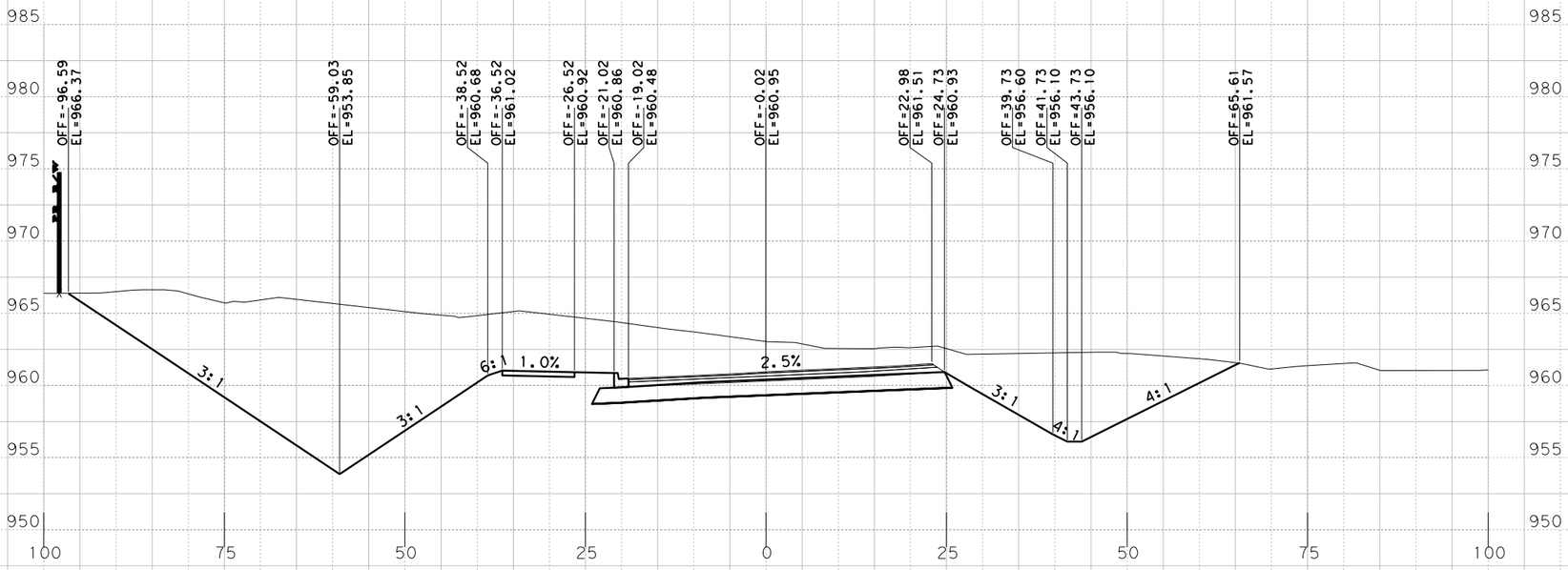

Sta. 639+50.0000 R1

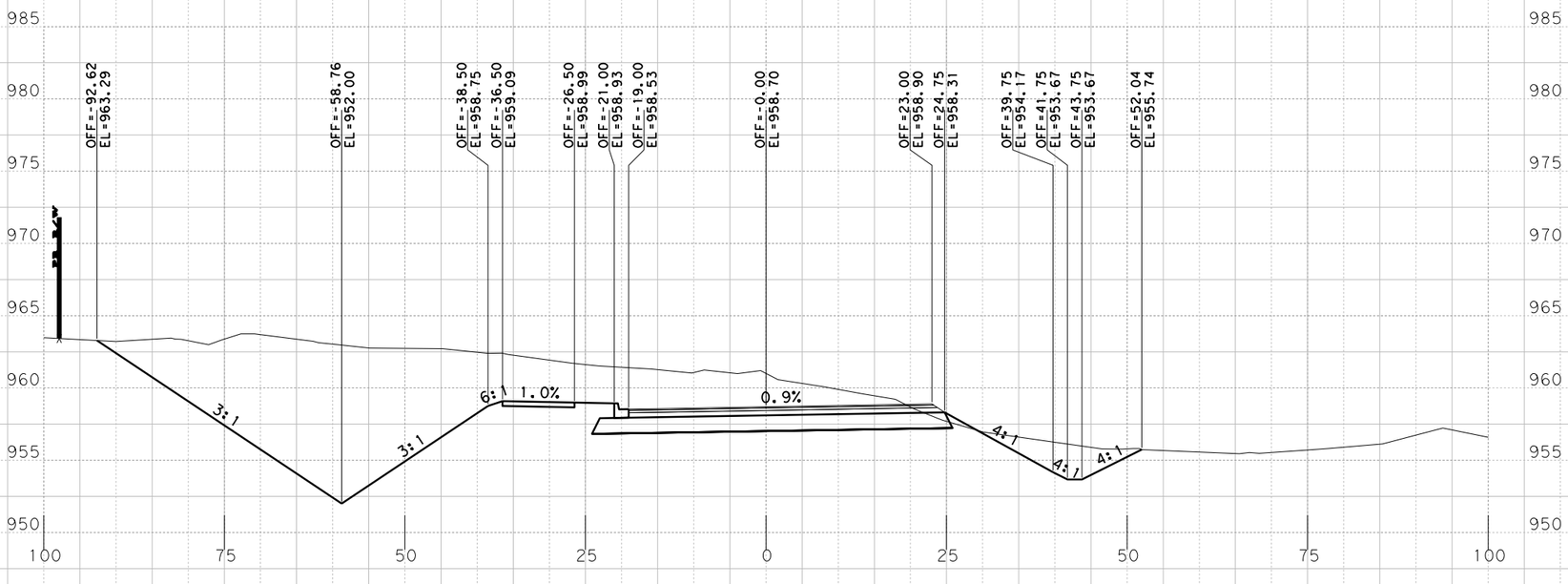

Sta. 639+00.0000 R1

PRELIMINARY
RM 2243
PHASE IA 100%

X-SECTIONS

SCALE: HORIZONTAL 1"=20'
VERTICAL 1"=10'

SHEET 130 OF 168

BGE, Inc.
101 W. Louis Henna Blvd., Suite 400
Austin, TX 78728
Tel: 512-879-0400 • www.bgeinc.com
TBPE Registration No. F-1046

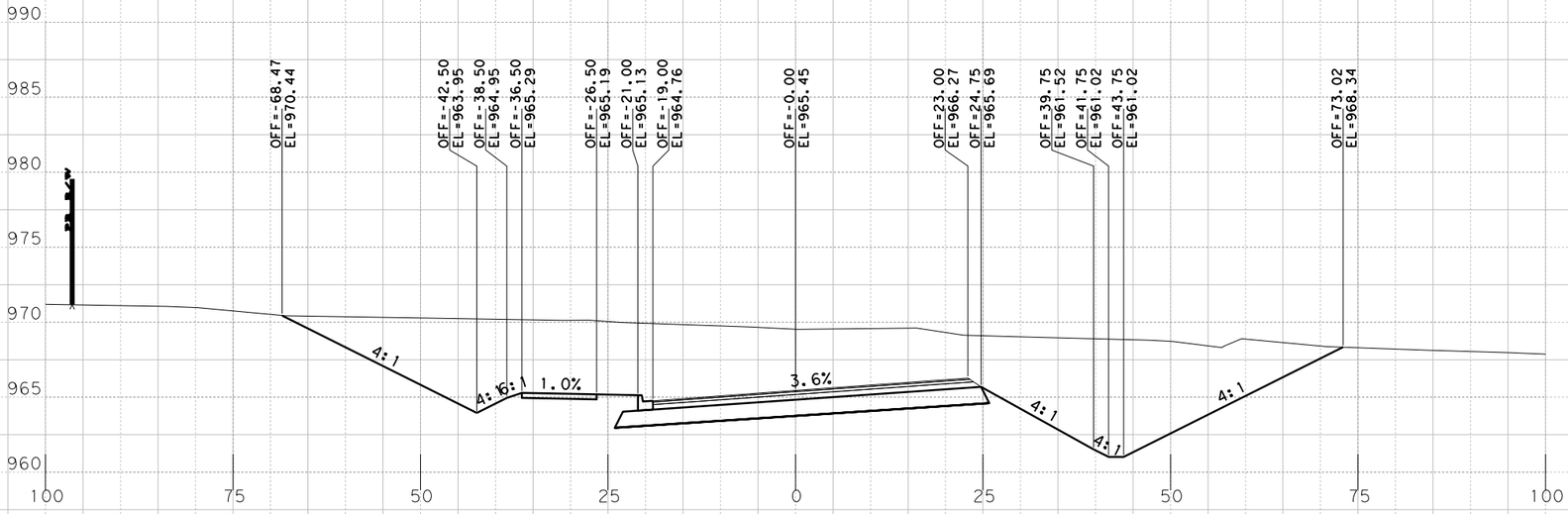

Sta. 640+50.0000 R1

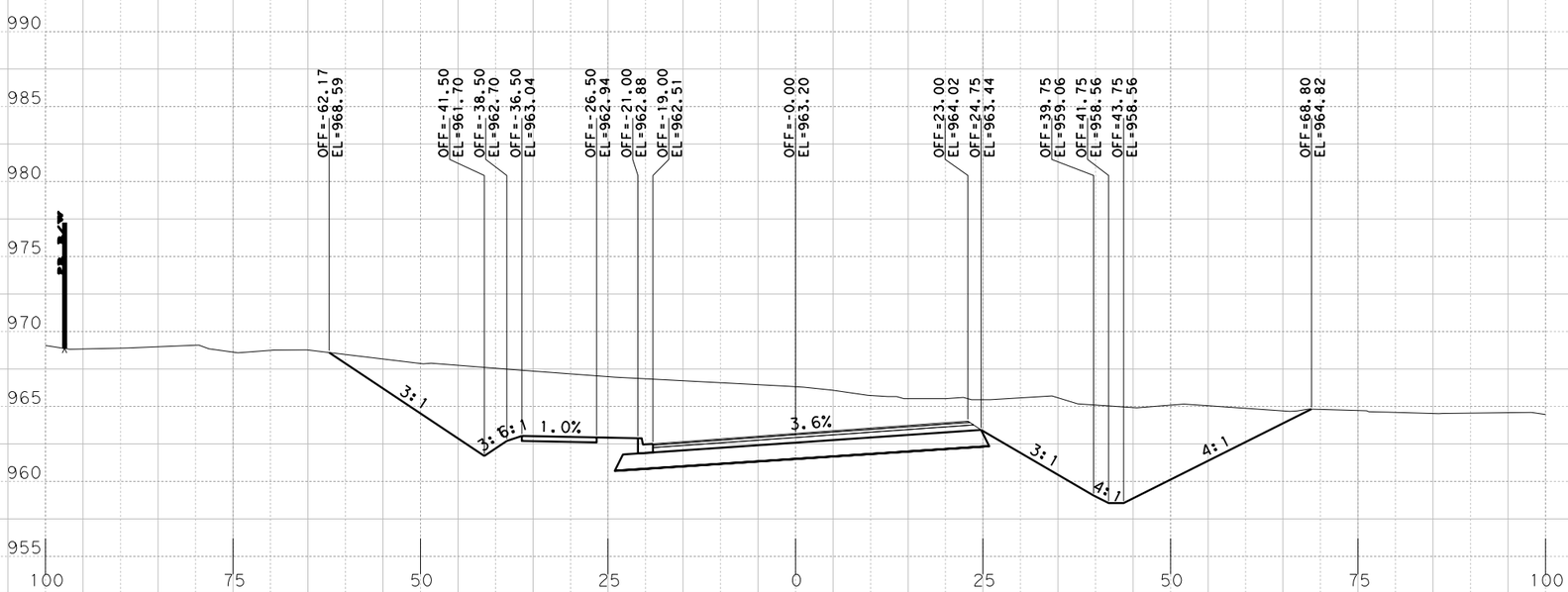

Sta. 640+00.0000 R1

PRELIMINARY
RM 2243
PHASE IA 100%

X-SECTIONS

SCALE: HORIZONTAL 1"=20'
VERTICAL 1"=10'

SHEET 131 OF 168

BGE, Inc.
101 W. Louis Henna Blvd., Suite 400
Austin, TX 78728
Tel: 512-879-0400 • www.bgeinc.com
TBPE Registration No. F-1046

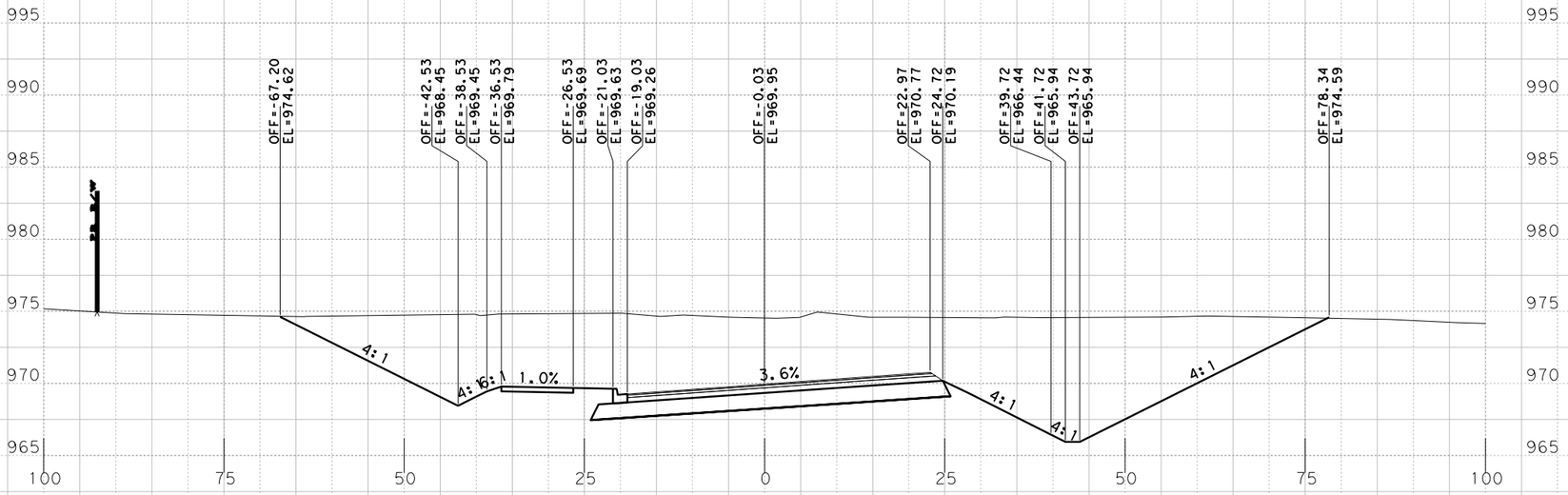

Sta. 641+50.0000 R1

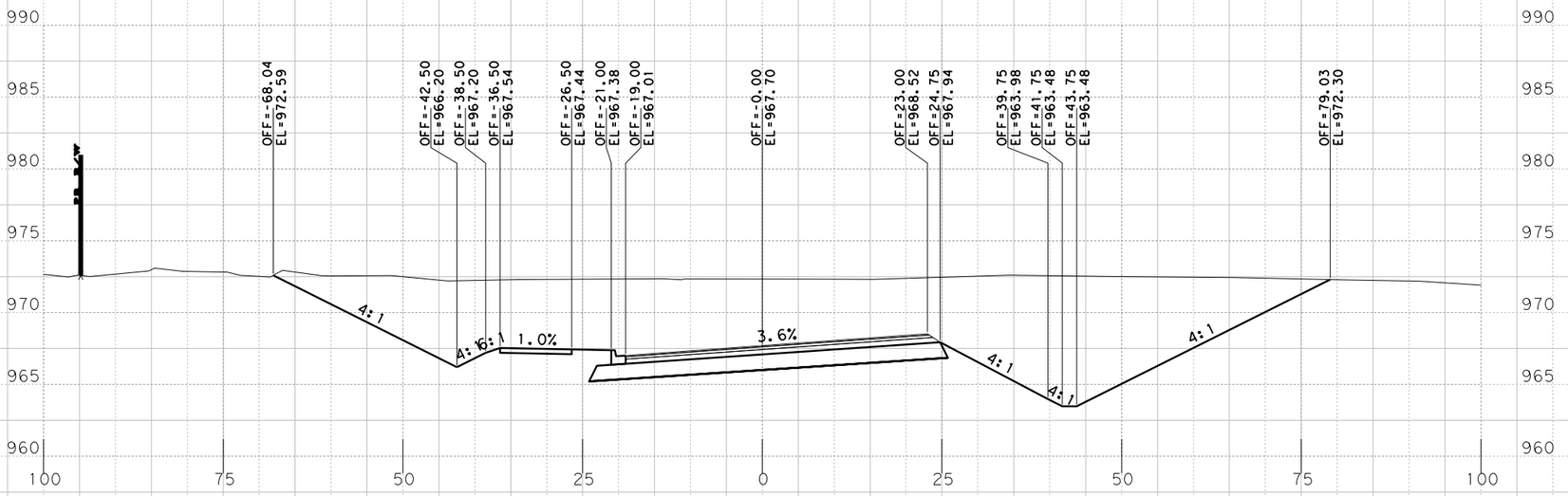

Sta. 641+00.0000 R1

PRELIMINARY
RM 2243
PHASE IA 100%
X-SECTIONS

SCALE: HORIZONTAL 1"=20'
VERTICAL 1"=10'

SHEET 132 OF 168

BGE, Inc.
101 W. Louis Henna Blvd., Suite 400
Austin, TX 78728
Tel: 512-879-0400 • www.bgeinc.com
TBPE Registration No. F-1046

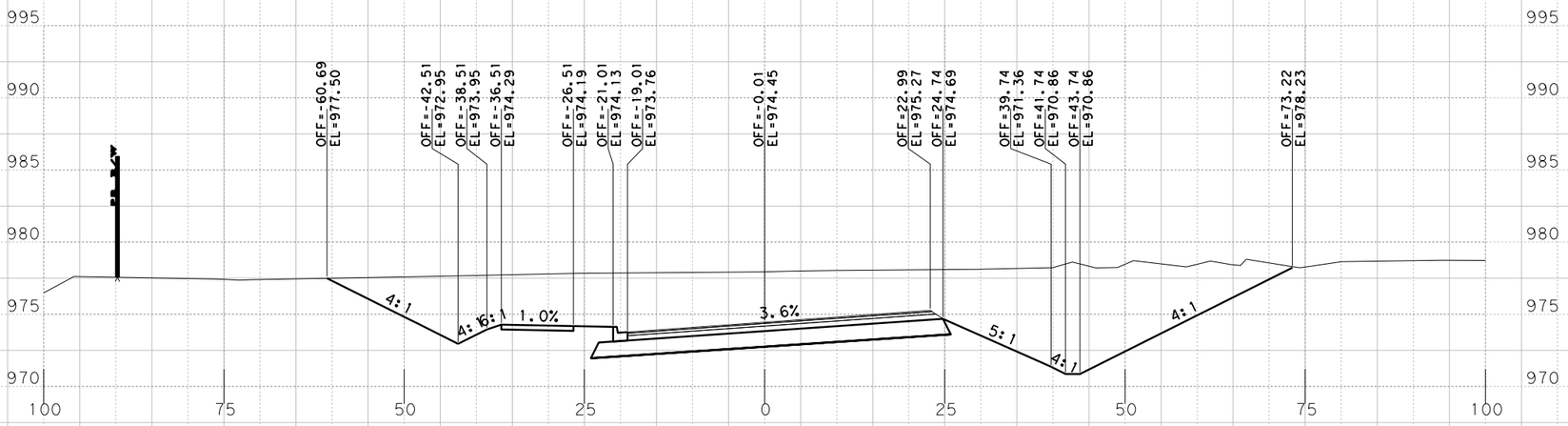

Sta. 642+50.0000 R1

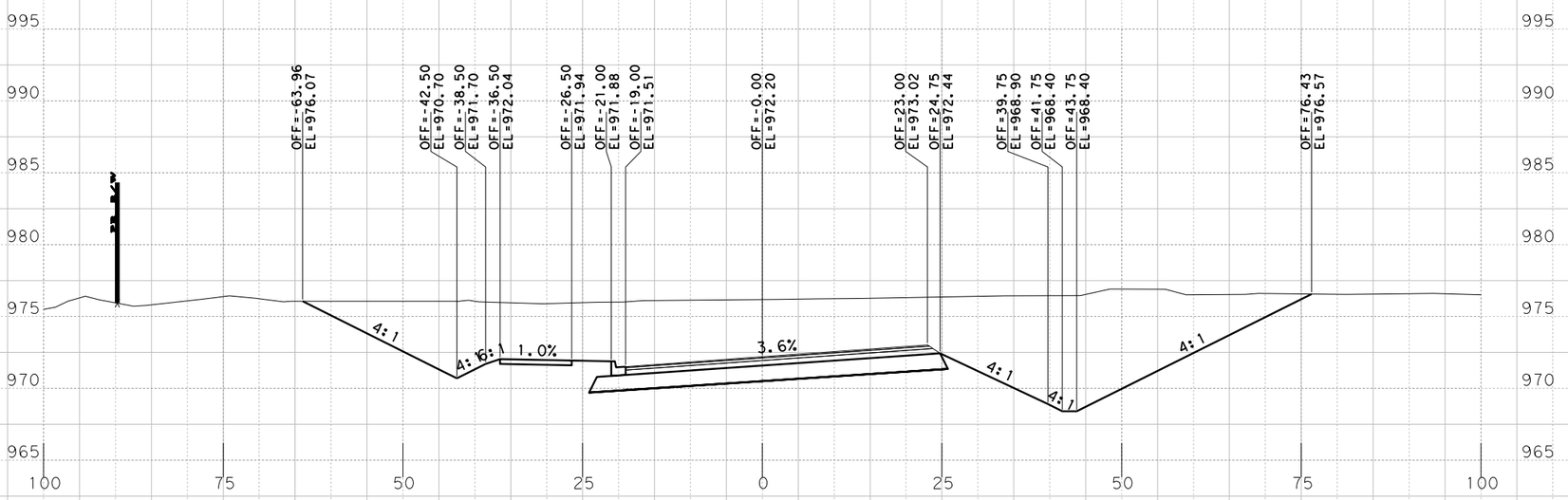

Sta. 642+00.0000 R1

PRELIMINARY
RM 2243
PHASE IA 100%
X-SECTIONS

SCALE: HORIZONTAL 1"=20'
VERTICAL 1"=10'

SHEET 133 OF 168

BGE, Inc.
101 W. Louis Henna Blvd., Suite 400
Austin, TX 78728
Tel: 512-879-0400 • www.bgeinc.com
TBPE Registration No. F-1046

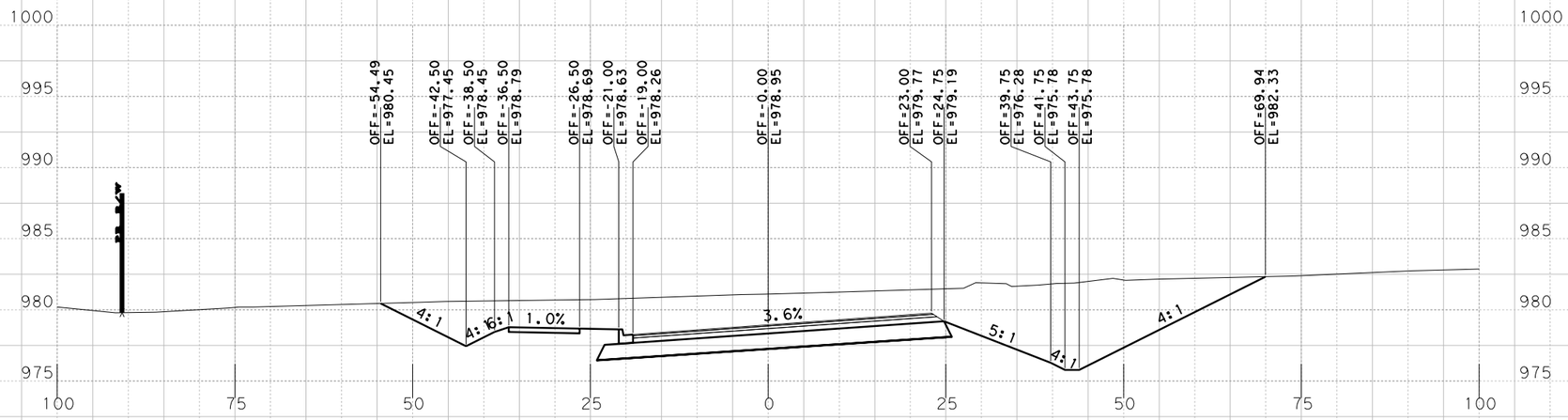

Sta. 643+50.0000 R1

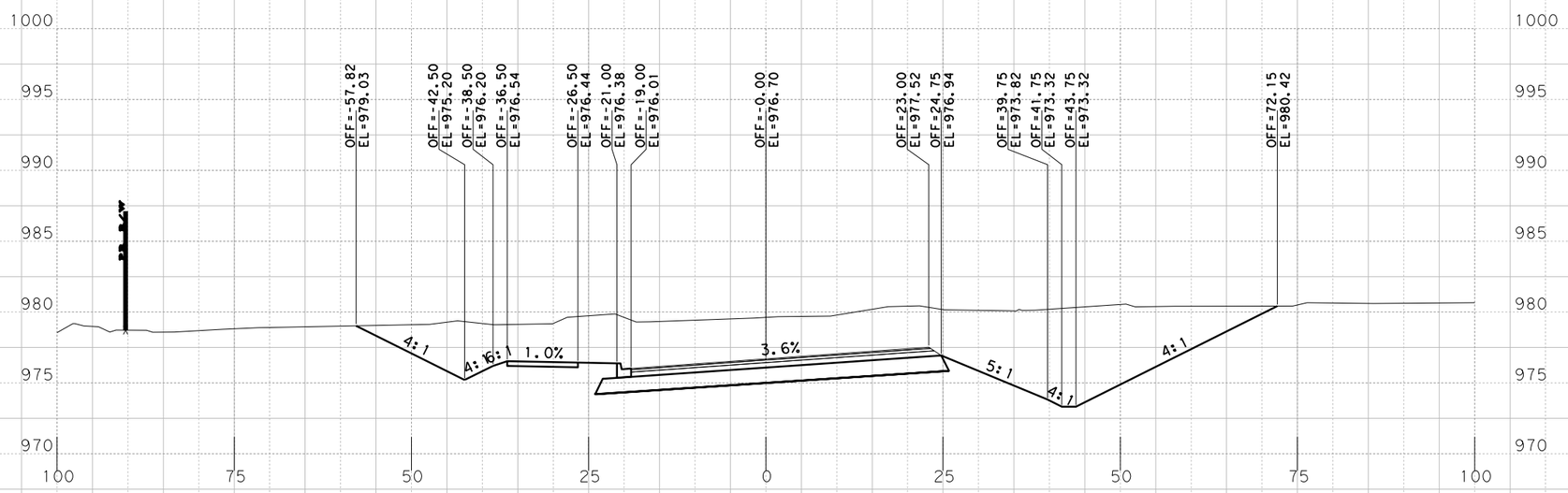

Sta. 643+00.0000 R1

PRELIMINARY
RM 2243
PHASE IA 100%

X-SECTIONS

SCALE: HORIZONTAL 1"=20'
VERTICAL 1"=10'

SHEET 134 OF 168

BGE, Inc.
101 W. Louis Henna Blvd., Suite 400
Austin, TX 78728
Tel: 512-879-0400 • www.bgeinc.com
TBPE Registration No. F-1046

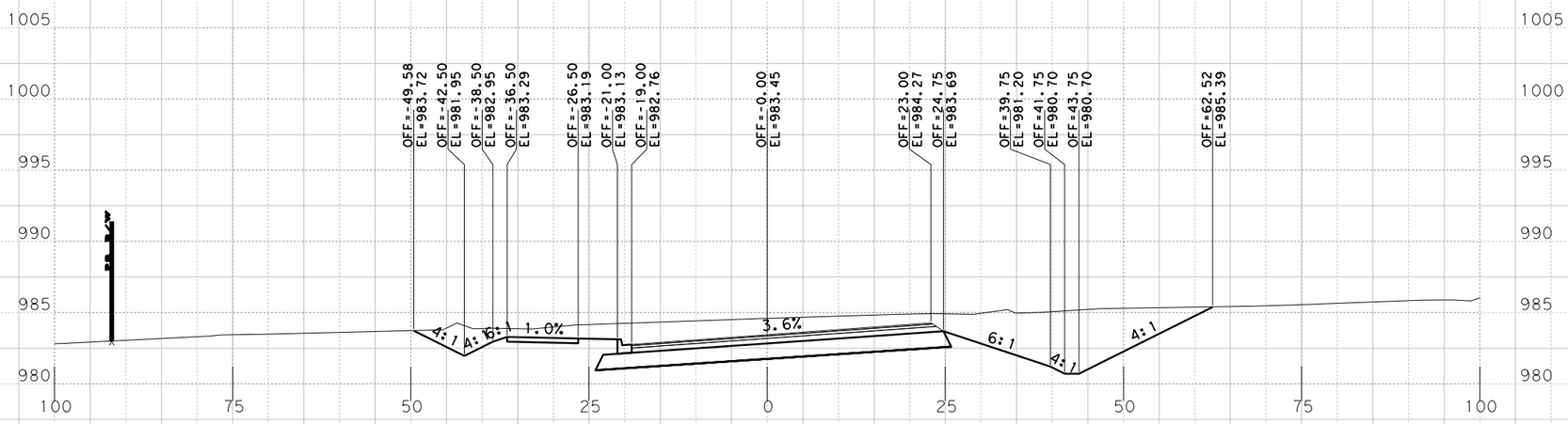

S+a. 644+50.0000 R1

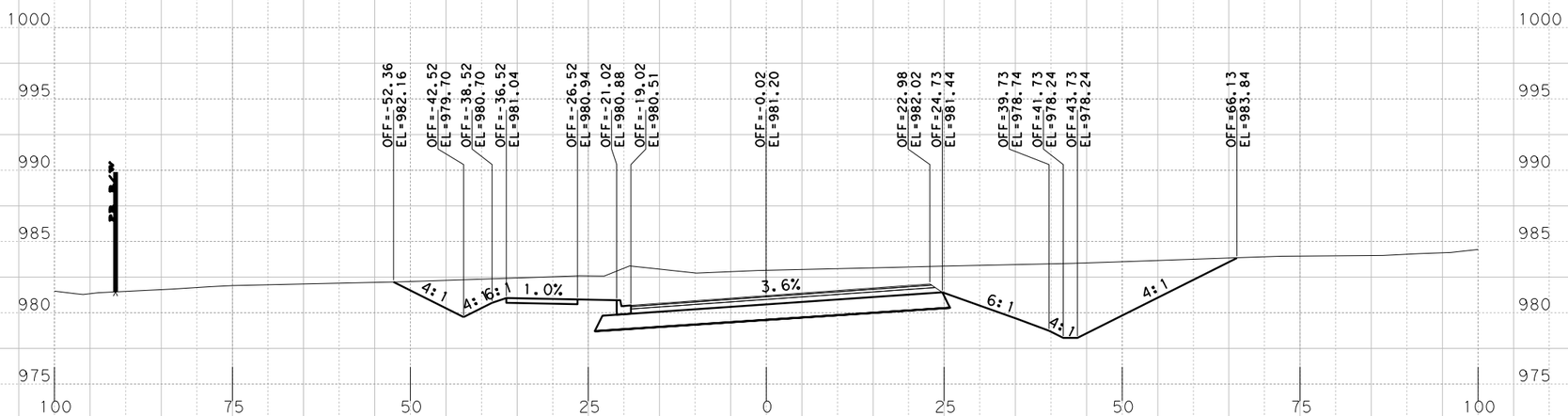

S+a. 644+00.0000 R1

PRELIMINARY
RM 2243
PHASE IA 100%

X-SECTIONS

SCALE: HORIZONTAL 1"=20'
VERTICAL 1"=10'

SHEET 135 OF 168

BGE, Inc.
101 W. Louis Henna Blvd., Suite 400
Austin, TX 78728
Tel: 512-879-0400 • www.bgeinc.com
TBPE Registration No. F-1046

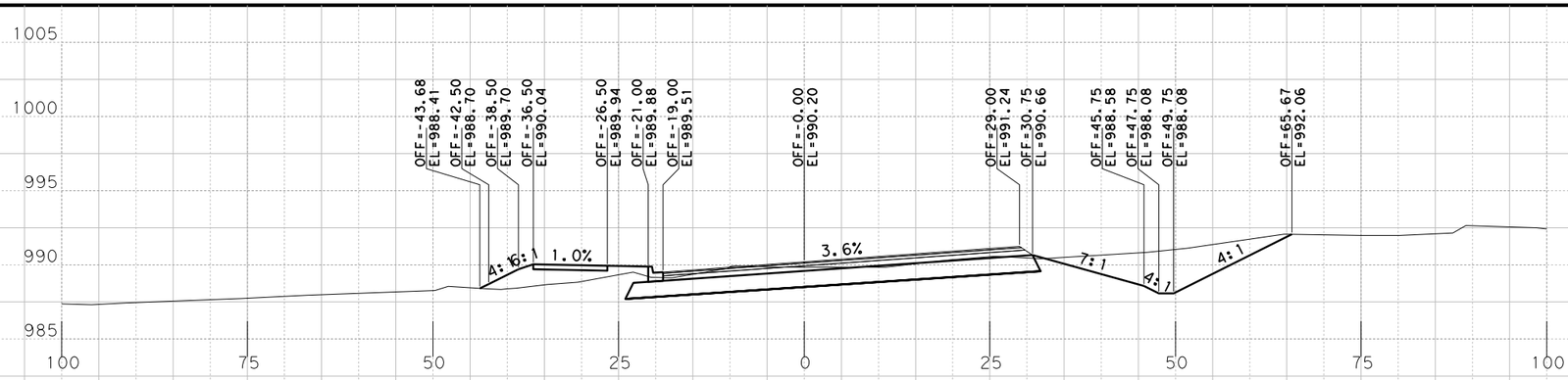

Sta. 646+00.0000 R1

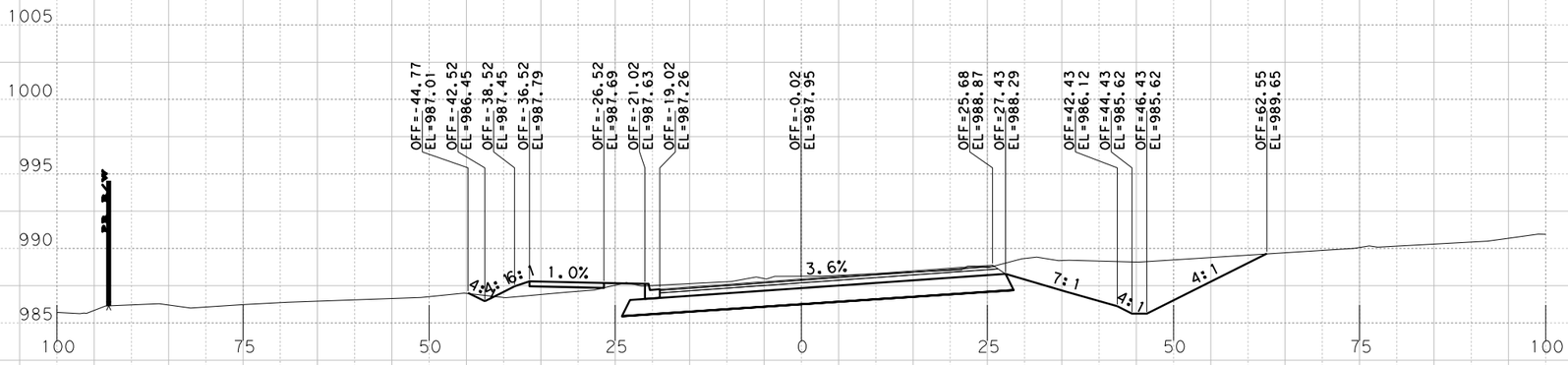

Sta. 645+50.0000 R1

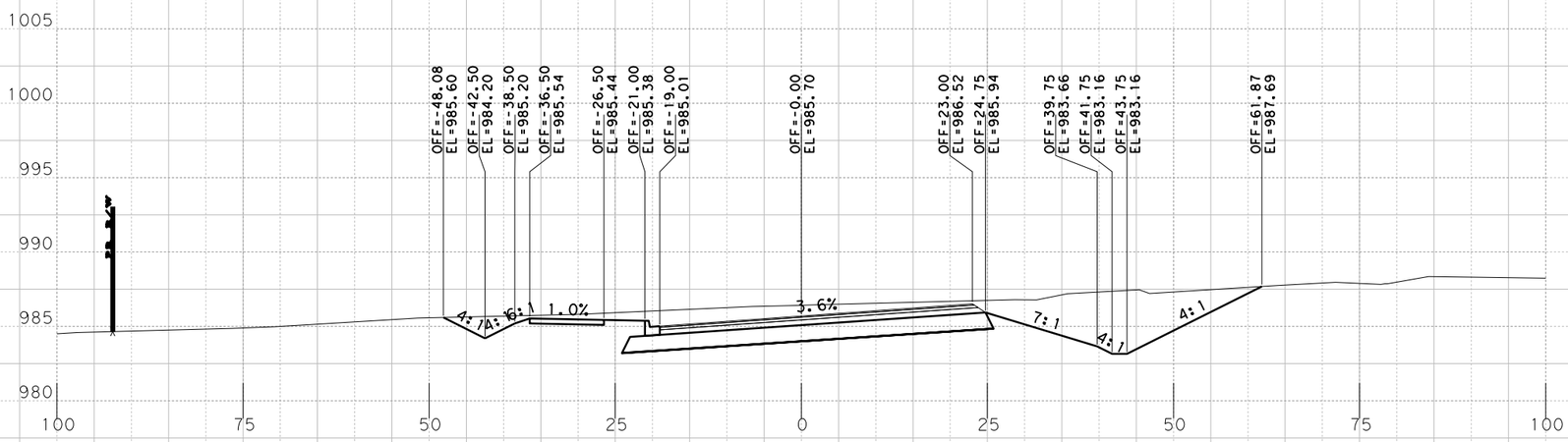

Sta. 645+00.0000 R1

PRELIMINARY
RM 2243
PHASE IA 100%

X-SECTIONS

SCALE: HORIZONTAL 1"=20'
VERTICAL 1"=10'

BGE, Inc.
101 W. Louis Henna Blvd., Suite 400
Austin, TX 78728
Tel: 512-879-0400 • www.bgeinc.com
TBPE Registration No. F-1046

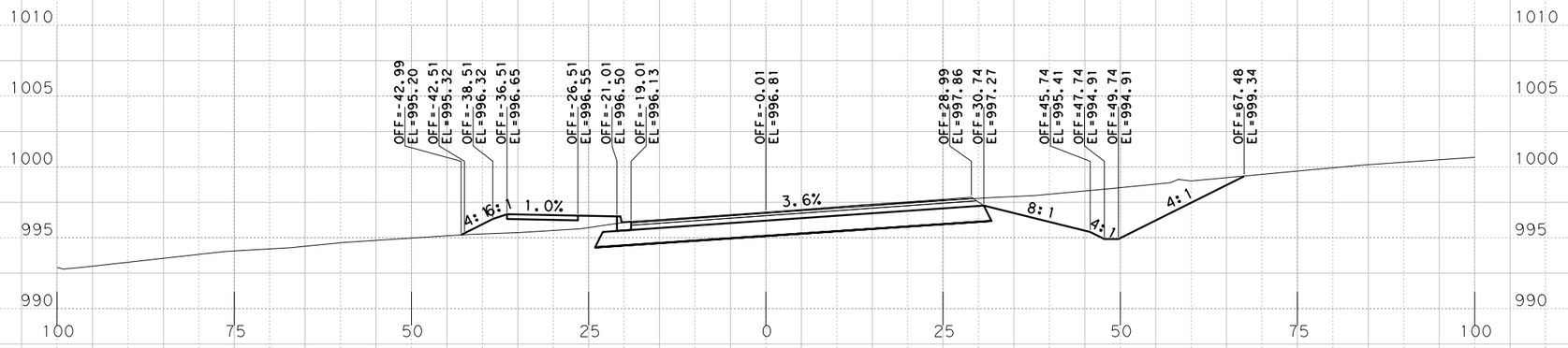

Sta. 647+50.0000 R1

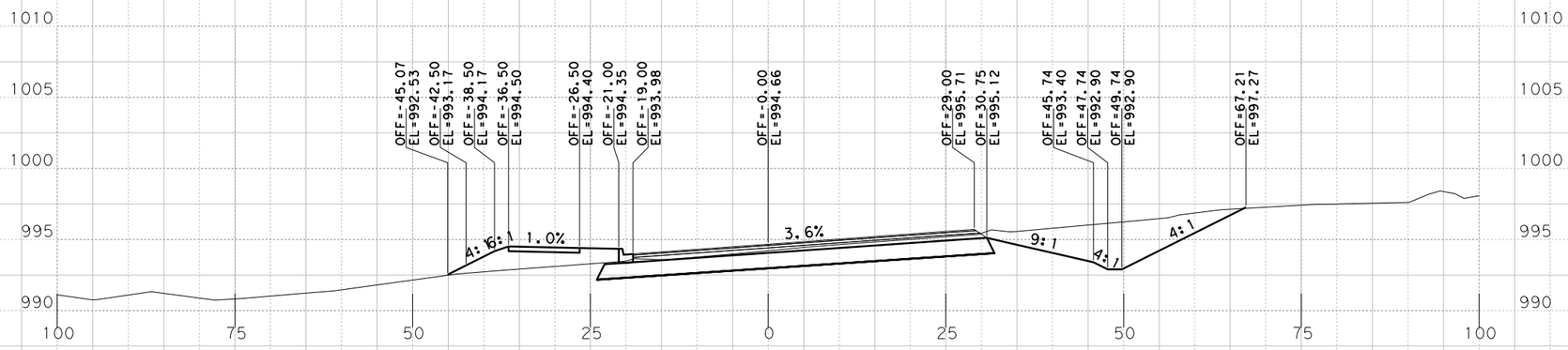

Sta. 647+00.0000 R1

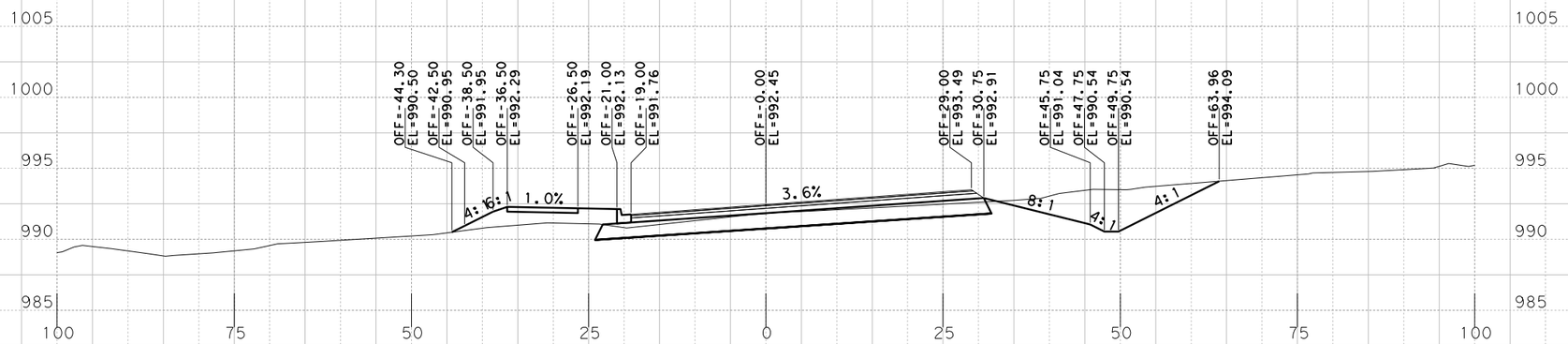

Sta. 646+50.0000 R1

PRELIMINARY
RM 2243
PHASE IA 100%

X-SECTIONS

SCALE: HORIZONTAL 1"=20'
VERTICAL 1"=10'

SHEET 137 OF 168

BGE, Inc.
101 W. Louis Henna Blvd., Suite 400
Austin, TX 78728
Tel: 512-879-0400 • www.bgeinc.com
TBPE Registration No. F-1046

DW# 20

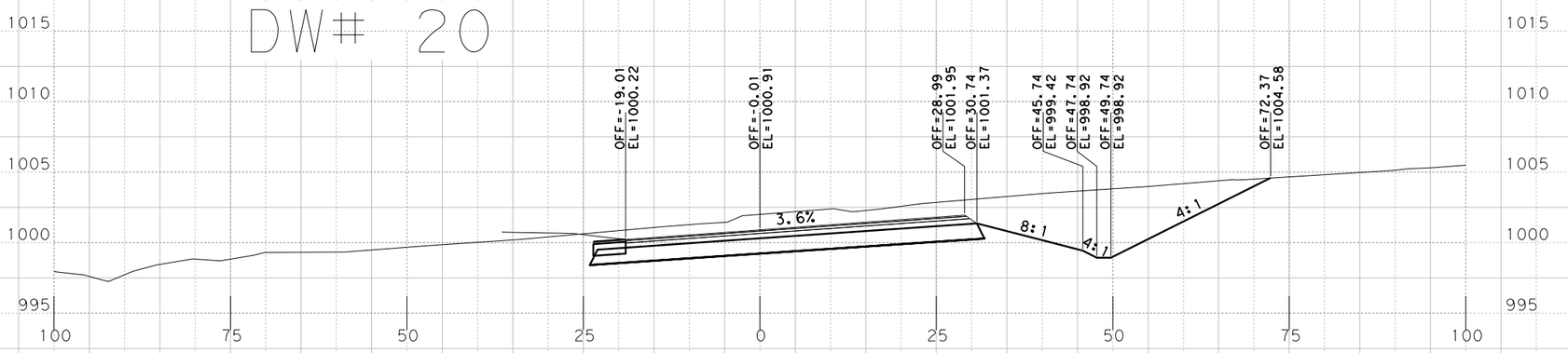

Sta. 648+50.0000 R1

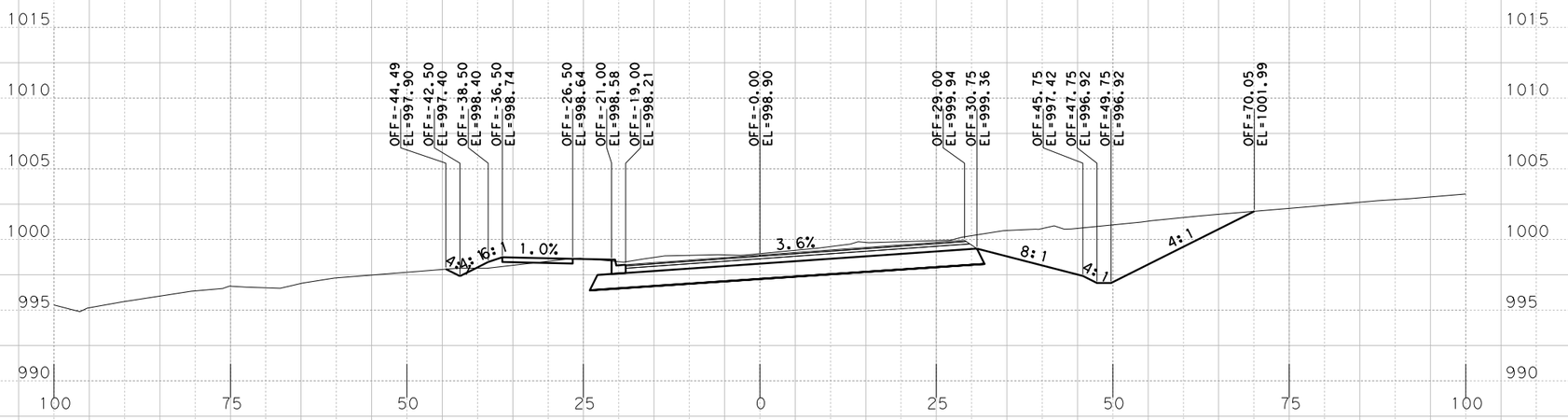

Sta. 648+00.0000 R1

PRELIMINARY
RM 2243
PHASE IA 100%

X-SECTIONS

SCALE: HORIZONTAL 1"=20'
VERTICAL 1"=10'

SHEET 138 OF 168

BGE, Inc.
101 W. Louis Henna Blvd., Suite 400
Austin, TX 78728
Tel: 512-879-0400 • www.bgeinc.com
TBPE Registration No. F-1046

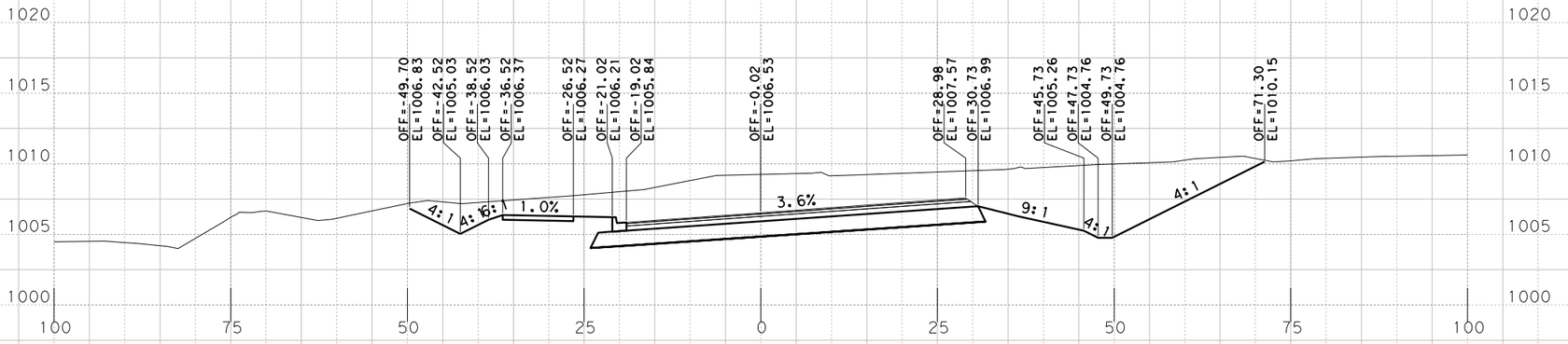

S+a. 650+00.0000 R1

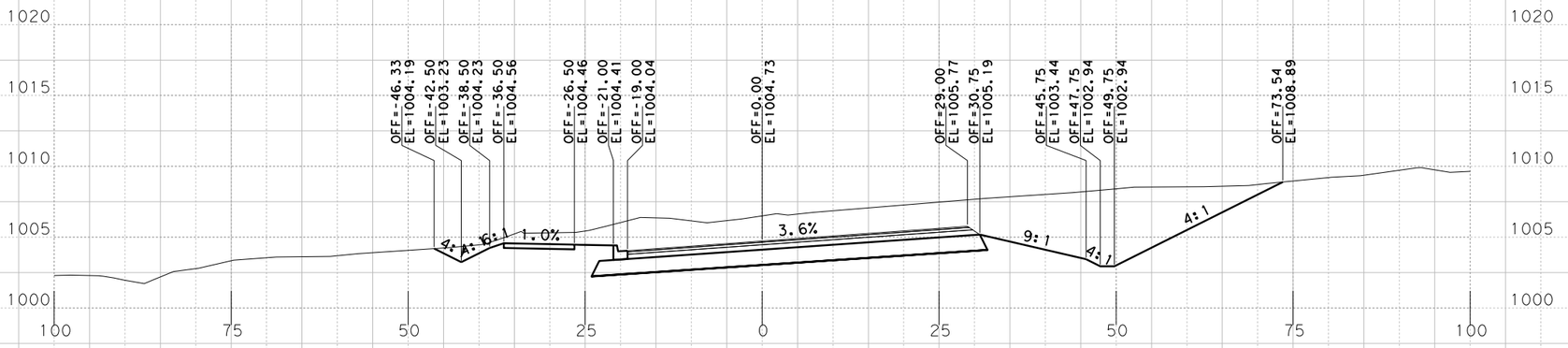

S+a. 649+50.0000 R1

DW# 20

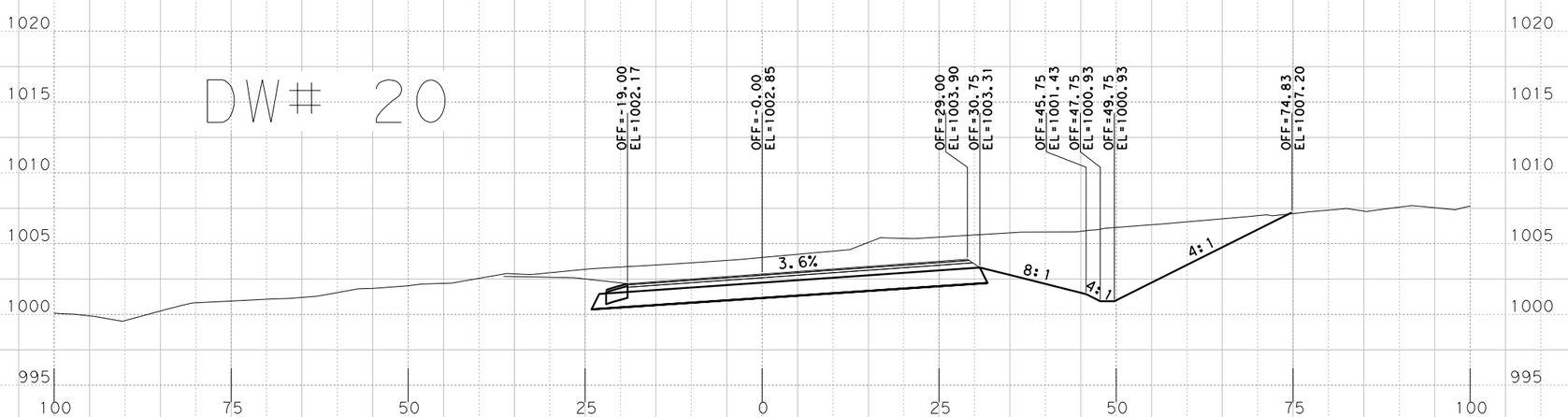

S+a. 649+00.0000 R1

PRELIMINARY
RM 2243
PHASE IA 100%

X-SECTIONS

SCALE: HORIZONTAL 1"=20'
VERTICAL 1"=10'

SHEET 139 OF 168

BGE, Inc.
101 W. Louis Henna Blvd., Suite 400
Austin, TX 78728
Tel: 512-879-0400 • www.bgeinc.com
TBPE Registration No. F-1046

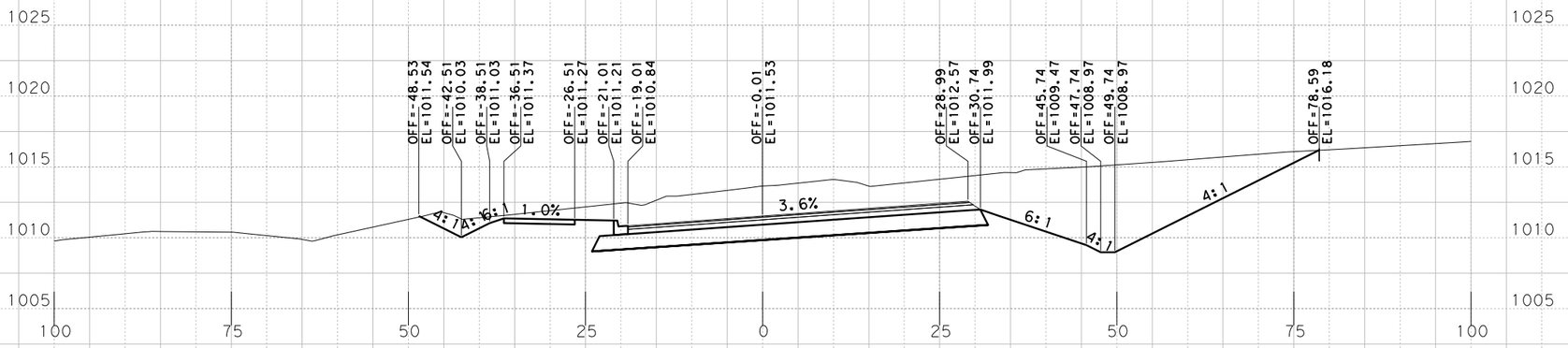

Sta. 651+50.0000 R1

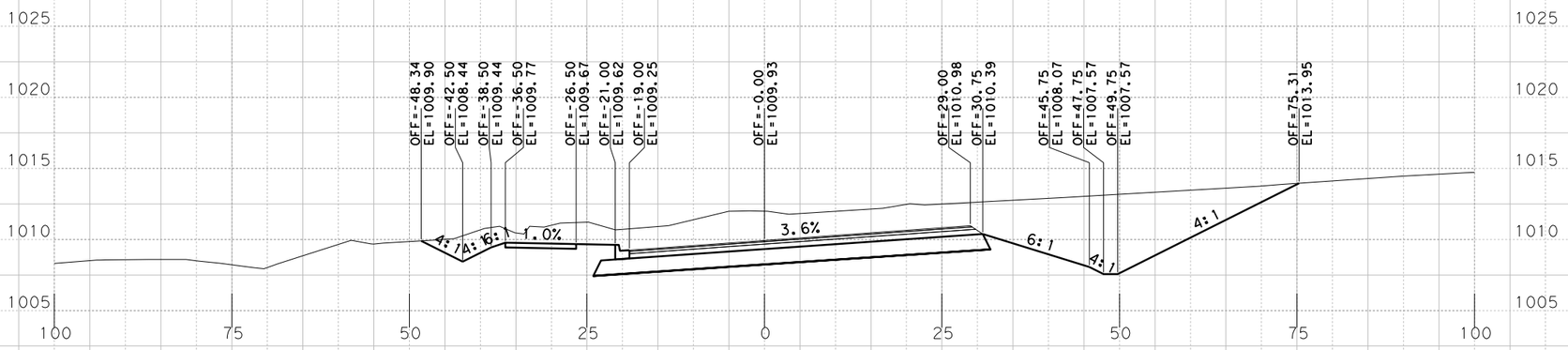

Sta. 651+00.0000 R1

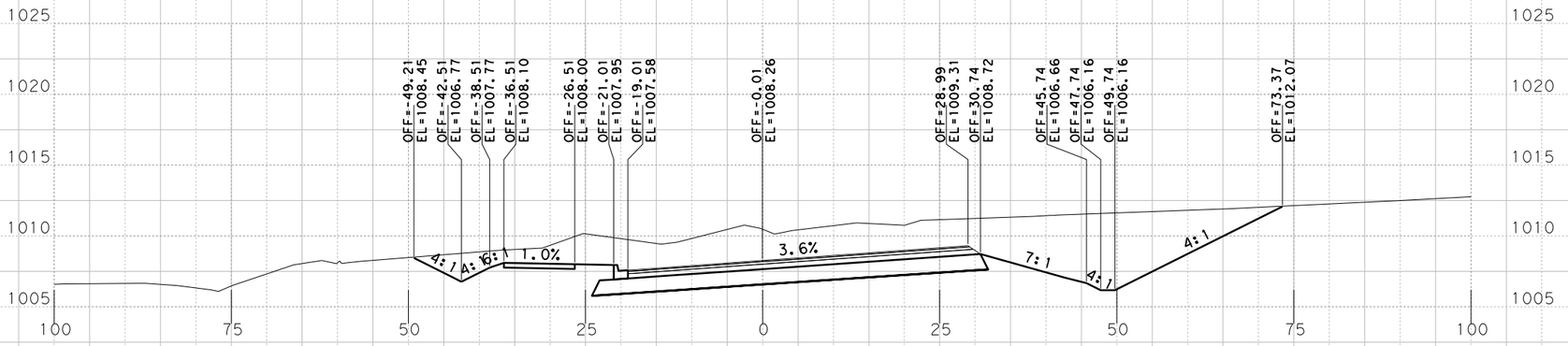

Sta. 650+50.0000 R1

PRELIMINARY
RM 2243
PHASE 1A 100%

X-SECTIONS

SCALE: HORIZONTAL 1"=20'
VERTICAL 1"=10'

SHEET 140 OF 168

BGE, Inc.
101 W. Louis Henna Blvd., Suite 400
Austin, TX 78728
Tel: 512-879-0400 • www.bgeinc.com
TBPE Registration No. F-1046

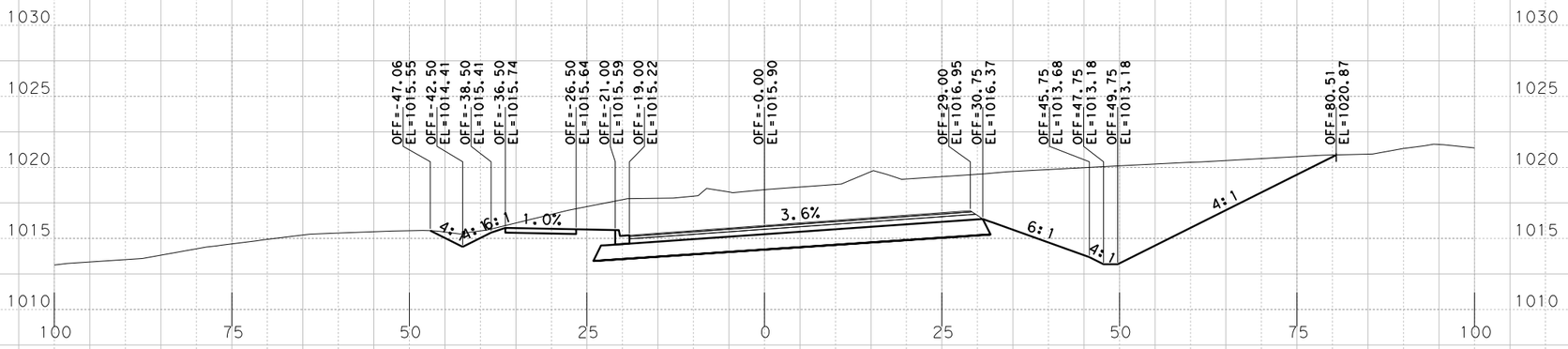

Sta. 653+00.0000 R1

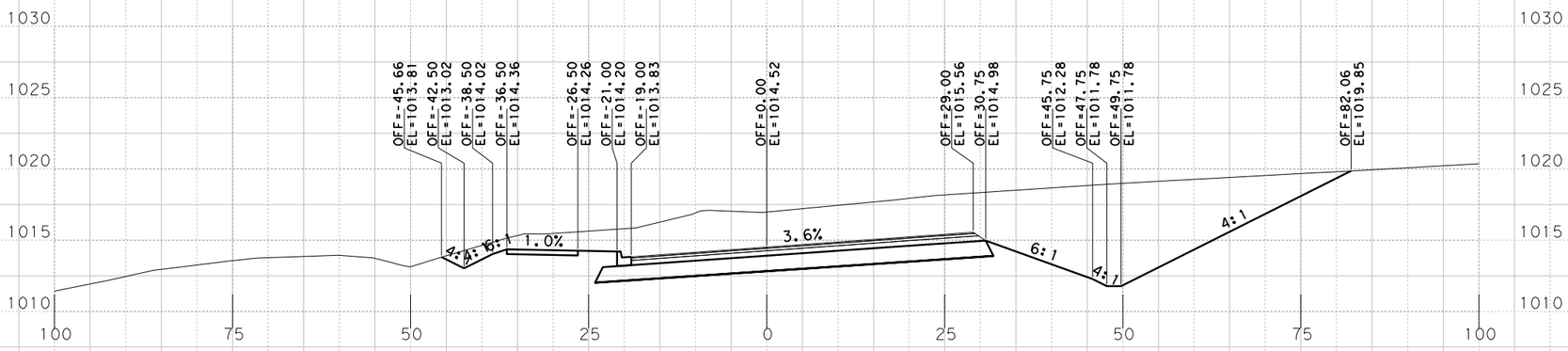

Sta. 652+50.0000 R1

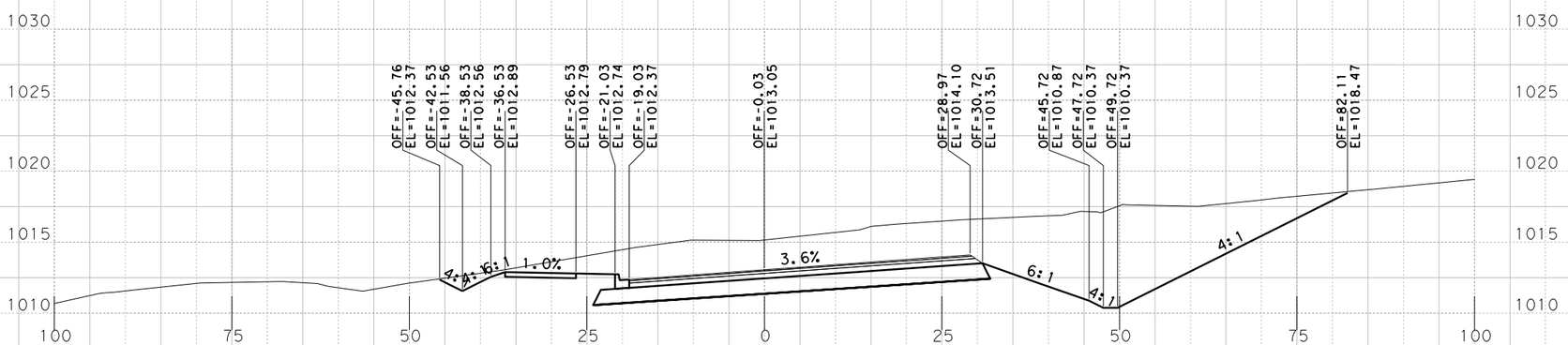

Sta. 652+00.0000 R1

PRELIMINARY
RM 2243
PHASE IA 100%

X-SECTIONS

SCALE: HORIZONTAL 1"=20'
VERTICAL 1"=10'

SHEET 141 OF 168

BGE, Inc.
101 W. Louis Henna Blvd., Suite 400
Austin, TX 78728
Tel: 512-879-0400 • www.bgeinc.com
TBPE Registration No. F-1046

DW# 21

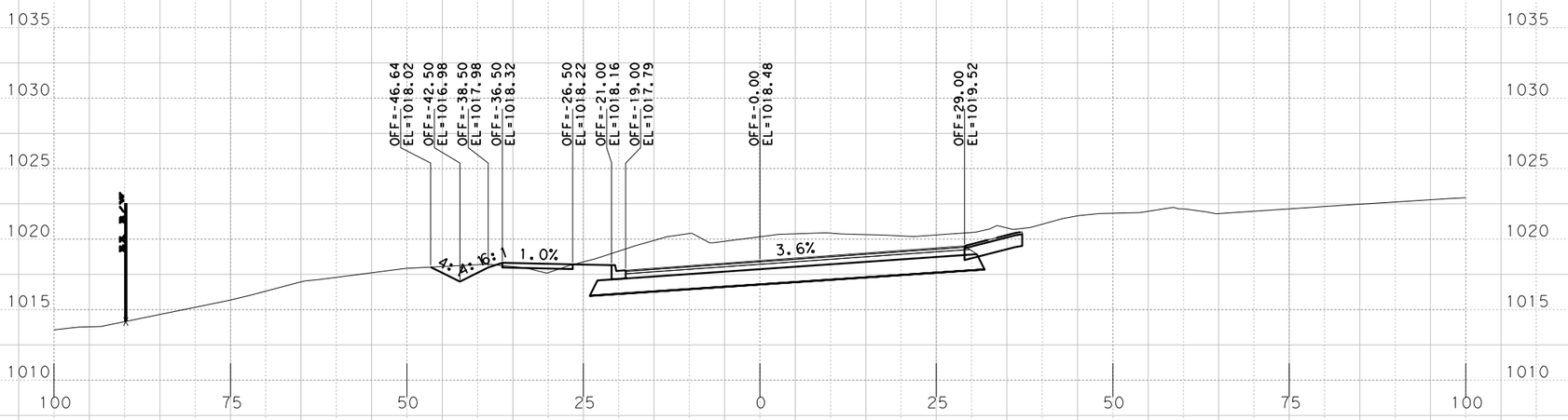

Sta. 654+00.0000 R1

DW# 21

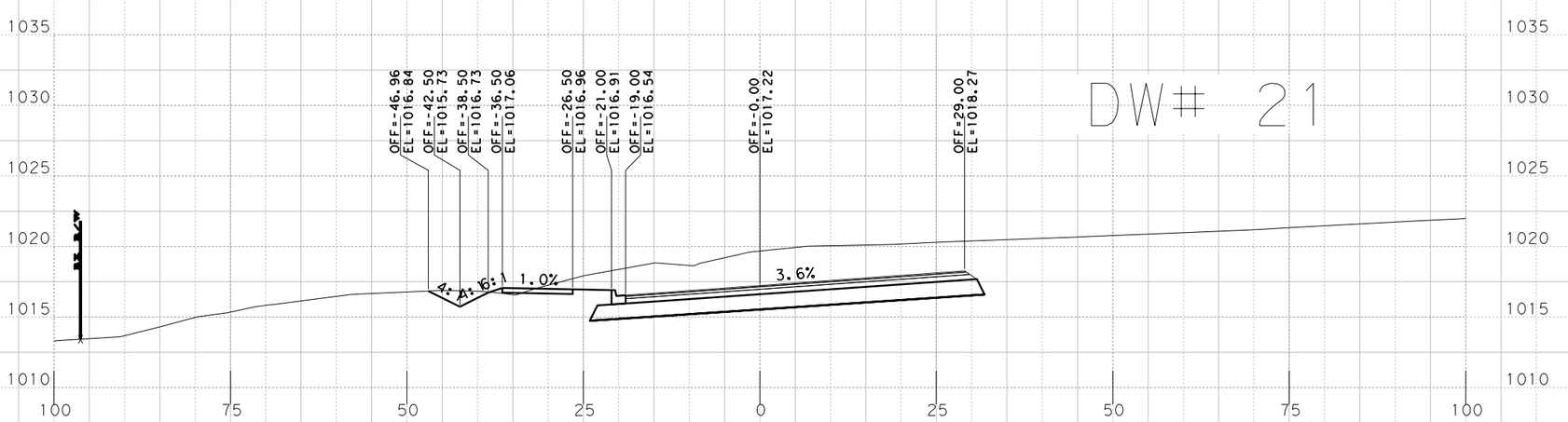

Sta. 653+50.0000 R1

PRELIMINARY
RM 2243
PHASE IA 100%

X-SECTIONS

SCALE: HORIZONTAL 1"=20'
VERTICAL 1"=10'

SHEET 142 OF 168

BGE, Inc.
101 W. Louis Henna Blvd., Suite 400
Austin, TX 78728
Tel: 512-879-0400 • www.bgeinc.com
TBPE Registration No. F-1046

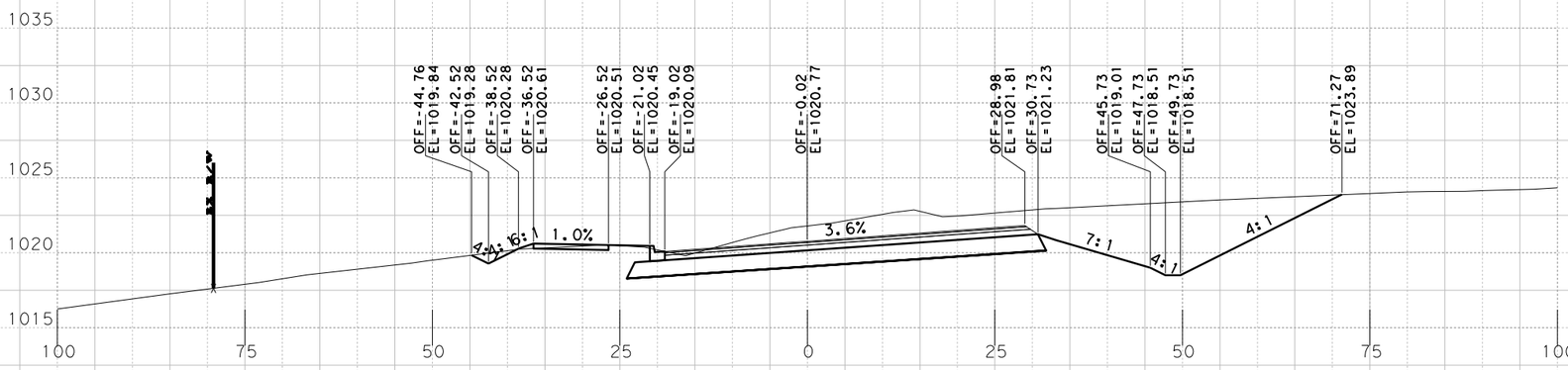

Sta. 655+00.0000 R1

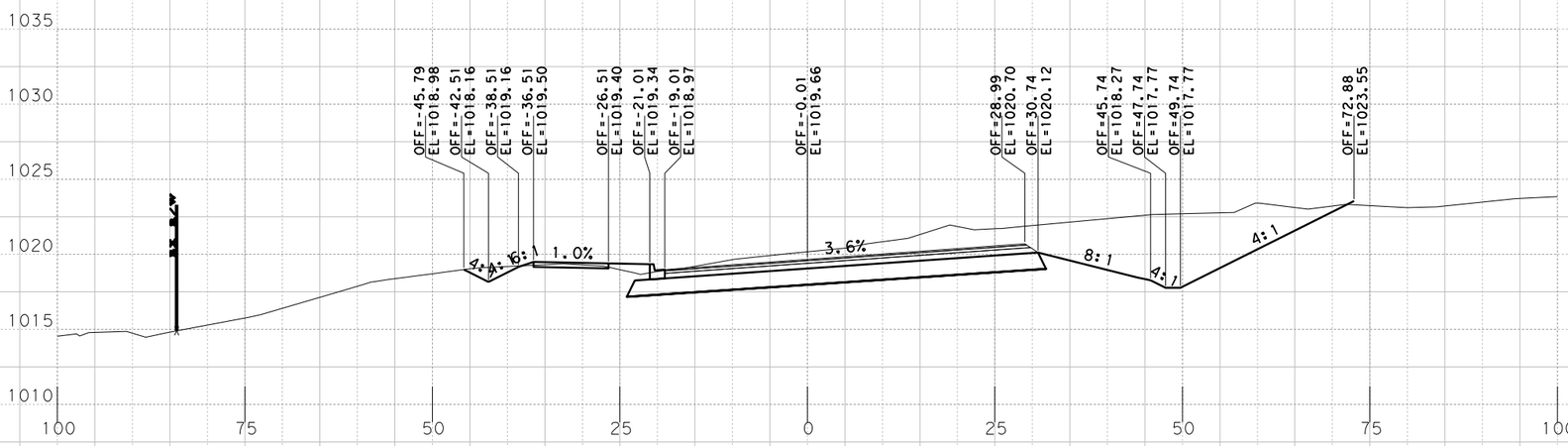

Sta. 654+50.0000 R1

PRELIMINARY
RM 2243
PHASE IA 100%

X-SECTIONS

SCALE: HORIZONTAL 1"=20'
VERTICAL 1"=10'

SHEET 143 OF 168

BGE, Inc.
101 W. Louis Henna Blvd., Suite 400
Austin, TX 78728
Tel: 512-879-0400 • www.bgeinc.com
TBPE Registration No. F-1046

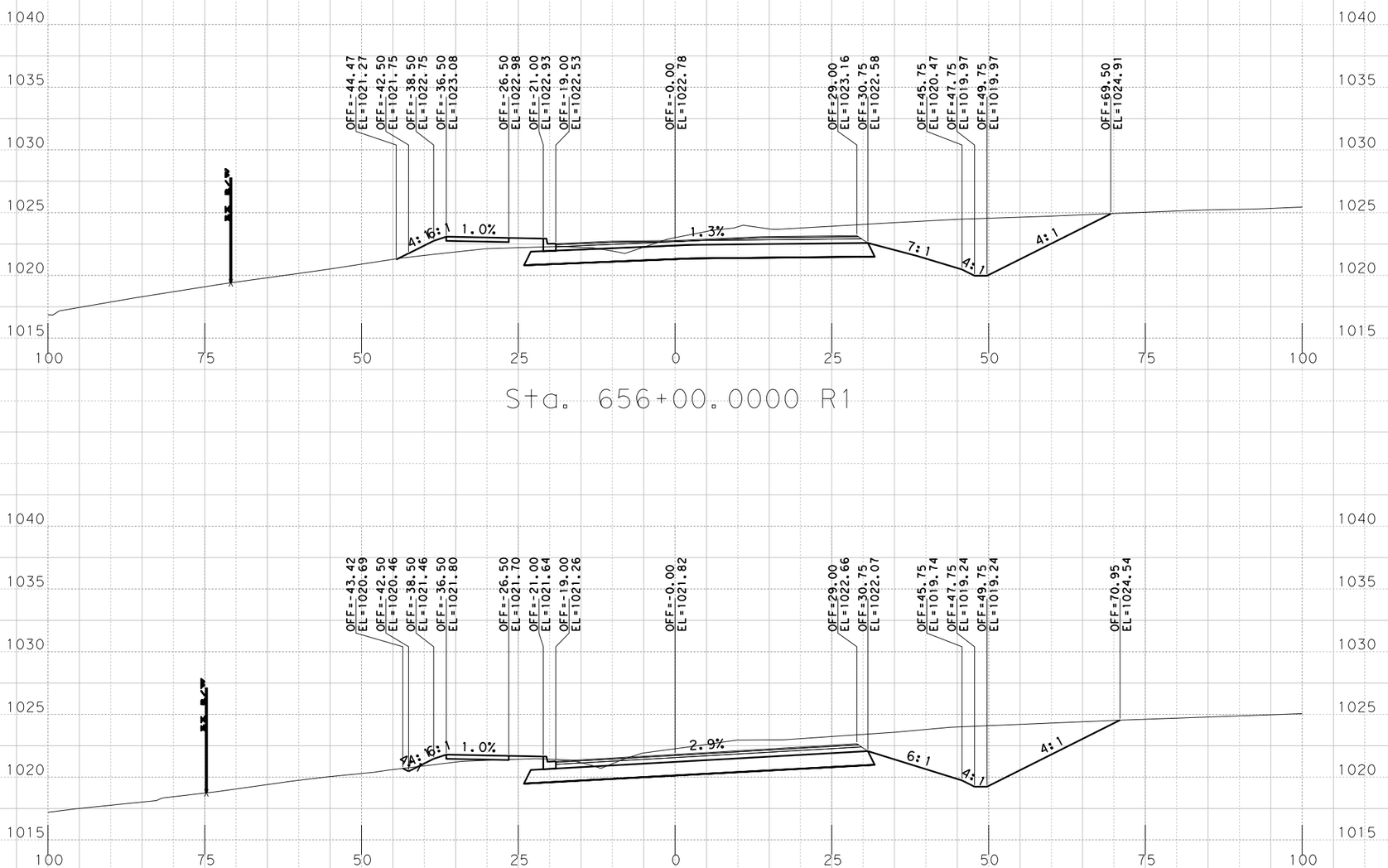

PRELIMINARY
RM 2243
PHASE 1A 100%
X-SECTIONS

SCALE: HORIZONTAL 1"=20'
VERTICAL 1"=10'

SHEET 144 OF 168

BGE, Inc.
101 W. Louis Henna Blvd., Suite 400
Austin, TX 78728
Tel: 512-879-0400 • www.bgeinc.com
TBPE Registration No. F-1046

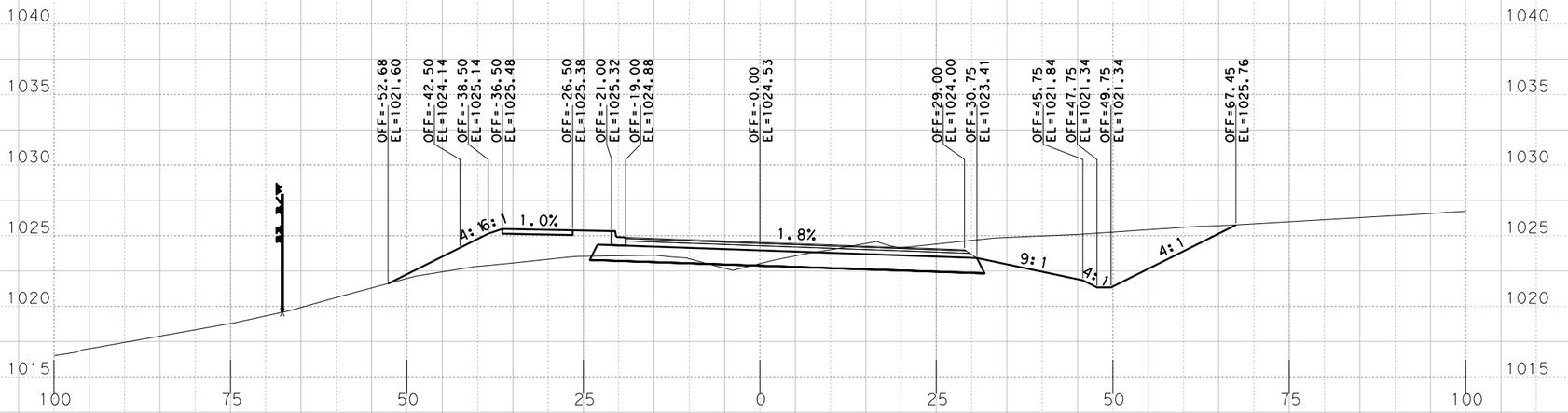

Sta. 657+00.0000 R1

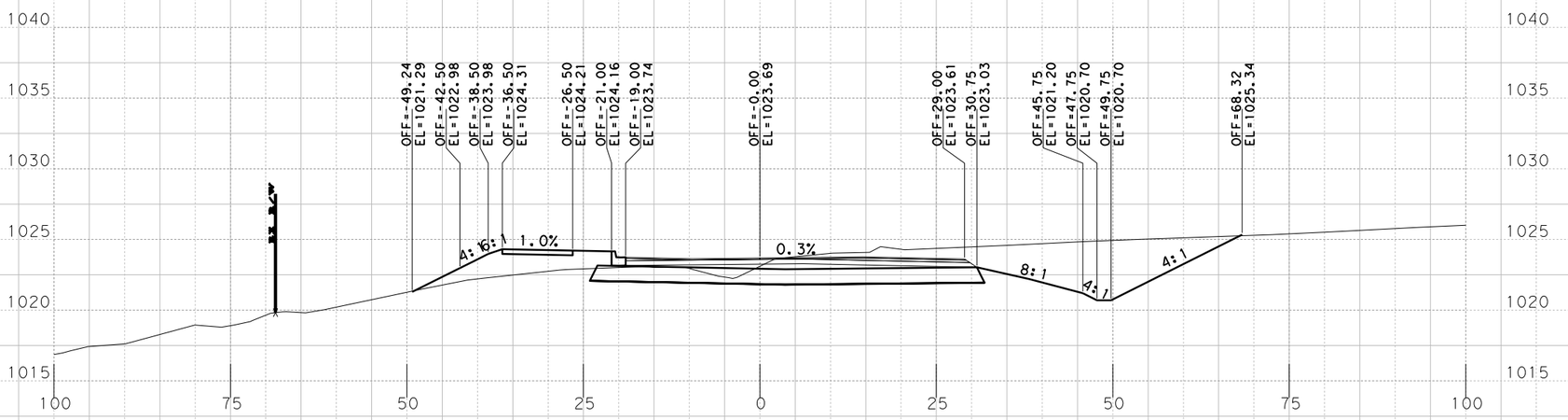

Sta. 656+50.0000 R1

PRELIMINARY
RM 2243
PHASE IA 100%

X-SECTIONS

SCALE: HORIZONTAL 1"=20'
VERTICAL 1"=10'

SHEET 145 OF 168

BGE, Inc.
101 W. Louis Henna Blvd., Suite 400
Austin, TX 78728
Tel: 512-879-0400 • www.bgeinc.com
TBPE Registration No. F-1046

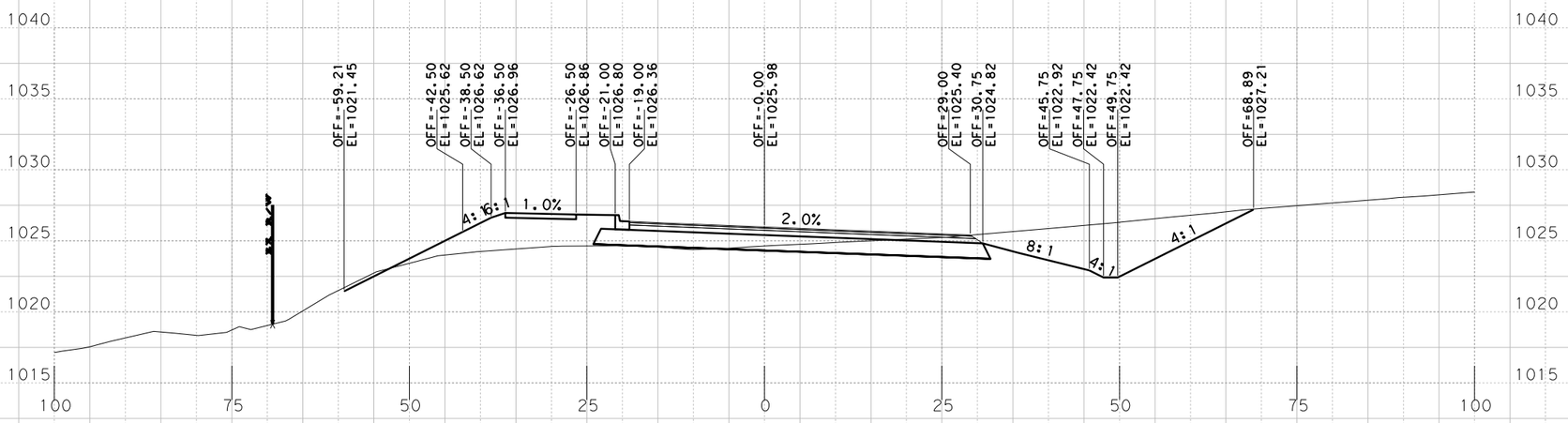

Sta. 658+00.0000 R1

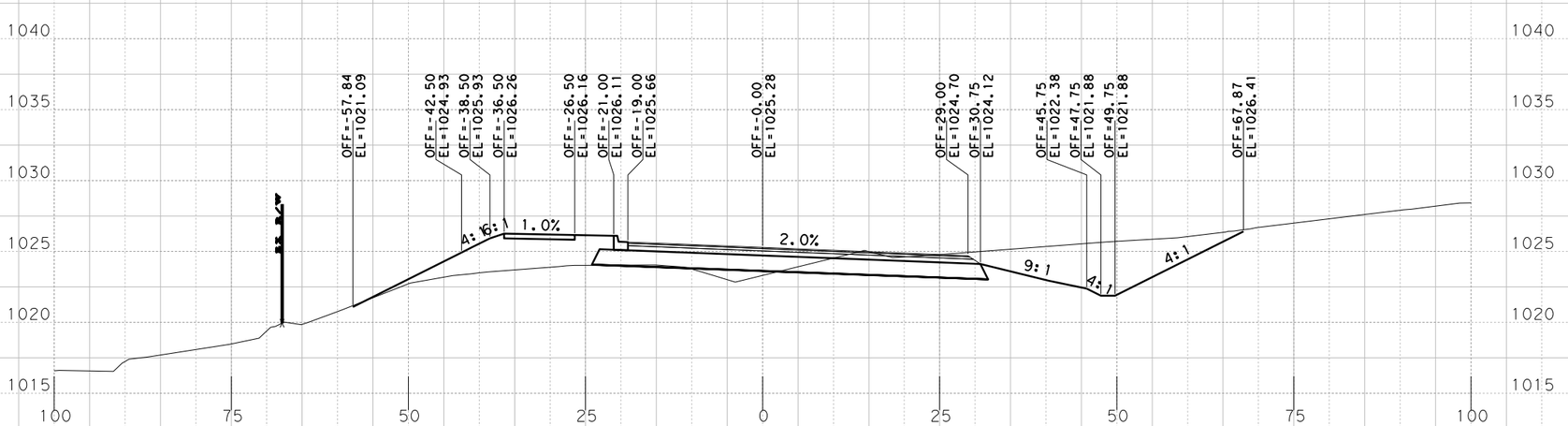

Sta. 657+50.0000 R1

PRELIMINARY
RM 2243
PHASE IA 100%

X-SECTIONS

SCALE: HORIZONTAL 1"=20'
VERTICAL 1"=10'

SHEET 146 OF 168

BGE, Inc.
101 W. Louis Henna Blvd., Suite 400
Austin, TX 78728
Tel: 512-879-0400 • www.bgeinc.com
TBPE Registration No. F-1046

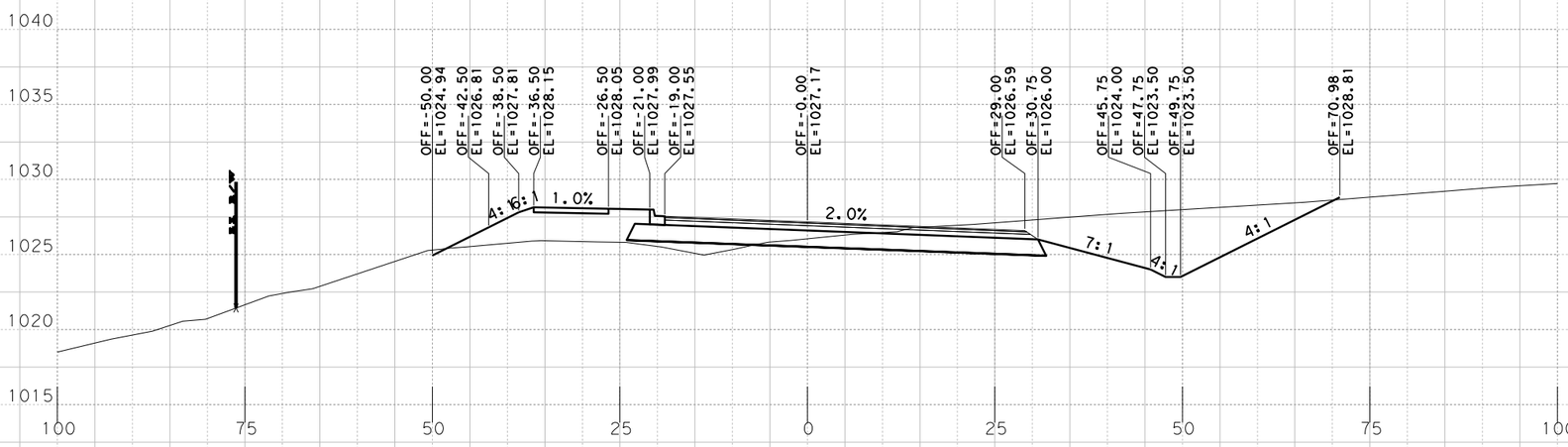

Sta. 659+00.0000 R1

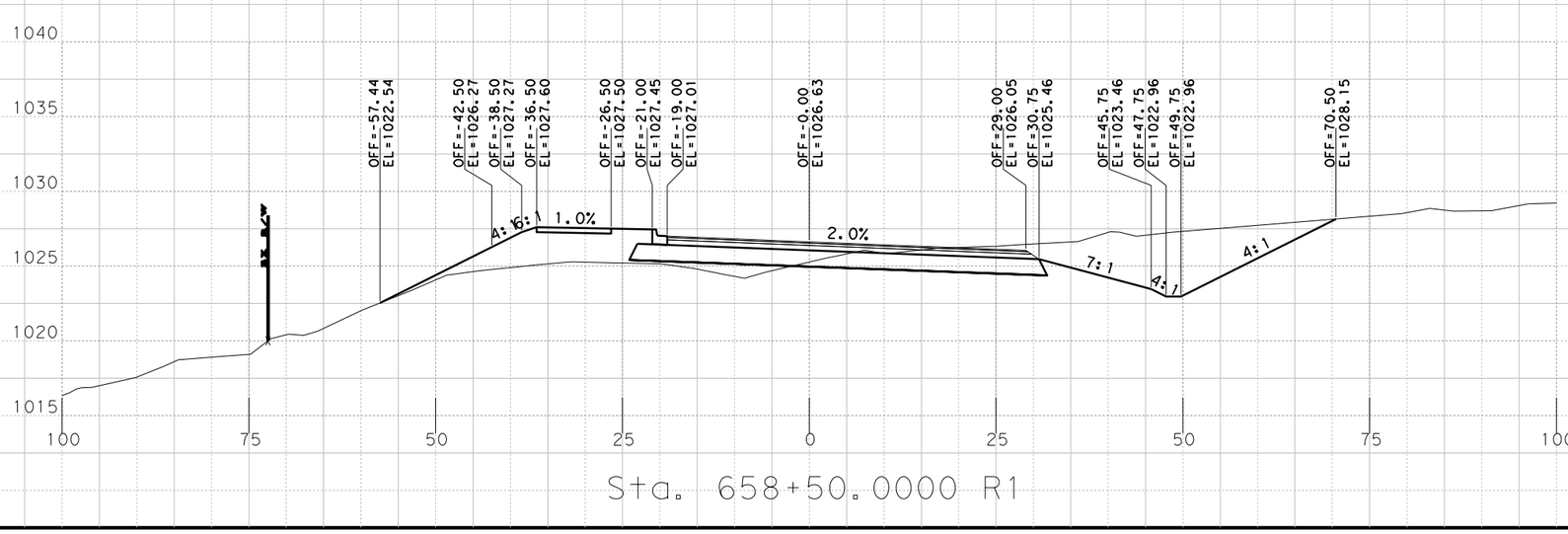

Sta. 658+50.0000 R1

PRELIMINARY
RM 2243
PHASE IA 100%
X-SECTIONS

SCALE: HORIZONTAL 1"=20'
VERTICAL 1"=10'

SHEET 147 OF 168

BGE, Inc.
101 W. Louis Henna Blvd., Suite 400
Austin, TX 78728
Tel: 512-879-0400 • www.bgeinc.com
TBPE Registration No. F-1046

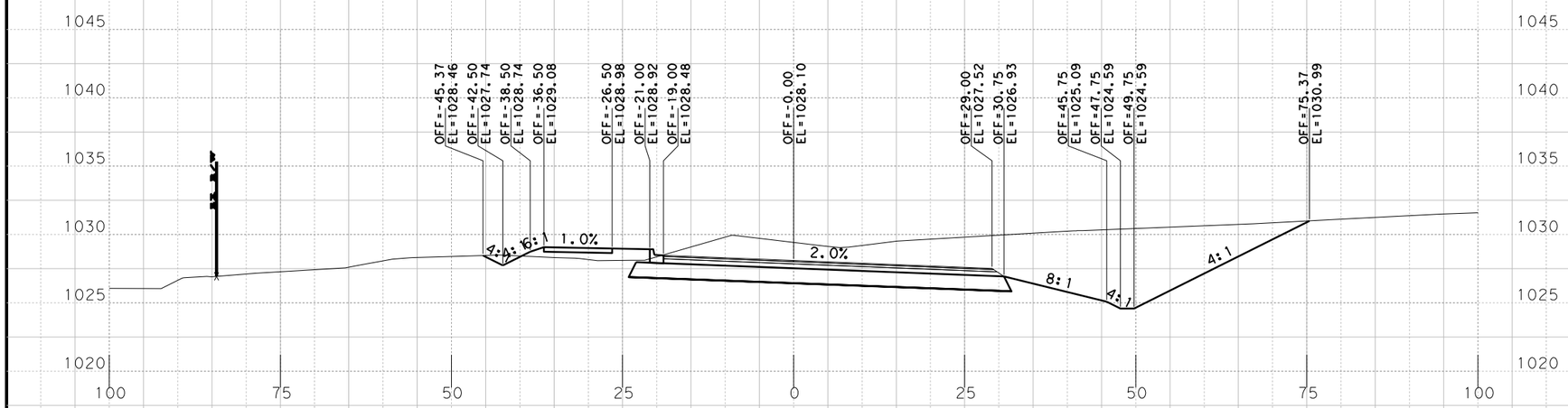

Sta. 660+00.0000 R1

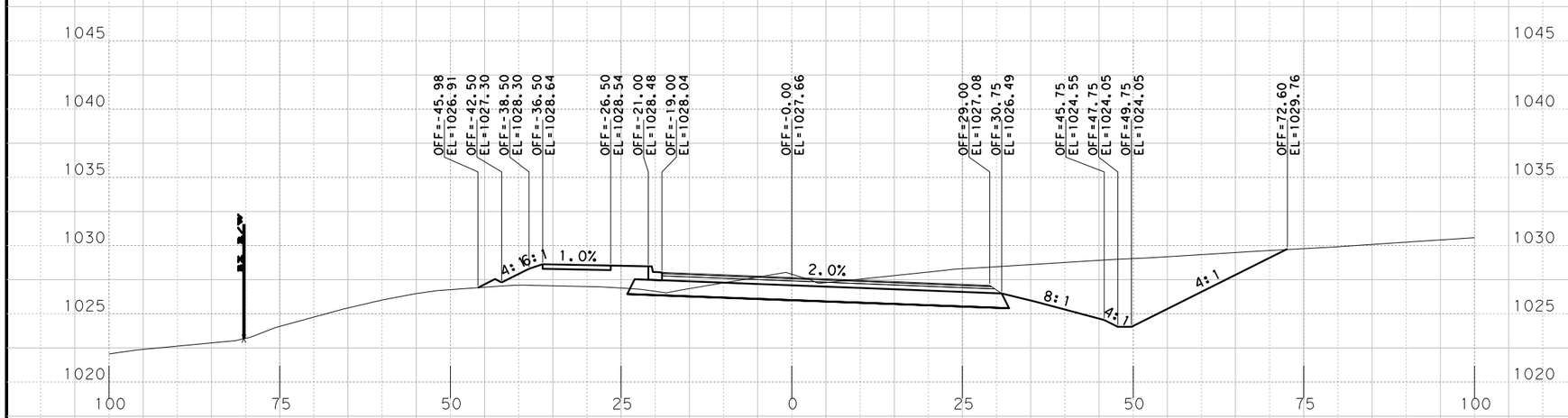

Sta. 659+50.0000 R1

PRELIMINARY
RM 2243
PHASE IA 100%
X-SECTIONS

SCALE: HORIZONTAL 1"=20'
VERTICAL 1"=10'

SHEET 148 OF 168

BGE, Inc.
101 W. Louis Henna Blvd., Suite 400
Austin, TX 78728
Tel: 512-879-0400 • www.bgeinc.com
TBPE Registration No. F-1046

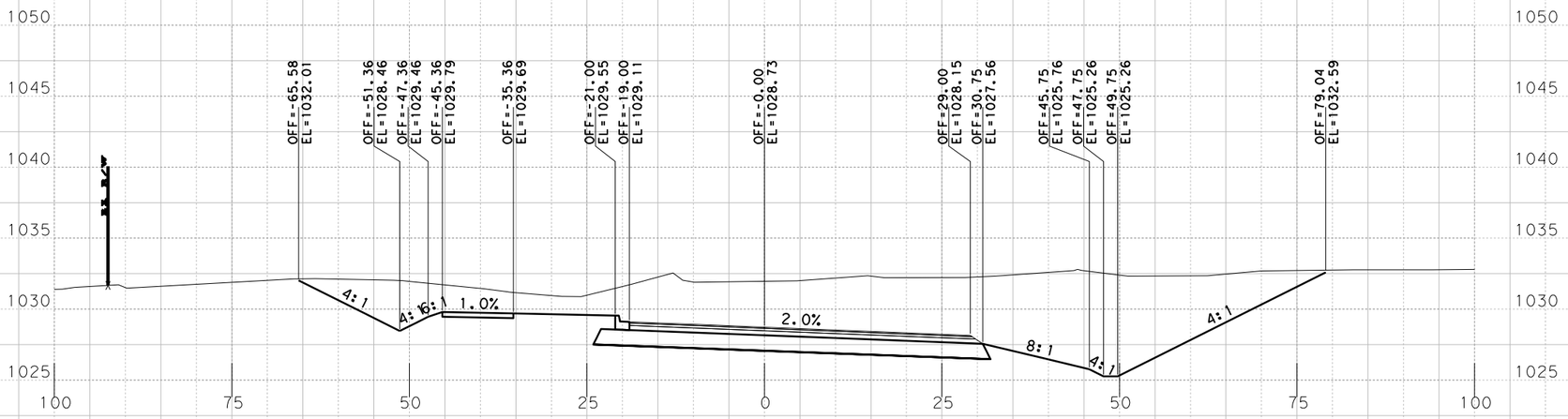

Sta. 661+00.0000 R1

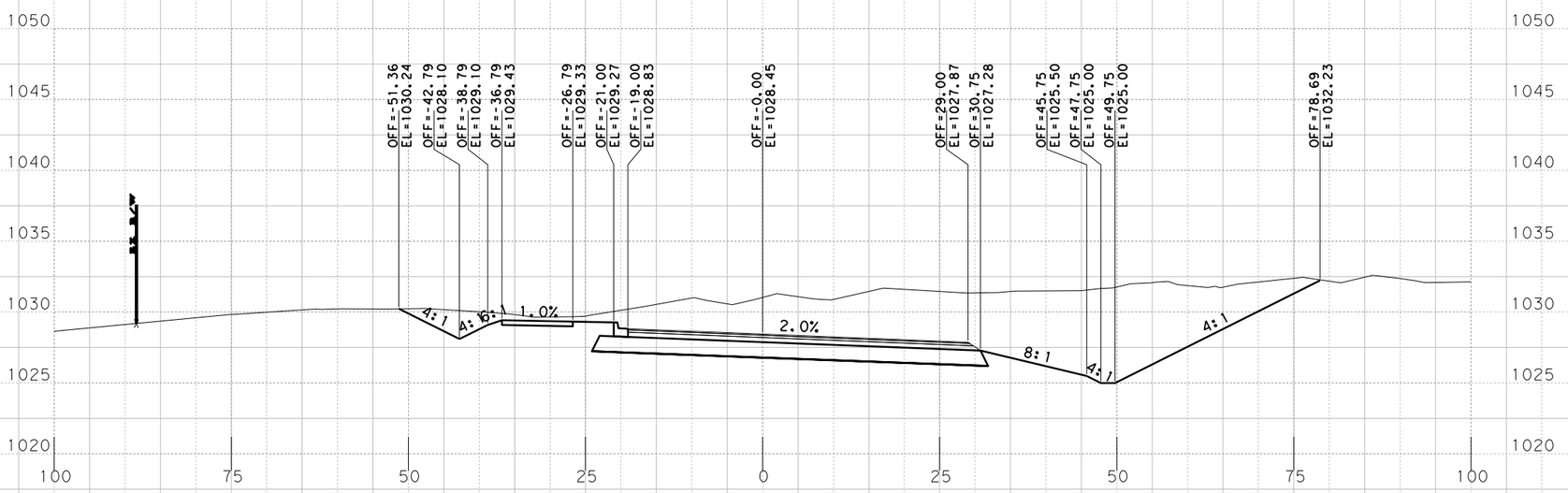

Sta. 660+50.0000 R1

PRELIMINARY
RM 2243
PHASE IA 100%
X-SECTIONS

SCALE: HORIZONTAL 1"=20'
VERTICAL 1"=10'

SHEET 149 OF 168

BGE, Inc.
101 W. Louis Henna Blvd., Suite 400
Austin, TX 78728
Tel: 512-879-0400 • www.bgeinc.com
TBPE Registration No. F-1046

GAREY PARK RD

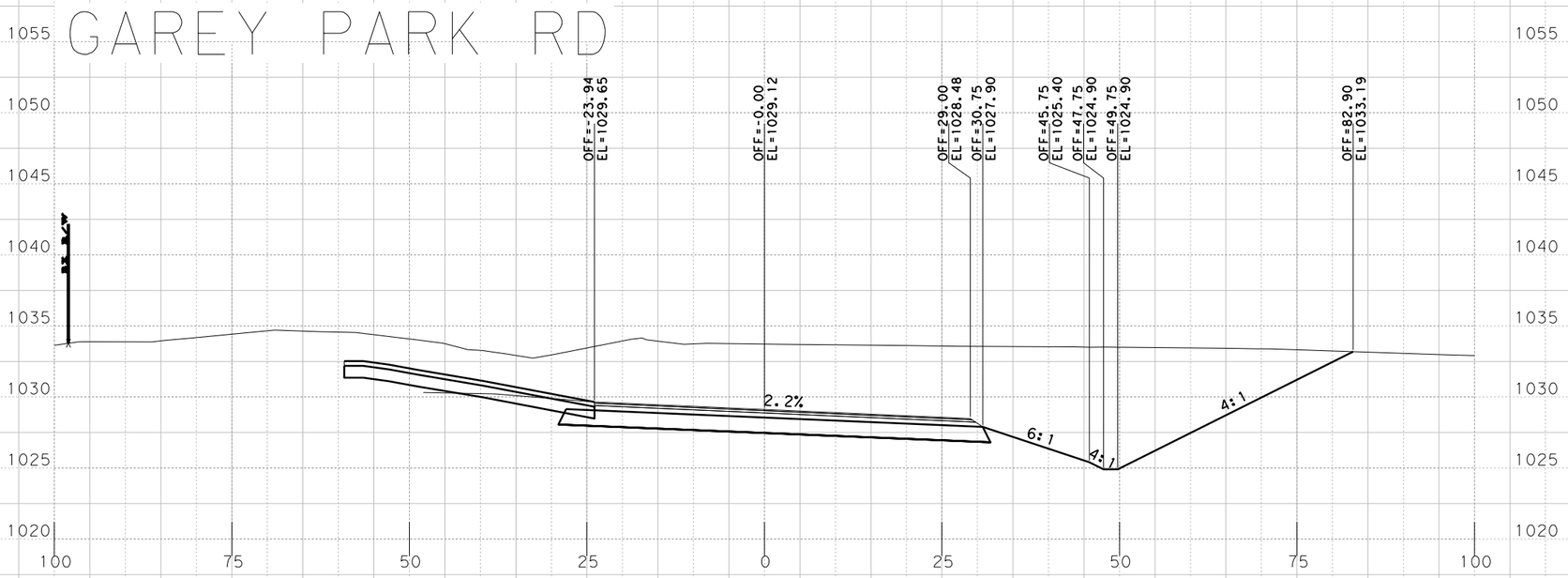

Sta. 662+00.0000 R1

GAREY PARK RD

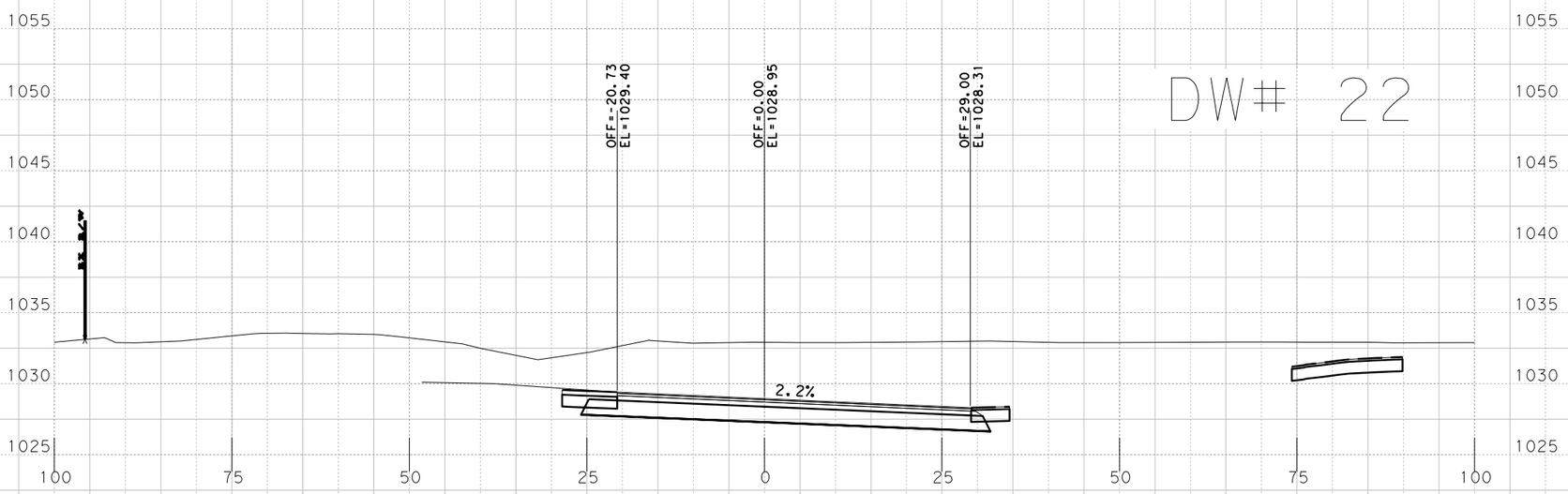

DW# 22

Sta. 661+50.0000 R1

PRELIMINARY
RM 2243
PHASE IA 100%

X-SECTIONS

SCALE: HORIZONTAL 1"=20'
VERTICAL 1"=10'

SHEET 150 OF 168

BGE, Inc.
101 W. Louis Henna Blvd., Suite 400
Austin, TX 78728
Tel: 512-879-0400 • www.bgeinc.com
TBPE Registration No. F-1046

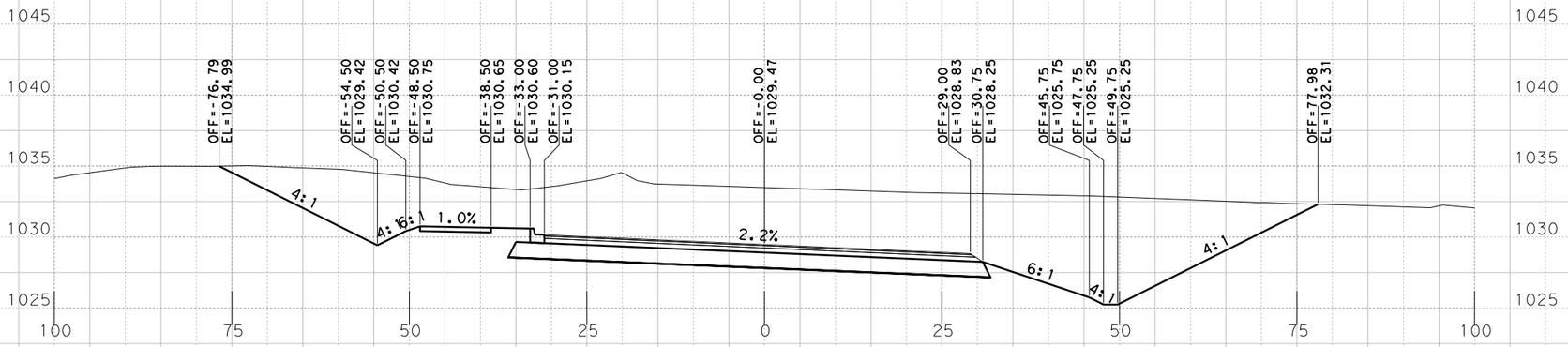

Sta. 663+00.0000 R1

GAREY PARK RD

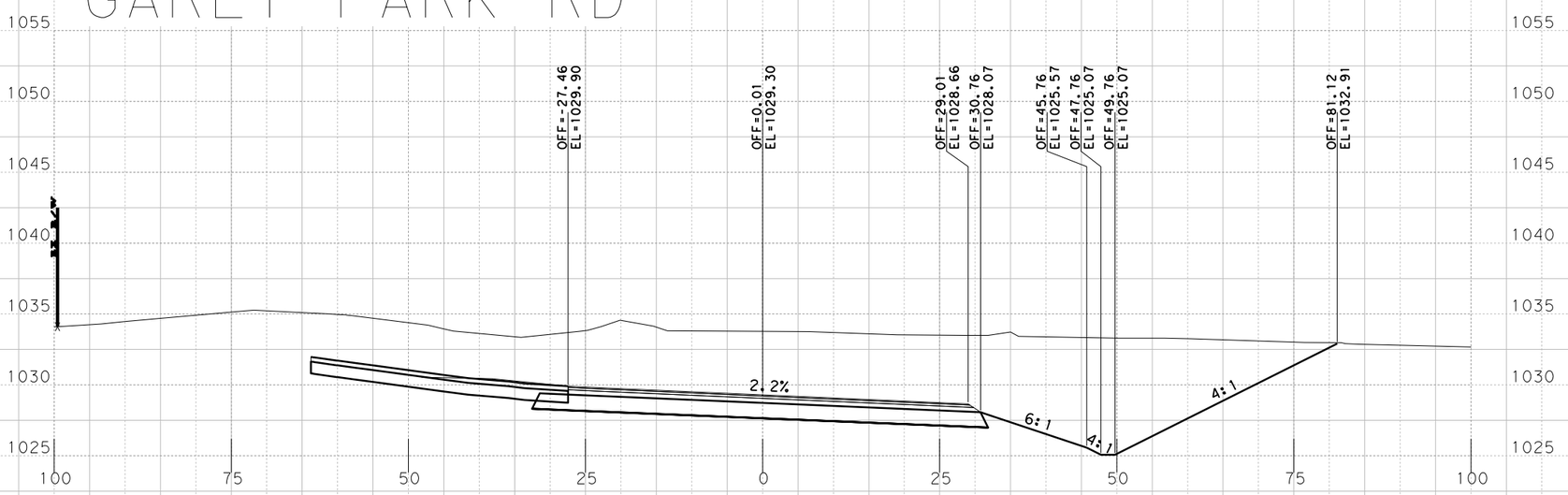

Sta. 662+50.0000 R1

PRELIMINARY
RM 2243
PHASE IA 100%

X-SECTIONS

SCALE: HORIZONTAL 1"=20'
VERTICAL 1"=10'

SHEET 151 OF 168

BGE, Inc.
101 W. Louis Henna Blvd., Suite 400
Austin, TX 78728
Tel: 512-879-0400 • www.bgeinc.com
TBPE Registration No. F-1046

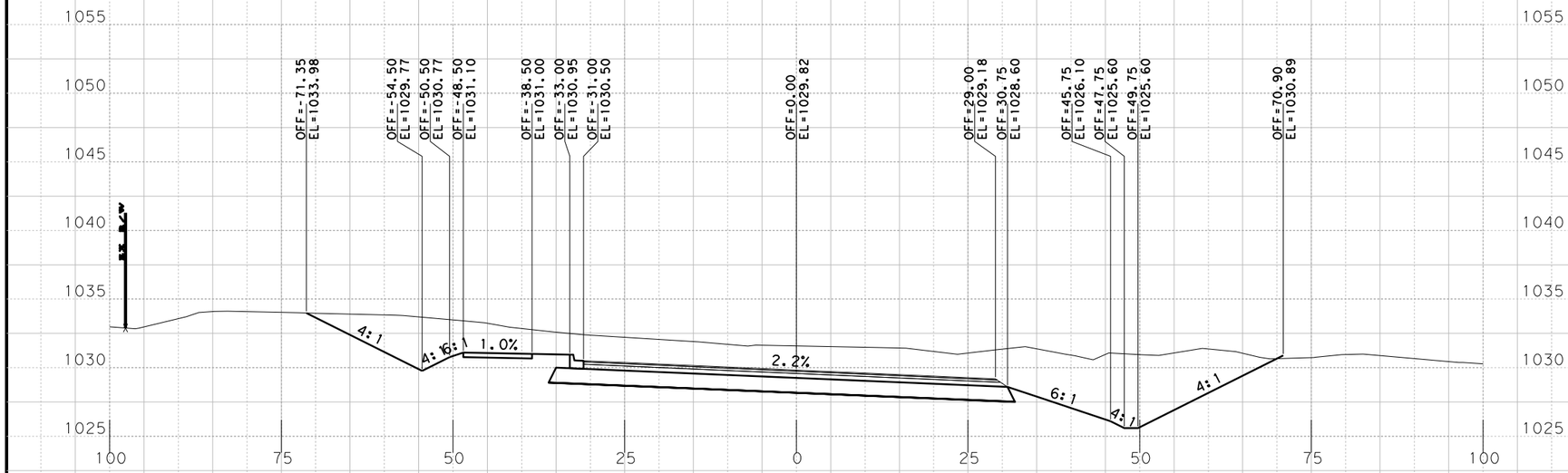

Sta. 664+00.0000 R1

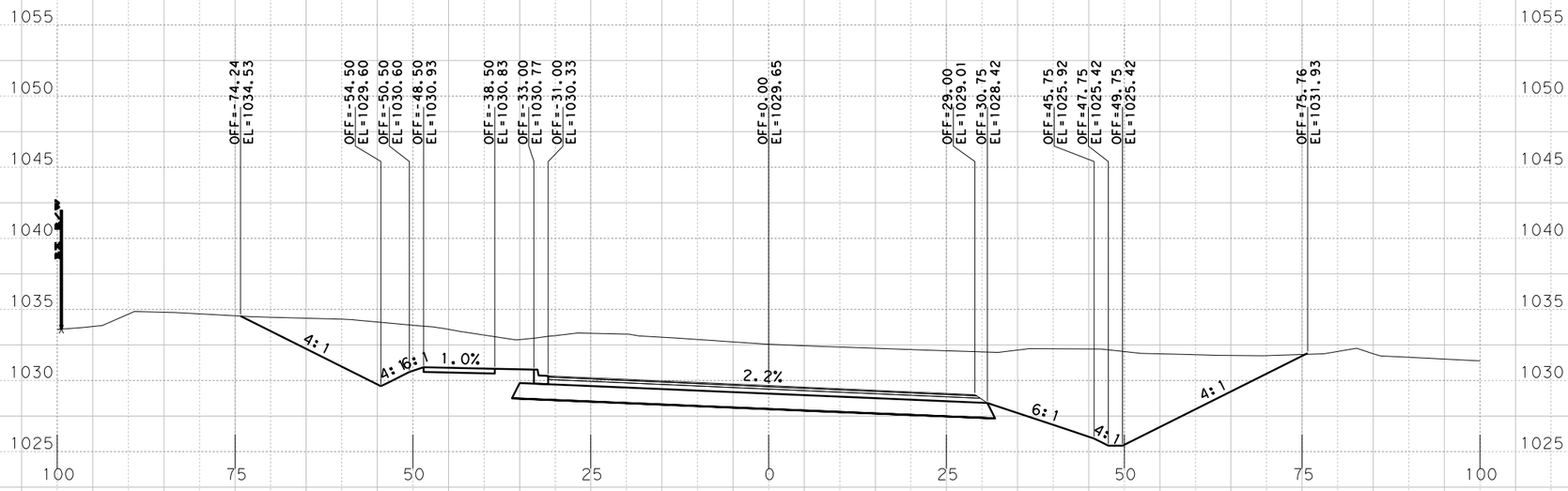

Sta. 663+50.0000 R1

PRELIMINARY
RM 2243
PHASE IA 100%

X-SECTIONS

SCALE: HORIZONTAL 1"=20'
VERTICAL 1"=10'

SHEET 152 OF 168

BGE, Inc.
101 W. Louis Henna Blvd., Suite 400
Austin, TX 78728
Tel: 512-879-0400 • www.bgeinc.com
TBPE Registration No. F-1046

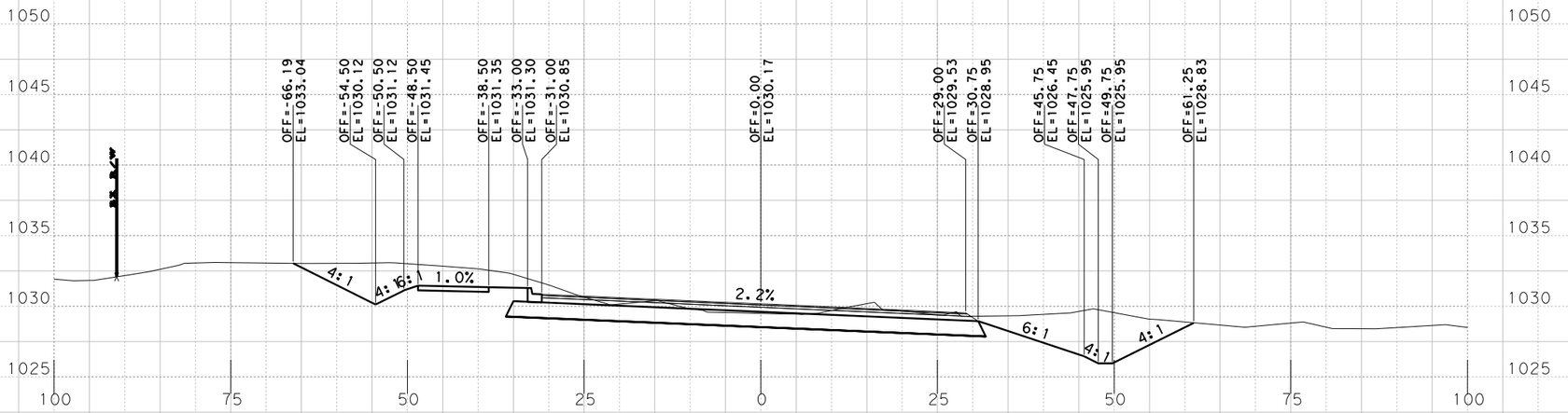

Sta. 665+00.0000 R1

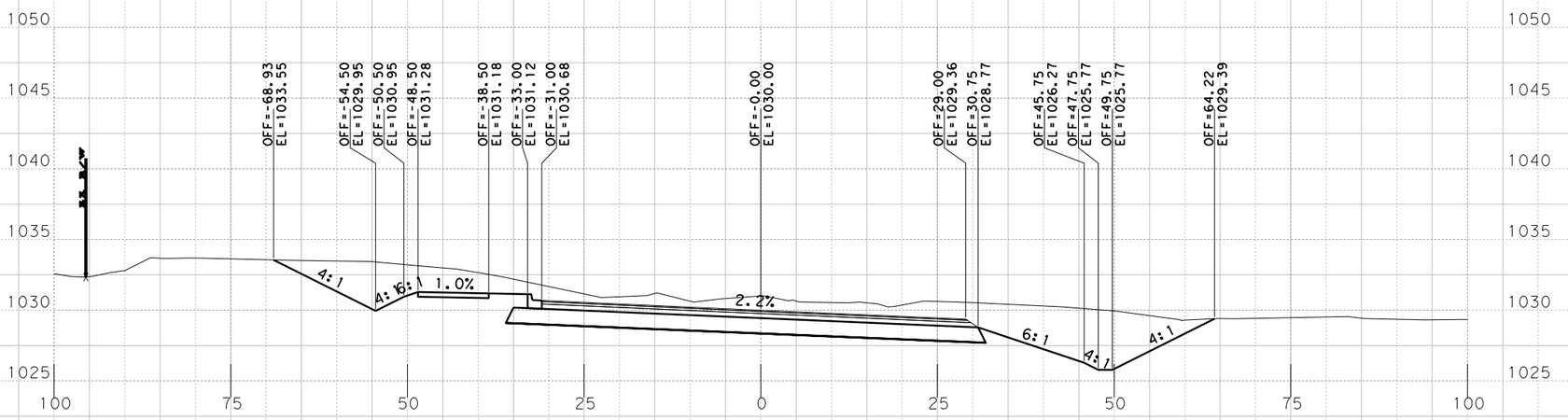

Sta. 664+50.0000 R1

PRELIMINARY
RM 2243
PHASE IA 100%

X-SECTIONS

SCALE: HORIZONTAL 1"=20'
VERTICAL 1"=10'

SHEET 153 OF 168

BGE, Inc.
101 W. Louis Henna Blvd., Suite 400
Austin, TX 78728
Tel: 512-879-0400 • www.bgeinc.com
TBPE Registration No. F-1046

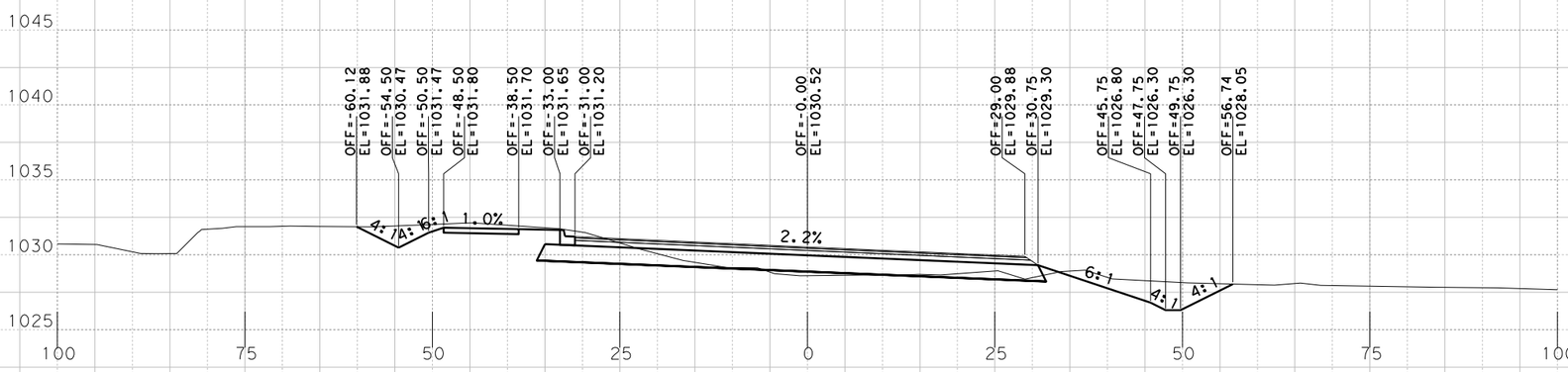

Sta. 666+00.0000 R1

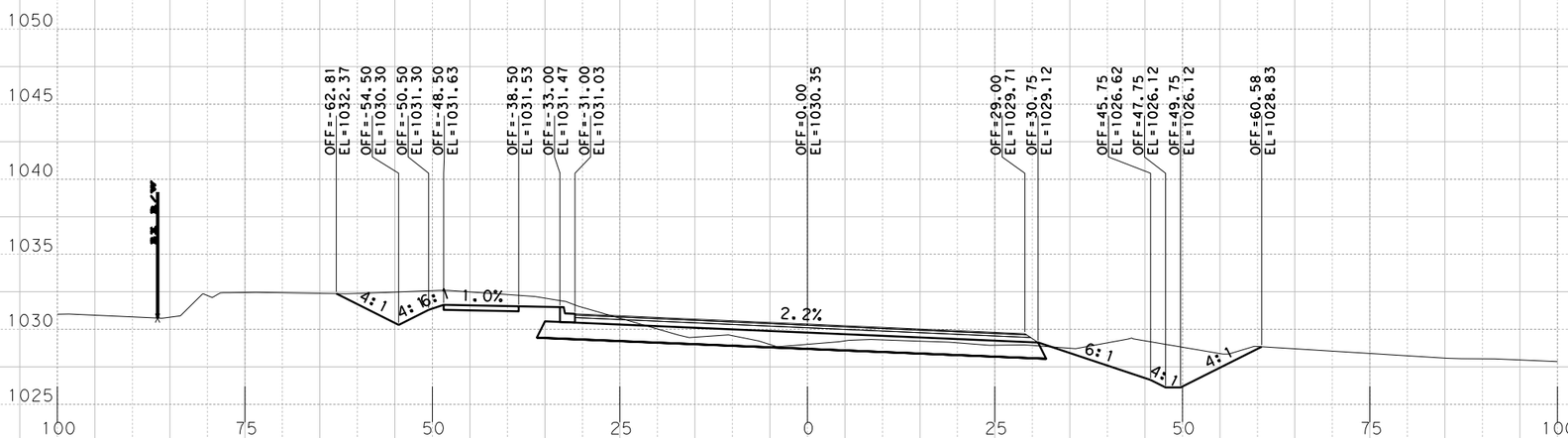

Sta. 665+50.0000 R1

PRELIMINARY
RM 2243
PHASE 1A 100%

X-SECTIONS

SCALE: HORIZONTAL 1"=20'
VERTICAL 1"=10'

SHEET 154 OF 168

BGE, Inc.
101 W. Louis Henna Blvd., Suite 400
Austin, TX 78728
Tel: 512-879-0400 • www.bgeinc.com
TBPE Registration No. F-1046

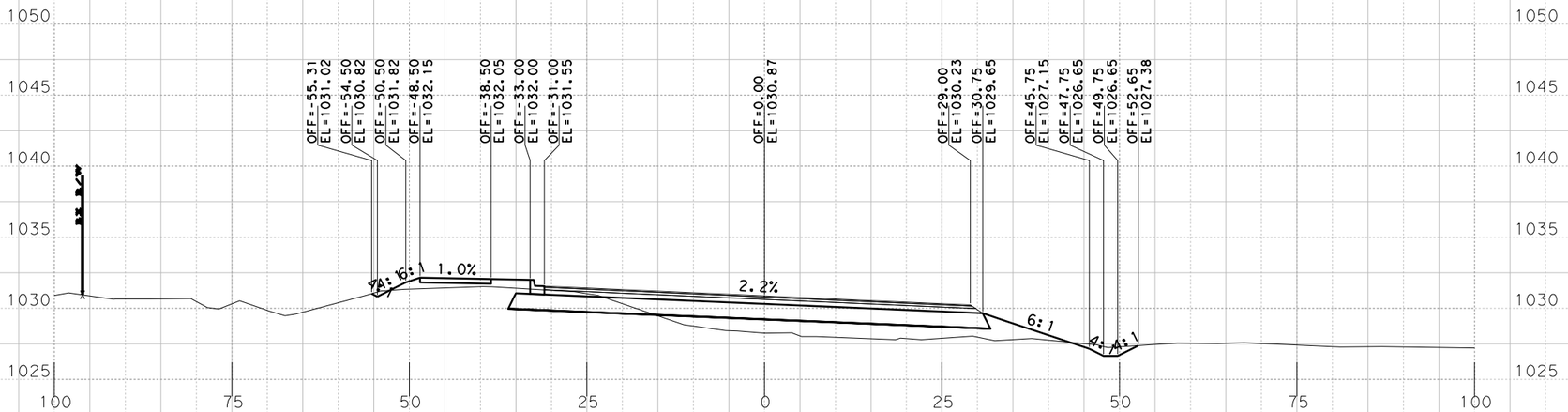

Sta. 667+00.0000 R1

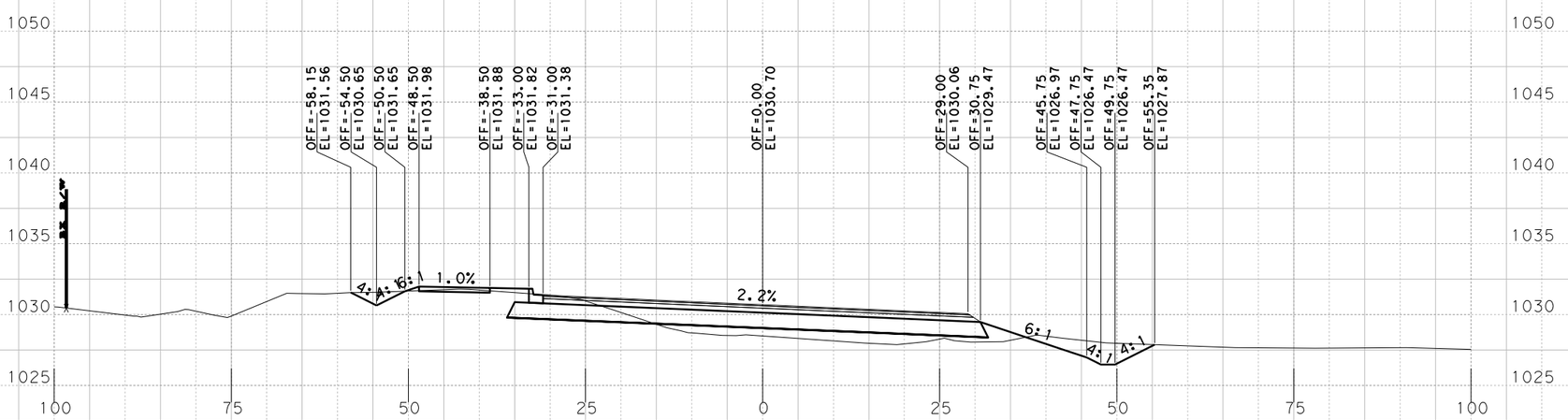

Sta. 666+50.0000 R1

PRELIMINARY
RM 2243
PHASE 1A 100%

X-SECTIONS

SCALE: HORIZONTAL 1"=20'
VERTICAL 1"=10'

SHEET 155 OF 168

BGE, Inc.
101 W. Louis Henna Blvd., Suite 400
Austin, TX 78728
Tel: 512-879-0400 • www.bgeinc.com
TBPE Registration No. F-1046

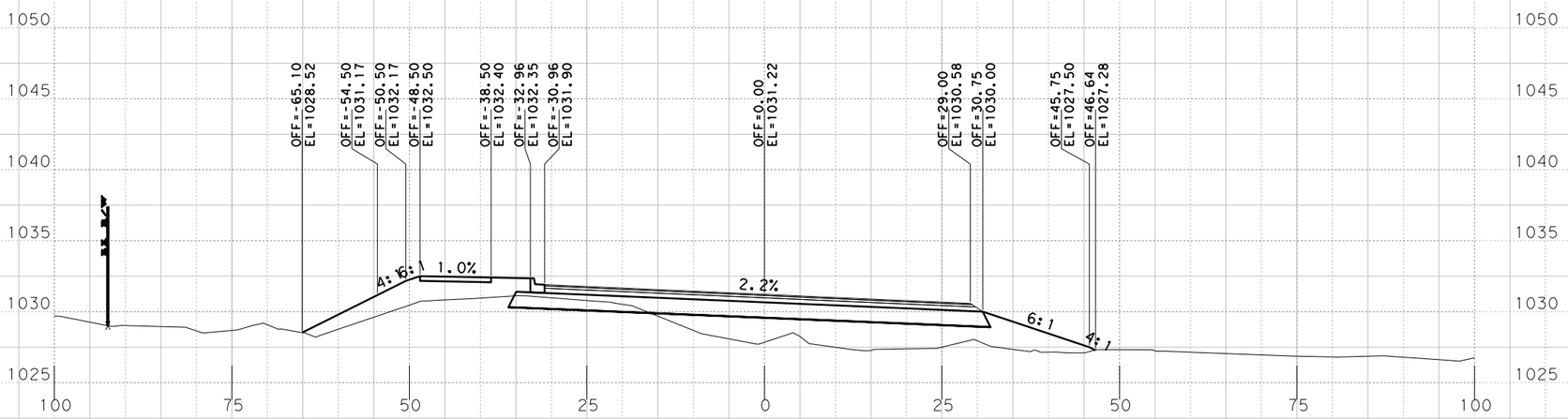

Sta. 668+00.0000 R1

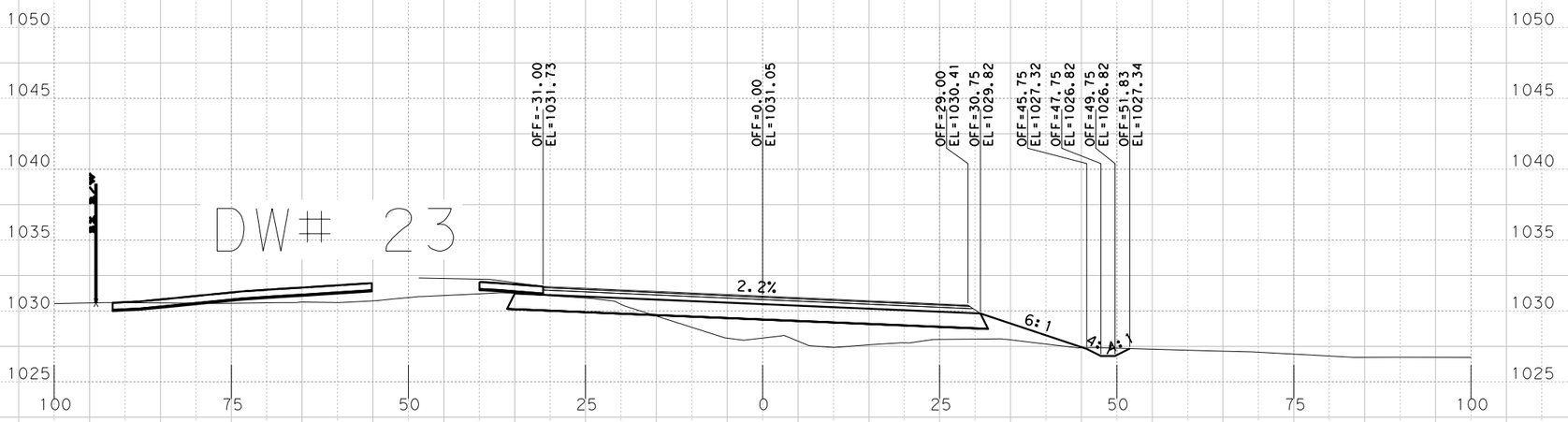

Sta. 667+50.0000 R1

PRELIMINARY
RM 2243
PHASE IA 100%

X-SECTIONS

SCALE: HORIZONTAL 1"=20'
VERTICAL 1"=10'

SHEET 156 OF 168

BGE, Inc.
101 W. Louis Henna Blvd., Suite 400
Austin, TX 78728
Tel: 512-879-0400 • www.bgeinc.com
TBPE Registration No. F-1046

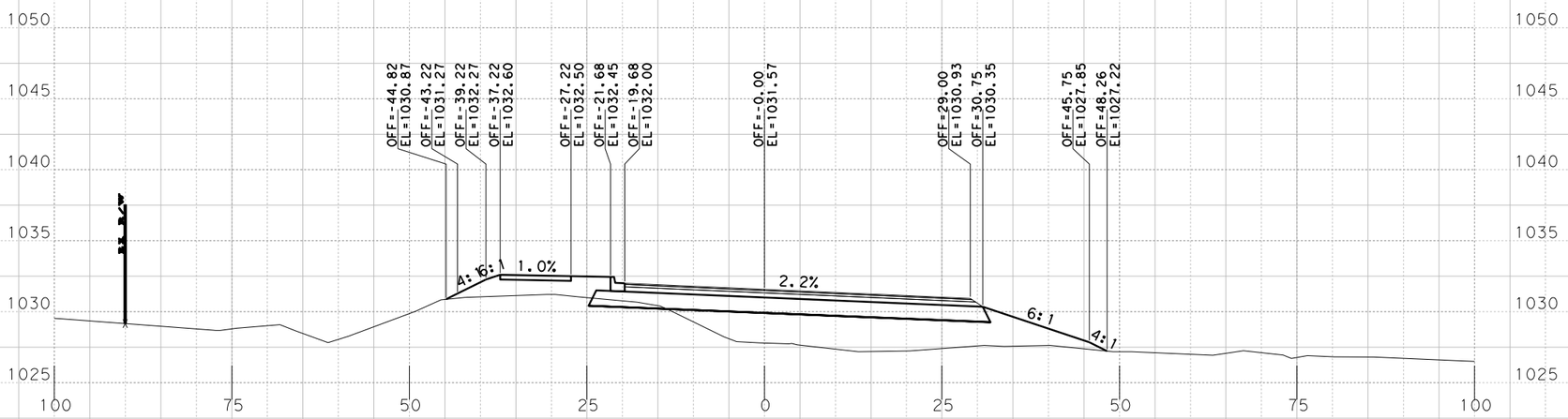

Sta. 669+00.0000 R1

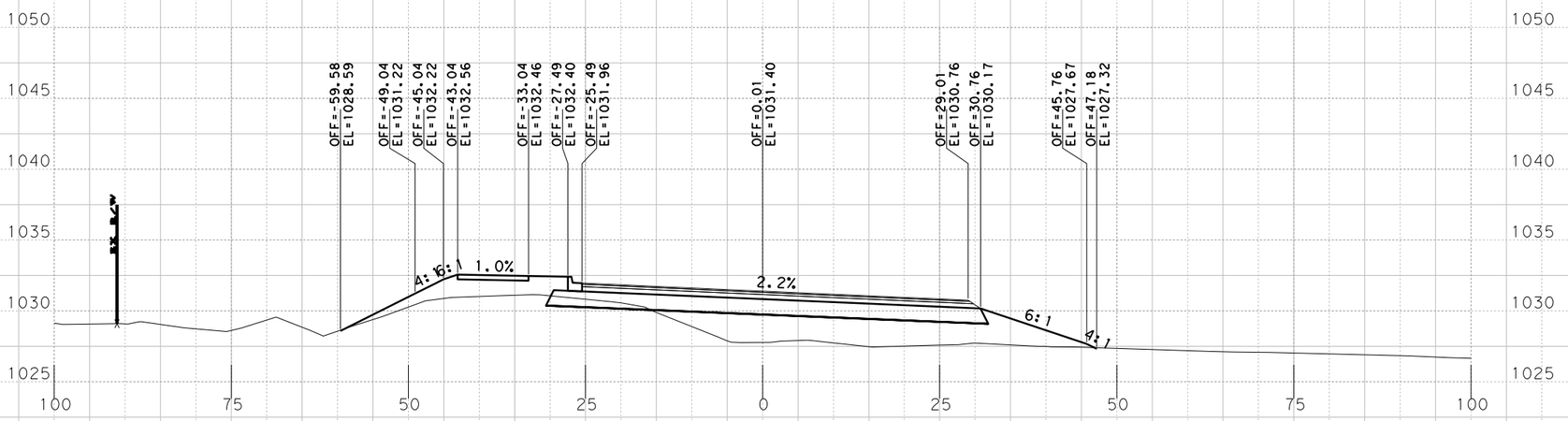

Sta. 668+50.0000 R1

PRELIMINARY
RM 2243
PHASE IA 100%

X-SECTIONS

SCALE: HORIZONTAL 1"=20'
VERTICAL 1"=10'

SHEET 157 OF 168

BGE, Inc.
101 W. Louis Henna Blvd., Suite 400
Austin, TX 78728
Tel: 512-879-0400 • www.bgeinc.com
TBPE Registration No. F-1046

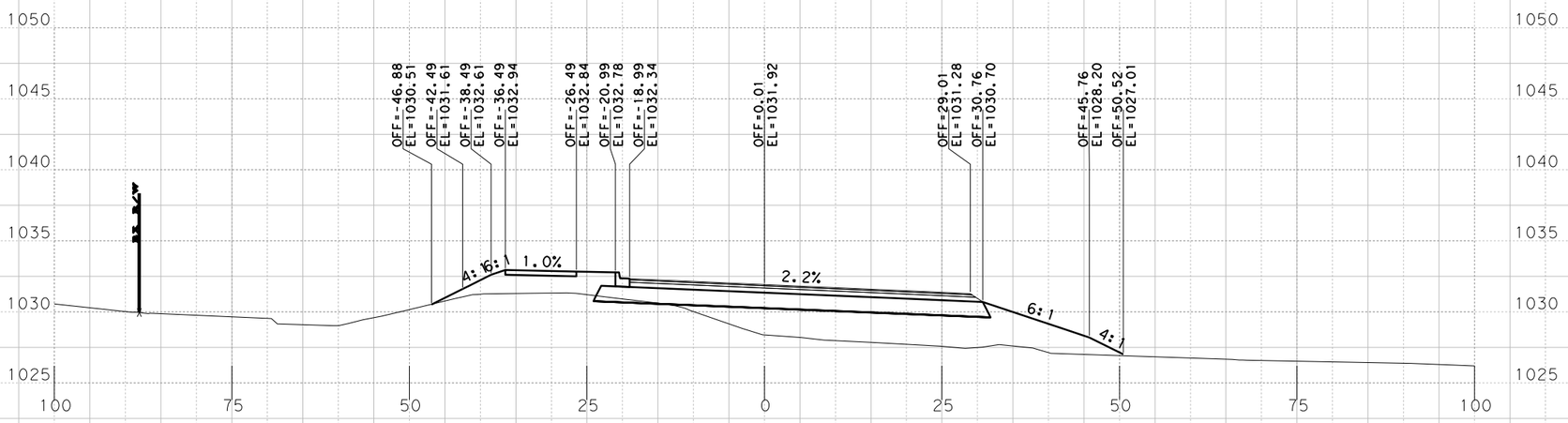

Sta. 670+00.0000 R1

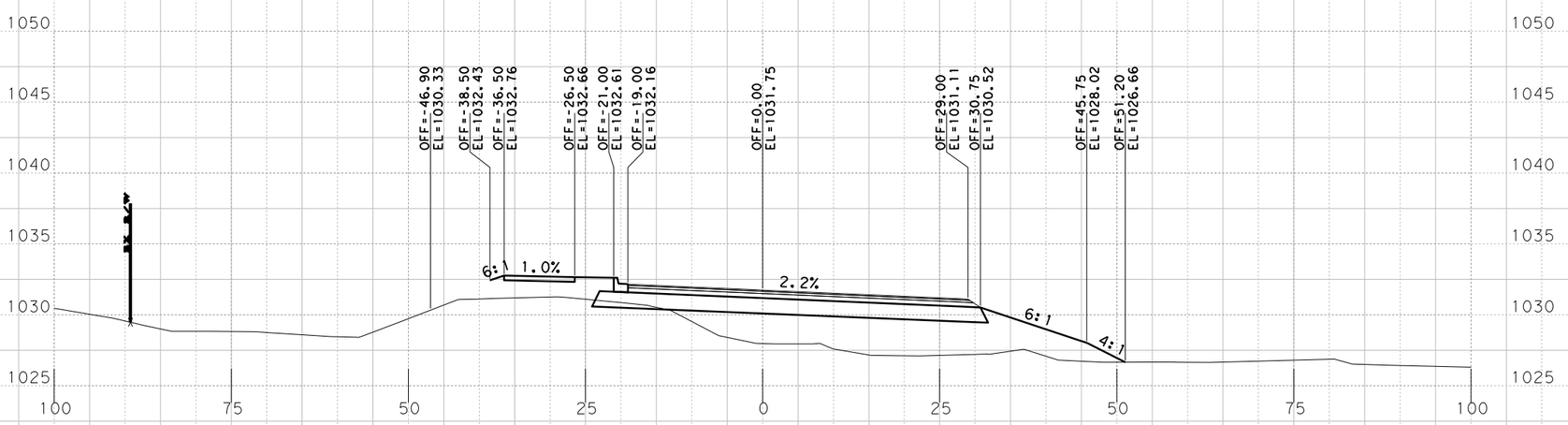

Sta. 669+50.0000 R1

PRELIMINARY
RM 2243
PHASE IA 100%
X-SECTIONS

SCALE: HORIZONTAL 1"=20'
VERTICAL 1"=10'

SHEET 158 OF 168

BGE, Inc.
101 W. Louis Henna Blvd., Suite 400
Austin, TX 78728
Tel: 512-879-0400 • www.bgeinc.com
TBPE Registration No. F-1046

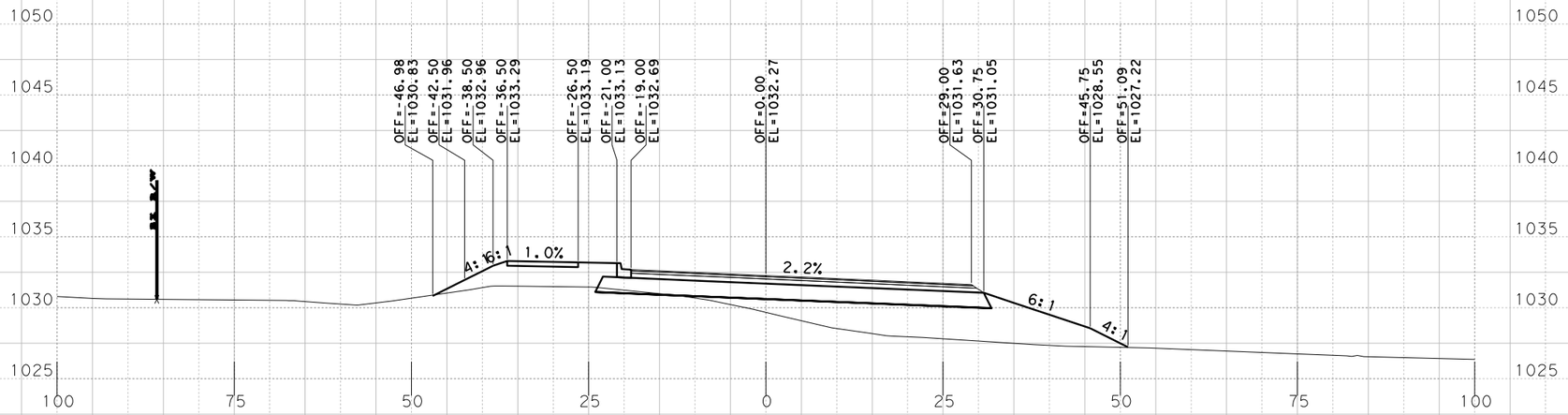

Sta. 671+00.0000 R1

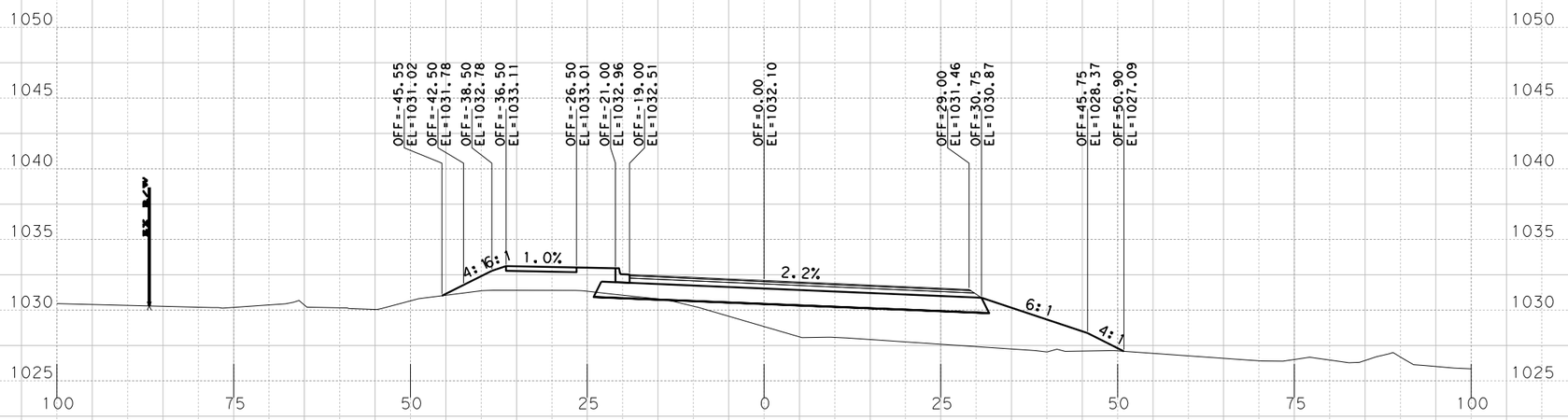

Sta. 670+50.0000 R1

PRELIMINARY
RM 2243
PHASE IA 100%

X-SECTIONS

SCALE: HORIZONTAL 1"=20'
VERTICAL 1"=10'

SHEET 159 OF 168

BGE, Inc.
101 W. Louis Henna Blvd., Suite 400
Austin, TX 78728
Tel: 512-879-0400 • www.bgeinc.com
TBPE Registration No. F-1046

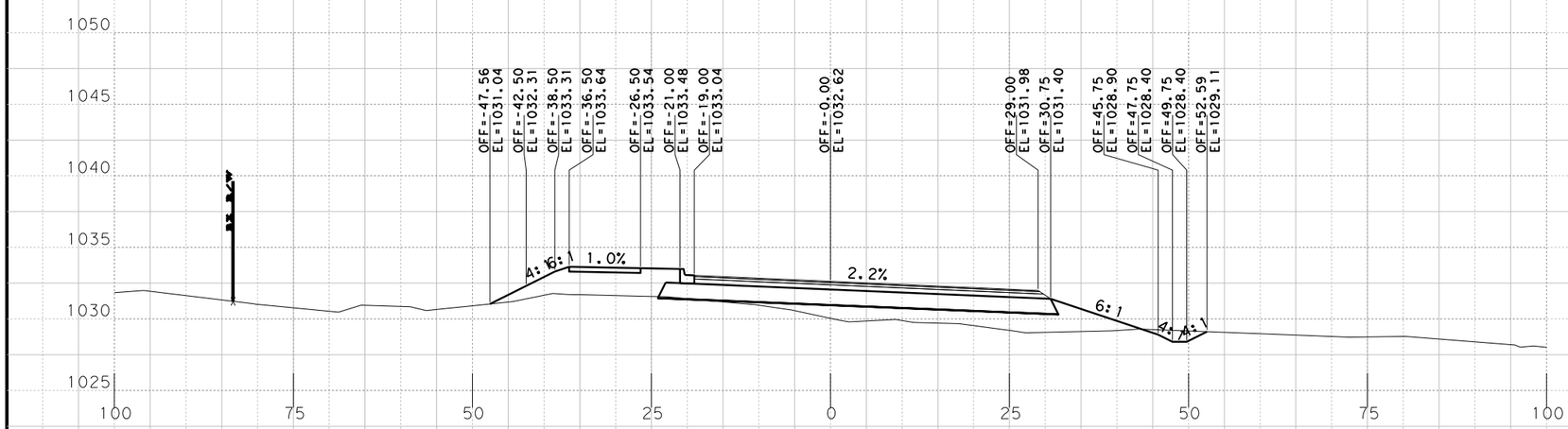

Sta. 672+00.0000 R1

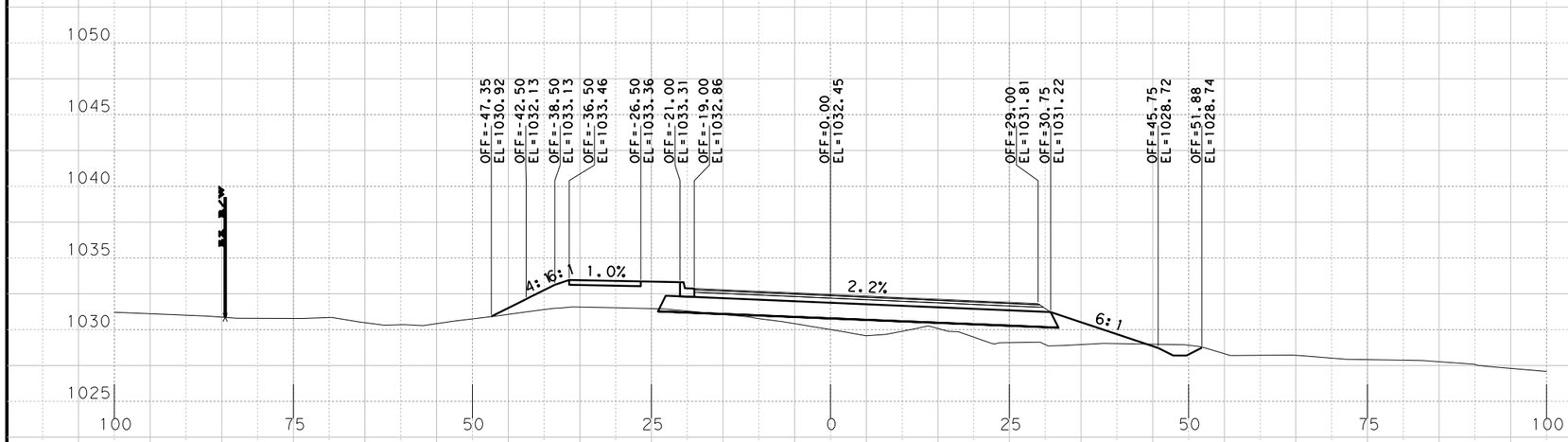

Sta. 671+50.0000 R1

PRELIMINARY
RM 2243
PHASE IA 100%

X-SECTIONS

SCALE: HORIZONTAL 1"=20'
VERTICAL 1"=10'

SHEET 160 OF 168

BGE, Inc.
101 W. Louis Henna Blvd., Suite 400
Austin, TX 78728
Tel: 512-879-0400 • www.bgeinc.com
TBPE Registration No. F-1046

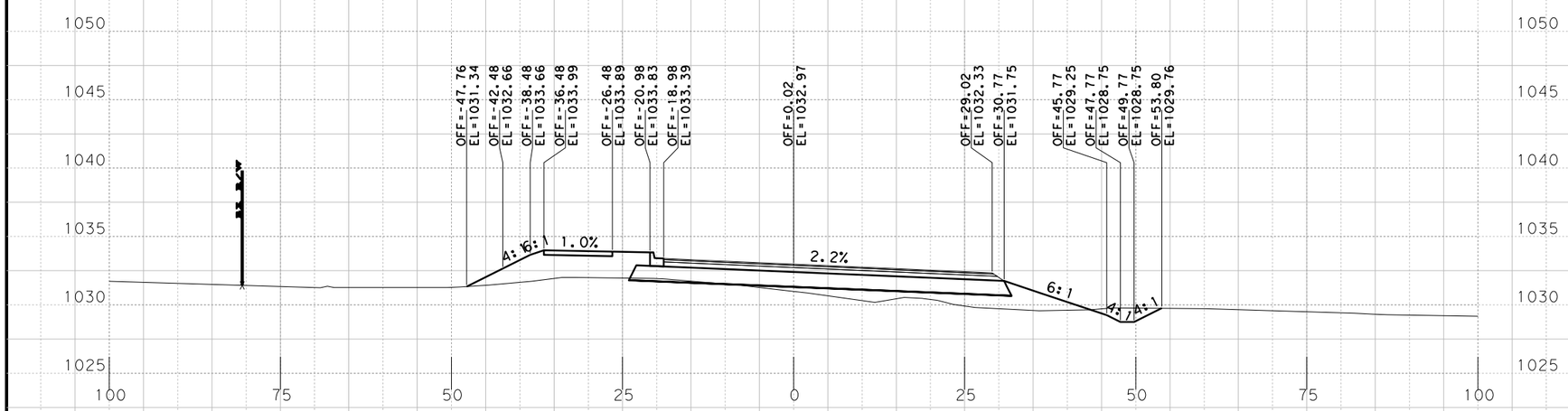

Sta. 673+00.0000 R1

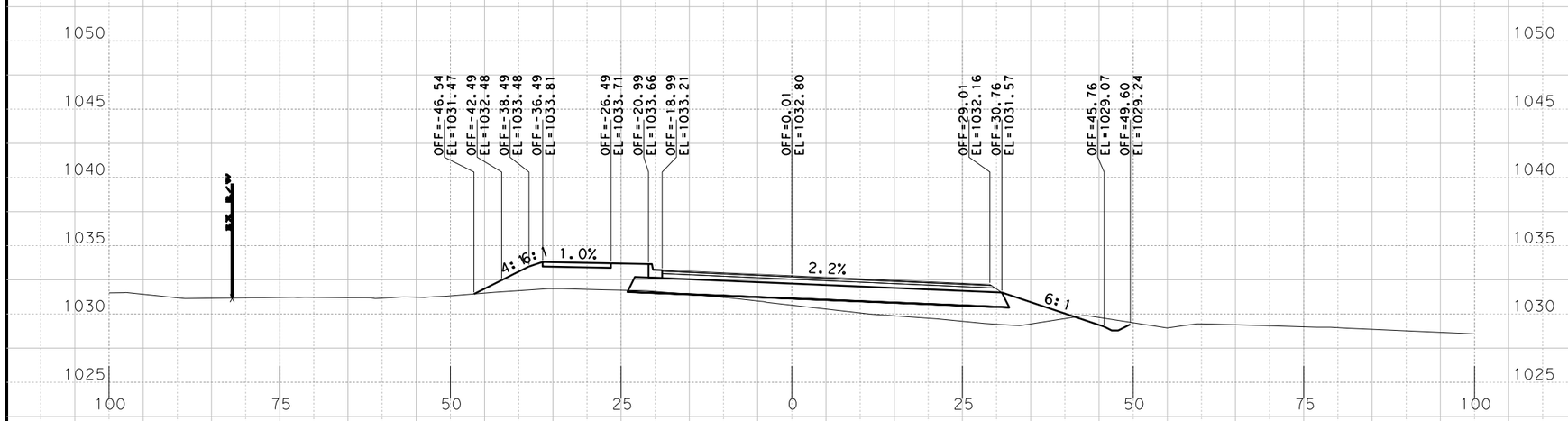

Sta. 672+50.0000 R1

PRELIMINARY
RM 2243
PHASE IA 100%

X-SECTIONS

SCALE: HORIZONTAL 1"=20'
VERTICAL 1"=10'

SHEET 161 OF 168

BGE, Inc.
101 W. Louis Henna Blvd., Suite 400
Austin, TX 78728
Tel: 512-879-0400 • www.bgeinc.com
TBPE Registration No. F-1046

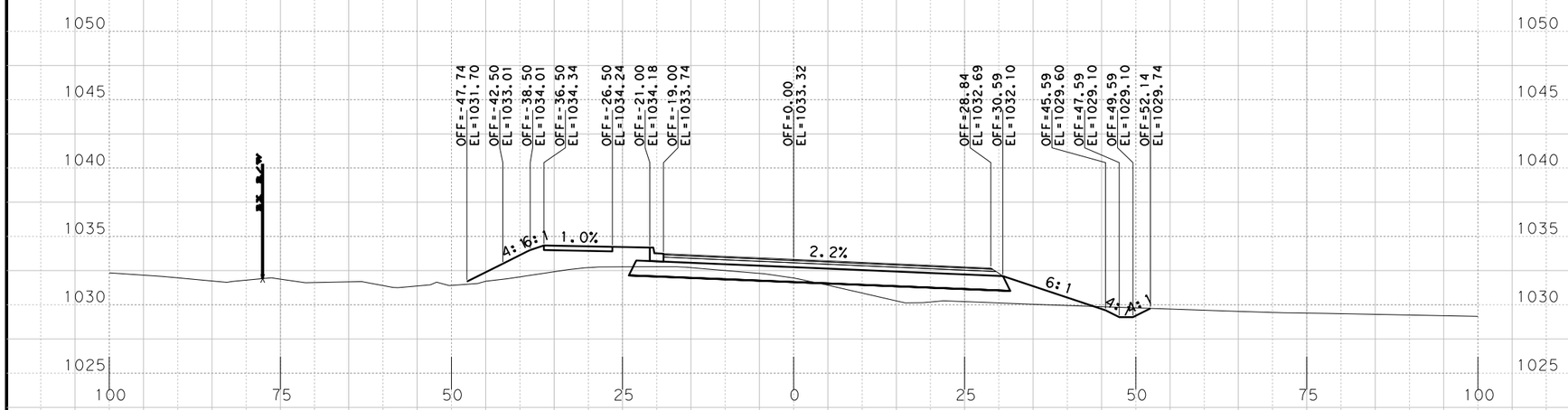

S†a. 674+00.0000 R1

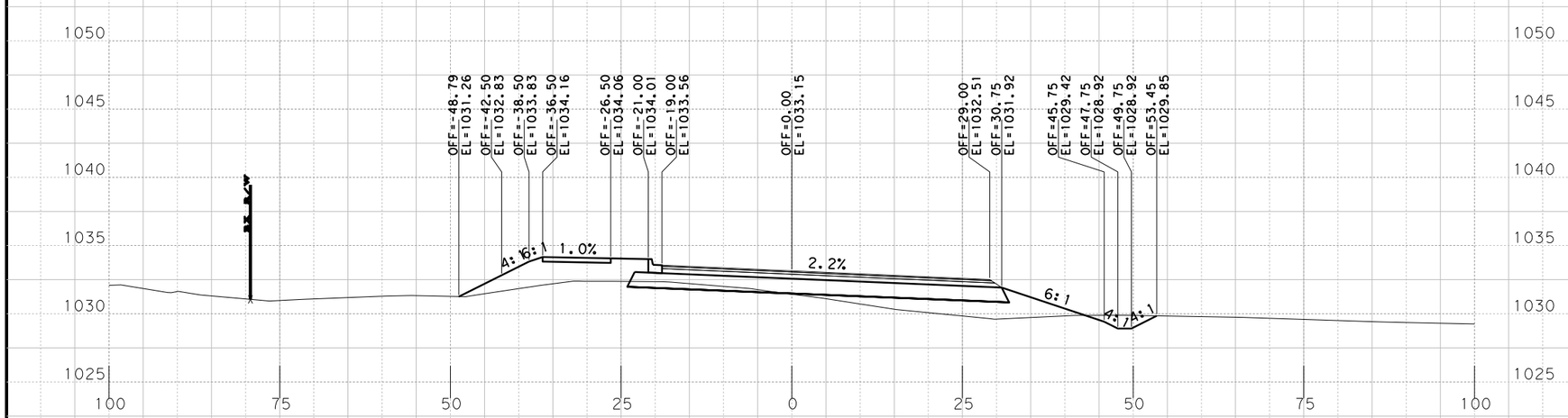

S†a. 673+50.0000 R1

PRELIMINARY
RM 2243
PHASE IA 100%

X-SECTIONS

SCALE: HORIZONTAL 1"=20'
VERTICAL 1"=10'

SHEET 162 OF 168

BGE, Inc.
101 W. Louis Henna Blvd., Suite 400
Austin, TX 78728
Tel: 512-879-0400 • www.bgeinc.com
TBPE Registration No. F-1046

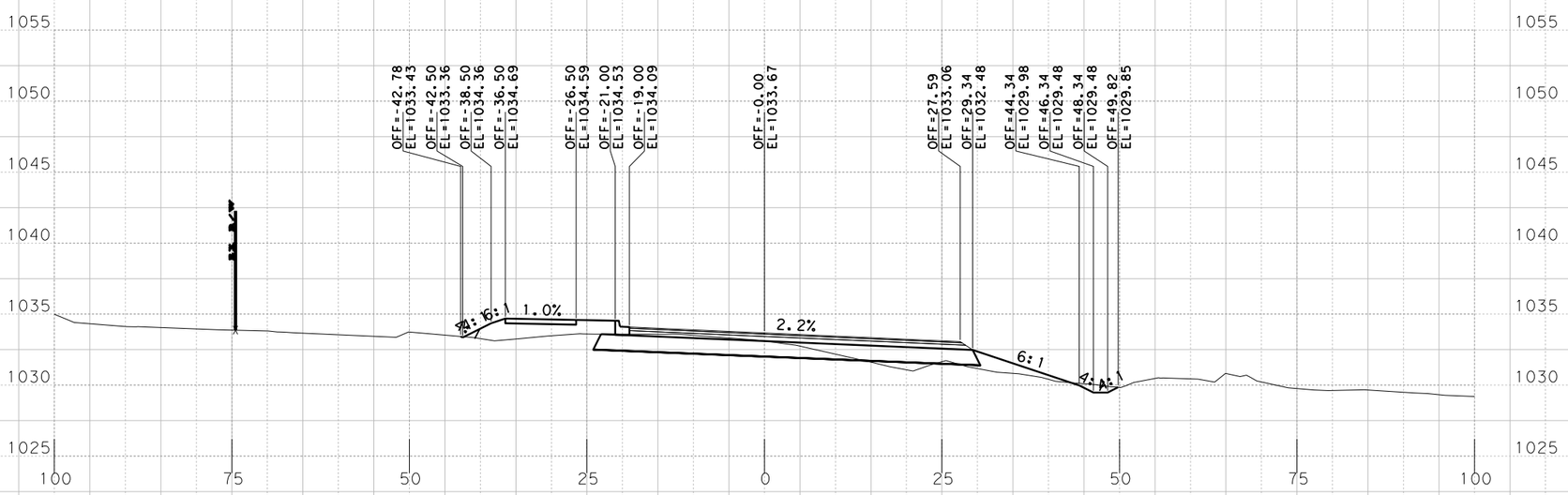

Sta. 675+00.0000 R1

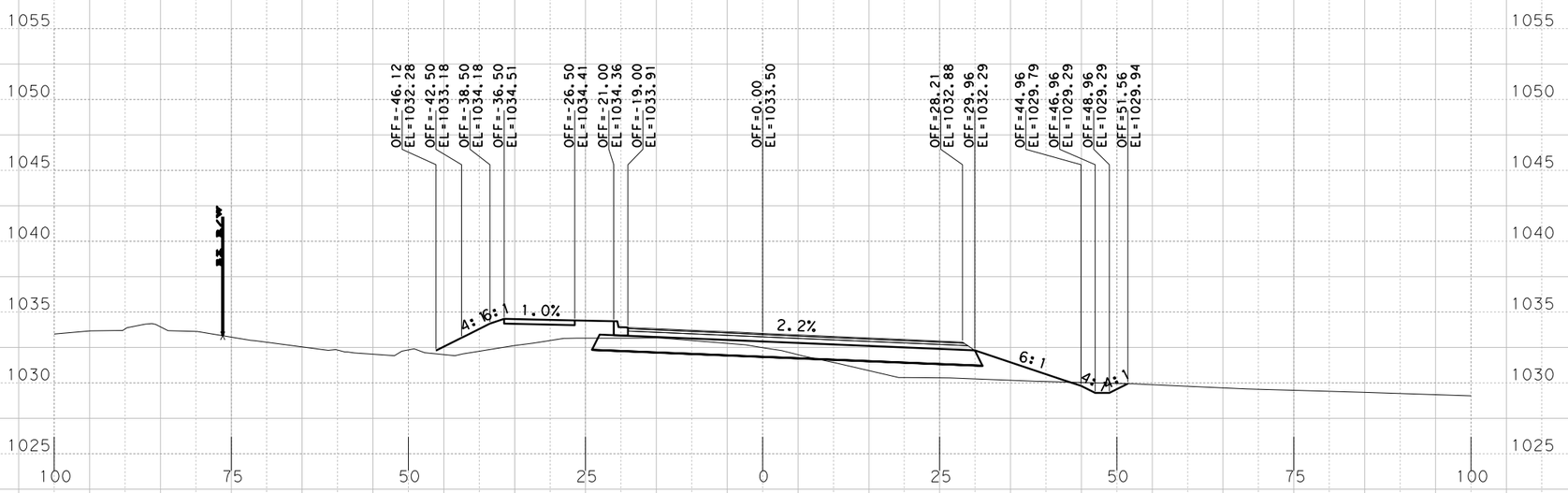

Sta. 674+50.0000 R1

PRELIMINARY
RM 2243
PHASE IA 100%

X-SECTIONS

SCALE: HORIZONTAL 1"=20'
VERTICAL 1"=10'

SHEET 163 OF 168

BGE, Inc.
101 W. Louis Henna Blvd., Suite 400
Austin, TX 78728
Tel: 512-879-0400 • www.bgeinc.com
TBPE Registration No. F-1046

Sta. 676+00.0000 R1

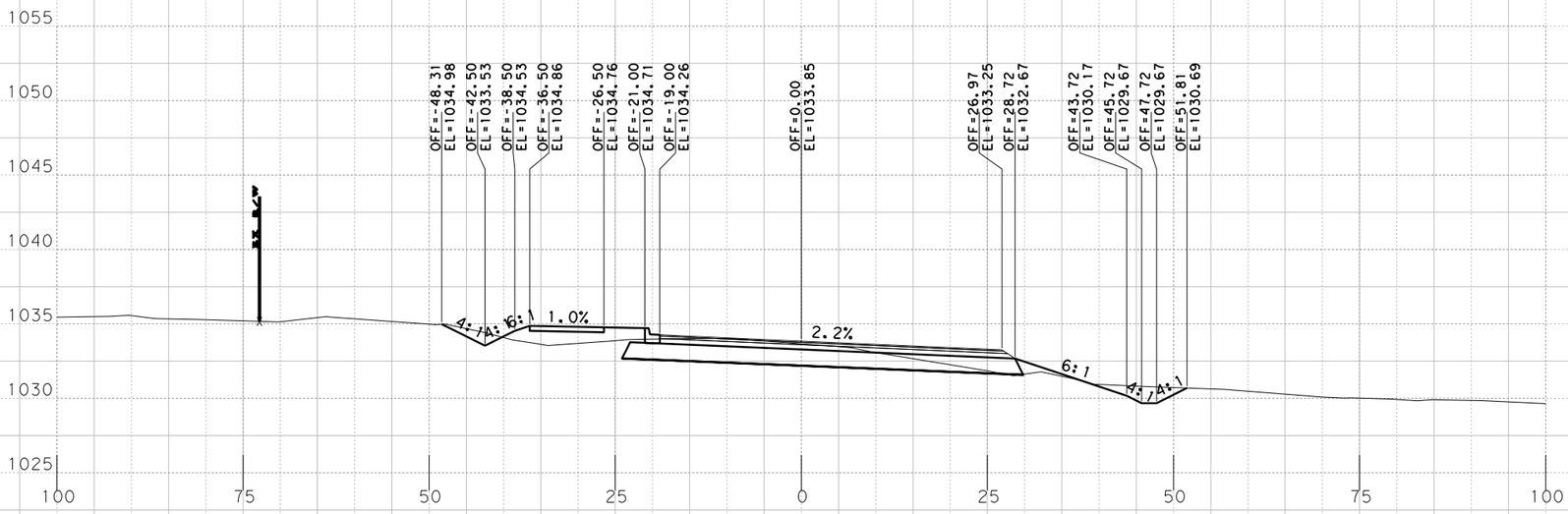

Sta. 675+50.0000 R1

PRELIMINARY
RM 2243
PHASE IA 100%

X-SECTIONS

SCALE: HORIZONTAL 1"=20'
VERTICAL 1"=10'

SHEET 164 OF 168

BGE, Inc.
101 W. Louis Henna Blvd., Suite 400
Austin, TX 78728
Tel: 512-879-0400 • www.bgeinc.com
TBPE Registration No. F-1046

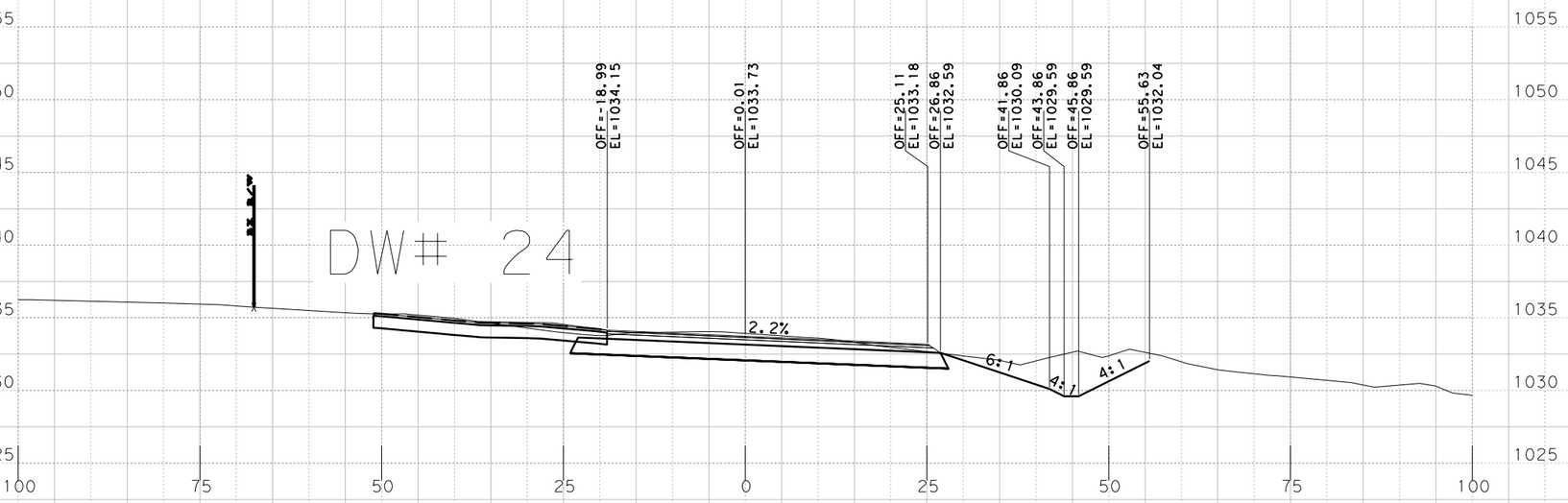

Sta. 677+00.0000 R1

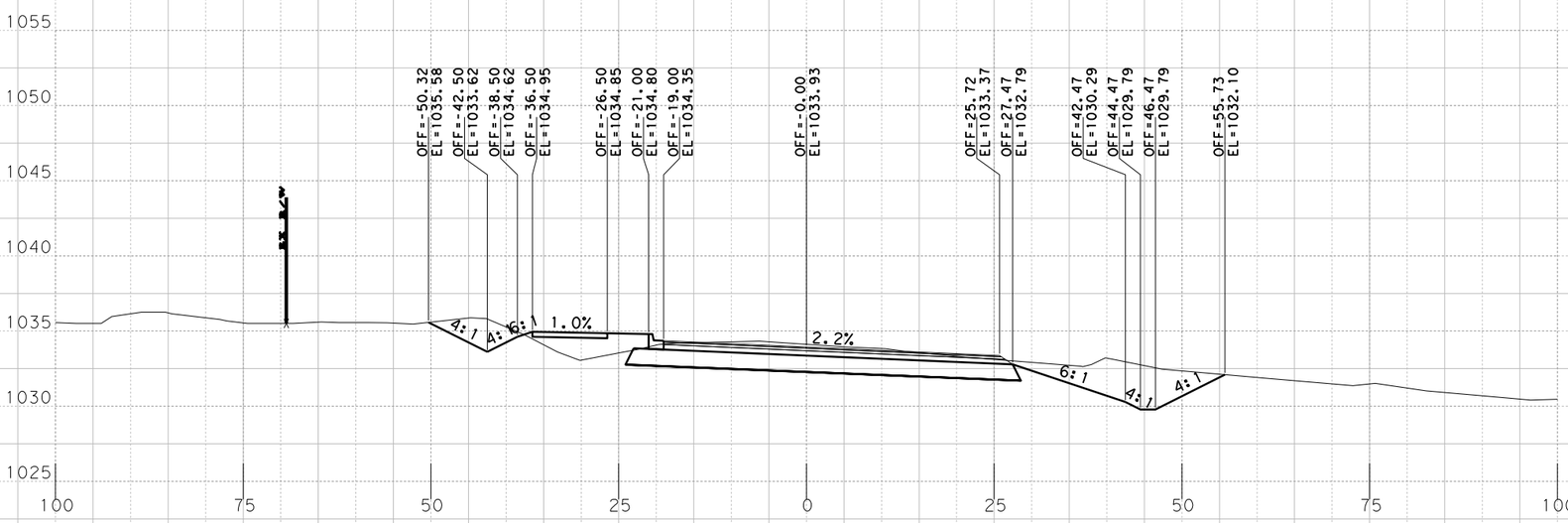

Sta. 676+50.0000 R1

PRELIMINARY
RM 2243
PHASE IA 100%

X-SECTIONS

SCALE: HORIZONTAL 1"=20'
VERTICAL 1"=10'

SHEET 165 OF 168

BGE, Inc.
101 W. Louis Henna Blvd., Suite 400
Austin, TX 78728
Tel: 512-879-0400 • www.bgeinc.com
TBPE Registration No. F-1046

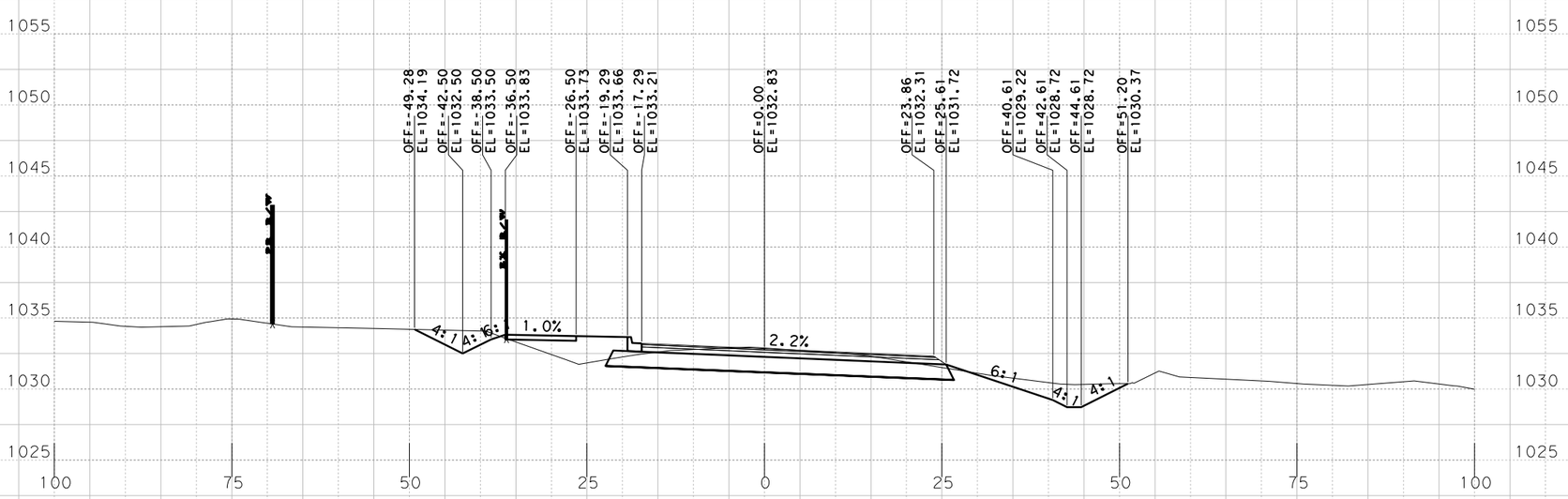

Sta. 678+00.0000 R1

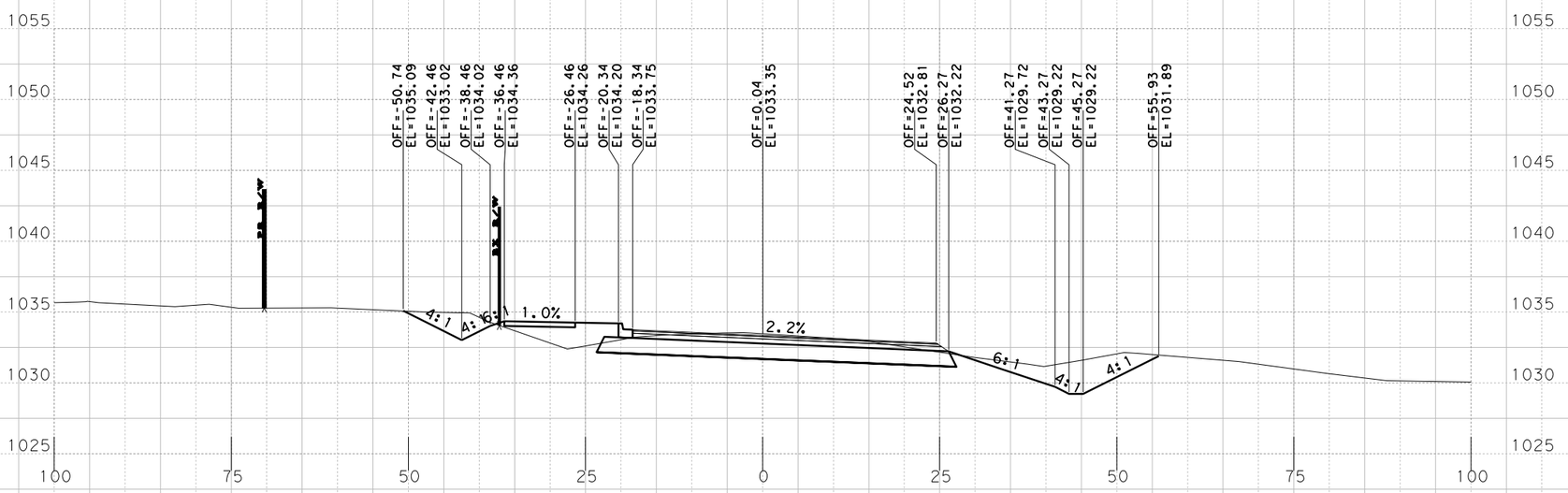

Sta. 677+50.0000 R1

PRELIMINARY
RM 2243
PHASE IA 100%
X-SECTIONS

SCALE: HORIZONTAL 1"=20'
VERTICAL 1"=10'

SHEET 166 OF 168

BGE, Inc.
101 W. Louis Henna Blvd., Suite 400
Austin, TX 78728
Tel: 512-879-0400 • www.bgeinc.com
TBPE Registration No. F-1046

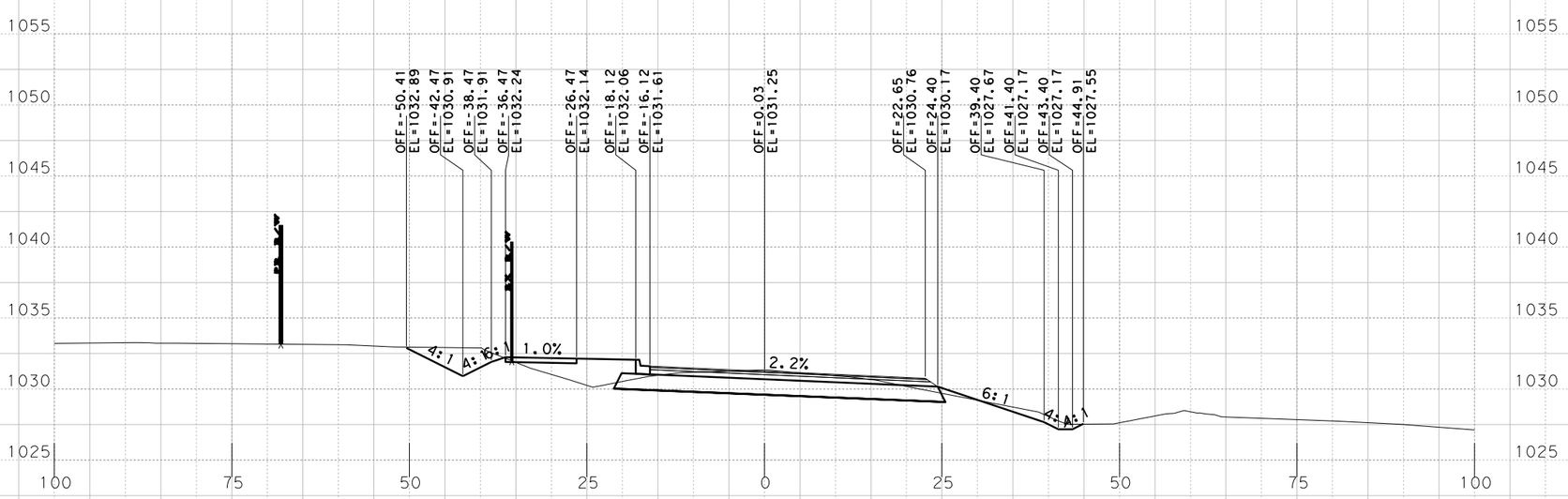

Sta. 679+00.0000 R1

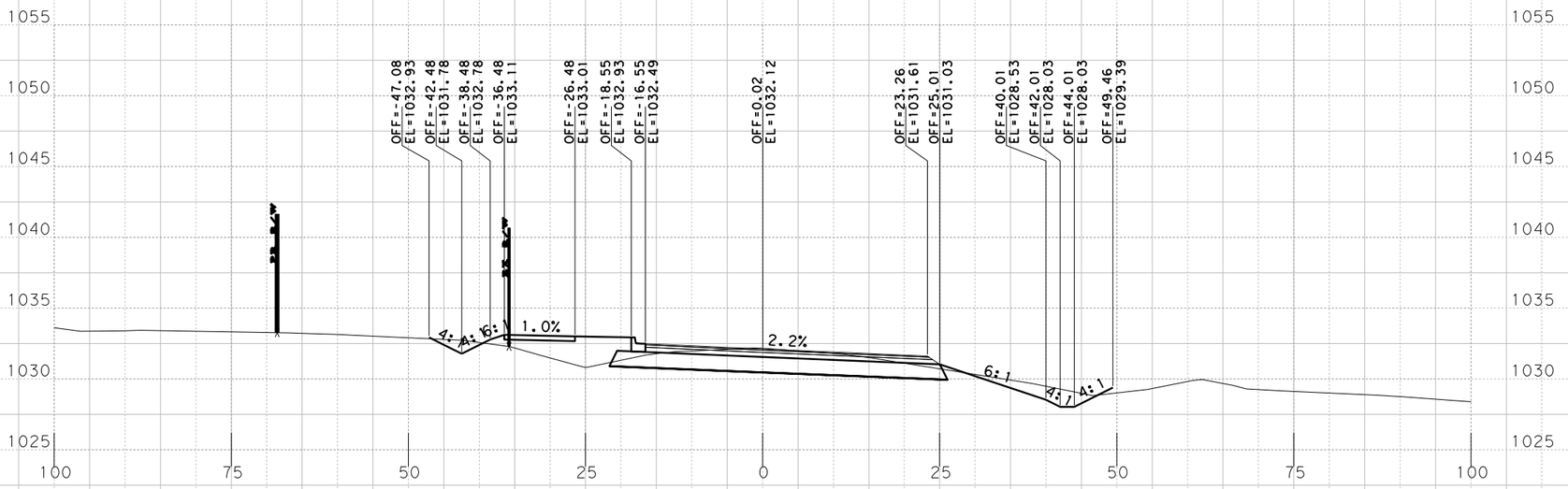

Sta. 678+50.0000 R1

PRELIMINARY
RM 2243
PHASE IA 100%
X-SECTIONS

SCALE: HORIZONTAL 1"=20'
VERTICAL 1"=10'

SHEET 167 OF 168

BGE, Inc.
101 W. Louis Henna Blvd., Suite 400
Austin, TX 78728
Tel: 512-879-0400 • www.bgeinc.com
TBPE Registration No. F-1046

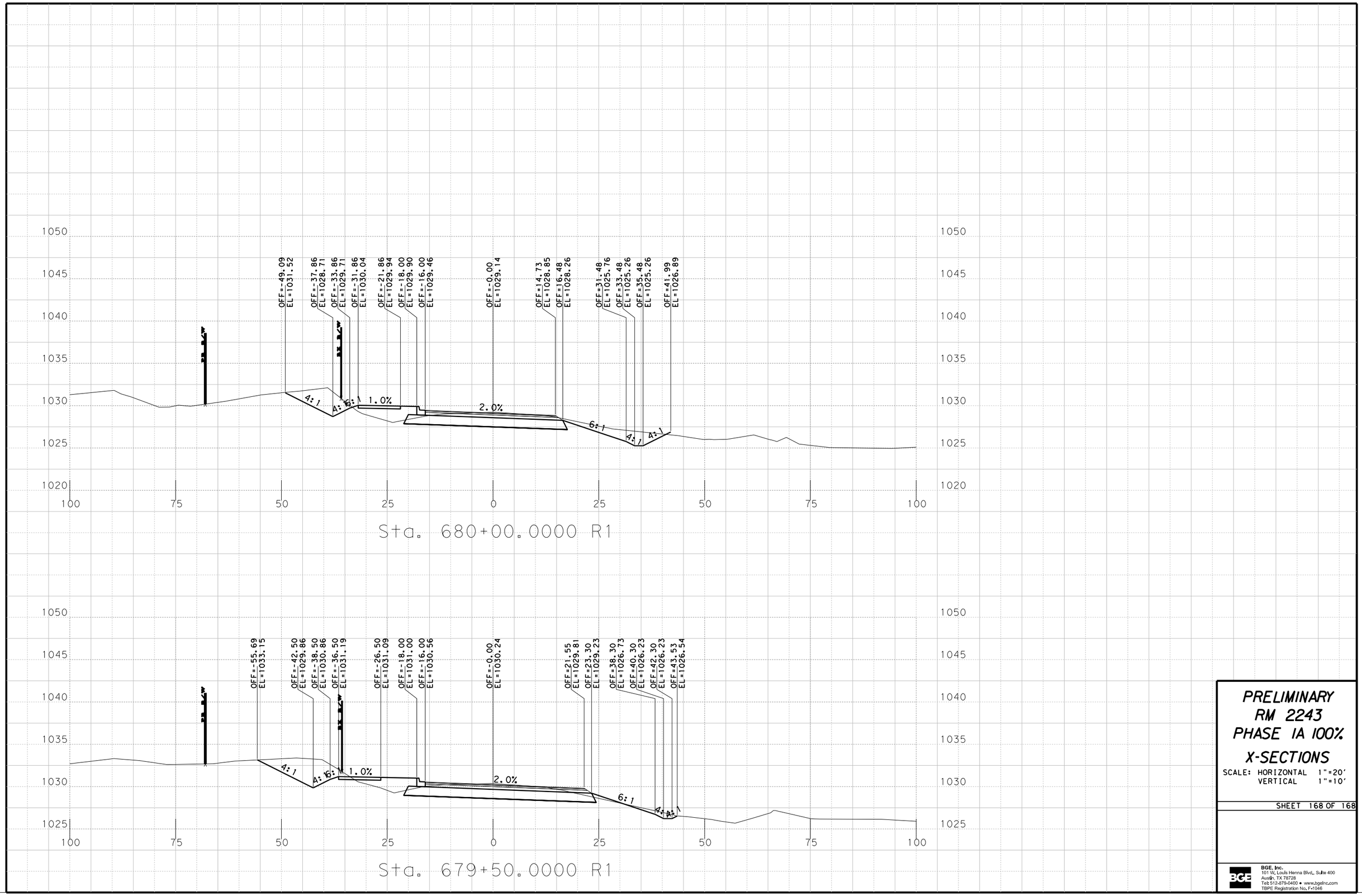

PRELIMINARY
RM 2243
PHASE IA 100%

X-SECTIONS

SCALE: HORIZONTAL 1"=20'
VERTICAL 1"=10'

SHEET 168 OF 168

BGE, Inc.
101 W. Louis Henna Blvd., Suite 400
Austin, TX 78728
Tel: 512-879-0400 • www.bgeinc.com
TBPE Registration No. F-1046

Dwg Info: G:\CFA\2014\0308801_Williamson_County_2013_Road_Bond\MUN\46_RM2243\01\DESIGN\G-001-COVR.dwg — Tab: COVER — Plotted: 3/5/2025 5:16 PM By: RACHAEL NEWTON

INDEX OF SHEETS

G-001	COVER
G-002-G-003	GENERAL NOTES
G-004	GENERAL LEGEND
G-005	SUMMARY OF QUANTITIES
WATER & WASTEWATER	
C-100	KEY MAP
C-101-C-103	4" WATERLINE PROTECT-IN-PLACE
C-104-C-112	WATERLINE "B" PLAN AND PROFILE SHEETS
C-113-C-114	WATERLINE "C" PLAN AND PROFILE SHEETS
C-115	WATERLINE "D" PLAN AND PROFILE SHEETS
C-116	WATERLINE "E" PLAN AND PROFILE SHEETS
C-117	4" WATERLINE ABANDONMENT
C-118	WATERLINE "F" PLAN AND PROFILE SHEETS
C-119-C-120	WATERLINE "G" PLAN SHEETS
C-122	WATER SERVICE SHEET
C-123	WATER VALVE BOX ADJUSTMENTS
C-124	WASTEWATER MANHOLE ADJUSTMENTS
C-125	RESTRAINED JOINTS CALCULATIONS
EROSION & SEDIMENTATION CONTROLS	
C-201-C-210	EROSION CONTROL SHEETS
DETAILS	
C-501-C-502	STANDARD DETAILS

City of Leander

CITY OF LEANDER
RM 2243
WATER LINE IMPROVEMENTS
90% SUBMITTAL

TOTAL LENGTH OF PROJECT: 6,779 LF

PROJECT LIMITS:
ALONG HERO WAY FROM US 183-A TO
RONALD REAGAN BLVD.

CONSTRUCTION OF 2”, 4", 6", AND 12" WATER LINES, AND SERVICE WATER LINES; 24", 42” STEEL ENCASEMENT INSTALLED VIA OPEN TRENCH AND JACK/BORE; WASTEWATER MANHOLE ADJUSTMENTS; REQUIRED APPURTENANCES, AND CONNECTIONS TO THE EXISTING 2”, 4", AND 12" WATER LINES.

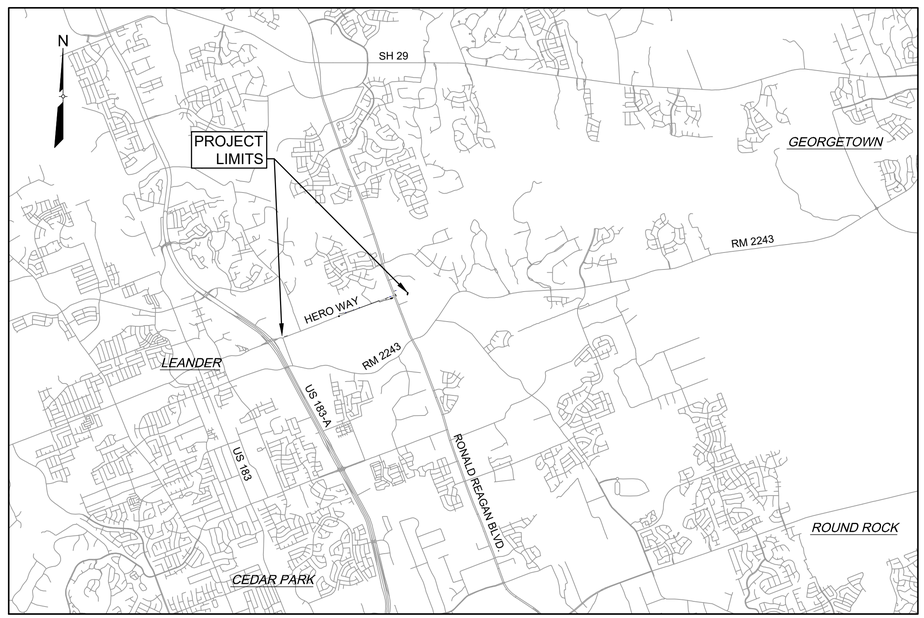

VICINITY MAP
(NOT TO SCALE)

REV. NO.	REVISION DESCRIPTION	(C)ORRECT, (A)DD, (V)OID SHEET NUMBERS	APPR'D BY:	DATE

OWNER INFORMATION

OWNER:
CITY OF LEANDER, TEXAS
105 N BRUSHY STREET
LEANDER, TEXAS 78641

CONTACT:
SARVESH DHAKAL, PE
ASSISTANT CITY ENGINEER
512-528-2775

DESIGNER:
COBBFENDLEY
9600 N. MOPAX EXPRESSWAY, SUITE 800
AUSTIN, TEXAS 78758

CONTACT:
KRISTEN VAN HOOSIER, P.E.
512-646-4326

90% SUBMITTAL

NOT FOR

CONSTRUCTION

SUBMITTED FOR APPROVAL:

INTERIM REVIEW
Not intended for construction, bidding or permit purposes.
Engineer: KRISTEN VAN HOOSIER
P.E. Serial No.: 136882
Date: 3/5/2025

MARCH 05, 2025

KRISTEN VAN HOOSIER, P.E. DATE
COBBFENDLEY, INC.

APPROVALS:

SARVESH DHAKAL, P.E. DATE
CITY OF LEANDER, TEXAS

CobbFendley
TBPE NO. 274 / TBPLS NO. 10046701
505 EAST HUNTLAND DRIVE, SUITE 100
AUSTIN, TEXAS 78752
512.834.9798 | FAX 512.834.9553
WWW.COBBFENDLEY.COM

GENERAL NOTES FOR SUBDIVISIONS AND SITE DEVELOPMENT PLANS

REVISED July 22, 2024

CITY CONTACTS:

ENGINEERING MAIN LINE:	512-528-2721
PLANNING DEPARTMENT:	512-528-2750
PUBLIC WORKS MAIN LINE:	512-259-2640
STORMWATER INSPECTIONS:	512-285-0055
UTILITIES MAIN LINE:	512-259-1142
UTILITIES ON-CALL:	512-690-4760

PEC CONTACTS:

PUBLIC SAFETY LINE:	1-888-343-7702
CUSTOMER OUTAGE LINE:	1-800-396-9037

GENERAL:

1. CONTRACTORS SHALL HAVE AN APPROVED SET OF PLANS WITH APPROVED REVISIONS ON SITE AT ALL TIMES. FAILURE TO HAVE APPROVED PLANS ON SITE MAY RESULT IN ISSUANCE OF WORK STOPPAGE.
2. CONTACT 811 SYSTEM FOR EXISTING WATER AND WASTEWATER LOCATIONS 48 HOURS PRIOR TO CONSTRUCTION.
   a. **REFRESH ALL LOCATES *BEFORE* 14 DAYS** – LOCATE REFRESH REQUESTS MUST INCLUDE A COPY OF YOUR 811 TICKET, TEXAS PIPELINE DAMAGE PREVENTION LAWS REQUIRE THAT A LOCATE REFRESH REQUEST BE SUBMITTED BEFORE 14 DAYS, OR IF LOCATION MARKERS ARE NO LONGER VISIBLE.
   b. **REPORT PIPELINE DAMAGE IMMEDIATELY** – IF YOU WITNESS OR EXPERIENCE PIPELINE EXCAVATION DAMAGE, PLEASE CONTACT THE CITY OF LEANDER BY PHONE AT 512-259-2640.

3. THE CONTRACTOR SHALL CONTACT THE CITY INSPECTOR 48 HOURS BEFORE:
   a. BEGINNING EACH PHASE OF CONSTRUCTION. CONTACT ASSIGNED CITY INSPECTOR.
   b. ANY TESTING. CONTRACTOR SHALL PROVIDE QUALITY TESTING FOR ALL INFRASTRUCTURES TO BE ACCEPTED AND MAINTAINED BY THE CITY OF LEANDER AFTER COMPLETION.
   c. PROOF ROLLING SUB-GRADE AND EVERY LIFT OF ROADWAY EMBANKMENT, IN-PLACE DENSITY TESTING OF EVERY BASE COURSE, AND ASPHALT CORES. ALL OF THIS TESTING MUST BE WITNESSED BY A CITY OF LEANDER REPRESENTATIVE.
   d. CONNECTING TO THE EXISTING WATER LINES.
   e. THE INSTALLATION OF ANY DRAINAGE FACILITY WITHIN A DRAINAGE EASEMENT OR STREET ROW. THE METHOD OF PLACEMENT AND COMPACTION OF BACKFILL IN THE CITY'S ROW MUST BE APPROVED PRIOR TO THE START OF BACKFILL OPERATIONS.
4. ALL RESPONSIBILITIY FOR THE ACCURACY OF THESE PLANS REMAINS WITH THE ENGINEER OF RECORD WHO PREPARED THEM. IN REVIEWING THESE PLANS, THE CITY MUST RELY ON THE ADEQUACY OF THE WORK OF THE ENGINEER OF RECORD.
5. EXCESS SOIL SHALL BE REMOVED AT THE CONTRACTOR'S EXPENSE. NOTIFY THE CITY OF LEANDER IF THE DISPOSAL SITE IS INSIDE THE CITY'S JURISDICTIONAL BOUNDARIES.
6. BURNING IS PROHIBITED.
7. NO WORK IS TO BE PERFORMED BETWEEN THE HOURS OF 9:00 P.M. AND 7:00 A.M. OR WEEKENDS. THE CITY INSPECTOR RESERVES THE RIGHT TO REQUIRE THE CONTRACTOR TO UNCOVER ALL WORK PERFORMED WITHOUT INSPECTION.
8. CONTACT THE CITY INSPECTOR 4 DAYS PRIOR TO WORK FOR APPROVAL TO SCHEDULE ANY INSPECTIONS ON WEEKENDS OR CITY HOLIDAYS.
9. NO BLASTING IS ALLOWED.
10. ANY CHANGES OR REVISIONS TO THESE PLANS MUST FIRST BE SUBMITTED TO THE CITY BY THE DESIGN ENGINEER FOR REVIEW AND WRITTEN APPROVAL PRIOR TO CONSTRUCTION OF THE REVISION. ALL CHANGES AND REVISIONS SHALL USE REVISION CLOUDS TO HIGHLIGHT ALL REVISIONS AND CHANGES WITH EACH SUBMITTAL. REVISION TRIANGLE MARKERS AND NUMBERS SHALL BE USED TO MARK REVISIONS. ALL CLOUDS AND TRIANGLE MARKERS FROM PREVIOUS REVISIONS MUST BE REMOVED. REVISION INFORMATION SHALL BE UPDATED ON COVER SHEET AND AFFECTED PLAN SHEET TITLE BLOCK.
11. THE CONTRACTOR AND ENGINEER SHALL KEEP ACCURATE RECORDS OF ALL CONSTRUCTION THAT DEVIATES FROM THE PLANS. THE ENGINEER SHALL FURNISH THE CITY OF LEANDER ACCURATE "RECORD DRAWINGS" FOLLOWING THE COMPLETION OF ALL CONSTRUCTION. THESE "RECORD DRAWINGS" SHALL MEET THE SATISFACTION OF THE ENGINEERING DEPARTMENTS PRIOR TO FINAL ACCEPTANCE.
12. THE CONTRACTOR WILL REIMBURSE THE CITY FOR ALL REPAIR AND/OR COST INCURRED AS A RESULT OF ANY DAMAGE TO ANY PUBLIC INFRASTRUCTURE WITHIN CITY EASEMENT OR PUBLIC RIGHT-OF-WAY, REGARDLESS OF THESE PLANS.
13. WHEN CONSTRUCTION IS BEING CARRIED OUT WITHIN EASEMENTS, THE CONTRACTOR SHALL CONFINE HIS WORK TO WITHIN THE PERMANENT AND TEMPORARY EASEMENTS. PRIOR TO ACCEPTANCE, THE CONTRACTOR SHALL BE RESPONSIBLE FOR REMOVING ALL TRASH AND DEBRIS WITHIN THE PERMANENT EASEMENTS. CLEANUP SHALL BE TO THE SATISFACTION OF THE ENGINEER OF RECORD AND CITY.
14. CONTRACTOR TO LOCATE, PROTECT, AND MAINTAIN BENCHMARKS, MONUMENTS, CONTROL POINTS AND PROJECT ENGINEERING REFERENCE POINTS. RE-ESTABLISH DISTURBED OR DESTROYED ITEMS BY REGISTERED PROFESSIONAL LAND SURVEYOR IN THE STATE OF TEXAS, AT NO ADDITIONAL COST TO THE PROPERTY OWNER.
15. ALL CONSTRUCTION OPERATIONS SHALL BE ACCOMPLISHED IN ACCORDANCE WITH APPLICABLE REGULATIONS OF THE U.S. OCCUPATIONAL SAFETY AND HEALTH ADMINISTRATION (OSHA). OSHA STANDARDS MAY BE PURCHASED FROM THE GOVERNMENT PRINTING OFFICE; INFORMATION AND RELATED REFERENCE MATERIALS MAY BE PURCHASED FROM OSHA, 1033 LA POSADA DR. SUITE 375, AUSTIN, TEXAS 78752-3832.
16. ALL MANHOLE FRAMES/COVERS AND WATER VALVE/METER BOXES MUST BE ADJUSTED TO FINISHED GRADE AT THE OWNER'S EXPENSE BY THE CONTRACTOR FOR CITY CONSTRUCTION INSPECTOR INSPECTION. ALL UTILITY ADJUSTMENTS SHALL BE COMPLETED PRIOR TO FINAL PAVING. CONTRACTOR SHALL BACKFILL AROUND MANHOLES AND VALVE BOXES WITH CLASS A CONCRETE.
17. ALL MATERIALS AND CONSTRUCTION PROCEDURES WITHIN THE SCOPE OF THIS CONTRACT WHERE NOT SPECIFICALLY COVERED IN THE PROJECT SPECIFICATIONS SHALL CONFORM TO ALL CITY OF LEANDER DETAILS AND CITY OF AUSTIN STANDARD SPECIFICATIONS.
18. PROJECT SPECIFICATIONS TAKE PRECEDENCE OVER PLANS AND SPECIAL CONDITIONS GOVERN OVER TECHNICAL SPECIFICATIONS.
19. THE CONTRACTOR SHALL BE RESPONSIBLE FOR ACQUIRING ALL PERMITS, TESTS, APPROVALS AND ACCEPTANCES REQUIRED TO COMPLETE CONSTRUCTION OF THIS PROJECT.
20. THE CONTRACTOR MUST OBTAIN A CONSTRUCTION WATER METER FOR ALL WATER USED DURING CONSTRUCTION. A COPY OF THIS PERMIT MUST BE CARRIED AT ALL TIMES BY ALL WHO USE WATER.
21. THE CONTRACTOR SHALL BE RESPONSIBLE FOR KEEPING ROADS AND DRIVES ADJACENT TO AND NEAR THE SITE FREE FROM SOIL, SEDIMENT AND DEBRIS. CONTRACTOR WILL NOT REMOVE SOIL, SEDIMENT OR DEBRIS FROM ANY AREA OR VEHICLE BY MEANS OF WATER. ONLY SHOVELING AND SWEEPING WILL BE ALLOWED. THE CONTRACTOR WILL BE RESPONSIBLE FOR DUST CONTROL FROM THE SITE. THE CONTRACTOR SHALL KEEP THE SITE AREA CLEAN AND MAINTAINED AT ALL TIMES, TO THE SATISFACTION OF THE CITY. THE SUBDIVISION (OR SITE) WILL NOT BE ACCEPTED (OR CERTIFICATE OF OCCUPANCY ISSUED) UNTIL THE SITE HAS BEEN CLEANED TO THE SATISIFACTION OF THE CITY.
22. TREES IN EXISTING ROW SHOULD BE PROTECTED OR NOTED IN THE PLANS TO BE REMOVED.

EROSION CONTROL NOTES:

1. TREES IN EXISTING ROW SHOULD BE PROTECTED OR NOTED IN THE PLANS TO BE REMOVED. THE CONTRACTOR IS REQUIRED TO INSPECT THE CONTROLS AND FENCES AT WEEKLY INTERVALS AND AFTER SIGNIFICANT RAINFALL EVENTS TO ENSURE THAT THEY ARE FUNCTIONING PROPERLY. THE CONTRACTOR IS RESPONSIBLE FOR MAINTENANCE OF CONTROLS AND FENCES AND SHALL IMMEDIATELY MAKE ANY NECESSARY REPAIRS TO DAMAGED AREAS. SILT ACCUMULATION AT CONTROLS MUST BE REMOVED WHEN THE DEPTH REACHES SIX (6) INCHES.
2. THE TEMPORARY SPOILS DISPOSAL SITE IS TO BE SHOWN IN THE EROSION CONTROL MAP.
3. ANY ON-SITE SPOILS DISPOSAL SHALL BE REMOVED PRIOR TO ACCEPTANCE UNLESS SPECIFICALLY SHOWN ON THE PLANS. THE DEPTH OF SPOIL SHALL NOT EXCEED 10 FEET IN ANY AREA.
4. ALL AREAS DISTURBED OR EXPOSED DURING CONSTRUCTION SHALL BE RESTORED WITH A MINIMUM OF 6 INCHES OF TOPSOIL AND COMPOST BLEND. TOPSOIL ON SINGLE FAMILY LOTS MAY BE INSTALLED WITH HOME CONSTRUCTION. THE TOPSOIL AND COMPOST BLEND SHALL CONSIST OF 75% TOPSOIL AND 25% COMPOST.
5. SEEDING FOR REESTABLISHING VEGETATION SHALL COMPLY WITH THE AUSTIN GROW GREEN GUIDE OR WILLIAMSON COUNTY'S PROTOCOL FOR SUSTAINABLE ROADSIDES (SPEC 164--WC001 SEEDING FOR EROSION CONTROL). RESEEDING VARIETIES OF BERMUDA SHALL NOT BE USED.
6. STABILIZED CONSTRUCTION ENTRANCE IS REQUIRED AT ALL POINTS WHERE CONSTRUCTION TRAFFIC IS EXITING THE PROJECT ONTO EXISTING PAVEMENT. LINEAR CONSTRUCTION PROJECTS MAY REQUIRE SPECIAL CONSIDERATION. ROADWAYS SHALL REMAIN CLEAR OF SILT AND MUD.
7. TEMPORARY STOP SIGNS SHOULD BE INSTALLED AT ALL CONSTRUCTION ENTRANCES WHERE A STOP CONDITION DOES NOT ALREADY EXIST.
8. IN THE EVENT OF INCLEMENT WEATHER THAT MAY RESULT IN A FLOODING SITUATION, THE CONTRACTOR SHALL REMOVE INLET PROTECTION MEASURES UNTIL SUCH TIME AS THE WEATHER EVENT HAS PASSED.

WATER AND WASTEWATER NOTES:

WATER AND WASTEWATER GENERAL NOTES:

1. ALL NEWLY INSTALLED PIPES AND RELATED PRODUCTS MUST CONFORM TO AMERICAN NATIONAL STANDARDS INSTITUTE/NATIONAL SANITATION FOUNDATION (ANSI/NSF) STANDARD 61 AND MUST BE CERTIFIED BY AND ORGANIZATION ACCREDITED BY ANSI.
2. ALL WATER SERVICE, WASTEWATER SERVICE AND VALVE LOCATIONS SHALL BE APPROPRIATELY STAMPED AS FOLLOWS:

WATER SERVICE	"W" ON TOP OF CURB
WASTEWATER SERVICE	"S" ON TOP OF CURB
VALVE	"V" ON TOP OF CURB

3. OPEN UTILITIES SHALL NOT BE PERMITTED ACROSS THE EXISTING PAVED SURFACES. WATER AND WASTEWATER LINES ACROSS THE EXISTING PAVED SURFACES SHALL BE BORED AND INSTALLED IN STEEL ENCASEMENT PIPES. BELL RESTRAINTS SHALL BE PROVIDED AT JOINTS.
4. INTERIOR SURFACES OF ALL DUCTILE IRON POTABLE OR RECLAIMED WATER PIPE SHALL BE CEMENT-MORTAR LINED AND SEAL COATED AS REQUIRED BY AWWA C104.

REV. NO.	REVISION DESCRIPTION	APPROVED BY:	DATE

CobbFendley
TBPE NO. F-274 / TBPLS NO. 10046701
9600 N. MOPAC EXPRESSWAY, SUITE 800
AUSTIN, TEXAS 78759
512.834.9798 | FAX 512.834.7727
WWW.COBBFENDLEY.COM

GENERAL NOTES (1 OF 2)

RM 2243 W/WW RELOCATIONS
LEANDER, TEXAS

City of Leander

PROJ. NO. 1903-099-24 15
DESIGN: R. RODRIGUEZ
DRAWN: R. RODRIGUEZ
CHECK: L. PRINCE
APPR: K. VAN HOOSIER
DATE: 3/5/2025

INTERIM REVIEW
Not intended for construction, bidding or permit purposes.
Engineer: KRISTEN VAN HOOSIER
P.E. Serial No.: 136882
Date: March 5, 2025

3/5/2025

THESE DESIGN DOCUMENTS ARE NOT TO BE USED FOR CONSTRUCTION PRIOR TO REGULATORY SIGNATURE AND PERMIT

SHEET
G-002

Dwg Info: G:\CFA\2014\0308801_Williamson_County_2013_Road_Bond\MUN\46_RM2243\01\DESIGN\G-002-GNOT.dwg -- Tab: GNOT(1) -- Plotted: 3/5/2025 5:18 PM By: RACHAEL NEWTON

5. SAND, AS DESCRIBED IN AUSTIN SPECIFICATION ITEM 510 PIPE, SHALL NOT BE USED AS BEDDING FOR WATER AND WASTEWATER LINES. ACCEPTABLE BEDDING MATERIALS ARE PIPE BEDDING STONE, PEA GRAVEL AND IN LIEU OF SAND, A NATURALLY OCCURRING OR MANUFACTURED STONE MATERIAL CONFORMING TO ASTM C33 FOR STONE QUALITY AND MEETING THE FOLLOWING GRADATION SPECIFICATION:

SIEVE SIZE	PERCENT RETAINED BY WEIGHT
1/2"	0
3/8"	0-2
#4	40-85
#10	95-100

6. DENSITY TESTING FOR TRENCH BACKFILL SHALL BE DONE IN MAXIMUM 12" LIFTS.

WATER:

1. SAMPLING TAPS SHALL BE BROUGHT UP TO 3 FEET ABOVE GRADE AND SHALL BE EASILY ACCESSIBLE FOR CITY PERSONNEL. AT THE CONTRACTORS' REQUEST, AND IN HIS PRESENCE, SAMPLES FOR BACTERIOLOGICAL TESTING WILL BE COLLECTED BY THE CITY OF LEANDER NOT LESS THAN 24 HOURS AFTER THE TREATED LINE HAS BEEN FLUSHED OF THE CONCENTRATED CHLORINE SOLUTION AND CHARGED WITH WATER APPROVED BY THE CITY.
2. CITY PERSONNEL WILL OPERATE OR AUTHORIZE THE CONTRACTOR TO OPERATE ALL WATER VALVES THAT WILL PASS THROUGH THE CITY'S POTABLE WATER. THE CONTRACTOR MAY BE FINED $500 OR MORE, INCLUDING ADDITIONAL THEFT OF WATER FINES, IF A WATER VALVE IS OPERATED IN AN UNAUTHORIZED MANNER, REGARDLESS OF WHO OPERATED THE VALVE.
3. THE CONTRACTOR IS HEREBY NOTIFIED THAT CONNECTING TO, SHUTTING DOWN, OR TERMINATING EXISTING UTILITY LINES MAY HAVE TO OCCUR AT OFF-PEAK HOURS. SUCH HOURS ARE USUALLY OUTSIDE NORMAL WORKING HOURS AND POSSIBLY BETWEEN 12 AM AND 6 AM AFTER COORDINATING WITH CITY CONSTRUCTION INSPECTORS AND INFORMING AFFECTED PROPERTIES.
4. PRESSURE TAPS OR HOT TAPS SHALL BE IN ACCORDANCE WITH CITY OF LEANDER STANDARD SPECIFICATIONS. THE CONTRACTOR SHALL PERFORM ALL EXCAVATION AND SHALL FURNISH, INSTALL AND AIR TEST THE SLEEVE AND VALVE. A CITY OF LEANDER INSPECTOR MUST BE PRESENT WHEN THE CONTRACTOR MAKES A TAP, AND/OR ASSOCIATED TESTS. A MINIMUM OF TWO (2) WORKING DAYS NOTICE IS REQUIRED. "SIZE ON SIZE" TAPS SHALL NOT BE PERMITTED UNLESS MADE BY THE USE OF AN APPROVED FULL-CIRCLE GASKETED TAPPING SLEEVE. CONCRETE THRUST BLOCKS SHALL BE PLACED BEHIND AND UNDER ALL TAP SLEEVES A MINIMUM OF 24 HOURS PRIOR TO THE BRANCH BEING PLACED INTO SERVICE. THRUST BLOCKS SHALL BE INSPECTED PRIOR TO BACKFILL.
5. FIRE HYDRANTS ON MAINS UNDER CONSTRUCTION SHALL BE SECURELY WRAPPED WITH A BLACK POLY WRAP BAG AND TAPED INTO PLACE. THE POLY WRAP SHALL BE REMOVED WHEN THE MAINS ARE ACCEPTED AND PLACED INTO SERVICE.
6. THRUST BLOCKS OR RESTRAINTS SHALL BE IN ACCORDANCE WITH THE CITY OF LEANDER STANDARD SPECIFICATIONS AND REQUIRED AT ALL FITTINGS PER DETAIL OR MANUFACTURER'S RECOMMENDATION. ALL FITTINGS SHALL HAVE BOTH THRUST BLOCKS AND RESTRAINTS.
7. ALL DEAD END WATER MAINS SHALL HAVE "FIRE HYDRANT ASSEMBLY" OR "BLOW-OFF VALVE AND THRUST BLOCK" OR "BLOW-OFF VALVE AND THRUST RESTRAINTS". THRUST RESTRAINTS SHALL BE INSTALLED ON THE MINIMUM LAST THREE PIPE LENGTHS (STANDARD 20' LAYING LENGTH). ADDITIONALL THRUST RESTRAINTS MAY BE REQUIRED BASED UPON THE MANUFACTURERS RECOMMENDATION AND/OR ENGINEER'S DESIGN.
8. PIPE MATERIAL FOR PUBLIC WATER MAINS SHALL BE PVC (AWWA C900-DR14 MIN. 305 PSI PRESSURE RATING). WATER SERVICES (2" OR LESS) SHALL BE POLYETHYLENE TUBING (BLACK, 200PSI, AND SDR-(9)). COPPER PIPES AND FITTINGS ARE NOT ALLOWED IN THE PUBLIC RIGHT OF WAY. ALL PLASTIC PIPES FOR USE IN PUBLIC WATER SYSTEMS MUST BEAR THE NATIONAL SANITATION FOUNDATION SEAL OF APPROVAL (NSF-PW).
9. ALL FIRE HYDRANT LEADS SHALL BE DUCTILE IRON PIPE (AWWA C115/C151 PRESSURE CLASS 350).
10. ALL IRON PIPE AND FITTINGS SHALL BE WRAPPED WITH MINIMUM 8-MIL POLYETHYLENE.
11. LINE FLUSHING OR ANY ACTIVITY USING A LARGE QUANTITY OF WATER MUST BE COORDINATED WITH THE PUBLIC WORKS DEPARTMENT.
12. ALL WATER METER BOXES SHALL BE:
    a. SINGLE, 1" METER AND BELOW — DFW37F-12-1CA, OR EQUAL
    b. DUAL, 1" METERS AND BELOW — DFW39F-12-1CA, OR EQUAL
    c. 1.5" SINGLE METER — DFW65C-14-1CA, OR EQUAL
    d. 2" SINGLE METER — DFW1730F-12-1CA, OR EQUAL
13. ALL WATER VALVE COVERS ARE TO BE PAINTED BLUE.

WASTEWATER:

1. CURVILINEAR WASTEWATER DESIGN LAYOUT IS NOT PERMITTED.
2. MANDREL TESTING SHALL BE CONDUCTED AFTER THE FINAL BACKFILL HAS BEEN IN PLACE AT LEAST 30 DAYS.
3. MANHOLES SHALL BE COATED PER CITY OF AUSTIN SPL WW-511 (RAVEN 405 OR SPRAYWALL). PENETRATIONS TO EXISTING WASTEWATER MANHOLES REQUIRE THE CONTRACTOR TO RECOAT THE ENTIRE MANHOLE IN ACCORDANCE WITH CITY OF AUSTIN STANDARD SPECIFICATIONS SECTION NO. 506.5.
4. RECLAIMED AND RECYCLED WATER LINE SHALL BE CONSTRUCTED OF "PURPLE PIPE." ALL RECLAIMED AND RECYCLED WATER VALVE COVERS SHALL BE SQUARE AND PAINTED PURPLE.
5. FORCE MAIN PIPES NEED TO HAVE SWEEPING WYES FOR JOINTS.

STREET AND DRAINAGE NOTES:

1. THE CITY OF LEANDER HAS NOT REVIEWED THESE PLANS FOR COMPLIANCE WITH THE AMERICANS WITH DISABILITIES ACT (ADA). IT IS THE RESPONSIBILITY OF THE OWNER TO PROVIDE COMPLIANCE WITH ALL LEGISTATION RELATED TO ACCESSIBLITY WITHIN THE LIMITS OF CONSTRUCTION SHOWN IN THESE PLANS. ALL SIDEWALKS SHALL COMPLY WITH THE AMERICANS WITH DISABILITIES ACT AND TEXAS ACCESSIBILITY STANDARS (TAS).
2. BACKFILL BEHIND THE CURB SHALL BE COMPACTED TO OBTAIN A MINIMUM OF 95% MAXIMUM DENSITY TO WITHIN 6" OF TOP OF CURB. MATERIAL USED SHALL BE PRIMARILY GRANULAR WITH NO ROCKS LARGER THAN 6" IN THE GREATEST DIMENSION. THE REMAINING 6" SHALL BE CLEAN TOPSOIL FREE FROM ALL CLODS AND SUITABLE FOR SUSTAINING PLANT LIFE.
3. A MINIMUM OF 6" OF TOPSOIL SHALL BE PLACED BETWEEN THE CURB AND RIGHT-OF-WAY AND IN ALL DRAINAGE CHANNELS EXCEPT CHANNELS CUT IN STABLE ROCK.
4. DEPTH OF COVER FOR ALL CROSSINGS UNDER PAVEMENT, INCLUDING GAS, ELECTRIC TELEPHONE, CABLE TV, ETC., SHALL BE A MINIMUM OF 36" BELOW SUBGRADE.
5. STREET RIGHT-OF-WAY SHALL BE GRADED AT A SLOPE OF ¼" PER FOOT TOWARD THE CURB UNLESS OTHERWISE INDICATED.
6. ALL DRAINAGE PIPE IN PUBLIC RIGHT OF WAY OR EASEMENTS SHALL BE REINFORCED CONCRETE PIPE MINIMUM CLASS III OF TONGUE AND GROOVE OR O-RING JOINT DESIGN. CORRUGATED METAL PIPE IS NOT ALLOWED IN PUBLIC RIGHT OR WAY OR EASEMENTS.
7. THE CONTRACTOR MUST PROVIDE A PNEUMATIC TRUCK PER TXDOT SPEC FOR PROOF ROLLING.
8. ALL STRIPING, WITH THE EXCEPTION OF STOP BARS, CROSS WALKS, WORDS AND ARROWS, IS TO BE TYPE II (WATER BASED). STOP BARS, CROSS WALKS, WORDS AND ARROWS REQUIRE TYPE I THERMOPLASTIC.
9. MANHOLE FRAMES, COVERS, VALVES, CLEAN-OUTS, ETC. SHALL BE RAISED TO GRADE PRIOR TO FINAL PAVEMENT CONSTRUCTION.
10. A STOP BAR SHALL BE PLACED AT ALL STOP SIGN LOCATIONS.
11. THE GEOTECHNICAL ENGINEER SHALL INSPECT THE SUBGRADE FOR COMPLIANCE WITH THE DESIGN ASSUMPTIONS MADE DURING PREPARATION OF THE SOILS REPORT. ANY ADJUSTMENTS THAT ARE REQUIRED SHALL BE MADE THROUGH REVISIONS OF THE APPROVED CONSTRUCTION PLANS.
12. GEOTECHNICAL INVESTIGATION INFORMATION AND PAVEMENT RECOMMENDATIONS WERE PROVIDED BY CORSAIR CONSULTING, LLC.
13. A TRAFFIC CONTROL PLAN, IN ACCORDANCE WITH THE TEXAS MANUAL ON UNIFORM TRAFFIC CONTROL DEVICES, CITY OF AUSTIN TRANSPORATION CRITERIA MANUAL, CITY OF LEANDER STANDARD DETAILS AND TEXAS DEPARTMENT OF TRANSPORTATION CRITERIA, SHALL BE SUBMITTED TO THE CITY OF LEANDER FOR REVIEW AND APPROVAL PRIOR TO ANY PARTIAL OR COMPLETE ROADWAY CLOSURES. TRAFFIC CONTROL PLANS MUST BE SITE SPECIFIC AND SIGNED AND SEALED BY A REGISTERED PROFESSIONAL ENGINEER.
14. ALL LANE CLOSURES SHALL OCCUR ONLY BETWEEN THE HOURS OF 9 AM AND 4 PM UNLESS OTHERWISE NOTED ON THE PLANS. ANY NIGHT TIME LANE CLOSURES REQUIRE APPROVAL OF THE CITY ENGINEER AND SHALL OCCUR BETWEEN THE HOURS OF 8 PM AND 6 AM. LANE CLOSURES OBSERVED BY THE CITY DURING PEAK HOURS OF 6 AM TO 9 AM OR 4 PM TO 8 PM WILL BE SUBJECT TO A FINE AND/OR SUBSEQUENT ISSUANCE OF WORK STOPPAGE.
15. TEMPORARY ROCK CRUSHING IS NOT ALLOWED. ALL SOURCES OF FLEXIBLE BASE MATERIAL ARE REQUIRED TO BE APPROVED BY THE CITY. PRIOR TO BASE PLACEMENT ALL CURRENT TRIAXIAL TEST REPORTS FOR PROPOSED STOCK PILES ARE TO BE SUBMITTED TO THE CITY CONSTRUCTION INSPECTOR FOR REVIEW AND APPROVAL.
16. AT ROAD INTERSECTIONS THAT HAVE A VALLEY GUTTER, THE CROWN TO THE INTERSECTING ROAD WILL BE CULMINATED AT A DISTANCE OF 40 FEET FROM THE INTERSECTING CURB LINE UNLESS OTHERWISE NOTED.
17. NO PONDING OF WATER SHALL BE ALLOWED TO COLLECT ON OR NEAR THE INTERSECTION OF PRIVATE DRIVEWAYS AND PUBLIC STREETS. RECONSTRUCTION OF THE DRIVEWAY APPROACH SHALL BE AT THE CONTRACTOR'S EXPENSE.
18. ALL DRIVEWAY APPROACHES SHALL HAVE A UNIFORM TWO PERCENT SLOPE WITHIN THE PUBLIC RIGHT OF WAY UNLESS APPROVED IN WRITING BY THE ENGINEERING DEPARTMENT.
19. IMPROVEMENTS THAT INCLUDE RECONSTRUCTION OF AN EXISTING TYPE II DRIVEWAY SHALL BE DONE IN A MANNER WHICH RETAINS OPERATIONS OF NOT LESS THAN HALF OF THE DRVIEWAY TO REMAIN OPEN AT ALL TIMES. FULL CLOSURE OF SUCH DRIVEWAY CAN BE CONSIDERED WITH WRITTEN AUTHORIZATION OBTAINED BY THE CONTRACTOR FROM ALL PROPERTY OWNERS AND ACCESS EASEMENT RIGHT HOLDERS ALLOWING THE FULL CLOSURE OF THE DRIVEWAY.
20. CONTRACTOR MUST CLEAR FIVE (5) FEET BEYOND ALL PUBLIC RIGHT OF WAY TO PREVENT FUTURE VEGETATIVE GROWTH INTO THE SIDEWALK AREAS.
21. SLOPE OF NATURAL GROUND ADJACENT TO THE PUBLIC RIGHT OF WAY SHALL NOT EXCEED 3:1 SLOPE. IF A 3:1 SLOPE IS NOT POSSIBLE, SLOPE PROTECTION OR RETAINING WALL MUST BE SUBMITTED TO THE CITY FOR REVIEW AND APPROVAL PRIOR TO FINAL ACCEPTANCE.
22. THERE SHALL BE NO WATER, WASTEWATER OR DRAINAGE APPURTENANCES, INCLUDING BUT NOT LIMITED TO VALVES, FITTINGS, METERS, CLEAN-OUTS, MANHOLES, OR VAULTS IN ANY DRIVEWAY, SIDEWALK, TRAFFIC OR PEDESTRIAN AREA.
23. PUBLIC SIDEWALKS SHALL NOT USE CURB INLETS AS PARTIAL WALKING SURFACE. SIDEWALKS SHALL NOT USE TRAFFIC CONTROL BOXES, METERS, CHECK VALVE VAULTS, COMMUNICATION VAULTS, OR OTHER BURIED OR PARTIALLY BURIED INFRASTRUCTURE AS A VEHICULAR OR PEDESTRIAN SURFACE.
24. ALL WET UTILITIES SHALL BE INSTALLED AND ALL DENSITIES MUST HAVE PASSED INSPECTION(S) PRIOR TO THE INSTALLATION OF DRY UTILITIES.
25. DRY UTILITIES SHALL BE INSTALLED AFTER SUBGRADE IS CUT AND BEFORE THE FIRST COURSE OF BASE. NO TRENCHING COMPACTED BASE. IF NECESSARY DRY UTILITIES INSTALLED AFTER FIRST COURSE BASE SHALL BE BORED ACROSS THE FULL WIDTH OF THE PUBLIC RIGHT-OF-WAY.
26. A MINIMUM OF SEVEN (7) DAYS OF CURE TIME IS REQUIRED FOR HMAC PRIOR TO THE INTRODUCTION OF VEHICULAR TRAFFIC TO ALL STREETS.

TRENCH SAFETY NOTES:

1. TRENCH SAFETY SYSTEMS TO BE UTILIZED FOR THIS PROJECT ARE DESCRIBED IN ITEM 509S "TRENCH SAFETY SYSTEMS" OF THE CITY OF AUSTIN STANDARD SPECIFICATIONS AND SHALL BE IN ACCORDANCE WITH THE LAWS OF THE STATE OF TEXAS AND THE U.S. OCCUPATION SAFETY AND HEALTH ADMINISTRATION REGULATIONS.

GRADING NOTES:

1. POSITIVE DRAINAGE SHALL BE MAINTAINED ON ALL SURFACE AREAS WITHIN THE SCOPE OF THIS PROJECT. CONTRACTOR SHOULD TAKE PRECAUTIONS NOT TO ALLOW ANY PONDING OF WATER.
2. THE CONTRACTOR SHALL CONSTRUCT EARTHEN EMBANKMENTS WITH SLOPES NO STEEPER THAN 3:1 AND COMPACT SOIL TO 95% OF MAXIMUM DENSITY IN ACCORDANCE WITH THE CITY OF AUSTIN STANDARD SPECIFICATIONS.
3. AREAS OF SOIL DISTURBANCE ARE LIMITED TO GRADING AND IMPROVEMENTS SHOWN. ALL OTHER AREAS WILL NOT BE DISTURBED.

REV. NO.	REVISION DESCRIPTION	APPROVED BY:	DATE

CobbFendley
TBPE NO. F-274 / TBPLS NO. 10046701
9600 N. MOPAC EXPRESSWAY, SUITE 800
AUSTIN, TEXAS 78759
512.834.9798 | FAX 512.834.7727
WWW.COBBFENDLEY.COM

GENERAL NOTES (2 OF 2)

RM 2243 W/WW RELOCATIONS
LEANDER, TEXAS

City of Leander

PROJ. NO. 1903-099-24 15
DESIGN: R. RODRIGUEZ
DRAWN: R. RODRIGUEZ
CHECK: L. PRINCE
APPR: K. VAN HOOSIER
DATE: 3/5/2025

INTERIM REVIEW
Not intended for construction, bidding or permit purposes.
Engineer: KRISTEN VAN HOOSIER
P.E. Serial No.: 136882
Date: March 5, 2025

3/5/2025

THESE DESIGN DOCUMENTS ARE NOT TO BE USED FOR CONSTRUCTION PRIOR TO REGULATORY SIGNATURE AND PERMIT.

SHEET
G-003

Dwg Info: G:\CFA\2014\030801_Williamson_County_2013_Road_Bond\MUN\46_RM2243\01\DESIGN\G-002-GNOT.dwg — Tab: GNOT(2) — Plotted: 3/5/2025 5:18 PM By: RACHAEL NEWTON

SURVEY LEGEND

- BENCHMARK
- BOLLARD
- BORE HOLE
- CABLE TV JUNCTION BOX
- CABLE TV PEDESTAL
- CLEANOUT
- COMMUNICATIONS MANHOLE
- CONC. HWY. MONUMENT FOUND TYPE II
- CONCRETE MONUMENT FOUND
- CONCRETE MONUMENT SET
- COTTON SPINDLE FOUND
- COTTON SPINDLE SET
- ELECTRIC JUNCTION BOX
- ELECTRIC MANHOLE
- ELECTRIC METER
- ELECTRIC PEDESTAL
- ELECTRIC TRANSFORMER PAD
- FIRE HYDRANT
- GAS MANHOLE
- GAS METER
- GAS TEST LEAD
- GAS VALVE
- GROUND LIGHT
- GUARD POST
- GUY WIRE
- IRON PIPE FOUND
- IRON ROD FOUND
- IRON ROD SET
- IRRIGATION CONTROL VALVE
- LIGHT, STANDARD
- MAILBOX
- MANHOLE
- MONITORING WELL
- NAIL FOUND
- NAIL SET
- POWER POLE
- POWER POLE WITH LIGHT
- POWER POLE WITH RISER
- PULL BOX
- RISER
- ROOF DRAIN
- SEPTIC LID
- SIGN
- SPRINKLER HEAD
- STORM MANHOLE
- TELECOM JUNCTION BOX
- TELECOM MANHOLE
- TELECOM PEDESTAL
- TEST HOLE
- TRAFFIC SIGNAL BOX
- TRAFFIC SIGNAL POLE
- TREE
- TREE TO BE REMOVED
- UNDERGROUND CABLE TV MARKER
- UNDERGROUND ELECTRIC MARKER
- UNDERGROUND FIBER OPTIC MARKER
- UNDERGROUND GAS PIPELINE MARKER
- UNDERGROUND PIPELINE MARKER
- UNDERGROUND TELECOM MARKER
- UNDERGROUND WATER MARKER
- VALVE, MISCELLANEOUS
- VENT
- WASTEWATER MANHOLE
- WATER FAUCET
- WATER MANHOLE
- WATER METER
- WATER VALVE
- WELL

EXISTING UTILITIES AND FEATURES

- RIGHT OF WAY
- EASEMENT
- WATER LINE
- REUSE WATER
- WATER, ABANDONED
- WASTEWATER LINE
- FORCE MAIN
- WASTEWATER, ABANDONED
- STORM DRAIN
- STORM CULVERT
- GAS LINE
- OVERHEAD ELECTRIC
- U.G. TELECOM
- FIBER OPTIC
- U.G. ELECTRIC
- CABLE TV
- CHAINLINK FENCE
- IRON FENCE
- ROCK FENCE
- WIRE FENCE
- WOOD FENCE
- GUARD RAIL
- APPROXIMATE TREE LINE

PROPOSED UTILITY FEATURES

- GATE VALVE
- GATE VALVE
- BUTTERFLY VALVE
- BALL VALVE
- CHECK VALVE
- AIR RELEASE VALVE
- AIR RELEASE VALVE
- BACK FLOW PREVENTOR
- FIRE HYDRANT
- DRAIN VALVE
- METER

UTILITY LINE STYLE LEGEND

- WATER LINE
- RECLAIMED WATER LINE
- RAW WATER LINE
- CHILLED WATER LINE
- WASTEWATER LINE
- FORCE MAIN
- STORM DRAIN
- GAS LINE

X = SIZE OF LINE (0.5" TO 120")

M = MATERIAL OF PIPE

- ABS = ACRYLONITRILE BUTADIENE STYRENE
- AC = ASBESTOS CONCRETE
- BS = BARE STEEL
- CI = CAST IRON
- CMP - CORRUGATED METAL PIPE
- COP = COPPER
- CS = COATED STEEL
- CSC = CONCRETE STEEL CYLINDER
- DI = DUCTILE IRON
- FRPM = FIBERGLASS REINFORCED POLYMER MORTAR
- GALV = GALVANIZED STEEL
- HDPE = HIGH DENSITY POLYETHYLENE
- HP = HIGH PRESSURE
- IP = INTERMEDIATE PRESSURE
- PB = POLYBUTYLENE
- PE = POLYETHYLENE
- PVC = POLYVINYLCHLORIDE
- RCP - REINFORCED CONCRETE PIPE
- STL = STEEL
- VHP = VERY HIGH PRESSURE
- WI = WROUGHT IRON
- WS = WRAPPED STEEL

ABD = ABANDONED
UNK = UNKNOWN

IF THE MATERIAL IS UNKNOWN, IT WILL NOT BE SHOWN.
IF THE SIZE IS UNKNOWN, ONLY THE UTILITY TYPE WILL BE SHOWN.

EXAMPLES:

- W-12-DI — WATER, 12" DUCTILE IRON
- WW-8-PVC — WASTEWATER, 8" PVC
- SD-18-CMP — STORM DRAIN, 18" CORRUGATED METAL PIPE
- G-1.5-STL — GAS, 1 1/2" STEEL PIPE

ABBREVIATIONS

ASPH	ASPHALT
B-B	BACK TO BACK
BKFL	BACKFILL
℄	BASELINE
BE	BEVELED END
BM	BENCHMARK
BTM	BOTTOM
℄	CENTERLINE
CI	CAST IRON
CONC	CONCRETE
CONSTR	CONSTRUCTION
CMP	CORRUGATED METAL PIPE
DE	DRAINAGE EASEMENT
DI	DUCTILE IRON
ESMT	EASEMENT
ELEC	ELECTRIC
EL	ELEVATION
ELL	ELBOW
EXIST	EXISTING
FB	FIELDBOOK
FH	FIRE HYDRANT
F/C	FRAME AND COVER
FUT	FUTURE
HP	HIGH PRESURE (>60 PSIG)
LP	LOW PRESSURE (<60 PSIG)
LT	LEFT
MH	MANHOLE
NFIF	NOT FOUND IN FIELD
O/S	OFFSET
OHWM	ORDINARY HIGH WATER MARK
PE	POLYETHYLENE
PVC	POLYVINYL CHLORIDE
PVMT	PAVEMENT
℄	PROPERTY LINE
PROP	PROPOSED
REF	REFERENCE
RCB	REINFORCED CONCRETE BOX
RCP	REINFORCED CONCRETE PIPE
RT	RIGHT
ROW	RIGHT OF WAY
SHT	SHEET
SW	SIDEWALK
STA	STATION
STL	STEEL
SD	STORM DRAIN
TELE	TELEPHONE / TELECOM
TBM	TEMPORARY BENCH MARK
TXDOT	TEXAS DEPARTMENT OF TRANSPORTATION
UE	UTILITY EASEMENT
WE	WATER EASEMENT
WL	WATERLINE
WM	WATER METER
WV	WATER VALVE
WW	WASTEWATER
WWE	WASTEWATER EASEMENT

REV. NO.	REVISION DESCRIPTION	APPROVED BY:	DATE

CobbFendley
TBPE NO. F-274 / TBPLS NO. 10046701
9600 N. MOPAC EXPRESSWAY, SUITE 800
AUSTIN, TEXAS 78759
512.834.9798 | FAX 512.834.7727
WWW.COBBFENDLEY.COM

GENERAL LEGEND

RM 2243 W/WW RELOCATIONS
LEANDER, TEXAS

City of Leander

PROJ. NO.	1903-099-24 15
DESIGN:	R. RODRIGUEZ
DRAWN:	R. RODRIGUEZ
CHECK:	L. PRINCE
APPR:	K. VAN HOOSIER
DATE:	3/5/2025

INTERIM REVIEW
Not intended for construction, bidding or permit purposes.
Engineer: KRISTEN VAN HOOSIER
P.E. Serial No.: 136882
Date: March 5, 2025

3/5/2025

THESE DESIGN DOCUMENTS ARE NOT TO BE USED FOR CONSTRUCTION PRIOR TO REGULATORY SIGNATURE AND PERMIT.

SHEET
G-004

Dwg Info: G:\CFA\2014\0308801_Williamson_County_2013_Road_Bond\MUN\46_RM2243\01\DESIGN\G-002-GNDT.dwg — Tab: LGND — Plotted: 3/5/2025 5:18 PM By: RACHAEL NEWTON

Bid Item	501S-24	504S-3W	505S-B-3	505S-B-24	505S-B-42	509S-1	510-AW1HDPE	510-AW2HDPE	510-AW-2PVC	510-AW-4PVC	510-AW-12PVC	510-AWRJ-2PVC	510-AWRJ-4PVC	510-AWRJ-6DI	510-AWRJ-12PVC	510-FW-3	510-FW-5	510-KW
Description	Jacking or Boring 24" Pipe, Steel Encasement Pipe	Adjusting Water Valve Boxes to Grade	Encasement Pipe, 3" Dia., Steel	Encasement Pipe, 24" Dia., Steel	Encasement Pipe, 42" Dia., Steel	Trench Excavation Safety Protection System (All Depths)	Pipe, 1 inch Dia. HDPE DR9 (all depths), Including Excavation and Backfill	Pipe, 2 inch Dia. HDPE DR9 (all depths), Including Excavation and Backfill	Pipe, 2 inch Dia. PVC SCH 80 (all depths), Including Excavation and Backfill	Pipe, 4" Dia. PVC, C-900, DR-14, all depths, Complete in Place, Including Excavation and Backfill	Pipe, 12" Dia. PVC, C-900, DR-14, all depths, Complete in Place, Including Excavation and Backfill	Pipe, 2" Dia. PVC, SCH 80 (Restrained), all depths, Complete in Place, Including Excavation and Backfill	Pipe, 4" Dia. PVC, C-900, DR-14 (Restrained), all depths, Complete in Place, Including Excavation and Backfill	Pipe, 6" Dia. DI CL-350 (Restrained), all depths, Complete in Place, Including Excavation and Backfill	Pipe, 12" Dia. PVC, C-900, DR-14 (Restrained), all depths, Complete in Place, Including Excavation and Backfill	Concrete Trench Cap, 3 Ft. Width	Concrete Trench Cap, 5 Ft. Width	Ductile Iron Fittings (C-153 Weight Schedule)
Sheet	LF	EA	LF	LF	LF	LF	LF	LF	LF	LF	LF	LF	LF	LF	LF	LF	LF	TON
C-101	0	0	0	0	0	165	0	0	0	0	0	0	0	0	0	165	0	0.00
C-102	0	0	0	0	0	111	0	0	0	0	0	0	0	0	0	111	0	0.00
C-103	0	0	0	0	0	62	0	0	0	0	0	0	0	0	0	62	0	0
C-104	0	0	0	0	0	400	0	0	0	0	170	0	0	0	230	0	0	0.29
C-105	0	0	0	23	0	515	46	0	0	0	197	0	0	19	253	0	0	0.20
C-106	0	0	0	0	0	493	28	0	0	0	346	0	0	15	104	0	0	0.07
C-107	0	0	0	0	0	491	28	0	0	0	248	0	0	13	202	0	0	0.07
C-108	0	0	0	90	0	450	0	0	0	0	314	0	0	0	136	0	0	0.13
C-109	0	0	0	0	0	467	0	0	0	0	287	0	0	0	180	0	0	0.17
C-110	67	0	0	78	0	382	0	0	0	0	208	0	0	0	241	0	0	0.16
C-111	0	0	0	33	0	472	22	0	0	0	176	0	0	0	274	0	0	0.24
C-112	0	0	0	29	0	97	0	0	0	0	0	0	0	16	81	0	0	0.35
C-113	0	0	0	0	0	349	0	0	0	0	232	0	0	0	117	0	0	0.143
C-114	0	0	0	18	0	171	0	0	0	0	59	0	0	0	112	0	0	0.08
C-115	0	0	0	0	123	123	0	0	0	0	0	0	0	0	0	0	0	0
C-116	0	0	0	0	0	187	0	20	104	0	0	63	0	0	0	0	0	0.043
C-117	0	0	0	0	0	0	0	0	0	0	0	0	0	0	0	0	0	0.02
C-118	0	0	0	0	0	277	0	0	0	248	0	0	26	0	0	3	0	0.076
C-119	0	0	0	0	0	0	0	0	0	0	0	0	0	0	0	0	0	0
C-120	0	0	56	0	0	119	119	0	0	0	0	0	0	0	0	0	0	0
C-121	0	0	0	0	0	0	0	0	0	0	0	0	0	0	0	0	47	0
C-122	0	0	0	0	0	266	133	133	0	0	0	0	0	0	0	0	0	0
C-123	0	4	0	0	0	0	0	0	0	0	0	0	0	0	0	0	0	0
C-124	0	0	0	0	0	0	0	0	0	0	0	0	0	0	0	0	0	0

Bid Item	510-JW2x2	510-JW4x4	510-JW12x6	510-JW12x12	510-IW24x2	511S-A-6	511S-A-12	511S-B	SP510-A-2"	SP510-A-4"	SP510-A-12"	SP510-B	SP510-BW	SP511-J	SP511-K-12"	506-1WW	506-2WW
Description	Wet Connections, 2"x2"	Wet Connections, 4"x4"	Wet Connections, 12"x6"	Wet Connections, 12"x12"	Pressure Taps, 24"x2"	Valves, Gate Type, 6 in Dia.	Valves, Gate Type, 12 in Dia.	Fire Hydrant Assembly	Restrain Existing PVC Pipe, 2" Diameter; Includes bell or mechanical joint restraints and other incidentals necessary to complete; pipe shall be restrained at a minimum the length of called for on the plans, but shall be restrained up to the next joint	Restrain Existing PVC Pipe, 4" Diameter; Includes bell or mechanical joint restraints and other incidentals necessary to complete; pipe shall be restrained at a minimum the length of called for on the plans, but shall be restrained up to the next joint	Restrain Existing PVC Pipe,12" Diameter; Includes bell or mechanical joint restraints and other incidentals necessary to complete; pipe shall be restrained at a minimum the length of called for on the plans, but shall be restrained up to the next joint	Water Service Relocation, including new meter, new meter box, 2" Corporation Stop, Tap to Main, as well as removal of the existing meter, box and components	Water Service Pipe Reconnection	Remove Existing Fire Hydrant, including plugging of pipe, installation of blind flange as needed, labor, equipment, and other incidentals	Remove Existing 12" gate valve, including plugging of pipe, installation of blind flange as needed, labor, equipment, and other incidentals	Minor Manhole Height Adjustment, 48" Dia.	Major Manhole Height Adjustment, 48" Dia.
Sheet	EA	EA	EA	EA	EA	EA	EA	EA	EA	EA	EA	EA	EA	EA	EA	EA	EA
C-101	0	0	0	0	0	0	0	0	0	0	0	0	0	0	0	0	0
C-102	0	0	0	0	0	0	0	0	0	0	0	0	0	0	0	0	0
C-103	0	0	0	0	0	0	0	0	0	0	0	0	0	0	0	0	0
C-104	0	0	0	1	0	0	0	0	0	0	1	0	0	0	0	0	0
C-105	0	0	0	0	0	1	0	1	0	0	0	1	1	0	0	0	0
C-106	0	0	0	0	0	1	1	1	0	0	0	1	1	0	0	0	0
C-107	0	0	0	0	0	1	1	1	0	0	0	1	1	0	0	0	0
C-108	0	0	0	0	0	0	0	0	0	0	0	0	0	0	0	0	0
C-109	0	0	0	0	0	0	3	0	0	0	0	0	0	0	0	0	0
C-110	0	0	0	0	0	0	0	0	0	0	0	0	0	0	0	0	0
C-111	0	0	0	0	0	0	3	0	0	0	0	0	0	1	2	0	0
C-112	0	0	1	1	0	1	1	1	0	0	1	0	0	0	0	0	0
C-113	0	0	0	0	0	0	1	0	0	0	0	0	0	0	0	0	0
C-114	0	0	0	1	0	0	1	0	0	0	1	0	0	0	0	0	0
C-115	0	0	0	0	0	0	0	0	0	0	0	0	0	0	0	0	0
C-116	2	0	0	0	1	0	0	0	2	0	0	0	0	0	0	0	0
C-117	0	0	0	0	0	0	0	0	0	0	0	0	0	0	0	0	0
C-118	0	2	0	0	0	0	0	0	0	2	0	0	0	0	0	0	0
C-119	0	0	0	0	0	0	0	0	0	0	0	0	1	0	0	0	0
C-120	0	0	0	0	0	0	0	0	0	0	0	1	1	0	0	0	0
C-121	0	0	0	0	0	0	0	0	0	0	0	0	0	0	0	0	0
C-122	0	0	0	0	0	0	0	0	0	0	0	1	0	0	0	0	0
C-123	0	0	0	0	0	0	0	0	0	0	0	0	0	0	0	0	0
C-124	0	0	0	0	0	0	0	0	0	0	0	0	0	0	0	2	2

Bid Item	160 WC02 COL	161 7006 COL	162 WC04 COL	164 WC04 COL	164 WC05 COL	164 WC06 COL	166 7002 COL	168 WC01 COL	506 7002 COL	507 7011 COL	506 7039 COL	506 7041 COL
Description	FURNISHING AND PLACING TOPSOIL (4")	EROSION CONTROL COMPOST (4")	MULCH SODDING	BROADCAST SEED (PERM_URBAN_CLAY)	BROADCAST SEED (TEMP_WARM)	BROADCAST SEED (TEMP_COOL)	FERTILIZER	VEGETATIVE WATERING	ROCK FILTER DAMS (INSTALL)(TY 2)	ROCK FILTER DAMS (REMOVE)	TEMP SEDMT CONT FENCE (INSTALL)	TEMP SEDMT CONT FENCE (REMOVE)
Sheet	SY	SY	SY	SY	SY	SY	TON	MG	LF	LF	LF	LF
C-201	929	232.25	232.25	1858	929	929	0.0580625	18.58	0	0	417	417
C-202	182	45.5	45.5	364	182	182	0.011375	3.64	0	0	146	146
C-203	54	13.5	13.5	108	54	54	0.003375	1.08	17	17	29	29
C-204	1923	480.75	480.75	3846	1923	1923	0.1201875	38.46	0	0	738	738
C-205	819	204.75	204.75	1638	819	819	0.0511875	16.38	0	0	0	0
C-206	1336	334	334	2672	1336	1336	0.0835	26.72	17	17	0	0
C-207	2011	502.75	502.75	4022	2011	2011	0.1256875	40.22	120	120	495	495
C-208	1354	338.5	338.5	2708	1354	1354	0.084625	27.08	20	20	400	400
C-209	829	207.25	207.25	1658	829	829	0.0518125	16.58	41	41	42	42
C-210	289	72.25	72.25	578	289	289	0.0180625	5.78	0	0	145	145

REV. NO.	REVISION DESCRIPTION	APPROVED BY:	DATE

CobbFendley
TBPE NO. F-274 / TBPLS NO. 10046701
9600 N. MOPAC EXPRESSWAY, SUITE 800
AUSTIN, TEXAS 78759
512.834.9798 | FAX 512.834.7727
WWW.COBBFENDLEY.COM

SUMMARY OF QUANTITIES

RM 2243 W/WW RELOCATIONS
LEANDER, TEXAS

City of Leander

PROJ. NO. 1903-099-24 15
DESIGN: R. RODRIGUEZ
DRAWN: R. RODRIGUEZ
RECK: L. PRINCE
APPR: K. VAN HOOSIER
DATE: 3/7/2025

INTERIM REVIEW
Not intended for construction, bidding or permit purposes.
Engineer: KRISTEN VAN HOOSIER
P.E. Serial No.: 136882
Date: March 7, 2025

3/7/2025

THESE DESIGN DOCUMENTS ARE NOT TO BE USED FOR CONSTRUCTION PRIOR TO REGULATORY SIGNATURE AND PERMIT.

SHEET
G-005

Dwg Info: G:\CFA\2014\0308801_Williamson_County_2013_Road_Bond\MUN\46_RM2243\01\DESIGN\G-005-QTY.dwg -- Tab: QTY -- By: ANTONIO TERRAZAS -- Plotted: 3/7/2025 7:27 AM

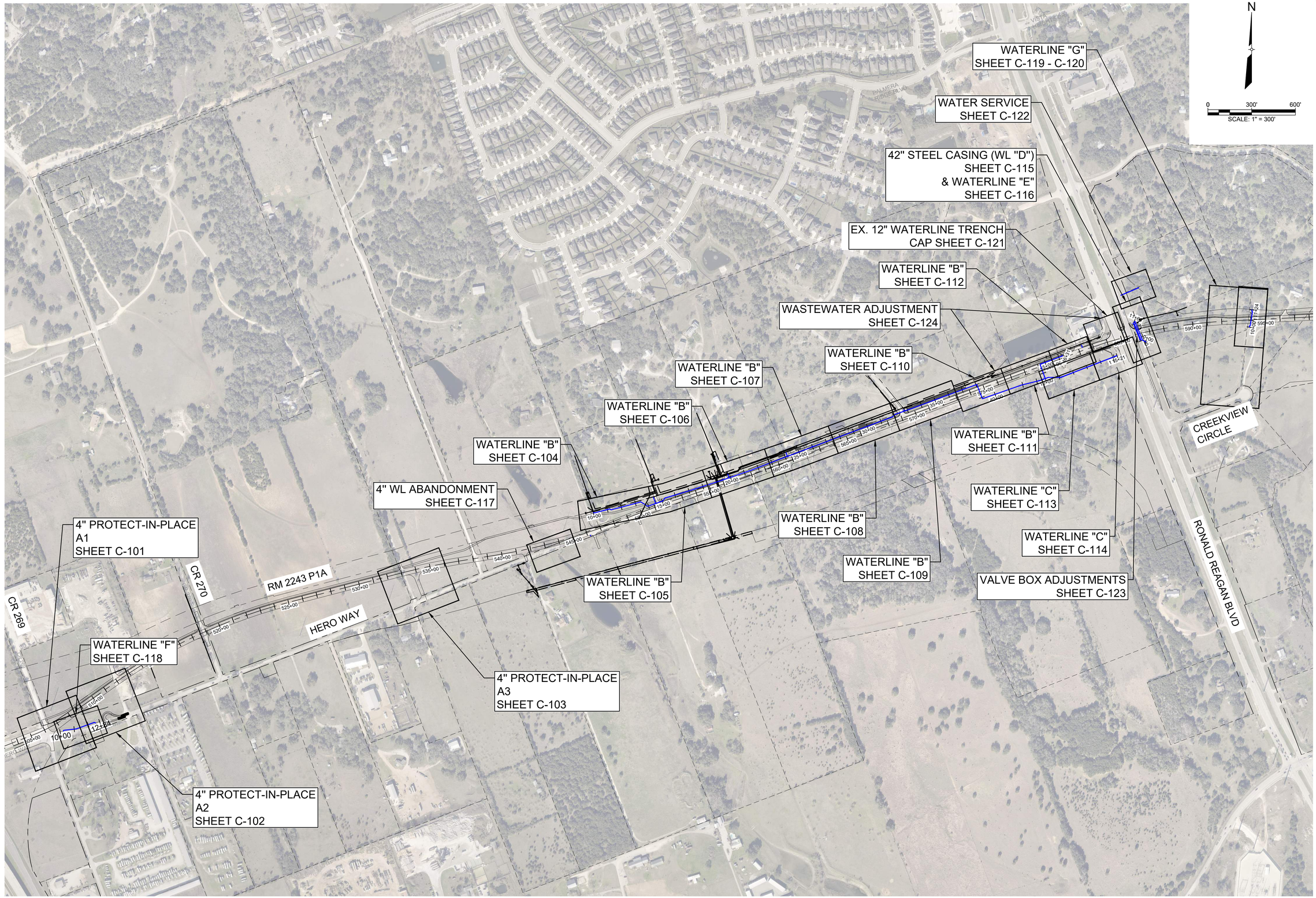

Dwg Info: G:\CFA\2014\0308801_Williamson_County_2013_Road_Bond\MUN\46_RM2243\01\DESIGN\C-100-KEYMAP.dwg -- Tab: KEYMAP-01 -- Plotted: 3/5/2025 5:29 PM By: RACHAEL NEWTON

REV. NO.	REVISION DESCRIPTION	APPROVED BY:	DATE

CobbFendley
TBPE NO. F-274 / TBPLS NO. 10046701
9600 N. MOPAC EXPRESSWAY, SUITE 800
AUSTIN, TEXAS 78759
512.834.9798 | FAX 512.834.7727
WWW.COBBFENDLEY.COM

KEY MAP

RM 2243 W/WW RELOCATIONS
LEANDER, TEXAS

City of Leander

PROJ. NO. 1903-099-24 15
DESIGN: R. NEWTON
DRAWN: R. NEWTON
CHECK: L. PRINCE
APPR: K. VAN HOOSIER
DATE: 3/5/2025

INTERIM REVIEW
Not intended for construction, bidding or permit purposes.
Engineer: KRISTEN VAN HOOSIER
P.E. Serial No.: 136882
Date: March 5, 2025

3/5/2025

THESE DESIGN DOCUMENTS ARE NOT TO BE USED FOR CONSTRUCTION PRIOR TO REGULATORY SIGNATURE AND PERMIT.

SHEET
C-100

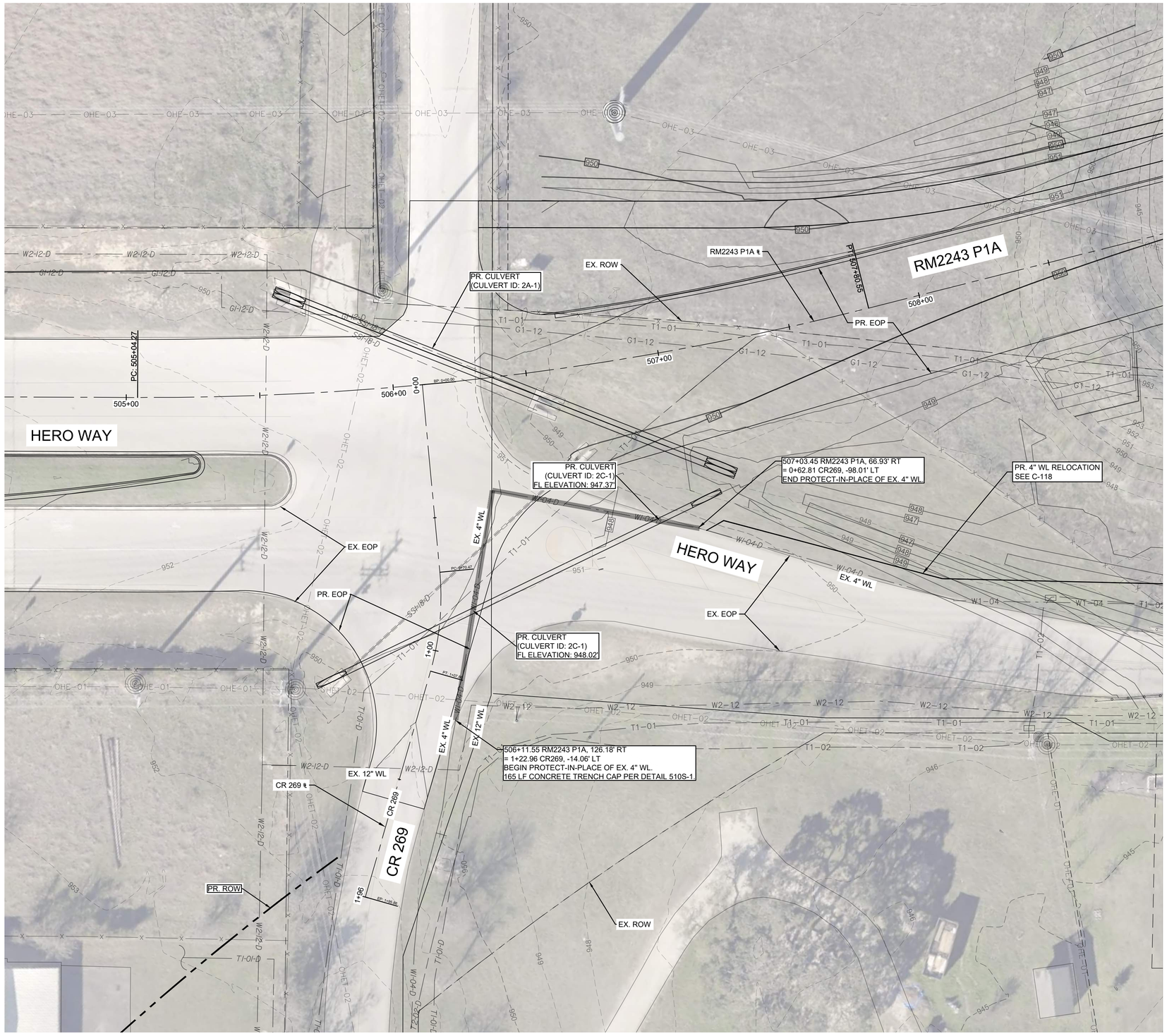

LEGEND

- EX. RIGHT-OF-WAY
- EX. EDGE OF PAVEMENT
- UTILITY EASEMENT
- EX. 2" WATER
- EX. 3" WATER
- EX. 6" WATER
- EX. 8" WATER
- EX. 12" WATER
- PR. WATER
- EX. STORM DRAIN
- EX. 42" GAS LINE
- EX. OVERHEAD ELECTRIC
- EX. OVERHEAD TELECOM
- EX. U.G. TELECOM
- EX. FENCE
- EX. WATER T.B.A
- EX. WATER VALVE
- EX. FIRE HYDRANT
- EX. WATER METER
- EX. POWER POLE
- EX. TPED
- PR. WATER VALVE
- PR. FIRE HYDRANT
- PR. AIR RELEASE VALVE
- PR. DRAIN VALVE

GENERAL NOTES:

1. THE LOCATIONS OF EXISTING UNDERGROUND UTILITIES ARE SHOWN IN AN APPROXIMATE WAY ONLY. THE CONTRACTOR SHALL DETERMINE THE EXACT LOCATION OF ALL EXISTING UTILITIES BEFORE COMMENCING WORK AND AGREES TO BE FULLY RESPONSIBLE FOR ANY AND ALL DAMAGES THAT MIGHT BE OCCASIONED BY THE FAILURE TO EXACTLY LOCATE AND PRESERVE ANY AND ALL UNDERGROUND UTILITIES. WHEN THE CONTRACTOR IS USING TRENCHLESS INSTALLATION METHODS, THE CONTRACTOR SHALL LOCATE ALL UTILITIES FOR THE ENTIRE LENGTH OF THE INSTALLATION PRIOR TO ANY ACTIVITIES.
2. CONTRACTOR TO GIVE CITY OF LEANDER A MINIMUM OF TWO WEEKS NOTICE FOR ALL WATERLINE SHUTDOWNS
3. EXISTING WATER MAINS ARE TO BE PROTECTED AND REMAIN IN SERVICE UNTIL THE NEW MAINS ARE CONSTRUCTED, TESTED, APPROVED AND SERVICE LINES RECONNECTED AND THE NEW MAIN IS PLACED IN SERVICE.
4. EXISTING WATER SERVICE LINES AND METERS ARE TO BE PROTECTED AND REMAIN IN SERVICE UNTIL NEW SERVICE LINES ARE CONSTRUCTED, TESTED, APPROVED AND RECONNECTED AND IN SERVICE.
5. EXISTING WATER MAINS THAT ARE TO BE ABANDONED IN PLACE AND ARE UNDER THE PROPOSED ROADWAY ARE TO BE CUT, CAPPED, AND FILLED WITH FLOWABLE FILL. SUBSIDIARY TO COST OF PIPE, NO SEPARATE PAY. EXISTING WATER LINES THAT ARE TO BE ABANDONED IN PLACE AND ARE NOT UNDER THE PROPOSED ROADWAY WILL BE CAPPED.
6. CONTRACTOR SHALL COORDINATE WITH PEC TO DETERMINE AND PROVIDE ANY REQUIRED SUPPORT OF UTILITY POLES DURING TRENCH EXCAVATION OF WATER MAINS ALONG THIS EASEMENT CORRIDOR.
7. CONTRACTOR SHALL VERIFY FIELD CONDITIONS PRIOR TO CONSTRUCTION. ANY DISCREPANCIES FROM WHAT IS SHOWN SHALL BE IMMEDIATELY BROUGHT TO THE ATTENTION OF THE ENGINEER.

REV. NO.	REVISION DESCRIPTION	APPROVED BY:	DATE

CobbFendley
TBPE NO. F-274 / TBPLS NO. 10046701
9600 N. MOPAC EXPRESSWAY, SUITE 800
AUSTIN, TEXAS 78759
512.834.9798 | FAX 512.834.7727
WWW.COBBFENDLEY.COM

4" WL PROTECT-IN-PLACE A1

RM 2243 W/WW RELOCATIONS
LEANDER, TEXAS

City of Leander

PROJ. NO.	1903-099-24 15
DESIGN:	R. NEWTON
DRAWN:	R. NEWTON
CHECK:	L. PRINCE
APPR:	K. VAN HOOSIER
DATE:	3/5/2025

INTERIM REVIEW

Not intended for construction, bidding or permit purposes.

Engineer: KRISTEN VAN HOOSIER

P.E. Serial No.: 136882

Date: March 5, 2025

3/5/2025

THESE DESIGN DOCUMENTS ARE NOT TO BE USED FOR CONSTRUCTION PRIOR TO REGULATORY SIGNATURE AND PERMIT.

SHEET
C-101

Dwg Info: G:\CFA\2014\0308801_Williamson_County_2013_Road_Bond\MUN\46_RM2243\01\DESIGN\C-101-WATR-Adjust-A.dwg – Tab: WATR-A1 – Plotted: 3/5/2025 5:42 PM By: RACHAEL NEWTON

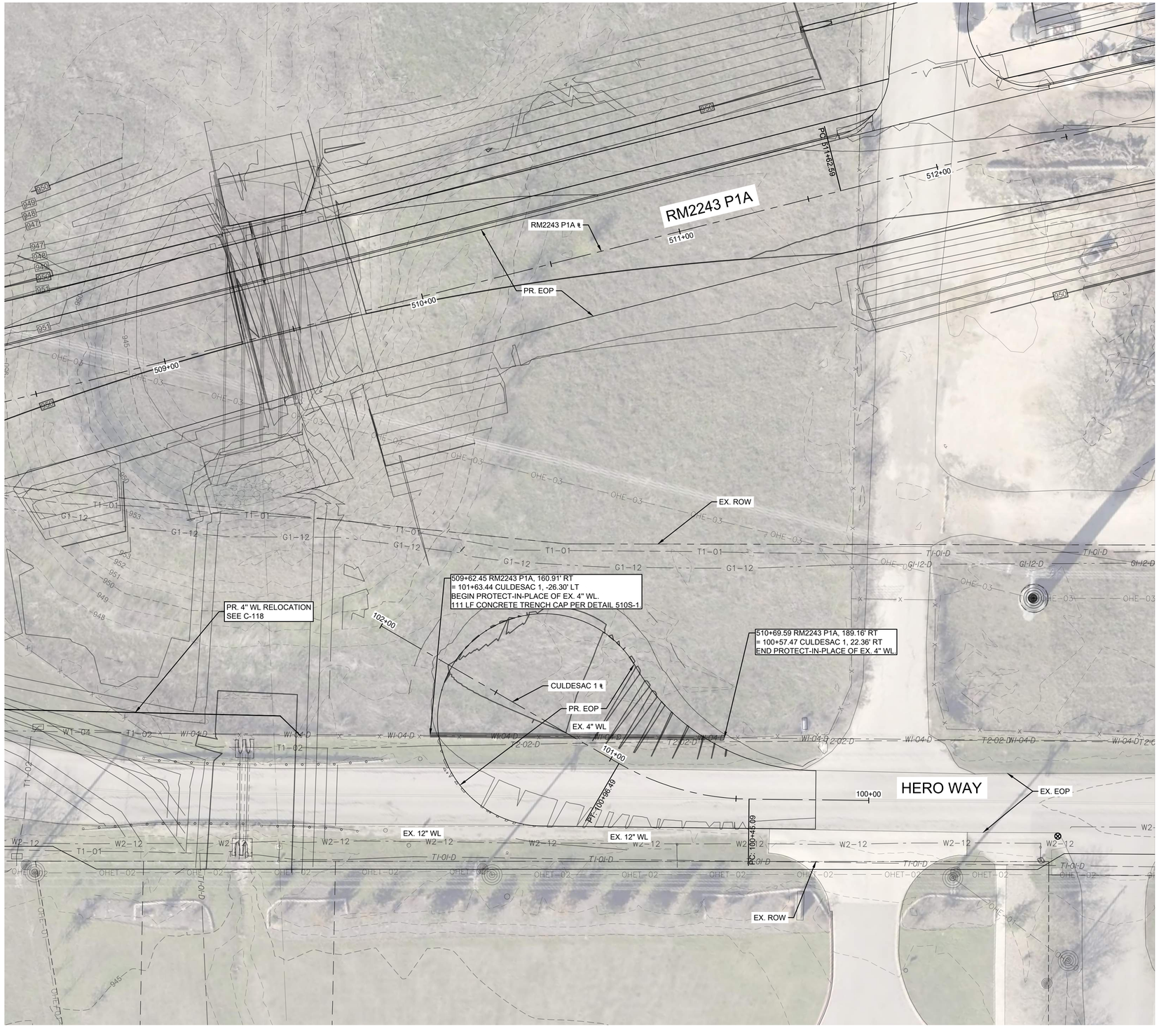

0 20' 40'

SCALE: 1" = 20'

LEGEND

- EX. RIGHT-OF-WAY
- EX. EDGE OF PAVEMENT
- UTILITY EASEMENT
- EX. 2" WATER
- EX. 3" WATER
- EX. 6" WATER
- EX. 8" WATER
- EX. 12" WATER
- PR. WATER
- EX. STORM DRAIN
- EX. 42" GAS LINE
- EX. OVERHEAD ELECTRIC
- EX. OVERHEAD TELECOM
- EX. U.G. TELECOM
- EX. FENCE
- EX. WATER T.B.A
- EX. WATER VALVE
- EX. FIRE HYDRANT
- EX. WATER METER
- EX. POWER POLE
- EX. TPED
- PR. WATER VALVE
- PR. FIRE HYDRANT
- PR. AIR RELEASE VALVE
- PR. DRAIN VALVE

GENERAL NOTES:

1. THE LOCATIONS OF EXISTING UNDERGROUND UTILITIES ARE SHOWN IN AN APPROXIMATE WAY ONLY. THE CONTRACTOR SHALL DETERMINE THE EXACT LOCATION OF ALL EXISTING UTILITIES BEFORE COMMENCING WORK AND AGREES TO BE FULLY RESPONSIBLE FOR ANY AND ALL DAMAGES THAT MIGHT BE OCCASIONED BY THE FAILURE TO EXACTLY LOCATE AND PRESERVE ANY AND ALL UNDERGROUND UTILITIES. WHEN THE CONTRACTOR IS USING TRENCHLESS INSTALLATION METHODS, THE CONTRACTOR SHALL LOCATE ALL UTILITIES FOR THE ENTIRE LENGTH OF THE INSTALLATION PRIOR TO ANY ACTIVITIES.
2. CONTRACTOR TO GIVE CITY OF LEANDER A MINIMUM OF TWO WEEKS NOTICE FOR ALL WATERLINE SHUTDOWNS
3. EXISTING WATER MAINS ARE TO BE PROTECTED AND REMAIN IN SERVICE UNTIL THE NEW MAINS ARE CONSTRUCTED, TESTED, APPROVED AND SERVICE LINES RECONNECTED AND THE NEW MAIN IS PLACED IN SERVICE.
4. EXISTING WATER SERVICE LINES AND METERS ARE TO BE PROTECTED AND REMAIN IN SERVICE UNTIL NEW SERVICE LINES ARE CONSTRUCTED, TESTED, APPROVED AND RECONNECTED AND IN SERVICE.
5. EXISTING WATER MAINS THAT ARE TO BE ABANDONED IN PLACE AND ARE UNDER THE PROPOSED ROADWAY ARE TO BE CUT, CAPPED, AND FILLED WITH FLOWABLE FILL. SUBSIDIARY TO COST OF PIPE, NO SEPARATE PAY. EXISTING WATER LINES THAT ARE TO BE ABANDONED IN PLACE AND ARE NOT UNDER THE PROPOSED ROADWAY WILL BE CAPPED.
6. CONTRACTOR SHALL COORDINATE WITH PEC TO DETERMINE AND PROVIDE ANY REQUIRED SUPPORT OF UTILITY POLES DURING TRENCH EXCAVATION OF WATER MAINS ALONG THIS EASEMENT CORRIDOR.
7. CONTRACTOR SHALL VERIFY FIELD CONDITIONS PRIOR TO CONSTRUCTION. ANY DISCREPANCIES FROM WHAT IS SHOWN SHALL BE IMMEDIATELY BROUGHT TO THE ATTENTION OF THE ENGINEER.

REV. NO.	REVISION DESCRIPTION	APPROVED BY:	DATE

CobbFendley
TBPE NO. F-274 / TBPLS NO. 10046701
9600 N. MOPAC EXPRESSWAY, SUITE 800
AUSTIN, TEXAS 78759
512.834.9798 | FAX 512.834.7727
WWW.COBBFENDLEY.COM

4" WL PROTECT-IN-PLACE A2

RM 2243 W/WW RELOCATIONS
LEANDER, TEXAS

City of Leander

PROJ. NO.	1903-099-24 15
DESIGN:	R. NEWTON
DRAWN:	R. NEWTON
CHECK:	L. PRINCE
APPR:	K. VAN HOOSIER
DATE:	3/5/2025

INTERIM REVIEW

Not intended for construction, bidding or permit purposes.

Engineer: KRISTEN VAN HOOSIER

P.E. Serial No.: 136882

Date: March 5, 2025

3/5/2025

THESE DESIGN DOCUMENTS ARE NOT TO BE USED FOR CONSTRUCTION PRIOR TO REGULATORY SIGNATURE AND PERMIT

SHEET
C-102

Dwg Info: G:\CFA\2014\030801_Williamson_County_2013_Road_Bond\MUN\46_RM2243\01\DESIGN\C-101-WATR-Adjust-A.dwg – Tab: WATR-A2 – Plotted: 3/5/2025 5:46 PM By: RACHAEL NEWTON

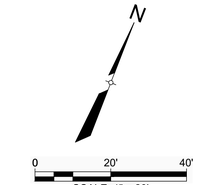

LEGEND

- EX. RIGHT-OF-WAY
- EX. EDGE OF PAVEMENT
- UTILITY EASEMENT
- EX. 2" WATER
- EX. 3" WATER
- EX. 6" WATER
- EX. 8" WATER
- EX. 12" WATER
- PR. WATER
- EX. STORM DRAIN
- EX. 42" GAS LINE
- EX. OVERHEAD ELECTRIC
- EX. OVERHEAD TELECOM
- EX. U.G. TELECOM
- EX. FENCE
- EX. WATER T.B.A
- EX. WATER VALVE
- EX. FIRE HYDRANT
- EX. WATER METER
- EX. POWER POLE
- EX. TPED
- PR. WATER VALVE
- PR. FIRE HYDRANT
- PR. AIR RELEASE VALVE
- PR. DRAIN VALVE

GENERAL NOTES:

1. THE LOCATIONS OF EXISTING UNDERGROUND UTILITIES ARE SHOWN IN AN APPROXIMATE WAY ONLY. THE CONTRACTOR SHALL DETERMINE THE EXACT LOCATION OF ALL EXISTING UTILITIES BEFORE COMMENCING WORK AND AGREES TO BE FULLY RESPONSIBLE FOR ANY AND ALL DAMAGES THAT MIGHT BE OCCASIONED BY THE FAILURE TO EXACTLY LOCATE AND PRESERVE ANY AND ALL UNDERGROUND UTILITIES. WHEN THE CONTRACTOR IS USING TRENCHLESS INSTALLATION METHODS, THE CONTRACTOR SHALL LOCATE ALL UTILITIES FOR THE ENTIRE LENGTH OF THE INSTALLATION PRIOR TO ANY ACTIVITIES.
2. CONTRACTOR TO GIVE CITY OF LEANDER A MINIMUM OF TWO WEEKS NOTICE FOR ALL WATERLINE SHUTDOWNS
3. EXISTING WATER MAINS ARE TO BE PROTECTED AND REMAIN IN SERVICE UNTIL THE NEW MAINS ARE CONSTRUCTED, TESTED, APPROVED AND SERVICE LINES RECONNECTED AND THE NEW MAIN IS PLACED IN SERVICE.
4. EXISTING WATER SERVICE LINES AND METERS ARE TO BE PROTECTED AND REMAIN IN SERVICE UNTIL NEW SERVICE LINES ARE CONSTRUCTED, TESTED, APPROVED AND RECONNECTED AND IN SERVICE.
5. EXISTING WATER MAINS THAT ARE TO BE ABANDONED IN PLACE AND ARE UNDER THE PROPOSED ROADWAY ARE TO BE CUT, CAPPED, AND FILLED WITH FLOWABLE FILL. SUBSIDIARY TO COST OF PIPE, NO SEPARATE PAY. EXISTING WATER LINES THAT ARE TO BE ABANDONED IN PLACE AND ARE NOT UNDER THE PROPOSED ROADWAY WILL BE CAPPED.
6. CONTRACTOR SHALL COORDINATE WITH PEC TO DETERMINE AND PROVIDE ANY REQUIRED SUPPORT OF UTILITY POLES DURING TRENCH EXCAVATION OF WATER MAINS ALONG THIS EASEMENT CORRIDOR.
7. CONTRACTOR SHALL VERIFY FIELD CONDITIONS PRIOR TO CONSTRUCTION. ANY DISCREPANCIES FROM WHAT IS SHOWN SHALL BE IMMEDIATELY BROUGHT TO THE ATTENTION OF THE ENGINEER.

REV. NO.	REVISION DESCRIPTION	APPROVED BY:	DATE

CobbFendley
TBPE NO. F-274 / TBPLS NO. 10046701
9600 N. MOPAC EXPRESSWAY, SUITE 800
AUSTIN, TEXAS 78759
512.834.9798 | FAX 512.834.7727
WWW.COBBFENDLEY.COM

4" WL PROTECT-IN-PLACE A3

RM 2243 W/WW RELOCATIONS
LEANDER, TEXAS

City of Leander

PROJ. NO. 1903-099-24 15
DESIGN: R. NEWTON
DRAWN: R. NEWTON
CHECK: L. PRINCE
APPR: K. VAN HOOSIER
DATE: 3/5/2025

INTERIM REVIEW
Not intended for construction, bidding or permit purposes.
Engineer: KRISTEN VAN HOOSIER
P.E. Serial No.: 136882
Date: March 5, 2025

3/5/2025

THESE DESIGN DOCUMENTS ARE NOT TO BE USED FOR CONSTRUCTION PRIOR TO REGULATORY SIGNATURE AND PERMIT.

SHEET
C-103

Dwg Info: G:\CFA\2014\0308801_Williamson_County_2013_Road_Bond\MUN\46_RM2243\01\DESIGN\C-101-WATR-Adjust-A.dwg – Tab: WATR-A3 – Plotted: 3/5/2025 5:50 PM By: RACHAEL NEWTON

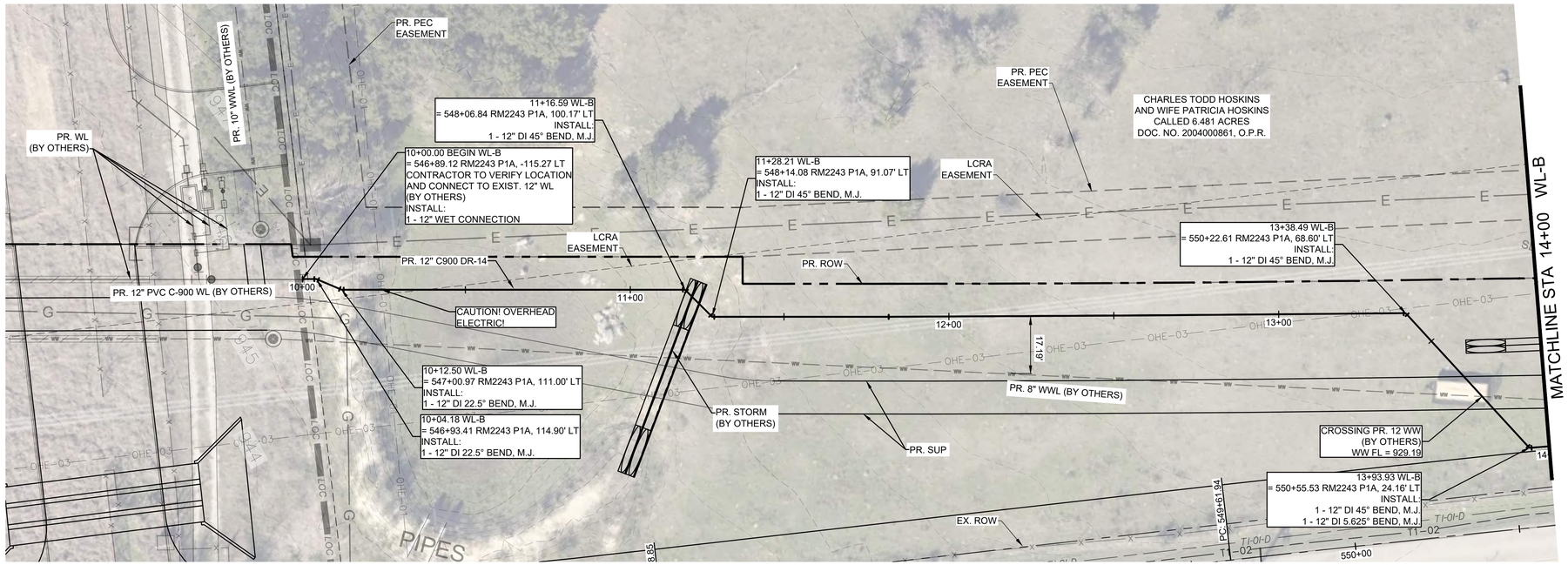

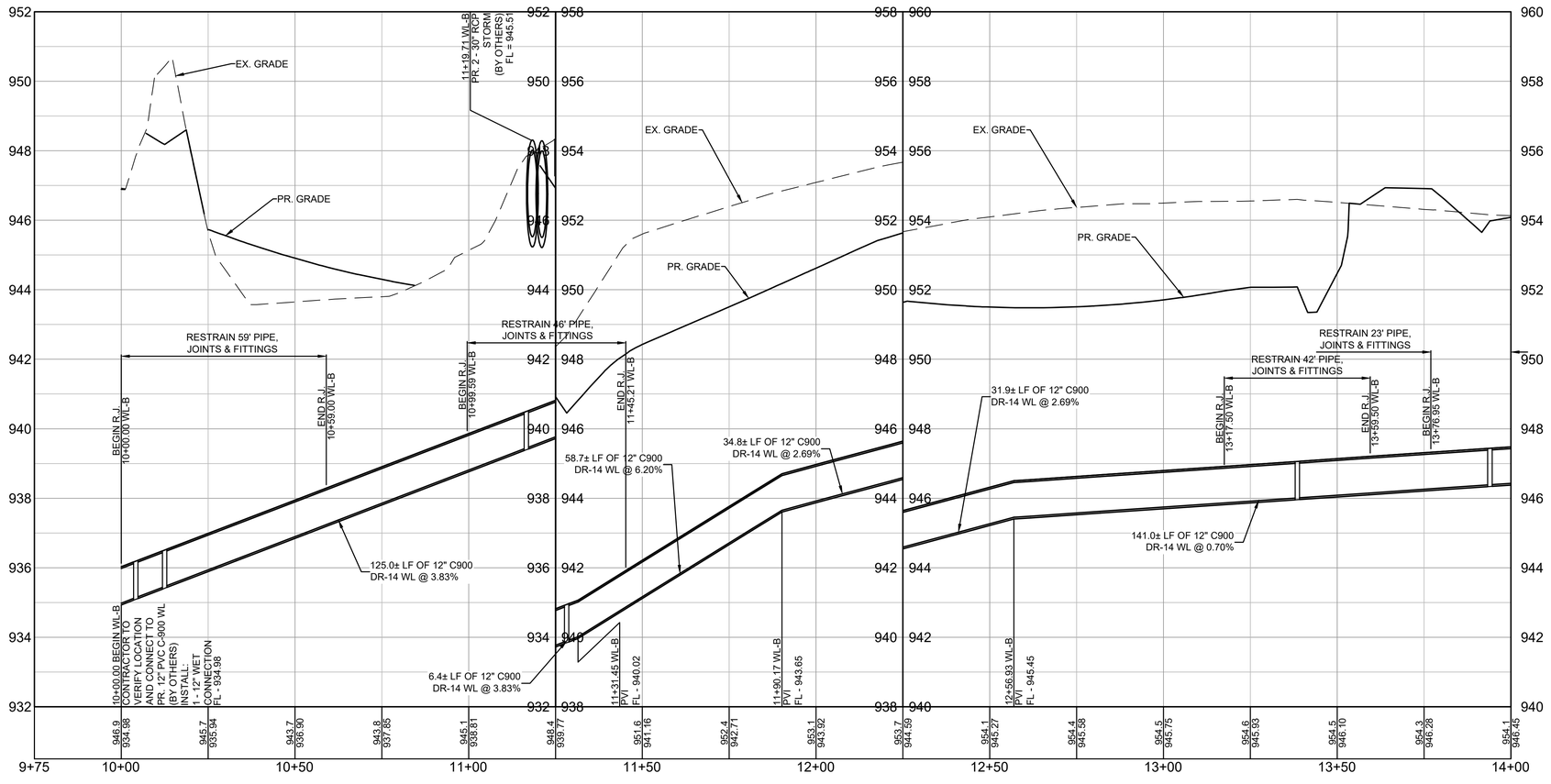

WL-B 9+75 TO 14+00

PROFILE SCALE
1"=40' HORIZ.
1"=4' VERT.

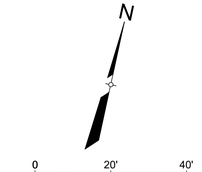

LEGEND

- EX. RIGHT-OF-WAY
- EX. EDGE OF PAVEMENT
- UTILITY EASEMENT
- EX. 2" WATER
- EX. 3" WATER
- EX. 6" WATER
- EX. 8" WATER
- EX. 12" WATER
- PR. WATER
- EX. STORM DRAIN
- EX. 42" GAS LINE
- EX. OVERHEAD ELECTRIC
- EX. OVERHEAD TELECOM
- EX. U.G. TELECOM
- EX. FENCE
- EX. WATER T.B.A
- EX. WATER VALVE
- PR. WATER VALVE
- EX. FIRE HYDRANT
- PR. FIRE HYDRANT
- EX. WATER METER
- PR. AIR RELEASE VALVE
- EX. POWER POLE
- PR. DRAIN VALVE
- EX. TPED

GENERAL NOTES:

1. THE LOCATIONS OF EXISTING UNDERGROUND UTILITIES ARE SHOWN IN AN APPROXIMATE WAY ONLY. THE CONTRACTOR SHALL DETERMINE THE EXACT LOCATION OF ALL EXISTING UTILITIES BEFORE COMMENCING WORK AND AGREES TO BE FULLY RESPONSIBLE FOR ANY AND ALL DAMAGES THAT MIGHT BE OCCASIONED BY THE FAILURE TO EXACTLY LOCATE AND PRESERVE ANY AND ALL UNDERGROUND UTILITIES. WHEN THE CONTRACTOR IS USING TRENCHLESS INSTALLATION METHODS, THE CONTRACTOR SHALL LOCATE ALL UTILITIES FOR THE ENTIRE LENGTH OF THE INSTALLATION PRIOR TO ANY ACTIVITIES.
2. CONTRACTOR TO GIVE CITY OF LEANDER A MINIMUM OF TWO WEEKS NOTICE FOR ALL WATERLINE SHUTDOWNS
3. EXISTING WATER MAINS ARE TO BE PROTECTED AND REMAIN IN SERVICE UNTIL THE NEW MAINS ARE CONSTRUCTED, TESTED, APPROVED AND SERVICE LINES RECONNECTED AND THE NEW MAIN IS PLACED IN SERVICE.
4. EXISTING WATER SERVICE LINES AND METERS ARE TO BE PROTECTED AND REMAIN IN SERVICE UNTIL NEW SERVICE LINES ARE CONSTRUCTED, TESTED, APPROVED AND RECONNECTED AND IN SERVICE.
5. EXISTING WATER MAINS THAT ARE TO BE ABANDONED IN PLACE AND ARE UNDER THE PROPOSED ROADWAY ARE TO BE CUT, CAPPED, AND FILLED WITH FLOWABLE FILL. SUBSIDIARY TO COST OF PIPE, NO SEPARATE PAY. EXISTING WATER LINES THAT ARE TO BE ABANDONED IN PLACE AND ARE NOT UNDER THE PROPOSED ROADWAY WILL BE CAPPED.
6. CONTRACTOR SHALL COORDINATE WITH PEC TO DETERMINE AND PROVIDE ANY REQUIRED SUPPORT OF UTILITY POLES DURING TRENCH EXCAVATION OF WATER MAINS ALONG THIS EASEMENT CORRIDOR.
7. CONTRACTOR SHALL VERIFY FIELD CONDITIONS PRIOR TO CONSTRUCTION. ANY DISCREPANCIES FROM WHAT IS SHOWN SHALL BE IMMEDIATELY BROUGHT TO THE ATTENTION OF THE ENGINEER.

REV. NO.	REVISION DESCRIPTION	APPROVED BY:	DATE

CobbFendley
TBPE NO. F-274 / TBPLS NO. 10046701
9600 N. MOPAC EXPRESSWAY, SUITE 800
AUSTIN, TEXAS 78759
512.834.9798 | FAX 512.834.7727
WWW.COBBFENDLEY.COM

WATERLINE "B" - STA. 10+00 TO 14+00 PLAN AND PROFILE

RM 2243 W/WW RELOCATIONS
LEANDER, TEXAS

City of Leander

PROJ. NO. 1903-099-24 15
DESIGN: O. SAENZ
DRAWN: O. SAENZ
CHECK: L. PRINCE
APPR: K. VAN HOOSIER
DATE: 3/5/2025

INTERIM REVIEW
Not intended for construction, bidding or permit purposes.
Engineer: KRISTEN VAN HOOSIER
P.E. Serial No.: 136882
Date: March 5, 2025

3/5/2025

THESE DESIGN DOCUMENTS ARE NOT TO BE USED FOR CONSTRUCTION PRIOR TO REGULATORY SIGNATURE AND PERMIT.

SHEET
C-104

Dwg Info: G:\CFA\2014\0308801_Williamson_County_2013_Road_Bond\MUN\46_RM2243\01\DESIGN\C-101-WATR-B1.dwg – Tab: WATERLINE "B" – STA. 10+00 TO 14+00 PLAN AND PROFILE – Plotted: 3/5/2025 4:28 PM By: RACHAEL NEWTON

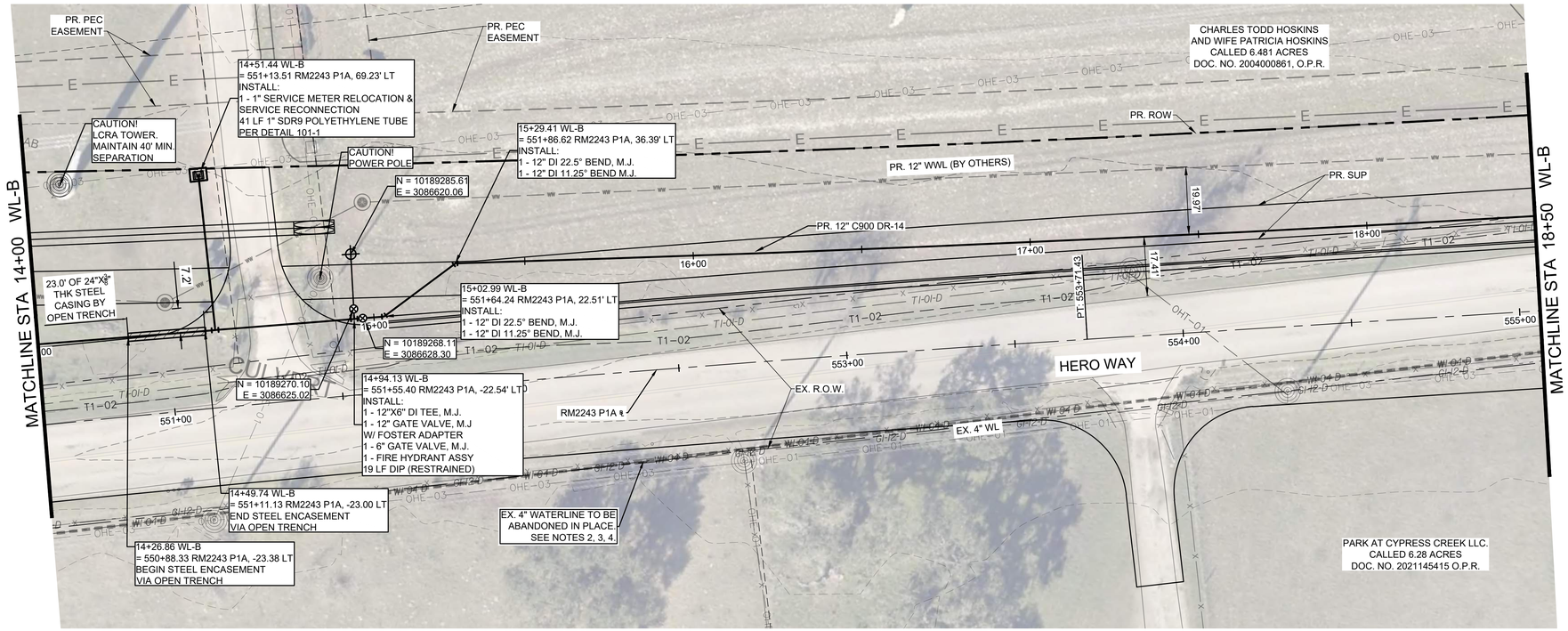

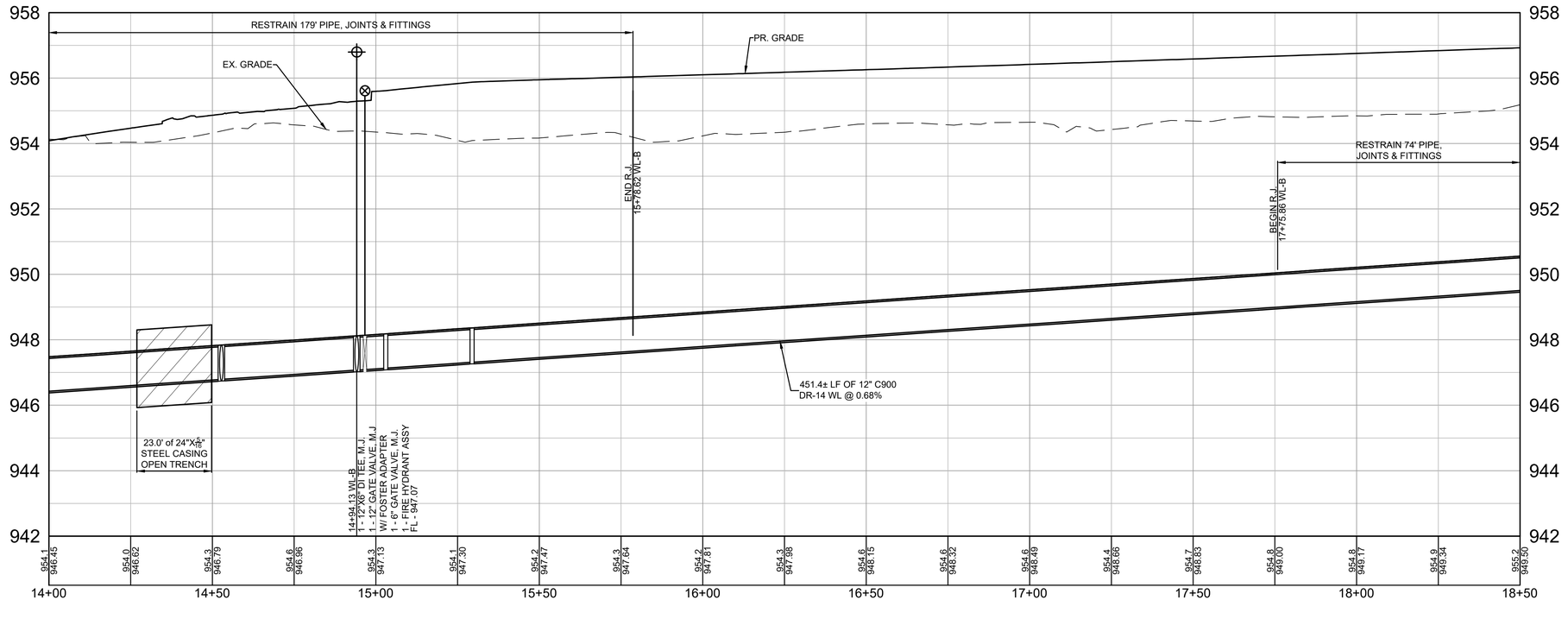

WL-B 14+00 TO 18+50

EXISTING GRADE
XXX.X
FLOW LINE OF PIPE
XXX.XX

PROFILE SCALE
1"=40' HORIZ.
1"=4' VERT.

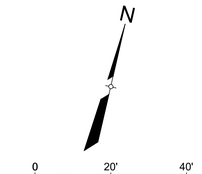

LEGEND

- EX. RIGHT-OF-WAY
- EX. EDGE OF PAVEMENT
- UTILITY EASEMENT
- EX. 2" WATER
- EX. 3" WATER
- EX. 6" WATER
- EX. 8" WATER
- EX. 12" WATER
- PR. WATER
- EX. STORM DRAIN
- EX. 42" GAS LINE
- EX. OVERHEAD ELECTRIC
- EX. OVERHEAD TELECOM
- EX. U.G. TELECOM
- EX. FENCE
- EX. WATER T.B.A
- EX. WATER VALVE
- PR. WATER VALVE
- EX. FIRE HYDRANT
- PR. FIRE HYDRANT
- EX. WATER METER
- PR. AIR RELEASE VALVE
- EX. POWER POLE
- PR. DRAIN VALVE
- EX. TPED

GENERAL NOTES:

1. THE LOCATIONS OF EXISTING UNDERGROUND UTILITIES ARE SHOWN IN AN APPROXIMATE WAY ONLY. THE CONTRACTOR SHALL DETERMINE THE EXACT LOCATION OF ALL EXISTING UTILITIES BEFORE COMMENCING WORK AND AGREES TO BE FULLY RESPONSIBLE FOR ANY AND ALL DAMAGES THAT MIGHT BE OCCASIONED BY THE FAILURE TO EXACTLY LOCATE AND PRESERVE ANY AND ALL UNDERGROUND UTILITIES. WHEN THE CONTRACTOR IS USING TRENCHLESS INSTALLATION METHODS, THE CONTRACTOR SHALL LOCATE ALL UTILITIES FOR THE ENTIRE LENGTH OF THE INSTALLATION PRIOR TO ANY ACTIVITIES.
2. CONTRACTOR TO GIVE CITY OF LEANDER A MINIMUM OF TWO WEEKS NOTICE FOR ALL WATERLINE SHUTDOWNS
3. EXISTING WATER MAINS ARE TO BE PROTECTED AND REMAIN IN SERVICE UNTIL THE NEW MAINS ARE CONSTRUCTED, TESTED, APPROVED AND SERVICE LINES RECONNECTED AND THE NEW MAIN IS PLACED IN SERVICE.
4. EXISTING WATER SERVICE LINES AND METERS ARE TO BE PROTECTED AND REMAIN IN SERVICE UNTIL NEW SERVICE LINES ARE CONSTRUCTED, TESTED, APPROVED AND RECONNECTED AND IN SERVICE.
5. EXISTING WATER MAINS THAT ARE TO BE ABANDONED IN PLACE AND ARE UNDER THE PROPOSED ROADWAY ARE TO BE CUT, CAPPED, AND FILLED WITH FLOWABLE FILL. SUBSIDIARY TO COST OF PIPE, NO SEPARATE PAY. EXISTING WATER LINES THAT ARE TO BE ABANDONED IN PLACE AND ARE NOT UNDER THE PROPOSED ROADWAY WILL BE CAPPED.
6. CONTRACTOR SHALL COORDINATE WITH PEC TO DETERMINE AND PROVIDE ANY REQUIRED SUPPORT OF UTILITY POLES DURING TRENCH EXCAVATION OF WATER MAINS ALONG THIS EASEMENT CORRIDOR.
7. CONTRACTOR SHALL VERIFY FIELD CONDITIONS PRIOR TO CONSTRUCTION. ANY DISCREPANCIES FROM WHAT IS SHOWN SHALL BE IMMEDIATELY BROUGHT TO THE ATTENTION OF THE ENGINEER.

REV. NO.	REVISION DESCRIPTION	APPROVED BY:	DATE

CobbFendley
TBPE NO. F-274 / TBPLS NO. 10046701
9600 N. MOPAC EXPRESSWAY, SUITE 800
AUSTIN, TEXAS 78759
512.834.9798 | FAX 512.834.7727
WWW.COBBFENDLEY.COM

WATERLINE "B" - STA. 14+00 TO 18+50 PLAN AND PROFILE

RM 2243 W/WW RELOCATIONS
LEANDER, TEXAS

City of Leander

PROJ. NO. 1903-099-24 15
DESIGN: O. SAENZ
DRAWN: O. SAENZ
CHECK: L. PRINCE
APPR: K. VAN HOOSIER
DATE: 3/5/2025

INTERIM REVIEW
Not intended for construction, bidding or permit purposes.
Engineer: KRISTEN VAN HOOSIER
P.E. Serial No.: 136882
Date: March 5, 2025

3/5/2025

THESE DESIGN DOCUMENTS ARE NOT TO BE USED FOR CONSTRUCTION PRIOR TO REGULATORY SIGNATURE AND PERMIT.

SHEET
C-105

Dwg Info: G:\CFA\2014\0308801_Williamson_County_2013_Road_Bond\MUN\46_RM2243\01\DESIGN\C-101-WATR-B1.dwg - Tab: WATERLINE "B" - STA. 14+00 TO 18+50 PLAN AND PROFILE - Plotted: 3/5/2025 4:30 PM By: RACHAEL NEWTON

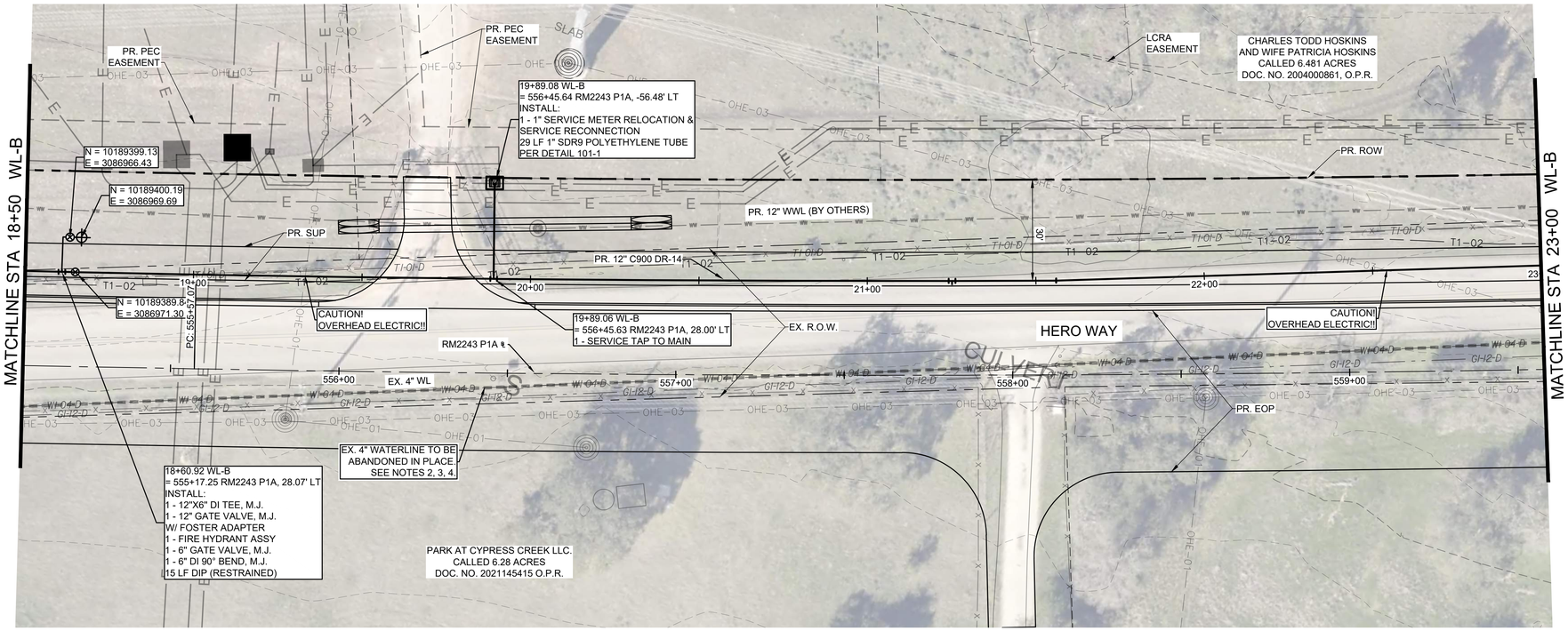

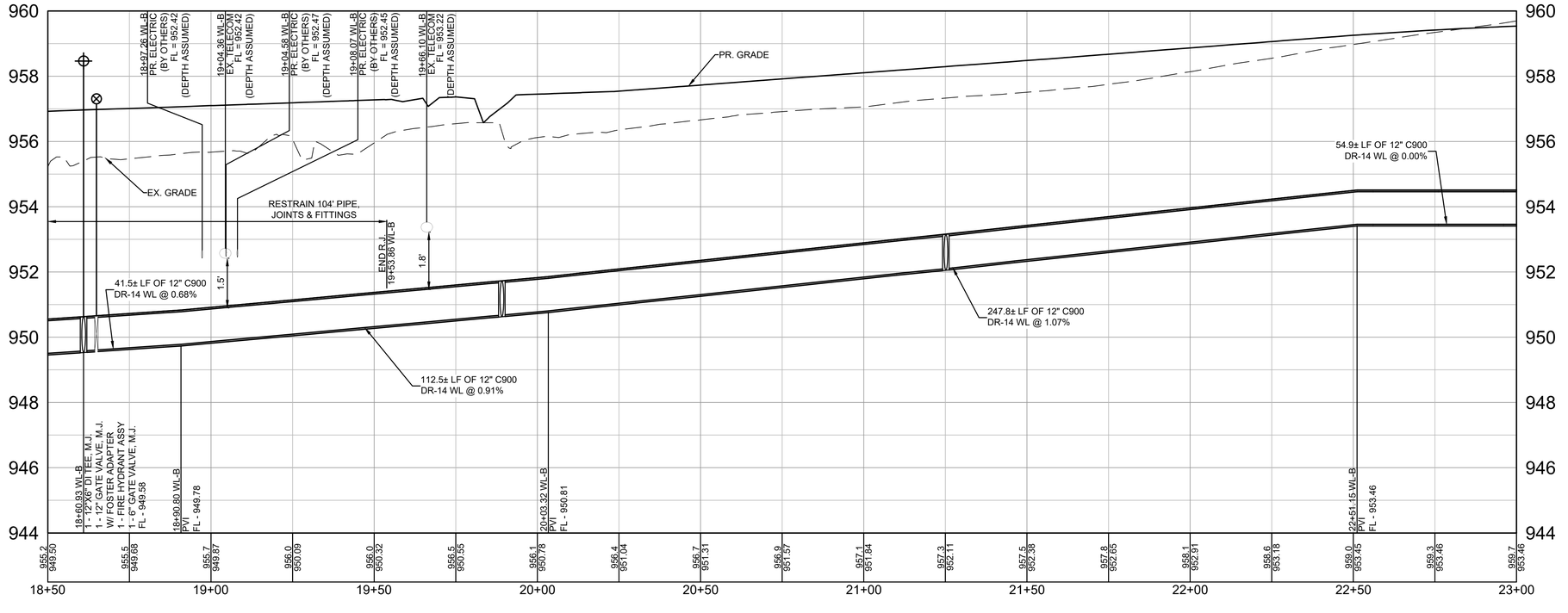

WL-B 18+50 TO 23+00

EXISTING GRADE
XXX.X
FLOW LINE OF PIPE
XXX.XX

PROFILE SCALE
1"=40' HORIZ.
1"=4' VERT.

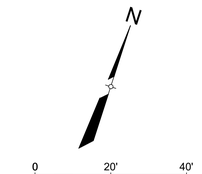

LEGEND

- EX. RIGHT-OF-WAY
- EX. EDGE OF PAVEMENT
- UTILITY EASEMENT
- EX. 2" WATER
- EX. 3" WATER
- EX. 6" WATER
- EX. 8" WATER
- EX. 12" WATER
- PR. WATER
- EX. STORM DRAIN
- EX. 42" GAS LINE
- EX. OVERHEAD ELECTRIC
- EX. OVERHEAD TELECOM
- EX. U.G. TELECOM
- EX. FENCE
- EX. WATER T.B.A
- EX. WATER VALVE
- PR. WATER VALVE
- EX. FIRE HYDRANT
- PR. FIRE HYDRANT
- EX. WATER METER
- PR. AIR RELEASE VALVE
- EX. POWER POLE
- PR. DRAIN VALVE
- EX. TPED

GENERAL NOTES:

1. THE LOCATIONS OF EXISTING UNDERGROUND UTILITIES ARE SHOWN IN AN APPROXIMATE WAY ONLY. THE CONTRACTOR SHALL DETERMINE THE EXACT LOCATION OF ALL EXISTING UTILITIES BEFORE COMMENCING WORK AND AGREES TO BE FULLY RESPONSIBLE FOR ANY AND ALL DAMAGES THAT MIGHT BE OCCASIONED BY THE FAILURE TO EXACTLY LOCATE AND PRESERVE ANY AND ALL UNDERGROUND UTILITIES. WHEN THE CONTRACTOR IS USING TRENCHLESS INSTALLATION METHODS, THE CONTRACTOR SHALL LOCATE ALL UTILITIES FOR THE ENTIRE LENGTH OF THE INSTALLATION PRIOR TO ANY ACTIVITIES.
2. CONTRACTOR TO GIVE CITY OF LEANDER A MINIMUM OF TWO WEEKS NOTICE FOR ALL WATERLINE SHUTDOWNS
3. EXISTING WATER MAINS ARE TO BE PROTECTED AND REMAIN IN SERVICE UNTIL THE NEW MAINS ARE CONSTRUCTED, TESTED, APPROVED AND SERVICE LINES RECONNECTED AND THE NEW MAIN IS PLACED IN SERVICE.
4. EXISTING WATER SERVICE LINES AND METERS ARE TO BE PROTECTED AND REMAIN IN SERVICE UNTIL NEW SERVICE LINES ARE CONSTRUCTED, TESTED, APPROVED AND RECONNECTED AND IN SERVICE.
5. EXISTING WATER MAINS THAT ARE TO BE ABANDONED IN PLACE AND ARE UNDER THE PROPOSED ROADWAY ARE TO BE CUT, CAPPED, AND FILLED WITH FLOWABLE FILL. SUBSIDIARY TO COST OF PIPE, NO SEPARATE PAY. EXISTING WATER LINES THAT ARE TO BE ABANDONED IN PLACE AND ARE NOT UNDER THE PROPOSED ROADWAY WILL BE CAPPED.
6. CONTRACTOR SHALL COORDINATE WITH PEC TO DETERMINE AND PROVIDE ANY REQUIRED SUPPORT OF UTILITY POLES DURING TRENCH EXCAVATION OF WATER MAINS ALONG THIS EASEMENT CORRIDOR.
7. CONTRACTOR SHALL VERIFY FIELD CONDITIONS PRIOR TO CONSTRUCTION. ANY DISCREPANCIES FROM WHAT IS SHOWN SHALL BE IMMEDIATELY BROUGHT TO THE ATTENTION OF THE ENGINEER.

REV. NO.	REVISION DESCRIPTION	APPROVED BY:	DATE

CobbFendley
TBPE NO. F-274 / TBPLS NO. 10046701
9600 N. MOPAC EXPRESSWAY, SUITE 800
AUSTIN, TEXAS 78759
512.834.9798 | FAX 512.834.7727
WWW.COBBFENDLEY.COM

WATERLINE "B" - STA. 18+50 TO 23+00 PLAN AND PROFILE

RM 2243 W/WW RELOCATIONS
LEANDER, TEXAS

City of Leander

PROJ. NO. 1903-099-24 15
DESIGN: O. SAENZ
DRAWN: O. SAENZ
CHECK: L. PRINCE
APPR: K. VAN HOOSIER
DATE: 3/5/2025

INTERIM REVIEW
Not intended for construction, bidding or permit purposes.
Engineer: KRISTEN VAN HOOSIER
P.E. Serial No.: 136882
Date: March 5, 2025

3/5/2025

THESE DESIGN DOCUMENTS ARE NOT TO BE USED FOR CONSTRUCTION PRIOR TO REGULATORY SIGNATURE AND PERMIT.

SHEET
C-106

Dwg Info: G:\CFA\2014\0308801_Williamson_County_2013_Road_Bond\MUN\46_RM2243\01\DESIGN\C-101-WATR-B1.dwg - Tab: WATERLINE "B" - STA. 18+50 TO 23+00 PLAN AND PROFILE - Plotted: 3/5/2025 4:31 PM By: RACHAEL NEWTON

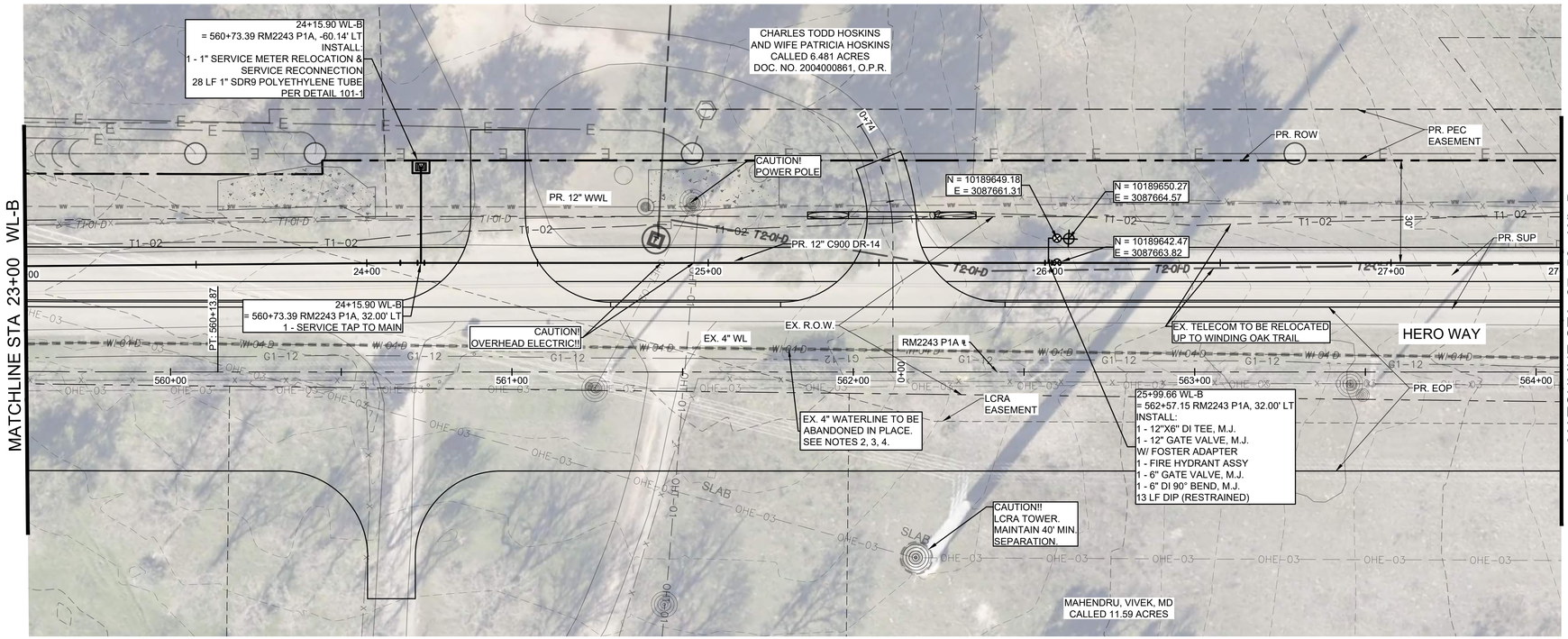

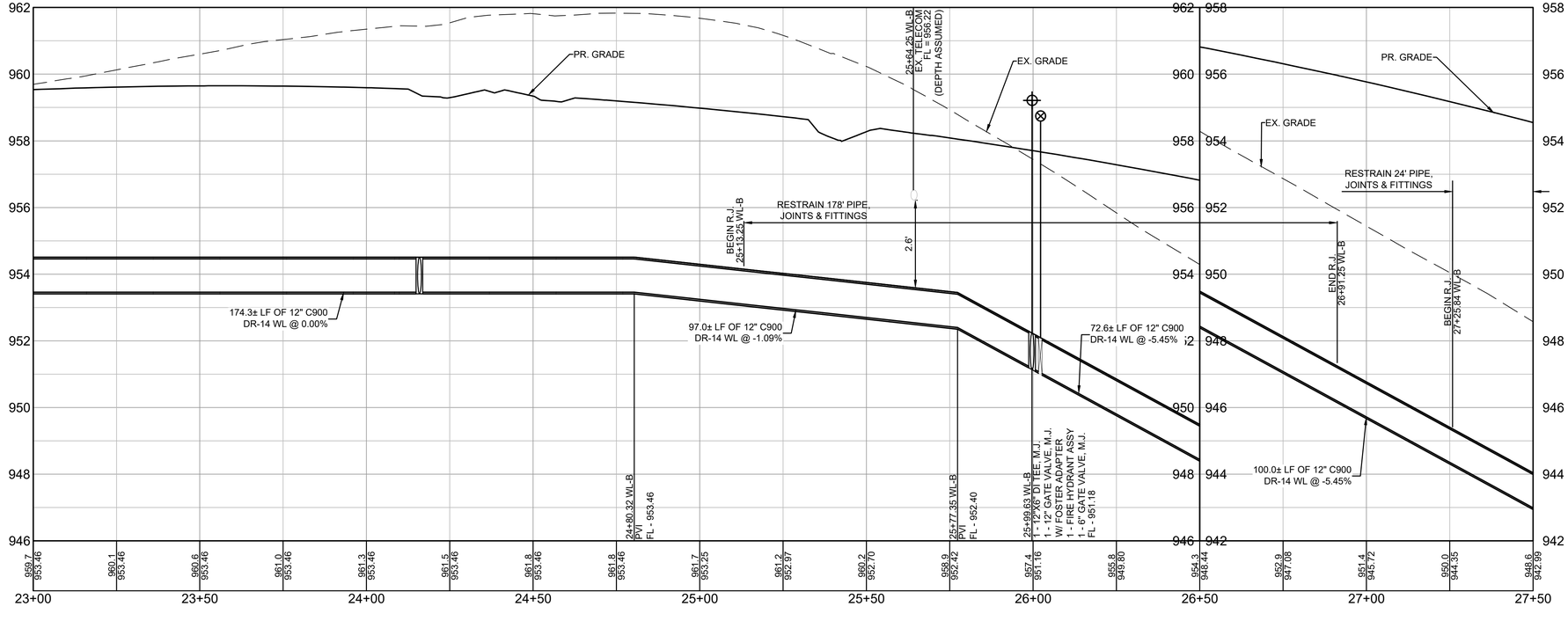

WL-B 23+00 TO 27+50

EXISTING GRADE
XXX.X
FLOW LINE OF PIPE
XXX.XX

PROFILE SCALE
1"=40' HORIZ.
1"=4' VERT.

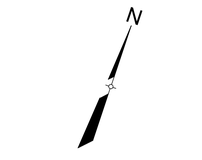

LEGEND

- EX. RIGHT-OF-WAY
- EX. EDGE OF PAVEMENT
- UTILITY EASEMENT
- EX. 2" WATER
- EX. 3" WATER
- EX. 6" WATER
- EX. 8" WATER
- EX. 12" WATER
- PR. WATER
- EX. STORM DRAIN
- EX. 42" GAS LINE
- EX. OVERHEAD ELECTRIC
- EX. OVERHEAD TELECOM
- EX. U.G. TELECOM
- EX. FENCE
- EX. WATER T.B.A
- EX. WATER VALVE
- PR. WATER VALVE
- EX. FIRE HYDRANT
- PR. FIRE HYDRANT
- EX. WATER METER
- PR. AIR RELEASE VALVE
- EX. POWER POLE
- PR. DRAIN VALVE
- EX. TPED

GENERAL NOTES:

1. THE LOCATIONS OF EXISTING UNDERGROUND UTILITIES ARE SHOWN IN AN APPROXIMATE WAY ONLY. THE CONTRACTOR SHALL DETERMINE THE EXACT LOCATION OF ALL EXISTING UTILITIES BEFORE COMMENCING WORK AND AGREES TO BE FULLY RESPONSIBLE FOR ANY AND ALL DAMAGES THAT MIGHT BE OCCASIONED BY THE FAILURE TO EXACTLY LOCATE AND PRESERVE ANY AND ALL UNDERGROUND UTILITIES. WHEN THE CONTRACTOR IS USING TRENCHLESS INSTALLATION METHODS, THE CONTRACTOR SHALL LOCATE ALL UTILITIES FOR THE ENTIRE LENGTH OF THE INSTALLATION PRIOR TO ANY ACTIVITIES.
2. CONTRACTOR TO GIVE CITY OF LEANDER A MINIMUM OF TWO WEEKS NOTICE FOR ALL WATERLINE SHUTDOWNS
3. EXISTING WATER MAINS ARE TO BE PROTECTED AND REMAIN IN SERVICE UNTIL THE NEW MAINS ARE CONSTRUCTED, TESTED, APPROVED AND SERVICE LINES RECONNECTED AND THE NEW MAIN IS PLACED IN SERVICE.
4. EXISTING WATER SERVICE LINES AND METERS ARE TO BE PROTECTED AND REMAIN IN SERVICE UNTIL NEW SERVICE LINES ARE CONSTRUCTED, TESTED, APPROVED AND RECONNECTED AND IN SERVICE.
5. EXISTING WATER MAINS THAT ARE TO BE ABANDONED IN PLACE AND ARE UNDER THE PROPOSED ROADWAY ARE TO BE CUT, CAPPED, AND FILLED WITH FLOWABLE FILL. SUBSIDIARY TO COST OF PIPE, NO SEPARATE PAY. EXISTING WATER LINES THAT ARE TO BE ABANDONED IN PLACE AND ARE NOT UNDER THE PROPOSED ROADWAY WILL BE CAPPED.
6. CONTRACTOR SHALL COORDINATE WITH PEC TO DETERMINE AND PROVIDE ANY REQUIRED SUPPORT OF UTILITY POLES DURING TRENCH EXCAVATION OF WATER MAINS ALONG THIS EASEMENT CORRIDOR.
7. CONTRACTOR SHALL VERIFY FIELD CONDITIONS PRIOR TO CONSTRUCTION. ANY DISCREPANCIES FROM WHAT IS SHOWN SHALL BE IMMEDIATELY BROUGHT TO THE ATTENTION OF THE ENGINEER.

REV. NO.	REVISION DESCRIPTION	APPROVED BY:	DATE

CobbFendley
TBPE NO. F-274 / TBPLS NO. 10046701
9600 N. MOPAC EXPRESSWAY, SUITE 800
AUSTIN, TEXAS 78759
512.834.9798 | FAX 512.834.7727
WWW.COBBFENDLEY.COM

WATERLINE "B" - STA. 23+00 TO 27+50 PLAN AND PROFILE

RM 2243 W/WW RELOCATIONS
LEANDER, TEXAS

City of Leander

PROJ. NO.	1903-099-24 15
DESIGN:	O. SAENZ
DRAWN:	O. SAENZ
CHECK:	L. PRINCE
APPR:	K. VAN HOOSIER
DATE:	3/5/2025

INTERIM REVIEW
Not intended for construction, bidding or permit purposes.
Engineer: KRISTEN VAN HOOSIER
P.E. Serial No.: 136882
Date: March 5, 2025

3/5/2025

THESE DESIGN DOCUMENTS ARE NOT TO BE USED FOR CONSTRUCTION PRIOR TO REGULATORY SIGNATURE AND PERMIT.

SHEET
C-107

Dwg Info: G:\CFA\2014\0308801_Williamson_County_2013_Road_Bond\MUN\46_RM2243\01\DESIGN\C-101-WATR-B1.dwg - Tab: WATERLINE "B" - STA. 23+00 TO 27+50 PLAN AND PROFILE - Plotted: 3/5/2025 4:33 PM By: RACHAEL NEWTON

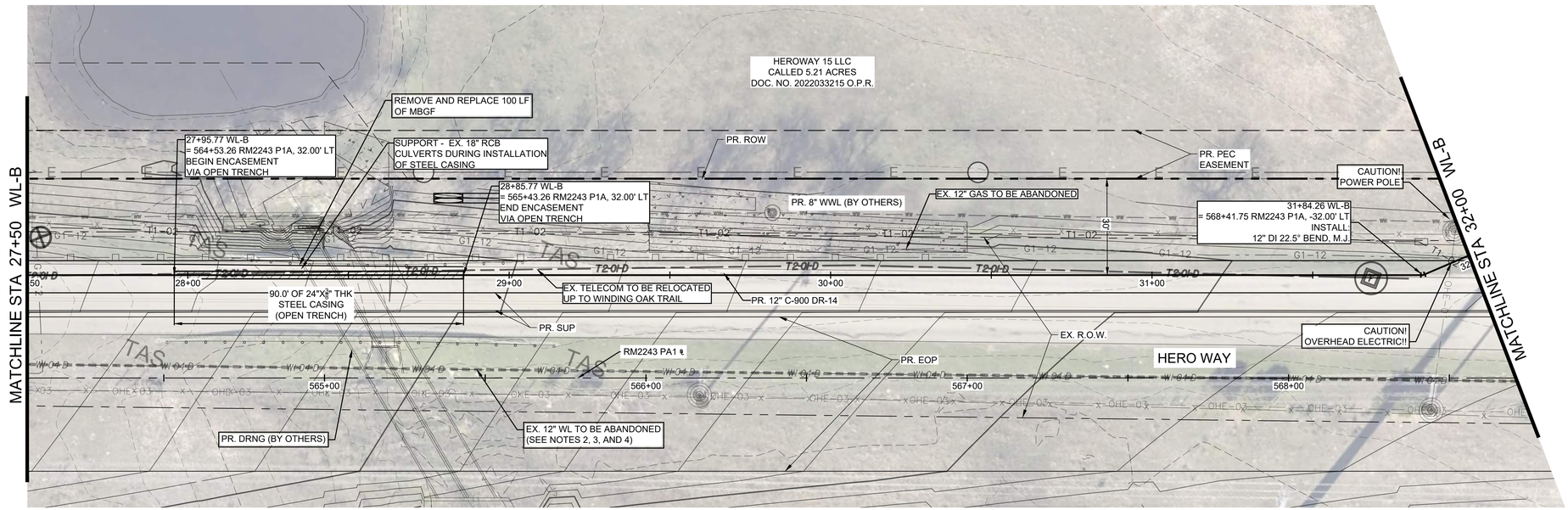

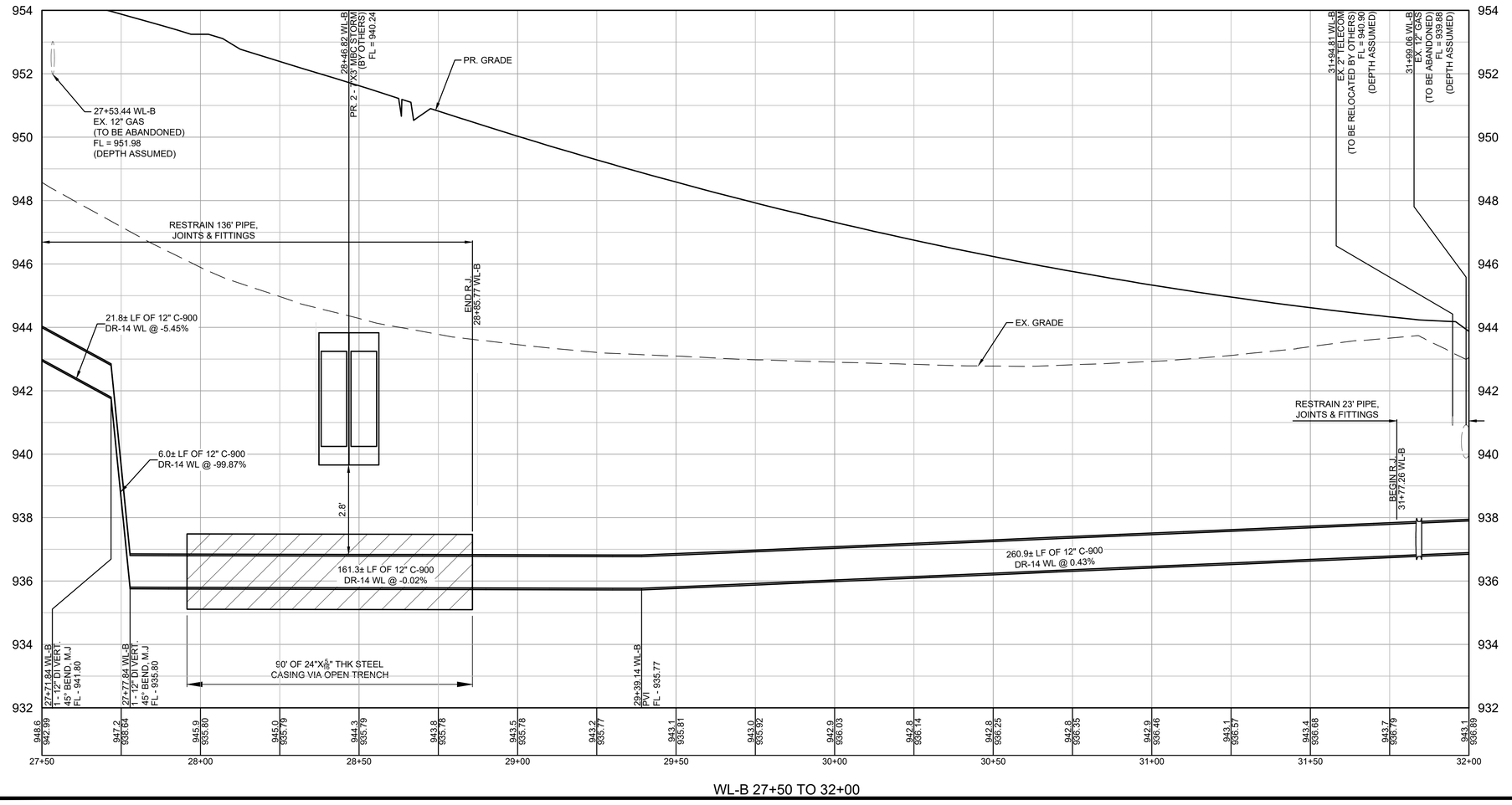

WL-B 27+50 TO 32+00

EXISTING GRADE XXX.X
FLOW LINE OF PIPE XXX.XX

PROFILE SCALE
1"=40' HORIZ.
1"=4' VERT.

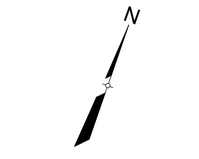

LEGEND

- EX. RIGHT-OF-WAY
- EX. EDGE OF PAVEMENT
- UTILITY EASEMENT
- EX. 2" WATER
- EX. 3" WATER
- EX. 6" WATER
- EX. 8" WATER
- EX. 12" WATER
- PR. WATER
- EX. STORM DRAIN
- EX. 42" GAS LINE
- EX. OVERHEAD ELECTRIC
- EX. OVERHEAD TELECOM
- EX. U.G. TELECOM
- EX. FENCE
- EX. WATER T.B.A
- EX. WATER VALVE
- PR. WATER VALVE
- EX. FIRE HYDRANT
- PR. FIRE HYDRANT
- EX. WATER METER
- PR. AIR RELEASE VALVE
- EX. POWER POLE
- PR. DRAIN VALVE
- EX. TPED

GENERAL NOTES:

1. THE LOCATIONS OF EXISTING UNDERGROUND UTILITIES ARE SHOWN IN AN APPROXIMATE WAY ONLY. THE CONTRACTOR SHALL DETERMINE THE EXACT LOCATION OF ALL EXISTING UTILITIES BEFORE COMMENCING WORK AND AGREES TO BE FULLY RESPONSIBLE FOR ANY AND ALL DAMAGES THAT MIGHT BE OCCASIONED BY THE FAILURE TO EXACTLY LOCATE AND PRESERVE ANY AND ALL UNDERGROUND UTILITIES. WHEN THE CONTRACTOR IS USING TRENCHLESS INSTALLATION METHODS, THE CONTRACTOR SHALL LOCATE ALL UTILITIES FOR THE ENTIRE LENGTH OF THE INSTALLATION PRIOR TO ANY ACTIVITIES.
2. CONTRACTOR TO GIVE CITY OF LEANDER A MINIMUM OF TWO WEEKS NOTICE FOR ALL WATERLINE SHUTDOWNS
3. EXISTING WATER MAINS ARE TO BE PROTECTED AND REMAIN IN SERVICE UNTIL THE NEW MAINS ARE CONSTRUCTED, TESTED, APPROVED AND SERVICE LINES RECONNECTED AND THE NEW MAIN IS PLACED IN SERVICE.
4. EXISTING WATER SERVICE LINES AND METERS ARE TO BE PROTECTED AND REMAIN IN SERVICE UNTIL NEW SERVICE LINES ARE CONSTRUCTED, TESTED, APPROVED AND RECONNECTED AND IN SERVICE.
5. EXISTING WATER MAINS THAT ARE TO BE ABANDONED IN PLACE AND ARE UNDER THE PROPOSED ROADWAY ARE TO BE CUT, CAPPED, AND FILLED WITH FLOWABLE FILL. SUBSIDIARY TO COST OF PIPE, NO SEPARATE PAY. EXISTING WATER LINES THAT ARE TO BE ABANDONED IN PLACE AND ARE NOT UNDER THE PROPOSED ROADWAY WILL BE CAPPED.
6. CONTRACTOR SHALL COORDINATE WITH PEC TO DETERMINE AND PROVIDE ANY REQUIRED SUPPORT OF UTILITY POLES DURING TRENCH EXCAVATION OF WATER MAINS ALONG THIS EASEMENT CORRIDOR.
7. CONTRACTOR SHALL VERIFY FIELD CONDITIONS PRIOR TO CONSTRUCTION. ANY DISCREPANCIES FROM WHAT IS SHOWN SHALL BE IMMEDIATELY BROUGHT TO THE ATTENTION OF THE ENGINEER.

REV. NO.	REVISION DESCRIPTION	APPROVED BY:	DATE

CobbFendley
TBPE NO. F-274 / TBPLS NO. 10046701
9600 N. MOPAC EXPRESSWAY, SUITE 800
AUSTIN, TEXAS 78759
512.834.9798 | FAX 512.834.7727
WWW.COBBFENDLEY.COM

WATERLINE "B" - STA. 27+50 TO 32+00 PLAN AND PROFILE

RM 2243 W/WW RELOCATIONS

LEANDER, TEXAS

City of Leander

PROJ. NO. 1903-099-24 15
DESIGN: R. NEWTON
DRAWN: R. NEWTON
CHECK: L. PRINCE
APPR: K. VAN HOOSIER
DATE: 3/5/2025

INTERIM REVIEW
Not intended for construction, bidding or permit purposes.
Engineer: KRISTEN VAN HOOSIER
P.E. Serial No.: 136882
Date: March 5, 2025

3/5/2025

THESE DESIGN DOCUMENTS ARE NOT TO BE USED FOR CONSTRUCTION PRIOR TO REGULATORY SIGNATURE AND PERMIT.

SHEET
C-108

Dwg Info: G:\CFA\2014\0308801_Williamson_County_2013_Road_Bond\MUN\46_RM2243\01\DESIGN\C-101-WATR-B2.dwg - Tab: WATR-B2-01 - Plotted: 3/5/2025 4:34 PM By: RACHAEL NEWTON

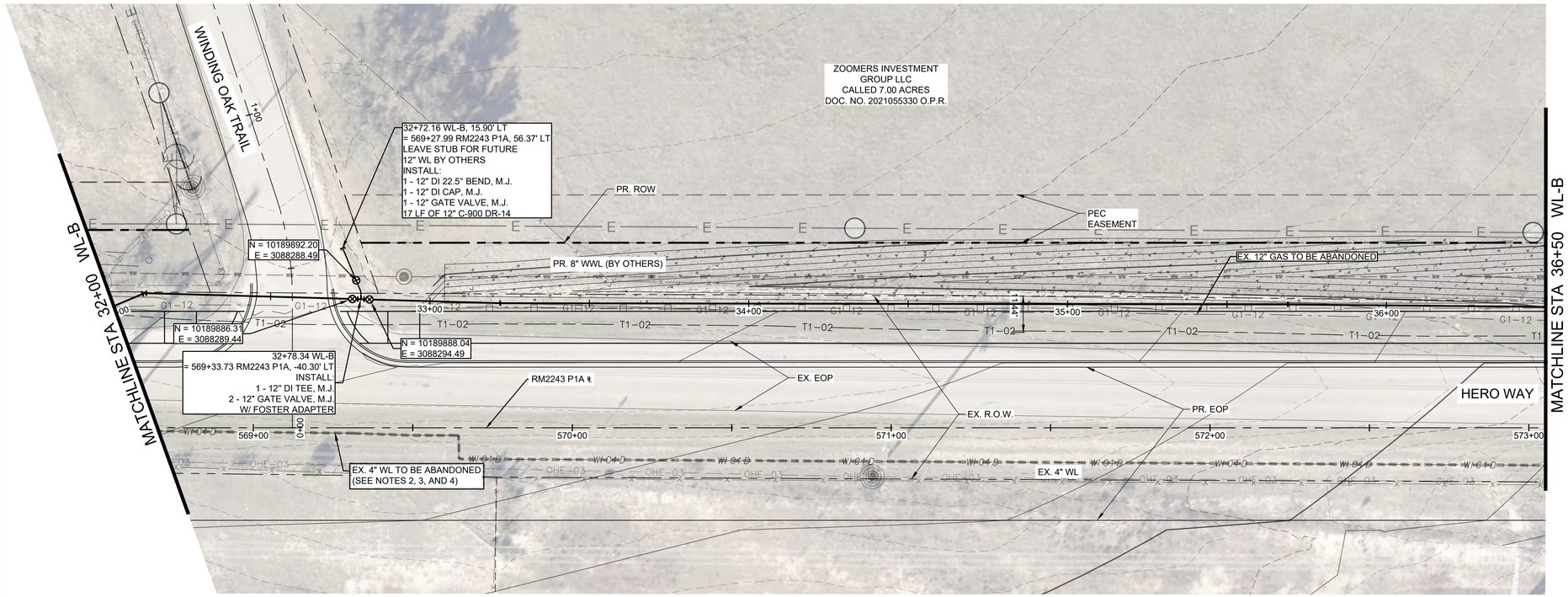

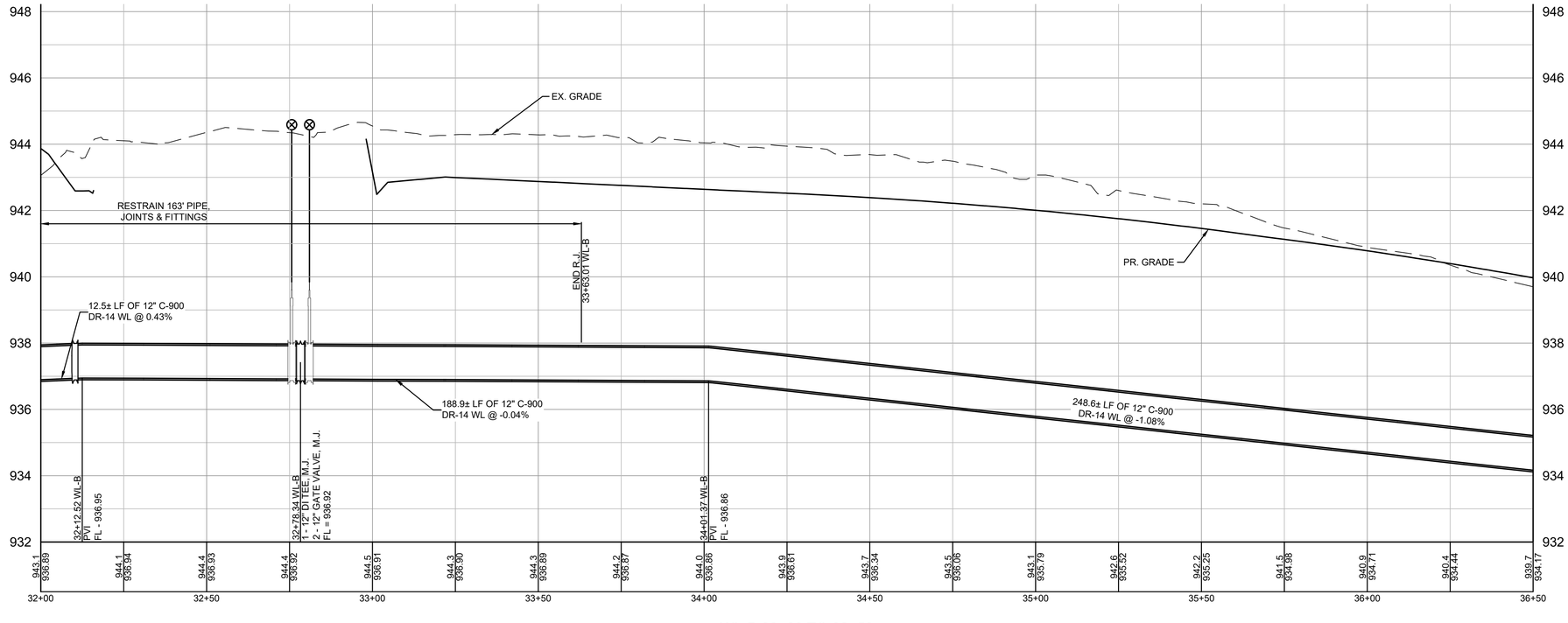

WL-B 32+00 TO 36+50

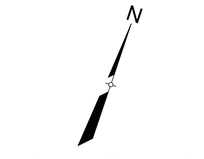

LEGEND

- EX. RIGHT-OF-WAY
- EX. EDGE OF PAVEMENT
- UTILITY EASEMENT
- EX. 2" WATER
- EX. 3" WATER
- EX. 6" WATER
- EX. 8" WATER
- EX. 12" WATER
- PR. WATER
- EX. STORM DRAIN
- EX. 42" GAS LINE
- EX. OVERHEAD ELECTRIC
- EX. OVERHEAD TELECOM
- EX. U.G. TELECOM
- EX. FENCE
- EX. WATER T.B.A
- EX. WATER VALVE
- PR. WATER VALVE
- EX. FIRE HYDRANT
- PR. FIRE HYDRANT
- EX. WATER METER
- PR. AIR RELEASE VALVE
- EX. POWER POLE
- PR. DRAIN VALVE
- EX. TPED

GENERAL NOTES:

1. THE LOCATIONS OF EXISTING UNDERGROUND UTILITIES ARE SHOWN IN AN APPROXIMATE WAY ONLY. THE CONTRACTOR SHALL DETERMINE THE EXACT LOCATION OF ALL EXISTING UTILITIES BEFORE COMMENCING WORK AND AGREES TO BE FULLY RESPONSIBLE FOR ANY AND ALL DAMAGES THAT MIGHT BE OCCASIONED BY THE FAILURE TO EXACTLY LOCATE AND PRESERVE ANY AND ALL UNDERGROUND UTILITIES. WHEN THE CONTRACTOR IS USING TRENCHLESS INSTALLATION METHODS, THE CONTRACTOR SHALL LOCATE ALL UTILITIES FOR THE ENTIRE LENGTH OF THE INSTALLATION PRIOR TO ANY ACTIVITIES.
2. CONTRACTOR TO GIVE CITY OF LEANDER A MINIMUM OF TWO WEEKS NOTICE FOR ALL WATERLINE SHUTDOWNS
3. EXISTING WATER MAINS ARE TO BE PROTECTED AND REMAIN IN SERVICE UNTIL THE NEW MAINS ARE CONSTRUCTED, TESTED, APPROVED AND SERVICE LINES RECONNECTED AND THE NEW MAIN IS PLACED IN SERVICE.
4. EXISTING WATER SERVICE LINES AND METERS ARE TO BE PROTECTED AND REMAIN IN SERVICE UNTIL NEW SERVICE LINES ARE CONSTRUCTED, TESTED, APPROVED AND RECONNECTED AND IN SERVICE.
5. EXISTING WATER MAINS THAT ARE TO BE ABANDONED IN PLACE AND ARE UNDER THE PROPOSED ROADWAY ARE TO BE CUT, CAPPED, AND FILLED WITH FLOWABLE FILL. SUBSIDIARY TO COST OF PIPE, NO SEPARATE PAY. EXISTING WATER LINES THAT ARE TO BE ABANDONED IN PLACE AND ARE NOT UNDER THE PROPOSED ROADWAY WILL BE CAPPED.
6. CONTRACTOR SHALL COORDINATE WITH PEC TO DETERMINE AND PROVIDE ANY REQUIRED SUPPORT OF UTILITY POLES DURING TRENCH EXCAVATION OF WATER MAINS ALONG THIS EASEMENT CORRIDOR.
7. CONTRACTOR SHALL VERIFY FIELD CONDITIONS PRIOR TO CONSTRUCTION. ANY DISCREPANCIES FROM WHAT IS SHOWN SHALL BE IMMEDIATELY BROUGHT TO THE ATTENTION OF THE ENGINEER.

EXISTING GRADE
FLOW LINE OF PIPE
XXX.X
XXX.XX

PROFILE SCALE
1"=40' HORIZ.
1"=4' VERT.

REV. NO.	REVISION DESCRIPTION	APPROVED BY:	DATE

CobbFendley
TBPE NO. F-274 / TBPLS NO. 10046701
9600 N. MOPAC EXPRESSWAY, SUITE 800
AUSTIN, TEXAS 78759
512.834.9798 | FAX 512.834.7727
WWW.COBBFENDLEY.COM

WATERLINE "B" - STA. 32+00 TO 36+50 PLAN AND PROFILE

RM 2243 W/WW RELOCATIONS
LEANDER, TEXAS

City of Leander

PROJ. NO. 1903-099-24 15
DESIGN: R. NEWTON
DRAWN: R. NEWTON
CHECK: L. PRINCE
APPR: K. VAN HOOSIER
DATE: 3/5/2025

INTERIM REVIEW
Not intended for construction, bidding or permit purposes.
Engineer: KRISTEN VAN HOOSIER
P.E. Serial No.: 136882
Date: March 5, 2025

3/5/2025

THESE DESIGN DOCUMENTS ARE NOT TO BE USED FOR CONSTRUCTION PRIOR TO REGULATORY SIGNATURE AND PERMIT.

SHEET
C-109

Dwg Info: G:\CFA\2014\0308801_Williamson_County_2013_Road_Bond\MUN\46_RM2243\01\DESIGN\C-101-WATR-B2.dwg - Tab: WATR-B2-02 - Plotted: 3/5/2025 4:34 PM By: RACHAEL NEWTON

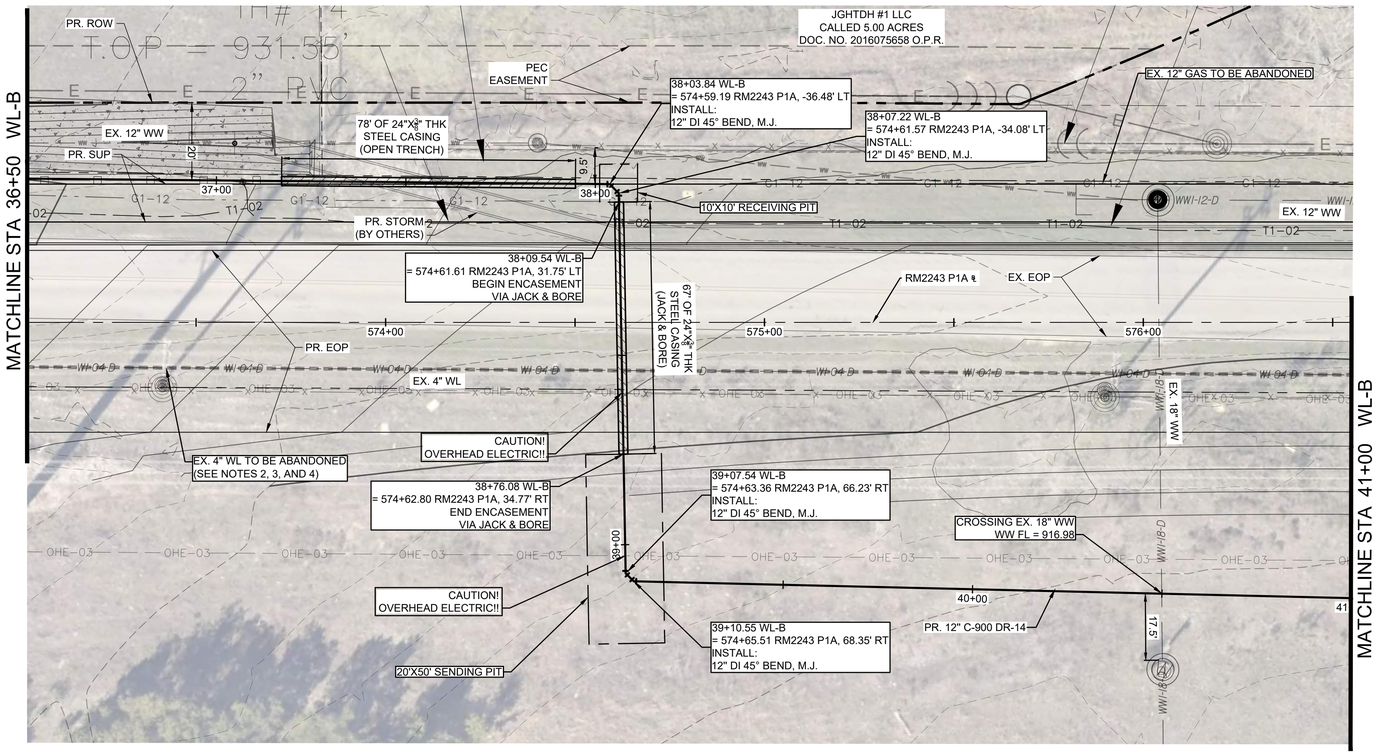

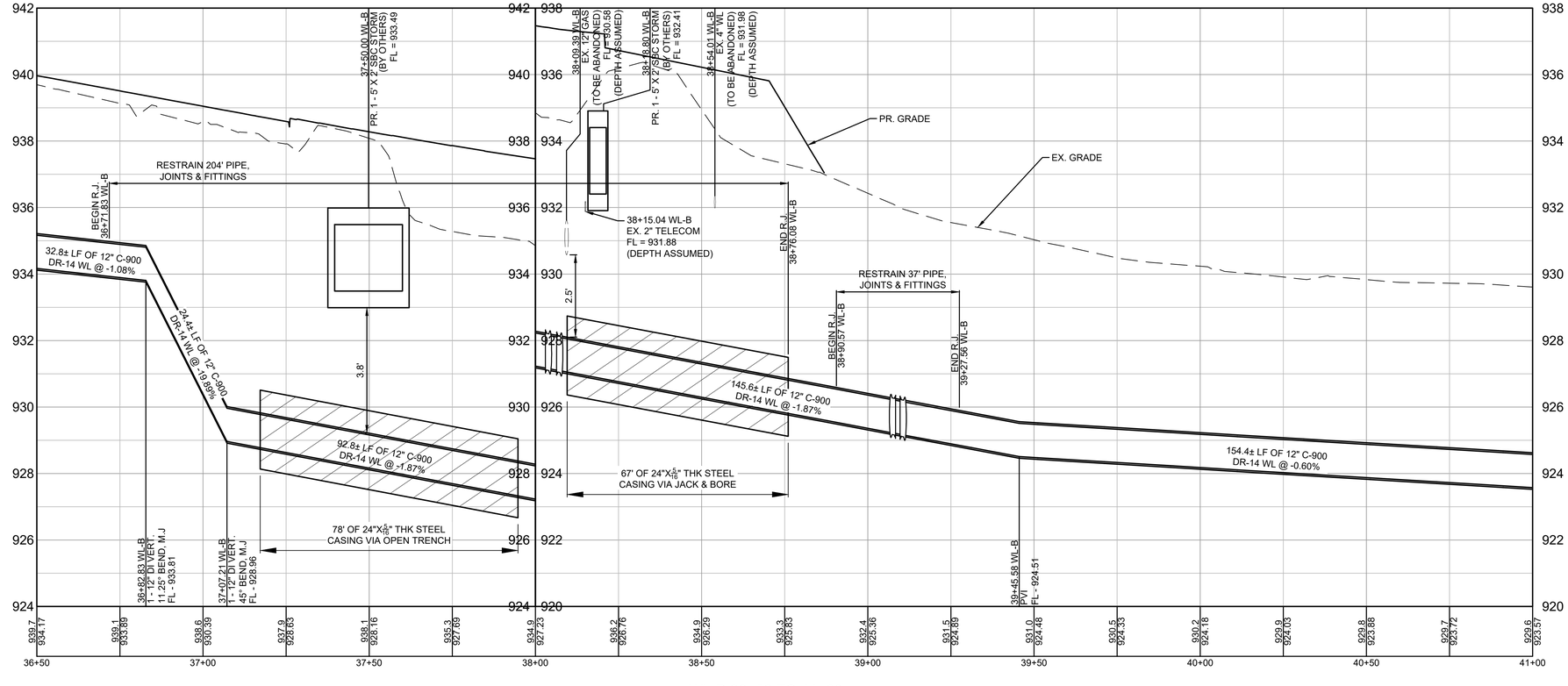

WL-B 36+50 TO 41+00

EXISTING GRADE
XXX.X
FLOW LINE OF PIPE
XXX.XX

PROFILE SCALE
1"=40' HORIZ.
1"=4' VERT.

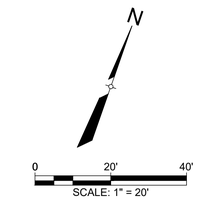

LEGEND

- EX. RIGHT-OF-WAY
- EX. EDGE OF PAVEMENT
- UTILITY EASEMENT
- EX. 2" WATER
- EX. 3" WATER
- EX. 6" WATER
- EX. 8" WATER
- EX. 12" WATER
- PR. WATER
- EX. STORM DRAIN
- EX. 42" GAS LINE
- EX. OVERHEAD ELECTRIC
- EX. OVERHEAD TELECOM
- EX. U.G. TELECOM
- EX. FENCE
- EX. WATER T.B.A
- EX. WATER VALVE
- PR. WATER VALVE
- EX. FIRE HYDRANT
- PR. FIRE HYDRANT
- EX. WATER METER
- PR. AIR RELEASE VALVE
- EX. POWER POLE
- PR. DRAIN VALVE
- EX. TPED

GENERAL NOTES:

1. THE LOCATIONS OF EXISTING UNDERGROUND UTILITIES ARE SHOWN IN AN APPROXIMATE WAY ONLY. THE CONTRACTOR SHALL DETERMINE THE EXACT LOCATION OF ALL EXISTING UTILITIES BEFORE COMMENCING WORK AND AGREES TO BE FULLY RESPONSIBLE FOR ANY AND ALL DAMAGES THAT MIGHT BE OCCASIONED BY THE FAILURE TO EXACTLY LOCATE AND PRESERVE ANY AND ALL UNDERGROUND UTILITIES. WHEN THE CONTRACTOR IS USING TRENCHLESS INSTALLATION METHODS, THE CONTRACTOR SHALL LOCATE ALL UTILITIES FOR THE ENTIRE LENGTH OF THE INSTALLATION PRIOR TO ANY ACTIVITIES.
2. CONTRACTOR TO GIVE CITY OF LEANDER A MINIMUM OF TWO WEEKS NOTICE FOR ALL WATERLINE SHUTDOWNS
3. EXISTING WATER MAINS ARE TO BE PROTECTED AND REMAIN IN SERVICE UNTIL THE NEW MAINS ARE CONSTRUCTED, TESTED, APPROVED AND SERVICE LINES RECONNECTED AND THE NEW MAIN IS PLACED IN SERVICE.
4. EXISTING WATER SERVICE LINES AND METERS ARE TO BE PROTECTED AND REMAIN IN SERVICE UNTIL NEW SERVICE LINES ARE CONSTRUCTED, TESTED, APPROVED AND RECONNECTED AND IN SERVICE.
5. EXISTING WATER MAINS THAT ARE TO BE ABANDONED IN PLACE AND ARE UNDER THE PROPOSED ROADWAY ARE TO BE CUT, CAPPED, AND FILLED WITH FLOWABLE FILL. SUBSIDIARY TO COST OF PIPE, NO SEPARATE PAY. EXISTING WATER LINES THAT ARE TO BE ABANDONED IN PLACE AND ARE NOT UNDER THE PROPOSED ROADWAY WILL BE CAPPED.
6. CONTRACTOR SHALL COORDINATE WITH PEC TO DETERMINE AND PROVIDE ANY REQUIRED SUPPORT OF UTILITY POLES DURING TRENCH EXCAVATION OF WATER MAINS ALONG THIS EASEMENT CORRIDOR.
7. CONTRACTOR SHALL VERIFY FIELD CONDITIONS PRIOR TO CONSTRUCTION. ANY DISCREPANCIES FROM WHAT IS SHOWN SHALL BE IMMEDIATELY BROUGHT TO THE ATTENTION OF THE ENGINEER.

REV. NO.	REVISION DESCRIPTION	APPROVED BY:	DATE

CobbFendley
TBPE NO. F-274 / TBPLS NO. 10046701
9600 N. MOPAC EXPRESSWAY, SUITE 800
AUSTIN, TEXAS 78759
512.834.9798 | FAX 512.834.7727
WWW.COBBFENDLEY.COM

WATERLINE "B" - STA. 36+50 TO 41+00 PLAN AND PROFILE
RM 2243 W/WW RELOCATIONS
LEANDER, TEXAS

City of Leander

PROJ. NO. 1903-099-24 15
DESIGN: R. NEWTON
DRAWN: R. NEWTON
CHECK: L. PRINCE
APPR: K. VAN HOOSIER
DATE: 3/5/2025

INTERIM REVIEW
Not intended for construction, bidding or permit purposes.
Engineer: KRISTEN VAN HOOSIER
P.E. Serial No.: 136882
Date: March 5, 2025

3/5/2025

THESE DESIGN DOCUMENTS ARE NOT TO BE USED FOR CONSTRUCTION PRIOR TO REGULATORY SIGNATURE AND PERMIT.

SHEET
C-110

Dwg Info: G:\CFA\2014\0308801_Williamson_County_2013_Road_Bond\MUN\46_RM2243\01\DESIGN\C-101-WATR-B2.dwg - Tab: WATR-B2-03 - Plotted: 3/5/2025 4:35 PM By: RACHAEL NEWTON

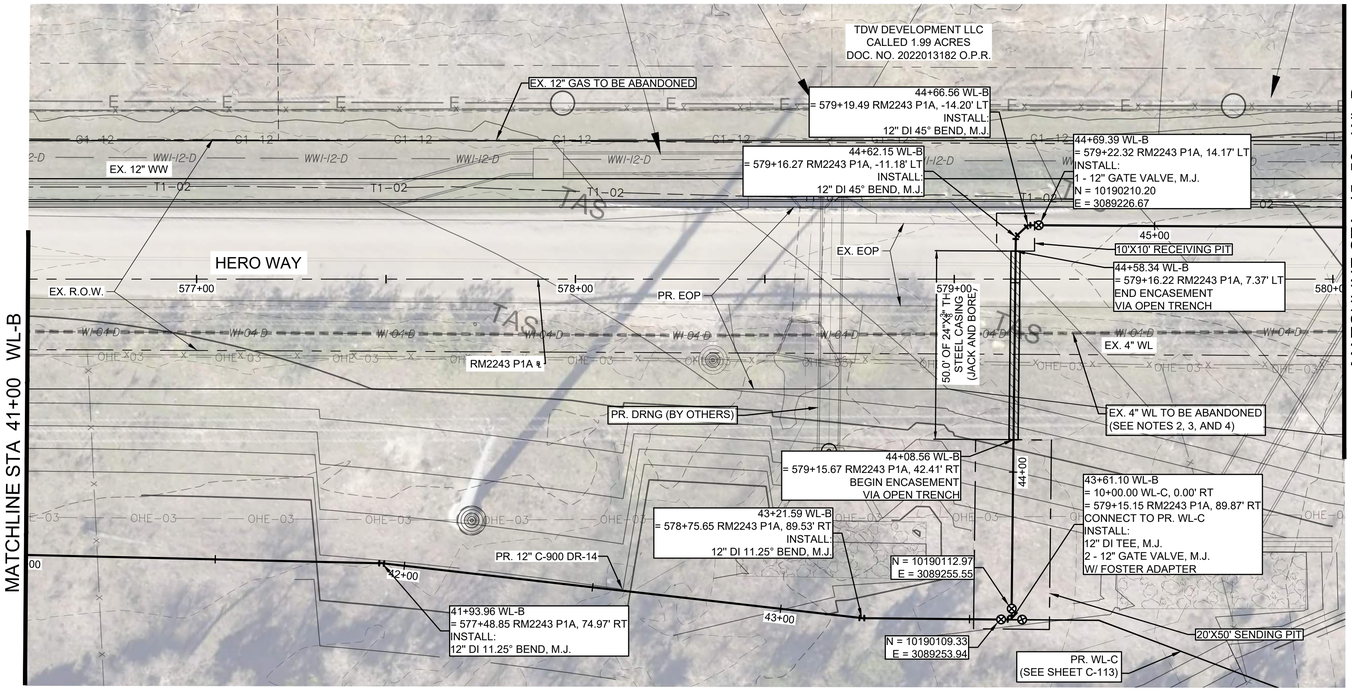

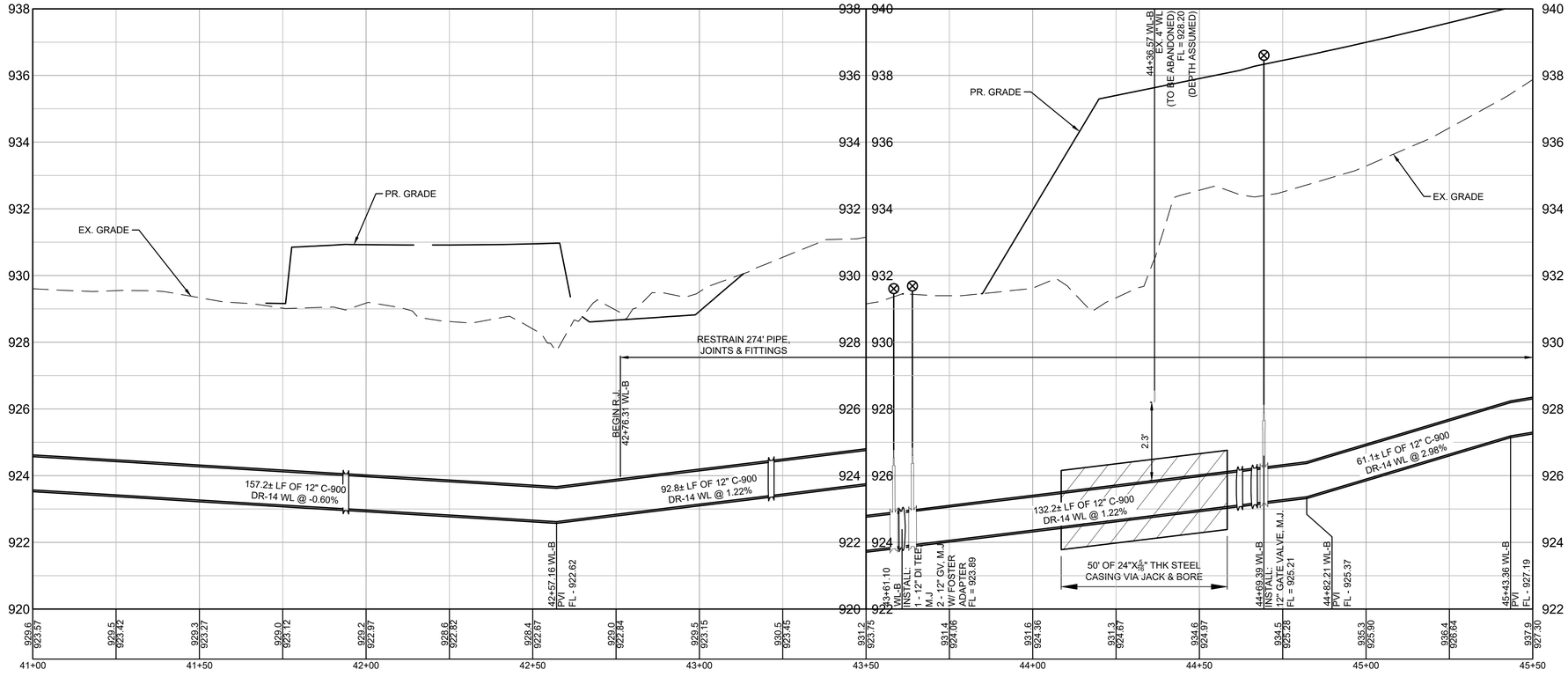

WL-B 41+00 TO 45+50

EXISTING GRADE
XXX.X
FLOW LINE OF PIPE
XXX.XX

PROFILE SCALE
1"=40' HORIZ.
1"=4' VERT.

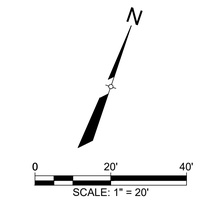

LEGEND

- EX. RIGHT-OF-WAY
- EX. EDGE OF PAVEMENT
- UTILITY EASEMENT
- EX. 2" WATER
- EX. 3" WATER
- EX. 6" WATER
- EX. 8" WATER
- EX. 12" WATER
- PR. WATER
- EX. STORM DRAIN
- EX. 42" GAS LINE
- EX. OVERHEAD ELECTRIC
- EX. OVERHEAD TELECOM
- EX. U.G. TELECOM
- EX. FENCE
- EX. WATER T.B.A
- EX. WATER VALVE
- PR. WATER VALVE
- EX. FIRE HYDRANT
- PR. FIRE HYDRANT
- EX. WATER METER
- PR. AIR RELEASE VALVE
- EX. POWER POLE
- PR. DRAIN VALVE
- EX. TPED

GENERAL NOTES:

1. THE LOCATIONS OF EXISTING UNDERGROUND UTILITIES ARE SHOWN IN AN APPROXIMATE WAY ONLY. THE CONTRACTOR SHALL DETERMINE THE EXACT LOCATION OF ALL EXISTING UTILITIES BEFORE COMMENCING WORK AND AGREES TO BE FULLY RESPONSIBLE FOR ANY AND ALL DAMAGES THAT MIGHT BE OCCASIONED BY THE FAILURE TO EXACTLY LOCATE AND PRESERVE ANY AND ALL UNDERGROUND UTILITIES. WHEN THE CONTRACTOR IS USING TRENCHLESS INSTALLATION METHODS, THE CONTRACTOR SHALL LOCATE ALL UTILITIES FOR THE ENTIRE LENGTH OF THE INSTALLATION PRIOR TO ANY ACTIVITIES.
2. CONTRACTOR TO GIVE CITY OF LEANDER A MINIMUM OF TWO WEEKS NOTICE FOR ALL WATERLINE SHUTDOWNS
3. EXISTING WATER MAINS ARE TO BE PROTECTED AND REMAIN IN SERVICE UNTIL THE NEW MAINS ARE CONSTRUCTED, TESTED, APPROVED AND SERVICE LINES RECONNECTED AND THE NEW MAIN IS PLACED IN SERVICE.
4. EXISTING WATER SERVICE LINES AND METERS ARE TO BE PROTECTED AND REMAIN IN SERVICE UNTIL NEW SERVICE LINES ARE CONSTRUCTED, TESTED, APPROVED AND RECONNECTED AND IN SERVICE.
5. EXISTING WATER MAINS THAT ARE TO BE ABANDONED IN PLACE AND ARE UNDER THE PROPOSED ROADWAY ARE TO BE CUT, CAPPED, AND FILLED WITH FLOWABLE FILL. SUBSIDIARY TO COST OF PIPE, NO SEPARATE PAY. EXISTING WATER LINES THAT ARE TO BE ABANDONED IN PLACE AND ARE NOT UNDER THE PROPOSED ROADWAY WILL BE CAPPED.
6. CONTRACTOR SHALL COORDINATE WITH PEC TO DETERMINE AND PROVIDE ANY REQUIRED SUPPORT OF UTILITY POLES DURING TRENCH EXCAVATION OF WATER MAINS ALONG THIS EASEMENT CORRIDOR.
7. CONTRACTOR SHALL VERIFY FIELD CONDITIONS PRIOR TO CONSTRUCTION. ANY DISCREPANCIES FROM WHAT IS SHOWN SHALL BE IMMEDIATELY BROUGHT TO THE ATTENTION OF THE ENGINEER.

REV. NO.	REVISION DESCRIPTION	APPROVED BY:	DATE

CobbFendley
TBPE NO. F-274 / TBPLS NO. 10046701
9600 N. MOPAC EXPRESSWAY, SUITE 800
AUSTIN, TEXAS 78759
512.834.9798 | FAX 512.834.7727
WWW.COBBFENDLEY.COM

WATERLINE "B" - STA. 41+00 TO 45+50 PLAN AND PROFILE

RM 2243 W/WW RELOCATIONS
LEANDER, TEXAS

City of Leander

PROJ. NO. 1903-099-24 15
DESIGN: R. NEWTON
DRAWN: R. NEWTON
CHECK: L. PRINCE
APPR: K. VAN HOOSIER
DATE: 3/5/2025

INTERIM REVIEW
Not intended for construction, bidding or permit purposes.
Engineer: KRISTEN VAN HOOSIER
P.E. Serial No.: 136882
Date: March 5, 2025

3/5/2025

THESE DESIGN DOCUMENTS ARE NOT TO BE USED FOR CONSTRUCTION PRIOR TO REGULATORY SIGNATURE AND PERMIT

SHEET
C-111

Dwg Info: G:\CFA\2014\0308801_Williamson_County_2013_Road_Bond\MUN\46_RM2243\01\DESIGN\C-101-WATR-B2.dwg - Tab: WATR-B2-04 - Plotted: 3/5/2025 4:36 PM By: RACHAEL NEWTON

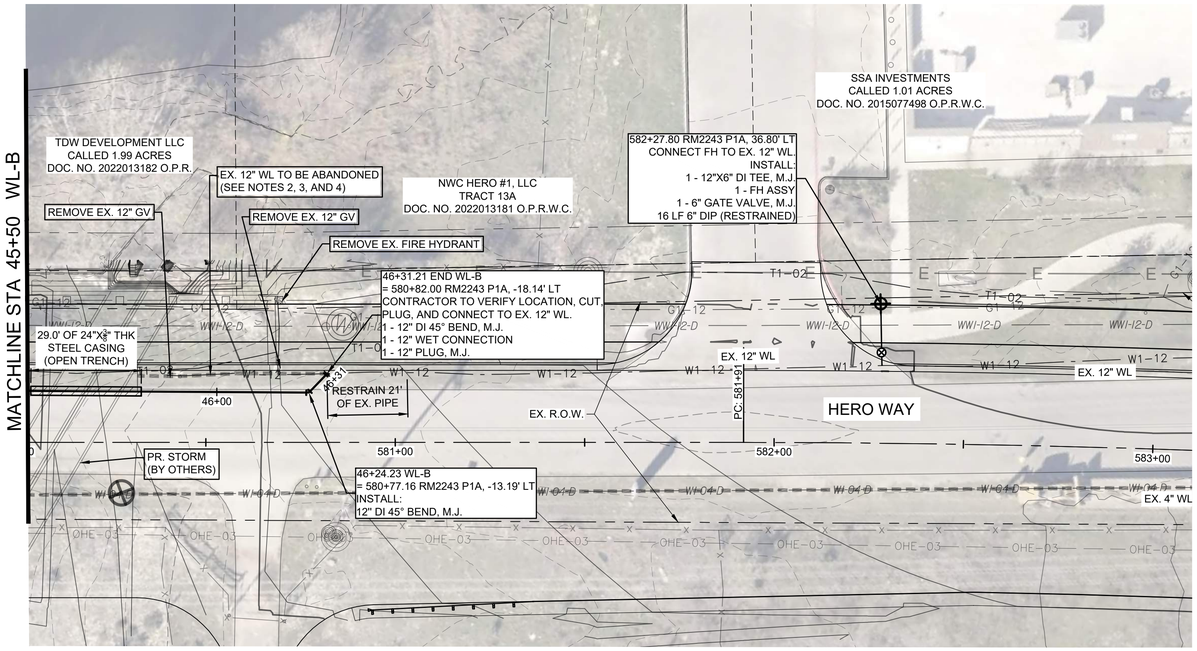

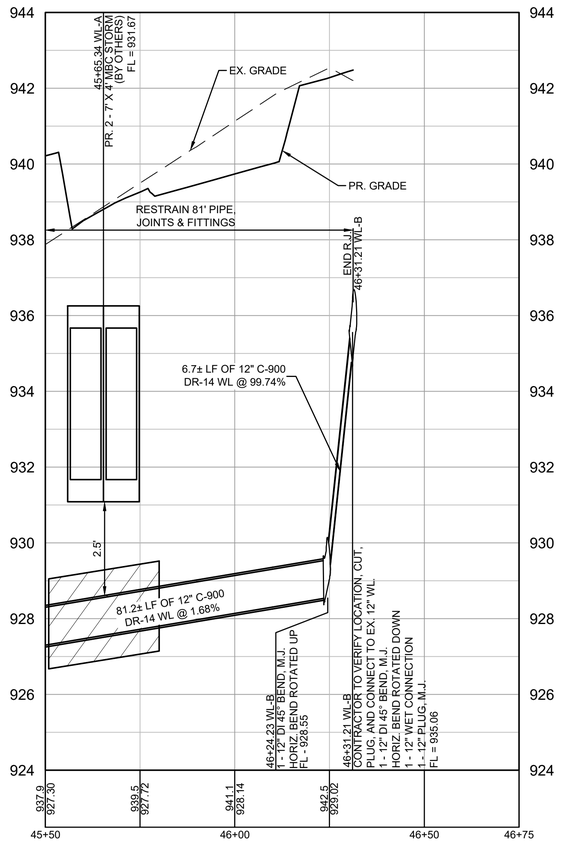

WL-B 45+50 TO 46+75

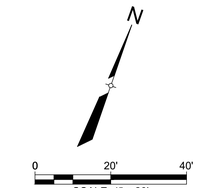

LEGEND

- EX. RIGHT-OF-WAY
- EX. EDGE OF PAVEMENT
- UTILITY EASEMENT
- EX. 2" WATER
- EX. 3" WATER
- EX. 6" WATER
- EX. 8" WATER
- EX. 12" WATER
- PR. WATER
- EX. STORM DRAIN
- EX. 42" GAS LINE
- EX. OVERHEAD ELECTRIC
- EX. OVERHEAD TELECOM
- EX. U.G. TELECOM
- EX. FENCE
- EX. WATER T.B.A
- EX. WATER VALVE
- PR. WATER VALVE
- EX. FIRE HYDRANT
- PR. FIRE HYDRANT
- EX. WATER METER
- PR. AIR RELEASE VALVE
- EX. POWER POLE
- PR. DRAIN VALVE
- EX. TPED

GENERAL NOTES:

1. THE LOCATIONS OF EXISTING UNDERGROUND UTILITIES ARE SHOWN IN AN APPROXIMATE WAY ONLY. THE CONTRACTOR SHALL DETERMINE THE EXACT LOCATION OF ALL EXISTING UTILITIES BEFORE COMMENCING WORK AND AGREES TO BE FULLY RESPONSIBLE FOR ANY AND ALL DAMAGES THAT MIGHT BE OCCASIONED BY THE FAILURE TO EXACTLY LOCATE AND PRESERVE ANY AND ALL UNDERGROUND UTILITIES. WHEN THE CONTRACTOR IS USING TRENCHLESS INSTALLATION METHODS, THE CONTRACTOR SHALL LOCATE ALL UTILITIES FOR THE ENTIRE LENGTH OF THE INSTALLATION PRIOR TO ANY ACTIVITIES.
2. CONTRACTOR TO GIVE CITY OF LEANDER A MINIMUM OF TWO WEEKS NOTICE FOR ALL WATERLINE SHUTDOWNS
3. EXISTING WATER MAINS ARE TO BE PROTECTED AND REMAIN IN SERVICE UNTIL THE NEW MAINS ARE CONSTRUCTED, TESTED, APPROVED AND SERVICE LINES RECONNECTED AND THE NEW MAIN IS PLACED IN SERVICE.
4. EXISTING WATER SERVICE LINES AND METERS ARE TO BE PROTECTED AND REMAIN IN SERVICE UNTIL NEW SERVICE LINES ARE CONSTRUCTED, TESTED, APPROVED AND RECONNECTED AND IN SERVICE.
5. EXISTING WATER MAINS THAT ARE TO BE ABANDONED IN PLACE AND ARE UNDER THE PROPOSED ROADWAY ARE TO BE CUT, CAPPED, AND FILLED WITH FLOWABLE FILL. SUBSIDIARY TO COST OF PIPE, NO SEPARATE PAY. EXISTING WATER LINES THAT ARE TO BE ABANDONED IN PLACE AND ARE NOT UNDER THE PROPOSED ROADWAY WILL BE CAPPED.
6. CONTRACTOR SHALL COORDINATE WITH PEC TO DETERMINE AND PROVIDE ANY REQUIRED SUPPORT OF UTILITY POLES DURING TRENCH EXCAVATION OF WATER MAINS ALONG THIS EASEMENT CORRIDOR.
7. CONTRACTOR SHALL VERIFY FIELD CONDITIONS PRIOR TO CONSTRUCTION. ANY DISCREPANCIES FROM WHAT IS SHOWN SHALL BE IMMEDIATELY BROUGHT TO THE ATTENTION OF THE ENGINEER.

EXISTING GRADE
XXX.X
FLOW LINE OF PIPE
XXX.XX

PROFILE SCALE
1"=40' HORIZ.
1"=4' VERT.

REV. NO.	REVISION DESCRIPTION	APPROVED BY:	DATE

CobbFendley
TBPE NO. F-274 / TBPLS NO. 10046701
9600 N. MOPAC EXPRESS WAY, SUITE 800
AUSTIN, TEXAS 78759
512.834.9798 | FAX 512.834.7727
WWW.COBBFENDLEY.COM

WATERLINE "B" - STA. 45+50 TO END
PLAN AND PROFILE
RM 2243 W/WW RELOCATIONS
LEANDER, TEXAS

City of Leander

PROJ. NO. 1903-099-24 15
DESIGN: R. NEWTON
DRAWN: R. NEWTON
CHECK: L. PRINCE
APPR: K. VAN HOOSIER
DATE: 3/5/2025

INTERIM REVIEW
Not intended for construction, bidding or permit purposes.
Engineer: KRISTEN VAN HOOSIER
P.E. Serial No.: 136882
Date: March 5, 2025

3/5/2025

THESE DESIGN DOCUMENTS ARE NOT TO BE USED FOR CONSTRUCTION PRIOR TO REGULATORY SIGNATURE AND PERMIT.

SHEET
C-112

Dwg Info: G:\CFA\2014\0308801_Williamson_County_2013_Road_Bond\MUN\46_RM2243\01\DESIGN\C-101-WATR-B2.dwg - Tab: WATR-B2-05 - Plotted: 3/5/2025 4:37 PM By: RACHAEL NEWTON

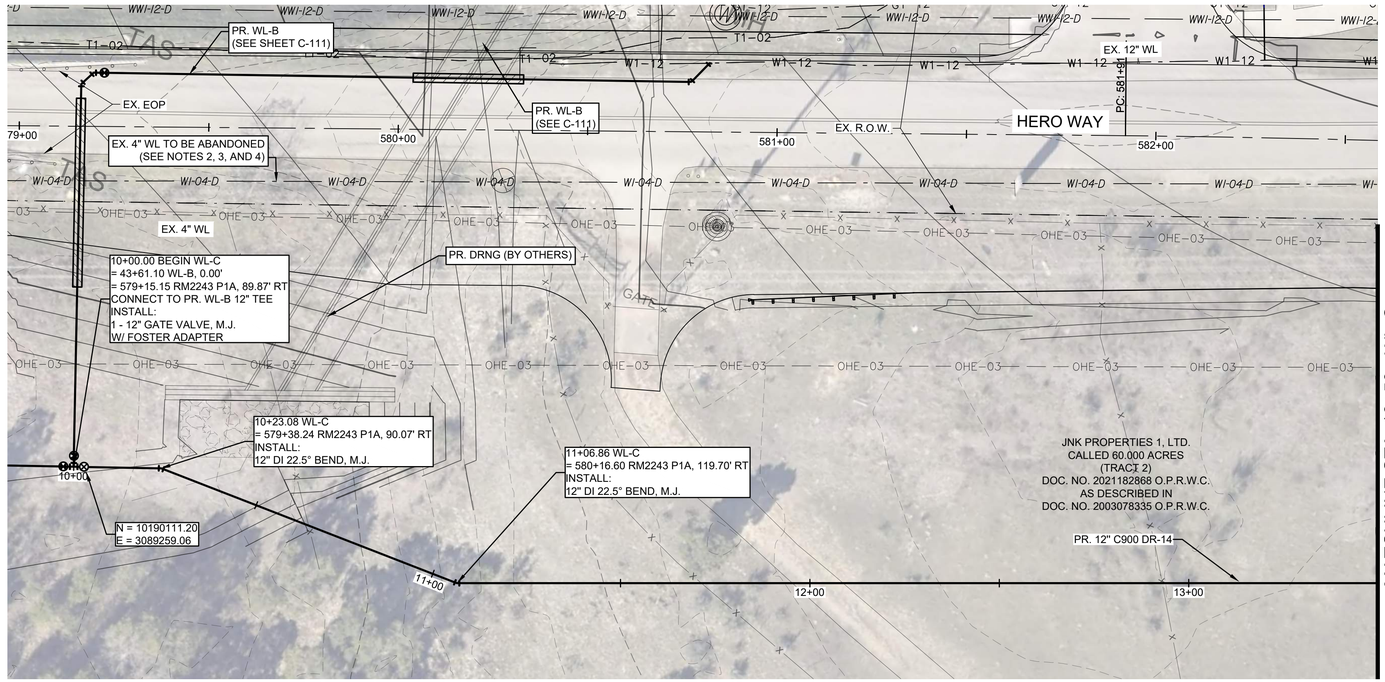

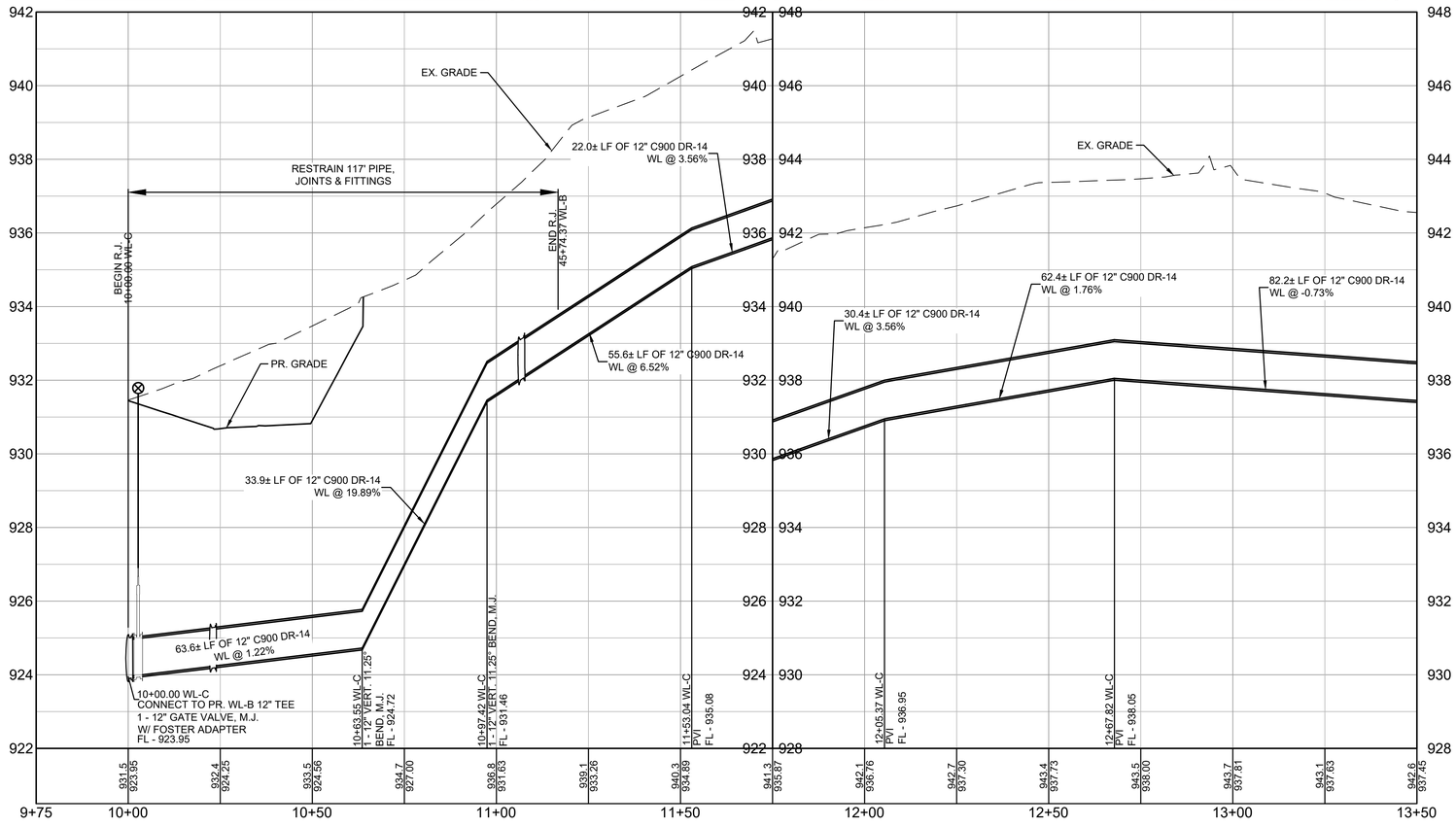

WL-C 9+75 TO 13+50

N

0 20' 40'

SCALE: 1" = 20'

LEGEND

- EX. RIGHT-OF-WAY
- EX. EDGE OF PAVEMENT
- UTILITY EASEMENT
- EX. 2" WATER
- EX. 3" WATER
- EX. 6" WATER
- EX. 8" WATER
- EX. 12" WATER
- PR. WATER
- EX. STORM DRAIN
- EX. 42" GAS LINE
- EX. OVERHEAD ELECTRIC
- EX. OVERHEAD TELECOM
- EX. U.G. TELECOM
- EX. FENCE
- EX. WATER T.B.A
- EX. WATER VALVE
- PR. WATER VALVE
- EX. FIRE HYDRANT
- PR. FIRE HYDRANT
- EX. WATER METER
- PR. AIR RELEASE VALVE
- EX. POWER POLE
- PR. DRAIN VALVE
- EX. TPED

GENERAL NOTES:

1. THE LOCATIONS OF EXISTING UNDERGROUND UTILITIES ARE SHOWN IN AN APPROXIMATE WAY ONLY. THE CONTRACTOR SHALL DETERMINE THE EXACT LOCATION OF ALL EXISTING UTILITIES BEFORE COMMENCING WORK AND AGREES TO BE FULLY RESPONSIBLE FOR ANY AND ALL DAMAGES THAT MIGHT BE OCCASIONED BY THE FAILURE TO EXACTLY LOCATE AND PRESERVE ANY AND ALL UNDERGROUND UTILITIES. WHEN THE CONTRACTOR IS USING TRENCHLESS INSTALLATION METHODS, THE CONTRACTOR SHALL LOCATE ALL UTILITIES FOR THE ENTIRE LENGTH OF THE INSTALLATION PRIOR TO ANY ACTIVITIES.
2. CONTRACTOR TO GIVE CITY OF LEANDER A MINIMUM OF TWO WEEKS NOTICE FOR ALL WATERLINE SHUTDOWNS
3. EXISTING WATER MAINS ARE TO BE PROTECTED AND REMAIN IN SERVICE UNTIL THE NEW MAINS ARE CONSTRUCTED, TESTED, APPROVED AND SERVICE LINES RECONNECTED AND THE NEW MAIN IS PLACED IN SERVICE.
4. EXISTING WATER SERVICE LINES AND METERS ARE TO BE PROTECTED AND REMAIN IN SERVICE UNTIL NEW SERVICE LINES ARE CONSTRUCTED, TESTED, APPROVED AND RECONNECTED AND IN SERVICE.
5. EXISTING WATER MAINS THAT ARE TO BE ABANDONED IN PLACE AND ARE UNDER THE PROPOSED ROADWAY ARE TO BE CUT, CAPPED, AND FILLED WITH FLOWABLE FILL. SUBSIDIARY TO COST OF PIPE, NO SEPARATE PAY. EXISTING WATER LINES THAT ARE TO BE ABANDONED IN PLACE AND ARE NOT UNDER THE PROPOSED ROADWAY WILL BE CAPPED.
6. CONTRACTOR SHALL COORDINATE WITH PEC TO DETERMINE AND PROVIDE ANY REQUIRED SUPPORT OF UTILITY POLES DURING TRENCH EXCAVATION OF WATER MAINS ALONG THIS EASEMENT CORRIDOR.
7. CONTRACTOR SHALL VERIFY FIELD CONDITIONS PRIOR TO CONSTRUCTION. ANY DISCREPANCIES FROM WHAT IS SHOWN SHALL BE IMMEDIATELY BROUGHT TO THE ATTENTION OF THE ENGINEER.

EXISTING GRADE
XXX.X
FLOW LINE OF PIPE
XXX.XX

PROFILE SCALE
1"=40' HORIZ.
1"=4' VERT.

REV. NO.	REVISION DESCRIPTION	APPROVED BY:	DATE

CobbFendley
TBPE NO. F-274 / TBPLS NO. 10046701
9600 N. MOPAC EXPRESSWAY, SUITE 800
AUSTIN, TEXAS 78759
512.834.9798 | FAX 512.834.7727
WWW.COBBFENDLEY.COM

WATERLINE "C" - STA. 10+00 TO 13+50 PLAN & PROFILE

RM 2243 W/WW RELOCATIONS
LEANDER, TEXAS

City of Leander

PROJ. NO. 1903-099-24 15
DESIGN: R. NEWTON
DRAWN: R. NEWTON
CHECK: L. PRINCE
APPR: K. VAN HOOSIER
DATE: 3/5/2025

INTERIM REVIEW
Not intended for construction, bidding or permit purposes.
Engineer: KRISTEN VAN HOOSIER
P.E. Serial No.: 136882
Date: March 5, 2025

3/5/2025

THESE DESIGN DOCUMENTS ARE NOT TO BE USED FOR CONSTRUCTION PRIOR TO REGULATORY SIGNATURE AND PERMIT.

SHEET
C-113

Dwg Info: G:\CFA\2014\030801_Williamson_County_2013_Road_Bond\MUN\46_RM2243\01\DESIGN\C-101-WATR-C1.dwg – Tab: WATERLINE "C" – STA. 10+00 TO 13+50 PLAN & PROFILE – Plotted: 3/5/2025 4:42 PM By: RACHAEL NEWTON

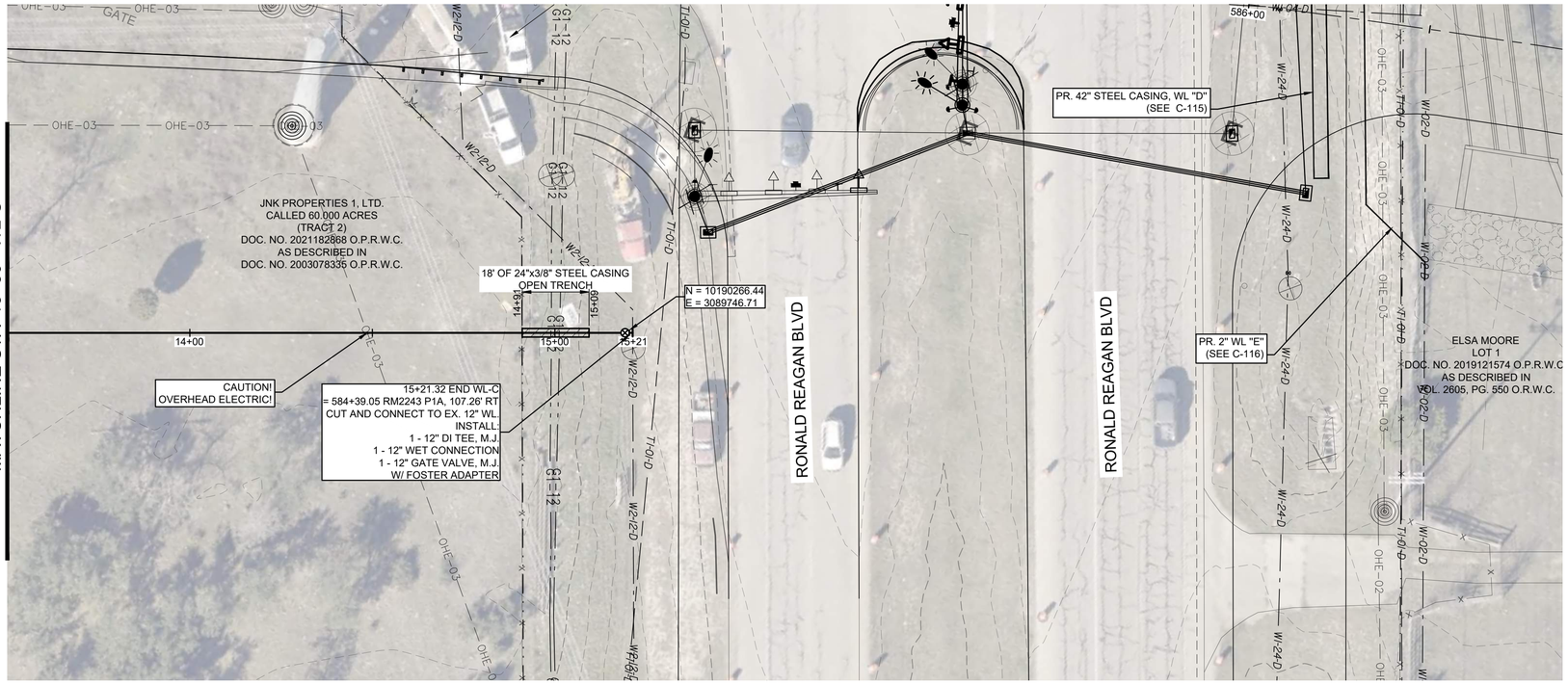

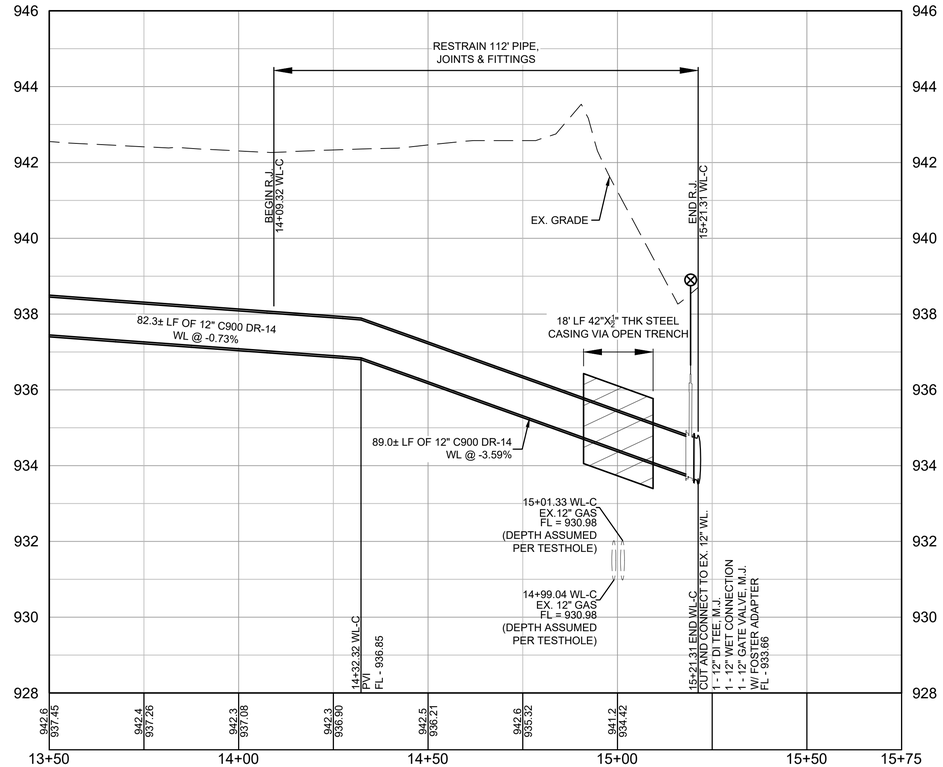

WL-C 13+50 TO 15+75

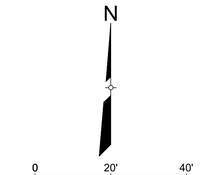

LEGEND

- EX. RIGHT-OF-WAY
- EX. EDGE OF PAVEMENT
- UTILITY EASEMENT
- EX. 2" WATER
- EX. 3" WATER
- EX. 6" WATER
- EX. 8" WATER
- EX. 12" WATER
- PR. WATER
- EX. STORM DRAIN
- EX. 42" GAS LINE
- EX. OVERHEAD ELECTRIC
- EX. OVERHEAD TELECOM
- EX. U.G. TELECOM
- EX. FENCE
- EX. WATER T.B.A
- EX. WATER VALVE
- EX. FIRE HYDRANT
- EX. WATER METER
- EX. POWER POLE
- EX. TPED
- PR. WATER VALVE
- PR. FIRE HYDRANT
- PR. AIR RELEASE VALVE
- PR. DRAIN VALVE

GENERAL NOTES:

1. THE LOCATIONS OF EXISTING UNDERGROUND UTILITIES ARE SHOWN IN AN APPROXIMATE WAY ONLY. THE CONTRACTOR SHALL DETERMINE THE EXACT LOCATION OF ALL EXISTING UTILITIES BEFORE COMMENCING WORK AND AGREES TO BE FULLY RESPONSIBLE FOR ANY AND ALL DAMAGES THAT MIGHT BE OCCASIONED BY THE FAILURE TO EXACTLY LOCATE AND PRESERVE ANY AND ALL UNDERGROUND UTILITIES. WHEN THE CONTRACTOR IS USING TRENCHLESS INSTALLATION METHODS, THE CONTRACTOR SHALL LOCATE ALL UTILITIES FOR THE ENTIRE LENGTH OF THE INSTALLATION PRIOR TO ANY ACTIVITIES.
2. CONTRACTOR TO GIVE CITY OF LEANDER A MINIMUM OF TWO WEEKS NOTICE FOR ALL WATERLINE SHUTDOWNS
3. EXISTING WATER MAINS ARE TO BE PROTECTED AND REMAIN IN SERVICE UNTIL THE NEW MAINS ARE CONSTRUCTED, TESTED, APPROVED AND SERVICE LINES RECONNECTED AND THE NEW MAIN IS PLACED IN SERVICE.
4. EXISTING WATER SERVICE LINES AND METERS ARE TO BE PROTECTED AND REMAIN IN SERVICE UNTIL NEW SERVICE LINES ARE CONSTRUCTED, TESTED, APPROVED AND RECONNECTED AND IN SERVICE.
5. EXISTING WATER MAINS THAT ARE TO BE ABANDONED IN PLACE AND ARE UNDER THE PROPOSED ROADWAY ARE TO BE CUT, CAPPED, AND FILLED WITH FLOWABLE FILL. SUBSIDIARY TO COST OF PIPE, NO SEPARATE PAY. EXISTING WATER LINES THAT ARE TO BE ABANDONED IN PLACE AND ARE NOT UNDER THE PROPOSED ROADWAY WILL BE CAPPED.
6. CONTRACTOR SHALL COORDINATE WITH PEC TO DETERMINE AND PROVIDE ANY REQUIRED SUPPORT OF UTILITY POLES DURING TRENCH EXCAVATION OF WATER MAINS ALONG THIS EASEMENT CORRIDOR.
7. CONTRACTOR SHALL VERIFY FIELD CONDITIONS PRIOR TO CONSTRUCTION. ANY DISCREPANCIES FROM WHAT IS SHOWN SHALL BE IMMEDIATELY BROUGHT TO THE ATTENTION OF THE ENGINEER.

EXISTING GRADE
XXX.X
FLOW LINE OF PIPE
XXX.XX

PROFILE SCALE
1"=40' HORIZ.
1"=4' VERT.

REV. NO.	REVISION DESCRIPTION	APPROVED BY:	DATE

CobbFendley
TBPE NO. F-274 / TBPLS NO. 10046701
9600 N. MOPAC EXPRESSWAY, SUITE 800
AUSTIN, TEXAS 78759
512.834.9798 | FAX 512.834.7727
WWW.COBBFENDLEY.COM

WATERLINE "C" - STA. 13+50 TO END
PLAN & PROFILE

RM 2243 W/WW RELOCATIONS
LEANDER, TEXAS

City of Leander

PROJ. NO.	1903-099-24 15
DESIGN:	R. NEWTON
DRAWN:	R. NEWTON
CHECK:	L. PRINCE
APPR:	K. VAN HOOSIER
DATE:	3/5/2025

INTERIM REVIEW
Not intended for construction, bidding or permit purposes.
Engineer: KRISTEN VAN HOOSIER
P.E. Serial No.: 136882
Date: March 5, 2025

3/5/2025

THESE DESIGN DOCUMENTS ARE NOT TO BE USED FOR CONSTRUCTION PRIOR TO REGULATORY SIGNATURE AND PERMIT.

SHEET
C-114

Dwg Info: G:\CFA\2014\0308801_Williamson_County_2013_Road_Bond\MUN\46_RM2243\01\DESIGN\C-101-WATR-C1.dwg -- Tab: WATERLINE "C" - STA. 13+50 TO END PLAN & PROFILE -- Plotted: 3/5/2025 4:44 PM By: RACHAEL NEWTON

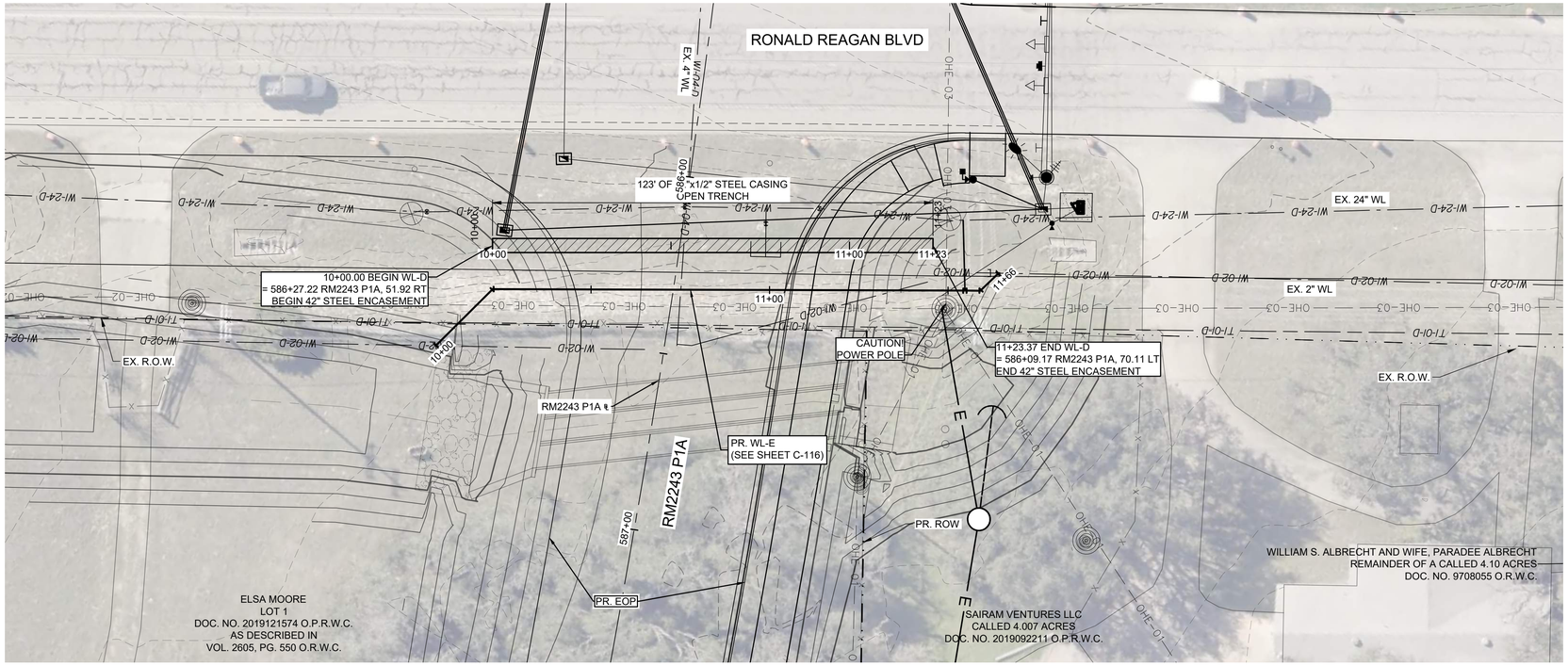

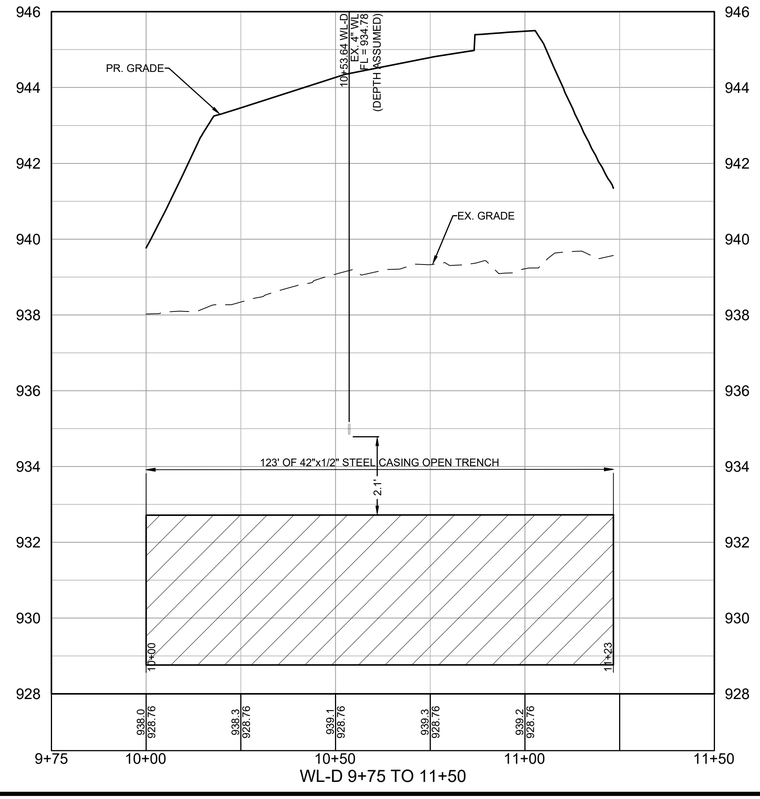

0 20' 40'

SCALE: 1" = 20'

LEGEND

- EX. RIGHT-OF-WAY
- EX. EDGE OF PAVEMENT
- UTILITY EASEMENT
- EX. 2" WATER
- EX. 3" WATER
- EX. 6" WATER
- EX. 8" WATER
- EX. 12" WATER
- PR. WATER
- EX. STORM DRAIN
- EX. 42" GAS LINE
- EX. OVERHEAD ELECTRIC
- EX. OVERHEAD TELECOM
- EX. U.G. TELECOM
- EX. FENCE
- EX. WATER T.B.A
- EX. WATER VALVE
- PR. WATER VALVE
- EX. FIRE HYDRANT
- PR. FIRE HYDRANT
- EX. WATER METER
- PR. AIR RELEASE VALVE
- EX. POWER POLE
- PR. DRAIN VALVE
- EX. TPED

GENERAL NOTES:

1. THE LOCATIONS OF EXISTING UNDERGROUND UTILITIES ARE SHOWN IN AN APPROXIMATE WAY ONLY. THE CONTRACTOR SHALL DETERMINE THE EXACT LOCATION OF ALL EXISTING UTILITIES BEFORE COMMENCING WORK AND AGREES TO BE FULLY RESPONSIBLE FOR ANY AND ALL DAMAGES THAT MIGHT BE OCCASIONED BY THE FAILURE TO EXACTLY LOCATE AND PRESERVE ANY AND ALL UNDERGROUND UTILITIES. WHEN THE CONTRACTOR IS USING TRENCHLESS INSTALLATION METHODS, THE CONTRACTOR SHALL LOCATE ALL UTILITIES FOR THE ENTIRE LENGTH OF THE INSTALLATION PRIOR TO ANY ACTIVITIES.
2. CONTRACTOR TO GIVE CITY OF LEANDER A MINIMUM OF TWO WEEKS NOTICE FOR ALL WATERLINE SHUTDOWNS
3. EXISTING WATER MAINS ARE TO BE PROTECTED AND REMAIN IN SERVICE UNTIL THE NEW MAINS ARE CONSTRUCTED, TESTED, APPROVED AND SERVICE LINES RECONNECTED AND THE NEW MAIN IS PLACED IN SERVICE.
4. EXISTING WATER SERVICE LINES AND METERS ARE TO BE PROTECTED AND REMAIN IN SERVICE UNTIL NEW SERVICE LINES ARE CONSTRUCTED, TESTED, APPROVED AND RECONNECTED AND IN SERVICE.
5. EXISTING WATER MAINS THAT ARE TO BE ABANDONED IN PLACE AND ARE UNDER THE PROPOSED ROADWAY ARE TO BE CUT, CAPPED, AND FILLED WITH FLOWABLE FILL. SUBSIDIARY TO COST OF PIPE, NO SEPARATE PAY. EXISTING WATER LINES THAT ARE TO BE ABANDONED IN PLACE AND ARE NOT UNDER THE PROPOSED ROADWAY WILL BE CAPPED.
6. CONTRACTOR SHALL COORDINATE WITH PEC TO DETERMINE AND PROVIDE ANY REQUIRED SUPPORT OF UTILITY POLES DURING TRENCH EXCAVATION OF WATER MAINS ALONG THIS EASEMENT CORRIDOR.
7. CONTRACTOR SHALL VERIFY FIELD CONDITIONS PRIOR TO CONSTRUCTION. ANY DISCREPANCIES FROM WHAT IS SHOWN SHALL BE IMMEDIATELY BROUGHT TO THE ATTENTION OF THE ENGINEER.

EXISTING GRADE
FLOW LINE OF PIPE
XXX.X
XXX.XX

PROFILE SCALE
1"=40' HORIZ.
1"=4' VERT.

REV. NO.	REVISION DESCRIPTION	APPROVED BY:	DATE

CobbFendley
TBPE NO. F-274 / TBPLS NO. 10046701
9600 N. MOPAC EXPRESSWAY, SUITE 800
AUSTIN, TEXAS 78759
512.834.9798 | FAX 512.834.7727
WWW.COBBFENDLEY.COM

WATERLINE "D" - STA. 10+00 TO END
PLAN & PROFILE
RM 2243 W/WW RELOCATIONS
LEANDER, TEXAS

City of Leander

PROJ. NO. 1903-099-24 15
DESIGN: B. GUINN
DRAWN: B. GUINN
CHECK: L. PRINCE
APPR: K. VAN HOOSIER
DATE: 3/5/2025

INTERIM REVIEW
Not intended for construction, bidding or permit purposes.
Engineer: KRISTEN VAN HOOSIER
P.E. Serial No.: 136882
Date: March 5, 2025

3/5/2025

THESE DESIGN DOCUMENTS ARE NOT TO BE USED FOR CONSTRUCTION PRIOR TO REGULATORY SIGNATURE AND PERMIT.

SHEET
C-115

Dwg Info: G:\CFA\2014\0308801_Williamson_County_2013_Road_Bond\MUN\46_RM2243\01\DESIGN\C-101-WATR-D1.dwg - Tab: WATR-D - Plotted: 3/5/2025 7:36 PM By: RACHAEL NEWTON

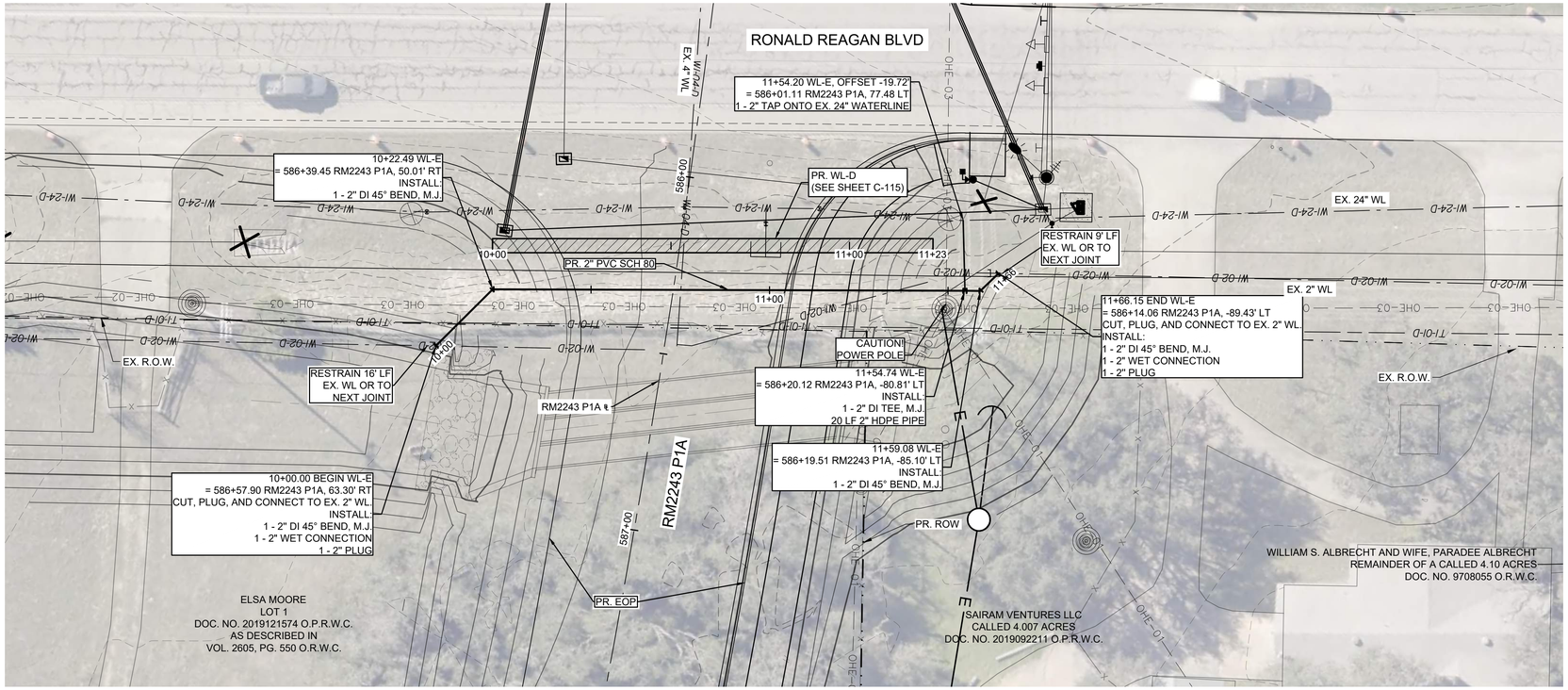

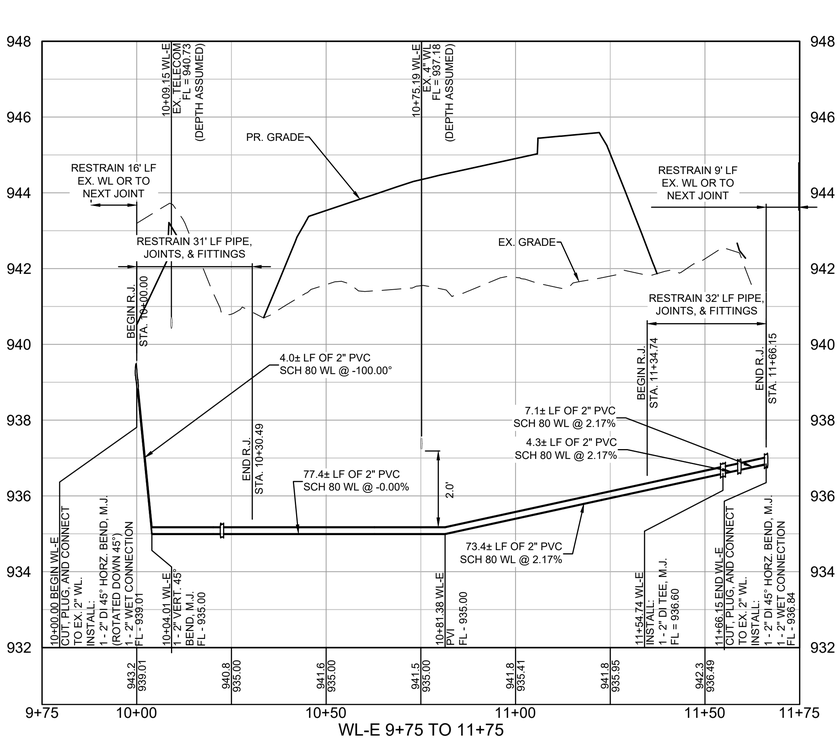

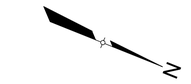

LEGEND

- EX. RIGHT-OF-WAY
- EX. EDGE OF PAVEMENT
- UTILITY EASEMENT
- EX. 2" WATER
- EX. 3" WATER
- EX. 6" WATER
- EX. 8" WATER
- EX. 12" WATER
- PR. WATER
- EX. STORM DRAIN
- EX. 42" GAS LINE
- EX. OVERHEAD ELECTRIC
- EX. OVERHEAD TELECOM
- EX. U.G. TELECOM
- EX. FENCE
- EX. WATER T.B.A
- EX. WATER VALVE
- PR. WATER VALVE
- EX. FIRE HYDRANT
- PR. FIRE HYDRANT
- EX. WATER METER
- PR. AIR RELEASE VALVE
- EX. POWER POLE
- PR. DRAIN VALVE
- EX. TPED

GENERAL NOTES:

1. THE LOCATIONS OF EXISTING UNDERGROUND UTILITIES ARE SHOWN IN AN APPROXIMATE WAY ONLY. THE CONTRACTOR SHALL DETERMINE THE EXACT LOCATION OF ALL EXISTING UTILITIES BEFORE COMMENCING WORK AND AGREES TO BE FULLY RESPONSIBLE FOR ANY AND ALL DAMAGES THAT MIGHT BE OCCASIONED BY THE FAILURE TO EXACTLY LOCATE AND PRESERVE ANY AND ALL UNDERGROUND UTILITIES. WHEN THE CONTRACTOR IS USING TRENCHLESS INSTALLATION METHODS, THE CONTRACTOR SHALL LOCATE ALL UTILITIES FOR THE ENTIRE LENGTH OF THE INSTALLATION PRIOR TO ANY ACTIVITIES.
2. CONTRACTOR TO GIVE CITY OF LEANDER A MINIMUM OF TWO WEEKS NOTICE FOR ALL WATERLINE SHUTDOWNS
3. EXISTING WATER MAINS ARE TO BE PROTECTED AND REMAIN IN SERVICE UNTIL THE NEW MAINS ARE CONSTRUCTED, TESTED, APPROVED AND SERVICE LINES RECONNECTED AND THE NEW MAIN IS PLACED IN SERVICE.
4. EXISTING WATER SERVICE LINES AND METERS ARE TO BE PROTECTED AND REMAIN IN SERVICE UNTIL NEW SERVICE LINES ARE CONSTRUCTED, TESTED, APPROVED AND RECONNECTED AND IN SERVICE.
5. EXISTING WATER MAINS THAT ARE TO BE ABANDONED IN PLACE AND ARE UNDER THE PROPOSED ROADWAY ARE TO BE CUT, CAPPED, AND FILLED WITH FLOWABLE FILL. SUBSIDIARY TO COST OF PIPE, NO SEPARATE PAY. EXISTING WATER LINES THAT ARE TO BE ABANDONED IN PLACE AND ARE NOT UNDER THE PROPOSED ROADWAY WILL BE CAPPED.
6. CONTRACTOR SHALL COORDINATE WITH PEC TO DETERMINE AND PROVIDE ANY REQUIRED SUPPORT OF UTILITY POLES DURING TRENCH EXCAVATION OF WATER MAINS ALONG THIS EASEMENT CORRIDOR.
7. CONTRACTOR SHALL VERIFY FIELD CONDITIONS PRIOR TO CONSTRUCTION. ANY DISCREPANCIES FROM WHAT IS SHOWN SHALL BE IMMEDIATELY BROUGHT TO THE ATTENTION OF THE ENGINEER.

EXISTING GRADE
XXX.X
FLOW LINE OF PIPE
XXX.XX

PROFILE SCALE
1"=40' HORIZ.
1"=4' VERT.

REV. NO.	REVISION DESCRIPTION	APPROVED BY:	DATE

CobbFendley
TBPE NO. F-274 / TBPLS NO. 10046701
9600 N. MOPAC EXPRESSWAY, SUITE 800
AUSTIN, TEXAS 78759
512.834.9798 | FAX 512.834.7727
WWW.COBBFENDLEY.COM

WATERLINE "E" - STA. 10+00 TO END
PLAN & PROFILE
RM 2243 W/WW RELOCATIONS
LEANDER, TEXAS

City of Leander

PROJ. NO. 1903-099-24 15
DESIGN: B. GUINN
DRAWN: B. GUINN
CHECK: L. PRINCE
APPR: K. VAN HOOSIER
DATE: 3/7/2025

INTERIM REVIEW
Not intended for construction, bidding or permit purposes.
Engineer: KRISTEN VAN HOOSIER
P.E. Serial No.: 136882
Date: March 7, 2025

3/7/2025

THESE DESIGN DOCUMENTS ARE NOT TO BE USED FOR CONSTRUCTION PRIOR TO REGULATORY SIGNATURE AND PERMIT.

SHEET
C-116

Dwg Info: G:\CFA\2014\0308801_Williamson_County_2013_Road_Bond\MUN\46_RM2243\01\DESIGN\C-101-WATR-D1.dwg - Tab: WATR-E - Plotted: 3/7/2025 12:26 AM By: OSCAR SAENZ

N

0 20' 40'

SCALE: 1" = 20'

LEGEND

- EX. RIGHT-OF-WAY
- EX. EDGE OF PAVEMENT
- UTILITY EASEMENT
- EX. 2" WATER
- EX. 3" WATER
- EX. 6" WATER
- EX. 8" WATER
- EX. 12" WATER
- PR. WATER
- EX. STORM DRAIN
- EX. 42" GAS LINE
- EX. OVERHEAD ELECTRIC
- EX. OVERHEAD TELECOM
- EX. U.G. TELECOM
- EX. FENCE
- EX. WATER T.B.A
- EX. WATER VALVE
- EX. FIRE HYDRANT
- EX. WATER METER
- EX. POWER POLE
- EX. TPED
- PR. WATER VALVE
- PR. FIRE HYDRANT
- PR. AIR RELEASE VALVE
- PR. DRAIN VALVE

GENERAL NOTES:

1. THE LOCATIONS OF EXISTING UNDERGROUND UTILITIES ARE SHOWN IN AN APPROXIMATE WAY ONLY. THE CONTRACTOR SHALL DETERMINE THE EXACT LOCATION OF ALL EXISTING UTILITIES BEFORE COMMENCING WORK AND AGREES TO BE FULLY RESPONSIBLE FOR ANY AND ALL DAMAGES THAT MIGHT BE OCCASIONED BY THE FAILURE TO EXACTLY LOCATE AND PRESERVE ANY AND ALL UNDERGROUND UTILITIES. WHEN THE CONTRACTOR IS USING TRENCHLESS INSTALLATION METHODS, THE CONTRACTOR SHALL LOCATE ALL UTILITIES FOR THE ENTIRE LENGTH OF THE INSTALLATION PRIOR TO ANY ACTIVITIES.
2. CONTRACTOR TO GIVE CITY OF LEANDER A MINIMUM OF TWO WEEKS NOTICE FOR ALL WATERLINE SHUTDOWNS
3. EXISTING WATER MAINS ARE TO BE PROTECTED AND REMAIN IN SERVICE UNTIL THE NEW MAINS ARE CONSTRUCTED, TESTED, APPROVED AND SERVICE LINES RECONNECTED AND THE NEW MAIN IS PLACED IN SERVICE.
4. EXISTING WATER SERVICE LINES AND METERS ARE TO BE PROTECTED AND REMAIN IN SERVICE UNTIL NEW SERVICE LINES ARE CONSTRUCTED, TESTED, APPROVED AND RECONNECTED AND IN SERVICE.
5. EXISTING WATER MAINS THAT ARE TO BE ABANDONED IN PLACE AND ARE UNDER THE PROPOSED ROADWAY ARE TO BE CUT, CAPPED, AND FILLED WITH FLOWABLE FILL. SUBSIDIARY TO COST OF PIPE, NO SEPARATE PAY. EXISTING WATER LINES THAT ARE TO BE ABANDONED IN PLACE AND ARE NOT UNDER THE PROPOSED ROADWAY WILL BE CAPPED.
6. CONTRACTOR SHALL COORDINATE WITH PEC TO DETERMINE AND PROVIDE ANY REQUIRED SUPPORT OF UTILITY POLES DURING TRENCH EXCAVATION OF WATER MAINS ALONG THIS EASEMENT CORRIDOR.
7. CONTRACTOR SHALL VERIFY FIELD CONDITIONS PRIOR TO CONSTRUCTION. ANY DISCREPANCIES FROM WHAT IS SHOWN SHALL BE IMMEDIATELY BROUGHT TO THE ATTENTION OF THE ENGINEER.

REV. NO.	REVISION DESCRIPTION	APPROVED BY:	DATE

CobbFendley
TBPE NO. F-274 / TBPLS NO. 10046701
9600 N. MOPAC EXPRESSWAY, SUITE 800
AUSTIN, TEXAS 78759
512.834.9798 | FAX 512.834.7727
WWW.COBBFENDLEY.COM

4" WL ABANDONMENT

RM 2243 W/WW RELOCATIONS

LEANDER, TEXAS

City of Leander

PROJ. NO.	1903-099-24 15
DESIGN:	R. NEWTON
DRAWN:	R. NEWTON
CHECK:	L. PRINCE
APPR:	K. VAN HOOSIER
DATE:	3/5/2025

INTERIM REVIEW

Not intended for construction, bidding or permit purposes.

Engineer: KRISTEN VAN HOOSIER

P.E. Serial No.: 136882

Date: March 5, 2025

3/5/2025

THESE DESIGN DOCUMENTS ARE NOT TO BE USED FOR CONSTRUCTION PRIOR TO REGULATORY SIGNATURE AND PERMIT.

SHEET

C-117

Dwg Info: G:\CFA\2014\0308801_Williamson_County_2013_Road_Bond\MUN\46_RM2243\01\DESIGN\C-101-WATR-Adjust-A.dwg – Tab: WATR-ABANDON – Plotted: 3/5/2025 7:48 PM By: RACHAEL NEWTON

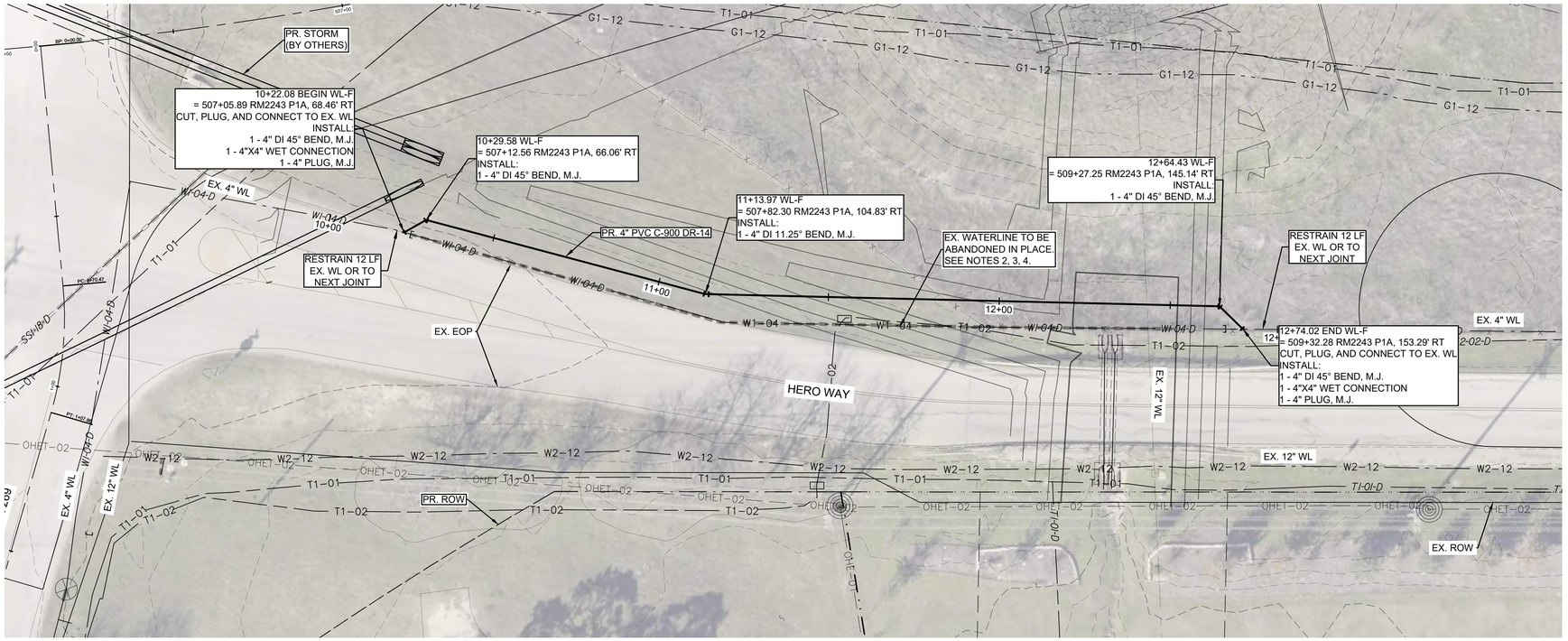

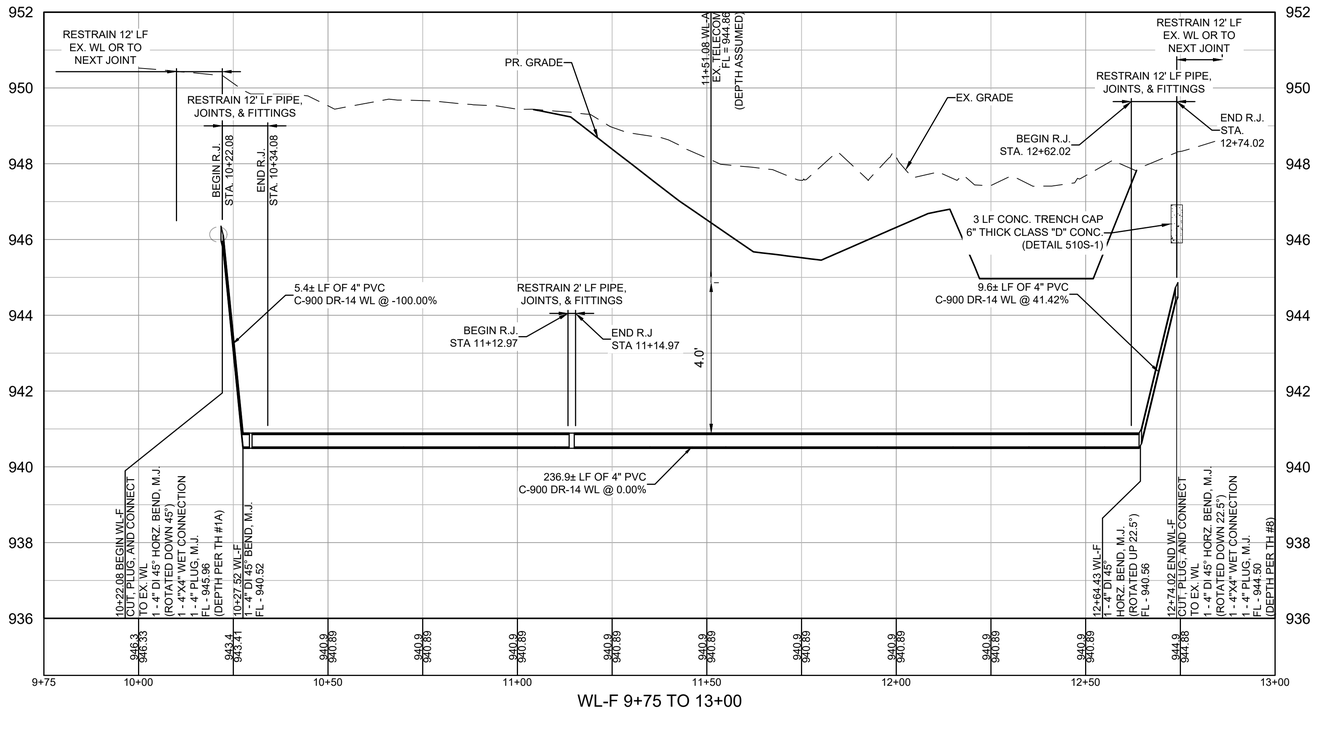

WL-F 9+75 TO 13+00

EXISTING GRADE
XXX.X
FLOW LINE OF PIPE
XXX.XX

PROFILE SCALE
1"=40' HORIZ.
1"=4' VERT.

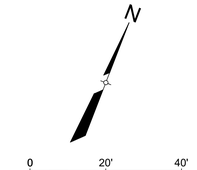

LEGEND

- EX. RIGHT-OF-WAY
- EX. EDGE OF PAVEMENT
- UTILITY EASEMENT
- EX. 2" WATER
- EX. 3" WATER
- EX. 6" WATER
- EX. 8" WATER
- EX. 12" WATER
- PR. WATER
- EX. STORM DRAIN
- EX. 42" GAS LINE
- EX. OVERHEAD ELECTRIC
- EX. OVERHEAD TELECOM
- EX. U.G. TELECOM
- EX. FENCE
- EX. WATER T.B.A
- EX. WATER VALVE
- PR. WATER VALVE
- EX. FIRE HYDRANT
- PR. FIRE HYDRANT
- EX. WATER METER
- PR. AIR RELEASE VALVE
- EX. POWER POLE
- PR. DRAIN VALVE
- EX. TPED

GENERAL NOTES:

1. THE LOCATIONS OF EXISTING UNDERGROUND UTILITIES ARE SHOWN IN AN APPROXIMATE WAY ONLY. THE CONTRACTOR SHALL DETERMINE THE EXACT LOCATION OF ALL EXISTING UTILITIES BEFORE COMMENCING WORK AND AGREES TO BE FULLY RESPONSIBLE FOR ANY AND ALL DAMAGES THAT MIGHT BE OCCASIONED BY THE FAILURE TO EXACTLY LOCATE AND PRESERVE ANY AND ALL UNDERGROUND UTILITIES. WHEN THE CONTRACTOR IS USING TRENCHLESS INSTALLATION METHODS, THE CONTRACTOR SHALL LOCATE ALL UTILITIES FOR THE ENTIRE LENGTH OF THE INSTALLATION PRIOR TO ANY ACTIVITIES.
2. CONTRACTOR TO GIVE CITY OF LEANDER A MINIMUM OF TWO WEEKS NOTICE FOR ALL WATERLINE SHUTDOWNS
3. EXISTING WATER MAINS ARE TO BE PROTECTED AND REMAIN IN SERVICE UNTIL THE NEW MAINS ARE CONSTRUCTED, TESTED, APPROVED AND SERVICE LINES RECONNECTED AND THE NEW MAIN IS PLACED IN SERVICE.
4. EXISTING WATER SERVICE LINES AND METERS ARE TO BE PROTECTED AND REMAIN IN SERVICE UNTIL NEW SERVICE LINES ARE CONSTRUCTED, TESTED, APPROVED AND RECONNECTED AND IN SERVICE.
5. EXISTING WATER MAINS THAT ARE TO BE ABANDONED IN PLACE AND ARE UNDER THE PROPOSED ROADWAY ARE TO BE CUT, CAPPED, AND FILLED WITH FLOWABLE FILL. SUBSIDIARY TO COST OF PIPE, NO SEPARATE PAY. EXISTING WATER LINES THAT ARE TO BE ABANDONED IN PLACE AND ARE NOT UNDER THE PROPOSED ROADWAY WILL BE CAPPED.
6. CONTRACTOR SHALL COORDINATE WITH PEC TO DETERMINE AND PROVIDE ANY REQUIRED SUPPORT OF UTILITY POLES DURING TRENCH EXCAVATION OF WATER MAINS ALONG THIS EASEMENT CORRIDOR.
7. CONTRACTOR SHALL VERIFY FIELD CONDITIONS PRIOR TO CONSTRUCTION. ANY DISCREPANCIES FROM WHAT IS SHOWN SHALL BE IMMEDIATELY BROUGHT TO THE ATTENTION OF THE ENGINEER.

REV. NO.	REVISION DESCRIPTION	APPROVED BY:	DATE

CobbFendley
TBPE NO. F-274 / TBPLS NO. 10046701
9600 N. MOPAC EXPRESSWAY, SUITE 800
AUSTIN, TEXAS 78759
512.834.9798 | FAX 512.834.7727
WWW.COBBFENDLEY.COM

WATERLINE "F" - STA. 10+00 TO END
PLAN & PROFILE
RM 2243 W/WW RELOCATIONS
LEANDER, TEXAS

City of Leander

PROJ. NO. 1903-099-24 15
DESIGN: R. NEWTON
DRAWN: R. NEWTON
CHECK: L. PRINCE
APPR: K. VAN HOOSIER
DATE: 3/6/2025

INTERIM REVIEW
Not intended for construction, bidding or permit purposes.
Engineer: KRISTEN VAN HOOSIER
P.E. Serial No.: 136882
Date: March 6, 2025

3/6/2025

THESE DESIGN DOCUMENTS ARE NOT TO BE USED FOR CONSTRUCTION PRIOR TO REGULATORY SIGNATURE AND PERMIT.

SHEET
C-118

Dwg Info: G:\CFA\2014\0308801_Williamson_County_2013_Road_Bond\MUN\46_RM2243\01\DESIGN\C-101-WATR-F1.dwg - Tab: WATERLINE "F" - STA. 10+00 TO END P&P - Plotted: 3/6/2025 10:04 PM By: OSCAR SAENZ

N

0 60' 120'

SCALE: 1" = 60'

LEGEND

- EX. RIGHT-OF-WAY
- EX. EDGE OF PAVEMENT
- UTILITY EASEMENT
- EX. 2" WATER
- EX. 3" WATER
- EX. 6" WATER
- EX. 8" WATER
- EX. 12" WATER
- PR. WATER
- EX. STORM DRAIN
- EX. 42" GAS LINE
- EX. OVERHEAD ELECTRIC
- EX. OVERHEAD TELECOM
- EX. U.G. TELECOM
- EX. FENCE
- EX. WATER T.B.A
- EX. WATER VALVE
- EX. FIRE HYDRANT
- EX. WATER METER
- EX. POWER POLE
- EX. TPED
- PR. WATER VALVE
- PR. FIRE HYDRANT
- PR. AIR RELEASE VALVE
- PR. DRAIN VALVE

GENERAL NOTES:

1. THE LOCATIONS OF EXISTING UNDERGROUND UTILITIES ARE SHOWN IN AN APPROXIMATE WAY ONLY. THE CONTRACTOR SHALL DETERMINE THE EXACT LOCATION OF ALL EXISTING UTILITIES BEFORE COMMENCING WORK AND AGREES TO BE FULLY RESPONSIBLE FOR ANY AND ALL DAMAGES THAT MIGHT BE OCCASIONED BY THE FAILURE TO EXACTLY LOCATE AND PRESERVE ANY AND ALL UNDERGROUND UTILITIES. WHEN THE CONTRACTOR IS USING TRENCHLESS INSTALLATION METHODS, THE CONTRACTOR SHALL LOCATE ALL UTILITIES FOR THE ENTIRE LENGTH OF THE INSTALLATION PRIOR TO ANY ACTIVITIES.
2. CONTRACTOR TO GIVE CITY OF LEANDER A MINIMUM OF TWO WEEKS NOTICE FOR ALL WATERLINE SHUTDOWNS
3. EXISTING WATER MAINS ARE TO BE PROTECTED AND REMAIN IN SERVICE UNTIL THE NEW MAINS ARE CONSTRUCTED, TESTED, APPROVED AND SERVICE LINES RECONNECTED AND THE NEW MAIN IS PLACED IN SERVICE.
4. EXISTING WATER SERVICE LINES AND METERS ARE TO BE PROTECTED AND REMAIN IN SERVICE UNTIL NEW SERVICE LINES ARE CONSTRUCTED, TESTED, APPROVED AND RECONNECTED AND IN SERVICE.
5. EXISTING WATER MAINS THAT ARE TO BE ABANDONED IN PLACE AND ARE UNDER THE PROPOSED ROADWAY ARE TO BE CUT, CAPPED, AND FILLED WITH FLOWABLE FILL. SUBSIDIARY TO COST OF PIPE, NO SEPARATE PAY. EXISTING WATER LINES THAT ARE TO BE ABANDONED IN PLACE AND ARE NOT UNDER THE PROPOSED ROADWAY WILL BE CAPPED.
6. CONTRACTOR SHALL COORDINATE WITH PEC TO DETERMINE AND PROVIDE ANY REQUIRED SUPPORT OF UTILITY POLES DURING TRENCH EXCAVATION OF WATER MAINS ALONG THIS EASEMENT CORRIDOR.
7. CONTRACTOR SHALL VERIFY FIELD CONDITIONS PRIOR TO CONSTRUCTION. ANY DISCREPANCIES FROM WHAT IS SHOWN SHALL BE IMMEDIATELY BROUGHT TO THE ATTENTION OF THE ENGINEER.

EXISTING GRADE
XXX.X
FLOW LINE OF PIPE
XXX.XX

PROFILE SCALE
1"=40' HORIZ.
1"=4' VERT.

REV. NO.	REVISION DESCRIPTION	APPROVED BY:	DATE

CobbFendley
TBPE NO. F-274 / TBPLS NO. 10046701
9600 N. MOPAC EXPRESSWAY, SUITE 800
AUSTIN, TEXAS 78759
512.834.9798 | FAX 512.834.7727
WWW.COBBFENDLEY.COM

WATERLINE "G" - OVERALL PLAN

RM 2243 W/WW RELOCATIONS
LEANDER, TEXAS

City of Leander

PROJ. NO. 1903-099-24 15
DESIGN: R. NEWTON
DRAWN: R. NEWTON
CHECK: L. PRINCE
APPR: K. VAN HOOSIER
DATE: 3/5/2025

INTERIM REVIEW
Not intended for construction, bidding or permit purposes.
Engineer: KRISTEN VAN HOOSIER
P.E. Serial No.: 136882
Date: March 5, 2025

3/5/2025

THESE DESIGN DOCUMENTS ARE NOT TO BE USED FOR CONSTRUCTION PRIOR TO REGULATORY SIGNATURE AND PERMIT.

SHEET
C-119

Dwg Info: G:\CFA\2014\0308801_Williamson_County_2013_Road_Bond\MUN\46_RM2243\01\DESIGN\C-101-WATR-G1.dwg - Tab: WATR-G1(0) - Plotted: 3/5/2025 7:57 PM By: RACHAEL NEWTON

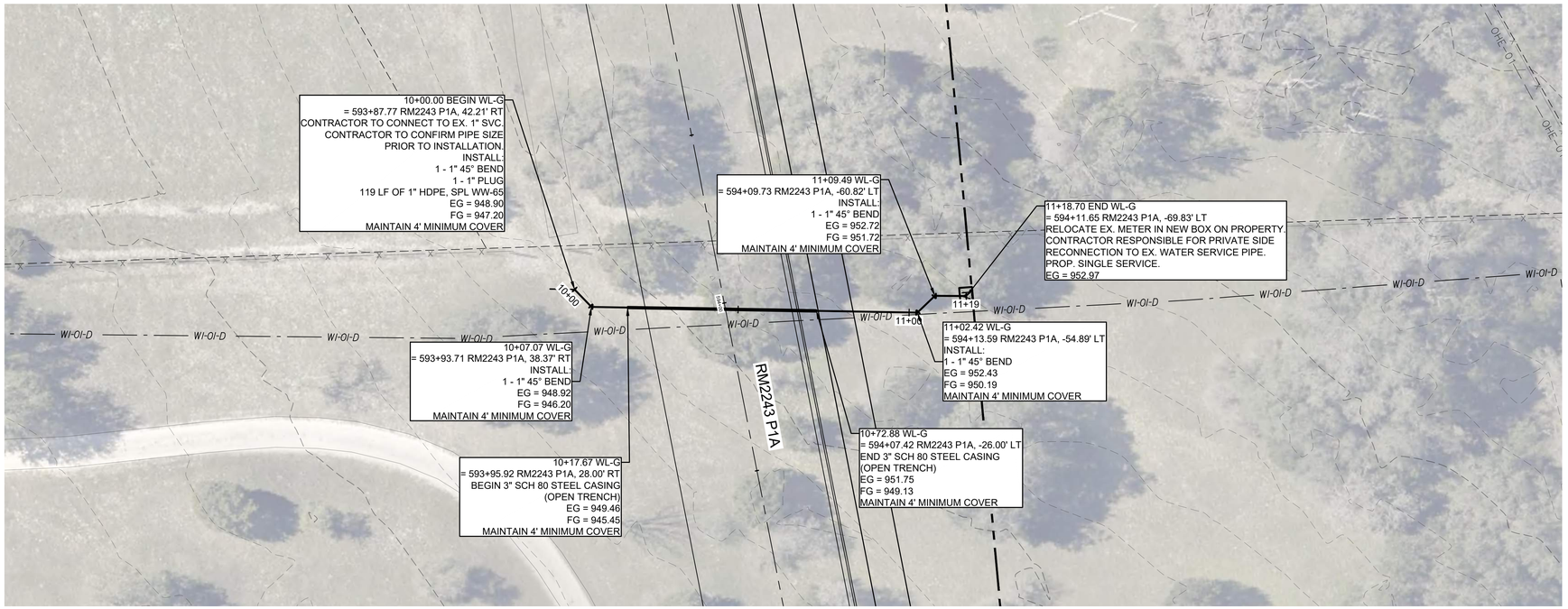

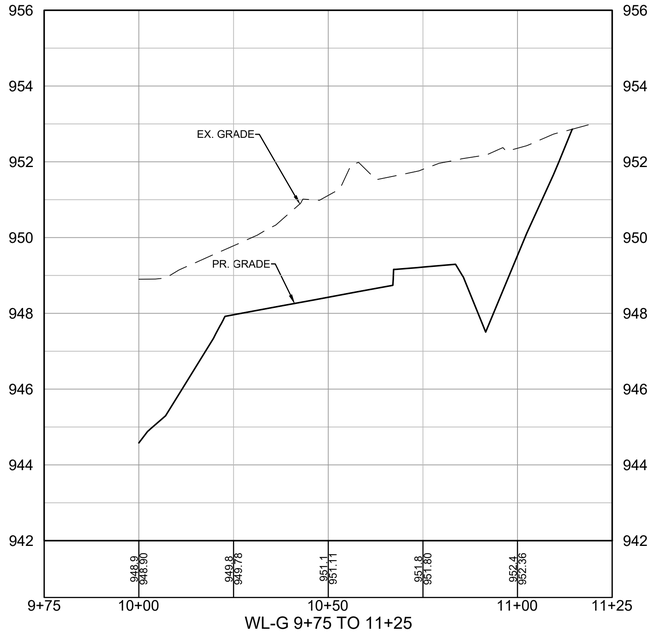

NOTE:
PROFILE PRESENT TO SHOW PROPOSED CUT ACROSS SERVICE.
SERVICE PIPE NOT PROFILED.

N

0 20' 40'
SCALE: 1" = 20'

LEGEND

- EX. RIGHT-OF-WAY
- EX. EDGE OF PAVEMENT
- UTILITY EASEMENT
- EX. 2" WATER
- EX. 3" WATER
- EX. 6" WATER
- EX. 8" WATER
- EX. 12" WATER
- PR. WATER
- EX. STORM DRAIN
- EX. 42" GAS LINE
- EX. OVERHEAD ELECTRIC
- EX. OVERHEAD TELECOM
- EX. U.G. TELECOM
- EX. FENCE
- EX. WATER T.B.A
- EX. WATER VALVE
- EX. FIRE HYDRANT
- EX. WATER METER
- EX. POWER POLE
- EX. TPED
- PR. WATER VALVE
- PR. FIRE HYDRANT
- PR. AIR RELEASE VALVE
- PR. DRAIN VALVE

GENERAL NOTES:

1. THE LOCATIONS OF EXISTING UNDERGROUND UTILITIES ARE SHOWN IN AN APPROXIMATE WAY ONLY. THE CONTRACTOR SHALL DETERMINE THE EXACT LOCATION OF ALL EXISTING UTILITIES BEFORE COMMENCING WORK AND AGREES TO BE FULLY RESPONSIBLE FOR ANY AND ALL DAMAGES THAT MIGHT BE OCCASIONED BY THE FAILURE TO EXACTLY LOCATE AND PRESERVE ANY AND ALL UNDERGROUND UTILITIES. WHEN THE CONTRACTOR IS USING TRENCHLESS INSTALLATION METHODS, THE CONTRACTOR SHALL LOCATE ALL UTILITIES FOR THE ENTIRE LENGTH OF THE INSTALLATION PRIOR TO ANY ACTIVITIES.
2. CONTRACTOR TO GIVE CITY OF LEANDER A MINIMUM OF TWO WEEKS NOTICE FOR ALL WATERLINE SHUTDOWNS
3. EXISTING WATER MAINS ARE TO BE PROTECTED AND REMAIN IN SERVICE UNTIL THE NEW MAINS ARE CONSTRUCTED, TESTED, APPROVED AND SERVICE LINES RECONNECTED AND THE NEW MAIN IS PLACED IN SERVICE.
4. EXISTING WATER SERVICE LINES AND METERS ARE TO BE PROTECTED AND REMAIN IN SERVICE UNTIL NEW SERVICE LINES ARE CONSTRUCTED, TESTED, APPROVED AND RECONNECTED AND IN SERVICE.
5. EXISTING WATER MAINS THAT ARE TO BE ABANDONED IN PLACE AND ARE UNDER THE PROPOSED ROADWAY ARE TO BE CUT, CAPPED, AND FILLED WITH FLOWABLE FILL. SUBSIDIARY TO COST OF PIPE, NO SEPARATE PAY. EXISTING WATER LINES THAT ARE TO BE ABANDONED IN PLACE AND ARE NOT UNDER THE PROPOSED ROADWAY WILL BE CAPPED.
6. CONTRACTOR SHALL COORDINATE WITH PEC TO DETERMINE AND PROVIDE ANY REQUIRED SUPPORT OF UTILITY POLES DURING TRENCH EXCAVATION OF WATER MAINS ALONG THIS EASEMENT CORRIDOR.
7. CONTRACTOR SHALL VERIFY FIELD CONDITIONS PRIOR TO CONSTRUCTION. ANY DISCREPANCIES FROM WHAT IS SHOWN SHALL BE IMMEDIATELY BROUGHT TO THE ATTENTION OF THE ENGINEER.

EXISTING GRADE
FLOW LINE OF PIPE
XXX.X
XXX.XX

PROFILE SCALE
1"=40' HORIZ.
1"=4' VERT.

REV. NO.	REVISION DESCRIPTION	APPROVED BY:	DATE

CobbFendley
TBPE NO. F-274 / TBPLS NO. 10046701
9600 N. MOPAC EXPRESSWAY, SUITE 800
AUSTIN, TEXAS 78759
512.834.9798 | FAX 512.834.7727
WWW.COBBFENDLEY.COM

WATERLINE "G" - STA. 10+00 TO 14+00 PLAN & PROFILE

RM 2243 W/WW RELOCATIONS
LEANDER, TEXAS

City of Leander

PROJ. NO. 1903-099-24 15
DESIGN: R. NEWTON
DRAWN: R. NEWTON
CHECK: L. PRINCE
APPR: K. VAN HOOSIER
DATE: 3/5/2025

INTERIM REVIEW
Not intended for construction, bidding or permit purposes.
Engineer: KRISTEN VAN HOOSER
P.E. Serial No.: 136882
Date: March 5, 2025

3/5/2025

THESE DESIGN DOCUMENTS ARE NOT TO BE USED FOR CONSTRUCTION PRIOR TO REGULATORY SIGNATURE AND PERMIT.

SHEET
C-120

Dwg Info: G:\CFA\2014\0308801_Williamson_County_2013_Road_Bond\MUN\46_RM2243\01\DESIGN\C-101-WATR-G1.dwg - Tab: WATR-G1(1) - Plotted: 3/5/2025 7:58 PM By: RACHAEL NEWTON

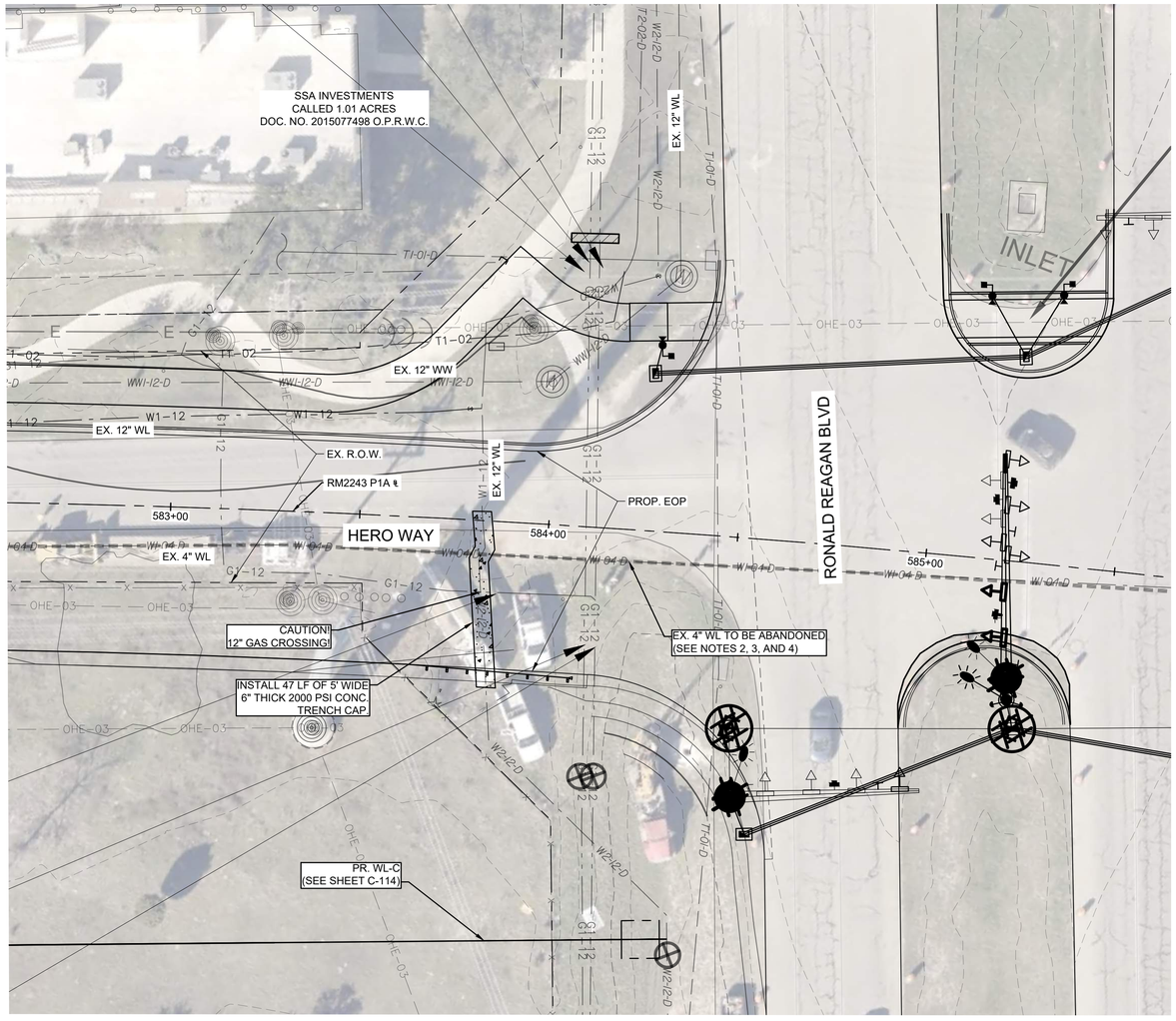

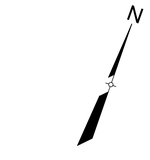

LEGEND

- EX. RIGHT-OF-WAY
- EX. EDGE OF PAVEMENT
- UTILITY EASEMENT
- EX. 2" WATER
- EX. 3" WATER
- EX. 6" WATER
- EX. 8" WATER
- EX. 12" WATER
- PR. WATER
- EX. STORM DRAIN
- EX. 42" GAS LINE
- EX. OVERHEAD ELECTRIC
- EX. OVERHEAD TELECOM
- EX. U.G. TELECOM
- EX. FENCE
- EX. WATER T.B.A
- EX. WATER VALVE
- PR. WATER VALVE
- EX. FIRE HYDRANT
- PR. FIRE HYDRANT
- EX. WATER METER
- PR. AIR RELEASE VALVE
- EX. POWER POLE
- PR. DRAIN VALVE
- EX. TPED

GENERAL NOTES:

1. THE LOCATIONS OF EXISTING UNDERGROUND UTILITIES ARE SHOWN IN AN APPROXIMATE WAY ONLY. THE CONTRACTOR SHALL DETERMINE THE EXACT LOCATION OF ALL EXISTING UTILITIES BEFORE COMMENCING WORK AND AGREES TO BE FULLY RESPONSIBLE FOR ANY AND ALL DAMAGES THAT MIGHT BE OCCASIONED BY THE FAILURE TO EXACTLY LOCATE AND PRESERVE ANY AND ALL UNDERGROUND UTILITIES. WHEN THE CONTRACTOR IS USING TRENCHLESS INSTALLATION METHODS, THE CONTRACTOR SHALL LOCATE ALL UTILITIES FOR THE ENTIRE LENGTH OF THE INSTALLATION PRIOR TO ANY ACTIVITIES.
2. CONTRACTOR TO GIVE CITY OF LEANDER A MINIMUM OF TWO WEEKS NOTICE FOR ALL WATERLINE SHUTDOWNS
3. EXISTING WATER MAINS ARE TO BE PROTECTED AND REMAIN IN SERVICE UNTIL THE NEW MAINS ARE CONSTRUCTED, TESTED, APPROVED AND SERVICE LINES RECONNECTED AND THE NEW MAIN IS PLACED IN SERVICE.
4. EXISTING WATER SERVICE LINES AND METERS ARE TO BE PROTECTED AND REMAIN IN SERVICE UNTIL NEW SERVICE LINES ARE CONSTRUCTED, TESTED, APPROVED AND RECONNECTED AND IN SERVICE.
5. EXISTING WATER MAINS THAT ARE TO BE ABANDONED IN PLACE AND ARE UNDER THE PROPOSED ROADWAY ARE TO BE CUT, CAPPED, AND FILLED WITH FLOWABLE FILL. SUBSIDIARY TO COST OF PIPE, NO SEPARATE PAY. EXISTING WATER LINES THAT ARE TO BE ABANDONED IN PLACE AND ARE NOT UNDER THE PROPOSED ROADWAY WILL BE CAPPED.
6. CONTRACTOR SHALL COORDINATE WITH PEC TO DETERMINE AND PROVIDE ANY REQUIRED SUPPORT OF UTILITY POLES DURING TRENCH EXCAVATION OF WATER MAINS ALONG THIS EASEMENT CORRIDOR.
7. CONTRACTOR SHALL VERIFY FIELD CONDITIONS PRIOR TO CONSTRUCTION. ANY DISCREPANCIES FROM WHAT IS SHOWN SHALL BE IMMEDIATELY BROUGHT TO THE ATTENTION OF THE ENGINEER.

EXISTING GRADE
FLOW LINE OF PIPE
XXX.X
XXX.XX

PROFILE SCALE
1"=40' HORIZ.
1"=4' VERT.

REV. NO.	REVISION DESCRIPTION	APPROVED BY:	DATE

CobbFendley
TBPE NO. F-274 / TBPLS NO. 10046701
9600 N. MOPAC EXPRESSWAY, SUITE 800
AUSTIN, TEXAS 78759
512.834.9798 | FAX 512.834.7727
WWW.COBBFENDLEY.COM

EX. 12" WATERLINE TRENCH CAP

RM 2243 W/WW RELOCATIONS
LEANDER, TEXAS

City of Leander

PROJ. NO. 1903-099-24 15
DESIGN: O. SAENZ
DRAWN: O. SAENZ
CHECK: L. PRINCE
APPR: K. VAN HOOSIER
DATE: 3/5/2025

INTERIM REVIEW
Not intended for construction, bidding or permit purposes.
Engineer: KRISTEN VAN HOOSIER
P.E. Serial No.: 136882
Date: March 5, 2025

3/5/2025

THESE DESIGN DOCUMENTS ARE NOT TO BE USED FOR CONSTRUCTION PRIOR TO REGULATORY SIGNATURE AND PERMIT

SHEET
C-121

Dwg Info: G:\CFA\2014\0308801_Williamson_County_2013_Road_Bond\MUN\46_RM2243\01\DESIGN\C-101-WATR-B2.dwg - Tab: WATR-B2-06 - Plotted: 3/5/2025 7:59 PM By: RACHAEL NEWTON

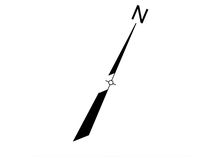

LEGEND

- EX. RIGHT-OF-WAY
- EX. EDGE OF PAVEMENT
- UTILITY EASEMENT
- EX. 2" WATER
- EX. 3" WATER
- EX. 6" WATER
- EX. 8" WATER
- EX. 12" WATER
- PR. WATER
- EX. STORM DRAIN
- EX. 42" GAS LINE
- EX. OVERHEAD ELECTRIC
- EX. OVERHEAD TELECOM
- EX. U.G. TELECOM
- EX. FENCE
- EX. WATER T.B.A
- EX. WATER VALVE
- EX. FIRE HYDRANT
- EX. WATER METER
- EX. POWER POLE
- EX. TPED
- PR. WATER VALVE
- PR. FIRE HYDRANT
- PR. AIR RELEASE VALVE
- PR. DRAIN VALVE

GENERAL NOTES:

1. THE LOCATIONS OF EXISTING UNDERGROUND UTILITIES ARE SHOWN IN AN APPROXIMATE WAY ONLY. THE CONTRACTOR SHALL DETERMINE THE EXACT LOCATION OF ALL EXISTING UTILITIES BEFORE COMMENCING WORK AND AGREES TO BE FULLY RESPONSIBLE FOR ANY AND ALL DAMAGES THAT MIGHT BE OCCASIONED BY THE FAILURE TO EXACTLY LOCATE AND PRESERVE ANY AND ALL UNDERGROUND UTILITIES. WHEN THE CONTRACTOR IS USING TRENCHLESS INSTALLATION METHODS, THE CONTRACTOR SHALL LOCATE ALL UTILITIES FOR THE ENTIRE LENGTH OF THE INSTALLATION PRIOR TO ANY ACTIVITIES.
2. CONTRACTOR TO GIVE CITY OF LEANDER A MINIMUM OF TWO WEEKS NOTICE FOR ALL WATERLINE SHUTDOWNS
3. EXISTING WATER MAINS ARE TO BE PROTECTED AND REMAIN IN SERVICE UNTIL THE NEW MAINS ARE CONSTRUCTED, TESTED, APPROVED AND SERVICE LINES RECONNECTED AND THE NEW MAIN IS PLACED IN SERVICE.
4. EXISTING WATER SERVICE LINES AND METERS ARE TO BE PROTECTED AND REMAIN IN SERVICE UNTIL NEW SERVICE LINES ARE CONSTRUCTED, TESTED, APPROVED AND RECONNECTED AND IN SERVICE.
5. EXISTING WATER MAINS THAT ARE TO BE ABANDONED IN PLACE AND ARE UNDER THE PROPOSED ROADWAY ARE TO BE CUT, CAPPED, AND FILLED WITH FLOWABLE FILL. SUBSIDIARY TO COST OF PIPE, NO SEPARATE PAY. EXISTING WATER LINES THAT ARE TO BE ABANDONED IN PLACE AND ARE NOT UNDER THE PROPOSED ROADWAY WILL BE CAPPED.
6. CONTRACTOR SHALL COORDINATE WITH PEC TO DETERMINE AND PROVIDE ANY REQUIRED SUPPORT OF UTILITY POLES DURING TRENCH EXCAVATION OF WATER MAINS ALONG THIS EASEMENT CORRIDOR.
7. CONTRACTOR SHALL VERIFY FIELD CONDITIONS PRIOR TO CONSTRUCTION. ANY DISCREPANCIES FROM WHAT IS SHOWN SHALL BE IMMEDIATELY BROUGHT TO THE ATTENTION OF THE ENGINEER.

EXISTING GRADE XXX.X
FLOW LINE OF PIPE XXX.XX

PROFILE SCALE
1"=40' HORIZ.
1"=4' VERT.

REV. NO.	REVISION DESCRIPTION	APPROVED BY:	DATE

CobbFendley
TBPE NO. F-274 / TBPLS NO. 10046701
9600 N. MOPAC EXPRESSWAY, SUITE 800
AUSTIN, TEXAS 78759
512.834.9798 | FAX 512.834.7727
WWW.COBBFENDLEY.COM

WATER SERVICE

RM 2243 W/WW RELOCATIONS
LEANDER, TEXAS

City of Leander

PROJ. NO. 1903-099-24 15
DESIGN: R. NEWTON
DRAWN: R. NEWTON
CHECK: L. PRINCE
APPR: K. VAN HOOSIER
DATE: 3/5/2025

INTERIM REVIEW
Not intended for construction, bidding or permit purposes.
Engineer: KRISTEN VAN HOOSIER
P.E. Serial No.: 136882
Date: March 5, 2025

3/5/2025

THESE DESIGN DOCUMENTS ARE NOT TO BE USED FOR CONSTRUCTION PRIOR TO REGULATORY SIGNATURE AND PERMIT.

SHEET
C-122

Dwg Info: G:\CFA\2014\0308801_Williamson_County_2013_Road_Bond\MUN\46_RM2243\01\DESIGN\C-101-WATR-SVC.dwg - Tab: WATR-SVC-1 - Plotted: 3/5/2025 8:01 PM By: RACHAEL NEWTON

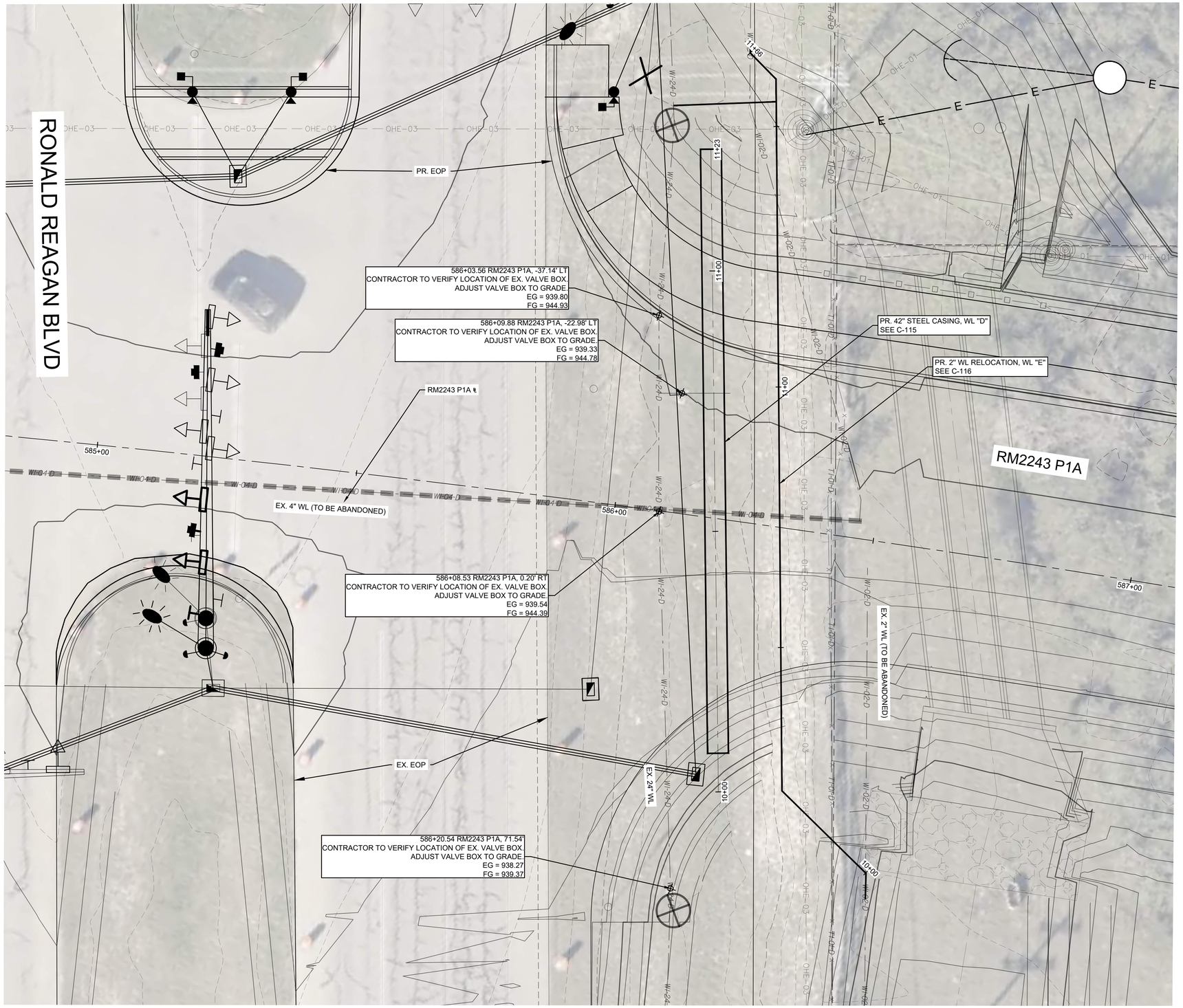

N

0 10' 20'

SCALE: 1" = 10'

LEGEND

- EX. RIGHT-OF-WAY
- EX. EDGE OF PAVEMENT
- UTILITY EASEMENT
- EX. 2" WATER
- EX. 3" WATER
- EX. 6" WATER
- EX. 8" WATER
- EX. 12" WATER
- PR. WATER
- EX. STORM DRAIN
- EX. 42" GAS LINE
- EX. OVERHEAD ELECTRIC
- EX. OVERHEAD TELECOM
- EX. U.G. TELECOM
- EX. FENCE
- EX. WATER T.B.A
- EX. WATER VALVE
- EX. FIRE HYDRANT
- EX. WATER METER
- EX. POWER POLE
- EX. TPED
- PR. WATER VALVE
- PR. FIRE HYDRANT
- PR. AIR RELEASE VALVE
- PR. DRAIN VALVE

GENERAL NOTES:

1. THE LOCATIONS OF EXISTING UNDERGROUND UTILITIES ARE SHOWN IN AN APPROXIMATE WAY ONLY. THE CONTRACTOR SHALL DETERMINE THE EXACT LOCATION OF ALL EXISTING UTILITIES BEFORE COMMENCING WORK AND AGREES TO BE FULLY RESPONSIBLE FOR ANY AND ALL DAMAGES THAT MIGHT BE OCCASIONED BY THE FAILURE TO EXACTLY LOCATE AND PRESERVE ANY AND ALL UNDERGROUND UTILITIES. WHEN THE CONTRACTOR IS USING TRENCHLESS INSTALLATION METHODS, THE CONTRACTOR SHALL LOCATE ALL UTILITIES FOR THE ENTIRE LENGTH OF THE INSTALLATION PRIOR TO ANY ACTIVITIES.
2. CONTRACTOR TO GIVE CITY OF LEANDER A MINIMUM OF TWO WEEKS NOTICE FOR ALL WATERLINE SHUTDOWNS
3. EXISTING WATER MAINS ARE TO BE PROTECTED AND REMAIN IN SERVICE UNTIL THE NEW MAINS ARE CONSTRUCTED, TESTED, APPROVED AND SERVICE LINES RECONNECTED AND THE NEW MAIN IS PLACED IN SERVICE.
4. EXISTING WATER SERVICE LINES AND METERS ARE TO BE PROTECTED AND REMAIN IN SERVICE UNTIL NEW SERVICE LINES ARE CONSTRUCTED, TESTED, APPROVED AND RECONNECTED AND IN SERVICE.
5. EXISTING WATER MAINS THAT ARE TO BE ABANDONED IN PLACE AND ARE UNDER THE PROPOSED ROADWAY ARE TO BE CUT, CAPPED, AND FILLED WITH FLOWABLE FILL. SUBSIDIARY TO COST OF PIPE, NO SEPARATE PAY. EXISTING WATER LINES THAT ARE TO BE ABANDONED IN PLACE AND ARE NOT UNDER THE PROPOSED ROADWAY WILL BE CAPPED.
6. CONTRACTOR SHALL COORDINATE WITH PEC TO DETERMINE AND PROVIDE ANY REQUIRED SUPPORT OF UTILITY POLES DURING TRENCH EXCAVATION OF WATER MAINS ALONG THIS EASEMENT CORRIDOR.
7. CONTRACTOR SHALL VERIFY FIELD CONDITIONS PRIOR TO CONSTRUCTION. ANY DISCREPANCIES FROM WHAT IS SHOWN SHALL BE IMMEDIATELY BROUGHT TO THE ATTENTION OF THE ENGINEER.

REV. NO.	REVISION DESCRIPTION	APPROVED BY:	DATE

CobbFendley
TBPE NO. F-274 / TBPLS NO. 10046701
9600 N. MOPAC EXPRESSWAY, SUITE 800
AUSTIN, TEXAS 78759
512.834.9798 | FAX 512.834.7727
WWW.COBBFENDLEY.COM

VALVE BOX ADJUSTMENTS

RM 2243 W/WW RELOCATIONS
LEANDER, TEXAS

City of Leander

PROJ. NO. 1903-099-24 15
DESIGN: R. NEWTON
DRAWN: R. NEWTON
CHECK: L. PRINCE
APPR: K. VAN HOOSIER
DATE: 3/5/2025

INTERIM REVIEW
Not intended for construction, bidding or permit purposes.
Engineer: KRISTEN VAN HOOSIER
P.E. Serial No.: 136882
Date: March 5, 2025

3/5/2025

THESE DESIGN DOCUMENTS ARE NOT TO BE USED FOR CONSTRUCTION PRIOR TO REGULATORY SIGNATURE AND PERMIT.

SHEET
C-123

Dwg Info: G:\CFA\2014\0308801_Williamson_County_2013_Road_Bond\MUN\46_RM2243\01\DESIGN\C-101-WATR-Adjust-A.dwg – Tab: VALVE-ADJUSTS – Plotted: 3/5/2025 8:13 PM By: RACHAEL NEWTON

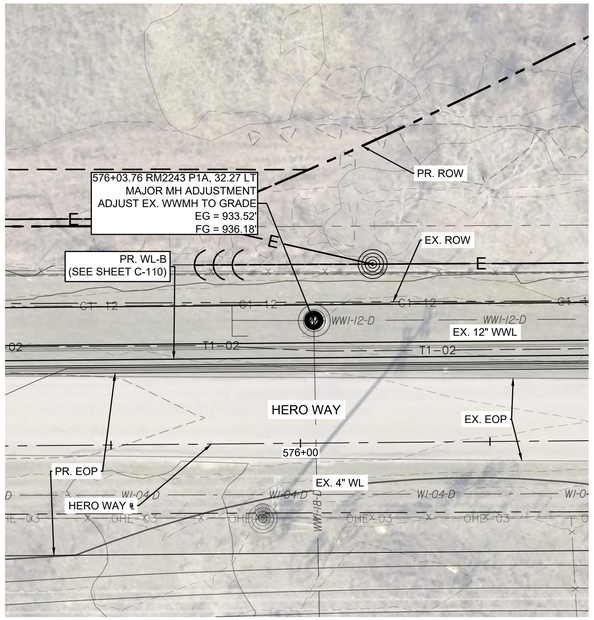

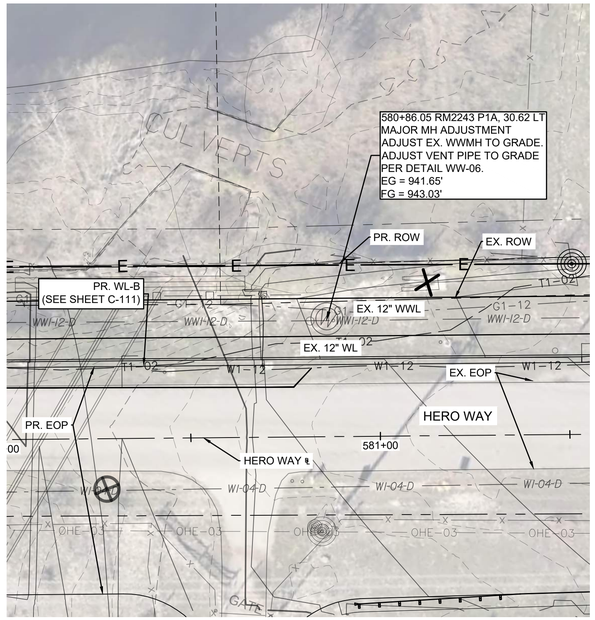

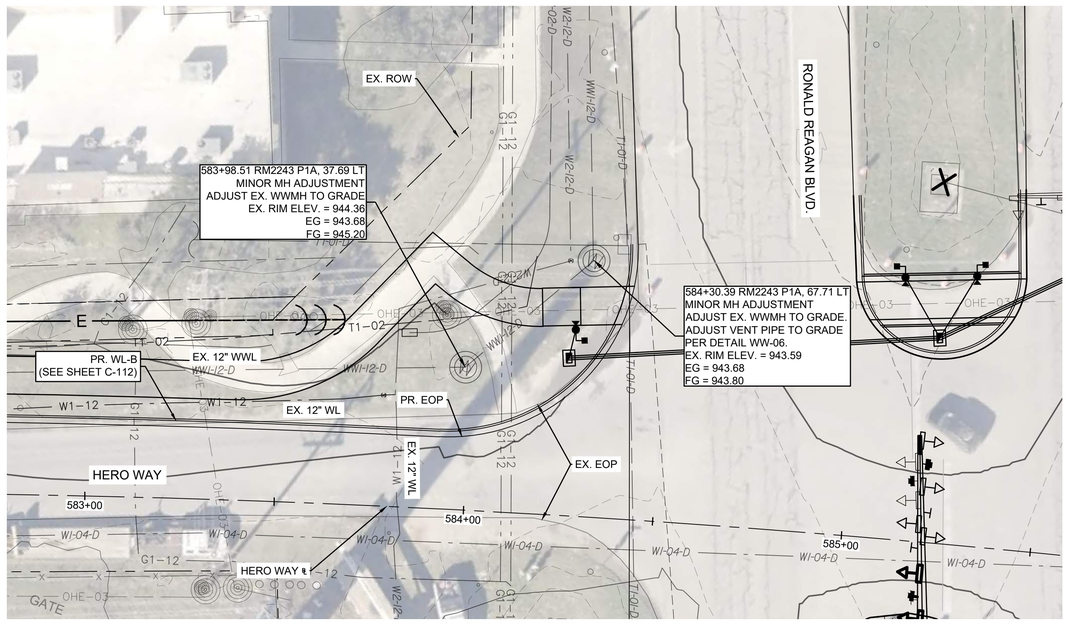

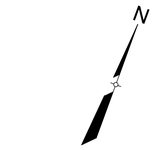

LEGEND

- EX. RIGHT-OF-WAY
- EX. EDGE OF PAVEMENT
- UTILITY EASEMENT
- EX. 2" WATER
- EX. 3" WATER
- EX. 6" WATER
- EX. 8" WATER
- EX. 12" WATER
- PR. WATER
- EX. STORM DRAIN
- EX. 42" GAS LINE
- EX. OVERHEAD ELECTRIC
- EX. OVERHEAD TELECOM
- EX. U.G. TELECOM
- EX. FENCE
- EX. WATER T.B.A
- EX. WATER VALVE
- EX. FIRE HYDRANT
- EX. WATER METER
- EX. POWER POLE
- EX. TPED
- PR. WATER VALVE
- PR. FIRE HYDRANT
- PR. AIR RELEASE VALVE
- PR. DRAIN VALVE

GENERAL NOTES:

1. THE LOCATIONS OF EXISTING UNDERGROUND UTILITIES ARE SHOWN IN AN APPROXIMATE WAY ONLY. THE CONTRACTOR SHALL DETERMINE THE EXACT LOCATION OF ALL EXISTING UTILITIES BEFORE COMMENCING WORK AND AGREES TO BE FULLY RESPONSIBLE FOR ANY AND ALL DAMAGES THAT MIGHT BE OCCASIONED BY THE FAILURE TO EXACTLY LOCATE AND PRESERVE ANY AND ALL UNDERGROUND UTILITIES. WHEN THE CONTRACTOR IS USING TRENCHLESS INSTALLATION METHODS, THE CONTRACTOR SHALL LOCATE ALL UTILITIES FOR THE ENTIRE LENGTH OF THE INSTALLATION PRIOR TO ANY ACTIVITIES.
2. ANY DISCREPANCIES FROM WHAT IS SHOWN SHALL BE BROUGHT TO THE ATTENTION OF THE ENGINEER PRIOR TO BEGINNING WORK.
3. ALL MANHOLES NEED TO BE 2'' ABOVE FINISHED GRADE IN GRASS AREAS.
4. CONTRACTOR TO COORDINATE ALL WORK WITH CITY OF LEANDER INSPECTORS.
5. CONTRACTOR SHALL IDENTIFY AND VERIFY THE EXISTING COATING TYPE OF EXISTING MANHOLES PRIOR TO CONSTRUCTION ACTIVITIES.
6. MAJOR MANHOLE ADJUSTMENTS INVOLVING RAISING THE GRADE SHALL BE DONE WITH A RISER.
7. CONTRACTOR TO BACKFILL AROUND ALL MANHOLES AND VALVE BOXES WITH CLASS A CONCRETE.

REV. NO.	REVISION DESCRIPTION	APPROVED BY:	DATE

CobbFendley
TBPE NO. F-274 / TBPLS NO. 10046701
9606 N. MOPAC EXPRESSWAY, SUITE 800
AUSTIN, TEXAS 78759
512.834.9798 | FAX 512.834.7727
WWW.COBBFENDLEY.COM

WWMH ADJUSTMENTS

RM 2243 W/WW RELOCATIONS
LEANDER, TEXAS

City of Leander

PROJ. NO. 1903-099-24 15
DESIGN: R. NEWTON
DRAWN: R. NEWTON
CHECK: L. PRINCE
APPR: K. VAN HOOSIER
DATE: 3/5/2025

INTERIM REVIEW
Not intended for construction, bidding or permit purposes.
Engineer: KRISTEN VAN HOOSIER
P.E. Serial No.: 136882
Date: March 5, 2025

3/5/2025

THESE DESIGN DOCUMENTS ARE NOT TO BE USED FOR CONSTRUCTION PRIOR TO REGULATORY SIGNATURE AND PERMIT.

SHEET
C-124

Dwg Info: G:\CFA\2014\0308801_Williamson_County_2013_Road_Bond\MUN\46_RM2243\01\DESIGN\C-112-WWTR-Adjustments.dwg — Tab: WWTR-A1-01 — Plotted: 3/5/2025 8:17 PM By: RACHAEL NEWTON

Pipe Size (in)	Fitting	Angle (degrees)	Test Pressure (psi)	Required Joint Restraint (ft)	Cover (ft)	Notes
WL-B RESTRAINED JOINTS CALCULATIONS						
12	DEAD END	-	200	110	4	7
12	DEAD END	-	200	89	5	7
12	DEAD END	-	200	82	6	7
12	DEAD END	-	200	59	11	7
12X6	TEE	-	200	20	4	7
12X6	TEE	-	200	20	5	7
12X6	TEE	-	200	20	6	7
12	TEE	-	200	20	4	7
12	TEE	-	200	20	6	7
12	HORZ. BEND	11.25	200	5	4	7
12	HORZ. BEND	11.25	200	4	5	7
12	HORZ. BEND	11.25	200	3	7	7
12	HORZ. BEND	22.5	200	10	4	7
12	HORZ. BEND	22.5	200	7	6	7
12	HORZ. BEND	22.5	200	6	7	7
12	HORZ. BEND	22.5	200	4	12	7
12	HORZ. BEND	45	200	21	4	7
12	HORZ. BEND	45	200	17	5	7
12	HORZ. BEND	45	200	9	9	7
12	HORZ. BEND	45	200	10	11	7
12	HORZ. BEND	45	200	8	12	7
12	VERT. OFFSET	11.25	200	11, 3	4	1,2,7
12	VERT. OFFSET	45	200	46, 9	4	1,2,7
12	VERT. OFFSET	45	200	51, 8	5	1,2,7
12	VERT. OFFSET	45	200	18, 5	11	1,2,7
WL-C RESTRAINED JOINTS CALCULATIONS						
12	DEAD END	-	200	110	4	7
12	DEAD END	-	200	82	6	7
12	Tee	-	200	20	4	7
12	HORZ. BEND	22.5	200	10	4	7
12	HORZ. BEND	22.5	200	8	5	7
12	VERT. OFFSET	11.25	200	14, 3	4	1,2,7
WL-E RESTRAINED JOINT CALCULATIONS						
2	TEE	-	200	20	4	7
2	TEE	-	200	20	5	7
2	VERT. OFFSET	45	200	16, 3	4	1,2,7
2	HORZ. BEND	45	200	8	4	7
WL-F RESTRAINED JOINT CALCULATIONS						
4	HORZ. BEND	11.25	200	3	4	7
4	HORZ. BEND	11.25	200	1	9	7
4	HORZ. BEND	45	200	8	4	7
4	HORZ. BEND	45	200	5	7	7
4	HORZ. BEND	45	200	4	9	7
4	VERT. OFFSET	22.5	200	12, 2	3	1, 2, 7
4	VERT. OFFSET	22.5	200	11, 2	4	1, 2, 7
4	VERT. OFFSET	45	200	12, 3	4	1, 2, 7

Notes:

1	The joint restraint calculation requires the first length on the upper bends.
2	The joint restraint calculation requires the second length on the lower bends.
3	This assumes that at least 10' is restrained on the length along each run.
4	This is measured from the end of the line.
5	If two fittings are close enough that adjacent calculated restrained lengths overlap, then restrain all pipe between the two fittings and assume half of the restrained pipe length beween the two fittings acts to resist the thrust force of each fitting.
6	The joint restraint calculation requires the larger sized pipe to be restrained.
7	This length is required on each side of the fitting.
8	These calculations were performed using the EBAA IRON restraint calculator.

Note: All restrained joints must be greater than or equal to the distances given above. If the required restrained joint length occurs to the middle of a pipe segment, then the

Settings:	Pipe Material	DI (POLYWRAPPED), PVC
	Laying Condition	Type 4
	Soil Designation	CH, Gran. Fill
	Min. Depth of Bury (ft)	7.36
	Max. Depth of Bury (ft)	10.9
	Avg. Depth of Bury (ft)	9.78
	Design Pressure (psi)	200
	Safety Factor	1.5

REV. NO.	REVISION DESCRIPTION	APPROVED BY:	DATE

CobbFendley
TBPE NO. F-274 / TBPLS NO. 10046701
9600 N. MOPAC EXPRESSWAY, SUITE 800
AUSTIN, TEXAS 78759
512.834.9798 | FAX 512.834.7727
WWW.COBBFENDLEY.COM

RESTRAINED JOINT CALCULATIONS

RM 2243 W/WW RELOCATIONS
LEANDER, TEXAS

City of Leander

PROJ. NO. 1903-099-24 15
DESIGN: R. RODRIGUEZ
DRAWN: R. RODRIGUEZ
CHECK: L. PRINCE
APPR: K. VAN HOOSIER
DATE: 3/5/2025

INTERIM REVIEW
Not intended for construction, bidding or permit purposes.
Engineer: KRISTEN VAN HOOSIER
P.E. Serial No.: 136882
Date: March 5, 2025

3/5/2025

THESE DESIGN DOCUMENTS ARE NOT TO BE USED FOR CONSTRUCTION PRIOR TO REGULATORY SIGNATURE AND PERMIT.

SHEET
C-125

Dwg Info: G:\CFA\2014\0308801_Williamson_County_2013_Road_Bond\MUN\46_RM2243\01\DESIGN\C-124-RJ-CALCS.dwg – Tab: RJ CALCS – Plotted: 3/5/2025 8:18 PM By: RACHAEL NEWTON

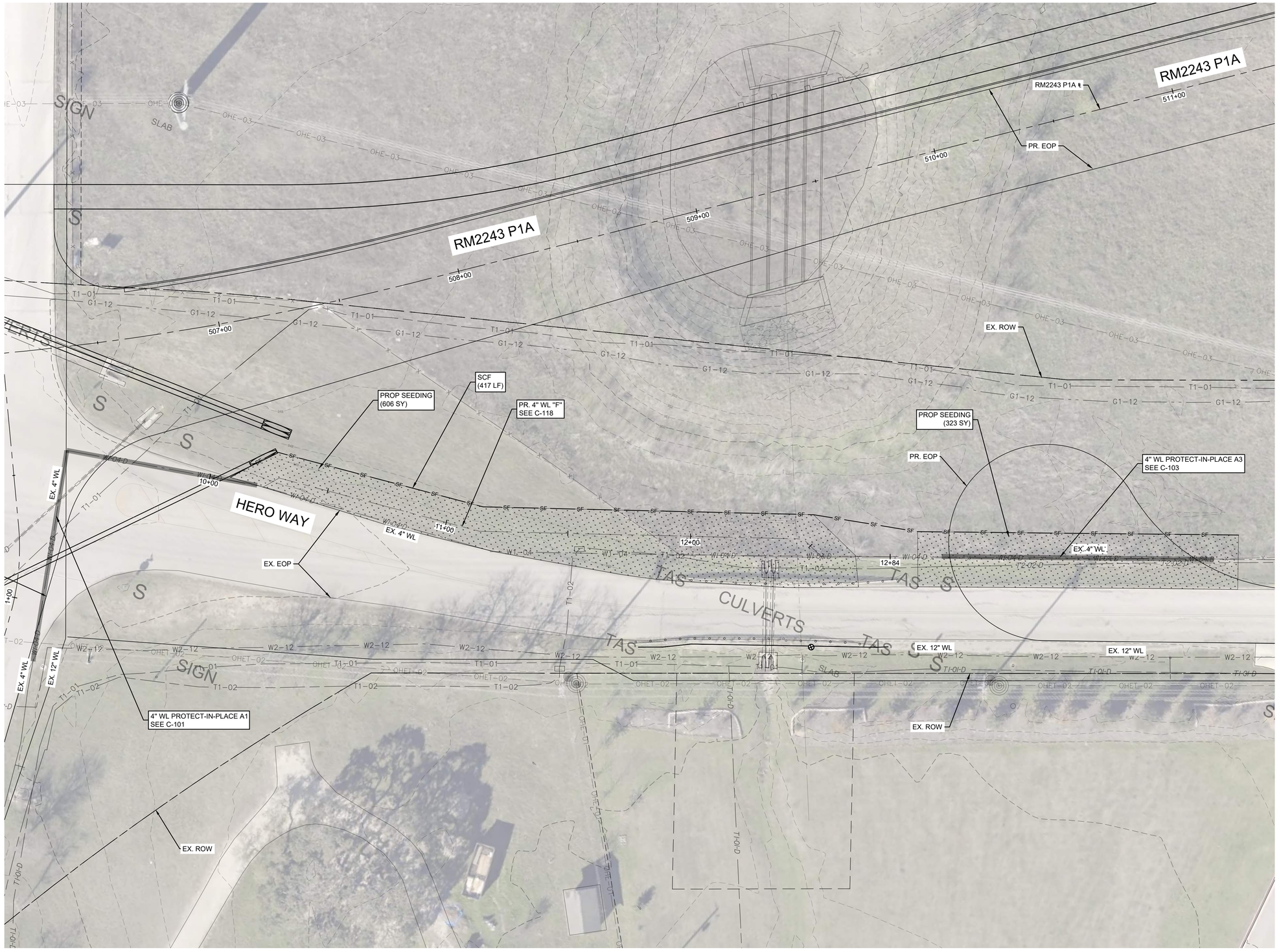

N

0 20' 40'

SCALE: 1" = 20'

LEGEND

- EX. RIGHT-OF-WAY
- EX. EDGE OF PAVEMENT
- UTILITY EASEMENT
- EX. 2" WATER
- EX. 3" WATER
- EX. 6" WATER
- EX. 8" WATER
- EX. 12" WATER
- PR. WATER
- EX. STORM DRAIN
- EX. 42" GAS LINE
- EX. OVERHEAD ELECTRIC
- EX. OVERHEAD TELECOM
- EX. U.G. TELECOM
- EX. FENCE
- EX. WATER T.B.A
- EX. WATER VALVE
- EX. FIRE HYDRANT
- EX. WATER METER
- EX. POWER POLE
- EX. TPED
- PR. WATER VALVE
- PR. FIRE HYDRANT
- PR. AIR RELEASE VALVE
- PR. DRAIN VALVE

GENERAL NOTES:

1. ALL EROSION CONTROL MEASURES SHALL BE PLACED WITHIN COUNTY RIGHT-OF-WAY DURING CONSTRUCTION.
2. CONTRACTOR SHALL MAINTAIN EROSION CONTROL MEASURES.
3. CONSTRUCTION ENTRANCE/EXIT TO BE DETERMINED IN THE FIELD, AND APPROVED BY THE ENGINEER.
4. ALL EROSION CONTROL ELEMENTS SHALL BE IN PLACE PRIOR TO COMMENCING ANY SOIL DISTURBING ACTIVITIES.

REV. NO.	REVISION DESCRIPTION	APPROVED BY:	DATE

CobbFendley
TBPE NO. F-274 / TBPLS NO. 10046701
9600 N. MOPAC EXPRESSWAY, SUITE 800
AUSTIN, TEXAS 78759
512.834.9798 | FAX 512.834.7727
WWW.COBBFENDLEY.COM

EROSION CONTROLS - SHEET 1

RM 2243 W/WW RELOCATIONS
LEANDER, TEXAS

City of Leander

PROJ. NO.	1903-099-24 15
DESIGN:	R. NEWTON
DRAWN:	R. NEWTON
CHECK:	L. PRINCE
APPR:	K. VAN HOOSIER
DATE:	3/5/2025

INTERIM REVIEW

Not intended for construction, bidding or permit purposes.

Engineer: KRISTEN VAN HOOSIER

P.E. Serial No.: 136882

Date: March 5, 2025

3/5/2025

THESE DESIGN DOCUMENTS ARE NOT TO BE USED FOR CONSTRUCTION PRIOR TO REGULATORY SIGNATURE AND PERMIT

SHEET
C-201

Dwg Info: G:\CFA\2014\0308801_Williamson_County_2013_Road_Bond\MUN\46_RM2243\01\DESIGN\C-201-ENS-1.dwg - Tab: ENS-A2-F - Plotted: 3/5/2025 8:44 PM By: RACHAEL NEWTON

N

0 20' 40'

SCALE: 1" = 20'

LEGEND

- EX. RIGHT-OF-WAY
- EX. EDGE OF PAVEMENT
- UTILITY EASEMENT
- EX. 2" WATER
- EX. 3" WATER
- EX. 6" WATER
- EX. 8" WATER
- EX. 12" WATER
- PR. WATER
- EX. STORM DRAIN
- EX. 42" GAS LINE
- EX. OVERHEAD ELECTRIC
- EX. OVERHEAD TELECOM
- EX. U.G. TELECOM
- EX. FENCE
- EX. WATER T.B.A
- EX. WATER VALVE
- EX. FIRE HYDRANT
- EX. WATER METER
- EX. POWER POLE
- EX. TPED
- PR. WATER VALVE
- PR. FIRE HYDRANT
- PR. AIR RELEASE VALVE
- PR. DRAIN VALVE

GENERAL NOTES:

1. ALL EROSION CONTROL MEASURES SHALL BE PLACED WITHIN COUNTY RIGHT-OF-WAY DURING CONSTRUCTION.
2. CONTRACTOR SHALL MAINTAIN EROSION CONTROL MEASURES.
3. CONSTRUCTION ENTRANCE/EXIT TO BE DETERMINED IN THE FIELD, AND APPROVED BY THE ENGINEER.
4. ALL EROSION CONTROL ELEMENTS SHALL BE IN PLACE PRIOR TO COMMENCING ANY SOIL DISTURBING ACTIVITIES.

REV. NO.	REVISION DESCRIPTION	APPROVED BY:	DATE

CobbFendley
TBPE NO. F-274 / TBPLS NO. 10046701
9600 N. MOPAC EXPRESSWAY, SUITE 800
AUSTIN, TEXAS 78759
512.834.9798 | FAX 512.834.7727
WWW.COBBFENDLEY.COM

EROSION CONTROLS - SHEET 2

RM 2243 W/WW RELOCATIONS
LEANDER, TEXAS

City of Leander

PROJ. NO. 1903-099-24 15
DESIGN: R. NEWTON
DRAWN: R. NEWTON
CHECK: L. PRINCE
APPR: K. VAN HOOSIER
DATE: 3/5/2025

INTERIM REVIEW
Not intended for construction, bidding or permit purposes.
Engineer: KRISTEN VAN HOOSIER
P.E. Serial No.: 136882
Date: March 5, 2025

3/5/2025

THESE DESIGN DOCUMENTS ARE NOT TO BE USED FOR CONSTRUCTION PRIOR TO REGULATORY SIGNATURE AND PERMIT.

SHEET
C-202

Dwg Info: G:\CFA\2014\0308801_Williamson_County_2013_Road_Bond\MUN\46_RM2243\01\DESIGN\C-201-ENS-1.dwg – Tab: ENS-A3 – Plotted: 3/5/2025 8:49 PM By: RACHAEL NEWTON

N

0 20' 40'

SCALE: 1" = 20'

LEGEND

- EX. RIGHT-OF-WAY
- EX. EDGE OF PAVEMENT
- UTILITY EASEMENT
- EX. 2" WATER
- EX. 3" WATER
- EX. 6" WATER
- EX. 8" WATER
- EX. 12" WATER
- PR. WATER
- EX. STORM DRAIN
- EX. 42" GAS LINE
- EX. OVERHEAD ELECTRIC
- EX. OVERHEAD TELECOM
- EX. U.G. TELECOM
- EX. FENCE
- EX. WATER T.B.A
- EX. WATER VALVE
- PR. WATER VALVE
- EX. FIRE HYDRANT
- PR. FIRE HYDRANT
- EX. WATER METER
- PR. AIR RELEASE VALVE
- EX. POWER POLE
- PR. DRAIN VALVE
- EX. TPED

GENERAL NOTES:

1. ALL EROSION CONTROL MEASURES SHALL BE PLACED WITHIN COUNTY RIGHT-OF-WAY DURING CONSTRUCTION.
2. CONTRACTOR SHALL MAINTAIN EROSION CONTROL MEASURES.
3. CONSTRUCTION ENTRANCE/EXIT TO BE DETERMINED IN THE FIELD, AND APPROVED BY THE ENGINEER.
4. ALL EROSION CONTROL ELEMENTS SHALL BE IN PLACE PRIOR TO COMMENCING ANY SOIL DISTURBING ACTIVITIES.

REV. NO.	REVISION DESCRIPTION	APPROVED BY:	DATE

CobbFendley
TBPE NO. F-274 / TBPLS NO. 10046701
9600 N. MOPAC EXPRESSWAY, SUITE 800
AUSTIN, TEXAS 78759
512.834.9798 | FAX 512.834.7727
WWW.COBBFENDLEY.COM

EROSION CONTROLS - SHEET 3

RM 2243 W/WW RELOCATIONS
LEANDER, TEXAS

City of Leander

PROJ. NO.	1903-099-24 15
DESIGN:	R. NEWTON
DRAWN:	R. NEWTON
CHECK:	L. PRINCE
APPR:	K. VAN HOOSIER
DATE:	3/5/2025

INTERIM REVIEW

Not intended for construction, bidding or permit purposes.

Engineer: KRISTEN VAN HOOSIER

P.E. Serial No.: 136882

Date: March 5, 2025

3/5/2025

THESE DESIGN DOCUMENTS ARE NOT TO BE USED FOR CONSTRUCTION PRIOR TO REGULATORY SIGNATURE AND PERMIT

SHEET

C-203

Dwg Info: G:\CFA\2014\0308801_Williamson_County_2013_Road_Bond\MUN\46_RM2243\01\DESIGN\C-201-ENS-1.dwg – Tab: ENS-ABANDON – Plotted: 3/5/2025 8:53 PM By: RACHAEL NEWTON

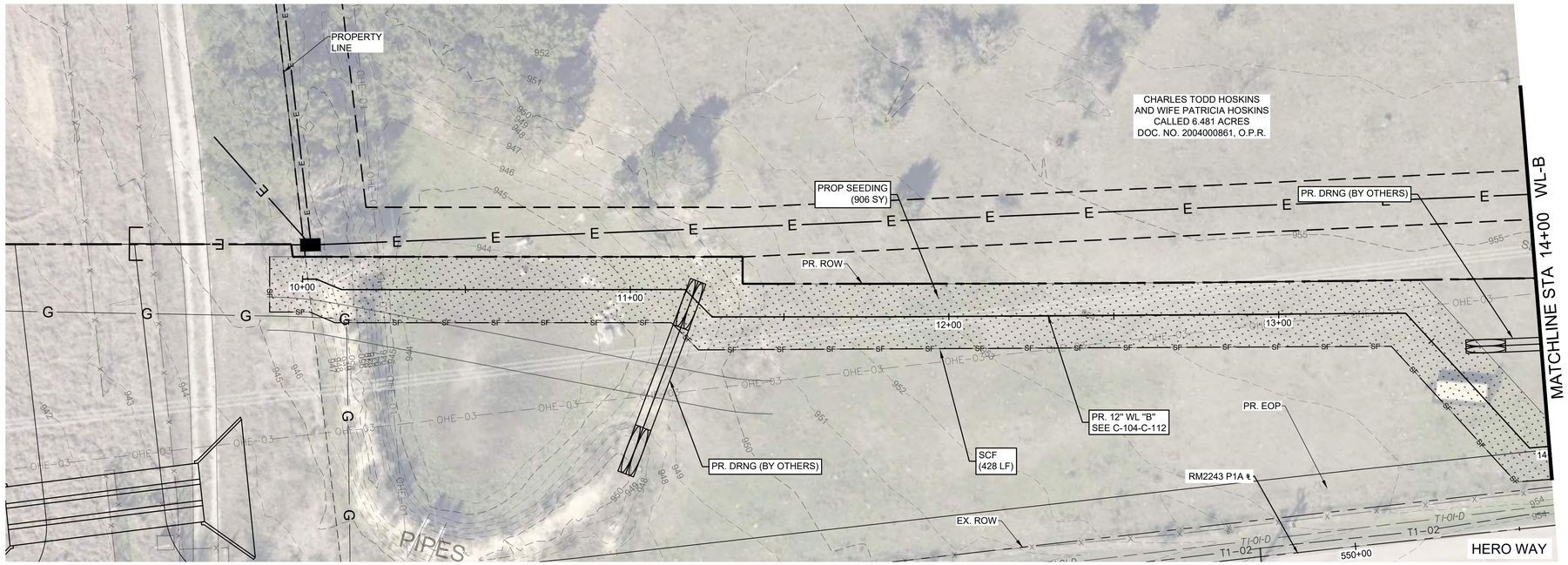

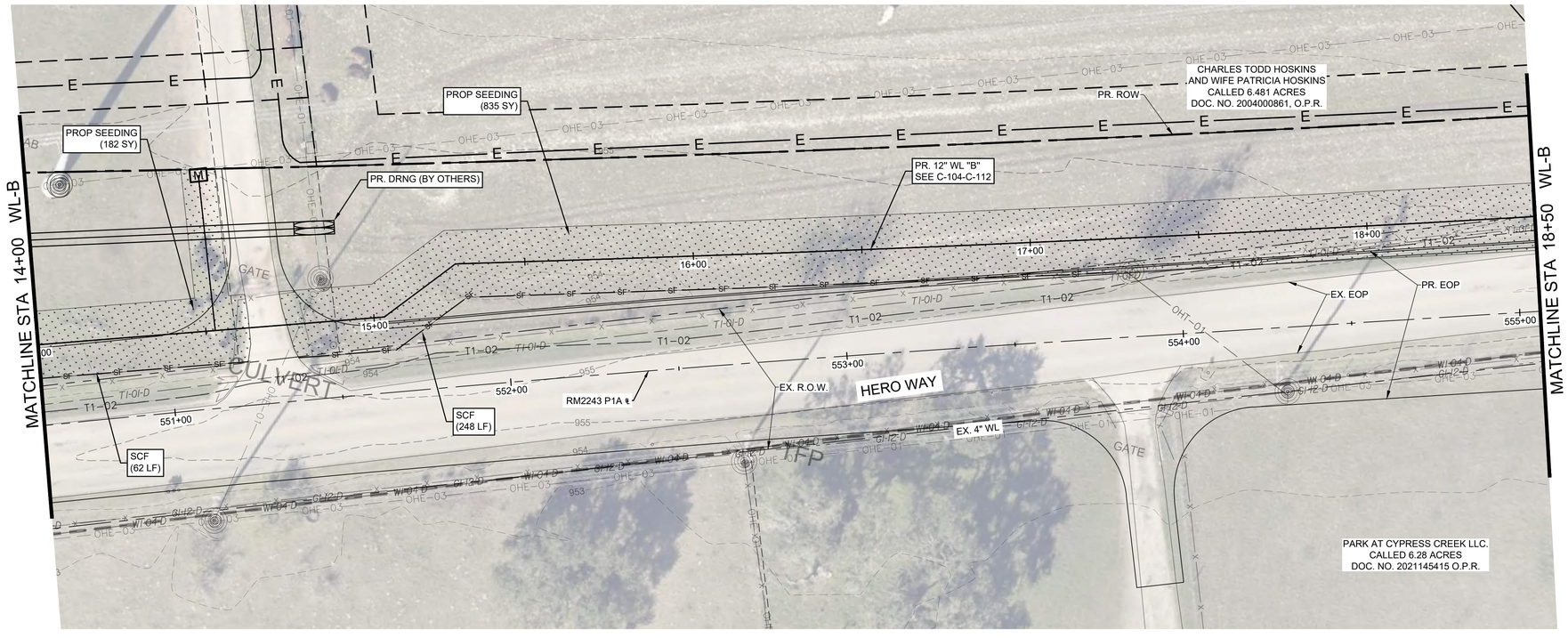

N

0 20' 40'

SCALE: 1" = 20'

LEGEND

- EX. RIGHT-OF-WAY
- EX. EDGE OF PAVEMENT
- UTILITY EASEMENT
- EX. 2" WATER
- EX. 3" WATER
- EX. 6" WATER
- EX. 8" WATER
- EX. 12" WATER
- PR. WATER
- EX. STORM DRAIN
- EX. 42" GAS LINE
- EX. OVERHEAD ELECTRIC
- EX. OVERHEAD TELECOM
- EX. U.G. TELECOM
- EX. FENCE
- EX. WATER T.B.A
- EX. WATER VALVE
- PR. WATER VALVE
- EX. FIRE HYDRANT
- PR. FIRE HYDRANT
- EX. WATER METER
- PR. AIR RELEASE VALVE
- EX. POWER POLE
- PR. DRAIN VALVE
- EX. TPED

GENERAL NOTES:

1. ALL EROSION CONTROL MEASURES SHALL BE PLACED WITHIN COUNTY RIGHT-OF-WAY DURING CONSTRUCTION.
2. CONTRACTOR SHALL MAINTAIN EROSION CONTROL MEASURES.
3. CONSTRUCTION ENTRANCE/EXIT TO BE DETERMINED IN THE FIELD, AND APPROVED BY THE ENGINEER.
4. ALL EROSION CONTROL ELEMENTS SHALL BE IN PLACE PRIOR TO COMMENCING ANY SOIL DISTURBING ACTIVITIES.

REV. NO.	REVISION DESCRIPTION	APPROVED BY:	DATE

CobbFendley
TBPE NO. F-274 / TBPLS NO. 10046701
9600 N. MOPAC EXPRESSWAY, SUITE 800
AUSTIN, TEXAS 78759
512.834.9798 | FAX 512.834.7727
WWW.COBBFENDLEY.COM

EROSION CONTROLS - SHEET 4

RM 2243 W/WW RELOCATIONS
LEANDER, TEXAS

City of Leander

PROJ. NO. 1903-099-24 15
DESIGN: R. NEWTON
DRAWN: R. NEWTON
CHECK: L. PRINCE
APPR: K. VAN HOOSIER
DATE: 3/5/2025

INTERIM REVIEW
Not intended for construction, bidding or permit purposes.
Engineer: KRISTEN VAN HOOSIER
P.E. Serial No.: 136882
Date: March 5, 2025

3/5/2025

THESE DESIGN DOCUMENTS ARE NOT TO BE USED FOR CONSTRUCTION PRIOR TO REGULATORY SIGNATURE AND PERMIT.

SHEET
C-204

Dwg Info: G:\CFA\2014\0308801_Williamson_County_2013_Road_Bond\MUN\46_RM2243\01\DESIGN\C-201-ENS-2.dwg - Tab: ENS-B1 - Plotted: 3/5/2025 9:14 PM By: RACHAEL NEWTON

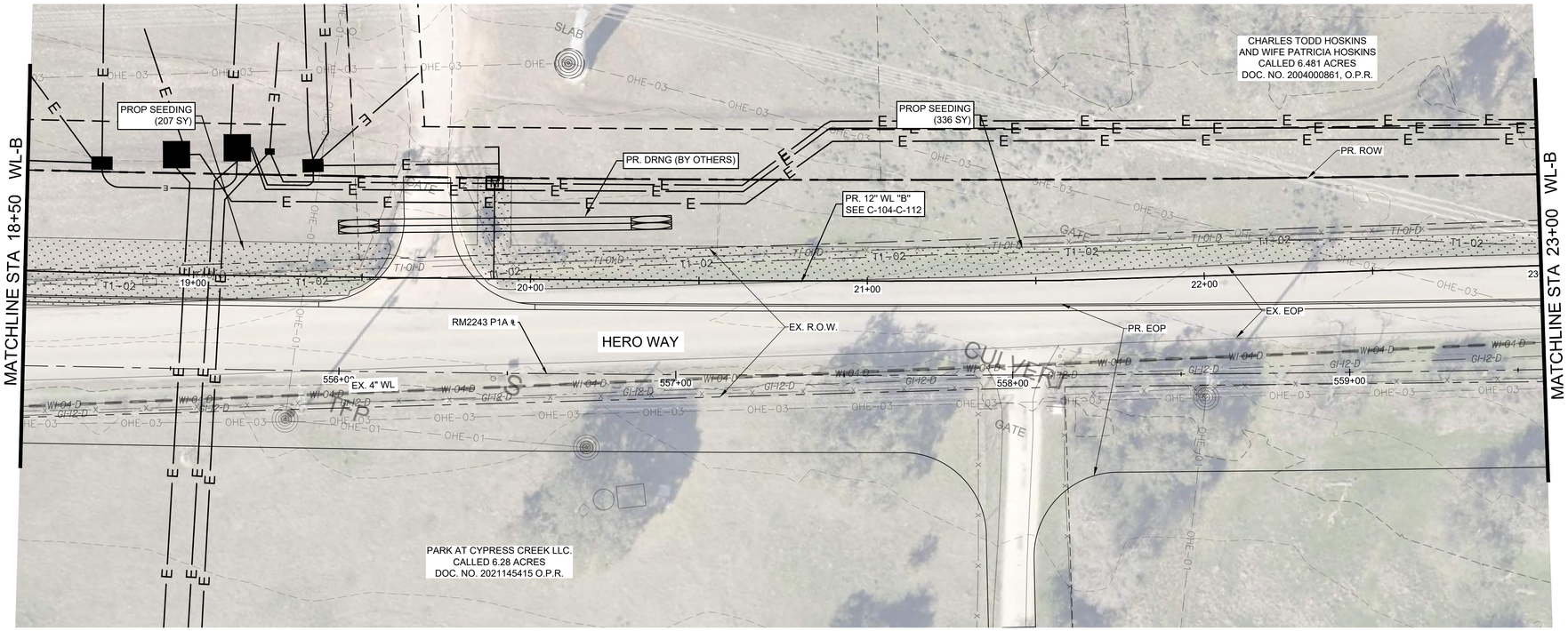

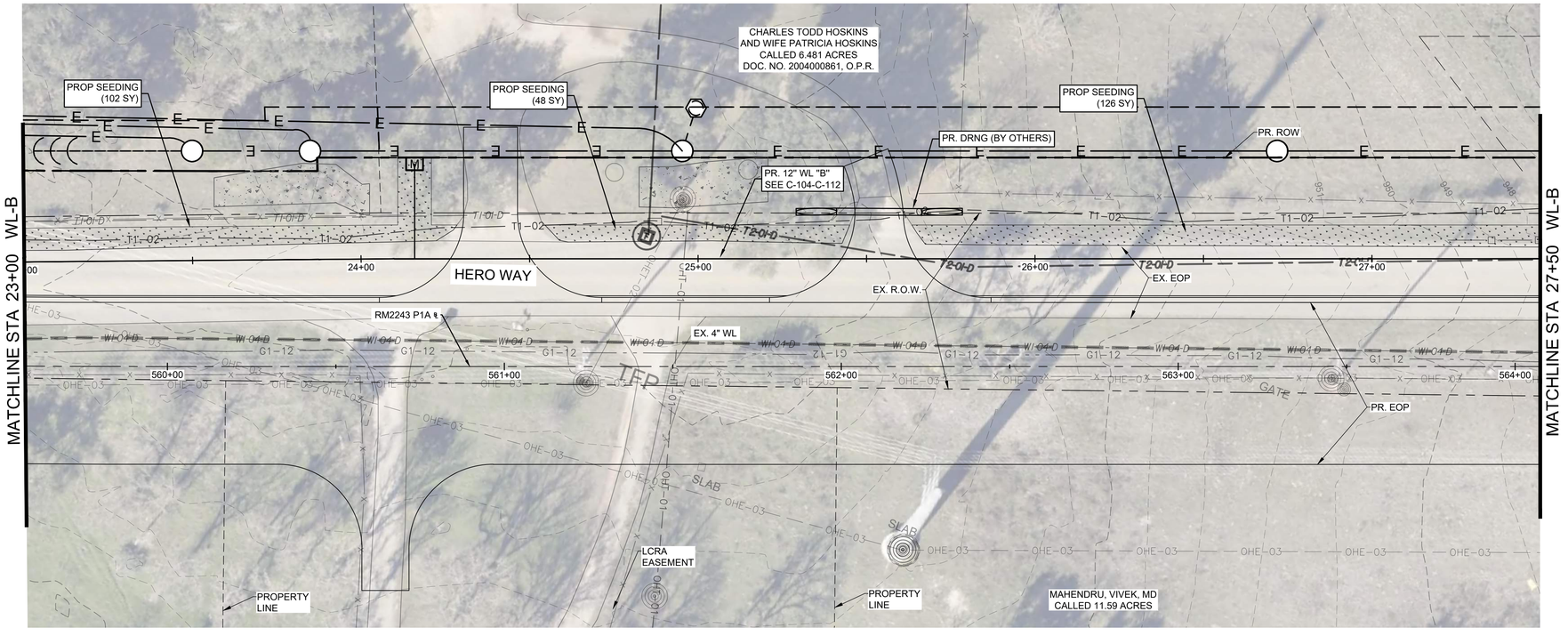

0 20' 40'
SCALE: 1" = 20'

LEGEND

- EX. RIGHT-OF-WAY
- EX. EDGE OF PAVEMENT
- UTILITY EASEMENT
- EX. 2" WATER
- EX. 3" WATER
- EX. 6" WATER
- EX. 8" WATER
- EX. 12" WATER
- PR. WATER
- EX. STORM DRAIN
- EX. 42" GAS LINE
- EX. OVERHEAD ELECTRIC
- EX. OVERHEAD TELECOM
- EX. U.G. TELECOM
- EX. FENCE
- EX. WATER T.B.A
- EX. WATER VALVE
- PR. WATER VALVE
- EX. FIRE HYDRANT
- PR. FIRE HYDRANT
- EX. WATER METER
- PR. AIR RELEASE VALVE
- EX. POWER POLE
- PR. DRAIN VALVE
- EX. TPED

GENERAL NOTES:

1. ALL EROSION CONTROL MEASURES SHALL BE PLACED WITHIN COUNTY RIGHT-OF-WAY DURING CONSTRUCTION.
2. CONTRACTOR SHALL MAINTAIN EROSION CONTROL MEASURES.
3. CONSTRUCTION ENTRANCE/EXIT TO BE DETERMINED IN THE FIELD, AND APPROVED BY THE ENGINEER.
4. ALL EROSION CONTROL ELEMENTS SHALL BE IN PLACE PRIOR TO COMMENCING ANY SOIL DISTURBING ACTIVITIES.

REV. NO.	REVISION DESCRIPTION	APPROVED BY:	DATE

CobbFendley
TBPE NO. F-274 / TBPLS NO. 10046701
9600 N. MOPAC EXPRESSWAY, SUITE 800
AUSTIN, TEXAS 78759
512.834.9798 | FAX 512.834.7727
WWW.COBBFENDLEY.COM

EROSION CONTROLS - SHEET 5

RM 2243 W/WW RELOCATIONS
LEANDER, TEXAS

City of Leander

PROJ. NO. 1903-099-24 15
DESIGN: R. NEWTON
DRAWN: R. NEWTON
CHECK: L. PRINCE
APPR: K. VAN HOOSIER
DATE: 3/5/2025

INTERIM REVIEW
Not intended for construction, bidding or permit purposes.
Engineer: KRISTEN VAN HOOSER
P.E. Serial No.: 136882
Date: March 5, 2025

3/5/2025

THESE DESIGN DOCUMENTS ARE NOT TO BE USED FOR CONSTRUCTION PRIOR TO REGULATORY SIGNATURE AND PERMIT.

SHEET
C-205

Dwg Info: G:\CFA\2014\0308801_Williamson_County_2013_Road_Bond\MUN\46_RM2243\01\DESIGN\C-201-ENS-2.dwg – Tab: ENS-B2 – Plotted: 3/5/2025 9:24 PM By: RACHAEL NEWTON

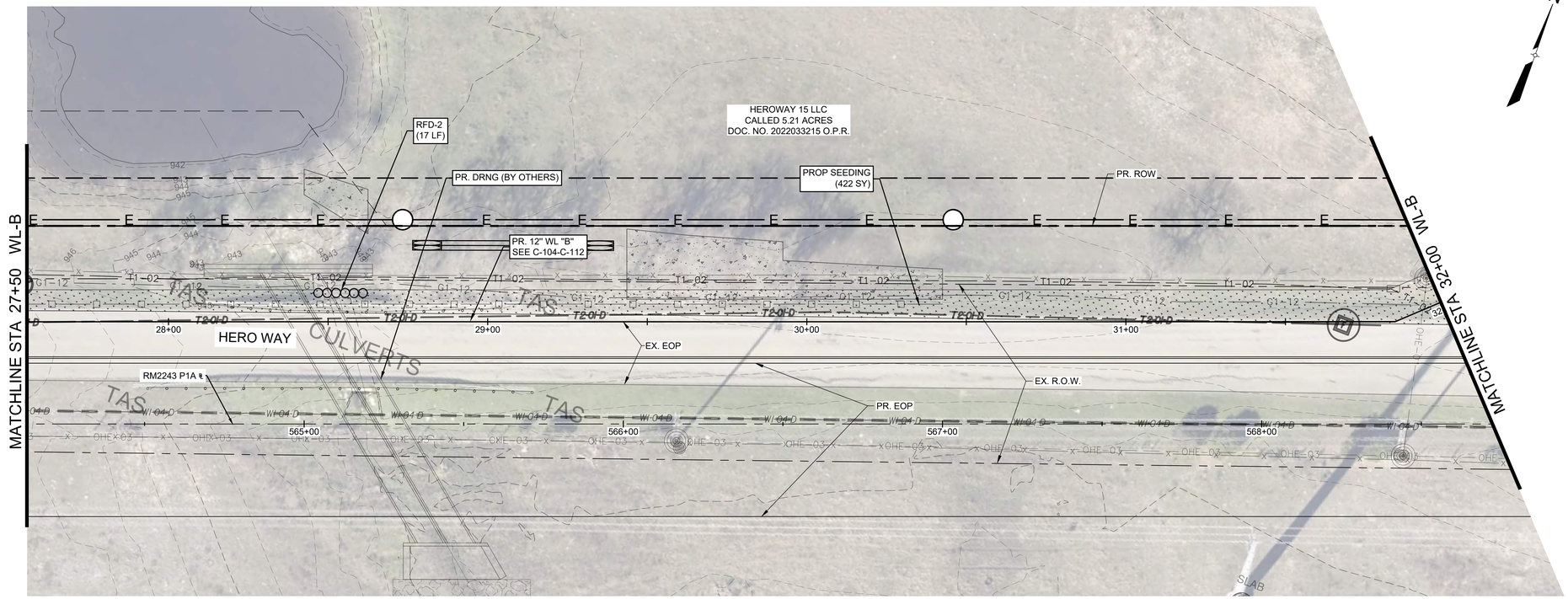

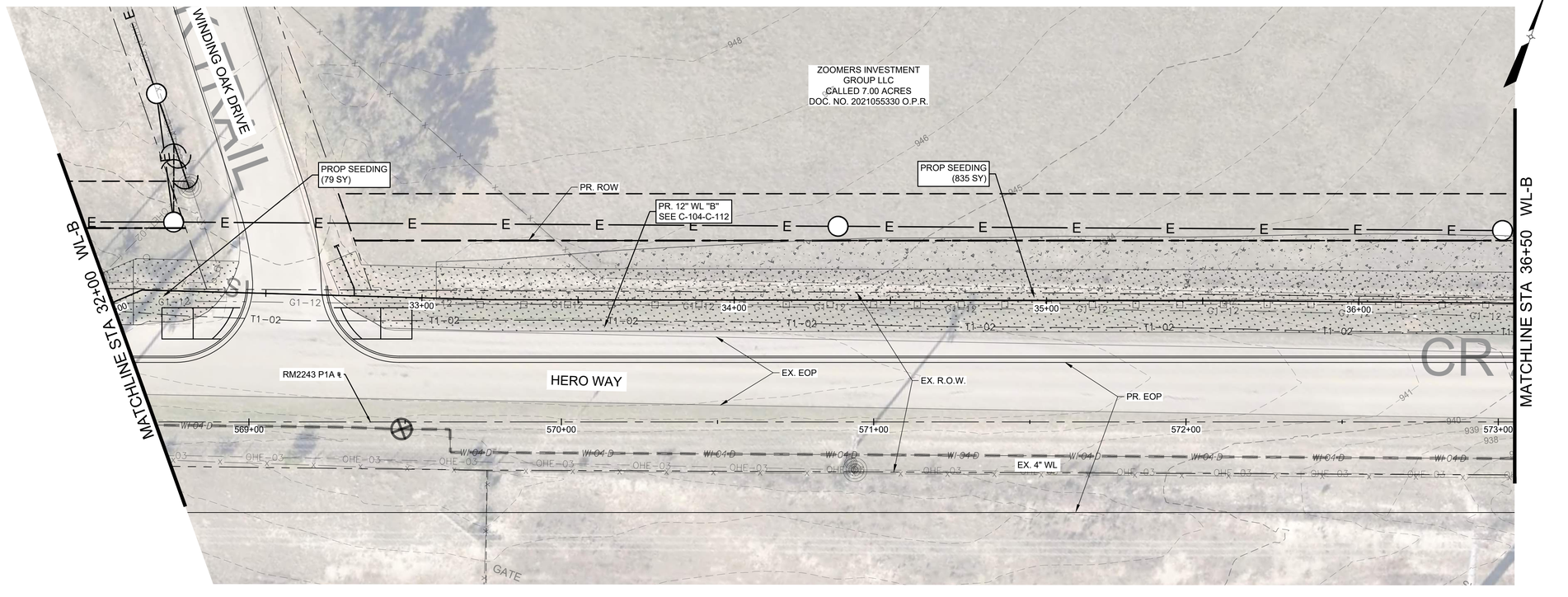

0 20' 40'

SCALE: 1" = 20'

LEGEND

- EX. RIGHT-OF-WAY
- EX. EDGE OF PAVEMENT
- UTILITY EASEMENT
- EX. 2" WATER
- EX. 3" WATER
- EX. 6" WATER
- EX. 8" WATER
- EX. 12" WATER
- PR. WATER
- EX. STORM DRAIN
- EX. 42" GAS LINE
- EX. OVERHEAD ELECTRIC
- EX. OVERHEAD TELECOM
- EX. U.G. TELECOM
- EX. FENCE
- EX. WATER T.B.A
- EX. WATER VALVE
- PR. WATER VALVE
- EX. FIRE HYDRANT
- PR. FIRE HYDRANT
- EX. WATER METER
- PR. AIR RELEASE VALVE
- EX. POWER POLE
- PR. DRAIN VALVE
- EX. TPED

GENERAL NOTES:

1. ALL EROSION CONTROL MEASURES SHALL BE PLACED WITHIN COUNTY RIGHT-OF-WAY DURING CONSTRUCTION.
2. CONTRACTOR SHALL MAINTAIN EROSION CONTROL MEASURES.
3. CONSTRUCTION ENTRANCE/EXIT TO BE DETERMINED IN THE FIELD, AND APPROVED BY THE ENGINEER.
4. ALL EROSION CONTROL ELEMENTS SHALL BE IN PLACE PRIOR TO COMMENCING ANY SOIL DISTURBING ACTIVITIES.

REV. NO.	REVISION DESCRIPTION	APPROVED BY:	DATE

CobbFendley
TBPE NO. F-274 / TBPLS NO. 10046701
9600 N. MOPAC EXPRESSWAY, SUITE 800
AUSTIN, TEXAS 78759
512.834.9798 | FAX 512.834.7727
WWW.COBBFENDLEY.COM

EROSION CONTROLS - SHEET 6

RM 2243 W/WW RELOCATIONS
LEANDER, TEXAS

City of Leander

PROJ. NO. 1903-099-24 15
DESIGN: R. NEWTON
DRAWN: R. NEWTON
CHECK: L. PRINCE
APPR: K. VAN HOOSIER
DATE: 3/5/2025

INTERIM REVIEW
Not intended for construction, bidding or permit purposes.
Engineer: KRISTEN VAN HOOSIER
P.E. Serial No.: 136882
Date: March 5, 2025

3/5/2025

THESE DESIGN DOCUMENTS ARE NOT TO BE USED FOR CONSTRUCTION PRIOR TO REGULATORY SIGNATURE AND PERMIT.

SHEET
C-206

Dwg Info: G:\CFA\2014\0308801_Williamson_County_2013_Road_Bond\MUN\46_RM2243\01\DESIGN\C-201-ENS-2.dwg – Tab: ENS-B3 – Plotted: 3/5/2025 9:34 PM By: RACHAEL NEWTON

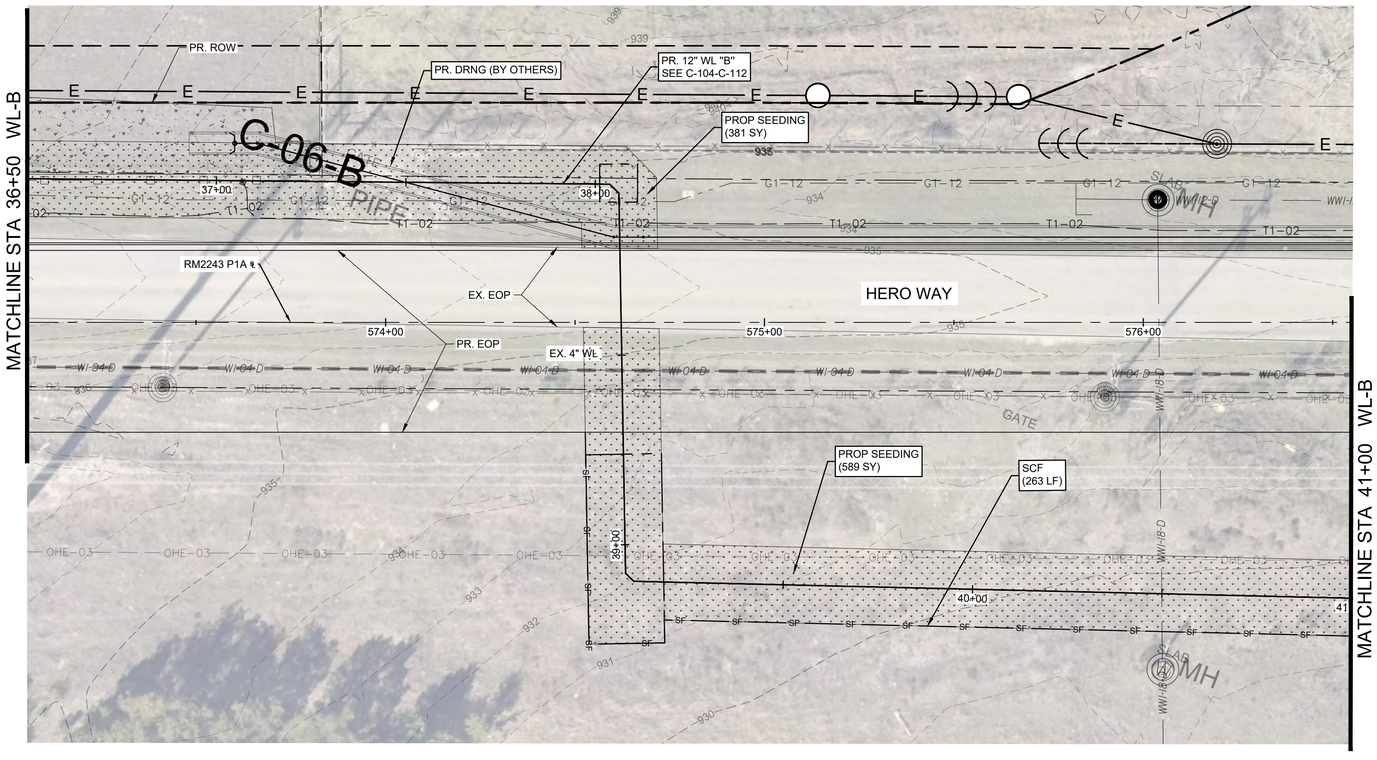

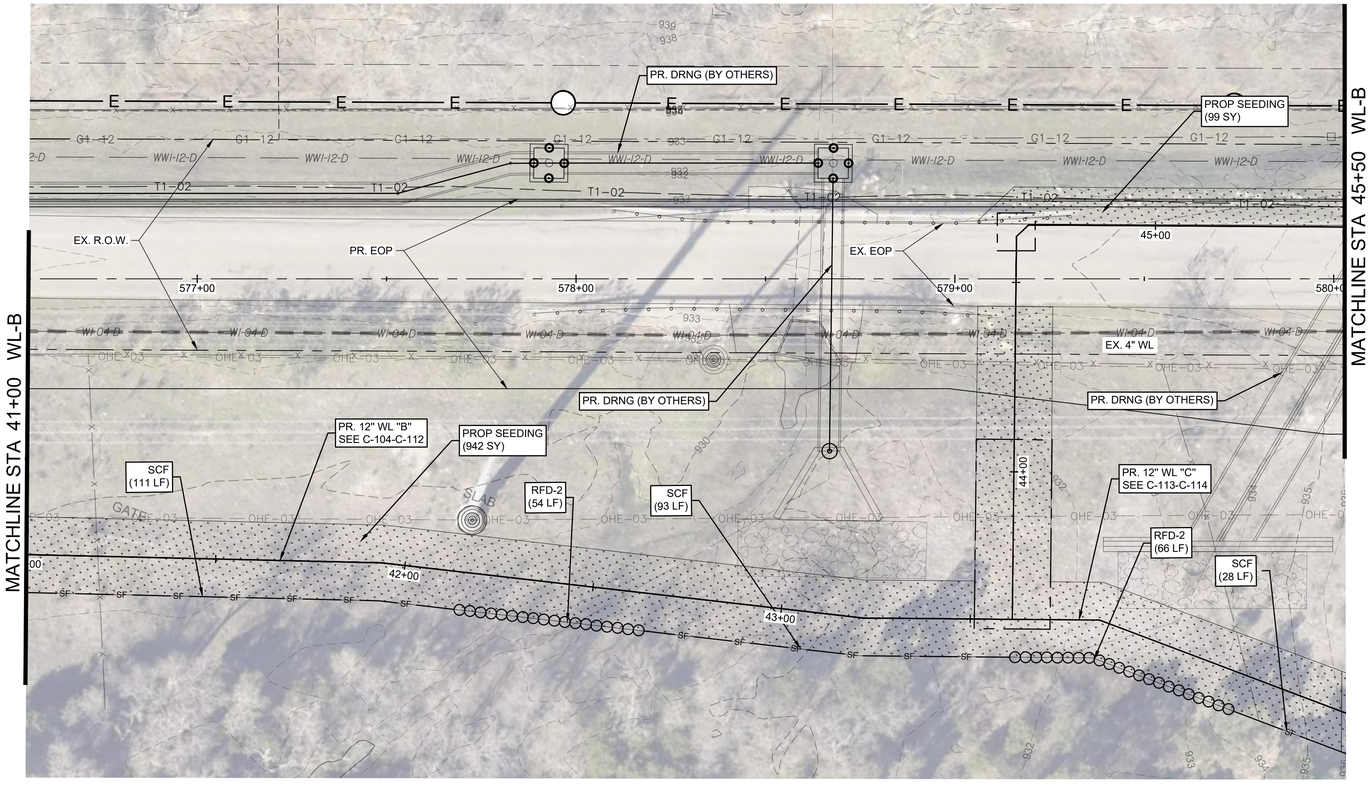

0 20' 40'

SCALE: 1" = 20'

LEGEND

- EX. RIGHT-OF-WAY
- EX. EDGE OF PAVEMENT
- UTILITY EASEMENT
- EX. 2" WATER
- EX. 3" WATER
- EX. 6" WATER
- EX. 8" WATER
- EX. 12" WATER
- PR. WATER
- EX. STORM DRAIN
- EX. 42" GAS LINE
- EX. OVERHEAD ELECTRIC
- EX. OVERHEAD TELECOM
- EX. U.G. TELECOM
- EX. FENCE
- EX. WATER T.B.A
- EX. WATER VALVE
- PR. WATER VALVE
- EX. FIRE HYDRANT
- PR. FIRE HYDRANT
- EX. WATER METER
- PR. AIR RELEASE VALVE
- EX. POWER POLE
- PR. DRAIN VALVE
- EX. TPED

GENERAL NOTES:

1. ALL EROSION CONTROL MEASURES SHALL BE PLACED WITHIN COUNTY RIGHT-OF-WAY DURING CONSTRUCTION.
2. CONTRACTOR SHALL MAINTAIN EROSION CONTROL MEASURES.
3. CONSTRUCTION ENTRANCE/EXIT TO BE DETERMINED IN THE FIELD, AND APPROVED BY THE ENGINEER.
4. ALL EROSION CONTROL ELEMENTS SHALL BE IN PLACE PRIOR TO COMMENCING ANY SOIL DISTURBING ACTIVITIES.

REV. NO.	REVISION DESCRIPTION	APPROVED BY:	DATE

CobbFendley
TBPE NO. F-274 / TBPLS NO. 10046701
9600 N. MOPAC EXPRESSWAY, SUITE 800
AUSTIN, TEXAS 78759
512.834.9798 | FAX 512.834.7727
WWW.COBBFENDLEY.COM

EROSION CONTROLS - SHEET 7

RM 2243 W/WW RELOCATIONS
LEANDER, TEXAS

City of Leander

PROJ. NO. 1903-099-24 15
DESIGN: R. NEWTON
DRAWN: R. NEWTON
CHECK: L. PRINCE
APPR: K. VAN HOOSIER
DATE: 3/6/2025

INTERIM REVIEW
Not intended for construction, bidding or permit purposes.
Engineer: KRISTEN VAN HOOSIER
P.E. Serial No.: 136882
Date: March 6, 2025

3/6/2025

THESE DESIGN DOCUMENTS ARE NOT TO BE USED FOR CONSTRUCTION PRIOR TO REGULATORY SIGNATURE AND PERMIT.

SHEET
C-207

Dwg Info: G:\CFA\2014\0308801_Williamson_County_2013_Road_Bond\MUN\46_RM2243\01\DESIGN\C-201-ENS-2.dwg – Tab: ENS-B4 – Plotted: 3/6/2025 4:18 PM By: RACHAEL NEWTON

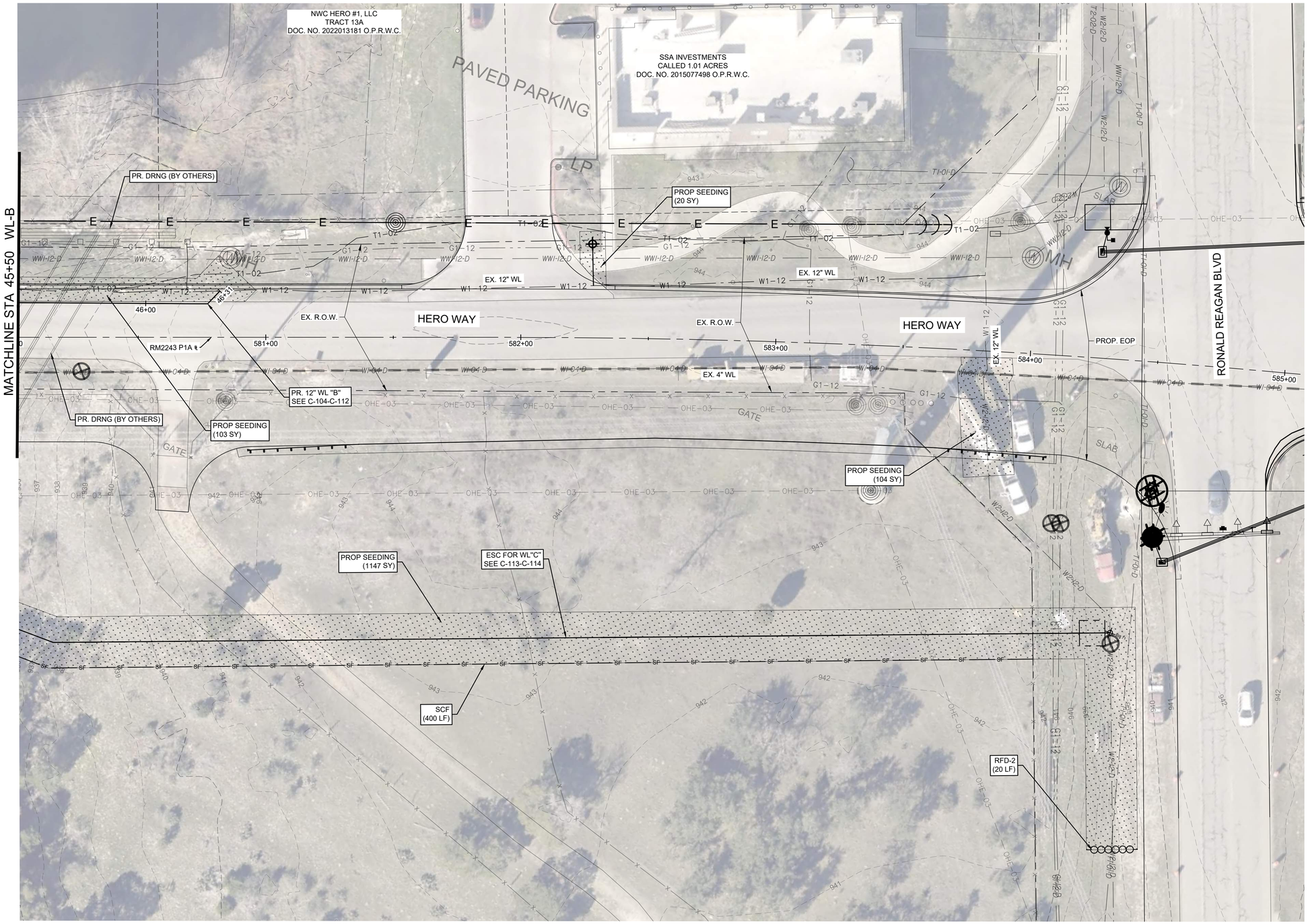

N

0 20' 40'

SCALE: 1" = 20'

LEGEND

- EX. RIGHT-OF-WAY
- EX. EDGE OF PAVEMENT
- UTILITY EASEMENT
- EX. 2" WATER
- EX. 3" WATER
- EX. 6" WATER
- EX. 8" WATER
- EX. 12" WATER
- PR. WATER
- EX. STORM DRAIN
- EX. 42" GAS LINE
- EX. OVERHEAD ELECTRIC
- EX. OVERHEAD TELECOM
- EX. U.G. TELECOM
- EX. FENCE
- EX. WATER T.B.A
- EX. WATER VALVE
- EX. FIRE HYDRANT
- EX. WATER METER
- EX. POWER POLE
- EX. TPED
- PR. WATER VALVE
- PR. FIRE HYDRANT
- PR. AIR RELEASE VALVE
- PR. DRAIN VALVE

GENERAL NOTES:

1. ALL EROSION CONTROL MEASURES SHALL BE PLACED WITHIN COUNTY RIGHT-OF-WAY DURING CONSTRUCTION.
2. CONTRACTOR SHALL MAINTAIN EROSION CONTROL MEASURES.
3. CONSTRUCTION ENTRANCE/EXIT TO BE DETERMINED IN THE FIELD, AND APPROVED BY THE ENGINEER.
4. ALL EROSION CONTROL ELEMENTS SHALL BE IN PLACE PRIOR TO COMMENCING ANY SOIL DISTURBING ACTIVITIES.

REV. NO.	REVISION DESCRIPTION	APPROVED BY:	DATE

CobbFendley
TBPE NO. F-274 / TBPLS NO. 10046701
9600 N. MOPAC EXPRESSWAY, SUITE 800
AUSTIN, TEXAS 78759
512.834.9798 | FAX 512.834.7727
WWW.COBBFENDLEY.COM

EROSION CONTROLS - SHEET 8

RM 2243 W/WW RELOCATIONS
LEANDER, TEXAS

City of Leander

PROJ. NO.	1903-099-24 15
DESIGN:	R. NEWTON
DRAWN:	R. NEWTON
CHECK:	L. PRINCE
APPR:	K. VAN HOOSIER
DATE:	3/6/2025

INTERIM REVIEW
Not intended for construction, bidding or permit purposes.
Engineer: KRISTEN VAN HOOSIER
P.E. Serial No.: 136882
Date: March 6, 2025

3/6/2025

THESE DESIGN DOCUMENTS ARE NOT TO BE USED FOR CONSTRUCTION PRIOR TO REGULATORY SIGNATURE AND PERMIT.

SHEET
C-208

Dwg Info: G:\CFA\2014\0308801_Williamson_County_2013_Road_Bond\MUN\46_RM2243\01\DESIGN\C-201-ENS-2.dwg - Tab: ENS-B5-C1 - Plotted: 3/6/2025 4:23 PM By: RACHAEL NEWTON

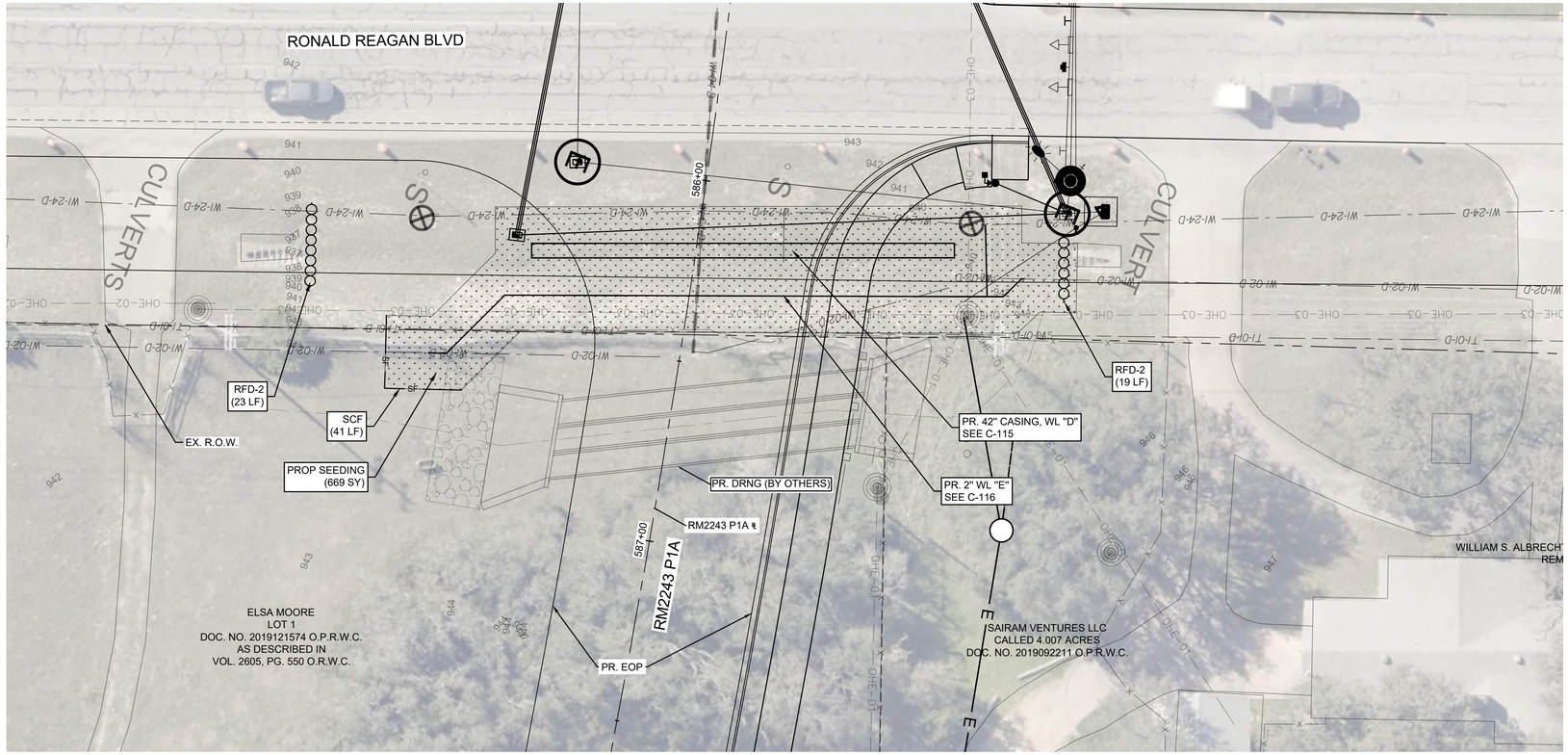

0 20' 40'

SCALE: 1" = 20'

LEGEND

- EX. RIGHT-OF-WAY
- EX. EDGE OF PAVEMENT
- UTILITY EASEMENT
- EX. 2" WATER
- EX. 3" WATER
- EX. 6" WATER
- EX. 8" WATER
- EX. 12" WATER
- PR. WATER
- EX. STORM DRAIN
- EX. 42" GAS LINE
- EX. OVERHEAD ELECTRIC
- EX. OVERHEAD TELECOM
- EX. U.G. TELECOM
- EX. FENCE
- EX. WATER T.B.A
- EX. WATER VALVE
- PR. WATER VALVE
- EX. FIRE HYDRANT
- PR. FIRE HYDRANT
- EX. WATER METER
- PR. AIR RELEASE VALVE
- EX. POWER POLE
- PR. DRAIN VALVE
- EX. TPED

GENERAL NOTES:

1. ALL EROSION CONTROL MEASURES SHALL BE PLACED WITHIN COUNTY RIGHT-OF-WAY DURING CONSTRUCTION.
2. CONTRACTOR SHALL MAINTAIN EROSION CONTROL MEASURES.
3. CONSTRUCTION ENTRANCE/EXIT TO BE DETERMINED IN THE FIELD, AND APPROVED BY THE ENGINEER.
4. ALL EROSION CONTROL ELEMENTS SHALL BE IN PLACE PRIOR TO COMMENCING ANY SOIL DISTURBING ACTIVITIES.

EXISTING GRADE
XXX.X
FLOW LINE OF PIPE
XXX.XX

PROFILE SCALE
1"=40' HORIZ.
1"=4' VERT.

REV. NO.	REVISION DESCRIPTION	APPROVED BY:	DATE

CobbFendley
TBPE NO. F-274 / TBPLS NO. 10046701
9600 N. MOPAC EXPRESSWAY, SUITE 800
AUSTIN, TEXAS 78759
512.834.9798 | FAX 512.834.7727
WWW.COBBFENDLEY.COM

EROSION CONTROLS - SHEET 9

RM 2243 W/WW RELOCATIONS
LEANDER, TEXAS

City of Leander

PROJ. NO. 1903-099-24 15
DESIGN: R. NEWTON
DRAWN: R. NEWTON
CHECK: L. PRINCE
APPR: K. VAN HOOSIER
DATE: 3/5/2025

INTERIM REVIEW
Not intended for construction, bidding or permit purposes.
Engineer: KRISTEN VAN HOOSER
P.E. Serial No.: 136882
Date: March 5, 2025

3/5/2025

THESE DESIGN DOCUMENTS ARE NOT TO BE USED FOR CONSTRUCTION PRIOR TO REGULATORY SIGNATURE AND PERMIT.

SHEET
C-209

Dwg Info: G:\CFA\2014\0308801_Williamson_County_2013_Road_Bond\MUN\46_RM2243\01\DESIGN\C-201-ENS-3.dwg — Tab: ENS-C2-01 — Plotted: 3/5/2025 10:25 PM By: RACHAEL NEWTON

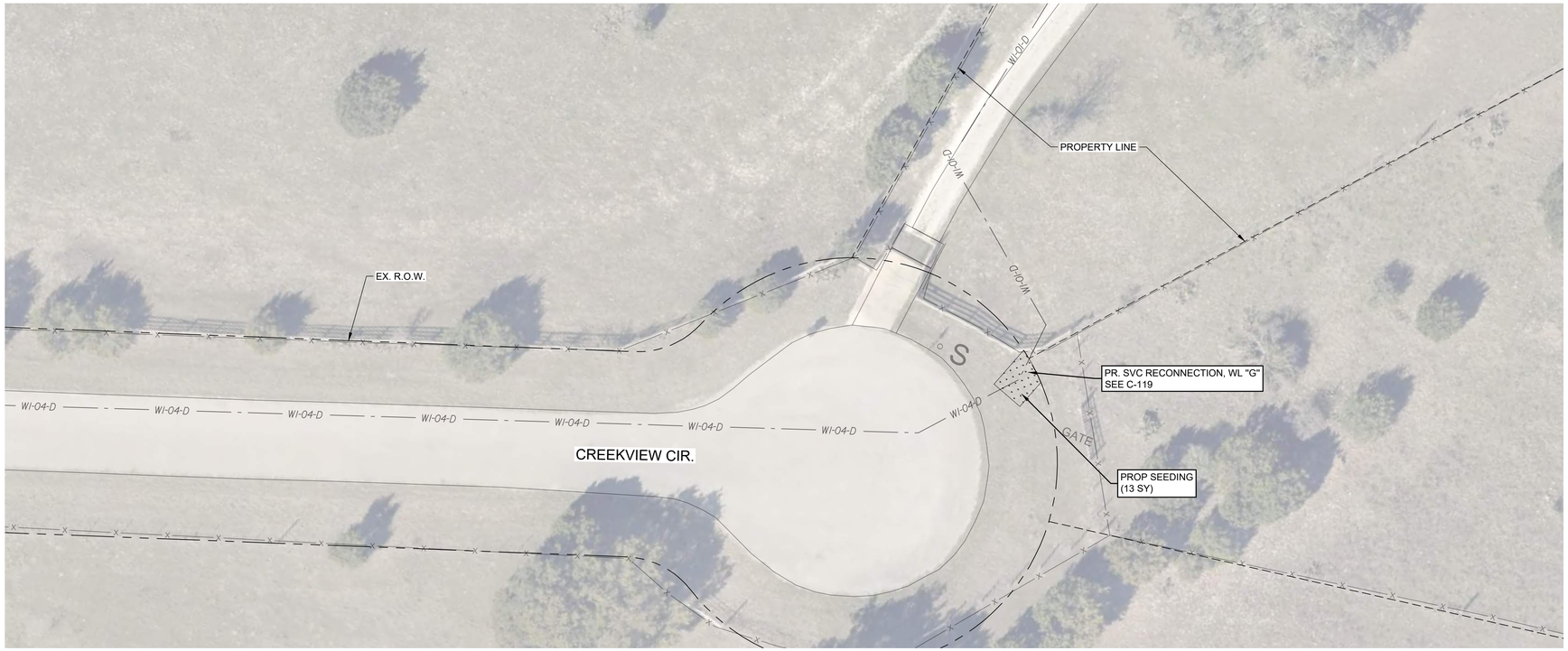

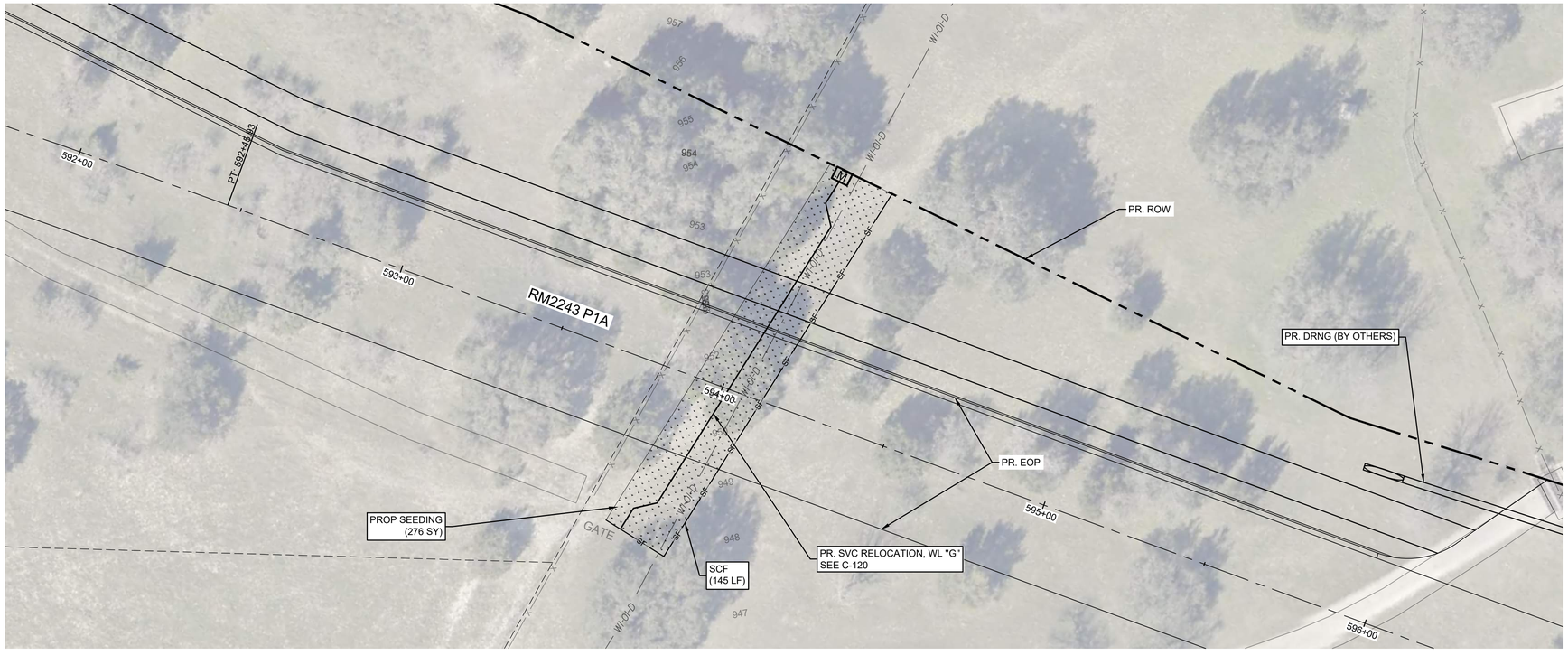

0 60' 120'

SCALE: 1" = 60'

LEGEND

- EX. RIGHT-OF-WAY
- EX. EDGE OF PAVEMENT
- UTILITY EASEMENT
- EX. 2" WATER
- EX. 3" WATER
- EX. 6" WATER
- EX. 8" WATER
- EX. 12" WATER
- PR. WATER
- EX. STORM DRAIN
- EX. 42" GAS LINE
- EX. OVERHEAD ELECTRIC
- EX. OVERHEAD TELECOM
- EX. U.G. TELECOM
- EX. FENCE
- EX. WATER T.B.A
- EX. WATER VALVE
- PR. WATER VALVE
- EX. FIRE HYDRANT
- PR. FIRE HYDRANT
- EX. WATER METER
- PR. AIR RELEASE VALVE
- EX. POWER POLE
- PR. DRAIN VALVE
- EX. TPED

GENERAL NOTES:

1. ALL EROSION CONTROL MEASURES SHALL BE PLACED WITHIN COUNTY RIGHT-OF-WAY DURING CONSTRUCTION.
2. CONTRACTOR SHALL MAINTAIN EROSION CONTROL MEASURES.
3. CONSTRUCTION ENTRANCE/EXIT TO BE DETERMINED IN THE FIELD, AND APPROVED BY THE ENGINEER.
4. ALL EROSION CONTROL ELEMENTS SHALL BE IN PLACE PRIOR TO COMMENCING ANY SOIL DISTURBING ACTIVITIES.

EXISTING GRADE
XXX.X
FLOW LINE OF PIPE
XXX.XX

PROFILE SCALE
1"=40' HORIZ.
1"=4' VERT.

REV. NO.	REVISION DESCRIPTION	APPROVED BY:	DATE

CobbFendley
TBPE NO. F-274 / TBPLS NO. 10046701
9600 N. MOPAC EXPRESSWAY, SUITE 800
AUSTIN, TEXAS 78759
512.834.9798 | FAX 512.834.7727
WWW.COBBFENDLEY.COM

EROSION CONTROLS - SHEET 10

RM 2243 W/WW RELOCATIONS
LEANDER, TEXAS

City of Leander

PROJ. NO. 1903-099-24 15
DESIGN: R. NEWTON
DRAWN: R. NEWTON
CHECK: L. PRINCE
APPR: K. VAN HOOSIER
DATE: 3/5/2025

INTERIM REVIEW
Not intended for construction, bidding or permit purposes.
Engineer: KRISTEN VAN HOOSIER
P.E. Serial No.: 136882
Date: March 5, 2025

3/5/2025

THESE DESIGN DOCUMENTS ARE NOT TO BE USED FOR CONSTRUCTION PRIOR TO REGULATORY SIGNATURE AND PERMIT

SHEET
C-210

Dwg Info: G:\CFA\2014\0308801_Williamson_County_2013_Road_Bond\MUN\46_RM2243\01\DESIGN\C-201-ENS-3.dwg — Tab: ENS-G1 — Plotted: 3/5/2025 10:34 PM By: RACHAEL NEWTON

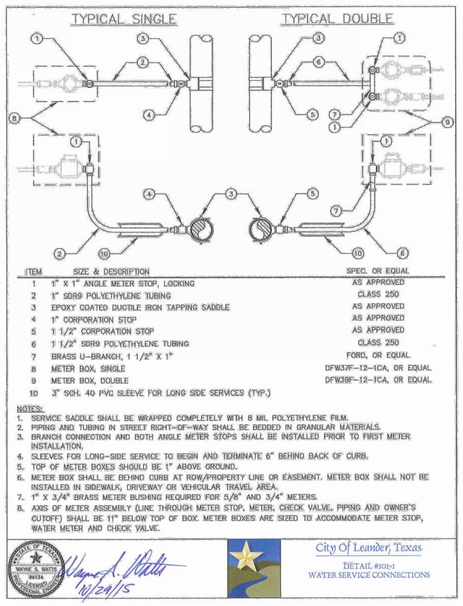

ITEM	SIZE & DESCRIPTION	SPEC. OR EQUAL
1	1" X 1" ANGLE METER STOP, LOCKING	AS APPROVED
2	1" SDR9 POLYETHYLENE TUBING	CLASS 250
3	EPOXY COATED DUCTILE IRON TAPPING SADDLE	AS APPROVED
4	1" CORPORATION STOP	AS APPROVED
5	1 1/2" CORPORATION STOP	AS APPROVED
6	1 1/2" SDR9 POLYETHYLENE TUBING	CLASS 250
7	BRASS U-BRANCH, 1 1/2" X 1"	FORD, OR EQUAL
8	METER BOX, SINGLE	DFW32F-12-1CA, OR EQUAL
9	METER BOX, DOUBLE	DFW32F-12-1CA, OR EQUAL
10	3" SCH. 40 PVC SLEEVE FOR LONG SIDE SERVICES (TYP.)	

NOTES:
1. SERVICE SADDLE SHALL BE WRAPPED COMPLETELY WITH 8 MIL. POLYETHYLENE FILM.
2. PIPING AND TUBING IN STREET RIGHT-OF-WAY SHALL BE BEDDED IN GRANULAR MATERIALS.
3. BRANCH CONNECTION AND BOTH ANGLE METER STOPS SHALL BE INSTALLED PRIOR TO FIRST METER INSTALLATION.
4. SLEEVES FOR LONG-SIDE SERVICE TO BEGIN AND TERMINATE 6" BEHIND BACK OF CURB.
5. TOP OF METER BOXES SHOULD BE 1" ABOVE GROUND.
6. METER BOX SHALL BE BEHIND CURB AT ROW/PROPERTY LINE OR EASEMENT. METER BOX SHALL NOT BE INSTALLED IN SIDEWALK, DRIVEWAY OR VEHICULAR TRAVEL AREA.
7. 1" X 3/4" BRASS METER BUSHING REQUIRED FOR 5/8" AND 3/4" METERS.
8. AXIS OF METER ASSEMBLY (LINE THROUGH METER STOP, METER, CHECK VALVE, PIPING AND OWNER'S CUTOFF) SHALL BE 11" BELOW TOP OF BOX. METER BOXES ARE SIZED TO ACCOMMODATE METER STOP, WATER METER AND CHECK VALVE.

WAYNE S. SMITH 86124 LICENSED PROFESSIONAL ENGINEER 11/24/15

City Of Leander, Texas
DETAIL #0061
WATER SERVICE CONNECTIONS

CITY OF AUSTIN AUSTIN WATER	TYPICAL GATE VALVE 4" - 16"	
RECORD COPY SIGNED BY KATHI L FLOWERS 05/18/2016 ADOPTED	THE ARCHITECT/ENGINEER ASSUMES RESPONSIBILITY FOR APPROPRIATE USE OF THIS STANDARD.	STANDARD NO. 511-AW-01 1 OF 4

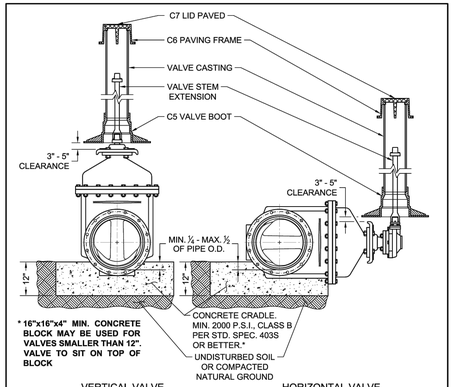

*** 16"x16"x4" MIN. CONCRETE BLOCK MAY BE USED FOR VALVES SMALLER THAN 12". VALVE TO SIT ON TOP OF BLOCK**

VERTICAL VALVE

HORIZONTAL VALVE
ONLY TO BE USED WHEN CALLED OUT ON THE DRAWINGS.

NOTES:
1. WELD SOCKET 2⅜" x 2" DEEP TO 1" SCH. 40 CARBON STEEL ROUND STEM EXTENSION, FITTED ON OPERATING NUT, [SCH. 80 FOR LENGTHS OVER 10'.]
2. VALVE CASTING SHALL BE 6" DI PIPE WITH BELL OR COLLAR CENTERED OVER VALVE BOOT.
3. NUT AT TOP OF VALVE EXTENSION ROD SHALL BE SQUARE 2" LONG WELDED TO TOP OF ROD.
4. VALVE STEM EXTENSIONS ARE REQUIRED ON ALL VALVES THAT EXCEED 3' DEEP FROM FINISHED GRADE. VALVE EXTENSIONS SHALL BE PLACED SUCH THAT THE EXTENSION NUT IS BETWEEN 12" AND 18" FROM FINISHED GRADE.

RECLAIMED WATER: ALL RECLAIMED PVC PIPE SHALL BE MANUFACTURED PURPLE PIPE. HDPE PIPE SHALL BE MANUFACTURED WITH PURPLE STRIPES. ALL OTHER PIPE AND APPURTENANCES SHALL BE MANUFACTURED PURPLE IF AVAILABLE. ALL PIPE AND FITTINGS THAT ARE NOT AVAILABLE FROM THE MANUFACTURER IN PURPLE SHALL BE PAINTED PURPLE PER SPL WW-3C. ALL BURIED DI AND CI PIPE AND FITTINGS SHALL ALSO BE WRAPPED IN PURPLE POLYETHYLENE PER SPL WW-27D. ALL COVERS SHALL HAVE **"RECLAIMED WATER"** CAST INTO THEM.

CITY OF AUSTIN AUSTIN WATER	TYPICAL GATE VALVE 4" - 16"	
RECORD COPY SIGNED BY KATHI L FLOWERS 05/18/2016 ADOPTED	THE ARCHITECT/ENGINEER ASSUMES RESPONSIBILITY FOR APPROPRIATE USE OF THIS STANDARD.	STANDARD NO. 511-AW-01 2 OF 4

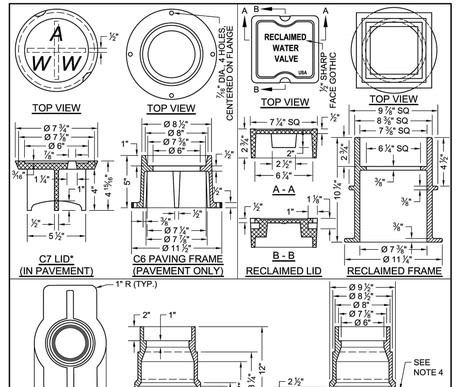

NOTES:
1. MATERIAL SHALL BE GRAY CAST IRON, ASTM A48, GRADE 30B.
2. THE MANUFACTURER'S IDENTIFICATION AND CASTING NUMBER, AND THE COUNTRY WHERE CAST, SHALL BE DISTINCTLY CAST ONTO EACH LID, FRAME, COLLAR AND BASE.
3. DRAFT AND SHRINKAGE ALLOWANCE SHALL BE IN ACCORDANCE WITH NORMAL FOUNDRY PRACTICE.
4. CASTING FINISH BY MANUFACTURER SHALL INCLUDE REMOVAL OF FINS AND FLASHING, AND PAINT WITH BLACK ASPHALT COATING.

WEIGHTS:
C7 LID: 13 LBS
RECLAIMED LID: 15 LBS
C6 FRAME: 23 LBS
RECLAIMED FRAME: 33 LBS
C5 BASE: 78 LBS

* LETTERING SHALL BE 1 ½" 2 PICK BAR SLOTS REQUIRED

CITY OF AUSTIN AUSTIN WATER	TYPICAL GATE VALVE 4" - 16"	
RECORD COPY SIGNED BY KATHI L FLOWERS 05/18/2016 ADOPTED	THE ARCHITECT/ENGINEER ASSUMES RESPONSIBILITY FOR APPROPRIATE USE OF THIS STANDARD.	STANDARD NO. 511-AW-01 3 OF 4

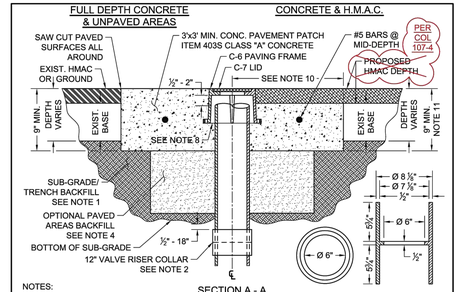

NOTES:
1. SUB-GRADE/TRENCH BACKFILL SHALL BE COMPACTED AS PER ITEM 201S, SUB-GRADE PREPARATION.
2. TO ADJUST VALVE CASTINGS TO FINAL GRADE, REMOVE RISER PIPE BELOW SUB-GRADE AND INSTALL APPROPRIATE LENGTH OF NEW RISER PIPE TO ACHIEVE FINAL GRADE. CONNECT THE TWO PIECES OF RISER PIPE WITH A 6" COLLAR MIN. 12" LENGTH APPROXIMATELY CENTERED ON THE JOINT WITH THE TOP OF SLEEVE LOCATED ½" - 18" BELOW SUB-GRADE. THE INSIDE "LIP" OF COLLAR TO BE PAINTED WITH FLUORESCENT WHITE PAINT OR COVERED WITH FLUORESCENT WHITE TAPE. ALTERNATE: FOR OPTIONAL SINGLE PIECE RISER INSTALLATION SEE SHEET 4 OF 4.
3. CLEAN VALVE BOX OF ALL DEBRIS DOWN TO THE NUT OF THE VALVE; NUT SHALL OPERATE WITH NO OBSTRUCTION.
4. WHERE CASTINGS TO BE REMOVED REQUIRE EXCAVATION GREATER THAN 20" DEEP, CONTRACTOR MAY ELECT TO FILL EXCAVATION WITH CONTROLLED LOW STRENGTH MATERIAL (SPEC. ITEM 402S) TO THE UNDERSIDE OF THE CONCRETE. PAVEMENT PATCH IN LIEU OF COMPACTED BACKFILL.
5. REINFORCING STEEL SHALL MEET SPEC. ITEM 406S.7.
6. NO MORE THAN 2 SECTIONS OF PIPE SHALL BE USED FROM VALVE TO FINAL GRADE.
7. BELL AND SPIGOT IS ACCEPTABLE FOR DEPTH OVER 18'.

CITY OF AUSTIN AUSTIN WATER	TYPICAL GATE VALVE 4" - 16"	
RECORD COPY SIGNED BY KATHI L FLOWERS 05/18/2016 ADOPTED	THE ARCHITECT/ENGINEER ASSUMES RESPONSIBILITY FOR APPROPRIATE USE OF THIS STANDARD.	STANDARD NO. 511-AW-01 4 OF 4

NOTES (CONT'):
8. PAVING FRAME SHALL BE FLUSH WITH THE CONC. PAD AND PLACED ½" - 2" ABOVE RISER PIPE (FRAME SHALL NOT REST ON RISER.)
9. IN UNPAVED AREAS, INSTALL ONE DELINEATOR STAKE IMMEDIATELY ADJACENT TO THE EDGE OF THE CONCRETE PAD. DELINEATOR SHALL BE BLUE FOR POTABLE WATER AND PURPLE FOR RECLAIMED WATER AND SHALL EXTEND AT LEAST 60" ABOVE GROUND. DELINEATORS SHALL HAVE 2" WIDE, WHITE IN COLOR, TYPE I REFLECTIVE TAPE MOUNTED DIAGONALLY AT 12" SPACING ON BOTH SIDES.
10. VALVE SHALL TYPICALLY BE CENTERED IN CONCRETE DIAMOND BUT MAY BE OFFSET WITH A MIN. OF 12" FROM CENTER OF VALVE LID TO EDGE OF CONCRETE IN ALL DIRECTIONS.
11. MIN. TOTAL DEPTH OF ASPHALT PLUS CONC. IS 9" AND MIN. DEPTH OF CONC. PAD SHALL BE 5"

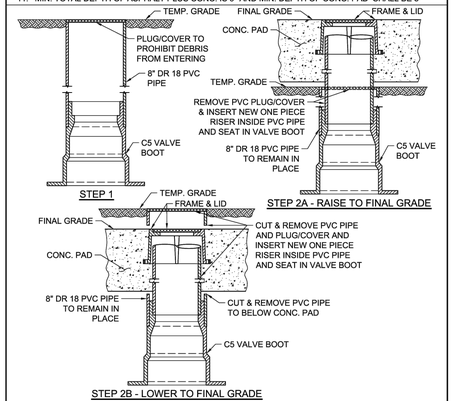

OPTIONAL ONE PIECE VALVE CASTING INSTALLATION

CITY OF AUSTIN AUSTIN WATER	TYPICAL GATE VALVE 4" - 16"	
RECORD COPY SIGNED BY KATHI L FLOWERS 05/18/2016 ADOPTED	THE ARCHITECT/ENGINEER ASSUMES RESPONSIBILITY FOR APPROPRIATE USE OF THIS STANDARD.	STANDARD NO. 511-AW-01 4 OF 4

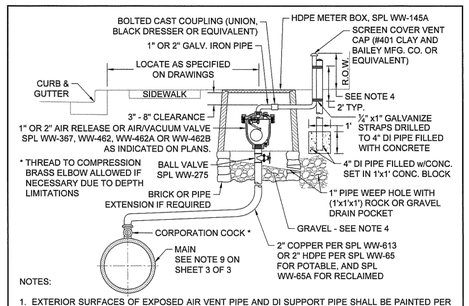

NOTES:
1. EXTERIOR SURFACES OF EXPOSED AIR VENT PIPE AND DI SUPPORT PIPE SHALL BE PAINTED PER SPL WW-3C. POTABLE WATER PIPE SHALL BE PAINTED SAFETY BLUE.
2. AIR VENT PIPE INSTALLATION SHALL BE AS NEAR AS PRACTICAL TO RIGHT-OF-WAY LINE WITH MINIMUM CLEARANCE OF 18" FROM ANY OBSTACLE.
3. HDPE METER BOX PENETRATION SHALL BE CORE BIT DRILLED. VOID SHALL BE FILLED WITH LINKSEAL LS 300 OR APPROVED EQUAL.
4. COMPACTED COARSE GRAVEL OR BROKEN STONE MIXED WITH SAND SLOPED TO DRAIN.
5. IN UNDEVELOPED AREAS, THE AIR VENT PIPE SHALL BE 4' MIN. IN HEIGHT SUPPORTED BY A 4" DIA. DI PIPE WHICH HAS BEEN FILLED WITH CONCRETE (SUPPORT PIPE SHALL BE 6' LONG, BURIED IN CLASS A CONCRETE OR CLSM 3' BELOW FINAL GRADE AND EXTENDING 3' ABOVE FINAL GRADE). INSTALL ONE DELINEATOR STAKE WITHIN 3' OF THE VAULT ON THE VEHICULAR ACCESS SIDE OF VAULT OR AS DIRECTED BY AUSTIN WATER. DELINEATOR SHALL BE BLUE FOR POTABLE WATER AND SHALL EXTEND AT LEAST 60" ABOVE GROUND. DELINEATORS SHALL HAVE 2" WIDE, WHITE IN COLOR, TYPE I REFLECTIVE TAPE MOUNTED DIAGONALLY AT 12" SPACING ON BOTH SIDES. IN DEVELOPED AREAS, THE AIR VENT PIPE SHALL BE 8" - 12" IN HEIGHT AND LOCATED NOT TO CONFLICT WITH SIDEWALK, DRIVEWAY, OR OTHER PEDESTRIAN TRAFFIC.
6. THE AIR VALVE AND ASSOCIATED PIPING SHALL BE INSTALLED ABOVE THE HIGHEST ELEVATION OF THE WATER MAIN. AIR VALVE PIPING, FROM THE WATER MAIN TO THE AIR VALVE, SHALL MAINTAIN A CONSTANT RISE, WITH NO DIPS, TO THE TOP OF THE GROUND.

1" - 2" AIR RELEASE OR AIR/VACUUM VALVE INSTALLATION - TYPE I

RECLAIMED WATER: ALL RECLAIMED PVC PIPE SHALL BE MANUFACTURED PURPLE PIPE. HDPE PIPE SHALL BE MANUFACTURED WITH PURPLE STRIPES. ALL OTHER PIPE AND APPURTENANCES SHALL BE MANUFACTURED PURPLE IF AVAILABLE. ALL PIPE AND FITTINGS THAT ARE NOT AVAILABLE FROM THE MANUFACTURER IN PURPLE SHALL BE PAINTED PURPLE PER SPL WW-3C. ALL BURIED DI AND CI PIPE AND FITTINGS SHALL ALSO BE WRAPPED IN PURPLE POLYETHYLENE PER SPL WW-27D. ALL COVERS SHALL HAVE "RECLAIMED WATER" CAST INTO THEM.

CITY OF AUSTIN AUSTIN WATER	AIR RELEASE AND AIR/VACUUM VALVE	
Kathi L. Flowers 05/18/2016 ADOPTED	THE ARCHITECT/ENGINEER ASSUMES RESPONSIBILITY FOR APPROPRIATE USE OF THIS STANDARD.	STANDARD NO. 511-AW-04 1 OF 3

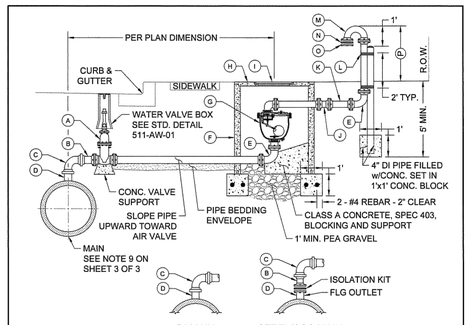

A. GATE VALVE (FLG x FLG). GATE VALVE SHALL NOT BE INSTALLED DIRECTLY ABOVE WATER MAIN.
B. PIPE FLG x FACTORY RESTRAINED JOINT SPIGOT END.
C. 90° BEND w/FACTORY RESTRAINED JOINT BELL ENDS, SPL WW-27F.
D. FOR DI MAIN: WELDED-ON OUTLET w/FACTORY RESTRAINED JOINT SPIGOT END.
FOR STEEL/CSC MAIN: WELDED-ON FLANGED OUTLET w/ISOLATION KIT AND FLG x FACTORY RESTRAINED SPIGOT END.
E. 90° BEND (FLG x FLG).
F. CLASS III RCP VAULT 60" MIN. I.D.
G. AIR RELEASE VALVE w/GOOSENECK PER AIR RELEASE VALVES FOR WATER SPL WW-367 OR AIR RELEASE/VACUUM RELIEF VALVES FOR POTABLE WATER SPL WW-462A OR AIR RELEASE/VACUUM RELIEF VALVES FOR RECLAIMED WATER SPL WW-462B OR AIR RELEASE/AIR VACUUM VALVE FOR WASTEWATER SPL WW-462B.
H. REINFORCED PRECAST CONCRETE LID (AASHTO H-20 LOADING).
I. COA FRAME AND 32" COVER WITH LETTERING MODIFIED FOR WATER.
J. BOLTED CAST COUPLING (SMITH-BLAIR 441 OMNI CAST COUPLING OR APPROVED EQUAL).
K. AIR VENT PIPE, 3" PIPE - GALVANIZED IRON, 4" AND LARGER PIPE - DI ONLY.
L. ¾" x1" GALVANIZE STRAPS DRILLED TO 4" DI PIPE FILLED w/CONCRETE (SEE NOTE 7).
M. RETURN BEND (FLG x FLG).
N. No. 16 MESH BRASS CLOTH
O. COMPANION FLANGE (SEE NOTE 5).
P. 4' MIN. - UNDEVELOPED AREAS.

3" OR LARGER AIR/VACUUM VALVE INSTALLATION - TYPE II

CITY OF AUSTIN AUSTIN WATER	AIR RELEASE AND AIR/VACUUM VALVE	
Kathi L. Flowers 05/18/2016 ADOPTED	THE ARCHITECT/ENGINEER ASSUMES RESPONSIBILITY FOR APPROPRIATE USE OF THIS STANDARD.	STANDARD NO. 511-AW-04 2 OF 3

NOTES:
1. ON 10" AND LARGER TWO PIECE COMBINATION AIR VALVES, THE OUTLET PIPING OF THE SMALL VALVE SHALL BE VENTED WITHIN THE VAULT INTO THE LARGER VENT PIPE
2. AIR VENT PIPE 6" AND LARGER SHALL BE DI (CLASS 350 MIN.) PIPE FLANGE FITTINGS AND EXTERIOR SURFACES OF ALL EXPOSED PIPE SHALL BE PAINTED PER SPL WW-3C. POTABLE WATER PIPE SHALL BE PAINTED SAFETY BLUE. SURFACE PREPARATION SHALL BE PER PAINT MANUFACTURER'S REQUIREMENTS.
3. ENTIRE AIR VENT ASSEMBLY SHALL BE LOCATED WITHIN EASEMENT OR R.O.W.
4. CONCRETE PIPE PENETRATIONS SHALL BE CORE BIT DRILLED. VOID SHALL BE SEALED w/LINKSEAL LS 300 OR APPROVED EQUAL.
5. CROSS SECTIONAL AREA OF OPENING TO BE EQUAL TO OR GREATER THAN CROSS SECTIONAL AREA OF AIR VENT PIPE.
6. AIR/VACUUM VALVE SHALL BE INSTALLED IN A MANNER WHICH WILL ALLOW REMOVAL OF ASSEMBLY WITHOUT REMOVAL OF PRECAST CONCRETE LID.
7. IN UNDEVELOPED AREAS, THE AIR VENT PIPE SHALL BE 4' MIN. IN HEIGHT SUPPORTED BY A 4" DIA. DI PIPE WHICH HAS BEEN FILLED WITH CONCRETE (SUPPORT PIPE SHALL BE 6' LONG, BURIED IN CLASS A CONCRETE OR CLSM 3' BELOW FINAL GRADE AND EXTENDING 3' ABOVE FINAL GRADE). INSTALL ONE DELINEATOR STAKE WITHIN 3' OF THE VAULT ON THE VEHICULAR ACCESS SIDE OF VAULT OR AS DIRECTED BY AUSTIN WATER. DELINEATOR SHALL BE BLUE FOR POTABLE WATER AND SHALL EXTEND AT LEAST 60" ABOVE GROUND. DELINEATORS SHALL HAVE 2" WIDE, WHITE IN COLOR, TYPE I REFLECTIVE TAPE MOUNTED DIAGONALLY AT 12" SPACING ON BOTH SIDES. IN DEVELOPED AREAS, THE AIR VENT PIPE SHALL BE LOCATED NOT TO CONFLICT WITH SIDEWALK, DRIVEWAY, OR OTHER PEDESTRIAN TRAFFIC.
8. GATE VALVE, PIPE, AND FITTINGS FROM MAIN TO ARV SHALL BE OF EQUAL DIAMETER AS THE AIR VALVE EXCEPT 3" ARV SHALL HAVE 4" FITTINGS AND A 4"x3" REDUCER AT THE ARV, AND ALL PIPE AND FITTINGS ON THE OUTLET SIDE OF THE ARV SHALL BE EQUAL TO THE SIZE OF THE OUTLET OF THE ARV. VAULTS SHALL BE 5' DIAMETER FOR 3" VALVE; 6' DIAMETER FOR 4", 6", AND 8" VALVES; AND 7' DIAMETER FOR 10" AND 12" VALVES.
9. FOR 24" AND LARGER MAINS, AN 18" OUTLET WITH BLIND FLANGE SHALL BE INSTALLED AT CONNECTION OF ARV.

3" OR LARGER AIR/VACUUM VALVE INSTALLATION - TYPE II

RECLAIMED WATER: ALL RECLAIMED PVC PIPE SHALL BE MANUFACTURED PURPLE PIPE. HDPE PIPE SHALL BE MANUFACTURED WITH PURPLE STRIPES. ALL OTHER PIPE AND APPURTENANCES SHALL BE MANUFACTURED PURPLE IF AVAILABLE. ALL PIPE AND FITTINGS THAT ARE NOT AVAILABLE FROM THE MANUFACTURER IN PURPLE SHALL BE PAINTED PURPLE PER SPL WW-3C. ALL BURIED DI AND CI PIPE AND FITTINGS SHALL ALSO BE WRAPPED IN PURPLE POLYETHYLENE PER SPL WW-27D. ALL COVERS SHALL HAVE "RECLAIMED WATER" CAST INTO THEM.

CITY OF AUSTIN AUSTIN WATER	AIR RELEASE AND AIR/VACUUM VALVE	
Kathi L. Flowers 05/18/2016 ADOPTED	THE ARCHITECT/ENGINEER ASSUMES RESPONSIBILITY FOR APPROPRIATE USE OF THIS STANDARD.	STANDARD NO. 511-AW-04 3 OF 3

REV. NO.	REVISION DESCRIPTION	APPROVED BY:	DATE

CobbFendley
TBPE NO. F-274 / TBPLS NO. 10046701
9600 N. MOPAC EXPRESSWAY, SUITE 800
AUSTIN, TEXAS 78759
512.834.9798 | FAX 512.834.7727
WWW.COBBFENDLEY.COM

STANDARD WATER DETAILS SHEET 1

RM 2243 W/WW RELOCATIONS
LEANDER, TEXAS

City of Leander

PROJ. NO.	1903-099-24 15
DESIGN:	R. RODRIGUEZ
DRAWN:	R. RODRIGUEZ
CHECK:	L. PRINCE
APPR:	K. VAN HOOSIER
DATE:	3/5/2025

INTERIM REVIEW
Not intended for construction, bidding or permit purposes.
Engineer: KRISTEN VAN HOOSIER
P.E. Serial No.: 136882
Date: March 5, 2025

3/5/2025

THESE DESIGN DOCUMENTS ARE NOT TO BE USED FOR CONSTRUCTION PRIOR TO REGULATORY SIGNATURE AND PERMIT.

SHEET
C-501

Dwg Info: G:\CFA\2014\0308801_Williamson_County--2013_Road_Bond\MUN\46_RM2243\01\DESIGN\C-501-DET.dwg -- Tab: DETL-WATR-01 -- Plotted: 3/5/2025 10:35 PM By: RACHAEL NEWTON

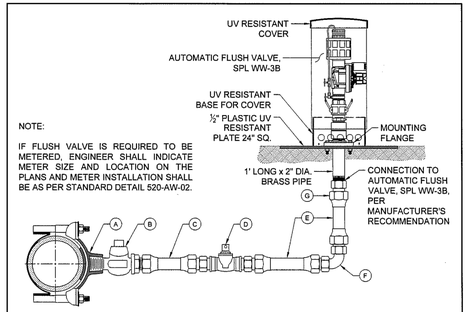

NOTE:

IF FLUSH VALVE IS REQUIRED TO BE METERED, ENGINEER SHALL INDICATE METER SIZE AND LOCATION ON THE PLANS AND METER INSTALLATION SHALL BE AS PER STANDARD DETAIL 520-AW-02.

A. 2" SERVICE CLAMP
B. 2" CORPORATION STOP MALE THREAD INLET BY COMPRESSION OUTLET
C. 2" COPPER WATER SERVICE TUBING EXTENDED BEYOND PAVEMENT
D. BALL VALVE, SPL WW-275 (SIZE EQUAL TO "E")
E. 2" COPPER TUBING PER SPL WW-613 OR 2" HDPE PER SPL WW-65 FOR POTABLE AND PER SPL WW-65A FOR RECLAIMED
F. 2" BRASS 90° BEND, COMPRESSION x COMPRESSION OR HDPE WITH STIFFENERS PER SPL WW-65B AT ALL CONNECTIONS
G. 2" BRASS COUPLING, COMPRESSION x FIP

NOTES:
1. AUTOMATIC FLUSH VALVE MAY ALSO BE USED ON TAPPED PLUGS AND CAPS.
2. THE CONTRACTOR SHALL PROVIDE THE FLUSH VALVE ACCESS KEY TO AUSTIN WATER UPON FLUSH VALVE ACCEPTANCE.
3. VALVE "D" SHALL NOT BE LOCATED MORE THAN 36" BELOW FLUSH VALVE OR MORE THAN 24" HORIZONTALLY FROM FLUSH VALVE. VALVE "D" SHALL NOT BE LOCATED IN A SIDEWALK OR DRIVEWAY.
4. METER BOX (IF REQUIRED) AND FLUSH VALVE SHALL NOT BE LOCATED IN A SIDEWALK, DRIVEWAY, PEDESTRIAN WAY OR TRAFFIC WAY. TEMPORARY FLUSH VALVES SHALL BE LOCATED AS SHOWN ON APPROVED PLANS.
5. A DRAINAGE WAY, CONTAINED WITHIN THE R.O.W. OR AN EASEMENT, SHALL BE PROVIDED FROM FLUSH VALVE TO STORM SEWER SYSTEM OR PUBLIC DRAINAGE WAY.
6. DESIGN ENGINEER SHALL PROVIDE CALCULATIONS WITH PLANS AT THE TIME OF REVIEW INCLUDING FREQUENCY AND FLUSH RATE REQUIRED TO CIRCULATE WATER IN DEAD END MAIN EVERY 72 HOURS.

CITY OF AUSTIN AUSTIN WATER	AUTOMATIC FLUSH VALVE	
Kathi L. Flowers 05/18/2016 ADOPTED	THE ARCHITECT/ENGINEER ASSUMES RESPONSIBILITY FOR APPROPRIATE USE OF THIS STANDARD.	STANDARD NO. 511-AW-05 1 OF 1

FIRE HYDRANTS LACKING INTEGRAL STORZ CONNECTOR SHALL BE REJECTED (NO STORZ ADAPTERS ALLOWED)

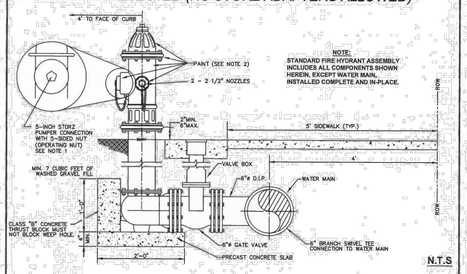

NOTES:
1. FIRE HYDRANT SHALL BE CLOW MEDALLION F2545, AMERICAN DARLING B-84-B-5, MUELLER SUPER CENTURION, EJ 5CD250 WATERMASTER, KENNEDY K81D GUARDIAN, AVK 2780, OR APPROVED EQUAL VIA SUBMITTAL PROCESS. THE PRIMARY FEATURES REQUIRED INCLUDE: FACTORY INSTALLED INTEGRAL 5-INCH STORZ PUMPER NOZZLE; 1.5-INCH PENT OPERATING NUT ON NOZZLE CAP, OPEN LEFT; FACTORY PAINTED.
2. HYDRANTS SHALL BE FACTORY PAINTED WITH FLINT ALUMINUM SILVER PAINT OR SHERWIN WILLIAMS SILVER B59S11. HYDRANTS WILL NOT BE ACCEPTED IF PAINTED AFTER DELIVERY OR IF PAINT IS FLAT IN APPEARANCE.
3. ALL DUCTILE OR CAST IRON FITTINGS AND/OR PIPE SHALL BE POLYWRAPPED.
4. ALL HYDRANTS SHALL BE EQUIPPED WITH A BREAKAWAY FLANGE. ALL FITTINGS SHALL BE EQUIPPED WITH JOINT RESTRAINT "MEGALUG" OR APPROVED EQUAL. ALL ANCHOR FITTING TO BE CONCRETE THRUST BLOCKED.
5. BLUE, BI-DIRECTIONAL REFLECTIVE PAVEMENT MARKER. ULTIMATE WET NIGHT VISIBILITY SHALL BE INSTALLED PER MANUFACTURER'S RECOMMENDATION AT THE CORRESPONDING ROADWAY STATION OFFSET 6" (SIX INCHES) FROM CENTER OF STREET TO THE SIDE HYDRANT IS LOCATED. AT INTERSECTIONS, MARKERS SHALL BE PLACED ON BOTH ROADWAYS ADJACENT TO HYDRANT.

LOCATION:
6. SET F.H. ON LOT LINE (EXTENDED WHEN POSSIBLE).
7. F.H. LOCATED AT STREET INTERSECTIONS SHALL BE PLACED A MINIMUM OF TEN FEET (10') FROM RADIUS TANGENT POINT.
8. NO OBSTRUCTIONS SHALL BE PERMITTED WITHIN THREE FEET (3') IN ALL DIRECTIONS FROM F.H.
9. 5-INCH STORZ PUMPER NOZZLE SHALL FACE THE FIRE LANE OR TRAVEL WAY UNLESS OTHERWISE NOTED.

Wayne A. Watts 02/05/19

City Of Leander, Texas
DETAIL #101-4
STANDARD FIRE HYDRANT ASSEMBLY

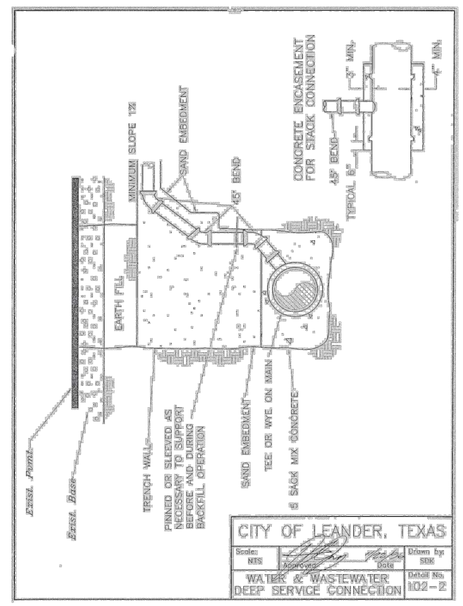

CITY OF LEANDER, TEXAS

Scales: NTS	Accepted: Date	Drawn by: SDK
WATER & WASTEWATER DEEP SERVICE CONNECTION		Detail No. 102-2

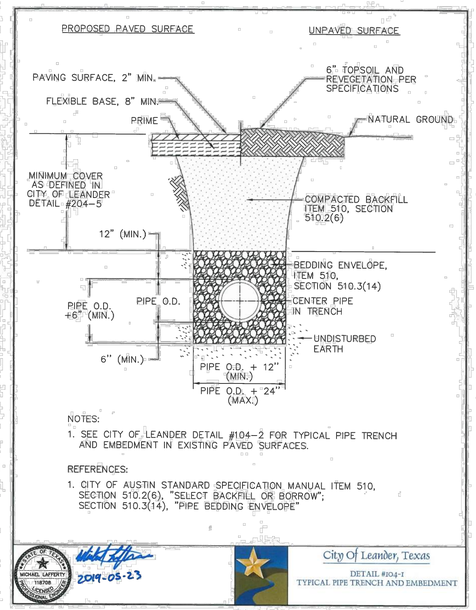

NOTES:
1. SEE CITY OF LEANDER DETAIL #104-2 FOR TYPICAL PIPE TRENCH AND EMBEDMENT IN EXISTING PAVED SURFACES.

REFERENCES:
1. CITY OF AUSTIN STANDARD SPECIFICATION MANUAL ITEM 510, SECTION 510.2(6), "SELECT BACKFILL OR BORROW"; SECTION 510.3(14), "PIPE BEDDING ENVELOPE"

MICHAEL LAFFERTY 136700 — 2019-05-23

City of Leander, Texas
DETAIL #104-1
TYPICAL PIPE TRENCH AND EMBEDMENT

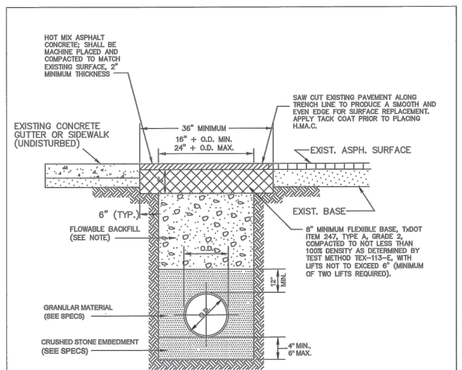

NOTES:
FLOWABLE BACKFILL SHALL CONSIST OF A MIXTURE OF NATIVE SOILS OR MANUFACTURED MATERIALS, CEMENT AND/OR FLY ASH, AND WATER WHICH PRODUCES A MATERIAL WITH UNCONFINED COMPRESSIVE STRENGTH OF BETWEEN 250 AND 450 PSI AFTER 28 DAYS. ANY MATERIALS USED SHALL BE PRIMARILY GRANULAR, WITH A PLASTICITY INDEX <12 AND WITH 100% PASSING A 3/4 INCH SIEVE. THE FLOWABLE MIXTURE SHALL BE MIXED IN A PUG MILL, CONCRETE MIXER, OR TRANSIT MIXER AND SHALL HAVE A MINIMUM SLUMP OF 5 INCHES. THE FLOWABLE MIXTURE MUST BE ALLOWED TO SET PRIOR TO THE PACEMENT OF ANY OVERLAYING MATERIAL.

ONE CONCRETE CYLINDER WILL BE REQUIRED FOR TESTING AND WILL BE FABRICATED BY THE CITY INSPECTOR.

THE PUBLIC WORKS DEPARTMENT IS TO BE CONTACTED AT 259-2640 PRIOR TO COMMENCEMENT OF BACKFILL OPERATIONS.

Wayne A. Watts 4/20/12

City Of Leander, Texas
DETAIL #104-2
TYPICAL TRENCH AND H.M.A.C. SURFACE REMOVAL AND REPLACEMENT DETAIL

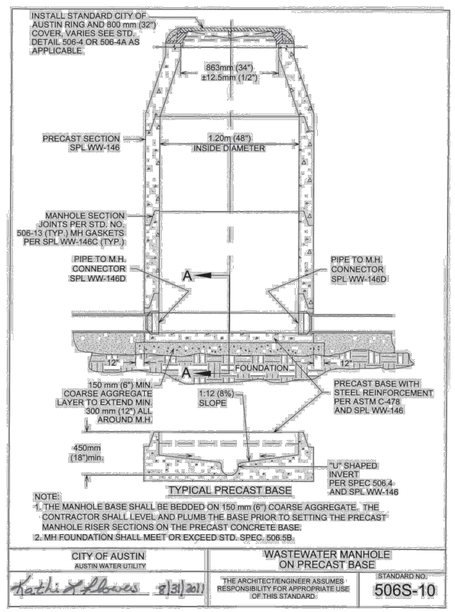

NOTE:
1. THE MANHOLE BASE SHALL BE BEDDED ON 150 mm (6") COARSE AGGREGATE. THE CONTRACTOR SHALL LEVEL AND PLUMB THE BASE PRIOR TO SETTING THE PRECAST MANHOLE RISER SECTIONS ON THE PRECAST CONCRETE BASE.
2. MH FOUNDATION SHALL MEET OR EXCEED STD. SPEC. 506.5B.

CITY OF AUSTIN AUSTIN WATER UTILITY	WASTEWATER MANHOLE ON PRECAST BASE	
Kathi L. Flowers 2/3/2017	THE ARCHITECT/ENGINEER ASSUMES RESPONSIBILITY FOR APPROPRIATE USE OF THIS STANDARD.	STANDARD NO. 506S-10

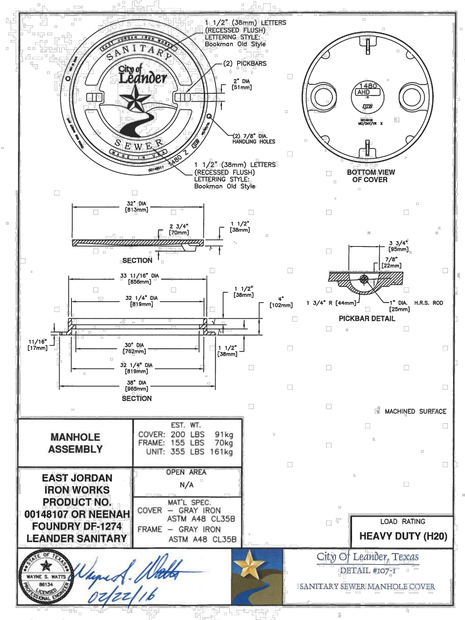

MANHOLE ASSEMBLY	EST. WT. COVER: 200 LBS 91kg FRAME: 155 LBS 70kg UNIT: 355 LBS 161kg	
EAST JORDAN IRON WORKS PRODUCT NO. 00148107 OR NEENAH FOUNDRY DF-1274 LEANDER SANITARY	OPEN AREA N/A	
	MAT'L SPEC. COVER – GRAY IRON ASTM A48 CL35B FRAME – GRAY IRON ASTM A48 CL35B	LOAD RATING HEAVY DUTY (H20)

Wayne A. Watts 02/22/16

City Of Leander, Texas
DETAIL #107-1
SANITARY SEWER MANHOLE COVER

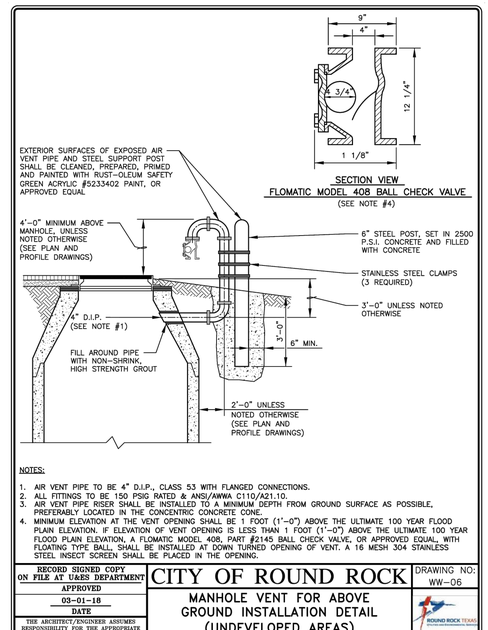

NOTES:
1. AIR VENT PIPE TO BE 4" D.I.P., CLASS 53 WITH FLANGED CONNECTIONS.
2. ALL FITTINGS TO BE 150 PSIG RATED & ANSI/AWWA C110/A21.10.
3. AIR VENT PIPE RISER SHALL BE INSTALLED TO A MINIMUM DEPTH FROM GROUND SURFACE AS POSSIBLE, PREFERABLY LOCATED IN THE CONCENTRIC CONCRETE CONE.
4. MINIMUM ELEVATION AT THE VENT OPENING SHALL BE 1 FOOT (1'-0") ABOVE THE ULTIMATE 100 YEAR FLOOD PLAIN ELEVATION. IF ELEVATION OF VENT OPENING IS LESS THAN 1 FOOT (1'-0") ABOVE THE ULTIMATE 100 YEAR FLOOD PLAIN ELEVATION, A FLOMATIC MODEL 408, PART #2145 BALL CHECK VALVE, OR APPROVED EQUAL, WITH FLOATING TYPE BALL, SHALL BE INSTALLED AT DOWN TURNED OPENING OF VENT. A 16 MESH 304 STAINLESS STEEL INSECT SCREEN SHALL BE PLACED IN THE OPENING.

RECORD SIGNED COPY ON FILE AT UARS DEPARTMENT	CITY OF ROUND ROCK	DRAWING NO: WW-06
APPROVED 03-01-18 DATE THE ARCHITECT/ENGINEER ASSUMES RESPONSIBILITY FOR THE APPROPRIATE USE OF THIS DETAIL (NOT TO SCALE)	MANHOLE VENT FOR ABOVE GROUND INSTALLATION DETAIL (UNDEVELOPED AREAS)	

REV. NO.	REVISION DESCRIPTION	APPROVED BY:	DATE

CobbFendley
TBPE NO. F-274 / TBPLS NO. 10046701
9600 N. MOPAC EXPRESSWAY, SUITE 800
AUSTIN, TEXAS 78759
512.834.9798 | FAX 512.834.7727
WWW.COBBFENDLEY.COM

STANDARD WATER DETAILS SHEET 2

RM 2243 W/WW RELOCATIONS
LEANDER, TEXAS

City of Leander

PROJ. NO.	1903-099-24 15
DESIGN:	R. RODRIGUEZ
DRAWN:	R. RODRIGUEZ
CHECK:	L. PRINCE
APPR:	K. VAN HOOSIER
DATE:	3/5/2025

INTERIM REVIEW
Not intended for construction, bidding or permit purposes.
Engineer: KRISTEN VAN HOOSIER
P.E. Serial No.: 136882
Date: March 5, 2025

3/5/2025

THESE DESIGN DOCUMENTS ARE NOT TO BE USED FOR CONSTRUCTION PRIOR TO REGULATORY SIGNATURE AND PERMIT.

SHEET
C-502

Dwg Info: G:\CFA\2014\0308801_Williamson_County_2013_Road_Bond\MUN\46_RM2243\01\DESIGN\C-501-DET.dwg - Tab: DETL-WATR-02 - Plotted: 3/5/2025 10:35 PM By: RACHAEL NEWTON

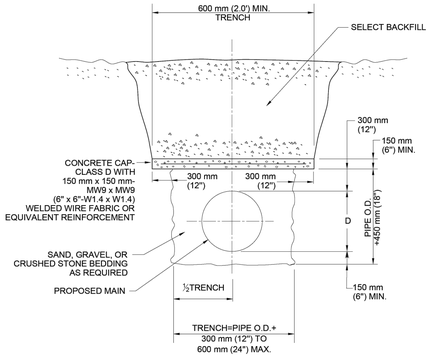

CITY OF AUSTIN WATER AND WASTEWATER UTILITY	CONCRETE TRENCH CAP	
RECORD COPY SIGNED BY KATHI F. PAYNE 2/17/00 ADOPTED	THE ENGINEER/ARCHITECT ASSUMES RESPONSIBILITY FOR APPROPRIATE USE OF THIS STANDARD. MODIFICATIONS TO THIS STANDARD ARE PROHIBITED.	STANDARD NO. 510S-1 1 OF 1

REV. NO.	REVISION DESCRIPTION	APPROVED BY:	DATE

CobbFendley
TBPE NO. F-274 / TBPLS NO. 10046701
9600 N. MOPAC EXPRESSWAY, SUITE 800
AUSTIN, TEXAS 78759
512.834.9798 | FAX 512.834.7727
WWW.COBBFENDLEY.COM

STANDARD WATER DETAILS SHEET 3

RM 2243 W/WW RELOCATIONS
LEANDER, TEXAS

City of Leander

PROJ. NO. 1903-099-24 15
DESIGN: R. RODRIGUEZ
DRAWN: R. RODRIGUEZ
CHECK: L. PRINCE
APPR: K. VAN HOOSIER
DATE: 3/7/2025

INTERIM REVIEW
Not intended for construction, bidding or permit purposes.
Engineer: KRISTEN VAN HOOSIER
P.E. Serial No.: 136882
Date: March 7, 2025

3/7/2025

THESE DESIGN DOCUMENTS ARE NOT TO BE USED FOR CONSTRUCTION PRIOR TO REGULATORY SIGNATURE AND PERMIT.

SHEET
C-503

Dwg Info: G:\CFA\2014\0308801_Williamson_County_2013_Road_Bond\MUN\46_RM2243\01\DESIGN\C-501-DET.dwg – Tab: STANDARD WATER DETAILS SHEET 3 – Plotted: 3/7/2025 12:54 AM By: OSCAR SAENZ