Texas Commission on Environmental Quality

Edwards Aquifer Application Cover Page

Our Review of Your Application

The Edwards Aquifer Program staff conducts an administrative and technical review of all applications. The turnaround time for administrative review can be up to 30 days as outlined in 30 TAC 213.4(e). Generally administrative completeness is determined during the intake meeting or within a few days of receipt. The turnaround time for technical review of an administratively complete Edwards Aquifer application is 90 days as outlined in 30 TAC 213.4(e). Please know that the review and approval time is directly impacted by the quality and completeness of the initial application that is received. In order to conduct a timely review, it is imperative that the information provided in an Edwards Aquifer application include final plans, be accurate, complete, and in compliance with 30 TAC 213.

Administrative Review

1. Edwards Aquifer applications must be deemed administratively complete before a technical review can begin. To be considered administratively complete, the application must contain completed forms and attachments, provide the requested information, and meet all the site plan requirements. The submitted application and plan sheets should be final plans. Please submit one full-size set of plan sheets with the original application, and half-size sets with the additional copies.

   To ensure that all applicable documents are included in the application, the program has developed tools to guide you and web pages to provide all forms, checklists, and guidance. Please visit the below website for assistance: http://www.tceq.texas.gov/field/eapp.

2. This Edwards Aquifer Application Cover Page form (certified by the applicant or agent) must be included in the application and brought to the administrative review meeting.

3. Administrative reviews are scheduled with program staff who will conduct the review. Applicants or their authorized agent should call the appropriate regional office, according to the county in which the project is located, to schedule a review. The average meeting time is one hour.

4. In the meeting, the application is examined for administrative completeness. Deficiencies will be noted by staff and emailed or faxed to the applicant and authorized agent at the end of the meeting, or shortly after. Administrative deficiencies will cause the application to be deemed incomplete and returned.

   An appointment should be made to resubmit the application. The application is re-examined to ensure all deficiencies are resolved. The application will only be deemed administratively complete when all administrative deficiencies are addressed.

5. If an application is received by mail, courier service, or otherwise submitted without a review meeting, the administrative review will be conducted within 30 days. The applicant and agent will be contacted with the results of the administrative review. If the application is found to be administratively incomplete, it can be retrieved from the regional office or returned by regular mail. If returned by mail, the regional office may require arrangements for return shipping.

6. If the geologic assessment was completed before October 1, 2004 and the site contains "possibly sensitive" features, the assessment must be updated in accordance with the *Instructions to Geologists* (TCEQ-0585 Instructions).

Technical Review

1. When an application is deemed administratively complete, the technical review period begins. The regional office will distribute copies of the application to the identified affected city, county, and groundwater conservation district whose jurisdiction includes the subject site. These entities and the public have 30 days to provide comments on the application to the regional office. All comments received are reviewed by TCEQ.

2. A site assessment is usually conducted as part of the technical review, to evaluate the geologic assessment and observe existing site conditions. The site must be accessible to our staff. The site boundaries should be

clearly marked, features identified in the geologic assessment should be flagged, roadways marked and the alignment of the Sewage Collection System and manholes should be staked at the time the application is submitted. If the site is not marked the application may be returned.

3. We evaluate the application for technical completeness and contact the applicant and agent via Notice of Deficiency (NOD) to request additional information and identify technical deficiencies. There are two deficiency response periods available to the applicant. There are 14 days to resolve deficiencies noted in the first NOD. If a second NOD is issued, there is an additional 14 days to resolve deficiencies. If the response to the second notice is not received, is incomplete or inadequate, or provides new information that is incomplete or inadequate, the application must be withdrawn or will be denied. Please note that because the technical review is underway, whether the application is withdrawn or denied **the application fee will be forfeited**.
4. The program has 90 calendar days to complete the technical review of the application. If the application is technically adequate, such that it complies with the Edwards Aquifer rules, and is protective of the Edwards Aquifer during and after construction, an approval letter will be issued. Construction or other regulated activity may not begin until an approval is issued.

Mid-Review Modifications

It is important to have final site plans prior to beginning the permitting process with TCEQ to avoid delays.

Occasionally, circumstances arise where you may have significant design and/or site plan changes after your Edwards Aquifer application has been deemed administratively complete by TCEQ. This is considered a "Mid-Review Modification". Mid-Review Modifications may require redistribution of an application that includes the proposed modifications for public comment.

If you are proposing a Mid-Review Modification, two options are available:

- If the technical review has begun your application can be denied/withdrawn, your fees will be forfeited, and the plan will have to be resubmitted.
- TCEQ can continue the technical review of the application as it was submitted, and a modification application can be submitted at a later time.

If the application is denied/withdrawn, the resubmitted application will be subject to the administrative and technical review processes and will be treated as a new application. The application will be redistributed to the affected jurisdictions.

Please contact the regional office if you have questions. If your project is located in Williamson, Travis, or Hays County, contact TCEQ's Austin Regional Office at 512-339-2929. If your project is in Comal, Bexar, Medina, Uvalde, or Kinney County, contact TCEQ's San Antonio Regional Office at 210-490-3096

Please fill out all required fields below and submit with your application.

1. Regulated Entity Name: Shell Road						**2. Regulated Entity No.:**			
3. Customer Name: City of Georgetown						**4. Customer No.: 600412043**			
5. Project Type: **(Please circle/check one)**	New		Modification			Extension		Exception	
6. Plan Type: **(Please circle/check one)**	WPAP	CZP	SCS	UST	AST	EXP	EXT	Technical Clarification	Optional Enhanced Measures
7. Land Use: **(Please circle/check one)**	Residential		Non-residential			**8. Site (acres):**			19.89
9. Application Fee:	$6500		**10. Permanent BMP(s):**			Jellyfish Filter			
11. SCS (Linear Ft.):			**12. AST/UST (No. Tanks):**			N/A			
13. County:	Williamson		**14. Watershed:**			Pecan Branch and Berry Creek			

Application Distribution

Instructions: Use the table below to determine the number of applications required. One original and one copy of the application, plus additional copies (as needed) for each affected incorporated city, county, and groundwater conservation district are required. Linear projects or large projects, which cross into multiple jurisdictions, can require additional copies. Refer to the "Texas Groundwater Conservation Districts within the EAPP Boundaries" map found at:

http://www.tceq.texas.gov/assets/public/compliance/field_ops/eapp/EAPP%20GWCD%20map.pdf

For more detailed boundaries, please contact the conservation district directly.

Austin Region			
County:	**Hays**	**Travis**	**Williamson**
Original (1 req.)	___	___	___
Region (1 req.)	___	___	___
County(ies)	___	___	Williamson
Groundwater Conservation District(s)	___Edwards Aquifer Authority ___Barton Springs/ Edwards Aquifer ___Hays Trinity ___Plum Creek	___Barton Springs/ Edwards Aquifer	NA
City(ies) Jurisdiction	___Austin ___Buda ___Dripping Springs ___Kyle ___Mountain City ___San Marcos ___Wimberley ___Woodcreek	___Austin ___Bee Cave ___Pflugerville ___Rollingwood ___Round Rock ___Sunset Valley ___West Lake Hills	___Austin ___Cedar Park ___Florence X Georgetown ___Jerrell ___Leander ___Liberty Hill ___Pflugerville ___Round Rock

San Antonio Region					
County:	**Bexar**	**Comal**	**Kinney**	**Medina**	**Uvalde**
Original (1 req.)	___	___	___	___	___
Region (1 req.)	___	___	___	___	___
County(ies)	___	___	___	___	___
Groundwater Conservation District(s)	___ Edwards Aquifer Authority ___Trinity-Glen Rose	___Edwards Aquifer Authority	___Kinney	___EAA ___Medina	___EAA ___Uvalde
City(ies) Jurisdiction	___Castle Hills ___Fair Oaks Ranch ___Helotes ___Hill Country Village ___Hollywood Park ___San Antonio (SAWS) ___Shavano Park	___Bulverde ___Fair Oaks Ranch ___Garden Ridge ___New Braunfels ___Schertz	NA	___San Antonio ETJ (SAWS)	NA

I certify that to the best of my knowledge, that the application is complete and accurate. This application is hereby submitted to TCEQ for administrative review and technical review.
Alexis Woffenden
Print Name of Customer/Authorized Agent
05/09/2025
Signature of Customer/Authorized Agent Date

FOR TCEQ INTERNAL USE ONLY				
Date(s)Reviewed:		Date Administratively Complete:		
Received From:		Correct Number of Copies:		
Received By:		Distribution Date:		
EAPP File Number:		Complex:		
Admin. Review(s) (No.):		No. AR Rounds:		
Delinquent Fees (Y/N):		Review Time Spent:		
Lat./Long. Verified:		SOS Customer Verification:		
Agent Authorization Complete/Notarized (Y/N):		Fee Check:	Payable to TCEQ (Y/N):	
Core Data Form Complete (Y/N):			Signed (Y/N):	
Core Data Form Incomplete Nos.:			Less than 90 days old (Y/N):	

Edwards Aquifer Protection Program Roadway Application

Texas Commission on Environmental Quality

This application is intended only for projects which a major roadway is designed for construction, such as State highways, County roads, and City thoroughfares.

Designed for Regulated Activities on the Contributing Zone to the Edwards Aquifer in relation to 30 TAC §213.24, Regulated Activities on the Edwards Aquifer Recharge Zone, in relation to 30 TAC §213.5(b), Effective June 1, 1999.

To ensure that the application is administratively complete, confirm that all fields in the form are complete, verify that all requested information is provided, consistently reference the same site and contact person in all forms in the application, and ensure forms are signed by the appropriate party.

Note: Including all the information requested in the form and attachments contributes to more streamlined technical reviews.

Signature

To the best of my knowledge, the responses to this form accurately reflect all information requested concerning the proposed regulated activities and methods to protect the Edwards Aquifer.

The application was prepared by:

Print Name of Customer/Agent: Alexis Woffenden, P.E.

Date: 05/09/2025

Signature of Customer/Agent:



Project Information

1. Regulated Entity (Project) Name: Shell Road
2. County: Williamson
3. Stream Basin(s): Pecan Branch and Berry Creek
4. Groundwater Conservation District (if applicable): _____
5. Customer (Applicant):

   Contact Person: Chris Pousson
   Entity: City of Georgetown
   Mailing Address: P.O. Box 409
   City, State: Georgetown,TX Zip: 78627
   Telephone: 512-930-8162
   Email Address: chris.pousson@georgetown.org

6. Agent (Representative):

   Contact Person: Alexis Woffenden, P.E.
   Entity: BGE, Inc.
   Mailing Address: 1701 Directors Blvd.
   City, State: Austin, TX Zip: 78744
   Telephone: 512-795-1416
   Email Address: awoffenden@bgeinc.com

7. Landowner of R.O.W. (Right of Way)
   Person or entity responsible for maintenance of water quality Best Management Practices (BMPs), if not applicant.

   Contact Person: Chris Pousson
   Entity: City of Georgetown
   Mailing Address: P.O. Box 409
   City, State: Georgetown,TX Zip: 78627
   Telephone: 512-930-8162
   Email Address: chris.pousson@georgetown.org

8. ☒ **The TCEQ must be able to inspect the project site or the application will be returned**. Sufficient survey marking is provided on the project to allow TCEQ regional staff to locate the boundaries and alignment of any regulated activities and the geologic or manmade features noted in the Geologic Assessment.

   ☒ Survey marking will be completed by this date: 05/09/2025

9. ☒ **Attachment A - Road Map**. A road map showing directions to and the location of the project site is attached. The map clearly shows the boundary of the project site.

10. ☒ **Attachment B - USGS Quadrangle**. A copy of the official 7 ½ minute USGS Quadrangle Map (Scale: 1" = 2000') is attached. The map(s) clearly show:

    ☒ Project site boundaries
    ☒ USGS Quadrangle Name(s)
    ☒ All drainage paths from site to surface waters

11. ☒ **This project extends into (Check all that apply):**

    ☒ Recharge Zone (RZ)
    ☐ Contributing Zone (CZ)
    ☐ Transition Zone (TZ)
    ☐ Contributing Zone within Transition Zone (CZ/TZ)
    ☐ Zone not regulated by EAPP

12. ☒ **Attachment C - Project Description**. A detailed narrative description of the proposed project is attached. The project description is consistent throughout the application and contains, at a minimum, the following details:

- ☒ Complete site area [Acres]
- ☒ Offsite upgradient stormwater areas to be captured
- ☒ Impervious area [Acres]
- ☒ Permanent BMP(s)
- ☒ Proposed site use
- ☒ Existing roadway (paved and/or unpaved)
- ☒ Structures to be demolished [Include demo phase]
- ☒ Major interim phases

13. Existing project site conditions are noted below:

- ☒ Existing paved and/or unpaved roads
- ☐ Undeveloped (Cleared)
- ☐ Undeveloped (Undisturbed/Not cleared)
- ☐ Existing commercial site
- ☐ Existing industrial site
- ☐ Existing residential site
- ☐ Other: _____

14. ☒ **Attachment D - Factors Affecting Surface Water Quality**. A detailed description of all factors that could affect surface water quality is attached.

15. ☒ Only inert materials as defined by 30 TAC §330.3 will be used as fill material.

16. Type of pavement or road surface to be used:

- ☐ Concrete
- ☒ Asphaltic concrete pavement
- ☐ Permeable Friction Course (PFC)
- ☐ Other: _____

17. Right of Way (R.O.W.) and Pavement Area:

R.O.W. for project: 19.89 (ac.)
Length: 6,104 ft.
Width: varies from 51 ft. to 93 ft.
Impervious cover (IC): 13.07 (ac.)
Total of Pavement area 13.07 (ac.) ÷ R.O.W. area 19.89 (ac.) x 100 = 65.7% IC.

- ☒ CAD program was used to determine areas.
- ☒ Number of travel lanes: proposed: 4, existing: 2
- ☒ Typical widths of lanes: 12 (ft.)
- ☒ Are intersections also being improved? (Y/N) Y

Site Plan Requirements

Items 18 - 28 must be included on the Site Plan.

18. ☒ The Site Plan must have a minimum scale of 1" = 400'.
    Site Plan Scale: 1" = 50'

19. 100-year floodplain boundaries:

    ☐ Some part(s) of the project site is located within the 100-year floodplain. The floodplain is shown and labeled. The 100-year floodplain boundaries are based on the following specific (including date of material) source(s): _____.

    ☒ No part of the project site is located within the 100-year floodplain.

20. ☒ A layout of the development with existing and finished contours at appropriate, but not greater than ten-foot contour intervals is shown. Sensitive features, lots, wells, buildings, roads, culverts, etc. are shown on the site plan.

21. ☒ A figure (map) indicating all paths of drainage from the site to surface waters.

    ☒ Name all stream crossings: Pecan Branch and Berry Creek
    ☒ Drainage patterns and approximate slopes.
    ☐ There will be no discharge to surface waters.

22. ☒ Distinguish between areas of soil disturbance and areas which will not be disturbed.

23. ☒ Show locations of major structural and nonstructural controls. These are the temporary and permanent best management practices. Include the following:

    ☐ Show design and location of any hazardous materials traps.
    ☐ Show design at outfalls of major control structures and conveyances.
    ☒ A description of the BMPs and measures that prevent pollutants from entering surface streams.

24. Show locations of staging areas or project specific locations (PSL). Are they:

    ☒ Onsite, within project R.O.W.
    ☐ Offsite.
    ☐ Not yet determined. (Requires future authorization)

25. ☒ Show locations where soil stabilization practices are expected to occur.

26. ☒ Show surface waters (including wetlands).

27. Temporary aboveground storage tank facilities:

    ☐ Temporary aboveground storage tank facilities will be located on this site. Show on site plan.
    ☒ Temporary aboveground storage tank facilities will not be located on this site.

28. ☒ Plan(s) also include:

    ☐ Sidewalks
    ☒ Related turn lanes
    ☒ Demolition plans
    ☐ Other improved areas: _____
    ☒ Shared-use paths
    ☐ Off-site improvements and staging areas
    ☒ Utility relocations

Permanent Best Management Practices (BMPs)

Description of practices and measures that will be used after construction is completed.

29. ☒ Permanent BMPs and measures have been designed, and will be constructed, operated, and maintained to ensure that 80% of the incremental increase in the annual mass loading of total suspended solids (TSS) from the site caused by the regulated activity is removed. These quantities have been calculated in accordance with technical guidance accepted by the executive director.

    ☒ The TCEQ Technical Guidance Manual (TGM) was used to design permanent BMPs and measures for this site.

    ☒ A technical guidance other than the TCEQ TGM was used to design permanent BMPs and measures for this site. The complete citation for the technical guidance that was used: City of Georgetown UDC 11.07.040

30. ☒ **Attachment E - BMPs for Upgradient (Offsite) Stormwater.**

    ☒ A description of the BMPs and measures that will be used to prevent pollution of surface water, groundwater, or stormwater that originates upgradient from the site and flows across the site is attached.

    ☐ No surface water, groundwater or stormwater originates upgradient from the site and flows across the site, and an explanation is attached.

    ☐ Permanent BMPs or measures are not required to prevent pollution of surface water, groundwater, or stormwater that originates upgradient from the site and flows across the site, and an explanation is attached.

31. ☒ **Attachment F - BMPs for On-site Stormwater**.

    ☒ A description of the BMPs and measures that will be used to prevent pollution of surface water or groundwater that originates on-site or flows off the site, including pollution caused by contaminated stormwater runoff from the site is attached.

    ☐ Permanent BMPs or measures are not required to prevent pollution of surface water or groundwater that originates on-site or flows off the site, including pollution caused by contaminated stormwater runoff, and an explanation is attached.

32. ☒ **Attachment G - Construction Plans**. Construction plans and design calculations for the proposed permanent BMPs and measures have been prepared by or under the direct supervision of a Texas Licensed Professional Engineer, and are signed, sealed, and dated. Construction plans for the proposed permanent BMPs and measures are attached and include all proposed structural plans and specifications, and appropriate details.

    ☒ Major bridge cross-sections, and roadway plan and profiles

    ☒ BMP plans and details

    ☒ Design calculations

    ☒ Erosion control

    ☒ TCEQ Construction Notes

    ☒ SW3P

    ☐ EPIC, as necessary

33. ☒ **Attachment H - Inspection, Maintenance, Repair and Retrofit Plan**. A site and BMP specific plan for the inspection, maintenance, repair, and, if necessary, retrofit of the permanent BMPs and measures is attached. The plan fulfills all the following:

    ☒ Prepared and certified by the engineer designing the permanent BMPs and measures.
    ☒ Signed by the owner or responsible party.
    ☒ Outlines specific procedures for documenting inspections, maintenance, repairs, and, if necessary, retrofit.
    ☒ Contains a discussion of recordkeeping procedures.

34. ☐ **Attachment I - Pilot-Scale Field Testing Plan.** Pilot studies for BMPs that are not recognized by the Executive Director require prior approval from the TCEQ. A plan for pilot-scale field testing is attached.

    ☒ N/A

35. ☒ **Attachment J - Measures for Minimizing Surface Stream Contamination.** A description of the measures that will be used to avoid or minimize surface stream contamination and changes in the way in which water enters a stream as a result of the construction and development is attached. The measures address increased stream flashing, the creation of stronger flows, and in-stream effects caused by the regulated activity which increase erosion or may result in water quality degradation.

    ☐ Include permanent spill measures used to contain hydrocarbons or hazardous substances by way of traps, or response contingencies.

36. The applicant is responsible for maintaining the permanent BMPs after construction until such time as the maintenance obligation is either assumed in writing by another entity.

    If the applicant intends to transfer responsibility, check the box below.

    ☐ Yes

    A copy of the transfer of responsibility must be filed with the executive director at the appropriate regional office within 30 days.

Stormwater to be generated by the Proposed Project

Description of practices and measures that will be used during construction.

37. ☒ The site description, controls, maintenance, and inspection requirements for the Storm Water Pollution Prevention Plan (SWPPP or SW3P) developed under the Texas Pollutant Discharge Elimination System (TPDES) general permits for stormwater discharges have been submitted to fulfill paragraphs 30 TAC §213.24(1-5) & §213.5(b) of the technical report.

    ☒ The Temporary Stormwater Section (TCEQ-0602) is included with the application.
    ☐ The SWPPP (SW3P) will serve as the Temporary Stormwater Section (TCEQ-0602).

38. ☒ **Attachment K - Volume and Character of Stormwater**. A detailed description of the volume (quantity) and character (quality) of the stormwater runoff expected to occur from the proposed project is attached. The estimates of stormwater runoff quality and quantity are based on area and type of impervious cover.

    ☒ Include the pre-construction runoff coefficient.
    ☒ Include the post-construction runoff coefficient.

Administrative Information

39. ☒ Submit one (1) original and one (1) copy of the application, plus one electronic copy as needed, for each affected incorporated city, groundwater conservation district, and county in which the project will be located. The TCEQ is required to distribute the additional copies to these jurisdictions.

40. The fee for the plan(s) is based on:

    ☒ The total R.O.W. (as in Item 17).

    ☐ TxDOT roadway project.



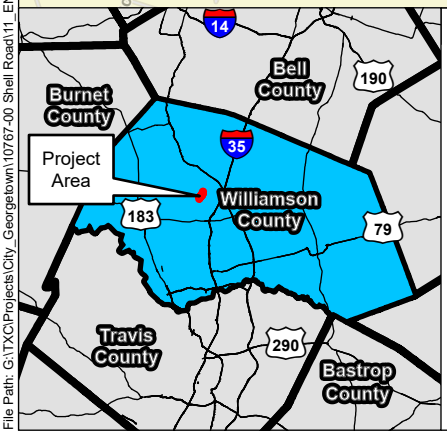

Legend

Project Area

0 1 2 Kilometers

0 0.5 1 Miles

BGE, Inc.
101 West Louis Henna Blvd, Suite 400
Austin, TX 78728
Tel: 512-879-0400 Fax: 512-879-0499
www.bgeinc.com

Shell Road Improvements Project

Figure 1:
Project Vicinity Map
Williamson County, TX

Date: July 2023 | Proj. No: 10767-00

File Path: G:\TXC\Projects\City_Georgetown\10767-00 Shell Road\11_ENV\GIS\Shell Road Arch Maps.aprx

GIS Analyst: lbach



USGS U.S. DEPARTMENT OF THE INTERIOR
U.S. GEOLOGICAL SURVEY

The National Map OnDemand Topo

7.5-MINUTE TOPO QUADRANGLE
Custom Extent
7.5-MINUTE TOPO

Produced by the United States Geological Survey

SCALE 1:24 000

ROAD CLASSIFICATION

7.5-MINUTE TOPO, TX
2025

0 1,000 2,000 Meters

0 3,000 6,000 US Feet

N

CellGrid_7_5Minute
Shell Road Footprint

SHELL ROAD

BGE, Inc.
10777 Westheimer, Suite 500, Houston TX 77042
Tel: 281-558-8700 Fax: 281-558-9701
www.bgeinc.com

USGS QUAD MAP

September 2024	Proj. No: 9986-03	Exhibit No: 4

ATTACHMENT C-PROJECT DESCRIPTION

The City of Georgetown is proposing the expansion of Shell Road within Williamson County. Shell Road will be widened from a two-lane road to a divided four-lane road from Williams Drive to 1,200-feet northeast of Sycamore Street. The project is approximately 1.4 miles. The project will also include a 10-ft Shared Use Path (SUP). The project is located within the City of Georgetown city limits. The project is located within the Edwards Aquifer Recharge Zone. The project remains outside of regulatory FEMA floodplains per FEMA FIRM maps 48491C0280E and 48491C0290E effective 09/26/2008. The project area is 19.89 acres. The offsite area draining toward the project area is 160 acres. The offsite areas around the project are currently single family and commercial lots.

The existing Shell Road roadway from Williams Drive to 1,200-feet northeast of Sycamore Street consists of two traveling lanes approximately 11-feet wide. The proposed roadway will consist of four (4) new 12-feet travel lanes with a 16-foot wide median. The proposed pavement section consists of proof roll subgrade with geogrid base reinforcement fabric, 10.5-inch thick flexible base material, prime coat, two and a half (2.5) inches of asphaltic surface material (HMA Type C), tack coat, and two (2) inches of asphaltic surface material (HMA Type D). The proposed roadway will have a curb and gutter along the both sides of the road with a crown along the centerline of the road and cross-slope of 1.5% to 3% sloping toward the curb and gutter. Runoff from the road will drain toward the curb and gutter and be collected by curb inlets along the proposed roadway. A portion of the offsite areas drain toward the road to be collected by a proposed ditch. The ditch drains area inlet which discharges into the proposed storm sewer system in Shell Road. Collected runoff will be treated by Jellyfish Filter Stormwater Treatment systems prior to discharging at cross-culverts.

The proposed RM 2243 roadway has profile slopes that range roughly between 0.22% and 2.16%. The cross slope ranges between 1.5% and 3% from the crown of the road to the proposed curb and gutters. The project is located within the Pecan Branch and Berry Creek watersheds which are tributaries to the San Gabriel River.

TCEQ guidelines state projects must provide 80% TSS removal for increased impervious cover over the Edwards Aquifer Recharge Zone. The City of Georgetown requires 85% TSS removal for projects within the city's jurisdiction. Treatment for the total increase in impervious cover associated with this project is to be provided by two proposed Jellyfish Filter Stormwater Treatment systems located along Shell Road just before discharge into cross-culverts. The Jellyfish Filter Stormwater Treatment system will provide enough treatment to meet the required 85% removal of the increase in TSS created by the project. The existing impervious cover for the site is 6.88 acres. The proposed impervious cover for the site is 13.07 acres which is an increase of 6.19 acres in impervious cover.

ATTACHMENT D - FACTORS AFFECTING SURFACE WATER QUALITY

Construction Activities:

Sediment from disturbed areas from clearing and grubbing exercises, earthwork for drainage channels, paving operations, concrete flatwork construction, concrete wash out areas and stockpile runoff have the potential of mixing with storm water runoff during construction. These sediments will be contained with temporary BMPs as outlined in the SWPPP.

Operation:

After construction has been completed and the roadway is in operation, runoff from the roadway will have some amounts of total suspended solids (TSS) and oil and grease (O&G). The proposed Jellyfish Stormwater Treatment permanent BMPs shall treat these runoff contaminants prior to discharging to any streams or tributaries.

ATTACHMENT E – BMPS FOR UPGRADIENT STORMWATER

Areas where upgradient storm water flows into the right-of-way will be intercepted and conveyed by the existing roadway ditches to low point discharge areas until the proposed storm sewer system has been constructed. Silt fencing or biodegradable erosion control longs placed along the right-of-way boundary will serve to filter any runoff that discharges outside of the right-of-way. The retained flows within the right-of-way will be filtered through a series of rock berms and biodegradable erosion control logs prior to discharging to streams. The proposed silt fencing, biodegradable erosion control logs and rock berm locations are shown on the SWPPP sheets of the Construction Plans.

After construction has been completed, all areas from the proposed edge of paving to the proposed right-of-way, shall be stabilized. Most areas within the project area will drain to two Jellyfish Filter Treatment systems.

ATTACHMENT F – BMPS FOR ON-SITE STORMWATER

During roadway construction, the contractor shall install permanent seeding and two Jellyfish Filter Treatment Systems along the length of the proposed roadway. Permanent BMPs are to be installed per TCEQ and local requirements and prior to the removal of temporary BMPs.

As surface water flows from and through the project areas, the proposed permanent BMPs will prevent pollution by preventing additional sediment runoff and filtering the pollutants (listed in "Attachment B – Potential Sources of Contamination") prior to any runoff leaving the site. As shown in the attached SWPPP plans, permanent seeding will minimize soil runoff from disturbed areas.

Jellyfish Filter Treatment Systems were designed according to TCEQ technical guidance as the BMP for on-site stormwater. Removal of 7,822 lbs of TSS shall be accomplished to obtain the desired level of water quality treatment based on the TCEQ and City of Georgetown guidelines. The table below provides existing impervious cover amounts (Existing Cover), proposed impervious cover amounts (Proposed Cover), segments of roadway treated by Jellyfish Filter Treatment Systems (Jellyfish Treatment), required TSS amount to be removed per TCEQ guidelines (TCEQ Lm), required TSS amount to be removed per City of Geogetown guidelines (Georgetown Lm), and TSS amount to be removed by Jellyfish Filter Treatment Systems (Lr).

Table 1. Jellyfish Filter Treatment Calculations.

	ROW Area	Existing Cover	Proposed Cover	Jellyfish	TCEQ Lm	Georgetown Lm	Lr
	Acres	Acres	Acres	Treatment	lbs	lbs	lbs
DA 1	2.20	1.67	2.04	Yes	322	342	1945
DA 2	5.38	2.49	4.87	No	2045	2201	
DA 3	6.95	2.72	6.16	Yes	2994	3181	5877
TOTAL	14.53	6.88	13.07		5,362	5,724	7,822

In using the aforementioned treatment methods and maintaining natural drainage patterns downgradient of the proposed site, any flow to natural occurring sensitive features, both known and unknown, will be maintained.

ATTACHMENT G – CONSTRUCTION PLANS

ATTACHMENT H – INSPECTION, MAINTENANCE, REPAIR, AND RETROFIT PLAN

Jellyfish Filter Stormwater Treatment

Inspections. Inspections should take place, at minimum, quarterly to ensure that the system is serviced at the appropriate times. The attached Jellyfish Filter Stormwater Treatment Maintenance Guide provides instructions and details on the Inspection Procedure during both wet and dry weather conditions. Inspection activities can include observing: the amount of debris/trash in the interceptor, any damages to the coalescing plates, and the oil and sediment levels. A sample inspection and maintenance log is included in the Maintenance Guide that follows.

Maintenance. The unit must be cleaned annually, which includes the removal and disposal of all water, sediment, and debris. The maintenance procedure is included in the Jellyfish Filter Stormwater Treatment Maintenance Guide in the following pages. Material disposal and accumulated sediment found in the system must be handled and disposed of in accordance with TCEQ and City of Georgetown regulatory protocols – refer to the Technical Guidance on Best Management Practices (RG-348) for further information.

Repair and Retrofit. With each inspection, any damage to components of the Jellyfish Filter Stormwater Treatment should be identified and repaired immediately. Additional information related to the replacement of Jellyfish Filter Stormwater Treatment parts is included in the following documents.

Soil Stabilization Practice (Seeding, Sodding, Preservation of Natural Resources)

Inspections. Maintenance forces will review roadways and roadsides on a regular basis, most of which are visited within a weekly cycle and/or according to City of Georgetown standards. Drainage ditches and structures are inspected after large storms with consideration for any damage to grass cover, litter accumulation, or erosion. Any problem areas are duly noted particularly if there is an absence of vegetation, any accumulation of brush, debris or litter, and/or any areas of significant erosion. These items will then be scheduled for repair on priority basis.

Maintenance. Litter, debris, and brush accumulation is assessed not only for aesthetic reasons but also for the tendency to clog drainage paths or impede the intended flow of a structure's hydraulic design. Areas are cleaned periodically by City forces or by outside contractor. Areas documented as trouble spots are scheduled on a priority basis. Right of Way areas, will be mowed by contract. The cutting height is usually 5-7 inches for all areas, unless otherwise directed by the City. Any vegetated areas that have noxious vegetation, insects, or other pests will be remedied with the minimum amount of selective pesticide necessary to control the pest. All chemicals are EPA labeled, registered, and approved. Personnel licensed and/or trained

according to Texas Department of Agriculture (TDA) laws and regulations will apply pesticides. Records are kept for each application in accordance with TDA laws and regulations.

Repair and Retrofit. If minor retrofit or revegetation is needed for water quality controls, it can be done with maintenance or contracted personnel. Major repairs or changes must come through City of Georgetown staff or its consultants for engineering data and structural approval.

The City of Georgetown CIP Manager may be contacted for questions or concerns that pertain to the maintenance of this facility after it is completed and operating. The current CIP Manager has approved these guidelines and has signed below.

Signature

5/15/24
Date

Printed Name

CONTECH®
ENGINEERED SOLUTIONS

Jellyfish® Filter Maintenance Guide

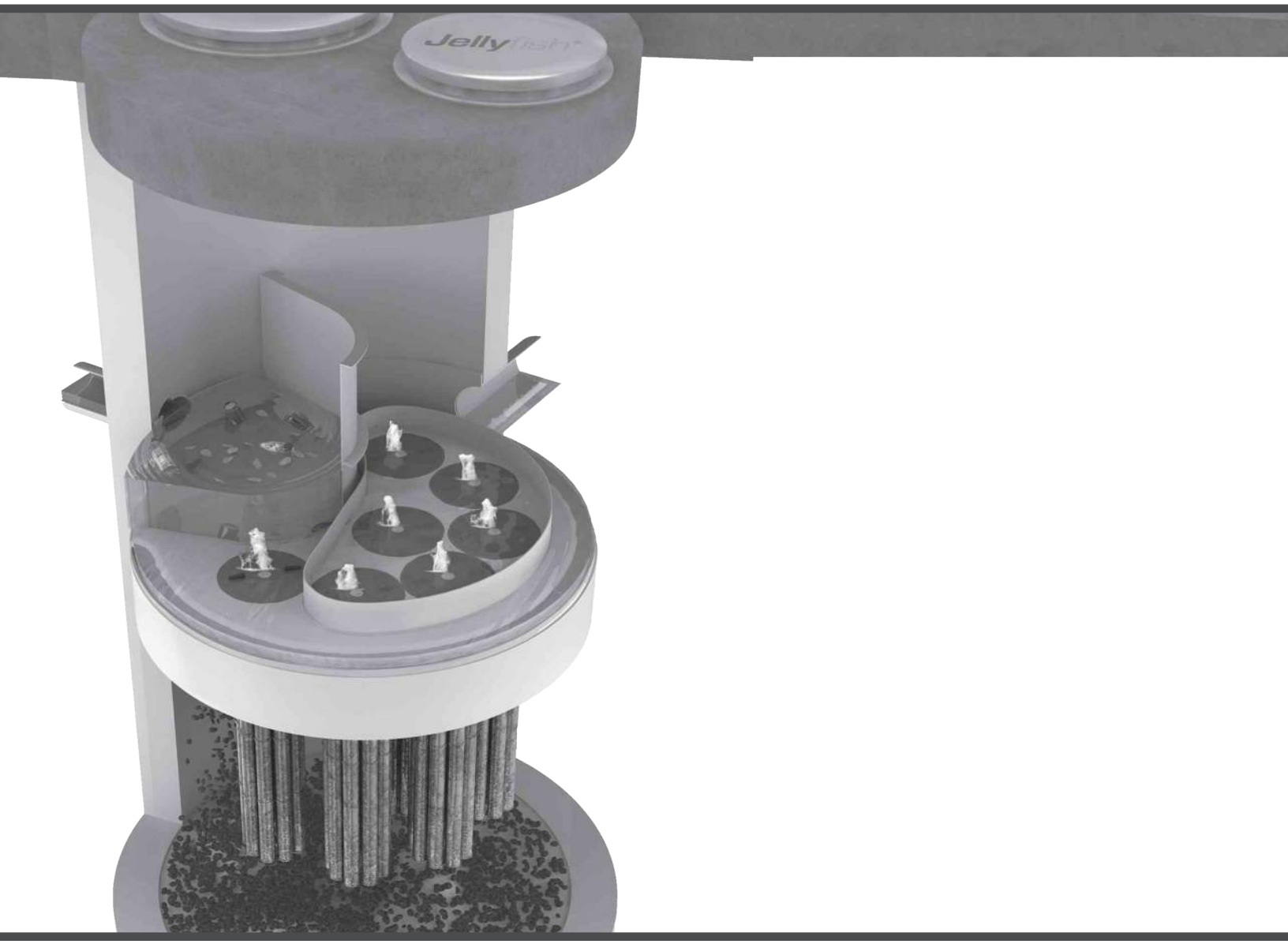

Jellyfish®

JELLYFISH® FILTER
INSPECTION & MAINTENANCE GUIDE

Jellyfish units are often just one of many structures in a more comprehensive stormwater drainage and treatment system.

In order for maintenance of the Jellyfish filter to be successful, it is imperative that all other components be properly maintained. The maintenance and repair of upstream facilities should be carried out prior to Jellyfish maintenance activities.

In addition to considering upstream facilities, it is also important to correct any problems identified in the drainage area. Drainage area concerns may include: erosion problems, heavy oil loading, and discharges of inappropriate materials.

TABLE OF CONTENTS

Inspection and Maintenance Overview 3

Inspection Procedure.....3

Maintenance Procedure.....4

Cartridge Assembly & Cleaning.....5

Inspection Process 7

1.0 Inspection and Maintenance Overview

The primary purpose of the Jellyfish® Filter is to capture and remove pollutants from stormwater runoff. As with any filtration system, these pollutants must be removed to maintain the filter's maximum treatment performance. Regular inspection and maintenance are required to insure proper functioning of the system.

Maintenance frequencies and requirements are site specific and vary depending on pollutant loading. Additional maintenance activities may be required in the event of non-storm event runoff, such as base-flow or seasonal flow, an upstream chemical spill or due to excessive sediment loading from site erosion or extreme runoff events. It is a good practice to inspect the system after major storm events.

Inspection activities are typically conducted from surface observations and include:

- Observe if standing water is present
- Observe if there is any physical damage to the deck or cartridge lids
- Observe the amount of debris in the Maintenance Access Wall (MAW) or inlet bay for vault systems

Maintenance activities include:

- Removal of oil, floatable trash and debris
- Removal of collected sediments
- Rinsing and re-installing the filter cartridges
- Replace filter cartridge tentacles, as needed

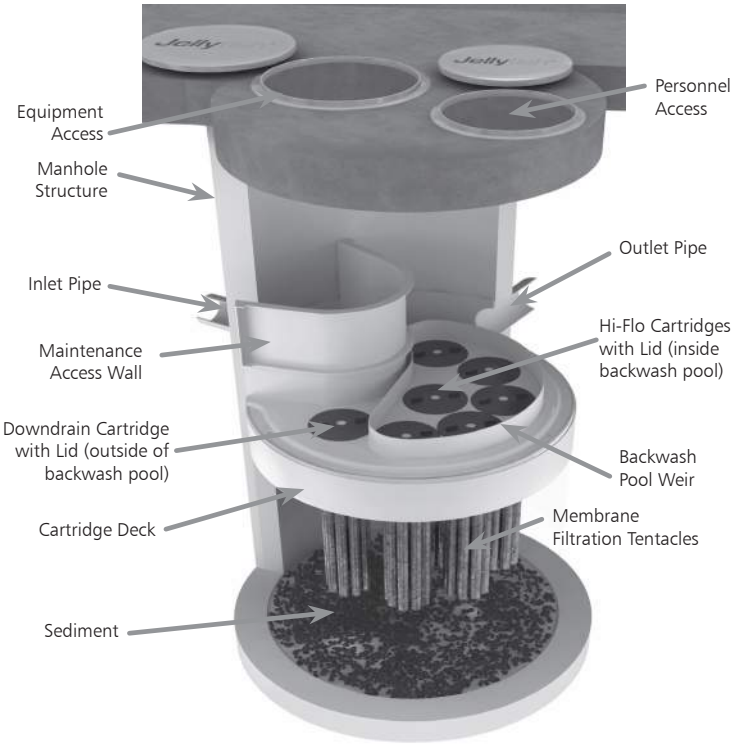

Note: Separator Skirt not shown

2.0 Inspection Timing

Inspection of the Jellyfish Filter is key in determining the maintenance requirements for, and to develop a history of, the site's pollutant loading characteristics. In general, inspections should be performed at the times indicated below; *or per the approved project stormwater quality documents (if applicable), whichever is more frequent*.

1. A minimum of quarterly inspections during the first year of operation to assess the sediment and floatable pollutant accumulation, and to ensure proper functioning of the system.
2. Inspection frequency in subsequent years is based on the inspection and maintenance plan developed in the first year of operation. Minimum frequency should be once per year.
3. Inspection is recommended after each major storm event.
4. Inspection is required immediately after an upstream oil, fuel or other chemical spill.

3.0 Inspection Procedure

The following procedure is recommended when performing inspections:

1. Provide traffic control measures as necessary.
2. Inspect the MAW or inlet bay for floatable pollutants such as trash, debris, and oil sheen.
3. Measure oil and sediment depth in several locations, by lowering a sediment probe until contact is made with the floor of the structure. Record sediment depth, and presences of any oil layers.
4. Inspect cartridge lids. Missing or damaged cartridge lids to be replaced.
5. Inspect the MAW (where appropriate), cartridge deck and receptacles, and backwash pool weir, for damaged or broken components.

3.1 Dry weather inspections

- Inspect the cartridge deck for standing water, and/or sediment on the deck.
- No standing water under normal operating conditions.
- Standing water inside the backwash pool, but not outside the backwash pool indicates, that the filter cartridges need to be rinsed.



Inspection Utilizing Sediment Probe

- Standing water outside the backwash pool is not anticipated and may indicate a backwater condition caused by high water elevation in the receiving water body, or possibly a blockage in downstream infrastructure.
- Any appreciable sediment (≥1/16") accumulated on the deck surface should be removed.

3.2 Wet weather inspections

- Observe the rate and movement of water in the unit. Note the depth of water above deck elevation within the MAW or inlet bay.
- Less than 6 inches, flow should be exiting the cartridge lids of each of the draindown cartridges (i.e. cartridges located outside the backwash pool).
- Greater than 6 inches, flow should be exiting the cartridge lids of each of the draindown cartridges and each of the hi-flo cartridges (i.e. cartridges located inside the backwash pool), and water should be overflowing the backwash pool weir.
- 18 inches or greater and relatively little flow is exiting the cartridge lids and outlet pipe, this condition indicates that the filter cartridges need to be rinsed.

4.0 Maintenance Requirements

Required maintenance for the Jellyfish Filter is based upon results of the most recent inspection, historical maintenance records, or the site specific water quality management plan; whichever is more frequent. In general, maintenance requires some combination of the following:

1. Sediment removal for depths reaching 12 inches or greater, or within 3 years of the most recent sediment cleaning, whichever occurs sooner.
2. Floatable trash, debris, and oil removal.
3. Deck cleaned and free from sediment.
4. Filter cartridges rinsed and re-installed as required by the most recent inspection results, or within 12 months of the most recent filter rinsing, whichever occurs sooner.
5. Replace tentacles if rinsing does not restore adequate hydraulic capacity, remove accumulated sediment, or if damaged or missing. It is recommended that tentacles should remain in service no longer than 5 years before replacement.
6. Damaged or missing cartridge deck components must be repaired or replaced as indicated by results of the most recent inspection.
7. The unit must be cleaned out and filter cartridges inspected immediately after an upstream oil, fuel, or chemical spill. Filter cartridge tentacles should be replaced if damaged or compromised by the spill.

5.0 Maintenance Procedure

The following procedures are recommended when maintaining the Jellyfish Filter:

1. Provide traffic control measures as necessary.
2. Open all covers and hatches. Use ventilation equipment as required, according to confined space entry procedures. *Caution: Dropping objects onto the cartridge deck may cause damage*.
3. Perform Inspection Procedure prior to maintenance activity.
4. To access the cartridge deck for filter cartridge service, descend into the structure and step directly onto the deck. Caution: Do not step onto the maintenance access wall (MAW) or backwash pool weir, as damage may result. Note that the cartridge deck may be slippery.
5. Maximum weight of maintenance crew and equipment on the cartridge deck not to exceed 450 lbs.

5.1 Filter Cartridge Removal

1. Remove a cartridge lid.
2. Remove cartridges from the deck using the lifting loops in the cartridge head plate. Rope or a lifting device (available from Contech) should be used. *Caution: Should a snag occur, do not force the cartridge upward as damage to the tentacles may result. Wet cartridges typically weigh between 100 and 125 lbs*.
3. Replace and secure the cartridge lid on the exposed empty receptacle as a safety precaution. Contech does not recommend exposing more than one empty cartridge receptacle at a time.

5.2 Filter Cartridge Rinsing

1. Remove all 11 tentacles from the cartridge head plate. Take care not to lose or damage the O-ring seal as well as the plastic threaded nut and connector.



Cartridge Removal & Lifting Device

2. Position tentacles in a container (or over the MAW), with the threaded connector (open end) facing down, so rinse water is flushed through the membrane and captured in the container.
3. Using the Jellyfish rinse tool (available from Contech) or a low-pressure garden hose sprayer, direct water spray onto the tentacle membrane, sweeping from top to bottom along the length of the tentacle. Rinse until all sediment is removed from the membrane. *Caution: Do not use a high pressure sprayer or focused stream of water on the membrane. Excessive water pressure may damage the membrane*.

4. Collected rinse water is typically removed by vacuum hose.
5. Reassemble cartridges as detailed later in this document. Reuse O-rings and nuts, ensuring proper placement on each tentacle.

5.3 Sediment and Flotables Extraction

1. Perform vacuum cleaning of the Jellyfish Filter only after filter cartridges have been removed from the system. Access the lower chamber for vacuum cleaning only through the maintenance access wall (MAW) opening. Be careful not to damage the flexible plastic separator skirt that is attached to the underside of the deck on manhole systems. Do not lower the vacuum wand through a cartridge receptacle, as damage to the receptacle will result.
2. Vacuum floatable trash, debris, and oil, from the MAW opening or inlet bay. Alternatively, floatable solids may be removed by a net or skimmer.



Vacuuming Sump Through MAW

3. Pressure wash cartridge deck and receptacles to remove all sediment and debris. Sediment should be rinsed into the sump area. Take care not to flush rinse water into the outlet pipe.
4. Remove water from the sump area. Vacuum or pump equipment should only be introduced through the MAW or inlet bay.
5. Remove the sediment from the bottom of the unit through the MAW or inlet bay opening.



Vacuuming Sump Through MAW

6. For larger diameter Jellyfish Filter manholes (≥8-ft) and some vaults complete sediment removal may be facilitated by removing a cartridge lid from an empty receptacle and inserting a jetting wand (not a vacuum wand) through the receptacle. Use the sprayer to rinse loosened sediment toward the vacuum hose in the MAW opening, being careful not to damage the receptacle.

5.4 Filter Cartridge Reinstallation and Replacement

1. Cartridges should be installed after the deck has been cleaned. It is important that the receptacle surfaces be free from grit and debris.
2. Remove cartridge lid from deck and carefully lower the filter cartridge into the receptacle until head plate gasket is seated squarely in receptacle. ***Caution: Do not force the cartridge downward; damage may occur.***
3. Replace the cartridge lid and check to see that both male threads are properly seated before rotating approximately 1/3 of a full rotation until firmly seated. Use of an approved rim gasket lubricant may facilitate installation. See next page for additional details.
4. If rinsing is ineffective in removing sediment from the tentacles, or if tentacles are damaged, provisions must be made to replace the spent or damaged tentacles with new tentacles. Contact Contech to order replacement tentacles.

5.5 Chemical Spills

Caution: If a chemical spill has been captured, do not attempt maintenance. Immediately contact the local hazard response agency and contact Contech.

5.6 Material Disposal

The accumulated sediment found in stormwater treatment and conveyance systems must be handled and disposed of in accordance with regulatory protocols. It is possible for sediments to contain measurable concentrations of heavy metals and organic chemicals (such as pesticides and petroleum products). Areas with the greatest potential for high pollutant loading include industrial areas and heavily traveled roads. Sediments and water must be disposed of in accordance with all applicable waste disposal regulations. When scheduling maintenance, consideration must be made for the disposal of solid and liquid wastes. This typically requires coordination with a local landfill for solid waste disposal. For liquid waste disposal a number of options are available including a municipal vacuum truck decant facility, local waste water treatment plant or on-site treatment and discharge.

Jellyfish Filter Components & Filter Cartridge Assembly and Installation

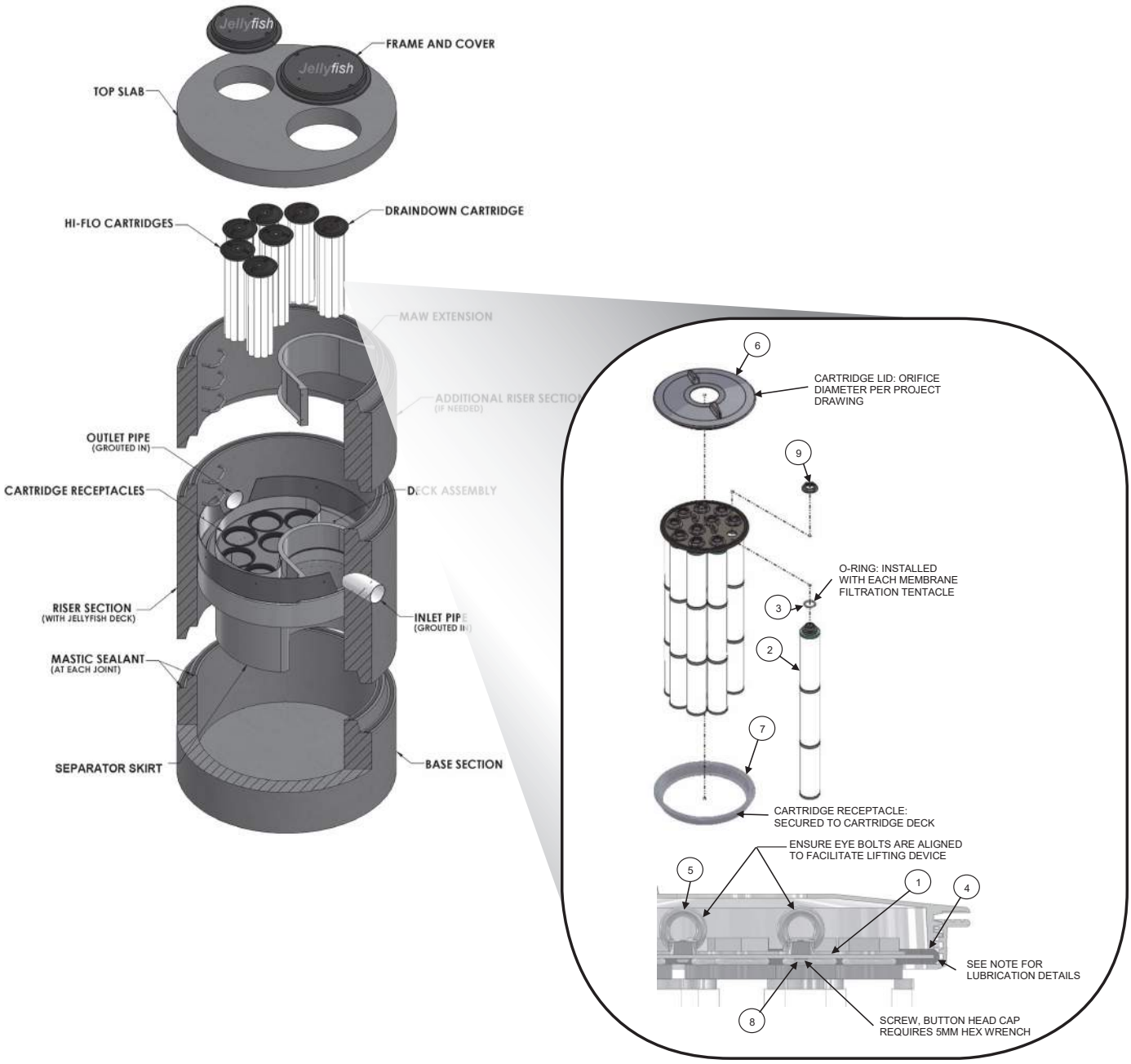

TABLE 1: BOM

ITEM NO.	DESCRIPTION
1	JF HEAD PLATE
2	JF TENTACLE
3	JF O-RING
4	JF HEAD PLATE GASKET
5	JF CARTRIDGE EYELET
6	JF 14IN COVER
7	JF RECEPTACLE
8	BUTTON HEAD CAP SCREW M6X14MM SS
9	JF CARTRIDGE NUT

TABLE 2: APPROVED GASKET LUBRICANTS

PART NO.	MFR	DESCRIPTION
78713	LA-CO	LUBRI-JOINT
40501	HERCULES	DUCK BUTTER
30600	OATEY	PIPE LUBRICANT
PSLUBXL1Q	PROSELECT	PIPE JOINT LUBRICANT

NOTES:

Head Plate Gasket Installation:
Install Head Plate Gasket (Item 4) onto the Head Plate (Item 1) and liberally apply a lubricant from Table 2: Approved Gasket Lubricants onto the gasket where it contacts the Receptacle (Item 7) and Cartridge Lide (ITem 6). Follow Lubricant manufacturer's instructions.

Lid Assembly:
Rotate Cartridge Lid counter-clockwise until both male threads drop down and properly seat. Then rotate Cartridge Lid clock-wise approximately one-third of a full rotation until Cartridge Lid is firmly secured, creating a watertight seal.

Jellyfish Filter Inspection and Maintenance Log

Owner:				Jellyfish Model No:		
Location:				GPS Coordinates:		
Land Use:	Commercial:		Industrial:		Service Station:	
	Roadway/Highway:		Airport:		Residential:	

Date/Time:						
Inspector:						
Maintenance Contractor:						
Visible Oil Present: (Y/N)						
Oil Quantity Removed:						
Floatable Debris Present: (Y/N)						
Floatable Debris Removed: (Y/N)						
Water Depth in Backwash Pool						
Draindown Cartridges externally rinsed and recommissioned: (Y/N)						
New tentacles put on Draindown Cartridges: (Y/N)						
Hi-Flo Cartridges externally rinsed and recommissioned: (Y/N)						
New tentacles put on Hi-Flo Cartridges: (Y/N)						
Sediment Depth Measured: (Y/N)						
Sediment Depth (inches or mm):						
Sediment Removed: (Y/N)						
Cartridge Lids intact: (Y/N)						
Observed Damage:						
Comments:						



Jellyfish®

CONTECH
ENGINEERED SOLUTIONS

800.338.1122
www.ContechES.com

Support

- Drawings and specifications are available at www.conteches.com/jellyfish.
- Site-specific design support is available from Contech Engineered Solutions.
- Find a Certified Maintenance Provider at www.conteches.com/ccmp

© 2019 Contech Engineered Solutions LLC, a QUIKRETE Company

Contech Engineered Solutions LLC provides site solutions for the civil engineering industry. Contech's portfolio includes bridges, drainage, sanitary sewer, stormwater, wastewater treatment and earth stabilization products. For information on other Contech segment offerings, visit ContechES.com or call 800.338.1122

NOTHING IN THIS CATALOG SHOULD BE CONSTRUED AS A WARRANTY. APPLICATIONS SUGGESTED HEREIN ARE DESCRIBED ONLY TO HELP READERS MAKE THEIR OWN EVALUATIONS AND DECISIONS, AND ARE NEITHER GUARANTEES NOR WARRANTIES OF SUITABILITY FOR ANY APPLICATION. CONTECH MAKES NO WARRANTY WHATSOEVER, EXPRESS OR IMPLIED, RELATED TO THE APPLICATIONS, MATERIALS, COATINGS, OR PRODUCTS DISCUSSED HEREIN. ALL IMPLIED WARRANTIES OF MERCHANTABILITY AND ALL IMPLIED WARRANTIES OF FITNESS FOR ANY PARTICULAR PURPOSE ARE DISCLAIMED BY CONTECH. SEE CONTECH'S CONDITIONS OF SALE (AVAILABLE AT WWW.CONTECHES.COM/COS) FOR MORE INFORMATION.

The product(s) described may be protected by one or more of the following US patents: 5,322,629; 5,624,576; 5,707,527; 5,759,415; 5,788,848; 5,985,157; 6,027,639; 6,350,374; 6,406,218; 6,641,720; 6,511,595; 6,649,048; 6,991,114; 6,998,038; 7,186,058; related foreign patents or other patents pending.

ATTACHMENT J – MEASURES FOR MINIMIZING SURFACE STREAM CONTAMINATION

Surface stream contamination will be minimized through the use of Jellyfish Filter Stormwater Treatment systems designed to capture pollutants in runoff from roadway infrastructure along the entire length of the project contributing drainage area, excluding a small portion of the proposed roadway. The Jellyfish Filter Stormwater Treatment systems are designed to capture pollutants before the runoff reaches any down gradient streams. Where cross drainage structures convey concentrated flow to receiving swales or channels, energy dissipation devices, rock rip rap, shallow slopes, and other soil stabilization measures will be used to reduce erosive forces. These measures have been placed downstream of all culverts to minimize erosion and stream degradation.

ATTACHMENT B-VOLUME AND CHARACTER OF STORM WATER

Volume

The project is within the Pecan Branch and Berry Creek watersheds which are both tributaries of the San Gabriel River. The drainage from the proposed roadway will be conveyed to storm water collection system and discharged at the cross-culverts.

Runoff from the roadway combines with off-site runoff draining from the north of Shell Road. The offsite runoff is collected by roadside ditches which either discharge directly at the cross-culverts or discharge into an area inlet that connects to the storm water collection system in Shell Road. The roadside ditches and the storm water collection system was designed to convey the 25-year storm event. The SCS Method was utilized to determine the storm runoff for the 25-year and the 100-year storm event. Existing cross-culverts under Shell Road will be expanded along the project alignment to convey 25-year storm event under Shell Road (see Table 1 below). The SCS method was utilized for analyzing the cross-culvert flow (see Table 2 below). Table 3 provides the existing and proposed impervious cover values for the project area.

Table 1. Existing and Proposed Condition Flows using SCS Method. Systems ON_01A and ON_01B drain to Culvert 1 which is within the Pecan Branch Watershed. System ON_02A drains to Culvert 2 which is within the Berry Creek Watershed.

Curve Number (Existing Condition)

CURVE NUMBER CALCULATIONS

ID	Area (ac)	Rating	Cover Type	CN	Drainage Area ID	Drainage Area (ac)	Drainage Area (sq-mi)	Product	Weighted CN	Note
DA_ON_01A	4.08	D	Good condition (grass cover > 75%)	80	DA_ON_01A	6.57	0.0103	326.17	87	
DA_ON_01A	2.49	D	Paved; curbs and storm drains (excluding right-of-way)	98				243.98		
DA_ON_01B	1.20	D	Good condition (grass cover > 75%)	80	DA_ON_01B	3.07	0.0048	96.21	91	
DA_ON_01B	1.86	D	Paved; curbs and storm drains (excluding right-of-way)	98				182.65		
DA_ON_02A	7.05	D	Good condition (grass cover > 75%)	80	DA_ON_02A	10.25	0.0160	563.60	86	
DA_ON_02A	3.21	D	Paved; curbs and storm drains (excluding right-of-way)	98				314.43		

Curve Number (Proposed Condition)

DA_ON_01A	1.58	D	Good condition (grass cover > 75%)	80	DA_ON_01A	6.57	0.0103	126.52	94	
DA_ON_01A	4.99	D	Paved; curbs and storm drains (excluding right-of-way)	98				488.55		
DA_ON_01B	0.89	D	Good condition (grass cover > 75%)	80	DA_ON_01B	3.07	0.0048	71.06	93	
DA_ON_01B	2.18	D	Paved; curbs and storm drains (excluding right-of-way)	98				213.45		
DA_ON_02A	3.81	D	Good condition (grass cover > 75%)	80	DA_ON_02A	10.25	0.0160	304.69	91	
DA_ON_02A	6.44	D	Paved; curbs and storm drains (excluding right-of-way)	98				631.60		
	19.89									
	0.03									

Cover Type	A	B	C	D
Good condition (grass cover > 75%)	39	61	74	80
Residential - 1/4 acre	61	75	83	87
Commercial and business	89	92	94	95
Industrial	81	88	91	93
Paved; curbs and storm drains (excluding right-of-way)	98	98	98	98

Table 2. Culvert 1 and Culvert 2 Calculated Flows Using SCS Method.

Hydrologic Element	Area (sq-mi)	Discharge (cfs)			
		p = 50%	p = 10%	p = 4%	p = 1%
		2-yr	**10-yr**	**25-yr**	**100-yr**
CULVERT_01	0.2213	217.90	406.20	520.30	706.30
CULVERT_02	0.0644	76.60	153.50	200.90	276.90

Table 3. Existing and Proposed Impervious Cover for the Project Area.

Total Project Area:	19.89	ac
Total EX Impervious Cover:	6.88	ac
Total PR Impervious Cover:	13.07	ac
# Contributing Drainage Areas:	2	
Culvert 1		
Total Area (SS Flow)	8.78	ac
Area within ROW	7.58	ac
EX Impervious Cover	4.16	ac
PR Impervious Cover	6.91	ac
Culvert 2		
Total Area (SS Flow)	23.66	ac
Area within ROW	6.95	ac
EX Impervious Cover	2.72	ac
PR Impervious Cover	6.16	ac

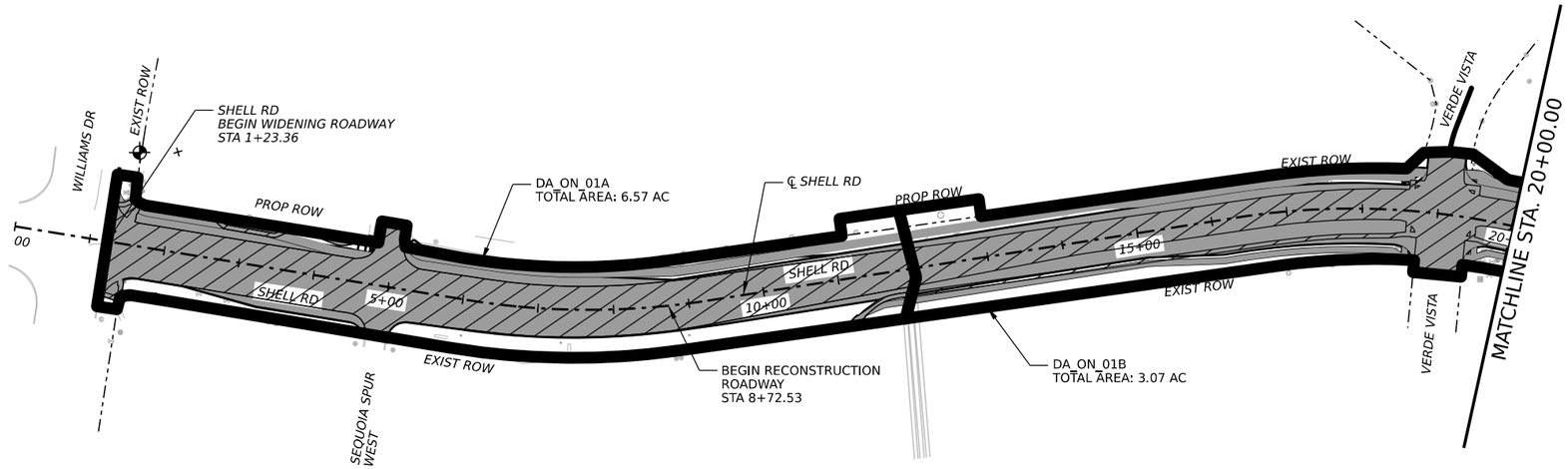

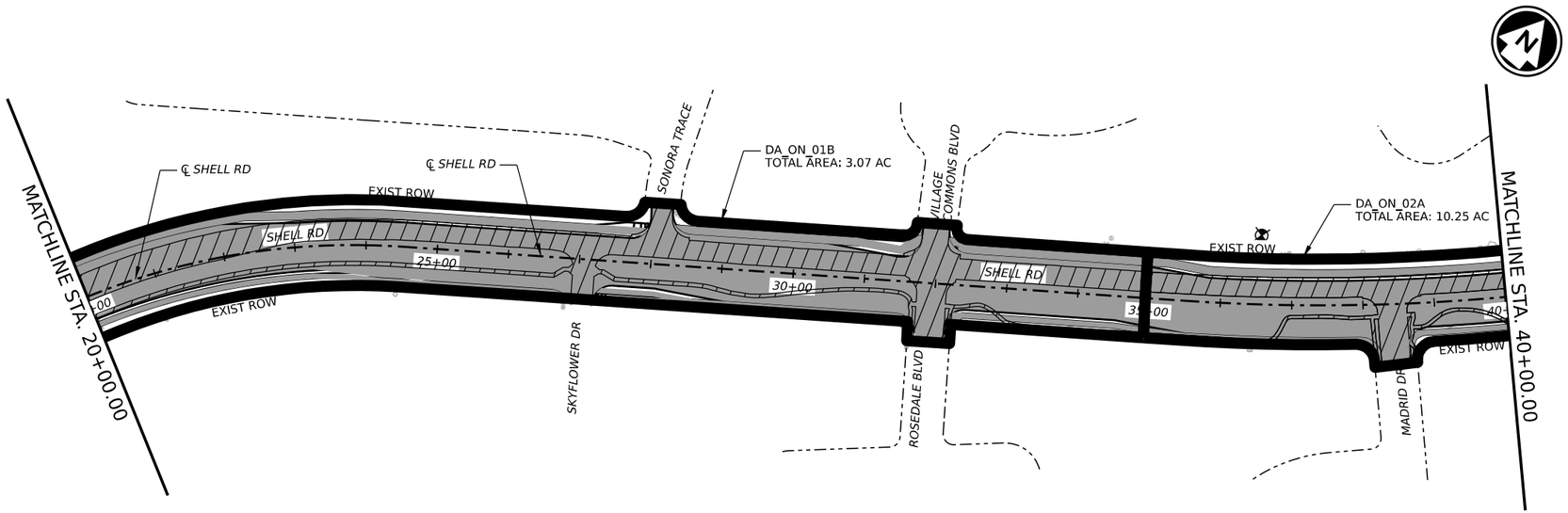

LEGEND

EXISTING IMPERVIOUS COVER

PROPOSED IMPERVIOUS COVER

0 100 200

SCALE: 1" = 200'

EST.1848 GEORGETOWN TEXAS

BGE, Inc.
101 West Louis Henna Blvd, Suite 400, Austin, TX 78728
Tel: 512-879-0400 • www.bgeinc.com
TBPE Registration No. F-1046

SHELL RD

WPAP DRAINAGE AREA MAP

BEGIN TO STA 40+00

SHEET 1 OF 2

SHEET NO. 3

DATE: 2/14/2025 10:32:16 AM
FILE: G:\TXC\Projects\City Georgetown\10767-00 Shell Road\03_CADD\01_Shts\06-DRNG\WPAP\Shell_WPAP_Proj_01.dgn

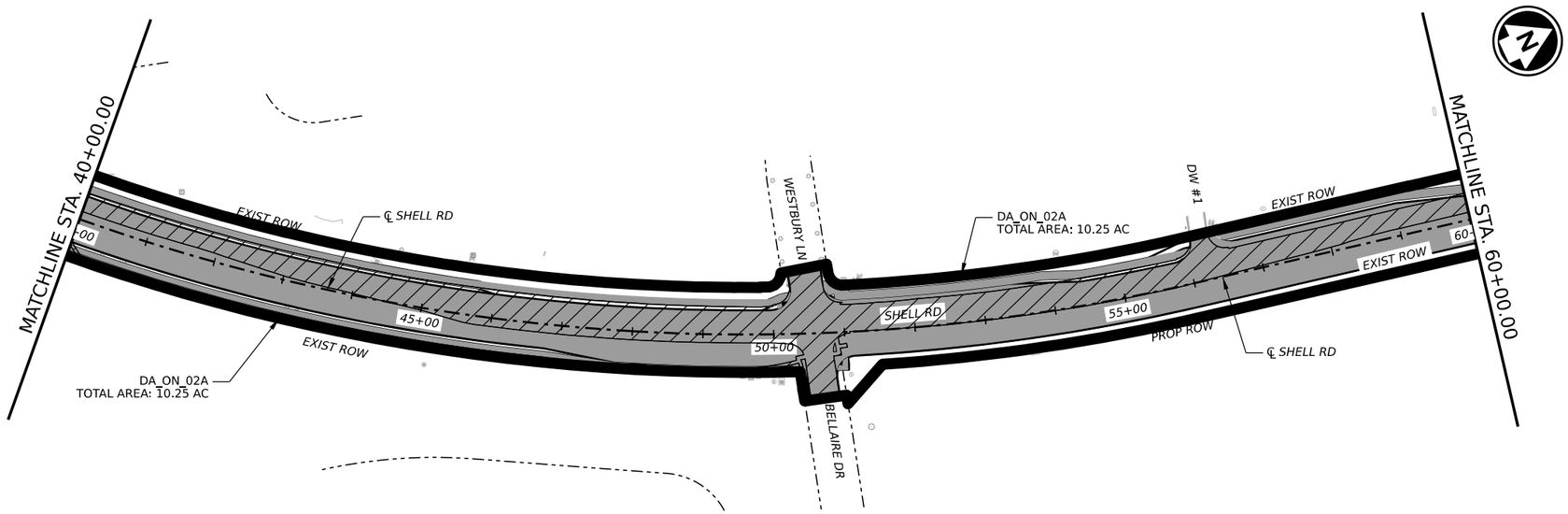

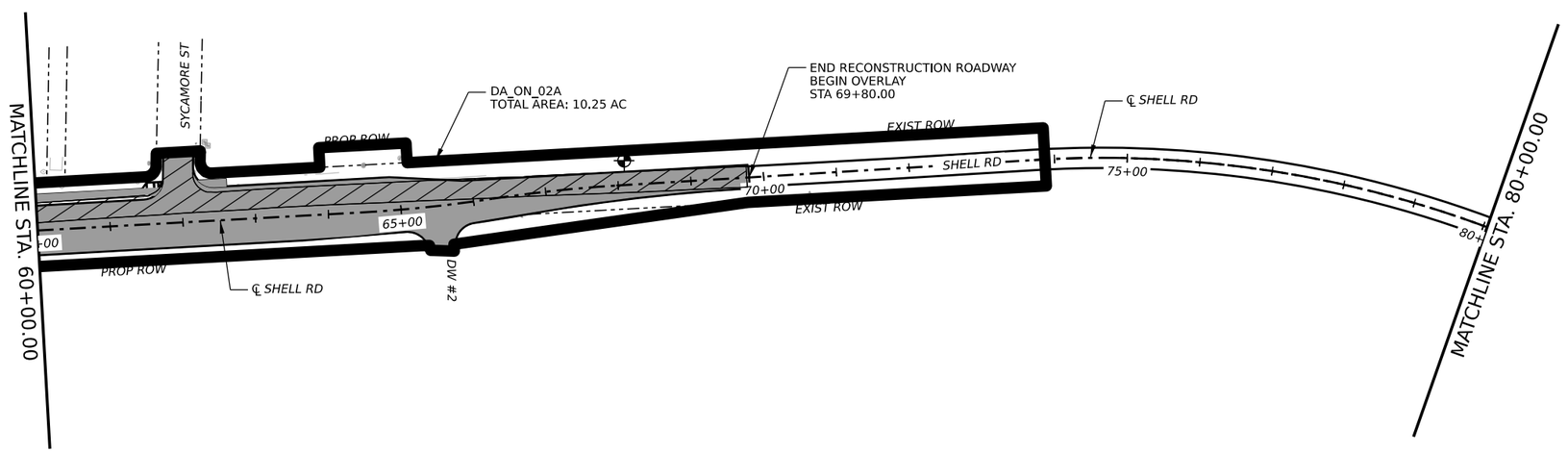

LEGEND

EXISTING IMPERVIOUS COVER

PROPOSED IMPERVIOUS COVER

0 100 200

SCALE: 1" = 200'

EST.1848 GEORGETOWN TEXAS

BGE, Inc.
101 West Louis Henna Blvd, Suite 400, Austin, TX 78728
Tel: 512-879-0400 • www.bgeinc.com
TBPE Registration No. F-1046

SHELL RD

WPAP DRAINAGE AREA MAP

STA 40+00 TO 80+00

SHEET 2 OF 2

SHEET NO. 4

DATE: 2/14/2025 10:29:44 AM
FILE: G:\TX\Projects\City Georgetown\10767-00 Shell Road\03_CADD\01_Shts\06-DRNG\WPAP\Shell_WPAP_Proj_02.dgn

Geologic Assessment

Texas Commission on Environmental Quality

For Regulated Activities on The Edwards Aquifer Recharge/transition Zones and Relating to 30 TAC §213.5(b)(3), Effective June 1, 1999

To ensure that the application is administratively complete, confirm that all fields in the form are complete, verify that all requested information is provided, consistently reference the same site and contact person in all forms in the application, and ensure forms are signed by the appropriate party.

Note: Including all the information requested in the form and attachments contributes to more streamlined technical reviews.

Signature

To the best of my knowledge, the responses to this form accurately reflect all information requested concerning the proposed regulated activities and methods to protect the Edwards Aquifer. My signature certifies that I am qualified as a geologist as defined by 30 TAC Chapter 213.

Print Name of Geologist: Crystal Hall Telephone: (512) 879-0468

Date: 05/12/2023 Fax: (512) 879-0499

Representing: BGE, Inc. TBPE Registration No. F-1046 (Name of Company and TBPG or TBPE registration number)

Signature of Geologist:

Regulated Entity Name: Shell Road Improvements Project

Project Information

1. Date(s) Geologic Assessment was performed: April 12, 2023
2. Type of Project:
   - ☒ WPAP
   - ☐ SCS
   - ☐ AST
   - ☐ UST
3. Location of Project:
   - ☒ Recharge Zone
   - ☐ Transition Zone
   - ☐ Contributing Zone within the Transition Zone

CHall 5/12/23

STATE OF TEXAS
CRYSTAL HALL
GEOLOGY
11409
LICENSED
PROFESSIONAL GEOSCIENTIST

4. ☒ **Attachment A - Geologic Assessment Table**. Completed Geologic Assessment Table (Form TCEQ-0585-Table) is attached.

5. ☒ Soil cover on the project site is summarized in the table below and uses the SCS Hydrologic Soil Groups* (Urban Hydrology for Small Watersheds, Technical Release No. 55, Appendix A, Soil Conservation Service, 1986). If there is more than one soil type on the project site, show each soil type on the site Geologic Map or a separate soils map.

Table 1 - Soil Units, Infiltration Characteristics and Thickness

Soil Name	Group*	Thickness(feet)
Please see Table 1 in Attachment B & C: Site Geology Report & Stratigraphic Column and Attachment D: Site Soil Map		

Soil Name	Group*	Thickness(feet)

** Soil Group Definitions (Abbreviated)*

A. *Soils having a high infiltration rate when thoroughly wetted.*
B. *Soils having a moderate infiltration rate when thoroughly wetted.*
C. *Soils having a slow infiltration rate when thoroughly wetted.*
D. *Soils having a very slow infiltration rate when thoroughly wetted.*

6. ☒ **Attachment B – Stratigraphic Column**. A stratigraphic column showing formations, members, and thicknesses is attached. The outcropping unit, if present, should be at the top of the stratigraphic column. Otherwise, the uppermost unit should be at the top of the stratigraphic column.

7. ☒ **Attachment C – Site Geology**. A narrative description of the site specific geology including any features identified in the Geologic Assessment Table, a discussion of the potential for fluid movement to the Edwards Aquifer, stratigraphy, structure(s), and karst characteristics is attached.

8. ☒ **Attachment D – Site Geologic Map(s)**. The Site Geologic Map must be the same scale as the applicant's Site Plan. The minimum scale is 1": 400'

   Applicant's Site Plan Scale: 1" = 500'
   Site Geologic Map Scale: 1" = 500'
   Site Soils Map Scale (if more than 1 soil type): 1" = 500'

9. Method of collecting positional data:

   ☒ Global Positioning System (GPS) technology.

☐ Other method(s). Please describe method of data collection: _____

10. ☒ The project site and boundaries are clearly shown and labeled on the Site Geologic Map.
11. ☒ Surface geologic units are shown and labeled on the Site Geologic Map.
12. ☒ Geologic or manmade features were discovered on the project site during the field investigation. They are shown and labeled on the Site Geologic Map and are described in the attached Geologic Assessment Table.

    ☐ Geologic or manmade features were not discovered on the project site during the field investigation.

13. ☒ The Recharge Zone boundary is shown and labeled, if appropriate.
14. All known wells (test holes, water, oil, unplugged, capped and/or abandoned, etc.): If applicable, the information must agree with Item No. 20 of the WPAP Application Section.

    ☐ There are 0 (#) wells present on the project site and the locations are shown and labeled. (Check all of the following that apply.)
    - ☐ The wells are not in use and have been properly abandoned.
    - ☐ The wells are not in use and will be properly abandoned.
    - ☐ The wells are in use and comply with 16 TAC Chapter 76.

    ☒ There are no wells or test holes of any kind known to exist on the project site.

Administrative Information

15. ☒ Submit one (1) original and one (1) copy of the application, plus additional copies as needed for each affected incorporated city, groundwater conservation district, and county in which the project will be located. The TCEQ will distribute the additional copies to these jurisdictions. The copies must be submitted to the appropriate regional office.

Attachment A: Geologic Assessment Table

GEOLOGIC ASSESSMENT TABLE

PROJECT NAME: Shell Road

LOCATION			FEATURE CHARACTERISTICS												EVALUATION			PHYSICAL SETTING		
1A	1B*	1C*	2A	2B	3	4			5	5A	6	7	8A	8B	9	10		11		12
FEATURE ID	LATITUDE	LONGITUDE	FEATURE TYPE	POINTS	FORMATION	DIMENSIONS (FEET)			TREND (DEGREES)	CAVE	DENSITY (NO/FT²)	APERTURE (FEET)	INFILL	RELATIVE INFILTRATION RATE	TOTAL	SENSITIVITY		CATCHMENT AREA (ACRES)		TOPOGRAPHY
						X	Y	Z		10						<40	>40	<1.6	>1.6	
CD-1	30 69816°N	-97.707714°W	CD	5	Ked	0.5	0.25	0.5	--	0	N/A	N/A	O	5	10	X		X		Hillside
MB-1	30 697506°N	-97.7078°W	MB	30	Ked	1	1	-	--	0	N/A	N/A	X	5	35	X		X		Hillside
MB-2	30 696723°N	-97.7083°W	MB	30	Ked	1	1	-	--	0	N/A	N/A	X	5	35	X		X		Hillside
MB-3	30 696665°N	-97.708358°W	MB	30	Ked	1	1	-	--	0	N/A	N/A	X	5	35	X		X		Hillside
MB-4	30 69666°N	-97.70837°W	MB	30	Ked	1	1	-	--	0	N/A	N/A	X	5	35	X		X		Hillside
MB-5	30 696563°N	-97.708394°W	MB	30	Ked	1	1	-	--	0	N/A	N/A	X	5	35	X		X		Hillside
MB-6	30 696064°N	-97.708487°W	MB	30	Kgl	1	1	-	--	0	N/A	N/A	X	5	35	X		X		Hillside
MB-7	30 693578°N	-97.709054°W	MB	30	Kgl	1	1	-	--	0	N/A	N/A	X	5	35	X		X		Hillside
MB-8	30 690604°N	-97.71237°W	MB	30	Kgl	1	1	-	--	0	N/A	N/A	X	5	35	X		X		Hillside
MB 9	30 690158°N	-97.713138°W	MB	30	Kgl	1	1	-	--	0	N/A	N/A	X	5	35	X		X		Hillside
MB-10	30 690203°N	-97.713193°W	MB	30	Kgl	1	1	-	--	0	N/A	N/A	X	5	35	X		X		Hillside
MB-11	30 689466°N	-97.713828°W	MB	30	Kgl	1	1	-	--	0	N/A	N/A	X	5	35	X		X		Hillside
MB-12	30 688881°N	-97.714858°W	MB	30	Ked	1	1	-	--	0	N/A	N/A	X	5	35	X		X		Hillside
MB-13	30 687863°N	-97.71629°W	MB	30	Ked	1	1	-	--	0	N/A	N/A	X	5	35	X		X		Hillside
MB-14	30 688283°N	-97.71569°W	MB	30	Ked	1	1	-	--	0	N/A	N/A	X	5	35	X		X		Hillside
MB-15	30 687334°N	-97.718425°W	MB	30	Ked	1	1	-	--	0	N/A	N/A	X	5	35	X		X		Hillside
MB-16	30 686774°N	-97.716532°W	MB	30	Ked	1	1	-	--	0	N/A	N/A	X	5	35	X		X		Hillside
MB-17	30 685994°N	-97.718873°W	MB	30	Ked	1	1	-	--	0	N/A	N/A	X	5	35	X		X		Hillside
MB-18	30 695593°N	-97.716473°W	MB	30	Ked	1	1	-	--	0	N/A	N/A	X	5	35	X		X		Hillside
MB-19	30 684897°N	-97.718892°W	MB	30	Ked	1	1	-	--	0	N/A	N/A	X	5	35	X		X		Hillside
MB-20	30 684173°N	-97.716892°W	MB	30	Ked	1	1	-	--	0	N/A	N/A	X	5	35	X		X		Hillside
MB-21	30 68322°N	-97.717852°W	MB	30	Ked	1	1	-	--	0	N/A	N/A	X	5	35	X		X		Hillside

* DATUM: WGS84

2A TYPE	TYPE	2B POINTS
C	Cave	30
SC	Solution cavity	20
SF	Solution-enlarged fracture(s)	20
F	Fault	20
O	Other natural bedrock features	5
MB	Manmade feature in bedrock	30
SW	Swallow hole	30
SH	Sinkhole	20
CD	Non-karst closed depression	5
Z	Zone, clustered or aligned features	30

8A INFILLING	
N	None, exposed bedrock
C	Coarse - cobbles, breakdown, sand, gravel
O	Loose or soft mud or soil, organics, leaves, sticks, dark colors
F	Fines, compacted clay-rich sediment, soil profile, gray or red colors
V	Vegetation. Give details in narrative description
FS	Flowstone, cements, cave deposits
X	Other materials

12 TOPOGRAPHY
Cliff, Hilltop, Hillside, Drainage, Floodplain, Streambed

I have read, I understood, and I have followed the Texas Commission on Environmental Quality's Instructions to Geologists. The information presented here complies with that document and is a true representation of the conditions observed in the field.
My signature certifies that I am qualified as a geologist as defined by 30 TAC Chapter 213.

Date 04/27/2023

Sheet 1 of 1

TCEQ-0585-Table (Rev. 10-01-04)

STATE OF TEXAS
CRYSTAL HALL
GEOLOGY
11409
LICENSED
PROFESSIONAL GEOSCIENTIST

C Hall
5/14/23

Attachment B & C: Site Geology Report and Stratigraphic Column

Geologic Assessment – Site Geology Report

Shell Road Improvements Project
from Williams Drive to 0.2 mile north of Sycamore Street,
City of Georgetown, Williamson County, TX

Prepared For:
City of Georgetown



Prepared By:

BGE, Inc.
101 West Louis Henna Blvd., Suite 400
Austin, TX 78728
BGE PN: 10767-00
TBPE Registration No. F-1046
May 2023

C Hall
5/16/23

STATE OF TEXAS
CRYSTAL HALL
GEOLOGY
11409
LICENSED
PROFESSIONAL GEOSCIENTIST

Table of Contents

Section 1 Introduction **1**
Section 2 Methodology **1**
Section 3 Results **1**
3.1 Overview 1
3.2 Soils 1
3.3 Geology 2
3.4 Hydrogeologic Assessment 3
Section 4 Feature Descriptions **4**
Section 5 Conclusion **4**

Attachments

Attachment A: **Geologic Assessment Table**
Attachment B & C: **Site Geology Report & Stratigraphic Column**
Attachment D: **Site Geologic Map & Site Soils Map**
Attachment E: **Project Area Photographs**

Section 1 Introduction

A geologic assessment (GA) was conducted by Ms. Crystal Hall, P.G. and environmental scientists of BGE, Inc. (BGE) on April 12, 2023, for the Shell Road Improvements Project, herein referred to as "project". The proposed project is approximately 1.2 miles in length from Williams Drive (Dr.) to 0.2 mile north of Sycamore Street (St.). The project area consists of approximately 23.3 acres of new and existing right-of-way (ROW), temporary construction easements, and permanent sidewalk easements within the City of Georgetown, Williamson County, Texas. The project area includes the limits necessary for roadway widening and reconstruction.

Section 2 Methodology

The GA was completed on the project area following the methods described in the *TCEQ Instruction to Geologists for Geologic Assessments on the Edwards Aquifer Recharge/Transition Zones* (hereafter Instructions to Geologists) and augmented with the TCEQ *Complying with the Edwards Aquifer Rules Technical Guidance on Best Management Practices*.

BGE scientists, including a Texas Licensed Professional Geologist (PG), conducted a 100 percent pedestrian survey during the site visit on April 12, 2023. During the site visit, transects spaced no more than 50-feet apart and drainages were systematically walked to observe surface features. BGE surveyed the entirety of the 23.3-acre project area located within the Edwards Aquifer Recharge Zone. Surface soil and visible geology were recorded during the field visit. Data was collected in the field with a Samsung tablet with a GPS internal receiver. The technique used to determine the depth, thickness, and consistency of fill material of identified features included probing with a digging implement.

Following the field investigations, BGE completed a Geologic Assessment Form (**Attachment A: Geologic Assessment Form**) and a Geologic Assessment Table (**Attachment B: Geologic Assessment Table**) according to the standards in the TCEQ Instructions to Geologists in addition to all maps and attachments required by the TCEQ Edwards Aquifer Rules.

Section 3 Results

3.1 Overview

The project area occurs within a mostly urbanized area with roadway, residential, commercial, and utility improvements. Herbaceous and tree upland communities observed along the Shell Road corridor included Mesquite (*Prosopis glandulosa*), Bermuda grass (*Cynodon dactylon*), and Cedar elm (*Ulmus crassifolia*). The project is primarily located within existing ROW along Shell Road.

3.2 Soils

The project area is mapped within the Soil Survey of Williamson County (**Attachment C: Site Soils Map**) Soil survey data was utilized to establish the geomorphological setting and soil types present. Detailed soil map unit descriptions and soil characteristics were derived from information available in the online NRCS Web Soil Survey, and soil series locations were determined from information available in the online NRCS Soil Survey Geographic Database (SSURGO). The NRCS National Hydric Soils List was also used to

identify the limits of mapped hydric soils within the project area. The soil map units identified in the project area and the characteristics of each soil map unit are provided in **Table 1.**

Table 1: Soil Units, Infiltration Characteristics, and Thickness

Soil Map Unit	Group	Thickness (feet)	Drainage Class	Permeability	Surface Runoff	Hydric
Crawford clay, 1 to 3 percent slopes	D	2.25	Well drained	Very low to moderately low	Very high	No
Doss silty clay, moist, 1 to 5 percent slopes	D	1.42	Well drained	Moderately low to moderately high	Medium	No
Eckrant stony clay, 0 to 3 percent slopes, stony	D	0.92	Well drained	Moderately low to moderately high	Medium	No
Eckrant-Rock outcrop association, 1 to 10 percent slopes	D	0.92	Well drained	Moderately low to moderately high	Medium	No
Georgetown stony clay loam, 1 to 3 percent slopes	D	2.92	Well drained	Very low to moderately low	Very high	No

Source: SSURGO

3.3 Geology

The Austin Sheet of the Geologic Atlas of Texas was utilized to identify underlying geology. The geologic units present on the project area have been identified as Georgetown Formation and Edwards Limestone (**Attachment D: Site Geologic Map**). The Georgetown Formation has an approximate thickness between 30 to 80 feet while the Edwards Limestone has a thickness that varies from 60 to 350 feet. The lithology of the Georgetown Formation is limestone and marl. The lithology of Edwards Limestone includes limestone, dolomite, and chert.

Per review of published literature, there are no faults in the project area. The **Stratigraphic Column** outlining the geologic features in the project area is provided below in **Table 2**.

Table 2: Stratigraphic Column

Age	Approximate Thickness	Geologic Unit
Quaternary	60 to 350 feet thick	Georgetown formation
Upper Cretaceous	30 to 80 feet thick	Edwards limestone

Source: USGS 2023

3.4 Hydrogeologic Assessment

According to the National Hydrography Dataset, Pecan Branch, a tributary of the San Gabriel River, flows southeast of the boundary of the project area. There are no mapped streams intersecting the project area and no streams were identified during the site visit The elevation on the project area range between approximately 780 feet above mean sea level (msl) to about 870 feet above msl.

No wells were identified on the project area at the time of the site visit. Per review of data from TCEQ and the Texas Water Development Board (TWDB), no water wells are recorded within 500 feet of the project area.

The entire project area is located within the Edwards Aquifer Recharge Zone. U.S. Fish and Wildlife (USFWS) karst zone data obtained for Williamson County indicates that the project area is mapped within Karst Zones 1 and 3. Karst Zone 1 is defined as an area known to contain endangered cave fauna. Karst Zone 3 is defined as areas that probably do not contain endangered cave fauna .

3.5 Endangered Species Act 4(d) Rule Compliance

Geologic assessments completed within the jurisdiction of the City of Georgetown are also required to consider the Endangered Species Act 4(d) Rule for the threatened Georgetown Salamander (*Eurycea naufragia*). Additional requirements include the identification of all springs and streams within the project area. A stream buffer is established for all streams over the Edwards Aquifer Recharge Zone that drain more than 64 acres. Generally, the stream buffer coincides with the boundaries of the FEMA 1 percent floodplain or a calculated 1 percent floodplain, whichever is smaller. No springs and no streams were identified during the site visit within the project area; therefore, no stream buffers are required for this project.

Section 4 Feature Descriptions

BGE identified twenty-two geologic features within the project area. Per the attached calculations, none of these features are considered sensitive per TCEQ criteria. Geologic features identified within the project area are described below. Photographs were taken to characterize current site conditions and to document identified features (**Attachment F: Project Area Photographs**).

Feature CD-1 is a non-karst closed depression. This feature consisted of an animal burrow occurring over Edwards Limestone. Mapped soils included various clays. This feature was relatively small with a diameter less than one foot. The infill material within the depression consisted of organics (leaf litter, twigs, and other breakdown), roots, and moderately compacted clay-rich sediment. Due to the low infiltration rate and lack of connectivity to the subsurface, this feature is not considered to be sensitive.

Features MB-1 through MB-21 are manmade features in bedrock mapped in the Edwards Limestone and the Georgetown Formation geologic units. These features consisted of electrical, sewage, and stormwater manholes. These manmade features had low infiltration and were not determined to be sensitive.

Section 5 Conclusion

The site visit to perform a GA for the Shell Road Improvements Project was conducted on April 12, 2023, by BGE scientists, including a Texas License PG, over the approximate 23.3 acre project area. BGE identified twenty-two geologic features (CD-1and MB-1 through MB-21). None of these features met the criteria to be considered sensitive features according to the TCEQ Instructions for Geologists standards. No springs or streams were mapped on the project area; therefore, no protective stream buffers are required to comply with the Endangered Species Act 4(d) Rule for Threatened Georgetown Salamander for City of Georgetown UDC section 11.07.003.

Appendix D: Geology Map & Site Soils Map

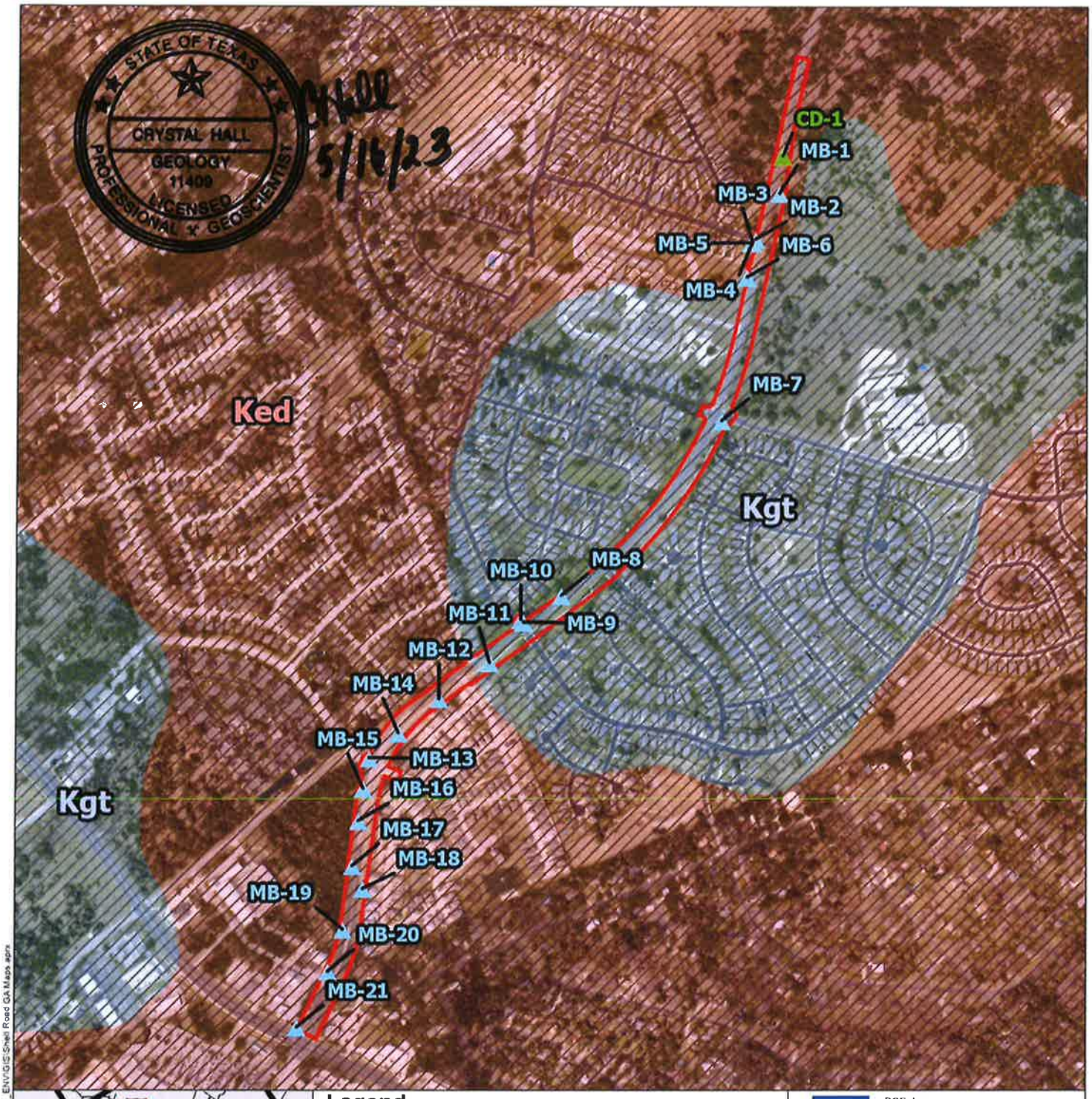

STATE OF TEXAS
CRYSTAL HALL
GEOLOGY
11409
LICENSED
PROFESSIONAL GEOSCIENTIST

5/16/23



Legend

- Project Area
- Non-karst closed depression (CD)
- Manmade features in bedrock (MB)
- Edwards Aquifer Recharge Zone
- Edwards Limestone (Ked)
- Georgetown Formation (Kgt)

N

0 400 800
Feet

BGE, Inc.
101 West Louis Henna Blvd, Suite 400
Austin, TX 78728
Tel: 512-879-0400 Fax: 512-879-0499
www.bgeinc.com

Shell Road

Site Geologic Map
Williamson County, TX

Date: May 2023 | Proj. No: 10767-00

File Path: G:\TXC\Projects\City_Georgetown\10767-00 Shell Road\11_ENV\GIS\Shell Road GA Maps.aprx

GIS Analyst: afash

Data Source: WCAD 2022, USGS 2023, TCEQ 2023, DOT 2015





Legend

- Project Area
- Soils (NRCS)
- Stream (NHD)
- Pond (NHD)
- Wetlands (NWI)
- 100 yr Floodplain (FEMA)
- 500 yr Floodplain (FEMA)
- Floodway (FEMA)
- Roadway (TxDOT)

N

0 400 800

Feet

BGE, Inc.
101 West Louis Henna Blvd, Suite 400
Austin, TX 78728
Tel: 512-879-0400 Fax: 512-879-0499
www.bgeinc.com

Shell Road

Site Soils Map

Williamson County, TX

Date: May 2023 | Proj. No: 10767-00

File Path: G:\TXC\Projects\City_Georgetown\10767-00 Shell Road\11_ENV\GIS\Shell Road GA Maps.aprx

GIS Analyst: afish

Data Source: Source: TxDot 2022, NRCS 20223, NHD 2022

STATE OF TEXAS
CRYSTAL HALL
GEOLOGY
11409
LICENSED
PROFESSIONAL GEOSCIENTIST

C Hall
5/16/23

Attachment E: Project Area Photographs

Shell Road Geological Assessment
Client: City of Georgetown
10767-00



Photograph 1: Facing north, overview of Shell Road.



Photograph 2: Facing north, view of the northern end of project area.

Shell Road Geological Assessment
Client: City of Georgetown
10767-00



Photograph 3: Facing north, view of the southern end of project area.



Photograph 4: Facing west, view of a small animal burrow (CD-1) found on the northern side of the project area.

Shell Road Geological Assessment
Client: City of Georgetown
10767-00



Photograph 5: Facing south, representative view of water manhole on the southern side of the project area.



Photograph 6: Facing south, representative view of sanitary sewer manhole on the southern side of the project area.



Photograph 7: Facing south, representative view of a utilities cover found near the center of the project area.



Photograph 8: Facing south, representative view of a fire hydrant found near the center of the project area.

Temporary Stormwater Section

Texas Commission on Environmental Quality

for Regulated Activities on the Edwards Aquifer Recharge Zone and Relating to 30 TAC §213.5(b)(4)(A), (B), (D)(I) and (G); Effective June 1, 1999

To ensure that the application is administratively complete, confirm that all fields in the form are complete, verify that all requested information is provided, consistently reference the same site and contact person in all forms in the application, and ensure forms are signed by the appropriate party.

Note: Including all the information requested in the form and attachments contributes to more streamlined technical reviews.

Signature

To the best of my knowledge, the responses to this form accurately reflect all information requested concerning the proposed regulated activities and methods to protect the Edwards Aquifer. This **Temporary Stormwater Section** is hereby submitted for TCEQ review and executive director approval. The application was prepared by:

Print Name of Customer/Agent: Alexis Woffenden, P.E.

Date: 05/09/2025

Signature of Customer/Agent:



Regulated Entity Name: Shell Road

Project Information

Potential Sources of Contamination

Examples: Fuel storage and use, chemical storage and use, use of asphaltic products, construction vehicles tracking onto public roads, and existing solid waste.

1. Fuels for construction equipment and hazardous substances which will be used during construction:

   ☐ The following fuels and/or hazardous substances will be stored on the site: _____

   These fuels and/or hazardous substances will be stored in:

   ☐ Aboveground storage tanks with a cumulative storage capacity of less than 250 gallons will be stored on the site for less than one (1) year.

☐ Aboveground storage tanks with a cumulative storage capacity between 250 gallons and 499 gallons will be stored on the site for less than one (1) year.

☐ Aboveground storage tanks with a cumulative storage capacity of 500 gallons or more will be stored on the site. An Aboveground Storage Tank Facility Plan application must be submitted to the appropriate regional office of the TCEQ prior to moving the tanks onto the project.

☒ Fuels and hazardous substances will not be stored on the site.

2. ☒ **Attachment A - Spill Response Actions**. A site specific description of the measures to be taken to contain any spill of hydrocarbons or hazardous substances is attached.

3. ☐ Temporary aboveground storage tank systems of 250 gallons or more cumulative storage capacity must be located a minimum horizontal distance of 150 feet from any domestic, industrial, irrigation, or public water supply well, or other sensitive feature.

4. ☒ **Attachment B - Potential Sources of Contamination**. A description of any activities or processes which may be a potential source of contamination affecting surface water quality is attached.

Sequence of Construction

5. ☒ **Attachment C - Sequence of Major Activities**. A description of the sequence of major activities which will disturb soils for major portions of the site (grubbing, excavation, grading, utilities, and infrastructure installation) is attached.

   ☐ For each activity described, an estimate (in acres) of the total area of the site to be disturbed by each activity is given.

   ☐ For each activity described, include a description of appropriate temporary control measures and the general timing (or sequence) during the construction process that the measures will be implemented.

6. ☐ Name the receiving water(s) at or near the site which will be disturbed or which will receive discharges from disturbed areas of the project: _____

Temporary Best Management Practices (TBMPs)

Erosion control examples: tree protection, interceptor swales, level spreaders, outlet stabilization, blankets or matting, mulch, and sod. Sediment control examples: stabilized construction exit, silt fence, filter dikes, rock berms, buffer strips, sediment traps, and sediment basins. Please refer to the Technical Guidance Manual for guidelines and specifications. All structural BMPs must be shown on the site plan.

7. ☒ **Attachment D – Temporary Best Management Practices and Measures**. TBMPs and measures will prevent pollution of surface water, groundwater, and stormwater. The construction-phase BMPs for erosion and sediment controls have been designed to retain sediment on site to the extent practicable. The following information is attached:

☒ A description of how BMPs and measures will prevent pollution of surface water, groundwater or stormwater that originates upgradient from the site and flows across the site.

☒ A description of how BMPs and measures will prevent pollution of surface water or groundwater that originates on-site or flows off site, including pollution caused by contaminated stormwater runoff from the site.

☒ A description of how BMPs and measures will prevent pollutants from entering surface streams, sensitive features, or the aquifer.

☒ A description of how, to the maximum extent practicable, BMPs and measures will maintain flow to naturally-occurring sensitive features identified in either the geologic assessment, TCEQ inspections, or during excavation, blasting, or construction.

8. ☐ The temporary sealing of a naturally-occurring sensitive feature which accepts recharge to the Edwards Aquifer as a temporary pollution abatement measure during active construction should be avoided.

   ☐ **Attachment E - Request to Temporarily Seal a Feature**. A request to temporarily seal a feature is attached. The request includes justification as to why no reasonable and practicable alternative exists for each feature.

   ☒ There will be no temporary sealing of naturally-occurring sensitive features on the site.

9. ☒ **Attachment F - Structural Practices**. A description of the structural practices that will be used to divert flows away from exposed soils, to store flows, or to otherwise limit runoff discharge of pollutants from exposed areas of the site is attached. Placement of structural practices in floodplains has been avoided.

10. ☒ **Attachment G - Drainage Area Map**. A drainage area map supporting the following requirements is attached:

    ☐ For areas that will have more than 10 acres within a common drainage area disturbed at one time, a sediment basin will be provided.

    ☐ For areas that will have more than 10 acres within a common drainage area disturbed at one time, a smaller sediment basin and/or sediment trap(s) will be used.

    ☐ For areas that will have more than 10 acres within a common drainage area disturbed at one time, a sediment basin or other equivalent controls are not attainable, but other TBMPs and measures will be used in combination to protect down slope and side slope boundaries of the construction area.

    ☐ There are no areas greater than 10 acres within a common drainage area that will be disturbed at one time. A smaller sediment basin and/or sediment trap(s) will be used in combination with other erosion and sediment controls within each disturbed drainage area.

☒ There are no areas greater than 10 acres within a common drainage area that will be disturbed at one time. Erosion and sediment controls other than sediment basins or sediment traps within each disturbed drainage area will be used.

11. ☐ **Attachment H - Temporary Sediment Pond(s) Plans and Calculations**. Temporary sediment pond or basin construction plans and design calculations for a proposed temporary BMP or measure have been prepared by or under the direct supervision of a Texas Licensed Professional Engineer. All construction plans and design information must be signed, sealed, and dated by the Texas Licensed Professional Engineer. Construction plans for the proposed temporary BMPs and measures are attached.

☒ N/A

12. ☒ **Attachment I - Inspection and Maintenance for BMPs.** A plan for the inspection of each temporary BMP(s) and measure(s) and for their timely maintenance, repairs, and, if necessary, retrofit is attached. A description of the documentation procedures, recordkeeping practices, and inspection frequency are included in the plan and are specific to the site and/or BMP.

13. ☒ All control measures must be properly selected, installed, and maintained in accordance with the manufacturer's specifications and good engineering practices. If periodic inspections by the applicant or the executive director, or other information indicate a control has been used inappropriately, or incorrectly, the applicant must replace or modify the control for site situations.

14. ☒ If sediment escapes the construction site, off-site accumulations of sediment must be removed at a frequency sufficient to minimize offsite impacts to water quality (e.g., fugitive sediment in street being washed into surface streams or sensitive features by the next rain).

15. ☒ Sediment must be removed from sediment traps or sedimentation ponds not later than when design capacity has been reduced by 50%. A permanent stake will be provided that can indicate when the sediment occupies 50% of the basin volume.

16. ☒ Litter, construction debris, and construction chemicals exposed to stormwater shall be prevented from becoming a pollutant source for stormwater discharges (e.g., screening outfalls, picked up daily).

Soil Stabilization Practices

Examples: establishment of temporary vegetation, establishment of permanent vegetation, mulching, geotextiles, sod stabilization, vegetative buffer strips, protection of trees, or preservation of mature vegetation.

17. ☒ **Attachment J - Schedule of Interim and Permanent Soil Stabilization Practices**. A schedule of the interim and permanent soil stabilization practices for the site is attached.

18. ☒ Records must be kept at the site of the dates when major grading activities occur, the dates when construction activities temporarily or permanently cease on a portion of the site, and the dates when stabilization measures are initiated.

19. ☒ Stabilization practices must be initiated as soon as practicable where construction activities have temporarily or permanently ceased.

Administrative Information

20. ☒ All structural controls will be inspected and maintained according to the submitted and approved operation and maintenance plan for the project.

21. ☒ If any geologic or manmade features, such as caves, faults, sinkholes, etc., are discovered, all regulated activities near the feature will be immediately suspended. The appropriate TCEQ Regional Office shall be immediately notified. Regulated activities must cease and not continue until the TCEQ has reviewed and approved the methods proposed to protect the aquifer from any adverse impacts.

22. ☒ Silt fences, diversion berms, and other temporary erosion and sediment controls will be constructed and maintained as appropriate to prevent pollutants from entering sensitive features discovered during construction.

Attachment A – Spill Response Actions

This project will prohibit the storage of hazardous substances, fuels, or oils on the project site and require they are stored at an approved offsite facility. The construction of the proposed roadway will require the use of several types of equipment that will be fueled on site. This will present a slight risk of hydrocarbon or hazardous substance spills. In the event of such spills, the contaminated area will be sealed by the use of existing dirt or crushed limestone base material. This material will then be collected and disposed at an approved hazardous material location. All proper authorities will be notified as soon as the spill is discovered. The emergency response phone number for the State of Texas Spill-Reporting Hotline is 1-800-832-8224.

Attachment B – Potential Sources of Contamination

No particular activity or process during construction of the project is anticipated to present a significant risk of being a potential source of contamination. However, during regular construction operations, several common and minor risks of contamination are anticipated. Should any unforeseen mishaps occur during construction, the contractor shall follow the guidelines set forth in "Attachment A – Spill Response Plan".

Potential sources of sediment to stormwater runoff:

- Clearing and grubbing
- Grading and excavation
- Vehicle tracking
- Landscaping

Potential pollutants and sources, other than sediment, to stormwater runoff:

- Combined Staging Area – small fueling, minor equipment maintenance, sanitary facility.
- Materials Storage Area – solvents, adhesives, paving materials, aggregates, trash, etc.
- Construction Activities – paving, concrete pouring

Potential on-site pollutants:

- Fertilizer
- Concrete
- Glue, adhesives
- Gasoline, diesel fuel, hydraulic fluids, antifreeze
- Sanitary toilets

Attachment C – Sequence of Major Activities

1. Temporary erosion and sedimentation controls are to be installed as indicated on the Traffic Control Plan (TCP) Narrative and in accordance with the stormwater pollution prevention plan (SWPPP) that is required to be posted on the site.
2. The environmental project manager, and/or site supervisor, and/or designated responsible party, and the general contractor will follow the storm water pollution prevention plan (SWPP) posted on the site. Temporary erosion and sedimentation controls will be revised, if needed, to comply with city inspectors' directives and revised construction schedule relative to the water quality plan requirements and the erosion and sedimentation plan.
3. Temporary erosion and sedimentation controls will be inspected and maintained in accordance with the storm water pollution prevention plan (SWPPP) posted on the site.
4. A sequence of major construction activities is included in the following Traffic Control Plan (TCP) sheets, attached.

Attachment D – Temporary Best Management Practices and Measures

Prior to the commencement of any construction activity, the contractor shall install silt fence, rock filter dam, rock bedding at construction exit, and temporary seeding, per the SW3P plan. All temporary BMPs are to be installed per TCEQ and local requirements.

As surface water flows from and through disturbed areas, the proposed temporary BMPs will prevent pollution by filtering the increased sediment loads and other pollutants (listed in "Attachment B – Potential Sources of Contamination") prior to any runoff leaving the site. As shown in the attached SW3P plans, silt fence will be utilized downstream of any grading and construction activities to remove debris and sediment from run-off in that area. Temporary seeding will minimize soil runoff from disturbed areas. Rock filter dams will prevent excessive erosion from the storm sewer outfalls and stabilized construction exits will prevent the transport of sediment off-site.

In using the aforementioned treatment methods and maintaining natural drainage patterns downgradient of the proposed site, any flow to natural occurring sensitive features, both known and unknown, will be maintained.

Attachment F – Structural Practices

The following temporary BMP structural practices will be employed on the site:

A. Silt Fence – Used for sediment filtration along the downslope perimeter of portions of the project, as well as to prevent runoff from storage of excavated materials during utility construction. The fence retains sediment primarily by retarding flow and promoting deposition of sediment on the uphill side of the slope. Runoff is filtered as it passes through the geotextile.

B. Rock Filter Dam – Used to reduce the velocities of concentrated flows, provide a sediment barrier, and reduce erosion is channels and ditches.

C. Rock Bedding at Construction Exit – Stone pads will be constructed at the entrance and exits to the project to prevent off-site transport of sediment by construction vehicles. The pads are a minimum of 50’ long and 20’ wide. They will be graded to prevent runoff from leaving the site.

D. Temporary Seeding – To be provided around all storm sewer inlets during construction. Locations are indicated in SW3P plans. The measures will minimize sediment runoff from disturbed soils.

The placement of structural practices in the floodplain has been avoided within the project limits.

ATTACHMENT G – DRAINAGE AREA MAP

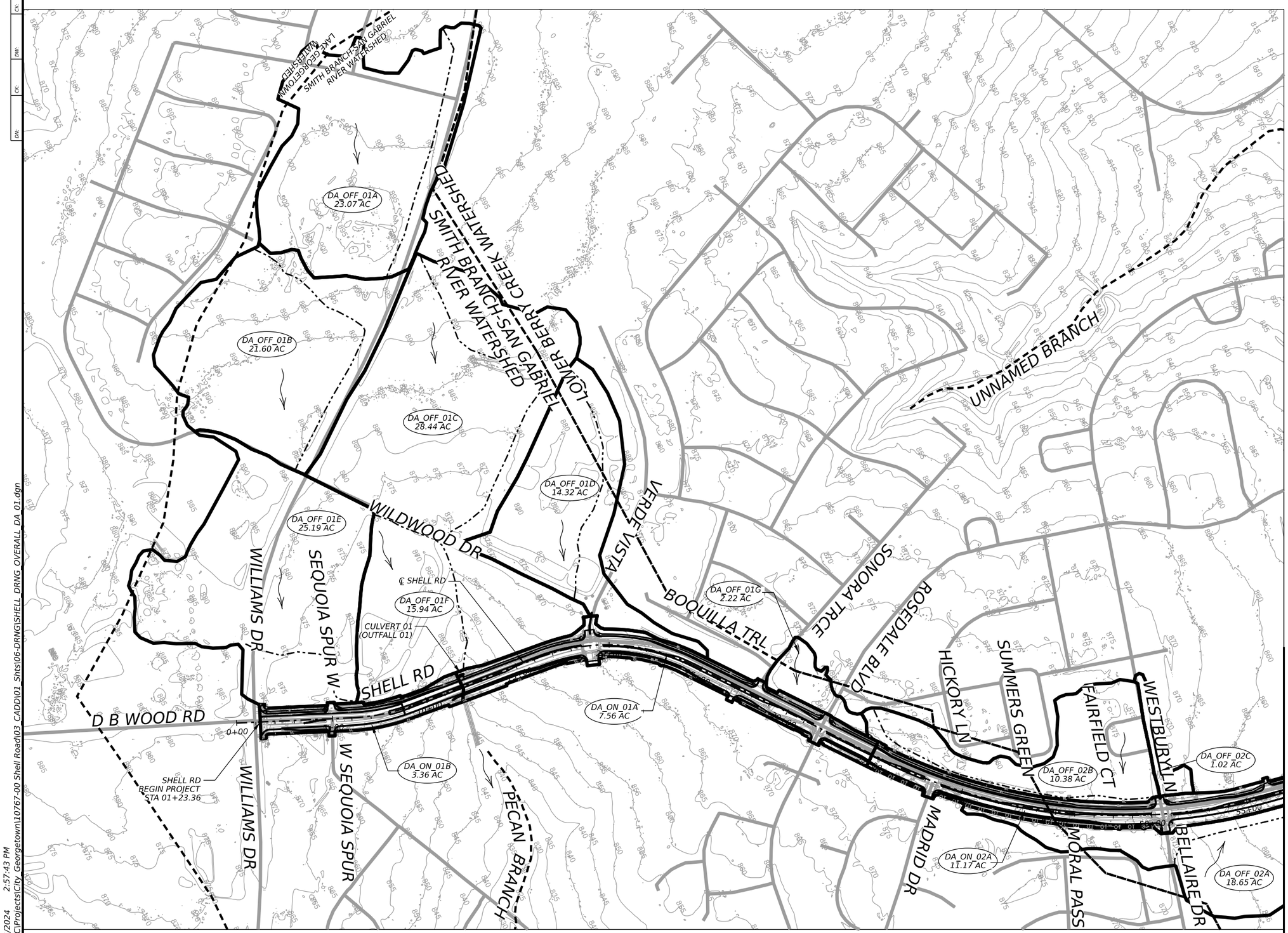

MATCHLINE STA. 56+00.00

LEGEND

- XXX-XXX X.XX AC — DRAINAGE AREA ID
- FLOW DIRECTION
- DRAINAGE AREA BOUNDARY
- DITCH LINE

NOTE

- CONTOUR SOURCE: 2015 CITY OF GEORGETOWN LIDAR DATA

0 250 500

SCALE: 1" = 500'

STATE OF TEXAS
ALEXIS WOFFENDEN
117162
LICENSED PROFESSIONAL ENGINEER

11/18/2024

EST.1848 GEORGETOWN TEXAS

BGE, Inc.
101 West Louis Henna Blvd, Suite 400, Austin, TX 78728
Tel: 512-879-0400 • www.bgeinc.com
TBPE Registration No. F-1046

SHELL ROAD

OVERALL DRAINAGE AREA MAP

SHEET 1 OF 2

SHEET NO. 134

DATE: 11/15/2024 2:57:43 PM
FILE: G:\TXC\Projects\City Georgetown\10767-00 Shell Road\03 CADD\01 Shts\06-DRNG\SHELL DRNG OVERALL DA 01.dgn

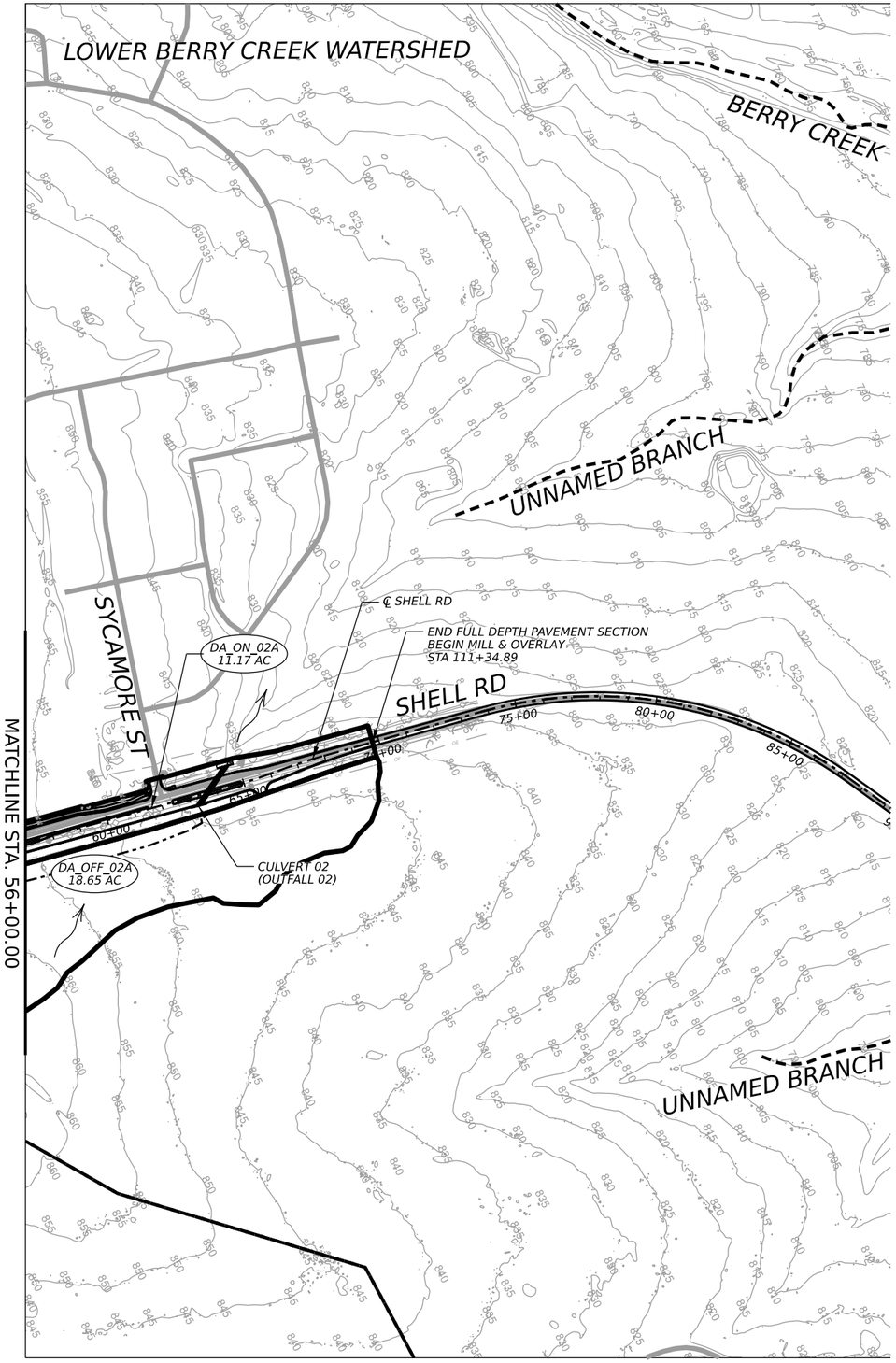

LEGEND

- XXX-XXX / X.XX AC — DRAINAGE AREA ID
- FLOW DIRECTION
- DRAINAGE AREA BOUNDARY
- DITCH LINE

NOTE

- CONTOUR SOURCE: 2015 CITY OF GEORGETOWN LIDAR DATA

0 250 500

SCALE: 1" = 500'

STATE OF TEXAS
ALEXIS WOFFENDEN
117162
LICENSED
PROFESSIONAL ENGINEER

11/18/2024

EST. 1848 GEORGETOWN TEXAS

BGE, Inc.
101 West Louis Henna Blvd, Suite 400, Austin, TX 78728
Tel: 512-879-0400 • www.bgeinc.com
TBPE Registration No. F-1046

SHELL ROAD

OVERALL DRAINAGE AREA MAP

SHEET 2 OF 2

SHEET NO. 135

DATE: 11/15/2024 2:57:46 PM
FILE: G:\TX\Projects\City Georgetown\10767-00 Shell Road\03 CADD\01 Shts\06-DRNG\SHELL_DRNG_OVERALL_DA_02.dgn

Time of Concentration (Existing Condition)

BASIN INFORMATION		SHEET FLOW (<= 100 FEET)				SHALLOW CONC. FLOW			OPEN CHANNEL FLOW				SHEET FLOW		SHALLOW CONC. FLOW			OPEN CHANNEL FLOW			TOTAL			SCS UH		Hydraulic Radius Calculations										
DRAINAGE BASIN	AREA (ac)	US ELEV. (FT)	DS ELEV. (FT)	LENGTH (FT)	ROUGHNESS COEFFICIENT n	DS ELEV. (FT)	LENGTH (FT)	PAVED (P) OR UNPAVED (U)	DS ELEV. (FT)	LENGTH (FT)	HYDRAULIC RADIUS (FT)	MANNING'S N VALUE	SLOPE (FT/FT)	T1 (HR)	SLOPE (FT/FT)	VELOCITY (FT/SEC)	T2 (HR)	SLOPE (FT/FT)	VELOCITY (FT/SEC)	T3 (HR)	TIME OF CONCENTRATION TC=T1+T2+T3 (HR)	TIME OF CONCENTRATION TC=T1+T2+T3 (MIN)	TC USED (6 MIN MINIM (MIN)	LAG TIME T_LAG=0.6 TC (MIN)	DRAINAGE BASIN	Fore Slope (H:1)	Bottom Width (ft)	Back Slope (H:1)	Avg Flow Depth (ft)	Fore Slope Width (ft)	Fore Slope Hypotenuse (ft)	Back Slope Width (ft)	Back Slope Hypotenuse (ft)	XS Area (ft²)	Wetted Perimeter (ft)	Hydraulic Radius [A/P] (ft)
DA_OFF_01A	23.07	902.35	902.11	100	0.150	902.00	60	U	896.15	1203	0.12	0.035	0.002	0.36	0.002	0.69	0.02	0.005	0.74	0.45	**0.84**	**50.4**	**50.4**	**30**	DA_OFF_01A	30	0	30	0.3	7.5	7.5	7.5	7.5	1.88	15.0	0.12
DA_OFF_01B	21.60	901.34	900.80	100	0.150	890.98	623	U	886.38	827	0.12	0.035	0.005	0.26	0.016	2.02	0.09	0.006	0.78	0.29	**0.64**	**38.4**	**38.4**	**23**	DA_OFF_01B	6	0	6	0.3	1.5	1.5	1.5	1.5	0.38	3.0	0.12
DA_OFF_01C	28.44	896.43	895.57	100	0.150	869.58	1880	U	869.57	54	0.14	0.035	0.009	0.22	0.014	1.90	0.28	0.000	0.16	0.10	**0.59**	**35.4**	**35.4**	**21**	DA_OFF_01C	20	4	10	0.2	4.0	4.0	2.0	2.0	1.40	10.0	0.14
DA_OFF_01D	14.32	883.18	881.67	100	0.011	872.81	1167	P	872.71	29	0.05	0.035	0.015	0.02	0.008	1.77	0.18	0.003	0.34	0.02	**0.23**	**13.7**	**13.7**	**8**	DA_OFF_01D	40	0	20	0.1	4.0	4.0	2.0	2.0	0.30	6.0	0.05
DA_OFF_01E	25.19	888.39	887.71	100	0.150	886.41	230	U	883.05	876	0.25	0.035	0.007	0.24	0.006	1.21	0.05	0.004	1.04	0.23	**0.53**	**31.6**	**31.6**	**20**	DA_OFF_01E	16	0	4	0.5	8.0	8.0	2.0	2.1	2.50	10.1	0.25
						883.05			865.62	786		0.016						0.022	6.00	0.04	**0.04**	**2.2**	**33.8**			Storm Drain										
DA_OFF_01F	15.94	875.20	872.14	100	0.150	857.77	814	U	852.59	149	0.25	0.035	0.031	0.13	0.018	2.14	0.11	0.035	3.14	0.01	**0.25**	**15.0**	**15.0**	**9**	DA_OFF_01F	15	0	20	0.5	7.5	7.5	10.0	10.0	4.38	17.5	0.25
DA_OFF_01G	2.22	881.11	881.07	100	0.150	874.03	444	U	873.58	21	0.12	0.035	0.000	0.73	0.016	2.03	0.06	0.021	1.53	0.00	**0.79**	**47.7**	**47.7**	**29**	DA_OFF_01G	6	0	6	0.3	1.5	1.5	1.5	1.5	0.38	3.0	0.12
DA_OFF_02A	18.65	870.26	868.16	100	0.150	844.70	1208	U	844.23	55	0.10	0.035	0.021	0.15	0.019	2.25	0.15	0.009	0.84	0.02	**0.32**	**19.2**	**19.2**	**12**	DA_OFF_02A	40	0	40	0.2	8.0	8.0	8.0	8.0	1.60	16.0	0.10
DA_OFF_02B	10.38	880.49	880.16	100	0.011	879.21	496	U	869.44	1056	0.50	0.035	0.003	0.04	0.002	0.71	0.19	0.009	2.56	0.11	**0.35**	**20.9**	**20.9**	**13**	DA_OFF_02B	7.5	0	7.5	1.0	7.5	7.6	7.5	7.6	7.50	15.1	0.50
DA_OFF_02C	1.02	873.10	872.97	100	0.011	870.09	486	P	864.42	158		0.035	0.001	0.06	0.006	1.57	0.09	0.036	6.00	0.01	**0.15**	**9.0**	**9.0**	**5**	DA_OFF_02C	Storm Drain										
DA_ON_01A	7.56	879.34	879.01	23	0.011	878.23	11	U	850.93	2320	0.35	0.035	0.014	0.01	0.072	4.32	0.00	0.012	2.28	0.28	**0.29**	**17.4**	**17.4**	**10**	DA_ON_01A	12	0	12	0.7	8.4	8.4	8.4	8.4	5.88	16.9	0.35
DA_ON_01B	3.36	875.69	874.59	52	0.011	872.93	48	U	850.93	999	0.25	0.035	0.021	0.01	0.035	3.00	0.00	0.022	2.49	0.11	**0.13**	**7.6**	**7.6**	**5**	DA_ON_01B	6	0	12	0.5	3.0	3.0	6.0	6.0	2.25	9.1	0.25
DA_ON_02A	11.17	879.32	879.23	17	0.011	878.72	15	U	840.22	2871	0.32	0.035	0.006	0.01	0.034	2.97	0.00	0.013	2.32	0.34	**0.35**	**21.2**	**21.2**	**13**	DA_ON_02A	12	0	12	0.7	7.8	7.8	7.8	7.8	5.07	15.7	0.32

Curve Number (Existing Condition)

CURVE NUMBER CALCULATIONS

ID	Area (ac)	Rating	Cover Type	CN	Drainage Area ID	Drainage Area (ac)	Drainage Area (sq-mi)	Weighted CN
DA_OFF_01A	14.21	D	Commercial and business	95				
DA_OFF_01A	4.81	D	Good condition (grass cover > 75%)	80	DA_OFF_01A	23.07	0.0360	92
DA_OFF_01A	4.05	D	Paved; curbs and storm drains (excluding right-of-way)	98				
DA_OFF_01B	8.07	D	Commercial and business	95				
DA_OFF_01B	10.20	D	Good condition (grass cover > 75%)	80	DA_OFF_01B	21.60	0.0337	88
DA_OFF_01B	3.33	D	Paved; curbs and storm drains (excluding right-of-way)	98				
DA_OFF_01C	9.12	D	Commercial and business	95				
DA_OFF_01C	15.78	D	Good condition (grass cover > 75%)	80	DA_OFF_01C	28.44	0.0444	86
DA_OFF_01C	1.81	D	Paved; curbs and storm drains (excluding right-of-way)	98				
DA_OFF_01C	1.74	D	Residential - 1/4 acre	87				
DA_OFF_01D	0.11	D	Good condition (grass cover > 75%)	80	DA_OFF_01D	14.32	0.0224	87
DA_OFF_01D	14.21	D	Residential - 1/4 acre	87				
DA_OFF_01E	21.41	D	Commercial and business	95	DA_OFF_01E	25.19	0.0394	95
DA_OFF_01E	3.78	D	Paved; curbs and storm drains (excluding right-of-way)	98				
DA_OFF_01F	4.83	D	Commercial and business	95				
DA_OFF_01F	10.76	D	Good condition (grass cover > 75%)	80	DA_OFF_01F	15.94	0.0249	85
DA_OFF_01F	0.04	D	Paved; curbs and storm drains (excluding right-of-way)	98				
DA_OFF_01F	0.31	D	Residential - 1/4 acre	87				
DA_OFF_01G	2.22	D	Residential - 1/4 acre	87	DA_OFF_01G	2.22	0.0035	87
DA_OFF_02A	18.65	D	Good condition (grass cover > 75%)	80	DA_OFF_02A	18.65	0.0291	80
DA_OFF_02B	10.38	D	Residential - 1/4 acre	87	DA_OFF_02B	10.38	0.0162	87
DA_OFF_02C	1.02	D	Residential - 1/4 acre	87	DA_OFF_02C	1.02	0.0016	87
DA_ON_01A	4.93	D	Good condition (grass cover > 75%)	80	DA_ON_01A	7.56	0.0118	86
DA_ON_01A	2.62	D	Paved; curbs and storm drains (excluding right-of-way)	98				
DA_ON_01B	1.41	D	Good condition (grass cover > 75%)	80	DA_ON_01B	3.36	0.0052	90
DA_ON_01B	1.94	D	Paved; curbs and storm drains (excluding right-of-way)	98				
DA_ON_02A	7.88	D	Good condition (grass cover > 75%)	80	DA_ON_02A	11.17	0.0175	85
DA_ON_02A	3.29	D	Paved; curbs and storm drains (excluding right-of-way)	98				

Runoff Computations (Existing Condition)

Runoff Computations - Table 01: Existing Condition

HMS INPUT				HMS OUTPUT					
						Discharge (cfs)			
Subbasin	Area (sq-mi)	CN	Lag Time (min)	Hydrologic Element	Area (sq-mi)	p = 50% 2-yr	p = 10% 10-yr	p = 4% 25-yr	p = 1% 100-yr
DA_OFF_01A	0.0360	92	30	DA_OFF_01A	0.0360	38.90	68.40	86.20	114.50
DA_OFF_01B	0.0337	88	23	DA_OFF_01B	0.0337	36.70	69.40	89.10	120.30
DA_OFF_01C	0.0444	86	21	DA_OFF_01C	0.0444	47.50	92.40	119.60	162.90
DA_OFF_01D	0.0224	87	8	DA_OFF_01D	0.0224	37.90	72.00	92.40	124.70
DA_OFF_01E	0.0394	95	20	DA_OFF_01E	0.0394	57.10	95.30	118.20	155.00
DA_OFF_01F	0.0249	85	9	DA_OFF_01F	0.0249	36.70	72.90	94.80	129.50
DA_OFF_01G	0.0035	87	29	DA_OFF_01G	0.0035	3.20	6.20	8.10	11.00
DA_OFF_02A	0.0291	80	12	DA_OFF_02A	0.0291	31.50	69.00	92.40	129.90
DA_OFF_02B	0.0162	87	13	DA_OFF_02B	0.0162	22.50	43.00	55.30	74.70
DA_OFF_02C	0.0016	87	5	DA_OFF_02C	0.0016	2.90	5.50	7.00	9.50
DA_ON_01A	0.0118	86	10	DA_ON_01A	0.0118	17.40	33.30	42.80	58.20
DA_ON_01B	0.0052	90	5	DA_ON_01B	0.0052	10.50	18.70	23.70	31.50
DA_ON_02A	0.0175	85	13	DA_ON_02A	0.0175	22.50	44.60	58.10	79.30
				CULVERT_01	0.2213	219.90	412.30	529.00	715.70
				CULVERT_02	0.0644	74.30	151.90	200.30	277.40

NOTE

- SEE SHELL ROAD WIDENING:PS&E DRAINAGE REPORT FOR DETAILED ANALYSIS AND DISCUSSION.
- THE PEAK FLOWS FOR HYDROGRAPH METHOD WERE DETERMINED USING A HEC-HMS 4.8 HYDROLOGIC MODEL.

STATE OF TEXAS
ALEXIS WOFFENDEN
117162
LICENSED
PROFESSIONAL ENGINEER

11/18/2024

EST.1848 GEORGETOWN TEXAS

BGE, Inc.
101 West Louis Henna Blvd, Suite 400, Austin, TX 78728
Tel: 512-879-0400 • www.bgeinc.com
TBPE Registration No. F-1046

SHELL ROAD

EXISTING HYDROLOGY DATA CULVERT

SHEET 1 OF 2

SHEET NO. 136

DATE: 11/15/2024 2:57:47 PM
FILE: G:\TXC\Projects\City Georgetown\10767-00 Shell Road\03 CADD\01 Shts\06-DRNG\SHELL_DRNG_CULV_HYDROLOGY_DATA_01.dgn

Time of Concentration (Proposed Condition)

BASIN INFORMATION		SHEET FLOW (<= 100 FEET)				SHALLOW CONC. FLOW			OPEN CHANNEL FLOW				SHEET FLOW		SHALLOW CONC. FLOW			OPEN CHANNEL FLOW			TOTAL			SCS UH		Hydraulic Radius Calculations										
DRAINAGE BASIN	AREA (ac)	US ELEV. (FT)	DS ELEV. (FT)	LENGTH (FT)	ROUGHNESS COEFFICIENT n	DS ELEV. (FT)	LENGTH (FT)	PAVED (P) OR UNPAVED (U)	DS ELEV. (FT)	LENGTH (FT)	HYDRAULIC RADIUS (FT)	MANNING'S N VALUE	SLOPE (FT/FT)	T1 (HR)	SLOPE (FT/FT)	VELOCITY (FT/SEC)	T2 (HR)	SLOPE (FT/FT)	VELOCITY (FT/SEC)	T3 (HR)	TIME OF CONCENTRATION TC=T1+T2+T3 (HR)	TIME OF CONCENTRATION TC=T1+T2+T3 (MIN)	TC USED (6 MIN MINIM (MIN)	LAG TIME T_LAG=0.6 TC (MIN)	DRAINAGE BASIN	Fore Slope (H:1)	Bottom Width (ft)	Back Slope (H:1)	Avg Flow Depth (ft)	Fore Slope Width (ft)	Fore Slope Hypotenuse (ft)	Back Slope Width (ft)	Back Slope Hypotenuse (ft)	XS Area (ft²)	Wetted Perimeter (ft)	Hydraulic Radius [A/P] (ft)
DA_OFF_01A	23.07	902.35	902.11	100	0.150	902.00	60	U	896.15	1203	0.12	0.035	0.002	0.36	0.002	0.69	0.02	0.005	0.74	0.45	**0.84**	**50.4**	**50.4**	**30**	DA_OFF_01A	30	0	30	0.3	7.5	7.5	7.5	7.5	1.88	15.0	0.12
DA_OFF_01B	21.60	901.34	900.80	100	0.150	890.98	623	U	886.38	827	0.12	0.035	0.005	0.26	0.016	2.02	0.09	0.006	0.78	0.29	**0.64**	**38.4**	**38.4**	**23**	DA_OFF_01B	6	0	6	0.3	1.5	1.5	1.5	1.5	0.38	3.0	0.12
DA_OFF_01C	28.44	896.43	895.57	100	0.150	869.58	1880	U	869.57	54	0.14	0.035	0.009	0.22	0.014	1.90	0.28	0.000	0.16	0.10	**0.59**	**35.4**	**35.4**	**21**	DA_OFF_01C	20	4	10	0.2	4.0	4.0	2.0	2.0	1.40	10.0	0.14
DA_OFF_01D	14.32	883.18	881.67	100	0.011	872.81	1167	P	872.71	29	0.05	0.035	0.015	0.02	0.008	1.77	0.18	0.003	0.34	0.02	**0.23**	**13.7**	**13.7**	**8**	DA_OFF_01D	40	0	20	0.1	4.0	4.0	2.0	2.0	0.30	6.0	0.05
DA_OFF_01E	25.19	888.39	887.71	100	0.150	886.41	230	U	883.05	876	0.25	0.035	0.007	0.24	0.006	1.21	0.05	0.004	1.04	0.23	**0.53**	**31.6**	**31.6**	**20**	DA_OFF_01E	16	0	4	0.5	8.0	8.0	2.0	2.1	2.50	10.1	0.25
						883.05			865.62	786	0.00	0.016						0.022	6.00	0.04	**0.04**	**2.2**	**33.8**			Storm Drain										
DA_OFF_01F	15.94	875.20	872.14	100	0.150	857.77	814	U	852.59	149	0.25	0.035	0.031	0.13	0.018	2.14	0.11	0.035	3.14	0.01	**0.25**	**15.0**	**15.0**	**9**	DA_OFF_01F	15	0	20	0.5	7.5	7.5	10.0	10.0	4.38	17.5	0.25
DA_OFF_01G	2.22	881.11	881.07	100	0.150	874.03	444	U	873.58	21	0.12	0.035	0.000	0.73	0.016	2.03	0.06	0.021	1.53	0.00	**0.79**	**47.7**	**47.7**	**29**	DA_OFF_01G	6	0	6	0.3	1.5	1.5	1.5	1.5	0.38	3.0	0.12
DA_OFF_02A	18.65	870.26	868.16	100	0.150	844.70	1208	U	844.23	55	0.10	0.035	0.021	0.15	0.019	2.25	0.15	0.009	0.84	0.02	**0.32**	**19.2**	**19.2**	**12**	DA_OFF_02A	40	0	40	0.2	8.0	8.0	8.0	8.0	1.60	16.0	0.10
DA_OFF_02B	10.38	880.49	880.16	100	0.011	879.21	496	U	869.44	1056	0.50	0.035	0.003	0.04	0.002	0.71	0.19	0.009	2.56	0.11	**0.35**	**20.9**	**20.9**	**13**	DA_OFF_02B	7.5	0	7.5	1.0	7.5	7.6	7.5	7.6	7.50	15.1	0.50
DA_OFF_02C	1.02	873.10	872.97	100	0.011	870.09	486	P	864.42	158	0.00	0.035	0.001	0.06	0.006	1.57	0.09	0.036	6.00	0.01	**0.15**	**9.0**	**9.0**	**5**	DA_OFF_02C	Storm Drain										
DA_ON_01A	7.56	880.07	879.09	49	0.011	878.84	154	U	850.93	2139	0.00	0.035	0.020	0.01	0.002	0.66	0.07	0.013	6.00	0.10	**0.18**	**10.5**	**10.5**	**6**	DA_ON_01A	Storm Drain										
DA_ON_01B	3.36	875.69	874.66	47	0.011	872.93	53	P	850.93	993	0.00	0.035	0.022	0.01	0.033	3.67	0.00	0.022	6.00	0.05	**0.06**	**3.6**	**6.0**	**4**	DA_ON_01B	Storm Drain										
DA_ON_02A	11.17	880.07	879.27	37	0.011	878.97	46	U	840.22	2810	0.00	0.035	0.022	0.01	0.007	1.30	0.01	0.014	6.00	0.13	**0.15**	**8.9**	**8.9**	**5**	DA_ON_02A	Storm Drain										

Curve Number (Proposed Condition)

CURVE NUMBER CALCULATIONS

ID	Area (ac)	Rating	Cover Type	CN	Drainage Area ID	Drainage Area (ac)	Drainage Area (sq-mi)	Product	Weighted CN
DA_ON_01A	2.43	D	Good condition (grass cover > 75%)	80	DA_ON_01A	7.56	0.0118	194.07	92
DA_ON_01A	5.13	D	Paved; curbs and storm drains (excluding right-of-way)	98				502.67	
DA_ON_01B	1.06	D	Good condition (grass cover > 75%)	80	DA_ON_01B	3.36	0.0052	84.78	92
DA_ON_01B	2.30	D	Paved; curbs and storm drains (excluding right-of-way)	98				224.93	
DA_ON_02A	4.74	D	Good condition (grass cover > 75%)	80	DA_ON_02A	11.17	0.0175	379.53	90
DA_ON_02A	6.43	D	Paved; curbs and storm drains (excluding right-of-way)	98				629.96	

Runoff Computations (Proposed Condition)

Runoff Computations - Table 01: Proposed Condition

HMS INPUT				HMS OUTPUT					
						Discharge (cfs)			
Subbasin	Area (sq-mi)	CN	Lag Time (min)	Hydrologic Element	Area (sq-mi)	p = 50%	p = 10%	p = 4%	p = 1%
						2-yr	10-yr	25-yr	100-yr
DA_OFF_01A	0.0360	92	30	DA_OFF_01A	0.0360	38.90	68.40	86.20	114.50
DA_OFF_01B	0.0337	88	23	DA_OFF_01B	0.0337	36.70	69.40	89.10	120.30
DA_OFF_01C	0.0444	86	21	DA_OFF_01C	0.0444	47.50	92.40	119.60	162.90
DA_OFF_01D	0.0224	87	8	DA_OFF_01D	0.0224	37.90	72.00	92.40	124.70
DA_OFF_01E	0.0394	95	20	DA_OFF_01E	0.0394	57.10	95.30	118.20	155.00
DA_OFF_01F	0.0249	85	9	DA_OFF_01F	0.0249	36.70	72.90	94.80	129.50
DA_OFF_01G	0.0035	87	29	DA_OFF_01G	0.0035	3.20	6.20	8.10	11.00
DA_OFF_02A	0.0291	80	12	DA_OFF_02A	0.0291	31.50	69.00	92.40	129.90
DA_OFF_02B	0.0162	87	13	DA_OFF_02B	0.0162	22.50	43.00	55.30	74.70
DA_OFF_02C	0.0016	87	5	DA_OFF_02C	0.0016	2.90	5.50	7.00	9.50
DA_ON_01A	0.0118	92	6	DA_ON_01A	0.0118	25.30	43.60	54.60	71.90
DA_ON_01B	0.0052	92	4	DA_ON_01B	0.0052	12.40	21.50	26.90	35.50
DA_ON_02A	0.0175	90	5	DA_ON_02A	0.0175	35.40	62.90	79.70	106.00
				CULVERT_01	0.2213	217.90	406.20	520.30	706.30
				CULVERT_02	0.0644	76.60	153.50	200.90	276.90

NOTE

- SEE SHELL ROAD WIDENING:PS&E DRAINAGE REPORT FOR DETAILED ANALYSIS AND DISCUSSION.
- THE PEAK FLOWS FOR HYDROGRAPH METHOD WERE DETERMINED USING A HEC-HMS 4.8 HYDROLOGIC MODEL.

STATE OF TEXAS
ALEXIS WOFFENDEN
117162
LICENSED
PROFESSIONAL ENGINEER

11/18/2024

EST. 1848 GEORGETOWN TEXAS

BGE, Inc.
101 West Louis Henna Blvd, Suite 400, Austin, TX 78728
Tel: 512-879-0400 • www.bgeinc.com
TBPE Registration No. F-1046

SHELL ROAD

PROPOSED HYDROLOGY DATA CULVERT

SHEET 2 OF 2

SHEET NO. 137

DATE: 11/15/2024 2:57:48 PM
FILE: G:\TXC\Projects\City Georgetown\10767-00 Shell Road\03 CADD\01 Shts\06-DRNG\SHELL_DRNG_CULV HYDROLOGY DATA 02.dgn

ATTACHMENT H – TEMPORARY SEDIMENT POND(S) PLANS AND CALCULATIONS

Not Applicable

Attachment I – Inspection and Maintenance for BMPs

The contractor will be required to maintain, repair, or retrofit all stabilized construction exits, silt fences, erosion control logs, and temporary seeding, as it is required through the duration of the project until the permanent BMPs are constructed and established. The contractor will be required to inspect the BMPs on at least a bi-monthly basis and after every rainfall event. A log of the inspections will be maintained and kept on site identifying each individual BMP area and its condition . The project inspector, from City of Georgetown, will also inspect the BMPs to ensure they are in proper working condition. If any BMP is found to be unacceptable, the inspector will notify the contractor to remedy the problem immediately.

Attachment J – Schedule of Interim and Permanent Soil Stabilization Practices

With the nature of this project, the disturbance of topsoil will be limited to the areas where the road will be constructed. The permanent soil stabilization practices of seeding, sodding, and preservation of natural resources will be utilized in order to maintain the topsoil put in place until the grasses are established. Bare soils should be seeded or otherwise stabilized within 14 calendar days after final grading or where construction activity has temporarily ceased for more than 21 days.

Agent Authorization Form
For Required Signature
Edwards Aquifer Protection Program
Relating to 30 TAC Chapter 213
Effective June 1, 1999

I Chris Pousson,
Print Name

CIP Manager,
Title - Owner/President/Other

of City of Georgetown,
Corporation/Partnership/Entity Name

have authorized Alexis Woffenden
Print Name of Agent/Engineer

of BGE, Inc.
Print Name of Firm

to represent and act on the behalf of the above named Corporation, Partnership, or Entity for the purpose of preparing and submitting this plan application to the Texas Commission on Environmental Quality (TCEQ) for the review and approval consideration of regulated activities.

I also understand that:

1. The applicant is responsible for compliance with 30 Texas Administrative Code Chapter 213 and any condition of the TCEQ's approval letter. The TCEQ is authorized to assess administrative penalties of up to $10,000 per day per violation.

2. For those submitting an application who are not the property owner, but who have the right to control and possess the property, additional authorization is required from the owner.

3. Application fees are due and payable at the time the application is submitted. The application fee must be sent to the TCEQ cashier or to the appropriate regional office. The application will not be considered until the correct fee is received by the commission.

4. A notarized copy of the Agent Authorization Form must be provided for the person preparing the application, and this form must accompany the completed application.

5. No person shall commence any regulated activity on the Edwards Aquifer Recharge Zone, Contributing Zone or Transition Zone until the appropriate application for the activity has been filed with and approved by the Executive Director.

SIGNATURE PAGE:

Applicant's Signature

2-26-25
Date

THE STATE OF Texas §

County of Williamson §

BEFORE ME, the undersigned authority, on this day personally appeared Chris Pousson known to me to be the person whose name is subscribed to the foregoing instrument, and acknowledged to me that (s)he executed same for the purpose and consideration therein expressed.

GIVEN under my hand and seal of office on this 26th day of Febuary, 2025.

Christopher Brian Mays
NOTARY PUBLIC

CHRISTOPHER BRIAN MAYS
Notary Public, State of Texas
Comm. Expires 08-02-2028
Notary ID 135021722

Christopher Brian Mays
Typed or Printed Name of Notary

MY COMMISSION EXPIRES: 8-2-2028

Application Fee Form

Texas Commission on Environmental Quality
Name of Proposed Regulated Entity: Shell Road
Regulated Entity Location: 1.4 miles of proposed roadway starting at Williams Drive and ending approx. 1,200 ft northeast of Sycamore Street.

Name of Customer: City of Georgtown
Contact Person: Chris Pousson Phone: 512-930-8162
Customer Reference Number (if issued):CN 600412043
Regulated Entity Reference Number (if issued):RN _____

Austin Regional Office (3373)

☐ Hays ☐ Travis ☒ Williamson

San Antonio Regional Office (3362)

☐ Bexar ☐ Medina ☐ Uvalde
☐ Comal ☐ Kinney

Application fees must be paid by check, certified check, or money order, payable to the **Texas Commission on Environmental Quality**. Your canceled check will serve as your receipt. **This form must be submitted with your fee payment**. This payment is being submitted to:

☒ Austin Regional Office
☐ Mailed to: TCEQ - Cashier
Revenues Section
Mail Code 214
P.O. Box 13088
Austin, TX 78711-3088

☐ San Antonio Regional Office
☐ Overnight Delivery to: TCEQ - Cashier
12100 Park 35 Circle
Building A, 3rd Floor
Austin, TX 78753
(512)239-0357

Site Location (Check All That Apply):

☒ Recharge Zone ☐ Contributing Zone ☐ Transition Zone

Type of Plan	***Size***	***Fee Due***
Water Pollution Abatement Plan, Contributing Zone Plan: One Single Family Residential Dwelling	Acres	$
Water Pollution Abatement Plan, Contributing Zone Plan: Multiple Single Family Residential and Parks	Acres	$
Water Pollution Abatement Plan, Contributing Zone Plan: Non-residential	19.89 Acres	$ 6500
Sewage Collection System	L.F.	$
Lift Stations without sewer lines	Acres	$
Underground or Aboveground Storage Tank Facility	Tanks	$
Piping System(s)(only)	Each	$
Exception	Each	$
Extension of Time	Each	$

Signature _____ Date: 06/20/2025

Application Fee Schedule

Texas Commission on Environmental Quality
Edwards Aquifer Protection Program 30 TAC Chapter 213 (effective 05/01/2008)

Water Pollution Abatement Plans and Modifications

Contributing Zone Plans and Modifications

Project	*Project Area in Acres*	*Fee*
One Single Family Residential Dwelling	< 5	$650
Multiple Single Family Residential and Parks	< 5 5 < 10 10 < 40 40 < 100 100 < 500 ≥ 500	$1,500 $3,000 $4,000 $6,500 $8,000 $10,000
Non-residential (Commercial, industrial, institutional, multi-family residential, schools, and other sites where regulated activities will occur)	< 1 1 < 5 5 < 10 10 < 40 40 < 100 ≥ 100	$3,000 $4,000 $5,000 $6,500 $8,000 $10,000

Organized Sewage Collection Systems and Modifications

Project	*Cost per Linear Foot*	*Minimum Fee-Maximum Fee*
Sewage Collection Systems	$0.50	$650 - $6,500

Underground and Aboveground Storage Tank System Facility Plans and Modifications

Project	*Cost per Tank or Piping System*	*Minimum Fee-Maximum Fee*
Underground and Aboveground Storage Tank Facility	$650	$650 - $6,500

Exception Requests

Project	*Fee*
Exception Request	$500

Extension of Time Requests

Project	***Fee***
Extension of Time Request	$150

TCEQ Use Only

TCEQ Core Data Form

For detailed instructions on completing this form, please read the Core Data Form Instructions or call 512-239-5175.

SECTION I: General Information

1. Reason for Submission (*If other is checked please describe in space provided.*)

☒ New Permit, Registration or Authorization (*Core Data Form should be submitted with the program application.*)

☐ Renewal *(Core Data Form should be submitted with the renewal form)* ☐ Other

2. Customer Reference Number *(if issued)*	Follow this link to search for CN or RN numbers in Central Registry**	**3. Regulated Entity Reference Number** *(if issued)*
CN 600412043		**RN**

SECTION II: Customer Information

4. General Customer Information | **5. Effective Date for Customer Information Updates** (mm/dd/yyyy)

☐ New Customer ☐ Update to Customer Information ☐ Change in Regulated Entity Ownership
☐ Change in Legal Name (Verifiable with the Texas Secretary of State or Texas Comptroller of Public Accounts)

The Customer Name submitted here may be updated automatically based on what is current and active with the Texas Secretary of State (SOS) or Texas Comptroller of Public Accounts (CPA).

6. Customer Legal Name *(If an individual, print last name first: eg: Doe, John)* | *If new Customer, enter previous Customer below:*

City of Georgetown

7. TX SOS/CPA Filing Number	**8. TX State Tax ID** (11 digits)	**9. Federal Tax ID** (9 digits)	**10. DUNS Number** *(if applicable)*

11. Type of Customer: ☐ Corporation ☐ Individual Partnership: ☐ General ☐ Limited

Government: ☒ City ☐ County ☐ Federal ☐ Local ☐ State ☐ Other ☐ Sole Proprietorship ☐ Other:

12. Number of Employees

☐ 0-20 ☐ 21-100 ☐ 101-250 ☐ 251-500 ☒ 501 and higher

13. Independently Owned and Operated?

☐ **Yes** ☐ **No**

14. Customer Role (Proposed or Actual) – *as it relates to the Regulated Entity listed on this form. Please check one of the following*

☐ Owner ☐ Operator ☒ Owner & Operator
☐ Occupational Licensee ☐ Responsible Party ☐ VCP/BSA Applicant ☐ Other:

15. Mailing Address:

P.O. Box 409

City	Georgetown	**State**	TX	**ZIP**	78627	**ZIP + 4**	

16. Country Mailing Information *(if outside USA)*	**17. E-Mail Address** *(if applicable)*
	chris.pousson@georgetown.org

18. Telephone Number	**19. Extension or Code**	**20. Fax Number** *(if applicable)*

(512) 930-8162		( ) -

SECTION III: Regulated Entity Information

21. General Regulated Entity Information *(If 'New Regulated Entity" is selected, a new permit application is also required.)*

☒ New Regulated Entity ☐ Update to Regulated Entity Name ☐ Update to Regulated Entity Information

The Regulated Entity Name submitted may be updated, in order to meet TCEQ Core Data Standards (removal of organizational endings such as Inc, LP, or LLC).

22. Regulated Entity Name *(Enter name of the site where the regulated action is taking place.)*

Shell Road

23. Street Address of the Regulated Entity: ***(No PO Boxes)***								
	City		**State**		**ZIP**		**ZIP + 4**	
24. County								

If no Street Address is provided, fields 25-28 are required.

25. Description to Physical Location:	1.4 miles of proposed roadway starting at Williams Drive and ending approx. 1,200 ft northeast of Sycamore Street				
26. Nearest City			**State**	**Nearest ZIP Code**	
Georgetown			TX	78627	

Latitude/Longitude are required and may be added/updated to meet TCEQ Core Data Standards. (Geocoding of the Physical Address may be used to supply coordinates where none have been provided or to gain accuracy).

27. Latitude (N) In Decimal:	30.694569		**28. Longitude (W) In Decimal:**	-97.708746	
Degrees	Minutes	Seconds	Degrees	Minutes	Seconds
30	41	40.4484	97	42	31.4856

29. Primary SIC Code (4 digits)	**30. Secondary SIC Code** (4 digits)	**31. Primary NAICS Code** (5 or 6 digits)	**32. Secondary NAICS Code** (5 or 6 digits)
1611		237310	

33. What is the Primary Business of this entity? *(Do not repeat the SIC or NAICS description.)*

Reconstruction of existing roadway

34. Mailing Address:	**P.O. Box 409**							
	City	**Georgetown**	**State**	**TX**	**ZIP**	**78627**	**ZIP + 4**	
35. E-Mail Address:	**chris.pousson@georgetown.org**							

36. Telephone Number	**37. Extension or Code**	**38. Fax Number** *(if applicable)*
(512) 930-8162		( ) -

39. TCEQ Programs and ID Numbers Check all Programs and write in the permits/registration numbers that will be affected by the updates submitted on this form. See the Core Data Form instructions for additional guidance.

☐ Dam Safety	☐ Districts	☒ Edwards Aquifer	☐ Emissions Inventory Air	☐ Industrial Hazardous Waste
☐ Municipal Solid Waste	☐ New Source Review Air	☐ OSSF	☐ Petroleum Storage Tank	☐ PWS
☐ Sludge	☐ Storm Water	☐ Title V Air	☐ Tires	☐ Used Oil
☐ Voluntary Cleanup	☐ Wastewater	☐ Wastewater Agriculture	☐ Water Rights	☐ Other:

SECTION IV: Preparer Information

40. Name:	Alexis Woffenden	**41. Title:**	Engineer

42. Telephone Number	**43. Ext./Code**	**44. Fax Number**	**45. E-Mail Address**
(512 **)** 795-1416		**( )** -	awoffenden@bgeinc.com

SECTION V: Authorized Signature

46. By my signature below, I certify, to the best of my knowledge, that the information provided in this form is true and complete, and that I have signature authority to submit this form on behalf of the entity specified in Section II, Field 6 and/or as required for the updates to the ID numbers identified in field 39.

Company:	BGE, Inc.	**Job Title:**	Engineer		
Name *(In Print):*	Alexis Woffenden			**Phone:**	**(**512 **)**795-1416
Signature:				**Date:**	03/19/2025

INDEX OF SHEETS

SHEET NO.	*DESCRIPTION*
SEE	*SHEET 2*

CITY OF GEORGETOWN, TEXAS

PLANS OF PROPOSED ROADWAY IMPROVEMENT

SHELL ROAD
PRJ000254

LIMITS: FROM WILLIAMS DR
TO 1800 FT SOUTHWEST OF SHELL SPUR

FOR RECONSTRUCTING APRROX. 1.3 MILES
OF THE EXISTING 2-LANE ROADWAY SECTION
TO A 4-LANE DIVIDED URBAN FACILITY AND ADDING
MILL & OVERLAY TO LAST APPROX 0.8 MILES OF
PROJECT; ENDING AT COUNTY MAINTENANCE LIMITS.

SHELL RD
FUNCTIONAL CLASS: URBAN MAJOR ARTERIAL
DESIGN SPEED: 45 MPH
A.D.T. (2021): 7,484
A.D.T. (2041): 12,573

APPROVED BY THE CITY OF GEORGETOWN, TEXAS
THIS ____ DAY OF _____, 2024.

SYSTEMS ENGINEERING DIRECTOR DATE

CIP PROJECT MANAGER DATE

City Council

Mayor
Josh Schroeder

Mayor Pro-Tem
Kevin Pitts

City Council Members
Amanda Parr - - - - - - - - District 1
Shawn Hood - - - - - - - - District 2
Mike Triggs - - - - - - - - District 3
Ron Garland - - - - - - - - District 4
Kevin Pitts - - - - - - - - District 5
Jake French - - - - - - - - District 6
Ben Stewart - - - - - - - - District 7

City Manager
David Morgan

BEGIN PROJECT
SHELL RD
STA 1+23.36

END PROJECT
SHELL RD
STA 111+34.89

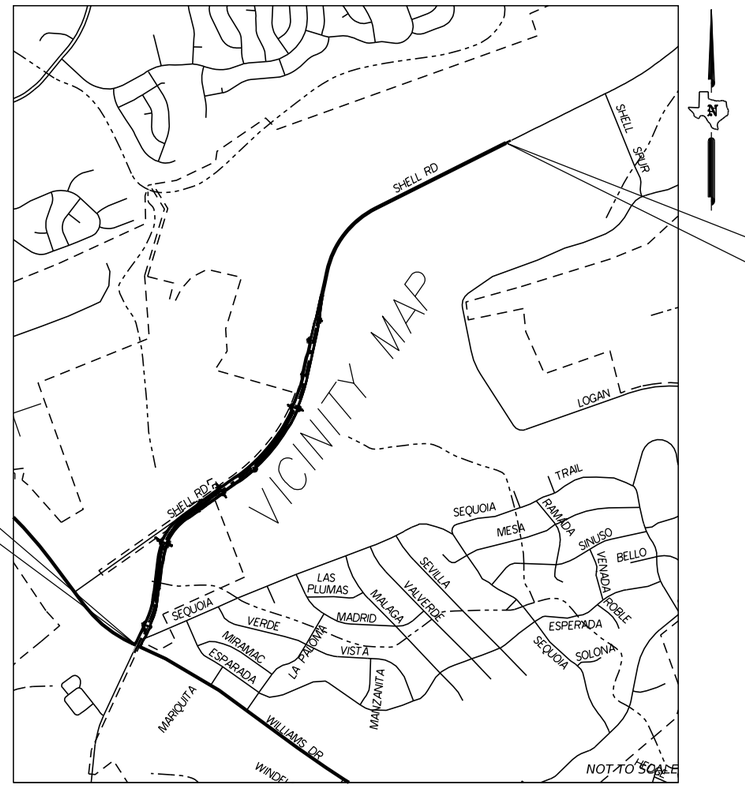

REGISTERED ACCESSIBILITY SPECIALIST (RAS) INSPECTION REQUIRED
TDLR NO: _____

SPECIFICATIONS ADOPTED BY THE TEXAS DEPARTMENT OF TRANSPORTATION, NOVEMBER 1, 2014 AND THE SPECIFICATION ITEMS LISTED AND DATED AS FOLLOWS, SHALL GOVERN ON THIS PROJECT: REQUIRED CONTRACT PROVISIONS FOR ALL FEDERAL-AID CONSTRUCTION CONTRACTS (FORM FHWA 1273, REVISED MAY 1, 2012).

ALL RESPONSIBILITY FOR THE ADEQUACY OF THESE PLANS REMAINS WITH THE ENGINEER WHO PREPARED THEM. IN ACCEPTING THESE PLANS, THE CITY OF GEORGETOWN MUST RELY UPON THE ADEQUACY OF THE WORK OF THE DESIGN ENGINEER.

REQUIRED SIGNS SHALL BE IN ACCORDANCE WITH BC(1)-21 THRU BC(12)-21 AND THE LATEST "TEXAS MANUAL ON UNIFORM TRAFFIC CONTROL DEVICES".

EXCEPTIONS: NONE
EQUATIONS: NONE
RAILROAD CROSSINGS: NONE

STATE OF TEXAS
ELENA RAMON
141765
LICENSED
PROFESSIONAL ENGINEER
3/12/2025

BGE, Inc.
101 Louis Henna Blvd., Suite 400, Austin, TX 78728
Tel: 512-879-0400 • www.bgeinc.com
TBPE Registration No. F-1046

BGE, INC.
PROJECT MANAGER

3/12/2025
DATE

DATE: 3/12/2025 2:49:00 PM
FILE: G:\TXC\Projects\City Georgetown\10767-00 Shell Road\03 CADD\01 Shts\00-GEN\Shell Gen_TTL.dgn

CK
DW
CK
DW

SHEET	GENERAL
1	TITLE SHEET
2	INDEX OF SHEETS
3 - 5	PROJECT LAYOUT
6	EXISTING TYPICAL SECTIONS
7 - 10	PROPOSED TYPICAL SECTIONS
11, 11A - 11I	GENERAL NOTES
12	TCP SUMMARY OF QUANTITIES
13	ROADWAY SUMMARY OF QUANTITIES
14	DRAINAGE SUMMARY OF QUANTITIES
15	ILLUMINATION SUMMARY OF QUANTITIES
16	SPMD SUMMARY OF QUANTITIES
17 - 19	SUMMARY OF SMALL SIGNS
20	SIGNALS SUMMARY OF QUANTITIES
21	SW3P SUMMARY OF QUANTITIES
22	UTILITY SUMMARY OF QUANTITIES
23	LANDSCAPING & IRRIGATION SUMMARY OF QUANTITIES
	TRAFFIC CONTROL PLAN
24	TRAFFIC CONTROL GENERAL NOTES
25 - 27	ADVANCED WARNING SIGN LAYOUTS
28 - 29	TRAFFIC CONTROL PLAN NARRATIVE
30 - 33	TCP TYPICAL SECTIONS - PHASE 1 (PHASES 1A & 1B)
34 - 37	TCP PHASE 1A STEP 3 STORM SEWER LATERAL DETAILS
38 - 45	TCP PHASE 1 LAYOUTS (PHASES 1A &1B)
46 - 49	TCP TYPICAL SECTIONS - PHASE 2
50 - 56	TCP PHASE 2 LAYOUTS
57 - 58	TCP TYPICAL SECTIONS - PHASE 3
59 - 65	TCP PHASE 3 LAYOUTS
66	TCP SONORA TRACE DETOUR
67 - 69	TCP INTERSECTION DETAILS
	STANDARDS (TCP)
70 - 81	BC(1)-21 THRU BC(12)-21
82 - 83	LPCB-13
84	TCP(2-1)-18
85	TCP(2-2)-18
86	TCP(2-3)-23
87	TCP(2-4)-18
88	TCP(3-1)-13
89	TCP(3-3)-14
90	TCP(7-1)-13
91	WZ (BRK)-13
92	WZ(RS)-22
93	WZ(STPM)-23
94	WZ(UL)-13
95	WZ(RCD)-13
96	WZ(BTS-1)-13
97	WZ(BTS-2)-13
98	TREATMENT FOR VARIOUS EDGE CONDITIONS
99 - 102	CAPITAL IMPROVEMENT PROJECT SIGN STANDARDS
	ROADWAY
103	HORIZONTAL ALIGNMENT DATA
104 - 115	ROADWAY PLAN & PROFILE
116 - 119	ROADWAY PLAN
120 - 122	INTERSECTION LAYOUT
123	SUMMARY OF INTERSECTIONS & DRIVEWAYS
124 - 129	MISCELLANEOUS CONCRETE CURB, MEDIAN & SIDEWALK DETAILS
	STANDARDS (ROADWAY)
130 - 131	CPCD-24
132	CCCG-22
133 - 136	PED-18
137 - 139	PRD-13
	DRAINAGE
140 - 141	OVERALL DRAINAGE AREA MAP
142 - 143	HYDROLOGY DATA (CULVERT)
144 - 146	DITCH CALCULATIONS
147 - 153	DRAINAGE AREA MAP (PROPOSED)
154 - 160	STORM SEWER COMPUTATIONS
161 - 172	STORM SEWER PLAN & PROFILE
173 - 176	STORM SEWER LATERALS
177 - 178	HYDRAULIC DATA (CULVERT)
179 - 180	CULVERT LAYOUTS
181	BCS
	STANDARDS (DRAINAGE)
182	SD11
183	SD11A
184	SD12
185	SD13
186	SD39
187	SD40
188	SD41
189	SD42
190	SCC-MD
191 - 192	SCC 3&4
193 - 194	SCC-8
195	MC-MD
	STANDARDS (DRAINAGE CONTINUED)
196 - 197	MC-6-16
198	ECD
199 - 201	MDD (FTW)
202	PW
203 - 205	SETB-FW-S
206 - 207	TD-C (FTW)
208	PBGC
209	PJB
210	PDD
211 - 212	PCU
213	CGT-PCU
214	CRR
215 - 216	SRR
217 - 218	PCO
219	CGT-PCO
220	PAZD
SHEET	**ILLUMINATION**
221 - 231	ILLUMINATION LAYOUT
	STANDARDS (ILLUMINATION)
232	GEO-116
233	GEO-117
234	GEO-206
235 - 236	GEO-225
237	GEO-236
238	UGDEM1.1
239	GEO-294
	TRAFFIC
240 - 249	SIGNING AND PAVEMENT MARKING
250	SMALL SIGN DETAIL
	STANDARDS (TRAFFIC)
251 - 254	D & OM(1)-20 THRU D & OM(4)-20
255 - 258	PM(1)-22 THRU PM(4)-22
259	SMD(GEN)-08
260 - 262	SMD(SLIP-1)-08 THRU SMD(SLIP-3)-08
263	SMD(TWT)-08
264 - 266	TP-80(12) (FTW)
267 - 271	TSR(1)-13 THRU TSR(5)-13
272	STANDARD STREET SIGN DETAIL
	SIGNALS
273	EXISTING SIGNAL LAYOUT - SHELL RD & WILLIAMS DR
274	PROPOSED SIGNAL LAYOUT - SHELL RD & WILLIAMS DR
275	PROPOSED SIGNAL ELEVATIONS - SHELL RD & WILLIAMS DR
276 - 277	PROPOSED SIGNAL ELECTRICAL SCHEDULE - SHELL RD & WILLIAMS DR
278	EXISTING SIGNAL LAYOUT - SHELL RD & VERDE VISTA
279	PROPOSED SIGNAL LAYOUT - SHELL RD & VERDE VISTA
280	PROPOSED SIGNAL ELEVATIONS - SHELL RD & VERDE VISTA
281 - 283	PROPOSED SIGNAL ELECTRICAL SCHEDULE - SHELL RD & VERDE VISTA
284	EXISTING INTERSECTION LAYOUT - ROSEDALE/VILLAGE COMMONS
285	PROPOSED SIGNAL LAYOUT - SHELL RD & ROSEDALE/VILLAGE COMMONS
286	PROPOSED SIGNAL ELEVATIONS - SHELL RD & ROSEDALE/VILLAGE COMMONS
287 - 290	PROPOSED SIGNAL ELECTRICAL SCHEDULE - SHELL RD & ROSEDALE/VILLAGE COMMONS
291	EXISTING SIGNAL LAYOUT - SHELL RD & WESTBURY/BELLAIRE
292	PROPOSED SIGNAL LAYOUT - SHELL RD & WESTBURY/BELLAIRE
293	PROPOSED SIGNAL ELEVATIONS - SHELL RD & WESTBURY/BELLAIRE
294 - 296	PROPOSED SIGNAL ELECTRICAL SCHEDULE - SHELL RD & WESTBURY/BELLAIRE
297 - 298	SIGNAL SIGN DETAIL
	STANDARDS (SIGNALS)
299 - 300	SMA-80(1)-12
301 - 305	LMA(1)-12
306	CFA-12
307	TS-FD-12
308	TS-CF-21
309	TS-BP-20
310	LUM-A-12
311	MA-C-12
312	MA-C-(ILSN)-12
313	MA-D-12
314	MA-DPD-20
315	SNS-95
316	WV & IV - 14
317 - 328	ED(1)-14 THRU ED(12)-14
329	PED POLE SPREAD FOOTING
	ENVIRONMENTAL
330 - 331	STORMWATER POLLUTION PREVENTION PLAN (SW3P)
332 - 337	SWP3 LAYOUTS
338	ENVIRONMENTAL PERMITS, ISSUES, AND COMMITMENTS (EPIC)
	STANDARDS (ENVIRONMENTAL)
339	EC(1)-16
340	EC(2)-16
341	EC(3)-16
342 - 344	EC(9)-16
	WATERLINE
345	LEGEND
346	GENERAL NOTES
347	TCEQ NOTES
348 - 349	OVERALL WATER METER AND VALVE ADJUSTMENTS
350 - 351	OVERALL W AND WW MANHOLE ADJUSTMENTS
352	WATER METER & FIRE HYDRANT RELOCATIONS
353 - 354	OVERALL RELOCATIONS
355	WL-A RELOCATION
356	WL-B RELOCATION
357	WL-B.2 RELOCATION
358	WL-C RELOCATION
359	WL-D RELOCATION
360	WL-E RELOCATION
361	WL-E.2 RELOCATION
362	WL-F RELOCATION
363	WL-G RELOCATION
364	WL-H RELOCATION
365	WL-I RELOCATION
366	WL-J RELOCATION
367	WWL-A RELOCATION
368	INSET VIEWS
369 - 395	JOINT RESTRAINT CALCULATIONS
396 - 397	THRUST BLOCK CALCULATIONS
398 - 405	STANDARD DETAILS
	LANDSCAPING & IRRIGATION
406 - 407	LANDSCAPE GENERAL NOTES
408 - 411	LANDSCAPE SPECIFICATIONS
412	PLANTING NOTES
413 - 424	PLANTING PLAN
425 - 429	LANDSCAPE DETAILS
430	IRRIGATION NOTES
431	IRRIGATION DETAILS
432 - 443	IRRIGATION PLAN

THE STANDARDS SHEETS SPECIFICALLY IDENTIFIED ABOVE HAVE BEEN SELECTED BY ME OR UNDER MY RESPONSIBLE SUPERVISION AS BEING APPLICABLE TO THIS PROJECT.

Elena Ramon, PE
ELENA RAMON (NO. 141765)

3/12/2025
DATE

STATE OF TEXAS
ELENA RAMON
141765
LICENSED
PROFESSIONAL ENGINEER

Elena Ramon
3/12/2025

EST.1848
GEORGETOWN
TEXAS

BGE, Inc.
101 West Louis Henna Blvd, Suite 400, Austin, TX 78728
Tel: 512-879-0400 • www.bgeinc.com
TBPE Registration No. F-1046

SHELL ROAD

INDEX OF SHEETS

SHEET 1 OF 1

SHEET NO. 2

DATE: 3/12/2025 2:49:02 PM
FILE: G:\TXC\Projects\City Georgetown\10767-00 Shell Road\03 CADD\01 Shts\00-GEN\Shell_Shts Index.dgn

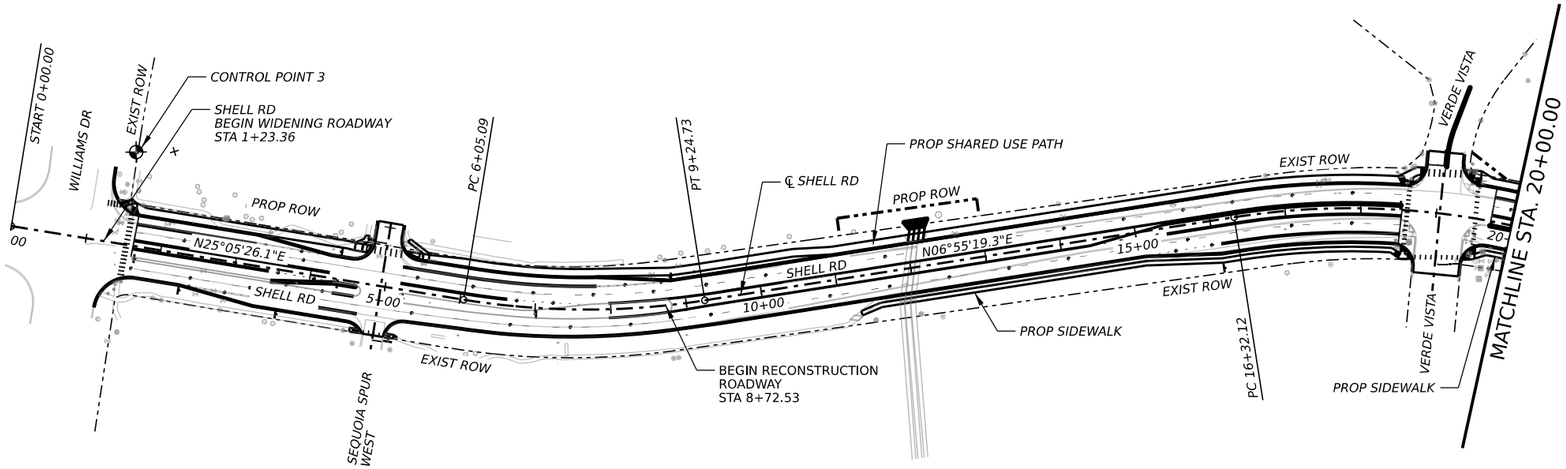

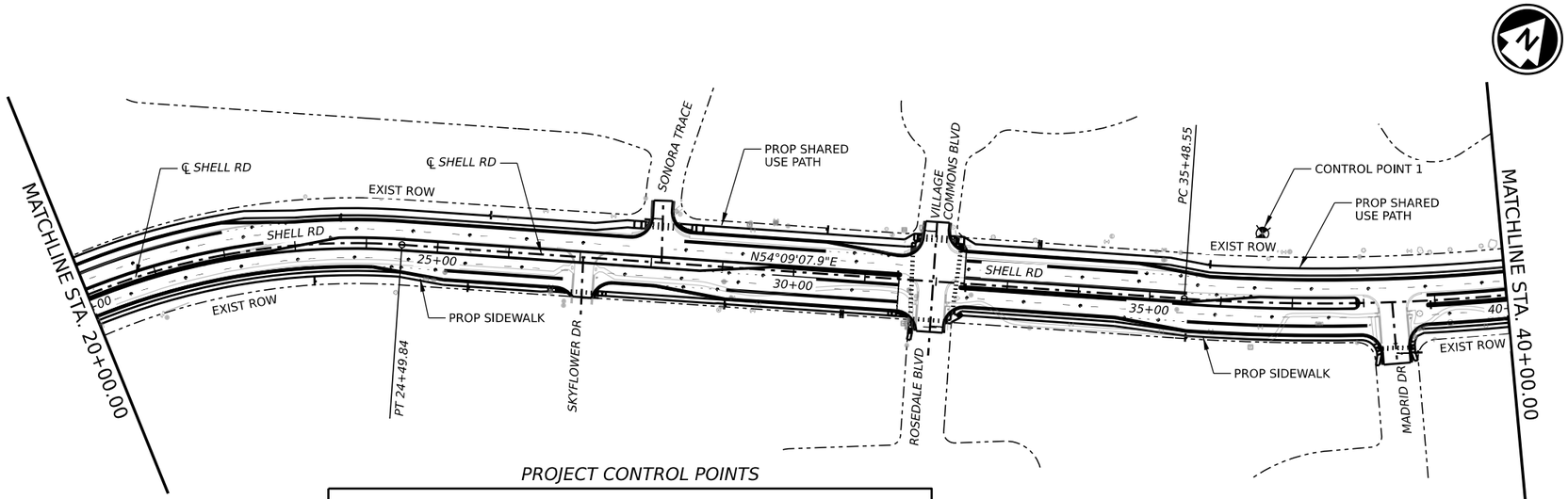

0 100 200

SCALE: 1" = 200'

PROJECT CONTROL POINTS

POINT NO.	NORTHING	EASTING	ELEVATION	DESCRIPTION
1	10226177.4029	3120824.1639	878.789	ALUM DISK IN CONC STAMPED
3	10223338.2873	3119025.4781	874.587	ALUM DISK IN CONC STAMPED

NOTES: COORDINATES ARE SURFACE VALUES BASED ON THE TEXAS STATE PLANE COORDINATE SYSTEM, NAD 83, CENTRAL ZONE. DISTANCES ARE SURFACE DISTANCES. TO OBTAIN GRID COORDINATES AND DISTANCES, MULTIPLY SURFACE VALUES BY THE COMBINED SURFACE ADJUSTMENT FACTOR OF 1.000142. ELEVATIONS REPORTED ARE ORTHOMETRIC HEIGHTS BASED ON GEOID 99.

STATE OF TEXAS
ELENA RAMON
141765
LICENSED
PROFESSIONAL ENGINEER

3/12/2025

EST.1848 GEORGETOWN TEXAS

BGE, Inc.
101 West Louis Henna Blvd, Suite 400, Austin, TX 78728
Tel: 512-879-0400 • www.bgeinc.com
TBPE Registration No. F-1046

SHELL ROAD

PROJECT LAYOUT

BEGIN TO STA 40+00

SHEET 1 OF 3

SHEET NO. 3

DATE: 3/12/2025 2:49:05 PM
FILE: G:\TXC\Projects\City Georgetown\10767-00 Shell Road\03 CADD\01 Shts\03-RDWY\Shell Proj 01.dgn

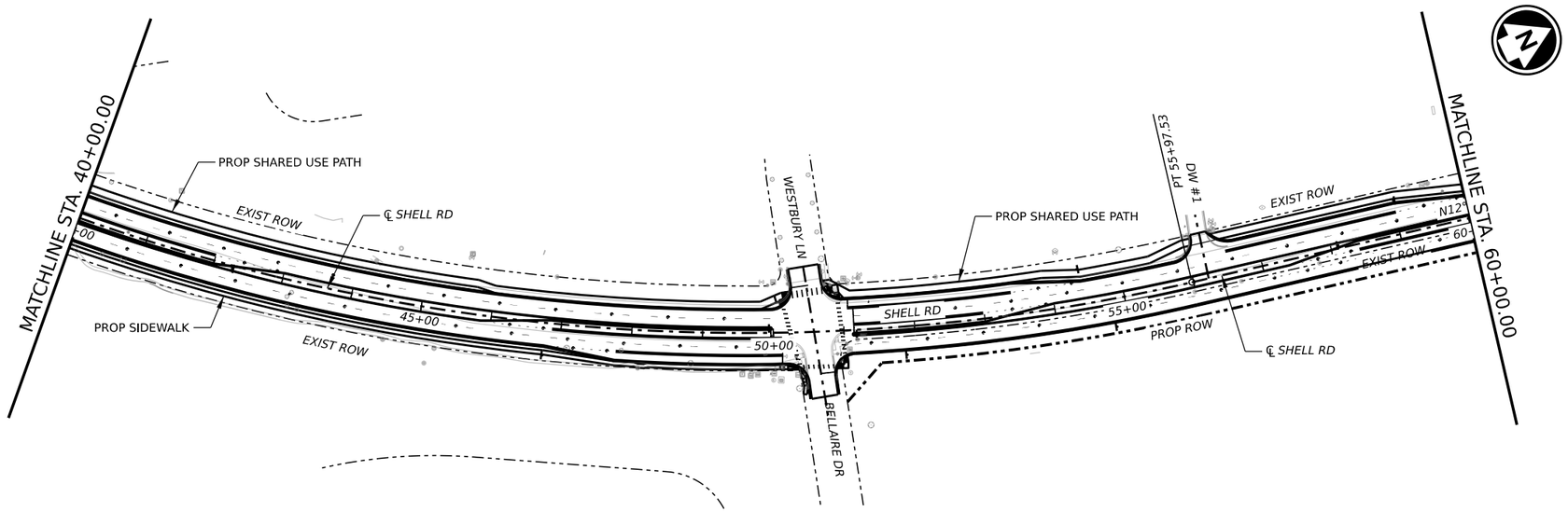

0 100 200

SCALE: 1" = 200'

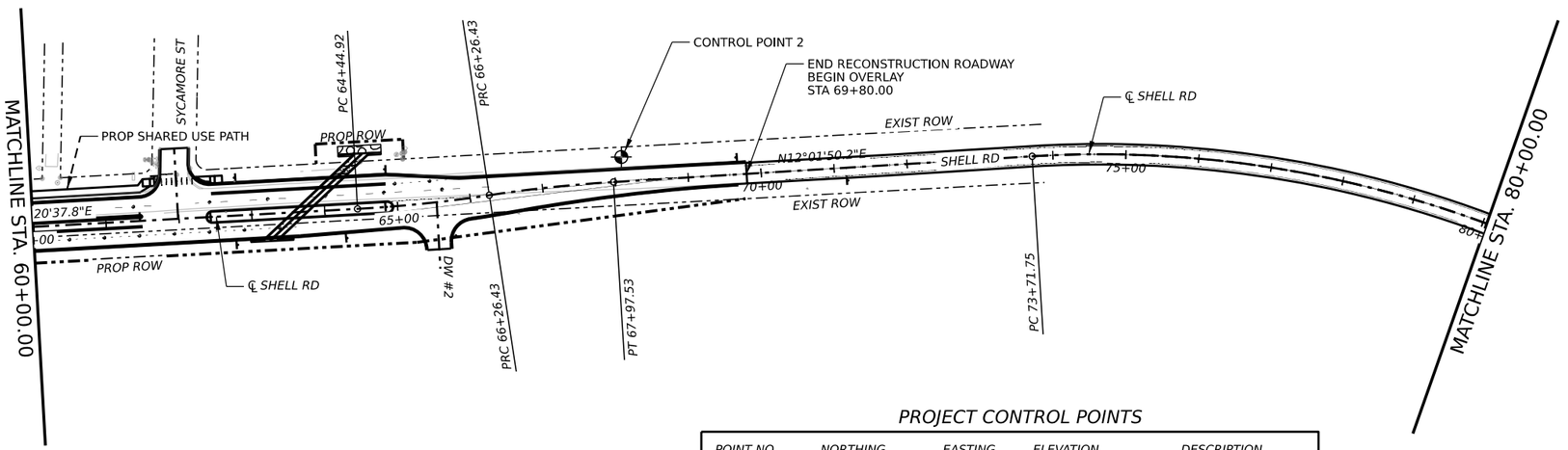

PROJECT CONTROL POINTS

POINT NO.	NORTHING	EASTING	ELEVATION	DESCRIPTION
2	10228907.7948	3122106.6043	839.099	ALUM DISK IN CONC STAMPED

NOTES: COORDINATES ARE SURFACE VALUES BASED ON THE TEXAS STATE PLANE COORDINATE SYSTEM, NAD 83, CENTRAL ZONE. DISTANCES ARE SURFACE DISTANCES. TO OBTAIN GRID COORDINATES AND DISTANCES, MULTIPLY SURFACE VALUES BY THE COMBINED SURFACE ADJUSTMENT FACTOR OF 1.000142. ELEVATIONS REPORTED ARE ORTHOMETRIC HEIGHTS BASED ON GEOID 99.

STATE OF TEXAS
ELENA RAMON
141765
LICENSED
PROFESSIONAL ENGINEER

3/12/2025

EST.1848 GEORGETOWN TEXAS

BGE, Inc.
101 West Louis Henna Blvd, Suite 400, Austin, TX 78728
Tel: 512-879-0400 • www.bgeinc.com
TBPE Registration No. F-1046

SHELL ROAD

PROJECT LAYOUT

STA 40+00 TO 80+00

SHEET 2 OF 3

SHEET NO. 4

DATE: 3/12/2025 2:49:07 PM
FILE: G:\TXC\Projects\City Georgetown\10767-00 Shell Road\03 CADD\01 Shts\03-RDWY\Shell Proj 02.dgn

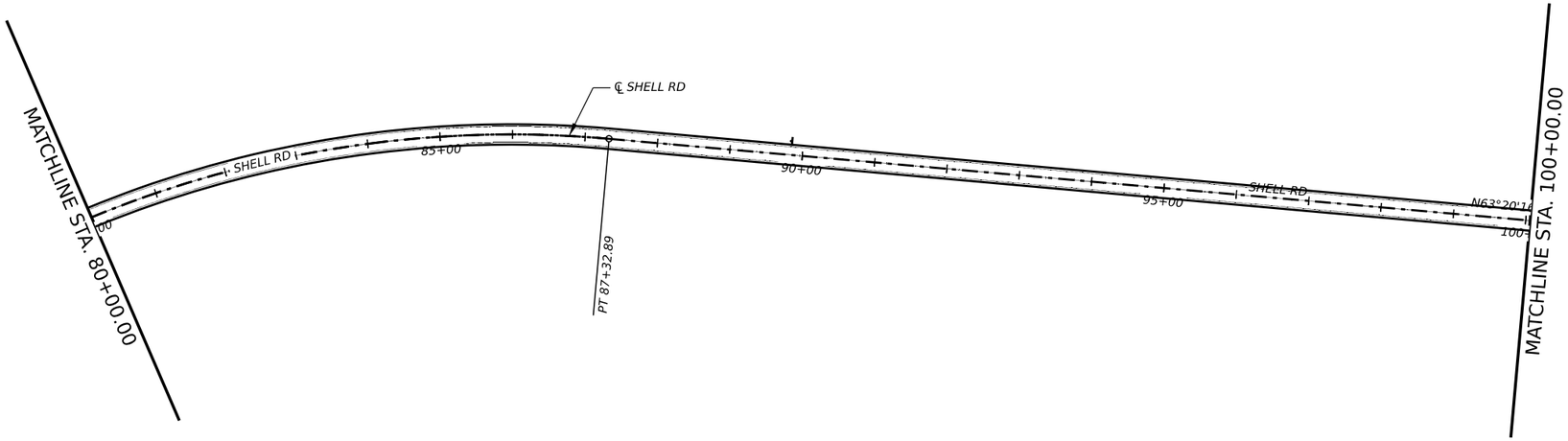

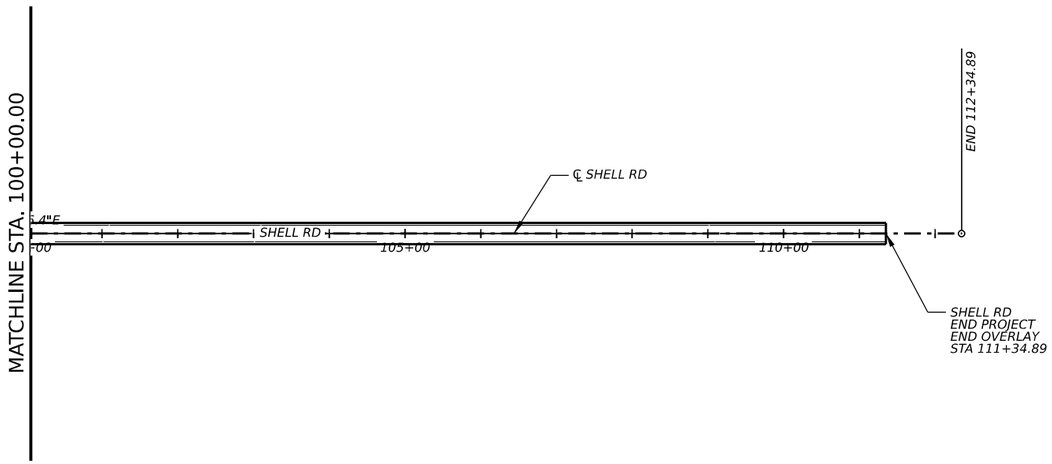

0 100 200

SCALE: 1" = 200'

STATE OF TEXAS
ELENA RAMON
141765
LICENSED
PROFESSIONAL ENGINEER

3/12/2025

EST.1848 GEORGETOWN TEXAS

BGE, Inc.
101 West Louis Henna Blvd, Suite 400, Austin, TX 78728
Tel: 512-879-0400 • www.bgeinc.com
TBPE Registration No. F-1046

SHELL ROAD

PROJECT LAYOUT

STA 80+00 TO END

SHEET 3 OF 3

SHEET NO. 5

DATE: 3/12/2025 2:49:08 PM
FILE: G:\TXC\Projects\City Georgetown\10767-00 Shell Road\03 CADD\01 Shts\03-RDWY\Shell Proj 03.dgn

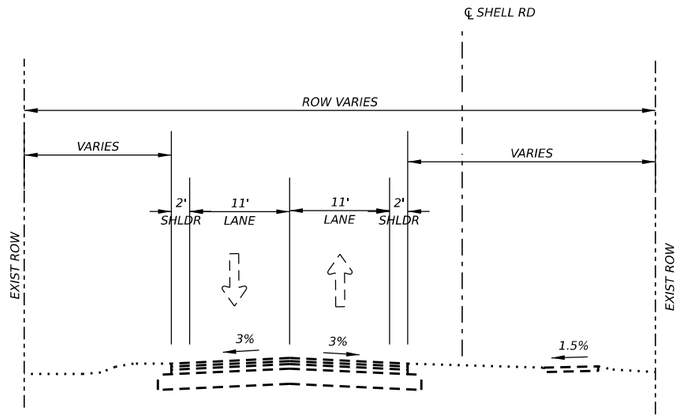

SHELL ROAD EXISTING TYPICAL SECTION

STA 08+81.22 TO STA 69+80.00

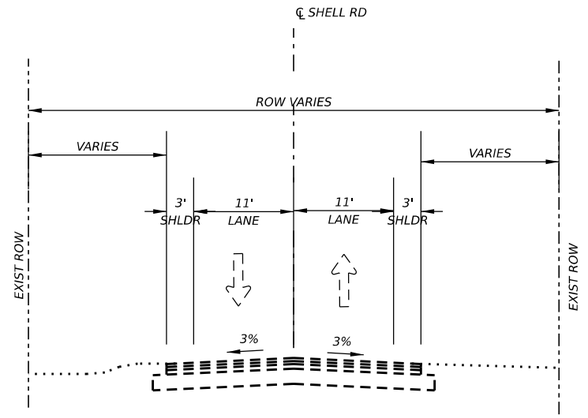

SHELL ROAD EXISTING TYPICAL SECTION

STA 69+80.00 TO STA 111+34.89

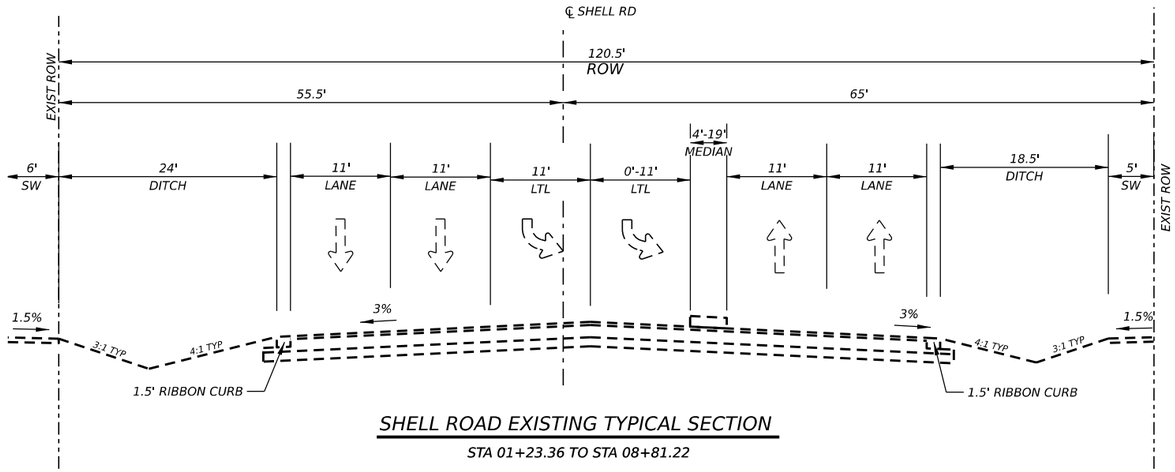

SHELL ROAD EXISTING TYPICAL SECTION

STA 01+23.36 TO STA 08+81.22

STATE OF TEXAS
ELENA RAMON
141765
LICENSED
PROFESSIONAL ENGINEER

3/12/2025

EST.1848
GEORGETOWN
TEXAS

BGE, Inc.
101 West Louis Henna Blvd, Suite 400, Austin, TX 78728
Tel: 512-879-0400 • www.bgeinc.com
TBPE Registration No. F-1046

SHELL ROAD

EXISTING TYPICAL SECTIONS

SHEET 1 OF 1

SHEET NO. 6

DATE: 3/12/2025 2:49:17 PM
FILE: G:\TXC\Projects\City Georgetown\10767-00 Shell Road\03_CADD\01_Shts\01-TYP\Shell EXIST TYP 01.dgn

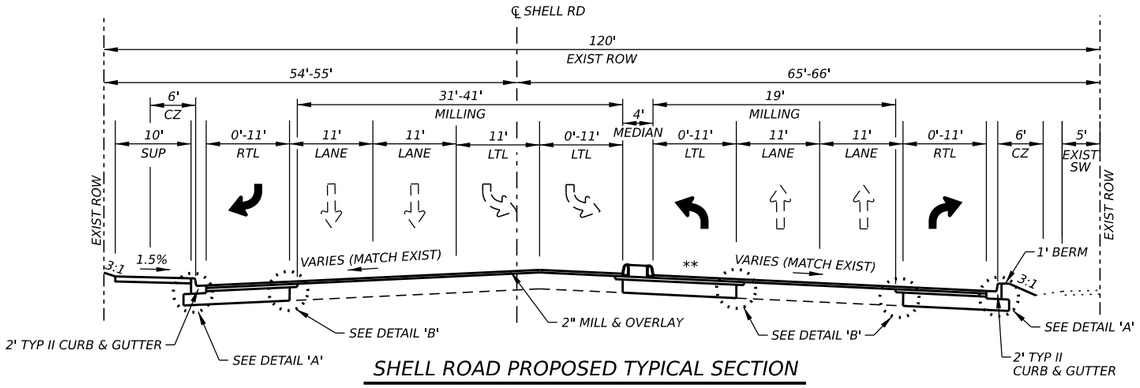

SHELL ROAD PROPOSED TYPICAL SECTION

STA 01+23.36 TO STA 05+00.00

** PROPOSED WIDENING FROM
STA 3+48.75 TO STA 4+70.00

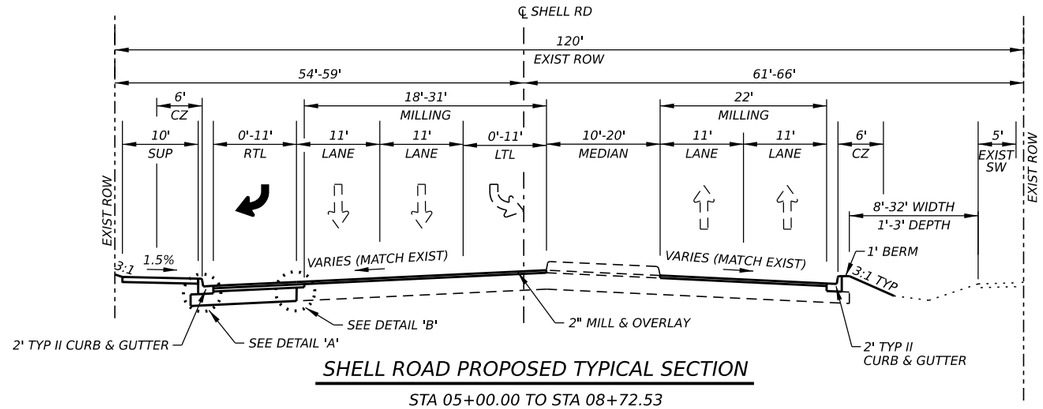

SHELL ROAD PROPOSED TYPICAL SECTION

STA 05+00.00 TO STA 08+72.53

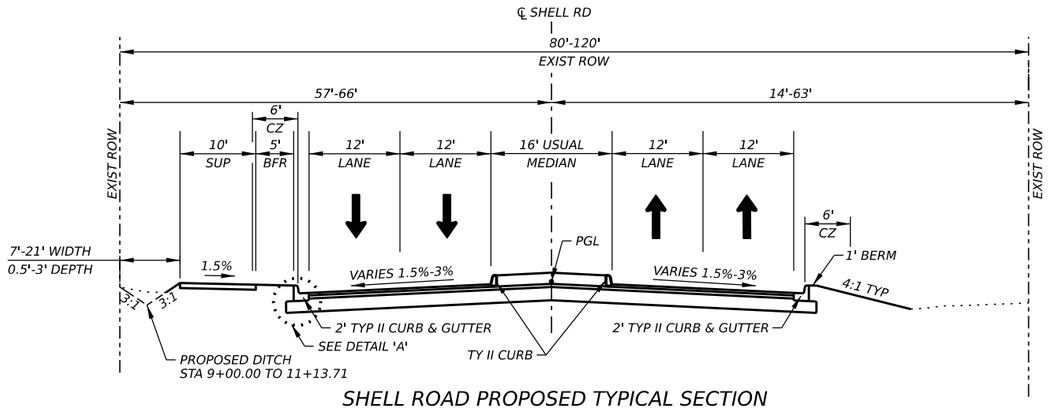

SHELL ROAD PROPOSED TYPICAL SECTION

STA 08+72.53 TO STA 11+13.71
STA 54+00.00 TO STA 56+25.00

LEGEND

- (A) 2" D-GR HMA TY-C PG 70-22 SAC-B
- (B) TACK COAT
- (C) 2.5" D-GR HMA TY-C PG 64-22
- (D) PRIME COAT
- (E) 10.5" FLEXIBLE BASE (TYPE A, GRADE 1)
- (F) PROOF ROLL SUBGRADE W/ GEOGRID BASE REINFORCEMENT (TY I)

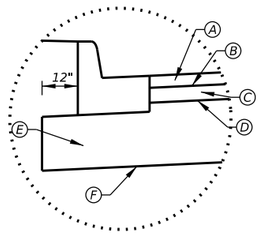

DETAIL 'A'

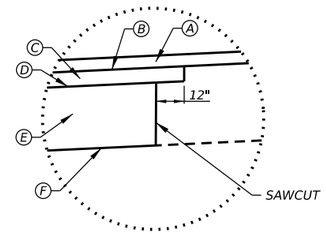

DETAIL 'B'

STATE OF TEXAS
ELENA RAMON
141765
LICENSED
PROFESSIONAL ENGINEER

Elena Ramon

3/12/2025

EST. 1848
GEORGETOWN
TEXAS

BGE, Inc.
101 West Louis Henna Blvd, Suite 400, Austin, TX 78728
Tel: 512-879-0400 • www.bgeinc.com
TBPE Registration No. F-1046

SHELL ROAD

PROPOSED TYPICAL SECTIONS

SHEET 1 OF 4

SHEET NO. 7

DATE: 3/12/2025 2:49:21 PM
FILE: G:\TXC\Projects\City Georgetown\10767-00 Shell Road\03 CADD\01 Shts\01-TYP\SHELL_TYP.dgn

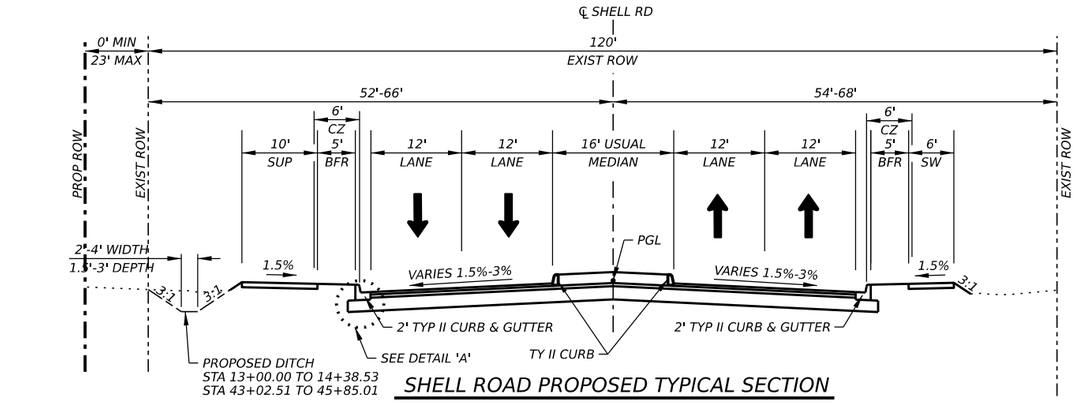

SHELL ROAD PROPOSED TYPICAL SECTION

STA 11+13.71 TO STA 14+38.53
STA 43+02.51 TO STA 45+85.01

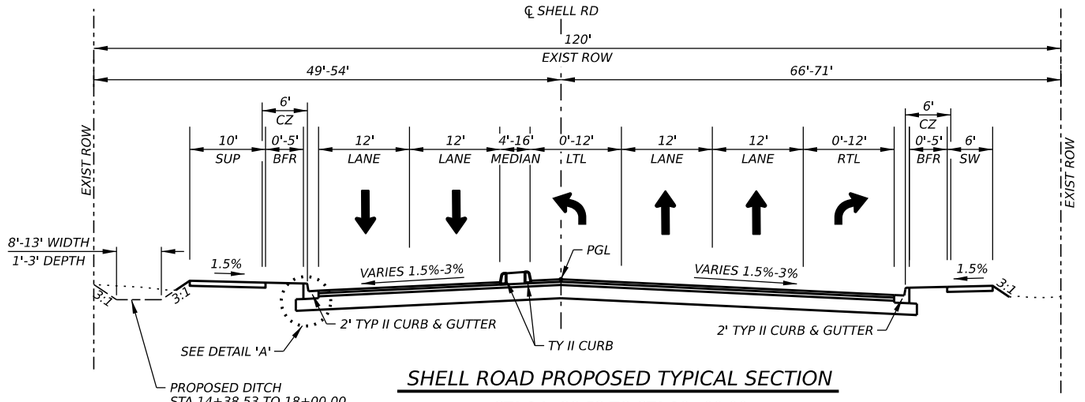

SHELL ROAD PROPOSED TYPICAL SECTION

STA 14+38.53 TO STA 19+00.00
STA 45+85.01 TO STA 50+00.00

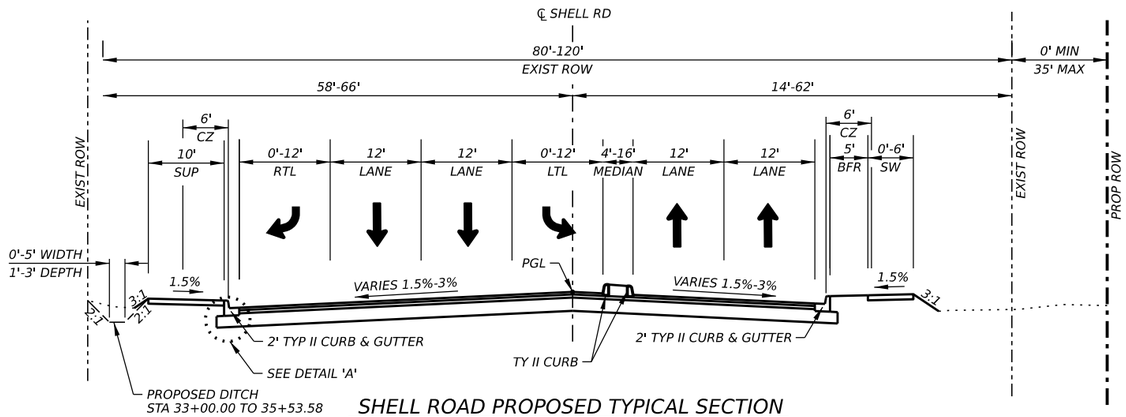

SHELL ROAD PROPOSED TYPICAL SECTION

STA 19+00.00 TO STA 23+61.80
STA 32+00.00 TO STA 35+53.58
STA 50+50.00 TO STA 54+00.00

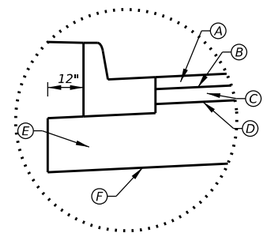

DETAIL 'A'

LEGEND

- (A) 2" D-GR HMA TY-C PG 70-22 SAC-B
- (B) TACK COAT
- (C) 2.5" D-GR HMA TY-C PG 64-22
- (D) PRIME COAT
- (E) 10.5" FLEXIBLE BASE (TYPE A, GRADE 1)
- (F) PROOF ROLL SUBGRADE W/ GEOGRID BASE REINFORCEMENT (TY I)

STATE OF TEXAS
ELENA RAMON
141765
LICENSED
PROFESSIONAL ENGINEER
3/12/2025

EST.1848
GEORGETOWN
TEXAS

BGE
BGE, Inc.
101 West Louis Henna Blvd, Suite 400, Austin, TX 78728
Tel: 512-879-0400 • www.bgeinc.com
TBPE Registration No. F-1046

SHELL ROAD

PROPOSED TYPICAL SECTIONS

SHEET 2 OF 4

SHEET NO. 8

DATE: 3/12/2025 2:49:21 PM
FILE: G:\TXC\Projects\City Georgetown\10767-00 Shell Road\03_CADD\01 Shts\01-TYP\SHELL_TYP.dgn

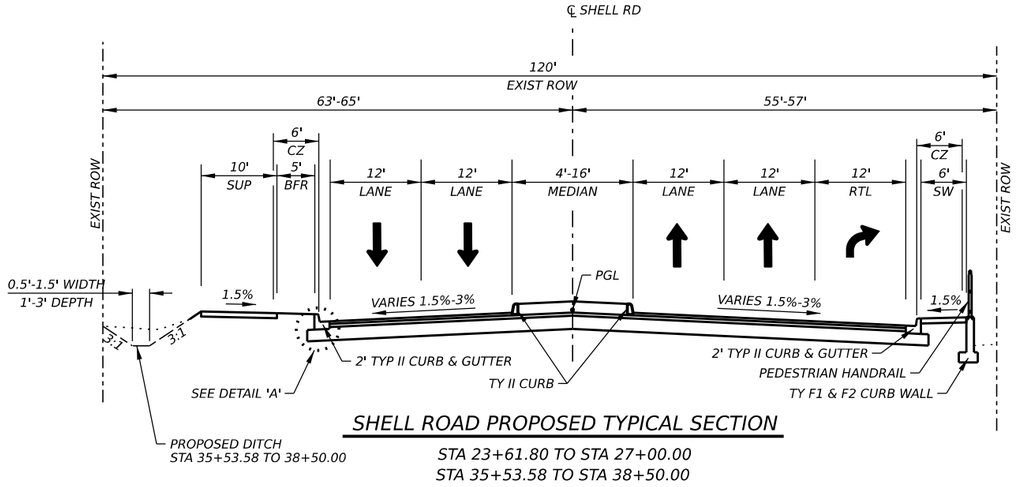

SHELL ROAD PROPOSED TYPICAL SECTION

STA 23+61.80 TO STA 27+00.00
STA 35+53.58 TO STA 38+50.00

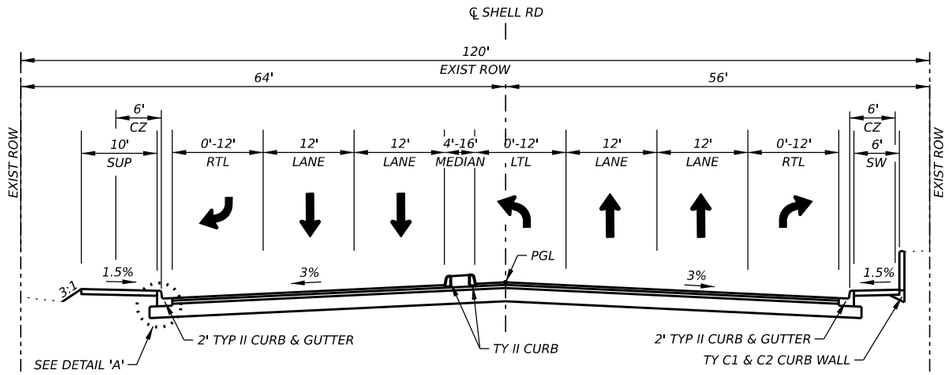

SHELL ROAD PROPOSED TYPICAL SECTION

STA 27+00.00 TO STA 32+00.00

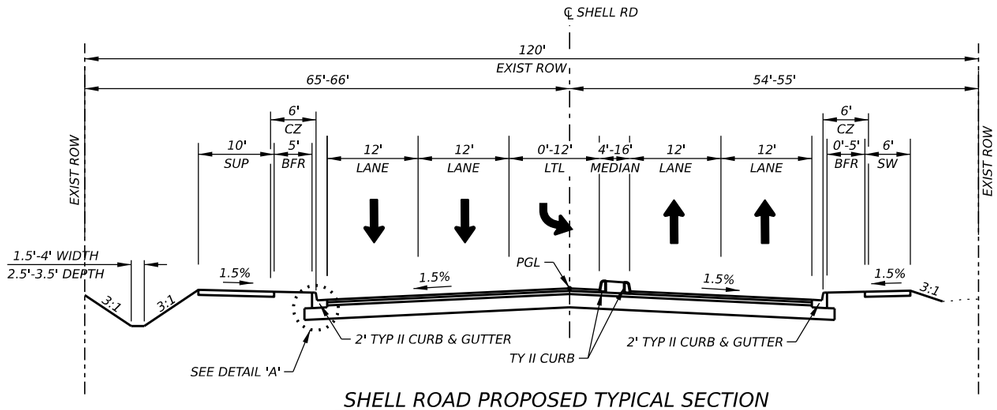

SHELL ROAD PROPOSED TYPICAL SECTION

STA 38+50.00 TO STA 43+02.51

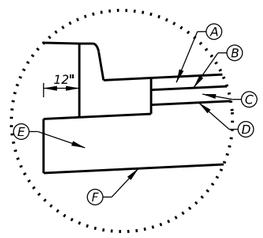

DETAIL 'A'

LEGEND

- (A) 2" D-GR HMA TY-C PG 70-22 SAC-B
- (B) TACK COAT
- (C) 2,5" D-GR HMA TY-C PG 64-22
- (D) PRIME COAT
- (E) 10,5" FLEXIBLE BASE (TYPE A, GRADE 1)
- (F) PROOF ROLL SUBGRADE W/ GEOGRID BASE REINFORCEMENT (TY I)

STATE OF TEXAS
ELENA RAMON
141765
LICENSED
PROFESSIONAL ENGINEER

3/12/2025

EST. 1848
GEORGETOWN
TEXAS

BGE, Inc.
101 West Louis Henna Blvd, Suite 400, Austin, TX 78728
Tel: 512-879-0400 • www.bgeinc.com
TBPE Registration No. F-1046

SHELL ROAD

PROPOSED TYPICAL SECTIONS

SHEET 3 OF 4

SHEET NO. 9

DATE: 3/12/2025 2:49:22 PM
FILE: G:\TXC\Projects\City Georgetown\10767-00 Shell Road\03 CADD\01_Shts\01-TYP\SHELL_TYP.dgn

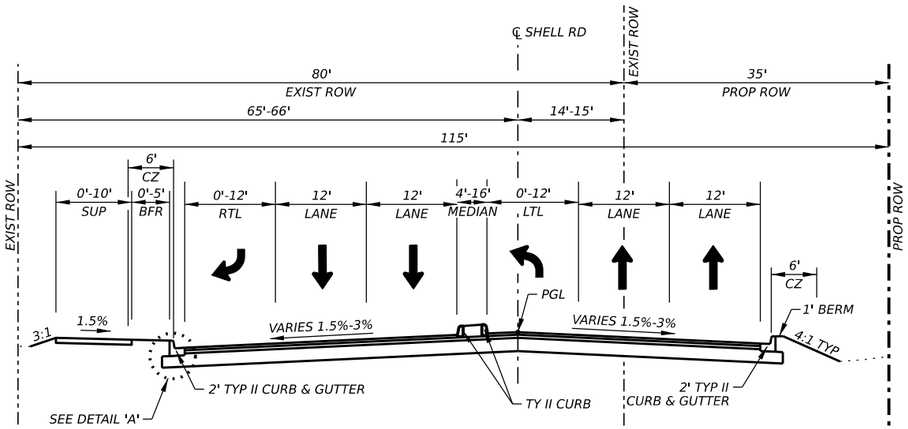

SHELL ROAD PROPOSED TYPICAL SECTION

STA 56+25.00 TO STA 62+00.00

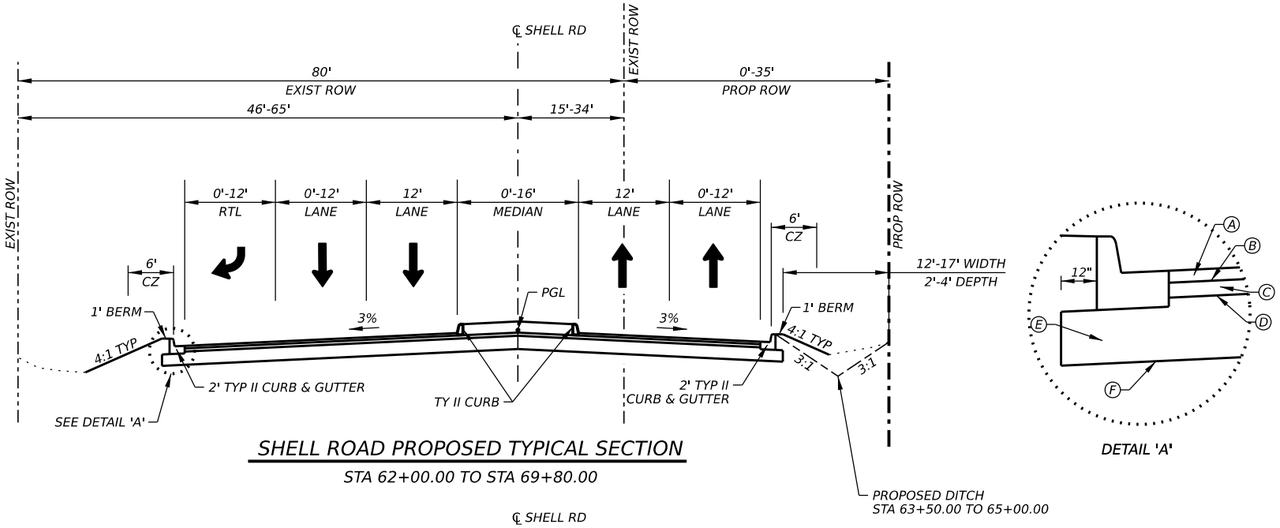

SHELL ROAD PROPOSED TYPICAL SECTION

STA 62+00.00 TO STA 69+80.00

DETAIL 'A'

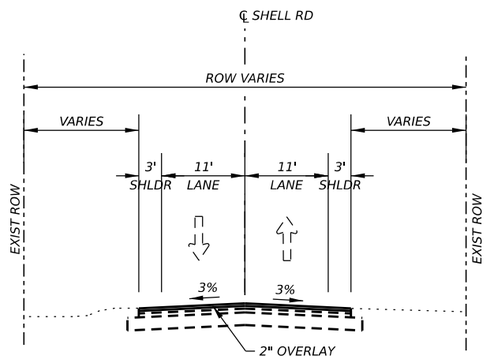

SHELL ROAD TYPICAL SECTION
PROPOSED OVERLAY

STA 69+80.00 TO STA 111+34.89

LEGEND

- (A) 2" D-GR HMA TY-C PG 70-22 SAC-B
- (B) TACK COAT
- (C) 2.5" D-GR HMA TY-C PG 64-22
- (D) PRIME COAT
- (E) 10.5" FLEXIBLE BASE (TYPE A, GRADE 1)
- (F) PROOF ROLL SUBGRADE W/ GEOGRID BASE REINFORCEMENT (TY I)

STATE OF TEXAS
ELENA RAMON
141765
LICENSED
PROFESSIONAL ENGINEER

3/12/2025

EST.1848 GEORGETOWN TEXAS

BGE, Inc.
101 West Louis Henna Blvd, Suite 400, Austin, TX 78728
Tel: 512-879-0400 • www.bgeinc.com
TBPE Registration No. F-1046

SHELL ROAD

PROPOSED TYPICAL SECTIONS

SHEET 4 OF 4

SHEET NO. 10

DATE: 3/12/2025 2:49:22 PM
FILE: G:\TXC\Projects\City Georgetown\10767-00 Shell Road\03_CADD\01 Shts\01-TYP\SHELL_TYP.dgn

GENERAL NOTES: Version: December 19, 2024

Item	Description	**Rate
**204	**Sprinkling**	
	(Dust)	30 GAL/CY
	(Item 132)	30 GAL/CY
	(Item 247)	30 GAL/CY
**210	**Rolling (Flat Wheel)**	
	(Item 247)	1 HR/200 TON
	(Item 316)	1 HR/6000 SY
**210	**Rolling (Tamping and Heavy Tamping)**	1 HR/200 CY
**210	**Rolling (Lt Pneumatic Tire)**	
	(Item 132)	1 HR/500 CY
	(Item 247)	1 HR/200 TON
	(Item 316 - Seal Coat)	1 HR/6000 SY
	(Item 316 - Two Course)	1 HR/3000 SY
247	**Flexible Base (CMP IN PLC)**	132 LB/CF
310	**Prime Coat**	0.20 GAL/SY
341/3076, 344/3077	**Dense-Graded Hot-Mix Asphalt and Superpave**	110 LB/SY/IN
	Tack Coat	0.08 GAL/SY

** For Informational Purposes Only

GENERAL

References to manufacturer's trade name or catalog numbers are for the purpose of identification only. Similar materials from other manufacturers are permitted if they are of equal quality, comply with the specifications for this project, and are approved.

If work is performed at Contractor's option, when inclement weather is impending, and the work is damaged by subsequent precipitation, the Contractor is responsible for all costs associated with replacing the work, if required.

The roadbed will be free of organic material prior to placing any section of the pavement structure.

Equip all construction equipment used in roadway work with highly visible omnidirectional flashing warning lights.

Provide a smooth, clean sawcut along the existing asphalt or concrete pavement structure, as directed. Consider subsidiary to the pertinent Items.

Construct all manholes/valves to final pavement elevations prior to the placement of final surface. If the manholes/valves are going to be exposed to traffic, place temporary asphalt around the manhole/valve to provide a 50:1 taper. The asphalt taper is subsidiary to the ACP work.

Keep the roadway free of debris and sediment caused by construction activities. Dispose of all material in accordance with federal, state, and local regulations. This work is subsidiary.

Damage to existing pipes and SET's due to Contractor operations will be repaired at Contractor's expense.

All locations used for storing construction equipment, materials, and stockpiles of any type, within the right of way, will be as directed. Use of right of way for these purposes will be restricted to those locations where driver sight distance to businesses and side street intersections is not obstructed and at other locations where an unsightly appearance will not exist. The Contractor will not have exclusive use of right of way but will cooperate in the use of the right of way with the city/county and various public utility companies as required.

ITEM 100 - PREPARING RIGHT OF WAY
Prep ROW must not begin until accessible trees designated for preservation have been protected, items listed in the EPIC have been addressed, and SW3P controls installed in accessible areas.

Backfill material will be Type B Embankment using ordinary compaction.

Follow Item 752.4 Work Methods and Item 752 general notes when removing or working on or near trees and brush.

Unless shown otherwise in the plans or a designated non-mow area, perform trimming or removal for areas within 30 ft. of edge of pavement under construction. Trim or remove to provide minimum of 5 ft. of horizontal clearance and 7 ft. of vertical clearance for the following: sidewalks, paths, guard fence, rails, signs, object markers, and structures. Trim to provide a minimum of 14 ft. vertical clearance under all trees. This work is subsidiary.

Refer to G2 – Site Preparation for additional work included in Item 100 payment.

ITEM 105 – REMOVING TREATED AND UNTREATED BASE AND ASPHALT PAVEMENT
Existing typical is based on information available. This typical may not account for all maintenance work such as overlays or pavement repairs. A change in material type or thickness does not warrant additional payment. Payment is full compensation for removing all material to the depth specified.

ITEM 110 – EXCAVATION
The Engineer will define unsuitable material.

ITEM 132 – ALL EMBANKMENT
At no time will the retaining wall backfill material exceed the adjacent embankment operation by more than one lift. At no time will the embankment adjacent to the retaining wall backfill exceed the wall backfill by any elevation. Embankment placed over the area of MSE backfill must meet the same backfill requirements for the type specified under Item 423.

The Engineer will define unsuitable material. Material which the Contractor might deem to be unsuitable due to moisture content will not be considered unsuitable material.

3/12/2025 2:49:23 PM $PLTDRV5$
G:\TXC\Projects\City_Georgetown\10767-00 Shell Road\03_CADD\01_Shts\00-GEN\Shell_General Notes.dgn

Prior to begin embankment of existing area, correct or replace unstable material to a depth of 6 in. below existing grade. Embankment areas will be inspected prior to beginning work.

Rock or broken concrete produced by the project is allowed in earth embankments. The size of the rock or broken concrete will not exceed the layer thickness requirements in Section 132.3.4., "Compaction Methods." The material will not be placed vertically within 5 ft. of the finished subgrade elevation.

Embankment placed vertically within 5 ft. of the finished subgrade elevation or within the edges of the subgrade and treated with lime, cement, or other calcium-based additives must have a sulfate content less than 3000 ppm. Allow 5 business days for testing. Treatment of sulfate material 3000 ppm to 7000 ppm requires 7 days of mellowing and continuous water curing, in accordance TxDOT guidelines for Treatment of Sulfate-Rich Soils and Bases in Pavement Structures (9/2005). Material over 7000 ppm is not allowed.

ITEM 160 - TOPSOIL
Refer to G7 – Loaming, Hydroseeding and Permanent Erosion Control for work included in Item 160 payment.

ITEM 164 – SEEDING FOR EROSION CONTROL
Refer to G7 – Loaming, Hydroseeding and Permanent Erosion Control for work included in Item 164 payment.

ITEM 168 – VEGETATIVE WATERING
Water all areas of project to be seeded or sodded.

Maintain the seedbed in a condition favorable for the growth of grass. Watering can be postponed immediately after a rainfall on the site of ½ inch or greater, but will be resumed before the soil dries out. Continue watering until final acceptance.

Vegetative watering rates and quantities are based on ¼ inch of watering per week over a 3-month watering cycle. The actual rates used and paid for will be as directed and will be based on prevailing weather conditions to maintain the seedbed.

Obtain water at a source that is metered (furnish a current certification of the meter being used) or furnish the manufacturer's specifications showing the tank capacity for each truck used. Notify the Engineer, each day that watering takes place, before watering, so that meter readings or truck counts can be verified.

ITEM 247 - FLEXIBLE BASE
The layer thickness will be 4 in. to 6 in. unless shown on the plans. Placing in a single layer is allowed when total thickness of base is 8 in. or less. When placed in multiple layers, compact the bottom and middle layers to at least 95% and 98% of the maximum dry density, respectively. When placed in a single layer or the final layer, compact to at least 100%.

Correction of subgrade soft spots is subsidiary.

Complete per plans the subgrade, ditches, slopes, and drainage structures prior to the placement of base.

Do not use a vibratory roller to compact base placed directly on top of a drainage structure.

Grade 4 will have the same material requirements as Grade 5 except minimum compressive strength at lateral pressure 3 psi will be **70** psi and at lateral pressure 15 psi will be 150 psi. Grade 4 does not have a minimum compressive strength at lateral pressure 0 psi.

ITEM 300s – SURFACE COURSES AND PAVEMENTS
For seal coat applications: Asphalt cements, cutback, performance-graded asphalt season is May 1 thru September 15. Emulsified asphalt season is April 1 thru October 15.

The latest work start date for asphalt season is August 1 when a date is required per special provision to Item 8.1.

Overlay and seal coat projects must include placement of surface material on the existing mailbox turnouts, including turnouts that are worn paths without a pavement structure. Apply a new surface and material as necessary to create a mailbox turnout with a cross slope that matches the adjacent pavement. Payment of work will be in accordance with the item for the type of material placed.

ITEM 310 – PRIME COAT
Apply blotter material to all driveways and intersections. This work is subsidiary.
When Multi Option is allowed, provide MC 30, EC 30 or AE-P.

Rolling to ensure penetration is required.

ITEMS 341, 344, & 3076 THRU 348/3082 - HOT-MIX ASPHALT PAVEMENT
Core holes may be filled with an Asphaltic patching material meeting the requirements of DMS-9203 or with SCM meeting requirements of DMS-9202.

Remove and dispose of off the ROW the audible/profile markings, reflectorized markings, and raised markers.

Install transverse butt joints with 50 ft. H: 1 in. V transition from the new ACP to the existing surface. Install a butt joint with 24 in. H: 1 in. V transition from the new ACP to a driveway, pullout or intersection. Saw cut the existing pavement at the butt joints. This work is subsidiary.

Use a device to create a maximum 3H:1V notched wedge joint on all longitudinal joints of 2 in. or greater. This work is subsidiary.

Prior to milling, core the existing pavement to verify thickness. This work is subsidiary.

Ensure placement sequence to avoid excess distance of longitudinal joint lap back not to exceed one day's production rates.

3/12/2025 2:49:27 PM $PLTDRV5$
G:\TXC\Projects\City_Georgetown\10767-00 Shell Road\03_CADD\01_Shts\00-GEN\Shell_General Notes.dgn

Submit any proposed adjustments or changes to a JMF before production of the new JMF.

Tack every layer. Do not dilute tack coat. Apply it evenly through a distributor spray bar.

Provide a minimum transition of 10' for intersections, 10' for commercial driveways, and 6' for residential driveways unless otherwise shown on the plans.

Irregularities will require the replacement of a full lane width using an asphalt paver. Replace the entire sublot if the irregularities are greater than 40% of the sublot area.

Lime or an approved anti-stripping agent must be used when crushed gravel is utilized to meet a SAC "A" requirement.

When using RAP or RAS, include the management methods of processing, stockpiling, and testing the material in the QCP submitted for the project. If RAP and RAS are used in the same mix, the QCP must document that both of these materials have dedicated feeder bins for each recycled material. Blending of RAP and RAS in one feeder bin or in a stockpile is not permitted.

Asphalt content and binder properties of RAP and RAS stockpiles must be documented when recycled asphalt content greater than 20% is utilized.

No RAS is allowed in surface courses.

Department approved warm-mix additives is required for all surface mix application when RAP is used. Dosage rates will be approved during JMF approval.

The Hamburg Wheel Test will have a minimum rut depth of 3mm except for SMA with HPG or PG 76.

ITEMS 341/3076 - DENSE-GRADED HOT-MIX ASPHALT
Use the SGC for design and production testing of all mixtures. Design all Type D mixtures as a surface mix, maximum 15% RAP and no RAS. Contractor may not use a substitute PG binder for 76-22. When using substitute binders, mold specimens for mix design and production at the temperature required for the substitute binder used to produce the HMA.

The Hamburg Wheel minimum number of passes for PG 64 or lower is reduced to 7,000. The Engineer may accept Hamburg Wheel test results for production and placement if no more than 1 of the 5 most recent tests is below the specified number of passes and the failing test is no more than 2,000 passes below the specified number of passes.

ITEM 354 - PLANING AND TEXTURING PAVEMENT
Contractor retains ownership of salvaged materials.

Unless shown on the plans, mill and resurface the work area during each shift on roadways with ADT greater than 20,000 or if milling will expose the flex base or subgrade per the typical section.

Unless shown on the plans, mill and resurface a work area within 5 days for roadways with ADT 20,000 or less.

Taper permanent transverse faces 50 ft. per 1 in. Taper temporary transverse faces 25 ft. per 1 in. Taper permanent longitudinal faces 6 ft. per 1 in. HMA may be used as temporary tapers. Provide minimum 1 in. butt joints at bridge ends and paving ends. This work is subsidiary. Milled surfaces directly covered by a mat thickness of 1 in. or less shall produce a milled texture with a ridge to valley depth (RVD) no greater than 0.25 in. (6.5 mm).

ITEM 400 - EXCAVATION AND BACKFILL FOR STRUCTURES
Unless otherwise shown on the plans, for cutting and restoring pavement use the AUS District Flexible Pavement Details found at https://www.txdot.gov/about/districts/austin-district/district-standards.html .

Saw-cut the pavement at the edge of the excavation. This work is subsidiary.

Backfill the bridge ends in accordance with the limits shown on Option 2 of the TxDOT "CSAB" Standard. If the bridge includes an approach slab, extend the limits of the backfill to 10 ft. beyond the end of the approach slab. This work is subsidiary.

Refer to G4 – Pipe Excavation, Trenching, Embedment, Encasement and Backfilling and G9 – Structural Excavation. For conflicts between Item 400 and G4/G9 specifications, G4/G9 specifications are to be used.

ITEM 416 - DRILLED SHAFT FOUNDATIONS
Stake all Foundations, for approval, before beginning drilling operations.

Calculate the vertical signal head clearance before placing any signal pole foundation.

For mast-arm signal and strain pole anchor bolts, set two in tension and two in compression.

Obtain approval of placement prior to placing concrete.

Remove spoils from a flood plain at the end of each workday.

ITEM 432 - RIPRAP
Mow strip riprap will be 4 in. and all other riprap will be 5 in. unless otherwise shown on the plans. Mow strip for cable barrier may be placed monolithically with the barrier foundations if using concrete in accordance with Item 543. Fiber reinforcement is not allowed except in mow strip for cable barrier if foundation and mow strip are placed monolithically. GFRP is allowed reinforcement for all applications.

Saw-cut existing riprap then epoxy 12 in. long No. 3 or No. 4 bars 6 in. deep at a maximum spacing of 18 in. in each direction to tie new riprap to existing riprap. This work is subsidiary.

3/12/2025 2:49:30 PM $PLTDRVSS
G:\TXC\Projects\City_Georgetown\10767-00 Shell Road\03_CADD\01_Shts\00-GEN\Shell_General Notes.dgn

Provide Type A Grade 3 or 5 flexible base for cement stabilized riprap. Compressive strengths for flexible base are waived.

SGT approach taper, paid for using mow strip item, will be installed using concrete, flexible base coated with SS-1 at a rate of 0.12 GAL/SY, or HMA Type B/C/D. Placement will be ordinary compaction and does not require placement using an asphalt paver.

ITEM 466 - HEADWALLS AND WINGWALLS
Remove all loose formwork and materials from the waterway at the end of each work week or prior to a rain event. Debris that falls into the waterway must be removed at the end of each work day. Upon completion of the structure, stencil the National Bridge Inventory (NBI) number (structure number) using black paint and 4 in. tall numbers at 4 locations designated by TxDOT. This work is subsidiary.

ITEM 467 - SAFETY END TREATMENT
Field adjust pipe end to maintain the necessary slope. Field cutting of pipe end is allowed. Coat all metal field cuts or exposed reinforcement with asphalt paint.

For all Type II SETs, provide riprap apron shown in the cast-in-place standards and precast riprap detail standard. This work is subsidiary.

Cast-in-place or precast will be allowed unless stated otherwise.

ITEM 496 - REMOVING STRUCTURES
Submit a demolition plan to the Engineer. Have the plan signed and sealed by a licensed professional engineer when the structure will continue to accommodate traffic after removal has begun and the removal impacts any part of the structure below the deck or riding surface. If applicable, the plan must detail requirements for meeting the U.S. Army Corps of Engineers' Section 404 Permit. The demolition plan must detail handling of roadway and waterway traffic. Waterway traffic must be maintained at all times unless a closure is approved by the Engineer.

No debris is allowed to fall into a body of water. Debris that falls into the water must be removed at the end of each workday. Debris that falls into the floodway must be removed at the end of each work week or prior to a rain event.

No debris is allowed to fall directly onto existing pavement. Existing pavement must be protected from damage by debris with a minimum of 1 ft. sand cushion. Submit an alternate roadway protection or cushion material to Engineer for approval. If existing pavement is PFC, use a vacuum truck to remove embedded sand after removal of sand cushion and debris. This work is subsidiary.

ITEM 502 - BARRICADES, SIGNS, AND TRAFFIC HANDLING
Refer to G1 – Barricades, Signs and Traffic Handling for additional work included in Item 502. For conflicts between Item 502 and G1 specifications, G1 specification is to be used.

Table 5 (Special Events)

Event	City	Dates
Red Poppy Festival	Georgetown	April 26-28, 2024
Wine and Music Festival	Georgetown	Last Saturday of September

All the large and special events listed in the above tables occur annually. Coordinate with the Department and review the city/event website to plan around the future events.

To account for directional traffic volumes, begin and end times of closures may be shifted equally by the Engineer. The closure duration will remain. Added compensation is not allowed.

One-way traffic control, including work performed under Item 510, must be set up to provide a maximum of 20 minutes of delay to the traveling public.

Provide 2-hour notice prior to implementation and immediately upon removal of the closure.

For roadways listed in Table 1: Submit the request 96 hours prior to implementation.

For roadways not listed in Table 1: Submit the request a minimum of 48 hours prior to the closure and by the following deadline immediately prior to the closure: 11A on Tuesday or 11A on Friday.

For all roadways: Submit request for traffic detours and full roadway closures 168 hours prior to implementation. Submit request for nighttime work 96 hours to implementation date.

Cancellations of accepted closures (not applicable to full closures or detours) due to weather will not require resubmission in accordance with the above restrictions if the work is completed during the next allowable closure time.

Closures that conflict with adjacent contractor will be prioritized according to critical path work per latest schedule. Conflicting critical path or non-critical work will be approved for first LCN submitted. Denial of a closure due to prioritization or other reasons will not be reason for time suspension, delay, overhead, etc.

Meet with the Engineer prior to lane closures to ensure that sufficient equipment, materials, devices, and workers will be used. Take immediate action to modify current and future traffic control, if at any time the queue becomes greater than 20 minutes.
Consider inclement weather prior to implementing the lane closures. Do not set up traffic control when the pavement is wet.

Cover, relocate, or remove existing small, large, and overhead signs that conflict with traffic control. Cover large and overhead signs to remain using latest standard TS-CD. This work is subsidiary.

Install all permanent signs, delineation, and object markers required for the operation of the roadway before opening to traffic. Use of temporary mounts is allowed or may be required until the permanent mounts are installed or not impacted by construction. Maintain the temporary mounts. This work is subsidiary.

3/12/2025 2:49:34 PM $PLTDRV$$
G:\TX\C\Projects\City_Georgetown\10767-00 Shell Road\03_CADD\01_Shts\00-GEN\Shell_General Notes.dgn

Place a 28-inch cone, meeting requirements of BC (10) and Ty III barricades, on top of foundations that have protruding studs. This work is subsidiary.

Vertical panels used on roadways with speed limit 55mph or greater must be round in shape or have a self-righting mechanism. The "flat" or "oblong" shaped vertical panels are not allowed.

A series of sequential flashing warning lights, per BC(7), must be installed in a merging taper for long term stationary TCP. This includes all TCP setups, such as those shown on the plans or TCP setups per the standards.

Edge condition treatment types must be in accordance with the TxDOT standard. Installation and removal of a safety slope is subsidiary.

For non-site-specific signal projects, 2 months of barricades will be paid per work order location. The Contractor Force Account "Safety Contingency" that has been established for this project is intended to be utilized for work zone enhancements, to improve the effectiveness of the Traffic Control Plan, that could not be foreseen in the project planning and design stage. These enhancements will be mutually agreed upon by the Engineer and the Contractor's Responsible Person based on weekly or more frequent traffic management reviews on the project. The Engineer may choose to use existing bid items if it does not slow the implementation of enhancement.

ITEM 506 - TEMPORARY EROSION, SEDIMENTATION, AND ENV CONTROLS
Refer to G6 – Sedimentation and Temporary Erosion Control for additional work included in Item 506. For conflicts between Item 506 and G6 specifications, G6 specification is to be used.

If SW3P plan sheets are not provided, place the control measures as directed.

Install, maintain, remove control measures in areas of the right of way utilized by the Contractor that are outside the limits of disturbance required for construction. Permanently stabilize the area. This work is subsidiary.

Erosion control measures must be initiated immediately in areas where construction activities have ceased and will not resume for a period exceeding 14 calendar days. Vertical track all exposed soil, stockpiles, and slopes. Re-track after each rain event or every 14 days, whichever occurs first. Sheep foot roller is allowed for vertical tracking. This work is subsidiary.

For routine or anticipated dewatering, notify the engineer 72 hours before beginning dewatering. Notify the Engineer within 1 hour of beginning emergency or recent rainfall dewatering. Water located within the ROW that will leave the ROW must appear free of pollutants such as suspended sediment, oil sheen, floating solids, etc. Dirty water must pass thru adequate BMPs prior to leaving the ROW to prevent discharge of dirty water. Bypass pumping of water found in a navigable waterway that enters from outside the ROW and is discharged downstream of the ROW will not require the use of BMPs. Dewatering BMPs will be paid for in conformance with the applicable bid items. However, if the necessary BMP item is not included in the Contract, payment for the BMP will be in accordance with Article 9.7., "Payment for Extra Work and Force Account Method." The act of dewatering

and the equipment used to dewater will not be paid for directly but will be subsidiary to pertinent bid items.

Unless a specific pay item is provided in the plans, the installation of the 6:1 or flatter for RFD side slopes in the safety zone will be subsidiary to pertinent bid items.

Cover small waste containers (100 gallons or less) at all times. This work is subsidiary. Large waste containers (more than 100 gallons) must have a secondary discharge containment system around the container using erosion control logs. Installation of the log for each container location will be paid using existing bid items. Repair, remove, or replace of the log will not be paid. Revisions, repairs, remove or replace of the log during exchange of empty/full containers at the same location will not be paid.

Portable restrooms must be located more than 50 ft. from a waterway. Tie or stake down portable restrooms to prevent tipping due to vandalism or weather. This work is subsidiary.

Provide a designated location for disposal when excess and waste, including waste generated from cleaning of all equipment used for mixing, hauling, and transfer concrete is disposed in the ROW or PSL. Manufactured disposal containers must be metal or a plastic material with minimum 10 mil thickness. Paper, earthen berms, or pits must be lined with minimum 10 mill thickness polyethylene sheeting. Disposal locations must be located a minimum of 50 ft. from a waterway, tree, or sensitive feature. The disposal location must have a minimum height of 6 in. Maintain a minimum 4 in. of freeboard at all times. Disposal locations are not required for cleaning of small hand tools. Hardened concrete waste may be used as embankment if placed in accordance with Item 132.

Dust Control
Stockpiles that will be inactive for greater than 14 days must be treated to contain dust by covering with chemical dust suppressant, soil blanket, vertical tracking, or method other than sprinkling with water. Stockpiles that are actively being used must be treated to contain dust by vertical tracking or a method determined by the Contractor. This work is subsidiary.

Provide designated construction traffic routes when feasible. Construction site traffic must be directed to use designated routes.

ITEM 508 – CONSTRUCTING DETOURS
Detour typical section must match the adjacent roadway section, unless shown on the plans.

Type B ACP use PG 64-22 and Type C or D ACP use PG 76-22, unless shown on the plans.

Flexible base will be Type A Grade 5 placed using ordinary compaction. Base compressive strengths are waived for roadways with AADT less than 50,000.

3/12/2025 2:49:37 PM $PLTDRVSS
G:\TXC\Projects\City_Georgetown\10767-00 Shell Road\03_CADD\01_Shts\00-GEN\Shell_General Notes.dgn

ITEM 512 – PORTABLE TRAFFIC BARRIER
In lieu of a crash cushion, place 25:1 Class C concrete transition where concrete PTB terminates adjacent to existing concrete barrier. Installation and removal will be paid using existing Item 512 bid items.

If bid item allows concrete or steel, the steel barrier must provide a maximum deflection of 2 ft. 3 in. Pinning and other work to obtain the required deflection is subsidiary.

Any increase in temporary barrier quantities that occur due to Contractor changes in the sequence of work or the traffic control plan will not be paid.

ITEMS 528, 529, 530, 531, & 536 – MISCELLANEOUS CONSTRUCTION
Reinforcement will be in accordance with Section 432.3.1 unless shown on the plans. Fiber reinforcement is not allowed. GFRP is allowed reinforcement for all applications. Class A and B Concrete are allowed to use Coarse Aggregate Grades 1-8.

Unless shown on the plans, all concrete will be 5 in. thick and have 2 in. sand, base, or RAP bedding. Furnish base meeting the requirement for any type or grade in accordance with Item 247. Compressive strengths for flexible base are waived. RAP must be 100% passing a 1 in. sieve. Bedding and flexible base must be placed using ordinary compaction.

Expansion joints will be placed every 40 ft. Expansion joints must be 1 in. wide asphalt board and flush with the surface. The bottom of the asphalt board will be at half the depth of the concrete. The reinforcement will be continuous thru the expansion joint.

Sidewalk cross slope must not exceed 1.5%.

If roots are encountered verify with the Engineer before accommodating or removing 2 in. diameter or larger roots. Root removal must be in accordance with Section 752.4.2. Roots may remain in the bedding or base. For improvements within 6 in. of a root, the concrete thickness may be reduced by 1 in. and the bedding increased by 1 in. to minimize impacts to the roots. Adjust bedding and surface profile to provide a 1 in. bedding cushion around the roots. The surface profile may be adjusted to the extent allowed by ADA. This work is subsidiary.

ITEM 530 – INTERSECTIONS, DRIVEWAYS, AND TURNOUTS
Notify property owners at least 48 hr. before beginning work on their driveway. Use a means and methods to construct the driveway while maintaining access to the property at all times. Full closure of a driveway is allowed for reconstruction if duration and alternate access are approved by Engineer. Install and maintain material across a work zone as temporary access. This work is subsidiary.

The following typical section notes apply to all driveways and turnouts:
For ACP or SURF TREAT, the pavement structure will match the adjacent roadway unless detailed on the plans. HMA, including surface, may use a maximum allowable quantity of 40% RAP and 5% RAS for private driveways, public driveways for 2-lane roadways or smaller, and turnouts. Blending of 2 or more sources is allowed.

For CONC, the pavement structure will be 6 in. thick and have 3 in. flexible base bedding unless detailed on the plans.
Driveways that are public (county road and city street) the pavement structure will match the adjacent roadway.

ITEMS 540, 542, & 544 - METAL BEAM GUARD FENCE AND GUARDRAIL END TREATMENTS
Furnish round timber posts for guard fence. Steel posts for low fill culvert applications is subsidiary including use of low fill culvert application due to other concrete structures such as inlets. Long span application at inlets may be used as an alternate to low fill culvert. Unless otherwise specified on the plans, use of low fill culvert or long span at inlets will be subsidiary to pertinent items. Stake the locations for approval before installation. Adjust the limits of the fence to meet field conditions. Install delineators before opening the road to traffic.

Retain all materials. Existing materials that are structurally sound and dent free may be reused. All reused material will be from this project and in compliance with current standards. Structurally sound rust spots with the largest dimension of 4 in. may be cleaned and repaired in accordance with Section 540.3.5. Punch or field drill holes in the metal rail element to accommodate post spacing. Additional holes for splice or connections are not allowed. Space the field holes in accordance with the latest standard but no closer than the minimum spacing shown on the current standard.

Remove, replace, and install mow strip block out material. Construct new block outs and backfill unused block outs with class B concrete. This work is subsidiary.

Repair of mow strip damage, not caused by contractor negligence, and installation of new mow strip will be paid with appropriate bid items. Backfill and shoulder up of area around fence and mow strip will be paid using embankment item.

ITEM 610 - ROADWAY ILLUMINATION ASSEMBLIES
For each assembly, paint the service, circuit, run and assembly number/letter using 3 in. tall characters and black paint. The marking shall be stacked vertically with the service on top and the assembly number/letter on the bottom. Paint 6 ft. above the roadway surface on the hand access door side of the pole or adjacent to the assembly if mounted to a structure. This work is subsidiary. For both transformer and shoe-base type illumination poles, provide double-pole breakaway fuse holder.

Provide 10-amp time delay fuses.
Maintain all new and existing illumination for the duration of the contract. All existing illumination will remain operational until replaced by new illumination or required to be removed due to construction.

ITEM 618 - CONDUIT
Shift the locations of conduit and ground boxes to accommodate field conditions. Install conduit not exceeding 2 feet in any direction from a straight line. Install conduit at a minimum depth of 2

3/12/2025 2:49:41 PM $PLTDRVSS
G:\TXC\Projects\City_Georgetown\10767-00 Shell Road\03_CADD\01_Shts\00-GEN\Shell_General Notes.dgn

ft. below finished grade. Installation of the conduit by jacking or boring method will be at a depth of at least 1 ft. below subgrade.

Install a high tension, non-metallic pull rope in all empty conduit runs. This work is subsidiary. Use a coring device, not a hammer drill, when drilling holes through concrete structures.

Structurally mounted junction boxes will be as shown on the plans. When used for traffic signal installations, these boxes will be 12" x 12" x 8". This work is subsidiary.

For underground conduit, smooth wall schedule 40 equivalent HDPE can be substituted for schedule 40 PVC. Schedule 80 bore can be replaced with a schedule 40 equivalent HDPE carrier pipe of adequate size to carry the proposed conduits. HDPE must transition to RMC/PVC per ED (11)-14.

When using existing conduit, ensure that all conduits have bushings and cleaned of dirt, mud, grease, and other debris. Re-strap existing or relocated conduit per the specification. This work is subsidiary.

Abandoned underground conduit must have all conductors removed.

ITEM 620 - ELECTRICAL CONDUCTORS
Provide 10-amp time delay fuses.

Install a minimum size 8 AWG equipment grounding conductor (EGC) in all conduits including loop detectors and traffic signal cables. Payment and the size of the EGC will be in accordance with standard ED (3)-14 note 12.

Permanently mark "Illumination" on the luminaire conductors installed inside a traffic signal pole. Make the marks easily visible from the hand hole.

ITEM 624 – GROUND BOXES
Aggregate for fill under the box will be crushed, have a maximum size of 2 in., minimum size of ½ in., and requirements per Item 302 are waived.

ITEM 628 – ELECTRICAL SERVICES
Contact the utility company upon execution of contract and prior to the pre-construction meeting to make arrangements for all work and materials provided by the utility company.

ITEM 644 – SMALL ROADSIDE SIGN ASSEMBLIES
Triangular slip base must be the clamp style to secure the post to the slip base. Set screw style slip base will not be allowed.

ITEM 662 - WORK ZONE PAVEMENT MARKINGS
Notify the Engineer at least 24 hours in advance of work for this item.

Maintain removable and short-term markings daily. Remove within 48 hours after permanent striping has been completed.

Item 668 is not allowed for use as Item 662.

Roadways with existing profile pavement markings or rumble strips must supplement work zone solid lines with traffic buttons spaced at 12 in. Traffic buttons used to supplement the work zone markings will be paid by the each in addition to the work zone item.

ITEM 666 - RETROREFLECTORIZED PAVEMENT MARKINGS
Notify the Engineer at least 24 hr. before beginning work.

All projects, including resurfacing, must increase center-to-center width for center line markings to 18 in. unless the plans or existing is greater than 18 in.

Place longitudinal markings nightly for IH 35 main lanes or roadways with AADT greater than 100,000. Use of temporary flexible reflective roadway marker tabs is subsidiary and at the Contractor's option. Replace missing or damaged tabs nightly. If using tabs, place longitudinal markings weekly by 5 AM Friday for all weekday work and by 5 AM Monday for all weekend work. Failure to maintain tabs or place longitudinal markings by deadline will require nightly placement of longitudinal markings.

Place longitudinal markings no later than 7 calendar days after placement of the surface for roadways with AADT greater than 20,000.

When the raised portion of a profile marking is placed as a separate operation from the pavement marking, the raised portion must be placed first then covered with TY I.

When using black shadow to cover existing stripe apply a non-retroreflective angular abrasive bead drop. The marking color shall be adjusted to resemble the pavement color. If Item 677 is not used prior to placement of black shadow, scrape the top of the marking with a blade or large piece of equipment unless surface is a seal coat. The scraping of the marking is subsidiary.

ITEM 668 – PREFABRICATED PAVEMENT MARKINGS AND RUMBLE STRIPS
For center line applications of preformed rumble strips on multilane undivided roadways, application shall be continuous even if profile markings are present.

For center line applications of preformed rumble strips on two lane two-way roadways, application shall be continuous even if profile markings are present. The preformed rumble strip must not be placed in conflict with a broken/skip pavement marking.

For edge line applications of preformed rumble strips, use option 7 of standard RS(2) unless option 8 required due to shoulder width.

ITEM 677 - ELIMINATING EXISTING PAVEMENT MARKINGS AND MARKERS
Dispose of removed materials and debris at locations off the right of way.

3/12/2025 2:49:45 PM $PLTDRVSS
G:\TXC\Projects\City_Georgetown\10767-00 Shell Road\03_CADD\01_Shts\00-GEN\Shell_General Notes.dgn

Elimination using a pavement marking will not be allowed in lieu of methods listed in specification.

Remove pavement markings on concrete surfaces by a blasting method. Flail milling will be allowed when total quantity of removal on concrete surfaces is less than 1000 ft.

Strip seal is only method allowed on seal coat surface unless project includes placement of a new surface. If total quantity of removal on a seal coat surface is less than 2000 ft., elimination using a pavement marking is allowed if a test section is approved by the Engineer. Test section shall demonstrate the thermo marking color matches the existing pavement color.

Remove pavement markings outside the limits of the new surface by a blasting method.

Use a TRAIL or a non-retroreflective paint to cover stripe remnants that remain after elimination.

The test requirements for these materials are waived. The paint color shall be adjusted to resemble the existing pavement color. Installation and maintenance is subsidiary.

ITEM 680 - HIGHWAY TRAFFIC SIGNALS
Luminaire arms shall be aligned with the signal head support. If multiple signal head supports, the luminaire arm shall be aligned with the support over the higher volume roadway.

All signal head housing components must be aluminum. Polycarbonate is not permitted.

Install 250W EQ LED illumination fixtures as shown in the plans. Test in accordance with Item 616. This work is subsidiary.

Furnish all materials and install signs mounted on the traffic signal wire, traffic signal poles, mast arms, and pedestal pole assemblies. Remove all conflicting signs and sign foundations when signal is placed into operation. This work is subsidiary.

ITEM 681 - TEMPORARY TRAFFIC SIGNALS
The scope of this contract will include modifications of existing signal systems as required to support the traffic control plan at the following locations: Shell Road at Verde Vista Intersection and Shell Road at Westbury Lane/Bellaire Drive Intersection.

Maintain 18 ft. vertical clearance. Place signal heads in accordance with the latest version of the TMUTCD.

Operate and maintain all signals within the project limits as shown on the plans, to commence when the signal system or roadway capacity is affected, or within 30 days after the start of work, whichever comes first.

Provide all items for temporary traffic signal including temporary controller and Video Imaging Vehicle Detection System (VIVDS) equipment. Controller will be an eight-phased NEMA controller. Controller cabinet will meet all the requirements of DMS-11170. Have a qualified

technician and a representative from the controller supplier on the project site to place the traffic signal in operation.

Adjust or relocate video detection and signal heads as required by project phasing or as directed. This work is subsidiary.

Response time to reported trouble calls will be less than 2 hours. Make appropriate repairs within 24 hours. Place a logbook in the controller cabinet and keep a record of each trouble call reported. Notify the Engineer of each trouble call. Do not clear the error log in the conflict monitor without approval.

Furnish all sign materials and install signs mounted on the traffic signal wire, traffic signal poles, mast arms, and pedestal pole assemblies. This work is subsidiary.

If intersection illumination is not shown on the plans, install 2 temporary illumination fixtures (250W equivalent LED) per intersection. This work is subsidiary.

ITEM 682 – VEHICLE AND PEDESTRIAN SIGNAL HEADS
Install signal head attachments so the wiring to each passes from the signal pole through the attachment hardware to the signal head. Use UV rated tie wraps.

Traffic signal heads will be aluminum unless otherwise shown on the plans. Back plates will be black aluminum with reflective borders.

Provide louvers, which have five vanes with a black finish on inside surfaces when required.

Fasten a hardware cloth screen, securely, with ⅝" or smaller mesh size to the front face of each louver to prevent bird nesting.

Use the four-point mounting system (TY A) for signal heads, except in cases of skewed or vertical heads when (TY B) will be used.

ITEM 684 – TRAFFIC SIGNAL CABLES
For Type A cables, cables meeting the requirements of IMSA 19-1 can be substituted for IMSA 20-1. For all types of cables, an increase of one size larger wire diameter and thickness can be substituted for plan size without additional cost to the Department. For example, 12 AWG can be substituted for 14 AWG.

For each cable run, coil an extra 2 ft. of cable in each steel pole and 5 ft. in the controller cabinet. Provide a separate multi-conductor signal cable (14 AWG) inside pedestal poles and mast-arm signal poles from the terminal strip to each signal head as shown on the plans.

ITEM 686 - TRAFFIC SIGNAL POLE ASSEMBLIES (STEEL)
Provide and install damping plates on all mast arms 40 ft. or greater. For mast arms less than 40 ft., refer to SMA and DMA vibration notes for guidance. This work is subsidiary.

3/12/2025 2:49:49 PM $PLTDRVSS
G:\TXC\Projects\City_Georgetown\10767-00 Shell Road\03_CADD\01_Shts\00-GEN\Shell_General Notes.dgn

When luminaires are installed on mast arm poles, install a separate terminal strip in the signal pole access compartment. Provide a 10-amp time-delay fuse for traffic signal poles with luminaires.

ITEM 687 – PEDESTAL POLE ASSEMBLIES
Verify the required pole height prior to ordering material.

ITEM 688 - PEDESTRIAN DETECTORS AND VEHICLE LOOP DETECTORS
Test all loops in accordance with the FHWA loop detector handbook.

Install vehicle loops prior to placement of roadway surface.

For replacement of existing loops, replacement of damaged or missing conduit from the vehicle loop detector to the ground box will be measured and paid by overrun of loop detector bid item.

Removal of damaged ground boxes at end of lead in cable is subsidiary to the new ground box. Test period for the pedestrian detectors shall be in accordance with item 680.3.1.8.

Pedestrian push buttons will be mounted at 42 in. above the walking surface and have permanent type signs within the detector unit (9 in. x 12 in. sign and push button station on signal poles and 5 in. x 7 in. sign and push button station on pedestrian poles), which explains their purpose and indicates which crosswalk signal is actuated. Provide speech walk message as shown in the plans or per Engineer.

ITEM 6001 – PORTABLE CHANGEABLE MESSAGE SIGN
Provide 4 PCMS. Provide a replacement within 12 hours. PCMS will be available for traffic control, event notices, roadway conditions, service announcements, etc.

Place PCMS 10 calendar days prior to begin work stating “Road Work Begin Soon, Contact 832-7000 For Info”.

Place PCMS at time of LCN request. Place the PCMS at the expected end of queue caused by the closure. When the closure is active, revise the message to reflect the actual condition during the closure, such as “RIGHT LN CLOSED XXX FT”.

ITEM 6185 – TRUCK MOUNTED ATTENUATOR AND TRAILER ATTENUATOR
The TMA/TA used for installation/removal of traffic control for a work area will be subsidiary to the TMA/TA used to perform the work.

The contractor will be responsible for determining if one or more operations will be ongoing at the same time to determine the total number of TMA/TA required for the work. TMA/TAs paid by the day is full compensation for all worksite locations during an entire day.

TMA/TAs used to protect damaged attenuators will be paid by the day using the force account item for the repair.

ITEM 6306 - VIDEO IMAGING VEHICLE DETECTION SYSTEM (VIVDS)
Install the VIVDS cameras onto the mast arms with the attachment mechanisms provided with the camera system. Install the VIVDS detection zones as directed. Have qualified personnel on site at the time of the signal turn-on to assist with the installation of detection zones. If the camera locations shown in the plans do not allow for proper sight of the proposed detection zones, relocate the cameras as needed and as directed. Place the traffic signal cable (TY A) (3-conductor) (16 AWG) in continuous and separate runs from each VIVDS camera to the controller. This work is subsidiary.

Aim and adjust the cameras, install the cables and VIVDS cards into the controller cabinet and complete any other necessary work to bring the traffic signal into operation.
Provide a Video Processor System (VPS) that can provide up to thirty-two detector outputs to the controller from up to eight camera/video processor units (C/VPU). Route the detector outputs through the Bus Interface Unit (BIU) or approved product, which replaces the functions of the BIU. Field of view for each C/VPU will provide a minimum of thirty-two virtual detection zones for vehicle detection.

Install all cables necessary to provide complete VIVDS operation. Provide a minimum of 10 cables to direct connect the notebook to the VIVDS port.

Phase red and green load switch outputs from up to sixteen phases of a NEMA TS2 Type 2 controller will be provided as inputs to the VPU for use with internal detector extend/delay timing functions. The C/VPU will be able to condition the detector outputs and detection zones based on the state of the associated phase number and color.

The serial communication port on the front of the VPU will be a DB-9 RS-232 connector. Supply a package that will operate with Windows XP and NT and provide the functionality defined in both sections 7.0 and 8.0 in both a direct connect and remote communications mode. The software resident in the VPU and the personal computer will be capable of transmitting and receiving all information needed for zone set up, monitoring vehicle detection by viewing flashing detection zone overlays, and uploading/downloading and interrogating all stored data within the VPU. Remote communications with the VCU will be possible with the addition of external communication devices (modem, Codec, etc.) using the RS-232 and video output ports on the front of the VPU.

The VPU operational software will be stored internally in flash memory and be capable of being updated without the removal and replacement of memory devices.

All surge protection will be din rail mounted.

3/12/2025 2:49:52 PM $PLTDRVSS
G:\TXC\Projects\City_Georgetown\10767-00 Shell Road\03_CADD\01_Shts\00-GEN\Shell_General Notes.dgn

Texas Commission on Environmental Quality
Water Pollution Abatement Plan
General Construction Notes

Edwards Aquifer Protection Program Construction Notes – Legal Disclaimer

The following/listed "construction notes" are intended to be advisory in nature only and do not constitute an approval or conditional approval by the Executive Director (ED), nor do they constitute a comprehensive listing of rules or conditions to be followed during construction. Further actions may be required to achieve compliance with TCEQ regulations found in Title 30, Texas Administrative Code (TAC), Chapters 213 and 217, as well as local ordinances and regulations providing for the protection of water quality. Additionally, nothing contained in the following/listed "construction notes" restricts the powers of the ED, the commission or any other governmental entity to prevent, correct, or curtail activities that result or may result in pollution of the Edwards Aquifer or hydrologically connected surface waters. The holder of any Edwards Aquifer Protection Plan containing "construction notes" is still responsible for compliance with Title 30, TAC, Chapters 213 or any other applicable TCEQ regulation, as well as all conditions of an Edwards Aquifer Protection Plan through all phases of plan implementation. Failure to comply with any condition of the ED's approval, whether or not in contradiction of any "construction notes," is a violation of TCEQ regulations and any violation is subject to administrative rules, orders, and penalties as provided under Title 30, TAC § 213.10 (relating to Enforcement). Such violations may also be subject to civil penalties and injunction. The following/listed "construction notes" in no way represent an approved exception by the ED to any part of Title 30 TAC, Chapters 213 and 217, or any other TCEQ applicable regulation

1. A written notice of construction must be submitted to the TCEQ regional office at least 48 hours prior to the start of any regulated activities. This notice must include:
   - the name of the approved project;
   - the activity start date; and
   - the contact information of the prime contractor.

2. All contractors conducting regulated activities associated with this project must be provided with complete copies of the approved Water Pollution Abatement Plan (WPAP) and the TCEQ letter indicating the specific conditions of its approval. During the course of these regulated activities, the contractors are required to keep on-site copies of the approved plan and approval letter.

3. If any sensitive feature(s) (caves, solution cavity, sink hole, etc.) is discovered during construction, all regulated activities near the sensitive feature must be suspended immediately. The appropriate TCEQ regional office must be immediately notified of any sensitive features encountered during construction. Construction activities may not be resumed until the TCEQ has reviewed and approved the appropriate protective measures in order to protect any sensitive feature and the Edwards Aquifer from potentially adverse impacts to water quality.

4. No temporary or permanent hazardous substance storage tank shall be installed within 150 feet of a water supply source, distribution system, well, or sensitive feature.

5. Prior to beginning any construction activity, all temporary erosion and sedimentation (E&S) control measures must be properly installed and maintained in accordance with the approved plans and manufacturers specifications. If inspections indicate a control has been used inappropriately, or incorrectly, the applicant must replace or modify the control for site situations. These controls must remain in place until the disturbed areas have been permanently stabilized.

6. Any sediment that escapes the construction site must be collected and properly disposed of before the next rain event to ensure it is not washed into surface streams, sensitive features, etc.

7. Sediment must be removed from the sediment traps or sedimentation basins not later than when it occupies 50% of the basin's design capacity.

8. Litter, construction debris, and construction chemicals exposed to stormwater shall be prevented from being discharged offsite.

9. All spoils (excavated material) generated from the project site must be stored on-site with proper E&S controls. For storage or disposal of spoils at another site on the Edwards Aquifer Recharge Zone, the owner of the site must receive approval of a water pollution abatement plan for the placement of fill material or mass grading prior to the placement of spoils at the other site.

10. If portions of the site will have a temporary or permanent cease in construction activity lasting longer than 14 days, soil stabilization in those areas shall be initiated as soon as possible prior to the 14th day of inactivity. If activity will resume prior to the 21st day, stabilization measures are not required. If drought conditions or inclement weather prevent action by the 14th day, stabilization measures shall be initiated as soon as possible.

11. The following records shall be maintained and made available to the TCEQ upon request:
    - the dates when major grading activities occur;
    - the dates when construction activities temporarily or permanently cease on a portion of the site; and
    - the dates when stabilization measures are initiated.

12. The holder of any approved Edward Aquifer protection plan must notify the appropriate regional office in writing and obtain approval from the executive director prior to initiating any of the following:

    A. any physical or operational modification of any water pollution abatement structure(s), including but not limited to ponds, dams, berms, sewage treatment plants, and diversionary structures;

    B. any change in the nature or character of the regulated activity from that which was originally approved or a change which would significantly impact the ability of the plan to prevent pollution of the Edwards Aquifer;

    C. any development of land previously identified as undeveloped in the original water pollution abatement plan.

Austin Regional Office 12100 Park 35 Circle, Building A Austin, Texas 78753-1808 Phone (512) 339-2929 Fax (512) 339-3795	San Antonio Regional Office 14250 Judson Road San Antonio, Texas 78233-4480 Phone (210) 490-3096 Fax (210) 545-4329

THESE GENERAL CONSTRUCTION NOTES MUST BE INCLUDED ON THE CONSTRUCTION PLANS PROVIDED TO THE CONTRACTOR AND ALL SUBCONTRACTORS.

3/12/2025 2:49:55 PM $PLTDRV$$
G:\TXC\Projects\City_Georgetown\10767-00 Shell Road\03_CADD\01_Shts\00-GEN\Shell_General Notes.dgn

SUMMARY OF WORKZONE TRAFFIC CONTROL ITEMS

LOCATION	* 400 6006	COGG1 6001	** 508 6001	512 6009	512 6010	512 6033	512 6034	512 6057	512 6058	662 6060	662 6061	662 6063	662 6071	662 6075	662 6080	662 6090	662 6095	662 6100
	CUT & RESTORING PAV	BARRICADES, SIGNS AND TRAFFIC HANDLING	CONSTRUCTING DETOURS	PORT CTB (FUR & INST)(LOW PROF)(TY 1)	PORT CTB (FUR & INST)(LOW PROF)(TY 2)	PORT CTB (MOVE)(LOW PROF)(TY 1)	PORT CTB (MOVE)(LOW PROF)(TY 2)	PORT CTB (REMOVE)(LOW PROF)(TY 1)	PORT CTB (REMOVE)(LOW PROF)(TY 2)	WK ZN PAV MRK REMOV (W)4"(BRK)	WK ZN PAV MRK REMOV (W)4"(DOT)	WK ZN PAV MRK REMOV (W)4"(SLD)	WK ZN PAV MRK REMOV (W)8"(SLD)	WK ZN PAV MRK REMOV (W)24"(SLD)	WK ZN PAV MRK REMOV (W)(ARROW)	WK ZN PAV MRK REMOV (W)(WORD)	WK ZN PAV MRK REMOV (Y)4"(SLD)	WK ZN PAV MRK REMOV (Y)12"(SLD)
	SY	MO	SY	LF	LF	LF	LF	LF	LF	LF	LF	LF	LF	LF	EA	EA	LF	LF
PHASE 1																		
SHEET 1 OF 7	300		110	550	80							1190					1316	180
SHEET 2 OF 7	20		770	1530	120							220	301	30	2		3118	
SHEET 3 OF 7	20			1020	80							1200					300	
SHEET 4 OF 7	20			1120	40							1160						
SHEET 5 OF 7				1100	40							1140						
SHEET 6 OF 7	30		1200	240	20							1750					1100	
SHEET 7 OF 7												300					300	
PHASE 2																		
SHEET 1 OF 7	45		75			320	20	230	60	70		1520					1280	200
SHEET 2 OF 7						1050	40	480	80		60	2170	285		2		3570	30
SHEET 3 OF 7						110	20	910	60			2120	526		2		2034	
SHEET 4 OF 7						200	20	920	20		66	2305	198		1		2214	
SHEET 5 OF 7						720	60	380			48	2212	676		2		2912	
SHEET 6 OF 7			220									2350					2400	
SHEET 7 OF 7												300					300	
END OF PHASE 2								1760	120									
PHASE 3																		
SHEET 1 OF 7						780	20					410					2046	
SHEET 2 OF 7						260	20				121		1090	160	4	4	4360	
SHEET 3 OF 7										340	144		1434	138	6	6	1600	
SHEET 4 OF 7										410	90		652	14	2	2	1500	
SHEET 5 OF 7										50	176		1253	116	5	5	3560	
SHEET 6 OF 7											75	612	240	17	2	2	2320	
SHEET 7 OF 7																		
END OF PHASE 3								880	40									
PHASE 4 - AFTER MILLING																		
STA 1+68 to 8+81																		
STA 69+76 to 111+34.89																		
PHASE 4 - FINAL SURFACE																		
STA 1+68 to 111+34.89																		
PROJECT TOTALS	435	22	2375	5560	380	3440	200	5560	380	870	780	20959	6655	475	28	19	36230	410

LOCATION	662 6109	662 6111	677 6001	677 6003	677 6008	677 6012	681 6001	6001 6002	6185 6002	6185 6005
	WK ZN PAV MRK SHT TERM (TAB)TY W	WK ZN PAV MRK SHT TERM (TAB)TY Y-2	ELIM EXT PAV MRK & MRKS (4")	ELIM EXT PAV MRK & MRKS (8")	ELIM EXT PAV MRK & MRKS (ARROW)	ELIM EXT PAV MRK & MRKS (WORD)	TEMP TRAF SIGNALS ***	PORTABLE CHANGEABLE MESSAGE SIGN	TMA (STATIONARY)	TMA (MOBILE OPERATION)
	EA	EA	LF	LF	EA	EA	EA	EA	DAY	DAY
PHASE 1								4		
SHEET 1 OF 7		66	820	280						
SHEET 2 OF 7	30	168	2540	820	2	2	1			
SHEET 3 OF 7		15	400							
SHEET 4 OF 7										
SHEET 5 OF 7							1			
SHEET 6 OF 7		55	1350							
SHEET 7 OF 7		15	450							
PHASE 2										
SHEET 1 OF 7			140							
SHEET 2 OF 7		60					1			
SHEET 3 OF 7										
SHEET 4 OF 7										
SHEET 5 OF 7							1			
SHEET 6 OF 7		22								
SHEET 7 OF 7		15								
END OF PHASE 2										
PHASE 3										
SHEET 1 OF 7										
SHEET 2 OF 7										
SHEET 3 OF 7										
SHEET 4 OF 7										
SHEET 5 OF 7										
SHEET 6 OF 7										
SHEET 7 OF 7										
END OF PHASE 3	2088	46								
PHASE 4 - AFTER MILLING										
STA 1+68 to 8+81	272									
STA 69+76 to 111+34.89		416								
PHASE 4 - FINAL SURFACE										
STA 1+68 to 111+34.89	2485	428								
PROJECT TOTALS	4875	1306	5700	1100	2	2	4	4	25	15

NOTES:

SHADOW VEHICLES WITH TMA ARE FOR STATIONARY AND MOBILE OPERATIONS.
TMA STATIONARY FOR INSTALL, MOVE AND REMOVE LOW PROFILE CONCRETE BARRIER, ETC.
TMA MOBILE FOR CONSTRUCTING PAVEMENT MARKINGS, ETC.
THE CONTRACOTR WILL BE RESPONSIBLE FOR DETERMINING IF OPERATIONS WILL BE ONGOING AT THE SAME TIME TO DETERMINE THE TOTAL NUMBER OF TMAs NEEDED FOR THE PROJECT.

* ITEM 400 - CUT & RESTORE PAVEMENT (SY)

AFTER INSTALLTION OF PROPOSED WATERLINE, STORM SEWER LATERAL AND CROSS CULVERT TRENCHES.
RESTORE EXISTING ROADWAY PAVEMENT IN ACCORDANCE WITH CITY OF GEORGETOWN'S TRENCH AND EMBEDMENT AND PAVEMENT REPLACEMENT DETAIL UNDER EXISTING PAVEMENT.

SEE SHELL ROAD UTILITY RELOCATIONS STANDARD FOR ADDITIONAL INFORMATION AND DETAILS.

** ITEM 508 - CONSTRUCTING DETOUR (SY)

TEMPORARY PAVEMENT WIDENING SHALL CONSISTS OF THE FOLLOWING:

D-GR HMA TY-D (2") (TOP LAYER)
D-GR HMA TY-B (10") (BOTTOM LAYER)

EMBANKMENT INCLUDED IN ITEM 508.

*** TEMPORARY TRAFFIC SIGNAL QUANTITIES, INCLUDING TEMPORARY SIGNAL POLES, SIGNAL HEADS, CONDUIT, CABLES, AND OTHER RELATED PARTS OF THE TEMPORARY TRAFFIC SIGNAL ARE SUBSIDIARY TO ITEM 681-6001.

EST.1848 GEORGETOWN TEXAS

BGE, Inc.
101 West Louis Henna Blvd, Suite 400, Austin, TX 78728
Tel: 512-879-0400 • www.bgeinc.com
TBPE Registration No. F-1046

SHELL ROAD

TCP SUMMARY OF QUANTITIES

SHEET 1 OF 1

SHEET NO. 12

DATE: 3/12/2025 5:41:09 PM
FILE: G:\TXC\Projects\City_Georgetown\10767-00 Shell Road\03_CADD\01 Shts\00-GEN\Shell_Summ_TCP.dgn

CK: DW: CK: DW:

CK:
DW:
CK:
DW:

SUMMARY OF ROADWAY ITEMS

LOCATION	COGG2 6002	104 6011	104 6021	104 6036	105 6018	110 6001	132 6003	134 6003	247 6041	310 6027	354 6113	432 6001	450 6042	529 6002	529 6008	529 6015	529 6016	529 6017
	PREPARING ROW	REMOVING CONC (MEDIANS)	REMOVING CONC (CURB)	REMOVING CONC (SIDEWALK OR RAMP)	REMOVING STAB BASE AND ASPH PAV (7")	EXCAVATION (ROADWAY)	EMBANKMENT (FINAL)(ORD COMP)(TY B)	BACKFILL (TY C)	FL BS (CMP IN PLC)(TYA GR1-2)(FNAL POS)	PRIME COAT(MC-30 OR AE-P)	PLAN & TEXT ASPH CONC PAV (2")	RIPRAP (CONC)(4 IN)	RAIL (TY PR1)	CONC CURB (TY II)	CONC CURB & GUTTER (TY II)	CONC CURB (TY C1)	CONC CURB (TY F1)	CONC CURB (TY F2)
	STA	SY	LF	SY	SY	CY	CY	STA	CY	GAL	SY	CY	LF	LF	LF	LF	LF	LF
PP SHEET 1 OF 12	4.77	123	1118	312	501	1130	89		372	217	3289			232	1042			
PP SHEET 2 OF 12	6.00	159	1371	192	2004	1167	494		868	543	1420	3		806	1199			
PP SHEET 3 OF 12	6.00		1198	396	2616	2307	776		1436	916				1202	1199			
PP SHEET 4 OF 12	6.00		1268	351	3202	1537	1005		1519	986				1203	1206			
PP SHEET 5 OF 12	6.00		1285	386	2263	2530	366		1577	1023			100	1200	1228	25	100	
PP SHEET 6 OF 12	6.00		1260	386	2408	2290	725		1610	1046		25	105	1039	1247	85		105
PP SHEET 7 OF 12	6.00		1235	420	2151	1561	667		1431	918			195	1023	1231		95	100
PP SHEET 8 OF 12	6.00		1201	409	2894	1725	881		1372	872				1201	1201			
PP SHEET 9 OF 12	6.00		1287	250	3572	2546	758		1562	1014				977	1279			
PP SHEET 10 OF 12	6.00		1255		2412	2233	540		1467	943				1200	1203			
PP SHEET 11 OF 12	6.00		1254		2063	2682	492		1434	926		28		832	1260			
PP SHEET 12 OF 12	3.8		754		1189	772	225	2.2	762	455					761			
OVERLAY SHEET 1 OF 4								8										
OVERLAY SHEET 2 OF 4								12										
OVERLAY SHEET 3 OF 4								12										
OVERLAY SHEET 4 OF 4								7.35										
PROJECT TOTALS	68.57	282	14486	3102	27275	22480	7018	41.55	15410	9859	4709	56	400	10915	14056	110	195	205

SUMMARY OF ROADWAY ITEMS

LOCATION	529 6027	530 6002	531 6001	531 6004	531 6005	531 6010	531 6013	536 6002	542 6001	3076 6015	3076 6025	3076 6066	5001 6001
	CONC CURB (TY C2)	INTERSECTIONS (ACP)	CONC SIDEWALKS (4")	CURB RAMPS (TY 1)	CURB RAMPS (TY 2)	CURB RAMPS (TY 7)	CURB RAMPS (TY 10)	CONC MEDIAN	REMOVE METAL BEAM GUARD FENCE	D-GR HMA TY-C PG64-22	D-GR HMA TY-C SAC-B PG70-22	TACK COAT	GEOGRID BASE REINFORCEMENT (TY I)
	LF	SY	SY	EA	EA	EA	EA	SY	LF	TON	TON	GAL	SY
PP SHEET 1 OF 12		305	412	2		3	1	34		149	494	898	1333
PP SHEET 2 OF 12			700					152		373	506	920	3019
PP SHEET 3 OF 12			1068					174		630	504	916	4979
PP SHEET 4 OF 12		580	901			6		221		678	542	986	5258
PP SHEET 5 OF 12		265	905			2	2	106		703	562	1023	5456
PP SHEET 6 OF 12	60	396	937	1		5	1	168		719	575	1046	5568
PP SHEET 7 OF 12		245	1053		2			161		631	505	918	4961
PP SHEET 8 OF 12			1063					227		600	480	872	4761
PP SHEET 9 OF 12		570	724			7	1	211		697	558	1014	5405
PP SHEET 10 OF 12		120	627					161		648	518	943	5083
PP SHEET 11 OF 12		470	171			1	1	44	430	637	509	926	4965
PP SHEET 12 OF 12										313	250	455	2670
OVERLAY SHEET 1 OF 4											274	498	
OVERLAY SHEET 2 OF 4											411	747	
OVERLAY SHEET 3 OF 4											411	747	
OVERLAY SHEET 4 OF 4											251	457	
PROJECT TOTALS	60	2951	8561	3	2	24	6	1659	430	6778	7350	13366	53458

DATE: 3/12/2025 5:41:10 PM
FILE: G:\TX\Projects\City Georgetown\10767-00 Shell Road\03_CADD\01 Shts\00-GEN\Shell_Summ_Pav.dgn

EST.1848 GEORGETOWN TEXAS

BGE, Inc.
101 West Louis Henna Blvd, Suite 400, Austin, TX 78728
Tel: 512-879-0400 • www.bgeinc.com
TBPE Registration No. F-1046

SHELL ROAD

ROADWAY SUMMARY OF QUANTITIES

SHEET 1 OF 1

SHEET NO.
13

SUMMARY OF DRAINAGE ITEMS																		
LOCATION	402 6001	432 6033	462 6003	462 6010	462 6055	464 6003	464 6005	464 6007	464 6008	465 6002	465 6006	465 6011	465 6014	465 6015	465 6016	465 6030	465 6031	465 6156
	TRENCH EXCAVATION PROTECTION	RIPRAP (STONE PROTECTION)(18 IN)	CONC BOX CULV (4 FT X 2 FT)	CONC BOX CULV (6 FT X 3 FT)	CONC BOX CULV (6 FT X 4 FT)(EXTEND)	RC PIPE (CL III)(18 IN)	RC PIPE (CL III)(24 IN)	RC PIPE (CL III)(30 IN)	RC PIPE (CL III)(36 IN)	MANH (COMPL)(PRM) (48IN)	JCTBOX(COMPL) (PJB)(4FTX4FT)	JCTBOX(COMPL) (PJB)(6FTX6FT)	INLET (COMPL)(PCO)(3FT)(LEFT)	INLET (COMPL)(PCO) (3FT)(RIGHT	INLET (COMPL)(PCO) (3FT)(BOTH)	INLET (COMPL)(PCU) (3FT)(LEFT)	INLET (COMPL)(PCU)(3FT)(RIGHT)	INLET (COMPL)(PAZD)(RG)(4FTX4FT)
	LF	CY	LF	LF	LF	LF	LF	LF	LF	EA	EA	EA	EA	EA	EA	EA	EA	EA
STORM SEWER P&P SHEET 1 OF 12	180					379					1					1	1	
STORM SEWER P&P SHEET 2 OF 12	600						391				2			2		2		
STORM SEWER P&P SHEET 3 OF 12	600							569	54		1	1	2	1			1	
STORM SEWER P&P SHEET 4 OF 12	600							778			4		2	4		1		
STORM SEWER P&P SHEET 5 OF 12	600					276					2		2	1				
STORM SEWER P&P SHEET 6 OF 12	346					515				1	1		1					
STORM SEWER P&P SHEET 7 OF 12	600						254				3		2	3	1			
STORM SEWER P&P SHEET 8 OF 12	600							587			3		2	2				
STORM SEWER P&P SHEET 9 OF 12	600								754		3		1	1			1	1
STORM SEWER P&P SHEET 10 OF 12	600								558		2		1	2	1			
STORM SEWER P&P SHEET 11 OF 12	350		71						146		1	1	1	2				
STORM SEWER P&P SHEET 12 OF 12																		
STORM SEWER LATERALS SHEET 1 OF 4	424					346	61											
STORM SEWER LATERALS SHEET 2 OF 4	404					423												
STORM SEWER LATERALS SHEET 3 OF 4	326					347	80											
STORM SEWER LATERALS SHEET 4 OF 4	389					318		106										
CULVERT LAYOUT 01					48													
CULVERT LAYOUT 02	66	58		346														
PROJECT TOTALS	7285	58	71	346	48	2604	786	2040	1512	1	23	2	14	18	2	4	3	1

SUMMARY OF DRAINAGE ITEMS								
LOCATION	465 6315	465 6517	466 6180	467 6223	496 6004	496 6007	7101 0001	7101 0002
	INLET (COMPL)(TRENCH DRAIN)(24")	JUNCT BOX (COMPL)(JB) (5FT X 5FT)(FTW)	WINGWALL (PW - 1) (HW=5 FT)	SET (TY I)(S=6 FT)(HW=6 FT)(3:1) (C)	REMOV STR (SET)	REMOV STR (PIPE)	8' X 8' JELLYFISH PEAK DIVERSION VAULT W/ 13 CARTRIDGES	8' X 16' JELLYFISH PEAK DIVERSION VAULT W/ 39 CARTRIDGES
	EA	EA	EA	EA	EA	LF	EA	EA
STORM SEWER P&P SHEET 1 OF 12					2	88		
STORM SEWER P&P SHEET 2 OF 12							1	
STORM SEWER P&P SHEET 3 OF 12								
STORM SEWER P&P SHEET 4 OF 12					2	104		
STORM SEWER P&P SHEET 5 OF 12	1				1			
STORM SEWER P&P SHEET 6 OF 12	1				2	83		
STORM SEWER P&P SHEET 7 OF 12								
STORM SEWER P&P SHEET 8 OF 12								
STORM SEWER P&P SHEET 9 OF 12	1	1			8	428		
STORM SEWER P&P SHEET 10 OF 12					8	336		
STORM SEWER P&P SHEET 11 OF 12	1					66		1
STORM SEWER P&P SHEET 12 OF 12								
STORM SEWER LATERALS SHEET 1 OF 4								
STORM SEWER LATERALS SHEET 2 OF 4								
STORM SEWER LATERALS SHEET 3 OF 4								
STORM SEWER LATERALS SHEET 4 OF 4								
CULVERT LAYOUT 01				3				
CULVERT LAYOUT 02			2					
PROJECT TOTALS	4	1	2	3	23	1105	1	1

EST.1848
GEORGETOWN
TEXAS

BGE, Inc.
101 West Louis Henna Blvd, Suite 400, Austin, TX 78728
Tel: 512-879-0400 • www.bgeinc.com
TBPE Registration No. F-1046

SHELL ROAD

DRAINAGE SUMMARY OF QUANTITIES

SHEET 1 OF 1

SHEET NO.
14

DATE: 3/12/2025 2:50:02 PM
FILE: G:\TX\Projects\City Georgetown\10767-00 Shell Road\03 CADD\01 Shts\00-GEN\Shell_Summ_Drainage.dgn

CK:
DW:
CK:
DW:

SUMMARY OF ILLUMINATION ITEMS

LOCATION	GUSL-CF-B	GUSL-35-1	GUSL-35-2	GUK6-SL	GUM50-P-1	GUM50-P-2	GUR2-S (24" X 24") (TRENCH)	GUR2-S (30" X 24") (TRENCH)	GUR2-S (36" X 24") (BORING)	SS00001	SS00002	SS00003	SS00004
	CONCRETE FOUNDATION STREEETLIGHT POLE	STREETLIGHT 35' BRUSHED ALUMINUM SINGLE ARM	STREETLIGHT 35' BRUSHED ALUMINUM DOUBLE ARM	JUNCTION BOX	1" (SCH 40) (PVC) CONDUIT	2" (SCH 40) (PVC) CONDUIT	1" (SCH 40) (PVC) CONDUIT (TRENCH)	2" (SCH 40) (PVC) CONDUIT (TRENCH)	2" (SCH 40) (PVC) CONDUIT (BORE)	ELEC CONDR (NO.1/0) ALUMINUM TPLX	ELEC CONDR (NO.12) COPPER DPLX	IRRIGATION METER	CONCRETE ENCASEMENT
	LF	EA	EA	EA	LF	LF	LF	LF	LF	LF	LF	EA	LF
SHEET 1 OF 11	24	4	0	4	62	780	62	623	157	800	82	0	0
SHEET 2 OF 11	30	4	1	6	55	1455	55	1411	44	1500	85	1	0
SHEET 3 OF 11	24	4	0	6	35	1531	35	1295	236	1575	55	0	0
SHEET 4 OF 11	30	3	2	8	50	1519	50	1442	77	1579	80	1	0
SHEET 5 OF 11	18	2	1	6	35	1637	35	1234	403	1677	50	0	0
SHEET 6 OF 11	36	5	1	9	57	843	57	824	19	888	87	0	0
SHEET 7 OF 11	24	4	0	4	45	1251	45	1251	0	1281	70	1	0
SHEET 8 OF 11	18	3	0	6	27	1386	27	973	413	1426	42	0	0
SHEET 9 OF 11	24	3	1	8	47	1601	47	1408	193	1650	72	1	0
SHEET 10 OF 11	36	5	1	8	89	1459	89	1248	211	1509	124	1	4
SHEET 11 OF 11	12	2	0	2	17	372	17	372	0	382	27	0	0
PROJECT TOTALS	276	39	7	67	519	13834	519	12081	1753	14267	774	5	4

NOTES:

1. TRENCH CONDUIT IS QUANTIFIED AND PAID FOR USING A DEPTH OF 30" FOR PRIMARY CONDUIT RUNS AND 24" FOR SECONDARY CONDUIT RUNS. NO ADDITIONAL PAYMENT WILL BE MADE FOR INSTALLING CONDUIT DEEPER THAN MINIMUM DEPTH TO AVOID UTILITIES.

2. STREETLIGHT SERVICE WILL BE #1/0 AI TPLX IN A 2" PVC CONDUIT FROM HANDHOLE TO HANDHOLE. THE STREETLIGHTS WILL BE FED FROM A HANDHOLE VIA #12/2 CU DPLX CABLE IN A 1" PVC CONDUIT. IRRIGATION POINTS WILL BE FED OFF STREETLIGHT SERVICE FROM PROPOSED HANDHOLES TO PROPOSED METER LOCATIONS. THE METER WILL BE FED VIA #1/0 AI TPLX IN A 2" PVC CONDUIT.

3. CONTRACTOR TO PROVIDE IRRIGATION ELECTRICAL SERVICE WITH A FORCE ACCOUNT ALLOWANCE OF $10,000 PER METER FOR A TOTAL ALLOWANCE OF $50,000.

DATE: 3/12/2025 2:50:03 PM
FILE: G:\TXC\Projects\City Georgetown\10767-00 Shell Road\03 CADD\01 Shts\00-GEN\Shell_Summ_Illum.dgn

EST.1848 GEORGETOWN TEXAS

BGE, Inc.
101 West Louis Henna Blvd, Suite 400, Austin, TX 78728
Tel: 512-879-0400 • www.bgeinc.com
TBPE Registration No. F-1046

SHELL ROAD

ILLUMINATION SUMMARY OF QUANTITIES

SHEET 1 OF 1

CK:
DW:
CK:
DW:

SUMMARY OF PAVEMENT MARKING ITEMS

LOCATION	666 6030	666 6036	666 6048	666 6306	666 6309	666 6321	668 6077	668 6085	672 6007	672 6009
	REFL PAV MRK TY I (W)8"(DOT) (100MIL)	REFL PAV MRK TY I (W)8"(SLD)(100MIL)	REFL PAV MRK TY I (W)24"(SLD) (100MIL)	RE PM W/RET REQ TY I (W)6"(BRK)(100MIL)	RE PM W/RET REQ TY I (W)6"(SLD)(100MIL)	RE PM W/RET REQ TY I (Y)6"(SLD)(100MIL)	PREFAB PAV MRK TY C (W) (ARROW)	PREFAB PAV MRK TY C (W) (WORD)	REFL PAV MRKR TY I-C	REFL PAV MRKR TY II-A-A
	LF	LF	LF	LF	LF	LF	EA	EA	EA	EA
SHEET 1 OF 10	143	1178	374	481			11	10	95	
SHEET 2 OF 10	121	1090	417	544			8	8	92	
SHEET 3 OF 10	144	1434	478	542			12	12	111	
SHEET 4 OF 10	90	652	54	586			4	4	70	
SHEET 5 OF 10	176	1253	384	463			12	11	100	
SHEET 6 OF 10	116	389	17	143	448	606	4	3	37	15
SHEET 7 OF 10					2411	2410				61
SHEET 8 OF 10					2400	2400				60
SHEET 9 OF 10					2400	2400				60
SHEET 10 OF 10					658	658				17
PROJECT TOTALS	790	5996	1724	2759	8317	8474	51	48	505	213

SUMMARY OF SIGNING ITEMS

LOCATION	644 6001	644 6076
	IN SM RD SN SUP&AM TY10BWG(1) SA(P)	REMOVE SM RD SN SUP&AM
	EA	EA
SHEET 1 OF 10	10	9
SHEET 2 OF 10	5	3
SHEET 3 OF 10	14	6
SHEET 4 OF 10	5	2
SHEET 5 OF 10	8	2
SHEET 6 OF 10	12	3
SHEET 7 OF 10		
SHEET 8 OF 10	1	
SHEET 9 OF 10		
SHEET 10 OF 10		
PROJECT TOTALS	55	25

DATE: 3/12/2025 2:50:04 PM
FILE: G:\TXC\Projects\City Georgetown\10767-00 Shell Road\03_CADD\01 Shts\00-GEN\Shell_Summ_SPMD.dgn

EST.1848 GEORGETOWN TEXAS

BGE, Inc.
101 West Louis Henna Blvd, Suite 400, Austin, TX 78728
Tel: 512-879-0400 • www.bgeinc.com
TBPE Registration No. F-1046

SHELL ROAD

SPMD SUMMARY OF QUANTITIES

SHEET 1 OF 1

SHEET NO.
16

SUMMARY OF SMALL SIGNS

SM RD SGN ASSM TY XXXXX (X) XX (X-XXXX)

PLAN SHEET NO.	SIGN NO.	SIGN NOMENCLATURE	SIGN	DIMENSIONS	FLAT ALUMINUM (TYPE A)	EXAL ALUMINUM (TYPE G)	POST TYPE FRP = Fiberglass TWT = Thin-Wall 10BWG = 10 BWG S80 = Sch 80	POSTS 1 or 2	ANCHOR TYPE UA=Universal Conc UB=Universal Bolt SA=Slipbase-Conc SB=Slipbase-Bolt WS=Wedge Steel WP=Wedge Plastic	MOUNTING DESIGNATION PREFABRICATED P = "Plain" T = "T" U = "U" 1EXT or 2EXT = # of Ext BM = Extruded Wind Beam WC = 1.12 #/ft Wing Channel EXAL= Extruded Alum Sign Panels	BRIDGE MOUNT CLEARANCE SIGNS (See Note 2) TYPE N	BRIDGE MOUNT CLEARANCE SIGNS (See Note 2) TYPE S
1	1	R4-7	(KEEP RIGHT)	24 X 30	X		10 BWG	1	SA	P		
1	2	R3-7R	RIGHT LANE MUST TURN RIGHT	36 X 36	X		10 BWG	1	SA	P		
1	3	R2-1	SPEED LIMIT 35	30 X 36	X		10 BWG	1	SA	P		
1	4	R3-8 LLS	(LANE USE)	48 X 30	X		10 BWG	1	SA	P		
1	5	R3-8 SSR	(LANE USE)	48 X 30	X		10 BWG	1	SA	P		
1	6	D3-1G	SHELL ROAD	36 X 9	X		10 BWG	1	SA	P		
		D3-1G	SEQUOIA SPUR W	60 X 9	X							
		R1-1	STOP	36 X 36	X							
1	7	D3-1G	SHELL ROAD	36 X 9	X		10 BWG	1	SA	P		
		D3-1G	SEQUOIA SPUR W	60 X 9	X							
		R1-1	STOP	36 X 36	X							
1	8	R4-7	(KEEP RIGHT)	24 X 30	X		10 BWG	1	SA	P		
1	9	R3-7L	LEFT LANE MUST TURN LEFT	36 X 36	X		10 BWG	1	SA	P		
1	10	R3-8LSSR	(LANE USE)	66 X 30	X		10 BWG	1	SA	P		
2	1	R3-8LSSR	(LANE USE)	66 X 30	X		10 BWG	1	SA	P		
2	2	R4-7	(KEEP RIGHT)	24 X 30	X		10 BWG	1	SA	P		
2	3	R4-7	(KEEP RIGHT)	24 X 30	X		10 BWG	1	SA	P		
2	4	R3-7R	RIGHT LANE MUST TURN RIGHT	36 X 36	X		10 BWG	1	SA	P		
2	5	R3-8LSSR	(LANE USE)	66 X 30	X		10 BWG	1	SA	P		
3	1	R2-1	SPEED LIMIT 45	30 X 36	X		10 BWG	1	SA	P		
3	2	R2-1	SPEED LIMIT 35	30 X 36	X		10 BWG	1	SA	P		
3	3	R6-1R	ONE WAY	54 X 18	X		10 BWG	1	SA	P		
3	4	D3-1G	SHELL RD	36 X 9	X		10 BWG	1	SA	P		
		D3-1G	SKYFLOWER DR	54 X 9	X							
		R1-1	STOP	36 X 36	X							
3	5	D3-1G	SHELL RD	36 X 9	X		10 BWG	1	SA	P		
		D3-1G	SONORA TRACE	60 X 9	X							
		R1-1	STOP	36 X 36	X							
3	6	R6-1R	ONE WAY	54 X 18	X		10 BWG	1	SA	P		
3	7	R3-8LSSR	(LANE USE)	66 X 30	X		10 BWG	1	SA	P		
3	8	R3-7R	RIGHT LANE MUST TURN RIGHT	36 X 36	X		10 BWG	1	SA	P		
3	9	R3-7R	RIGHT LANE MUST TURN RIGHT	36 X 36	X		10 BWG	1	SA	P		
		R5-1a	WRONG WAY (BACK TO BACK)	42 X 30	X							
3	10	R4-7	(KEEP RIGHT)	24 X 30	X		10 BWG	1	SA	P		

ALUMINUM SIGN BLANKS THICKNESS	
Square Feet	Minimum Thickness
Less than 7.5	0.080"
7.5 to 15	0.100"
Greater than 15	0.125"

The Standard Highway Sign Designs for Texas (SHSD) can be found at the following website.

http://www.txdot.gov/

NOTE:

1. Sign supports shall be located as shown on the plans, except that the Engineer may shift the sign supports, within design guidelines, where necessary to secure a more desirable location or to avoid conflict with utilities. Unless otherwise shown on the plans, the Contractor shall stake and the Engineer will verify all sign support locations.
2. For installation of bridge mount clearance signs, see Bridge Mounted Clearance Sign Assembly (BMCS)Standard Sheet.
3. For Sign Support Descriptive Codes, see Sign Mounting Details Small Roadside Signs General Notes & Details SMD(GEN).

Texas Department of Transportation

Traffic Operations Division Standard

SUMMARY OF SMALL SIGNS

SOSS

SHEET 1 OF 3

FILE: sums16.dgn	DN: TxDOT	CK: TxDOT	DW: TxDOT	CK: TxDOT
©TxDOT May 1987	CONT	SECT	JOB	HIGHWAY
REVISIONS				
	DIST	COUNTY		SHEET NO.
				17

18

DISCLAIMER:
The use of this standard is governed by the "Texas Engineering Practice Act". No warranty of any kind is made by TxDOT for any purpose whatsoever. TxDOT assumes no responsibility for the conversion of this standard to other formats or for incorrect results or damages resulting from its use.

DATE: 3/12/2025 2:50:04 PM
FILE: G:\TXC\Projects\City_Georgetown\10767-00 Shell Road\03_CADD\01_Shts\00-GENR_SMALLSIGNS.dgn SUMMARY

SUMMARY OF SMALL SIGNS

SM RD SGN ASSM TY XXXXX (X) XX (X-XXXX)

PLAN SHEET NO.	SIGN NO.	SIGN NOMENCLATURE	SIGN	DIMENSIONS	FLAT ALUMINUM (TYPE A)	EXAL ALUMINUM (TYPE G)	POST TYPE FRP = Fiberglass TWT = Thin-Wall 10BWG = 10 BWG S80 = Sch 80	POSTS 1 or 2	ANCHOR TYPE UA=Universal Conc UB=Universal Bolt SA=Slipbase-Conc SB=Slipbase-Bolt WS=Wedge Steel WP=Wedge Plastic	MOUNTING DESIGNATION PREFABRICATED P = "Plain" T = "T" U = "U" 1EXT or 2EXT = # of Ext BM = Extruded Wind Beam WC = 1.12 #/ft Wing Channel EXAL= Extruded Alum Sign Panels	BRIDGE MOUNT CLEARANCE SIGNS (See Note 2) TYPE N	BRIDGE MOUNT CLEARANCE SIGNS (See Note 2) TYPE S
3	11	R4-7	(KEEP RIGHT)	24 X 30	X		10 BWG	1	SA	P		
3	12	R3-7R	RIGHT LANE MUST TURN RIGHT	36 X 36	X		10 BWG	1	SA	P		
		R5-1a	WRONG WAY (BACK TO BACK)	42 X 30	X							
3	13	R3-7R	RIGHT LANE MUST TURN RIGHT	36 X 36	X		10 BWG	1	SA	P		
3	14	R3-8LSSR	(LANE USE)	66 X 30	X		10 BWG	1	SA	P		
4	1	R4-7	(KEEP RIGHT)	24 X 30	X		10 BWG	1	SA	P		
4	2	D3-1G	SHELL RD	36 X 9	X		10 BWG	1	SA	P		
		D3-1G	MADRID DR	42 X 9	X							
		R1-1	STOP	36 X 36	X							
4	3	R4-7	(KEEP RIGHT)	24 X 30	X		10 BWG	1	SA	P		
4	4	R3-7L	LEFT LANE MUST TURN LEFT	36 X 36	X		10 BWG	1	SA	P		
4	5	R3-8LSSR	(LANE USE)	66 X 30	X		10 BWG	1	SA	P		
5	1	R4-7	(KEEP RIGHT)	24 X 30	X		10 BWG	1	SA	P		
5	2	R4-7	(KEEP RIGHT)	24 X 30	X		10 BWG	1	SA	P		
5	3	W9-1R	RIGHT LANE ENDS	36 X 36	X		10 BWG	1	SA	P		
5	4	R3-8LSSR	(LANE USE)	66 X 30	X		10 BWG	1	SA	P		
5	5	W9-2TL	LANE ENDS MERGE LEFT	36 X 36	X		10 BWG	1	SA	P		
5	6	R6-1R	ONE WAY	54 X 18	X		10 BWG	1	SA	P		
5	7	R3-7L	LEFT LANE MUST TURN LEFT	36 X 36	X		10 BWG	1	SA	P		
5	8	R3-7R	RIGHT LANE MUST TURN RIGHT	36 X 36	X		10 BWG	1	SA	P		
6	1	R4-7	(KEEP RIGHT)	24 X 30	X		10 BWG	1	SA	P		
6	2	D3-1G	SHELL RD	36 X 9	X		10 BWG	1	SA	P		
		D3-1G	SYCAMORE ST	48 X 9	X							
		R1-1	STOP	36 X 36	X							
6	3	R4-7	(KEEP RIGHT)	24 X 30	X		10 BWG	1	SA	P		
6	4	R2-1	SPEED LIMIT 50	30 X 36	X		10 BWG	1	SA	P		
6	5	R2-1	SPEED LIMIT 45	30 X 36	X		10 BWG	1	SA	P		
6	6	W4-2R	(TRANSITION LEFT)	36 X 36	X		10 BWG	1	SA	P		
6	7	W6-2	(DIVIDED HIGHWAY ENDS)	36 X 36	X		10 BWG	1	SA	P		
6	8	R3-7R	RIGHT LANE MUST TURN RIGHT	36 X 36	X		10 BWG	1	SA	P		
6	9	D3-1G	SHELL RD	36 X 9	X		10 BWG	1	SA	P		
		D3-1G	GRAND VIEW RD	60 X 9	X							
		R1-1	STOP	36 X 36	X							

ALUMINUM SIGN BLANKS THICKNESS	
Square Feet	Minimum Thickness
Less than 7.5	0.080"
7.5 to 15	0.100"
Greater than 15	0.125"

The Standard Highway Sign Designs for Texas (SHSD) can be found at the following website.

http://www.txdot.gov/

NOTE:

1. Sign supports shall be located as shown on the plans, except that the Engineer may shift the sign supports, within design guidelines, where necessary to secure a more desirable location or to avoid conflict with utilities. Unless otherwise shown on the plans, the Contractor shall stake and the Engineer will verify all sign support locations.
2. For installation of bridge mount clearance signs, see Bridge Mounted Clearance Sign Assembly (BMCS)Standard Sheet.
3. For Sign Support Descriptive Codes, see Sign Mounting Details Small Roadside Signs General Notes & Details SMD(GEN).

Texas Department of Transportation

Traffic Operations Division Standard

SUMMARY OF SMALL SIGNS

SOSS

SHEET 2 OF 3

FILE: sums16.dgn	DN: TxDOT	CK: TxDOT	DW: TxDOT	CK: TxDOT
©TxDOT May 1987	CONT	SECT	JOB	HIGHWAY
REVISIONS				
	DIST	COUNTY		SHEET NO.
				18

18

DISCLAIMER:
The use of this standard is governed by the "Texas Engineering Practice Act". No warranty of any kind is made by TxDOT for any purpose whatsoever. TxDOT assumes no responsibility for the conversion of this SMD(GEN)SMALL SIGNS to other formats or for incorrect results or damages resulting from its use.

DATE: 3/12/2025 2:50:05 PM
FILE: G:\TXC\Projects\City_Georgetown\10767-00 Shell Road\03_CADD\01_Shts\00-GEN_SMALL SIGNS.dgn SUMMARY

SUMMARY OF SMALL SIGNS

SM RD SGN ASSM TY XXXXX (X) XX (X-XXXX)

PLAN SHEET NO.	SIGN NO.	SIGN NOMENCLATURE	SIGN	DIMENSIONS	FLAT ALUMINUM (TYPE A)	EXAL ALUMINUM (TYPE G)	POST TYPE FRP = Fiberglass TWT = Thin-Wall 10BWG = 10 BWG S80 = Sch 80	POSTS 1 or 2	ANCHOR TYPE UA=Universal Conc UB=Universal Bolt SA=Slipbase-Conc SB=Slipbase-Bolt WS=Wedge Steel WP=Wedge Plastic	MOUNTING DESIGNATION PREFABRICATED P = "Plain" T = "T" U = "U"	MOUNTING DESIGNATION 1EXT or 2EXT = # of Ext BM = Extruded Wind Beam WC = 1.12 #/ft Wing Channel EXAL= Extruded Alum Sign Panels	BRIDGE MOUNT CLEARANCE SIGNS (See Note 2) TYPE N	BRIDGE MOUNT CLEARANCE SIGNS (See Note 2) TYPE S
6	10	W6-1	(DIVIDED HIGHWAY BEGINS)	36 X 36	X		10 BWG	1	SA	P			
6	11	W6-3	(TWO WAY TRAFFIC)	36 X 36	X		10 BWG	1	SA	P			
6	12	W1-2R	(RIGHT CURVE ARROW)	36 X 36	X		10 BWG	1	SA	P			
		W13-1P	45 MPH	18 X 18	X								
8	1	W1-2L	(LEFT CURVE ARROW)	36 X 36	X		10 BWG	1	SA	P			
		W13-1P	45 MPH	18 X 18	X								

ALUMINUM SIGN BLANKS THICKNESS	
Square Feet	Minimum Thickness
Less than 7.5	0.080"
7.5 to 15	0.100"
Greater than 15	0.125"

The Standard Highway Sign Designs for Texas (SHSD) can be found at the following website.

http://www.txdot.gov/

NOTE:

1. Sign supports shall be located as shown on the plans, except that the Engineer may shift the sign supports, within design guidelines, where necessary to secure a more desirable location or to avoid conflict with utilities. Unless otherwise shown on the plans, the Contractor shall stake and the Engineer will verify all sign support locations.
2. For installation of bridge mount clearance signs, see Bridge Mounted Clearance Sign Assembly (BMCS)Standard Sheet.
3. For Sign Support Descriptive Codes, see Sign Mounting Details Small Roadside Signs General Notes & Details SMD(GEN).

Texas Department of Transportation

Traffic Operations Division Standard

SUMMARY OF SMALL SIGNS

SOSS

SHEET 3 OF 3

FILE: sums16.dgn	DN: TxDOT	CK: TxDOT	DW: TxDOT	CK: TxDOT
© TxDOT May 1987	CONT	SECT	JOB	HIGHWAY
REVISIONS	DIST	COUNTY		SHEET NO. 19

DISCLAIMER:
The use of this standard is governed by the "Texas Engineering Practice Act". No warranty of any kind is made by TxDOT for any purpose whatsoever. TxDOT assumes no responsibility for the conversion of this standard to other formats or for incorrect results or damages resulting from its use.

DATE: 3/12/2025 2:50:05 PM
FILE: G:\TXC\Projects\City_Georgetown\10767-00 Shell Road\03_CADD\01_Shts\00-GEN\SMALL SIGN SUMMARY.dgn

18

SUMMARY OF SIGNAL ITEMS

LOCATION	416 6030	416 6031	416 6032	416 6034	420 6012	618 6046	618 6053	618 6054	620 6009	620 6010	621 6002	621 6005	624 6010	628 6164	680 6002
	DRILL SHAFT (TRF SIG POLE) (24 IN)	DRILL SHAFT (TRF SIG POLE) (30 IN)	DRILL SHAFT (TRF SIG POLE) (36 IN)	DRILL SHAFT (TRF SIG POLE) (48 IN)	CL B CONC (MISC)	CONDT (PVC) (SCH 80) (2")	CONDT (PVC) (SCH 80) (3")	CONDT (PVC) (SCH 80) (3") (BORE)	ELEC CONDR (NO.6) BARE	ELEC CONDR (NO.6) INSULATED	TRAY CABLE (3 CONDR) (12 AWG)	TRAY CABLE (4 CONDR) (12 AWG)	GROUND BOX TY D (162922)W/APRON	ELC SRV TY D 120/240 070(NS)AL(E)PS(U)	INSTALL HWY TRF SIG (ISOLATED) *
	LF	LF	LF	LF	CY	LF	LF	LF	LF	LF	LF	LF	EA	EA	EA
SHEET 1 OF 4-WILLIAMS DR	12		14			85	260	400	745	0	380	400	5		1
SHEET 2 OF 4-VERDE VISTA	30			22		115	1840		1955	30	570	525	5		1
SHEET 3 OF 4-ROSEDALE BLVD/VILLAGE COMMONS BLVD	24	24	14	22	2	100	1625		1725	30	710	790	5	1	1
SHEET 4 OF 4-BELLAIRE DR/WESTBURY LN	30		14	22		75	1900		2005	0	735	365	4		1
PROJECT TOTALS	96	24	42	66	2	375	5625	400	6430	60	2395	2080	19	1	4

SUMMARY OF SIGNAL ITEMS (CONTINUED)

LOCATION	680 6004	682 6001	682 6002	682 6003	682 6004	682 6005	682 6006	682 6018	682 6054	682 6056	684 6010	684 6012	684 6025	684 6028	684 6036
	REMOVING TRAFFIC SIGNALS	VEH SIG SEC (12")LED(GRN)	VEH SIG SEC (12")LED(GRN ARW)	VEH SIG SEC (12")LED(YEL)	VEH SIG SEC (12")LED(YEL ARW)	VEH SIG SEC (12")LED(RED)	VEH SIG SEC (12")LED(RED ARW)	PED SIG SEC (LED)(COUNTDOWN)	BACKPLATE W/REF BRDR(3 SEC)(VENT)ALUM	BACKPLATE W/REF BRDR(5 SEC)(VENT)ALUM	TRF SIG CBL (TY A)(12 AWG)(5 CONDR)	TRF SIG CBL (TY A)(12 AWG)(7 CONDR)	TRF SIG CBL (TY A)(12 AWG)(20 CONDR)	TRF SIG CBL (TY A)(14 AWG)(2 CONDR)	TRF SIG CBL (TY A)(14 AWG)(10 CONDR)
	EA	EA	EA	EA	EA	EA	EA	EA	EA	EA	LF	LF	LF	LF	LF
SHEET 1 OF 4-WILLIAMS DR	1	4	3	4	4	4	2	2	2	3	20	279	615	615	605
SHEET 2 OF 4-VERDE VISTA	1	8	1	8	2	8	2	8	8	1	80	469	990	1335	915
SHEET 3 OF 4-ROSEDALE BLVD/VILLAGE COMMONS BLVD		10	2	10	4	10	4	8	10	2	80	505	570	1225	740
SHEET 4 OF 4-BELLAIRE DR/WESTBURY LN	1	10	2	10	4	10	4	10	10	2	80	560	770	1185	615
PROJECT TOTALS	3	32	8	32	14	32	12	28	30	8	260	1813	2945	4360	2875

SUMMARY OF SIGNAL ITEMS (CONTINUED)

LOCATION	686 6032	686 6036	686 6044	686 6052	686 6060	686 6248	686 6280	687 6001	687 6005	688 6001	688 6003	6306 6001	6306 6002
	INS TRF SIG PL AM(S)1 ARM(28')LUM&ILSN	INS TRF SIG PL AM(S)1 ARM(32')LUM&ILSN	INS TRF SIG PL AM(S)1 ARM(40')LUM&ILSN	INS TRF SIG PL AM(S)1 ARM(48')LUM&ILSN	INS TRF SIG PL AM(S)1 ARM(55')LUM&ILSN	IN TRF SG PL AM(S)2ARM(60-40')LUM&ILSN	IN TRF SG PL AM(S)2ARM(65-44')LUM&ILSN	PED POLE ASSEMBLY	REMOVE PED POLE ASSEMBLY	PED DETECT PUSH BUTTON (APS)	PED DETECTOR CONTROLLER UNIT	VIVDS PROSR SYS	VIVDS CAM ASSY FXD LNS
	EA	EA	EA	EA	EA	EA	EA	EA	EA	EA	EA	EA	EA
SHEET 1 OF 4-WILLIAMS DR				1				2	1	2			1
SHEET 2 OF 4-VERDE VISTA							1	5	8	8	1	1	2
SHEET 3 OF 4-ROSEDALE BLVD/VILLAGE COMMONS BLVD	1	1	1		1			5		8	1	1	4
SHEET 4 OF 4-BELLAIRE DR/WESTBURY LN			1			1		5	2	8	1	1	3
PROJECT TOTALS	1	1	2	1	1	1	1	17	11	26	3	3	10

SUMMARY OF SIGNAL ITEMS (CONTINUED)

LOCATION	6306 6005	6306 6007	6321 6027	6411 6002
	VIVDS CNTRL SOFTWARE	VIVDS CABLING	SIGNAL RELATED SIGNS (INSTALL)	ILSN (LED) (8 S)
	EA	LF	EA	EA
SHEET 1 OF 4-WILLIAMS DR		418	3	1
SHEET 2 OF 4-VERDE VISTA	1	445	2	2
SHEET 3 OF 4-ROSEDALE BLVD/VILLAGE COMMONS BLVD	1	825	4	4
SHEET 4 OF 4-BELLAIRE DR/WESTBURY LN	1	755	3	3
PROJECT TOTALS	3	2443	12	10

* GROUND MOUNTED SIGNAL CONTROLLER CABINETS, SIEMENS M60 CONTROLLER, AND OTHER RELATED SIGNAL ITEMS ARE SUBSIDIARY TO ITEM 680-6002.

EST.1848 GEORGETOWN TEXAS

BGE, Inc.
101 West Louis Henna Blvd, Suite 400, Austin, TX 78728
Tel: 512-879-0400 ● www.bgeinc.com
TBPE Registration No. F-1046

SHELL ROAD

SIGNAL SUMMARY OF QUANTITIES

SHEET 1 OF 1

SHEET NO. 20

DATE: 3/12/2025 2:50:06 PM
FILE: G:\TXC\Projects\City Georgetown\10767-00 Shell Road\03 CADD\01 Shts\00-GEN\Shell_Summ_Signal.dgn

CK DW CK DW

SUMMARY OF EROSION CONTROL ITEMS															
LOCATION	COGG7 6003	164 6007	164 6009	164 6011	168 6001	COGG6 6003	COGG6 6003	COGG6 6011	COGG6 6020	COGG6 6024	COGG6 6038	COGG6 6039	COGG6 6041	COGG6 6043
	FURNISHING AND PLACING TOPSOIL (4")	BROADCAST SEED (PERM) (URBAN) (CLAY)	BROADCAST SEED (TEMP) (WARM)	BROADCAST SEED (TEMP) (COOL)	VEGETATIVE WATERING	SOIL RETENTION BLANKETS (CL 1) (TY C)	ROCK FILTER DAMS (INSTALL) (TY 3)	ROCK FILTER DAMS (REMOVE)	CONSTRUCTION EXITS (INSTALL) (TY 1)	CONSTRUCTION EXITS (REMOVE)	TEMP SEDMT CONT FENCE (INSTALL)	TEMP SEDMT CONT FENCE (REMOVE)	BIODEG EROSN CONT LOGS (INSTL) (12")	BIODEG EROSN CONT LOGS (REMOVE)
	SY	SY	SY	SY	MG	SY	LF	LF	SY	SY	LF	LF	LF	LF
SHEET 1 OF 6	3439	3439	1720	1720	120						1283	1283	82	82
SHEET 2 OF 6	3967	3967	1984	1984	139		30	30			2317	2317	132	132
SHEET 3 OF 6	2908	2908	1454	1454	102						2269	2269	84	84
SHEET 4 OF 6	4330	4330	2165	2165	152						2374	2374	102	102
SHEET 5 OF 6	3627	3627	1814	1814	127						2329	2329	114	114
SHEET 6 OF 6	4782	4782	2391	2391	167		30	30			2010	2010	52	52
PROJECT						9000			100	100				
PROJECT TOTALS	23053	23053	11527	11527	807	9000	60	60	100	100	12582	12582	566	566

BGE, Inc.
101 West Louis Henna Blvd, Suite 400, Austin, TX 78728
Tel: 512-879-0400 ● www.bgeinc.com
TBPE Registration No. F-1046

SHELL ROAD

SW3P SUMMARY OF QUANTITIES

SHEET 1 OF 1

SHEET NO. 21

DATE: 3/12/2025 5:41:10 PM
FILE: G:\TXC\Projects\City Georgetown\10767-00 Shell Road\03 CADD\01 Shts\00-GEN\Shell_Summ_SW3Pl.dgn

CK:
DW:
CK:
DW:

SUMMARY OF UTILITY ITEMS

LOCATION	W1	W3	W4	W5	W6	W8	W9	W10	W11	W12	W14	W16
	REPOSITIONING AND ADJUSTING WATER METERS, 2 INCH	ADJUSTING WATER VALVE BOXES TO GRADE	MINOR MANHOLE HEIGHT ADJUSTMENT, 4' DIA	24-INCH STEEL ENCASEMENT PIPE, 1/2" THICK	30-INCH STEEL ENCASEMENT PIPE, 1/2" THICK	EXTRA DEPTH OF MANHOLE, 48" DIA	WATERTIGHT PRE-CASE MANHOLE W/CIP BASE, 48" DIA	24 INCH LARGE DIAMETER CLEANOUT	PIPE, 2-INCH DIAMETER, HDPE SDR9 CLASS 200 (ALL DEPTHS), INCLUDING EXCAVATION, BACKFILL, AND TRENCH REPAIR	FACTORY RESTRAINED JOINT PIPE, 2-INCH DIAMETER, DUCTILE IRON, CLASS 350 (ALL DEPTHS), INCLUDING EXCAVATION, BACKFILL, AND TRENCH REPAIR	FACTORY RESTRAINED JOINT PIPE, 6-INCH DIAMETER, DUCTILE IRON, CLASS 350 (ALL DEPTHS), INCLUDING EXCAVATION, BACKFILL, AND TRENCH REPAIR	FACTORY RESTRAINED JOINT PIPE, 12-INCH DIAMETER, DUCTILE IRON, CLASS 350 (ALL DEPTHS), INCLUDING EXCAVATION, BACKFILL, AND TRENCH REPAIR
	EA	EA	EA	LF	LF	LVF	EA	EA	LF	LF	LF	LF
PROJECT TOTALS	3	17	7	94	223	4	1	1	50	27	5	192

SUMMARY OF UTILITY ITEMS

LOCATION	W17	W19	W20	W21-A	W21-B	W21-C	W21-D	W22	W23	W24
	FACTORY RESTRAINED JOINT PIPE, 16-INCH DIAMETER, DUCTILE IRON, CLASS 250 (ALL DEPTHS), INCLUDING EXCAVATION, BACKFILL, AND TRENCH REPAIR	FACTORY RESTRAINED JOINT PIPE, 12-INCH DIAMETER, PVC C900 (ALL DEPTHS), INCLUDING EXCAVATION, BACKFILL, AND TRENCH REPAIR	FACTORY RESTRAINED JOINT PIPE, 16-INCH DIAMETER, PVC C900 (ALL DEPTHS), INCLUDING EXCAVATION, BACKFILL, AND TRENCH REPAIR	EXTERNALLY MOUNTED JOINT RESTRAINT DEVICE FOR EXISTING 12-INCH DUCTILE IRON PIPE, COMPLETE AND IN PLACE	EXTERNALLY MOUNTED JOINT RESTRAINT DEVICE FOR EXISTING 16-INCH DUCTILE IRON PIPE, COMPLETE AND IN PLACE	EXTERNALLY MOUNTED JOINT RESTRAINT DEVICE FOR EXISTING 12-INCH PVC PIPE, COMPLETE AND IN PLACE	EXTERNALLY MOUNTED JOINT RESTRAINT DEVICE FOR EXISTING 16-INCH PVC PIPE, COMPLETE AND IN PLACE	PIPE, 8-INCH DIAMETER, SDR26 (ALL DEPTHS) MIN. PRESSURE 150 PSI, INCLUDING EXCAVATION, BACKFILL, AND TRENCH REPAIR	WATER AND WASTEWATER TRENCH SAFETY PLAN	WATER AND WASTEWATER PIPE TRENCH EXCAVATION SAFETY PROTECTION SYSTEMS
	LF	LF	LF	EA	EA	EA	EA	LF	LS	LF
PROJECT TOTALS	553	3	700	3	2	2	4	108	1	1638

SUMMARY OF UTILITY ITEMS

LOCATION	W25	W26	W27	W30	W31	W32	W33	W36	W37	W38	W39	W40	W41	W42	W43	W44
	REMOVE, RELOCATE, AND RECONNECT IRRIGATION VALVES & METERS	CONNECTING NEW 2" SERVICE TO EXISTING PRIVATE SERVICE (2" DIA NEW SERVICE TO 2" DIA PRIVATE SERVICE)	CONNECTING NEW 6" SERVICE TO EXISTING PRIVATE SERVICE (6" DIA NEW SERVICE TO 6" DIA PRIVATE SERVICE)	WET CONNECTIONS, 12-INCH DIAMETER X 12-INCH DIAMETER	WET CONNECTIONS, 16-INCH DIAMETER X 16-INCH DIAMETER	DUCTILE IRON FITTINGS (ALL SIZES)	VALVES, RESILIENT WEDGE GATE VALVE, 2-INCH DIAMETER	VALVES, RESILIENT WEDGE GATE VALVE, 12-INCH DIAMETER	VALVES, RESILIENT WEDGE GATE VALVE, 16-INCH DIAMETER	REMOVE GATE VALVE	FIRE HYDRANT, INCLUDING FIRE HYDRANT ASSEMBLY, 6-INCH PIPE, 6-INCH GATE VALVE, COMPLETE AND IN PLACE	REMOVE AND SALVAGE EXISTING FIRE HYDRANT ASSEMBLY	VALVES, AUTOMATIC COMBINATION AIR/VACUUM RELEASE VALVE ASSEMBLY, 2-INCH	CUT, PLUG, AND ABANDON EXISTING WATER/WASTEWATER PIPE, ALL SIZES AND	ABANDON EXISTING WASTEWATER MANHOLE	TOTAL MOBILIZATION PAYMENT
	LS	EA	EA	EA	EA	TON	EA	EA	EA	EA	EA	EA	EA	EA	EA	LS
PROJECT TOTALS	1	3	1	4	16	11	3	1	13	15	10	5	5	10	1	1

DATE: 3/12/2025 2:50:08 PM
FILE: G:\TXC\Projects\City Georgetown\10767-00 Shell Road\03_CADD\01_Shts\00-GEN\Shell_Summ_Utility.dgn

EST.1848
GEORGETOWN
TEXAS

BGE, Inc.
101 West Louis Henna Blvd, Suite 400, Austin, TX 78728
Tel: 512-879-0400 • www.bgeinc.com
TBPE Registration No. F-1046

SHELL ROAD

UTILITY SUMMARY OF QUANTITIES

SHEET 1 OF 1

SUMMARY OF LANDSCAPE ITEMS														
LOCATION	110 L001	170 L002	192 L003	192 L004	192 L005	192 L006	192 L007	192 L010	402 L011	528 L012	529 L013	556 L014	751 L015	329451 L016
	EXCAVATION (LANDSCAPE MEDIAN)	IRRIGATION SYSTEM	LACEY OAK (3" cal. B&B)	DESERT WILLOW (8' HT. 4' SPR,B&B)	MEXICAN OLIVE (3" cal. CONT)	TEXAS PERSIMMON (4" cal. B&B)	TEXAS MOUNTAIN LAUREL (24" BOX)	MULCH	TRENCH EXCAVATION PROTECTION	COLORED TEXTURED CONCRETE	LANDSCAPE CURB	UNDERDRAIN	LANDSCAPE MAINTENANCE (1 YEAR)	TREE SOIL CELLS
	CY	LS	EA	EA	EA	EA	EA	CY	LF	SY	LF	LF	CYC	LS
PROJECT TOTALS	5800	1	22	22	20	27	25	70	1600	2250	2600	1600	1	1

DW:
CC:
DW:
CK:

DATE: 3/12/2025 2:50:09 PM
FILE: G:\TX\C\Projects\City_Georgetown\10767-00 Shell Road\03_CADD\01_Shts\00-GEN\Shell_Summ_Landscape Irrigation.dgn

EST.1848 GEORGETOWN TEXAS

BGE, Inc.
101 West Louis Henna Blvd, Suite 400, Austin, TX 78728
Tel: 512-879-0400 • www.bgeinc.com
TBPE Registration No. F-1046

SHELL ROAD

LANDSCAPING & IRRIGATION SUMMARY OF QUANTITIES

SHEET 1 OF 1

SHEET NO.
23

CK
DW
CK
DW

GENERAL

THE CONTRACTOR'S ATTENTION IS DIRECTED TO THE REQUIREMENTS OF ITEM CIP8, "LEGAL RELATIONS AND RESPONSIBILITIES TO THE PUBLIC", OF THE GEORGETOWN CONSTRUCTION SPECIFICATIONS AND STANDARDS. IN ADDITION TO THESE REQUIREMENTS, THE FOLLOWING PROVISIONS SHALL ALSO GOVERN ON THIS CONTRACT.

1. THIS IS A SUGGESTED TRAFFIC CONTROL PLAN (TCP). THE CONTRACTOR MAY SUBMIT AN ALTERNATE TRAFFIC CONTROL PLAN, SIGNED AND SEALED BY A LICENSED PROFESSIONAL ENGINEER IN TEXAS, FOR APPROVAL. WHEN MUTUALLY BENEFICIAL CHANGES ARE PROPOSED TO THE EXISTING TRAFFIC CONTROL PLAN AND ARE AGREED UPON BY THE CONTRACTOR AND THE CITY, THE PLAN SHEETS MAY BE DEVELOPED AND SIGNED AND SEALED BY THE ENGINEER.

2. FURNISH AND INSTALL ALL TRAFFIC CONTROL PLANS DEVICES, INCLUDING BUT NOT LIMITED TO BARRICADES, SIGNS, AND WORK ZONE MARKINGS, IN COMPLIANCE WITH THE LATEST VERSION OF THE TEXAS MANUAL ON UNIFORM TRAFFIC CONTROL DEVICES (TXMUTCD), THE STATE STANDARD TRAFFIC CONTROL PLANS (TCP) SHEETS, AND THE BARRICADES AND CONSTRUCTION (BC) SHEETS. REFER TO THE PROJECT GENERAL NOTES FOR ADDITIONAL INFORMATION REGARDING THE TRAFFIC CONTROL PLAN. ALL WORK & MATERIALS ARE PAID WITH ITEM 502 BARRICADES, SIGNS AND TRAFFIC HANDLING.

3. ALL TRAFFIC CONTROL DEVICES SHALL BE KEPT IN THEIR PROPER POSITION AND IN GOOD CONDITION AT ALL TIMES. DEVICES SHALL BE REPAIRED, REPLACED OR CLEANED AS NECESSARY TO PRESERVE THEIR APPEARANCE AND CONTINUITY.

4. VERIFY THE LOCATION AND SPACING OF SIGNS, BARRICADES, AND CHANNELIZING DEVICES PRIOR TO THEIR PLACEMENT ALONG VERTICAL CURVES, HORIZONTAL CURVES, AND OTHER GEOMETRIC CONSTRAINTS TO ENSURE VISIBILITY TO ALL MOTORISTS.

5. COVER ALL EXISTING SIGNS THAT CONFLICT WITH THE TRAFFIC CONTROL PLAN AND UNCOVER DURING NON-WORKING HOURS OR AS DIRECTED. PARTIAL COVERAGE OF THE SIGN OR COVERAGE BY MATERIAL THAT WILL NOT COVER THE ENTIRE SIGN ALL THE TIME IS NOT PERMITTED.

6. VARY THE SPACING OF SIGNS TO MEET TRAFFIC CONDITIONS OR AS DIRECTED AND ENSURE THAT ALL TRAFFIC CONTROL DEVICES AND WORK ZONE PAVEMENT MARKINGS ARE KEPT IN A HIGHLY VISIBLE CONDITION (CLEAN, UPRIGHT AND AT PROPER LOCATION).

7. CONDUCT CONSTRUCTION OPERATIONS SO AS TO PROVIDE THE LEAST POSSIBLE INTERFERENCE TO TRAFFIC AND TO PERMIT THE CONTINUOUS MOVEMENT OF TRAFFIC IN ALL ALLOWABLE DIRECTIONS AT ALL TIMES OR AS PERMITTED BY THE SEQUENCE OF CONSTRUCTION. PROVIDE FOR SAFE AND CONVENIENT ACCESS TO ABUTTING PROPERTY, HIGHWAYS, PUBLIC ROADS, AND STREET CROSSINGS EXCEPT AS OTHERWISE SHOWN ON THE SEQUENCE OF CONSTRUCTION.

8. REGULATE ALL CONSTRUCTION TRAFFIC SO AS TO CAUSE A MINIMAL INCONVENIENCE TO THE TRAVELING PUBLIC. AT THE TIMES WHEN IT IS NECESSARY FOR TRUCKS TO STOP, UNLOAD OR CROSS ROADWAYS UNDER TRAFFIC, PROVIDE WARNING SIGNS AND FLAGGERS AS NEEDED TO ADEQUATELY PROTECT THE TRAVELING PUBLIC.

9. NOTIFY THE CITY IN WRITING TWO WEEKS PRIOR TO SHIFTING OF TRAFFIC WITHIN EACH PHASE OF THE TRAFFIC CONTROL PLAN.

10. MOVING AN EXISTING SIGN TO A TEMPORARY LOCATION IS SUBSIDIARY TO ITEM 502. INSTALLATIONS WITH PERMANENT SUPPORTS AT PERMANENT LOCATIONS WILL BE PAID FOR UNDER THE APPLICABLE BID ITEM(S).

11. USE OF PORTABLE CHANGEABLE MESSAGE SIGNS AS ADVANCE NOTICE OF LANE CLOSURES WILL BE REQUIRED. FOR LOCATIONS THAT ARE ADJACENT TO EACH OTHER, A SINGLE SIGN IN ADVANCE OF THE ENTIRE WORK AREA IS ACCEPTABLE.

12. PLACE PORTABLE CHANGEABLE MESSAGE SIGNS AT LOCATIONS REQUIRING LANE CLOSURES FOR TWO WEEKS BEFORE THE CLOSURES.

13. ADDITIONAL SIGNS, BARRICADES AND CHANNELIZING DEVICES MAY BE REQUIRED TO MAINTAIN TRAFFIC DURING CONSTRUCTION, AS SHOWN ON TCP STANDARDS. ADDITIONAL SIGNS, BARRICADES, ETC. (IF ANY), WILL BE SUBSIDIARY TO ITEMS 502 "BARRICADES, SIGNS AND TRAFFIC HANDLING".

STATE OF TEXAS
ELENA RAMON
141765
LICENSED
PROFESSIONAL ENGINEER

3/12/2025

EST.1848
GEORGETOWN
TEXAS

BGE, Inc.
101 West Louis Henna Blvd, Suite 400, Austin, TX 78728
Tel: 512-879-0400 • www.bgeinc.com
TBPE Registration No. F-1046

SHELL ROAD

TRAFFIC CONTROL PLAN NOTES

SHEET 1 OF 1

SHEET NO.
24

DATE: 3/12/2025 2:50:10 PM
FILE: G:\TXC\Projects\City Georgetown\10767-00 Shell Road\03 CADD\01 Shts\02-TCP\SHELL_TCP_NOTES.dgn

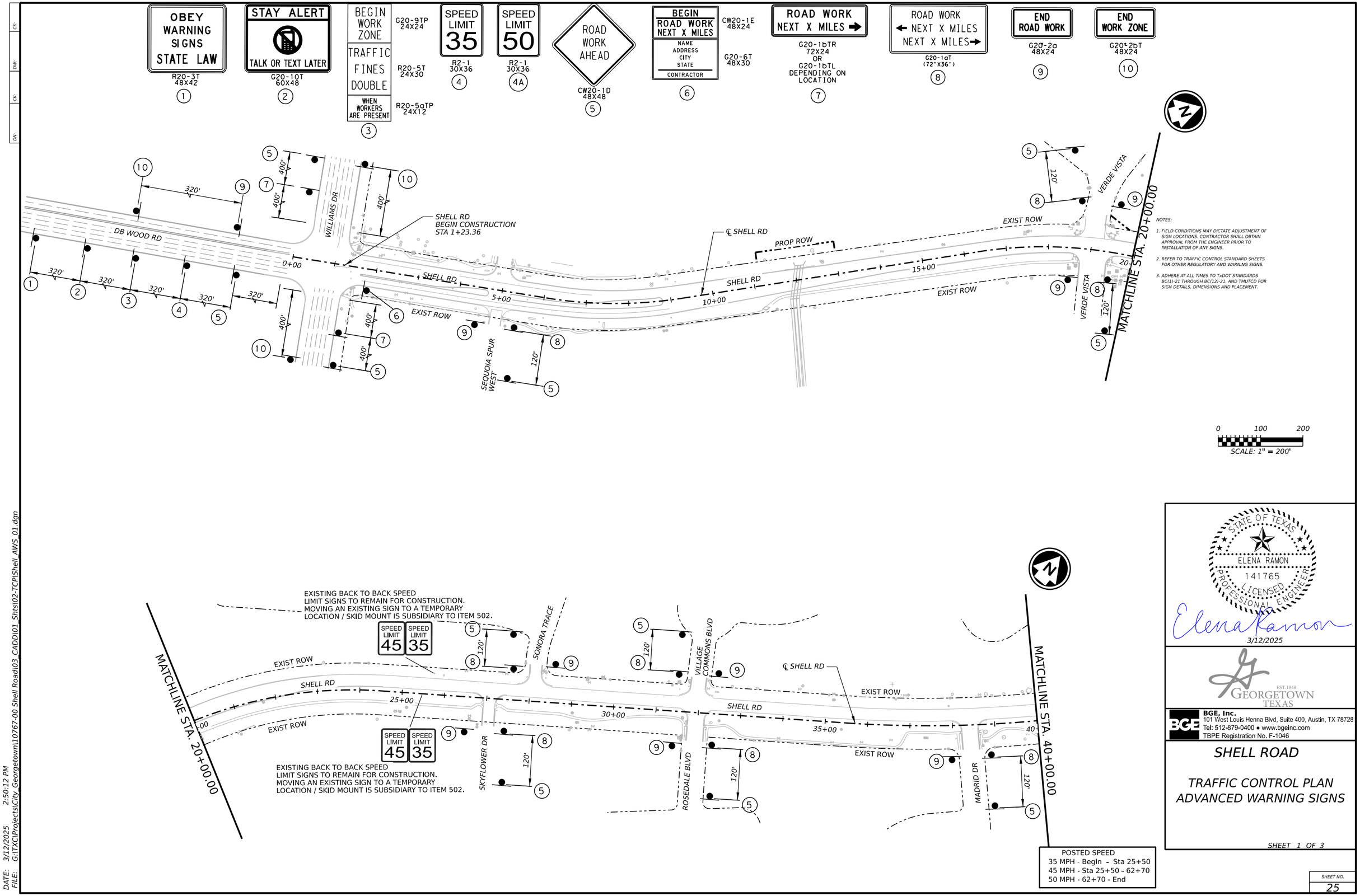

STATE OF TEXAS
ELENA RAMON
141765
LICENSED
PROFESSIONAL ENGINEER
Elena Ramon
3/12/2025

EST. 1848 GEORGETOWN TEXAS

BGE, Inc.
101 West Louis Henna Blvd, Suite 400, Austin, TX 78728
Tel: 512-879-0400 • www.bgeinc.com
TBPE Registration No. F-1046

SHELL ROAD

TRAFFIC CONTROL PLAN ADVANCED WARNING SIGNS

SHEET 1 OF 3

SHEET NO. 25

DATE: 3/12/2025 2:50:12 PM
FILE: G:\TXC\Projects\City Georgetown\10767-00 Shell Road\03 CADD\01 Shts\02-TCP\Shell AWS 01.dgn

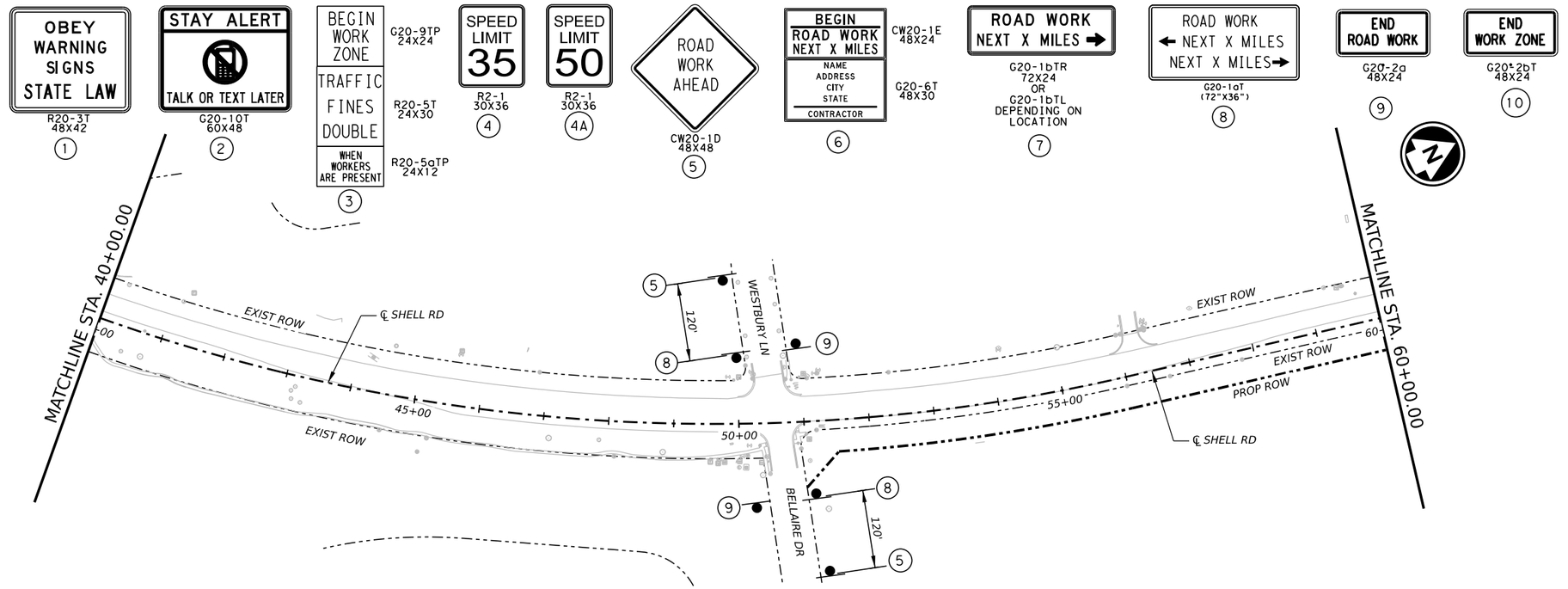

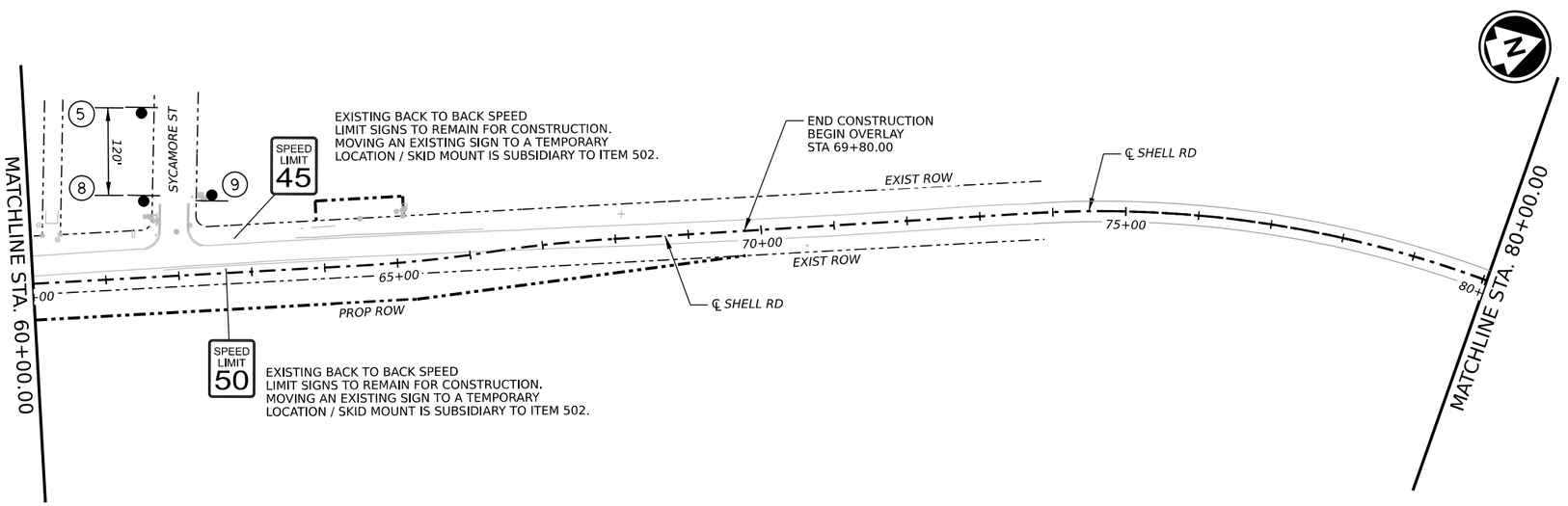

NOTES:

1. FIELD CONDITIONS MAY DICTATE ADJUSTMENT OF SIGN LOCATIONS. CONTRACTOR SHALL OBTAIN APPROVAL FROM THE ENGINEER PRIOR TO INSTALLATION OF ANY SIGNS.
2. REFER TO TRAFFIC CONTROL STANDARD SHEETS FOR OTHER REGULATORY AND WARNING SIGNS.
3. ADHERE AT ALL TIMES TO TxDOT STANDARDS BC(1)-21 THROUGH BC(12)-21, AND TMUTCD FOR SIGN DETAILS, DIMENSIONS AND PLACEMENT.

0 100 200
SCALE: 1" = 200'

POSTED SPEED
35 MPH - Begin - Sta 25+50
45 MPH - Sta 25+50 - 62+70
50 MPH - 62+70 - End

STATE OF TEXAS
ELENA RAMON
141765
LICENSED
PROFESSIONAL ENGINEER
3/12/2025

EST.1848 GEORGETOWN TEXAS

BGE, Inc.
101 West Louis Henna Blvd, Suite 400, Austin, TX 78728
Tel: 512-879-0400 • www.bgeinc.com
TBPE Registration No. F-1046

SHELL ROAD

TRAFFIC CONTROL PLAN ADVANCED WARNING SIGNS

SHEET 2 OF 3

SHEET NO. 26

DATE: 3/12/2025 2:50:13 PM
FILE: G:\TXC\Projects\City Georgetown\10767-00 Shell Road\03 CADD\01 Shts\02-TCP\Shell AWS 02.dgn



R20-3T
48X42
(1)



G20-10T
60X48
(2)



G20-9TP
24X24
R20-5T
24X30
R20-5aTP
24X12
(3)



R2-1
30X36
(4)



R2-1
30X36
(4A)



CW20-1D
48X48
(5)



CW20-1E
48X24
G20-6T
48X30
(6)



G20-1bTR
72X24
OR
G20-1bTL
DEPENDING ON
LOCATION
(7)

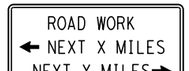

G20-1aT
(72"X36")
(8)



G20-2a
48X24
(9)

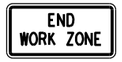

G20-2bT
48X24
(10)

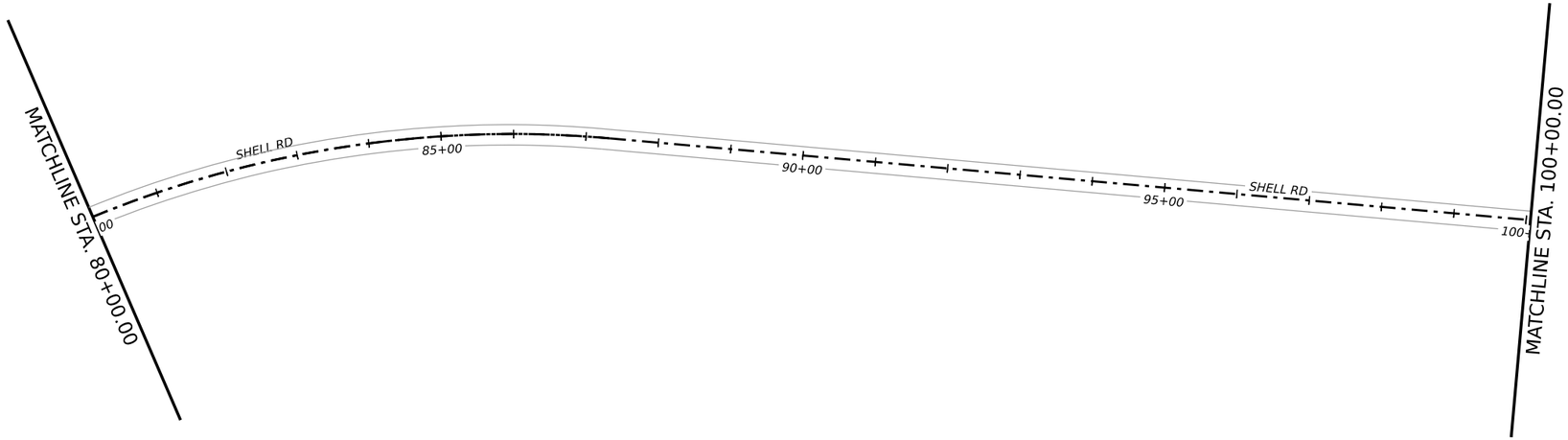



NOTES:

1. *FIELD CONDITIONS MAY DICTATE ADJUSTMENT OF SIGN LOCATIONS. CONTRACTOR SHALL OBTAIN APPROVAL FROM THE ENGINEER PRIOR TO INSTALLATION OF ANY SIGNS.*
2. *REFER TO TRAFFIC CONTROL STANDARD SHEETS FOR OTHER REGULATORY AND WARNING SIGNS.*
3. *ADHERE AT ALL TIMES TO TxDOT STANDARDS BC(1)-21 THROUGH BC(12)-21, AND TMUTCD FOR SIGN DETAILS, DIMENSIONS AND PLACEMENT.*

0 100 200
SCALE: 1" = 200'

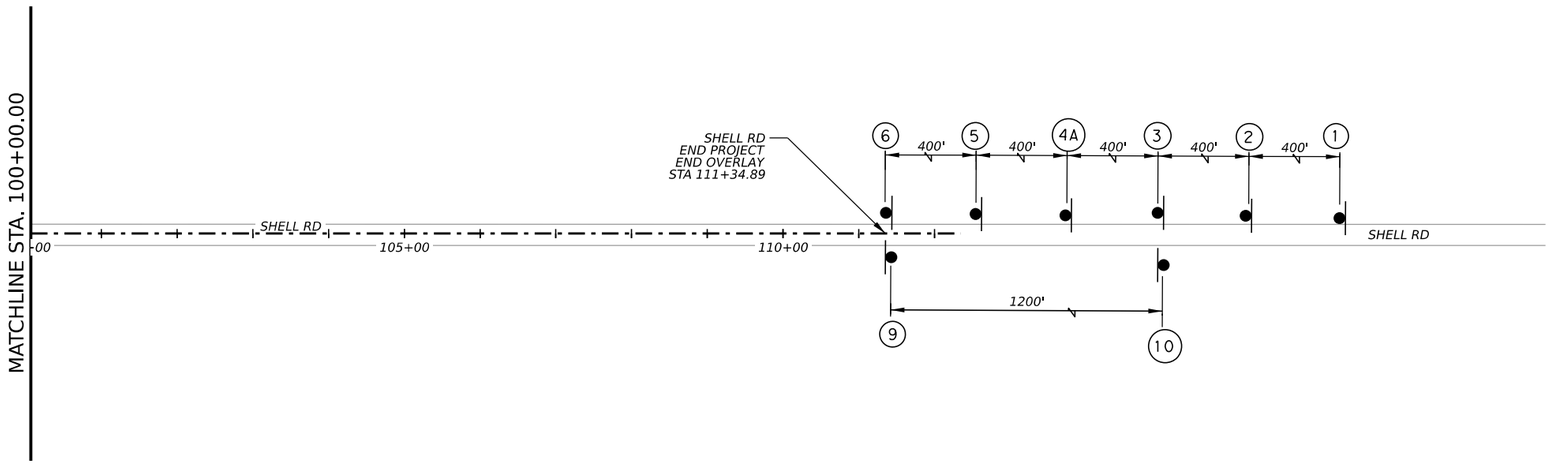



POSTED SPEED
35 MPH - Begin - Sta 25+50
45 MPH - Sta 25+50 - 62+70
50 MPH - 62+70 - End

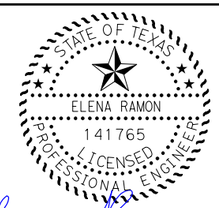

3/12/2025

EST.1848
GEORGETOWN
TEXAS

BGE, Inc.
101 West Louis Henna Blvd, Suite 400, Austin, TX 78728
Tel: 512-879-0400 • www.bgeinc.com
TBPE Registration No. F-1046

SHELL ROAD

TRAFFIC CONTROL PLAN ADVANCED WARNING SIGNS

SHEET 3 OF 3

SHEET NO.
27

DATE: 3/12/2025 2:50:15 PM
FILE: G:\TXC\Projects\City Georgetown\10767-00 Shell Road\03 CADD\01 Shts\02-TCP\Shell AWS 03.dgn

GENERAL:
FOLLOW THE CONSTRUCTION SEQUENCING UNLESS OTHERWISE APPROVED.

THE CONTRACTOR MAY PROPOSE MODIFICATIONS TO THE SEQUENCE OF WORK FOR CONSIDERATION BY THE CITY. ANY RECOMMENDATION RESULTING IN MAJOR MODIFICATIONS TO THE SEQUENCE OF WORK BY THE CONTRACTOR SHALL INCLUDE ANY CHANGES TO THE VARIOUS PAY ITEMS, IMPACT TO TRAFFIC, AND EFFECT TO OVERALL PROJECT TIME, COST, ETC. DO NOT PROCEED WITH ANY CONSTRUCTION OPERATIONS BASED ON A REVISED SEQUENCE OF WORK WITHOUT WRITTEN APPROVAL FROM THE CITY.

TWO WEEKS PRIOR TO BEGINNING ANY CONSTRUCTION, PORTABLE CHANGEABLE MESSAGE SIGNS SHALL BE PLACED ON BOTH ENDS OF THE PROJECT. MESSAGES AS DIRECTED.

IT IS THE CONTRACTOR'S RESPONSIBILTY TO DETERMINE EXACT LOCATION OF UTILITIES PRIOR TO STARTING CONSTRUCTION WITHIN A WORK AREA.

CONTRACTOR WILL MAINTAIN ACCESS TO DRIVEWAYS AND SIDE STREETS AT ALL TIMES UNLESS APPROVED BY THE CITY OR SHOWN OTHERWISE IN THE PLANS.

SIDE STREETS AND DRIVEWAYS SHALL BE CONSTRUCTED UTILIZING DAILY/TEMPORARY ONE WAY TRAFFIC CONTROL AND BE OPENED TO FULL WIDTH AT THE END OF THE WORKDAY MAINTAINING ACCESS AT ALL TIMES UNLESS OTHERWISE APPROVED.
SEE TRAFFIC CONTROL PLAN INTERSECTION DETAILS FOR ADDITIONAL INFORMATION.

FOR ALL PHASES THE CONTRACTOR WILL PROVIDE TEMPORARY PIPE DRAINS OR CULVERTS AND TAKE SUCH MEASURES AS DIRECTED TO PROVIDE FOR CONTINUED DRAINAGE FROM ALL ABUTTING PROPERTY, THE RIGHT OF WAY AND THE ROADWAY DURING CONSTRUCTION OPERATIONS. LABOR AND MATERIALS INVOLVED IN THIS WORK WILL NOT BE PAID FOR DIRECTLY, BUT WILL BE CONSIDERED SUBSIDIARY TO THE VARIOUS BID ITEMS OF THE CONTRACT.

WORK ZONE PAVEMENT MARKINGS AND CONCRETE BARRIERS FOR ALL PHASES ARE OFFSET FROM PROPOSED ALIGNMENT OF SHELL ROAD. SEE TRAFFIC CONTROL PLAN TYPICAL SECTIONS AND LAYOUTS FOR DIMENSIONS AND DETAILS.

BEFORE BEGINNING ANY WORK, PLACE ALL APPLICABLE BARRICADES IN ACCORDANCE WITH TXDOT STANDARDS BC (1-12)-21.

PHASE 1A - CONSTRUCTION:
STA 2+30 - 73+50 (SHELL ℄)

PHASE 1A CONSTRUCTION CONSISTS OF:
PROPOSED CONSTRUCTION OF WATER & WASTEWATER LINES AND APPURTENANCES.
PROPOSED CONSTRUCTION OF PARTIAL STORM SEWER AND APPURTENANCES.
PROPOSED CONSTRUCTION OF DRAINAGE STRUCTURES.

STEP 1:
INSTALL TEMPORARY EROSION CONTROL DEVICES FOR CONSTRUCTION ACTIVITIES AS SHOWN ON SW3P LAYOUTS FOR ENTIRE PROJECT. TEMPORARY EROSION CONTROL DEVICES WILL REQUIRE ADJUSTMENTS AS PHASES PROGRESS.
INSTALL LOW PROFILE CONCRETE BARRIER FROM STA 11+80 TO 16+20 AND STA 19+45 TO 20+45 ON LEFT SIDE OF SHELL ROAD. USE STANDARD TCP (2-2)-18 FOR DAILY LANE CLOSURES FOR THE INSTALLTION.

STEP 2:
CONSTRUCT PROPOSED WATER & WASTEWATER LINES TO LIMITS AS SHOWN ON SHELL ROAD UTILITY RELOCATION PLAN SHEETS. EXISTING TRAFFIC CONFIGURATION ON SHELL ROAD TO REMAIN FOR THE CONSTRUCTION OF PROPOSED WATERLINES AND SHALL REMAIN UNTIL END OF PHASE 1A.
CONTRACTOR TO UTILIZE TCP (2-2)-18 STANDARD FOR DAILY LANE CLOSURES TO INSTALL PROPOSED WATERLINES ACROSS SHELL ROAD AND SIDE STREETS.
IN THE EVENT OF ADVERSE CONDITIONS & THE CONTRACTOR IS UNABLE TO COMPLETELY BACKFILL TRENCH TO EXISTING ROADWAY SURFACE, THE CONTRACTOR WILL COVER TRENCHES WITH ANCHOR PINNED STEEL PLATES. ALL LANES TO BE OPEN DURING NON-WORKING HOURS.
AFTER INSTALLTION OF PROPOSED WATERLINES ACROSS ROADWAYS, RESTORE EXISTING PAVEMENT IN ACCORDANCE WITH CITY OF GEORGETOWN'S TRENCH AND EMBEDMENT AND PAVEMENT REPLACEMENT DETAIL UNDER EXISTING PAVEMENT. SEE SHELL ROAD UTILITY RELOCATIONS STANDARD FOR ADDITIONAL INFORMATION AND DETAILS.

STEP 3:
CONSTRUCT STORM SEWER LATERALS IN 3 STAGES ACROSS EXISTING SHELL ROADWAY AT STA 4+20, STA 8+00 AND STA 11+00. SEE TCP PHASE 1A STEP 3 PLAN SHEETS AND REFER TO TCP (2-2)-18 & TCP (2-4)-18 STANDARDS FOR ADDITIONAL INFORMATION.
IN THE EVENT OF ADVERSE CONDITIONS & THE CONTRACTOR IS UNABLE TO COMPLETELY BACKFILL TRENCH TO EXISTING ROADWAY SURFACE, THE CONTRACTOR WILL COVER TRENCHES WITH ANCHOR PINNED STEEL PLATES. ALL LANES TO BE OPEN DURING NON-WORKING HOURS.

STORM SEWER CONSTRUCTION FROM STA 32+50 TO STA 63+30 CAN NOT BEGIN UNTIL COMPLETION OF FRONTIER RELOCATION.

BEGIN CONSTRUCTION OF STORM SEWER INLETS, TRUNKLINES AND PARTIAL LATERALS FROM STA 12+00 (OUTLET) TO STA 29+20 AND FROM STA 32+50 TO STA 63+30 (OUTLET). ALL OF THE TRUNK LINES, JUNCTION BOXES, INLETS AND PORTIONS OF THE LATERALS IN THESE LOCATIONS ARE OUTSIDE THE EXISTING ROADWAY. EXISTING TRAFFIC CONFIGURATION ON SHELL ROAD TO REMAIN UNTIL STEP 7.

STEP 4:
CONSTRUCT PROPOSED CROSS CULVERT AT STA 63+66 IN HALF WIDTHS ACROSS EXISTING SHELL ROAD USING STANDARD TCP (2-2)-18 FOR DAILY LANE CLOSURES. SHELL ROAD TO BE BACKFILLED TO THE TOP OF EXISTING SURFACE BY THE END OF EACH DAY. THIS WORK WILL BE DONE IN ACCORDANCE WITH ITEM 400 CUT & RESTORE PAVEMENT. THE ROADWAY SHALL ALLOW FOR THE SAFE AND EFFICIENT PASSAGE OF TRAFFIC. TCP (2-2)-18 WILL REMAIN IN EFFECT 24 HOURS A DAY UNTIL THE ROADWAY IS CONSIDERED SAFE AND SUITABLE FOR TRAFFIC BY CONSTRUCTION OBSERVER.

STEP 5:
BEGIN PROPOSED LUMINAIRE, TRAFFIC SIGNAL AND TRAFFIC SIGNAL CONDUIT INSTALLTION IN CONJUNCTION WITH PHASE 1A CONSTRUCTION. PROPOSED TRAFFIC SIGNAL CONDUITS MAY BE INSTALLED COMPLETELY ACROSS ROADWAY USING LANE CLOSURE STANDARDS TCP (2-2)-18 OR TCP (2-4)-18.
EXISTING TRAFFIC SIGNALS AT SHELL ROAD (SOUTHBOUND) & VERDE VISTA (WEST) AND SHELL ROAD (SOUTHBOUND) & WESTBURY LANE TO REMAIN FOR PHASE 1 TRAFFIC. INSTALL TEMPORARY SIGNALS AS INDICATED IN THE ASSOCIATED TRAFFIC CONTROL PLANS FOR PHASE 1 TRAFFIC FOR SHELL ROAD (NORTHBOUND) & VERDE VISTA (EAST) AND SHELL ROAD (NORTHBOUND) & BELLAIRE DR.
TEMPORARILY CONNECT EXISTING AND TEMPORARY SIGNALS FOR SHELL & VERDE VISTA AND SHELL & BELLAIRE FOR PHASE 1 CONSTRUCTION.
PROPOSED TRAFFIC SIGNALS INSTALLED AT ROSEDALE BLVD WILL BE OPERATIONAL FOR PHASE 3.

STEP 6:
CONSTRUCT TEMPORARY PAVEMENT ON LEFT SIDE OF SHELL ROAD FOR PHASE 1 LANES FROM STA 14+35 TO 18+75, STA 19+35 TO 25+00 AND STA 66+50 TO 73+50. TEMPORARY PAVEMENT TO BE CONSTRUCTED IN ACCORDANCE WITH ITEM 508. NOTCH AND EXCAVATE EXISTING MATERIAL AT EDGE OF EXISTING ROADWAY. CONSTRUCT TEMPORARY PAVEMENT TO MATCH EXISTING CROSS SLOPE OF ROADWAY. TEMPORARY DRAINAGE IS SUBSIDIARY TO ITEM 508. SEE TCP TYPICAL SECTIONS AND LAYOUTS FOR ADDITIONAL INFORMATION & DETAILS.
USE TCP (2-1)-18 STANDARD TO CONSTRUCT TEMPORARY PAVEMENT.

STEP 7:
OBLITERATE EXISTING PAVEMENT MARKINGS FOR SHELL NORTHBOUND LANES FROM STA 1+70 TO 8+81. ALSO SHELL NORTHBOUND & SOUTHBOUND LANES FROM STA 8+81 TO 25+00 AND FROM STA 66+50 TO 73+50.
CONSTRUCT WORK ZONE PAVEMENT MARKINGS IN ACCORDANCE WITH PHASE 1 LANE CONFIGURATION AND SET UP TRAFFIC CONTROL SOUTH OF WILLIAMS DR.
THEN SHIFT TRAFFIC TO PHASE 1 LANES.
INSTALL LOW PROFILE CONCRETE BARRIER AND CHANNELIZERS ALONG WORK ZONE. USE STANDARD TCP (2-2)-18 FOR DAILY LANE CLOSURES TO INSTALL LOW PROFILE CONCRETE BARRIER.

PHASE 1B - CONSTRUCTION:
STA 2+30 - 73+50 (SHELL ℄)

PHASE 1B CONSTRUCTION CONSISTS OF:
PROPOSED CONSTRUCTION RIGHT SIDE OF SHELL ROAD AND SIDE STREETS.

PHASE 1A DOES NOT NEED TO BE COMPLETED IN IT'S ENTIRETY BEFORE BEGINNING PHASE 1B.

STEP 1:
BEGIN & COMPLETE ROADWAY CONSTRUCTION THROUGH 2.5" HMA TY C FOR PHASE 1 FROM STA 2+30 TO 4+81 (RTL).
AFTER COMPLETION OF ROADWAY & STORM SEWER FROM STA 2+30 TO 8+00, MOVE LOW PROFILE CONCRETE BARRIER FROM STA 3+80 TO 7+00 AND REMOVE TRAFFIC CONTROL SOUTH OF WILLIAMS DR. OPEN BOTH SHELL ROAD NORTHBOUND LANES FROM WILLIAMS DR. TO STA 7+00.

STEP 2:
BEGIN ROADWAY CONSTRUCTION FROM STA 8+72 TO 69+71.
EXCAVATE AND REMOVE EXISITNG MATERIALS. CONSTRUCT PROPOSED PAVEMENT SECTION IN ACCORDANCE WITH ROADWAY TYPICAL SECTIONS. SEE PROPOSED TYPICAL SECTIONS FOR ADDITIONAL INFORMATION AND DETAILS.
CONSTRUCT PROPOSED PAVEMENT SECTION THROUGH 2.5" HMA TY C, MEDIAN, CURB & GUTTER, DITCHES AND SEEDING ALL SLOPES. FINAL HMA SURFACE TO BE CONSTRUCTED IN PHASE 4.

PROPOSED MEDIAN FROM STA 43+00 TO 50+00 TO BE CONSTRUCTED IN PHASE 2 AND MEDIAN FROM STA 8+81 TO 14+35, STA 19+70 TO 25+00, STA 51+10 TO 61+50 AND STA 62+40 TO 68+60 IN PHASE 3.

CONTRACTOR TO LEAVE OPENINGS IN CURB TO ALLOW FOR DRAINAGE UNTIL PHASE 4 CONSTRUCTION.
PROPOSED CURB & GUTTER FROM STA 7+90 TO 10+60 AND STA 65+00 TO 69+76.7 TO BE CONSTRUCTED AFTER MEDIAN IS COMPLETED IN PHASE 3.

CONSTRUCT SIDE STREETS IN ACCORDANCE WITH TRAFFIC CONTROL PLAN INTERSECTION DETAILS. SEE PLAN SHEETS FOR MORE INFORMATION.

STEP 3:
CONSTRUCT TEMPORARY PAVEMENT ON RIGHT SIDE OF SHELL ROAD FOR PHASE 2 LANES FROM STA 7+90 TO 10+60 (RT SIDE) AND STA 66+15 TO 73+50 (RT SIDE). TEMPORARY PAVEMENT TO BE CONSTRUCTED IN ACCORDANCE WITH ITEM 508. NOTCH AND EXCAVATE EXISTING MATERIAL AT EDGE OF EXISTING / PROPOSED ROADWAY. CONSTRUCT TEMPORARY PAVEMENT TO MATCH PROPOSED CROSS SLOPE OF ROADWAY. TEMPORARY DRAINAGE IS SUBSIDIARY TO ITEM 508.
SEE TCP TYPICAL SECTIONS AND LAYOUTS FOR ADDITIONAL INFORMATION & DETAILS.

INSTALL TEMPORARY SIGNALS FOR PHASE 2 LANES AT SHELL & VERDE VISTA AND SHELL & WESTBURY.
TEMPORARY SIGNALS TO REMAIN COVERED UNTIL TRAFFIC IS SHIFTED TO PHASE 2 LANES.

STEP 4:
AFTER COMPLETION OF ALL STEPS PROCEED TO PHASE 2 CONSTRUCTION.

STATE OF TEXAS
ELENA RAMON
141765
LICENSED
PROFESSIONAL ENGINEER
3/12/2025

EST.1848 GEORGETOWN TEXAS

BGE, Inc.
101 West Louis Henna Blvd, Suite 400, Austin, TX 78728
Tel: 512-879-0400 • www.bgeinc.com
TBPE Registration No. F-1046

SHELL ROAD

TRAFFIC CONTROL PLAN NARRATIVE

SHEET 1 OF 2

SHEET NO. 28

DATE: 3/12/2025 2:50:15 PM
FILE: G:\TXC\Projects\City Georgetown\10767-00 Shell Road\03 CADD\01_Shts\02-TCP\SHELL_TCP_SEQ1.dgn

PHASE 2 - CONSTRUCTION:
STA 1+20 - 73+50 (SHELL ℄)

PHASE 2 CONSTRUCTION CONSISTS OF:
PROPOSED COMPLETION OF STORM SEWER AND APPURTENANCES.
PROPOSED CONSTRUCTION LEFT SIDE OF SHELL ROAD, SIDE STREETS AND DRAINAGE STRUCTURES.

STEP 1:
CONSTRUCT WORK ZONE PAVEMENT MARKINGS IN ACCORDANCE WITH PHASE 2 LANE CONFIGURATION.
MOVE LOW PROFILE CONCRETE BARRIER AND CHANNELIZERS ALONG WORK ZONE. ACTIVATE TEMPORARY SIGNALS AT SHELL & VERDE VISTA AND SHELL & WESTBURY, THEN SHIFT TRAFFIC TO PHASE 2 LANES.

CONSTRUCT PROPOSED CROSS CULVERT EXTENSION AND SAFETY END TREATMENT AT STA 12+01.

COMPLETE STORM SEWER INLETS AND LATERALS FROM STA 4+20 TO 11+00.

COMPLETE STORM SEWER INLETS AND LATERALS FROM STA 12+00 TO STA 29+20.

ALSO COMPLETE STORM SEWER INLETS AND LATERALS FROM STA 32+50 TO STA 62+75.

STEP 2:
BEGIN LUMINAIRE, TRAFFIC SIGNAL AND TRAFFIC SIGNAL CONDUIT INSTALLTION IN CONJUNCTION WITH PHASE 2 CONSTRUCTION. PROPOSED TRAFFIC SIGNAL CONDUITS MAY BE INSTALLED COMPLETELY ACROSS ROADWAY USING LANE CLOSURE STANDARDS TCP (2-2)-18 OR TCP (2-4)-18.
PROPOSED TRAFFIC SIGNALS INSTALLED IN PHASE 1 AT SHELL ROAD (NORTHBOUND) & VERDE VISTA (EAST) AND SHELL ROAD (NORTHBOUND) & BELLAIRE DR. TO BE USED FOR PHASE 2 TRAFFIC. INSTALL TEMPORARY SIGNALS FOR PHASE 2 TRAFFIC FOR SHELL ROAD (SOUTHBOUND) AT VERDE VISTA AND SHELL ROAD (SOUTHBOUND) AT WESTBURY LANE.
INSTALL PROPOSED TRAFFIC SIGNAL AT WILLIAMS DR. REMOVE EXISTING TRAFFIC SIGNAL WHEN PROPOSED SIGNAL IS OPERATIONAL. ALSO INSTALL PROPOSED TRAFFIC SIGNAL HEAD AT WILLIAMS DR. FOR PROPOSED RIGHT TURN LANE.
PROPOSED TRAFFIC SIGNALS INSTALLED AT VILLAGE COMMONS BLVD WILL BE OPERATIONAL FOR PHASE 3.

BEGIN ROADWAY CONSTRUCTION FOR PHASE 2. EXCAVATE AND REMOVE EXISITNG MATERIALS.
CONSTRUCT PROPOSED PAVEMENT SECTION IN ACCORDANCE WITH ROADWAY TYPICAL SECTIONS.
CONSTRUCT PROPOSED PAVEMENT SECTION THROUGH 2.5" HMA TY C, MEDIAN, CURB & GUTTER, DITCHES AND SEEDING ALL SLOPES. FINAL HMA SURFACE TO BE CONSTRUCTED IN PHASE 4.

COMPLETE PROPOSED MEDIAN FROM STA 43+00 TO 50+00.

CONTRACTOR TO LEAVE OPENINGS IN CURB & GUTTER TO ALLOW FOR DRAINAGE UNTIL PHASE 4 CONSTRUCTION. PROPOSED CURB & GUTTER FROM STA 8+40 TO 10+00 AND STA 66+00 TO 69+76.7 TO BE CONSTRUCTED AFTER MEDIAN IS COMPLETED IN PHASE 3.

CONSTRUCT SIDE STREETS IN ACCORDANCE WITH TRAFFIC CONTROL PLAN INTERSECTION DETAILS. SEE PLAN SHEETS FOR MORE INFORMATION.

AT CONSTRUCTION BREAKS, INSTALL TRANSITION FROM PROPOSED PAVEMENT TO EXISTING GRADE USING HMA OR AS DIRECTED BY THE CONSTRUCTION OBSERVER FOR APPROXIMATELY 50 LF.
THE TRANSITION WILL NOT BE PAID FOR DIRECTLY BUT CONSIDERED SUBSIDIARY TO VARIOUS BID ITEMS.

CONSTRUCT TEMPORARY PAVEMENT ON LEFT SIDE OF SHELL ROAD FOR PHASE 3 LANES FROM STA 8+40 TO 10+00. TEMPORARY PAVEMENT TO BE CONSTRUCTED IN ACCORDANCE WITH ITEM 508. NOTCH AND EXCAVATE EXISTING MATERIAL AT EDGE OF PROPOSED ROADWAY. CONSTRUCT TEMPORARY PAVEMENT TO MATCH PROPOSED CROSS SLOPE OF ROADWAY. TEMPORARY DRAINAGE IS SUBSIDIARY TO ITEM 508. SEE TCP TYPICAL SECTIONS AND LAYOUTS FOR ADDITIONAL INFORMATION & DETAILS.

STEP 3:
AFTER COMPLETION OF ALL STEPS PROCEED TO PHASE 3 CONSTRUCTION.

PHASE 3 - CONSTRUCTION:
STA 8+81 - 14+50 (SHELL ℄)
STA 19+70 - 25+00 (SHELL ℄)
STA 51+10 - 61+50 (SHELL ℄)
STA 62+40 - 64+94 (SHELL ℄)

PHASE 3 CONSTRUCTION CONSISTS OF:
PROPOSED COMPLETION OF SHELL ROAD AND MEDIAN.

STEP 1:
ALL TRAFFIC SIGNALS INSTALLED IN PHASES 1 & 2 TO BE OPERATIONAL FOR PHASE 3 CONSTRUCTION.
CONSTRUCT WORK ZONE PAVEMENT MARKINGS IN ACCORDANCE WITH PHASE 3 LANE CONFIGURATION.
MOVE LOW PROFILE CONCRETE BARRIER AND CHANNELIZERS ALONG WORK ZONE AND SHIFT TRAFFIC TO PHASE 3 LANES.
COMPLETE ROADWAY AND MEDIAN CONSTRUCTION FROM STA 3+48 TO 4+70 AND STA 8+81 TO 14+50.
EXCAVATE AND REMOVE EXISITNG MATERIALS. CONSTRUCT PROPOSED PAVEMENT SECTION IN ACCORDANCE WITH ROADWAY TYPICAL SECTIONS. CONSTRUCT PROPOSED PAVEMENT SECTION THROUGH 2.5" HMA TY C AND MEDIAN. COMPLETE MEDIAN FROM STA 19+70 TO 25+00, STA 51+10 TO 61+50 AND STA 62+40 TO 64+94 (ROADWAY HAS BEEN CONSTRUCTED IN PHASES 2 & 3 IN THESE LOCATIONS).
FINAL HMA SURFACE TO BE CONSTRUCTED IN PHASE 4.
COMPLETE REMAINING IRRIGATION SYSTEM AND LANDSCAPE ALL MEDIAN AREAS.

STEP 2:
AFTER COMPLETION OF PROPOSED MEDIAN, REMOVE TEMPORARY PAVEMENT IN ACCORDANCE WITH ITEM 508, THEN CONSTRUCT PROPOSED CURB & GUTTER FROM STA 7+90 TO 10+60 & STA 65+00 TO 69+76.7 (RIGHT SIDE) AND STA 8+40 TO 10+00 & STA 66+00 TO 69+76.7 (LEFT SIDE).

STEP 3:
REMOVE LOW PROFILE CONCRETE BARRIER AND CHANNELIZERS. CONSTRUCT WORK ZONE SHORT TERM PAVEMENT MARKINGS IN ACCORDANCE WITH FINAL LANE CONFIGURATION FROM STA 5+50 TO 73+50.

AFTER COMPLETION OF ALL STEPS PROCEED TO PHASE 4 CONSTRUCTION.

PHASE 4 - CONSTRUCTION:
STA 1+23.36 - 111+34.89 (SHELL ℄)

PHASE 4 CONSTRUCTION CONSISTS OF:
PROPOSED MILLING, FINAL OVERLAY AND PAVEMENT MARKINGS.

STEP 1:
MILL EXISTING ROADWAY SURFACE FROM STA 1+24.24 TO 8+81.00.
AFTER MILLING, CONSTRUCT WORK ZONE SHORT TERM PAVEMENT MARKINGS (TABS).

STEP 2:
CONSTRUCT FINAL HMA ROADWAY SURFACE AND WORK ZONE SHORT TERM PAVEMENT MARKINGS (TABS) FROM STA 1+24.24 TO 111+34.89.

USE STANDARDS TCP (2-2)-18 AND TCP (2-4)-18 FOR DAILY LANE CLOSURES DURING MILLING AND HMA OVERLAY OPERATIONS.

AT CONSTRUCTION BREAKS, INSTALL TRANSITION FROM PROPOSED PAVEMENT TO EXISTING GRADE USING HMA OR AS DIRECTED BY THE CONSTRUCTION OBSERVER FOR APPOXIMATELY 50 LF.
THE TRANSITION WILL NOT BE PAID FOR DIRECTLY BUT CONSIDERED SUBSIDIARY TO VARIOUS BID ITEMS.

STEP 3:
AFTER COMPLETION OF FINAL ROADWAY SURFACE, INSTALL FINAL PAVEMENT MARKINGS AND RAISED PAVEMENT MARKERS USING STANDARDS TCP (3-1)-13 AND TCP (3-3)-14.

OPEN ALL LANES TO FINAL TRAFFIC CONFIGURATION.

STATE OF TEXAS
ELENA RAMON
141765
LICENSED
PROFESSIONAL ENGINEER
3/12/2025

EST.1848
GEORGETOWN
TEXAS

BGE, Inc.
101 West Louis Henna Blvd, Suite 400, Austin, TX 78728
Tel: 512-879-0400 • www.bgeinc.com
TBPE Registration No. F-1046

SHELL ROAD

TRAFFIC CONTROL PLAN NARRATIVE

SHEET 2 OF 2

SHEET NO. 29

DATE: 3/12/2025 2:50:17 PM
FILE: G:\TXC\Projects\City Georgetown\10767-00 Shell Road\03_CADD\01 Shts\02-TCP\SHELL_TCP_SEQ2.dgn

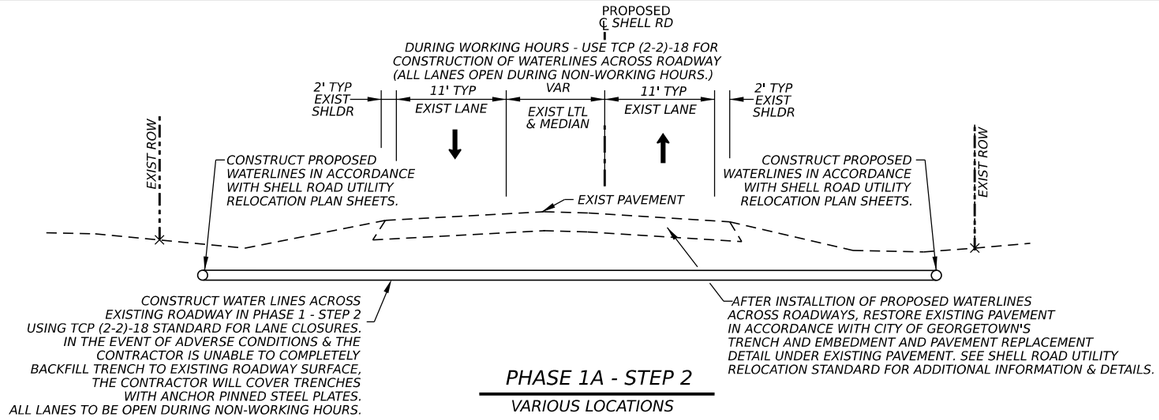

PHASE 1A - STEP 2

VARIOUS LOCATIONS

PROPOSED CONSTRUCTION OF WATER & WASTEWATER LINES
(SEE SHELL ROAD UTILITY RELOCATION PLAN SHEETS)

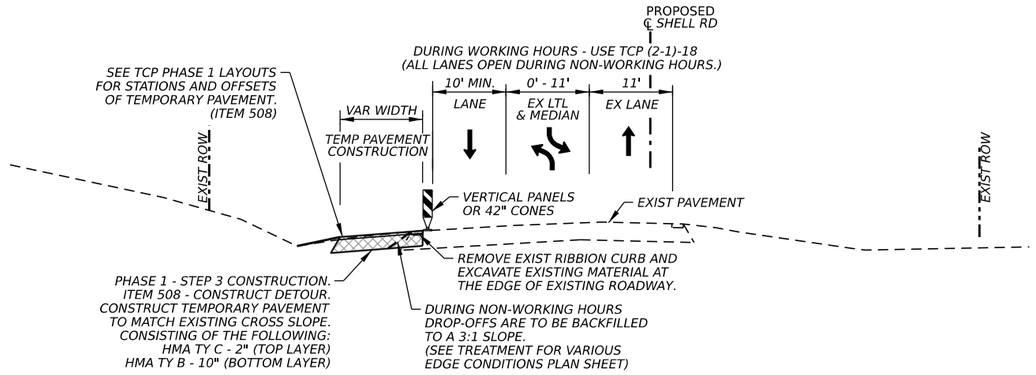

PHASE 1A - STEP 3

VARIOUS LOCATIONS

PROPOSED CONSTRUCTION OF TEMPORARY PAVEMENT
(SEE SHELL ROAD TCP PHASE 1 LAYOUT PLAN SHEETS)

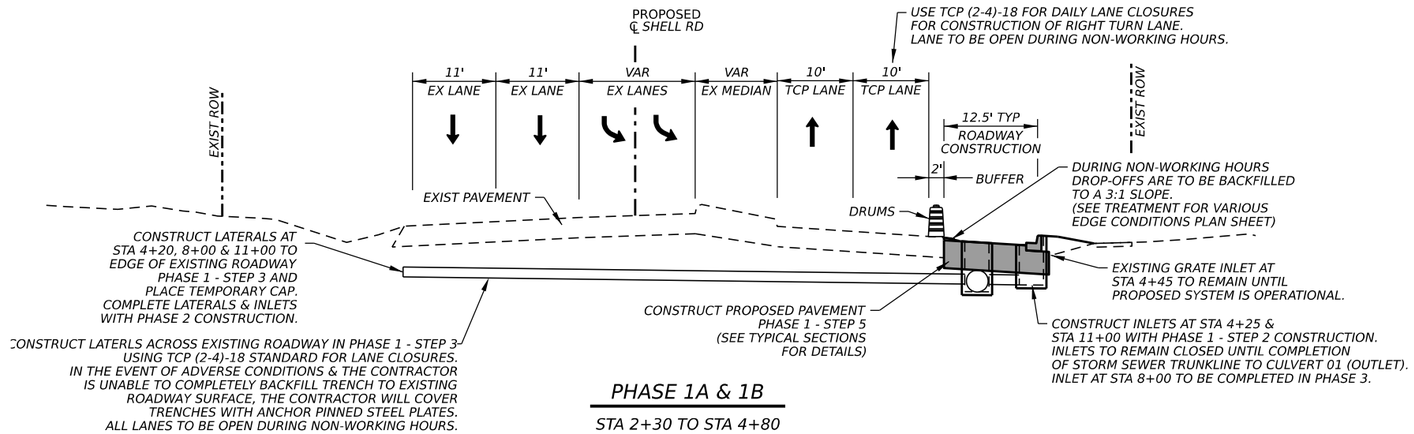

PHASE 1A & 1B

STA 2+30 TO STA 4+80

LEGEND

- DIRECTION OF TRAFFIC
- CHANNELIZING DEVICES
- SIGN
- TYPE 3 BARRICADE
- FLASHING ARROW BOARD
- LOW PROFILE CONCRETE BARRIER
- CONSTRUCTION THIS PHASE
- TEMPORARY PAVEMENT
- BUILT PREVIOUSLY
- TEMPORARY PAVEMENT BUILT PREVIOUSLY

NOTES:
1. MAINTAIN ACCESS TO ALL INTERSECTIONS AND DRIVEWAYS AT ALL TIMES UNLESS OTHERWISE NOTED.
2. SEE TCP SEQUENCE OF WORK.
3. SEE BC, TCP, AND WZ STANDARDS FOR TEMPORARY SIGNING AND PAVEMENT MARKING DETAILS.
4. SEE P&P SHEETS AND INTERSECTION LAYOUTS FOR ADDITIONAL INFORMATION.
5. ALL CHANNELIZING DEVICES AND SIGN PLACEMENT MUST CONFORM TO THE TEXAS MANUAL ON UNIFORM TRAFFIC CONTROL DEVICES (TMUTCD) AND TXDOT STANDARDS.
6. WARNING SIGN PLACEMENT SHALL NOT CONFLICT WITH EXISTING PERMANENT SIGNAGE.
7. EXISTING GROUND MOUNTED SIGNS SHALL BE TEMPORARILY REINSTALLED ON SKIDS WHERE NEEDED FOR TCP.

0 10 20
SCALE: 1" = 20'

STATE OF TEXAS
ELENA RAMON
141765
LICENSED PROFESSIONAL ENGINEER

3/12/2025

EST.1848 GEORGETOWN TEXAS

BGE, Inc.
101 West Louis Henna Blvd, Suite 400, Austin, TX 78728
Tel: 512-879-0400 • www.bgeinc.com
TBPE Registration No. F-1046

SHELL ROAD

TCP TYPICAL SECTIONS PHASE 1 (PHASES 1A & 1B)

SHEET 1 OF 4

SHEET NO. 30

DATE: 3/12/2025 2:50:19 PM
FILE: G:\TXC\Projects\City Georgetown\10767-00 Shell Road\03_CADD\01 Shts\02-TCP\SHELL_TCP_TYP.dgn

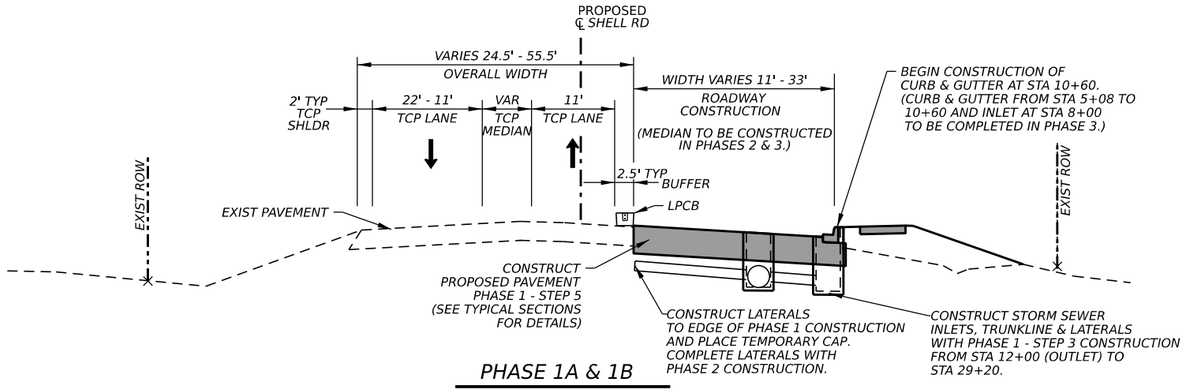

PHASE 1A & 1B

STA 8+81 TO STA 14+35

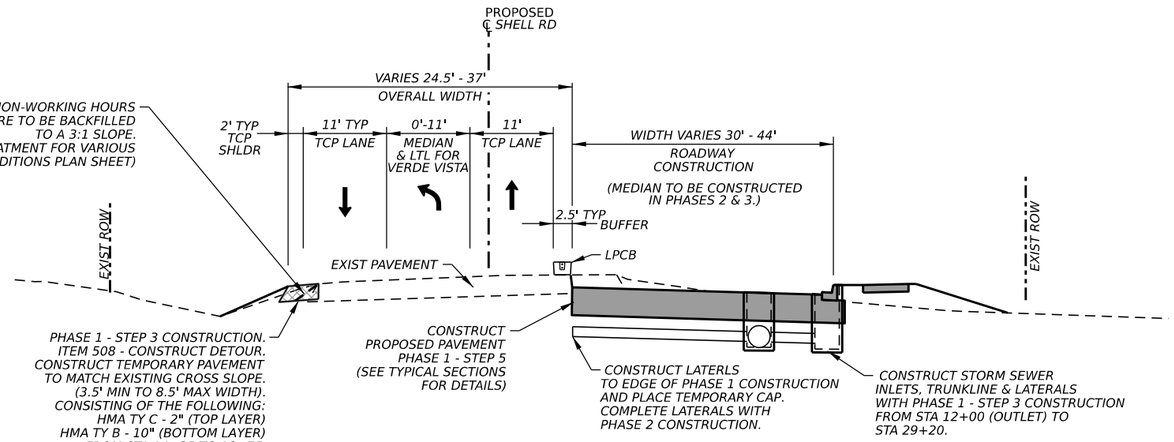

PHASE 1A & 1B

STA 14+35 TO STA 19+50

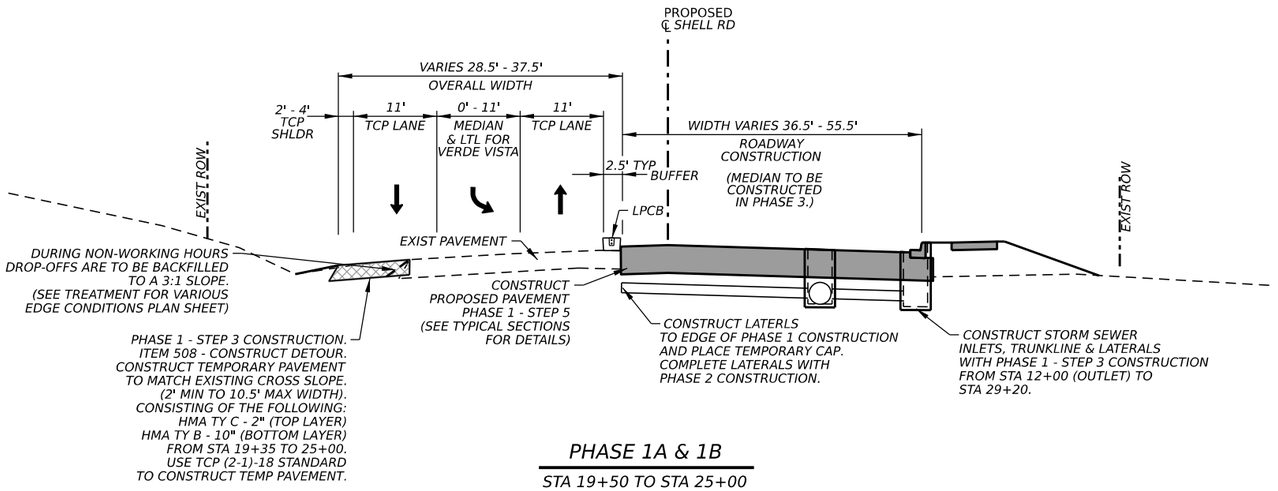

PHASE 1A & 1B

STA 19+50 TO STA 25+00

LEGEND

- DIRECTION OF TRAFFIC
- CHANNELIZING DEVICES
- SIGN
- TYPE 3 BARRICADE
- FLASHING ARROW BOARD
- LOW PROFILE CONCRETE BARRIER
- CONSTRUCTION THIS PHASE
- TEMPORARY PAVEMENT
- BUILT PREVIOUSLY
- TEMPORARY PAVEMENT BUILT PREVIOUSLY

NOTES:

1. MAINTAIN ACCESS TO ALL INTERSECTIONS AND DRIVEWAYS AT ALL TIMES UNLESS OTHERWISE NOTED.
2. SEE TCP SEQUENCE OF WORK.
3. SEE BC, TCP, AND WZ STANDARDS FOR TEMPORARY SIGNING AND PAVEMENT MARKING DETAILS.
4. SEE P&P SHEETS AND INTERSECTION LAYOUTS FOR ADDITIONAL INFORMATION.
5. ALL CHANNELIZING DEVICES AND SIGN PLACEMENT MUST CONFORM TO THE TEXAS MANUAL ON UNIFORM TRAFFIC CONTROL DEVICES (TMUTCD) AND TXDOT STANDARDS.
6. WARNING SIGN PLACEMENT SHALL NOT CONFLICT WITH EXISTING PERMANENT SIGNAGE.
7. EXISTING GROUND MOUNTED SIGNS SHALL BE TEMPORARILY REINSTALLED ON SKIDS WHERE NEEDED FOR TCP.

0 10 20

SCALE: 1" = 20'

STATE OF TEXAS
ELENA RAMON
141765
LICENSED
PROFESSIONAL ENGINEER
3/12/2025

EST.1848
GEORGETOWN
TEXAS

BGE, Inc.
101 West Louis Henna Blvd, Suite 400, Austin, TX 78728
Tel: 512-879-0400 • www.bgeinc.com
TBPE Registration No. F-1046

SHELL ROAD

TCP TYPICAL SECTIONS PHASE 1 (PHASES 1A & 1B)

SHEET 2 OF 4

SHEET NO. 31

DATE: 3/12/2025 2:50:19 PM
FILE: G:\TXC\Projects\City Georgetown\10767-00 Shell Road\03_CADD\01_Shts\02-TCP\SHELL_TCP_TYP.dgn

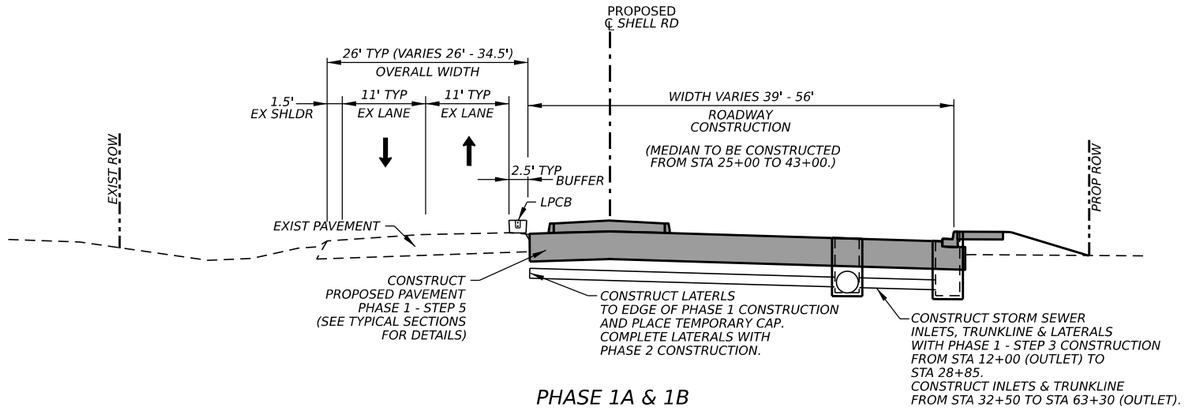

PHASE 1A & 1B

STA 25+00 TO STA 43+00

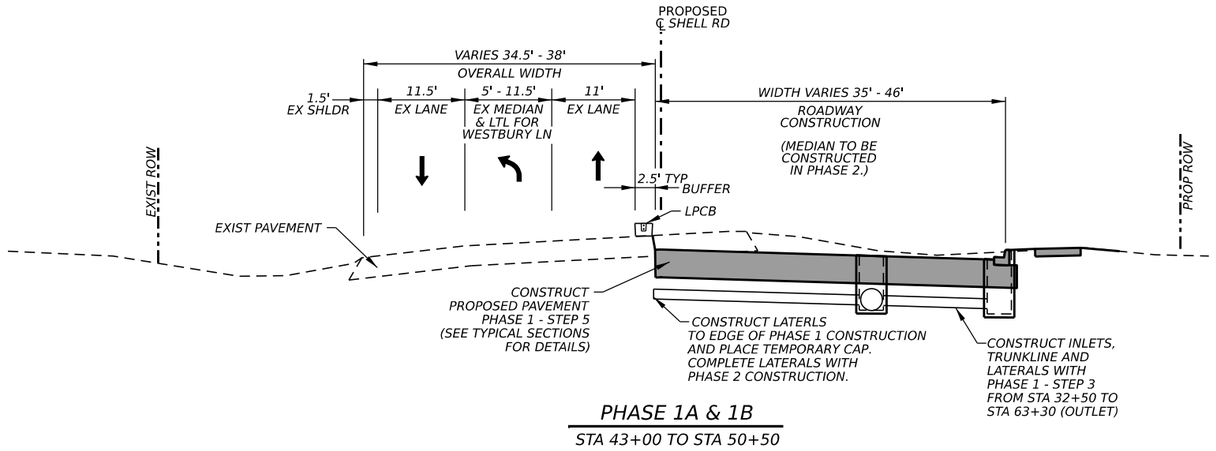

PHASE 1A & 1B

STA 43+00 TO STA 50+50

LEGEND

- DIRECTION OF TRAFFIC
- CHANNELIZING DEVICES
- SIGN
- TYPE 3 BARRICADE
- FLASHING ARROW BOARD
- LOW PROFILE CONCRETE BARRIER
- CONSTRUCTION THIS PHASE
- TEMPORARY PAVEMENT
- BUILT PREVIOUSLY
- TEMPORARY PAVEMENT BUILT PREVIOUSLY

NOTES:

1. MAINTAIN ACCESS TO ALL INTERSECTIONS AND DRIVEWAYS AT ALL TIMES UNLESS OTHERWISE NOTED.
2. SEE TCP SEQUENCE OF WORK.
3. SEE BC, TCP, AND WZ STANDARDS FOR TEMPORARY SIGNING AND PAVEMENT MARKING DETAILS.
4. SEE P&P SHEETS AND INTERSECTION LAYOUTS FOR ADDITIONAL INFORMATION.
5. ALL CHANNELIZING DEVICES AND SIGN PLACEMENT MUST CONFORM TO THE TEXAS MANUAL ON UNIFORM TRAFFIC CONTROL DEVICES (TMUTCD) AND TXDOT STANDARDS.
6. WARNING SIGN PLACEMENT SHALL NOT CONFLICT WITH EXISTING PERMANENT SIGNAGE.
7. EXISTING GROUND MOUNTED SIGNS SHALL BE TEMPORARILY REINSTALLED ON SKIDS WHERE NEEDED FOR TCP.

0 10 20

SCALE: 1" = 20'

STATE OF TEXAS
ELENA RAMON
141765
LICENSED
PROFESSIONAL ENGINEER

3/12/2025

EST. 1848 GEORGETOWN TEXAS

BGE, Inc.
101 West Louis Henna Blvd, Suite 400, Austin, TX 78728
Tel: 512-879-0400 • www.bgeinc.com
TBPE Registration No. F-1046

SHELL ROAD

TCP TYPICAL SECTIONS PHASE 1 (PHASES 1A & 1B)

SHEET 3 OF 4

SHEET NO. 32

DATE: 3/12/2025 2:50:20 PM
FILE: G:\TXC\Projects\City Georgetown\10767-00 Shell Road\03 CADD\01 Shts\02-TCP\SHELL_TCP_TYP.dgn

CK: DW: CK: DW:

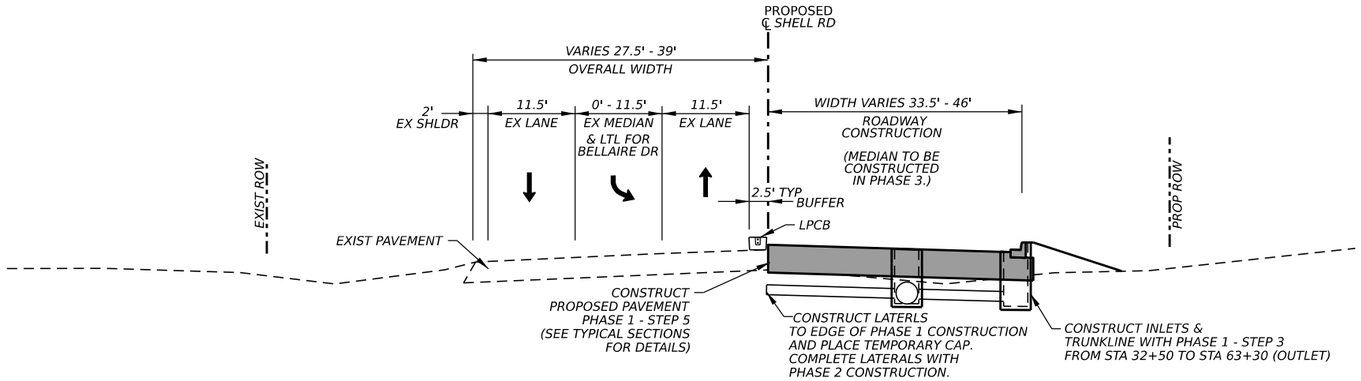

PHASE 1A & 1B

STA 50+50 TO STA 65+00

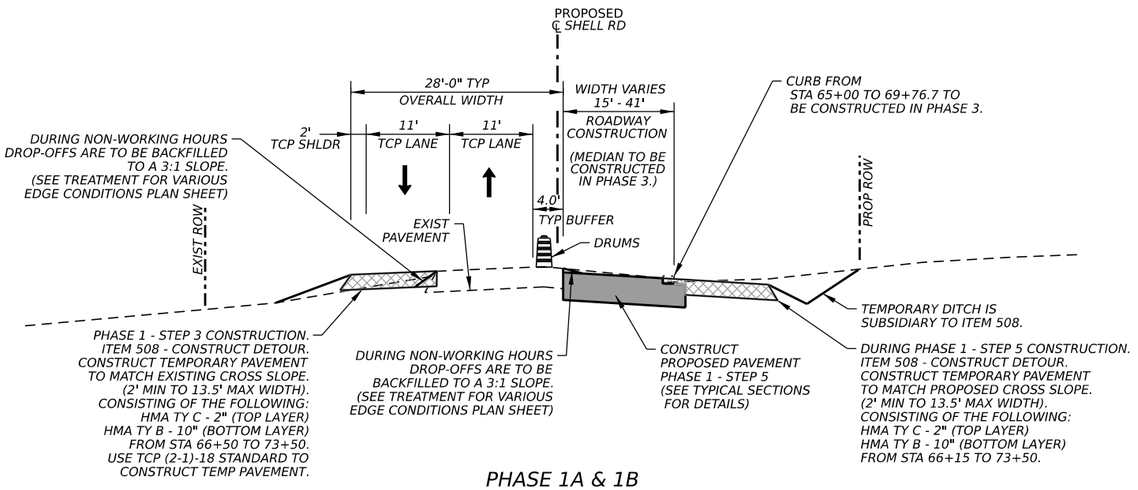

PHASE 1A & 1B

STA 65+00 TO STA 73+50

LEGEND

- DIRECTION OF TRAFFIC
- CHANNELIZING DEVICES
- SIGN
- TYPE 3 BARRICADE
- FLASHING ARROW BOARD
- LOW PROFILE CONCRETE BARRIER
- CONSTRUCTION THIS PHASE
- TEMPORARY PAVEMENT
- BUILT PREVIOUSLY
- TEMPORARY PAVEMENT BUILT PREVIOUSLY

NOTES:

1. MAINTAIN ACCESS TO ALL INTERSECTIONS AND DRIVEWAYS AT ALL TIMES UNLESS OTHERWISE NOTED.
2. SEE TCP SEQUENCE OF WORK.
3. SEE BC, TCP, AND WZ STANDARDS FOR TEMPORARY SIGNING AND PAVEMENT MARKING DETAILS.
4. SEE P&P SHEETS AND INTERSECTION LAYOUTS FOR ADDITIONAL INFORMATION.
5. ALL CHANNELIZING DEVICES AND SIGN PLACEMENT MUST CONFORM TO THE TEXAS MANUAL ON UNIFORM TRAFFIC CONTROL DEVICES (TMUTCD) AND TXDOT STANDARDS.
6. WARNING SIGN PLACEMENT SHALL NOT CONFLICT WITH EXISTING PERMANENT SIGNAGE.
7. EXISTING GROUND MOUNTED SIGNS SHALL BE TEMPORARILY REINSTALLED ON SKIDS WHERE NEEDED FOR TCP.

0 10 20

SCALE: 1" = 20'

STATE OF TEXAS
ELENA RAMON
141765
LICENSED
PROFESSIONAL ENGINEER

3/12/2025

EST.1848 GEORGETOWN TEXAS

BGE, Inc.
101 West Louis Henna Blvd, Suite 400, Austin, TX 78728
Tel: 512-879-0400 • www.bgeinc.com
TBPE Registration No. F-1046

SHELL ROAD

TCP TYPICAL SECTIONS PHASE 1 (PHASES 1A & 1B)

SHEET 4 OF 4

SHEET NO. 33

DATE: 3/12/2025 2:50:21 PM
FILE: G:\TXC\Projects\City Georgetown\10767-00 Shell Road\03 CADD\01 Shts\02-TCP\SHELL_TCP_TYP.dgn

CK
DW
CK
DW

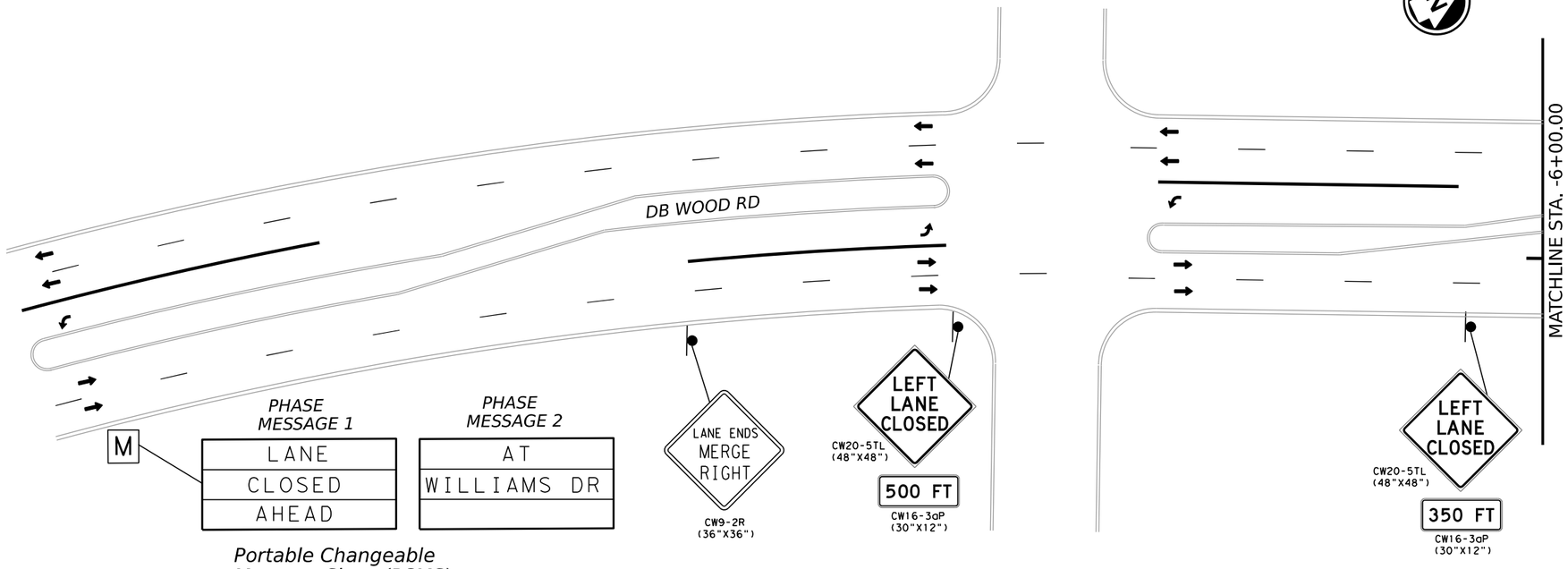

Portable Changeable Message Signs (PCMS)

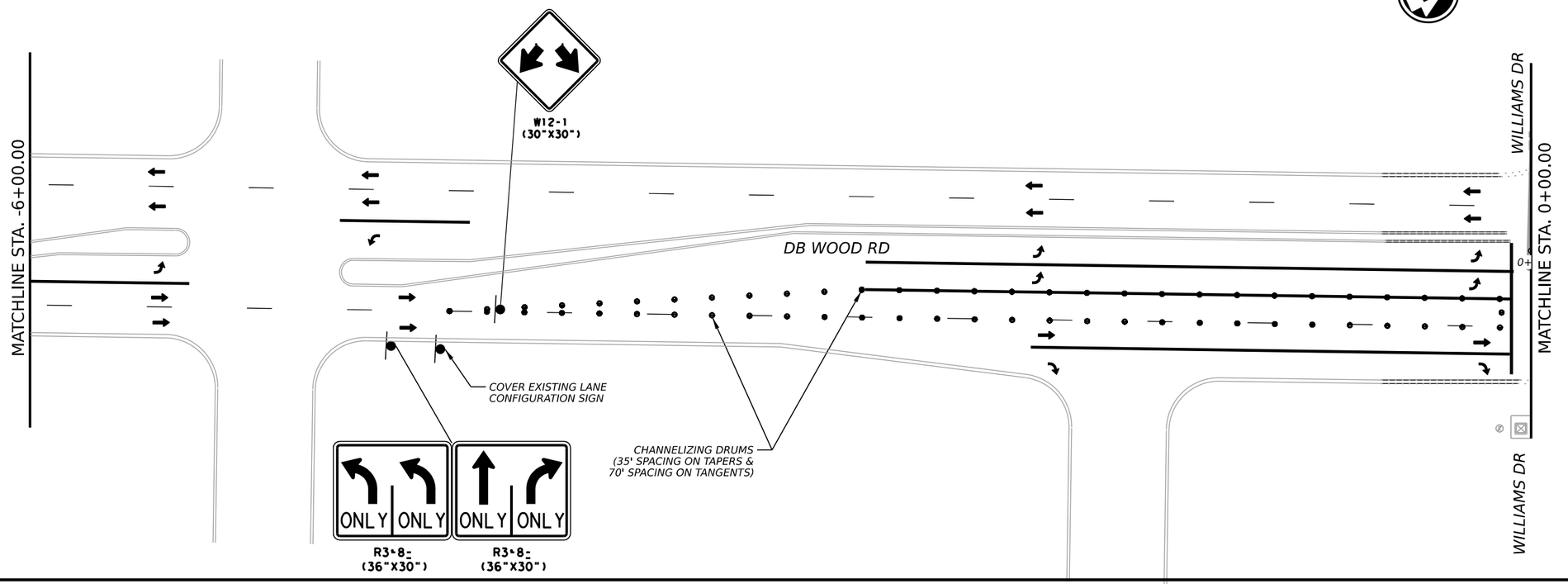

LEGEND

- *DIRECTION OF TRAFFIC*
- *CHANNELIZING DEVICES*
- *SIGN*
- *TYPE 3 BARRICADE*
- *FLASHING ARROW BOARD*
- *LOW PROFILE CONCRETE BARRIER*
- *CONSTRUCTION THIS PHASE*
- *TEMPORARY PAVEMENT*
- *BUILT PREVIOUSLY*
- *TEMPORARY PAVEMENT BUILT PREVIOUSLY*

NOTES:

1. *MAINTAIN ACCESS TO ALL INTERSECTIONS AND DRIVEWAYS AT ALL TIMES UNLESS OTHERWISE NOTED.*
2. *SEE TCP SEQUENCE OF WORK.*
3. *SEE BC, TCP, AND WZ STANDARDS FOR TEMPORARY SIGNING AND PAVEMENT MARKING DETAILS.*
4. *SEE P&P SHEETS AND INTERSECTION LAYOUTS FOR ADDITIONAL INFORMATION.*
5. *ALL CHANNELIZING DEVICES AND SIGN PLACEMENT MUST CONFORM TO THE TEXAS MANUAL ON UNIFORM TRAFFIC CONTROL DEVICES (TMUTCD) AND TXDOT STANDARDS.*
6. *WARNING SIGN PLACEMENT SHALL NOT CONFLICT WITH EXISTING PERMANENT SIGNAGE.*
7. *EXISTING GROUND MOUNTED SIGNS SHALL BE TEMPORARILY REINSTALLED ON SKIDS WHERE NEEDED FOR TCP.*

0 25 50

SCALE: 1" = 50'

STATE OF TEXAS
ELENA RAMON
141765
LICENSED
PROFESSIONAL ENGINEER

3/12/2025

EST. 1848 GEORGETOWN TEXAS

BGE, Inc.
101 West Louis Henna Blvd, Suite 400, Austin, TX 78728
Tel: 512-879-0400 • www.bgeinc.com
TBPE Registration No. F-1046

SHELL ROAD

TCP PHASE 1A
STEP 3 - STAGE 1
STORM SEWER
LATERAL DETAILS

SHEET 1 OF 4

SHEET NO. 34

DATE: 3/12/2025 2:50:56 PM
FILE: G:\TXC\Projects\City Georgetown\10767-00 Shell Road\03 CADD\01 Shts\02-TCPSHELL_TCP1_S3.2_01.dgn

CK: DW: CK: DW:

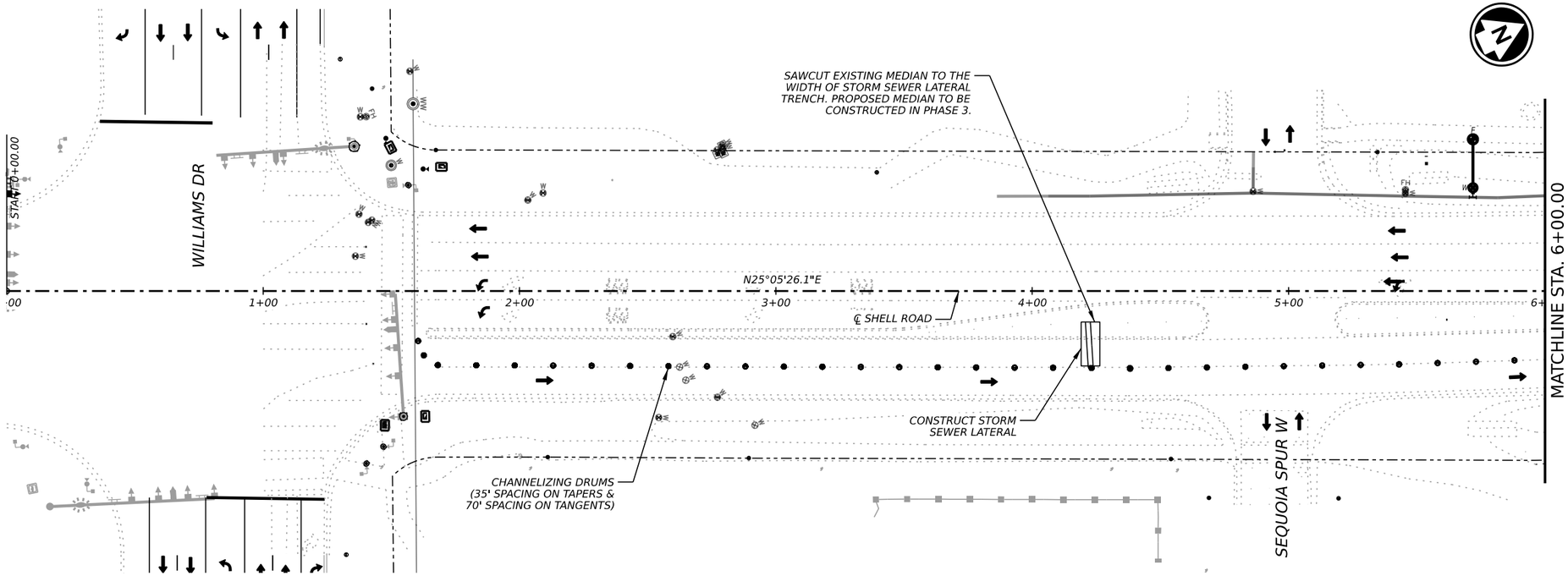

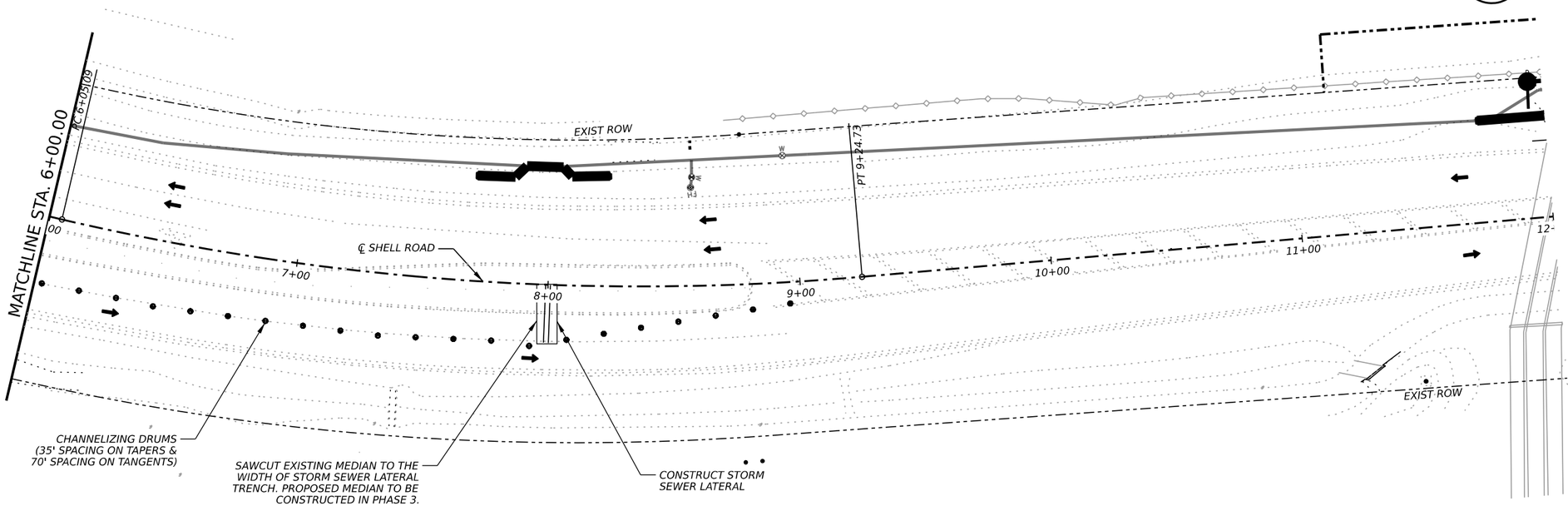

LEGEND

- DIRECTION OF TRAFFIC
- CHANNELIZING DEVICES
- SIGN
- TYPE 3 BARRICADE
- FLASHING ARROW BOARD
- LOW PROFILE CONCRETE BARRIER
- CONSTRUCTION THIS PHASE
- TEMPORARY PAVEMENT
- BUILT PREVIOUSLY
- TEMPORARY PAVEMENT BUILT PREVIOUSLY

NOTES:

1. MAINTAIN ACCESS TO ALL INTERSECTIONS AND DRIVEWAYS AT ALL TIMES UNLESS OTHERWISE NOTED.
2. SEE TCP SEQUENCE OF WORK.
3. SEE BC, TCP, AND WZ STANDARDS FOR TEMPORARY SIGNING AND PAVEMENT MARKING DETAILS.
4. SEE P&P SHEETS AND INTERSECTION LAYOUTS FOR ADDITIONAL INFORMATION.
5. ALL CHANNELIZING DEVICES AND SIGN PLACEMENT MUST CONFORM TO THE TEXAS MANUAL ON UNIFORM TRAFFIC CONTROL DEVICES (TMUTCD) AND TXDOT STANDARDS.
6. WARNING SIGN PLACEMENT SHALL NOT CONFLICT WITH EXISTING PERMANENT SIGNAGE.
7. EXISTING GROUND MOUNTED SIGNS SHALL BE TEMPORARILY REINSTALLED ON SKIDS WHERE NEEDED FOR TCP.

0 25 50

SCALE: 1" = 50'

STATE OF TEXAS
ELENA RAMON
141765
LICENSED
PROFESSIONAL ENGINEER

3/12/2025

EST.1848 GEORGETOWN TEXAS

BGE, Inc.
101 West Louis Henna Blvd, Suite 400, Austin, TX 78728
Tel: 512-879-0400 • www.bgeinc.com
TBPE Registration No. F-1046

SHELL ROAD

TCP PHASE 1A
STEP 3 - STAGE 1
STORM SEWER

SHEET 2 OF 4

SHEET NO. 35

DATE: 3/12/2025 2:51:05 PM
FILE: G:\TXC\Projects\City Georgetown\10767-00 Shell Road\03 CADD\01 Shts\02-TCP\SHELL_TCP1_S3.2_02.dgn

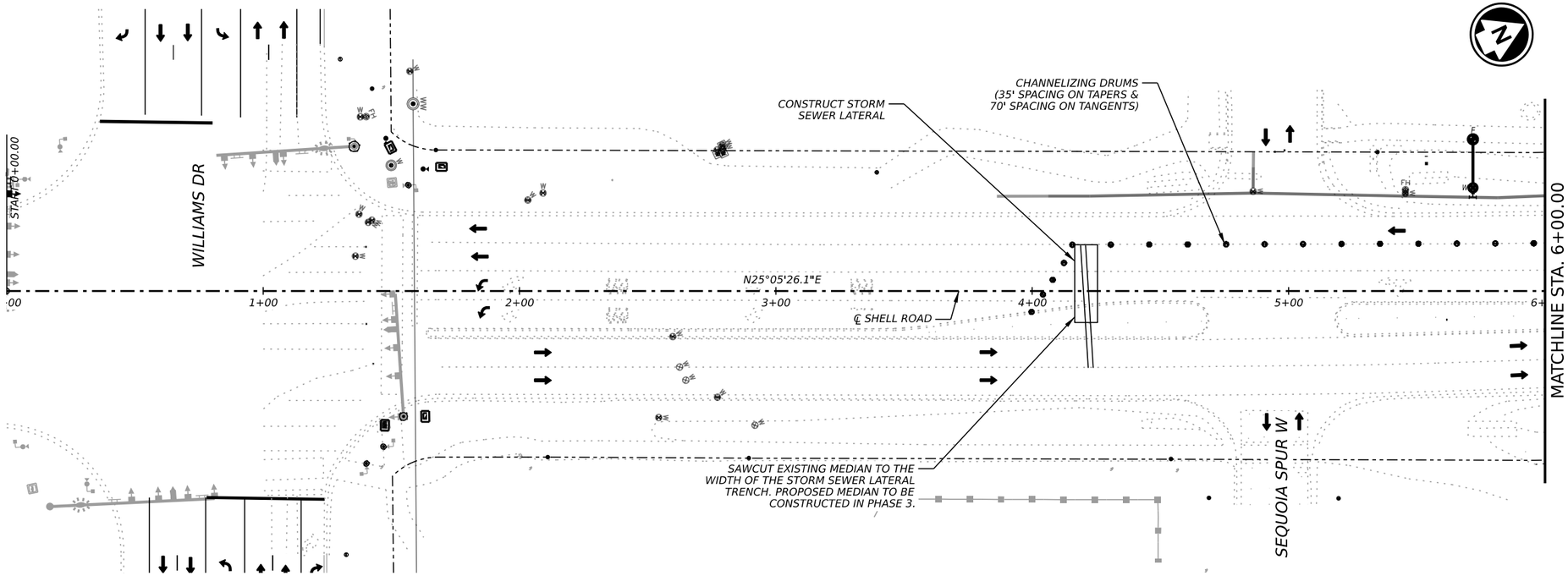

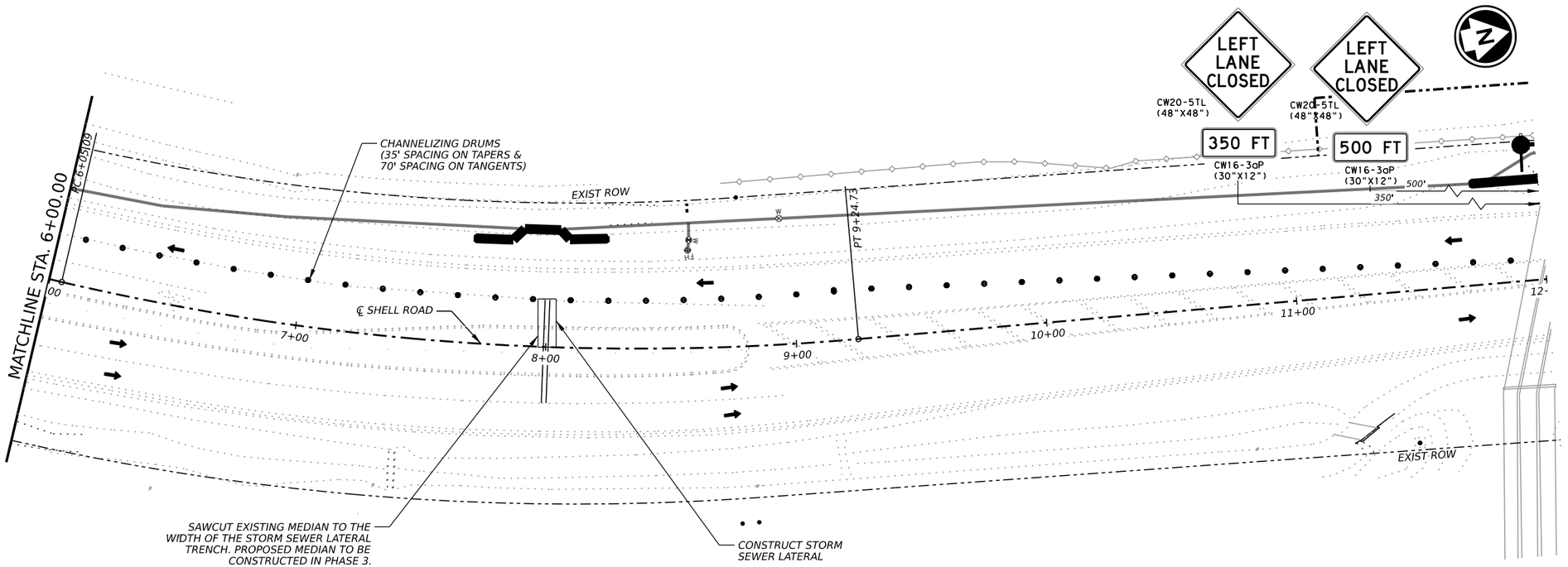

LEGEND

- DIRECTION OF TRAFFIC
- CHANNELIZING DEVICES
- SIGN
- TYPE 3 BARRICADE
- FLASHING ARROW BOARD
- LOW PROFILE CONCRETE BARRIER
- CONSTRUCTION THIS PHASE
- TEMPORARY PAVEMENT
- BUILT PREVIOUSLY
- TEMPORARY PAVEMENT BUILT PREVIOUSLY

NOTES:

1. MAINTAIN ACCESS TO ALL INTERSECTIONS AND DRIVEWAYS AT ALL TIMES UNLESS OTHERWISE NOTED.
2. SEE TCP SEQUENCE OF WORK.
3. SEE BC, TCP, AND WZ STANDARDS FOR TEMPORARY SIGNING AND PAVEMENT MARKING DETAILS.
4. SEE P&P SHEETS AND INTERSECTION LAYOUTS FOR ADDITIONAL INFORMATION.
5. ALL CHANNELIZING DEVICES AND SIGN PLACEMENT MUST CONFORM TO THE TEXAS MANUAL ON UNIFORM TRAFFIC CONTROL DEVICES (TMUTCD) AND TXDOT STANDARDS.
6. WARNING SIGN PLACEMENT SHALL NOT CONFLICT WITH EXISTING PERMANENT SIGNAGE.
7. EXISTING GROUND MOUNTED SIGNS SHALL BE TEMPORARILY REINSTALLED ON SKIDS WHERE NEEDED FOR TCP.

0 25 50

SCALE: 1" = 50'

STATE OF TEXAS
ELENA RAMON
141765
LICENSED
PROFESSIONAL ENGINEER

3/12/2025

EST.1848 GEORGETOWN TEXAS

BGE, Inc.
101 West Louis Henna Blvd, Suite 400, Austin, TX 78728
Tel: 512-879-0400 • www.bgeinc.com
TBPE Registration No. F-1046

SHELL ROAD

TCP PHASE 1A
STEP 3 - STAGE 2
STORM SEWER

SHEET 3 OF 4

SHEET NO. 36

DATE: 3/12/2025 2:51:14 PM
FILE: G:\TXC\Projects\City Georgetown\10767-00 Shell Road\03 CADD\01 Shts\02-TCP\SHELL_TCP1_S3.3 01.dgn

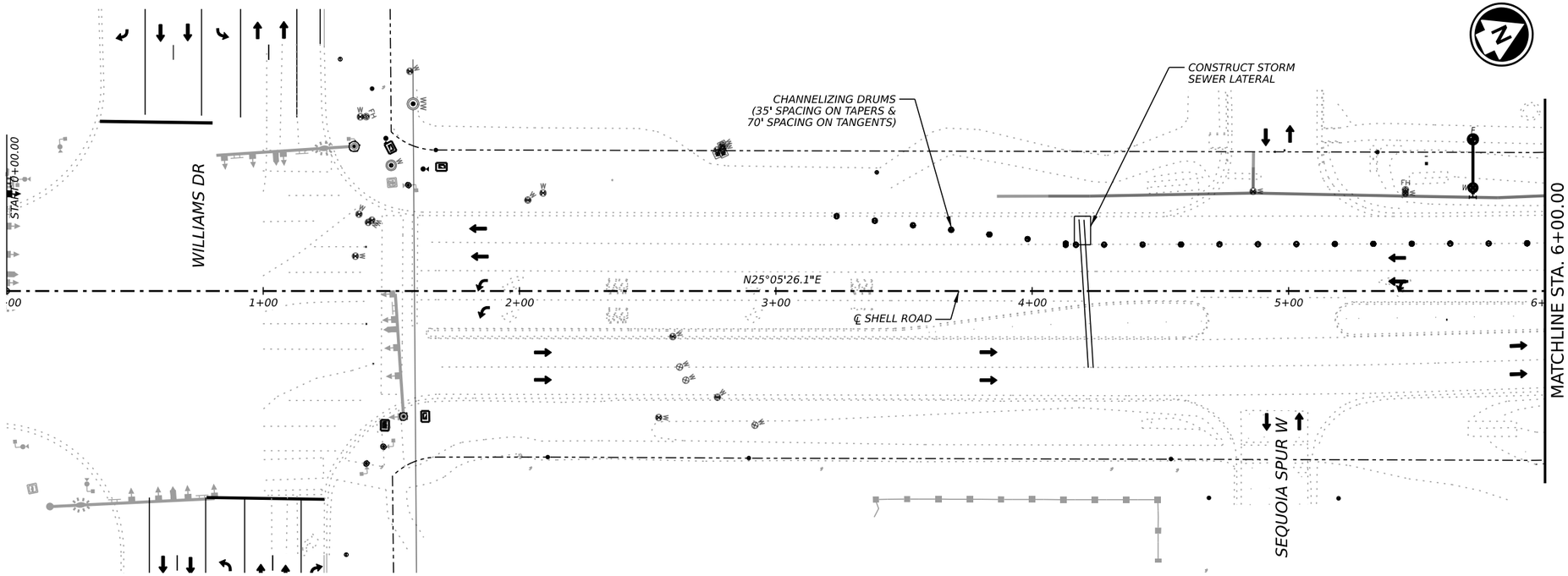

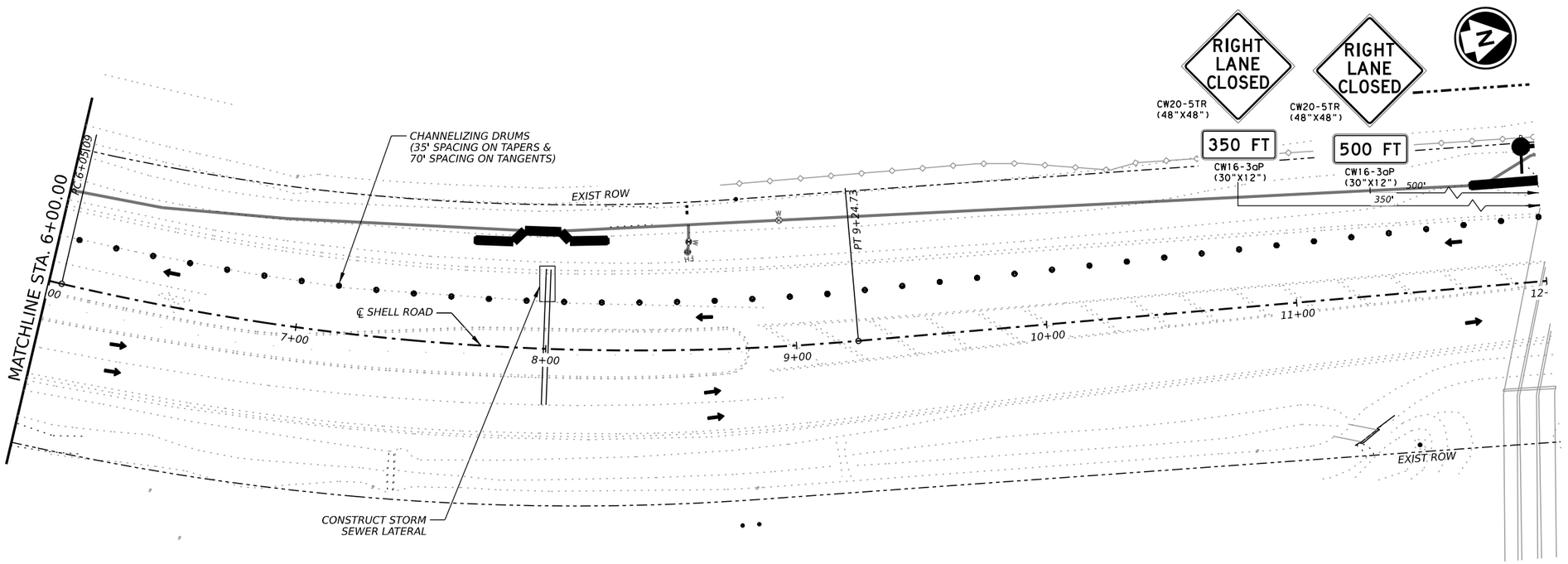

LEGEND

- DIRECTION OF TRAFFIC
- CHANNELIZING DEVICES
- SIGN
- TYPE 3 BARRICADE
- FLASHING ARROW BOARD
- LOW PROFILE CONCRETE BARRIER
- CONSTRUCTION THIS PHASE
- TEMPORARY PAVEMENT
- BUILT PREVIOUSLY
- TEMPORARY PAVEMENT BUILT PREVIOUSLY

NOTES:

1. MAINTAIN ACCESS TO ALL INTERSECTIONS AND DRIVEWAYS AT ALL TIMES UNLESS OTHERWISE NOTED.
2. SEE TCP SEQUENCE OF WORK.
3. SEE BC, TCP, AND WZ STANDARDS FOR TEMPORARY SIGNING AND PAVEMENT MARKING DETAILS.
4. SEE P&P SHEETS AND INTERSECTION LAYOUTS FOR ADDITIONAL INFORMATION.
5. ALL CHANNELIZING DEVICES AND SIGN PLACEMENT MUST CONFORM TO THE TEXAS MANUAL ON UNIFORM TRAFFIC CONTROL DEVICES (TMUTCD) AND TXDOT STANDARDS.
6. WARNING SIGN PLACEMENT SHALL NOT CONFLICT WITH EXISTING PERMANENT SIGNAGE.
7. EXISTING GROUND MOUNTED SIGNS SHALL BE TEMPORARILY REINSTALLED ON SKIDS WHERE NEEDED FOR TCP.

0 25 50

SCALE: 1" = 50'

STATE OF TEXAS
ELENA RAMON
141765
LICENSED
PROFESSIONAL ENGINEER

3/12/2025

EST.1848 GEORGETOWN TEXAS

BGE, Inc.
101 West Louis Henna Blvd, Suite 400, Austin, TX 78728
Tel: 512-879-0400 • www.bgeinc.com
TBPE Registration No. F-1046

SHELL ROAD

TCP PHASE 1A
STEP 3 - STAGE 3
STORM SEWER

SHEET 4 OF 4

SHEET NO. 37

DATE: 3/12/2025 2:51:23 PM
FILE: G:\TXC\Projects\City Georgetown\10767-00 Shell Road\03 CADD\01 Shts\02-TCP\SHELL_TCP1_S3.4 01.dgn

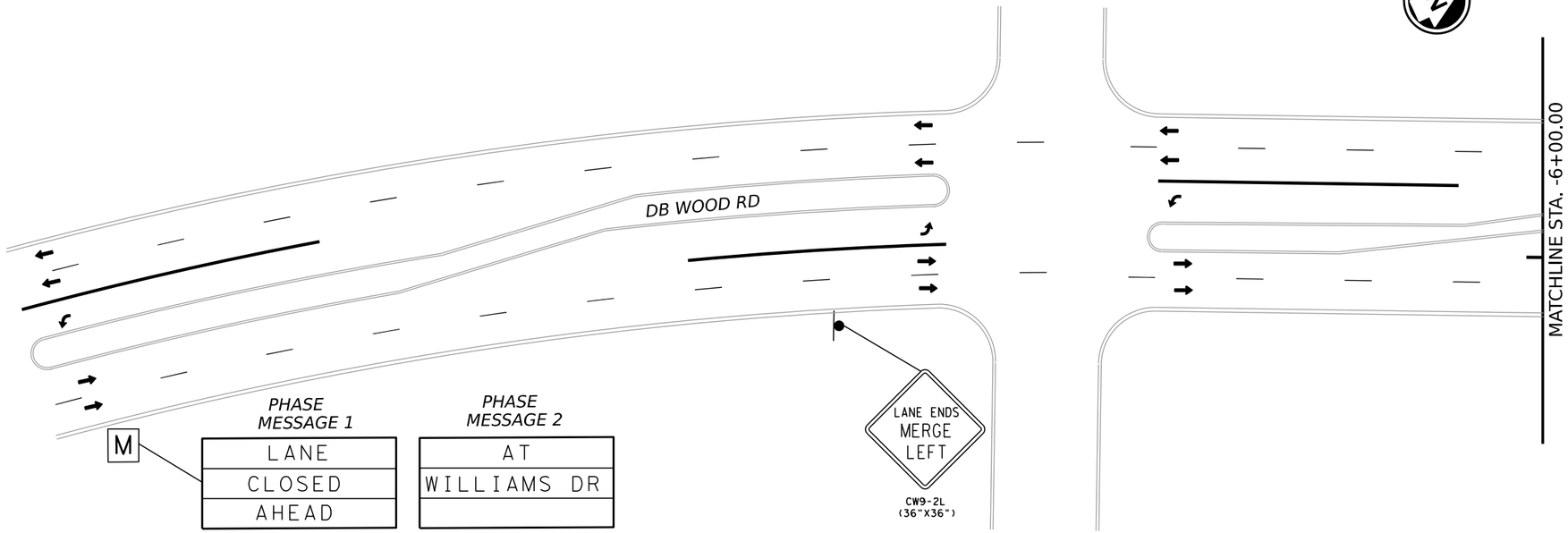

Portable Changeable Message Signs (PCMS)

LEGEND

- DIRECTION OF TRAFFIC
- CHANNELIZING DEVICES
- SIGN
- TYPE 3 BARRICADE
- FLASHING ARROW BOARD
- LOW PROFILE CONCRETE BARRIER
- CONSTRUCTION THIS PHASE
- TEMPORARY PAVEMENT
- BUILT PREVIOUSLY
- TEMPORARY PAVEMENT BUILT PREVIOUSLY

NOTES:

1. MAINTAIN ACCESS TO ALL INTERSECTIONS AND DRIVEWAYS AT ALL TIMES UNLESS OTHERWISE NOTED.
2. SEE TCP SEQUENCE OF WORK.
3. SEE BC, TCP, AND WZ STANDARDS FOR TEMPORARY SIGNING AND PAVEMENT MARKING DETAILS.
4. SEE P&P SHEETS AND INTERSECTION LAYOUTS FOR ADDITIONAL INFORMATION.
5. ALL CHANNELIZING DEVICES AND SIGN PLACEMENT MUST CONFORM TO THE TEXAS MANUAL ON UNIFORM TRAFFIC CONTROL DEVICES (TMUTCD) AND TXDOT STANDARDS.
6. WARNING SIGN PLACEMENT SHALL NOT CONFLICT WITH EXISTING PERMANENT SIGNAGE.
7. EXISTING GROUND MOUNTED SIGNS SHALL BE TEMPORARILY REINSTALLED ON SKIDS WHERE NEEDED FOR TCP.

0 25 50

SCALE: 1" = 50'

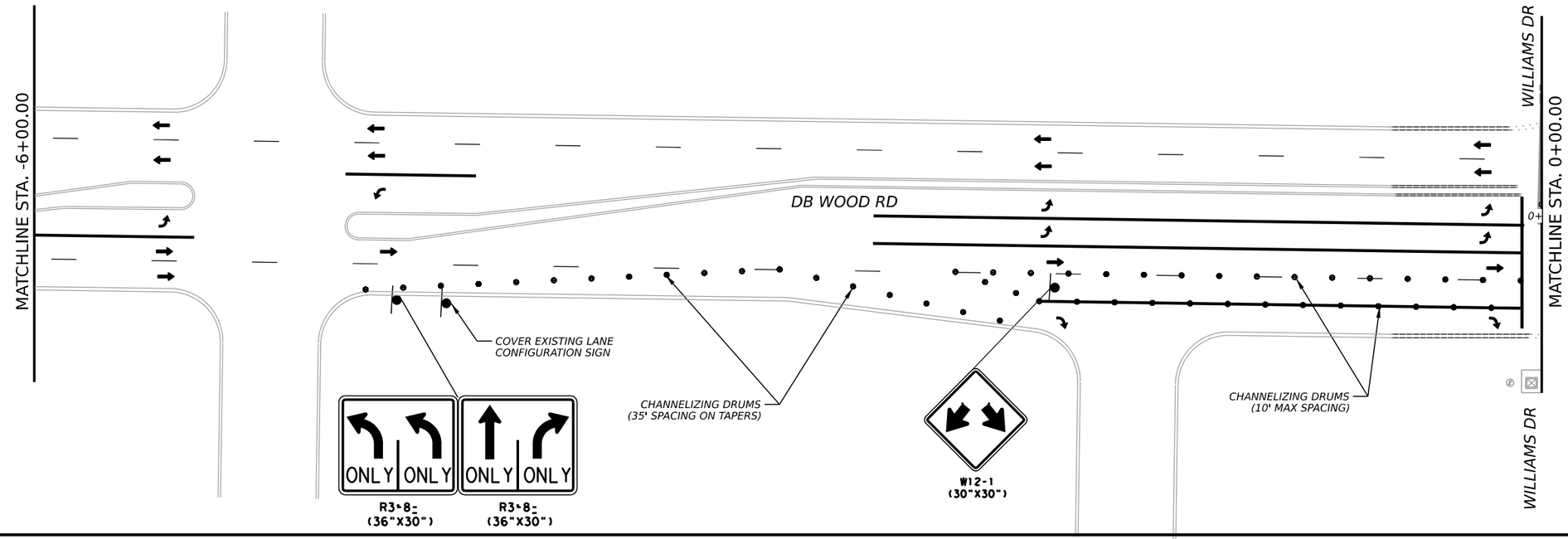

STATE OF TEXAS
ELENA RAMON
141765
LICENSED
PROFESSIONAL ENGINEER

3/12/2025

EST. 1848 GEORGETOWN TEXAS

BGE, Inc.
101 West Louis Henna Blvd, Suite 400, Austin, TX 78728
Tel: 512-879-0400 • www.bgeinc.com
TBPE Registration No. F-1046

SHELL ROAD

TCP PHASE 1 LAYOUTS (PHASES 1A & 1B)

SHEET 1 OF 8

SHEET NO. 38

DATE: 3/12/2025 2:51:32 PM
FILE: G:\TXC\Projects\City Georgetown\10767-00 Shell Road\03 CADD\01 Shts\02-TCP\SHELL_TCP1_S3.dgn

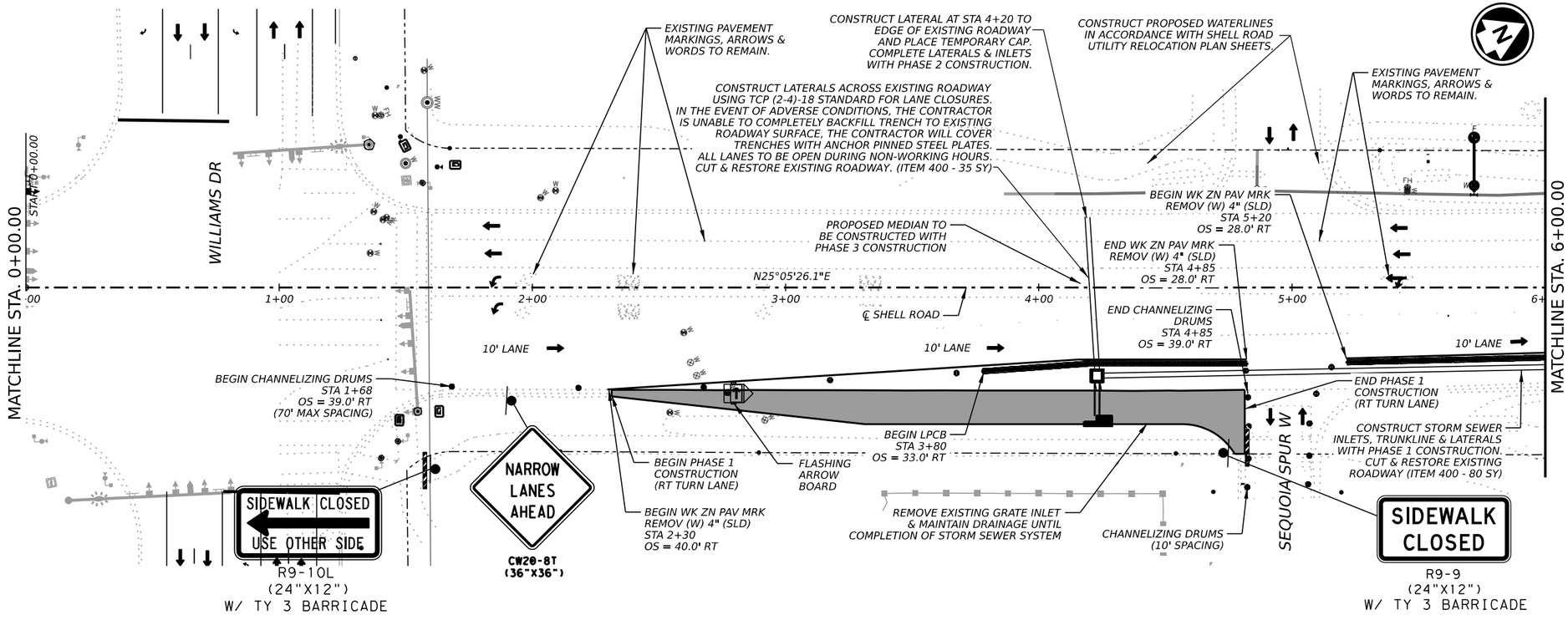

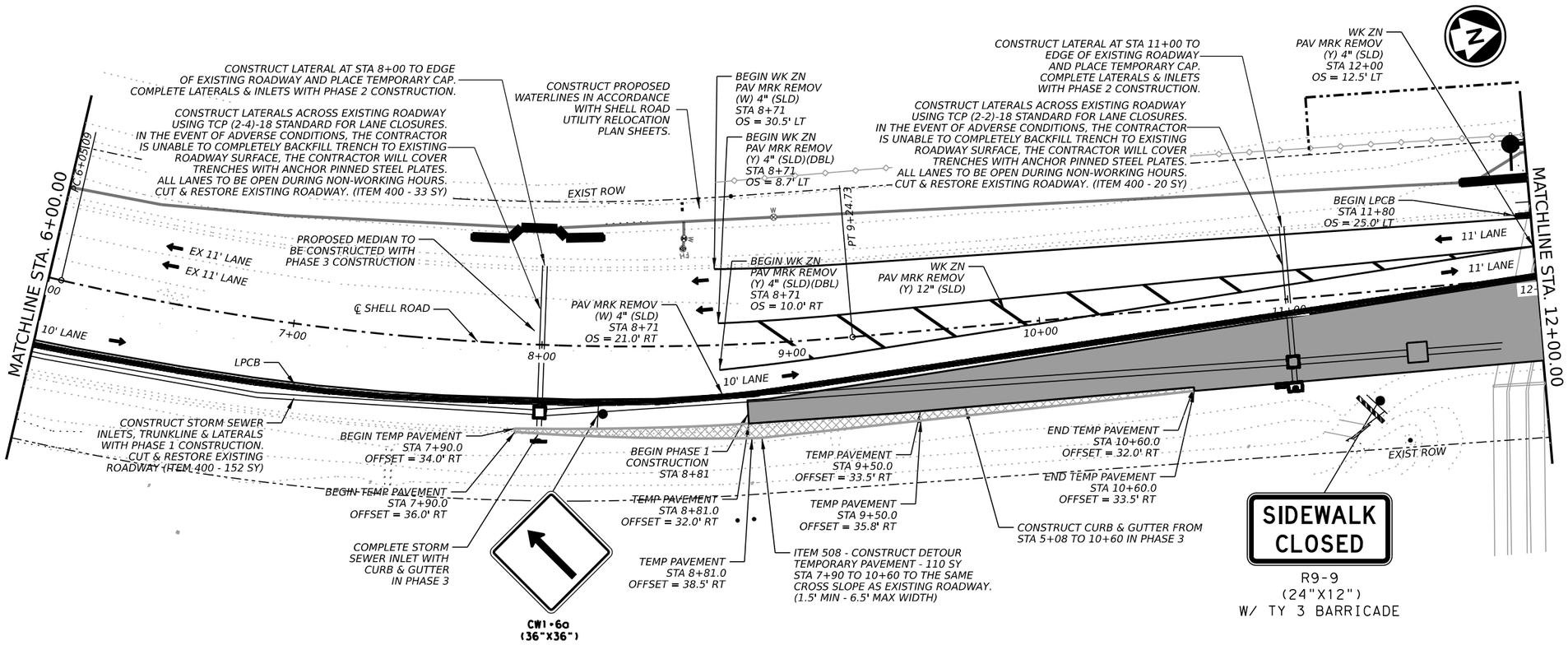

LEGEND

- DIRECTION OF TRAFFIC
- CHANNELIZING DEVICES
- SIGN
- TYPE 3 BARRICADE
- FLASHING ARROW BOARD
- LOW PROFILE CONCRETE BARRIER
- CONSTRUCTION THIS PHASE
- TEMPORARY PAVEMENT
- BUILT PREVIOUSLY
- TEMPORARY PAVEMENT BUILT PREVIOUSLY

NOTES:

1. MAINTAIN ACCESS TO ALL INTERSECTIONS AND DRIVEWAYS AT ALL TIMES UNLESS OTHERWISE NOTED.
2. SEE TCP SEQUENCE OF WORK.
3. SEE BC, TCP, AND WZ STANDARDS FOR TEMPORARY SIGNING AND PAVEMENT MARKING DETAILS.
4. SEE P&P SHEETS AND INTERSECTION LAYOUTS FOR ADDITIONAL INFORMATION.
5. ALL CHANNELIZING DEVICES AND SIGN PLACEMENT MUST CONFORM TO THE TEXAS MANUAL ON UNIFORM TRAFFIC CONTROL DEVICES (TMUTCD) AND TXDOT STANDARDS.
6. WARNING SIGN PLACEMENT SHALL NOT CONFLICT WITH EXISTING PERMANENT SIGNAGE.
7. EXISTING GROUND MOUNTED SIGNS SHALL BE TEMPORARILY REINSTALLED ON SKIDS WHERE NEEDED FOR TCP.

0 25 50

SCALE: 1" = 50'

STATE OF TEXAS
ELENA RAMON
141765
LICENSED
PROFESSIONAL ENGINEER

Elena Ramon

3/12/2025

GEORGETOWN TEXAS EST.1848

BGE, Inc.
101 West Louis Henna Blvd, Suite 400, Austin, TX 78728
Tel: 512-879-0400 • www.bgeinc.com
TBPE Registration No. F-1046

SHELL ROAD

TCP PHASE 1 LAYOUTS (PHASES 1A & 1B)

SHEET 2 OF 8

SHEET NO. 39

DATE: 3/12/2025 2:51:42 PM
FILE: G:\TXC\Projects\City Georgetown\10767-00 Shell Road\03 CADD\01 Shts\02-TCP\SHELL_TCP1_01.dgn

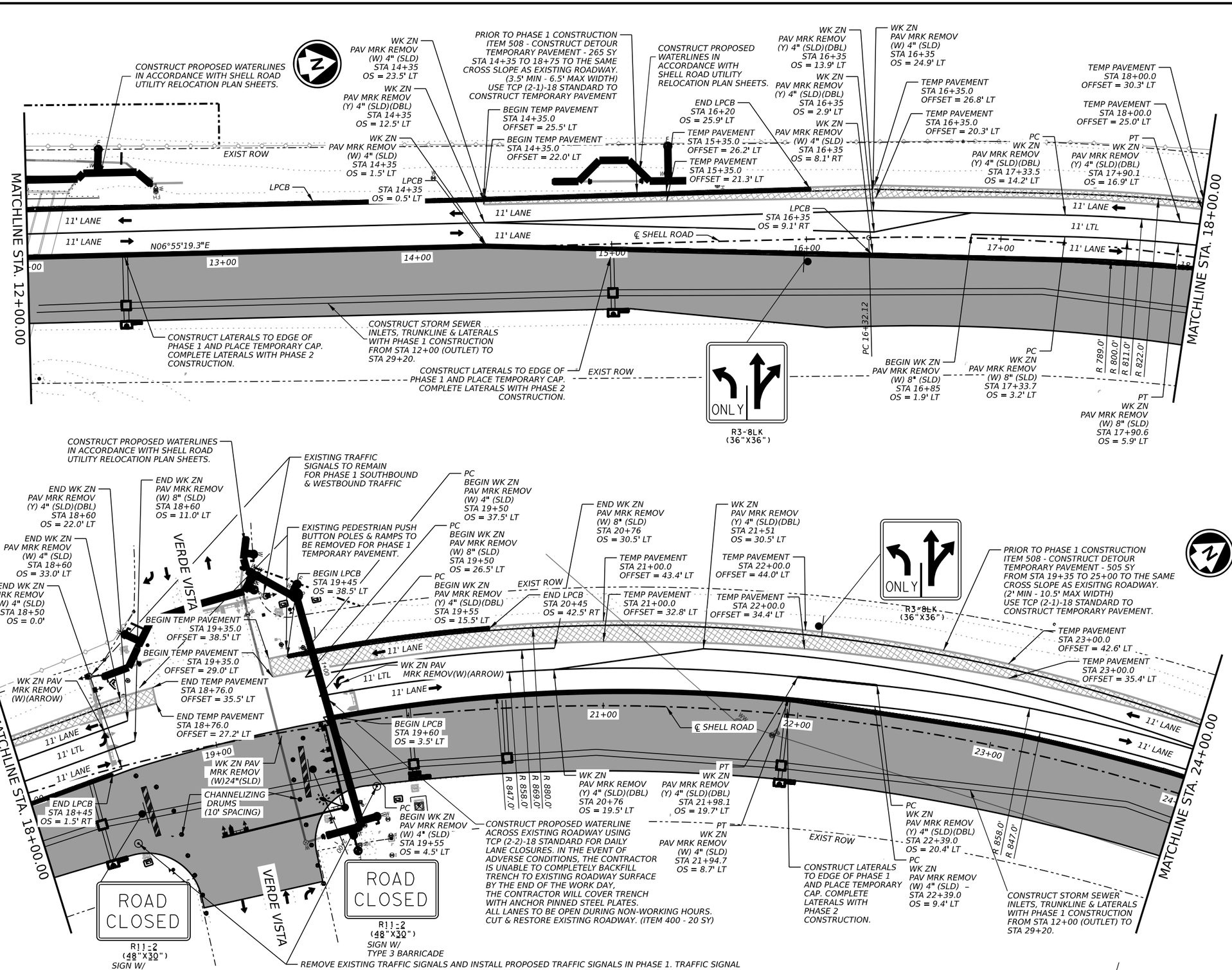

LEGEND

- DIRECTION OF TRAFFIC
- CHANNELIZING DEVICES
- SIGN
- TYPE 3 BARRICADE
- FLASHING ARROW BOARD
- LOW PROFILE CONCRETE BARRIER
- CONSTRUCTION THIS PHASE
- TEMPORARY PAVEMENT
- BUILT PREVIOUSLY
- TEMPORARY PAVEMENT BUILT PREVIOUSLY

NOTES:

1. MAINTAIN ACCESS TO ALL INTERSECTIONS AND DRIVEWAYS AT ALL TIMES UNLESS OTHERWISE NOTED.
2. SEE TCP SEQUENCE OF WORK.
3. SEE BC, TCP, AND WZ STANDARDS FOR TEMPORARY SIGNING AND PAVEMENT MARKING DETAILS.
4. SEE P&P SHEETS AND INTERSECTION LAYOUTS FOR ADDITIONAL INFORMATION.
5. ALL CHANNELIZING DEVICES AND SIGN PLACEMENT MUST CONFORM TO THE TEXAS MANUAL ON UNIFORM TRAFFIC CONTROL DEVICES (TMUTCD) AND TXDOT STANDARDS.
6. WARNING SIGN PLACEMENT SHALL NOT CONFLICT WITH EXISTING PERMANENT SIGNAGE.
7. EXISTING GROUND MOUNTED SIGNS SHALL BE TEMPORARILY REINSTALLED ON SKIDS WHERE NEEDED FOR TCP.

0 25 50

SCALE: 1" = 50'

STATE OF TEXAS
ELENA RAMON
141765
LICENSED
PROFESSIONAL ENGINEER

3/12/2025

GEORGETOWN TEXAS EST. 1848

BGE, Inc.
101 West Louis Henna Blvd, Suite 400, Austin, TX 78728
Tel: 512-879-0400 • www.bgeinc.com
TBPE Registration No. F-1046

SHELL ROAD

TCP PHASE 1 LAYOUTS (PHASES 1A & 1B)

SHEET 3 OF 8

SHEET NO. 40

DATE: 3/12/2025 2:51:52 PM
FILE: G:\TXC\Projects\City Georgetown\10767-00 Shell Road\03 CADD\01 Shts\02-TCPSHELL_TCP1 02.dgn

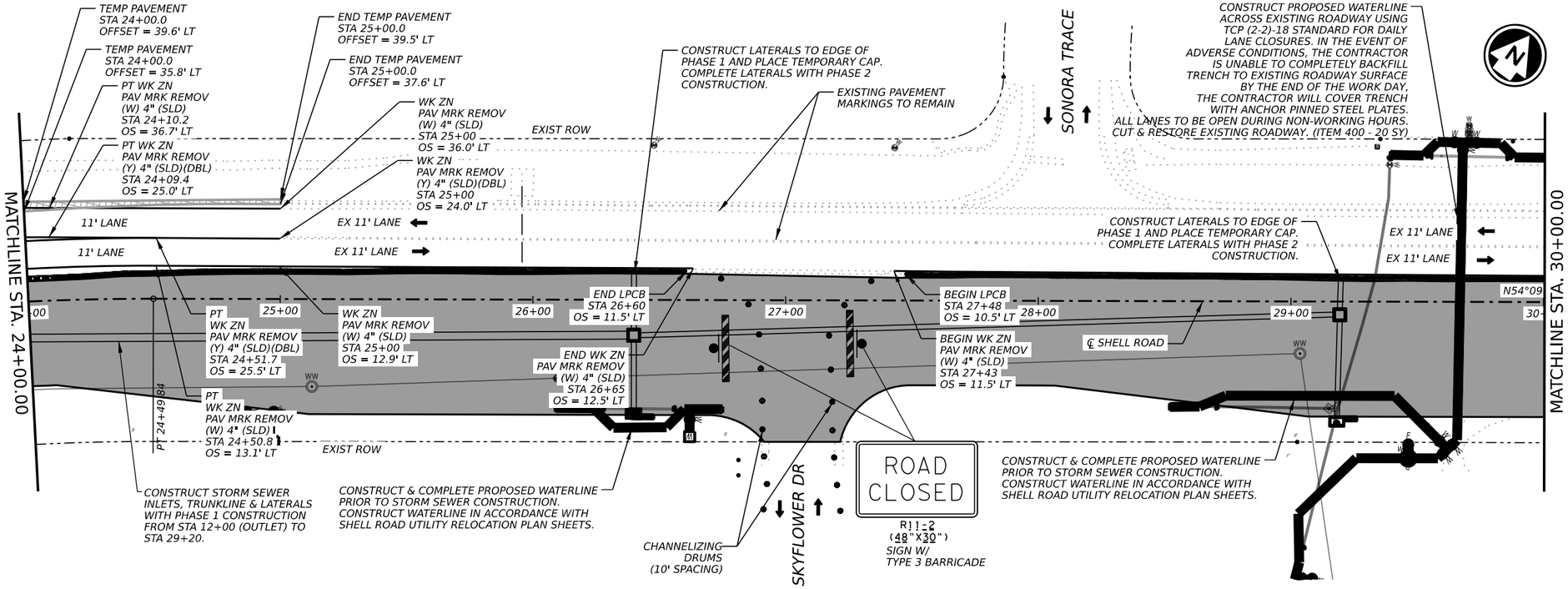

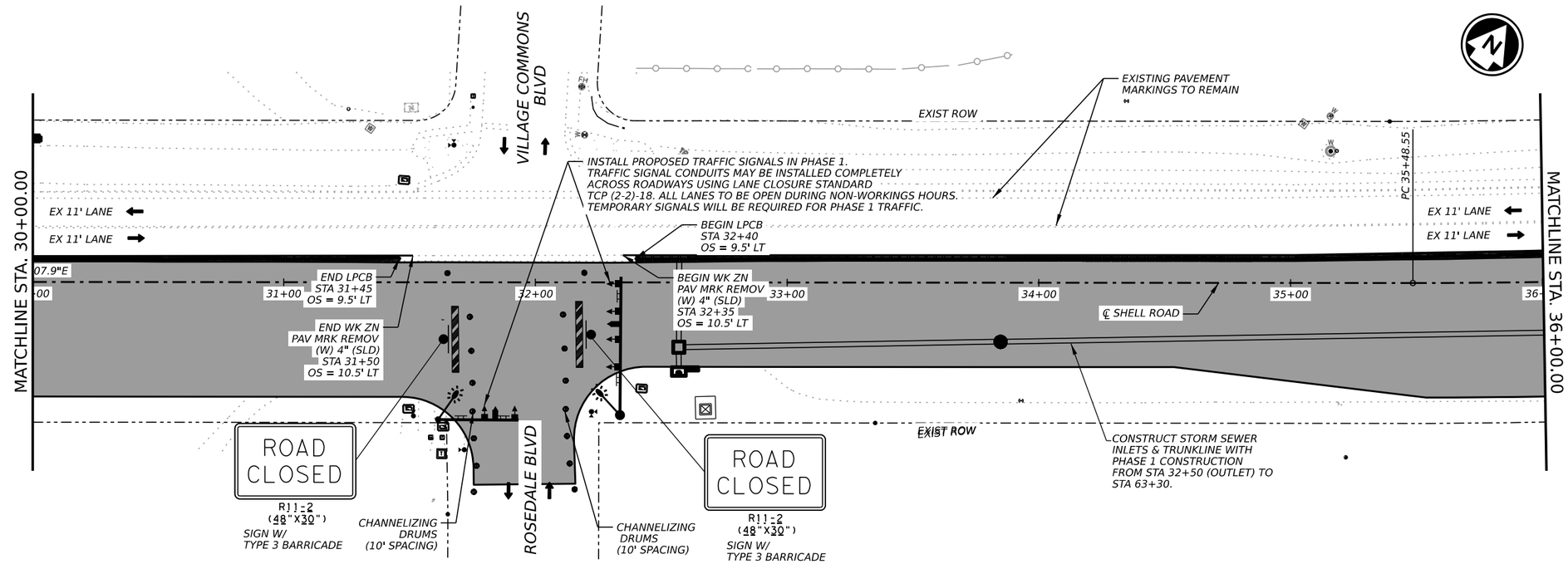

STATE OF TEXAS
ELENA RAMON
141765
LICENSED
PROFESSIONAL ENGINEER
3/12/2025

EST.1848
GEORGETOWN
TEXAS

BGE, Inc.
101 West Louis Henna Blvd, Suite 400, Austin, TX 78728
Tel: 512-879-0400 • www.bgeinc.com
TBPE Registration No. F-1046

SHELL ROAD

TCP PHASE 1 LAYOUTS (PHASES 1A & 1B)

SHEET 4 OF 8

SHEET NO. 41

DATE: 3/12/2025 2:52:02 PM
FILE: G:\TXC\Projects\City Georgetown\10767-00 Shell Road\03 CADD\01 Shts\02-TCP\SHELL_TCP1_03.dgn

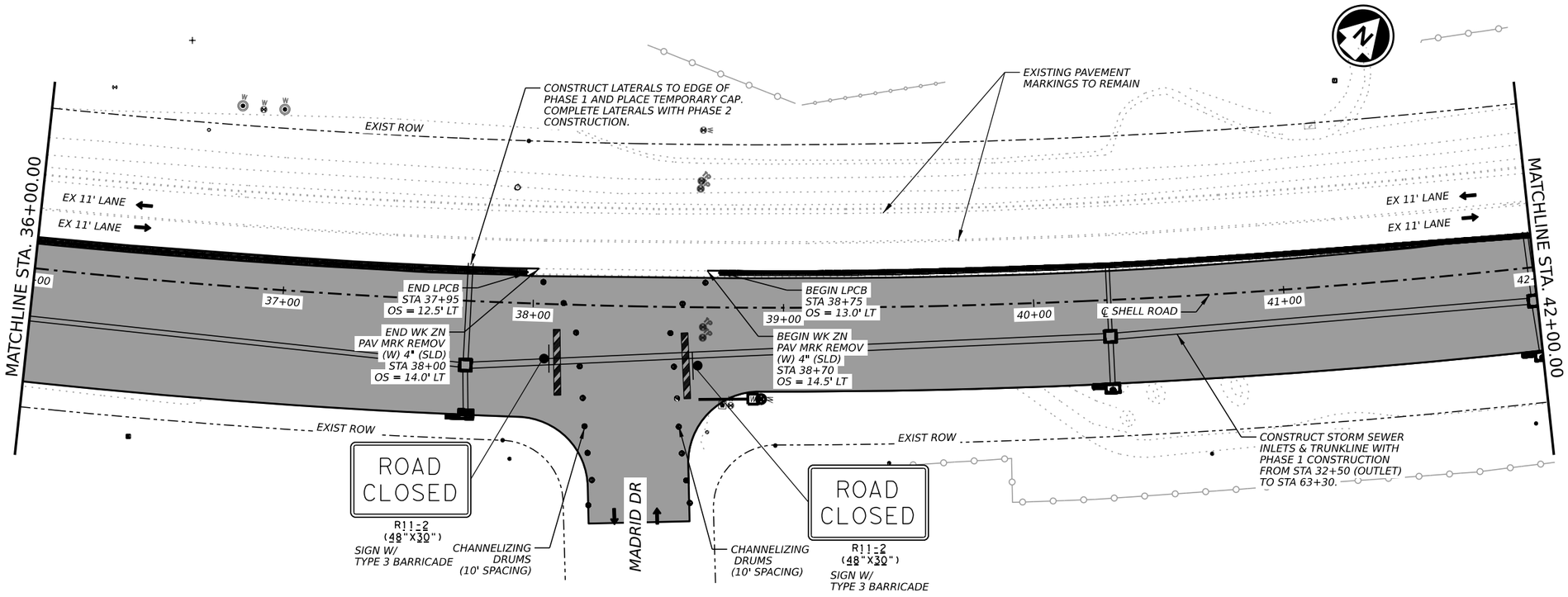

LEGEND

- DIRECTION OF TRAFFIC
- CHANNELIZING DEVICES
- SIGN
- TYPE 3 BARRICADE
- FLASHING ARROW BOARD
- LOW PROFILE CONCRETE BARRIER
- CONSTRUCTION THIS PHASE
- TEMPORARY PAVEMENT
- BUILT PREVIOUSLY
- TEMPORARY PAVEMENT BUILT PREVIOUSLY

NOTES:

1. MAINTAIN ACCESS TO ALL INTERSECTIONS AND DRIVEWAYS AT ALL TIMES UNLESS OTHERWISE NOTED.
2. SEE TCP SEQUENCE OF WORK.
3. SEE BC, TCP, AND WZ STANDARDS FOR TEMPORARY SIGNING AND PAVEMENT MARKING DETAILS.
4. SEE P&P SHEETS AND INTERSECTION LAYOUTS FOR ADDITIONAL INFORMATION.
5. ALL CHANNELIZING DEVICES AND SIGN PLACEMENT MUST CONFORM TO THE TEXAS MANUAL ON UNIFORM TRAFFIC CONTROL DEVICES (TMUTCD) AND TXDOT STANDARDS.
6. WARNING SIGN PLACEMENT SHALL NOT CONFLICT WITH EXISTING PERMANENT SIGNAGE.
7. EXISTING GROUND MOUNTED SIGNS SHALL BE TEMPORARILY REINSTALLED ON SKIDS WHERE NEEDED FOR TCP.

0 25 50

SCALE: 1" = 50'

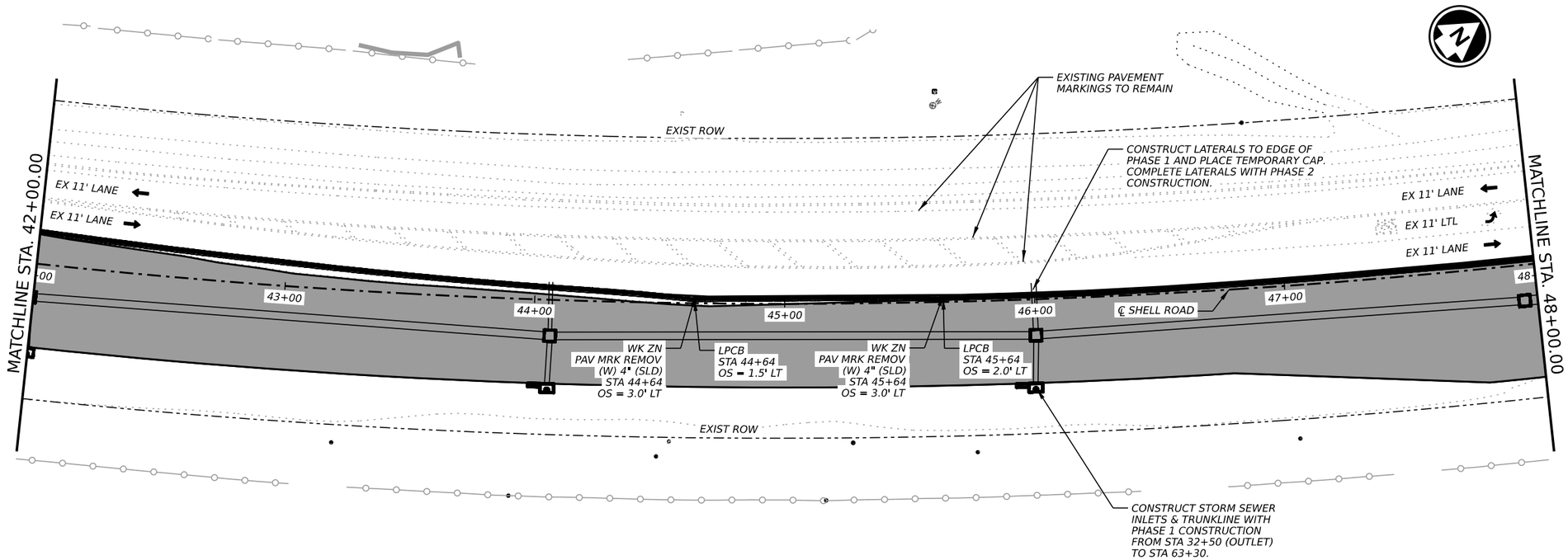

STATE OF TEXAS
ELENA RAMON
141765
LICENSED
PROFESSIONAL ENGINEER

Elena Ramon

3/12/2025

EST.1848 GEORGETOWN TEXAS

BGE, Inc.
101 West Louis Henna Blvd, Suite 400, Austin, TX 78728
Tel: 512-879-0400 • www.bgeinc.com
TBPE Registration No. F-1046

SHELL ROAD

TCP PHASE 1 LAYOUTS (PHASES 1A & 1B)

SHEET 5 OF 8

SHEET NO. 42

DATE: 3/12/2025 2:52:12 PM
FILE: G:\TXC\Projects\City Georgetown\10767-00 Shell Road\03 CADD\01 Shts\02-TCP\SHELL_TCP1_04.dgn

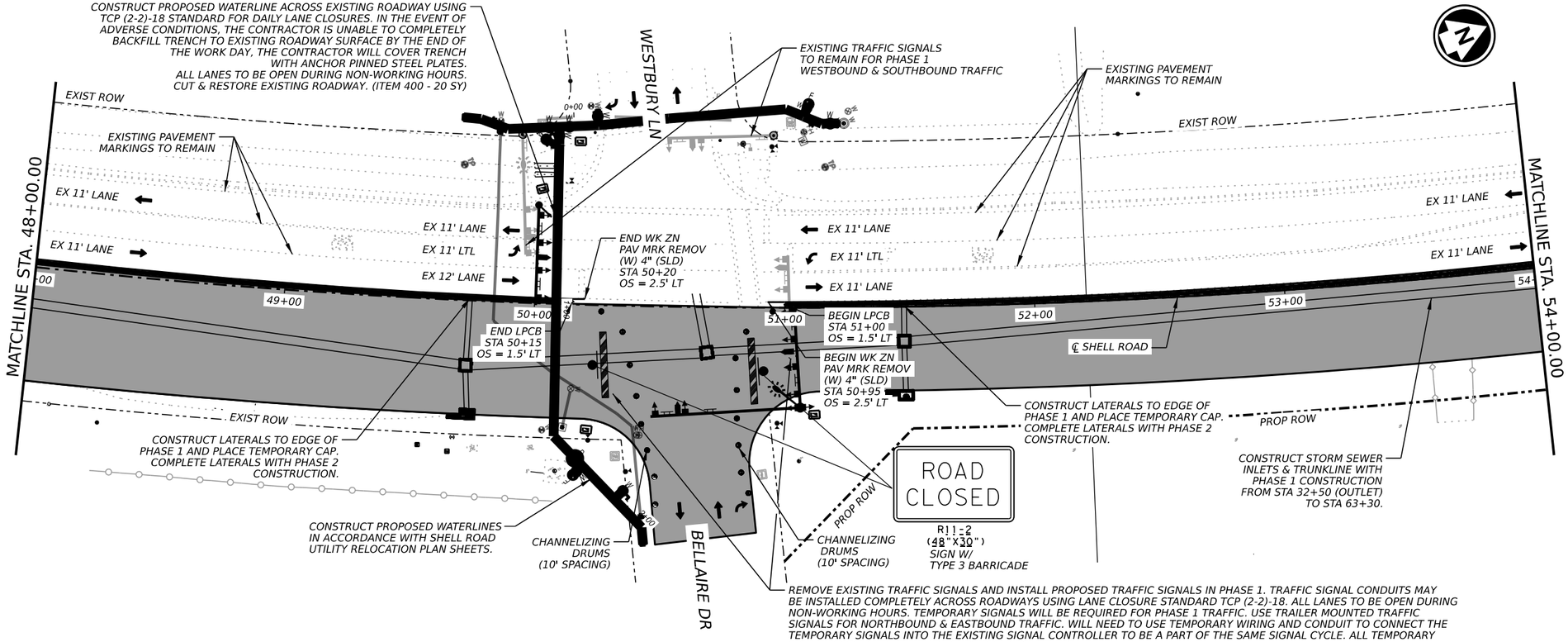

LEGEND

- DIRECTION OF TRAFFIC
- CHANNELIZING DEVICES
- SIGN
- TYPE 3 BARRICADE
- FLASHING ARROW BOARD
- LOW PROFILE CONCRETE BARRIER
- CONSTRUCTION THIS PHASE
- TEMPORARY PAVEMENT
- BUILT PREVIOUSLY
- TEMPORARY PAVEMENT BUILT PREVIOUSLY

NOTES:

1. MAINTAIN ACCESS TO ALL INTERSECTIONS AND DRIVEWAYS AT ALL TIMES UNLESS OTHERWISE NOTED.
2. SEE TCP SEQUENCE OF WORK.
3. SEE BC, TCP, AND WZ STANDARDS FOR TEMPORARY SIGNING AND PAVEMENT MARKING DETAILS.
4. SEE P&P SHEETS AND INTERSECTION LAYOUTS FOR ADDITIONAL INFORMATION.
5. ALL CHANNELIZING DEVICES AND SIGN PLACEMENT MUST CONFORM TO THE TEXAS MANUAL ON UNIFORM TRAFFIC CONTROL DEVICES (TMUTCD) AND TXDOT STANDARDS.
6. WARNING SIGN PLACEMENT SHALL NOT CONFLICT WITH EXISTING PERMANENT SIGNAGE.
7. EXISTING GROUND MOUNTED SIGNS SHALL BE TEMPORARILY REINSTALLED ON SKIDS WHERE NEEDED FOR TCP.

0 25 50

SCALE: 1" = 50'

STATE OF TEXAS
ELENA RAMON
141765
LICENSED
PROFESSIONAL ENGINEER

3/12/2025

EST.1848 GEORGETOWN TEXAS

BGE, Inc.
101 West Louis Henna Blvd, Suite 400, Austin, TX 78728
Tel: 512-879-0400 • www.bgeinc.com
TBPE Registration No. F-1046

SHELL ROAD

TCP PHASE 1 LAYOUTS (PHASES 1A & 1B)

SHEET 6 OF 8

SHEET NO. 43

DATE: 3/12/2025 2:52:22 PM
FILE: G:\TXC\Projects\City Georgetown\10767-00 Shell Road\03 CADD\01 Shts\02-TCP\SHELL_TCP1_05.dgn

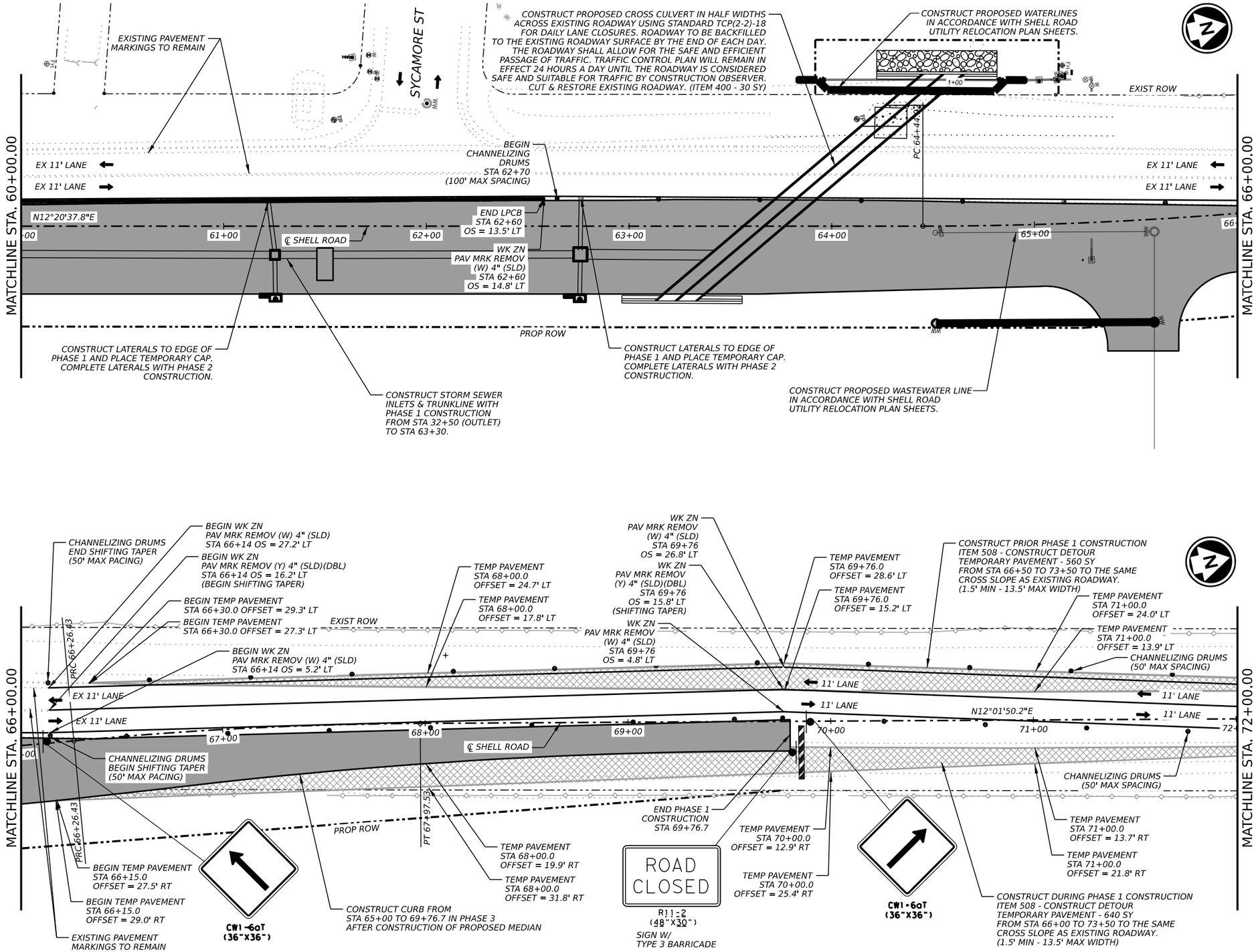

LEGEND

- DIRECTION OF TRAFFIC
- CHANNELIZING DEVICES
- SIGN
- TYPE 3 BARRICADE
- FLASHING ARROW BOARD
- LOW PROFILE CONCRETE BARRIER
- CONSTRUCTION THIS PHASE
- TEMPORARY PAVEMENT
- BUILT PREVIOUSLY
- TEMPORARY PAVEMENT BUILT PREVIOUSLY

NOTES:

1. MAINTAIN ACCESS TO ALL INTERSECTIONS AND DRIVEWAYS AT ALL TIMES UNLESS OTHERWISE NOTED.
2. SEE TCP SEQUENCE OF WORK.
3. SEE BC, TCP, AND WZ STANDARDS FOR TEMPORARY SIGNING AND PAVEMENT MARKING DETAILS.
4. SEE P&P SHEETS AND INTERSECTION LAYOUTS FOR ADDITIONAL INFORMATION.
5. ALL CHANNELIZING DEVICES AND SIGN PLACEMENT MUST CONFORM TO THE TEXAS MANUAL ON UNIFORM TRAFFIC CONTROL DEVICES (TMUTCD) AND TXDOT STANDARDS.
6. WARNING SIGN PLACEMENT SHALL NOT CONFLICT WITH EXISTING PERMANENT SIGNAGE.
7. EXISTING GROUND MOUNTED SIGNS SHALL BE TEMPORARILY REINSTALLED ON SKIDS WHERE NEEDED FOR TCP.

0 25 50

SCALE: 1" = 50'

STATE OF TEXAS
ELENA RAMON
141765
LICENSED
PROFESSIONAL ENGINEER

3/12/2025

EST.1848 GEORGETOWN TEXAS

BGE, Inc.
101 West Louis Henna Blvd, Suite 400, Austin, TX 78728
Tel: 512-879-0400 • www.bgeinc.com
TBPE Registration No. F-1046

SHELL ROAD

TCP PHASE 1 LAYOUTS (PHASES 1A & 1B)

SHEET 7 OF 8

SHEET NO. 44

DATE: 3/12/2025 2:52:31 PM
FILE: G:\TXC\Projects\City Georgetown\10767-00 Shell Road\03 CADD\01 Shts\02-TCP\SHELL_TCP1_06.dgn

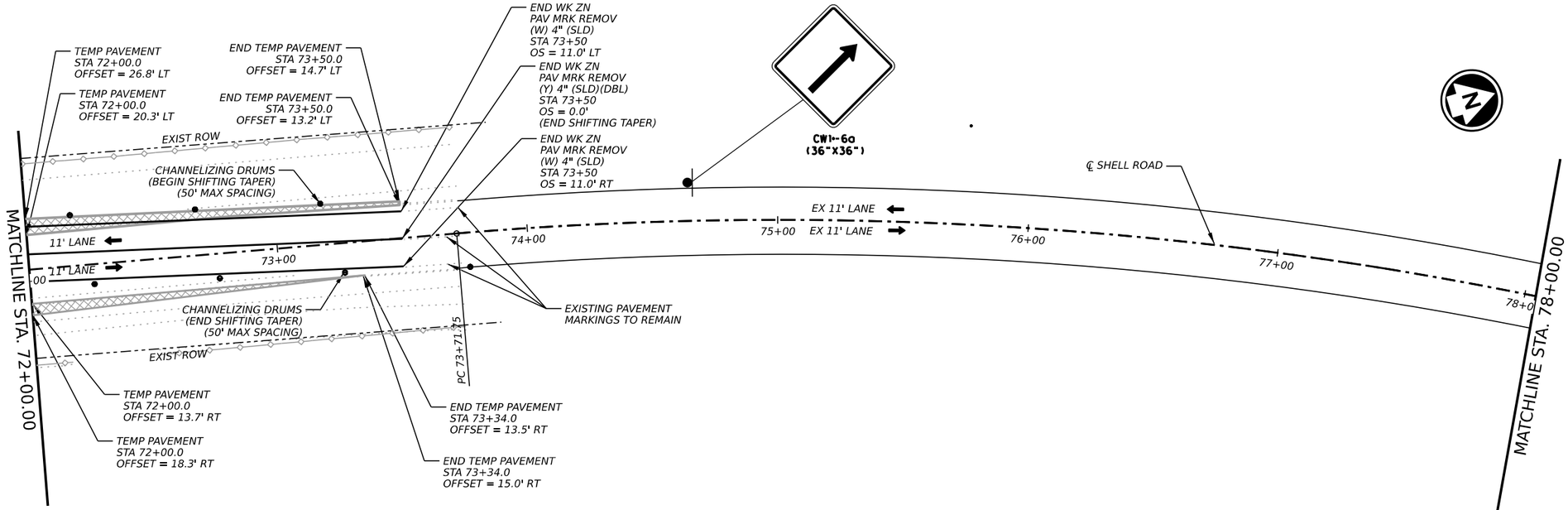

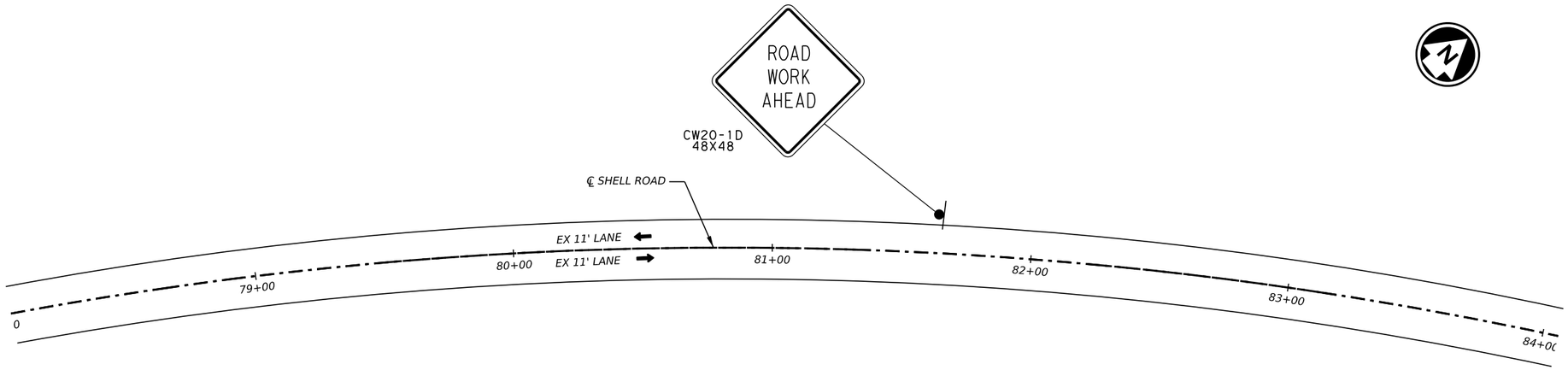

LEGEND

- DIRECTION OF TRAFFIC
- CHANNELIZING DEVICES
- SIGN
- TYPE 3 BARRICADE
- FLASHING ARROW BOARD
- LOW PROFILE CONCRETE BARRIER
- CONSTRUCTION THIS PHASE
- TEMPORARY PAVEMENT
- BUILT PREVIOUSLY
- TEMPORARY PAVEMENT BUILT PREVIOUSLY

NOTES:

1. MAINTAIN ACCESS TO ALL INTERSECTIONS AND DRIVEWAYS AT ALL TIMES UNLESS OTHERWISE NOTED.
2. SEE TCP SEQUENCE OF WORK.
3. SEE BC, TCP, AND WZ STANDARDS FOR TEMPORARY SIGNING AND PAVEMENT MARKING DETAILS.
4. SEE P&P SHEETS AND INTERSECTION LAYOUTS FOR ADDITIONAL INFORMATION.
5. ALL CHANNELIZING DEVICES AND SIGN PLACEMENT MUST CONFORM TO THE TEXAS MANUAL ON UNIFORM TRAFFIC CONTROL DEVICES (TMUTCD) AND TXDOT STANDARDS.
6. WARNING SIGN PLACEMENT SHALL NOT CONFLICT WITH EXISTING PERMANENT SIGNAGE.
7. EXISTING GROUND MOUNTED SIGNS SHALL BE TEMPORARILY REINSTALLED ON SKIDS WHERE NEEDED FOR TCP.

0 25 50

SCALE: 1" = 50'

STATE OF TEXAS
ELENA RAMON
141765
LICENSED
PROFESSIONAL ENGINEER
3/12/2025

EST.1848
GEORGETOWN
TEXAS

BGE, Inc.
101 West Louis Henna Blvd, Suite 400, Austin, TX 78728
Tel: 512-879-0400 • www.bgeinc.com
TBPE Registration No. F-1046

SHELL ROAD

TCP PHASE 1 LAYOUTS (PHASES 1A & 1B)

SHEET 8 OF 8

SHEET NO. 45

DATE: 3/12/2025 2:52:39 PM
FILE: G:\TXC\Projects\City Georgetown\10767-00 Shell Road\03 CADD\01 Shts\02-TCP\SHELL_TCP1_07.dgn

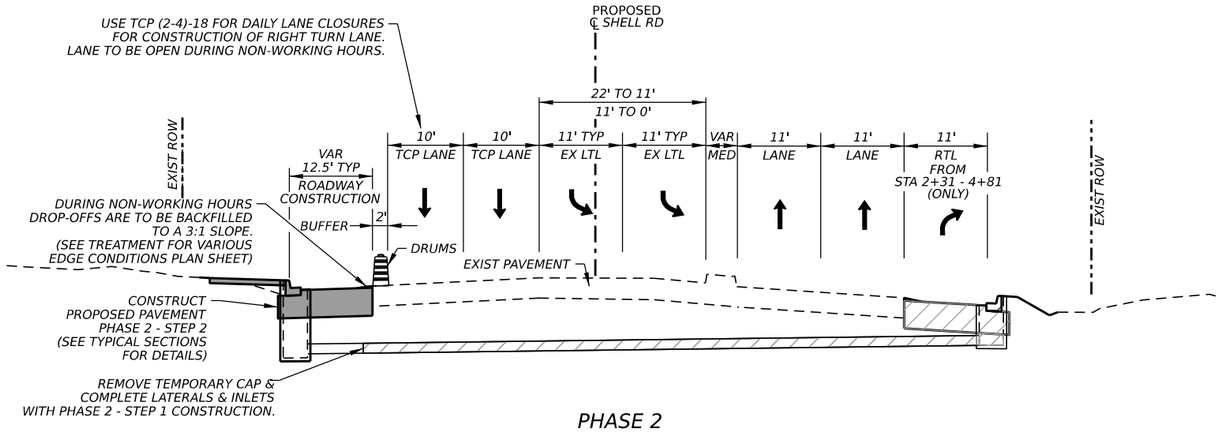

PHASE 2

STA 1+00 TO STA 8+81

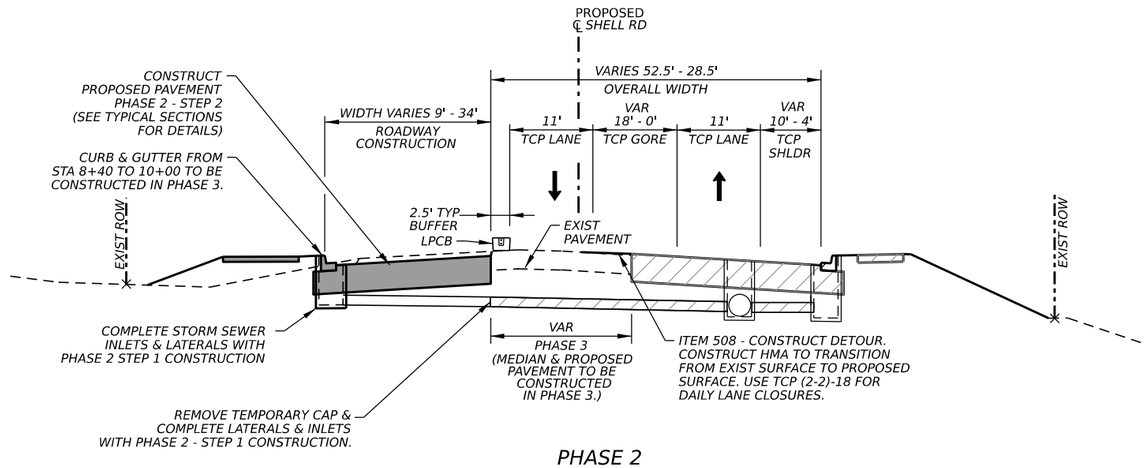

PHASE 2

STA 8+81 TO STA 14+35

LEGEND

- DIRECTION OF TRAFFIC
- CHANNELIZING DEVICES
- SIGN
- TYPE 3 BARRICADE
- FLASHING ARROW BOARD
- LOW PROFILE CONCRETE BARRIER
- CONSTRUCTION THIS PHASE
- TEMPORARY PAVEMENT
- BUILT PREVIOUSLY
- TEMPORARY PAVEMENT BUILT PREVIOUSLY

NOTES:

1. MAINTAIN ACCESS TO ALL INTERSECTIONS AND DRIVEWAYS AT ALL TIMES UNLESS OTHERWISE NOTED.
2. SEE TCP SEQUENCE OF WORK.
3. SEE BC, TCP, AND WZ STANDARDS FOR TEMPORARY SIGNING AND PAVEMENT MARKING DETAILS.
4. SEE P&P SHEETS AND INTERSECTION LAYOUTS FOR ADDITIONAL INFORMATION.
5. ALL CHANNELIZING DEVICES AND SIGN PLACEMENT MUST CONFORM TO THE TEXAS MANUAL ON UNIFORM TRAFFIC CONTROL DEVICES (TMUTCD) AND TXDOT STANDARDS.
6. WARNING SIGN PLACEMENT SHALL NOT CONFLICT WITH EXISTING PERMANENT SIGNAGE.
7. EXISTING GROUND MOUNTED SIGNS SHALL BE TEMPORARILY REINSTALLED ON SKIDS WHERE NEEDED FOR TCP.

0 10 20

SCALE: 1" = 20'

STATE OF TEXAS
ELENA RAMON
141765
LICENSED
PROFESSIONAL ENGINEER

3/12/2025

EST.1848 GEORGETOWN TEXAS

BGE, Inc.
101 West Louis Henna Blvd, Suite 400, Austin, TX 78728
Tel: 512-879-0400 • www.bgeinc.com
TBPE Registration No. F-1046

SHELL ROAD

TCP TYPICAL SECTIONS PHASE 2

SHEET 1 OF 4

SHEET NO. 46

DATE: 3/12/2025 2:52:44 PM
FILE: G:\TXC\Projects\City Georgetown\10767-00 Shell Road\03 CADD\01 Shts\02-TCP\SHELL_TCP_TYP2.dgn

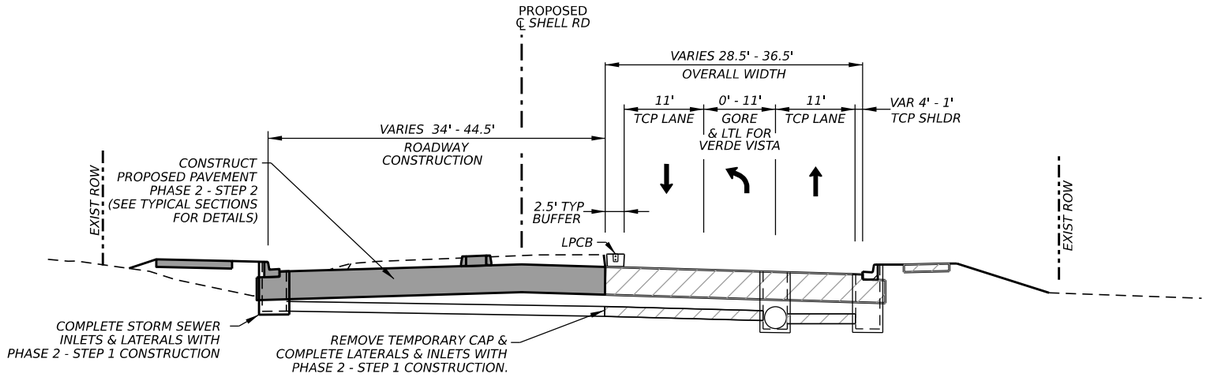

PHASE 2

STA 14+35 TO STA 19+50

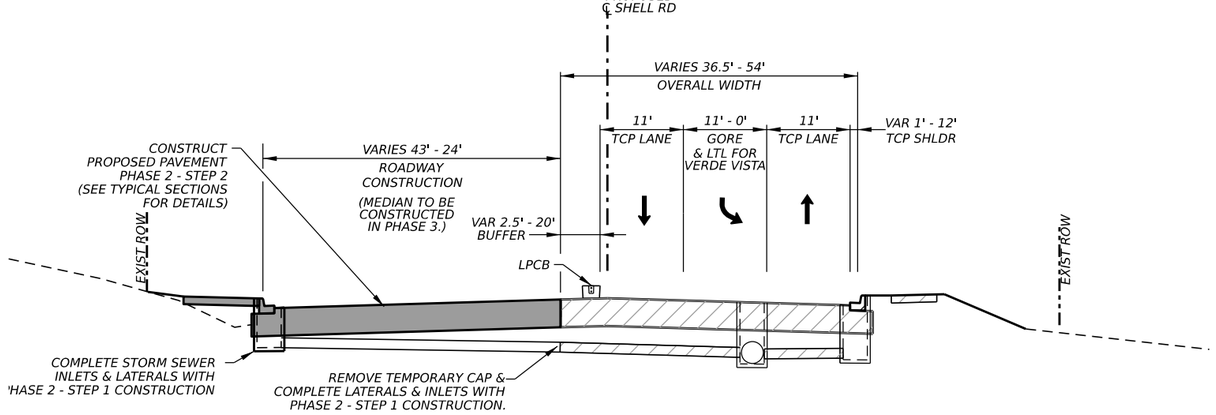

PHASE 2

STA 19+50 TO STA 25+00

LEGEND

- DIRECTION OF TRAFFIC
- CHANNELIZING DEVICES
- SIGN
- TYPE 3 BARRICADE
- FLASHING ARROW BOARD
- LOW PROFILE CONCRETE BARRIER
- CONSTRUCTION THIS PHASE
- TEMPORARY PAVEMENT
- BUILT PREVIOUSLY
- TEMPORARY PAVEMENT BUILT PREVIOUSLY

NOTES:

1. MAINTAIN ACCESS TO ALL INTERSECTIONS AND DRIVEWAYS AT ALL TIMES UNLESS OTHERWISE NOTED.
2. SEE TCP SEQUENCE OF WORK.
3. SEE BC, TCP, AND WZ STANDARDS FOR TEMPORARY SIGNING AND PAVEMENT MARKING DETAILS.
4. SEE P&P SHEETS AND INTERSECTION LAYOUTS FOR ADDITIONAL INFORMATION.
5. ALL CHANNELIZING DEVICES AND SIGN PLACEMENT MUST CONFORM TO THE TEXAS MANUAL ON UNIFORM TRAFFIC CONTROL DEVICES (TMUTCD) AND TXDOT STANDARDS.
6. WARNING SIGN PLACEMENT SHALL NOT CONFLICT WITH EXISTING PERMANENT SIGNAGE.
7. EXISTING GROUND MOUNTED SIGNS SHALL BE TEMPORARILY REINSTALLED ON SKIDS WHERE NEEDED FOR TCP.

0 10 20

SCALE: 1" = 20'

STATE OF TEXAS
ELENA RAMON
141765
LICENSED
PROFESSIONAL ENGINEER

3/12/2025

EST.1848 GEORGETOWN TEXAS

BGE, Inc.
101 West Louis Henna Blvd, Suite 400, Austin, TX 78728
Tel: 512-879-0400 • www.bgeinc.com
TBPE Registration No. F-1046

SHELL ROAD

TCP TYPICAL SECTIONS PHASE 2

SHEET 2 OF 4

SHEET NO. 47

DATE: 3/12/2025 2:52:44 PM
FILE: G:\TXC\Projects\City Georgetown\10767-00 Shell Road\03 CADD\01 Shts\02-TCP\SHELL_TCP_TYP2.dgn

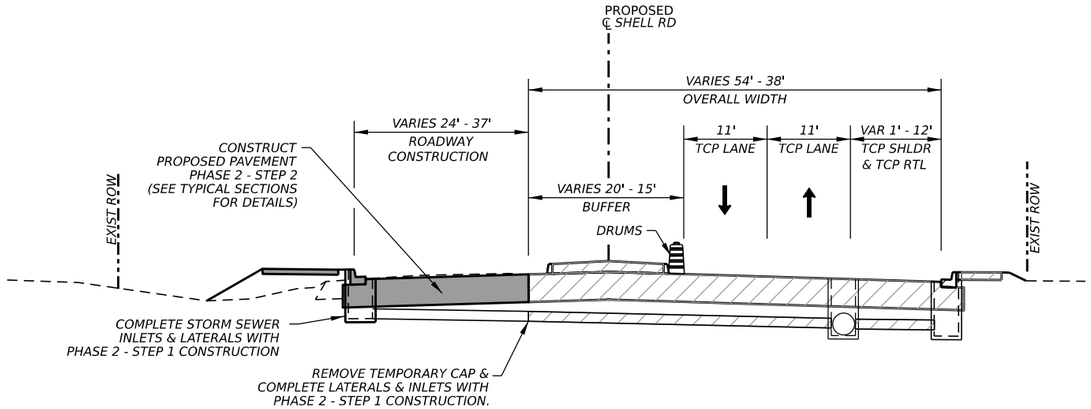

PHASE 2

STA 25+00 TO STA 43+00

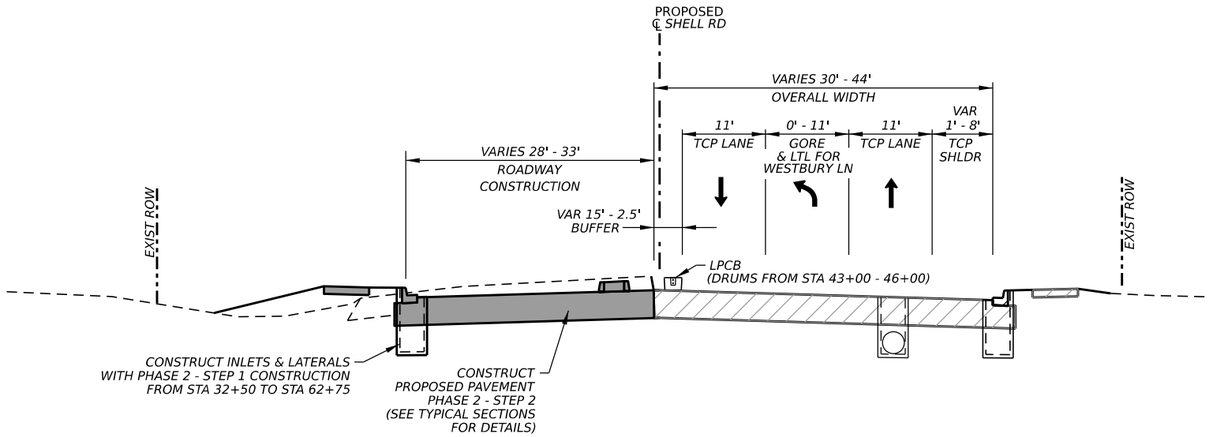

PHASE 2

STA 43+00 TO STA 50+50

LEGEND

- DIRECTION OF TRAFFIC
- CHANNELIZING DEVICES
- SIGN
- TYPE 3 BARRICADE
- FLASHING ARROW BOARD
- LOW PROFILE CONCRETE BARRIER
- CONSTRUCTION THIS PHASE
- TEMPORARY PAVEMENT
- BUILT PREVIOUSLY
- TEMPORARY PAVEMENT BUILT PREVIOUSLY

NOTES:

1. MAINTAIN ACCESS TO ALL INTERSECTIONS AND DRIVEWAYS AT ALL TIMES UNLESS OTHERWISE NOTED.
2. SEE TCP SEQUENCE OF WORK.
3. SEE BC, TCP, AND WZ STANDARDS FOR TEMPORARY SIGNING AND PAVEMENT MARKING DETAILS.
4. SEE P&P SHEETS AND INTERSECTION LAYOUTS FOR ADDITIONAL INFORMATION.
5. ALL CHANNELIZING DEVICES AND SIGN PLACEMENT MUST CONFORM TO THE TEXAS MANUAL ON UNIFORM TRAFFIC CONTROL DEVICES (TMUTCD) AND TXDOT STANDARDS.
6. WARNING SIGN PLACEMENT SHALL NOT CONFLICT WITH EXISTING PERMANENT SIGNAGE.
7. EXISTING GROUND MOUNTED SIGNS SHALL BE TEMPORARILY REINSTALLED ON SKIDS WHERE NEEDED FOR TCP.

0 10 20

SCALE: 1" = 20'

STATE OF TEXAS
ELENA RAMON
141765
LICENSED
PROFESSIONAL ENGINEER

3/12/2025

EST.1848 GEORGETOWN TEXAS

BGE, Inc.
101 West Louis Henna Blvd, Suite 400, Austin, TX 78728
Tel: 512-879-0400 • www.bgeinc.com
TBPE Registration No. F-1046

SHELL ROAD

TCP TYPICAL SECTIONS PHASE 2

SHEET 3 OF 4

SHEET NO. 48

DATE: 3/12/2025 2:52:45 PM
FILE: G:\TXC\Projects\City Georgetown\10767-00 Shell Road\03 CADD\01 Shts\02-TCP\SHELL_TCP_TYP2.dgn

CK: DW: CK: DW:

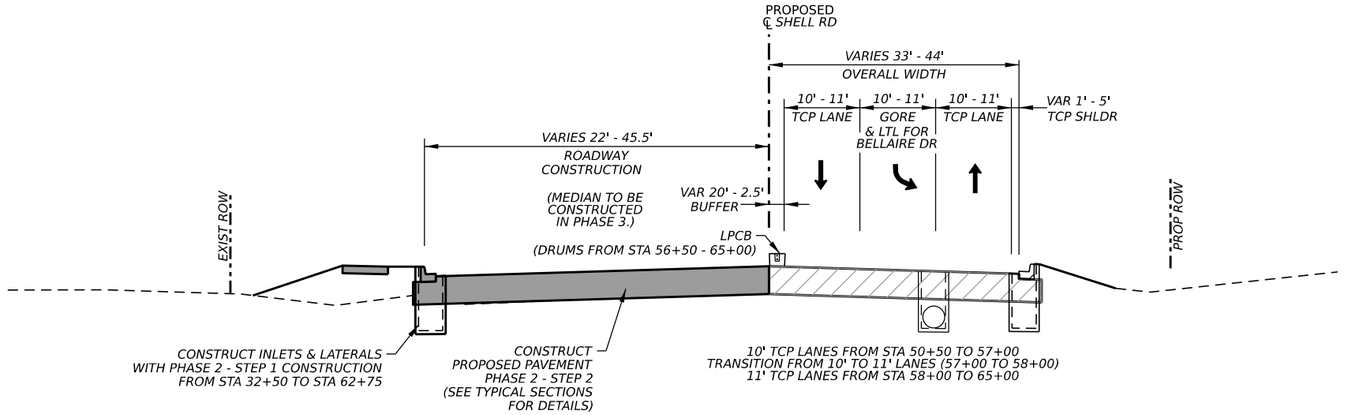

PHASE 2

STA 50+50 TO STA 65+00

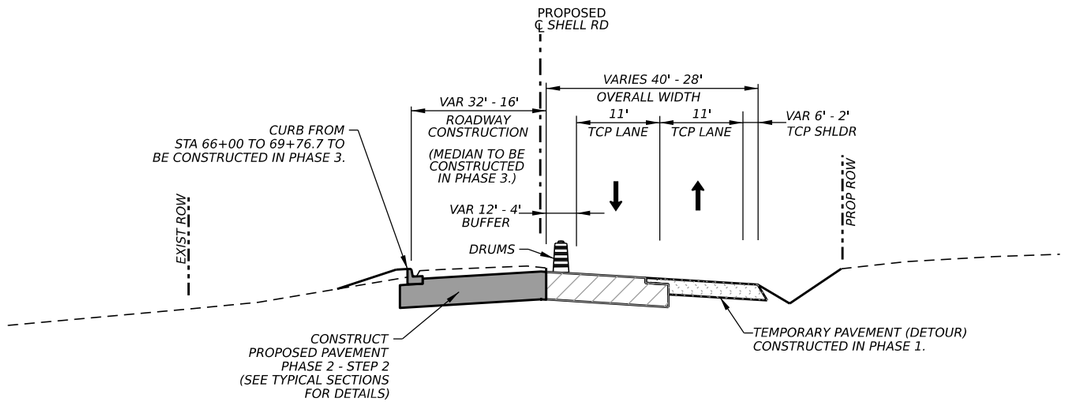

PHASE 2

STA 65+00 TO STA 73+50

LEGEND

- DIRECTION OF TRAFFIC
- CHANNELIZING DEVICES
- SIGN
- TYPE 3 BARRICADE
- FLASHING ARROW BOARD
- LOW PROFILE CONCRETE BARRIER
- CONSTRUCTION THIS PHASE
- TEMPORARY PAVEMENT
- BUILT PREVIOUSLY
- TEMPORARY PAVEMENT BUILT PREVIOUSLY

NOTES:

1. MAINTAIN ACCESS TO ALL INTERSECTIONS AND DRIVEWAYS AT ALL TIMES UNLESS OTHERWISE NOTED.
2. SEE TCP SEQUENCE OF WORK.
3. SEE BC, TCP, AND WZ STANDARDS FOR TEMPORARY SIGNING AND PAVEMENT MARKING DETAILS.
4. SEE P&P SHEETS AND INTERSECTION LAYOUTS FOR ADDITIONAL INFORMATION.
5. ALL CHANNELIZING DEVICES AND SIGN PLACEMENT MUST CONFORM TO THE TEXAS MANUAL ON UNIFORM TRAFFIC CONTROL DEVICES (TMUTCD) AND TXDOT STANDARDS.
6. WARNING SIGN PLACEMENT SHALL NOT CONFLICT WITH EXISTING PERMANENT SIGNAGE.
7. EXISTING GROUND MOUNTED SIGNS SHALL BE TEMPORARILY REINSTALLED ON SKIDS WHERE NEEDED FOR TCP.

0 10 20

SCALE: 1" = 20'

STATE OF TEXAS
ELENA RAMON
141765
LICENSED
PROFESSIONAL ENGINEER

3/12/2025

EST.1848 GEORGETOWN TEXAS

BGE, Inc.
101 West Louis Henna Blvd, Suite 400, Austin, TX 78728
Tel: 512-879-0400 • www.bgeinc.com
TBPE Registration No. F-1046

SHELL ROAD

TCP TYPICAL SECTIONS PHASE 2

SHEET 4 OF 4

SHEET NO. 49

DATE: 3/12/2025 2:52:46 PM
FILE: G:\TXC\Projects\City Georgetown\10767-00 Shell Road\03 CADD\01 Shts\02-TCP\SHELL_TCP_TYP2.dgn

DW: CK: DW: CK:

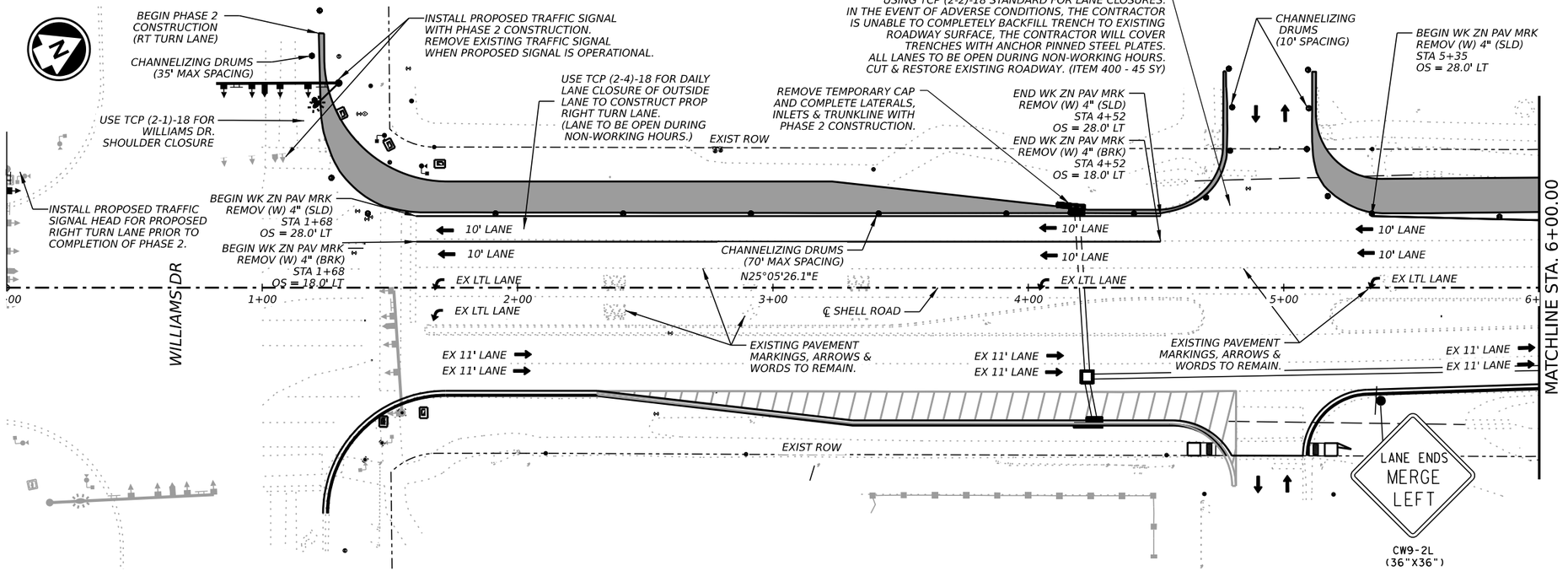

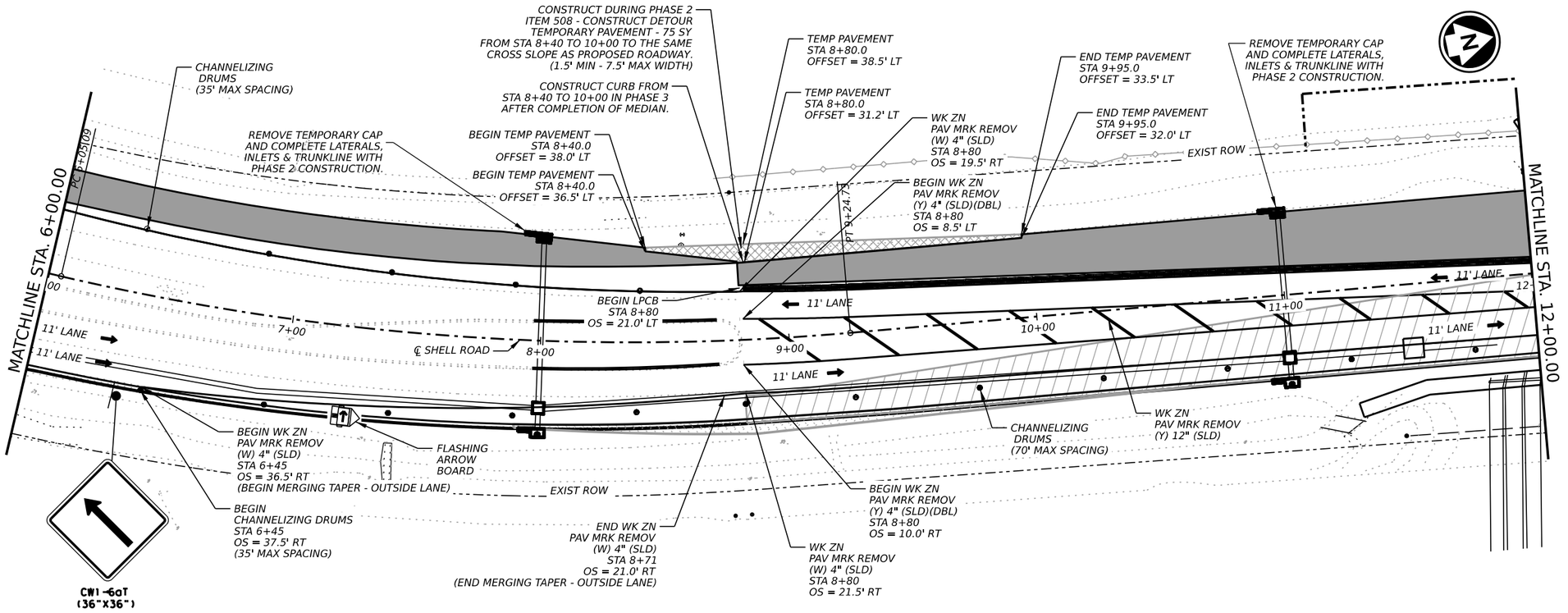

LEGEND

- DIRECTION OF TRAFFIC
- CHANNELIZING DEVICES
- SIGN
- TYPE 3 BARRICADE
- FLASHING ARROW BOARD
- LOW PROFILE CONCRETE BARRIER
- CONSTRUCTION THIS PHASE
- TEMPORARY PAVEMENT
- BUILT PREVIOUSLY
- TEMPORARY PAVEMENT BUILT PREVIOUSLY

NOTES:

1. MAINTAIN ACCESS TO ALL INTERSECTIONS AND DRIVEWAYS AT ALL TIMES UNLESS OTHERWISE NOTED.
2. SEE TCP SEQUENCE OF WORK.
3. SEE BC, TCP, AND WZ STANDARDS FOR TEMPORARY SIGNING AND PAVEMENT MARKING DETAILS.
4. SEE P&P SHEETS AND INTERSECTION LAYOUTS FOR ADDITIONAL INFORMATION.
5. ALL CHANNELIZING DEVICES AND SIGN PLACEMENT MUST CONFORM TO THE TEXAS MANUAL ON UNIFORM TRAFFIC CONTROL DEVICES (TMUTCD) AND TXDOT STANDARDS.
6. WARNING SIGN PLACEMENT SHALL NOT CONFLICT WITH EXISTING PERMANENT SIGNAGE.
7. EXISTING GROUND MOUNTED SIGNS SHALL BE TEMPORARILY REINSTALLED ON SKIDS WHERE NEEDED FOR TCP.

0 25 50

SCALE: 1" = 50'

STATE OF TEXAS
ELENA RAMON
141765
LICENSED
PROFESSIONAL ENGINEER

3/12/2025

EST.1848 GEORGETOWN TEXAS

BGE, Inc.
101 West Louis Henna Blvd, Suite 400, Austin, TX 78728
Tel: 512-879-0400 • www.bgeinc.com
TBPE Registration No. F-1046

SHELL ROAD

TCP PHASE 2 LAYOUTS

SHEET 1 OF 7

SHEET NO. 50

DATE: 3/12/2025 2:52:49 PM
FILE: G:\TXC\Projects\City Georgetown\10767-00 Shell Road\03 CADD\01 Shts\02-TCP\SHELL_TCP2_01.dgn

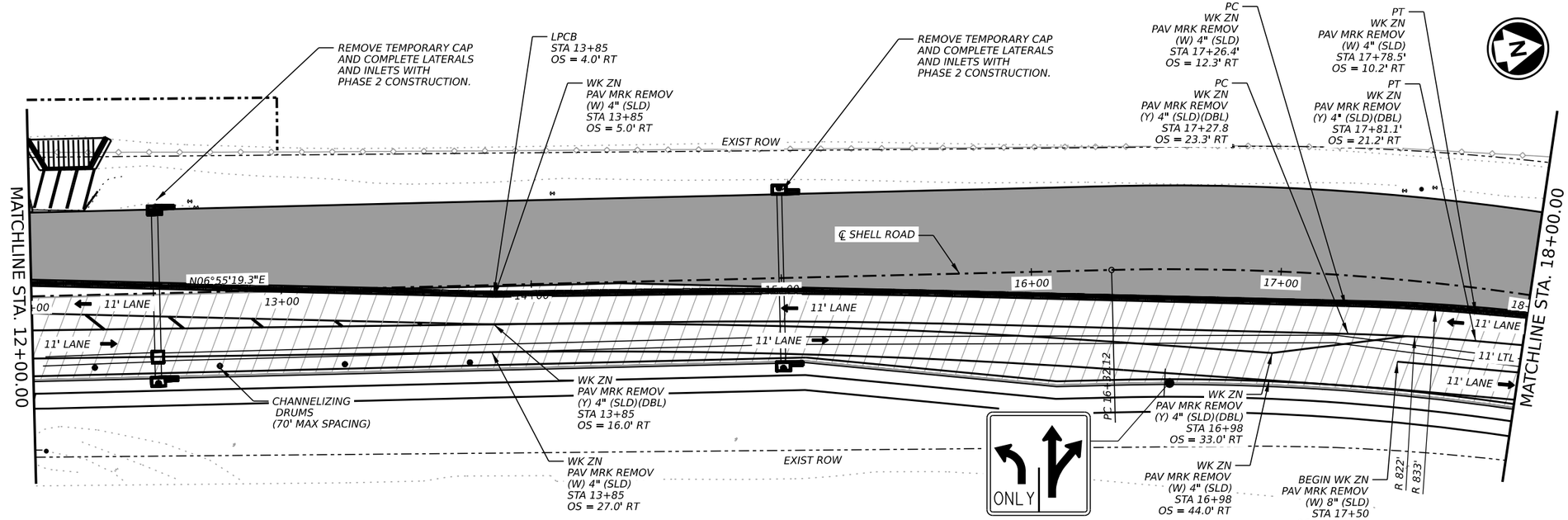

LEGEND

- DIRECTION OF TRAFFIC
- CHANNELIZING DEVICES
- SIGN
- TYPE 3 BARRICADE
- FLASHING ARROW BOARD
- LOW PROFILE CONCRETE BARRIER
- CONSTRUCTION THIS PHASE
- TEMPORARY PAVEMENT
- BUILT PREVIOUSLY
- TEMPORARY PAVEMENT BUILT PREVIOUSLY

NOTES:

1. MAINTAIN ACCESS TO ALL INTERSECTIONS AND DRIVEWAYS AT ALL TIMES UNLESS OTHERWISE NOTED.
2. SEE TCP SEQUENCE OF WORK.
3. SEE BC, TCP, AND WZ STANDARDS FOR TEMPORARY SIGNING AND PAVEMENT MARKING DETAILS.
4. SEE P&P SHEETS AND INTERSECTION LAYOUTS FOR ADDITIONAL INFORMATION.
5. ALL CHANNELIZING DEVICES AND SIGN PLACEMENT MUST CONFORM TO THE TEXAS MANUAL ON UNIFORM TRAFFIC CONTROL DEVICES (TMUTCD) AND TXDOT STANDARDS.
6. WARNING SIGN PLACEMENT SHALL NOT CONFLICT WITH EXISTING PERMANENT SIGNAGE.
7. EXISTING GROUND MOUNTED SIGNS SHALL BE TEMPORARILY REINSTALLED ON SKIDS WHERE NEEDED FOR TCP.

0 25 50

SCALE: 1" = 50'

STATE OF TEXAS
ELENA RAMON
141765
LICENSED PROFESSIONAL ENGINEER

3/12/2025

EST.1848 GEORGETOWN TEXAS

BGE, Inc.
101 West Louis Henna Blvd, Suite 400, Austin, TX 78728
Tel: 512-879-0400 • www.bgeinc.com
TBPE Registration No. F-1046

SHELL ROAD

TCP PHASE 2 LAYOUTS

SHEET 2 OF 7

SHEET NO. 51

DATE: 3/12/2025 2:52:52 PM
FILE: G:\TXC\Projects\City Georgetown\10767-00 Shell Road\03 CADD\01 Shts\02-TCP\SHELL_TCP2_02.dgn

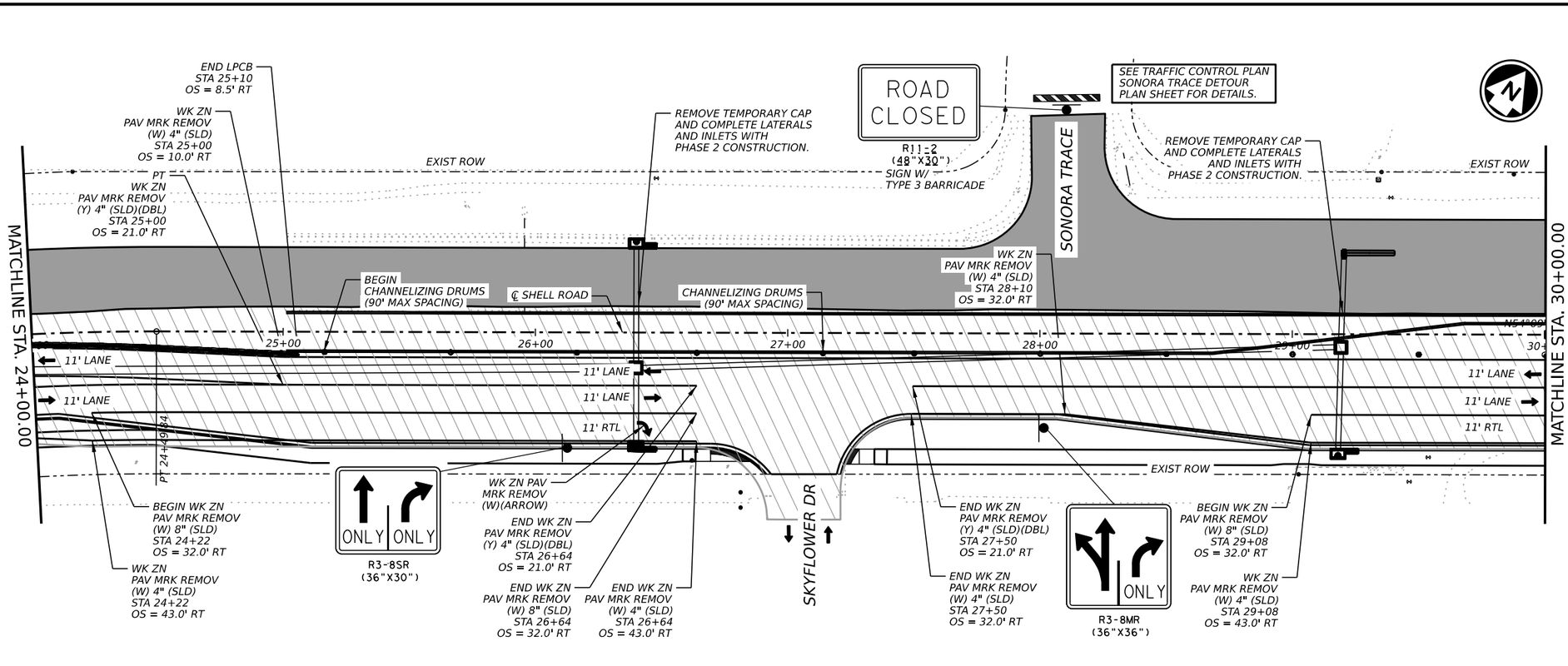

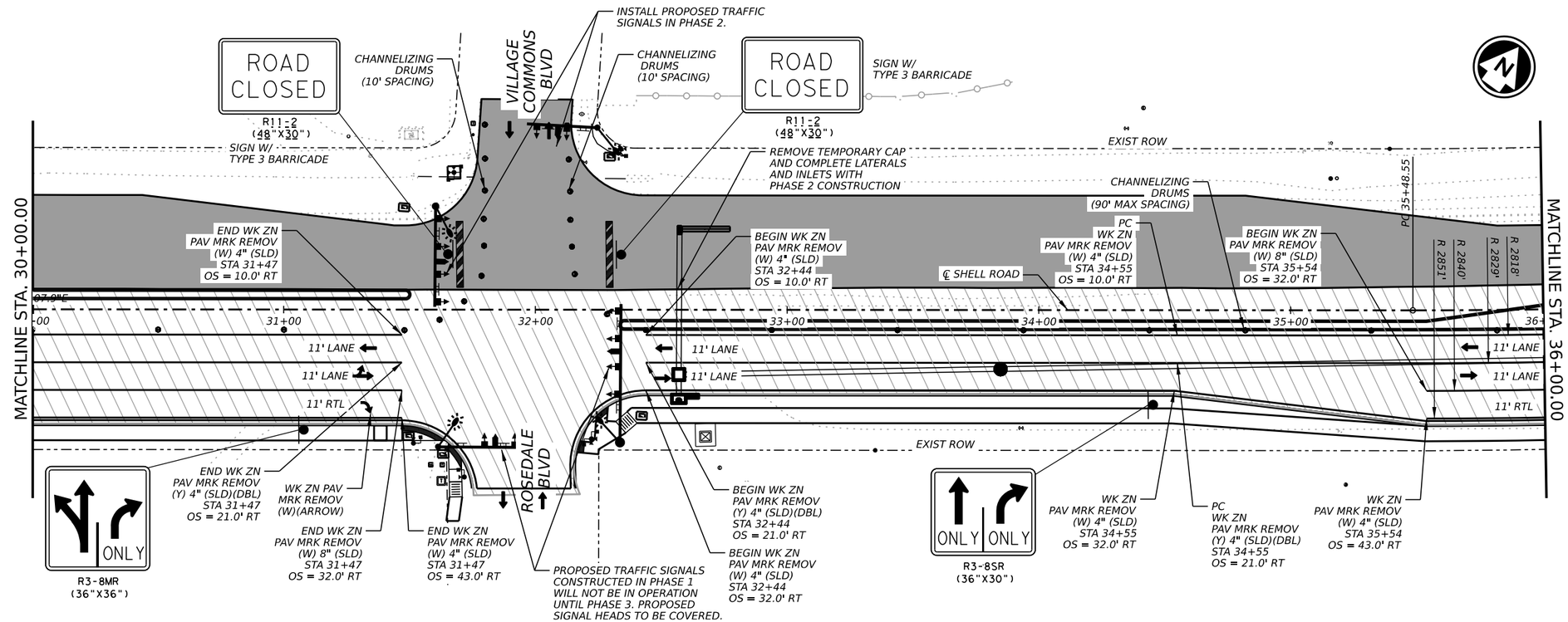

ELENA RAMON
141765
LICENSED
PROFESSIONAL ENGINEER
STATE OF TEXAS
3/12/2025

EST. 1848
GEORGETOWN
TEXAS

BGE, Inc.
101 West Louis Henna Blvd, Suite 400, Austin, TX 78728
Tel: 512-879-0400 • www.bgeinc.com
TBPE Registration No. F-1046

SHELL ROAD

TCP PHASE 2 LAYOUTS

SHEET 3 OF 7

SHEET NO. 52

DATE: 3/12/2025 2:52:55 PM
FILE: G:\TXC\Projects\City Georgetown\10767-00 Shell Road\03 CADD\01 Shts\02-TCP\SHELL_TCP2_03.dgn

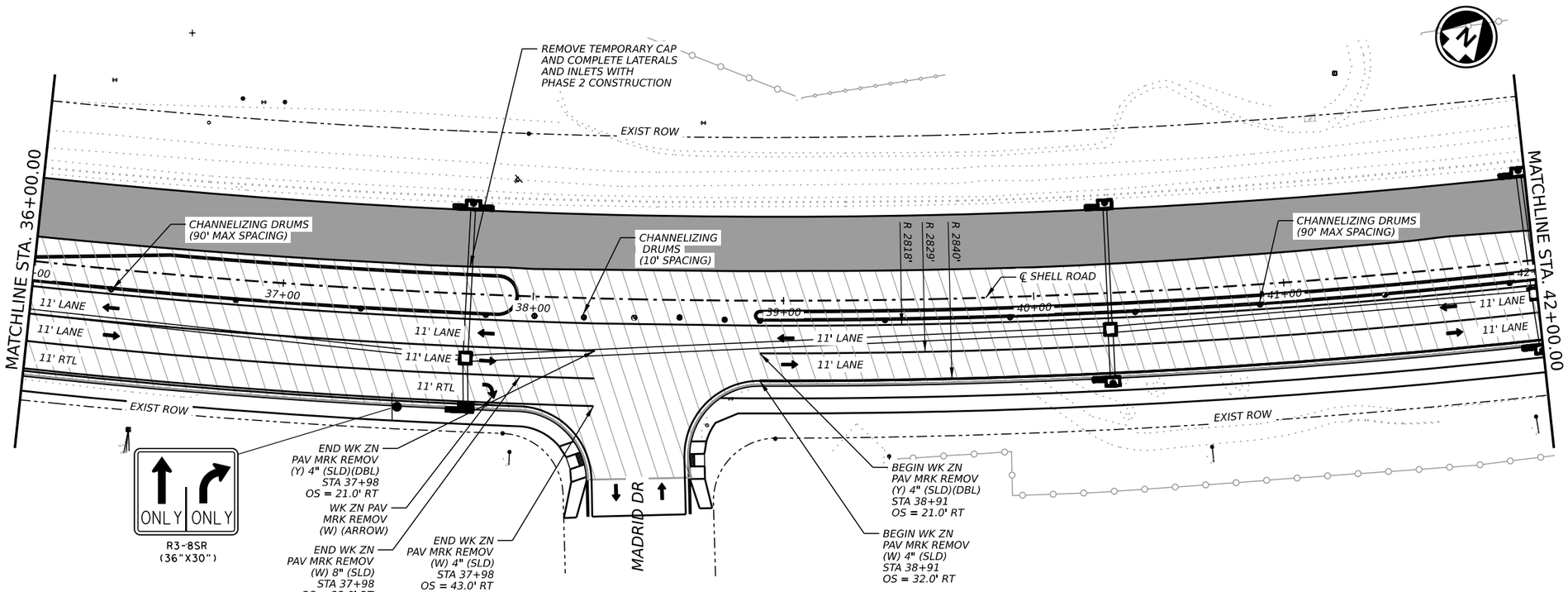

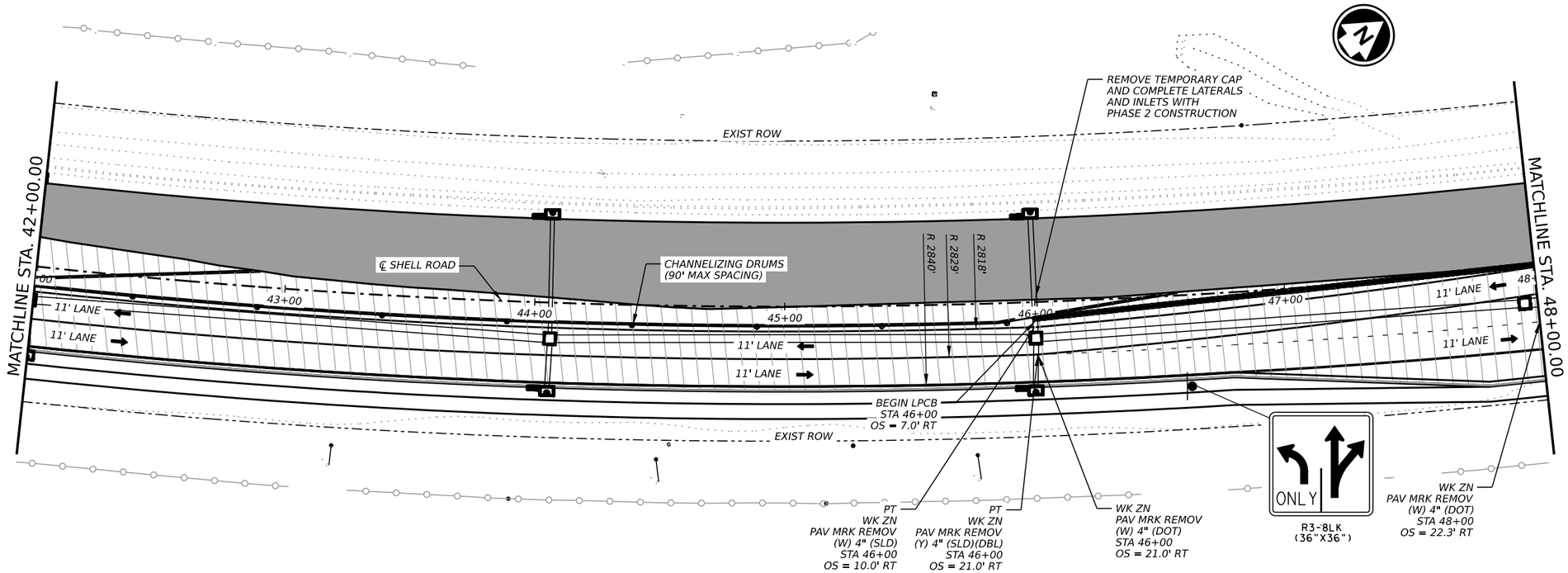

LEGEND

- DIRECTION OF TRAFFIC
- CHANNELIZING DEVICES
- SIGN
- TYPE 3 BARRICADE
- FLASHING ARROW BOARD
- LOW PROFILE CONCRETE BARRIER
- CONSTRUCTION THIS PHASE
- TEMPORARY PAVEMENT
- BUILT PREVIOUSLY
- TEMPORARY PAVEMENT BUILT PREVIOUSLY

NOTES:

1. MAINTAIN ACCESS TO ALL INTERSECTIONS AND DRIVEWAYS AT ALL TIMES UNLESS OTHERWISE NOTED.
2. SEE TCP SEQUENCE OF WORK.
3. SEE BC, TCP, AND WZ STANDARDS FOR TEMPORARY SIGNING AND PAVEMENT MARKING DETAILS.
4. SEE P&P SHEETS AND INTERSECTION LAYOUTS FOR ADDITIONAL INFORMATION.
5. ALL CHANNELIZING DEVICES AND SIGN PLACEMENT MUST CONFORM TO THE TEXAS MANUAL ON UNIFORM TRAFFIC CONTROL DEVICES (TMUTCD) AND TXDOT STANDARDS.
6. WARNING SIGN PLACEMENT SHALL NOT CONFLICT WITH EXISTING PERMANENT SIGNAGE.
7. EXISTING GROUND MOUNTED SIGNS SHALL BE TEMPORARILY REINSTALLED ON SKIDS WHERE NEEDED FOR TCP.

0 25 50

SCALE: 1" = 50'

STATE OF TEXAS
ELENA RAMON
141765
LICENSED
PROFESSIONAL ENGINEER

3/12/2025

EST. 1848 GEORGETOWN TEXAS

BGE, Inc.
101 West Louis Henna Blvd, Suite 400, Austin, TX 78728
Tel: 512-879-0400 • www.bgeinc.com
TBPE Registration No. F-1046

SHELL ROAD

TCP PHASE 2 LAYOUTS

SHEET 4 OF 7

SHEET NO. 53

DATE: 3/12/2025 2:52:58 PM
FILE: G:\TXC\Projects\City Georgetown\10767-00 Shell Road\03 CADD\01_Shts\02-TCP\SHELL_TCP2_04.dgn

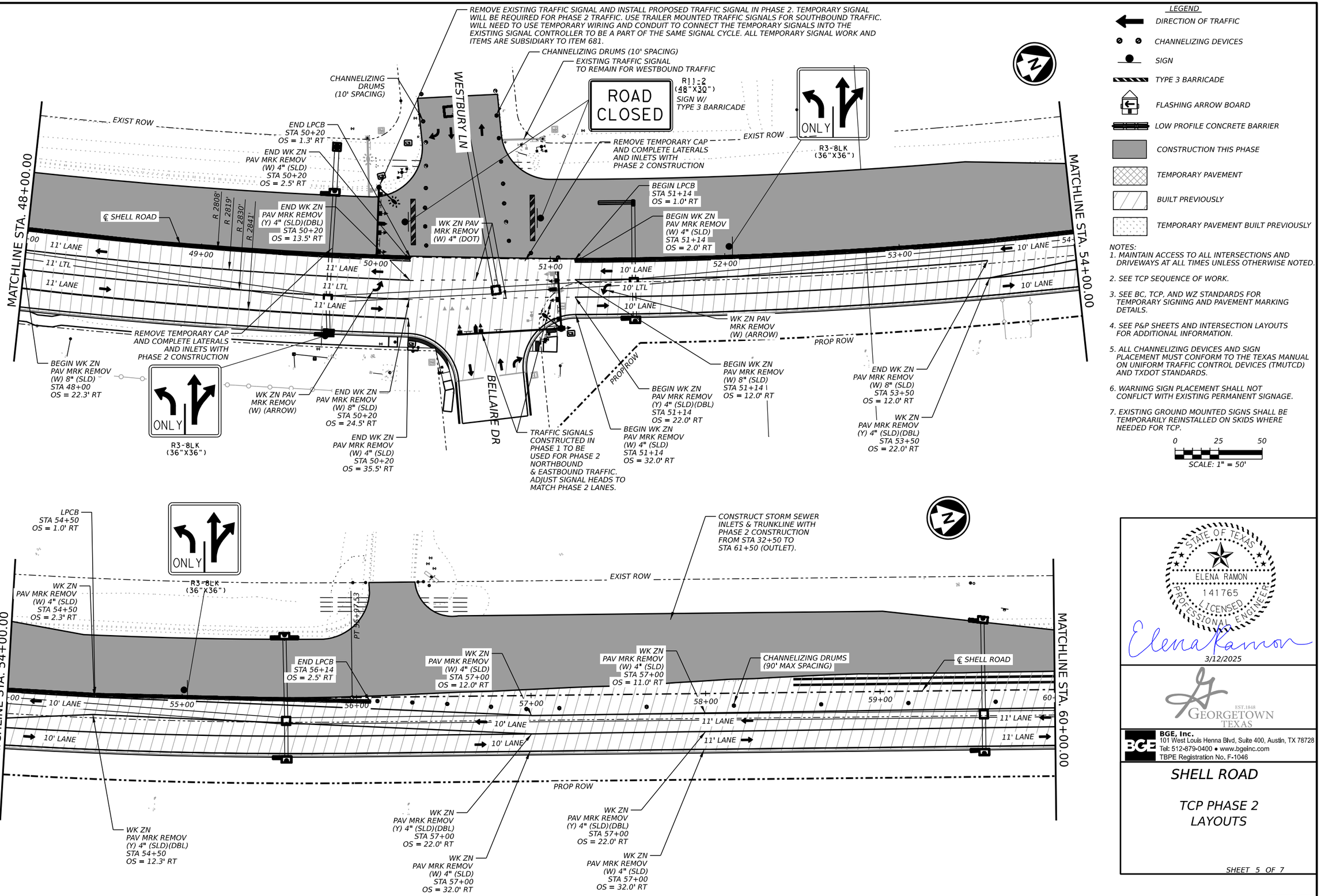

LEGEND

- DIRECTION OF TRAFFIC
- CHANNELIZING DEVICES
- SIGN
- TYPE 3 BARRICADE
- FLASHING ARROW BOARD
- LOW PROFILE CONCRETE BARRIER
- CONSTRUCTION THIS PHASE
- TEMPORARY PAVEMENT
- BUILT PREVIOUSLY
- TEMPORARY PAVEMENT BUILT PREVIOUSLY

NOTES:

1. MAINTAIN ACCESS TO ALL INTERSECTIONS AND DRIVEWAYS AT ALL TIMES UNLESS OTHERWISE NOTED.
2. SEE TCP SEQUENCE OF WORK.
3. SEE BC, TCP, AND WZ STANDARDS FOR TEMPORARY SIGNING AND PAVEMENT MARKING DETAILS.
4. SEE P&P SHEETS AND INTERSECTION LAYOUTS FOR ADDITIONAL INFORMATION.
5. ALL CHANNELIZING DEVICES AND SIGN PLACEMENT MUST CONFORM TO THE TEXAS MANUAL ON UNIFORM TRAFFIC CONTROL DEVICES (TMUTCD) AND TXDOT STANDARDS.
6. WARNING SIGN PLACEMENT SHALL NOT CONFLICT WITH EXISTING PERMANENT SIGNAGE.
7. EXISTING GROUND MOUNTED SIGNS SHALL BE TEMPORARILY REINSTALLED ON SKIDS WHERE NEEDED FOR TCP.

0 25 50

SCALE: 1" = 50'

STATE OF TEXAS
ELENA RAMON
141765
LICENSED
PROFESSIONAL ENGINEER

Elena Ramon

3/12/2025

EST.1848 GEORGETOWN TEXAS

BGE, Inc.
101 West Louis Henna Blvd, Suite 400, Austin, TX 78728
Tel: 512-879-0400 • www.bgeinc.com
TBPE Registration No. F-1046

SHELL ROAD

TCP PHASE 2 LAYOUTS

SHEET 5 OF 7

SHEET NO. 54

DATE: 3/12/2025 2:53:00 PM
FILE: G:\TXC\Projects\City Georgetown\10767-00 Shell Road\03 CADD\01 Shts\02-TCP\SHELL_TCP2_05.dgn

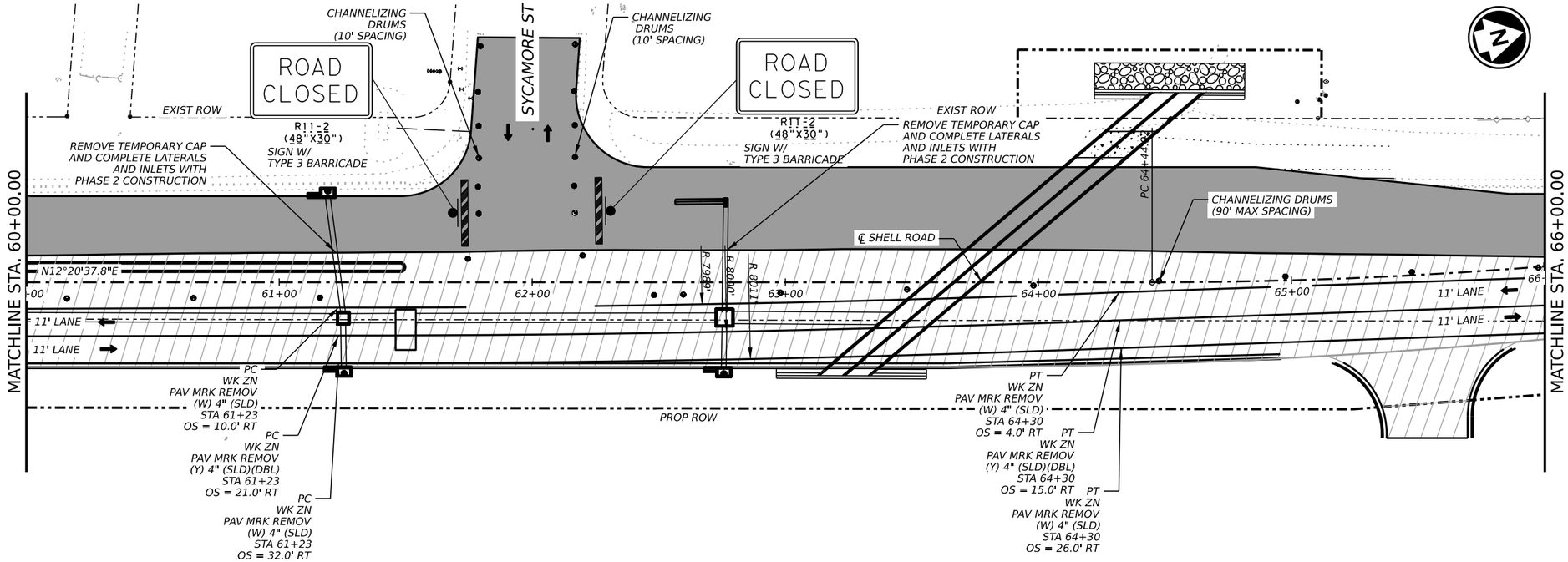

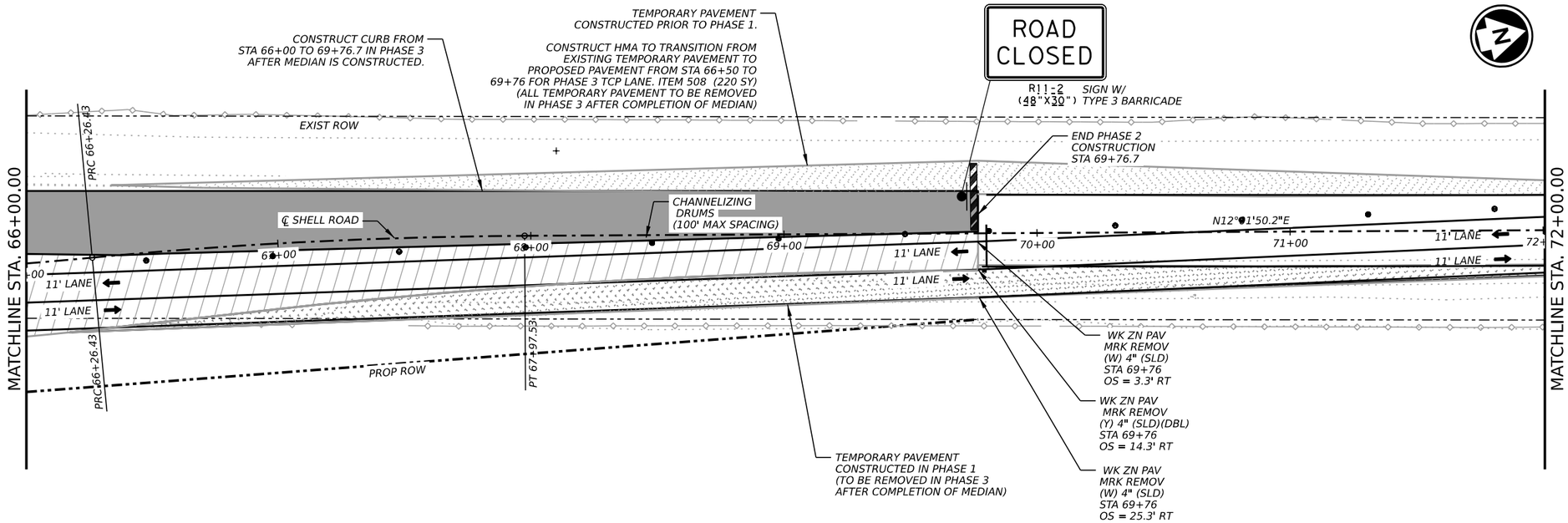

LEGEND

- DIRECTION OF TRAFFIC
- CHANNELIZING DEVICES
- SIGN
- TYPE 3 BARRICADE
- FLASHING ARROW BOARD
- LOW PROFILE CONCRETE BARRIER
- CONSTRUCTION THIS PHASE
- TEMPORARY PAVEMENT
- BUILT PREVIOUSLY
- TEMPORARY PAVEMENT BUILT PREVIOUSLY

NOTES:

1. MAINTAIN ACCESS TO ALL INTERSECTIONS AND DRIVEWAYS AT ALL TIMES UNLESS OTHERWISE NOTED.
2. SEE TCP SEQUENCE OF WORK.
3. SEE BC, TCP, AND WZ STANDARDS FOR TEMPORARY SIGNING AND PAVEMENT MARKING DETAILS.
4. SEE P&P SHEETS AND INTERSECTION LAYOUTS FOR ADDITIONAL INFORMATION.
5. ALL CHANNELIZING DEVICES AND SIGN PLACEMENT MUST CONFORM TO THE TEXAS MANUAL ON UNIFORM TRAFFIC CONTROL DEVICES (TMUTCD) AND TXDOT STANDARDS.
6. WARNING SIGN PLACEMENT SHALL NOT CONFLICT WITH EXISTING PERMANENT SIGNAGE.
7. EXISTING GROUND MOUNTED SIGNS SHALL BE TEMPORARILY REINSTALLED ON SKIDS WHERE NEEDED FOR TCP.

0 25 50

SCALE: 1" = 50'

STATE OF TEXAS
ELENA RAMON
141765
LICENSED
PROFESSIONAL ENGINEER
3/12/2025

EST. 1848 GEORGETOWN TEXAS

BGE, Inc.
101 West Louis Henna Blvd, Suite 400, Austin, TX 78728
Tel: 512-879-0400 • www.bgeinc.com
TBPE Registration No. F-1046

SHELL ROAD

TCP PHASE 2 LAYOUTS

SHEET 6 OF 7

SHEET NO. 55

DATE: 3/12/2025 2:53:03 PM
FILE: G:\TXC\Projects\City Georgetown\10767-00 Shell Road\03 CADD\01 Shts\02-TCP\SHELL_TCP2_06.dgn

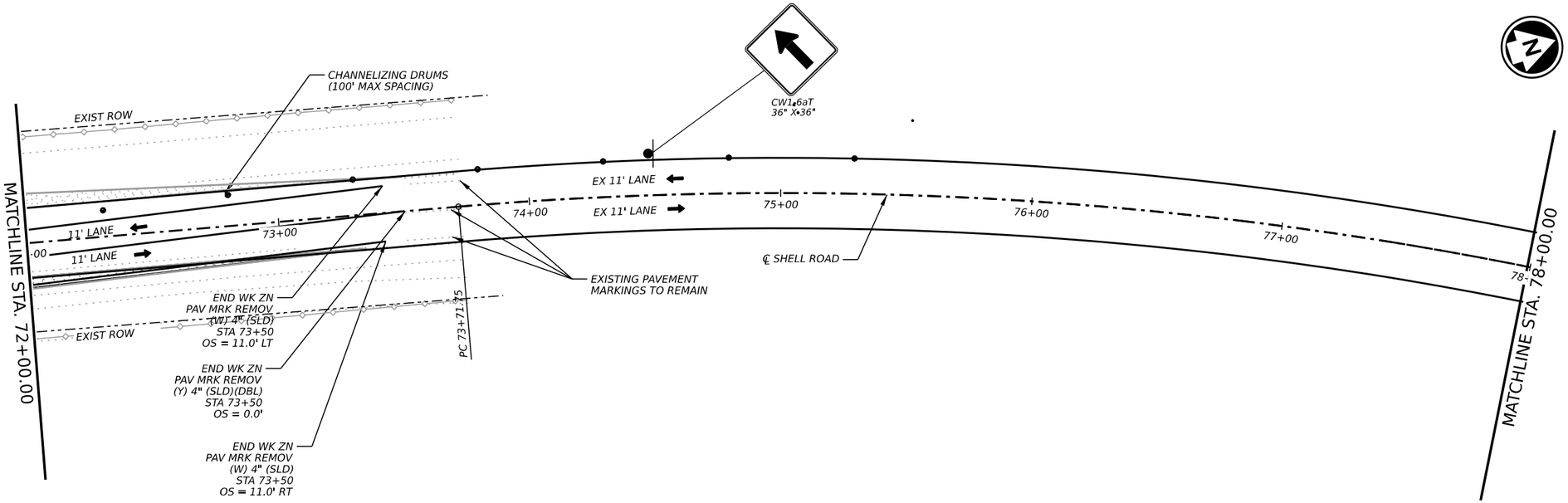

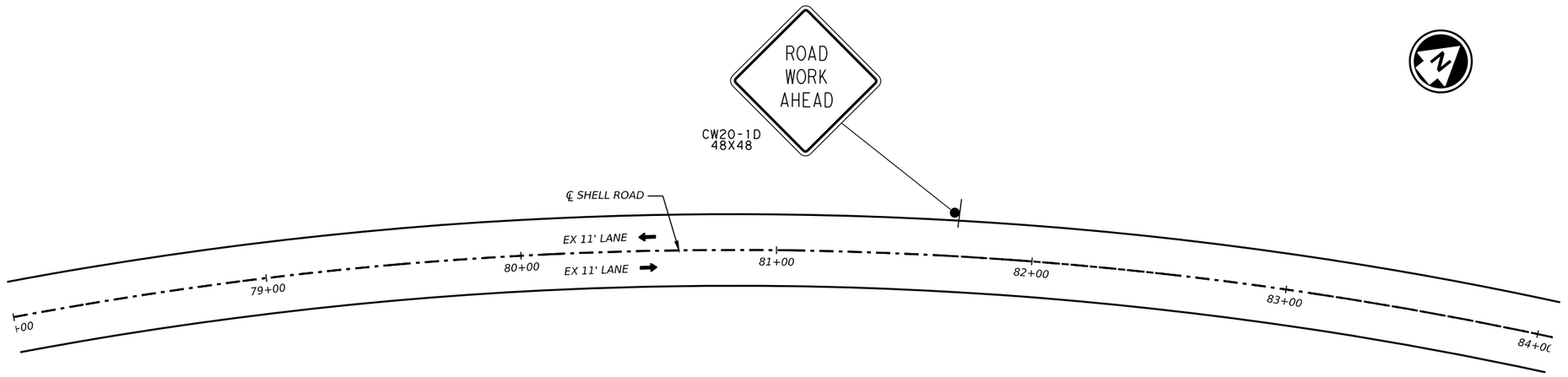

LEGEND

- DIRECTION OF TRAFFIC
- CHANNELIZING DEVICES
- SIGN
- TYPE 3 BARRICADE
- FLASHING ARROW BOARD
- LOW PROFILE CONCRETE BARRIER
- CONSTRUCTION THIS PHASE
- TEMPORARY PAVEMENT
- BUILT PREVIOUSLY
- TEMPORARY PAVEMENT BUILT PREVIOUSLY

NOTES:

1. MAINTAIN ACCESS TO ALL INTERSECTIONS AND DRIVEWAYS AT ALL TIMES UNLESS OTHERWISE NOTED.
2. SEE TCP SEQUENCE OF WORK.
3. SEE BC, TCP, AND WZ STANDARDS FOR TEMPORARY SIGNING AND PAVEMENT MARKING DETAILS.
4. SEE P&P SHEETS AND INTERSECTION LAYOUTS FOR ADDITIONAL INFORMATION.
5. ALL CHANNELIZING DEVICES AND SIGN PLACEMENT MUST CONFORM TO THE TEXAS MANUAL ON UNIFORM TRAFFIC CONTROL DEVICES (TMUTCD) AND TXDOT STANDARDS.
6. WARNING SIGN PLACEMENT SHALL NOT CONFLICT WITH EXISTING PERMANENT SIGNAGE.
7. EXISTING GROUND MOUNTED SIGNS SHALL BE TEMPORARILY REINSTALLED ON SKIDS WHERE NEEDED FOR TCP.

0 25 50

SCALE: 1" = 50'

STATE OF TEXAS
ELENA RAMON
141765
LICENSED
PROFESSIONAL ENGINEER

3/12/2025

EST.1848
GEORGETOWN
TEXAS

BGE, Inc.
101 West Louis Henna Blvd, Suite 400, Austin, TX 78728
Tel: 512-879-0400 • www.bgeinc.com
TBPE Registration No. F-1046

SHELL ROAD

TCP PHASE 2 LAYOUTS

SHEET 7 OF 7

SHEET NO. 56

DATE: 3/12/2025 2:53:05 PM
FILE: G:\TXC\Projects\City Georgetown\10767-00 Shell Road\03 CADD\01 Shts\02-TCP\SHELL_TCP2_07.dgn

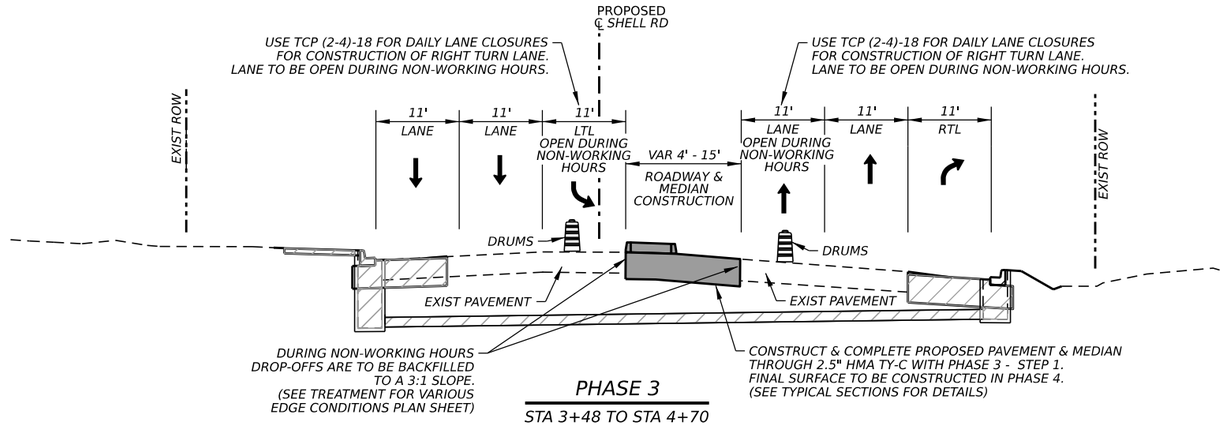

PHASE 3

STA 3+48 TO STA 4+70

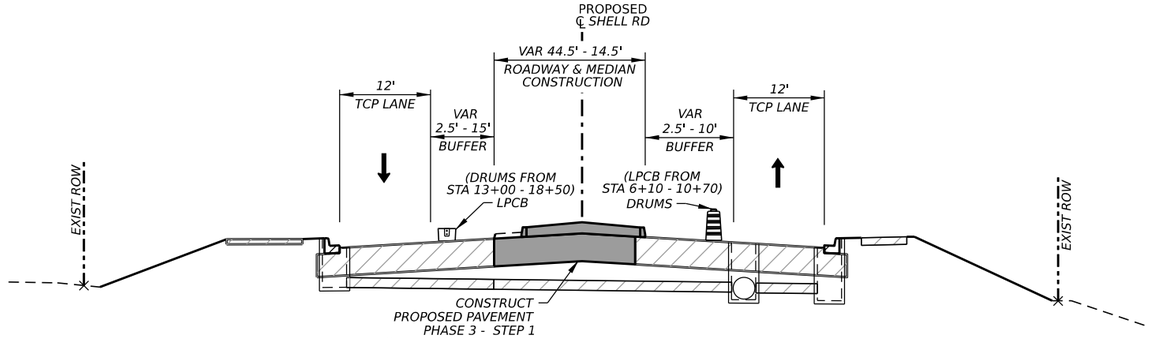

PHASE 3

STA 8+81 TO STA 14+50

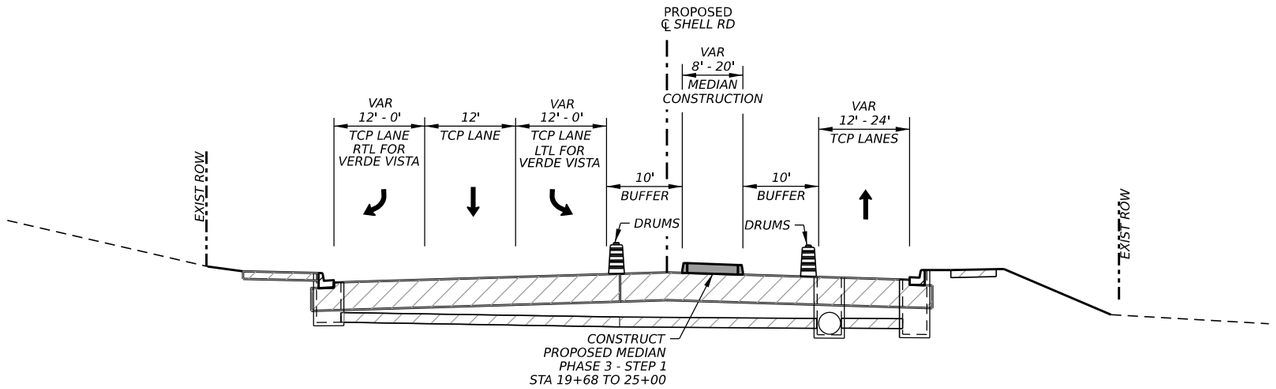

PHASE 3

STA 19+50 TO STA 25+00

LEGEND

- DIRECTION OF TRAFFIC
- CHANNELIZING DEVICES
- SIGN
- TYPE 3 BARRICADE
- FLASHING ARROW BOARD
- LOW PROFILE CONCRETE BARRIER
- CONSTRUCTION THIS PHASE
- TEMPORARY PAVEMENT
- BUILT PREVIOUSLY
- TEMPORARY PAVEMENT BUILT PREVIOUSLY

NOTES:

1. MAINTAIN ACCESS TO ALL INTERSECTIONS AND DRIVEWAYS AT ALL TIMES UNLESS OTHERWISE NOTED.
2. SEE TCP SEQUENCE OF WORK.
3. SEE BC, TCP, AND WZ STANDARDS FOR TEMPORARY SIGNING AND PAVEMENT MARKING DETAILS.
4. SEE P&P SHEETS AND INTERSECTION LAYOUTS FOR ADDITIONAL INFORMATION.
5. ALL CHANNELIZING DEVICES AND SIGN PLACEMENT MUST CONFORM TO THE TEXAS MANUAL ON UNIFORM TRAFFIC CONTROL DEVICES (TMUTCD) AND TXDOT STANDARDS.
6. WARNING SIGN PLACEMENT SHALL NOT CONFLICT WITH EXISTING PERMANENT SIGNAGE.
7. EXISTING GROUND MOUNTED SIGNS SHALL BE TEMPORARILY REINSTALLED ON SKIDS WHERE NEEDED FOR TCP.

0 10 20

SCALE: 1" = 20'

STATE OF TEXAS
ELENA RAMON
141765
LICENSED
PROFESSIONAL ENGINEER

Elena Ramon

3/12/2025

EST. 1848 GEORGETOWN TEXAS

BGE, Inc.
101 West Louis Henna Blvd, Suite 400, Austin, TX 78728
Tel: 512-879-0400 • www.bgeinc.com
TBPE Registration No. F-1046

SHELL ROAD

TCP TYPICAL SECTIONS PHASE 3

SHEET 1 OF 2

SHEET NO. 57

CK: DW: CK: DW:

DATE: 3/12/2025 2:53:06 PM
FILE: G:\TXC\Projects\City Georgetown\10767-00 Shell Road\03 CADD\01 Shts\02-TCP\SHELL_TCP_TYP3.dgn

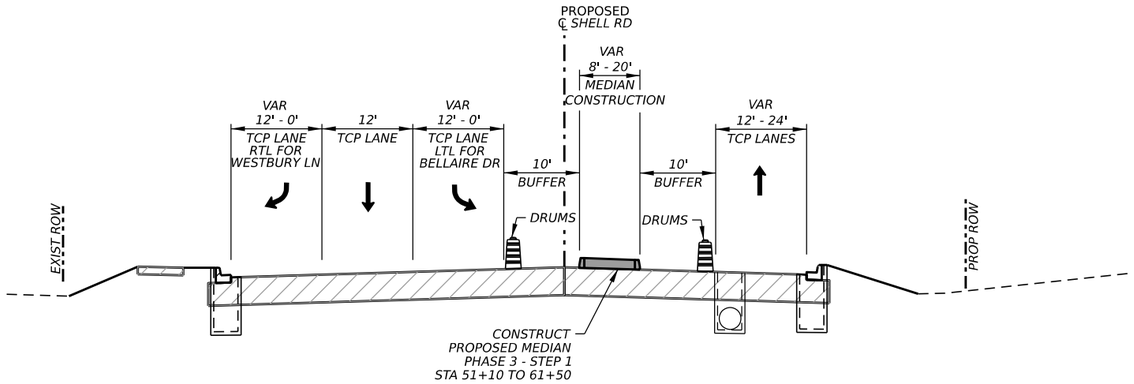

PHASE 3

STA 50+50 TO STA 62+00

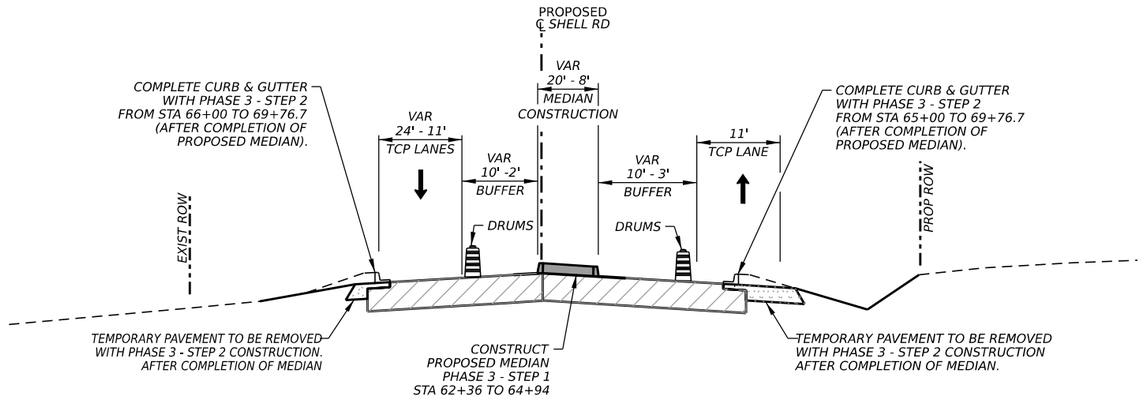

PHASE 3

STA 62+00 TO STA 73+50

LEGEND

- DIRECTION OF TRAFFIC
- CHANNELIZING DEVICES
- SIGN
- TYPE 3 BARRICADE
- FLASHING ARROW BOARD
- LOW PROFILE CONCRETE BARRIER
- CONSTRUCTION THIS PHASE
- TEMPORARY PAVEMENT
- BUILT PREVIOUSLY
- TEMPORARY PAVEMENT BUILT PREVIOUSLY

NOTES:

1. MAINTAIN ACCESS TO ALL INTERSECTIONS AND DRIVEWAYS AT ALL TIMES UNLESS OTHERWISE NOTED.
2. SEE TCP SEQUENCE OF WORK.
3. SEE BC, TCP, AND WZ STANDARDS FOR TEMPORARY SIGNING AND PAVEMENT MARKING DETAILS.
4. SEE P&P SHEETS AND INTERSECTION LAYOUTS FOR ADDITIONAL INFORMATION.
5. ALL CHANNELIZING DEVICES AND SIGN PLACEMENT MUST CONFORM TO THE TEXAS MANUAL ON UNIFORM TRAFFIC CONTROL DEVICES (TMUTCD) AND TXDOT STANDARDS.
6. WARNING SIGN PLACEMENT SHALL NOT CONFLICT WITH EXISTING PERMANENT SIGNAGE.
7. EXISTING GROUND MOUNTED SIGNS SHALL BE TEMPORARILY REINSTALLED ON SKIDS WHERE NEEDED FOR TCP.

0 10 20

SCALE: 1" = 20'

STATE OF TEXAS
ELENA RAMON
141765
LICENSED
PROFESSIONAL ENGINEER

3/12/2025

EST.1848 GEORGETOWN TEXAS

BGE, Inc.
101 West Louis Henna Blvd, Suite 400, Austin, TX 78728
Tel: 512-879-0400 • www.bgeinc.com
TBPE Registration No. F-1046

SHELL ROAD

TCP TYPICAL SECTIONS PHASE 3

SHEET 2 OF 2

SHEET NO. 58

DATE: 3/12/2025 2:53:07 PM
FILE: G:\TXC\Projects\City Georgetown\10767-00 Shell Road\03 CADD\01 Shts\02-TCP\SHELL_TCP_TYP3.dgn

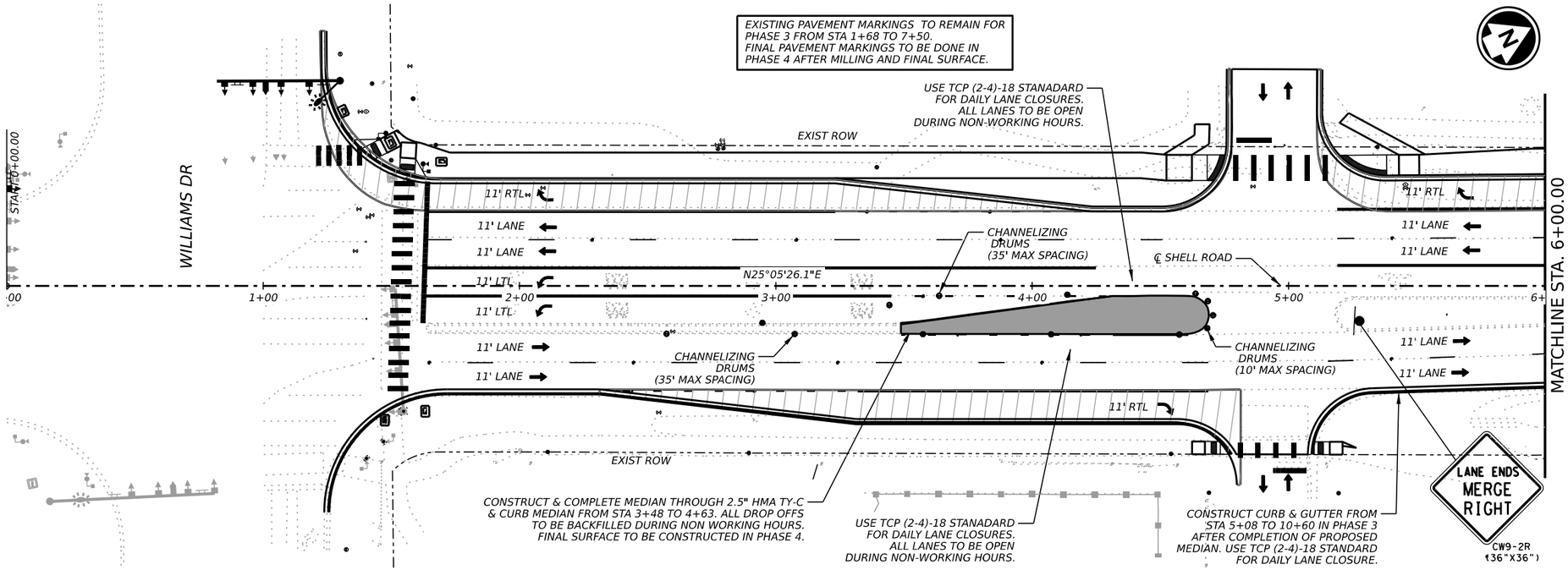

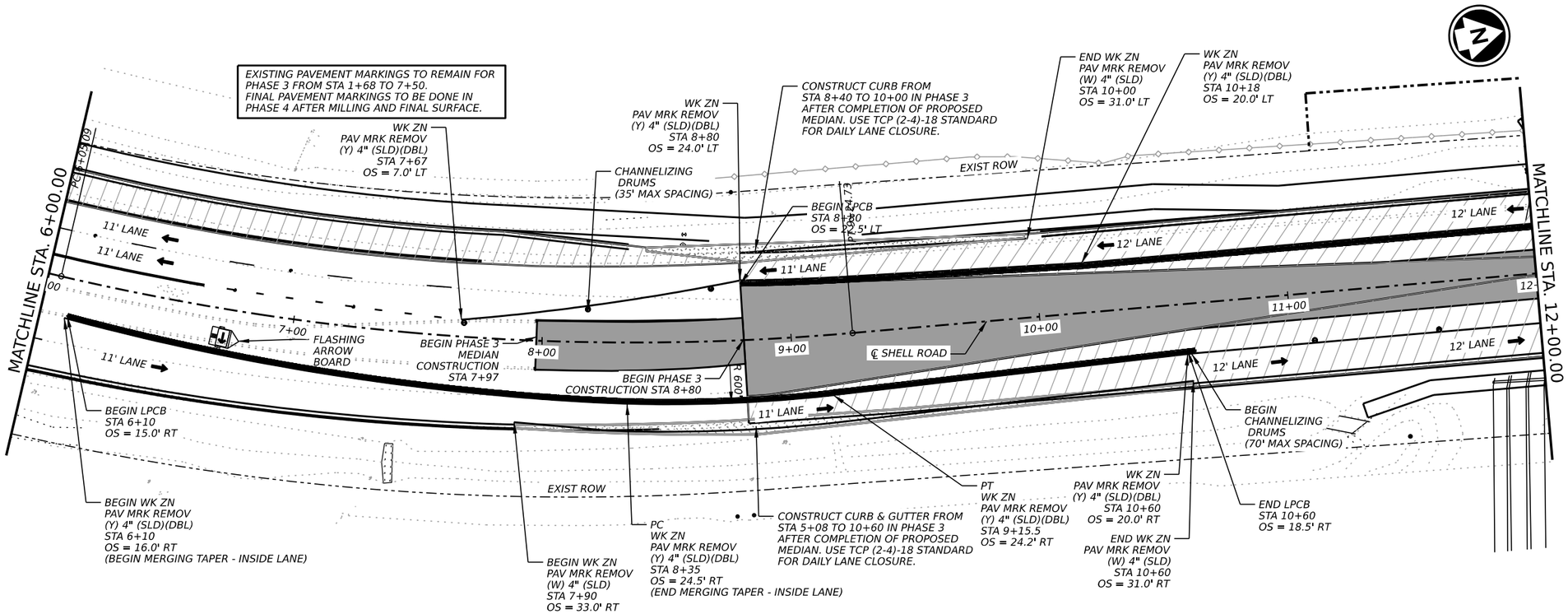

STATE OF TEXAS
ELENA RAMON
141765
LICENSED
PROFESSIONAL ENGINEER
Elena Ramon
3/12/2025

EST.1848 GEORGETOWN TEXAS

BGE, Inc.
101 West Louis Henna Blvd, Suite 400, Austin, TX 78728
Tel: 512-879-0400 • www.bgeinc.com
TBPE Registration No. F-1046

SHELL ROAD

TCP PHASE 3 LAYOUTS

SHEET 1 OF 7

SHEET NO. 59

DATE: 3/12/2025 2:53:09 PM
FILE: G:\TXC\Projects\City Georgetown\10767-00 Shell Road\03 CADD\01 Shts\02-TCP\SHELL_TCP3_01.dgn

ALL WORK ZONE PAVEMENT MARKINGS FOR PHASE 3 NOT LABELED WITH STATION & OFFSET TO BE DONE IN ACCORDANCE WITH FINAL PAVEMENT MARKING LOCATIONS.

MATCHLINE STA. 12+00.00

MATCHLINE STA. 18+00.00

BEGIN CHANNELIZING DRUMS (70' MAX SPACING)

END LPCB STA 14+60 OS = 18.5' LT

EXIST ROW

12' LANE

N06°55'19.3"E

13+00

14+00

15+00

16+00

17+00

18+

℄ SHELL ROAD

PC WK ZN PAV MRK REMOV (Y) 4" (SLD)(DBL) STA 16+32.1 OS = 20.0' LT

WK ZN PAV MRK REMOV (Y) 4" (SLD)(DBL)

12' LANE

12' LTL

ONLY

12' LANE

12' RTL

ONLY

PC 16°32.12

R 972'

R 984'

R 1012'

CHANNELIZING DRUMS (70' MAX SPACING)

EXIST ROW

ONLY ONLY ONLY

R3-8b (48"X30")

WK ZN PAV MRK REMOV (Y) 4" (SLD)(DBL) STA 14+50 OS = 20.0' RT

WK ZN PAV MRK REMOV (Y) 4" (DOT)

WK ZN PAV MRK REMOV (Y) 4" (SLD)(DBL) STA 15+50 OS = 8.0' RT

BEGIN WK ZN PAV MRK REMOV (W) 8" (SLD) STA 15+43 OS = 20.0' RT

PC WK ZN PAV MRK REMOV (W) 8" (SLD) STA 16+32.1 OS = 20.0' RT

PC WK ZN PAV MRK REMOV (Y) 4" (SLD)(DBL) STA 16+32.1 OS = 8.0' RT

WK ZN PAV MRK REMOV (W) (WORD)

WK ZN PAV MRK REMOV (W) (WORD)

LEGEND

- DIRECTION OF TRAFFIC
- CHANNELIZING DEVICES
- SIGN
- TYPE 3 BARRICADE
- FLASHING ARROW BOARD
- LOW PROFILE CONCRETE BARRIER
- CONSTRUCTION THIS PHASE
- TEMPORARY PAVEMENT
- BUILT PREVIOUSLY
- TEMPORARY PAVEMENT BUILT PREVIOUSLY

NOTES:

1. MAINTAIN ACCESS TO ALL INTERSECTIONS AND DRIVEWAYS AT ALL TIMES UNLESS OTHERWISE NOTED.
2. SEE TCP SEQUENCE OF WORK.
3. SEE BC, TCP, AND WZ STANDARDS FOR TEMPORARY SIGNING AND PAVEMENT MARKING DETAILS.
4. SEE P&P SHEETS AND INTERSECTION LAYOUTS FOR ADDITIONAL INFORMATION.
5. ALL CHANNELIZING DEVICES AND SIGN PLACEMENT MUST CONFORM TO THE TEXAS MANUAL ON UNIFORM TRAFFIC CONTROL DEVICES (TMUTCD) AND TXDOT STANDARDS.
6. WARNING SIGN PLACEMENT SHALL NOT CONFLICT WITH EXISTING PERMANENT SIGNAGE.
7. EXISTING GROUND MOUNTED SIGNS SHALL BE TEMPORARILY REINSTALLED ON SKIDS WHERE NEEDED FOR TCP.

0 25 50

SCALE: 1" = 50'

BEGIN WK ZN PAV MRK REMOV (W) 8" (SLD) STA 19+65 OS = 20.0' LT

BEGIN WK ZN PAV MRK REMOV (Y) 4" (SLD)(DBL) STA 19+65 OS = 8.0' LT

WK ZN PAV MRK REMOV (W) (ARROW)

WK ZN PAV MRK REMOV (W) (WORD)

WK ZN PAV MRK REMOV (Y) 4" (SLD)(DBL) STA 22+60 OS = 8.0' RT

END WK ZN PAV MRK REMOV (W) 8" (SLD) STA 22+60 OS = 20.0' LT

WK ZN PAV MRK REMOV (Y) 4" (DOT)

WK ZN PAV MRK REMOV (Y) 4" (SLD)(DBL) STA 23+60 OS = 20.0' LT

CHANNELIZING DRUMS (70' MAX SPACING)

EXIST ROW

END WK ZN PAV MRK REMOV (Y) 4" (SLD)(DBL) STA 18+55 OS = 20.0' LT

VERDE VISTA

ALL PROPOSED TRAFFIC SIGNALS TO BE OPERATIONAL FOR PHASE 3 TRAFFIC LANES. NON APPLICABLE SIGNAL HEADS TO BE COVERED.

MATCHLINE STA. 18+00.00

12' LANE

12' LTL

12' LANE

12' RTL

ONLY

12' RTL

12' LANE

12' LTL

ONLY

℄ SHELL ROAD

19+00

20+00

21+00

22+00

23+00

12' LANE

12' LANE

MATCHLINE STA. 24+00.00

CHANNELIZING DRUMS (10' SPACING)

R 972'

R 1000'

R 1012'

ONLY ONLY ONLY

R3-8b (48"X30")

ONLY ONLY

R3-8SR (36"X30")

WK ZN PAV MRK REMOV (W) (ARROW)

END WK ZN PAV MRK REMOV (Y) 4" (SLD)(DBL) STA 18+55 OS = 8.0' RT

END WK ZN PAV MRK REMOV (W) 8" (SLD) STA 18+55 OS = 20.0' RT

BEGIN WK ZN PAV MRK REMOV (Y) 4" (SLD)(DBL) STA 19+65 OS = 20.0' RT

CHANNELIZING DRUMS (70' MAX SPACING)

EXIST ROW

ALL WORK ZONE PAVEMENT MARKINGS FOR PHASE 3 NOT LABELED WITH STATION & OFFSET TO BE DONE IN ACCORDANCE WITH FINAL PAVEMENT MARKING LOCATIONS.

STATE OF TEXAS
ELENA RAMON
141765
LICENSED PROFESSIONAL ENGINEER

3/12/2025

EST.1848 GEORGETOWN TEXAS

BGE, Inc.
101 West Louis Henna Blvd, Suite 400, Austin, TX 78728
Tel: 512-879-0400 • www.bgeinc.com
TBPE Registration No. F-1046

SHELL ROAD

TCP PHASE 3 LAYOUTS

DATE: 3/12/2025 2:53:12 PM
FILE: G:\TXC\Projects\City Georgetown\10767-00 Shell Road\03_CADD\01 Shts\02-TCP\SHELL_TCP3_02.dgn

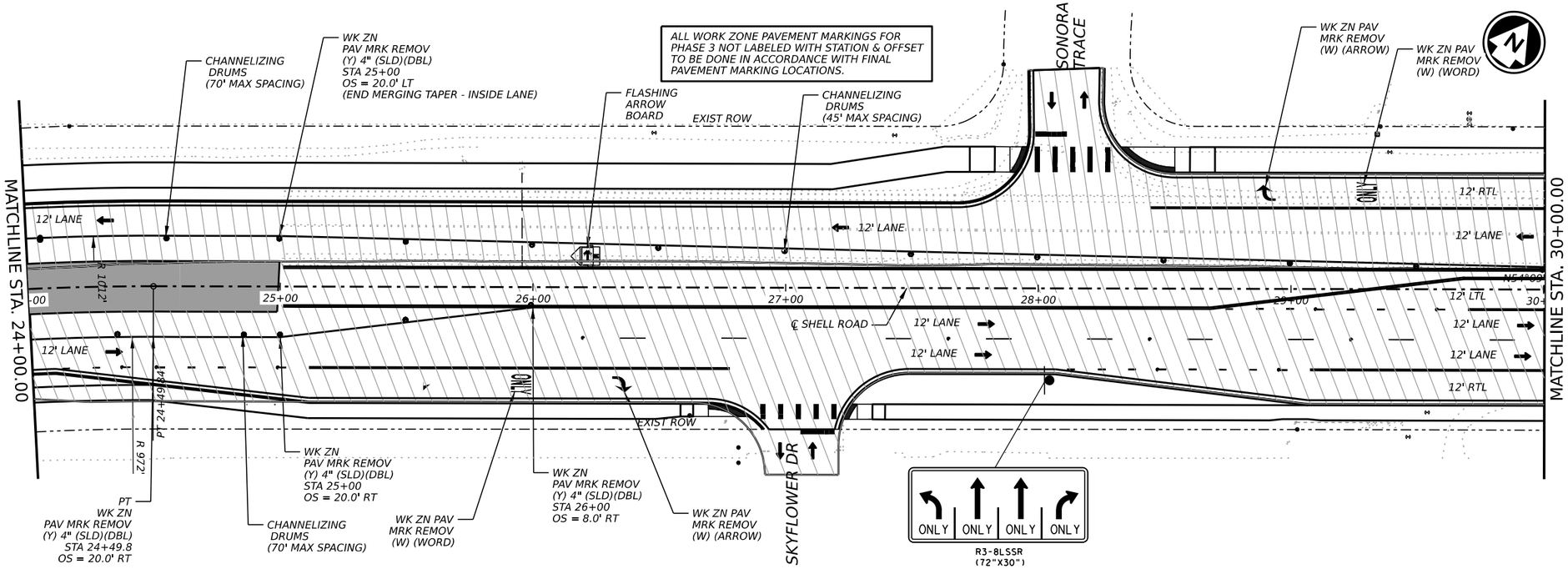

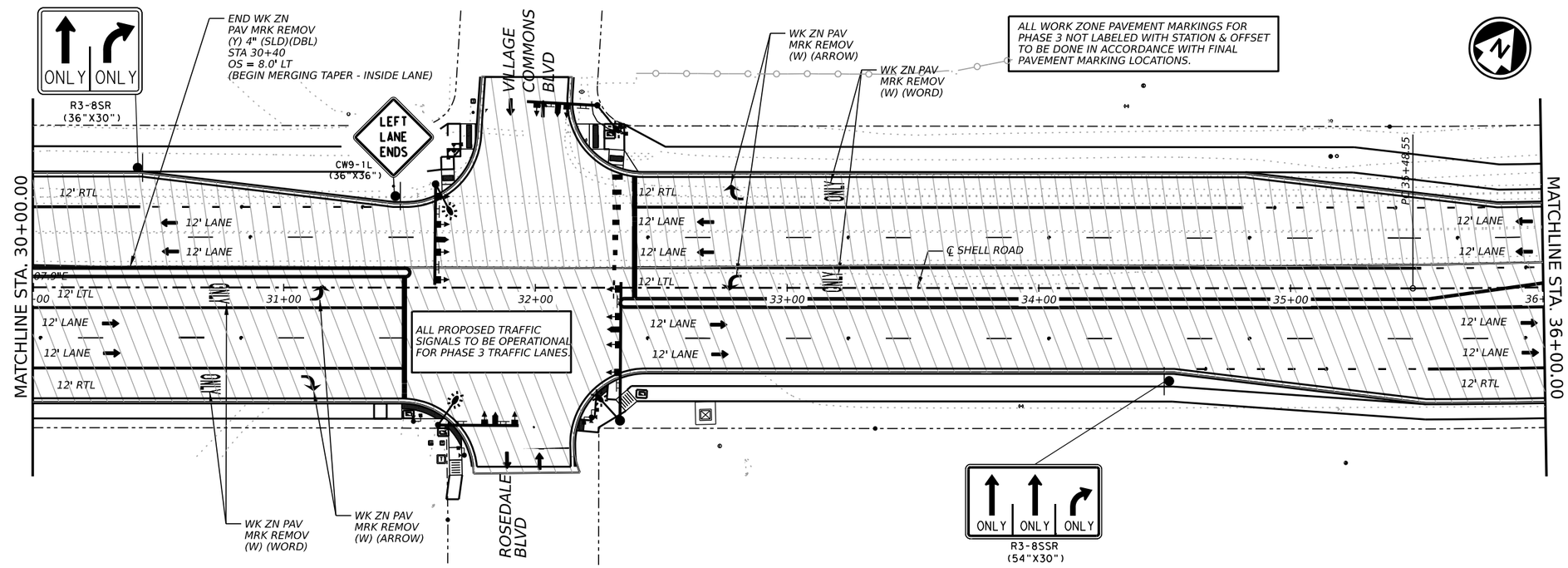

LEGEND

- DIRECTION OF TRAFFIC
- CHANNELIZING DEVICES
- SIGN
- TYPE 3 BARRICADE
- FLASHING ARROW BOARD
- LOW PROFILE CONCRETE BARRIER
- CONSTRUCTION THIS PHASE
- TEMPORARY PAVEMENT
- BUILT PREVIOUSLY
- TEMPORARY PAVEMENT BUILT PREVIOUSLY

NOTES:

1. MAINTAIN ACCESS TO ALL INTERSECTIONS AND DRIVEWAYS AT ALL TIMES UNLESS OTHERWISE NOTED.
2. SEE TCP SEQUENCE OF WORK.
3. SEE BC, TCP, AND WZ STANDARDS FOR TEMPORARY SIGNING AND PAVEMENT MARKING DETAILS.
4. SEE P&P SHEETS AND INTERSECTION LAYOUTS FOR ADDITIONAL INFORMATION.
5. ALL CHANNELIZING DEVICES AND SIGN PLACEMENT MUST CONFORM TO THE TEXAS MANUAL ON UNIFORM TRAFFIC CONTROL DEVICES (TMUTCD) AND TXDOT STANDARDS.
6. WARNING SIGN PLACEMENT SHALL NOT CONFLICT WITH EXISTING PERMANENT SIGNAGE.
7. EXISTING GROUND MOUNTED SIGNS SHALL BE TEMPORARILY REINSTALLED ON SKIDS WHERE NEEDED FOR TCP.

0 25 50

SCALE: 1" = 50'

STATE OF TEXAS
ELENA RAMON
141765
LICENSED
PROFESSIONAL ENGINEER

3/12/2025

GEORGETOWN TEXAS EST.1848

BGE, Inc.
101 West Louis Henna Blvd, Suite 400, Austin, TX 78728
Tel: 512-879-0400 • www.bgeinc.com
TBPE Registration No. F-1046

SHELL ROAD

TCP PHASE 3 LAYOUTS

SHEET 3 OF 7

SHEET NO. 61

DATE: 3/12/2025 2:53:15 PM
FILE: G:\TXC\Projects\City Georgetown\10767-00 Shell Road\03 CADD\01 Shts\02-TCP\SHELL_TCP3_03.dgn

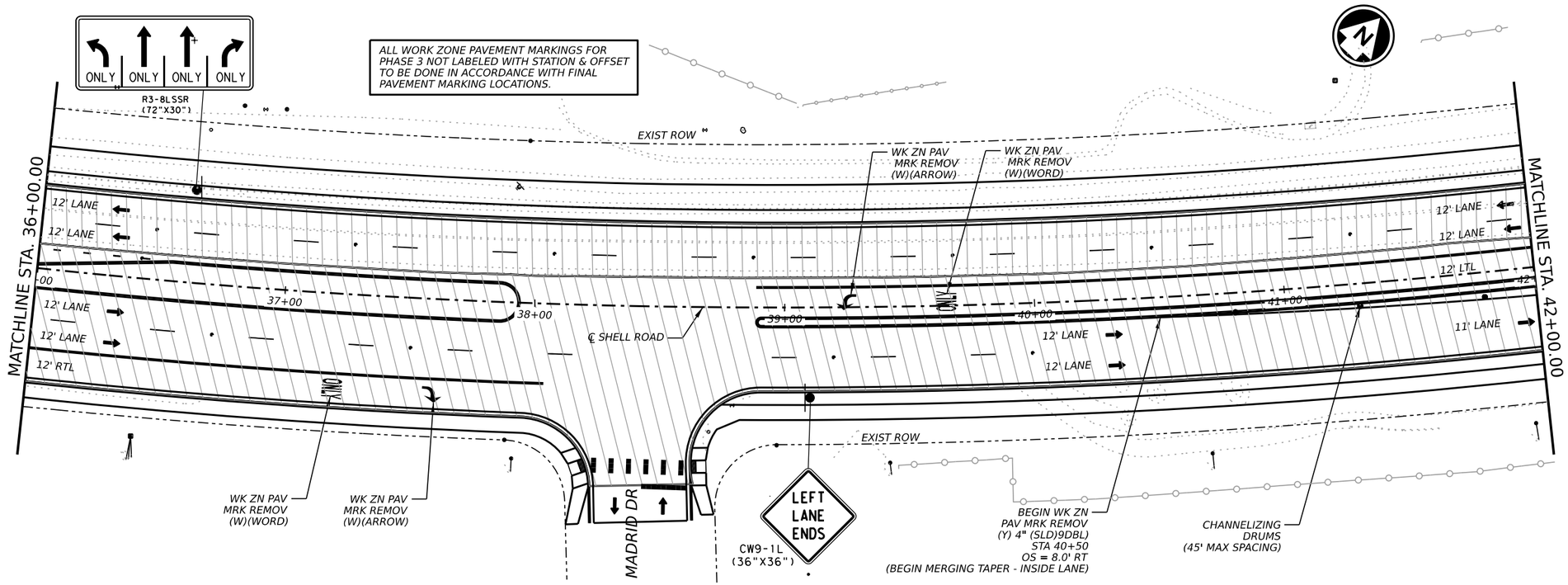

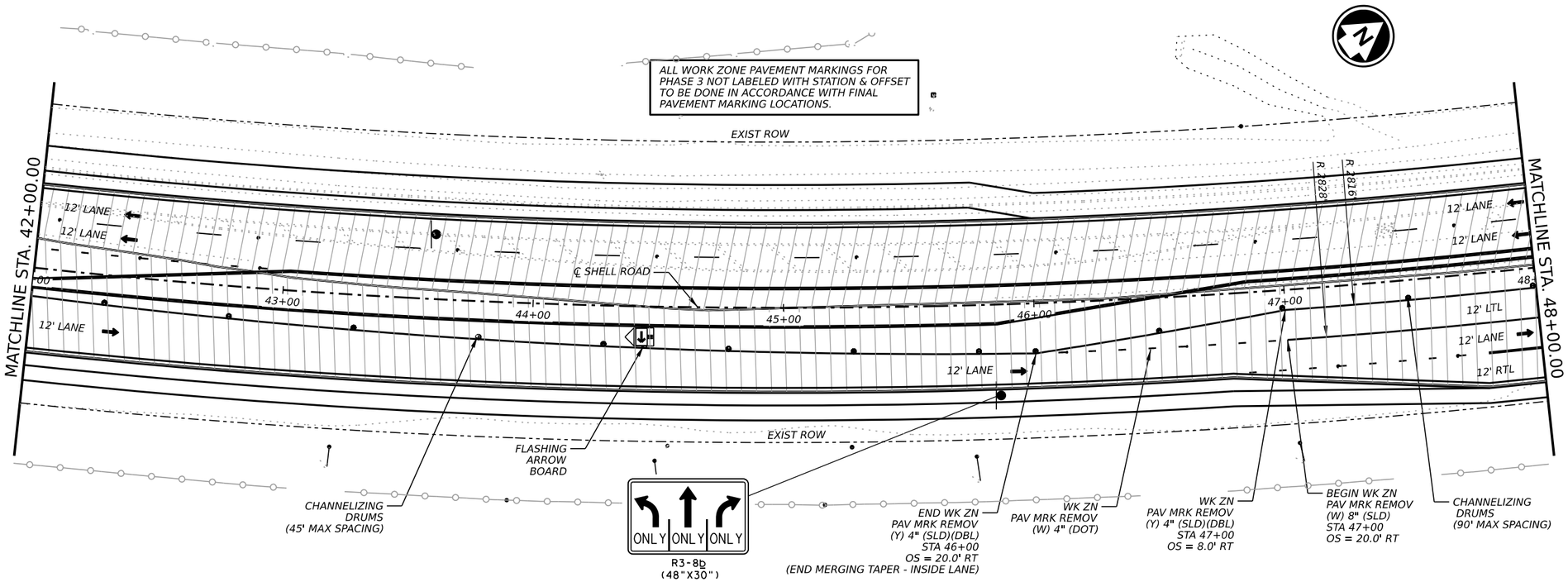

LEGEND

- DIRECTION OF TRAFFIC
- CHANNELIZING DEVICES
- SIGN
- TYPE 3 BARRICADE
- FLASHING ARROW BOARD
- LOW PROFILE CONCRETE BARRIER
- CONSTRUCTION THIS PHASE
- TEMPORARY PAVEMENT
- BUILT PREVIOUSLY
- TEMPORARY PAVEMENT BUILT PREVIOUSLY

NOTES:

1. MAINTAIN ACCESS TO ALL INTERSECTIONS AND DRIVEWAYS AT ALL TIMES UNLESS OTHERWISE NOTED.
2. SEE TCP SEQUENCE OF WORK.
3. SEE BC, TCP, AND WZ STANDARDS FOR TEMPORARY SIGNING AND PAVEMENT MARKING DETAILS.
4. SEE P&P SHEETS AND INTERSECTION LAYOUTS FOR ADDITIONAL INFORMATION.
5. ALL CHANNELIZING DEVICES AND SIGN PLACEMENT MUST CONFORM TO THE TEXAS MANUAL ON UNIFORM TRAFFIC CONTROL DEVICES (TMUTCD) AND TXDOT STANDARDS.
6. WARNING SIGN PLACEMENT SHALL NOT CONFLICT WITH EXISTING PERMANENT SIGNAGE.
7. EXISTING GROUND MOUNTED SIGNS SHALL BE TEMPORARILY REINSTALLED ON SKIDS WHERE NEEDED FOR TCP.

0 25 50

SCALE: 1" = 50'

STATE OF TEXAS
ELENA RAMON
141765
LICENSED
PROFESSIONAL ENGINEER

3/12/2025

EST.1848 GEORGETOWN TEXAS

BGE, Inc.
101 West Louis Henna Blvd, Suite 400, Austin, TX 78728
Tel: 512-879-0400 • www.bgeinc.com
TBPE Registration No. F-1046

SHELL ROAD

TCP PHASE 3 LAYOUTS

SHEET 4 OF 7

SHEET NO. 62

DATE: 3/12/2025 2:53:17 PM
FILE: G:\TXC\Projects\City Georgetown\10767-00 Shell Road\03 CADD\01 Shts\02-TCP\SHELL_TCP3_04.dgn

ALL WORK ZONE PAVEMENT MARKINGS FOR PHASE 3 NOT LABELED WITH STATION & OFFSET TO BE DONE IN ACCORDANCE WITH FINAL PAVEMENT MARKING LOCATIONS.

ALL PROPOSED TRAFFIC SIGNALS TO BE OPERATIONAL FOR PHASE 3 TRAFFIC LANES. NON APPLICABLE SIGNAL HEADS TO BE COVERED.

WESTBURY LN

BELLAIRE DR

MATCHLINE STA. 48+00.00

MATCHLINE STA. 54+00.00

MATCHLINE STA. 60+00.00

℄ SHELL ROAD

EXIST ROW

PROP ROW

BEGIN TAPER AT STA 49+00 AND END TAPER AT STA 49+50 CHANNELIZING DRUMS (10' MAX SPACING)

CLOSE LANE AT INTERSECTION CHANNELIZING DRUMS (10' MAX SPACING)

R 2816'

R 2828'

12' LANE

12' LTL

12' RTL

ONLY

49+00

50+00

51+00

52+00

53+00

54+00

55+00

56+00

57+00

58+00

59+00

60+00

CHANNELIZING DRUMS (90' MAX SPACING)

WK ZN PAV MRK REMOV (W)(WORD)

WK ZN PAV MRK REMOV (W)(ARROW)

END WK ZN PAV MRK REMOV (Y) 4" (SLD)(DBL) STA 50+15 OS = 8.0' RT

END WK ZN PAV MRK REMOV (W) 8" (SLD) STA 50+15 OS = 20.' RT

BEGIN WK ZN PAV MRK REMOV (W) 8" (SLD) STA 51+10 OS = 20.0' LT

BEGIN WK ZN PAV MRK REMOV (Y) 4" (SLD)(DBL) STA 51+10 OS = 8.0' LT

BEGIN WK ZN PAV MRK REMOV (Y) 4" (SLD)(DBL) STA 51+10 OS = 20.0' RT

WK ZN PAV MRK REMOV (Y) 4" (SLD)(DBL) STA 53+00 OS = 8.0' RT

END WK ZN PAV MRK REMOV (W) 8" (SLD) STA 53+00 OS = 20.0' LT

WK ZN PAV MRK REMOV (W) 4" (DOT)

R 2788'

R 2800'

R 2828'

WK ZN PAV MRK REMOV (W)(ARROW)

WK ZN PAV MRK REMOV (W)(WORD)

CHANNELIZING DRUMS (90' MAX SPACING)

LEGEND

- DIRECTION OF TRAFFIC
- CHANNELIZING DEVICES
- SIGN
- TYPE 3 BARRICADE
- FLASHING ARROW BOARD
- LOW PROFILE CONCRETE BARRIER
- CONSTRUCTION THIS PHASE
- TEMPORARY PAVEMENT
- BUILT PREVIOUSLY
- TEMPORARY PAVEMENT BUILT PREVIOUSLY

NOTES:

1. MAINTAIN ACCESS TO ALL INTERSECTIONS AND DRIVEWAYS AT ALL TIMES UNLESS OTHERWISE NOTED.
2. SEE TCP SEQUENCE OF WORK.
3. SEE BC, TCP, AND WZ STANDARDS FOR TEMPORARY SIGNING AND PAVEMENT MARKING DETAILS.
4. SEE P&P SHEETS AND INTERSECTION LAYOUTS FOR ADDITIONAL INFORMATION.
5. ALL CHANNELIZING DEVICES AND SIGN PLACEMENT MUST CONFORM TO THE TEXAS MANUAL ON UNIFORM TRAFFIC CONTROL DEVICES (TMUTCD) AND TXDOT STANDARDS.
6. WARNING SIGN PLACEMENT SHALL NOT CONFLICT WITH EXISTING PERMANENT SIGNAGE.
7. EXISTING GROUND MOUNTED SIGNS SHALL BE TEMPORARILY REINSTALLED ON SKIDS WHERE NEEDED FOR TCP.

0 25 50

SCALE: 1" = 50'

ALL WORK ZONE PAVEMENT MARKINGS FOR PHASE 3 NOT LABELED WITH STATION & OFFSET TO BE DONE IN ACCORDANCE WITH FINAL PAVEMENT MARKING LOCATIONS.

R3-8b (48"X30")

R3-8SR (36"X30")

R3-8LS (36"X30")

ONLY

WK ZN PAV MRK REMOV (Y) 4" (SLD)(DBL) STA 54+00 OS = 20.0' LT

CHANNELIZING DRUMS (90' MAX SPACING)

R 2788'

R 2828'

PT 55+97.53

WK ZN PAV MRK REMOV (Y) 4" (SLD)(DBL) STA 55+97.5 OS = 20.0' LT

PT WK ZN PAV MRK REMOV (Y) 4" (SLD)(DBL) STA 55+97.5 OS = 20.0' RT

WK ZN PAV MRK REMOV (Y) 4" (SLD)(DBL) STA 57+38 OS = 20.0' RT

WK ZN PAV MRK REMOV (W) 4" (DOT)

WK ZN PAV MRK REMOV (Y) 4" (SLD)(DBL) STA 58+38 OS = 8.0' RT

BEGIN WK ZN PAV MRK REMOV (W) 8" (SLD) STA 58+50 OS = 20.0' RT

STATE OF TEXAS
ELENA RAMON
141765
LICENSED
PROFESSIONAL ENGINEER

3/12/2025

EST.1848 GEORGETOWN TEXAS

BGE, Inc.
101 West Louis Henna Blvd, Suite 400, Austin, TX 78728
Tel: 512-879-0400 • www.bgeinc.com
TBPE Registration No. F-1046

SHELL ROAD

TCP PHASE 3 LAYOUTS

SHEET 5 OF 7

SHEET NO. 63

DATE: 3/12/2025 2:53:19 PM
FILE: G:\TXC\Projects\City Georgetown\10767-00 Shell Road\03 CADD\01 Shts\02-TCP\SHELL_TCP3 05.dgn

CK
DW
CK
DW

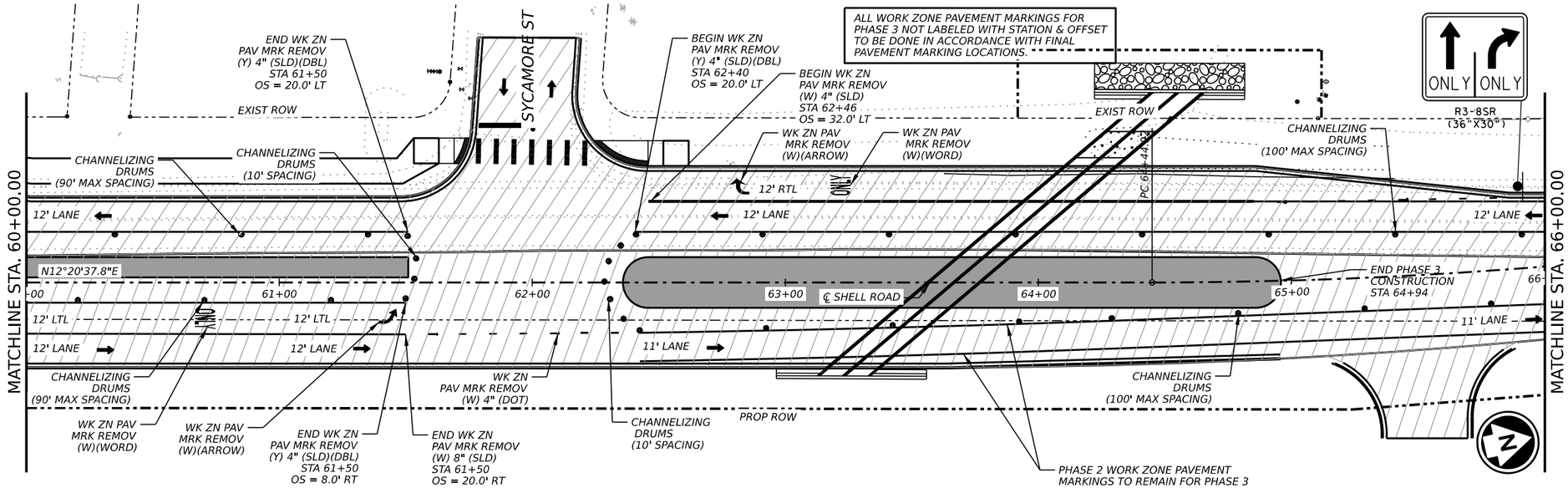

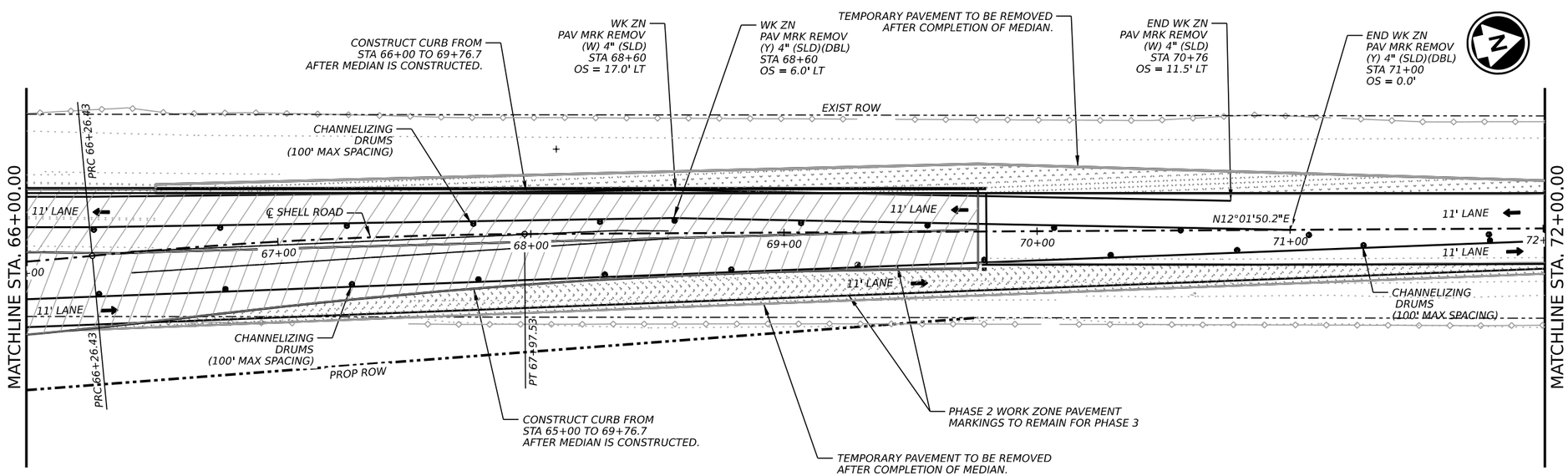

LEGEND

- DIRECTION OF TRAFFIC
- CHANNELIZING DEVICES
- SIGN
- TYPE 3 BARRICADE
- FLASHING ARROW BOARD
- LOW PROFILE CONCRETE BARRIER
- CONSTRUCTION THIS PHASE
- TEMPORARY PAVEMENT
- BUILT PREVIOUSLY
- TEMPORARY PAVEMENT BUILT PREVIOUSLY

NOTES:

1. MAINTAIN ACCESS TO ALL INTERSECTIONS AND DRIVEWAYS AT ALL TIMES UNLESS OTHERWISE NOTED.
2. SEE TCP SEQUENCE OF WORK.
3. SEE BC, TCP, AND WZ STANDARDS FOR TEMPORARY SIGNING AND PAVEMENT MARKING DETAILS.
4. SEE P&P SHEETS AND INTERSECTION LAYOUTS FOR ADDITIONAL INFORMATION.
5. ALL CHANNELIZING DEVICES AND SIGN PLACEMENT MUST CONFORM TO THE TEXAS MANUAL ON UNIFORM TRAFFIC CONTROL DEVICES (TMUTCD) AND TXDOT STANDARDS.
6. WARNING SIGN PLACEMENT SHALL NOT CONFLICT WITH EXISTING PERMANENT SIGNAGE.
7. EXISTING GROUND MOUNTED SIGNS SHALL BE TEMPORARILY REINSTALLED ON SKIDS WHERE NEEDED FOR TCP.

0 25 50

SCALE: 1" = 50'

STATE OF TEXAS
ELENA RAMON
141765
LICENSED
PROFESSIONAL ENGINEER

3/12/2025

EST.1848 GEORGETOWN TEXAS

BGE, Inc.
101 West Louis Henna Blvd, Suite 400, Austin, TX 78728
Tel: 512-879-0400 • www.bgeinc.com
TBPE Registration No. F-1046

SHELL ROAD

TCP PHASE 3 LAYOUTS

SHEET 6 OF 7

SHEET NO. 64

DATE: 3/12/2025 2:53:22 PM
FILE: G:\TXC\Projects\City Georgetown\10767-00 Shell Road\03 CADD\01 Shts\02-TCP\SHELL_TCP3_06.dgn

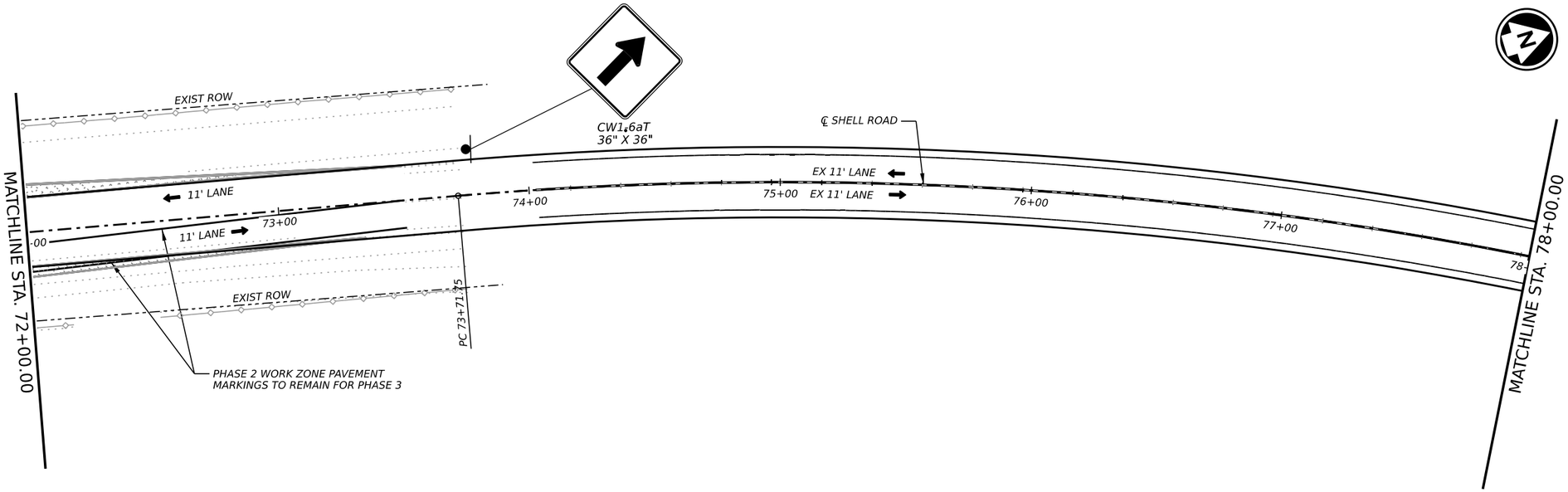

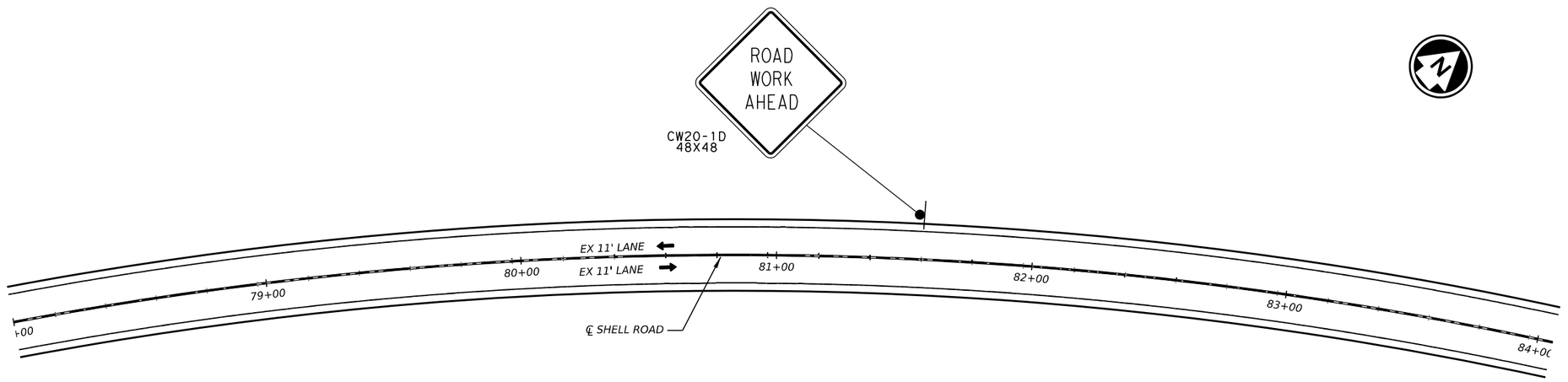

LEGEND

- DIRECTION OF TRAFFIC
- CHANNELIZING DEVICES
- SIGN
- TYPE 3 BARRICADE
- FLASHING ARROW BOARD
- LOW PROFILE CONCRETE BARRIER
- CONSTRUCTION THIS PHASE
- TEMPORARY PAVEMENT
- BUILT PREVIOUSLY
- TEMPORARY PAVEMENT BUILT PREVIOUSLY

NOTES:

1. MAINTAIN ACCESS TO ALL INTERSECTIONS AND DRIVEWAYS AT ALL TIMES UNLESS OTHERWISE NOTED.
2. SEE TCP SEQUENCE OF WORK.
3. SEE BC, TCP, AND WZ STANDARDS FOR TEMPORARY SIGNING AND PAVEMENT MARKING DETAILS.
4. SEE P&P SHEETS AND INTERSECTION LAYOUTS FOR ADDITIONAL INFORMATION.
5. ALL CHANNELIZING DEVICES AND SIGN PLACEMENT MUST CONFORM TO THE TEXAS MANUAL ON UNIFORM TRAFFIC CONTROL DEVICES (TMUTCD) AND TXDOT STANDARDS.
6. WARNING SIGN PLACEMENT SHALL NOT CONFLICT WITH EXISTING PERMANENT SIGNAGE.
7. EXISTING GROUND MOUNTED SIGNS SHALL BE TEMPORARILY REINSTALLED ON SKIDS WHERE NEEDED FOR TCP.

0 25 50

SCALE: 1" = 50'

STATE OF TEXAS
ELENA RAMON
141765
LICENSED
PROFESSIONAL ENGINEER

3/12/2025

EST. 1848 GEORGETOWN TEXAS

BGE, Inc.
101 West Louis Henna Blvd, Suite 400, Austin, TX 78728
Tel: 512-879-0400 • www.bgeinc.com
TBPE Registration No. F-1046

SHELL ROAD

TCP PHASE 3 LAYOUTS

SHEET 7 OF 7

SHEET NO. 65

DATE: 3/12/2025 2:53:24 PM
FILE: G:\TXC\Projects\City Georgetown\10767-00 Shell Road\03 CADD\01 Shts\02-TCP\SHELL_TCP3_07.dgn

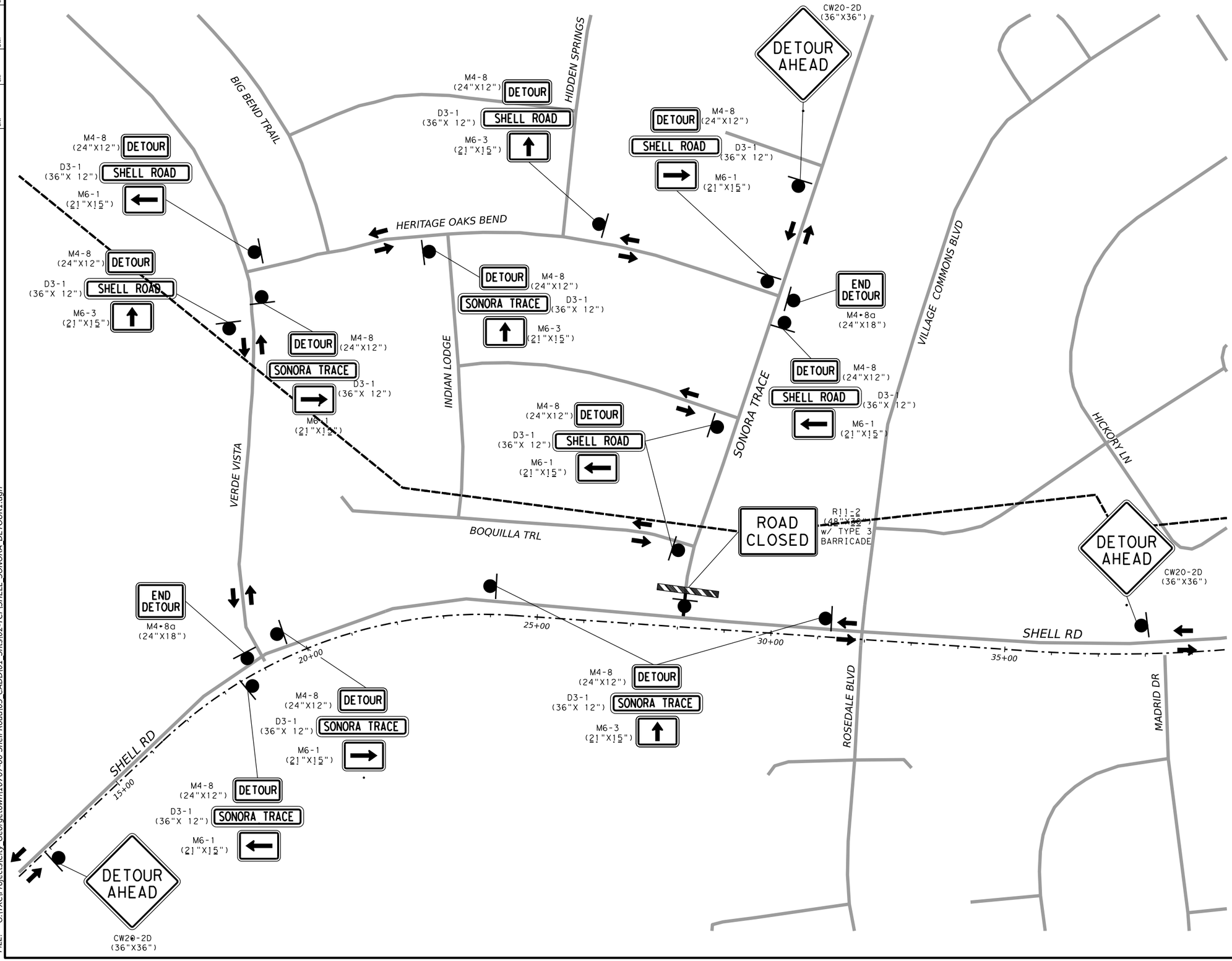

LEGEND

- *DIRECTION OF TRAFFIC*
- *TYPE 3 BARRICADE*
- *SIGN*
- *PORTABLE CHANGEABLE MESSAGE SIGNS (PCMS)*

NOTES:

1. *DETOUR SIGN PLACEMENT SHALL NOT CONFLICT WITH EXISTING PERMANENT SIGNS.*
2. *SIGNS AND BARRICADES SHOWN SHALL BE SUBSIDIARY TO ITEM 502.*
3. *COMPLETELY COVER SIGNS THAT CONFLICT WITH DETOUR. THESE SIGNS SHALL REMAIN COMPLETELY COVERED UNTIL THE SIGNS ARE APPLICABLE. THIS WORK WILL BE SUBSIDIARY TO ITEM 502.*
4. *REFER TO WZ(RCD)-13 STANDARD FOR MINIMUM SIGN SPACING DISTANCE AND ADDITIONAL DETAILS.*

STATE OF TEXAS
ELENA RAMON
141765
LICENSED
PROFESSIONAL ENGINEER

Elena Ramon

3/12/2025

EST.1848 GEORGETOWN TEXAS

BGE, Inc.
101 West Louis Henna Blvd, Suite 400, Austin, TX 78728
Tel: 512-879-0400 • www.bgeinc.com
TBPE Registration No. F-1046

SHELL ROAD

TRAFFIC CONTROL PLAN
SONORA TRACE DETOUR

SHEET 1 OF 1

SHEET NO. 66

DATE: 3/12/2025 2:53:26 PM
FILE: G:\TXC\Projects\City Georgetown\10767-00 Shell Road\03 CADD\01 Shts\02-TCP\SHELL_SONORA_DETOUR1.dgn

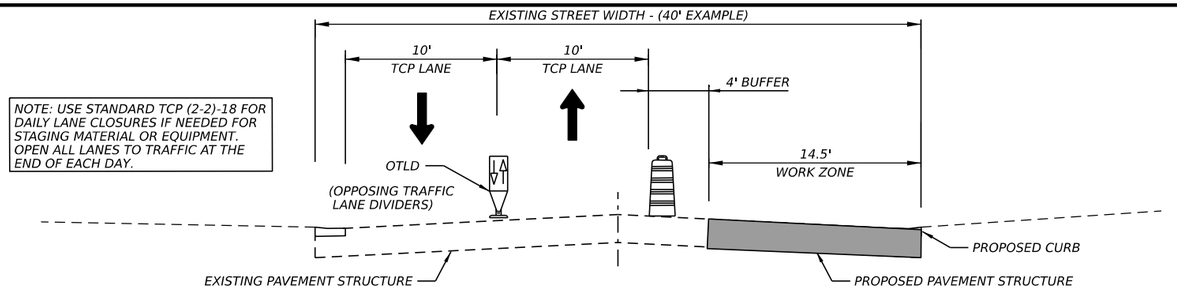

NOTE: USE STANDARD TCP (2-2)-18 FOR DAILY LANE CLOSURES IF NEEDED FOR STAGING MATERIAL OR EQUIPMENT. OPEN ALL LANES TO TRAFFIC AT THE END OF EACH DAY.

STEP 1 - STREET INTERSECTION

VERDE VISTA - 49' LT & 62' RT TYP WIDTH
VILLAGE COMMONS BLVD. - 36' TYP WIDTH (9' TCP LANES)
ROSEDALE BLVD. - 40' TYP WIDTH
MADRID DR. - 41' TYP WIDTH
WESTBURY LN - 46' TYP WIDTH
BELLAIRE DR. - 41' TYP WIDTH
SYCRAMORE ST. - 41' TYP WIDTH
(NOTE: VERDE VISTA 62' WIDTH TO BE DONE
WITH 2 STEPS - HALF WIDTH CONSTRUCTION)

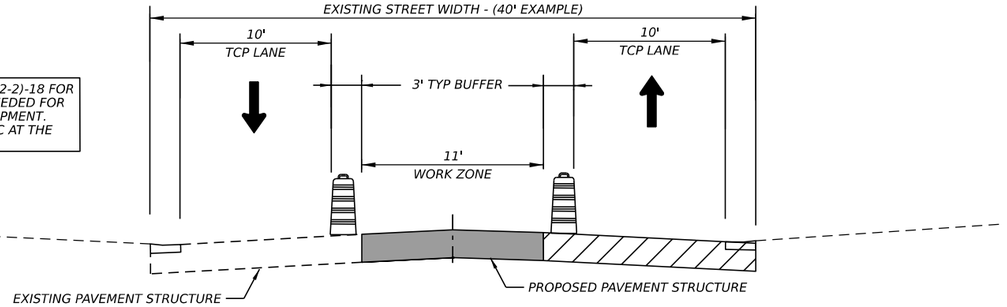

NOTE: USE STANDARD TCP (2-2)-18 FOR DAILY LANE CLOSURES IF NEEDED FOR STAGING MATERIAL OR EQUIPMENT. OPEN ALL LANES TO TRAFFIC AT THE END OF EACH DAY.

STEP 2 - STREET INTERSECTION

VERDE VISTA - 49' LT & 62' RT TYP WIDTH
VILLAGE COMMONS BLVD. - 36' TYP WIDTH (9' TCP LANES)
ROSEDALE BLVD. - 40' TYP WIDTH
MADRID DR. - 41' TYP WIDTH
WESTBURY LN - 46' TYP WIDTH
BELLAIRE DR. - 41' TYP WIDTH
SYCRAMORE ST. - 41' TYP WIDTH
(NOTE: VERDE VISTA 62' WIDTH TO BE DONE
WITH 2 STEPS - HALF WIDTH CONSTRUCTION)

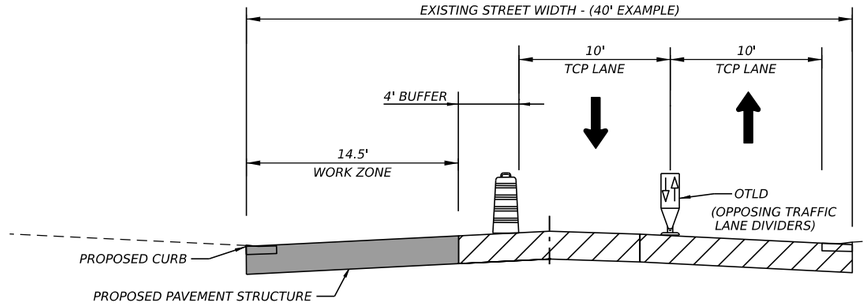

NOTE: USE STANDARD TCP (2-2)-18 FOR DAILY LANE CLOSURES IF NEEDED FOR STAGING MATERIAL OR EQUIPMENT. OPEN ALL LANES TO TRAFFIC AT THE END OF EACH DAY.

STEP 3 - STREET INTERSECTION

VERDE VISTA - 49' LT & 62' RT TYP WIDTH
VILLAGE COMMONS BLVD. - 36' TYP WIDTH (9' TCP LANES)
ROSEDALE BLVD. - 40' TYP WIDTH
MADRID DR. - 41' TYP WIDTH
WESTBURY LN - 46' TYP WIDTH
BELLAIRE DR. - 41' TYP WIDTH
SYCRAMORE ST. - 41' TYP WIDTH

LEGEND

- DIRECTION OF TRAFFIC
- CHANNELIZING DEVICES
- SIGN
- TYPE 3 BARRICADE
- FLASHING ARROW BOARD
- LOW PROFILE CONCRETE BARRIER
- CONSTRUCTION THIS PHASE
- TEMPORARY PAVEMENT
- BUILT PREVIOUSLY
- TEMPORARY PAVEMENT BUILT PREVIOUSLY

NOTES:
1. MAINTAIN ACCESS TO ALL INTERSECTIONS AND DRIVEWAYS AT ALL TIMES UNLESS OTHERWISE NOTED.
2. SEE TCP SEQUENCE OF WORK.
3. SEE BC, TCP, AND WZ STANDARDS FOR TEMPORARY SIGNING AND PAVEMENT MARKING DETAILS.
4. SEE P&P SHEETS AND INTERSECTION LAYOUTS FOR ADDITIONAL INFORMATION.
5. ALL CHANNELIZING DEVICES AND SIGN PLACEMENT MUST CONFORM TO THE TEXAS MANUAL ON UNIFORM TRAFFIC CONTROL DEVICES (TMUTCD) AND TXDOT STANDARDS.
6. WARNING SIGN PLACEMENT SHALL NOT CONFLICT WITH EXISTING PERMANENT SIGNAGE.
7. EXISTING GROUND MOUNTED SIGNS SHALL BE TEMPORARILY REINSTALLED ON SKIDS WHERE NEEDED FOR TCP.

NOTE:
SKYFLOWER DR. & SONORA TRACE TO BE CLOSED FOR CONSTRUCTION.
CLOSE ONE INTERSECTION AND COMPLETE BEFORE CLOSURE OF THE NEXT INTERSECTION.
IMMEDIATELY AFTER CLOSURE, CONTRACTOR TO WORK CONTINUOUSLY ON INTERSECTION TO COMPLETE AND OPEN BACK TO TRAFFIC.

STATE OF TEXAS
ELENA RAMON
141765
LICENSED
PROFESSIONAL ENGINEER
3/12/2025

EST.1848 GEORGETOWN TEXAS

BGE, Inc.
101 West Louis Henna Blvd, Suite 400, Austin, TX 78728
Tel: 512-879-0400 • www.bgeinc.com
TBPE Registration No. F-1046

SHELL ROAD

TRAFFIC CONTROL PLAN INTERSECTION DETAILS

SHEET 1 OF 3

SHEET NO. 67

DATE: 3/12/2025 2:53:27 PM
FILE: G:\TXC\Projects\City Georgetown\10767-00 Shell Road\03 CADD\01 Shts\02-TCP\SHELL_TCP_INT_01.dgn

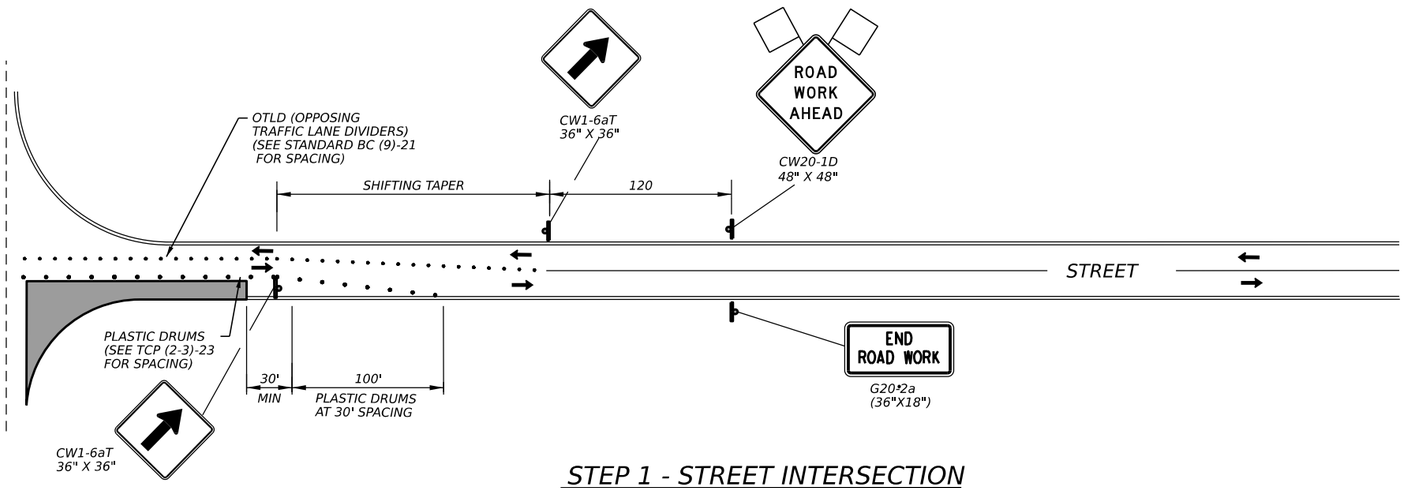

STEP 1 - STREET INTERSECTION

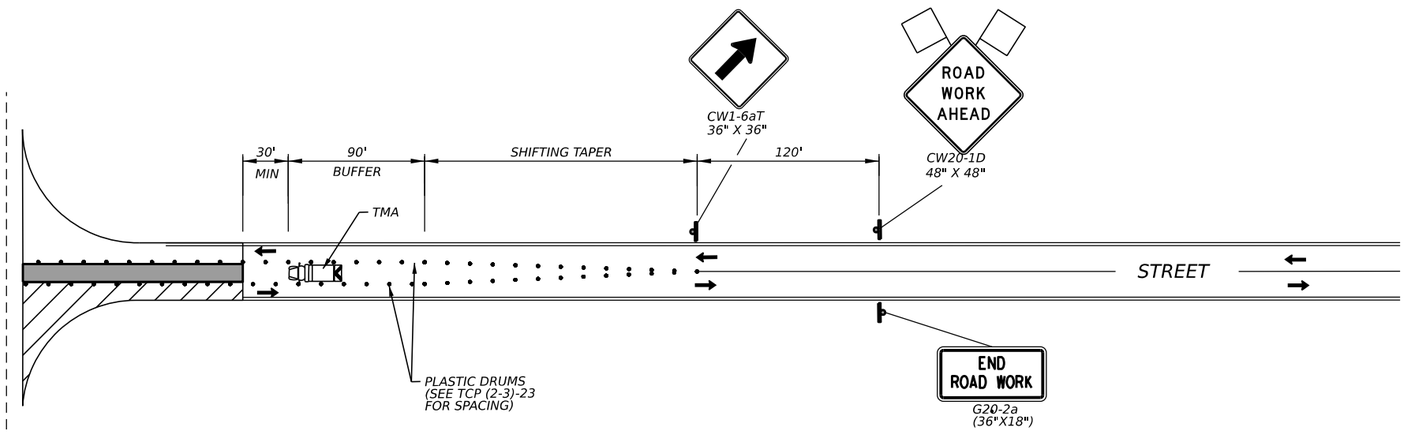

STEP 2 - STREET INTERSECTION

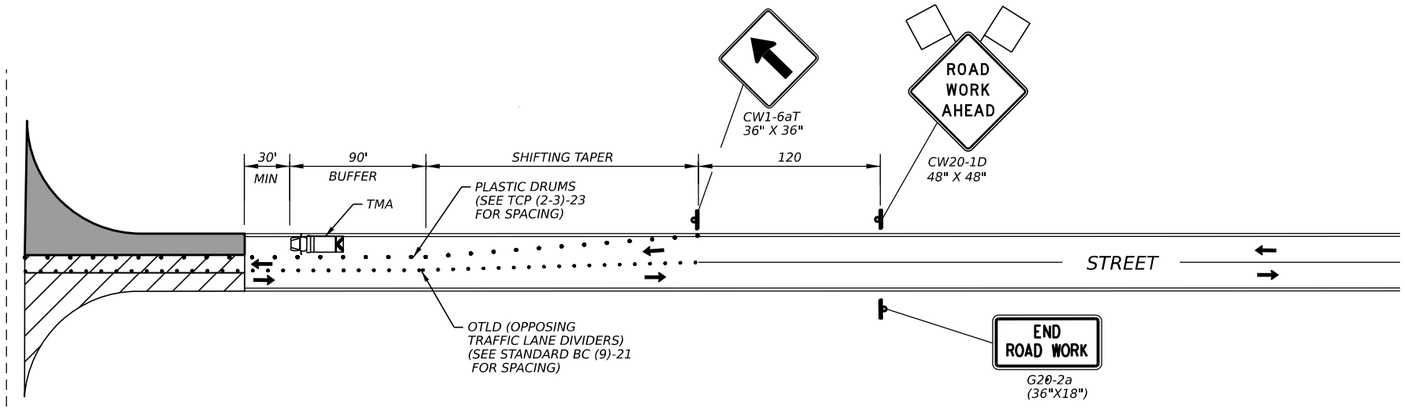

STEP 3 - STREET INTERSECTION

NOTE: FOR ADDITIONAL INFORMATION AND TRAFFIC CONTROL DETAILS REFER TO STANDARDS TCP (2-3)-23 & BC (9)-21

LEGEND

- DIRECTION OF TRAFFIC
- CHANNELIZING DEVICES
- SIGN
- TYPE 3 BARRICADE
- FLASHING ARROW BOARD
- LOW PROFILE CONCRETE BARRIER
- CONSTRUCTION THIS PHASE
- TEMPORARY PAVEMENT
- BUILT PREVIOUSLY
- TEMPORARY PAVEMENT BUILT PREVIOUSLY

NOTES:

1. MAINTAIN ACCESS TO ALL INTERSECTIONS AND DRIVEWAYS AT ALL TIMES UNLESS OTHERWISE NOTED.
2. SEE TCP SEQUENCE OF WORK.
3. SEE BC, TCP, AND WZ STANDARDS FOR TEMPORARY SIGNING AND PAVEMENT MARKING DETAILS.
4. SEE P&P SHEETS AND INTERSECTION LAYOUTS FOR ADDITIONAL INFORMATION.
5. ALL CHANNELIZING DEVICES AND SIGN PLACEMENT MUST CONFORM TO THE TEXAS MANUAL ON UNIFORM TRAFFIC CONTROL DEVICES (TMUTCD) AND TXDOT STANDARDS.
6. WARNING SIGN PLACEMENT SHALL NOT CONFLICT WITH EXISTING PERMANENT SIGNAGE.
7. EXISTING GROUND MOUNTED SIGNS SHALL BE TEMPORARILY REINSTALLED ON SKIDS WHERE NEEDED FOR TCP.

STATE OF TEXAS
ELENA RAMON
141765
LICENSED
PROFESSIONAL ENGINEER
3/12/2025

EST. 1848 GEORGETOWN TEXAS

BGE, Inc.
101 West Louis Henna Blvd, Suite 400, Austin, TX 78728
Tel: 512-879-0400 • www.bgeinc.com
TBPE Registration No. F-1046

SHELL ROAD

TRAFFIC CONTROL PLAN INTERSECTION DETAILS

SHEET 2 OF 3

SHEET NO. 68

DATE: 3/12/2025 2:53:28 PM
FILE: G:\TXC\Projects\City Georgetown\10767-00 Shell Road\03_CADD\01_Shts\02-TCP\SHELL_TCP_INT_02.dgn

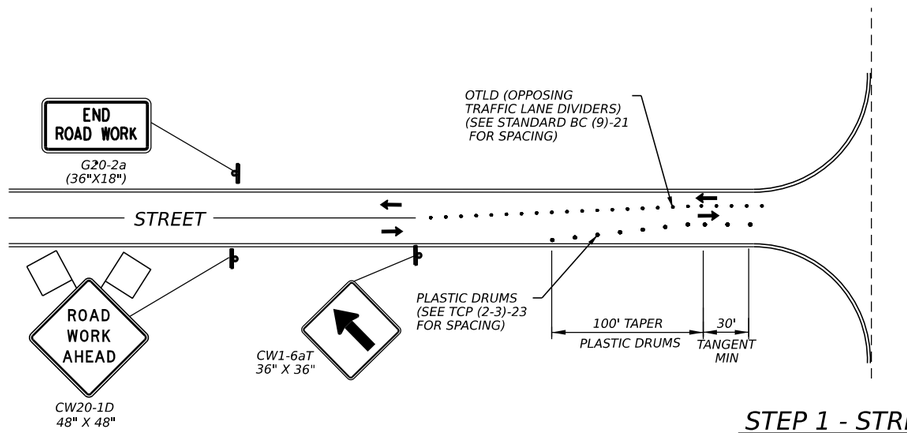

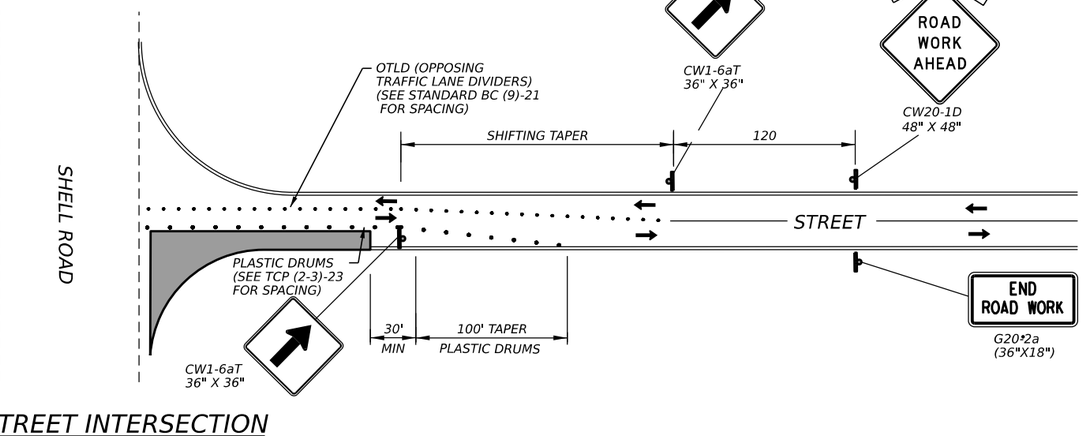

STEP 1 - STREET INTERSECTION

VERDE VISTA INTERSECTION
WESTBURY / BELLAIRE INTERSECTION

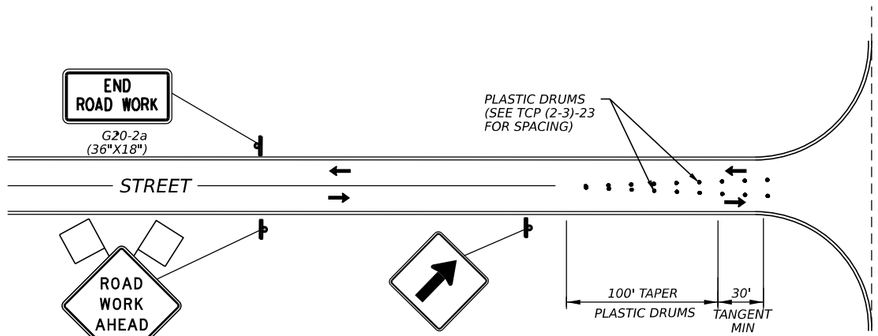

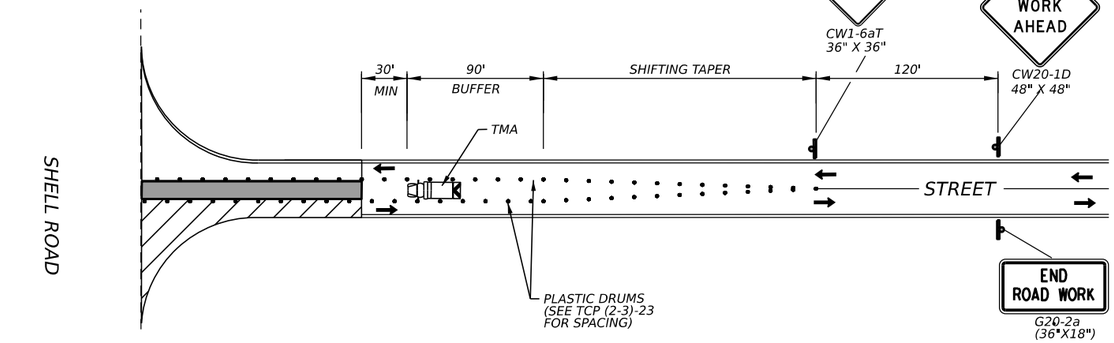

STEP 2 - STREET INTERSECTION

VERDE VISTA INTERSECTION
WESTBURY / BELLAIRE INTERSECTION

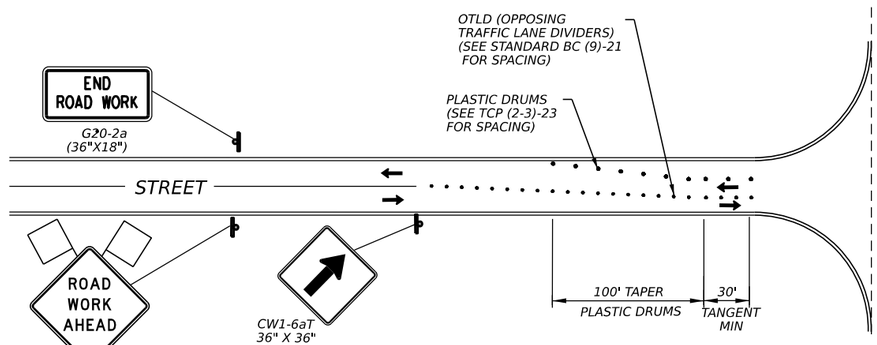

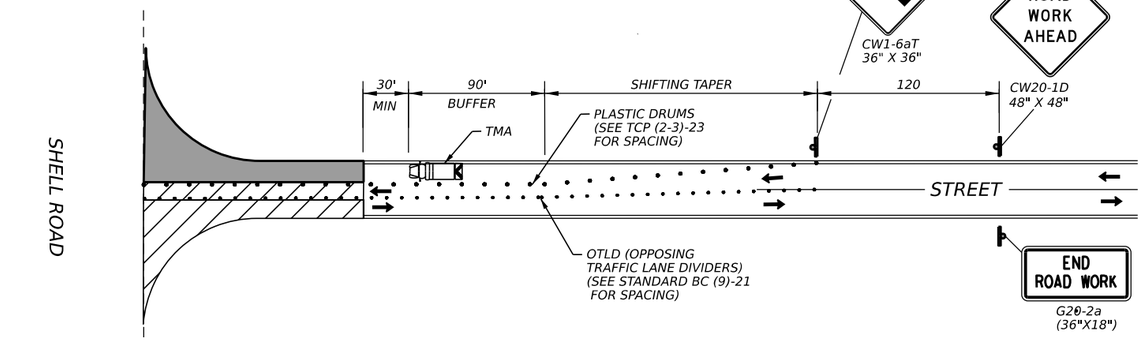

STEP 3 - STREET INTERSECTION

VERDE VISTA INTERSECTION
WESTBURY / BELLAIRE INTERSECTION

NOTE: FOR ADDITIONAL INFORMATION AND TRAFFIC CONTROL DETAILS REFER TO STANDARDS TCP (2-3)-23 & BC (9)-21

LEGEND

- DIRECTION OF TRAFFIC
- CHANNELIZING DEVICES
- SIGN
- TYPE 3 BARRICADE
- FLASHING ARROW BOARD
- LOW PROFILE CONCRETE BARRIER
- CONSTRUCTION THIS PHASE
- TEMPORARY PAVEMENT
- BUILT PREVIOUSLY
- TEMPORARY PAVEMENT BUILT PREVIOUSLY

NOTES:

1. MAINTAIN ACCESS TO ALL INTERSECTIONS AND DRIVEWAYS AT ALL TIMES UNLESS OTHERWISE NOTED.
2. SEE TCP SEQUENCE OF WORK.
3. SEE BC, TCP, AND WZ STANDARDS FOR TEMPORARY SIGNING AND PAVEMENT MARKING DETAILS.
4. SEE P&P SHEETS AND INTERSECTION LAYOUTS FOR ADDITIONAL INFORMATION.
5. ALL CHANNELIZING DEVICES AND SIGN PLACEMENT MUST CONFORM TO THE TEXAS MANUAL ON UNIFORM TRAFFIC CONTROL DEVICES (TMUTCD) AND TXDOT STANDARDS.
6. WARNING SIGN PLACEMENT SHALL NOT CONFLICT WITH EXISTING PERMANENT SIGNAGE.
7. EXISTING GROUND MOUNTED SIGNS SHALL BE TEMPORARILY REINSTALLED ON SKIDS WHERE NEEDED FOR TCP.

STATE OF TEXAS
ELENA RAMON
141765
LICENSED
PROFESSIONAL ENGINEER

3/12/2025

GEORGETOWN TEXAS EST.1848

BGE, Inc.
101 West Louis Henna Blvd, Suite 400, Austin, TX 78728
Tel: 512-879-0400 • www.bgeinc.com
TBPE Registration No. F-1046

SHELL ROAD

TRAFFIC CONTROL PLAN INTERSECTION DETAILS

SHEET 3 OF 3

SHEET NO. 69

DATE: 3/12/2025 2:53:31 PM
FILE: G:\TXC\Projects\City Georgetown\10767-00 Shell Road\03 CADD\01 Shts\02-TCP\SHELL TCP INT 03.dgn

DISCLAIMER:
The use of this standard is governed by the "Texas Engineering Practice Act". No warranty of any kind is made by TxDOT for any purpose whatsoever. TxDOT assumes no responsibility for the conversion of this standard to other formats or for incorrect results or damages resulting from its use.

DATE: 3/12/2025 2:53:34 PM
FILE: G:\TXC\Projects\City_Georgetown\10767-00 Shell Road\03_CADD\01_Shts\02-TCP\Shts\bc-21.dgn

BARRICADE AND CONSTRUCTION (BC) STANDARD SHEETS GENERAL NOTES:

1. The Barricade and Construction Standard Sheets (BC sheets) are intended to show typical examples for placement of temporary traffic control devices, construction pavement markings, and typical work zone signs. The information contained in these sheets meet or exceed the requirements shown in the "Texas Manual on Uniform Traffic Control Devices" (TMUTCD).

2. The development and design of the Traffic Control Plan (TCP)is the responsibility of the Engineer.

3. The Contractor may propose changes to the TCP that are signed and sealed by a licensed professional engineer for approval. The Engineer may develop, sign and seal Contractor proposed changes.

4. The Contractor is responsible for installing and maintaining the traffic control devices as shown in the plans. The Contractor may not move or change the approximate location of any device without the approval of the Engineer.

5. Geometric design of lane shifts and detours should, when possible, meet the applicable design criteria contained in manuals such as the American Association of State Highway and Transportation Officials (AASHTO), "A Policy on Geometric Design of Highways and Streets," the TxDOT "Roadway Design Manual" or engineering judgment.

6. When projects abut, the Engineer(s) may omit the END ROAD WORK, TRAFFIC FINES DOUBLE, and other advance warning signs if the signing would be redundant and the work areas appear continuous to the motorists. If the adjacent project is completed first, the Contractor shall erect the necessary warning signs as shown on these sheets, the TCP sheets or as directed by the Engineer. The BEGIN ROAD WORK NEXT X MILES sign shall be revised to show appropriate work zone distance.

7. The Engineer may require duplicate warning signs on the median side of divided highways where median width will permit and traffic volumes justify the signing.

8. All signs shall be constructed in accordance with the details found in the "Standard Highway Sign Designs for Texas," latest edition. Sign details not shown in this manual shall be shown in the plans or the Engineer shall provide a detail to the Contractor before the sign is manufactured.

9. The temporary traffic control devices shown in the illustrations of the BC sheets are examples. As necessary, the Engineer will determine the most appropriate traffic control devices to be used.

10. Where highway construction or maintenance work is being undertaken, other than mobile operations as defined by the Texas Manual on Uniform Traffic Control Devices, CSJ limit signs are required. CSJ limit signs are shown on BC(2). The OBEY WARNING SIGNS STATE LAW sign, STAY ALERT TALK OR TEXT LATER and the WORK ZONE TRAFFIC FINES DOUBLE sign with plaque shall be erected in advance of the CSJ limits. The BEGIN ROAD WORK NEXT X MILES, CONTRACTOR and END ROAD WORK signs shall be erected at or near the CSJ limits. For mobile operations, CSJ limit signs are not required.

11. Traffic control devices should be in place only while work is actually in progress or a definite need exists.

12. The Engineer has the final decision on the location of all traffic control devices.

13. Inactive equipment and work vehicles, including workers' private vehicles must be parked away from travel lanes. They should be as close to the right-of-way line as possible, or located behind a barrier or guardrail, or as approved by the Engineer.

WORKER SAFETY NOTES:

1. Workers on foot who are exposed to traffic or to construction equipment within the right-of-way shall wear high-visibility safety apparel meeting the requirements of ISEA "American National Standard for High-Visibility Apparel," or equivalent revisions, and labeled as ANSI 107-2004 standard performance for Class 2 or 3 risk exposure. Class 3 garments should be considered for high traffic volume work areas or night time work.

2. Except in emergency situations, flagger stations shall be illuminated when flagging is used at night.

COMPLIANT WORKZONE TRAFFIC CONTROL DEVICES

1. Only pre-qualified products shall be used. The "Compliant Work Zone Traffic Control Devices List" (CWZTCD) describes pre-qualified products and their sources.

2. Work zone traffic control devices shall be compliant with the Manual for Assessing safety Hardware (MASH).

THE DOCUMENTS BELOW CAN BE FOUND ON-LINE AT http://www.txdot.gov
COMPLIANT WORK ZONE TRAFFIC CONTROL DEVICES LIST (CWZTCD)
DEPARTMENTAL MATERIAL SPECIFICATIONS (DMS)
MATERIAL PRODUCER LIST (MPL)
ROADWAY DESIGN MANUAL - SEE "MANUALS (ONLINE MANUALS)"
STANDARD HIGHWAY SIGN DESIGNS FOR TEXAS (SHSD)
TEXAS MANUAL ON UNIFORM TRAFFIC CONTROL DEVICES (TMUTCD)
TRAFFIC ENGINEERING STANDARD SHEETS

Texas Department of Transportation | Traffic Safety Division Standard

BARRICADE AND CONSTRUCTION GENERAL NOTES AND REQUIREMENTS

BC(1)-21

FILE: bc-21.dgn	DN: TxDOT	CK: TxDOT	DW: TxDOT	CK: TxDOT
©TxDOT November 2002	CONT	SECT	JOB	HIGHWAY
REVISIONS 4-03 7-13 9-07 8-14 5-10 5-21	DIST	COUNTY		SHEET NO. 70

DISCLAIMER:
The use of this standard is governed by the "Texas Engineering Practice Act". No warranty of any kind is made by TxDOT for any purpose whatsoever. TxDOT assumes no responsibility for the conversion of this standard to other formats or for incorrect results or damages resulting from its use.

DATE: 3/12/2025 2:53:34 PM
FILE: G:\TxDOT\Projects\City_Georgetown\10767-00 Shell Road\03_CADD\01_Shts\02-TCP\Stds\BC-21.dgn

TYPICAL LOCATION OF CROSSROAD SIGNS

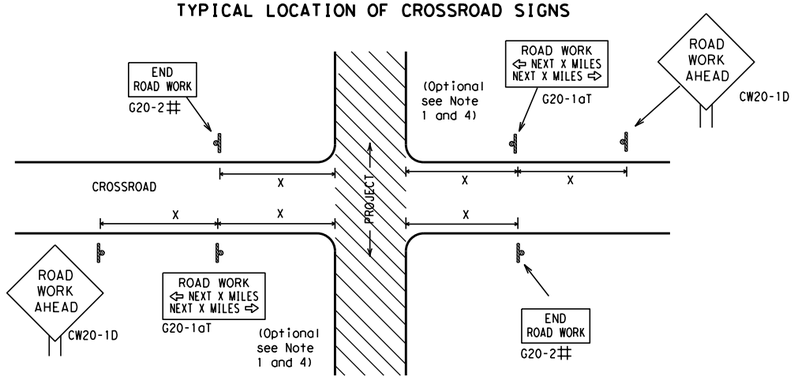

May be mounted on back of "ROAD WORK AHEAD"(CW20-1D) sign with approval of Engineer. (See note 2 below)

1. The typical minimum signing on a crossroad approach should be a "ROAD WORK AHEAD" (CW20-1D)sign and a (G20-2) "END ROAD WORK" sign, unless noted otherwise in plans.
2. The Engineer may use the reduced size 36" x 36" ROAD WORK AHEAD (CW20-1D) sign mounted back to back with the reduced size 36" x 18" "END ROAD WORK"(G20-2) sign on low volume crossroads (see Note 4 under "Typical Construction Warning Sign Size and Spacing"). See the "Standard Highway Sign Designs for Texas" manual for sign details. The Engineer may omit the advance warning signs on low volume crossroads. The Engineer will determine whether a road is low volume as per TMUTCD Part 5. This information shall be shown in the plans.
3. Based on existing field conditions, the Engineer/Inspector may require additional signs such as FLAGGER AHEAD, LOOSE GRAVEL, or other appropriate signs. When additional signs are required, these signs will be considered part of the minimum requirements. The Engineer/Inspector will determine the proper location and spacing of any sign not shown on the BC sheets, Traffic Control Plan sheets or the Work Zone Standard Sheets.
4. The "ROAD WORK NEXT X MILES"(G20-1aT)sign shall be required at high volume crossroads to advise motorists of the length of construction in either direction from the intersection. The Engineer will determine whether a roadway is considered high volume.
5. Additional traffic control devices may be shown elsewhere in the plans for higher volume crossroads.
6. When work occurs in the intersection area, appropriate traffic control devices, as shown elsewhere in the plans or as determined by the Engineer/Inspector, shall be in place.

T-INTERSECTION

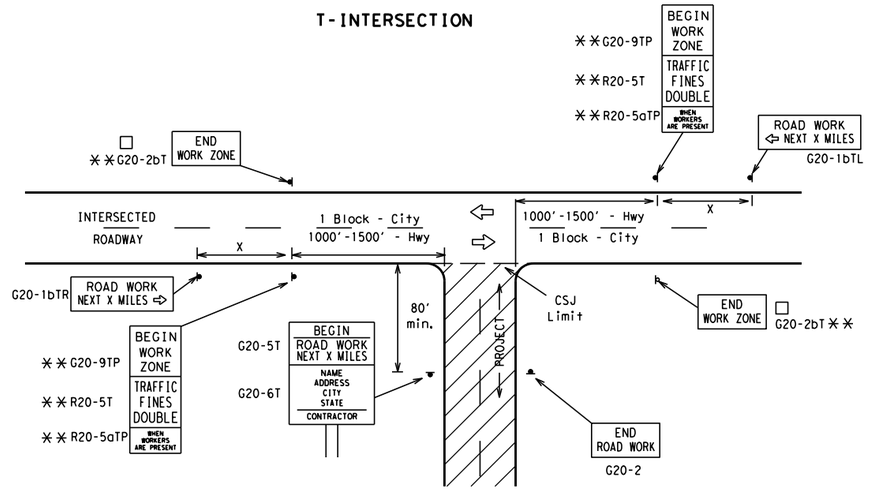

CSJ LIMITS AT T-INTERSECTION

1. The Engineer will determine the types and location of any additional traffic control devices, such as a flagger and accompanying signs, or other signs, that should be used when work is being performed at or near an intersection.
2. If construction closes the road at a T-intersection, the Contractor shall place the "CONTRACTOR NAME"(G20-6T) sign behind the Type 3 Barricades for the road closure (see BC(10) also). The "ROAD WORK NEXT X MILES" left arrow(G20-1bTL) and "ROAD WORK NEXT X MILES" right arrow (G20-1bTR)" signs shall be replaced by the detour signing called for in the plans.

TYPICAL CONSTRUCTION WARNING SIGN SIZE AND SPACING[1,5,6]

SIZE

Sign Number or Series	Conventional Road	Expressway/ Freeway
CW20[4] CW21 CW22 CW23 CW25	48" x 48"	48" x 48"
CW1, CW2, CW7, CW8, CW9, CW11, CW14	36" x 36"	48" x 48"
CW3, CW4, CW5, CW6, CW8-3, CW10, CW12	48" x 48"	48" x 48"

SPACING

Posted Speed	Sign △ Spacing "X"
MPH	Feet (Apprx.)
30	120
35	160
40	240
45	320
50	400
55	500[2]
60	600[2]
65	700[2]
70	800[2]
75	900[2]
80	1000[2]
✳	✳[3]

✳ For typical sign spacings on divided highways, expressways and freeways, see Part 6 of the "Texas Manual on Uniform Traffic Control Devices" (TMUTCD) typical application diagrams or TCP Standard Sheets.

△ Minimum distance from work area to first Advance Warning sign nearest the work area and/or distance between each additional sign.

GENERAL NOTES

1. Special or larger size signs may be used as necessary.
2. Distance between signs should be increased as required to have 1500 feet advance warning.
3. Distance between signs should be increased as required to have 1/2 mile or more advance warning.
4. 36" x 36" "ROAD WORK AHEAD" (CW20-1D)signs may be used on low volume crossroads at the discretion of the Engineer as per TMUTCD Part 5. See Note 2 under "Typical Location of Crossroad Signs".
5. Only diamond shaped warning sign sizes are indicated.
6. See sign size listing in "TMUTCD", Sign Appendix or the "Standard Highway Sign Designs for Texas" manual for complete list of available sign design sizes.

WORK AREAS IN MULTIPLE LOCATIONS WITHIN CSJ LIMITS

SAMPLE LAYOUT OF SIGNING FOR WORK BEGINNING AT THE CSJ LIMITS

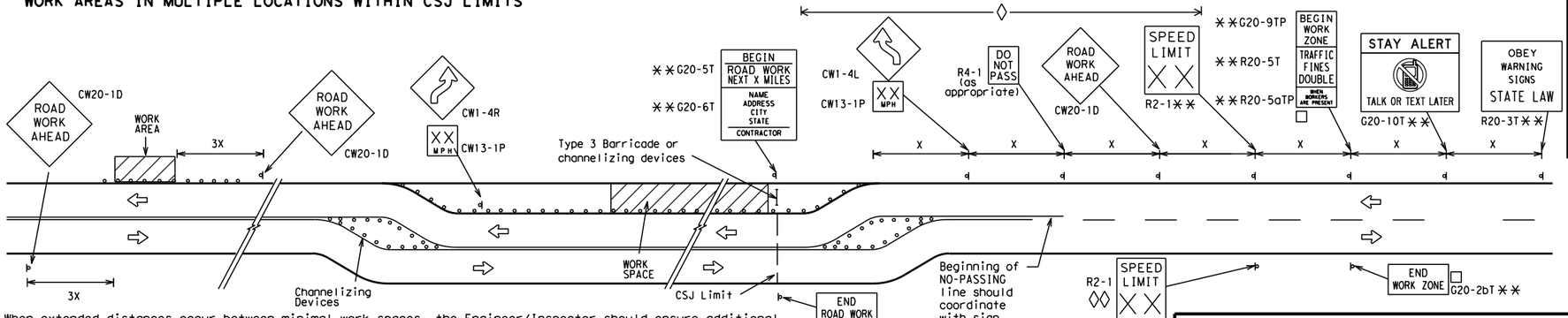

When extended distances occur between minimal work spaces, the Engineer/Inspector should ensure additional "ROAD WORK AHEAD"(CW20-1D)signs are placed in advance of these work areas to remind drivers they are still within the project limits. See the applicable TCP sheets for exact location and spacing of signs and channelizing devices.

SAMPLE LAYOUT OF SIGNING FOR WORK BEGINNING DOWNSTREAM OF THE CSJ LIMITS

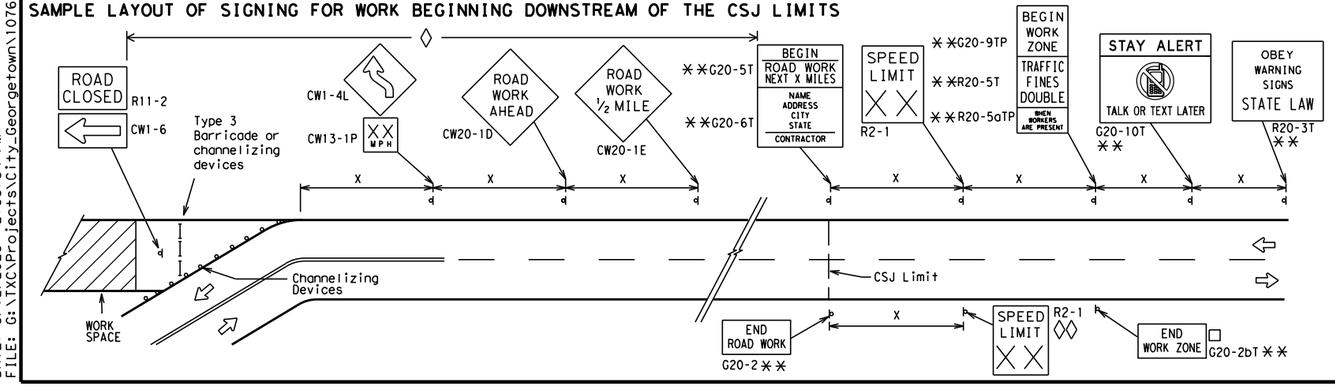

NOTES

The Contractor shall determine the appropriate distance to be placed on the G20-1 series signs and "BEGIN ROAD WORK NEXT X MILES"(G20-5T)sign for each specific project. This distance shall replace the "X" and shall be rounded to the nearest whole mile with the approval of the Engineer. No decimals shall be used.

□ The "BEGIN WORK ZONE"(G20-9TP) and "END WORK ZONE" (G20-2bT) shall be used as shown on the sample layout when advance signs are required outside the CSJ Limits. They inform the motorist of entering or leaving a part of the work zone lying outside the CSJ Limits where traffic fines may double if workers are present.

✳✳ CSJ limit signing is required for highway construction and maintenance work, with the exception of mobile operations.

◊ Area for placement of "ROAD WORK AHEAD" (CW20-1D)sign and other signs or devices as called for on the Traffic Control Plan.

◊◊ Contractor will install a regulatory speed limit sign at the end of the work zone.

LEGEND	
⊢⊣	Type 3 Barricade
○ ○ ○	Channelizing Devices
▬	Sign
X	See Typical Construction Warning Sign Size and Spacing chart or the TMUTCD for sign spacing requirements.

Texas Department of Transportation

Traffic Safety Division Standard

BARRICADE AND CONSTRUCTION PROJECT LIMIT

BC(2)-21

FILE: bc-21.dgn	DN: TxDOT	CK: TxDOT	DW: TxDOT	CK: TxDOT
©TxDOT November 2002	CONT	SECT	JOB	HIGHWAY
REVISIONS				
9-07 8-14	DIST	COUNTY		SHEET NO.
7-13 5-21				71

DISCLAIMER:
The use of this standard is governed by the "Texas Engineering Practice Act". No warranty of any kind is made by TxDOT for any purpose whatsoever. TxDOT assumes no responsibility for the conversion of this standard to other formats or for incorrect results or damages resulting from its use.

DATE: 3/12/2025 2:53:34 PM
FILE: G:\TXC\Projects\City_Georgetown\10767-00 Shell Road\03_CADD\01_Shts\02-TCP\Shts\BC-21.dgn

TYPICAL APPLICATION OF WORK ZONE SPEED LIMIT SIGNS

Work zone speed limits shall be regulatory, established in accordance with the "Procedures for Establishing Speed Zones," and approved by the Texas Transportation Commission, or by City Ordinance when within Incorporated City Limits.

Reduced speeds should only be posted in the vicinity of work activity and not throughout the entire project.

Regulatory work zone speed signs (R2-1) shall be removed or covered during periods when they are not needed.

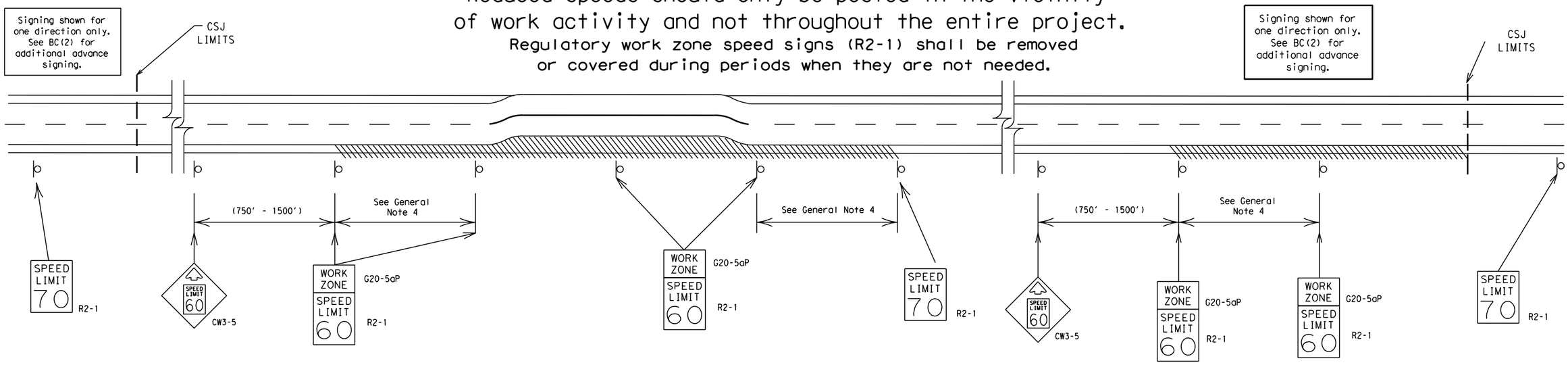

GUIDANCE FOR USE:

LONG/INTERMEDIATE TERM WORK ZONE SPEED LIMITS

This type of work zone speed limit should be included on the design of the traffic control plans when restricted geometrics with a lower design speed are present in the work zone and modification of the geometrics to a higher design speed is not feasible.

Long/Intermediate Term Work Zone Speed Limit signs, when approved as described above, should be posted and visible to the motorist when work activity is present. Work activity may also be defined as a change in the roadway that requires a reduced speed for motorists to safely negotiate the work area, including:

a) rough road or damaged pavement surface
b) substantial alteration of roadway geometrics (diversions)
c) construction detours
d) grade
e) width
f) other conditions readily apparent to the driver

As long as any of these conditions exist, the work zone speed limit signs should remain in place.

SHORT TERM WORK ZONE SPEED LIMITS

This type of work zone speed limit may be included on the design of the traffic control plans when workers or equipment are not behind concrete barrier, when work activity is within 10 feet of the traveled way or actually in the traveled way.

Short Term Work Zone Speed Limit signs should be posted and visible to the motorists only when work activity is present. When work activity is not present, signs shall be removed or covered.
(See Removing or Covering on BC(4)).

GENERAL NOTES

1. Regulatory work zone speed limits should be used only for sections of construction projects where speed control is of major importance.
2. Regulatory work zone speed limit signs shall be placed on supports at a 7 foot minimum mounting height.
3. Speed zone signs are illustrated for one direction of travel and are normally posted for each direction of travel.
4. Frequency of work zone speed limit signs should be:
   40 mph and greater 0.2 to 2 miles
   35 mph and less 0.2 to 1 mile
5. Regulatory speed limit signs shall have black legend and border on a white reflective background (See "Reflective Sheeting" on BC(4)).
6. Fabrication, erection and maintenance of the"ADVANCE SPEED LIMIT"(CW3-5)sign, "WORK ZONE"(G20-5aP) plaque and the "SPEED LIMIT"(R2-1)signs shall not be paid for directly, but shall be considered subsidiary to Item 502.
7. Turning signs from view, laying signs over or down will not be allowed, unless as otherwise noted under "REMOVING OR COVERING" on BC(4).
8. Techniques that may help reduce traffic speeds include but are not limited to:
   A. Law enforcement.
   B. Flagger stationed next to sign.
   C. Portable changeable message sign (PCMS).
   D. Low-power (drone) radar transmitter.
   E. Speed monitor trailers or signs.
9. Speeds shown on details above are for illustration only. Work Zone Speed Limits should only be posted as approved for each project.
10. For more specific guidance concerning the type of work, work zone conditions and factors impacting allowable regulatory construction speed zone reduction see TxDOT form #1204 in the TxDOT e-form system.

Texas Department of Transportation

Traffic Safety Division Standard

BARRICADE AND CONSTRUCTION WORK ZONE SPEED LIMIT

BC(3)-21

FILE: bc-21.dgn	DN: TxDOT	CK: TxDOT	DW: TxDOT	CK: TxDOT
©TxDOT November 2002	CONT	SECT	JOB	HIGHWAY
REVISIONS 9-07 8-14 7-13 5-21	DIST	COUNTY		SHEET NO. 72

DISCLAIMER:
The use of this standard is governed by the "Texas Engineering Practice Act". No warranty of any kind is made by TxDOT for any purpose whatsoever. TxDOT assumes no responsibility for the conversion of this standard to other formats or for incorrect results or damages resulting from its use.

DATE: 3/12/2025 2:53:34 PM
FILE: G:\TXC\Projects\City_Georgetown\10767-00 Shell Road\03_CADD\01_Shts\02-TCP\Stds\bc-21.dgn

TYPICAL MINIMUM CLEARANCES FOR LONG TERM AND INTERMEDIATE TERM SIGNS

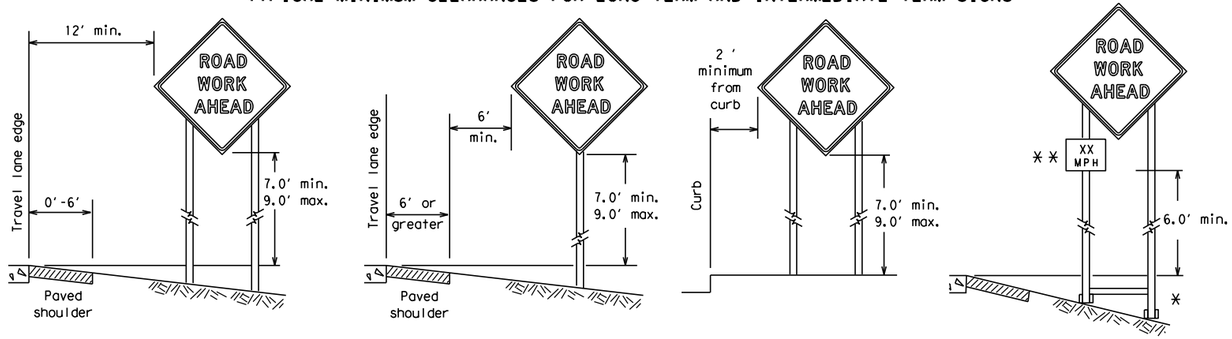

* When placing skid supports on unlevel ground, the leg post lengths must be adjusted so the sign appears straight and plumb. Objects shall NOT be placed under skids as a means of leveling.

** When plaques are placed on dual-leg supports, they should be attached to the upright nearest the travel lane. Supplemental plaques (advisory or distance) should not cover the surface of the parent sign.

ATTACHMENT FOR SIGN SUPPORTS

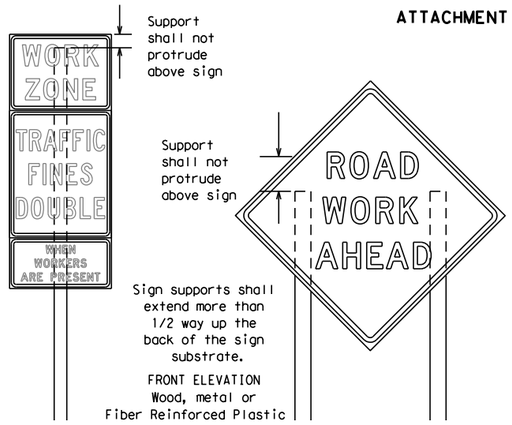

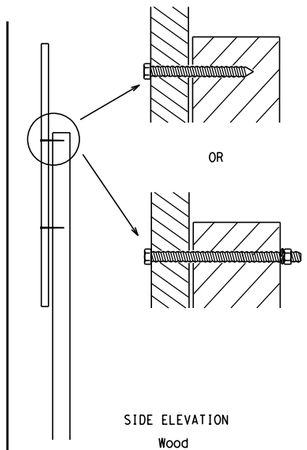

Attachment to wooden supports will be by bolts and nuts or screws. Use TxDOT's or manufacturer's recommended procedures for attaching sign substrates to other types of sign supports

Nails shall NOT be allowed. Each sign shall be attached directly to the sign support. Multiple signs shall not be joined or spliced by any means. Wood supports shall not be extended or repaired by splicing or other means.

Splicing embedded perforated square metal tubing in order to extend post height will only be allowed when the splice is made using four bolts, two above and two below the spice point. Splice must be located entirely behind the sign substrate, not near the base of the support. Splice insert lengths should be at least 5 times nominal post size, centered on the splice and of at least the same gauge material.

STOP/SLOW PADDLES

1. STOP/SLOW paddles are the primary method to control traffic by flaggers. The STOP/SLOW paddle size should be 24" x 24".
2. STOP/SLOW paddles shall be retroreflectorized when used at night.
3. STOP/SLOW paddles may be attached to a staff with a minimum length of 6' to the bottom of the sign.
4. Any lights incorporated into the STOP or SLOW paddle faces shall only be as specifically described in Section 6E.03 Hand Signaling Devices in the TMUTCD.

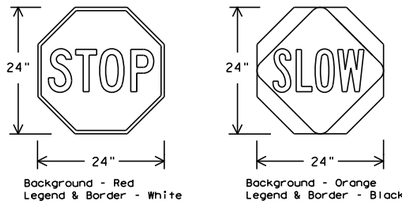

SHEETING REQUIREMENTS (WHEN USED AT NIGHT)		
USAGE	COLOR	SIGN FACE MATERIAL
BACKGROUND	RED	TYPE B OR C SHEETING
BACKGROUND	ORANGE	TYPE B_{FL} OR C_{FL} SHEETING
LEGEND & BORDER	WHITE	TYPE B OR C SHEETING
LEGEND & BORDER	BLACK	ACRYLIC NON-REFLECTIVE FILM

CONTRACTOR REQUIREMENTS FOR MAINTAINING PERMANENT SIGNS WITHIN THE PROJECT LIMITS

1. Permanent signs are used to give notice of traffic laws or regulations, call attention to conditions that are potentially hazardous to traffic operations, show route designations, destinations, directions, distances, services, points of interest, and other geographical, recreational, specific service (LOGO), or cultural information. Drivers proceeding through a work zone need the same, if not better route guidance as normally installed on a roadway without construction.
2. When permanent regulatory or warning signs conflict with work zone conditions, remove or cover the permanent signs until the permanent sign message matches the roadway condition. For details for covering large guide signs see the TS-CD standard.
3. When existing permanent signs are moved and relocated due to construction purposes, they shall be visible to motorists at all times.
4. If existing signs are to be relocated on their original supports, they shall be installed on crashworthy bases as shown on the SMD Standard sheets. The signs shall meet the required mounting heights shown on the BC Sheets or the SMD Standards. This work should be paid for under the appropriate pay item for relocating existing signs.
5. If permanent signs are to be removed and relocated using temporary supports, the Contractor shall use crashworthy supports as shown on the BC standard sheets, TLRS standard sheets or the CWZTCD list. The signs shall meet the required mounting heights shown on the BC, or the SMD standard sheets during construction. This work should be paid for under the appropriate pay item for relocating existing signs.
6. Any sign or traffic control device that is struck or damaged by the Contractor or his/her construction equipment shall be replaced as soon as possible by the Contractor to ensure proper guidance for the motorists. This will be subsidiary to Item 502.

GENERAL NOTES FOR WORK ZONE SIGNS

1. Contractor shall install and maintain signs in a straight and plumb condition and/or as directed by the Engineer.
2. Wooden sign posts shall be painted white.
3. Barricades shall NOT be used as sign supports.
4. All signs shall be installed in accordance with the plans or as directed by the Engineer. Signs shall be used to regulate, warn, and guide the traveling public safely through the work zone.
5. The Contractor may furnish either the sign design shown in the plans or in the "Standard Highway Sign Designs for Texas" (SHSD). The Engineer/Inspector may require the Contractor to furnish other work zone signs that are shown in the TMUTCD but may have been omitted from the plans. Any variation in the plans shall be documented by written agreement between the Engineer and the Contractor's Responsible Person. All changes must be documented in writing before being implemented. This can include documenting the changes in the Inspector's TxDOT diary and having both the Inspector and Contractor initial and date the agreed upon changes.
6. The Contractor shall furnish sign supports listed in the "Compliant Work Zone Traffic Control Device List" (CWZTCD) for small roadside signs. Supports for temporary large roadside signs shall meet the requirements detailed on the Temporary Large Roadside Signs (TLRS) standard sheets.The Contractor shall install the sign support in accordance with the manufacturer's recommendations. If there is a question regarding installation procedures, the Contractor shall furnish the Engineer a copy of the manufacturer's installation recommendations so the Engineer can verify the correct procedures are being followed.
7. The Contractor is responsible for installing signs on approved supports and replacing signs with damaged or cracked substrates and/or damaged or marred reflective sheeting as directed by the Engineer/Inspector.
8. Identification markings may be shown only on the back of the sign substrate. The maximum height of letters and/or company logos used for identification shall be 1 inch.
9. The Contractor shall replace damaged wood posts. New or damaged wood sign posts shall not be spliced.

DURATION OF WORK (as defined by the "Texas Manual on Uniform Traffic Control Devices" Part 6)

1. The types of sign supports, sign mounting height,the size of signs, and the type of sign substrates can vary based on the type of work being performed. The Engineer is responsible for selecting the appropriate size sign for the type of work being performed. The Contractor is responsible for ensuring the sign support, sign mounting height and substrate meets manufacturer's recommendations in regard to crashworthiness and duration of work requirements.
   a. Long-term stationary - work that occupies a location more than 3 days.
   b. Intermediate-term stationary - work that occupies a location more than one daylight period up to 3 days, or nighttime work lasting more than one hour.
   c. Short-term stationary - daytime work that occupies a location for more than 1 hour in a single daylight period.
   d. Short, duration - work that occupies a location up to 1 hour.
   e. Mobile - work that moves continuously or intermittently (stopping for up to approximately 15 minutes.)

SIGN MOUNTING HEIGHT

1. The bottom of Long-term/Intermediate-term signs shall be at least 7 feet, but not more than 9 feet, above the paved surface, except as shown for supplemental plaques mounted below other signs.
2. The bottom of Short-term/Short Duration signs shall be a minimum of 1 foot above the pavement surface but no more than 2 feet above the ground.
3. Long-term/Intermediate-term Signs may be used in lieu of Short-term/Short Duration signing.
4. Short-term/Short Duration signs shall be used only during daylight and shall be removed at the end of the workday or raised to appropriate Long-term/Intermediate sign height.
5. Regulatory signs shall be mounted at least 7 feet, but not more than 9 feet, above the paved surface regardless of work duration.

SIZE OF SIGNS

1. The Contractor shall furnish the sign sizes shown on BC (2) unless otherwise shown in the plans or as directed by the Engineer.

SIGN SUBSTRATES

1. The Contractor shall ensure the sign substrate is installed in accordance with the manufacturer's recommendations for the type of sign support that is being used. The CWZTCD lists each substrate that can be used on the different types and models of sign supports.
2. "Mesh" type materials are NOT an approved sign substrate, regardless of the tightness of the weave.
3. All wooden individual sign panels fabricated from 2 or more pieces shall have one or more plywood cleat, 1/2" thick by 6" wide, fastened to the back of the sign and extending fully across the sign. The cleat shall be attached to the back of the sign using wood screws that do not penetrate the face of the sign panel. The screws shall be placed on both sides of the splice and spaced at 6" centers. The Engineer may approve other methods of splicing the sign face.

REFLECTIVE SHEETING

1. All signs shall be retroreflective and constructed of sheeting meeting the color and retro-reflectivity requirements of DMS-8300 for rigid signs or DMS-8310 for roll-up signs. The web address for DMS specifications is shown on BC(1).
2. White sheeting, meeting the requirements of DMS-8300 Type A, shall be used for signs with a white background.
3. Orange sheeting, meeting the requirements of DMS-8300 Type B_{FL} or Type C_{FL}, shall be used for rigid signs with orange backgrounds.

SIGN LETTERS

1. All sign letters and numbers shall be clear, and open rounded type uppercase alphabet letters as approved by the Federal Highway Administration (FHWA) and as published in the "Standard Highway Sign Design for Texas" manual. Signs, letters and numbers shall be of first class workmanship in accordance with Department Standards and Specifications.

REMOVING OR COVERING

1. When sign messages may be confusing or do not apply, the signs shall be removed or completely covered.
2. Long-term stationary or intermediate stationary signs installed on square metal tubing may be turned away from traffic 90 degrees when the sign message is not applicable. This technique may not be used for signs installed in the median of divided highways or near any intersections where the sign may be seen from approaching traffic.
3. Signs installed on wooden skids shall not be turned at 90 degree angles to the roadway. These signs should be removed or completely covered when not required.
4. When signs are covered, the material used shall be opaque, such as heavy mil black plastic, or other materials which will cover the entire sign face and maintain their opaque properties under automobile headlights at night, without damaging the sign sheeting.
5. Burlap shall NOT be used to cover signs.
6. Duct tape or other adhesive material shall NOT be affixed to a sign face.
7. Signs and anchor stubs shall be removed and holes backfilled upon completion of work.

SIGN SUPPORT WEIGHTS

1. Where sign supports require the use of weights to keep from turning over, the use of sandbags with dry, cohesionless sand should be used.
2. The sandbags will be tied shut to keep the sand from spilling and to maintain a constant weight.
3. Rock, concrete, iron, steel or other solid objects shall not be permitted for use as sign support weights.
4. Sandbags should weigh a minimum of 35 lbs and a maximum of 50 lbs.
5. Sandbags shall be made of a durable material that tears upon vehicular impact. Rubber (such as tire inner tubes) shall NOT be used.
6. Rubber ballasts designed for channelizing devices should not be used for ballast on portable sign supports. Sign supports designed and manufactured with rubber bases may be used when shown on the CWZTCD list.
7. Sandbags shall only be placed along or laid over the base supports of the traffic control device and shall not be suspended above ground level or hung with rope, wire, chains or other fasteners. Sandbags shall be placed along the length of the skids to weigh down the sign support.
8. Sandbags shall NOT be placed under the skid and shall not be used to level sign supports placed on slopes.

FLAGS ON SIGNS

1. Flags may be used to draw attention to warning signs. When used, the flag shall be 16 inches square or larger and shall be orange or fluorescent red-orange in color. Flags shall not be allowed to cover any portion of the sign face.

Texas Department of Transportation

Traffic Safety Division Standard

BARRICADE AND CONSTRUCTION TEMPORARY SIGN NOTES

BC(4)-21

FILE: bc-21.dgn	DN: TxDOT	CK: TxDOT	DW: TxDOT	CK: TxDOT
©TxDOT November 2002	CONT	SECT	JOB	HIGHWAY
REVISIONS				
9-07 8-14	DIST	COUNTY		SHEET NO.
7-13 5-21				73

DISCLAIMER:
The use of this standard is governed by the "Texas Engineering Practice Act". No warranty of any kind is made by TxDOT for any purpose whatsoever. TxDOT assumes no responsibility for the conversion of this standard to other formats or for incorrect results or damages resulting from its use.

DATE: 3/12/2025 2:53:35 PM
FILE: G:\TXC\Projects\City_Georgetown\10767-00 Shell Road\03_CADD\01_Shts\02-TCP_Stds\bc-21.dgn

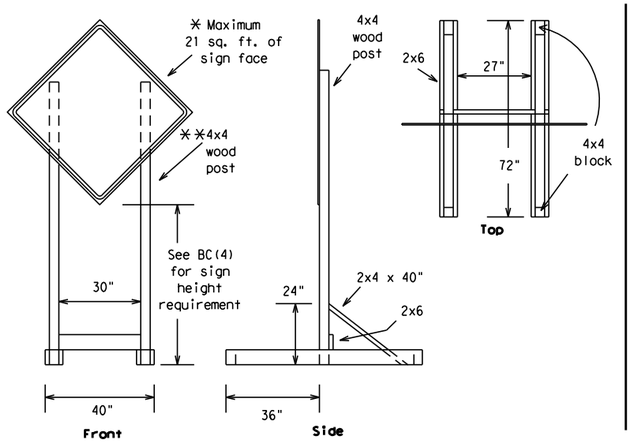

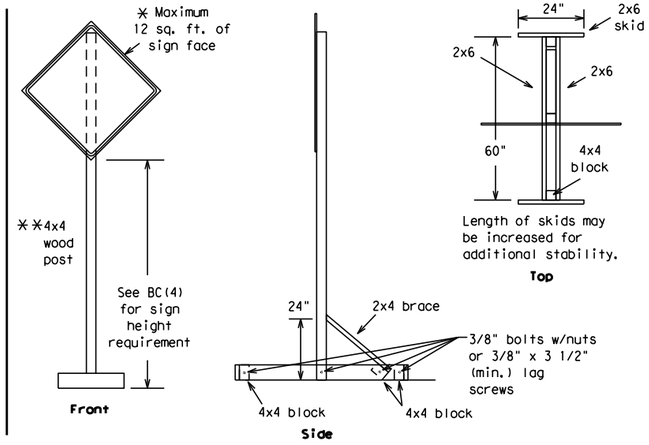

SKID MOUNTED WOOD SIGN SUPPORTS

* LONG/INTERMEDIATE TERM STATIONARY - PORTABLE SKID MOUNTED SIGN SUPPORTS

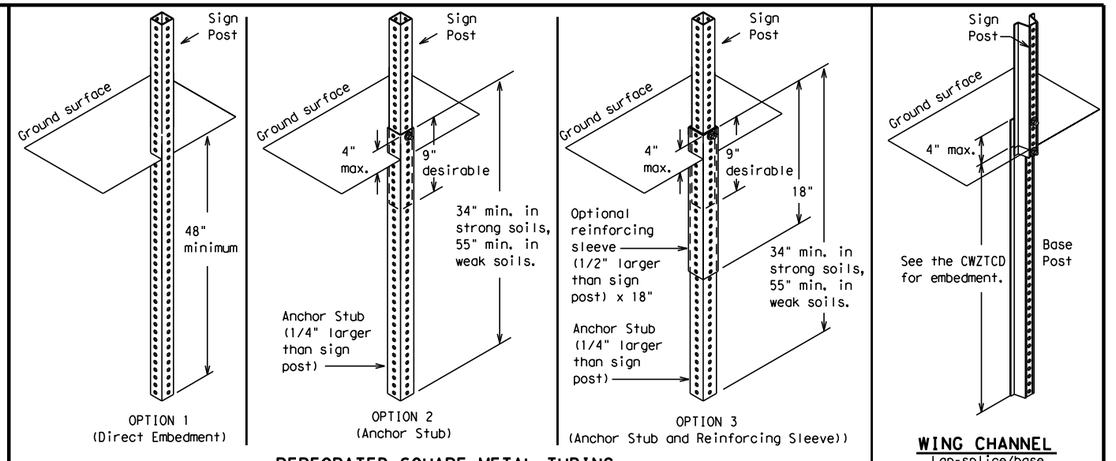

GROUND MOUNTED SIGN SUPPORTS

Refer to the CWZTCD and the manufacturer's installation procedure for each type sign support.
The maximum sign square footage shall adhere to the manufacturer's recommendation.
Two post installations can be used for larger signs.

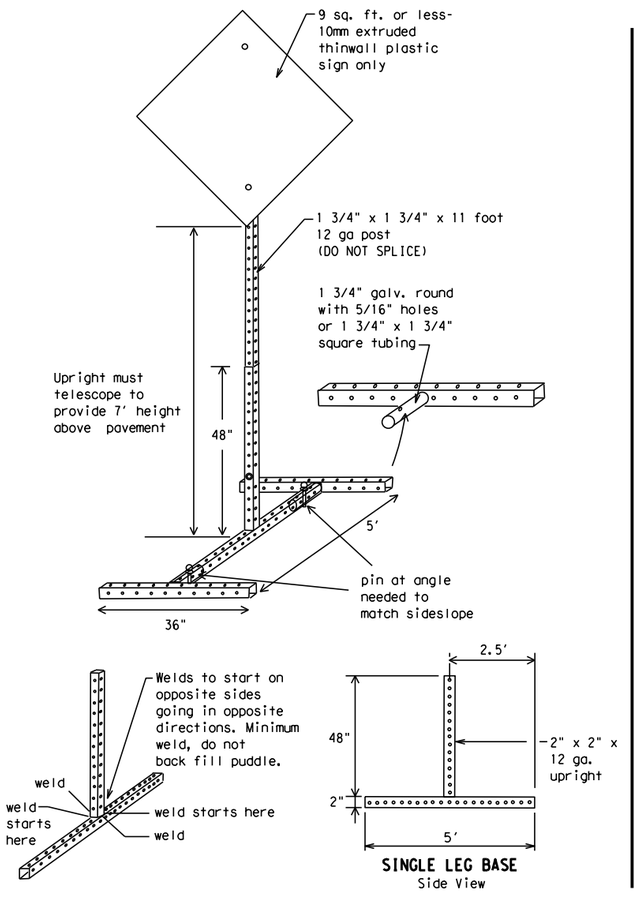

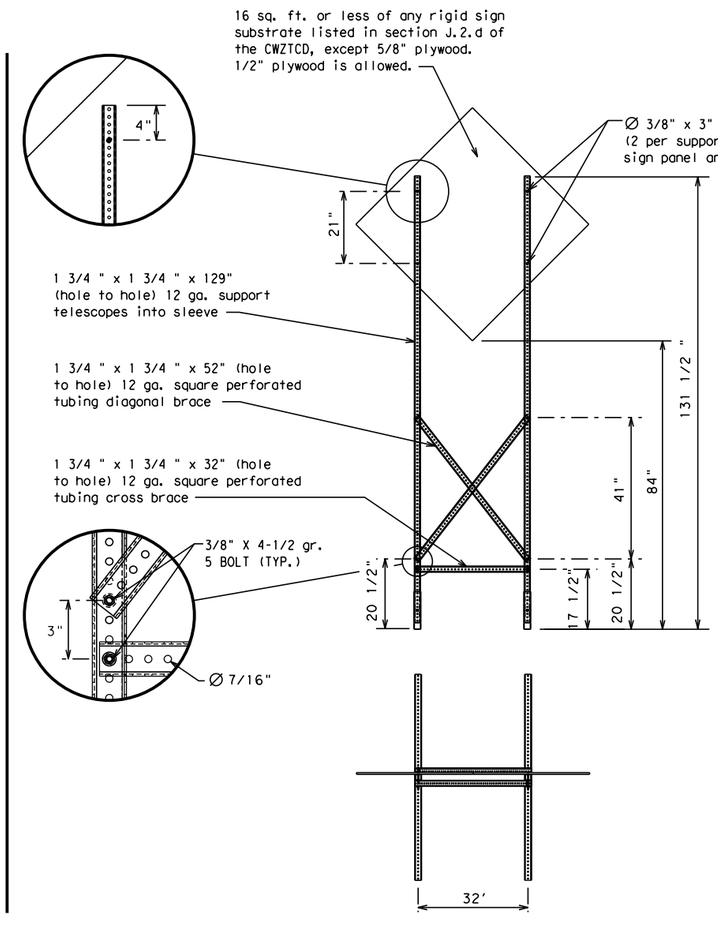

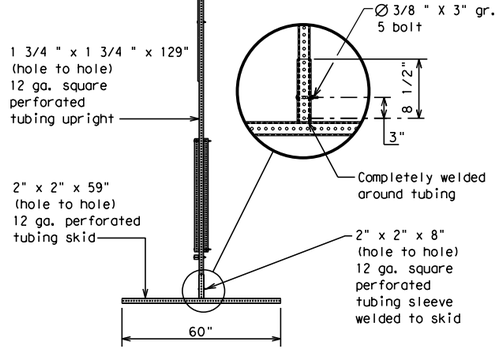

SKID MOUNTED PERFORATED SQUARE STEEL TUBING SIGN SUPPORTS

* LONG/INTERMEDIATE TERM STATIONARY - PORTABLE SKID MOUNTED SIGN SUPPORTS

WEDGE ANCHORS

Both steel and plastic Wedge Anchor Systems as shown on the SMD Standard Sheets may be used as temporary sign supports for signs up to 10 square feet of sign face. They may be set in concrete or in sturdy soils if approved by the Engineer. (See web address for "Traffic Engineering Standard Sheets" on BC(1)).

OTHER DESIGNS

MORE DETAILS OF APPROVED LONG/INTERMEDIATE AND SHORT TERM SUPPORTS CAN BE FOUND ON THE CWZTCD LIST. SEE BC(1) FOR WEBSITE LOCATION.

GENERAL NOTES

1. Nails may be used in the assembly of wooden sign supports, but 3/8" bolts with nuts or 3/8" x 3 1/2" lag screws must be used on every joint for final connection.
2. No more than 2 sign posts shall be placed within a 7 ft. circle, except for specific materials noted on the CWZTCD List.
3. When project is completed, all sign supports and foundations shall be removed from the project site. This will be considered subsidiary to Item 502.

* See BC(4) for definition of "Work Duration."

** Wood sign posts MUST be one piece. Splicing will NOT be allowed. Posts shall be painted white.

☐ See the CWZTCD for the type of sign substrate that can be used for each approved sign support.

Texas Department of Transportation | Traffic Safety Division Standard

BARRICADE AND CONSTRUCTION TYPICAL SIGN SUPPORT

BC(5)-21

FILE: bc-21.dgn	DN: TxDOT	CK: TxDOT	DW: TxDOT	CK: TxDOT
©TxDOT November 2002	CONT	SECT	JOB	HIGHWAY
REVISIONS				
9-07 8-14	DIST	COUNTY		SHEET NO.
7-13 5-21				74

DISCLAIMER:
The use of this standard is governed by the "Texas Engineering Practice Act". No warranty of any kind is made by TxDOT for any purpose whatsoever. TxDOT assumes no responsibility for the conversion of this standard to other formats or for incorrect results or damages resulting from its use.

DATE: 3/12/2025 2:53:35 PM
FILE: G:\TxC\Projects\City_Georgetown\10767-00 Shell Road\03_CADD\01_Shts\02-TCP\Srds\bc-21.dgn

WHEN NOT IN USE, REMOVE THE PCMS FROM THE RIGHT-OF-WAY OR PLACE THE PCMS BEHIND BARRIER OR GUARDRAIL WITH SIGN PANEL TURNED PARALLEL TO TRAFFIC

PORTABLE CHANGEABLE MESSAGE SIGNS

1. The Engineer/Inspector shall approve all messages used on portable changeable message signs (PCMS).
2. Messages on PCMS should contain no more than 8 words (about four to eight characters per word), not including simple words such as "TO," "FOR," "AT," etc.
3. Messages should consist of a single phase, or two phases that alternate. Three-phase messages are not allowed. Each phase of the message should convey a single thought, and must be understood by itself.
4. Use the word "EXIT" to refer to an exit ramp on a freeway; i.e., "EXIT CLOSED." Do not use the term "RAMP."
5. Always use the route or interstate designation (IH, US, SH, FM) along with the number when referring to a roadway.
6. When in use, the bottom of a stationary PCMS message panel should be a minimum 7 feet above the roadway, where possible.
7. The message term "WEEKEND" should be used only if the work is to start on Saturday morning and end by Sunday evening at midnight. Actual days and hours of work should be displayed on the PCMS if work is to begin on Friday evening and/or continue into Monday morning.
8. The Engineer/Inspector may select one of two options which are available for displaying a two-phase message on a PCMS. Each phase may be displayed for either four seconds each or for three seconds each.
9. Do not "flash" messages or words included in a message. The message should be steady burn or continuous while displayed.
10. Do not present redundant information on a two-phase message; i.e., keeping two lines of the message the same and changing the third line.
11. Do not use the word "Danger" in message.
12. Do not display the message "LANES SHIFT LEFT" or "LANES SHIFT RIGHT" on a PCMS. Drivers do not understand the message.
13. Do not display messages that scroll horizontally or vertically across the face of the sign.
14. The following table lists abbreviated words and two-word phrases that are acceptable for use on a PCMS. Both words in a phrase must be displayed together. Words or phrases not on this list should not be abbreviated, unless shown in the TMUTCD.
15. PCMS character height should be at least 18 inches for trailer mounted units. They should be visible from at least 1/2 (.5) mile and the text should be legible from at least 600 feet at night and 800 feet in daylight. Truck mounted units must have a character height of 10 inches and must be legible from at least 400 feet.
16. Each line of text should be centered on the message board rather than left or right justified.
17. If disabled, the PCMS should default to an illegible display that will not alarm motorists and will only be used to alert workers that the PCMS has malfunctioned. A pattern such as a series of horizontal solid bars is appropriate.

WORD OR PHRASE	ABBREVIATION
Access Road	ACCS RD
Alternate	ALT
Avenue	AVE
Best Route	BEST RTE
Boulevard	BLVD
Bridge	BRDG
Cannot	CANT
Center	CTR
Construction Ahead	CONST AHD
CROSSING	XING
Detour Route	DETOUR RTE
Do Not	DONT
East	E
Eastbound	(route) E
Emergency	EMER
Emergency Vehicle	EMER VEH
Entrance, Enter	ENT
Express Lane	EXP LN
Expressway	EXPWY
XXXX Feet	XXXX FT
Fog Ahead	FOG AHD
Freeway	FRWY, FWY
Freeway Blocked	FWY BLKD
Friday	FRI
Hazardous Driving	HAZ DRIVING
Hazardous Material	HAZMAT
High-Occupancy	HOV
Vehicle Highway	HWY
Hour(s)	HR, HRS
Information	INFO
It Is	ITS
Junction	JCT
Left	LFT
Left Lane	LFT LN
Lane Closed	LN CLOSED
Lower Level	LWR LEVEL
Maintenance	MAINT

WORD OR PHRASE	ABBREVIATION
Major	MAJ
Miles	MI
Miles Per Hour	MPH
Minor	MNR
Monday	MON
Normal	NORM
North	N
Northbound	(route) N
Parking	PKING
Road	RD
Right Lane	RT LN
Saturday	SAT
Service Road	SERV RD
Shoulder	SHLDR
Slippery	SLIP
South	S
Southbound	(route) S
Speed	SPD
Street	ST
Sunday	SUN
Telephone	PHONE
Temporary	TEMP
Thursday	THURS
To Downtown	TO DWNTN
Traffic	TRAF
Travelers	TRVLRS
Tuesday	TUES
Time Minutes	TIME MIN
Upper Level	UPR LEVEL
Vehicles (s)	VEH, VEHS
Warning	WARN
Wednesday	WED
Weight Limit	WT LIMIT
West	W
Westbound	(route) W
Wet Pavement	WET PVMT
Will Not	WONT

Roadway designation ≠ IH-number, US-number, SH-number, FM-number

RECOMMENDED PHASES AND FORMATS FOR PCMS MESSAGES DURING ROADWORK ACTIVITIES

(The Engineer may approve other messages not specifically covered here.)

Phase 1: Condition Lists

Road/Lane/Ramp Closure List

FREEWAY CLOSED X MILE	FRONTAGE ROAD CLOSED
ROAD CLOSED AT SH XXX	SHOULDER CLOSED XXX FT
ROAD CLSD AT FM XXXX	RIGHT LN CLOSED XXX FT
RIGHT X LANES CLOSED	RIGHT X LANES OPEN
CENTER LANE CLOSED	DAYTIME LANE CLOSURES
NIGHT LANE CLOSURES	I-XX SOUTH EXIT CLOSED
VARIOUS LANES CLOSED	EXIT XXX CLOSED X MILE
EXIT CLOSED	RIGHT LN TO BE CLOSED
MALL DRIVEWAY CLOSED	X LANES CLOSED TUE - FRI
XXXXXXXX BLVD CLOSED	

Other Condition List

ROADWORK XXX FT	ROAD REPAIRS XXXX FT
FLAGGER XXXX FT	LANE NARROWS XXXX FT
RIGHT LN NARROWS XXXX FT	TWO-WAY TRAFFIC XX MILE
MERGING TRAFFIC XXXX FT	CONST TRAFFIC XXX FT
LOOSE GRAVEL XXXX FT	UNEVEN LANES XXXX FT
DETOUR X MILE	ROUGH ROAD XXXX FT
ROADWORK PAST SH XXXX	ROADWORK NEXT FRI-SUN
BUMP XXXX FT	US XXX EXIT X MILES
TRAFFIC SIGNAL XXXX FT	LANES SHIFT *

* LANES SHIFT in Phase 1 must be used with STAY IN LANE in Phase 2.

Phase 2: Possible Component Lists

Action to Take/Effect on Travel List		Location List	Warning List	** Advance Notice List
MERGE RIGHT	FORM X LINES RIGHT	AT FM XXXX	SPEED LIMIT XX MPH	TUE-FRI XX AM- X PM
DETOUR NEXT X EXITS	USE XXXXX RD EXIT	BEFORE RAILROAD CROSSING	MAXIMUM SPEED XX MPH	APR XX-XX X PM-X AM
USE EXIT XXX	USE EXIT I-XX NORTH	NEXT X MILES	MINIMUM SPEED XX MPH	BEGINS MONDAY
STAY ON US XXX SOUTH	USE I-XX E TO I-XX N	PAST US XXX EXIT	ADVISORY SPEED XX MPH	BEGINS MAY XX
TRUCKS USE US XXX N	WATCH FOR TRUCKS	XXXXXXX TO XXXXXXX	RIGHT LANE EXIT	MAY X-X XX PM - XX AM
WATCH FOR TRUCKS	EXPECT DELAYS	US XXX TO FM XXXX	USE CAUTION	NEXT FRI-SUN
EXPECT DELAYS	PREPARE TO STOP		DRIVE SAFELY	XX AM TO XX PM
REDUCE SPEED XXX FT	END SHOULDER USE		DRIVE WITH CARE	NEXT TUE AUG XX
USE OTHER ROUTES	WATCH FOR WORKERS			TONIGHT XX PM- XX AM
STAY IN LANE *				

* LANES SHIFT in Phase 1 must be used with STAY IN LANE in Phase 2.

** See Application Guidelines Note 6.

APPLICATION GUIDELINES

1. Only 1 or 2 phases are to be used on a PCMS.
2. The 1st phase (or both) should be selected from the "Road/Lane/Ramp Closure List" and the "Other Condition List".
3. A 2nd phase can be selected from the "Action to Take/Effect on Travel, Location, General Warning, or Advance Notice Phase Lists".
4. A Location Phase is necessary only if a distance or location is not included in the first phase selected.
5. If two PCMS are used in sequence, they must be separated by a minimum of 1000 ft. Each PCMS shall be limited to two phases, and should be understandable by themselves.
6. For advance notice, when the current date is within seven days of the actual work date, calendar days should be replaced with days of the week. Advance notification should typically be for no more than one week prior to the work.

WORDING ALTERNATIVES

1. The words RIGHT, LEFT and ALL can be interchanged as appropriate.
2. Roadway designations IH, US, SH, FM and LP can be interchanged as appropriate.
3. EAST, WEST, NORTH and SOUTH (or abbreviations E, W, N and S) can be interchanged as appropriate.
4. Highway names and numbers replaced as appropriate.
5. ROAD, HIGHWAY and FREEWAY can be interchanged as needed.
6. AHEAD may be used instead of distances if necessary.
7. FT and MI, MILE and MILES interchanged as appropriate.
8. AT, BEFORE and PAST interchanged as needed.
9. Distances or AHEAD can be eliminated from the message if a location phase is used.

PCMS SIGNS WITHIN THE R.O.W. SHALL BE BEHIND GUARDRAIL OR CONCRETE BARRIER OR SHALL HAVE A MINIMUM OF FOUR (4) PLASTIC DRUMS PLACED PERPENDICULAR TO TRAFFIC ON THE UPSTREAM SIDE OF THE PCMS, WHEN EXPOSED TO ONE DIRECTION OF TRAFFIC. WHEN EXPOSED TO TWO WAY TRAFFIC, THE FOUR DRUMS SHOULD BE PLACED WITH ONE DRUM AT EACH OF THE FOUR CORNERS OF THE UNIT.

FULL MATRIX PCMS SIGNS

1. When Full Matrix PCMS signs are used, the character height and legibility/visibility requirements shall be maintained as listed in Note 15 under "PORTABLE CHANGEABLE MESSAGE SIGNS" above.
2. When symbol signs, such as the "Flagger Symbol"(CW20-7) are represented graphically on the Full Matrix PCMS sign and, with the approval of the Engineer, it shall maintain the legibility/visibility requirement listed above.
3. When symbol signs are represented graphically on the Full Matrix PCMS, they shall only supplement the use of the static sign represented, and shall not substitute for, or replace that sign.
4. A full matrix PCMS may be used to simulate a flashing arrow board provided it meets the visibility, flash rate and dimming requirements on BC(7), for the same size arrow.

Texas Department of Transportation

Traffic Safety Division Standard

BARRICADE AND CONSTRUCTION PORTABLE CHANGEABLE MESSAGE SIGN (PCMS)

BC(6)-21

FILE: bc-21.dgn	DN: TxDOT	CK: TxDOT	DW: TxDOT	CK: TxDOT
©TxDOT November 2002	CONT	SECT	JOB	HIGHWAY
REVISIONS				
9-07 8-14	DIST	COUNTY		SHEET NO.
7-13 5-21				75

100

DISCLAIMER:
The use of this standard is governed by the "Texas Engineering Practice Act". No warranty of any kind is made by TxDOT for any purpose whatsoever. TxDOT assumes no responsibility for the conversion of this standard to other formats or for incorrect results or damages resulting from its use.

DATE: 3/12/2025 2:53:36 PM
FILE: G:\TXC\Projects\City_Georgetown\10767-00 Snell Road\03_CADD\01_Shts\02-TCP\Stds\bc-21.dgn

1. Barrier Reflectors shall be pre-qualified, and conform to the color and reflectivity requirements of DMS-8600. A list of prequalified Barrier Reflectors can be found at the Material Producer List web address shown on BC(1).
2. Color of Barrier Reflectors shall be as specified in the TMUTCD. The cost of the reflectors shall be considered subsidiary to Item 512.

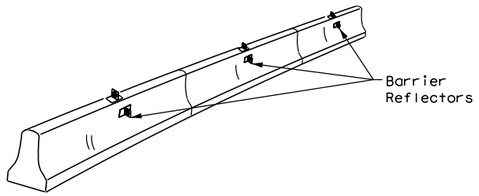

CONCRETE TRAFFIC BARRIER (CTB)

3. Where traffic is on one side of the CTB, two (2) Barrier Reflectors shall be mounted in approximately the midsection of each section of CTB. An alternate mounting location is uniformly spaced at one end of each CTB. This will allow for attachment of a barrier grapple without damaging the reflector. The Barrier Reflector mounted on the side of the CTB shall be located directly below the reflector mounted on top of the barrier, as shown in the detail above.
4. Where CTB separates two-way traffic, three barrier reflectors shall be mounted on each section of CTB. The reflector unit on top shall have two yellow reflective faces (Bi-Directional)while the reflectors on each side of the barrier shall have one yellow reflective face, as shown in the detail above.
5. When CTB separates traffic traveling in the same direction, no barrier reflectors will be required on top of the CTB.
6. Barrier Reflector units shall be yellow or white in color to match the edgeline being supplemented.
7. Maximum spacing of Barrier Reflectors is forty (40) feet.
8. Pavement markers or temporary flexible-reflective roadway marker tabs shall NOT be used as CTB delineation.
9. Attachment of Barrier Reflectors to CTB shall be per manufacturer's recommendations.
10. Missing or damaged Barrier Reflectors shall be replaced as directed by the Engineer.
11. Single slope barriers shall be delineated as shown on the above detail.

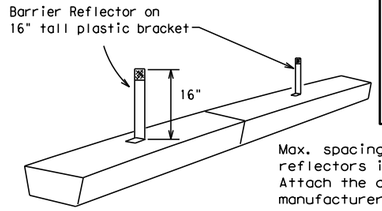

Max. spacing of barrier reflectors is 20 feet. Attach the delineators as per manufacturer's recommendations.

LOW PROFILE CONCRETE BARRIER (LPCB)

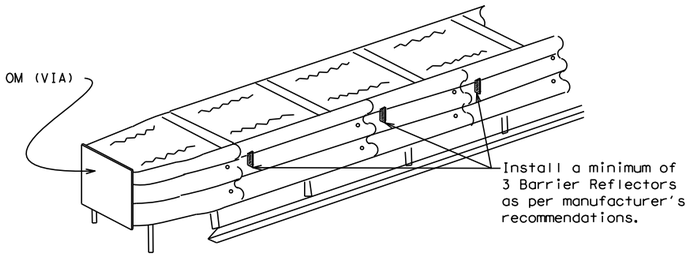

DELINEATION OF END TREATMENTS

END TREATMENTS FOR CTB'S USED IN WORK ZONES

End treatments used on CTB's in work zones shall meet the apppropriate crashworthy standards as defined in the Manual for Assessing Safety Hardware (MASH). Refer to the CWZTCD List for approved end treatments and manufacturers.

LOW PROFILE CONCRETE BARRIER (LPCB) USED IN WORK ZONES

LPCB is approved for use in work zone locations, where the posted speed is 45mph, or less. See Roadway Standard Sheet LPCB.

BARRIER REFLECTORS FOR CONCRETE TRAFFIC BARRIER AND ATTENUATORS

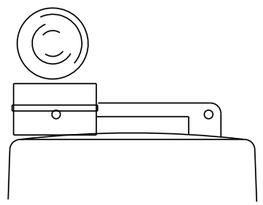

Type C Warning Light or approved substitute mounted on a drum adjacent to the travel way.

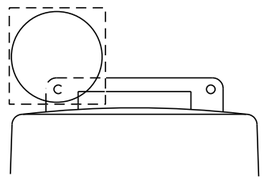

Warning reflector may be round or square.Must have a yellow reflective surface area of at least 30 square inches

WARNING LIGHTS

1. Warning lights shall meet the requirements of the TMUTCD.
2. Warning lights shall NOT be installed on barricades.
3. Type A-Low Intensity Flashing Warning Lights are commonly used with drums. They are intended to warn of or mark a potentially hazardous area. Their use shall be as indicated on this sheet and/or other sheets of the plans by the designation "FL". The Type A Warning Lights shall not be used with signs manufactured with Type B_{FL} or C_{FL} Sheeting meeting the requirements of Departmental Material Specification DMS-8300.
4. Type-C and Type D 360 degree Steady Burn Lights are intended to be used in a series for delineation to supplement other traffic control devices. Their use shall be as indicated on this sheet and/or other sheets of the plans by the designation "SB".
5. The Engineer/Inspector or the plans shall specify the location and type of warning lights to be installed on the traffic control devices.
6. When required by the Engineer, the Contractor shall furnish a copy of the warning lights certification. The warning light manufacturer will certify the warning lights meet the requirements of the latest ITE Purchase Specifications for Flashing and Steady-Burn Warning Lights.
7. When used to delineate curves, Type-C and Type D Steady Burn Lights should only be placed on the outside of the curve, not the inside.
8. The location of warning lights and warning reflectors on drums shall be as shown elsewhere in the plans.

WARNING LIGHTS MOUNTED ON PLASTIC DRUMS

1. Type A flashing warning lights are intended to warn drivers that they are approaching or are in a potentially hazardous area.
2. Type A random flashing warning lights are not intended for delineation and shall not be used in a series.
3. A series of sequential flashing warning lights placed on channelizing devices to form a merging taper may be used for delineation. If used, the successive flashing of the sequential warning lights should occur from the beginning of the taper to the end of the merging taper in order to identify the desired vehicle path. The rate of flashing for each light shall be 65 flashes per minute, plus or minus 10 flashes.
4. Type C and D steady-burn warning lights are intended to be used in a series to delineate the edge of the travel lane on detours, on lane changes, on lane closures, and on other similar conditions.
5. Type A, Type C and Type D warning lights shall be installed at locations as detailed on other sheets in the plans.
6. Warning lights shall not be installed on a drum that has a sign, chevron or vertical panel.
7. The maximum spacing for warning lights on drums should be identical to the channelizing device spacing.

WARNING REFLECTORS MOUNTED ON PLASTIC DRUMS AS A SUBSTITUTE FOR TYPE C (STEADY BURN) WARNING LIGHTS

1. A warning reflector or approved substitute may be mounted on a plastic drum as a substitute for a Type C, steady burn warning light at the discretion of the Contractor unless otherwise noted in the plans.
2. The warning reflector shall be yellow in color and shall be manufactured using a sign substrate approved for use with plastic drums listed on the CWZTCD.
3. The warning reflector shall have a minimum retroreflective surface area (one-side) of 30 square inches.
4. Round reflectors shall be fully reflectorized, including the area where attached to the drum.
5. Square substrates must have a minimum of 30 square inches of reflectorized sheeting. They do not have to be reflectorized where it attaches to the drum.
6. The side of the warning reflector facing approaching traffic shall have sheeting meeting the color and retroreflectivity requirements for DMS 8300-Type B or Type C.
7. When used near two-way traffic, both sides of the warning reflector shall be reflectorized.
8. The warning reflector should be mounted on the side of the handle nearest approaching traffic.
9. The maximum spacing for warning reflectors should be identical to the channelizing device spacing requirements.

Arrow Boards may be located behind channelizing devices in place for a shoulder taper or merging taper, otherwise they shall be delineated with four (4) channelizing devices placed perpendicular to traffic on the upstream side of traffic.

1. The Flashing Arrow Board should be used for all lane closures on multi-lane roadways, or slow moving maintenance or construction activities on the travel lanes.
2. Flashing Arrow Boards should not be used on two-lane, two-way roadways, detours, diversions or work on shoulders unless the "CAUTION" display (see detail below) is used.
3. The Engineer/Inspector shall choose all appropriate signs, barricades and/or other traffic control devices that should be used in conjunction with the Flashing Arrow Board.
4. The Flashing Arrow Board should be able to display the following symbols:

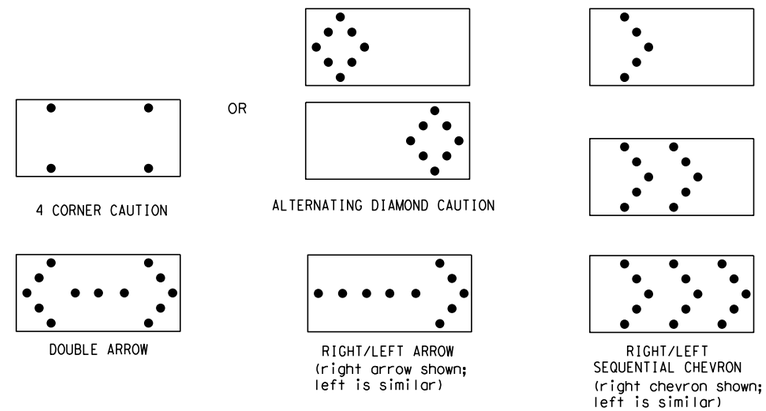

5. The "CAUTION" display consists of four corner lamps flashing simultaneously, or the Alternating Diamond Caution mode as shown.
6. The straight line caution display is NOT ALLOWED.
7. The Flashing Arrow Board shall be capable of minimum 50 percent dimming from rated lamp voltage. The flashing rate of the lamps shall not be less than 25 nor more than 40 flashes per minute.
8. Minimum lamp "on time" shall be approximately 50 percent for the flashing arrow and equal intervals of 25 percent for each sequential phase of the flashing chevron.
9. The sequential arrow display is NOT ALLOWED.
10. The flashing arrow display is the TxDOT standard; however, the sequential chevron display may be used during daylight operations.
11. The Flashing Arrow Board shall be mounted on a vehicle, trailer or other suitable support.
12. A Flashing Arrow Board SHALL NOT BE USED to laterally shift traffic.
13. A full matrix PCMS may be used to simulate a Flashing Arrow Board provided it meets visibility, flash rate and dimming requirements on this sheet for the same size arrow.
14. Minimum mounting height of trailer mounted Arrow Boards should be 7 feet from roadway to bottom of panel.

REQUIREMENTS			
TYPE	MINIMUM SIZE	MINIMUM NUMBER OF PANEL LAMPS	MINIMUM VISIBILITY DISTANCE
B	30 x 60	13	3/4 mile
C	48 x 96	15	1 mile

ATTENTION

Flashing Arrow Boards shall be equipped with automatic dimming devices.

WHEN NOT IN USE, REMOVE THE ARROW BOARD FROM THE RIGHT-OF-WAY OR PLACE THE ARROW BOARD BEHIND CONCRETE TRAFFIC BARRIER OR GUARDRAIL.

FLASHING ARROW BOARDS

TRUCK-MOUNTED ATTENUATORS

1. Truck-mounted attenuators (TMA) used on TxDOT facilities must meet the requirements outlined in the Manual for Assessing Safety Hardware (MASH).
2. Refer to the CWZTCD for the requirements of Level 2 or Level 3 TMAs.
3. Refer to the CWZTCD for a list of approved TMAs.
4. TMAs are required on freeways unless otherwise noted in the plans.
5. A TMA should be used anytime that it can be positioned 30 to 100 feet in advance of the area of crew exposure without adversely affecting the work performance.
6. The only reason a TMA should not be required is when a work area is spread down the roadway and the work crew is an extended distance from the TMA.

Texas Department of Transportation

Traffic Safety Division Standard

BARRICADE AND CONSTRUCTION ARROW PANEL, REFLECTORS, WARNING LIGHTS & ATTENUATOR

BC(7)-21

FILE: bc-21.dgn	DN: TxDOT	CK: TxDOT	DW: TxDOT	CK: TxDOT
©TxDOT November 2002	CONT	SECT	JOB	HIGHWAY
REVISIONS				
9-07 8-14	DIST	COUNTY		SHEET NO.
7-13 5-21				76

DISCLAIMER:
The use of this standard is governed by the "Texas Engineering Practice Act". No warranty of any kind is made by TxDOT for any purpose whatsoever. TxDOT assumes no responsibility for the conversion of this standard to other formats or for incorrect results or damages resulting from its use.

DATE: 3/12/2025 2:53:36 PM
FILE: G:\TXC\Projects\City_Georgetown\10767-00 Shell Road\03_CADD\01_Shts\02-TCP\Stds\bc-21.dgn

GENERAL NOTES

1. For long term stationary work zones on freeways, drums shall be used as the primary channelizing device.
2. For intermediate term stationary work zones on freeways, drums should be used as the primary channelizing device but may be replaced in tangent sections by vertical panels, or 42" two-piece cones. In tangent sections, one-piece cones may be used with the approval of the Engineer but only if personnel are present on the project at all times to maintain the cones in proper position and location.
3. For short term stationary work zones on freeways, drums are the preferred channelizing device but may be replaced in tapers, transitions and tangent sections by vertical panels, two-piece cones or one-piece cones as approved by the Engineer.
4. Drums and all related items shall comply with the requirements of the current version of the "Texas Manual on Uniform Traffic Control Devices" (TMUTCD) and the "Compliant Work Zone Traffic Control Devices List" (CWZTCD).
5. Drums, bases, and related materials shall exhibit good workmanship and shall be free from objectionable marks or defects that would adversely affect their appearance or serviceability.
6. The Contractor shall have a maximum of 24 hours to replace any plastic drums identified for replacement by the Engineer/Inspector. The replacement device must be an approved device.

GENERAL DESIGN REQUIREMENTS

Pre-qualified plastic drums shall meet the following requirements:

1. Plastic drums shall be a two-piece design; the "body" of the drum shall be the top portion and the "base" shall be the bottom.
2. The body and base shall lock together in such a manner that the body separates from the base when impacted by a vehicle traveling at a speed of 20 MPH or greater but prevents accidental separation due to normal handling and/or air turbulence created by passing vehicles.
3. Plastic drums shall be constructed of lightweight flexible, and deformable materials. The Contractor shall NOT use metal drums or single piece plastic drums as channelization devices or sign supports.
4. Drums shall present a profile that is a minimum of 18 inches in width at the 36 inch height when viewed from any direction. The height of drum unit (body installed on base) shall be a minimum of 36 inches and a maximum of 42 inches.
5. The top of the drum shall have a built-in handle for easy pickup and shall be designed to drain water and not collect debris. The handle shall have a minimum of two widely spaced 9/16 inch diameter holes to allow attachment of a warning light, warning reflector unit or approved compliant sign.
6. The exterior of the drum body shall have a minimum of four alternating orange and white retroreflective circumferential stripes not less than 4 inches nor greater than 8 inches in width. Any non-reflectorized space between any two adjacent stripes shall not exceed 2 inches in width.
7. Bases shall have a maximum width of 36 inches, a maximum height of 4 inches, and a minimum of two footholds of sufficient size to allow base to be held down while separating the drum body from the base.
8. Plastic drums shall be constructed of ultra-violet stabilized, orange, high-density polyethylene (HDPE) or other approved material.
9. Drum body shall have a maximum unballasted weight of 11 lbs.
10. Drum and base shall be marked with manufacturer's name and model number.

RETROREFLECTIVE SHEETING

1. The stripes used on drums shall be constructed of sheeting meeting the color and retroreflectivity requirements of Departmental Materials Specification DMS-8300, "Sign Face Materials." Type A or Type B reflective sheeting shall be supplied unless otherwise specified in the plans.
2. The sheeting shall be suitable for use on and shall adhere to the drum surface such that, upon vehicular impact, the sheeting shall remain adhered in-place and exhibit no delaminating, cracking, or loss of retroreflectivity other than that loss due to abrasion of the sheeting surface.

BALLAST

1. Unballasted bases shall be large enough to hold up to 50 lbs. of sand. This base, when filled with the ballast material, should weigh between 35 lbs (minimum) and 50 lbs (maximum). The ballast may be sand in one to three sandbags separate from the base, sand in a sand-filled plastic base, or other ballasting devices as approved by the Engineer. Stacking of sandbags will be allowed, however height of sandbags above pavement surface may not exceed 12 inches.
2. Bases with built-in ballast shall weigh between 40 lbs. and 50 lbs. Built-in ballast can be constructed of an integral crumb rubber base or a solid rubber base.
3. Recycled truck tire sidewalls may be used for ballast on drums approved for this type of ballast on the CWZTCD list.
4. The ballast shall not be heavy objects, water, or any material that would become hazardous to motorists, pedestrians, or workers when the drum is struck by a vehicle.
5. When used in regions susceptible to freezing, drums shall have drainage holes in the bottoms so that water will not collect and freeze becoming a hazard when struck by a vehicle.
6. Ballast shall not be placed on top of drums.
7. Adhesives may be used to secure base of drums to pavement.

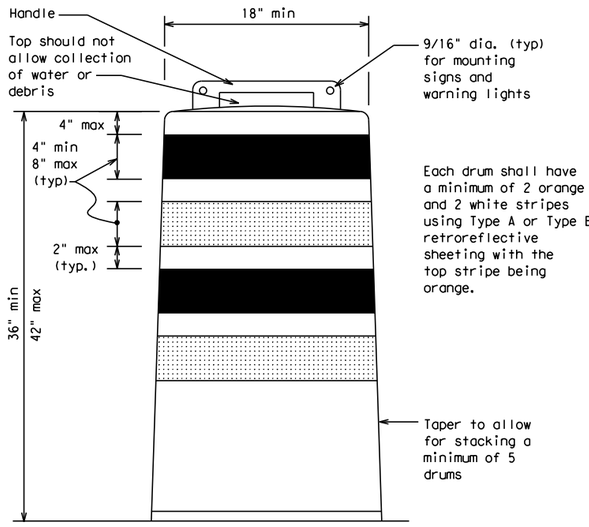

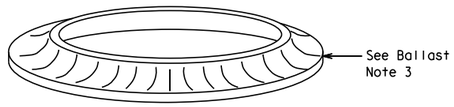

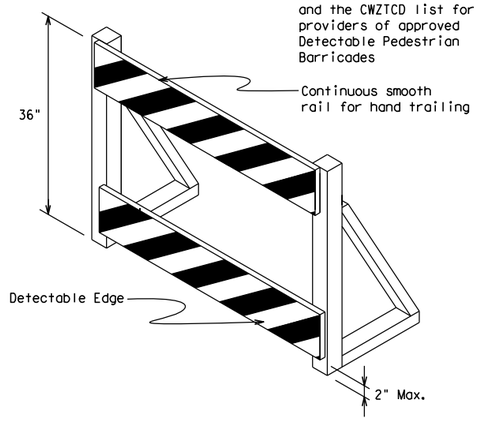

DETECTABLE PEDESTRIAN BARRICADES

1. When existing pedestrian facilities are disrupted, closed, or relocated in a TTC zone, the temporary facilities shall be detectable and include accessibility features consistent with the features present in the existing pedestrian facility. Refer to WZ(BTS-2) for Pedestrian Control requirements for Sidewalk Diversions, Sidewalk Detours and Crosswalk Closures.
2. Where pedestrians with visual disabilities normally use the closed sidewalk, a Detectable Pedestrian Barricade shall be placed across the full width of the closed sidewalk instead of a Type 3 Barricade.
3. Detectable pedestrian barricades similar to the one pictured above, longitudinal channelizing devices, some concrete barriers, and wood or chain link fencing with a continuous detectable edging can satisfactorily delineate a pedestrian path.
4. Tape, rope, or plastic chain strung between devices are not detectable, do not comply with the design standards in the "Americans with Disabilities Act Accessibility Guidelines (ADAAG)" and should not be used as a control for pedestrian movements.
5. Warning lights shall not be attached to detectable pedestrian barricades.
6. Detectable pedestrian barricades should use 8" nominal barricade rails as shown on BC(10) provided that the top rail provides a smooth continuous rail suitable for hand trailing with no splinters, burrs, or sharp edges.

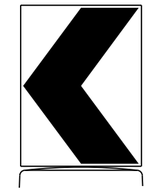

18" x 24" Sign
(Maximum Sign Dimension)
Chevron CW1-8, Opposing Traffic Lane Divider, Driveway sign D70a, Keep Right R4 series or other signs as approved by Engineer

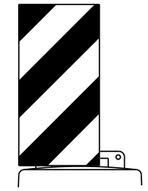

12" x 24"
Vertical Panel
mount with diagonals sloping down towards travel way

Plywood, Aluminum or Metal sign substrates shall NOT be used on plastic drums

SIGNS, CHEVRONS, AND VERTICAL PANELS MOUNTED ON PLASTIC DRUMS

1. Signs used on plastic drums shall be manufactured using substrates listed on the CWZTCD.
2. Chevrons and other work zone signs with an orange background shall be manufactured with Type B_{FL} or Type C_{FL} Orange sheeting meeting the color and retroreflectivity requirements of DMS-8300, "Sign Face Material," unless otherwise specified in the plans.
3. Vertical Panels shall be manufactured with orange and white sheeting meeting the requirements of DMS-8300 Type A or Type B. Diagonal stripes on Vertical Panels shall slope down toward the intended traveled lane.
4. Other sign messages (text or symbolic) may be used as approved by the Engineer. Sign dimensions shall not exceed 18 inches in width or 24 inches in height, except for the R9 series signs discussed in note 8 below.
5. Signs shall be installed using a 1/2 inch bolt (nominal) and nut, two washers, and one locking washer for each connection.
6. Mounting bolts and nuts shall be fully engaged and adequately torqued. Bolts should not extend more than 1/2 inch beyond nuts.
7. Chevrons may be placed on drums on the outside of curves, on merging tapers or on shifting tapers. When used in these locations, they may be placed on every drum or spaced not more than on every third drum. A minimum of three (3) should be used at each location called for in the plans.
8. R9-9, R9-10, R9-11 and R9-11a Sidewalk Closed signs which are 24 inches wide may be mounted on plastic drums, with approval of the Engineer.

Texas Department of Transportation | Traffic Safety Division Standard

BARRICADE AND CONSTRUCTION CHANNELIZING DEVICES

BC(8)-21

FILE: bc-21.dgn	DN: TxDOT	CK: TxDOT	DW: TxDOT	CK: TxDOT
©TxDOT November 2002	CONT	SECT	JOB	HIGHWAY
REVISIONS 4-03 8-14 9-07 5-21 7-13	DIST	COUNTY		SHEET NO. 77

DISCLAIMER:
The use of this standard is governed by the "Texas Engineering Practice Act". No warranty of any kind is made by TxDOT for any purpose whatsoever. TxDOT assumes no responsibility for the conversion of this standard to other formats or for incorrect results or damages resulting from its use.

DATE: 3/12/2025 2:53:36 PM
FILE: G:\TXC\Projects\City_Georgetown\10767-00 Shell Road\03_CADD\01_Shts\02-TCP\Srds\bc-21.dgn

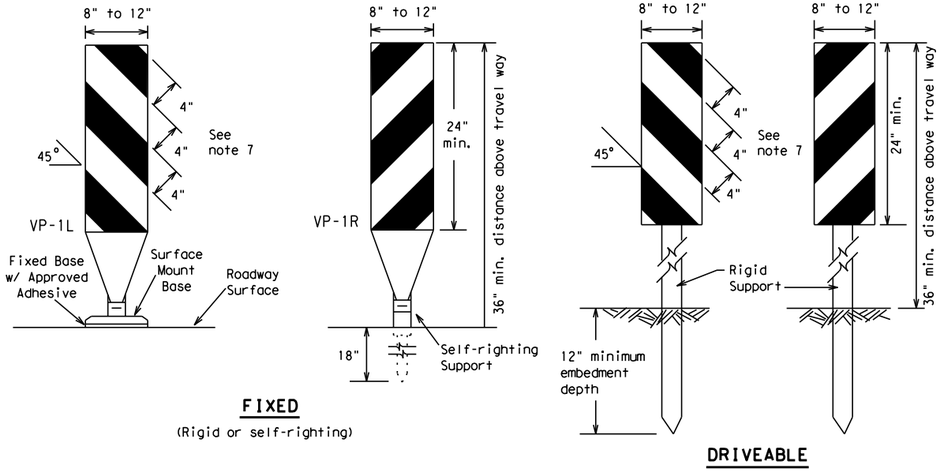

FIXED
(Rigid or self-righting)

DRIVEABLE

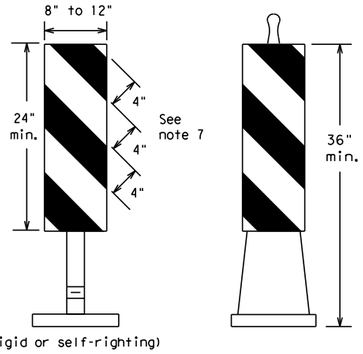

(Rigid or self-righting)

PORTABLE

1. Vertical Panels (VP's) are normally used to channelize traffic or divide opposing lanes of traffic.
2. VP's may be used in daytime or nighttime situations. They may be used at the edge of shoulder drop-offs and other areas such as lane transitions where positive daytime and nighttime delineation is required. The Engineer/Inspector shall refer to the Roadway Design Manual for additional requirements on the use VP's for drop-offs.
3. VP's should be mounted back to back if used at the edge of cuts adjacent to two-way two lane roadways. Stripes are to be reflective orange and reflective white and should always slope downward toward the travel lane.
4. VP's used on expressways and freeways or other high speed roadways, may have more than 270 square inches of retroreflective area facing traffic.
5. Self-righting supports are available with portable base. See "Compliant Work Zone Traffic Control Devices List" (CWZTCD).
6. Sheeting for the VP's shall be retroreflective Type A or Type B conforming to Departmental Material Specification DMS-8300, unless noted otherwise.
7. Where the height of reflective material on the vertical panel is 36 inches or greater, a panel stripe of 6 inches shall be used.

VERTICAL PANELS (VPs)

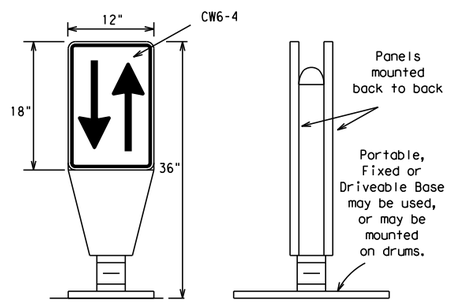

1. Opposing Traffic Lane Dividers (OTLD) are delineation devices designed to convert a normal one-way roadway section to two-way operation. OTLD's are used on temporary centerlines. The upward and downward arrows on the sign's face indicate the direction of traffic on either side of the divider. The base is secured to the pavement with an adhesive or rubber weight to minimize movement caused by a vehicle impact or wind gust.
2. The OTLD may be used in combination with 42" cones or VPs.
3. Spacing between the OTLD shall not exceed 500 feet. 42" cones or VPs placed between the OTLD's should not exceed 100 foot spacing.
4. The OTLD shall be orange with a black non-reflective legend. Sheeting for the OTLD shall be retroreflective Type B_{FL} or Type C_{FL} conforming to Departmental Material Specification DMS-8300, unless noted otherwise. The legend shall meet the requirements of DMS-8300.

OPPOSING TRAFFIC LANE DIVIDERS (OTLD)

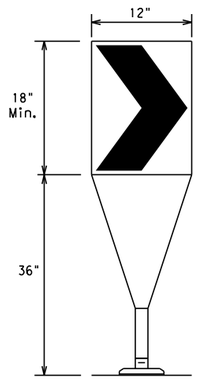

Fixed Base w/ Approved Adhesive (Driveable Base, or Flexible Support can be used)

1. The chevron shall be a vertical rectangle with a minimum size of 12 by 18 inches.
2. Chevrons are intended to give notice of a sharp change of alignment with the direction of travel and provide additional emphasis and guidance for vehicle operators with regard to changes in horizontal alignment of the roadway.
3. Chevrons, when used, shall be erected on the outside of a sharp curve or turn, or on the far side of an intersection. They shall be in line with and at right angles to approaching traffic. Spacing should be such that the motorist always has three in view, until the change in alignment eliminates its need.
4. To be effective, the chevron should be visible for at least 500 feet.
5. Chevrons shall be orange with a black nonreflective legend. Sheeting for the chevron shall be retroreflective Type B_{FL} or Type C_{FL} conforming to Departmental Material Specification DMS-8300, unless noted otherwise. The legend shall meet the requirements of DMS-8300.
6. For Long Term Stationary use on tapers or transitions on freeways and divided highways, self-righting chevrons may be used to supplement plastic drums but not to replace plastic drums.

CHEVRONS

GENERAL NOTES

1. Work Zone channelizing devices illustrated on this sheet may be installed in close proximity to traffic and are suitable for use on high or low speed roadways. The Engineer/Inspector shall ensure that spacing and placement is uniform and in accordance with the "Texas Manual on Uniform Traffic Control Devices" (TMUTCD).
2. Channelizing devices shown on this sheet may have a driveable, fixed or portable base. The requirement for self-righting channelizing devices must be specified in the General Notes or other plan sheets.
3. Channelizing devices on self-righting supports should be used in work zone areas where channelizing devices are frequently impacted by errant vehicles or vehicle related wind gusts making alignment of the channelizing devices difficult to maintain. Locations of these devices shall be detailed elsewhere in the plans. These devices shall conform to the TMUTCD and the "Compliant Work Zone Traffic Control Devices List" (CWZTCD).
4. The Contractor shall maintain devices in a clean condition and replace damaged, nonreflective, faded, or broken devices and bases as required by the Engineer/Inspector. The Contractor shall be required to maintain proper device spacing and alignment.
5. Portable bases shall be fabricated from virgin and/or recycled rubber. The portable bases shall weigh a minimum of 30 lbs.
6. Pavement surfaces shall be prepared in a manner that ensures proper bonding between the adhesives, the fixed mount bases and the pavement surface. Adhesives shall be prepared and applied according to the manufacturer's recommendations.
7. The installation and removal of channelizing devices shall not cause detrimental effects to the final pavement surfaces, including pavement surface discoloration or surface integrity. Driveable bases shall not be permitted on final pavement surfaces. The Engineer/Inspector shall approve all application and removal procedures of fixed bases.

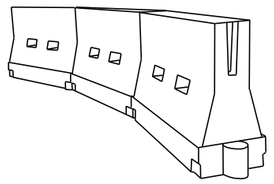

LONGITUDINAL CHANNELIZING DEVICES (LCD)

1. LCDs are crashworthy, lightweight, deformable devices that are highly visible, have good target value and can be connected together. They are not designed to contain or redirect a vehicle on impact.
2. LCDs may be used instead of a line of cones or drums.
3. LCDs shall be placed in accordance to application and installation requirements specific to the device, and used only when shown on the CWZTCD list.
4. LCDs should not be used to provide positive protection for obstacles, pedestrians or workers.
5. LCDs shall be supplemented with retroreflective delineation as required for temporary barriers on BC(7) when placed roughly parallel to the travel lanes.
6. LCDs used as barricades placed perpendicular to traffic should have at least one row of reflective sheeting meeting the requirements for barricade rails as shown on BC(10). Place reflective sheeting near the top of the LCD along the full length of the device.

WATER BALLASTED SYSTEMS USED AS BARRIERS

1. Water ballasted systems used as barriers shall not be used solely to channelize road users, but also to protect the work space per the appropriate Manual for Assessing Safety Hardware (MASH) crashworthiness requirements based on roadway speed and barrier application.
2. Water ballasted systems used to channelize vehicular traffic shall be supplemented with retroreflective delineation or channelizing devices to improve daytime/nighttime visibility. They may also be supplemented with pavement markings.
3. Water ballasted systems used as barriers shall be placed in accordance to application and installation requirements specific to the device, and used only when shown on the CWZTCD list.
4. Water ballasted systems used as barriers should not be used for a merging taper except in low speed (less than 45 MPH) urban areas. When used on a taper in a low speed urban area, the taper shall be delineated and the taper length should be designed to optimize road user operations considering the available geometric conditions.
5. When water ballasted systems used as barriers have blunt ends exposed to traffic, they should be attenuated as per manufacturer recommendations or flared to a point outside the clear zone.

If used to channelize pedestrians, longitudinal channelizing devices or water ballasted systems must have a continuous detectable bottom for users of long canes and the top of the unit shall not be less than 32 inches in height.

HOLLOW OR WATER BALLASTED SYSTEMS USED AS LONGITUDINAL CHANNELIZING DEVICES OR BARRIERS

Posted Speed	Formula	Minimum Desirable Taper Lengths ** 10' Offset	11' Offset	12' Offset	Suggested Maximum Spacing of Channelizing Devices: On a Taper	On a Tangent
30	$L = \frac{WS^2}{60}$	150'	165'	180'	30'	60'
35		205'	225'	245'	35'	70'
40		265'	295'	320'	40'	80'
45	L = WS	450'	495'	540'	45'	90'
50		500'	550'	600'	50'	100'
55		550'	605'	660'	55'	110'
60		600'	660'	720'	60'	120'
65		650'	715'	780'	65'	130'
70		700'	770'	840'	70'	140'
75		750'	825'	900'	75'	150'
80		800'	880'	960'	80'	160'

** Taper lengths have been rounded off.
L=Length of Taper (FT.) W=Width of Offset (FT.)
S=Posted Speed (MPH)

SUGGESTED MAXIMUM SPACING OF CHANNELIZING DEVICES AND MINIMUM DESIRABLE TAPER LENGTHS

SHEET 9 OF 12

Texas Department of Transportation | Traffic Safety Division Standard

BARRICADE AND CONSTRUCTION CHANNELIZING DEVICES

BC(9)-21

FILE: bc-21.dgn	DN: TxDOT	CK: TxDOT	DW: TxDOT	CK: TxDOT
© TxDOT November 2002	CONT	SECT	JOB	HIGHWAY
REVISIONS				
9-07 8-14	DIST	COUNTY		SHEET NO.
7-13 5-21				78

103

DISCLAIMER:
The use of this standard is governed by the "Texas Engineering Practice Act". No warranty of any kind is made by TxDOT for any purpose whatsoever. TxDOT assumes no responsibility for the conversion of this standard to other formats or for incorrect results or damages resulting from its use.

DATE: 3/12/2025 2:53:37 PM
FILE: G:\TXC\Projects\City_Georgetown\10767-00 Shell Road\03_CADD\01_Shts\02-TCP\Srds\bc-21.dgn

TYPE 3 BARRICADES

1. Refer to the Compliant Work Zone Traffic Control Devices List (CWZTCD) for details of the Type 3 Barricades and a list of all materials used in the construction of Type 3 Barricades.
2. Type 3 Barricades shall be used at each end of construction projects closed to all traffic.
3. Barricades extending across a roadway should have stripes that slope downward in the direction toward which traffic must turn in detouring. When both right and left turns are provided, the chevron striping may slope downward in both directions from the center of the barricade. Where no turns are provided at a closed road, striping should slope downward in both directions toward the center of roadway.
4. Striping of rails, for the right side of the roadway, should slope downward to the left. For the left side of the roadway, striping should slope downward to the right.
5. Identification markings may be shown only on the back of the barricade rails. The maximum height of letters and/or company logos used for identification shall be 1".
6. Barricades shall not be placed parallel to traffic unless an adequate clear zone is provided.
7. Warning lights shall NOT be installed on barricades.
8. Where barricades require the use of weights to keep from turning over, the use of sandbags with dry, cohesionless sand is recommended. The sandbags will be tied shut to keep the sand from spilling and to maintain a constant weight. Sand bags shall not be stacked in a manner that covers any portion of a barricade rails reflective sheeting. Rock, concrete, iron, steel or other solid objects will NOT be permitted. Sandbags should weigh a minimum of 35 lbs and a maximum of 50 lbs. Sandbags shall be made of a durable material that tears upon vehicular impact. Rubber (such as tire inner tubes) shall not be used for sandbags. Sandbags shall only be placed along or upon the base supports of the device and shall not be suspended above ground level or hung with rope, wire, chains or other fasteners.
9. Sheeting for barricades shall be retroreflective Type A or Type B conforming to Departmental Material Specification DMS-8300 unless otherwise noted.

Barricades shall NOT be used as a sign support.

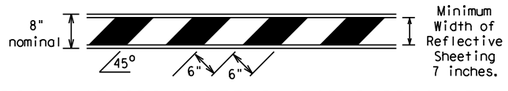

TYPICAL STRIPING DETAIL FOR BARRICADE RAIL

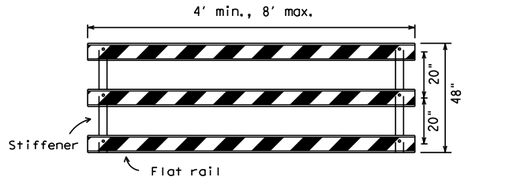

Stiffener may be inside or outside of support, but no more than 2 stiffeners shall be allowed on one barricade.

TYPICAL PANEL DETAIL FOR SKID OR POST TYPE BARRICADES

Each roadway of a divided highway shall be barricaded in the same manner.

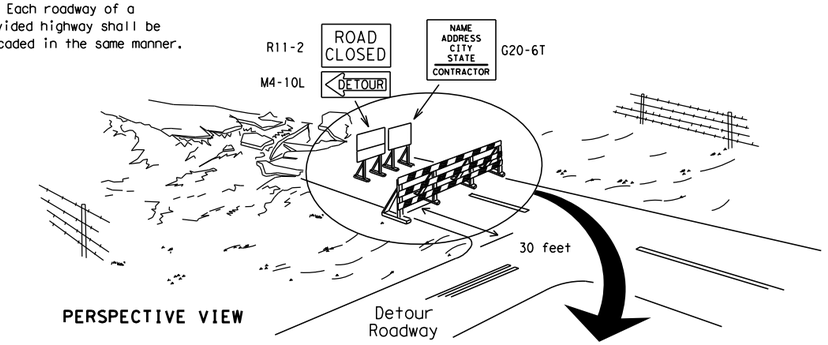

PERSPECTIVE VIEW

The three rails on Type 3 barricades shall be reflectorized orange and reflective white stripes on one side facing one-way traffic and both sides for two-way traffic.
Barricade striping should slant downward in the direction of detour.

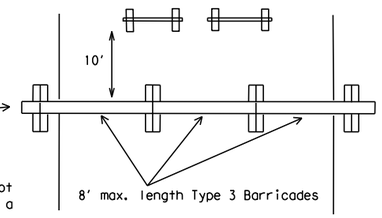

PLAN VIEW

1. Signs should be mounted on independent supports at a 7 foot mounting height in center of roadway. The signs should be a minimum of 10 feet behind Type 3 Barricades.
2. Advance signing shall be as specified elsewhere in the plans.

TYPE 3 BARRICADE (POST AND SKID) TYPICAL APPLICATION

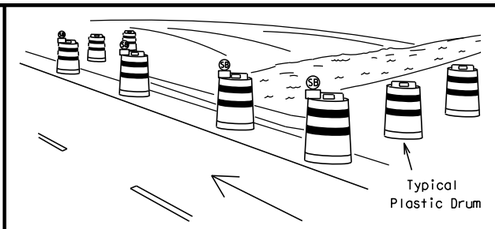

PERSPECTIVE VIEW

1. Where positive redirectional capability is provided, drums may be omitted.
2. Plastic construction fencing may be used with drums for safety as required in the plans.
3. Vertical Panels on flexible support may be substituted for drums when the shoulder width is less than 4 feet.
4. When the shoulder width is greater than 12 feet, steady-burn lights may be omitted if drums are used.
5. Drums must extend the length of the culvert widening.

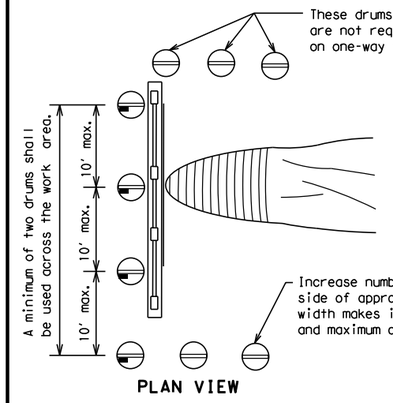

PLAN VIEW

LEGEND	
	Plastic drum
	Plastic drum with steady burn light or yellow warning reflector
SB	Steady burn warning light or yellow warning reflector

CULVERT WIDENING OR OTHER ISOLATED WORK WITHIN THE PROJECT LIMITS

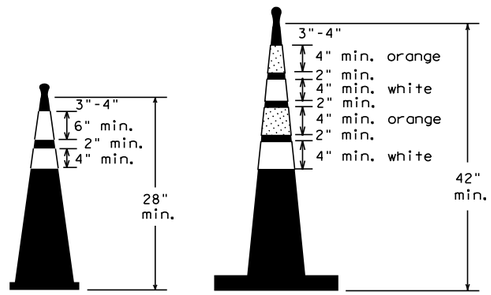

Two-Piece cones

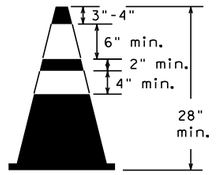

One-Piece cones

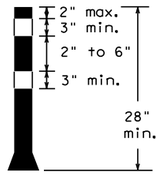

Tubular Marker

28" Cones shall have a minimum weight of 9 1/2 lbs.

42" 2-piece cones shall have a minimum weight of 30 lbs. including base.

1. Traffic cones and tubular markers shall be predominantly orange, and meet the height and weight requirements shown above.
2. One-piece cones have the body and base of the cone molded in one consolidated unit. Two-piece cones have a cone shaped body and a separate rubber base, or ballast, that is added to keep the device upright and in place.
3. Two-piece cones may have a handle or loop extending up to 8" above the minimum height shown, in order to aid in retrieving the device.
4. Cones or tubular markers shall have white or white and orange reflective bands as shown above. The reflective bands shall have a smooth, sealed outer surface and meet the requirements of Departmental Material Specification DMS-8300 Type A or Type B.
5. 28" cones and tubular markers are generally suitable for short duration and short-term stationary work as defined on BC(4). These should not be used for intermediate-term or long-term stationary work unless personnel is on-site to maintain them in their proper upright position.
6. 42" two-piece cones, vertical panels or drums are suitable for all work zone durations.
7. Cones or tubular markers used on each project should be of the same size and shape.

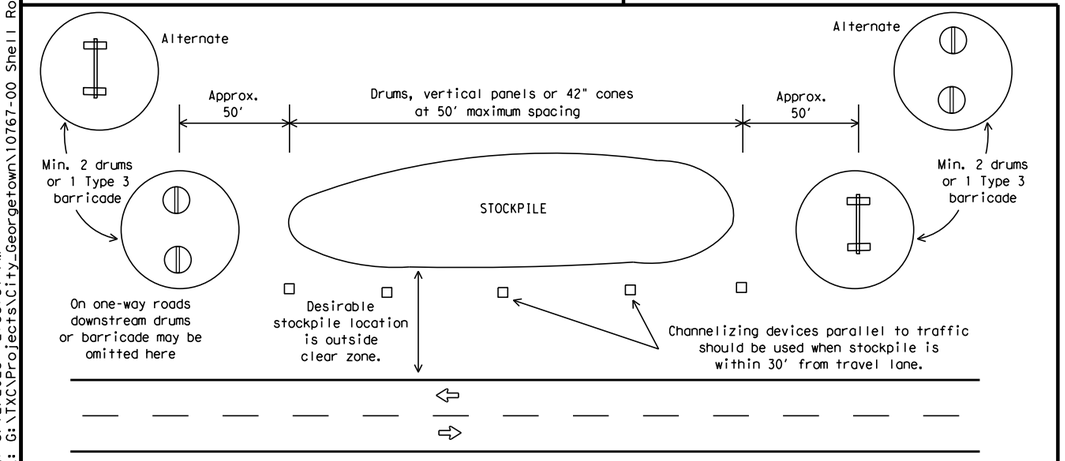

TRAFFIC CONTROL FOR MATERIAL STOCKPILES

Texas Department of Transportation — Traffic Safety Division Standard

BARRICADE AND CONSTRUCTION CHANNELIZING DEVICES

BC(10)-21

FILE: bc-21.dgn	DN: TxDOT	CK: TxDOT	DW: TxDOT	CK: TxDOT
©TxDOT November 2002	CONT	SECT	JOB	HIGHWAY
REVISIONS 9-07 8-14 7-13 5-21	DIST	COUNTY		SHEET NO. 79

DISCLAIMER:
The use of this standard is governed by the "Texas Engineering Practice Act". No warranty of any kind is made by TxDOT for any purpose whatsoever. TxDOT assumes no responsibility for the conversion of this standard to other formats or for incorrect results or damages resulting from its use.

DATE: 3/12/2025 2:53:37 PM
FILE: G:\TXC\Projects\City_Georgetown\10767-00 Shell Road\03_CADD\01_Shts\02-TCP\Stds\bc-21.dgn

WORK ZONE PAVEMENT MARKINGS

GENERAL

1. The Contractor shall be responsible for maintaining work zone and existing pavement markings, in accordance with the standard specifications and special provisions, on all roadways open to traffic within the CSJ limits unless otherwise stated in the plans.
2. Color, patterns and dimensions shall be in conformance with the "Texas Manual on Uniform Traffic Control Devices" (TMUTCD).
3. Additional supplemental pavement marking details may be found in the plans or specifications.
4. Pavement markings shall be installed in accordance with the TMUTCD and as shown on the plans.
5. When short term markings are required on the plans, short term markings shall conform with the TMUTCD, the plans and details as shown on the Standard Plan Sheet WZ(STPM).
6. When standard pavement markings are not in place and the roadway is opened to traffic, DO NOT PASS signs shall be erected to mark the beginning of the sections where passing is prohibited and PASS WITH CARE signs at the beginning of sections where passing is permitted.
7. All work zone pavement markings shall be installed in accordance with Item 662, "Work Zone Pavement Markings."

RAISED PAVEMENT MARKERS

1. Raised pavement markers are to be placed according to the patterns on BC(12).
2. All raised pavement markers used for work zone markings shall meet the requirements of Item 672, "RAISED PAVEMENT MARKERS" and Departmental Material Specification DMS-4200 or DMS-4300.

PREFABRICATED PAVEMENT MARKINGS

1. Removable prefabricated pavement markings shall meet the requirements of DMS-8241.
2. Non-removable prefabricated pavement markings (foil back) shall meet the requirements of DMS-8240.

MAINTAINING WORK ZONE PAVEMENT MARKINGS

1. The Contractor will be responsible for maintaining work zone pavement markings within the work limits.
2. Work zone pavement markings shall be inspected in accordance with the frequency and reporting requirements of work zone traffic control device inspections as required by Form 599.
3. The markings should provide a visible reference for a minimum distance of 300 feet during normal daylight hours and 160 feet when illuminated by automobile low-beam headlights at night, unless sight distance is restricted by roadway geometrics.
4. Markings failing to meet this criteria within the first 30 days after placement shall be replaced at the expense of the Contractor as per Specification Item 662.

REMOVAL OF PAVEMENT MARKINGS

1. Pavement markings that are no longer applicable, could create confusion or direct a motorist toward or into the closed portion of the roadway shall be removed or obliterated before the roadway is opened to traffic.
2. The above shall not apply to detours in place for less than three days, where flaggers and/or sufficient channelizing devices are used in lieu of markings to outline the detour route.
3. Pavement markings shall be removed to the fullest extent possible, so as not to leave a discernable marking. This shall be by any method approved by TxDOT Specification Item 677 for "Eliminating Existing Pavement Markings and Markers".
4. The removal of pavement markings may require resurfacing or seal coating portions of the roadway as described in Item 677.
5. Subject to the approval of the Engineer, any method that proves to be successful on a particular type pavement may be used.
6. Blast cleaning may be used but will not be required unless specifically shown in the plans.
7. Over-painting of the markings SHALL NOT BE permitted.
8. Removal of raised pavement markers shall be as directed by the Engineer.
9. Removal of existing pavement markings and markers will be paid for directly in accordance with Item 677, "ELIMINATING EXISTING PAVEMENT MARKINGS AND MARKERS," unless otherwise stated in the plans.
10. Black-out marking tape may be used to cover conflicting existing markings for periods less than two weeks when approved by the Engineer.

Temporary Flexible-Reflective Roadway Marker Tabs

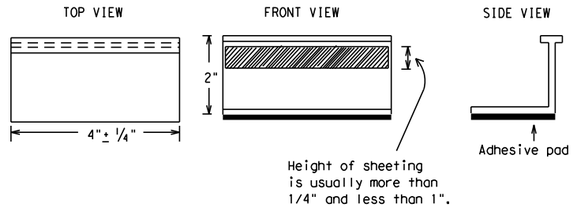

STAPLES OR NAILS SHALL NOT BE USED TO SECURE TEMPORARY FLEXIBLE-REFLECTIVE ROADWAY MARKER TABS TO THE PAVEMENT SURFACE

1. Temporary flexible-reflective roadway marker tabs used as guidemarks shall meet the requirements of DMS-8242.
2. Tabs detailed on this sheet are to be inspected and accepted by the Engineer or designated representative. Sampling and testing is not normally required, however at the option of the Engineer, either "A" or "B" below may be imposed to assure quality before placement on the roadway.
   A. Select five (5) or more tabs at random from each lot or shipment and submit to the Construction Division, Materials and Pavement Section to determine specification compliance.
   B. Select five (5) tabs and perform the following test. Affix five (5) tabs at 24 inch intervals on an asphaltic pavement in a straight line. Using a medium size passenger vehicle or pickup, run over the markers with the front and rear tires at a speed of 35 to 40 miles per hour, four (4) times in each direction. No more than one (1) out of the five (5) reflective surfaces shall be lost or displaced as a result of this test.
3. Small design variances may be noted between tab manufacturers.
4. See Standard Sheet WZ(STPM) for tab placement on new pavements. See Standard Sheet TCP(7-1) for tab placement on seal coat work.

RAISED PAVEMENT MARKERS USED AS GUIDEMARKS

1. Raised pavement markers used as guidemarks shall be from the approved product list, and meet the requirements of DMS-4200.
2. All temporary construction raised pavement markers provided on a project shall be of the same manufacturer.
3. Adhesive for guidemarks shall be bituminous material hot applied or butyl rubber pad for all surfaces, or thermoplastic for concrete surfaces.

Guidemarks shall be designated as:
YELLOW - (two amber reflective surfaces with yellow body).
WHITE - (one silver reflective surface with white body).

DEPARTMENTAL MATERIAL SPECIFICATIONS	
PAVEMENT MARKERS (REFLECTORIZED)	DMS-4200
TRAFFIC BUTTONS	DMS-4300
EPOXY AND ADHESIVES	DMS-6100
BITUMINOUS ADHESIVE FOR PAVEMENT MARKERS	DMS-6130
PERMANENT PREFABRICATED PAVEMENT MARKINGS	DMS-8240
TEMPORARY REMOVABLE, PREFABRICATED PAVEMENT MARKINGS	DMS-8241
TEMPORARY FLEXIBLE, REFLECTIVE ROADWAY MARKER TABS	DMS-8242

A list of prequalified reflective raised pavement markers, non-reflective traffic buttons, roadway marker tabs and other pavement markings can be found at the Material Producer List web address shown on BC(1).

Texas Department of Transportation

Traffic Safety Division Standard

BARRICADE AND CONSTRUCTION PAVEMENT MARKINGS

BC(11)-21

FILE: bc-21.dgn	DN: TxDOT	CK: TxDOT	DW: TxDOT	CK: TxDOT
©TxDOT February 1998	CONT	SECT	JOB	HIGHWAY
REVISIONS 2-98 9-07 5-21 1-02 7-13 11-02 8-14	DIST	COUNTY		SHEET NO. 80

DISCLAIMER:
The use of this standard is governed by the "Texas Engineering Practice Act". No warranty of any kind is made by TxDOT for any purpose whatsoever. TxDOT assumes no responsibility for the conversion of this standard to other formats or for incorrect results or damages resulting from its use.

DATE: 3/12/2025 2:53:37 PM
FILE: G:\TXC\Projects\City_Georgetown\10767-00 Shell Road\03_CADD\01_Shts\02-TCP\Stds\bc-21.dgn

PAVEMENT MARKING PATTERNS

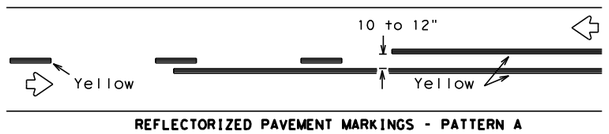

REFLECTORIZED PAVEMENT MARKINGS - PATTERN A

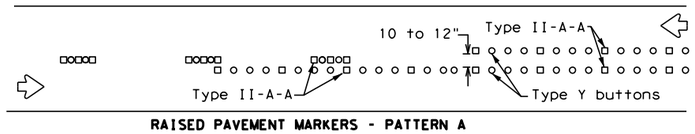

RAISED PAVEMENT MARKERS - PATTERN A

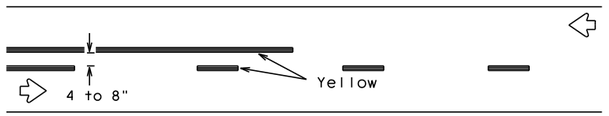

REFLECTORIZED PAVEMENT MARKINGS - PATTERN B

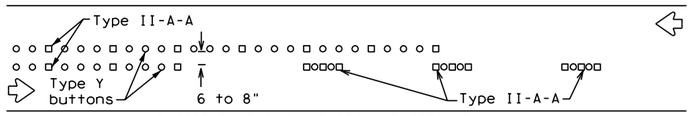

RAISED PAVEMENT MARKERS - PATTERN B

Pattern A is the TXDOT Standard, however Pattern B may be used if approved by the Engineer.
Prefabricated markings may be substituted for reflectorized pavement markings.

CENTER LINE & NO-PASSING ZONE BARRIER LINES FOR TWO-LANE, TWO-WAY HIGHWAYS

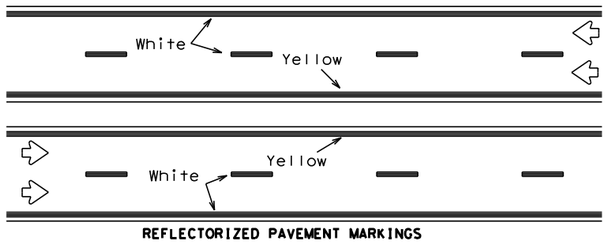

REFLECTORIZED PAVEMENT MARKINGS

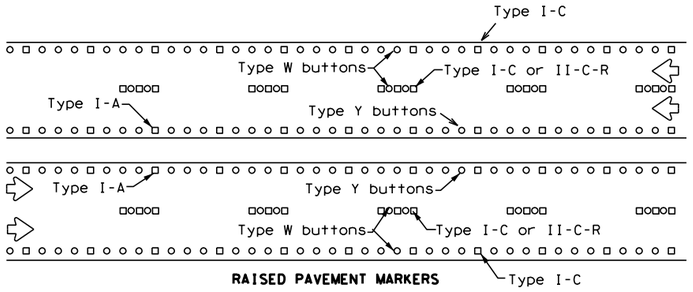

RAISED PAVEMENT MARKERS

Prefabricated markings may be substituted for reflectorized pavement markings.

EDGE & LANE LINES FOR DIVIDED HIGHWAY

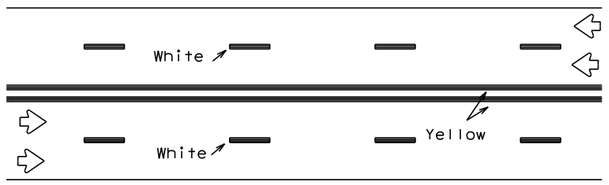

REFLECTORIZED PAVEMENT MARKINGS

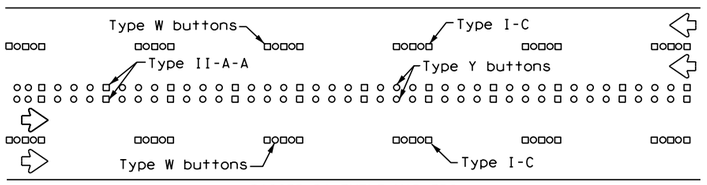

RAISED PAVEMENT MARKERS

Prefabricated markings may be substituted for reflectorized pavement markings.

LANE & CENTER LINES FOR MULTILANE UNDIVIDED HIGHWAYS

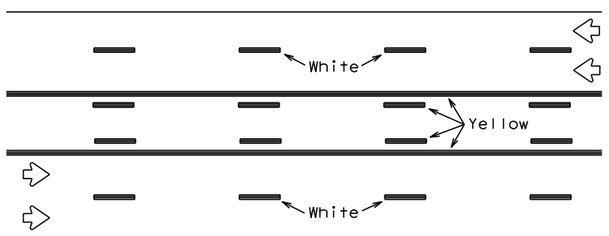

REFLECTORIZED PAVEMENT MARKINGS

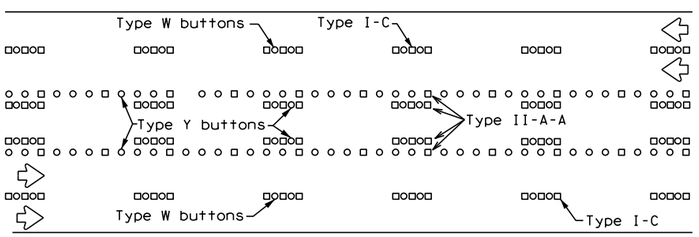

RAISED PAVEMENT MARKERS

Prefabricated markings may be substituted for reflectorized pavement markings.

TWO-WAY LEFT TURN LANE

STANDARD WORK ZONE PAVEMENT MARKINGS DETAILS

SOLID LINES

DOUBLE NO-PASSING LINE

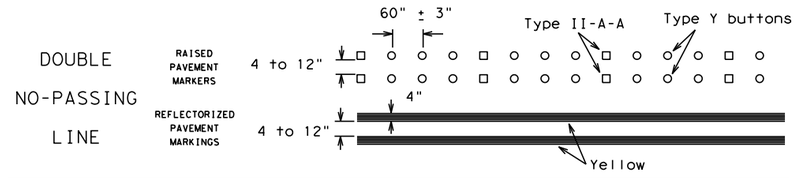

EDGE LINE OR SINGLE NO-PASSING LINE

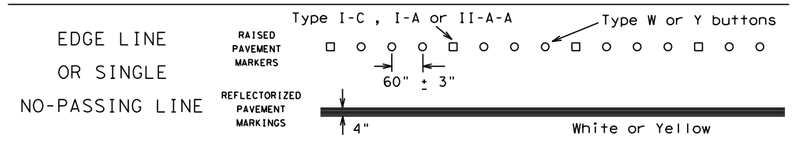

WIDE LINE

(FOR LEFT TURN CHANNELIZING LINE OR CHANNELIZING LINE USED TO DISCOURAGE LANE CHANGING.)

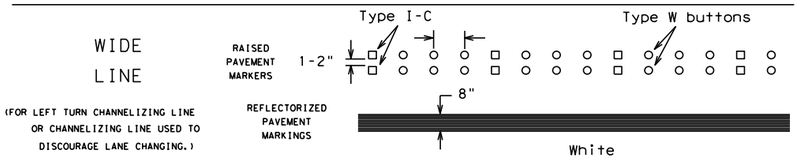

BROKEN LINES

CENTER LINE OR LANE LINE

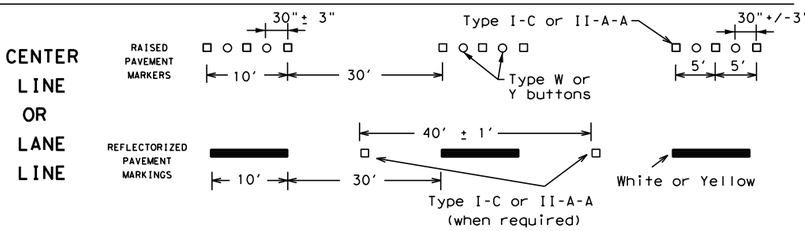

AUXILIARY OR LANEDROP LINE

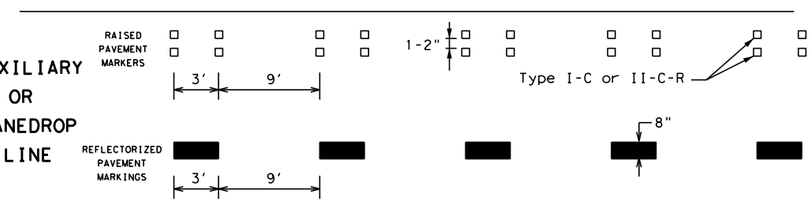

REMOVABLE MARKINGS WITH RAISED PAVEMENT MARKERS

If raised pavement markers are used to supplement REMOVABLE markings, the markers shall be applied to the top of the tape at the approximate mid length of tape used for broken lines or at 20 foot spacing for solid lines. This allows an easier removal of raised pavement markers and tape.

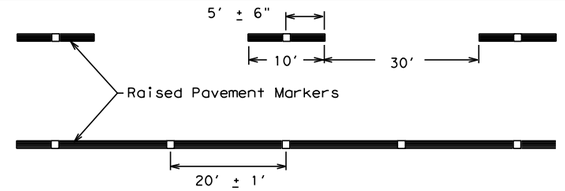

Centerline only - not to be used on edge lines

Raised pavement markers used as standard pavement markings shall be from the approved products list and meet the requirements of Item 672 "RAISED PAVEMENT MARKERS."

SHEET 12 OF 12

Texas Department of Transportation

Traffic Safety Division Standard

BARRICADE AND CONSTRUCTION PAVEMENT MARKING PATTERNS

BC(12)-21

FILE: bc-21.dgn	DN: TxDOT	CK: TxDOT	DW: TxDOT	CK: TxDOT
©TxDOT February 1998	CONT	SECT	JOB	HIGHWAY
REVISIONS 1-97 9-07 5-21 2-98 7-13 11-02 8-14	DIST	COUNTY		SHEET NO. 81

106

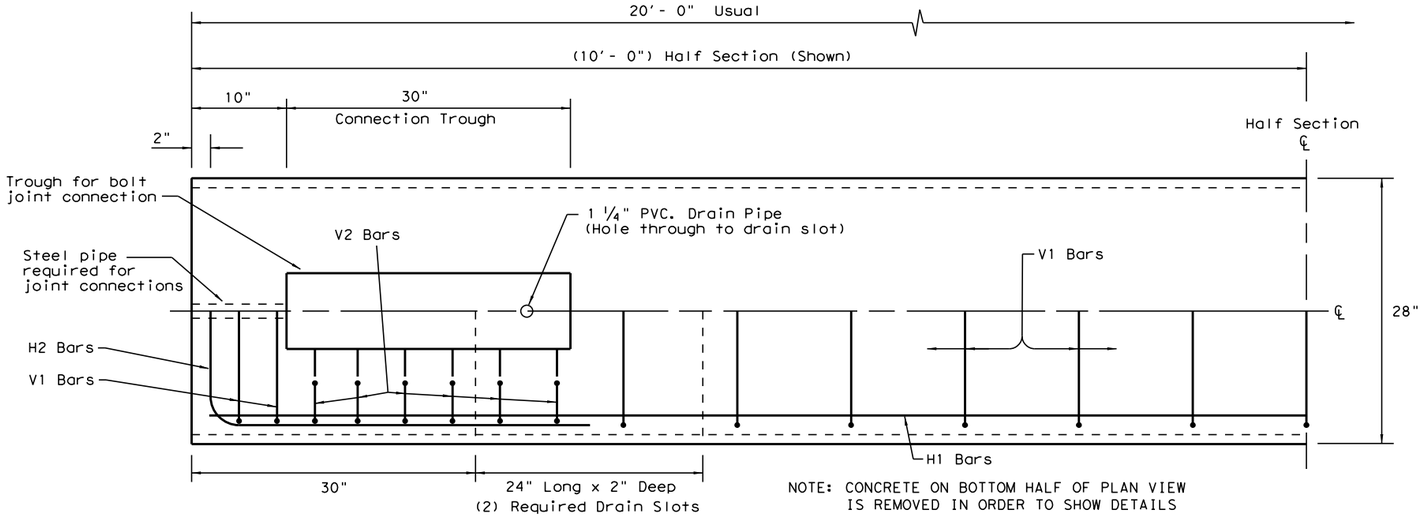

NOTE: CONCRETE ON BOTTOM HALF OF PLAN VIEW IS REMOVED IN ORDER TO SHOW DETAILS

PLAN
(TYPE 1) BARRIER SEGMENT
(SYMMETRICAL ABOUT CENTER LINES)

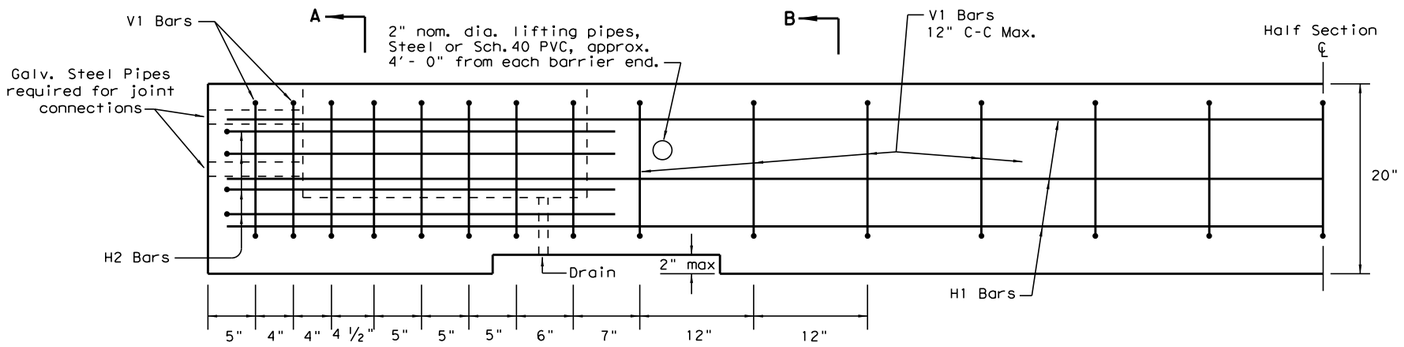

ELEVATION
(TYPE 1) BARRIER SEGMENT
(SYMMETRICAL ABOUT CENTER LINES)

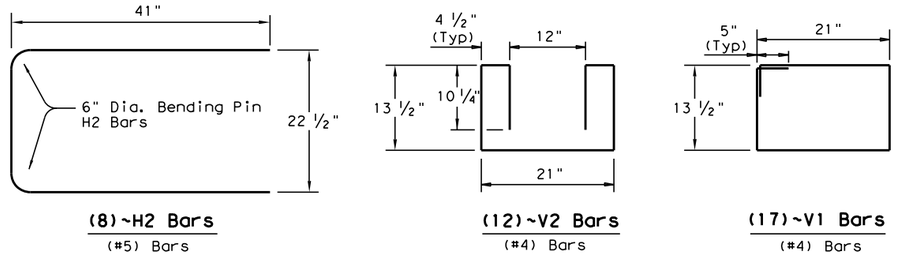

(8)~H2 Bars (#5) Bars

(12)~V2 Bars (#4) Bars

(17)~V1 Bars (#4) Bars

REINFORCING STEEL DETAILS
TYPE 1 - BARRIER SEGMENT

Note: Use 2" Dia. Bending Pin, unless otherwise shown

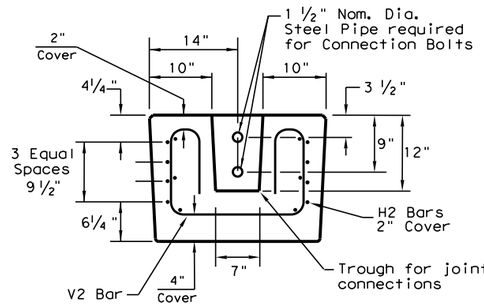

SECTION A-A

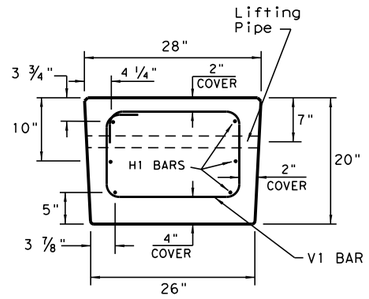

SECTION B-B

GENERAL NOTES

1. Low Profile Concrete Barrier (LPCB), is approved for use in temporary work zone locations, where the posted speed is 45 mph, or less.
2. Concrete shall be Class H for precast barrier with a minimum compressive strength of 3,600 psi.
3. Where used, rebar reinforcement shall be Grade 60 and conform to ASTM A615.
4. Precast LPCB barrier length shall be 20 ft.
5. All barrier edges shall have ¾" chamfer or a tooled radius.
6. Joint connection hardware shall be in accordance with Item 449, "Anchor Bolts." and is considered subsidiary.
7. Steel pipe required for joint connection bolts shall be galvanized in accordance with Item 445,"Galvanizing."
8. Welded wire reinforcement (WWR) may be used in lieu of conventional reinforcement for Type 1 barrier, and shall meet the requirements shown.

FOR CONTRACTORS INFORMATION ONLY

(TYPE 1) APPROX. QUANTITIES 20 FT. SECTION		
CONCRETE	CY	2.6
REINFORCING STEEL	LBS	330
TOTAL BARRIER WT.	LBS	11000

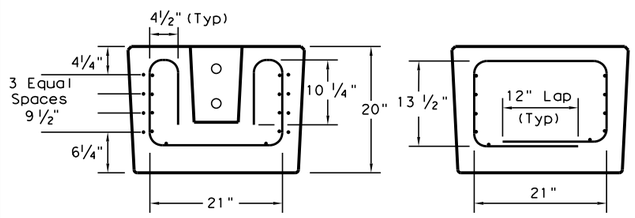

SECTION A-A SECTION B-B

(WWR) GENERAL NOTES

1. Deformed Welded Wire Reinforcement shall conform to ASTM A497.
2. Welded wire cage may be cut or bent, if necessary, but must be approved by the Engineer.
3. Combinations of reinforcing steel and WWR are permitted, as directed by the Engineer. The dimensions from the end of the barrier section to the first wire shall not exceed 3".

REQUIRED (WWR) WIRE DESIGN

8 ~ (D31) Horizontal Wires (Equally spaced)
10 ~ (D20) Horizontal Wires (Equally spaced)
29 ~ (D20) Vertical Wires (Spaced as shown in Elevation View)

WELDED WIRE REINFORCEMENT (WWR)- OPTIONAL REINFORCING

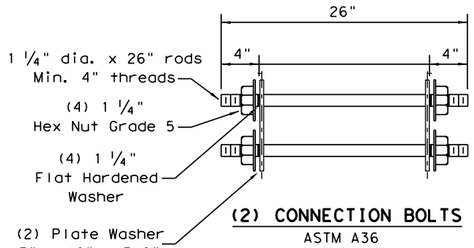

(2) CONNECTION BOLTS
ASTM A36

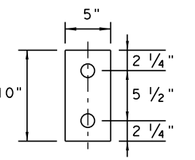

PLATE WASHER
5" x 10" x ⅜"

Note: Rods, Hex nuts and Washers shall be Galvanized.

SHEET 1 OF 2

Texas Department of Transportation

Design Division Standard

LOW PROFILE CONCRETE BARRIER
PRECAST BARRIER (TYPE 1)
LPCB-13

FILE: lpcb13.dgn	DN: TxDOT	CK: AM	DW: VP	CK:
©TxDOT December 2010	CONT	SECT	JOB	HIGHWAY
REVISIONS				
	DIST	COUNTY		SHEET NO.
				82

DISCLAIMER:
The use of this standard is governed by the "Texas Engineering Practice Act". No warranty of any kind is made by TxDOT for any purpose whatsoever. TxDOT assumes no responsibility for the conversion of this standard to other formats or for incorrect results or damages resulting from its use.

DATE: 3/12/2025
FILE: G:\TXC\Projects\City_Georgetown\10767-00 Shell Road\03_CADD\01_Shts\02-TCP\Stds\lpcb13.dgn

DISCLAIMER:
The use of this standard is governed by the "Texas Engineering Practice Act". No warranty of any kind is made by TxDOT for any purpose whatsoever. TxDOT assumes no responsibility for the conversion of this standard to other formats or for incorrect results or damages resulting from its use.

DATE: 3/12/2025
FILE: G:\TXC\Projects\City_Georgetown\10767-00 Shell Road\03_CADD\01_Shts\02-TCP\Stds\lpcb13.dgn

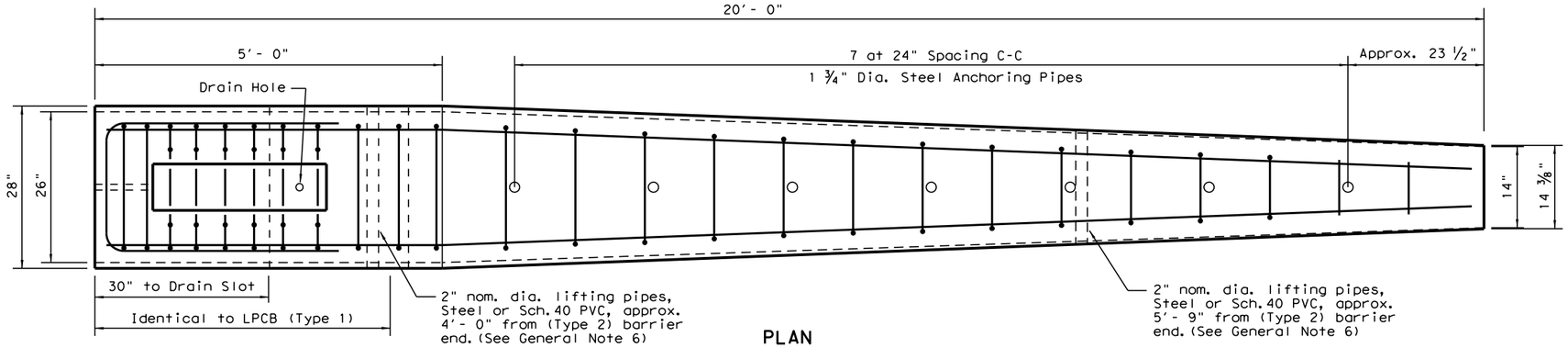

PLAN
(TYPE 2) END TERMINAL

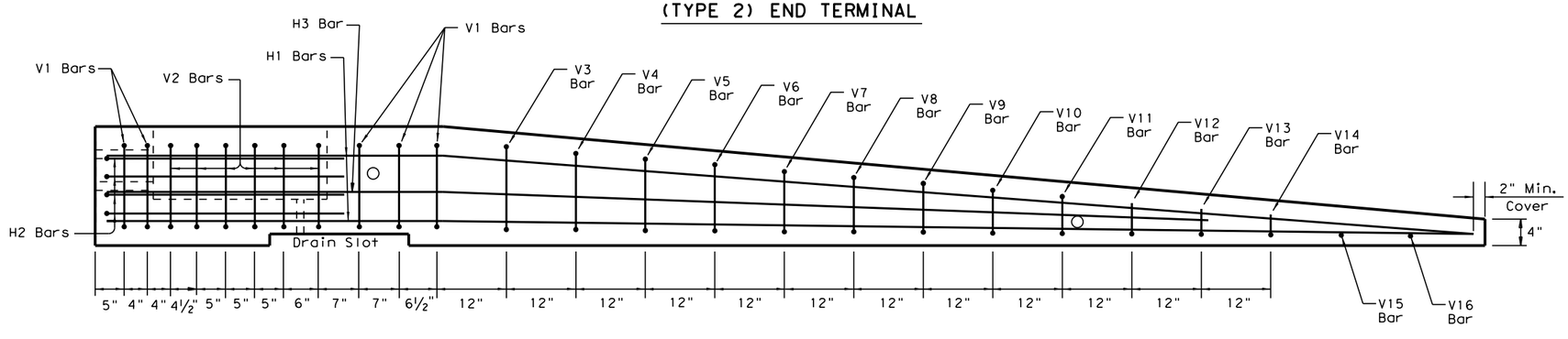

ELEVATION
(TYPE 2) END TERMINAL

Note:
Anchoring pipes not shown in Elevation View

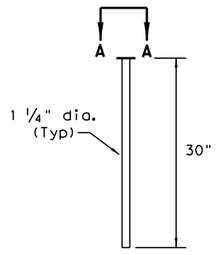

(7) Anchor Pins
ASTM A36 Steel
(See Note 3)

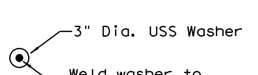

Section A-A
(Head of Anchoring Pin)

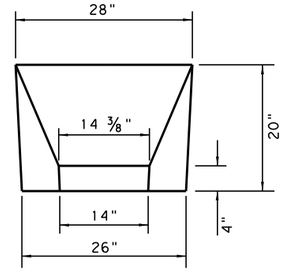

APPROACH VIEW

TYPE 2 - NOTES

1. Welded wire reinforcment (WWR) is "not" an option for Type 2 Barrier.
2. Type 2 Barrier shall be used as an end treatment for the Type 1 barrier segments, when applicable.
3. The end treatment can be used without the anchor pins in locations that can accommodate approximately 4 ft. of lateral displacement of the end treatment. The use of non-pinned end treatment does not affect the performance or the deflection of the Low-Profile barrier system.
4. The anchor pins are all the same length and are to be driven flush with the top of the (Type 2) barrier surface.
5. The bends in the H3 and H1 bars are slight, no formal bend is necessary.
6. The Type 2 barrier segment must be lifted from the rear first, to prevent cracking of sloped section.
7. See LPCB sheet 1 for additional information.

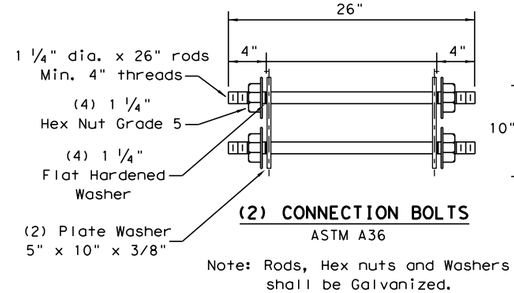

(2) CONNECTION BOLTS
ASTM A36

PLATE WASHER
5" x 10" x ⅜"

Note: Rods, Hex nuts and Washers shall be Galvanized.

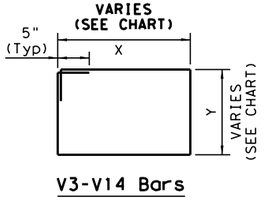

V3-V14 Bars

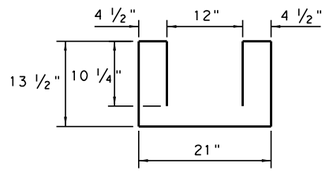

(6)~V2 Bars

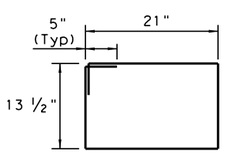

(5)~V1 Bars

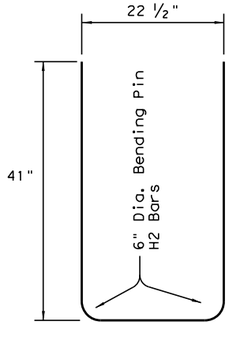

(4)~H2 Bars
(#5) Bars

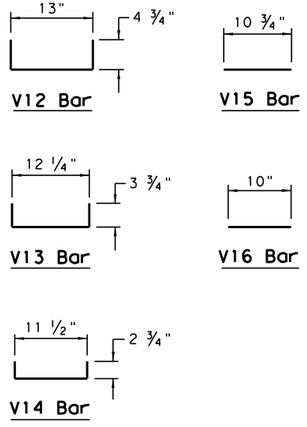

Note: All V Bars are (#4)

BAR (#4)	X (IN.)	Y (IN.)
V3 BAR	20 ¼	14 ½
V4 BAR	19 ½	13 ½
V5 BAR	18 ½	12 ¼
V6 BAR	17 ½	11 ¼
V7 BAR	17	10 ¼
V8 BAR	16 ¼	9
V9 BAR	15 ½	8
V10 BAR	14 ½	7
V11 BAR	13 ¾	6

REINFORCING STEEL DETAILS
TYPE 2 - END TERMINAL

Note: Use 2" Dia. Bending Pin, unless otherwise shown

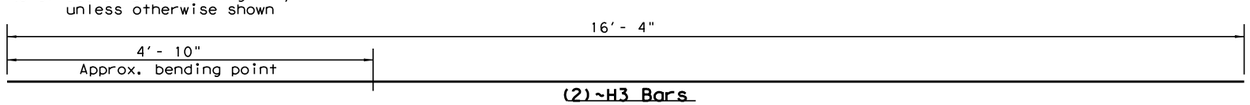

(2)~H3 Bars
(#5) Bar

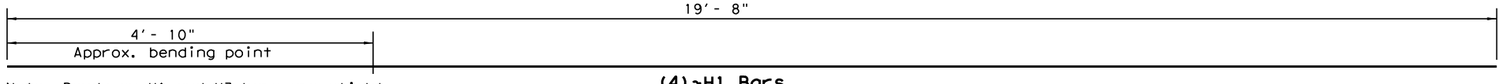

Note: Bends on H1 and H3 bars are slight and do not require formal bends.

(4)~H1 Bars
(#5) Bar

FOR CONTRACTORS INFORMATION ONLY

(TYPE 2) APPROX. QUANTITIES 20 FT. SECTION		
CONCRETE	CY	1.65
REINFORCING STEEL	LBS	240
TOTAL BARRIER WT.	LBS	7000

Texas Department of Transportation
Design Division Standard

LOW PROFILE CONCRETE BARRIER
PRECAST BARRIER (TYPE 2)
LPCB-13

FILE: lpcb13.dgn	DN: TxDOT	CK: AM	DW: VP	CK:
© TxDOT December 2010	CONT	SECT	JOB	HIGHWAY
REVISIONS				
	DIST	COUNTY		SHEET NO.
				83

DISCLAIMER:
The use of this standard is governed by the "Texas Engineering Practice Act". No warranty of any kind is made by TxDOT for any purpose whatsoever. TxDOT assumes no responsibility for the conversion of this standard to other formats or for incorrect results or damages resulting from its use.

DATE: 3/12/2025 2:53:39 PM
FILE: G:\TXC\Projects\City_Georgetown\10767-00 Shell Road\03_CADD\01_Shts\02-TCP_SHEETS.dgn

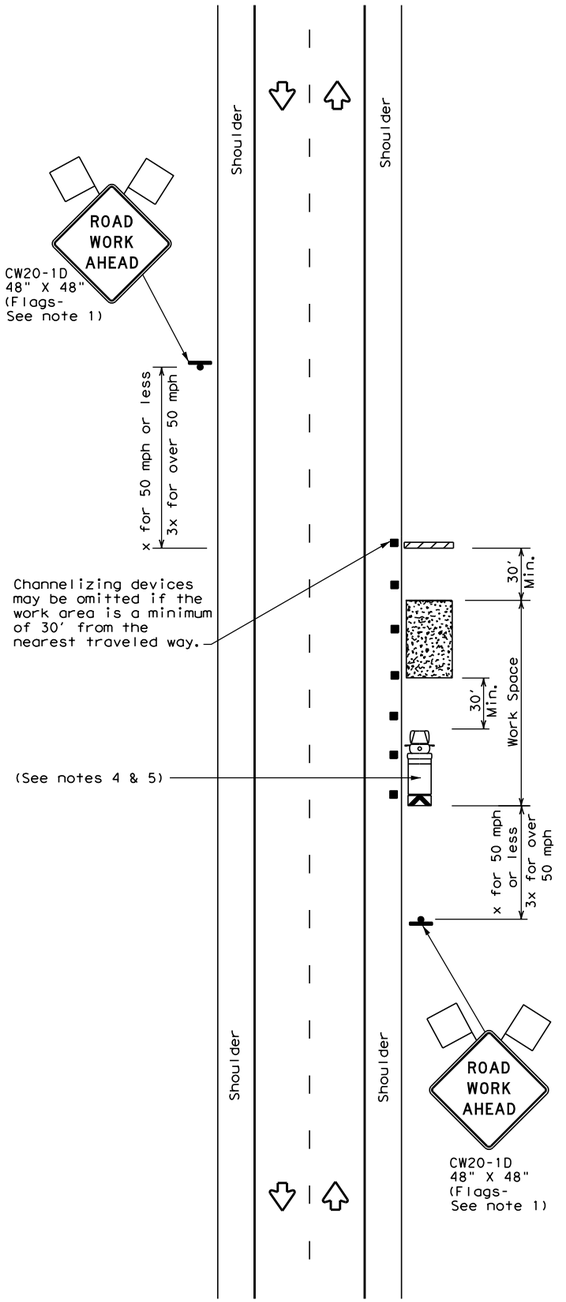

TCP (2-1a)

WORK SPACE NEAR SHOULDER
Conventional Roads

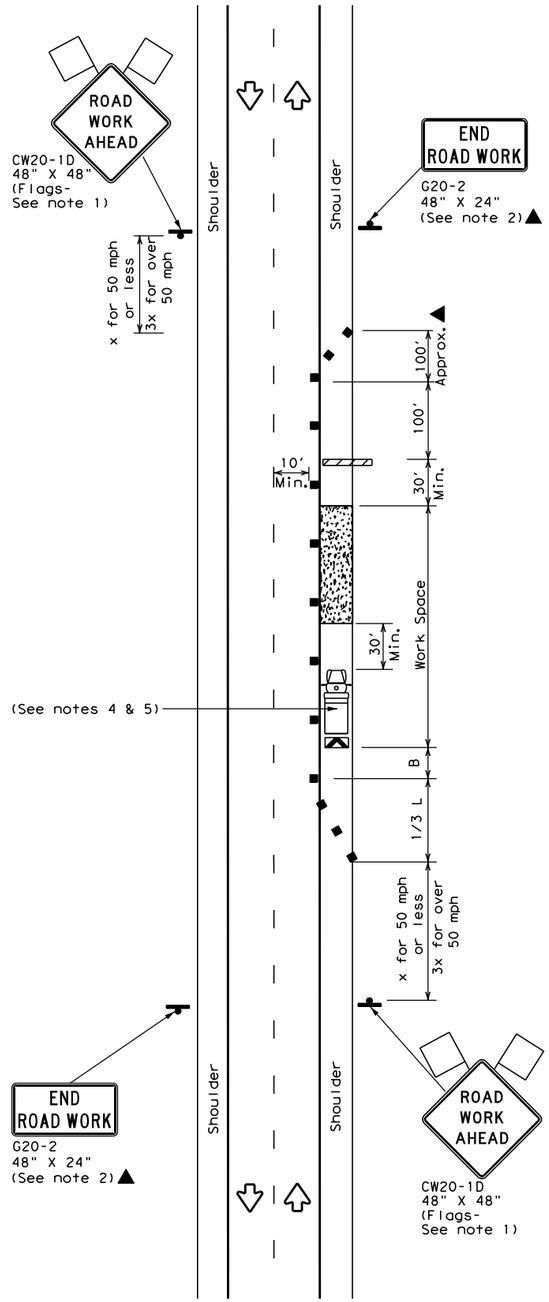

TCP (2-1b)

WORK SPACE ON SHOULDER
Conventional Roads

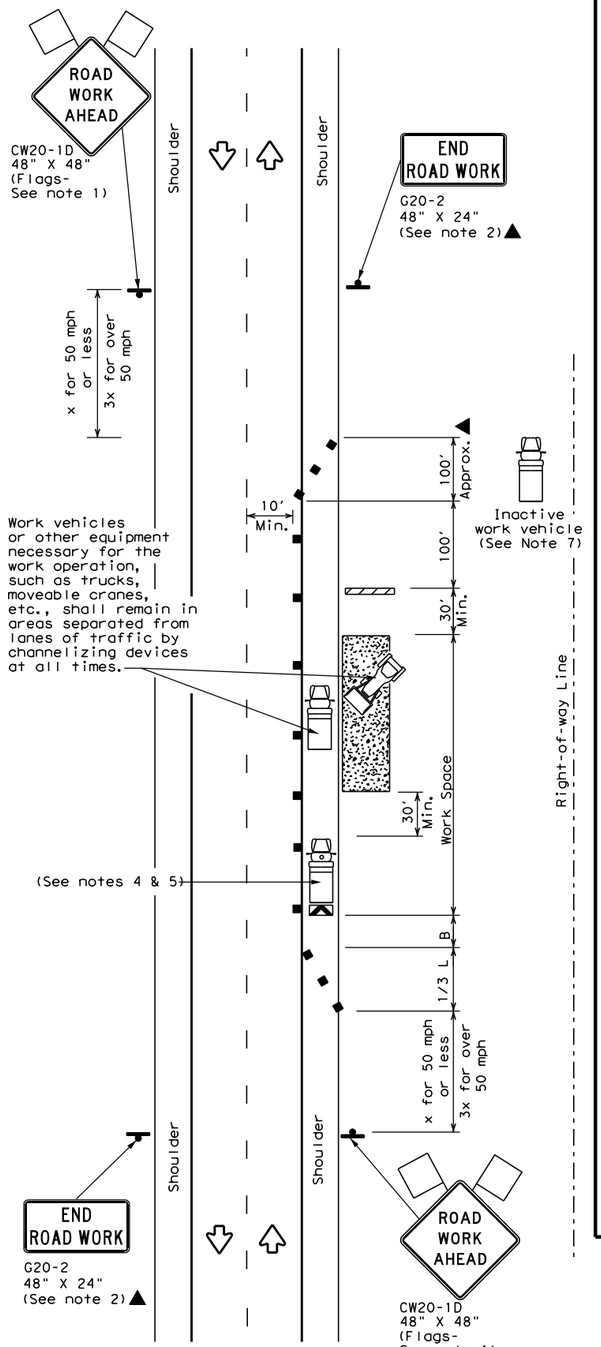

TCP (2-1c)

WORK VEHICLES ON SHOULDER
Conventional Roads

LEGEND			
	Type 3 Barricade		Channelizing Devices
	Heavy Work Vehicle		Truck Mounted Attenuator (TMA)
	Trailer Mounted Flashing Arrow Board	M	Portable Changeable Message Sign (PCMS)
	Sign		Traffic Flow
	Flag		Flagger

Posted Speed *	Formula	Minimum Desirable Taper Lengths ** 10' Offset	11' Offset	12' Offset	Suggested Maximum Spacing of Channelizing Devices: On a Taper	On a Tangent	Minimum Sign Spacing "X" Distance	Suggested Longitudinal Buffer Space "B"
30	$L=\frac{WS^2}{60}$	150'	165'	180'	30'	60'	120'	90'
35		205'	225'	245'	35'	70'	160'	120'
40		265'	295'	320'	40'	80'	240'	155'
45	L=WS	450'	495'	540'	45'	90'	320'	195'
50		500'	550'	600'	50'	100'	400'	240'
55		550'	605'	660'	55'	110'	500'	295'
60		600'	660'	720'	60'	120'	600'	350'
65		650'	715'	780'	65'	130'	700'	410'
70		700'	770'	840'	70'	140'	800'	475'
75		750'	825'	900'	75'	150'	900'	540'

* Conventional Roads Only

** Taper lengths have been rounded off.
L=Length of Taper(FT) W=Width of Offset(FT) S=Posted Speed(MPH)

TYPICAL USAGE				
MOBILE	SHORT DURATION	SHORT TERM STATIONARY	INTERMEDIATE TERM STATIONARY	LONG TERM STATIONARY
	✓	✓	✓	✓

GENERAL NOTES

1. Flags attached to signs where shown, are REQUIRED.
2. All traffic control devices illustrated are REQUIRED, except those denoted with the triangle symbol may be omitted when stated in the plans, or for routine maintenance work, when approved by the Engineer.
3. Stockpiled material should be placed a minimum of 30 feet from nearest traveled way.
4. Shadow Vehicle with TMA and high intensity rotating, flashing, oscillating or strobe lights. A Shadow Vehicle with a TMA should be used anytime it can be positioned 30 to 100 feet in advance of the area of crew exposure without adversely affecting the performance or quality of the work. If workers are no longer present but road or work conditions require the traffic control to remain in place, Type 3 Barricades or other channelizing devices may be substituted for the Shadow Vehicle and TMA.
5. Additional Shadow Vehicles with TMAs may be positioned off the paved surface, next to those shown in order to protect a wider work space.
6. See TCP(5-1) for shoulder work on divided highways, expressways and freeways.
7. Inactive work vehicles or other equipment should be parked near the right-of-way line and not parked on the paved shoulder.
8. CW21-5 "SHOULDER WORK" signs may be used in place of CW20-1D "ROAD WORK AHEAD" signs for shoulder work on conventional roadways.

Texas Department of Transportation

Traffic Operations Division Standard

TRAFFIC CONTROL PLAN CONVENTIONAL ROAD SHOULDER WORK

TCP(2-1)-18

FILE: tcp2-1-18.dgn	DN:	CK:	DW:	CK:
© TxDOT December 1985	CONT	SECT	JOB	HIGHWAY
REVISIONS				
2-94 4-98	DIST	COUNTY		SHEET NO.
8-95 2-12				84
1-97 2-18				

161

DISCLAIMER:
The use of this standard is governed by the "Texas Engineering Practice Act". No warranty of any kind is made by TxDOT for any purpose whatsoever. TxDOT assumes no responsibility for the conversion of this standard to other formats or for incorrect results or damages resulting from its use.

DATE: 3/12/2025 2:53:39 PM
FILE: G:\TxDC\Projects\City_Georgetown\10767-00 Shell Road\03_CADD\01_Shts\02-TCP(2-2)-18.dgn

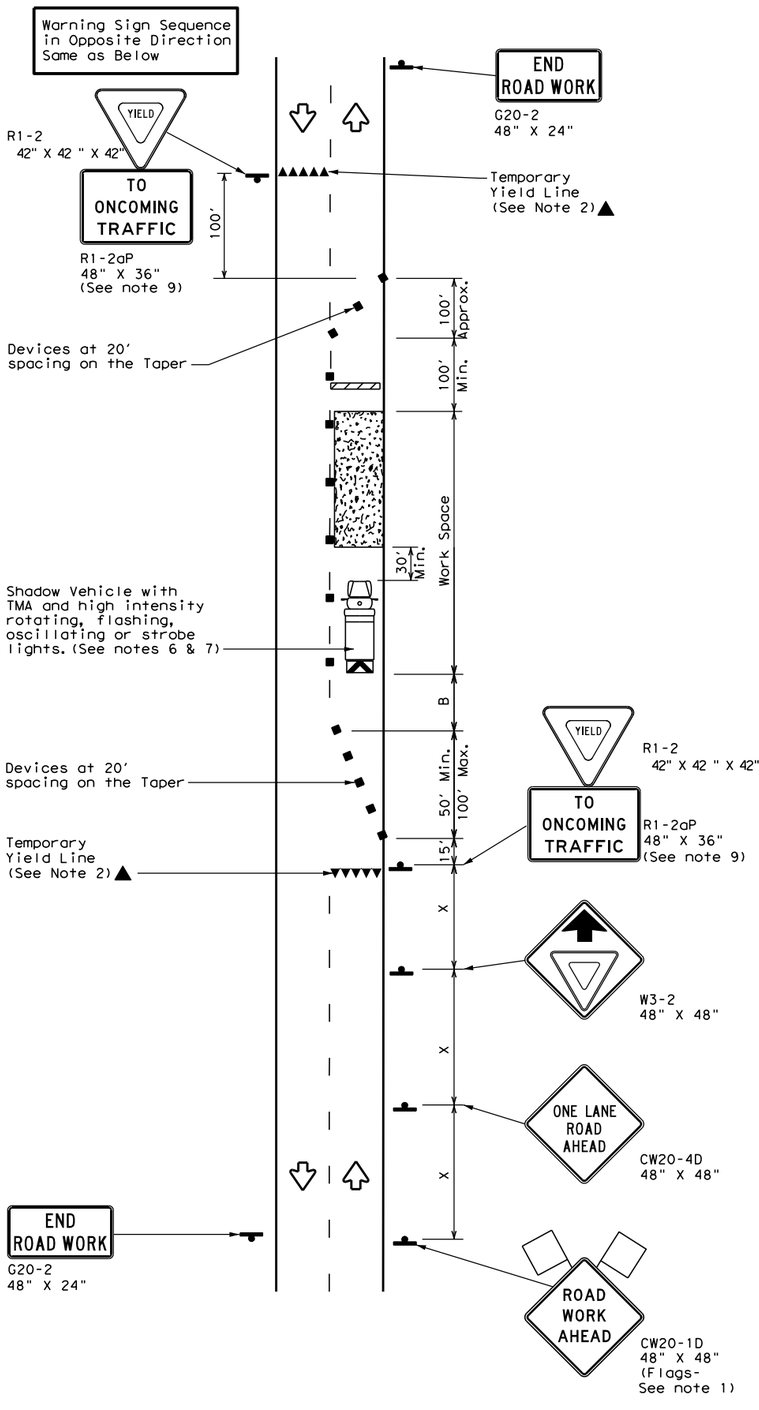

TCP (2-2a)
2-LANE ROADWAY WITHOUT PAVED SHOULDERS
ONE LANE TWO-WAY
CONTROL WITH YIELD SIGNS
(Less than 2000 ADT - See Note 9)

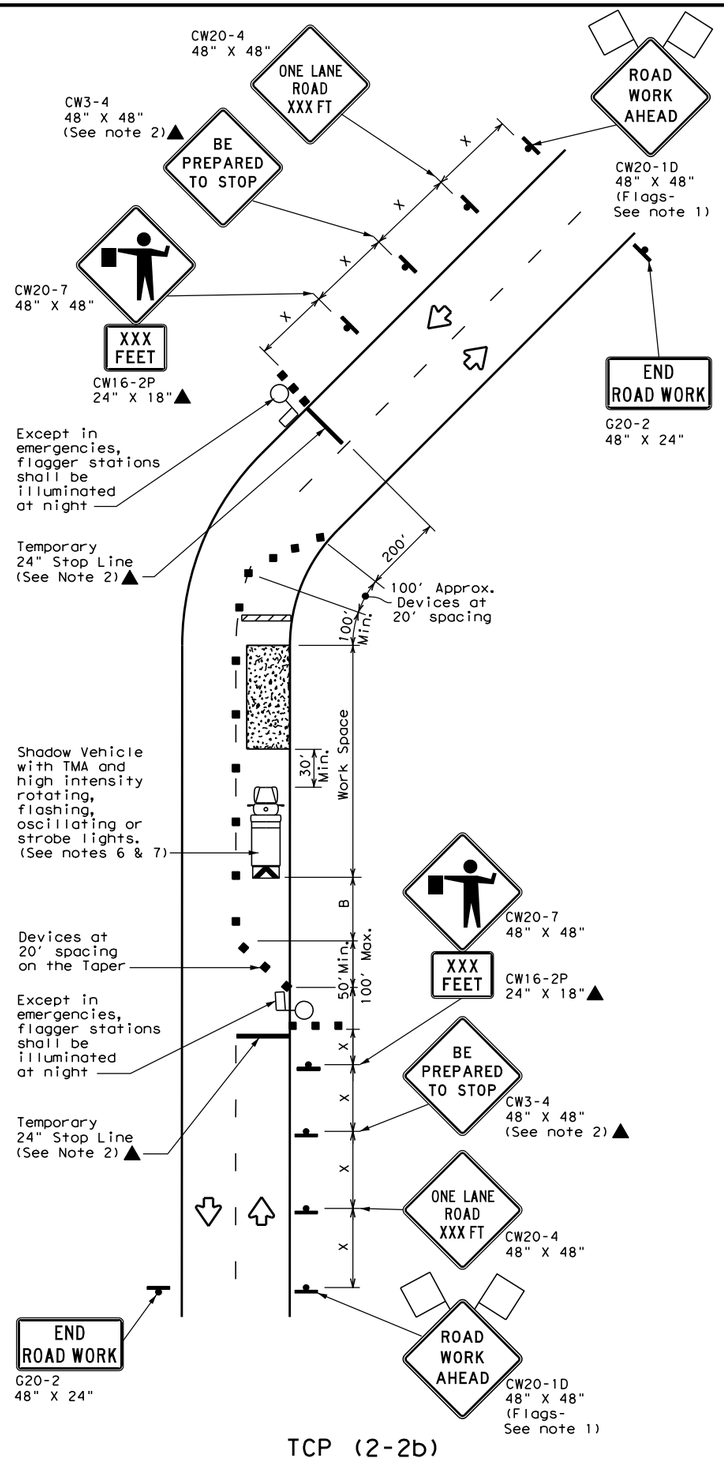

TCP (2-2b)
2-LANE ROADWAY WITHOUT PAVED SHOULDERS
ONE LANE TWO-WAY
CONTROL WITH FLAGGERS

LEGEND			
	Type 3 Barricade		Channelizing Devices
	Heavy Work Vehicle		Truck Mounted Attenuator (TMA)
	Trailer Mounted Flashing Arrow Board	M	Portable Changeable Message Sign (PCMS)
	Sign		Traffic Flow
	Flag		Flagger

Posted Speed *	Formula	Minimum Desirable Taper Lengths ** 10' Offset	11' Offset	12' Offset	Suggested Maximum Spacing of Channelizing Devices: On a Taper	On a Tangent	Minimum Sign Spacing "X" Distance	Suggested Longitudinal Buffer Space "B"	Stopping Sight Distance
30	$L = \frac{WS^2}{60}$	150'	165'	180'	30'	60'	120'	90'	200'
35		205'	225'	245'	35'	70'	160'	120'	250'
40		265'	295'	320'	40'	80'	240'	155'	305'
45	L=WS	450'	495'	540'	45'	90'	320'	195'	360'
50		500'	550'	600'	50'	100'	400'	240'	425'
55		550'	605'	660'	55'	110'	500'	295'	495'
60		600'	660'	720'	60'	120'	600'	350'	570'
65		650'	715'	780'	65'	130'	700'	410'	645'
70		700'	770'	840'	70'	140'	800'	475'	730'
75		750'	825'	900'	75'	150'	900'	540'	820'

* Conventional Roads Only
** Taper lengths have been rounded off.
L=Length of Taper(FT) W=Width of Offset(FT) S=Posted Speed(MPH)

TYPICAL USAGE				
MOBILE	SHORT DURATION	SHORT TERM STATIONARY	INTERMEDIATE TERM STATIONARY	LONG TERM STATIONARY
	✓	✓	✓	

GENERAL NOTES

1. Flags attached to signs where shown, are REQUIRED.
2. All traffic control devices illustrated are REQUIRED, except those denoted with the triangle symbol may be omitted when stated elsewhere in the plans, or for routine maintenance work, when approved by the Engineer.
3. The CW3-4 "BE PREPARED TO STOP" sign may be installed after the CW20-4 "ONE LANE ROAD XXX FT" sign, but proper sign spacing shall be maintained.
4. Flaggers should use two-way radios or other methods of communication to control traffic.
5. Length of work space should be based on the ability of flaggers to communicate.
6. A Shadow Vehicle with a TMA should be used anytime it can be positioned 30 to 100 feet in advance of the area of crew exposure without adversely affecting the performance or quality of the work. If workers are no longer present but road or work conditions require the traffic control to remain in place, Type 3 Barricades or other channelizing devices may be substituted for the Shadow Vehicle and TMA.
7. Additional Shadow Vehicles with TMAs may be positioned off the paved surface, next to those shown in order to protect a wider work space.

TCP (2-2a)

8. The R1-2 "YIELD" sign traffic control may be used on projects with approaches that have adequate sight distance. For projects in urban areas, work space should be no longer than one half city block. In rural areas, roadways with less than 2000 ADT, work space should be no longer than 400 feet.
9. The R1-2aP "YIELD TO ONCOMING TRAFFIC" sign shall be placed on a support at a 7 foot minimum mounting height.

TCP (2-2b)

10. Channelizing devices on the center line may be omitted when a pilot car is leading traffic and approved by the Engineer.
11. If the work space is located near a horizontal or vertical curve, the buffer distances should be increased in order to maintain stopping sight distance to the flagger and a queue of stopped vehicles. (See table above).
12. Flaggers should use 24" STOP/SLOW paddles to control traffic. Flags should be limited to emergency situtations.

Texas Department of Transportation
Traffic Operations Division Standard

TRAFFIC CONTROL PLAN
ONE-LANE TWO-WAY TRAFFIC CONTROL

TCP(2-2)-18

FILE: tcp2-2-18.dgn	DN:	CK:	DW:	CK:
©TxDOT December 1985	CONT	SECT	JOB	HIGHWAY
REVISIONS 8-95 3-03 1-97 2-12 4-98 2-18	DIST	COUNTY		SHEET NO. 85

DISCLAIMER:
The use of this standard is governed by the "Texas Engineering Practice Act". No warranty of any kind is made by TxDOT for any purpose whatsoever. TxDOT assumes no responsibility for the conversion of this standard to other formats or for incorrect results or damages resulting from its use.

DATE: DATE/TIME PLOTTED: 2:53:40 PM
FILE: DOCUMENT NAME: c:\Documents and Settings\City_Georgetown\10767-00 Shell Road\03_CADD\01_Shts\02-TCP\tcp2-3-23.dgn

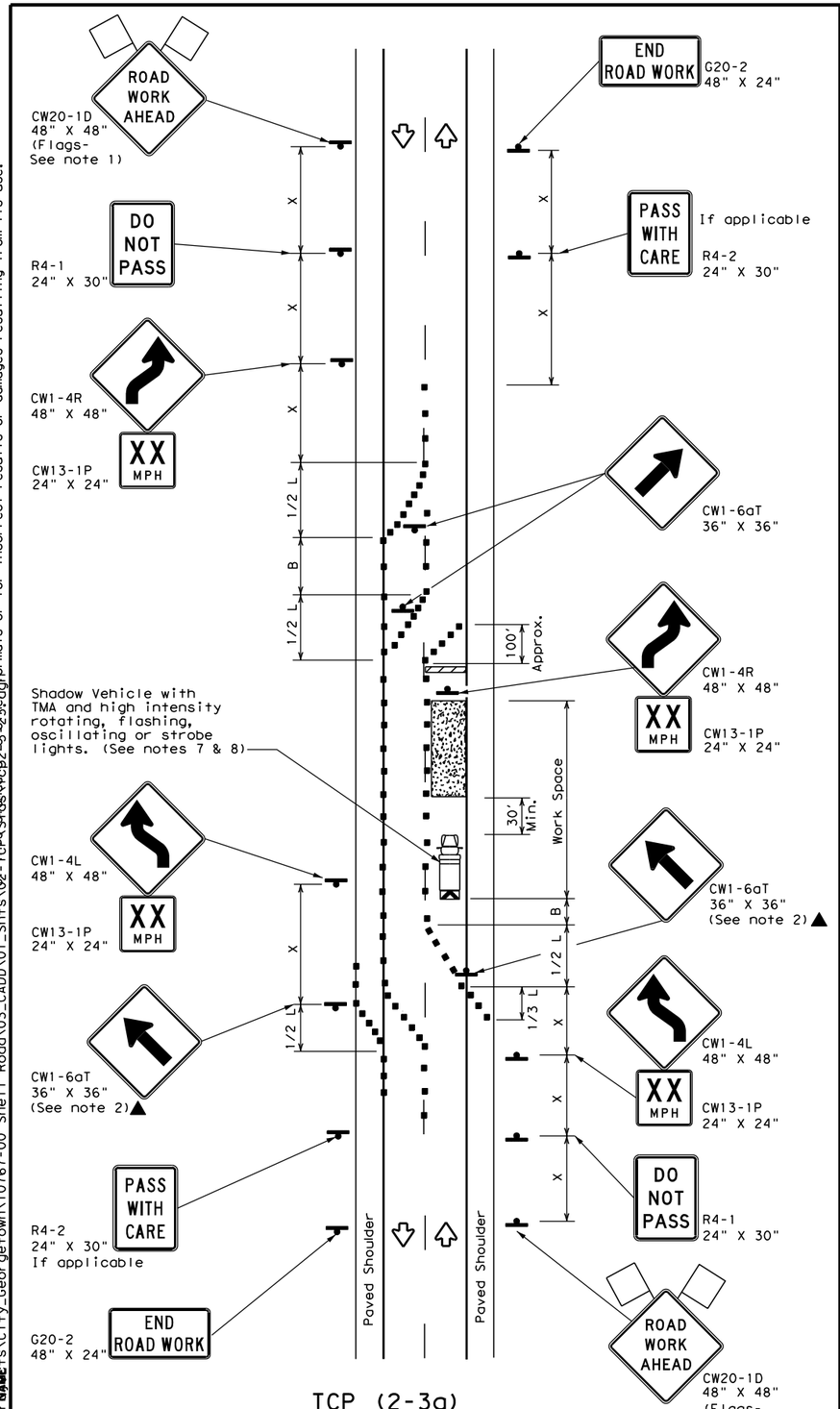

TCP (2-3a)
2-LANE ROADWAY WITH PAVED SHOULDERS

ONE LANE CLOSED
ADEQUATE FIELD OF VIEW

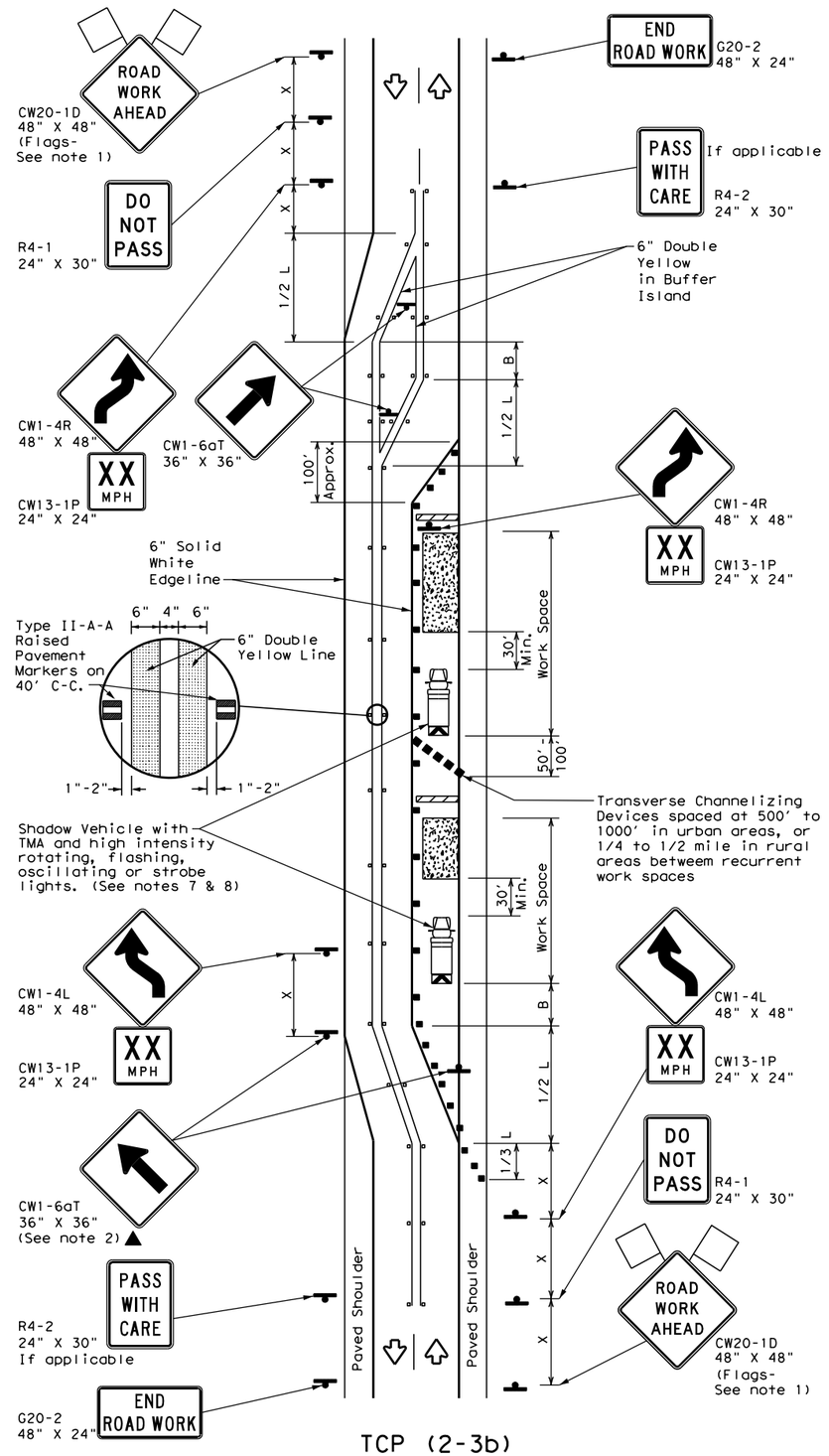

TCP (2-3b)
2-LANE ROADWAY WITH PAVED SHOULDERS

ONE LANE CLOSED
INADEQUATE FIELD OF VIEW

LEGEND

	Type 3 Barricade	■ ■	Channelizing Devices
	Heavy Work Vehicle		Truck Mounted Attenuator (TMA)
	Trailer Mounted Flashing Arrow Board	• • • •	Raised Pavement Markers Ty II-AA
	Sign		Traffic Flow
	Flag		Flagger

Posted Speed *	Formula	Minimum Desirable Taper Lengths ** 10' Offset	11' Offset	12' Offset	Suggested Maximum Spacing of Channelizing Devices: On a Taper	On a Tangent	Minimum Sign Spacing "X" Distance	Suggested Longitudinal Buffer Space "B"
30	$L = \frac{WS^2}{60}$	150'	165'	180'	30'	60'	120'	90'
35		205'	225'	245'	35'	70'	160'	120'
40		265'	295'	320'	40'	80'	240'	155'
45	L = WS	450'	495'	540'	45'	90'	320'	195'
50		500'	550'	600'	50'	100'	400'	240'
55		550'	605'	660'	55'	110'	500'	295'
60		600'	660'	720'	60'	120'	600'	350'
65		650'	715'	780'	65'	130'	700'	410'
70		700'	770'	840'	70'	140'	800'	475'
75		750'	825'	900'	75'	150'	900'	540'

* Conventional Roads Only

** Taper lengths have been rounded off.
L=Length of Taper(FT) W=Width of Offset(FT) S=Posted Speed(MPH)

TYPICAL USAGE

MOBILE	SHORT DURATION	SHORT TERM STATIONARY	INTERMEDIATE TERM STATIONARY	LONG TERM STATIONARY
				TCP(2-3b)ONLY
			✓	✓

GENERAL NOTES

1. Flags attached to signs where shown, are REQUIRED.
2. All traffic control devices illustrated are REQUIRED, except those denoted with the triangle symbol may be omitted when stated elsewhere in the plans, or for routine maintenance work, when approved by the Engineer.
3. When work space will be in place less than three days existing pavement markings may remain in place. Channelizing devices shall be used to separate traffic.
4. Flagger control should NOT be used unless roadway conditions or heavy traffic volume require additional emphasis to safely control traffic. Flagger should be positioned at end of traffic queue.
5. The R4-1 "DO NOT PASS," R4-2 " PASS WITH CARE" and construction regulatory speed zone signs may be installed within CW20-1D "ROAD WORK AHEAD" signs. Proper spacing of signs shall be maintained.
6. Conflicting pavement marking shall be removed for long term projects.
7. A Shadow Vehicle with a TMA should be used anytime it can be positioned 30 to 100 feet in advance of the area of crew exposure without adversely affecting the performance or quality of the work. If workers are no longer present but road or work conditions require the traffic control to remain in place, Type 3 Barricades or other channelizing devices may be substituted.
8. Additional Shadow Vehicles with TMAs may be positioned off the paved surface, next to those shown in order to protect a wider work space.

TCP (2-3a)

9. Conflicting pavement markings shall be removed for long-term projects. For shorter durations where traffic is directed over a yellow centerline, channelizing devices which separate two-way traffic should be spaced on tapers at 20' or 15' if posted speeds are 35 mph or slower, and for tangent sections, at 1/2(S) where S is the speed in mph. This tighter device spacing is intended for the area of the conflicting markings, not the entire work zone.

Texas Department of Transportation | *Traffic Operations Division Standard*

TRAFFIC CONTROL PLAN TRAFFIC SHIFTS ON TWO-LANE ROADS

TCP(2-3)-23

FILE: tcp(2-3)-23.dgn	DN:	CK:	DW:	CK:
© TxDOT April 2023	CONT	SECT	JOB	HIGHWAY
REVISIONS 12-85 4-98 2-18				
8-95 3-03 4-23	DIST	COUNTY		SHEET NO.
1-97 2-12				86

163

DISCLAIMER:
The use of this standard is governed by the "Texas Engineering Practice Act". No warranty of any kind is made by TxDOT for any purpose whatsoever. TxDOT assumes no responsibility for the conversion of this standard to other formats or for incorrect results or damages resulting from its use.

DATE: 3/12/2025 2:53:41 PM
FILE: G:\TXC\Projects\City_Georgetown\10767-00 Shell Road\03_CADD\01_Shts\02-TCP\tcp2-4-18.dgn

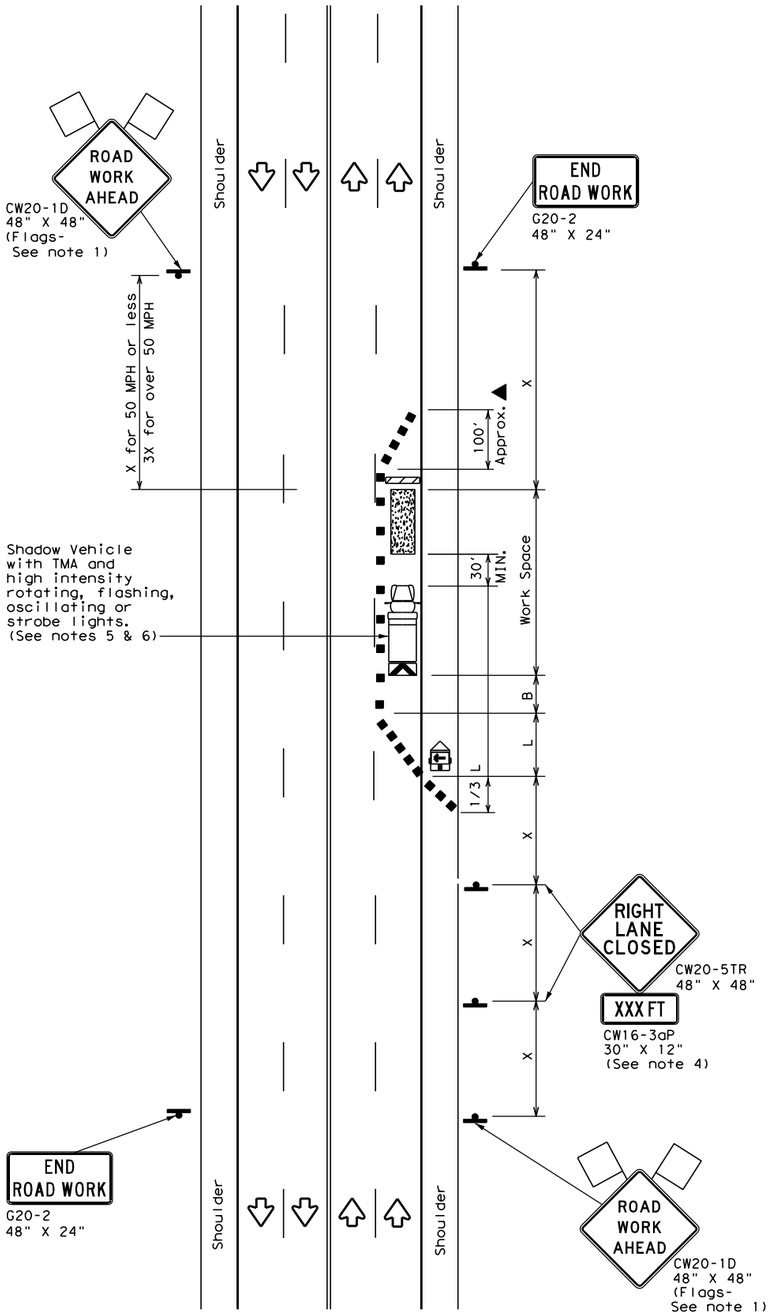

TCP (2-4a)

ONE LANE CLOSED

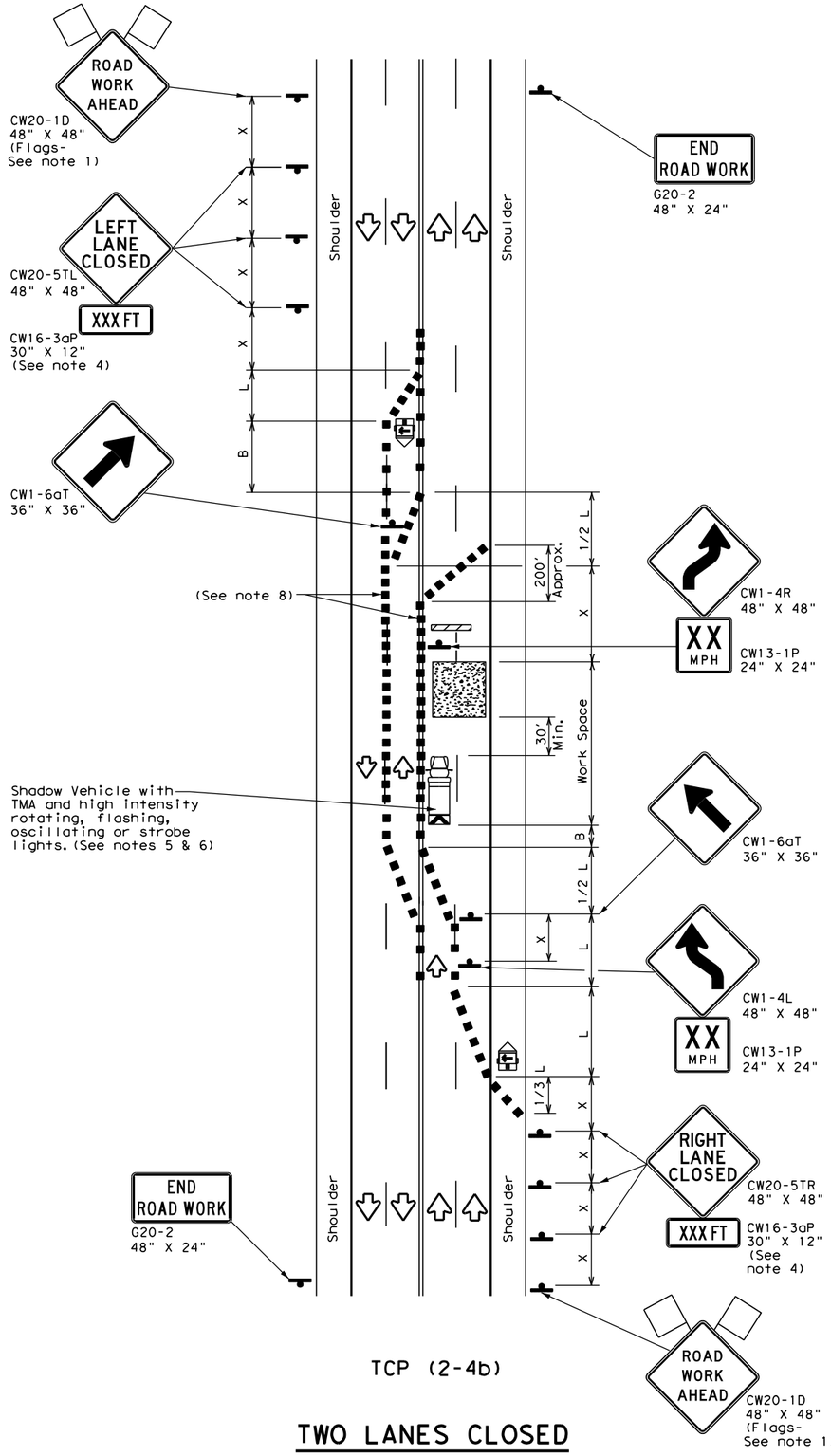

TCP (2-4b)

TWO LANES CLOSED

LEGEND			
	Type 3 Barricade		Channelizing Devices
	Heavy Work Vehicle		Truck Mounted Attenuator (TMA)
	Trailer Mounted Flashing Arrow Board	M	Portable Changeable Message Sign (PCMS)
	Sign		Traffic Flow
	Flag		Flagger

Posted Speed *	Formula	Minimum Desirable Taper Lengths ** 10' Offset	11' Offset	12' Offset	Suggested Maximum Spacing of Channelizing Devices: On a Taper	On a Tangent	Minimum Sign Spacing "X" Distance	Suggested Longitudinal Buffer Space "B"
30	$L=\frac{WS^2}{60}$	150'	165'	180'	30'	60'	120'	90'
35		205'	225'	245'	35'	70'	160'	120'
40		265'	295'	320'	40'	80'	240'	155'
45	L=WS	450'	495'	540'	45'	90'	320'	195'
50		500'	550'	600'	50'	100'	400'	240'
55		550'	605'	660'	55'	110'	500'	295'
60		600'	660'	720'	60'	120'	600'	350'
65		650'	715'	780'	65'	130'	700'	410'
70		700'	770'	840'	70'	140'	800'	475'
75		750'	825'	900'	75'	150'	900'	540'

* Conventional Roads Only

** Taper lengths have been rounded off.
L=Length of Taper(FT) W=Width of Offset(FT) S=Posted Speed(MPH)

TYPICAL USAGE				
MOBILE	SHORT DURATION	SHORT TERM STATIONARY	INTERMEDIATE TERM STATIONARY	LONG TERM STATIONARY
		✓	✓	

GENERAL NOTES

1. Flags attached to signs where shown, are REQUIRED.
2. All traffic control devices illustrated are REQUIRED, except those denoted with the triangle symbol may be omitted when stated elsewhere in the plans, or for routine maintenance work, when approved by the Engineer.
3. The downstream taper is optional. When used, it should be 100 feet minimum length per lane.
4. For short term applications, when post mounted signs are not used, the distance legend may be shown on the sign face rather than on a CW16-3aP supplemental plaque.
5. A Shadow Vehicle with a TMA should be used anytime it can be positioned 30 to 100 feet in advance of the area of crew exposure without adversely affecting the performance or quality of the work. If workers are no longer present but road or work conditions require the traffic control to remain in place, Type 3 Barricades or other channelizing devices may be substituted for the Shadow Vehicle and TMA.
6. Additional Shadow Vehicles with TMAs may be positioned in each closed lane, on the shoulder or off the paved surface, next to those shown in order to protect a wider work space.

TCP (2-4a)

7. If this TCP is used for a left lane closure, CW20-5TL "LEFT LANE CLOSED"signs shall be used and channelizing devices shall be placed on the centerline to protect the work space from opposing traffic with the arrow board placed in the closed lane near the end of the merging taper.

TCP (2-4b)

8. For shorter durations where traffic is directed over a yellow centerline, channelizing devices which separate two-way traffic should be spaced on tapers at 20' or 15' if posted speeds are 35 mph or slower, and for tangent sections, at 1/2(S) where S is the speed in mph. This tighter devices spacing is intended for the area of conflicting markings, not the entire work zone.

Texas Department of Transportation | Traffic Operations Division Standard

TRAFFIC CONTROL PLAN LANE CLOSURES ON MULTILANE CONVENTIONAL ROADS

TCP(2-4)-18

FILE: tcp2-4-18.dgn	DN:	CK:	DW:	CK:
© TxDOT December 1985	CONT	SECT	JOB	HIGHWAY
REVISIONS 8-95 3-03				
1-97 2-12	DIST	COUNTY		SHEET NO.
4-98 2-18				87

DISCLAIMER:
The use of this standard is governed by the "Texas Engineering Practice Act". No warranty of any kind is made by TxDOT for any purpose whatsoever. TxDOT assumes no responsibility for the conversion made by others of this standard to other formats or for incorrect results or damages resulting from its use.

DATE: 3/12/2025 2:53:41 PM
FILE: G:\TXC\Projects\City_Georgetown\10767-00 Shell Road\03_CADD\01_Shts\02-TCP3-1-13.dgn

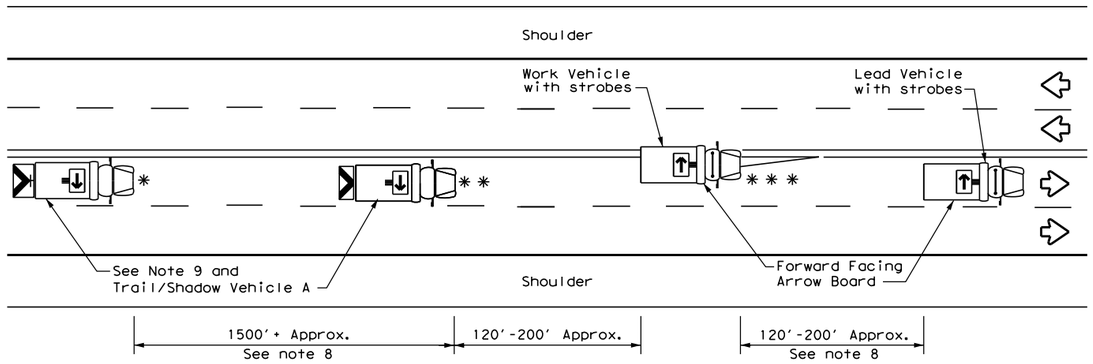

TCP (3-1a)

UNDIVIDED MULTILANE ROADWAY

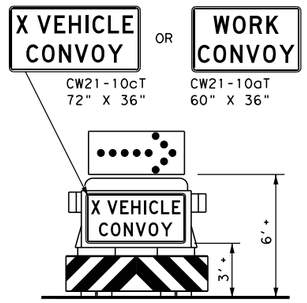

TRAIL/SHADOW VEHICLE A

with RIGHT Directional display Flashing Arrow Board

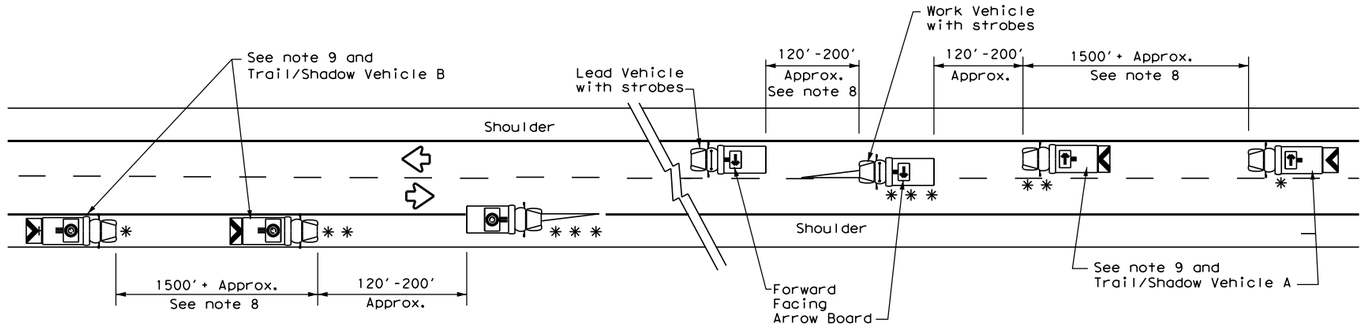

WORK ON SHOULDER

WORK ON TRAVEL LANE

TCP (3-1b)

TWO-WAY ROADWAY WITH PAVED SHOULDERS

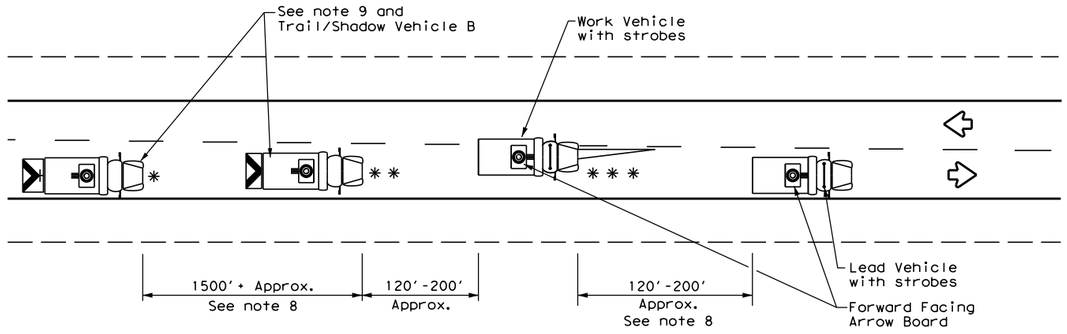

TCP (3-1c)

TWO-WAY ROADWAY WITHOUT PAVED SHOULDERS

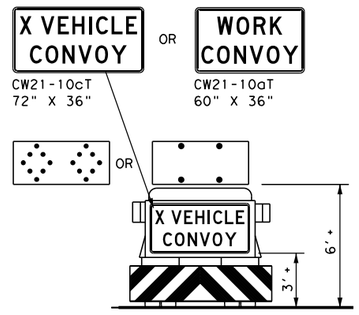

TRAIL/SHADOW VEHICLE B

with Flashing Arrow Board in CAUTION display

LEGEND			
*	Trail Vehicle	ARROW BOARD DISPLAY	
* *	Shadow Vehicle		
* * *	Work Vehicle		RIGHT Directional
	Heavy Work Vehicle		LEFT Directional
	Truck Mounted Attenuator (TMA)		Double Arrow
	Traffic Flow		CAUTION (Alternating Diamond or 4 Corner Flash)

TYPICAL USAGE				
MOBILE	SHORT DURATION	SHORT TERM STATIONARY	INTERMEDIATE TERM STATIONARY	LONG TERM STATIONARY
✓				

GENERAL NOTES

1. TRAIL, SHADOW, and LEAD vehicles shall be equipped with arrow boards as illustrated. When a LEAD vehicle is not used the WORK vehicle must be equipped with an arrow board. The Engineer will determine if the LEAD VEHICLE and/or TRAIL VEHICLE are required based on prevailing roadway conditions, traffic volume, and sight distance restrictions.
2. The use of amber high intensity rotating, flashing, oscillating, or strobe lights on vehicles are required. Blue high intensity rotating, flashing, oscillating or strobe lights when mounted on the driver's side of the vehicle may be operated simultaneously with the amber beacons or strobe lights.
3. The use of truck mounted attenuators (TMA) on the SHADOW VEHICLE and TRAIL VEHICLE are required.
4. Reflective sheeting on the rear of the TMA shall meet or exceed the reflectivity and color requirements of DEPARTMENTAL MATERIAL SPECIFICATION DMS 8300, Type A.
5. Flashing arrow boards shall be Type B or Type C as per the Barricade and Construction (BC) standards. The board shall be controlled from inside the vehicle.
6. Each vehicle shall have two-way radio communication capability.
7. When work convoys must change lanes, the TRAIL VEHICLE should change lanes first to shadow the other convoy vehicles.
8. Vehicle spacing between the TRAIL VEHICLE and the SHADOW VEHICLE will vary depending on sight distance restrictions. Motorists approaching the work convoy should be able to see the TRAIL VEHICLE in time to slow down and/or change lanes as they approach the TRAIL VEHICLE. Vehicle spacing between the WORK VEHICLE and SHADOW VEHICLE and vehicle spacing between WORK VEHICLE and LEAD VEHICLE may vary according to terrain, work activity and other factors.
9. "X VEHICLE CONVOY" (CW21-10cT) or "WORK CONVOY" (CW21-10aT) signs shall be used on TRAIL VEHICLES and SHADOW VEHICLES as shown. As an option 48" X 48" diamond shaped "WORK CONVOY"(CW21-10T) or "X VEHICLE CONVOY" (CW21-10bT) signs may be used where adequate mounting space exists. When used, the X VEHICLE CONVOY sign shall have the number of the convoy vehicles displayed on the sign in the number designation "X" location. The "X VEHICLE CONVOY" sign shall not be used on the SHADOW VEHICLE if a TRAIL VEHICLE is used.
10. On two-lane two-way roadways, the work and protection vehicles should pull over periodically to allow motor vehicle traffic to pass. If motorists are not allowed to pass the work convoy, a "DO NOT PASS" (R4-1) sign should be placed on the back of the rearmost protection vehicle.

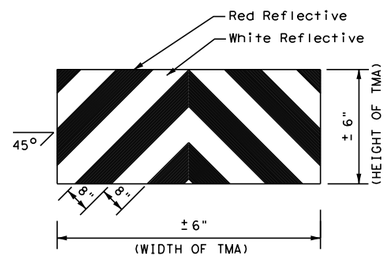

STRIPING FOR TMA

Texas Department of Transportation

Traffic Operations Division Standard

TRAFFIC CONTROL PLAN MOBILE OPERATIONS UNDIVIDED HIGHWAYS

TCP(3-1)-13

FILE: tcp3-1.dgn	DN: TxDOT	CK: TxDOT	DW: TxDOT	CK: TxDOT
©TxDOT December 1985	CONT	SECT	JOB	HIGHWAY
REVISIONS 2-94 4-98 8-95 7-13 1-97	DIST	COUNTY		SHEET NO. 88

DISCLAIMER:
The use of this standard is governed by the "Texas Engineering Practice Act". No warranty of any kind is made by TxDOT for any purpose whatsoever. TxDOT assumes no responsibility for the conversion of this standard to other formats or for incorrect results or damages resulting from its use.

DATE: 3/12/2025 2:53:42 PM
FILE: G:\TXC\Projects\City_Georgetown\10767-00 Shell Road\03_CADD\01_Shts\02-TCP_3-3_14.dgn

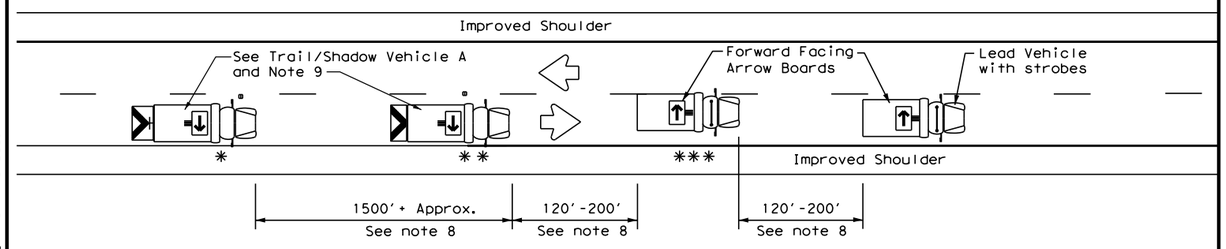

TCP (3-3a)

TWO LANE HIGHWAY WITH PAVED SHOULDERS (WORK ON TRAVEL LANE)

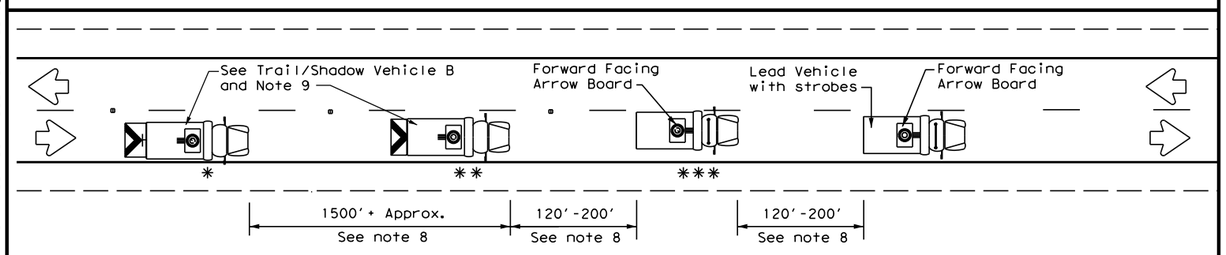

TCP (3-3b)

TWO LANE HIGHWAY WITHOUT PAVED SHOULDERS (WORK ON TRAVEL LANE)

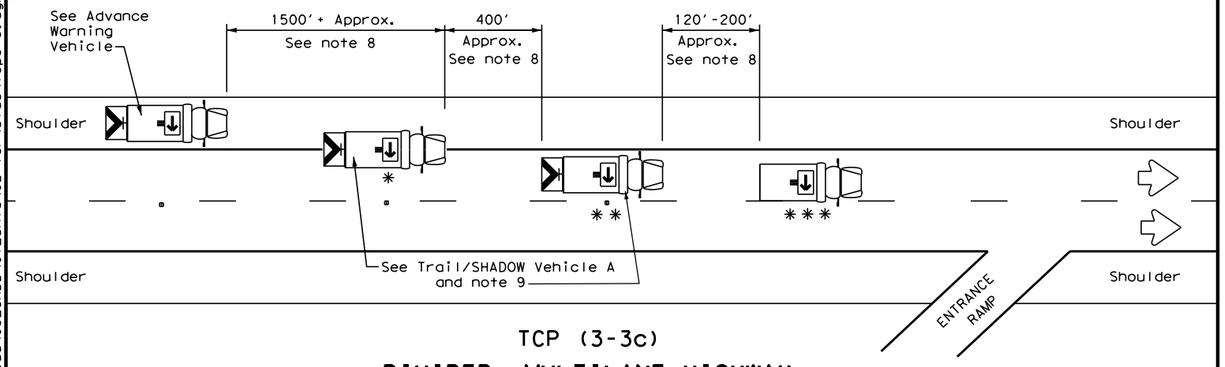

TCP (3-3c)

DIVIDED MULTILANE HIGHWAY

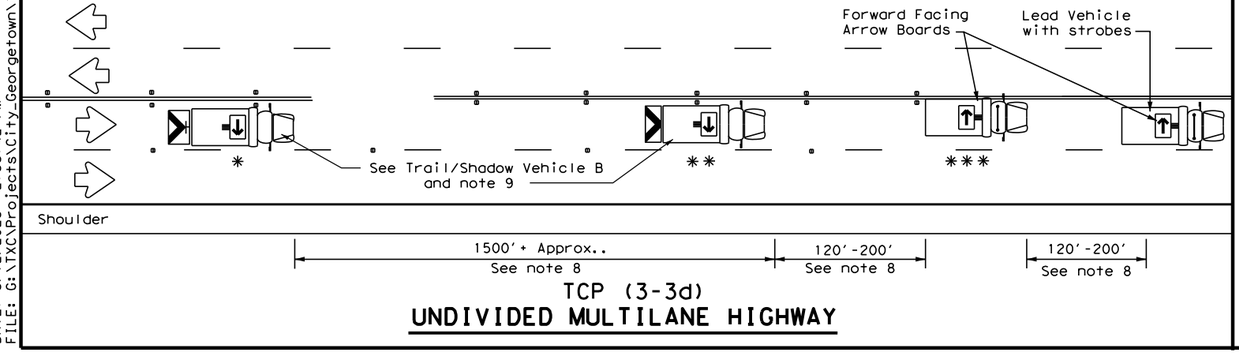

TCP (3-3d)

UNDIVIDED MULTILANE HIGHWAY

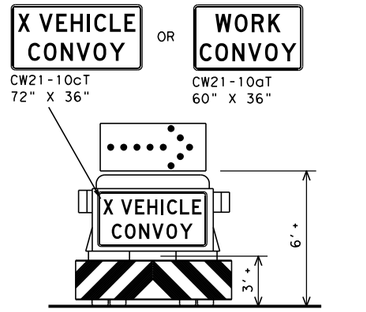

TRAIL/SHADOW VEHICLE A

with RIGHT Directional display
Flashing Arrow Board

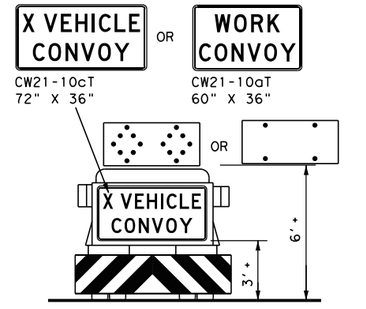

TRAIL/SHADOW VEHICLE B

with Flashing Arrow Board
in Caution Mode

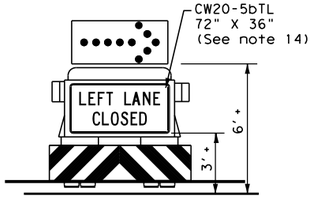

ADVANCE WARNING VEHICLE

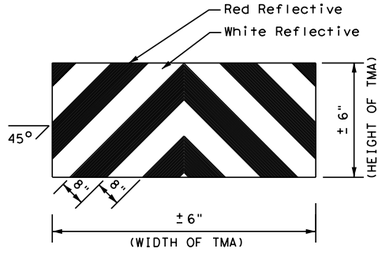

STRIPING FOR TMA

LEGEND			
*	Trail Vehicle	ARROW BOARD DISPLAY	
**	Shadow Vehicle		
***	Work Vehicle		RIGHT Directional
	Heavy Work Vehicle		LEFT Directional
	Truck Mounted Attenuator (TMA)		Double Arrow
	Traffic Flow		CAUTION (Alternating Diamond or 4 Corner Flash)

TYPICAL USAGE				
MOBILE	SHORT DURATION	SHORT TERM STATIONARY	INTERMEDIATE TERM STATIONARY	LONG TERM STATIONARY
✓				

GENERAL NOTES

1. TRAIL, SHADOW, and LEAD vehicles shall be equipped with arrow boards as illustrated. When a LEAD vehicle is not used on two way roads the WORK vehicle must have an arrow board. For divided roadways, the arrow board on the WORK vehicle is optional based on the type of work being performed. The Engineer will determine if the LEAD vehicle and/or TRAIL vehicle are required based on prevailing roadway conditions, traffic volume, and sight distance restrictions.
2. The use of amber high intensity rotating, flashing, oscillating, or strobe lights on vehicles are required. Blue high intensity rotating, flashing, oscillating, or strobe lights when mounted on the driver's side of the vehicle may be operated simultaneously with the amber beacons or strobe lights.
3. The use of truck mounted attenuators (TMA) on the SHADOW VEHICLE, ADVANCE WARNING and TRAIL VEHICLE are required.
4. Reflective sheeting on the rear of the TMA shall meet or exceed the reflectivity and color requirements of DEPARTMENTAL MATERIAL SPECIFICATION DMS 8300, Type A.
5. Flashing arrow boards shall be Type B or Type C as per the Barricade and Construction (BC) standards. The board shall be controlled from inside the vehicle.
6. Each vehicle shall have two-way radio communication capability.
7. When work convoys must change lanes, the TRAIL VEHICLE should change lanes first to shadow the other convoy vehicles.
8. Vehicle spacing between the TRAIL VEHICLE and the SHADOW VEHICLE will vary depending on sight distance restrictions. Motorists approaching the convoy should be able to see the TRAIL VEHICLE in time to slow down and/or change lanes as they approach the TRAIL VEHICLE. Vehicle spacing between the WORK VEHICLE and SHADOW VEHICLE and vehicle spacing between WORK VEHICLE and LEAD VEHICLE may vary according to terrain, work activity and other factors.
9. X VEHICLE CONVOY (CW21-10cT) or WORK CONVOY (CW21-10aT) signs shall be used on TRAIL VEHICLES and SHADOW VEHICLES as shown. As an option 48" x 48" diamond shaped WORK CONVOY (CW21-10T) or X VEHICLE CONVOY (CW21-10bT) signs may be used where adequate mounting space exists. When used, the X VEHICLE CONVOY sign shall have the number of the convoy vehicles displayed on the sign in the number designation "X" location. The X VEHICLE CONVOY sign shall not be used on the SHADOW VEHICLE if a TRAIL VEHICLE is used.
10. For divided highways with two or three lanes in one direction, the appropriate LEFT LANE CLOSED (CW20-5bTL), RIGHT LANE CLOSED (CW20-5bTR), or CENTER LANE CLOSED (CW20-5dT) sign should be used on the Advance Warning Vehicle. As an option, a portable changeable message sign (PCMS) or truck mounted changeable message sign (TMCMS) with a minimum character height of 12", and displaying the same legend may be substituted for these signs. An appropriate directional arrow display, simulating the size and legibility of the flashing arrow board may be used in the second phase of the PCMS/TMCMS message. When this is done, the arrow board will not be required on the Advance Warning Vehicle.
11. A double arrow shall not be displayed on the arrow board on the Advance Warning Vehicle.
12. For divided highways with three or four lanes in each direction, use TCP(3-2).
13. Standard diamond shape versions of the CW20-5 series signs may be used as an option if the rectangular signs shown are not available.
14. The Advance Warning Vehicle may straddle the edgeline when Shoulder width makes it necessary.
15. On two-lane two-way roadways, the work and protection vehicles should pull over periodically to allow motor vehicle traffic to pass. If motorists are not allowed to pass the work convoy, a DO NOT PASS (R4-1) sign should be placed on the back of the rearmost protection vehicle.

Texas Department of Transportation

Traffic Operations Division Standard

TRAFFIC CONTROL PLAN MOBILE OPERATIONS RAISED PAVEMENT MARKER INSTALLATION/ REMOVAL

TCP(3-3)-14

FILE: tcp3-3.dgn	DN: TxDOT	CK: TxDOT	DW: TxDOT	CK: TxDOT
©TxDOT September 1987	CONT	SECT	JOB	HIGHWAY
REVISIONS				
2-94 4-98	DIST	COUNTY		SHEET NO.
8-95 7-13				89
1-97 7-14				

177

DISCLAIMER:
The use of this standard is governed by the "Texas Engineering Practice Act". No warranty of any kind is made by TxDOT for any purpose whatsoever. TxDOT assumes no responsibility for the conversion of this standard to other formats or for incorrect results or damages resulting from its use.

DATE: 3/12/2025 2:53:42 PM
FILE: G:\TXC\Projects\City_Georgetown\10767-00 Shell Road\03_CADD\01_Shts\02-TCP_STDSHEETS\tcp7-1.dgn

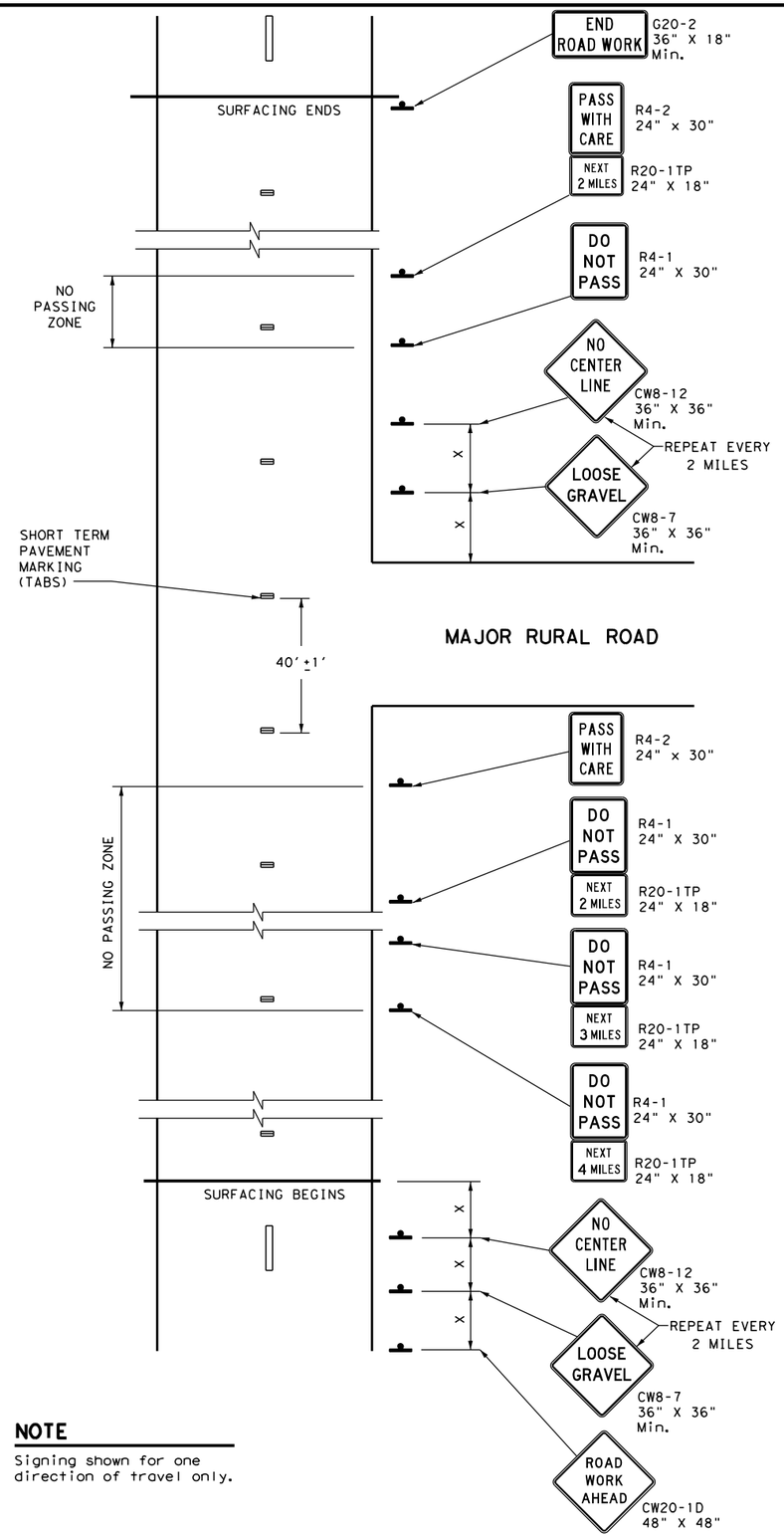

NOTE

Signing shown for one direction of travel only.

NO PASSING ZONES ON TWO-LANE TWO-WAY ROADS

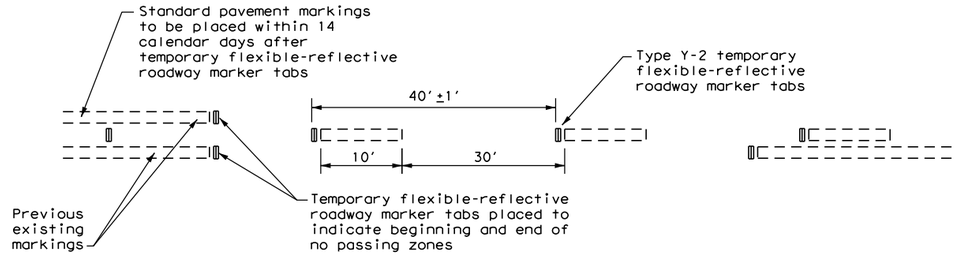

TABS ON CENTERLINES OF TWO-LANE TWO-WAY ROADS

For seal coat, micro-surface or similar operations

"DO NOT PASS" SIGN (R4-1) and NO-PASSING ZONES

A. Prior to the beginning of construction, all currently striped no-passing zones shall be signed with the DO NOT PASS (R4-1) signs and PASS WITH CARE (R4-2) signs placed at the beginning and end of each zone for each direction of travel except as otherwise provided herein. Signs marking these individual no-passing zones need not be covered prior to construction if the signs supplement the existing pavement markings.

B. At the discretion of the Engineer, in areas of numerous no-passing zones, several zones may be combined as a single zone. If passing is to be prohibited over one or more lengthy sections, a DO NOT PASS sign and a NEXT XX MILES (R20-1TP) plaque may be used at the beginning of such zones. The DO NOT PASS sign and the NEXT XX MILES plaque should be repeated every mile to the end of the no-passing zone. In areas where there is considerable distance between no-passing zones, the end of the no-passing zone may be signed with a PASS WITH CARE sign and a NEXT XX MILES plaque.

C. Depending on traffic volumes and length of sections, it may be desirable to prohibit passing throughout the project to prevent damage to windshield and lights. The DO NOT PASS sign and NEXT XX MILES plaque should be used and repeated as often as necessary for this purpose. Where several existing zones are to be combined into one individual no-passing zone, the sign at the beginning of the zone should be covered until the surfacing operation has passed this location so as not to have the DO NOT PASS sign conflict with the existing pavement markings. Also, unless one days operation completes the entire length of such combined zones, appropriate DO NOT PASS and PASS WITH CARE signs should be placed at the beginning and end of the no-passing zones where the surfacing operation has stopped for the day.

D. R4-1 and R4-2 are to remain in place until standard pavement markings are installed.

"NO CENTER LINE" SIGN (CW8-12)

A. Center line markings are yellow pavement markings that delineate the separation of travel lanes that have opposite directions of travel on a roadway. Divided highways do not typically have center line markings.

B. At the time construction activity obliterates the existing center line markings(low volume roads may not have an existing centerline), a NO CENTER LINE (CW8-12) sign should be erected at the beginning of the work area, at approximately 2 mile intervals within the work area, beyond major intersections and other locations deemed necessary by the Engineer.

C. The NO CENTER LINE signs are to remain in place until standard pavement markings are installed.

"LOOSE GRAVEL" SIGN (CW8-7)

A. When construction begins, a LOOSE GRAVEL (CW8-7) sign should be erected at each end of the work area and repeated at intervals of approximately 2 miles in rural areas and closer in urban areas.

B. The LOOSE GRAVEL signs are to remain in place until the condition no longer exists.

PAVEMENT MARKINGS

A. Temporary markings for surfacing projects shall be Temporary Flexible-reflective Roadway Marker Tabs unless otherwise approved by the Engineer. Tabs are to be installed to provide true alignment for striping crews or as directed by the Engineer. Tabs will be placed at the spacing indicated. Tabs should be applied to the pavement
no more than two (2) days before the surfacing is applied. After the surfacing is rolled and swept, the cover over the reflective strip shall be removed.

B. Tabs shall not be used to simulate edge lines.

C. Tab placement for overlay/inlay operations shall be as shown on the WZ(STPM) standard sheet.

COORDINATION OF SIGN LOCATIONS

A. The location of warning signs at the beginning and end of a work area are to be coordinated with other signing typically shown on the Barricade and Construction Standards for project limits to ensure adequate sign spacing.

B. Where possible the ROAD WORK AHEAD (CW20-1D), LOOSE GRAVEL (CW8-7), and NO CENTER LINE (CW8-12) signs should be placed in the sequence shown following the OBEY WARNING SIGNS STATE LAW (R20-3T) and the TRAFFIC FINES DOUBLE (R20-5T) sign, and one "X" sign spacing prior to the CONTRACTOR (G20-6T)sign typically located at or near the limits of surfacing. LOOSE GRAVEL and NO CENTER LINE signs will then be repeated as described above.

Posted Speed *	Minimum Sign Spacing "X" Distance
30	120′
35	160′
40	240′
45	320′
50	400′
55	500′
60	600′
65	700′
70	800′
75	900′

*** Conventional Roads Only**

TYPICAL USAGE				
MOBILE	SHORT DURATION	SHORT TERM STATIONARY	INTERMEDIATE TERM STATIONARY	LONG TERM STATIONARY
			✓	✓

GENERAL NOTES

1. The traffic control devices detailed on this sheet will be furnished and erected as directed by the Engineer on sections of roadway where tabs must be placed prior to the surfacing operation which will cover or obliterate the existing pavement markings.
2. The devices shown on this sheet are to be used to supplement those required by the BC Standards or others required elsewhere in the plans.
3. Signs shall be erected as detailed on the BC Standards or the Compliant Work Zone Traffic Control Devices List (CWZTCD) on supports approved for Long-Term / Intermediate-Term Work Zone Sign Supports.
4. When surfacing operations take place on divided highways, freeways or expressways, the size of diamond shaped construction warning signs shall be 48" x 48".
5. Signs on divided highways, freeways and expressways will be placed on both right and left sides of the roadway based on roadway conditions as directed by the Engineer.

Texas Department of Transportation

Traffic Operations Division Standard

TRAFFIC CONTROL DETAILS FOR SURFACING OPERATIONS

TCP(7-1)-13

FILE: tcp7-1.dgn	DN: TxDOT	CK: TxDOT	DW: TxDOT	CK: TxDOT
©TxDOT March 1991	CONT	SECT	JOB	HIGHWAY
REVISIONS				
4-92 4-98	DIST	COUNTY		SHEET NO.
1-97 7-13				90

210

DISCLAIMER:
The use of this standard is governed by the "Texas Engineering Practice Act". No warranty of any kind is made by TxDOT for any purpose whatsoever. TxDOT assumes no responsibility for the conversion of this standard to other formats or for incorrect results or damages resulting from its use.

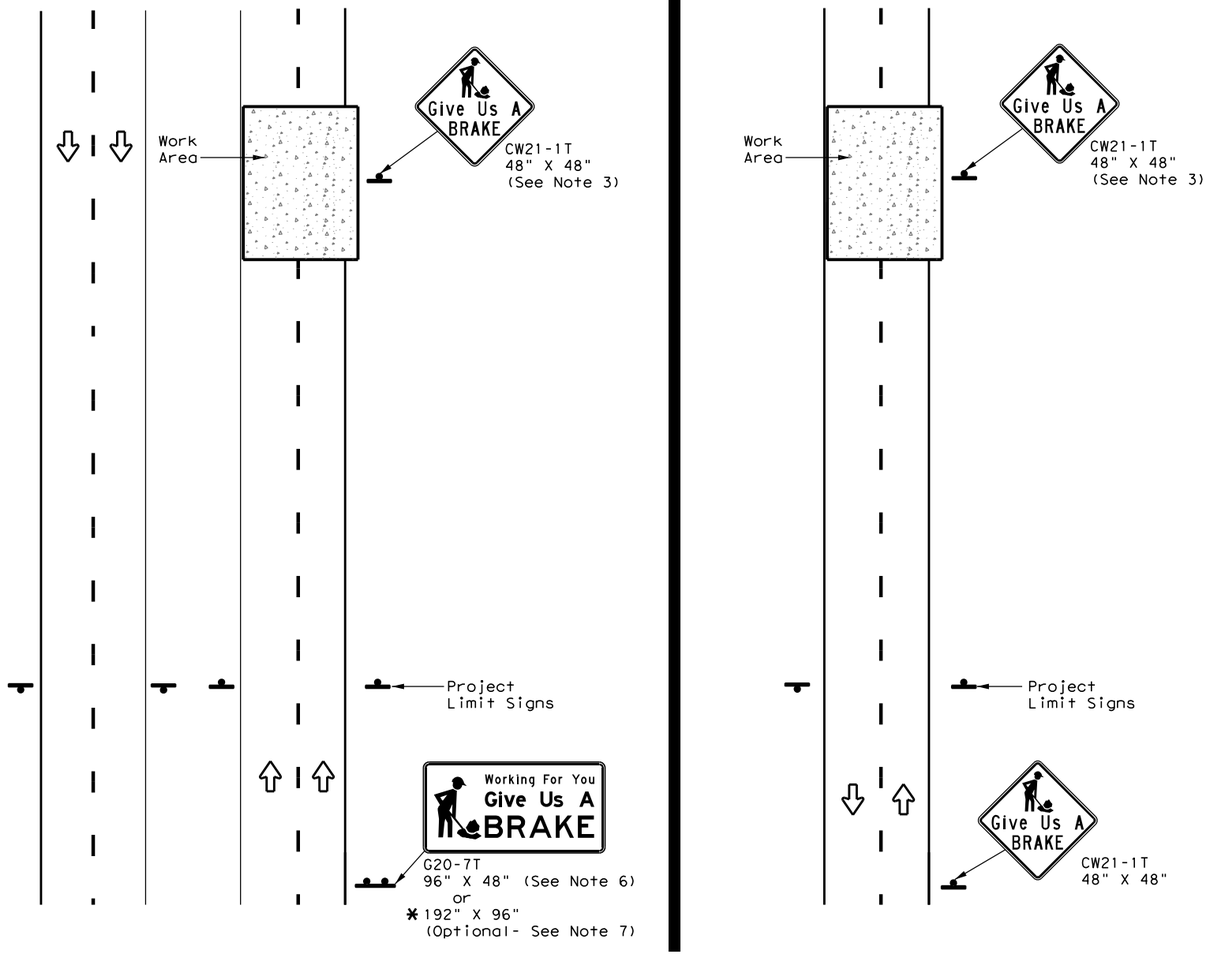

DIVIDED HIGHWAY

UNDIVIDED HIGHWAY

SIGNS ARE SHOWN FOR ONE DIRECTION OF TRAVEL

* When the optional larger WORKING FOR YOU GIVE US A BRAKE (G20-7T) 192" x 96" sign is required, the locations shall be noted elsewhere in the plans.

SUMMARY OF LARGE SIGNS

BACKGROUND COLOR	SIGN DESIGNATION	SIGN	SIGN DIMENSIONS	REFLECTIVE SHEETING	SQ FT	GALVANIZED STRUCTURAL STEEL			DRILLED SHAFT 24" DIA. (LF)
						Size	(LF) ①	(LF) ②	
Orange	G20-7T	Working For You Give Us A BRAKE	96" X 48"	Type B_{FL} or C_{FL}	32	▲	▲	▲	▲
Orange	G20-7T	Working For You Give Us A BRAKE	192" X 96"	Type B_{FL} or C_{FL}	128	W8x18	16	17	12

▲ See Note 6 Below

LEGEND	
	Sign
	Large Sign
	Traffic Flow

DEPARTMENTAL MATERIAL SPECIFICATIONS	
PLYWOOD SIGN BLANKS	DMS-7100
ALUMINUM SIGN BLANKS	DMS-7110
SIGN FACE MATERIALS	DMS-8300

COLOR	USAGE	SHEETING MATERIAL
ORANGE	BACKGROUND	TYPE B_{FL} OR TYPE C_{FL}
BLACK	LEGEND & BORDERS	NON-REFLECTIVE ACRYLIC FILM

GENERAL NOTES

1. See BC and SMD sheets for additional sign support details.
2. Sign locations shall be approved by the Engineer.
3. For projects more than two miles in length, Give Us a BRAKE signs should be repeated halfway through the project. The Give Us a Brake (CW21-1T) may be used for this purpose.
4. Work zone speed limits are sometimes used in conjunction with GIVE US A BRAKE signing. See BC(3) for location and spacing of construction speed zone signing when required.
5. Give Us a Brake (CW21-1T) signs and supports shall be considered subsidiary to Item 502, "Barricades, Signs and Traffic Handling."
6. The 96" X 48" Working For You Give Us A BRAKE (G20-7T) may use a 1/2" or 5/8" plywood substrate or 0.125" aluminum sheeting substrate and may be supported by two 4" x 6" wood posts with drilled holes for breakaway as per BC(5) and will be subsidiary to Item 502.
7. The Working For You Give Us A BRAKE (G20-7T) 192" X 96" sign shall be paid for under the following specification items:
   Item 636 - Aluminum Signs
   Item 647 - Large Roadside Sign Supports and Assemblies.
   Item 416 - Drilled Shaft Foundations
8. All signs shall be constructed in accordance with the details found in the "Standard Highway Sign Designs for Texas," latest edition. Sign details not shown in this manual shall be shown in the plans or the Engineer shall provide a detail to the Contractor before the sign is manufactured.

Texas Department of Transportation

Traffic Operations Division Standard

WORK ZONE "GIVE US A BRAKE" SIGNS

WZ(BRK)-13

FILE: wzbrk-13.dgn	DN: TxDOT	CK: TxDOT	DW: TxDOT	CK: TxDOT
©TxDOT August 1995	CONT	SECT	JOB	HIGHWAY
REVISIONS				
6-96 5-98 7-13	DIST	COUNTY		SHEET NO.
8-96 3-03				91

116

DATE: 3/12/2025 2:53:43 PM
FILE: G:\TXC\Projects\City_Georgetown\10767-00 Shell Road\03_CADD\01_Shts\02-TCP_SHEETS\wzbrk-13.dgn

DISCLAIMER:
The use of this standard is governed by the "Texas Engineering Practice Act". No warranty of any kind is made by TxDOT for any purpose whatsoever. TxDOT assumes no responsibility for the conversion of this standard to other formats or for incorrect results or damages resulting from its use.

DATE: 3/12/2025 2:53:44 PM
FILE: G:\TxC\Projects\City_Georgetown\10767-00 Shell Road\03_CADD\01_Shts\02-TCP_Shts\wzrs22.dgn

Warning sign and rumble strip sequence in opposite direction is same as below.

TABLE 1		
Flagger to Flagger (Length of Work Area)	ADT	# of Rumble Strip Arrays
1/8 Mile	< 4,500	1
	≥ 4,500	2
1/4 Mile	< 3,500	1
	≥ 3,500	2
1/2 Mile	< 2,600	1
	≥ 2,600	2
1 Mile	< 1,600	1
	≥ 1,600	2
> 1 Mile	N/A	2

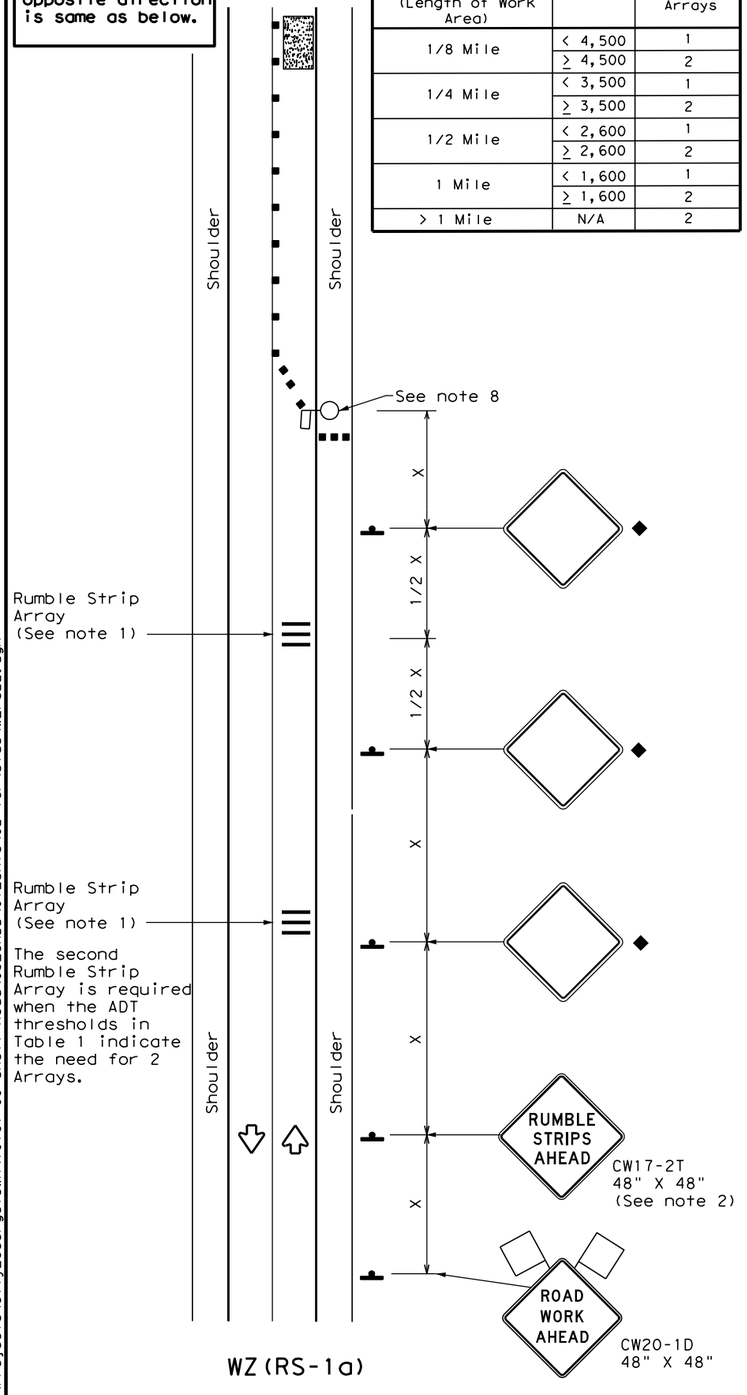

WZ(RS-1a)

RUMBLE STRIPS ON ONE-LANE TWO-WAY APPLICATION

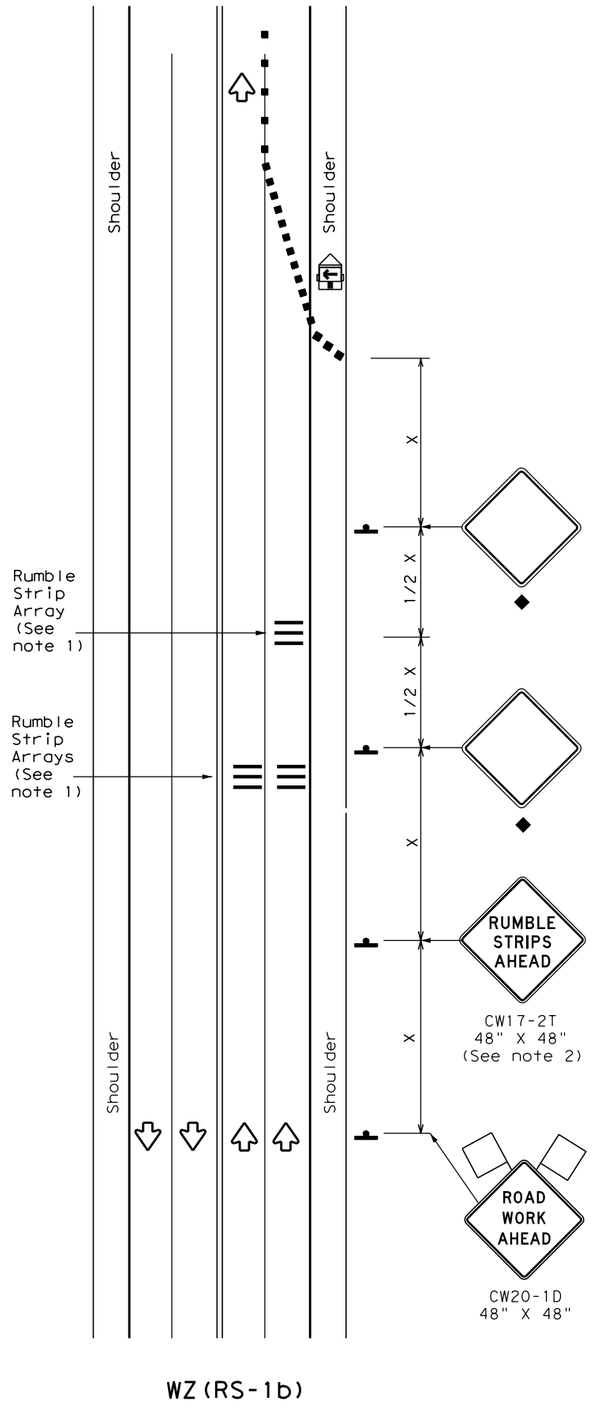

WZ(RS-1b)

RUMBLE STRIPS FOR LANE CLOSURE ON CONVENTIONAL ROADWAY

GENERAL NOTES

1. Each Rumble Strip Array should consist of three rumble strips spaced center to center at the spacing shown in Table 2, placed transverse across the lane at locations shown.
2. The CW17-2T "RUMBLE STRIPS AHEAD" sign should be located after the CW20-1D "ROAD WORK AHEAD sign and spaced as shown. If traffic is observed to be queuing, or is expected to queue beyond the Rumble Strips, the CW17-2T sign and the first Rumble Strip Array may be located upstream of the CW20-1D sign as necessary to provide needed warning.
3. Temporary Rumble Strips will be considered subsidiary to Item 502, and shall be a product listed on the Compliant Work Zone Traffic Control Devices.
4. Remove Temporary Rumble Strips before removing the advanced warning signs.
5. Temporary Rumble Strips should not be used on horizontal curves, loose gravel, soft or bleeding asphalt, heavily rutted pavements or unpaved surfaces.
6. Temporary Rumble Strips shall be installed and maintained as per manufacturer's recommendations.
7. This standard sheet shall be used in conjunction with other appropriate TCP standard, TMUTCD typical application or project specific detail for the project.
8. The one-lane two-way application may utilize a flagger, an Automated Flagger Assistance Device (AFAD) or a Portable Traffic Signal (PTS).
9. Replace defective Temporary Rumble Strips as directed by the Engineer.
10. Temporary Rumble Strips may be used on freeways or expressways based on engineering judgment and written direction from the Engineer.

LEGEND			
	Type 3 Barricade	■ ■	Channelizing Devices
	Heavy Work Vehicle		Truck Mounted Attenuator (TMA)
	Trailer Mounted Flashing Arrow Panel	M	Portable Changeable Message Sign (PCMS)
	Sign		Traffic Flow
	Flag		Flagger

Posted Speed *	Formula	Minimum Desirable Taper Lengths ** 10' Offset	11' Offset	12' Offset	Suggested Maximum Spacing of Channelizing Devices: On a Taper	On a Tangent	Minimum Sign Spacing "X" Distance	Suggested Longitudinal Buffer Space "B"
30	$L = \frac{WS^2}{60}$	150'	165'	180'	30'	60'	120'	90'
35		205'	225'	245'	35'	70'	160'	120'
40		265'	295'	320'	40'	80'	240'	155'
45	L=WS	450'	495'	540'	45'	90'	320'	195'
50		500'	550'	600'	50'	100'	400'	240'
55		550'	605'	660'	55'	110'	500'	295'
60		600'	660'	720'	60'	120'	600'	350'
65		650'	715'	780'	65'	130'	700'	410'
70		700'	770'	840'	70'	140'	800'	475'
75		750'	825'	900'	75'	150'	900'	540'

* Conventional Roads Only

** Taper lengths have been rounded off.
L=Length of Taper(FT) W=Width of Offset(FT)
S=Posted Speed(MPH)

TYPICAL USAGE				
MOBILE	SHORT DURATION	SHORT TERM STATIONARY	INTERMEDIATE TERM STATIONARY	LONG TERM STATIONARY
	✓	✓		

◆ Signs are for illustrative purposes only. Signs required may vary depending on the TCP, TMUTCD Typical Application, or project specific details for the project.

* For posted speeds in excess of 65 MPH, it is recommended that spacing is increased as speed limits increase. Increasing space between rumble strips will improve effectiveness.

TABLE 2	
Speed	Approximate distance between strips in an array
≤ 40 MPH	10'
> 40 MPH & ≤ 55 MPH	15'
= 60 MPH	20'
≥ 65 MPH	* 35' +

Texas Department of Transportation — Traffic Safety Division Standard

TEMPORARY RUMBLE STRIPS

WZ(RS)-22

FILE: wzrs22.dgn	DN: TxDOT	CK: TxDOT	DW: TxDOT	CK: TxDOT
©TxDOT November 2012	CONT	SECT	JOB	HIGHWAY
REVISIONS 2-14 1-22 4-16	DIST	COUNTY		SHEET NO. 92

117

DISCLAIMER:
The use of this standard is governed by the "Texas Engineering Practice Act". No warranty of any kind is made by TxDOT for any purpose whatsoever. TxDOT assumes no responsibility for the conversion of this standard to other formats or for incorrect results or damages resulting from its use.

WORK ZONE SHORT TERM PAVEMENT MARKINGS DETAILS

SOLID LINES

DOUBLE NO-PASSING LINE

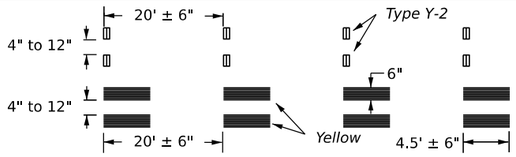

SINGLE NO-PASSING LINE or CHANNELIZATION LINE

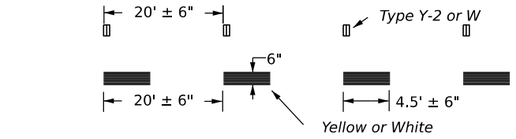

BROKEN LINES

(FOR CENTER LINE OR LANE LINE)

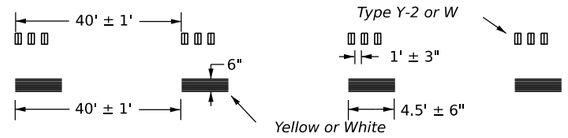

WIDE DOTTED LINES

(FOR LANE DROP LINES)

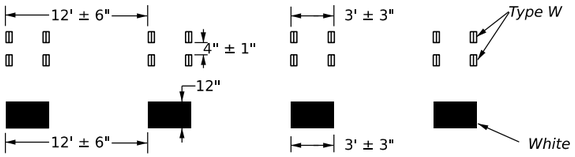

WIDE GORE MARKINGS

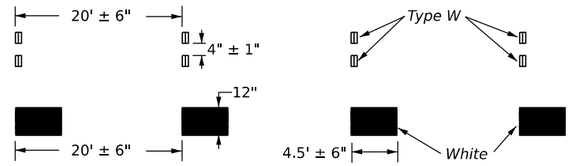

NOTES:

1. Short term pavement markings may be prefabricated markings (stick down tape) or temporary flexible reflective roadway marker tabs unless otherwise specified elsewhere in plans.
2. Short term pavement markings shall NOT be used to simulate edge lines.
3. Dimensions indicated on this sheet are typical and approximate. Variations in size and height may occur between markers or devices made by manufacturers, by as much as 1/4 inch, unless otherwise noted.
4. Temporary flexible-reflective roadway marker tabs will require normal maintenance replacement when used on roadways with an ADT per lane of up to 7500 vehicles with no more than 10% truck mix. When roadways exceed these values, additional maintenance replacement of devices should be planned.
5. No segment of roadway open to traffic shall remain without permanent pavement markings for a period greater than 14 calendar days. The Contractor will be responsible for maintaining short term pavement markings until permanent pavement markings are in place. When the Contractor is responsible for placement of permanent pavement markings, no segment of roadway shall remain without permanent pavement markings for a period greater than 14 calendar days unless weather conditions prohibit placement. Permanent pavement markings shall be placed as soon as weather permits.
6. For two lane, two-way roadways, DO NOT PASS signs shall be erected to mark the beginning of sections where passing is prohibited and PASS WITH CARE signs shall be erected to mark the beginning of sections where passing is permitted. Signs shall be in accordance with the "Texas Manual on Uniform Traffic Control Devices" (TMUTCD) and may be used to indicate the limits of no-passing zones for up to 14 calendar days. Permanent pavement markings should then be placed.
7. For low volume two lane, two-way roadways of 4000 ADT or less, no-passing lines may be omitted when approved by the Engineer. DO NOT PASS and PASS WITH CARE signs shall be erected (see note 6).
8. For exit gores where a lane is being dropped place wide gore markings or retroreflective channelizing devices to guide motorist through the exit. If channelizing devices are to be used it should be noted elsewhere in the plans. One piece cones are not allowed for this purpose.

TEMPORARY FLEXIBLE, REFLECTIVE ROADWAY MARKER TABS (TABS)

1. Temporary flexible-reflective roadway marker tabs detailed on this sheet will be designated Type Y-2 (two amber reflective surfaces with yellow body); Type Y (one amber reflective surface with yellow body); and Type W (one white or silver reflective surface with white body). Additional details may be found on BC(11).
2. Tabs shall meet requirements of Departmental Material Specification DMS-8242.
3. When dry, tabs shall be visible for a minimum distance of 200 feet during normal daylight hours and when illuminated by automobile low-beam head light at night, unless sight distance is restricted by roadway geometrics.
4. No two consecutive tabs nor four tabs per 1000 feet of line shall be missing or fail to meet the visual performance requirements of Note 3.

DATE:
FILE:

WORK ZONE SHORT TERM PAVEMENT MARKINGS PATTERNS

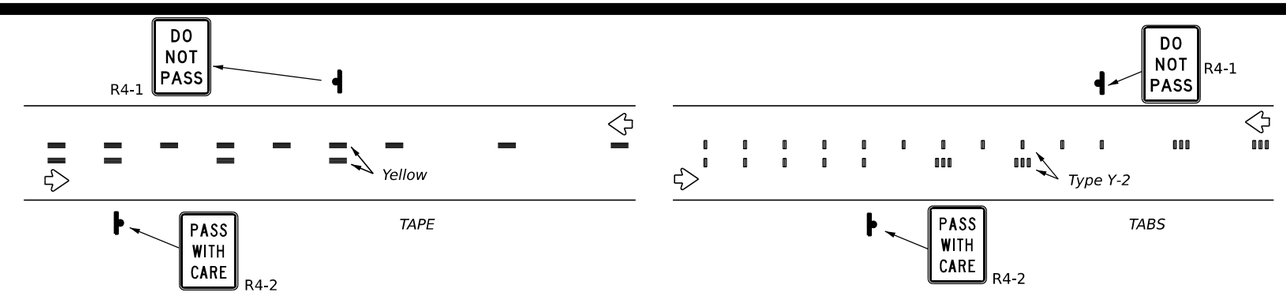

CENTER LINE & NO-PASSING ZONE BARRIER LINES FOR TWO LANE TWO-WAY HIGHWAYS

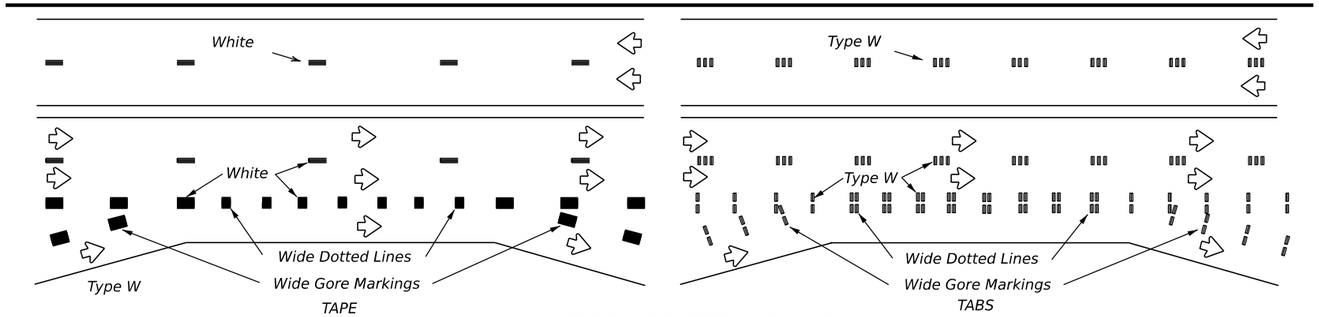

LANE LINES FOR DIVIDED HIGHWAY

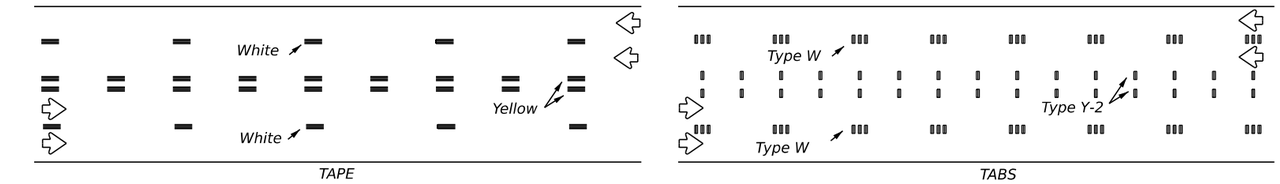

LANE & CENTER LINES FOR MULTILANE UNDIVIDED HIGHWAYS

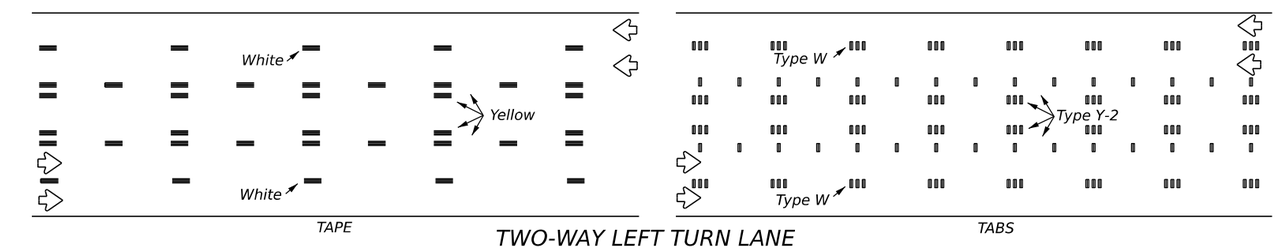

TWO-WAY LEFT TURN LANE

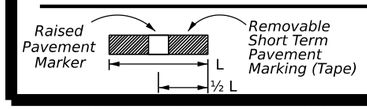

If raised pavement markers are used to supplement REMOVABLE short term markings, the markers shall be applied to the top of the tape at the approximate mid length of the tape. This allows an easier removal of raised markers and tape.

PREFABRICATED PAVEMENT MARKINGS

1. Temporary Removable Prefabricated Pavement Markings shall meet the requirements of DMS-8241.
2. Non-removable Prefabricated Pavement Markings shall meet the requirements of either DMS-8240 "Permanent Prefabricated Pavement Markings" or DMS-8243 "Temporary Costruction-Grade Prefabricated Pavement Markings."

RAISED PAVEMENT MARKERS

1. All raised pavement markers used for work zone markings shall meet the requirements of Item 672, "RAISED PAVEMENT MARKERS" and DMS-4200.

DEPARTMENTAL MATERIAL SPECIFICATIONS (DMS) & MATERIAL PRODUCER LISTS (MPL)

1. DMSs referenced above can be found along with embedded links to their respective MPLs at the following website:

http://www.txdot.gov/business/contractors_consultants/material_specifications/default.htm

Texas Department of Transportation

Traffic Safety Division Standard

WORK ZONE SHORT TERM PAVEMENT MARKINGS

WZ(STPM)-23

FILE: wzstpm-23.dgn	DN:	CK:	DW:	CK:
©TxDOT February 2023	CONT	SECT	JOB	HIGHWAY
REVISIONS				
4-92 7-13	DIST	COUNTY		SHEET NO.
1-97 2-23				93
3-03				

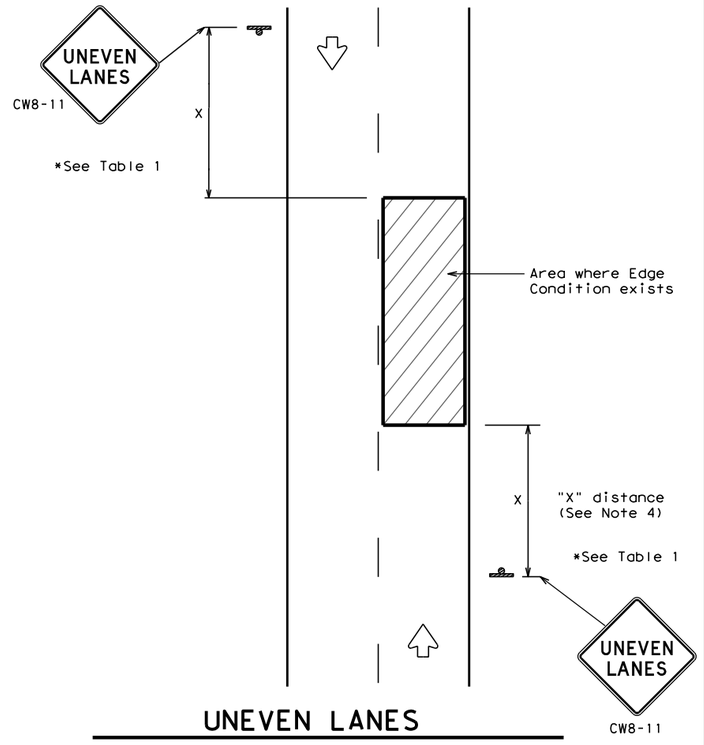

UNEVEN LANES
TWO LANE CONVENTIONAL ROAD

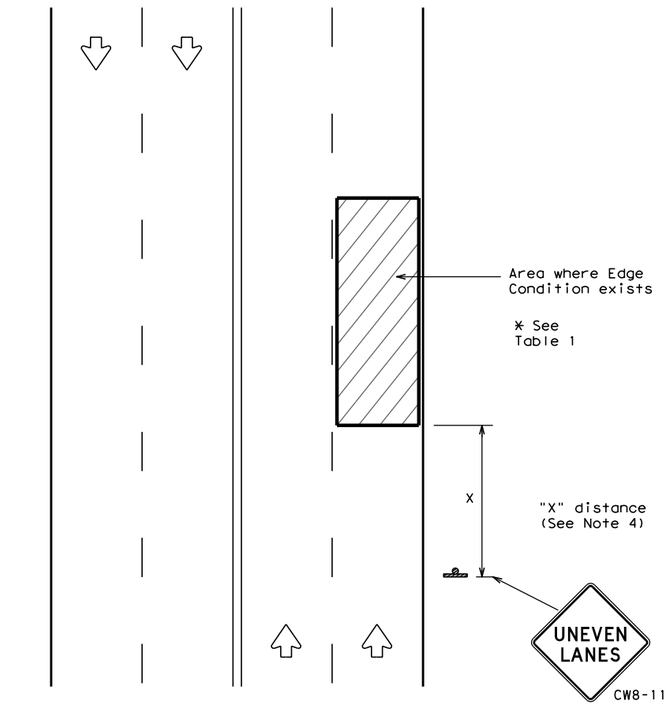

UNEVEN LANES
FOUR LANE CONVENTIONAL ROAD

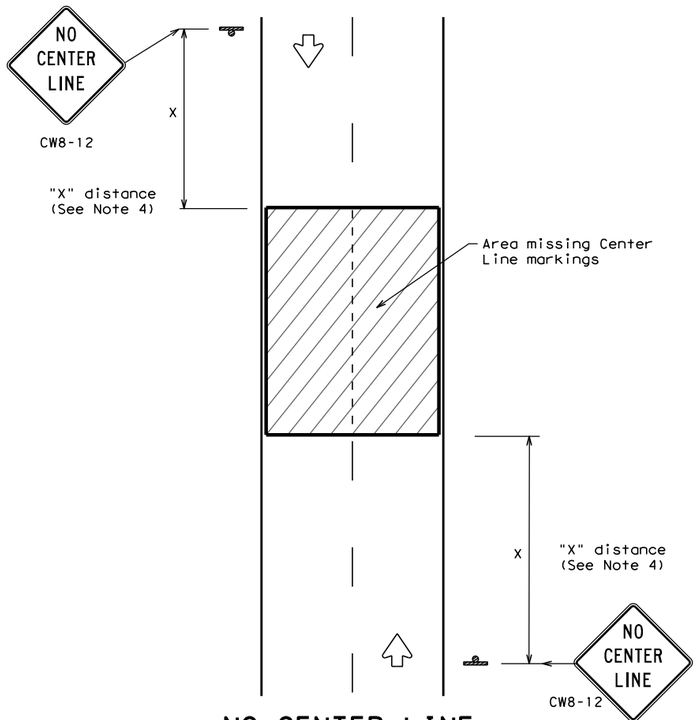

NO CENTER LINE
TWO LANE CONVENTIONAL ROAD

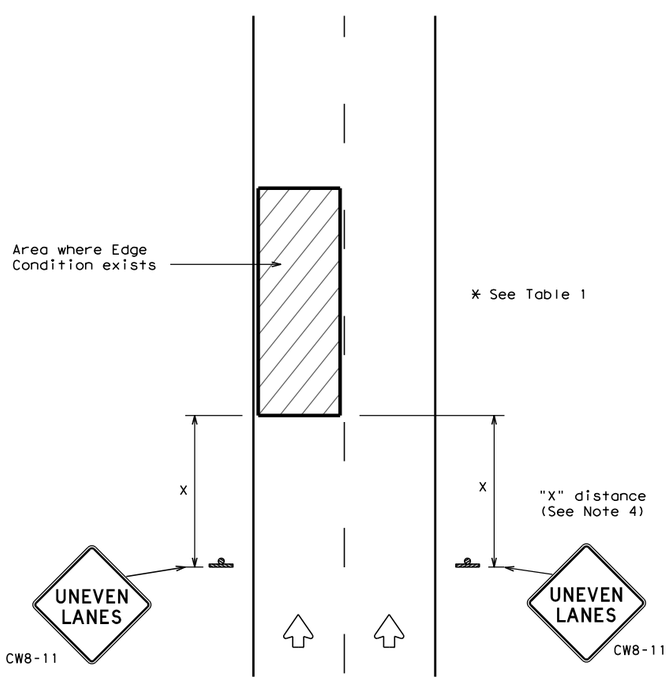

UNEVEN LANES
DIVIDED ROADWAY

DEPARTMENTAL MATERIAL SPECIFICATIONS	
PERMANENT PREFABRICATED PAVEMENT MARKINGS	DMS-8240
TEMPORARY (REMOVABLE) PREFABRICATED PAVEMENT MARKINGS	DMS-8241
SIGN FACE MATERIALS	DMS-8300

COLOR	USAGE	SHEETING MATERIAL
ORANGE	BACKGROUND	TYPE B_{FL} OR TYPE C_{FL} SHEETING
BLACK	LEGEND & BORDERS	ACRYLIC NON-REFLECTIVE SHEETING

GENERAL NOTES

1. If spalling or holes occur, ROUGH ROAD (CW8-8) signs should be placed in advance of the condition and be repeated every two miles where the condition persists.
2. UNEVEN LANES (CW8-11) signs shall be installed in advance of the condition and repeated every mile. Signs installed along the uneven lane condition may be supplemented with the NEXT XX MILES (CW7-3aP) plaque or Advisory Speed (CW13-1P) plaque.
3. NO CENTER LINE (CW8-12) signs and temporary pavement markings as per the WZ(STPM) standard shall be installed if yellow centerlines separating two way traffic are obscured or obliterated. Repeat NO CENTER LINE signs every two miles where the center line markings are not in place. The signs and markings shall remain in place until permanent pavement markings are installed.
4. Signs shall be spaced at the distances recommended as per BC standards.
5. Additional signs may be required as directed by the Engineer. Signs shall remain in place until final surface is applied. Signs shall be considered subsidiary to Item 502 "BARRICADES, SIGNS AND TRAFFIC HANDLING."
6. Signs shall be fabricated and mounted on supports as shown on the BC standards and/or listed on the "Compliant Work Zone Traffic Control Devices" list.
7. Short term markings shall not be used to simulate edge lines.
8. All signs shall be constructed in accordance with the details found in the "Standard Highway Sign Designs for Texas," latest edition.

TABLE 1

Edge Condition	Edge Height (D)	* Warning Devices
① 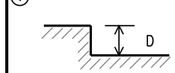	Less than or equal to: 1¼" (maximum-planing) 1½" (typical-overlay)	Sign: CW8-11
	Distance "D" may be a maximum of 1 1/4 " for planing operations and 2" for overlay operations if uneven lanes with edge condition 1 are open to traffic after work operations cease.	
② 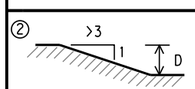	Less than or equal to 3"	Sign: CW8-11
③ 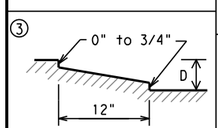 Notched Wedge Joint	Distance "D" may be a maximum of 3" if uneven lanes with edge condition 2 or 3 are open to traffic after work operations cease. Uneven lanes should not be open to traffic when "D" is greater than 3".	

TRAFFIC CONTROL DURING PLANING, OVERLAY AND LEVELING OPERATIONS ARE SHOWN ELSEWHERE IN THE PLANS.

MINIMUM WARNING SIGN SIZE	
Conventional roads	36" x 36"
Freeways/expressways, divided roadways	48" x 48"

Texas Department of Transportation

Traffic Operations Division Standard

SIGNING FOR UNEVEN LANES

WZ(UL)-13

FILE: wzul-13.dgn	DN: TxDOT	CK: TxDOT	DW: TxDOT	CK: TxDOT
© TxDOT April 1992	CONT	SECT	JOB	HIGHWAY
REVISIONS				
8-95 2-98 7-13	DIST	COUNTY		SHEET NO.
1-97 3-03				94

112

DISCLAIMER:
The use of this standard is governed by the "Texas Engineering Practice Act". No warranty of any kind is made by TxDOT for any purpose whatsoever. TxDOT assumes no responsibility for the conversion of this standard to other formats or for incorrect results or damages resulting from its use.

DATE: 3/12/2025 2:53:45 PM
FILE: G:\TXC\Projects\City_Georgetown\10767-00 Shell Road\03_CADD\01_Shts\02-TCPS\SHS\WZ(UL)-13.dgn

DISCLAIMER:
The use of this standard is governed by the "Texas Engineering Practice Act". No warranty of any kind is made by TxDOT for any purpose whatsoever. TxDOT assumes no responsibility for the conversion of this standard to other formats or for incorrect results or damages resulting from its use.

DATE: 3/12/2025 2:53:46 PM
FILE: G:\TXC\Projects\City_Georgetown\10767-00 Shell Road\03_CADD\01_Shts\02-TCP_Shts\wzrcd-13.dgn

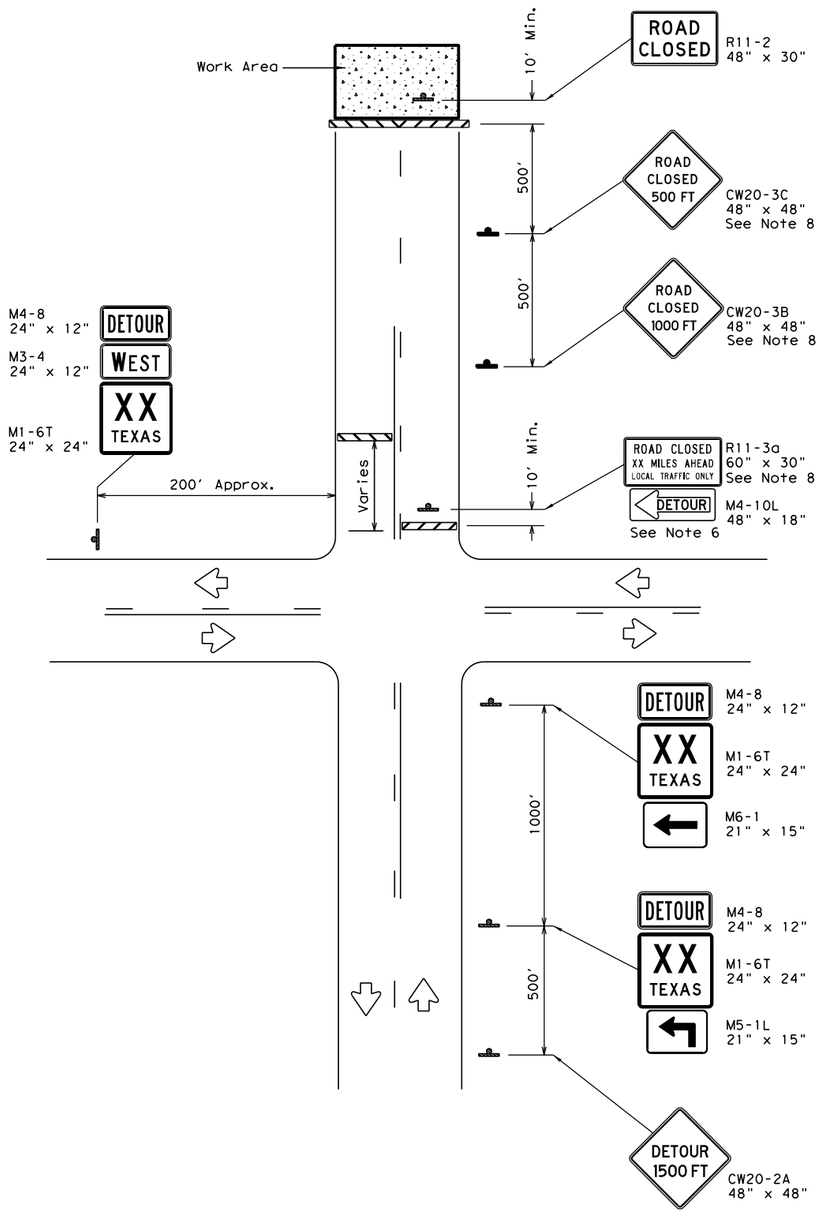

ROAD CLOSURE BEYOND THE INTERSECTION

Signing for a Numbered Route with an Off-Site Detour

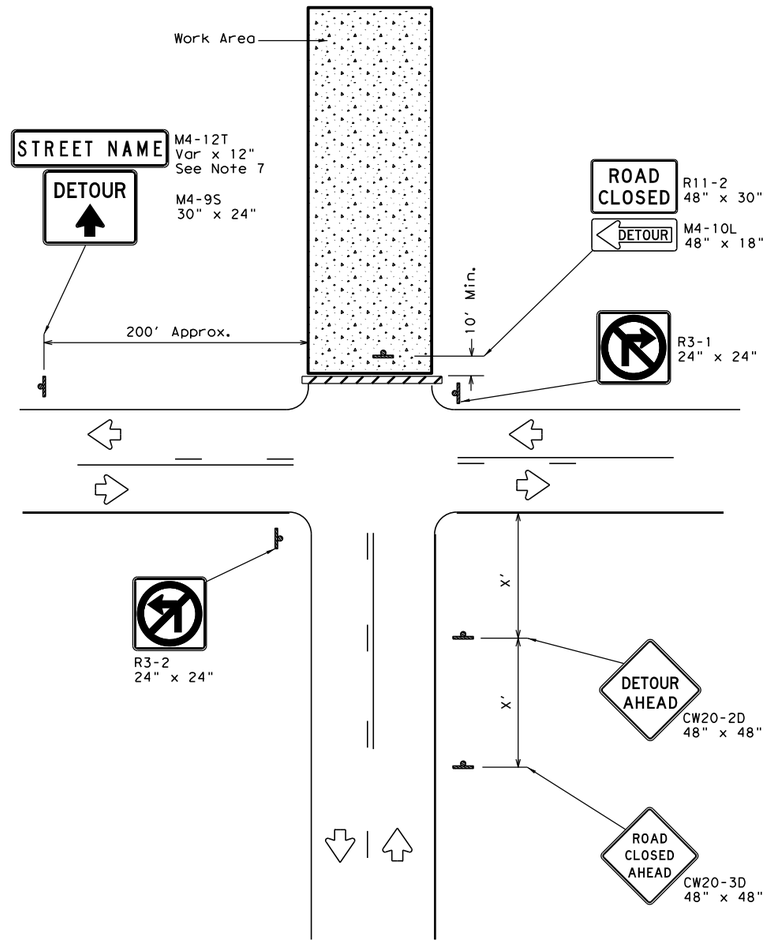

ROAD CLOSURE AT THE INTERSECTION

Signing for an Un-numbered Route with an Off-Site Detour

LEGEND	
	Type 3 Barricade
	Sign

Posted Speed *	Minimum Sign Spacing "X" Distance
30	120'
35	160'
40	240'
45	320'
50	400'
55	500'
60	600'
65	700'
70	800'
75	900'

* Conventional Roads Only

GENERAL NOTES

1. This sheet is intended to provide details for temporary work zone road closures. For permanent road closure details see the D&OM standards.
2. Barricades used shall meet the requirements shown on Barricade and Construction Standard BC(10) and listed on the Compliant Work Zone Traffic Control Devices list (CWZTCD).
3. Stockpiled materials shall not be placed on the traffic side of barricades.
4. Barricades at the road closure should extend from pavement edge to pavement edge.
5. Detour signing shown is intended to illustrate the type of signing that is appropriate for numbered routes or un-numbered routes as labeled. It does not indicate the full extent of detour signing required. Detour routes should be signed as shown elsewhere in the plans.
6. If the road is open for a significant distance beyond the intersection or there are significant origin/destination points beyond the intersection, the signs and barricades at this location should be located at the edge of the traveled way.
7. The Street Name (M4-12T) sign is to be placed above the DETOUR (M4-9S) sign.
8. For urban areas where there is a shorter distance between the intersection and the actual closure location, the ROAD CLOSED XX MILES AHEAD (R11-3a) sign may be replaced with a ROAD CLOSED TO THRU TRAFFIC (R11-4) sign. If adequate space does not exist between the intersection and the closure a single ROAD CLOSED AHEAD (CW20-3D) sign spaced as per the table above may replace the ROAD CLOSED 1000 FT (CW20-3B) and ROAD CLOSED 500 FT (CW20-3C) signs.
9. Signs and barricades shown shall be subsidiary to Item 502. Locations where these details will be required shall be as shown elsewhere in the plans.

Texas Department of Transportation

Traffic Operations Division Standard

WORK ZONE ROAD CLOSURE DETAILS

WZ(RCD)-13

FILE: wzrcd-13.dgn	DN: TxDOT	CK: TxDOT	DW: TxDOT	CK: TxDOT
©TxDOT August 1995	CONT	SECT	JOB	HIGHWAY
REVISIONS				
1-97 4-98 7-13	DIST	COUNTY		SHEET NO.
2-98 3-03				95

DISCLAIMER:
The use of this standard is governed by the "Texas Engineering Practice Act". No warranty of any kind is made by TxDOT for any purpose whatsoever. TxDOT assumes no responsibility for the conversion of this standard to other formats or for incorrect results or damages resulting from its use.

DATE:
FILE:

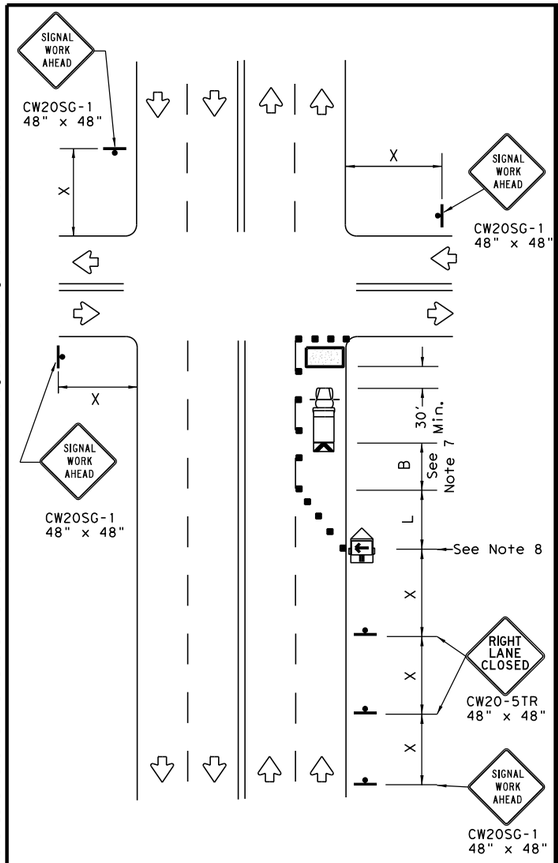

NEAR SIDE LANE CLOSURE

SHORT DURATION OR SHORT TERM STATIONARY

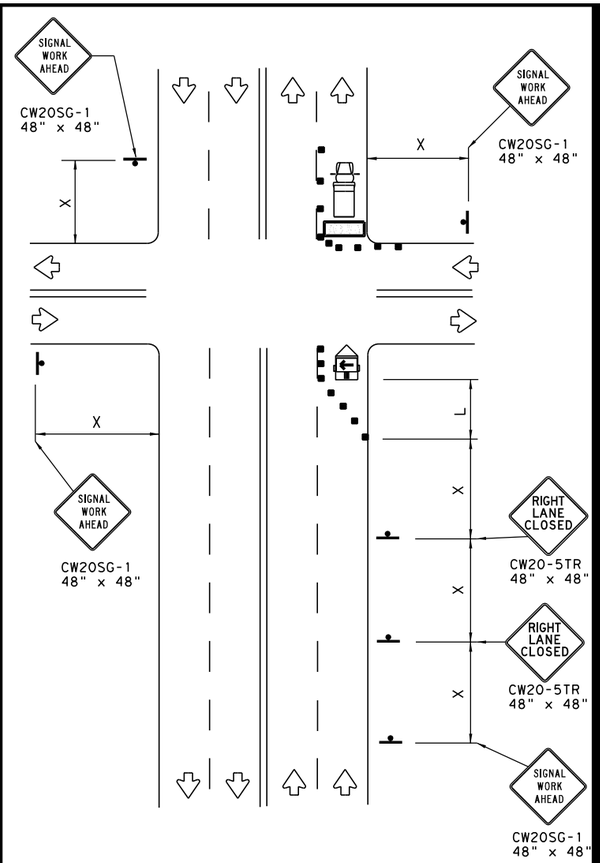

FAR SIDE RIGHT LANE CLOSURE

SHORT DURATION OR SHORT TERM STATIONARY

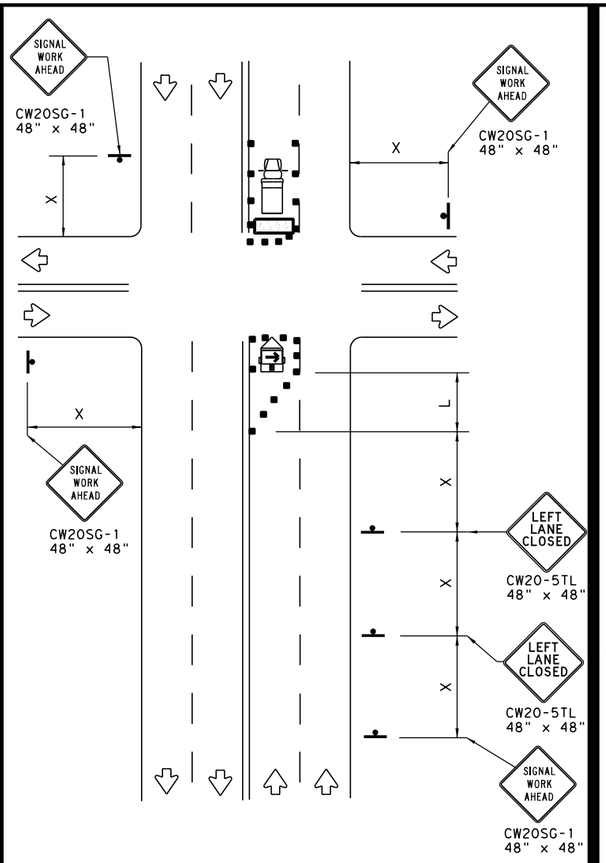

FAR SIDE LEFT LANE CLOSURE

SHORT DURATION OR SHORT TERM STATIONARY

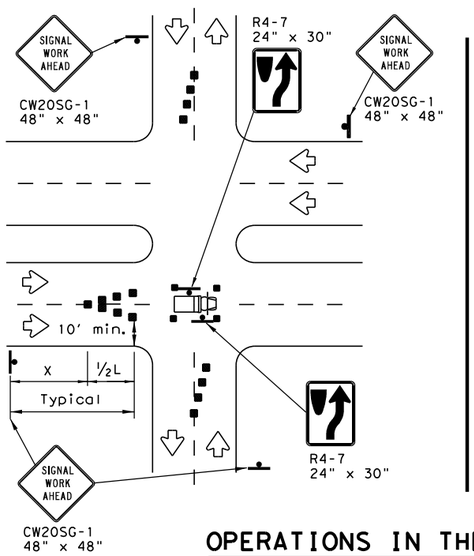

OPERATIONS IN THE INTERSECTION

SHORT DURATION

LEGEND			
	Type 3 Barricade		Channelizing Devices
	Heavy Work Vehicle		Truck Mounted Attenuator (TMA)
	Trailer Mounted Flashing Arrow Board	M	Portable Changeable Message Sign (PCMS)
	Sign		Traffic Flow
	Flag		Flagger

Posted Speed *	Formula	Minimum Desirable Taper Lengths ** 10' Offset	11' Offset	12' Offset	Suggested Maximum Spacing of Channelizing Devices On a Taper	On a Tangent	Minimum Sign Spacing "X" Distance	Suggested Longitudinal Buffer Space "B"
30	$L = \frac{WS^2}{60}$	150'	165'	180'	30'	60'	120'	90'
35		205'	225'	245'	35'	70'	160'	120'
40		265'	295'	320'	40'	80'	240'	155'
45	L = WS	450'	495'	540'	45'	90'	320'	195'
50		500'	550'	600'	50'	100'	400'	240'
55		550'	605'	660'	55'	110'	500'	295'
60		600'	660'	720'	60'	120'	600'	350'
65		650'	715'	780'	65'	130'	700'	410'
70		700'	770'	840'	70'	140'	800'	475'
75		750'	825'	900'	75'	150'	900'	540'

* Conventional Roads Only

** Taper lengths have been rounded off.
L=Length of Taper(FT) W=Width of Offset(FT) S=Posted Speed(MPH)

WORKERS IN BUCKET TRUCKS SHALL NOT WORK ABOVE OPEN LANES OF TRAFFIC.

GENERAL NOTES

1. The minimum size channelizing device is the 28" cone. 42" Two-piece cones, drums, vertical panels or barricades will be required when the device must be left unattended at night.
2. Obstructions or hazards at the work area shall be clearly marked and delineated at all times.
3. Flaggers and Flagger Symbol (CW20-7) signs may be required according to field conditions.
4. Vehicles parked in roadway shall be equipped with at least two high intensity rotating, flashing, oscillating or strobe type lights.
5. High level warning devices (flag trees) may be used at corners of the vehicle.
6. When work operations are performed on existing signals, the signals may be placed in flashing red mode when approved by the engineer. If existing signals do not have power, All-Way Stop (R1-1 and R1-3P) signs may be implemented when approved by the engineer.
7. For Short-Term Stationary work the buffer space "B" from the above table should be used if field conditions permit. For Short Duration (less than 1 hour) any buffer space provided will enhance the safety of the setup.
8. The arrow board at this location may be omitted for Short Duration work if the work vehicle has an arrow board in operation. As an option, the arrow board may be placed at the end of the taper in the closed lane if space is not available at the beginning of the taper.
9. Signs and devices for the NEAR SIDE LANE CLOSURE may be altered for a left lane closure by using a LEFT LANE CLOSED (CW20-5TL) and adding channelizing devices on the centerline to protect the work space from opposing traffic.

Texas Department of Transportation

Traffic Operations Division Standard

TRAFFIC SIGNAL WORK TYPICAL DETAILS

WZ(BTS-1)-13

FILE: wzbts-13.dgn	DN: TxDOT	CK: TxDOT	DW: TxDOT	CK: TxDOT
©TxDOT April 1992	CONT	SECT	JOB	HIGHWAY
REVISIONS				
2-98 10-99 7-13	DIST	COUNTY		SHEET NO.
4-98 3-03				96

114

DISCLAIMER:
The use of this standard is governed by the "Texas Engineering Practice Act". No warranty of any kind is made by TxDOT for any purpose whatsoever. TxDOT assumes no responsibility for the conversion of this standard to other formats or for incorrect results or damages resulting from its use.

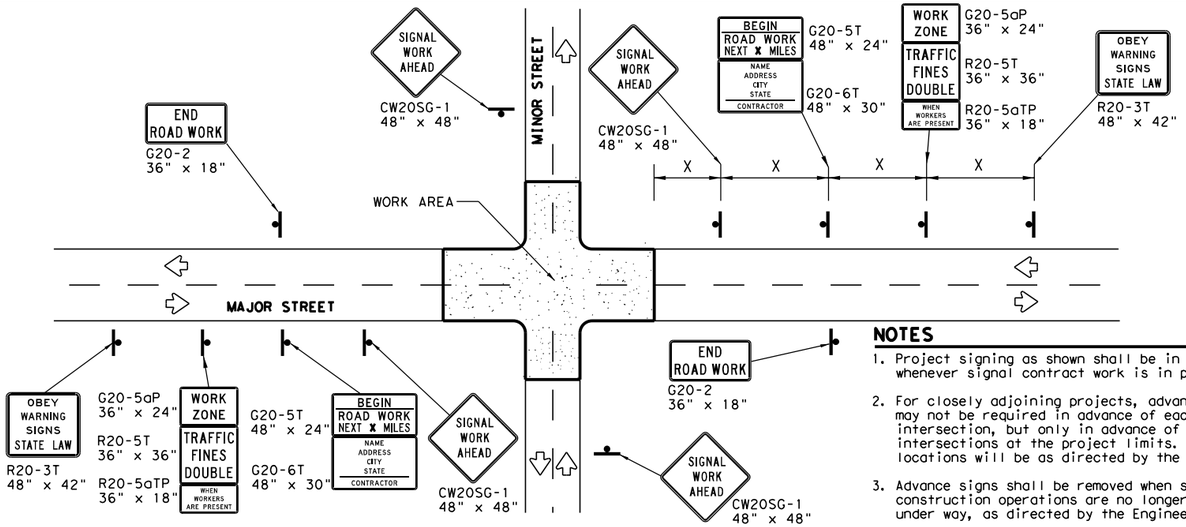

TYPICAL ADVANCE SIGNAL PROJECT SIGNING

FOR LONG TERM and INTERMEDIATE-TERM STATIONARY WORK OPERATIONS

NOTES

1. Project signing as shown shall be in place whenever signal contract work is in progress.
2. For closely adjoining projects, advance signing may not be required in advance of each intersection, but only in advance of the intersections at the project limits. Actual locations will be as directed by the Engineer.
3. Advance signs shall be removed when signal construction operations are no longer under way, as directed by the Engineer.
4. Warning sign spacing shown is typical for both directions.
5. See the Table on sheet 1 of 2 for Typical warning sign spacing.

GENERAL NOTES FOR WORK ZONE SIGNS

1. Signs shall be installed and maintained in a straight and plumb condition.
2. Wooden sign posts shall be painted white.
3. Barricades shall NOT be used as sign supports.
4. Nails shall NOT be used to attach signs to any support.
5. All signs shall be installed in accordance with the plans or as directed by the Engineer.
6. The Contractor shall furnish the sign design shown in the plans or in the "Standard Highway Sign Designs for Texas" (SHSD).
7. The Contractor shall furnish sign supports and substrates listed in the "Compliant Work Zone Traffic Control Device List" (CWZTCD), installed as per the manufacturer's recommendations.
8. Temporary signs that have damaged or cracked substrates and/or damaged or marred reflective sheeting shall be replaced as directed by the Engineer.
9. Identification markings may be shown only on the back of the sign substrate. The maximum height of letters and/or company logos used for identification shall be 1".
10. Damaged wood posts shall be replaced. Splicing wood posts will not be allowed.

DURATION OF WORK

1. Work zone durations are defined in Part 6, Section 6G.02 of the Texas Manual on Uniform Traffic Control Devices (TMUTCD).

SIGN MOUNTING HEIGHT

1. Sign height of Long-term/Intermediate-term warning signs shall be as shown on Figure 6F-1 of the TMUTCD.
2. Sign height of Short-term/Short Duration warning signs shall be as shown on Figure 6F-2 of the TMUTCD.
3. Regulatory signs shall be mounted at least 7 feet, but not more than 9 feet, above the paved surface regardless of work duration.

REMOVING OR COVERING

1. When sign messages may be confusing or do not apply, the signs shall be removed or completely covered, unless otherwise approved by the Engineer.
2. When signs are covered, the material used shall be opaque, such as heavy mil black plastic, or other materials which will cover the entire sign face and maintain their opaque properties under automobile headlights at night without damaging the sign sheeting. Burlap, or heavy materials such as plywood or aluminum shall not be used to cover signs.
3. Duct tape or other adhesive material shall NOT be affixed to a sign face.
4. Signs and anchor stubs shall be removed and holes back filled upon completion of the work.

REFLECTIVE SHEETING

1. All signs shall be retroreflective and constructed of sheeting meeting the requirements of the DMS and color usage table shown on this sheet.

SIGN SUPPORT WEIGHTS

1. Weights used to keep signs from turning over should be sandbags filled with dry, cohesionless material.
2. The sandbags will be tied shut to keep the sand from spilling and to maintain a constant weight.
3. Rock, concrete, iron, steel or other solid objects will not be permitted for use as sign support weights.
4. Sandbags should weigh a minimum of 35 lbs and a maximum of 50 lbs.
5. Sandbags shall be made of a durable material that tears upon vehicular impact. Rubber, such as tire inner tubes, shall not be used.
6. Rubber ballasts designed for channelizing devices should not be used for ballast on portable sign supports. Sign supports designed and manufactured with rubber bases may be used when shown on the CWZTCD list.
7. Sandbags shall only be placed along or laid over the base supports of the traffic control device and shall not be suspended above ground level or hung with rope, wire, chains or other fastners. Sandbags shall be placed along the length of the skids to weigh down the sign support.
8. Sandbags shall NOT be placed under the skid and shall not be used to level sign supports placed on slopes.

LEGEND	
	Sign
	Channelizing Devices
	Type 3 Barricade

DEPARTMENTAL MATERIAL SPECIFICATIONS	
SIGN FACE MATERIALS	DMS-8300
FLEXIBLE ROLL-UP REFLECTIVE SIGNS	DMS-8310

COLOR	USAGE	SHEETING MATERIAL
ORANGE	BACKGROUND	TYPE B_{FL} OR TYPE C_{FL} SHEETING
WHITE	BACKGROUND	TYPE A SHEETING
BLACK	LEGEND & BORDERS	ACRYLIC NON-REFLECTIVE SHEETING

Only pre-qualified products shall be used. A copy of the "Compliant Work Zone Traffic Control Devices List" (CWZTCD) describes pre-qualified products and their sources and may be found at the following web address:
http://www.txdot.gov/txdot_library/publications/construction.htm

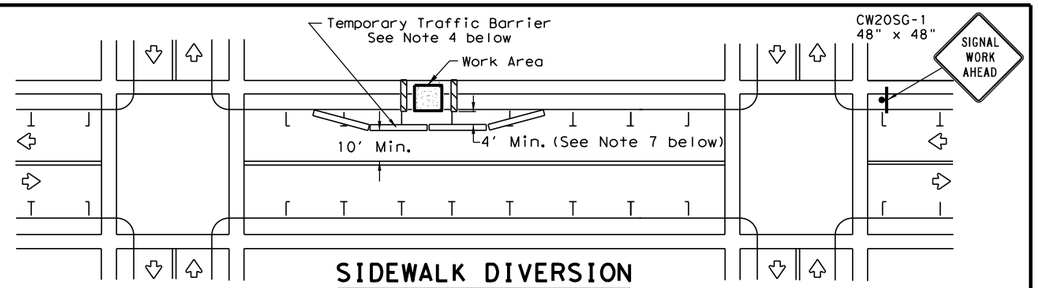

SIDEWALK DIVERSION

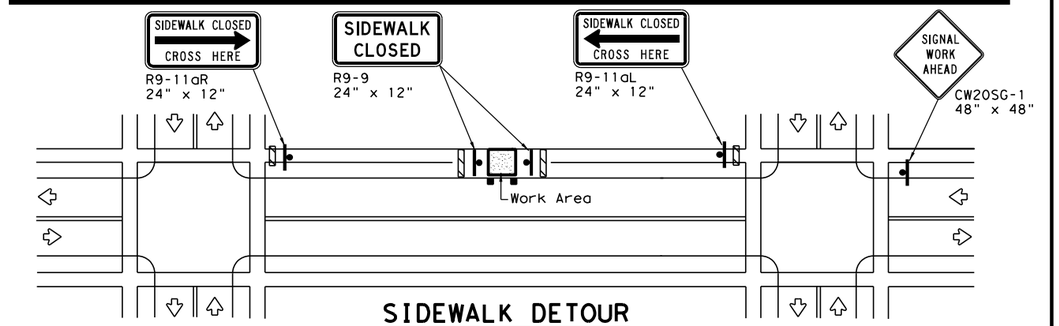

SIDEWALK DETOUR

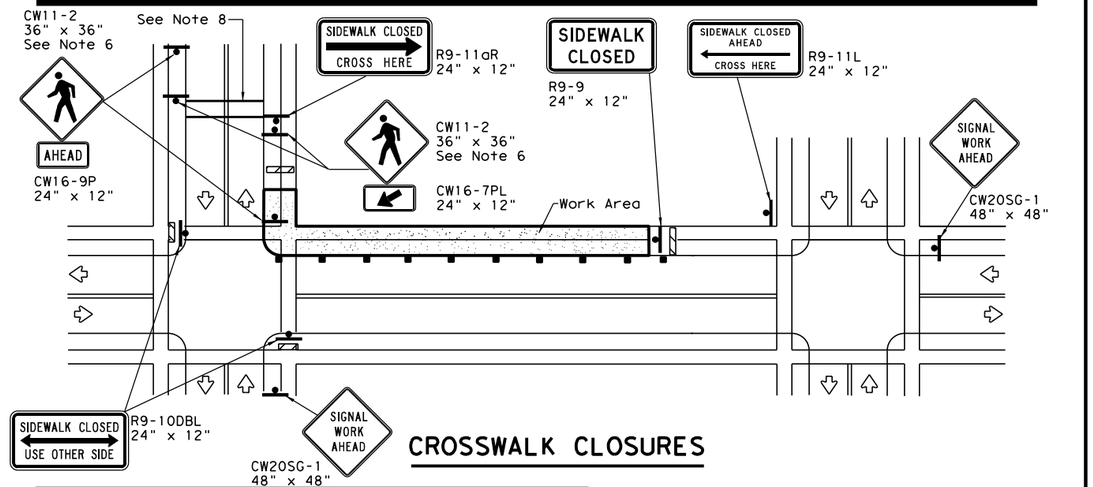

CROSSWALK CLOSURES

PEDESTRIAN CONTROL

1. Holes, trenches or other hazards shall be adequately protected by covering, delineating or surrounding the hazard with orange plastic pedestrian fencing or longitudinal channelizing devices, or as directed by the Engineer.
2. "CROSSWALK CLOSURES" as detailed above will require the Engineer's approval prior to installation.
3. R9 series signs shown may be placed on supports detailed on the BC standards or CWZTCD list, or when fabricated from approved lightweight plastic substrates, they may be mounted on top of a plastic drum at or near the location shown.
4. For speeds less than 45 mph longitudinal channelizing devices may be used instead of traffic barriers when approved by the Engineer. Attenuation of blunt ends and installation of water filled devices shall be as per BC(9) and manufacturer's recommendations.
5. Location of devices are for general guidance. Actual device spacing and location must be field adjusted to meet actual conditions.
6. Where pedestrians with visual disabilities normally use the closed sidewalk Detectable Pedestrian Barricades should be used instead of the Type 3 Barricades shown.
7. The width of existing sidewalk should be maintained if practical.
8. Pavement markings for mid-block crosswalks shall be paid for under the appropriate bid items.
9. When crosswalks or other pedestrian facilities are closed or relocated, temporary facilities shall be detectable and shall include accessibility features consistent with the features present in the existing pedestrian facility.

Texas Department of Transportation

Traffic Operations Division Standard

TRAFFIC SIGNAL WORK BARRICADES AND SIGNS

WZ(BTS-2)-13

FILE:	wzbts-13.dgn	DN: TxDOT	CK: TxDOT	DW: TxDOT	CK: TxDOT
©TxDOT	April 1992	CONT	SECT	JOB	HIGHWAY
REVISIONS					
2-98 10-99 7-13		DIST	COUNTY		SHEET NO.
4-98 3-03					97

DATE:
FILE:

DISCLAIMER:
The use of this standard is governed by the "Texas Engineering Practice Act". No warranty of any kind is made by TxDOT for any purpose whatsoever. TxDOT assumes no responsibility for the conversion of this standard to other formats or for incorrect results or damages resulting from its use.

DEFINITION OF TREATMENT ZONES FOR VARIOUS EDGE CONDITIONS

Edge Height (D) in Inches versus Lateral Clearance (Y) in Feet

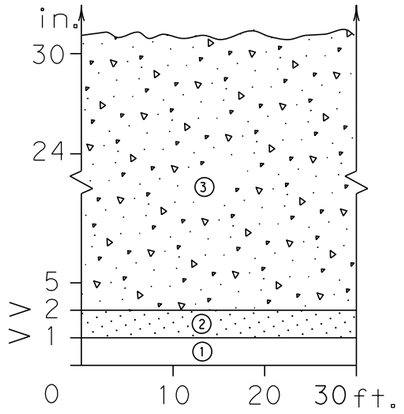

Edge Condition I
S = (3:1) (or flatter)

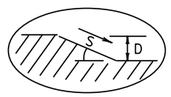

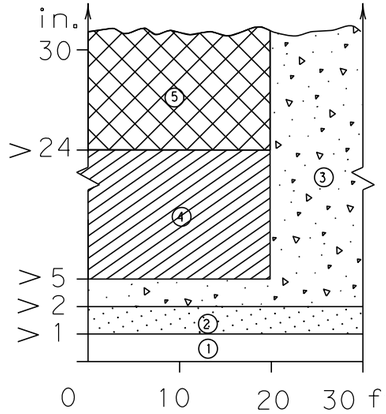

Edge Condition II
S = ((2.99):1) to (1:1)

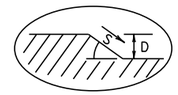

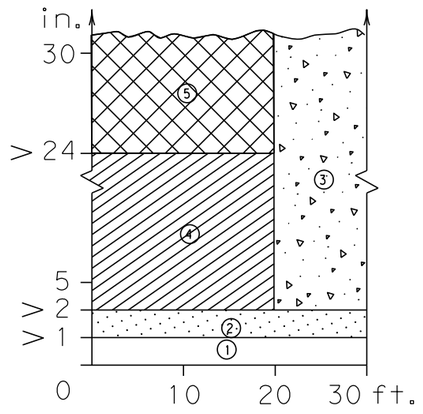

Edge Condition III
S is steeper than (1:1)

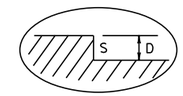

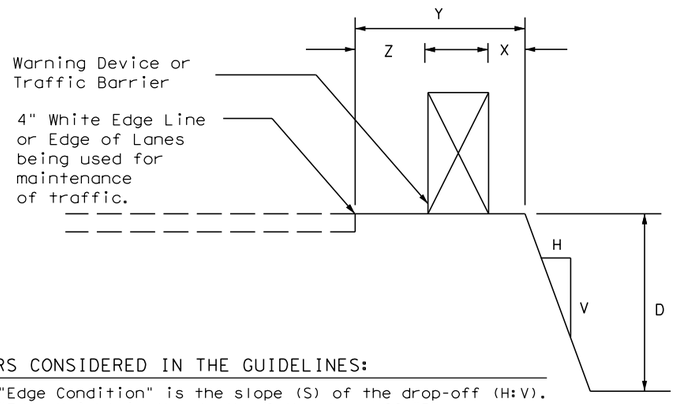

FACTORS CONSIDERED IN THE GUIDELINES:

1. The "Edge Condition" is the slope (S) of the drop-off (H:V). The "Edge Height is the depth of the drop-off "D".

2. Distance "X" is to be the maximum practical under job conditions. Two feet minimum for high speed conditions. Distance "Y" is the lateral clearance from edge of travel lane to edge of dropoff. Distance "Z" does not have a minimum.

3. In addition to the factors considered in the guidelines, each construction zone drop-off situation should be analyzed individually, taking into account other variables, such as: traffic mix, posted speed in the construction zone, horizontal curvature, and the practicality of the treatment options.

4. The conditions for indicating the use of positive or protective barriers are given by Zone-5 and Figure-1. Traffic barriers are primarily applicable for high speed conditions. Urban areas with speeds of 30 mph or less may have a lesser need for signing, delineation, and barriers. Right-angled edges, however, with "D" greater than 2 inches and located within a lateral offset of 6 feet, may indicate a higher level of treatment.

5. If the distance "Y" must be less than 3 feet, the use of a positive barrier may not be feasible. In such a case, consider either: 1) narrowing the lanes to a desired 11 to 12 feet or 10 foot minimum (see CW20-8 sign), or 2) provide an edge slope such as Edge Condition I.

Zone	Treatment Types Guidelines:
①	No treatment
②	CW 8-11 "Uneven Lanes" signs.
③	CW 8-9a Shoulder Drop-Off" or CW 8-11 signs plus vertical panels.
④	CW8-9a or CW 8-11, signs plus drums. Where restricted space precludes the use of drums, use vertical panels. An edge slope to that of the profered Edge Condition I.
⑤	Check indications (Figure-1) for possitive barrier. Where positive barrier is not indicated, the treatment shown above for Zone-4 may be used after consideration of other applicable factors.

Edge Condition Notes:

1. Edge Condition I: Most vehicles are able to traverse an edge condition with a slope rate of (3 to 1) or flatter. The slope must be constructed with a compacted material capable of supporting vehicles.

2. Edge Condition II: Most vehicles are able to traverse an edge condition with a slope between (2.99 to 1) and (1 to 1) so long as "D" does not exceed 5 inches. Under-carriage drag on most automobiles will occur when "D" exceeds 6 inches. As "D" exeeds 24 inches, the possibility for rollover is greater in most vehicles.

3. Edge Condition III: When slopes are greater than (1 to 1) and where "D" is greater than 2 inches, a more difficult control factor may exist for some vehicles, if not properly treated. For example, where "D" is greater than 2 inches and up to 24 inches different types of vehicles may experience different steering control at different edge heights. Automobiles might experience more steering control differential when "D" is greater than 2 inches and up to 5 inches. Trucks, particularly those with high loads, have more steering control differential when "D" is greater than 5 inches and up to 24 inches. When "D" exceeds 24 inches, the possibility of rollover is greater for most vehicles.

4. Milling or overlay operations that result in Edge Condition III should not be in place without appropriate warning treatments, and these conditions should not be left in place for extended periods of time.

FIGURE-1: CONDITIONS INDICATING USE OF POSITIVE BARRIER FOR ZONE 5 (▨)

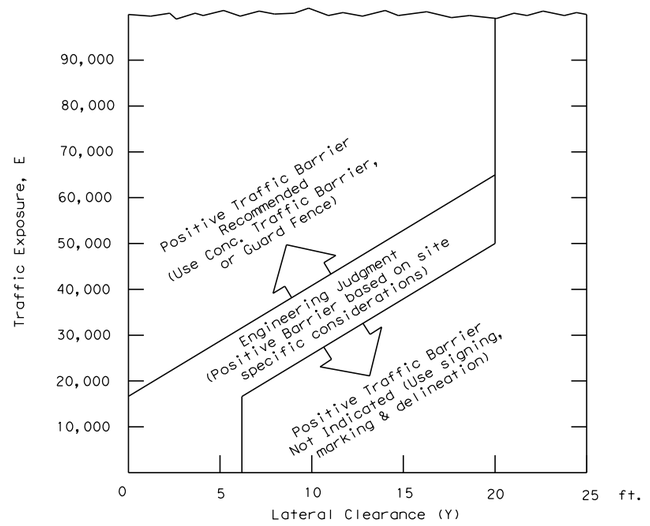

1. E = ADT x T
   Where ADT is that portion of the average daily traffic volume traveling within 20 feet (generally two adjacent lanes) of the edge dropoff condition; and, T is the duration time in years of the dropoff condition.

2. Figure-1 provides a practical approach to the use of positive barriers for the protection of vehicles from pavement drop-offs. Other factors, such as the presence of heavy machinery, construction workers, or the mix and volume of traffic may make the use of positive barriers appropriate, even when the edge condition alone may not justify the use of a barrier.

3. An approved end treatment should be provided for any positive barrier end located within the clear zone.

These guidelines apply to temporary traffic control areas or work zones where continuous pavement edges or drop-offs exists parallel and adjacent to a lane used by traffic. The edge conditions may be present between shoulders and travel lanes, between adjacent or opposing travel lanes, or at intermediate points across the width of the paved surface. Due to the variability in construction operations, tolerances in the variables may be allowed by the engineer. These guidelines do not apply to short term operations. These guidelines do not constitute a rigid standard or policy; rather, they are guidance to be used in conjunction with engineering judgement. These guidelines may be updated on the Design Division's on-line manuals.

Engineer's Seal

STATE OF TEXAS
ELENA RAMON
141765
LICENSED
PROFESSIONAL ENGINEER

Elena Ramon

Date 3/12/2025

Texas Department of Transportation

Traffic Safety Division Standard

TREATMENT FOR VARIOUS EDGE CONDITIONS

FILE: edgecon.dgn	DN:	CK:	DW:	CK:
©TxDOT August 2000	CONT	SECT	JOB	HIGHWAY
REVISIONS				
03-01 08-01 9-21	DIST	COUNTY		SHEET NO. 98

DATE: 3/12/2025 2:53:48 PM
FILE: G:\TXC\Projects\City_Georgetown\10767-00 Shell Road\03_CADD\01_Shts\02-TDPA_STDS\edgecon.dgn

Logo Usage Guidelines

The following guidelines illustrate the proper use of the Georgetown logo. These rules apply to all versions of the Georgetown logo, icon, and any department logos that utilize the logo elements.

GEORGETOWN TEXAS *more than welcome*

Primary Logo (with Tagline)
The lockup of the logo with the tagline underneath is the preferred logo, and should be used in most circumstances.

Typefaces

Files have been provided in a variety of formats that allow use of the Georgetown logo without purchasing typefaces. The logo itself is considered a piece of artwork and should not be changed. However, if additional customizations are made to the logo, such as creating department logos, it will be necessary to purchase the appropriate license for the typeface.

PT Serif
Bold
Headline/Subhead Font

1 2 3 4 5 6 7 8 9 0
A B C D E F G H I J K L M N O P Q R S T U V W X Y Z
a b c d e f g h i j k l m n o p q r s t u v w x y z

Montserrat
Regular
Body Copy Font

1 2 3 4 5 6 7 8 9 0
A B C D E F G H I J K L M N O P Q R S T U V W X Y Z
a b c d e f g h i j k l m n o p q r s t u v w x y z

Color Palette

The color palette provides a guide for keeping a consistent color scheme within the brand. Consult the color palettes shown below and work closely with professional printing services to ensure proper colors are used.

Black (80%)
C0 **M**0 **Y**0 **K**80
R88 **B**89 **G**91
HEX: #58595B

Pantone 1788 C
C0 **M**93 **Y**82 **K**0
R238 **B**39 **G**55
HEX: #EE2737

The Architect/Engineer assumes responsibility for appropriate use of this standard.

REVISED ON: 06/2006

GEORGETOWN TEXAS *more than welcome*	CITY OF GEORGETOWN CONSTRUCTION STANDARDS AND DETAILS CAPITAL IMPROVEMENT PROJECT SIGN SIGN STANDARDS	DRAWING NAME: SD26 1 OF 7 SCALE: NTS DATE: 1/2003 DRAWN BY: MRS APPROVED BY: TRB	

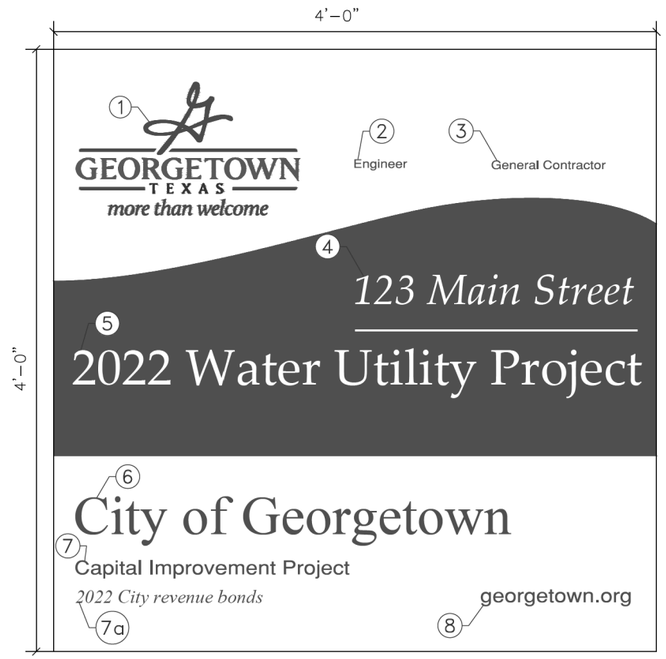

NOTES:
1. PRIMARY LOGO WITH TAGLINE
2. MONTSERRAT (REGULAR) 80% GREY
3. MONTSERRAT (REGULAR) 80% GREY
4. PT SERIF (ITALIC) WHITE
5. PT SERIF (REGULAR) WHITE
6. PT SERIF (REGULAR) 80% GREY
7. MONTSERRAT (REGULAR) 80% GREY
   a. PT SERIF (ITALIC) 80% GREY
8. MONTSERRAT (REGULAR) 80% GREY

The Architect/Engineer assumes responsibility for appropriate use of this standard.

REVISED ON: 06/2006

GEORGETOWN TEXAS *more than welcome*	CITY OF GEORGETOWN CONSTRUCTION STANDARDS AND DETAILS CAPITAL IMPROVEMENT PROJECT SIGN 4'x4' SIGN	DRAWING NAME: SD26 2 OF 7 SCALE: NTS DATE: 1/2003 DRAWN BY: MRS APPROVED BY: TRB	

STATE OF TEXAS
ELENA RAMON
141765
LICENSED
PROFESSIONAL ENGINEER
3/12/2025

EST.1848 GEORGETOWN TEXAS

BGE, Inc.
101 West Louis Henna Blvd, Suite 400, Austin, TX 78728
Tel: 512-879-0400 • www.bgeinc.com
TBPE Registration No. F-1046

SHELL ROAD

CAPITAL IMPROVEMENT PROJECT SIGN STANDARDS

SHEET 1 OF 4

SHEET NO. 99

DATE: 3/12/2025 2:53:48 PM
FILE: G:\TXC\Projects\City Georgetown\10767-00 Shell Road\03_CADD\01_Shts\02-TCP\Stds\TCP_PROJECT SIGN STD_01.dgn 3/12/2025 2:53:48 PM

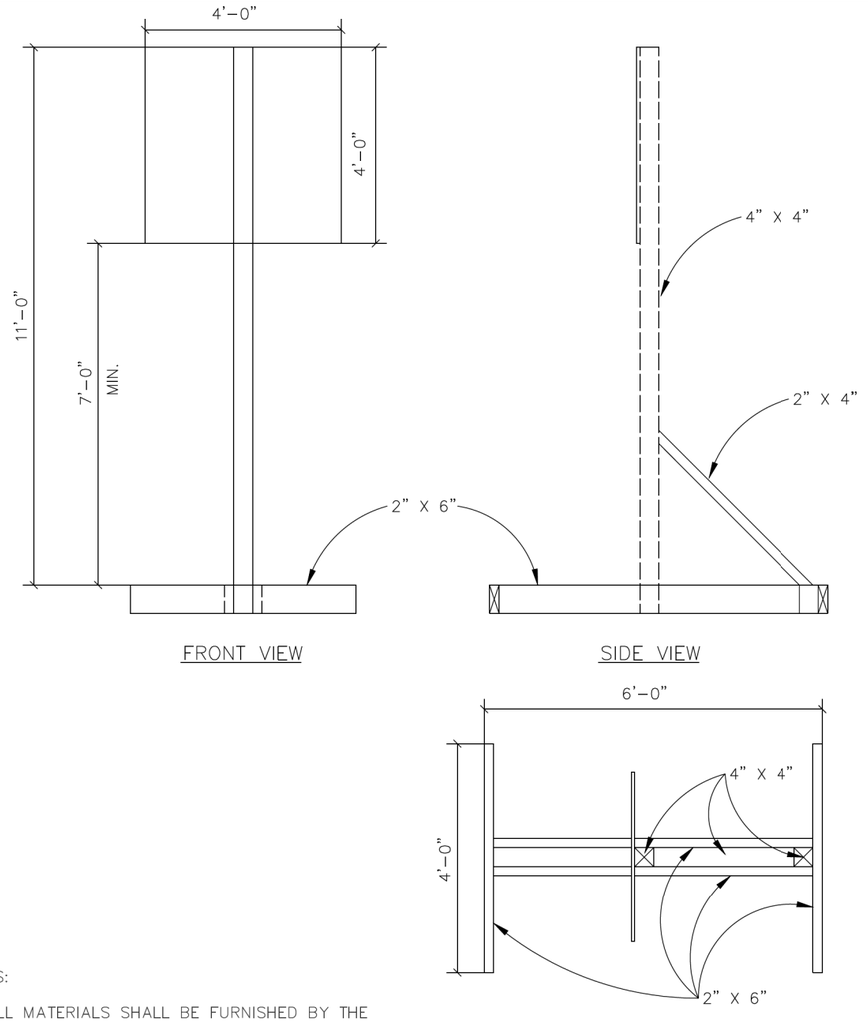

NOTES:

1. ALL MATERIALS SHALL BE FURNISHED BY THE CONTRACTOR WITH THE EXCEPTION OF THE CITY OF GEORGETOWN G.U.S. LOGO WHICH WILL BE FURNISHED BY THE CITY.
2. ALL SIGNS TO BE IN CONFORMANCE WITH THE CURRENT EDITION OF THE TEXAS MANUAL OF UNIFORM TRAFFIC CONTROL DEVICES (TMUTCD).

The Architect/Engineer assumes responsibility for appropriate use of this standard.

REVISED ON: 06/2006

GEORGETOWN TEXAS more than welcome

CITY OF GEORGETOWN
CONSTRUCTION STANDARDS AND DETAILS

CAPITAL IMPROVEMENT PROJECT SIGN
4'x4' SIGN BASE

DRAWING NAME: SD26 3 OF 7

SCALE:	DATE:
NTS	1/2003
DRAWN BY: MRS	APPROVED BY: TRB



NOTES:

1. PRIMARY LOGO WITH TAGLINE
2. MONTSERRAT (REGULAR) 80% GREY
3. MONTSERRAT (REGULAR) 80% GREY
4. PT SERIF (ITALIC) WHITE
5. PT SERIF (REGULAR) WHITE
6. PT SERIF (REGULAR) 80% GREY
7. MONTSERRAT (REGULAR) 80% GREY
   a. PT SERIF (ITALIC) 80% GREY
8. MONTSERRAT (REGULAR) 80% GREY

The Architect/Engineer assumes responsibility for appropriate use of this standard.

REVISED ON: 06/2006

GEORGETOWN TEXAS more than welcome

CITY OF GEORGETOWN
CONSTRUCTION STANDARDS AND DETAILS

CAPITAL IMPROVEMENT PROJECT SIGN
4'x8' SIGN

DRAWING NAME: SD26 4 OF 7

SCALE:	DATE:
NTS	1/2003
DRAWN BY: MRS	APPROVED BY: TRB

STATE OF TEXAS
ELENA RAMON
141765
LICENSED
PROFESSIONAL ENGINEER

Elena Ramon

3/12/2025

EST.1848 GEORGETOWN TEXAS

BGE, Inc.
101 West Louis Henna Blvd, Suite 400, Austin, TX 78728
Tel: 512-879-0400 • www.bgeinc.com
TBPE Registration No. F-1046

SHELL ROAD

CAPITAL IMPROVEMENT PROJECT SIGN STANDARDS

SHEET 2 OF 4

SHEET NO. 100

DATE: 3/12/2025 2:53:52 PM
FILE: G:\TXC\Projects\City Georgetown\10767-00 Shell Road\03 CADD\01 Shts\02-TCP\Stds\TCP_PROJECT SIGN STD_02.dgn 3/12/2025 2:53:52 PM

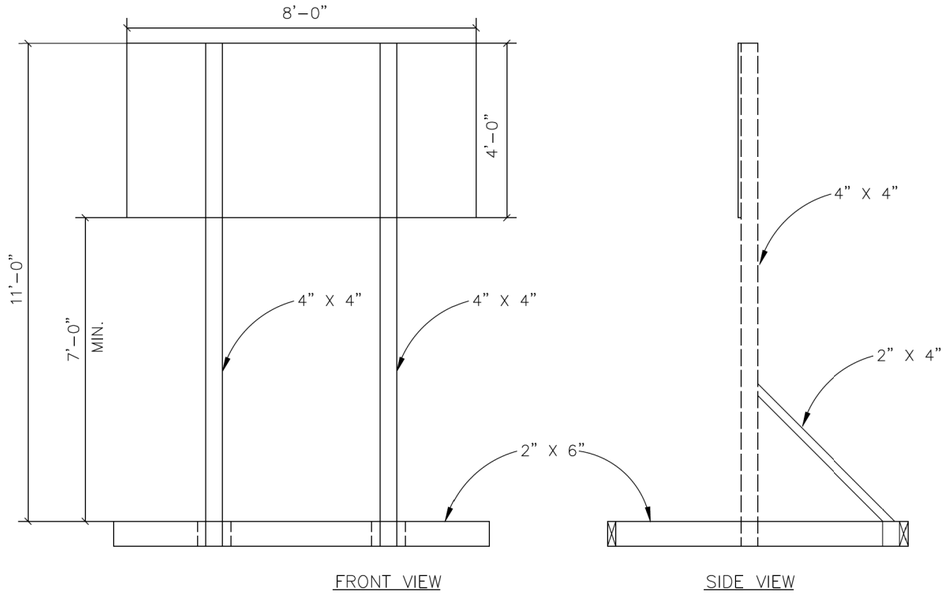

NOTES:

1. ALL MATERIALS SHALL BE FURNISHED BY THE CONTRACTOR WITH THE EXCEPTION OF THE CITY OF GEORGETOWN G.U.S. LOGO WHICH WILL BE FURNISHED BY THE CITY.
2. ALL SIGNS TO BE IN CONFORMANCE WITH THE CURRENT EDITION OF THE TEXAS MANUAL OF UNIFORM TRAFFIC CONTROL DEVICES (TMUTCD).

The Architect/Engineer assumes responsibility for appropriate use of this standard.

REVISED ON:
06/2006

GEORGETOWN TEXAS more than welcome	CITY OF GEORGETOWN CONSTRUCTION STANDARDS AND DETAILS CAPITAL IMPROVEMENT PROJECT SIGN 4'x8' SIGN BASE	DRAWING NAME: SD26 5 OF 7	SCALE: NTS; DATE: 1/2003; DRAWN BY: MRS; APPROVED BY: TRB

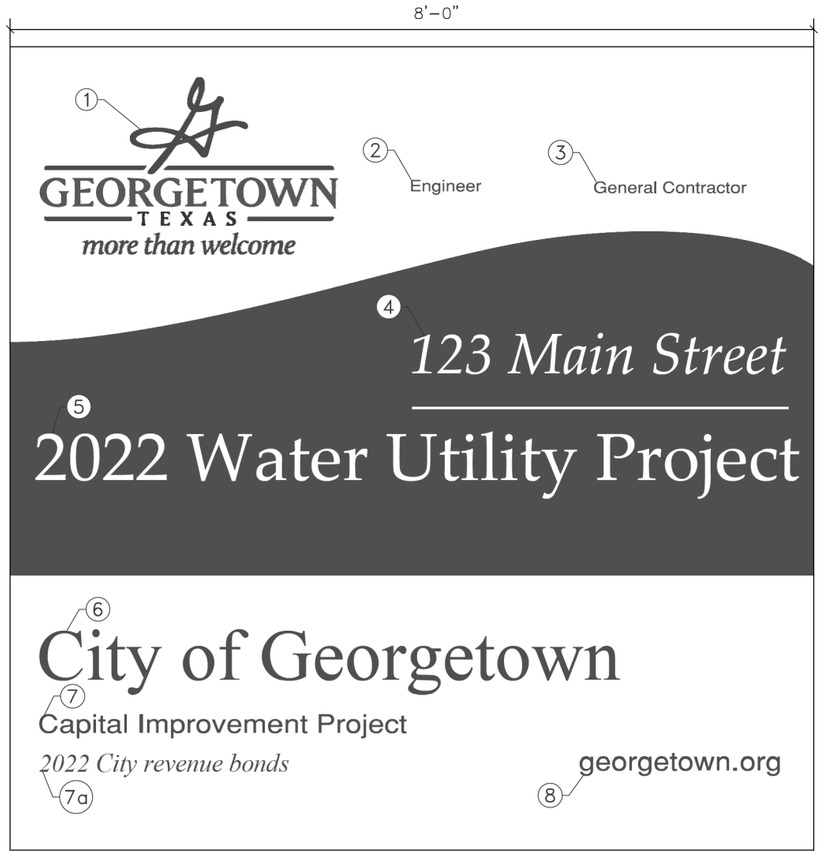

NOTES:
1. PRIMARY LOGO WITH TAGLINE
2. MONTSERRAT (REGULAR) 80% GREY
3. MONTSERRAT (REGULAR) 80% GREY
4. PT SERIF (ITALIC) WHITE
5. PT SERIF (REGULAR) WHITE
6. PT SERIF (REGULAR) 80% GREY
7. MONTSERRAT (REGULAR) 80% GREY
   a. PT SERIF (ITALIC) 80% GREY
8. MONTSERRAT (REGULAR) 80% GREY

The Architect/Engineer assumes responsibility for appropriate use of this standard.

REVISED ON:
06/2006

GEORGETOWN TEXAS more than welcome	CITY OF GEORGETOWN CONSTRUCTION STANDARDS AND DETAILS CAPITAL IMPROVEMENT PROJECT SIGN 8'x8' SIGN	DRAWING NAME: SD26 6 OF 7	SCALE: NTS; DATE: 1/2003; DRAWN BY: MRS; APPROVED BY: TRB

STATE OF TEXAS
ELENA RAMON
141765
LICENSED PROFESSIONAL ENGINEER

3/12/2025

EST.1848 GEORGETOWN TEXAS

BGE, Inc.
101 West Louis Henna Blvd, Suite 400, Austin, TX 78728
Tel: 512-879-0400 • www.bgeinc.com
TBPE Registration No. F-1046

SHELL ROAD

CAPITAL IMPROVEMENT PROJECT SIGN STANDARDS

SHEET 3 OF 4

SHEET NO. 101

DATE: 3/12/2025 2:53:55 PM
FILE: G:\TXC\Projects\City Georgetown\10767-00 Shell Road\03_CADD\01 Shts\02-TCP\Stds\TCP PROJECT SIGN STD 03.dgn 3/12/2025 2:53:55 PM

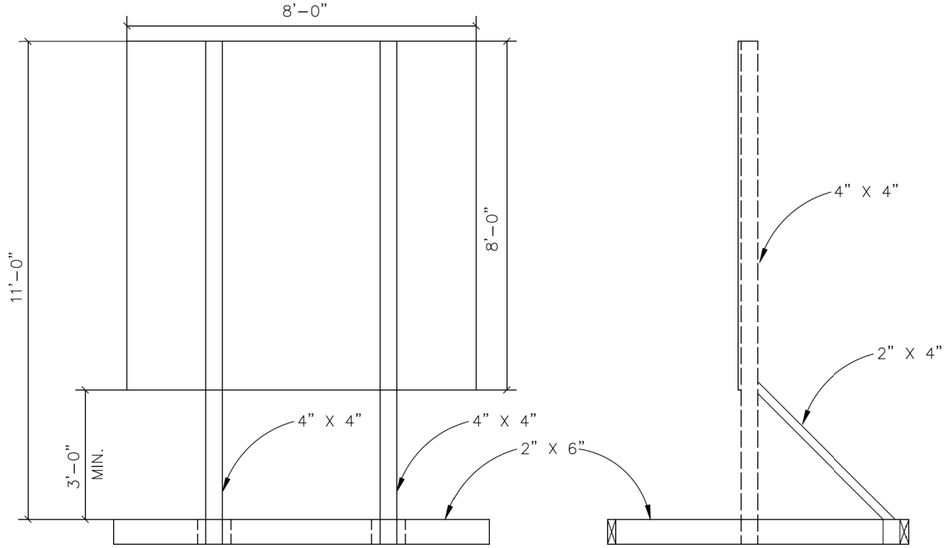

FRONT VIEW

SIDE VIEW

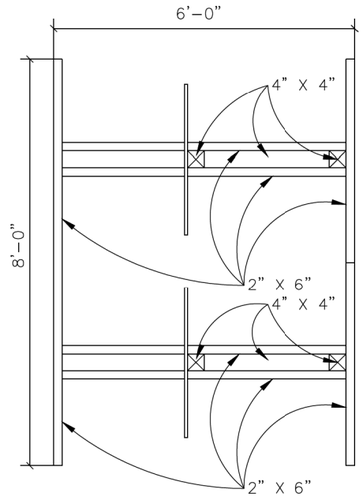

TOP VIEW

NOTES:

1. ALL MATERIALS SHALL BE FURNISHED BY THE CONTRACTOR WITH THE EXCEPTION OF THE CITY OF GEORGETOWN G.U.S. LOGO WHICH WILL BE FURNISHED BY THE CITY.
2. ALL SIGNS TO BE IN CONFORMANCE WITH THE CURRENT EDITION OF THE TEXAS MANUAL OF UNIFORM TRAFFIC CONTROL DEVICES (TMUTCD).

The Architect/Engineer assumes responsibility for appropriate use of this standard.

REVISED ON: 06/2006

GEORGETOWN TEXAS more than welcome

CITY OF GEORGETOWN
CONSTRUCTION STANDARDS AND DETAILS

CAPITAL IMPROVEMENT PROJECT SIGN
8'x48 SIGN BASE

DRAWING NAME: SD26 7 OF 7

SCALE:	DATE:
NTS	1/2003
DRAWN BY: MRS	APPROVED BY: TRB

NOTE:
SIGN WILL NOT BE PAID FOR DIRECTLY. SIGN WILL BE SUBSIDIARY TO OTHER PERTINENT BID ITEMS.

STATE OF TEXAS
ELENA RAMON
141765
LICENSED
PROFESSIONAL ENGINEER

Elena Ramon
3/12/2025

EST. 1848 GEORGETOWN TEXAS

BGE, Inc.
101 West Louis Henna Blvd, Suite 400, Austin, TX 78728
Tel: 512-879-0400 • www.bgeinc.com
TBPE Registration No. F-1046

SHELL ROAD

CAPITAL IMPROVEMENT PROJECT SIGN STANDARDS

SHEET 4 OF 4

SHEET NO. 102

DATE: 3/12/2025 2:53:58 PM
FILE: G:\TXC\Projects\City Georgetown\10767-00 Shell Road\03 CADD\01 Shts\02-TCP\Stds\TCP PROJECT SIGN STD 04.dgn 3/12/2025 2:53:58 PM

℄ SHELL RD

Alignment Name:	SHELL CL		
Alignment Description:			
Alignment Style:	Alignment\Baseline		
	Station	Northing	Easting
Element: Linear			
START	0	10223153.01	3119074.50
PC	605.09	10223701.01	3119331.09
Tangential Direction:	N25.091°		
Tangential Length:	605.09		
Element: Circular	SHELL CL-01		
PC	605.09	10223701.01	3119331.09
HPI	766.262	10223846.97	3119399.43
CC		10224128.45	3118418.20
PT	924.728	10224006.97	3119418.86
Radius:	1008		
Delta:	18.169°	Left	
Degree of Curvature (Arc):	5.684°		
Length:	319.638		
Tangent:	161.172		
Chord:	318.3		
Middle Ordinate:	12.643		
External:	12.804		
Back Tangent Direction:	N25.091°		
Back Radial Direction:	S64.909°		
Chord Direction:	N16.006°		
Ahead Radial Direction:	S83.078°		
Ahead Tangent Direction:	N6.922°E		
Element: Linear			
PT	924.728	10224006.97	3119418.86
PC	1632.117	10224709.20	3119504.11
Tangential Direction:	N6.922°E		
Tangential Length:	707.389		
Element: Circular	SHELL CL-02		
PC	1632.117	10224709.20	3119504.11
HPI	2065.822	10225139.74	3119556.38
CC		10224589.65	3120488.88
PT	2449.844	10225393.74	3119907.93
Radius:	992		
Delta:	47.230°	Right	
Degree of Curvature (Arc):	5.776°		
Length:	817.727		
Tangent:	433.705		
Chord:	794.771		
Middle Ordinate:	83.073		
External:	90.665		
Back Tangent Direction:	N6.922°E		
Back Radial Direction:	S83.078°		
Chord Direction:	N30.537°		
Ahead Radial Direction:	S35.848°		
Ahead Tangent Direction:	N54.152°		
Element: Linear			
PT	2449.844	10225393.74	3119907.93
PC	3548.548	10226037.18	3120798.51
Tangential Direction:	N54.152°		
Tangential Length:	1098.704		
Element: Circular	SHELL CL-03		
PC	3548.548	10226037.18	3120798.51
HPI	4621.054	10226665.27	3121667.86
CC		10228313.27	3119154.05
PT	5597.528	10227712.98	3121897.14
Radius:	2808		
Delta:	41.808°	Left	
Degree of Curvature (Arc):	2.040°		
Length:	2048.979		

℄ SHELL RD CONTINUED

Tangent:	1072.506		
Chord:	2003.823		
Middle Ordinate:	184.827		
External:	197.85		
Back Tangent Direction:	N54.152°		
Back Radial Direction:	S35.848°		
Chord Direction:	N33.248°		
Ahead Radial Direction:	S77.656°		
Ahead Tangent Direction:	N12.344°		
Element: Linear			
PT	5597.528	10227712.98	3121897.14
PC	6444.917	10228540.78	3122078.29
Tangential Direction:	N12.344°		
Tangential Length:	847.389		
Element: Circular	SHELL CL-04		
PC	6444.917	10228540.78	3122078.29
HPI	6535.74	10228629.51	3122097.71
CC		10228947.57	3120219.44
PRC	6626.425	10228719.68	3122108.58
Radius:	1902.845		
Delta:	5.465°	Left	
Degree of Curvature (Arc):	3.011°		
Length:	181.509		
Tangent:	90.823		
Chord:	181.44		
Middle Ordinate:	2.164		
External:	2.166		
Back Tangent Direction:	N12.344°		
Back Radial Direction:	S77.656°		
Chord Direction:	N9.611°E		
Ahead Radial Direction:	S83.122°		
Ahead Tangent Direction:	N6.878°E		
Element: Circular	SHELL CL-05		
PRC	6626.425	10228719.68	3122108.58
HPI	6712.036	10228804.67	3122118.84
CC		10228491.78	3123997.73
PT	6797.532	10228888.40	3122136.68
Radius:	1902.845		
Delta:	5.152°	Right	
Degree of Curvature (Arc):	3.011°		
Length:	171.107		
Tangent:	85.611		
Chord:	171.049		
Middle Ordinate:	1.923		
External:	1.925		
Back Tangent Direction:	N6.878°E		
Back Radial Direction:	S83.122°		
Chord Direction:	N9.455°E		
Ahead Radial Direction:	S77.969°		
Ahead Tangent Direction:	N12.031°		
Element: Linear			
PT	6797.532	10228888.40	3122136.68
PC	7371.755	10229450.01	3122256.37
Tangential Direction:	N12.031°		
Tangential Length:	574.223		
Element: Circular	SHELL CL-06		
PC	7371.755	10229450.01	3122256.37
HPI	8101.767	10230163.99	3122408.53
CC		10229133.19	3123742.98
PT	8732.886	10230491.57	3123060.92
Radius:	1520		
Delta:	51.307°	Right	
Degree of Curvature (Arc):	3.769°		
Length:	1361.131		
Tangent:	730.012		
Chord:	1316.106		
Middle Ordinate:	149.83		
External:	166.214		
Back Tangent Direction:	N12.031°		
Back Radial Direction:	S77.969°		
Chord Direction:	N37.684°		
Ahead Radial Direction:	S26.662°		
Ahead Tangent Direction:	N63.338°		
Element: Linear			
PT	8732.886	10230491.57	3123060.92
END	11234.88	10231614.29	3125296.88
Tangential Direction:	N63.338°		
Tangential Length:	2502.003		

℄ BELLAIRE DR

Alignment Name:	IR CL-4		
Alignment Description:			
Alignment Style:	Alignment\Intersecting Road		
	Station	Northing	Easting
Element: Linear			
START	0	10227225.3	3121641.99
END	186.188	10227174.5	3121821.14
Tangential Direction:	S74.190°		
Tangential Length:	186.188		

℄ VERDE VISTA

Alignment Name:	IR CL-14		
Alignment Description:			
Alignment Style:	Alignment\Intersecting Road		
	Station	Northing	Easting
Element: Linear			
START	0	10225002.6	3119494.76
END	187.157	10224934.4	3119669.05
Tangential Direction:	S68.631°E		
Tangential Length:	187.157		

℄ MADRID DR

Alignment Name:	IR CL-6		
Alignment Description:			
Alignment Style:	Alignment\Intersecting Road		
	Station	Northing	Easting
Element: Linear			
START ( )	0	10226219.9	3121025.59
END ( )	86.361	10226158.2	3121086.03
Tangential Direction:	S44.424°		
Tangential Length:	86.361		

℄ SEQUOIA SPUR W

Alignment Name:	IR CL-1		
Alignment Description:			
Alignment Style:	Alignment\Intersecting Road		
	Station	Northing	Easting
Element: Linear			
START	0	10223636.4	3119207.52
END	174.302	10223562.6	3119365.40
Tangential Direction:	S64.931°E		
Tangential Length:	174.302		

℄ SYCAMORE ST

Alignment Name:	IR CL-10		
Alignment Description:			
Alignment Style:	Alignment\Intersecting Road		
	Station	Northing	Easting
Element: Linear			
START	0	10228300.5	3122025.71
END	96.664	10228321.1	3121931.27
Tangential Direction:	N77.682°		
Tangential Length:	96.664		

℄ SONORA TRACE

Alignment Name:	IR CL-3		
Alignment Description:			
Alignment Style:	Alignment\Intersecting Road		
	Station	Northing	Easting
Element: Linear			
START	0	10225607.3	3120203.51
END	86.852	10225675.6	3120149.83
Tangential Direction:	N38.174°		
Tangential Length:	86.852		

℄ ROSEDALE BLVD

Alignment Name:	IR CL-		
Alignment Description:			
Alignment Style:	Alignment\Intersecting Road		
	Station	Northing	Easting
Element: Linear			
START	0	10225898.4	3120463.73
END	169.77	10225760.8	3120563.21
Tangential Direction:	S35.871°E		
Tangential Length:	169.77		

℄ SKYFLOWER DR

Alignment Name:	IR CL-2		
Alignment Description:			
Alignment Style:	Alignment\Intersecting Road		
	Station	Northing	Easting
Element: Linear			
START	0	10225542.9	3120114.30
END	83.285	10225476.6	3120164.79
Tangential Direction:	S37.318°		
Tangential Length:	83.285		

℄ GEORGETOWN VILLAGE

Alignment Name:	IR CL-9		
Alignment Description:			
Alignment Style:	Alignment\Intersecting Road		
	Station	Northing	Easting
Element: Linear			
START	0	10227736.7	3121902.32
END	92.024	10227757.6	3121812.70
Tangential Direction:	N76.878°		
Tangential Length:	92.024		

SHELL RD SUPERELEVATION DATA

Superelevation: SHELL_LT		Superelevation: SHELL_RT	
Station	Cross Slope	Station	Cross Slope
8+72.5300 R1	-2.50%	8+72.5300 R1	-4.64%
8+80.0000 R1	-2.50%	8+80.0000 R1	-4.64%
9+55.0000 R1	-3.00%	9+55.0000 R1	-3.00%
15+48.0000 R1	-3.00%	15+48.0000 R1	-3.00%
16+42.0000 R1	-1.50%	16+42.0000 R1	-1.50%
24+40.0000 R1	-1.50%	24+40.0000 R1	-1.50%
25+34.0000 R1	-3.00%	25+34.0000 R1	-3.00%
30+65.0000 R1	-3.00%	34+64.0000 R1	-3.00%
31+48.0000 R1	-2.00%	35+58.0000 R1	-1.50%
32+43.0000 R1	-2.00%	55+90.0000 R1	-1.50%
33+26.0000 R1	-3.00%	56+59.0000 R1	-3.00%
34+64.0000 R1	-3.00%	69+55.0000 R1	-3.00%
35+58.0000 R1	-1.50%	69+76.7100 R1	-2.80%
55+90.0000 R1	-1.50%		
56+59.0000 R1	-3.00%		
69+55.0000 R1	-3.00%		
69+76.7100 R1	-2.09%		

STATE OF TEXAS
ELENA RAMON
141765
LICENSED
PROFESSIONAL ENGINEER

Elena Ramon

3/12/2025

EST.1848
GEORGETOWN
TEXAS

BGE, Inc.
101 West Louis Henna Blvd, Suite 400, Austin, TX 78728
Tel: 512-879-0400 • www.bgeinc.com
TBPE Registration No. F-1046

SHELL ROAD

HORIZONTAL ALIGNMENT DATA

DATE: 3/12/2025 2:54:00 PM
FILE: G:\TXC\Projects\City Georgetown\10767-00 Shell Road\03 CADD\01 Shts\03-RDWY\Shell HALN 01.dgn

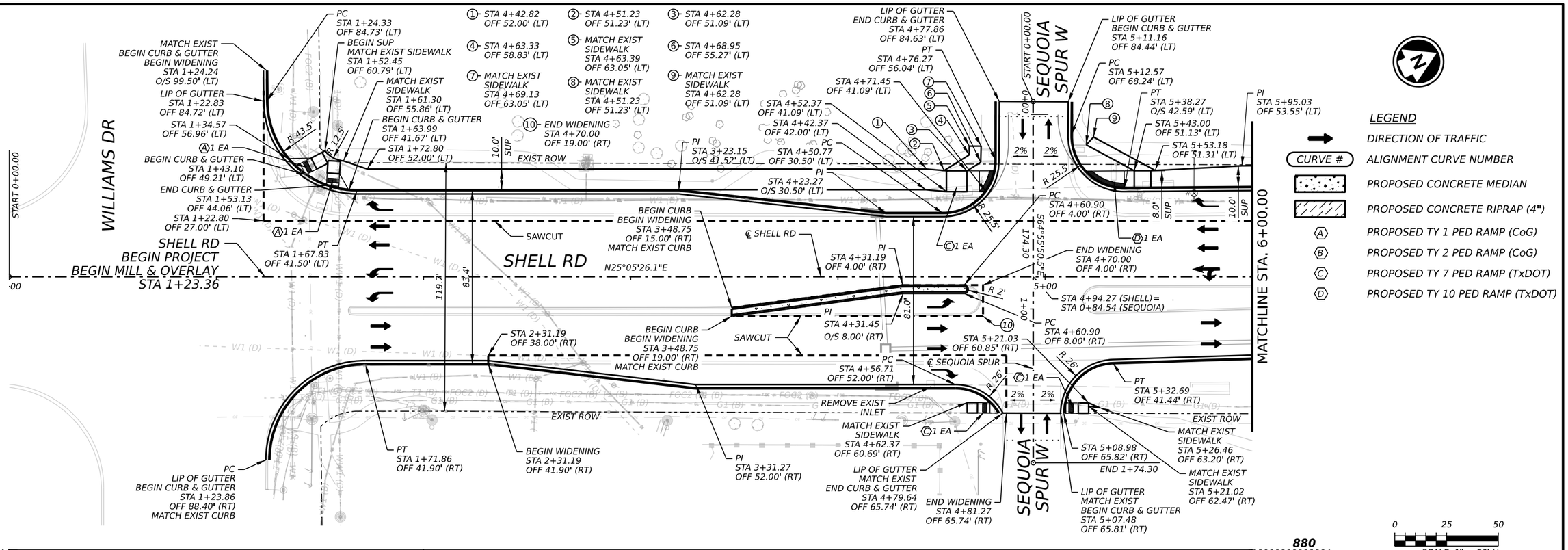

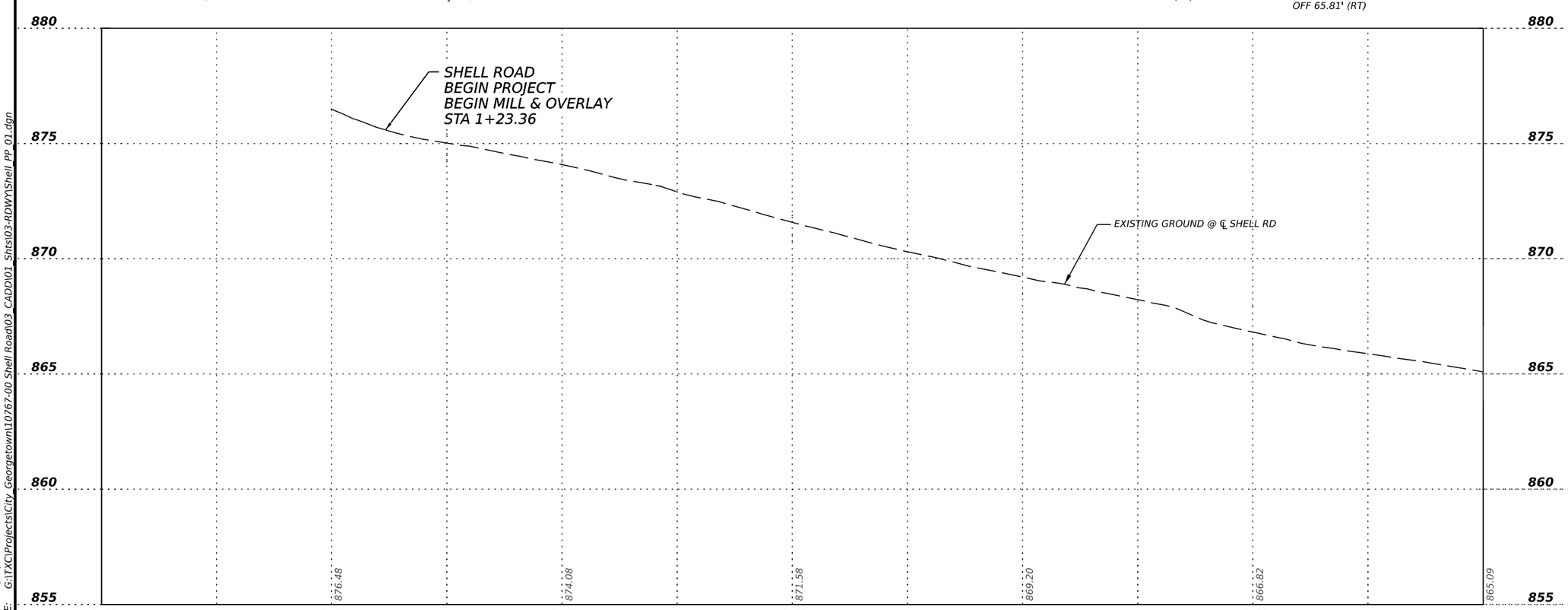

NOTE: ALL DIMENSIONS ARE TO FACE OF CURB UNLESS OTHERWISE NOTED.

STATE OF TEXAS
ELENA RAMON
141765
LICENSED
PROFESSIONAL ENGINEER
Elena Ramon
3/12/2025

EST.1848 GEORGETOWN TEXAS

BGE, Inc.
101 West Louis Henna Blvd, Suite 400, Austin, TX 78728
Tel: 512-879-0400 • www.bgeinc.com
TBPE Registration No. F-1046

SHELL ROAD

ROADWAY PLAN & PROFILE

BEGIN TO STA 6+00

SHEET 1 OF 12

SHEET NO. 104

DATE: 3/12/2025 2:54:18 PM
FILE: G:\TXC\Projects\City Georgetown\10767-00 Shell Road\03 CADD\01 Shts\03-RDWY\Shell_PP_01.dgn

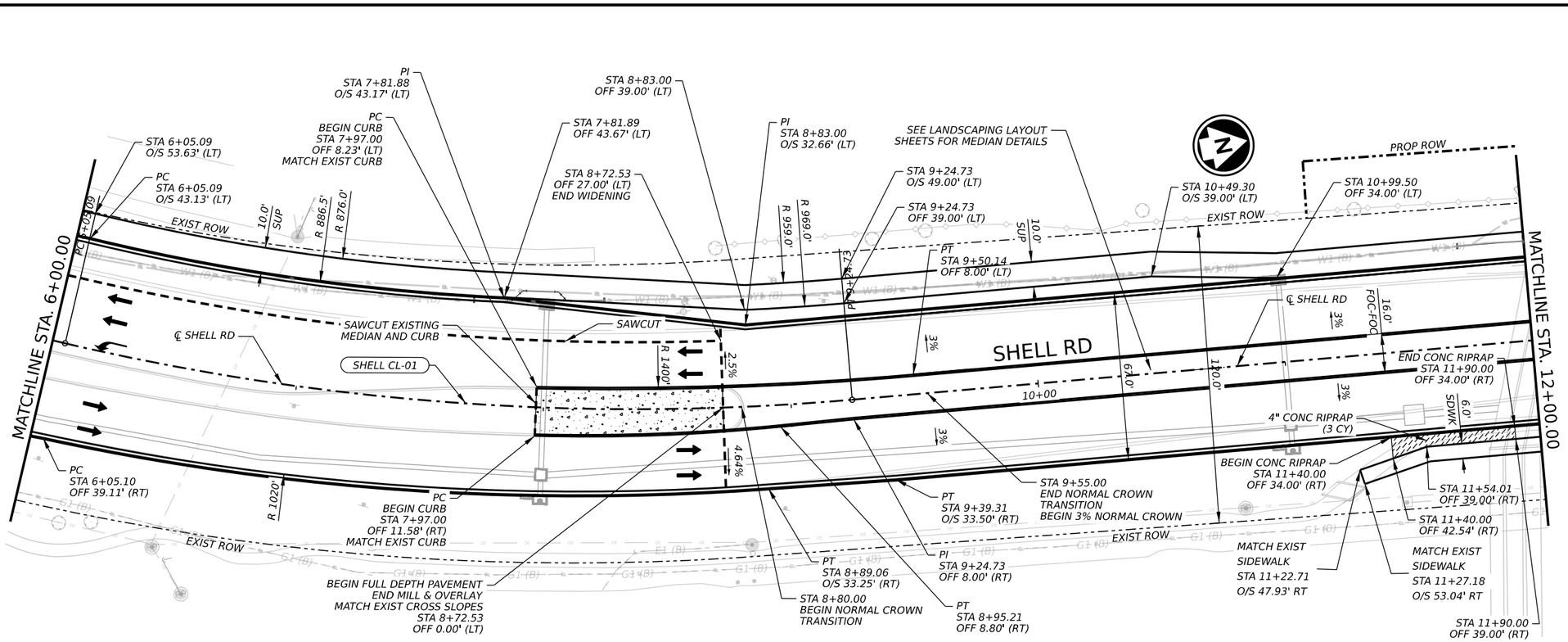

NOTE: ALL DIMENSIONS ARE TO FACE OF CURB UNLESS OTHERWISE NOTED.

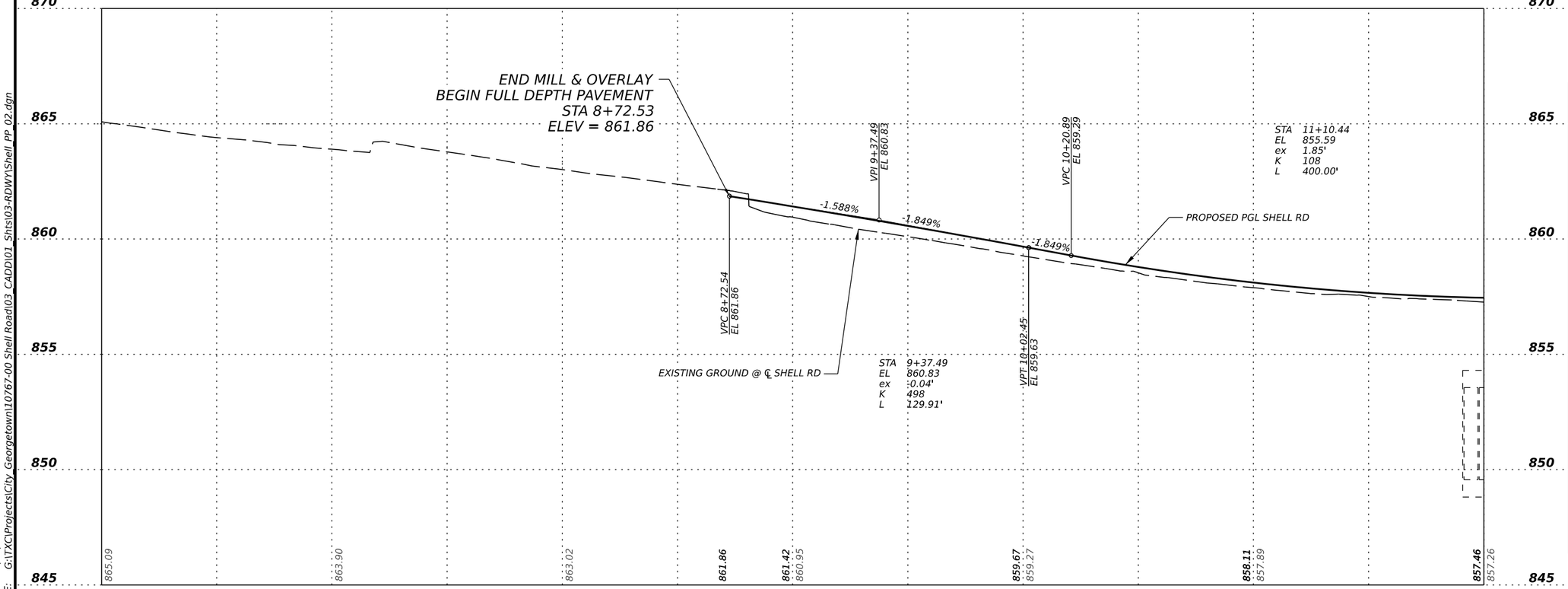

STATE OF TEXAS
ELENA RAMON
141765
LICENSED PROFESSIONAL ENGINEER

Elena Ramon

3/12/2025

EST. 1848 GEORGETOWN TEXAS

BGE, Inc.
101 West Louis Henna Blvd, Suite 400, Austin, TX 78728
Tel: 512-879-0400 • www.bgeinc.com
TBPE Registration No. F-1046

SHELL ROAD

ROADWAY PLAN & PROFILE

STA 6+00 TO 12+00

SHEET 2 OF 12

SHEET NO. 105

DATE: 3/12/2025 2:54:26 PM
FILE: G:\TXC\Projects\City Georgetown\10767-00 Shell Road\03 CADD\01 Shts\03-RDWY\Shell PP 02.dgn

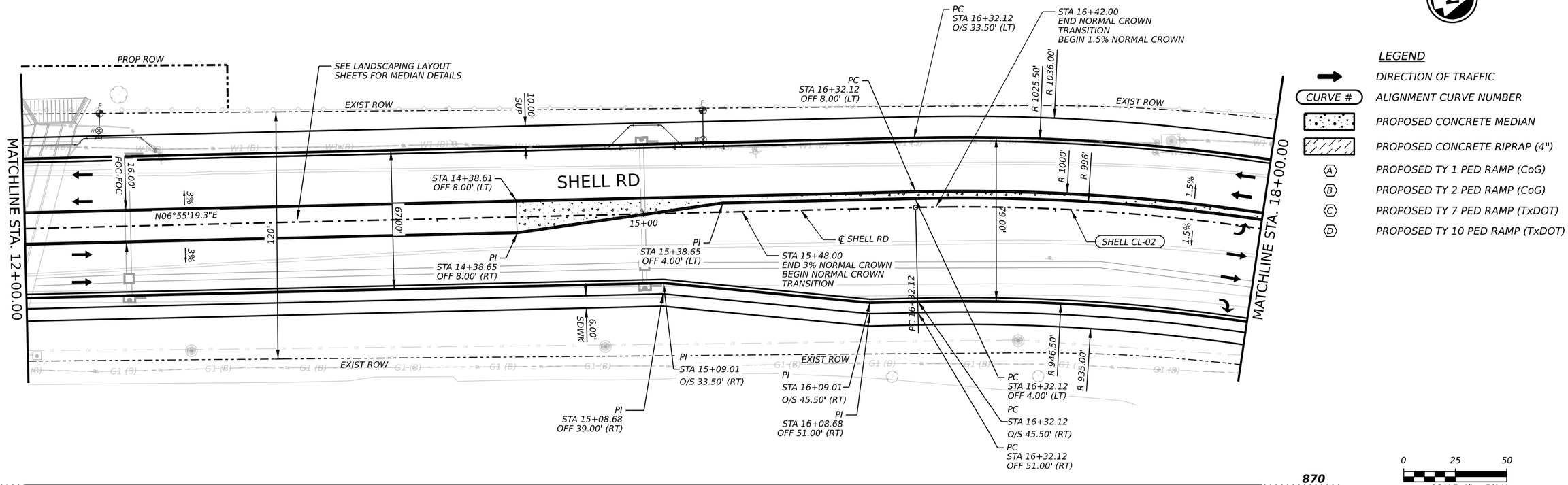

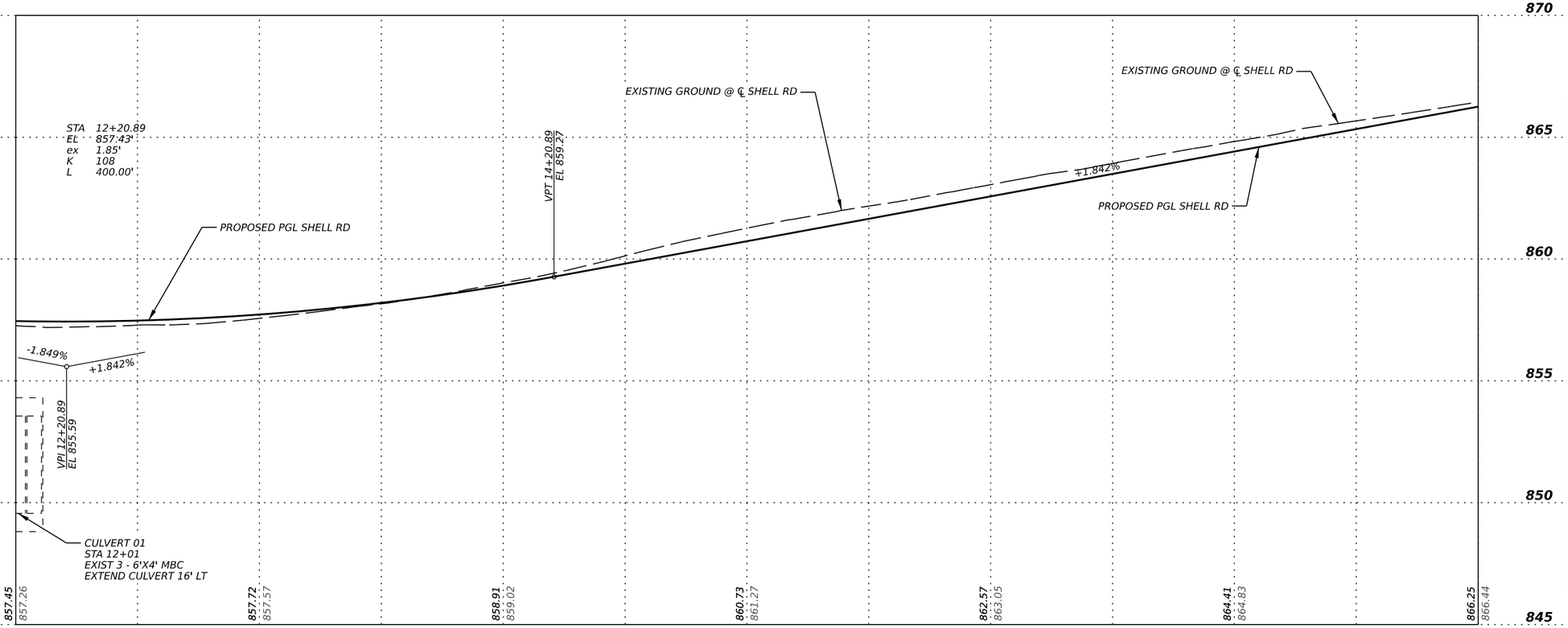

NOTE: ALL DIMENSIONS ARE TO FACE OF CURB UNLESS OTHERWISE NOTED.

STATE OF TEXAS
ELENA RAMON
141765
LICENSED
PROFESSIONAL ENGINEER

3/12/2025

EST.1848 GEORGETOWN TEXAS

BGE, Inc.
101 West Louis Henna Blvd, Suite 400, Austin, TX 78728
Tel: 512-879-0400 • www.bgeinc.com
TBPE Registration No. F-1046

SHELL ROAD

ROADWAY PLAN & PROFILE

STA 12+00 TO 18+00

SHEET 3 OF 12

SHEET NO. 106

DATE: 3/12/2025 2:54:31 PM
FILE: G:\TXC\Projects\City Georgetown\10767-00 Shell Road\03 CADD\01 Shts\03-RDWY\Shell PP 03.dgn

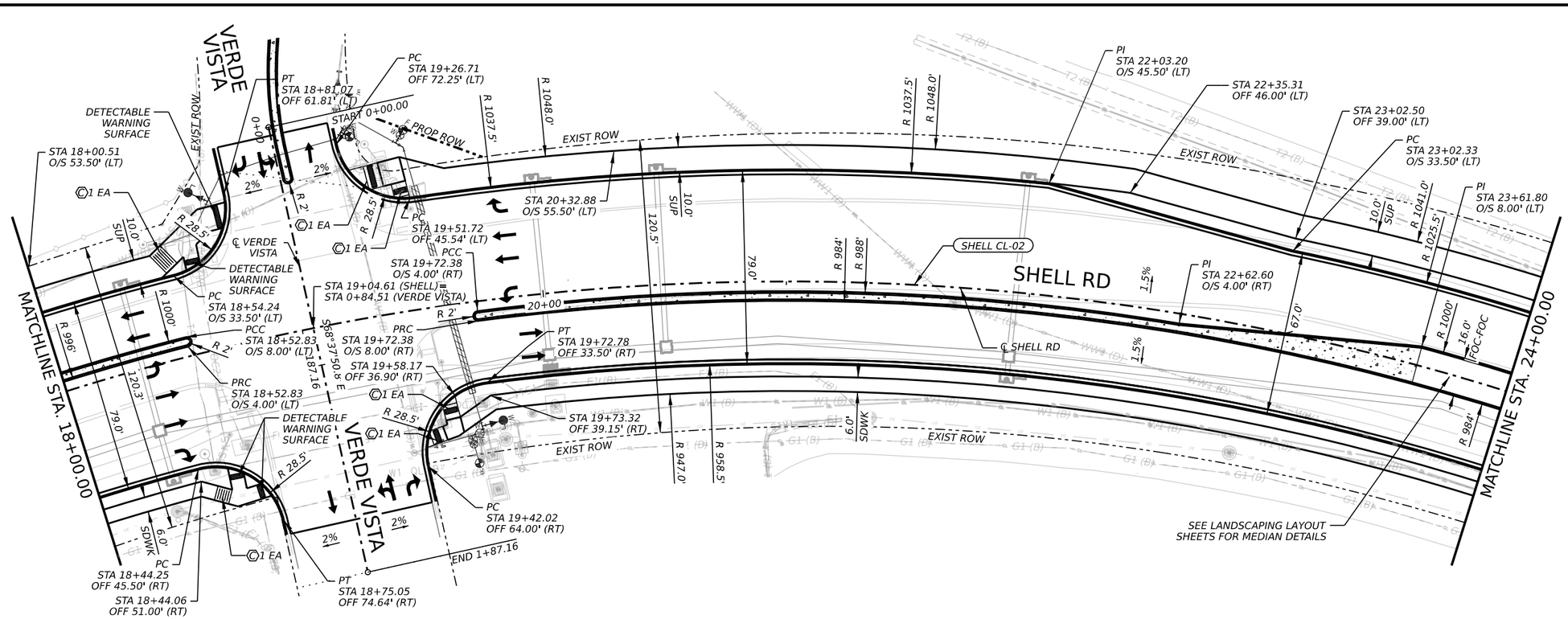

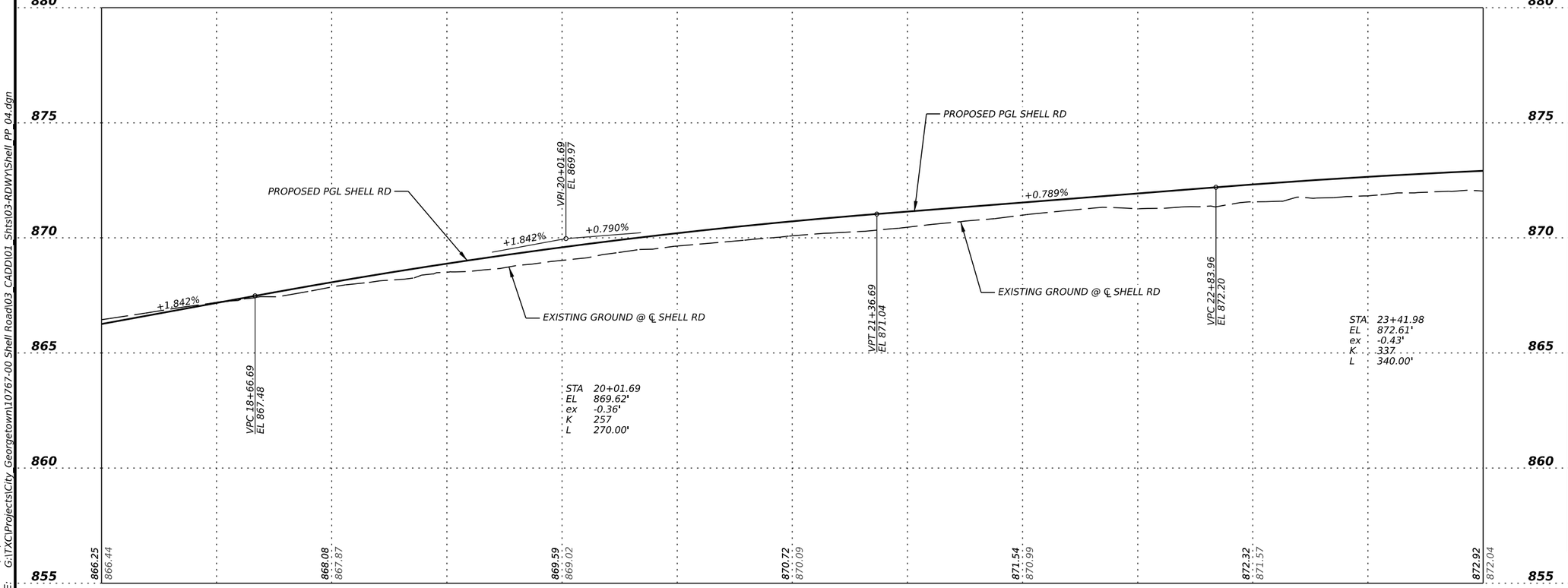

0 25 50

SCALE: 1" = 50' H
1" = 5' V

NOTE: ALL DIMENSIONS ARE TO FACE OF CURB UNLESS OTHERWISE NOTED.

STATE OF TEXAS
ELENA RAMON
141765
LICENSED
PROFESSIONAL ENGINEER

3/12/2025

EST. 1848 GEORGETOWN TEXAS

BGE, Inc.
101 West Louis Henna Blvd, Suite 400, Austin, TX 78728
Tel: 512-879-0400 • www.bgeinc.com
TBPE Registration No. F-1046

SHELL ROAD

ROADWAY PLAN & PROFILE

STA 18+00 TO 24+00

DATE: 3/12/2025 2:54:35 PM
FILE: G:\TXC\Projects\City Georgetown\10767-00 Shell Road\03 CADD\01 Shts\03-ROW\Shell_PP_04.dgn

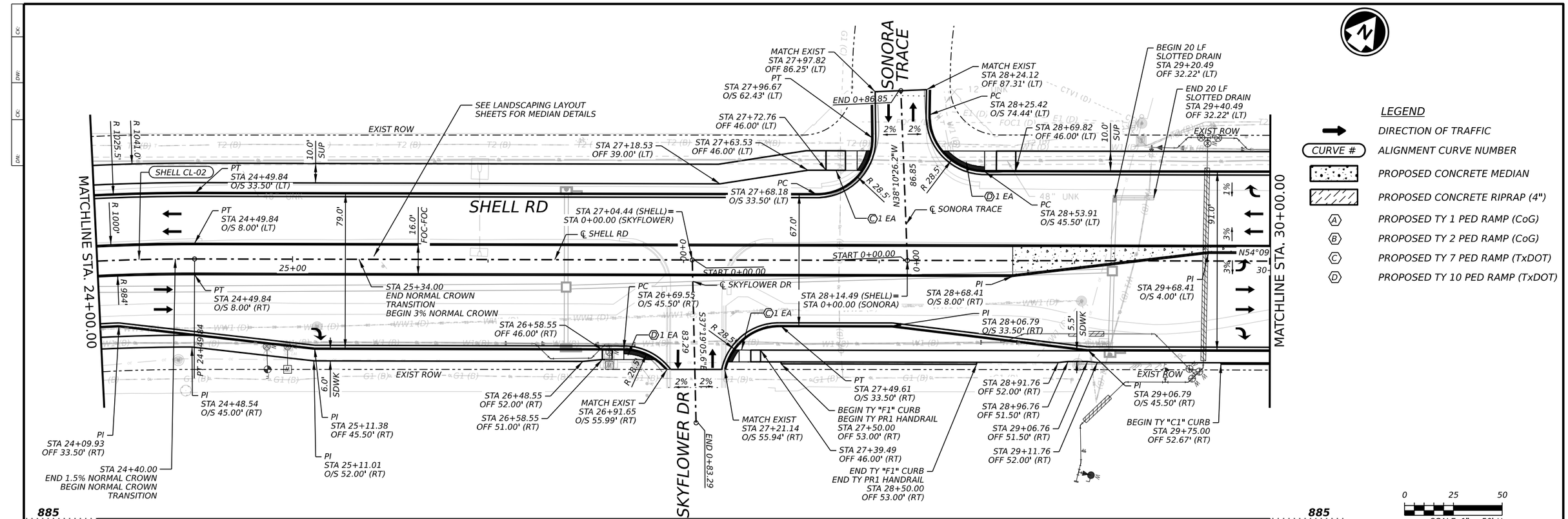

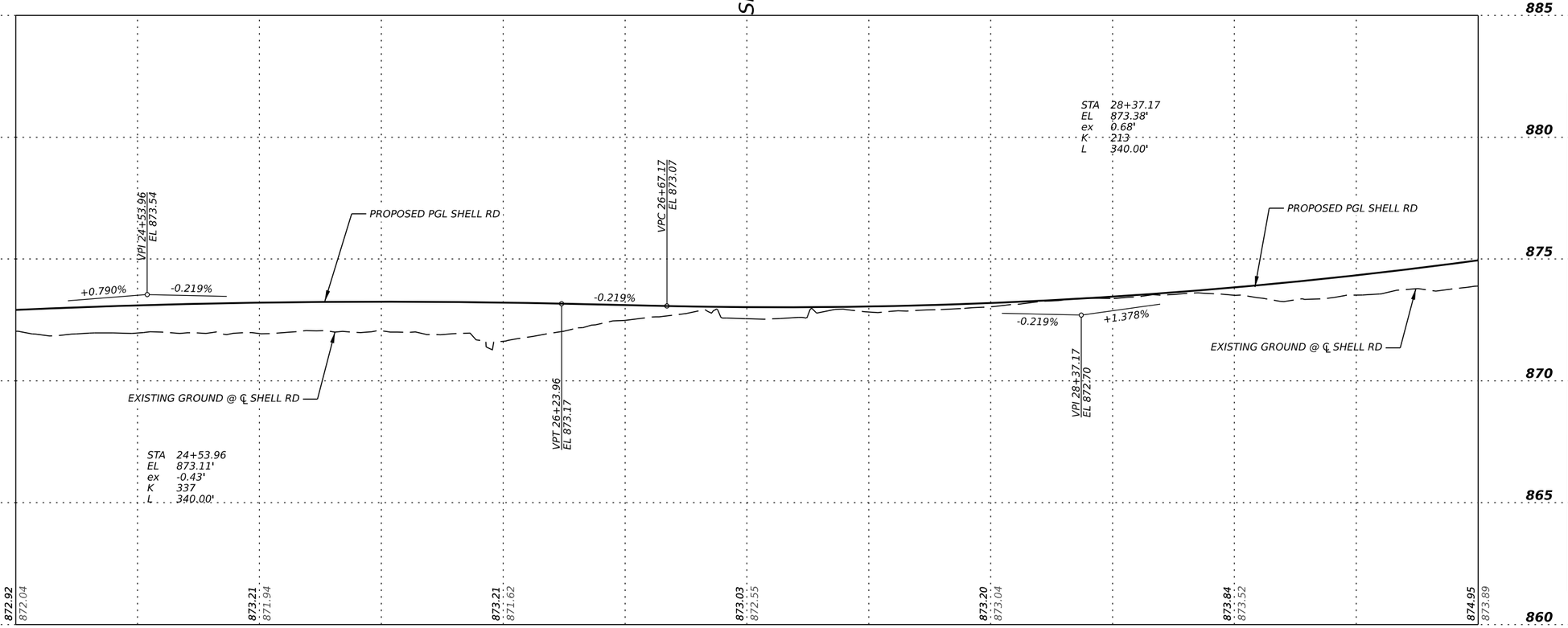

LEGEND

- DIRECTION OF TRAFFIC
- CURVE # — ALIGNMENT CURVE NUMBER
- PROPOSED CONCRETE MEDIAN
- PROPOSED CONCRETE RIPRAP (4")
- (A) PROPOSED TY 1 PED RAMP (CoG)
- (B) PROPOSED TY 2 PED RAMP (CoG)
- (C) PROPOSED TY 7 PED RAMP (TxDOT)
- (D) PROPOSED TY 10 PED RAMP (TxDOT)

NOTE: ALL DIMENSIONS ARE TO FACE OF CURB UNLESS OTHERWISE NOTED.

STATE OF TEXAS
ELENA RAMON
141765
LICENSED PROFESSIONAL ENGINEER

3/12/2025

EST.1848 GEORGETOWN TEXAS

BGE, Inc.
101 West Louis Henna Blvd, Suite 400, Austin, TX 78728
Tel: 512-879-0400 • www.bgeinc.com
TBPE Registration No. F-1046

SHELL ROAD

ROADWAY PLAN & PROFILE

STA 24+00 TO 30+00

SHEET NO. 108

DATE: 3/12/2025 2:54:41 PM
FILE: G:\TXC\Projects\City Georgetown\10767-00 Shell Road\03 CADD\01 Shts\03-RDWY\Shell_PP_05.dgn

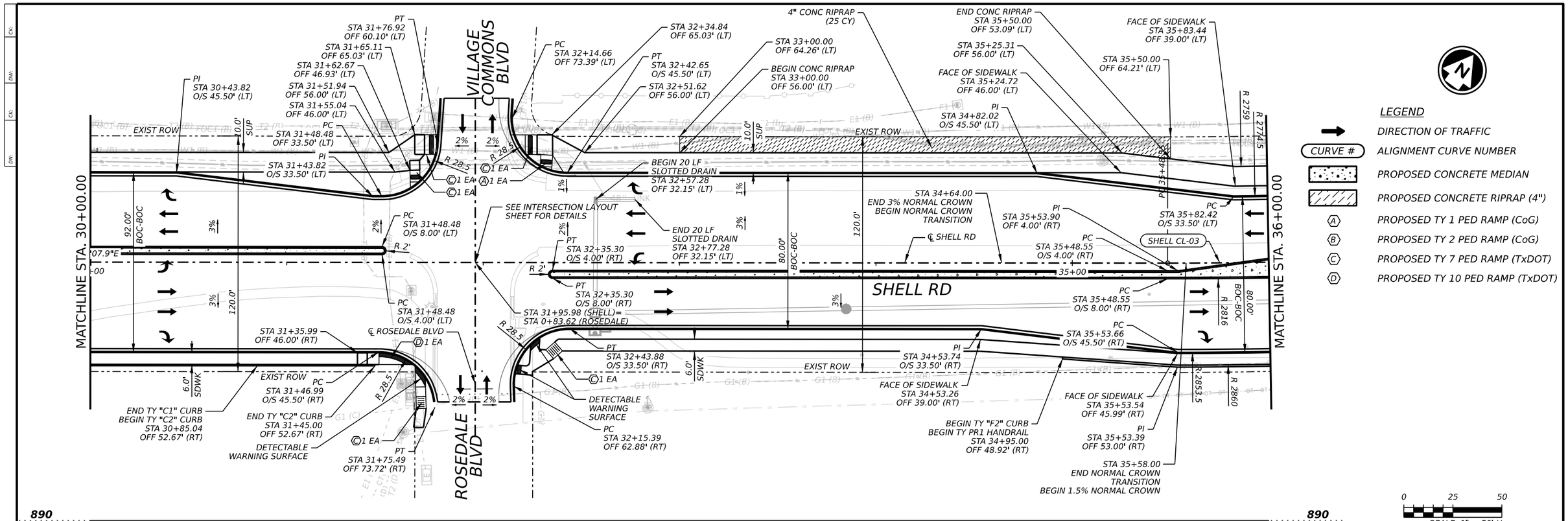

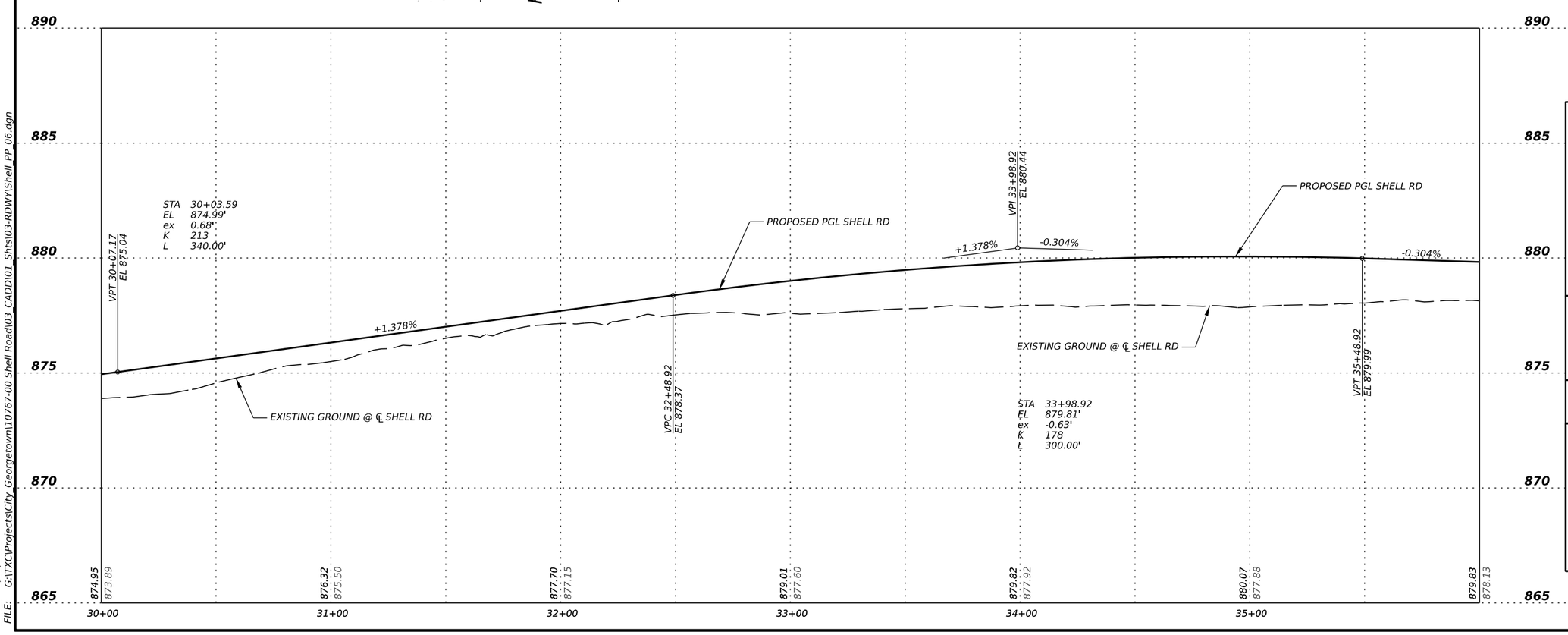

NOTE: ALL DIMENSIONS ARE TO FACE OF CURB UNLESS OTHERWISE NOTED.

STATE OF TEXAS
ELENA RAMON
141765
LICENSED PROFESSIONAL ENGINEER

Elena Ramon

3/12/2025

EST.1848 GEORGETOWN TEXAS

BGE, Inc.
101 West Louis Henna Blvd, Suite 400, Austin, TX 78728
Tel: 512-879-0400 • www.bgeinc.com
TBPE Registration No. F-1046

SHELL ROAD

ROADWAY PLAN & PROFILE

STA 30+00 TO 36+00

SHEET 6 OF 12

SHEET NO. 109

DATE: 3/12/2025 2:54:48 PM
FILE: G:\TXC\Projects\City Georgetown\10767-00 Shell Road\03 CADD\01_Shts\03-RDWY\Shell_PP_06.dgn

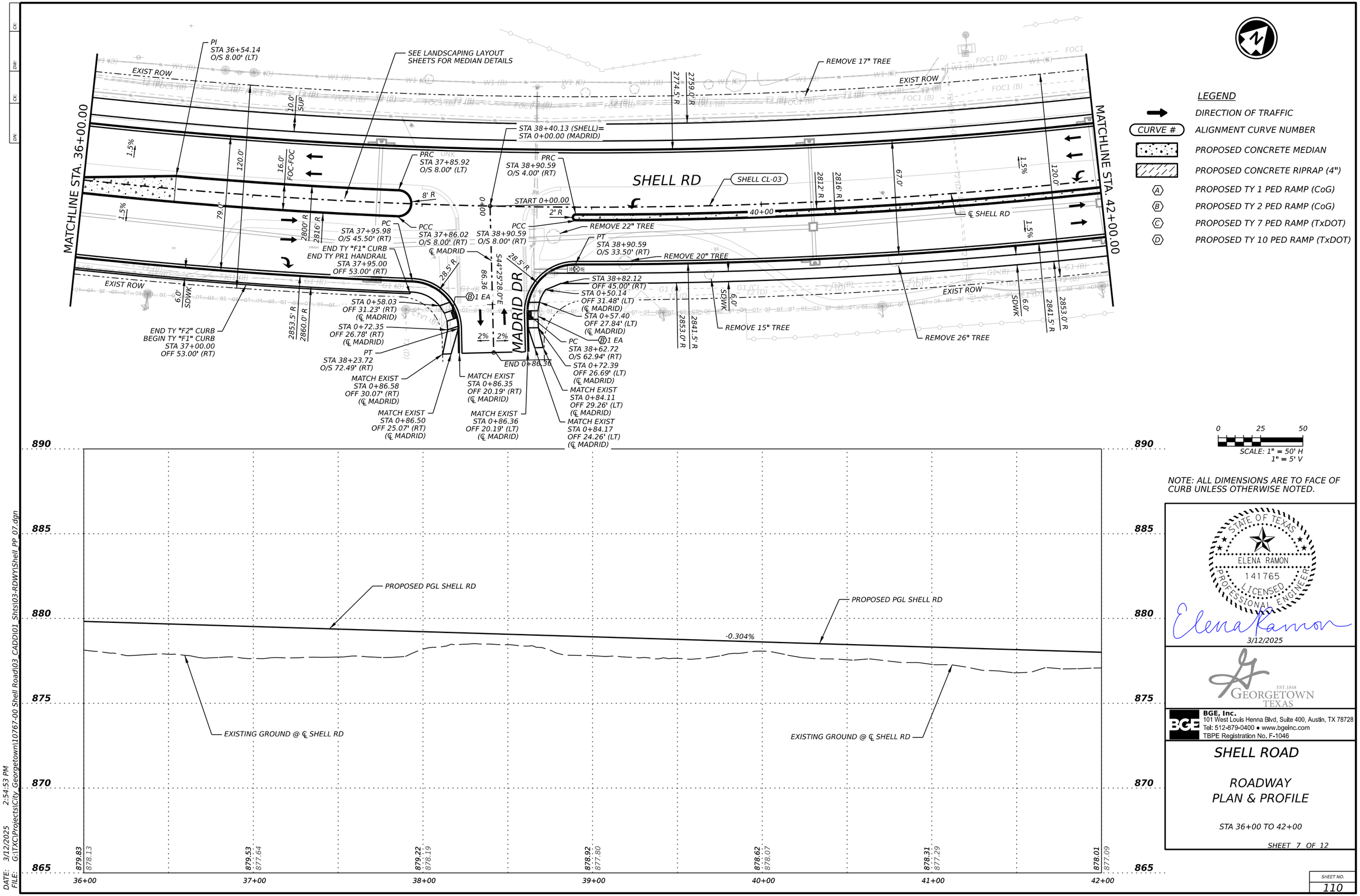

0 25 50

SCALE: 1" = 50' H
1" = 5' V

NOTE: ALL DIMENSIONS ARE TO FACE OF CURB UNLESS OTHERWISE NOTED.

STATE OF TEXAS
ELENA RAMON
141765
LICENSED
PROFESSIONAL ENGINEER

3/12/2025

EST.1848 GEORGETOWN TEXAS

BGE, Inc.
101 West Louis Henna Blvd, Suite 400, Austin, TX 78728
Tel: 512-879-0400 • www.bgeinc.com
TBPE Registration No. F-1046

SHELL ROAD

ROADWAY PLAN & PROFILE

STA 36+00 TO 42+00

SHEET 7 OF 12

SHEET NO. 110

DATE: 3/12/2025 2:54:53 PM
FILE: G:\TX\Projects\City Georgetown\10767-00 Shell Road\03 CADD\01 Shts\03-RDWY\Shell_PP_07.dgn

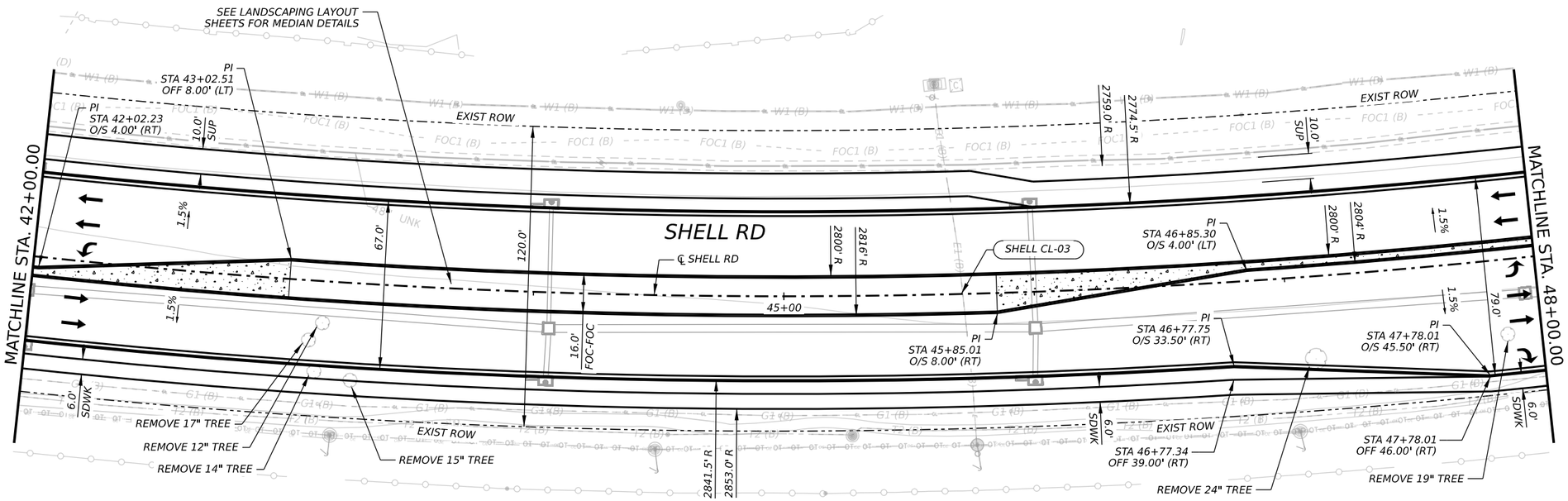

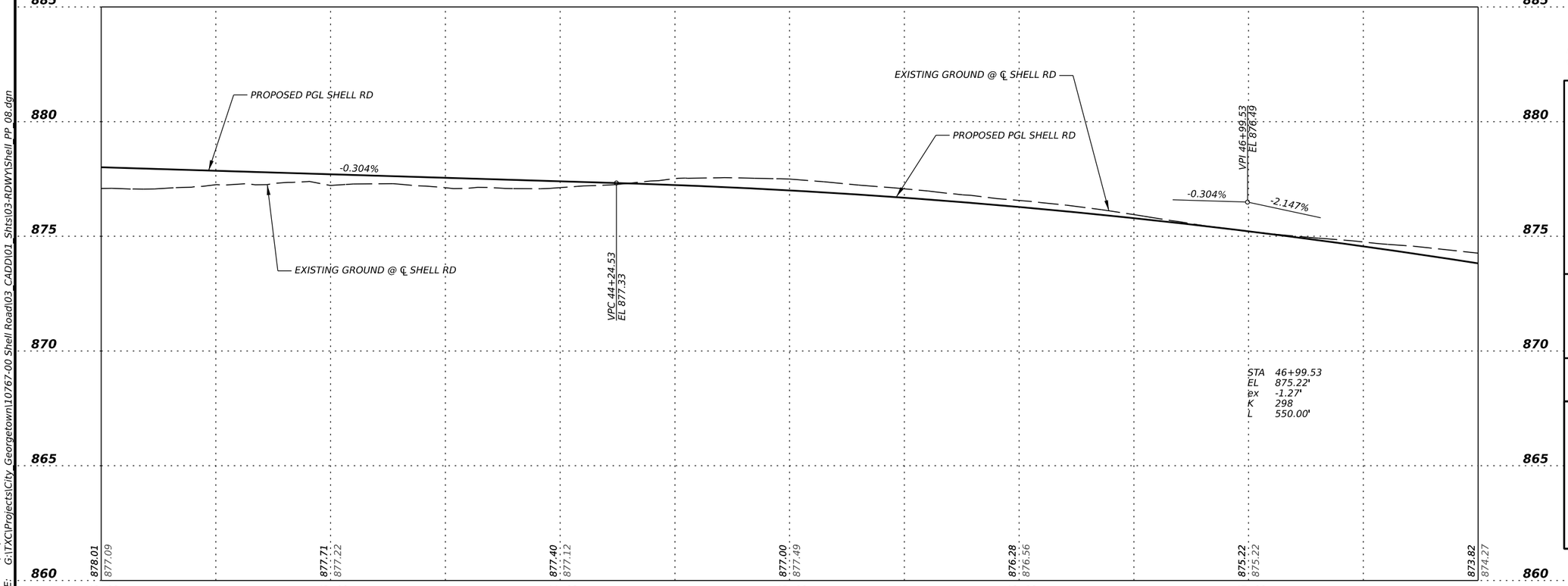

LEGEND

- DIRECTION OF TRAFFIC
- CURVE # — ALIGNMENT CURVE NUMBER
- PROPOSED CONCRETE MEDIAN
- PROPOSED CONCRETE RIPRAP (4")
- A — PROPOSED TY 1 PED RAMP (CoG)
- B — PROPOSED TY 2 PED RAMP (CoG)
- C — PROPOSED TY 7 PED RAMP (TxDOT)
- D — PROPOSED TY 10 PED RAMP (TxDOT)

0 25 50

SCALE: 1" = 50' H
1" = 5' V

NOTE: ALL DIMENSIONS ARE TO FACE OF CURB UNLESS OTHERWISE NOTED.

STATE OF TEXAS
ELENA RAMON
141765
LICENSED
PROFESSIONAL ENGINEER

3/12/2025

EST.1848 GEORGETOWN TEXAS

BGE, Inc.
101 West Louis Henna Blvd, Suite 400, Austin, TX 78728
Tel: 512-879-0400 • www.bgeinc.com
TBPE Registration No. F-1046

SHELL ROAD

ROADWAY PLAN & PROFILE

STA 42+00 TO 48+00

SHEET 8 OF 12

SHEET NO. 111

DATE: 3/12/2025 2:54:59 PM
FILE: G:\TXC\Projects\City Georgetown\10767-00 Shell Road\03 CADD\01 Shts\03-RDWY\Shell_PP_08.dgn

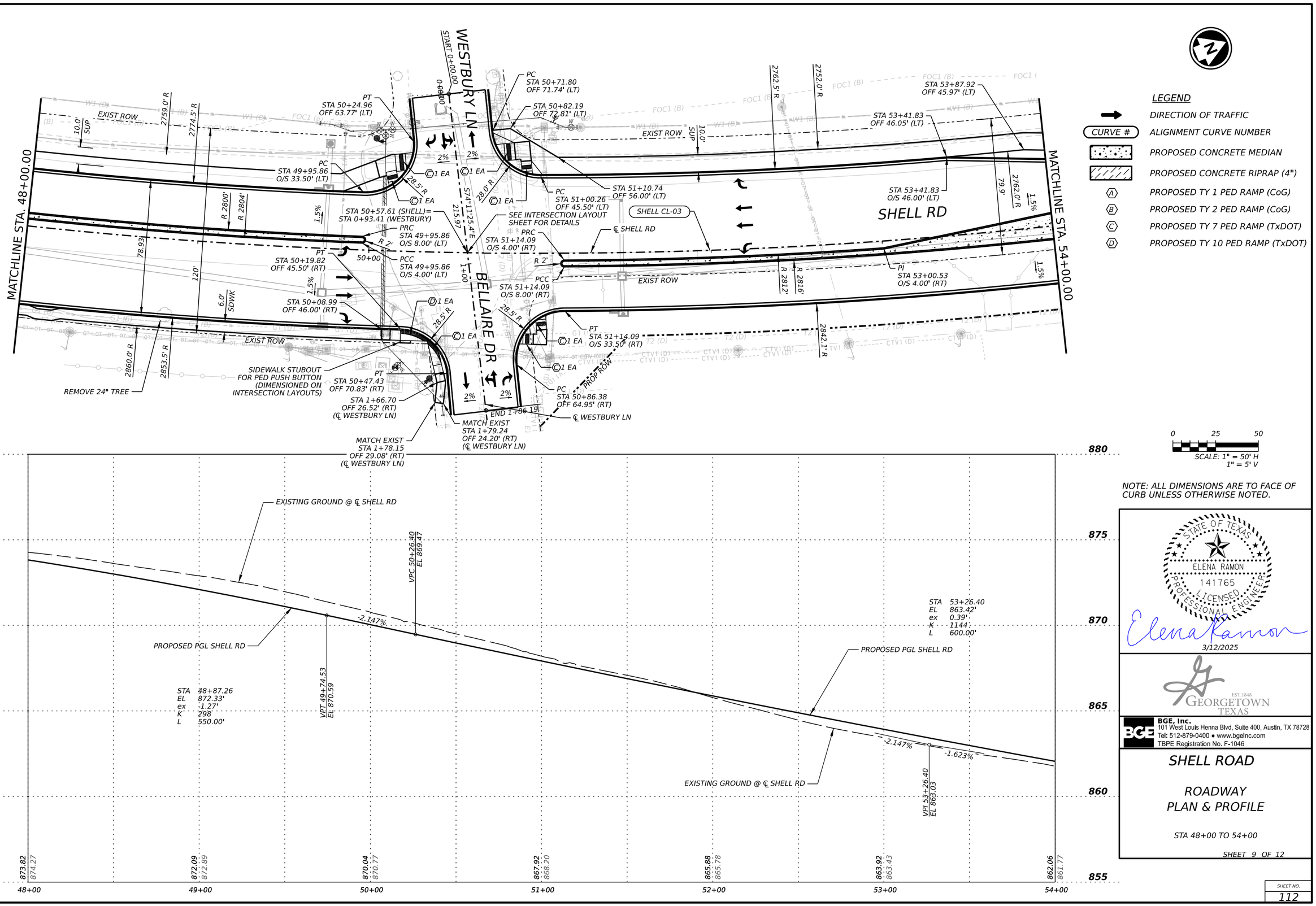

LEGEND

- DIRECTION OF TRAFFIC
- CURVE # — ALIGNMENT CURVE NUMBER
- PROPOSED CONCRETE MEDIAN
- PROPOSED CONCRETE RIPRAP (4")
- (A) PROPOSED TY 1 PED RAMP (CoG)
- (B) PROPOSED TY 2 PED RAMP (CoG)
- (C) PROPOSED TY 7 PED RAMP (TxDOT)
- (D) PROPOSED TY 10 PED RAMP (TxDOT)

0 25 50

SCALE: 1" = 50' H
1" = 5' V

NOTE: ALL DIMENSIONS ARE TO FACE OF CURB UNLESS OTHERWISE NOTED.

STATE OF TEXAS
ELENA RAMON
141765
LICENSED PROFESSIONAL ENGINEER

3/12/2025

EST. 1848 GEORGETOWN TEXAS

BGE, Inc.
101 West Louis Henna Blvd, Suite 400, Austin, TX 78728
Tel: 512-879-0400 • www.bgeinc.com
TBPE Registration No. F-1046

SHELL ROAD

ROADWAY PLAN & PROFILE

STA 48+00 TO 54+00

SHEET 9 OF 12

SHEET NO. 112

DATE: 3/12/2025 2:55:04 PM
FILE: G:\TXC\Projects\City Georgetown\10767-00 Shell Road\03 CADD\01 Shts\03-ROW\Shell PP 09.dgn

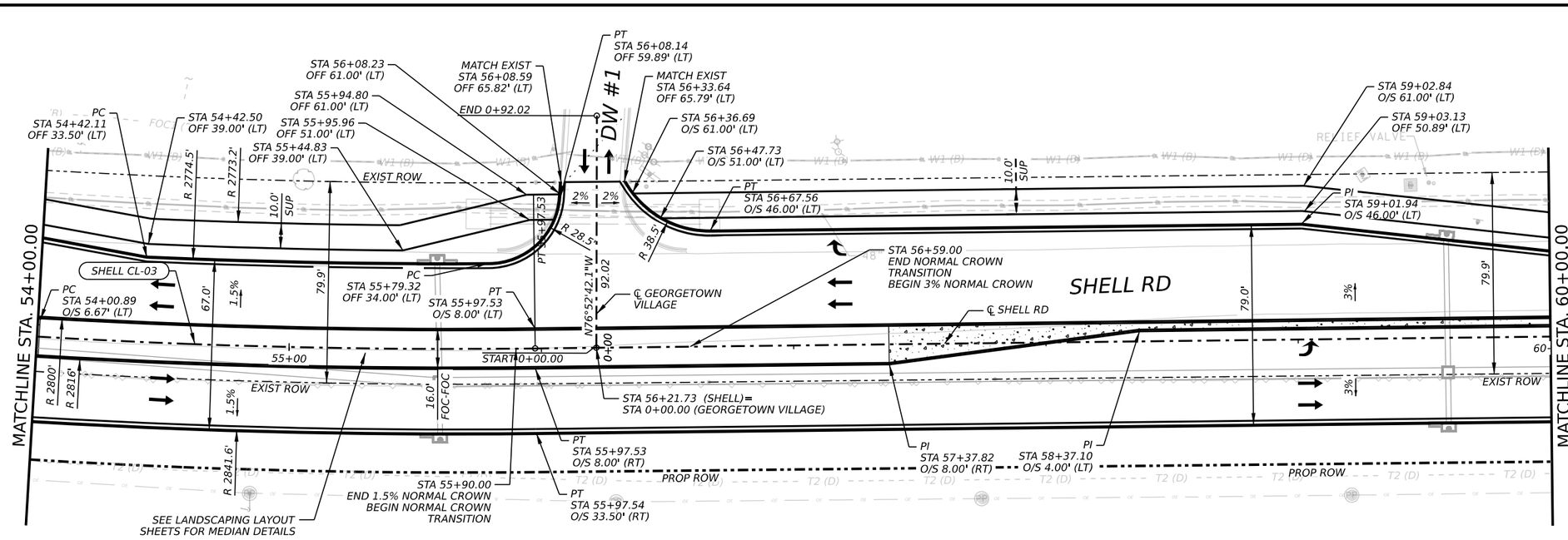

LEGEND

- DIRECTION OF TRAFFIC
- CURVE # — ALIGNMENT CURVE NUMBER
- PROPOSED CONCRETE MEDIAN
- PROPOSED CONCRETE RIPRAP (4")
- (A) PROPOSED TY 1 PED RAMP (CoG)
- (B) PROPOSED TY 2 PED RAMP (CoG)
- (C) PROPOSED TY 7 PED RAMP (TxDOT)
- (D) PROPOSED TY 10 PED RAMP (TxDOT)

0 25 50

SCALE: 1" = 50' H
1" = 5' V

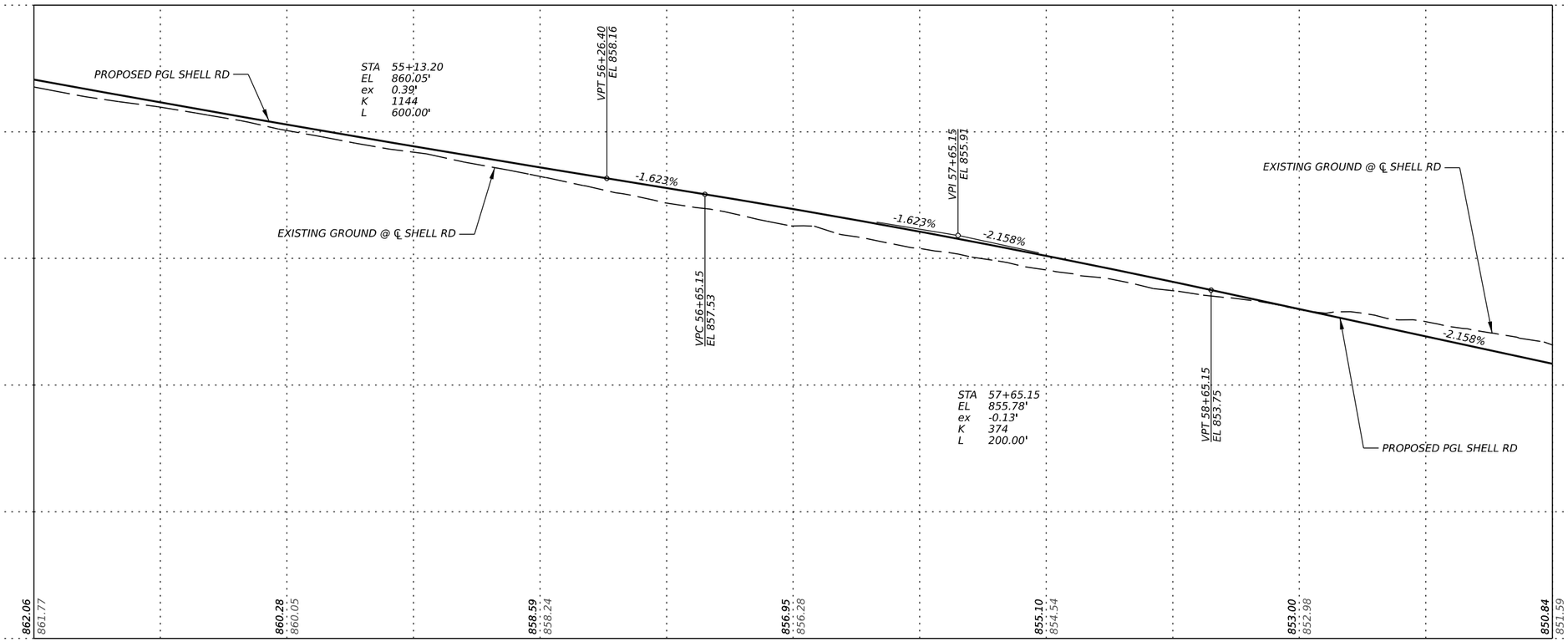

NOTE: ALL DIMENSIONS ARE TO FACE OF CURB UNLESS OTHERWISE NOTED.

STATE OF TEXAS
ELENA RAMON
141765
LICENSED
PROFESSIONAL ENGINEER

Elena Ramon

3/12/2025

EST. 1848 GEORGETOWN TEXAS

BGE, Inc.
101 West Louis Henna Blvd, Suite 400, Austin, TX 78728
Tel: 512-879-0400 • www.bgeinc.com
TBPE Registration No. F-1046

SHELL ROAD

ROADWAY PLAN & PROFILE

STA 54+00 TO 60+00

SHEET 10 OF 12

SHEET NO. 113

DATE: 3/12/2025 2:55:09 PM
FILE: G:\TXC\Projects\City Georgetown\10767-00 Shell Road\03 CADD\01 Shts\03-RDWY\Shell PP 10.dgn

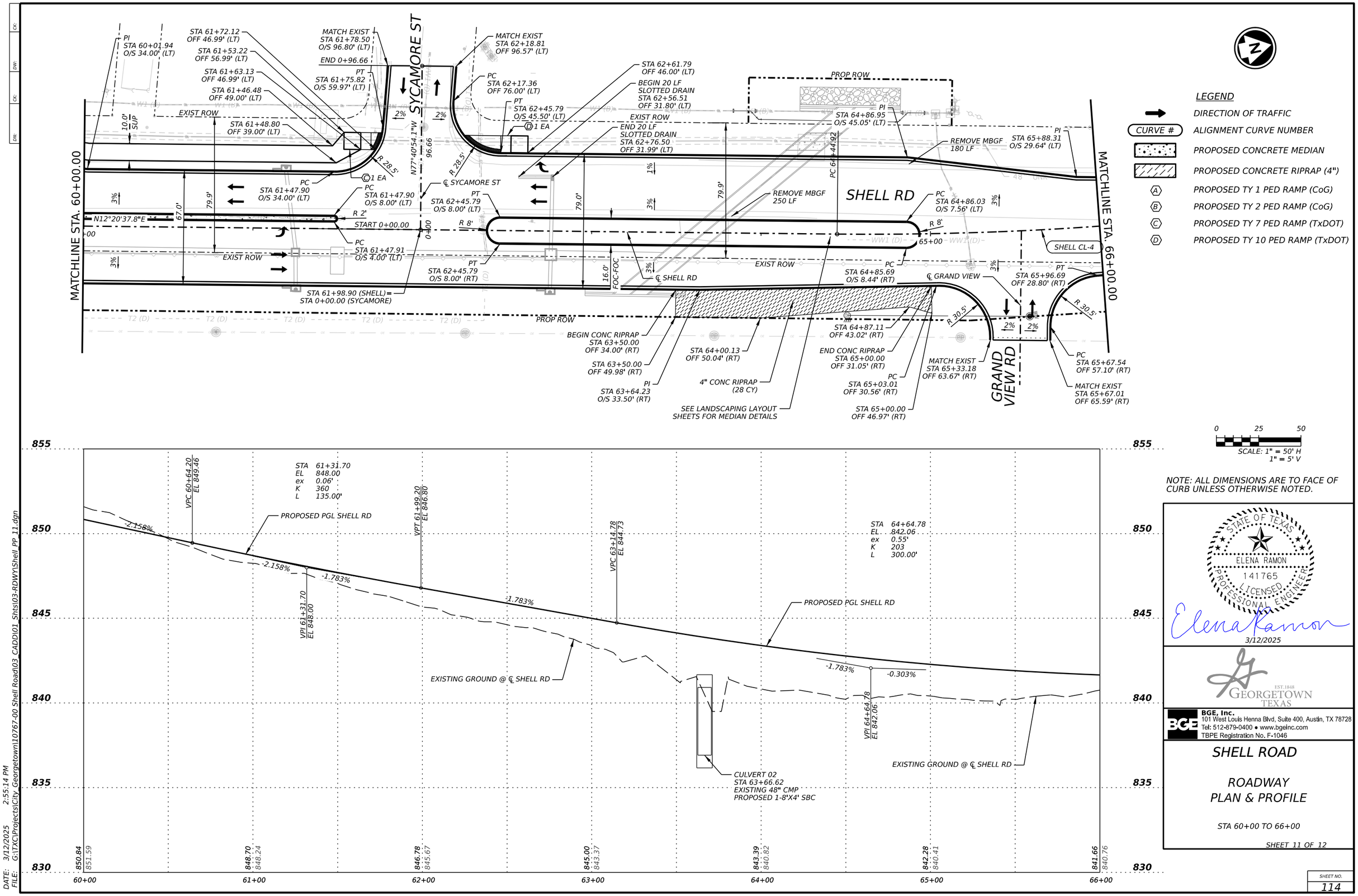

NOTE: ALL DIMENSIONS ARE TO FACE OF CURB UNLESS OTHERWISE NOTED.

STATE OF TEXAS
ELENA RAMON
141765
LICENSED
PROFESSIONAL ENGINEER

Elena Ramon

3/12/2025

EST. 1848 GEORGETOWN TEXAS

BGE, Inc.
101 West Louis Henna Blvd, Suite 400, Austin, TX 78728
Tel: 512-879-0400 • www.bgeinc.com
TBPE Registration No. F-1046

SHELL ROAD

ROADWAY PLAN & PROFILE

STA 60+00 TO 66+00

SHEET 11 OF 12

SHEET NO. 114

DATE: 3/12/2025 2:55:14 PM
FILE: G:\TXC\Projects\City Georgetown\10767-00 Shell Road\03 CADD\01 Shts\03-RDWY\Shell PP 11.dgn

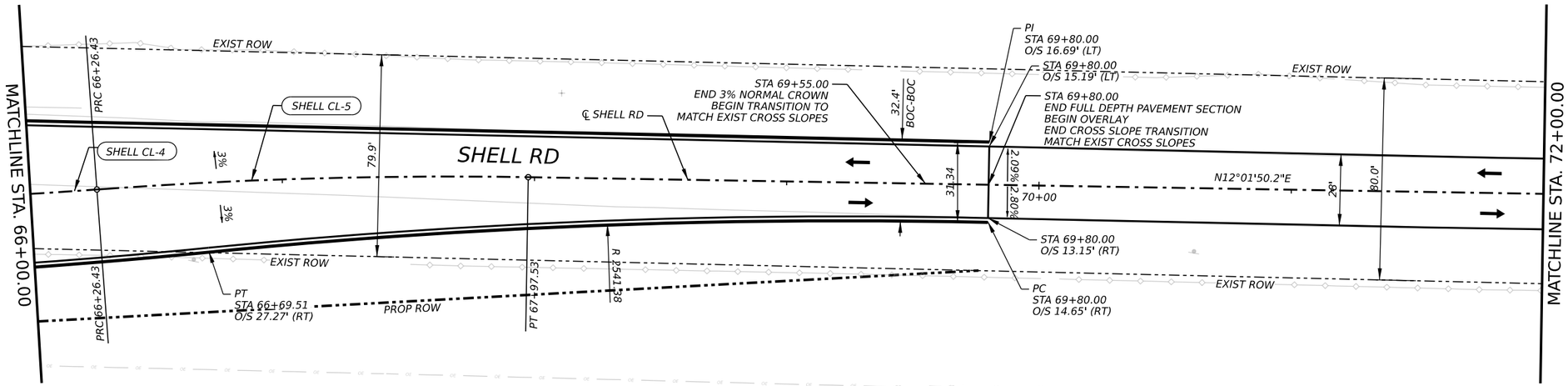

LEGEND

- DIRECTION OF TRAFFIC
- CURVE # — ALIGNMENT CURVE NUMBER
- PROPOSED CONCRETE MEDIAN
- PROPOSED CONCRETE RIPRAP (4")
- (A) PROPOSED TY 1 PED RAMP (CoG)
- (B) PROPOSED TY 2 PED RAMP (CoG)
- (C) PROPOSED TY 7 PED RAMP (TxDOT)
- (D) PROPOSED TY 10 PED RAMP (TxDOT)

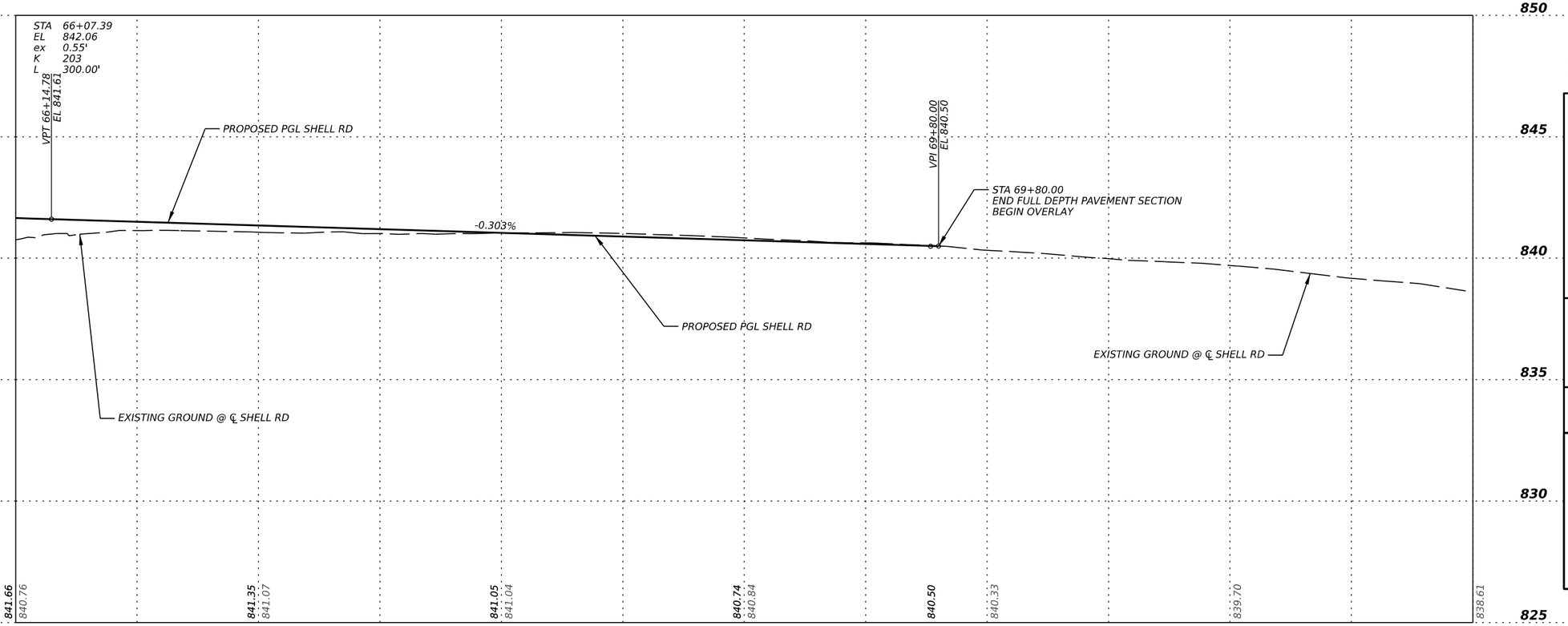

0 25 50

SCALE: 1" = 50' H
1" = 5' V

NOTE: ALL DIMENSIONS ARE TO FACE OF CURB UNLESS OTHERWISE NOTED.

STATE OF TEXAS
ELENA RAMON
141765
LICENSED
PROFESSIONAL ENGINEER

3/12/2025

EST. 1848 GEORGETOWN TEXAS

BGE, Inc.
101 West Louis Henna Blvd, Suite 400, Austin, TX 78728
Tel: 512-879-0400 • www.bgeinc.com
TBPE Registration No. F-1046

SHELL ROAD

ROADWAY PLAN & PROFILE

STA 66+00 TO END

SHEET 12 OF 12

SHEET NO. 115

DATE: 3/12/2025 2:55:19 PM
FILE: G:\TXC\Projects\City Georgetown\10767-00 Shell Road\03 CADD\01 Shts\03-ROW\Shell PP 12.dgn

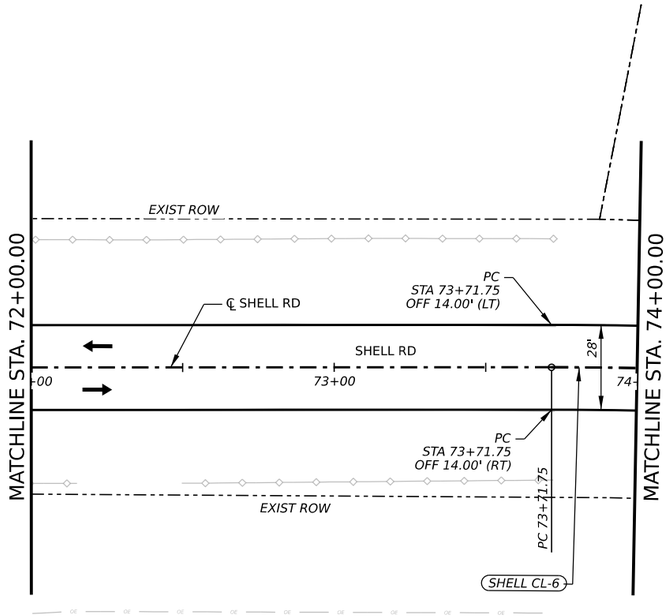

LEGEND

- DIRECTION OF TRAFFIC
- CURVE # — ALIGNMENT CURVE NUMBER
- PROPOSED CONCRETE MEDIAN
- PROPOSED CONCRETE RIPRAP (4")
- (A) PROPOSED TY 1 PED RAMP (CoG)
- (B) PROPOSED TY 2 PED RAMP (CoG)
- (C) PROPOSED TY 7 PED RAMP (TxDOT)
- (D) PROPOSED TY 10 PED RAMP (TxDOT)

0 25 50

SCALE: 1" = 50'

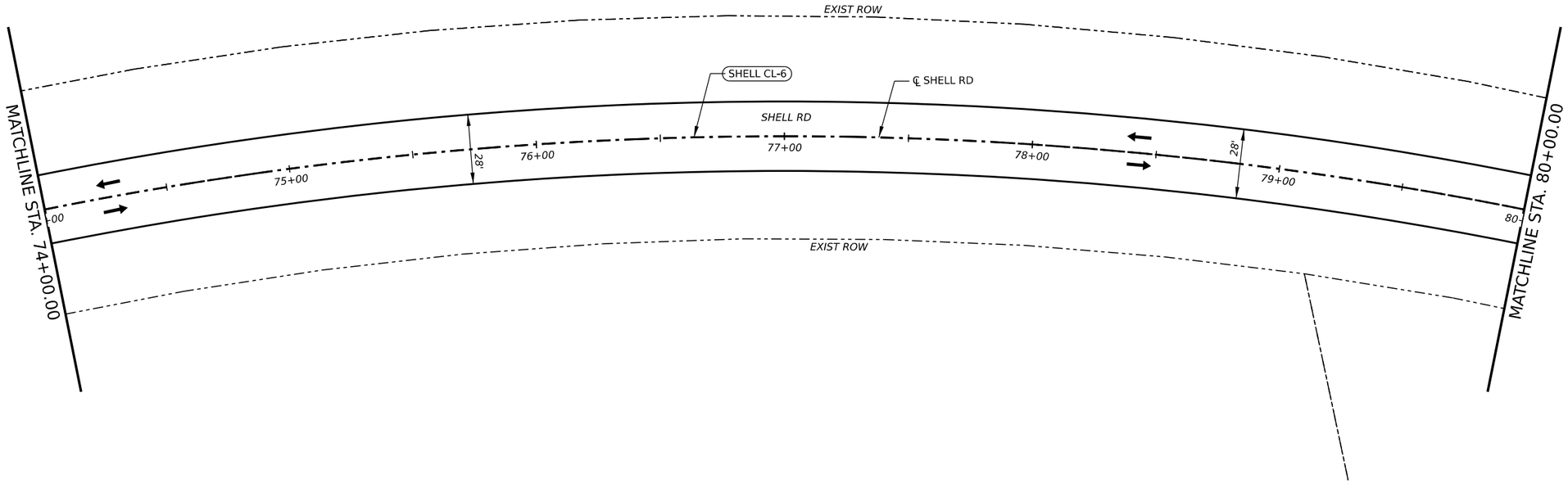

STATE OF TEXAS
ELENA RAMON
141765
LICENSED
PROFESSIONAL ENGINEER

Elena Ramon

3/12/2025

EST. 1848
GEORGETOWN
TEXAS

BGE, Inc.
101 West Louis Henna Blvd, Suite 400, Austin, TX 78728
Tel: 512-879-0400 • www.bgeinc.com
TBPE Registration No. F-1046

SHELL ROAD

ROADWAY PLAN

STA 72+00 TO STA 80+00

SHEET 1 OF 4

SHEET NO. 116

DATE: 3/12/2025 2:55:22 PM
FILE: G:\TXC\Projects\City Georgetown\10767-00 Shell Road\03 CADD\01 Shts\03-ROW\Shell DP Pav01.dgn

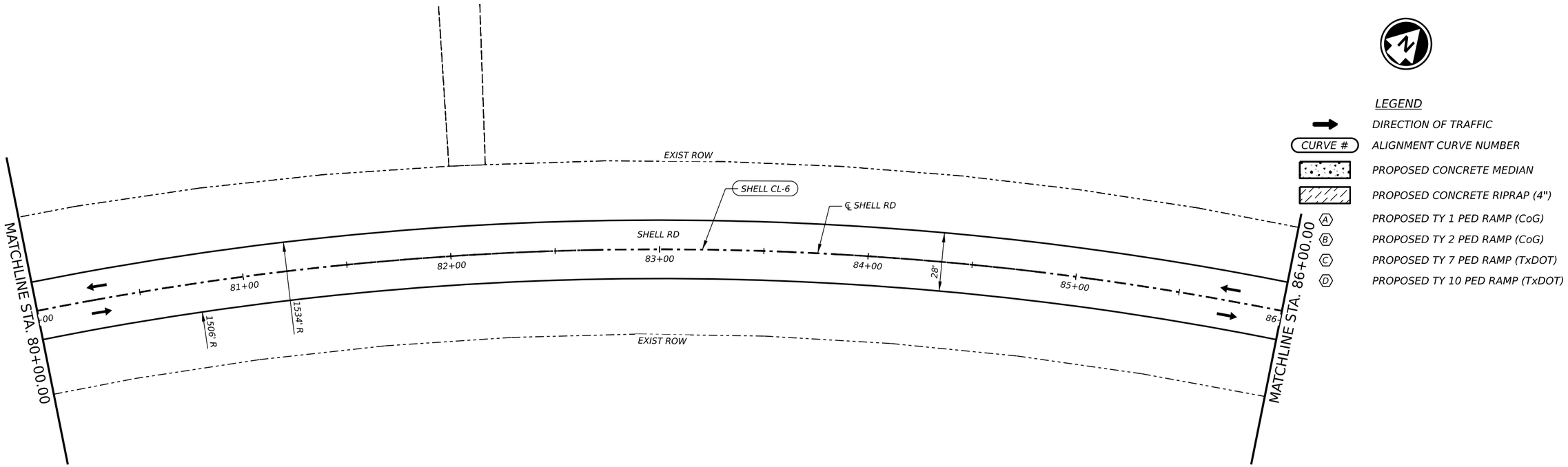

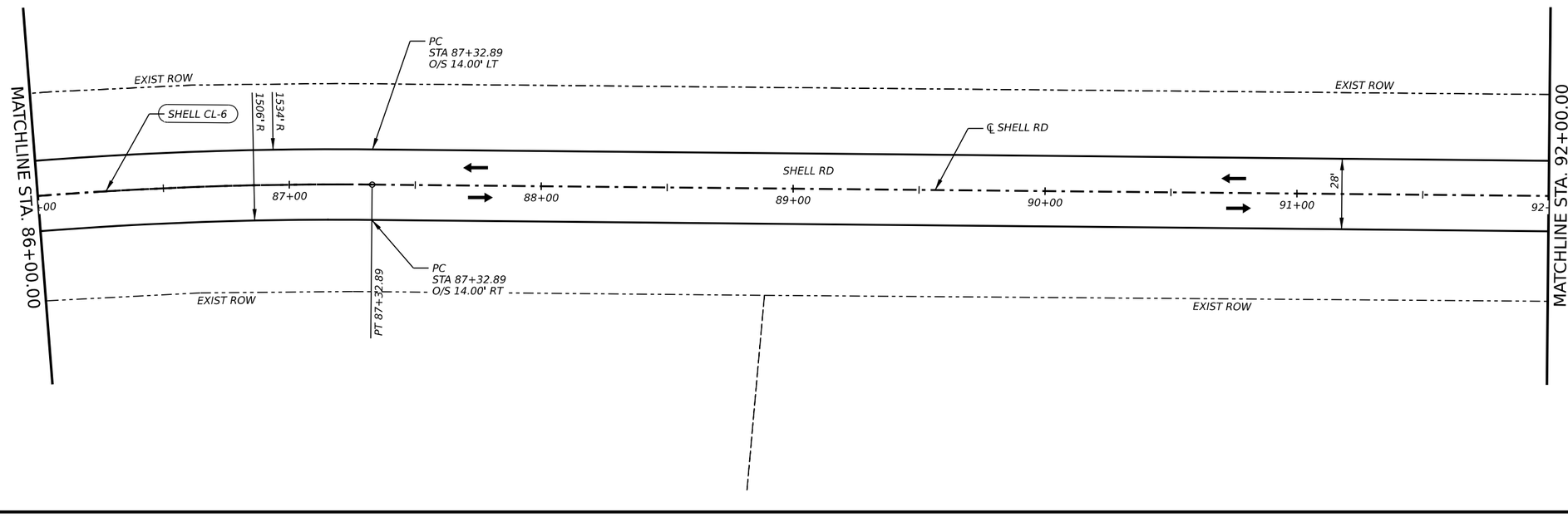

LEGEND

- DIRECTION OF TRAFFIC
- CURVE # — ALIGNMENT CURVE NUMBER
- PROPOSED CONCRETE MEDIAN
- PROPOSED CONCRETE RIPRAP (4")
- (A) PROPOSED TY 1 PED RAMP (CoG)
- (B) PROPOSED TY 2 PED RAMP (CoG)
- (C) PROPOSED TY 7 PED RAMP (TxDOT)
- (D) PROPOSED TY 10 PED RAMP (TxDOT)

0 25 50

SCALE: 1" = 50'

STATE OF TEXAS
ELENA RAMON
141765
LICENSED
PROFESSIONAL ENGINEER

3/12/2025

EST. 1848 GEORGETOWN TEXAS

BGE, Inc.
101 West Louis Henna Blvd, Suite 400, Austin, TX 78728
Tel: 512-879-0400 • www.bgeinc.com
TBPE Registration No. F-1046

SHELL ROAD

ROADWAY PLAN

STA 80+00 TO 92+00

SHEET 2 OF 4

SHEET NO. 117

DATE: 3/12/2025 2:55:24 PM
FILE: G:\TXC\Projects\City Georgetown\10767-00 Shell Road\03 CADD\01 Shts\03-ROWN\Shell DP Pav02.dgn

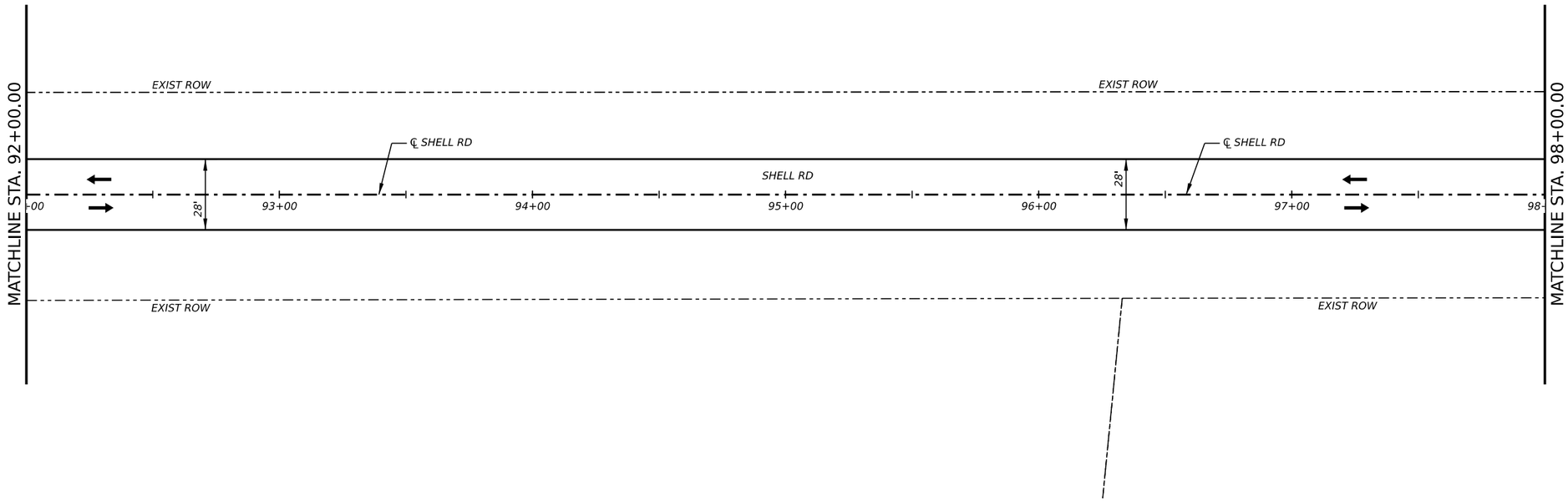

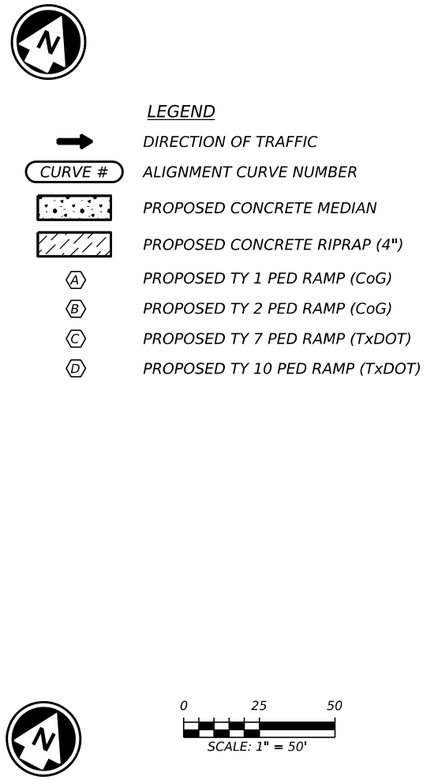

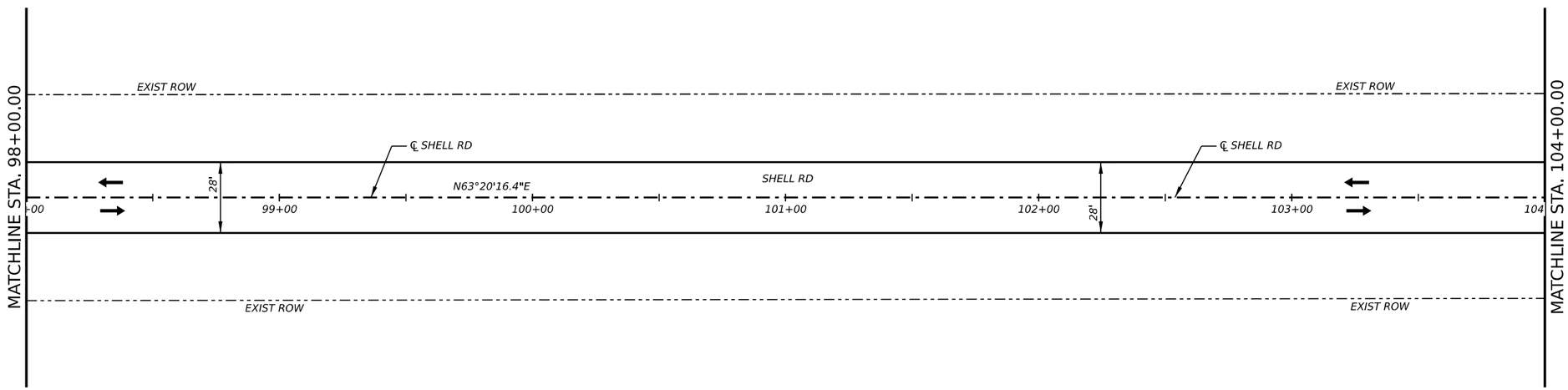



EST.1848
GEORGETOWN
TEXAS

BGE, Inc.
101 West Louis Henna Blvd, Suite 400, Austin, TX 78728
Tel: 512-879-0400 • www.bgeinc.com
TBPE Registration No. F-1046

SHELL ROAD

ROADWAY PLAN

STA 92+00 TO 104+00

SHEET 3 OF 4

SHEET NO.
118

DATE: 3/12/2025 2:55:25 PM
FILE: G:\TXC\Projects\City Georgetown\10767-00 Shell Road\03_CADD\01_Shts\03-RDWY\Shell_DP_Pav03.dgn

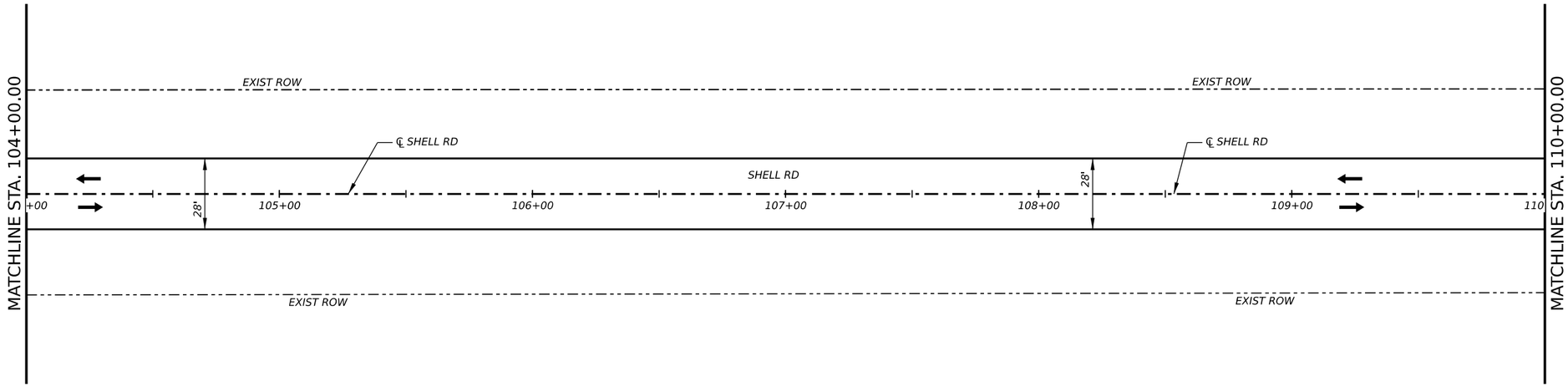

LEGEND

- DIRECTION OF TRAFFIC
- CURVE # — ALIGNMENT CURVE NUMBER
- PROPOSED CONCRETE MEDIAN
- PROPOSED CONCRETE RIPRAP (4")
- (A) PROPOSED TY 1 PED RAMP (CoG)
- (B) PROPOSED TY 2 PED RAMP (CoG)
- (C) PROPOSED TY 7 PED RAMP (TxDOT)
- (D) PROPOSED TY 10 PED RAMP (TxDOT)

0 25 50

SCALE: 1" = 50'

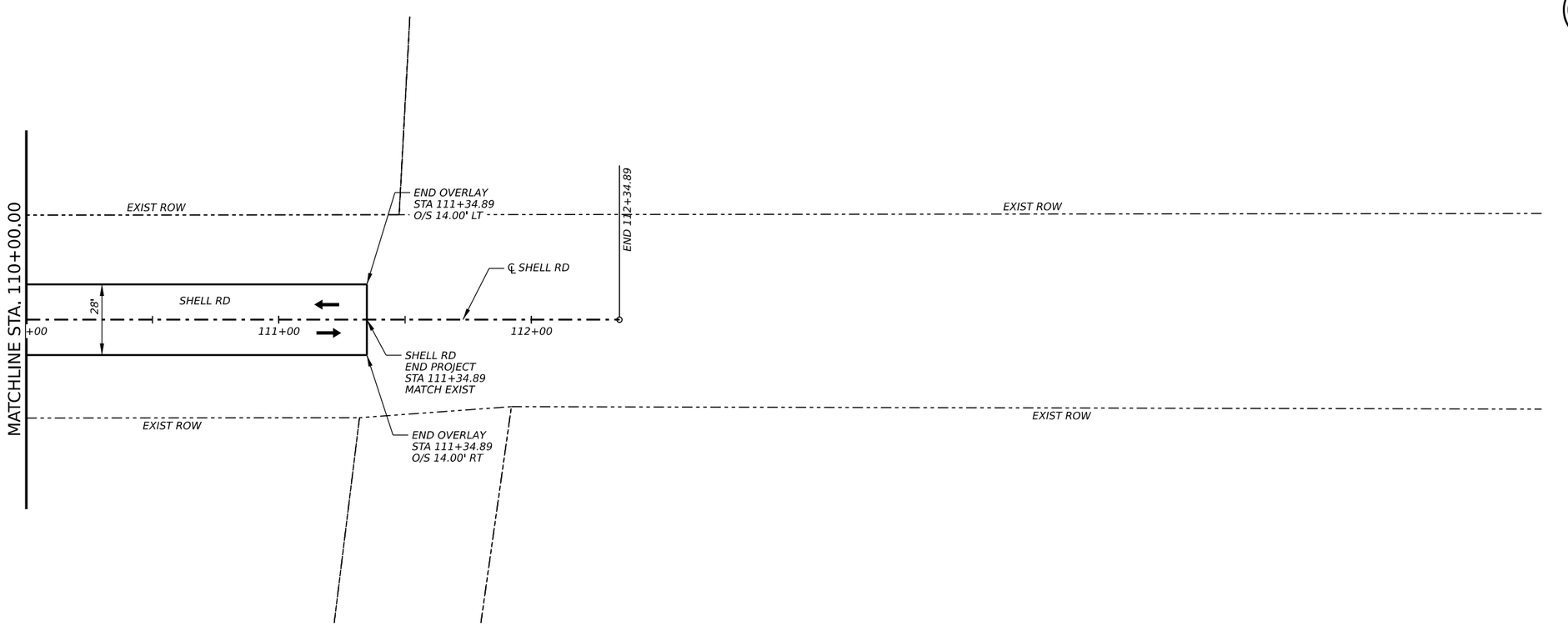

STATE OF TEXAS
ELENA RAMON
141765
LICENSED
PROFESSIONAL ENGINEER

3/12/2025

EST.1848 GEORGETOWN TEXAS

BGE, Inc.
101 West Louis Henna Blvd, Suite 400, Austin, TX 78728
Tel: 512-879-0400 • www.bgeinc.com
TBPE Registration No. F-1046

SHELL ROAD

ROADWAY PLAN

STA 104+00 TO END

SHEET 4 OF 4

SHEET NO. 119

DATE: 3/12/2025 2:55:26 PM
FILE: G:\TXC\Projects\City Georgetown\10767-00 Shell Road\03_CADD\01 Shts\03-RDWY\Shell_DP_Pav04.dgn

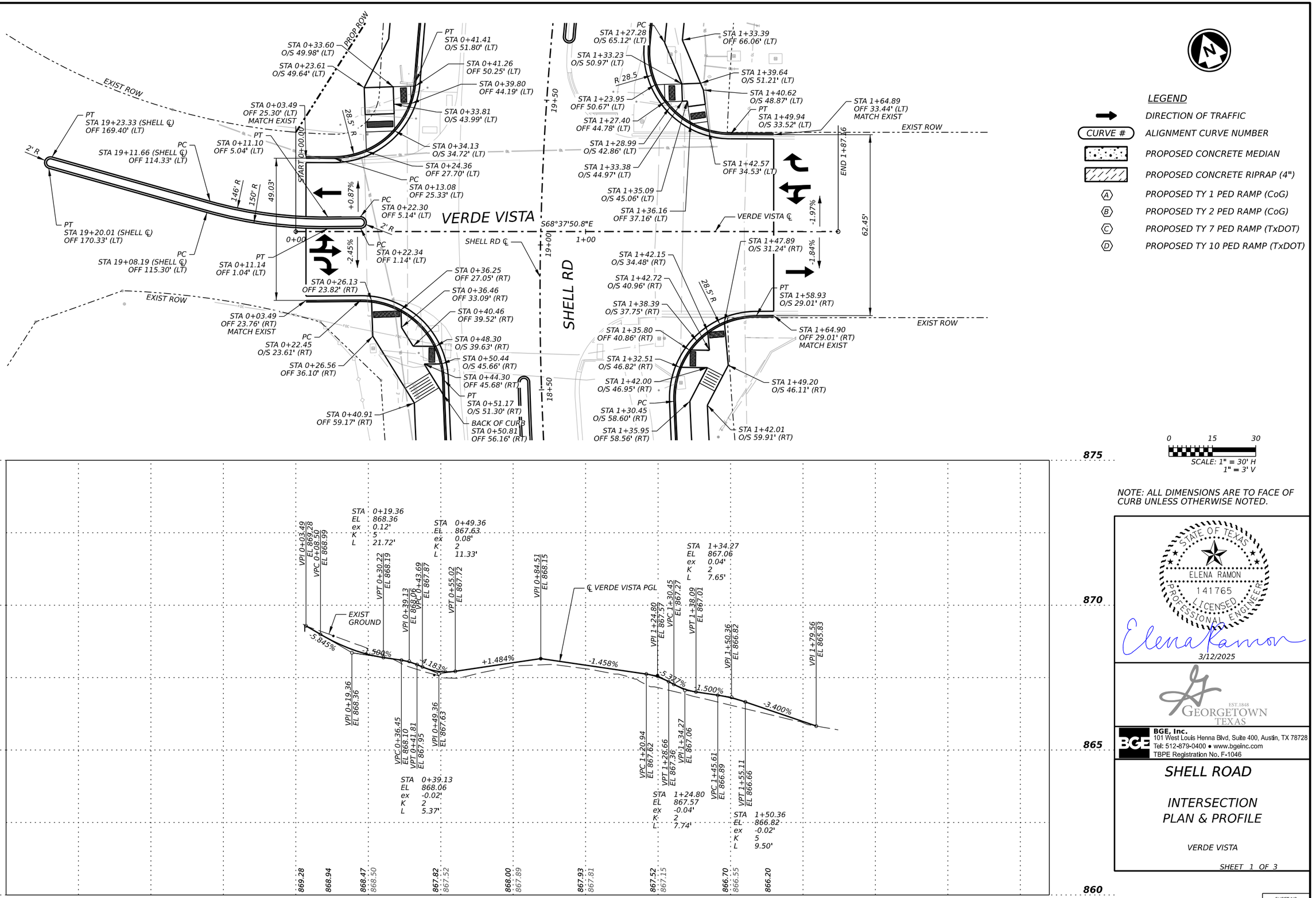

LEGEND

- DIRECTION OF TRAFFIC
- CURVE # — ALIGNMENT CURVE NUMBER
- PROPOSED CONCRETE MEDIAN
- PROPOSED CONCRETE RIPRAP (4")
- (A) PROPOSED TY 1 PED RAMP (CoG)
- (B) PROPOSED TY 2 PED RAMP (CoG)
- (C) PROPOSED TY 7 PED RAMP (TxDOT)
- (D) PROPOSED TY 10 PED RAMP (TxDOT)

0 15 30

SCALE: 1" = 30' H
1" = 3' V

NOTE: ALL DIMENSIONS ARE TO FACE OF CURB UNLESS OTHERWISE NOTED.

STATE OF TEXAS
ELENA RAMON
141765
LICENSED
PROFESSIONAL ENGINEER

3/12/2025

EST.1848 GEORGETOWN TEXAS

BGE, Inc.
101 West Louis Henna Blvd, Suite 400, Austin, TX 78728
Tel: 512-879-0400 • www.bgeinc.com
TBPE Registration No. F-1046

SHELL ROAD

INTERSECTION PLAN & PROFILE

VERDE VISTA

SHEET 1 OF 3

SHEET NO. 120

DATE: 3/12/2025 2:55:42 PM
FILE: G:\TXC\Projects\City Georgetown\10767-00 Shell Road\03 CADD\01 Shts\03-RDWY\Shell Int 01.dgn

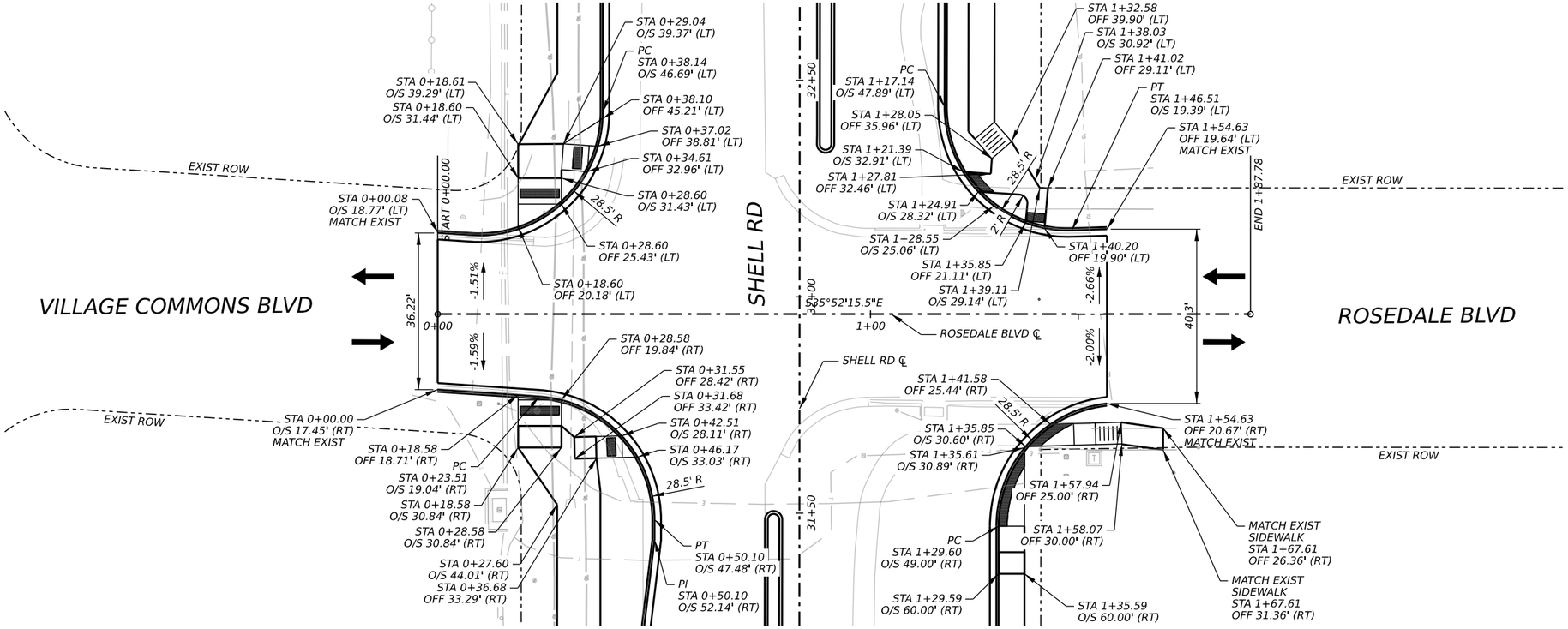

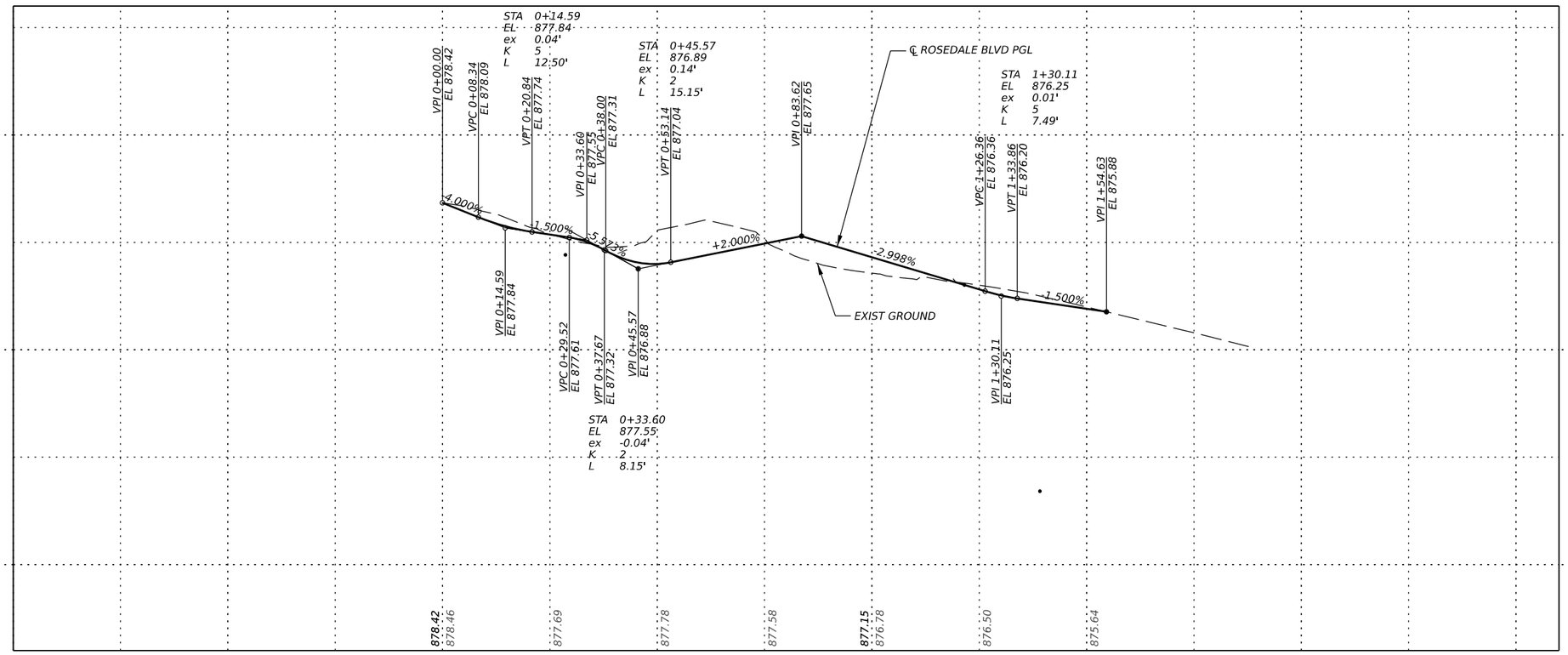

LEGEND

- DIRECTION OF TRAFFIC
- CURVE # — ALIGNMENT CURVE NUMBER
- PROPOSED CONCRETE MEDIAN
- PROPOSED CONCRETE RIPRAP (4")
- (A) PROPOSED TY 1 PED RAMP (CoG)
- (B) PROPOSED TY 2 PED RAMP (CoG)
- (C) PROPOSED TY 7 PED RAMP (TxDOT)
- (D) PROPOSED TY 10 PED RAMP (TxDOT)

0 15 30

SCALE: 1" = 30' H
1" = 3' V

NOTE: ALL DIMENSIONS ARE TO FACE OF CURB UNLESS OTHERWISE NOTED.

STATE OF TEXAS
ELENA RAMON
141765
LICENSED
PROFESSIONAL ENGINEER

3/12/2025

EST.1848 GEORGETOWN TEXAS

BGE, Inc.
101 West Louis Henna Blvd, Suite 400, Austin, TX 78728
Tel: 512-879-0400 • www.bgeinc.com
TBPE Registration No. F-1046

SHELL ROAD

INTERSECTION PLAN & PROFILE

ROSEDALE BLVD

SHEET 2 OF 3

SHEET NO. 121

DATE: 3/12/2025 2:55:48 PM
FILE: G:\TXC\Projects\City Georgetown\10767-00 Shell Road\03 CADD\01 Shts\03-ROWY\Shell Int 02.dgn

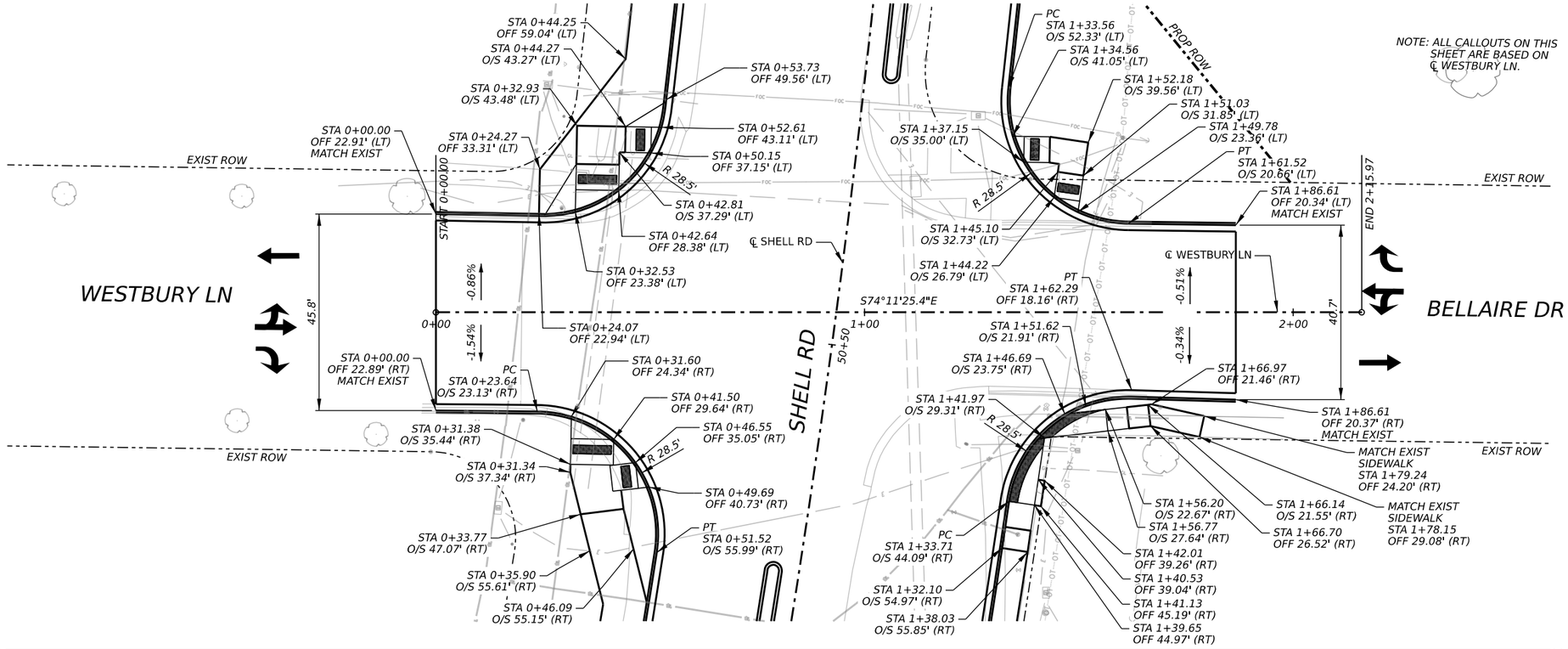

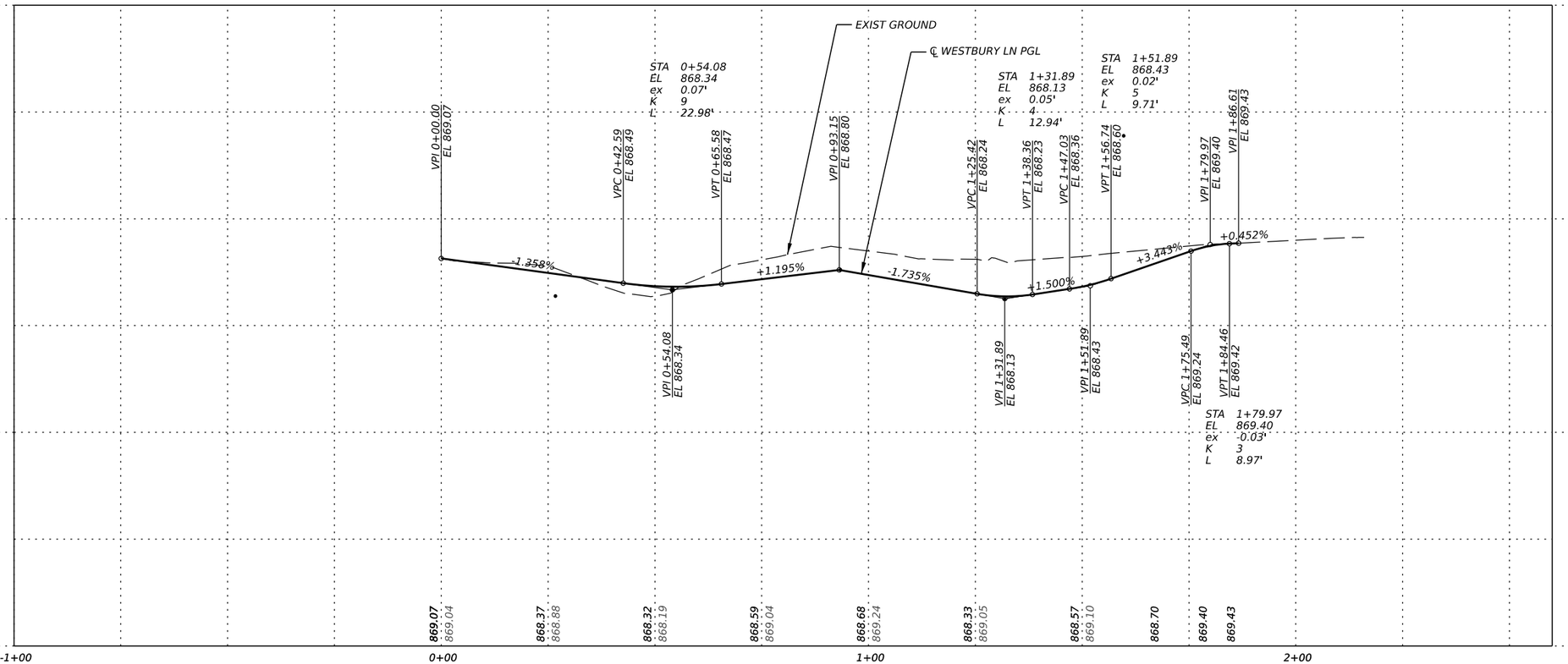

NOTE: ALL DIMENSIONS ARE TO FACE OF CURB UNLESS OTHERWISE NOTED.

STATE OF TEXAS
ELENA RAMON
141765
LICENSED
PROFESSIONAL ENGINEER
Elena Ramon
3/12/2025

EST.1848 GEORGETOWN TEXAS

BGE, Inc.
101 West Louis Henna Blvd, Suite 400, Austin, TX 78728
Tel: 512-879-0400 • www.bgeinc.com
TBPE Registration No. F-1046

SHELL ROAD

INTERSECTION PLAN & PROFILE

WESTBURY LN

SHEET 3 OF 3

SHEET NO. 122

DATE: 3/12/2025 2:55:54 PM
FILE: G:\TXC\Projects\City Georgetown\10767-00 Shell Road\03 CADD\01 Shts\03-RDWY\Shell Int 03.dgn

SUMMARY OF INTERSECTIONS & DRIVEWAYS

INTERSECTION NAME	P&P SHEET NUMBER	CENTERLINE STATION		R1 (FT)	R2 (FT)	WIDTH	AREA	LENGTH	LENGTHS			GRADES		
						FT	SY	FT	(L1) FT	(L2) FT	(L3) FT	(G1) %	(G2) %	(G3) %
SEQUOIA SPUR W	PP 01	4+94.24	LT	27	27	33	218	50	5.80	10.00	27.43	5.39	1.50	9.00
SEQUOIA SPUR W	PP 01	4+94.29	RT	26	26	28	87	20	20.00	-	-	0.08	-	-
VERDE VISTA	PP 04	19+03.42	LT	30	30	46	269	44	SEE INTERSECTION P&P SHEETS					
VERDE VISTA	PP 04	19+06.14	RT	30	30	59	311	40	SEE INTERSECTION P&P SHEETS					
SKYFLOWER DR	PP 05	27+05.87	RT	30	30	26	80	18	17.81	-	-	-0.88	-	-
SONORA TRACE	PP 05	28+11.07	LT	30	30	26	185	49	7.74	10.00	30.81	3.75	1.50	0.77
VILLAGE COMMONS BLVD	PP 06	31+95.94	LT	30	30	33	216	46	SEE INTERSECTION P&P SHEETS					
ROSEDALE BLVD	PP 06	31+96.00	RT	30	30	37	180	33	SEE INTERSECTION P&P SHEETS					
MADRID DR	PP 07	38+43.97	RT	30	30	37	245	49	20.24	28.31	-	-5.85	0.30	-
WESTBURY LN	PP 09	50+44.92	LT	30	30	43	300	54	SEE INTERSECTION P&P SHEETS					
BELLAIRE DR	PP 09	50+66.96	RT	30	30	38	270	55	SEE INTERSECTION P&P SHEETS					
DW #1	PP 10	56+22.67	LT	30	40	22	120	28	13.51	10.00	4.80	5.20	2.00	8.29
SYCAMORE ST	PP 11	61+98.90	LT	30	30	37	289	58	58.41	-	-	1.92	-	-
GRAND VIEW RD	PP 11	65+50.12	RT	32	32	32	181	37	36.62	-	-	1.92	-	-

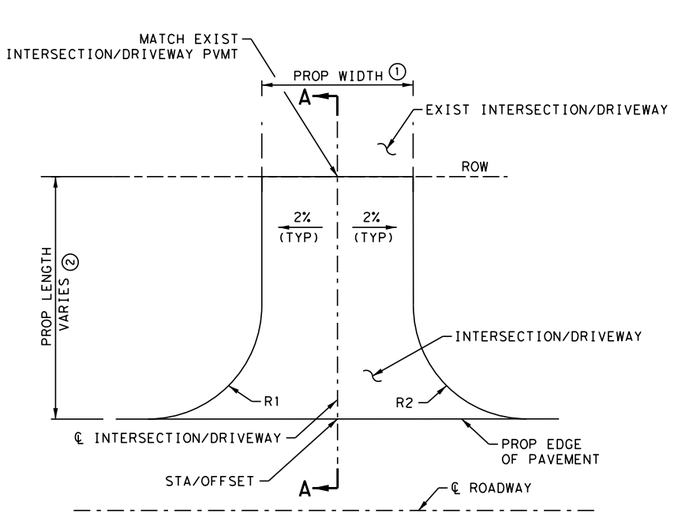

INTERSECTIONS & DRIVEWAYS

NTS

G = INTERSECTION/DRIVEWAY GRADE (%)
L = HORIZONTAL LENGTH TO THE GRADE BREAK

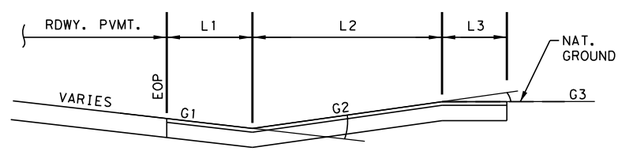

INTERSECTIONS & DRIVEWAYS

NTS

STATE OF TEXAS
ELENA RAMON
141765
LICENSED
PROFESSIONAL ENGINEER

3/12/2025

EST.1848
GEORGETOWN
TEXAS

BGE, Inc.
101 West Louis Henna Blvd, Suite 400, Austin, TX 78728
Tel: 512-879-0400 • www.bgeinc.com
TBPE Registration No. F-1046

SHELL ROAD

SUMMARY OF INTERSECTIONS & DRIVEWAYS

SHEET 1 OF 1

SHEET NO. 123

DATE: 3/12/2025 2:55:55 PM
FILE: G:\TXC\Projects\City Georgetown\10767-00 Shell Road\03 CADD\01 Shts\03-RDWY\Shell_SUMM_INT.dgn

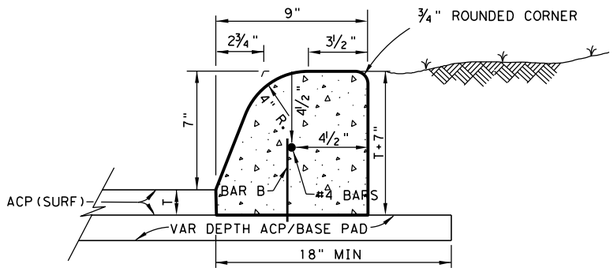

CONCRETE CURB (TYPE 2)

W/ ACP

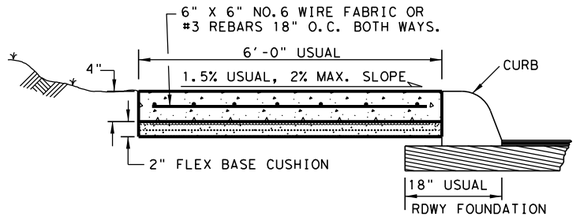

TYPICAL SIDEWALK SECTION

GROOVED JOINTS IN THE SIDE WALK SHALL BE AT A MAX. SPACING OF 10 FT. AND SHALL HAVE ¾" EXPANSION JOINTS AT A MAX. SPACING OF 60' AND TO COINSIDE WITH THE CURB EXP. JOINTS.

GENERAL NOTES:

1. CONCRETE CURB TYPE 1 AND 2 SHOWN SHALL MEET THE MINIMUM SPECIFICATION REQUIREMENTS OF CLASS "A" CONCRETE PER ITEM 529 AND 421.
2. ALL REINFORCING STEEL SHALL BE GRADE 60
3. WHERE CONCRETE CURB IS PLACED ON EXISTING CONCRETE PAVEMENT, THE PAVEMENT SHALL BE DRILLED AND THE REINFORCING BARS GROUTED IN PLACE.
4. EXPANSION AND CONTRACTION JOINTS SHALL BE CONSTRUCTED TO MATCH PAVEMENT JOINTS IN ALL CURBS AND CURB AND GUTTER ADJACENT TO JOINTED CONCRETE PAVEMENT. WHERE PLACEMENT OF CURB OR CURB AND GUTTER IS NOT ADJACENT TO CONCRETE PAVEMENT, EXPANSION JOINTS SHALL BE PROVIDED AT STRUCTURES, CURB RETURNS AT STREETS, AND AT LOCATIONS DIRECTED BY THE ENGINEER.
5. VERTICAL AND HORIZONTAL DOWEL BARS AND TRANSVERSE REINFORCING BARS SHALL BE PLACED AT 4 FEET C-C, UNLESS OTHERWISE SHOWN.
6. ONE-HALF INCH EXPANSION JOINT MATERIAL SHALL BE PROVIDED WHERE CURB OR CURB AND GUTTER IS ADJACENT TO SIDEWALK OR RIPRAP. THIS IS SUBSIDIARY TO THE CURB, ITEM 529.
7. LAYDOWN CURB AT DRIVEWAYS WILL BE PAID AS SUBSIDIARY TO ITEM 530.
8. FOR SIDEWALK DETAILS AT DRIVEWAYS, SEE SAN ANTONIO DISTRICT STANDARD "DRIVEWAY DETAILS".
9. SEE PEDESTRIAN HANDRAIL DETAILS STANDARD "PRD" FOR MORE INFORMATION. CONCRETE RAIL FOUNDATION TO BE POURED WITH THE SIDEWALK BUT PAYMENT IS SUBSIDIARY TO ITEM 450 "RAILING".
10. CLEAR SIDEWALK WIDTH EXCLUDING THE PEDESTRIAN RAIL FOUNDATION SHALL BE 6' UNLESS OTHERWISE SPECIFIED IN THE PLANS

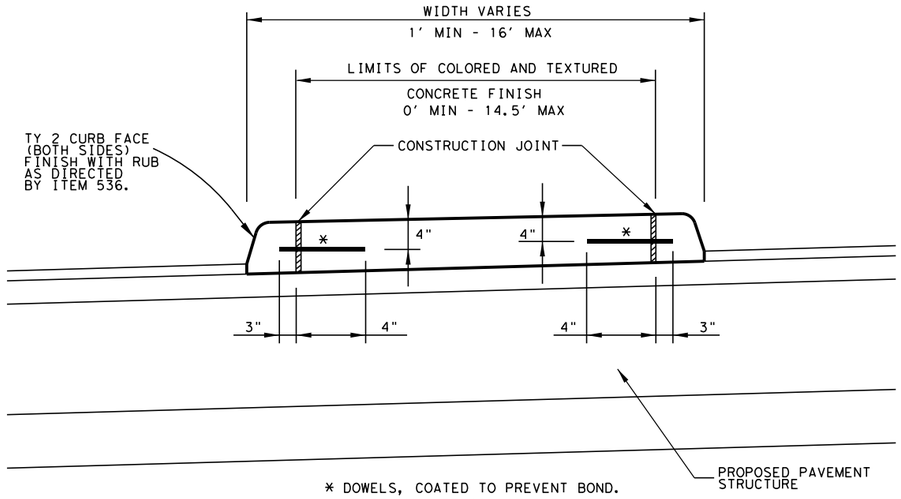

* DOWELS, COATED TO PREVENT BOND. LENGTH MAY BE ADJUSTED TO MEET FIELD CONDITIONS.

TYPICAL PROPOSED MEDIAN SECTION

GENERAL NOTES:

1. CONCRETE SHALL BE CLASS "A".
2. CONCRETE MEDIAN JOINTS SHALL CONFORM TO THE CONCRETE PAVEMENT DETAILS SHOWN ON STANDARD "CPCD-24", EXCEPT THAT NO LONGITUDINAL JOINTS WILL BE ALLOWED OTHER THAN THE JOINTS BETWEEN THE CURB AND COLORED AND TEXTURED CONCRETE THAT SHALL INCLUDE 18" - #4 BARS SPACED AT 4' ON CENTER. INCLUDE 1/2" PREMOLDED ASPHALT BOARD WITH JOINT SEALING COMPOUND (CLASS 5 OR 8) UNLESS OTHERWISE APPROVED. SEE ABOVE DETAIL FOR MORE INFORMATION. TRANSVERSE CONTRACTION JOINT SPACING WILL BE 50 FEET OR LESS OR AS APPROVED.
3. REINFORCING STEEL FOR CONCRETE MEDIAN SHALL CONFORM TO #4 BARS 12" CENTER TO CENTER BOTH WAYS.
4. ALL REINFORCING NOT SHOWN SEE APPROPRIATE STANDARDS FOR MORE DETAILS.
5. SEAL JOINTS USING METHOD "B" (JOINT SEALING COMPOUND ONLY) AS SHOWN ON STANDARD "JS-14".
6. CONSTRUCTION JOINTS WILL ONLY BE ALLOWED WHERE APPROVED.
7. OUTSIDE CURB FACES WILL CONFORM TO TYPE 2 CURB AS SHOWN ON STANDARD "CCCG-22".
8. SEE "COLORED TEXTURED CONCRETE MEDIAN PATTERN" DETAIL FOR COLOR AND TEXTURE.
9. USING "CCCG-22" FOR CONCRETE CURB BAR "B" EMBEDMENT SHALL BE 6" INTO PAVEMENT.

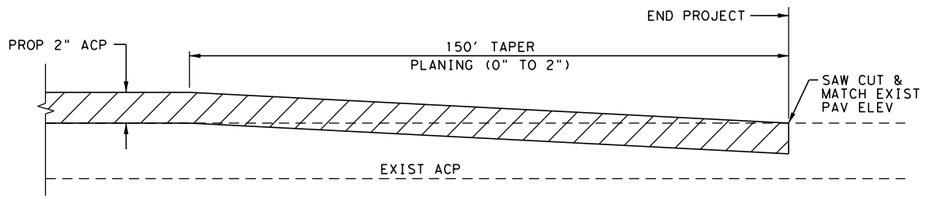

LONGITUDINAL PLANING DETAIL

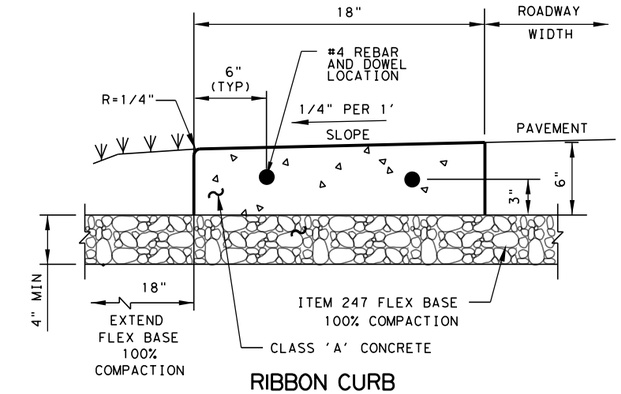

RIBBON CURB

GENERAL NOTES:

1. ALL WORK AND MATERIALS SHALL CONFORM TO SPECIFICATION ITEM 529, "CONCRETE CURB, GUTTER, AND COMBINED CURB AND GUTTER", AND THESE DETAILS (INDEPENDENT OF THE CONSTRUCTION METHODS USED).
2. ALL CURBS SHALL HAVE A MINIMUM OF 4 INCHES OF COMPACTED FLEXIBLE BASE BETWEEN THE BOTTOM OF THE CURB AND TOP OF SUBGRADE. THE FLEXIBLE BASE MATERIAL, COMPACTED TO 100% DENSITY, SHALL EXTEND 18 INCHES BEHIND BACK OF CURB, OR 36 INCHES IF THE SUBGRADE P.I. IS GREATER THAN 20.
3. CONCRETE IS CLASS 'A' MEDIUM BROOM FINISH.
4. REINFORCING BARS ARE #4 BARS UNLESS OTHERWISE SHOWN.
5. PLACE EXPANSION JOINT AT A MAXIMUM SPACING OF 40 FEET. TERMINATE WORKDAY PRODUCTION AT AN EXPANSION JOINT.
6. PLACE 1/2" WIDE EXPANSION JOINTS AT STRUCTURES, CURB RETURNS AND INCREMENTS NO GREATER THAN 40 FEET.
7. FORM CONTROL JOINTS, 1/4 INCH WIDE AND 3/4 INCH DEEP AT A MAXIMUM SPACING OF 10 FEET. WHEN CURB ABUTS CONCRETE PAVEMENT, MATCH PAVEMENT JOINT SPACING.
8. ROUND EXPOSED EDGES AND JOINTS TO A 1/4 INCH RADIUS.
9. COAT 16 INCHES OF 24 INCH LONG DOWELS WITH GREASE OR APPROVED DEBONDING LUBRICANT. INSTALL DOWEL CAP ON LUBRICATED END OF THE DOWELS.



EST. 1848 GEORGETOWN TEXAS

BGE, Inc.
101 West Louis Henna Blvd, Suite 400, Austin, TX 78728
Tel: 512-879-0400 • www.bgeinc.com
TBPE Registration No. F-1046

SHELL ROAD

MISC CONCRETE CURB, MEDIAN & SIDEWALK DETAILS

SHEET 1 OF 6

SHEET NO. 124

DATE: 3/12/2025 2:55:56 PM
FILE: G:\TX\Projects\City Georgetown\10767-00 Shell Road\03_CADD\01_Shts\03-RDWY\Stds\SHELL Misc Details 01.dgn

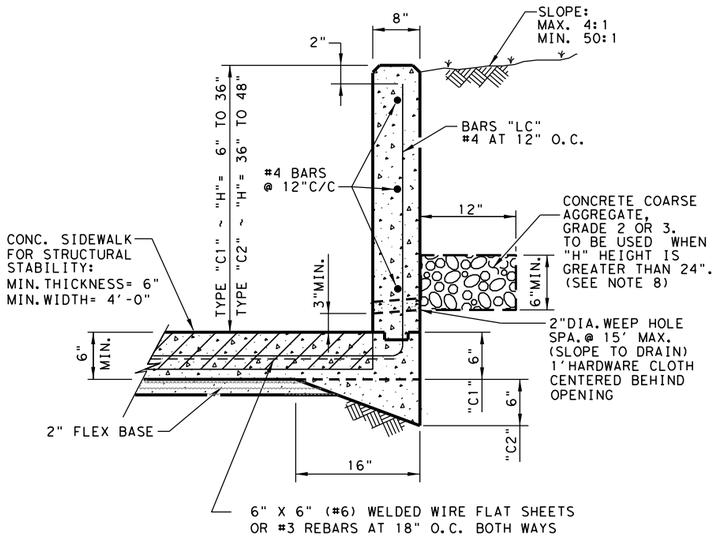

TYPE "C1" & "C2" CURB

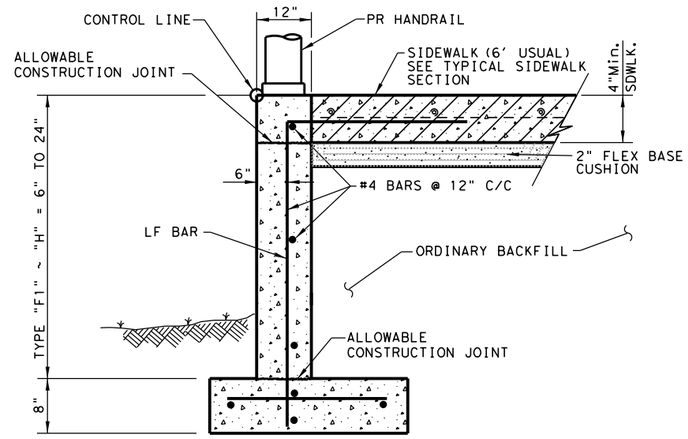

TYPE "F1" CURB

GENERAL NOTES:

1. CONCRETE FOR CURB TYPE F AND C SHOWN SHALL MEET THE MINIMUM SPECIFICATION REQUIREMENTS OF CLASS "C" CONCRETE PER ITEM 421
2. ALL REINFORCING STEEL SHALL BE GRADE 60
3. EXPANSION AND CONTRACTION JOINTS SHALL BE CONSTRUCTED TO MATCH PAVEMENT JOINITS IN ALL CURBS AND CURB AND GUTTER ADJACENT TO JOINTED CONCRETE PAVEMENT. WHERE PLACEMENT OF CURB OR CURB AND GUTTER IS NOT ADJACENT TO CONCRETE PAVEMENT, EXPANSION JOINTS SHALL BE PROVIDED AT STRUCTURES, CURB RETURNS AT STREETS, AND AT LOCATIONS DIRECTED BY THE ENGINEER.
4. VERTICAL AND HORIZONTAL DOWEL BARS AND TRANSVERSE REINFORCING BARS SHALL BE PLACED AT 4 FEET C-C, UNLESS OTHERWISE SHOWN.
5. UNTIL THE SIDEWALK IS COMPLETE, LATERAL SUPPORT FOR THE "F" CURBS WILL BE REQUIRED.
6. IF AGGREGATE IS REQUIRED PER THE DETAIL, IT IS PAID AS SUBSIDIARY TO THE CURB, ITEM 529.

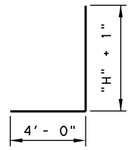

BAR "LC"

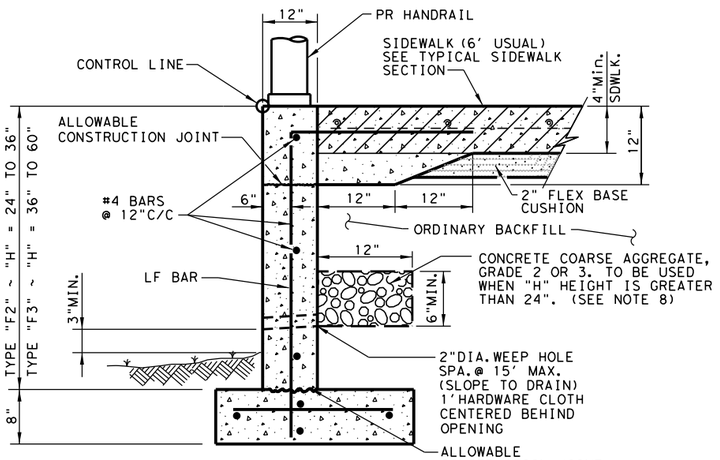

TYPE "F2" & "F3" CURB

DESIGN SOIL PARAMETERS:
Soil Unit Wt. = 120 pcf
Phi = 30 Degrees
Cohesion = 50 psf
Min. PI = 15
Max. PI = 30
SURCHARGE:
TYPE F CURB q = 2' Adjacent to sidewalk
Max. slope behind TYPE C Curb = 4:1
Min. Factor of Safety against sliding is 1.5.
Designed in accordance with current AASHTO Standards and Interim Specifications.

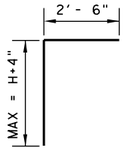

BAR "LF"

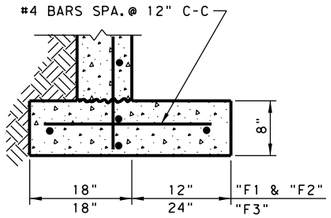

FOOTING DETAIL

CLASS C CONCRETE PAID UNDER ITEM 531, SIDEWALK. (NOTE. ADDITIONAL CONCRETE TO MEET THE THICKENED SECTIONS REQUIRED BY THESE DETAILS IS SUBSIDIARY TO ITEM 531, CURB.)

STATE OF TEXAS
ELENA RAMON
141765
LICENSED
PROFESSIONAL ENGINEER
3/12/2025

EST. 1848 GEORGETOWN TEXAS

BGE, Inc.
101 West Louis Henna Blvd, Suite 400, Austin, TX 78728
Tel: 512-879-0400 • www.bgeinc.com
TBPE Registration No. F-1046

SHELL ROAD

MISC CONCRETE CURB, MEDIAN & SIDEWALK DETAILS

SHEET 2 OF 6

SHEET NO. 125

DATE: 3/12/2025 2:55:56 PM
FILE: G:\TXC\Projects\City Georgetown\10767-00 Shell Road\03 CADD\01 Shts\03-ROW\1Stds\SHELL Misc Details 02.dgn 3/12/2025 2:55:56 PM

TYPE "F1" & "F2" CURB DETAILS

STA	OFFSET	WALL HEIGHT "H" (FT)	WALL TYPE
27+50	53' RT	1.74	F1
27+55	53' RT	1.75	F1
27+60	53' RT	1.74	F1
27+65	53' RT	1.74	F1
27+70	53' RT	1.75	F1
27+75	53' RT	1.79	F1
27+80	53' RT	1.86	F1
27+85	53' RT	1.90	F1
27+90	53' RT	1.88	F1
27+95	53' RT	1.87	F1
28+00	53' RT	1.84	F1
28+05	53' RT	1.80	F1
28+10	53' RT	1.72	F1
28+15	53' RT	1.65	F1
28+20	53' RT	1.60	F1
28+25	53' RT	1.53	F1
28+30	53' RT	1.40	F1
28+35	53' RT	1.28	F1
28+40	53' RT	1.17	F1
28+45	53' RT	1.08	F1
28+50	53' RT	1.01	F1

STA	OFFSET	WALL HEIGHT "H" (FT)	WALL TYPE
34+95	48.88' RT	2.69	F2
35+00	49.23' RT	2.63	F2
35+05	49.58' RT	2.67	F2
35+10	49.93' RT	2.70	F2
35+15	50.28' RT	2.72	F2
35+20	50.63' RT	2.74	F2
35+25	50.98 RT	2.75	F2
35+30	51.33' RT	2.76	F2
35+35	51.68' RT	2.78	F2
35+40	52.03' RT	2.81	F2
35+45	52.38' RT	2.82	F2
35+50	52.73' RT	2.84	F2
35+55	53' RT	2.86	F2
35+60	53' RT	2.87	F2
35+65	53' RT	2.87	F2
35+70	53' RT	2.87	F2
35+75	53' RT	2.86	F2
35+80	53' RT	2.85	F2
35+85	53' RT	2.85	F2
35+90	53' RT	2.84	F2
35+95	53' RT	2.83	F2
36+00	53' RT	2.82	F2
36+05	53' RT	2.81	F2
36+10	53' RT	2.81	F2
36+15	53' RT	2.80	F2
36+20	53' RT	2.80	F2
36+25	53' RT	2.79	F2
36+30	53' RT	2.77	F2
36+35	53' RT	2.76	F2
36+40	53' RT	2.75	F2

STA	OFFSET	WALL HEIGHT "H" (FT)	WALL TYPE
36+45	53' RT	2.73	F2
36+50	53' RT	2.71	F2
36+55	53' RT	2.69	F2
36+60	53' RT	2.65	F2
36+65	53' RT	2.62	F2
36+70	53' RT	2.60	F2
36+75	53' RT	2.40	F2
36+80	53' RT	2.26	F2
36+85	53' RT	2.21	F2
36+90	53' RT	2.20	F2
36+95	53' RT	2.16	F2
37+00	53' RT	2.04	F2
37+05	53' RT	1.96	F1
37+10	53' RT	1.87	F1
37+15	53' RT	1.83	F1
37+20	53' RT	1.89	F1
37+25	53' RT	1.76	F1
37+30	53' RT	1.52	F1
37+35	53' RT	1.49	F1
37+40	53' RT	1.54	F1
37+45	53' RT	1.57	F1
37+50	53' RT	1.59	F1
37+55	53' RT	1.61	F1
37+60	53' RT	1.62	F1
37+65	53' RT	1.60	F1
37+70	53' RT	1.58	F1
37+75	53' RT	1.60	F1
37+80	53' RT	1.65	F1
37+85	53' RT	1.65	F1
37+90	53' RT	1.42	F1
37+95	53' RT	1.55	F1

TYPE "C1" & "C2" CURB DETAILS

STA	OFFSET	WALL HEIGHT "H" (FT)	WALL TYPE
29+75	53' RT	0.39	C1
29+80	53' RT	0.51	C1
29+85	53' RT	0.63	C1
29+90	53' RT	0.79	C1
29+95	53' RT	0.92	C1
30+00	53' RT	0.98	C1
30+05	53' RT	1.07	C1
30+10	53' RT	1.07	C1
30+15	53' RT	1.13	C1
30+20	53' RT	1.25	C1
30+25	53' RT	1.21	C1
30+30	53' RT	1.17	C1
30+35	53' RT	1.15	C1
30+40	53' RT	1.13	C1
30+45	53' RT	1.16	C1
30+50	53' RT	1.19	C1
30+55	53' RT	1.23	C1
30+60	53' RT	1.26	C1
30+65	53' RT	1.39	C1
30+70	53' RT	1.54	C1
30+75	53' RT	1.83	C1
30+80	53' RT	2.18	C1
30+85	53' RT	2.75	C1
30+90	53' RT	3.20	C2
30+95	53' RT	3.52	C2
31+00	53' RT	3.82	C2
31+05	53' RT	3.97	C2
31+10	53' RT	3.94	C2
31+15	53' RT	3.91	C2
31+20	53' RT	4.00	C2
31+25	53' RT	4.00	C2
31+30	53' RT	4.00	C2
31+35	53' RT	3.95	C2
31+40	53' RT	3.77	C2
31+45	53' RT	3.46	C2

STATE OF TEXAS
ELENA RAMON
141765
LICENSED
PROFESSIONAL ENGINEER
Elena Ramon
3/12/2025

EST.1848 GEORGETOWN TEXAS

BGE, Inc.
101 West Louis Henna Blvd, Suite 400, Austin, TX 78728
Tel: 512-879-0400 • www.bgeinc.com
TBPE Registration No. F-1046

SHELL ROAD

MISC CONCRETE CURB, MEDIAN & SIDEWALK DETAILS

DATE: 3/12/2025 3:08:35 PM
FILE: G:\TXC\Projects\City Georgetown\10767-00 Shell Road\03 CADD\01 Shts\03-RDWY\Stds\SHELL Misc Details 03.dgn 3/12/2025 3:08:35 PM
DW: CK: DW: CK:

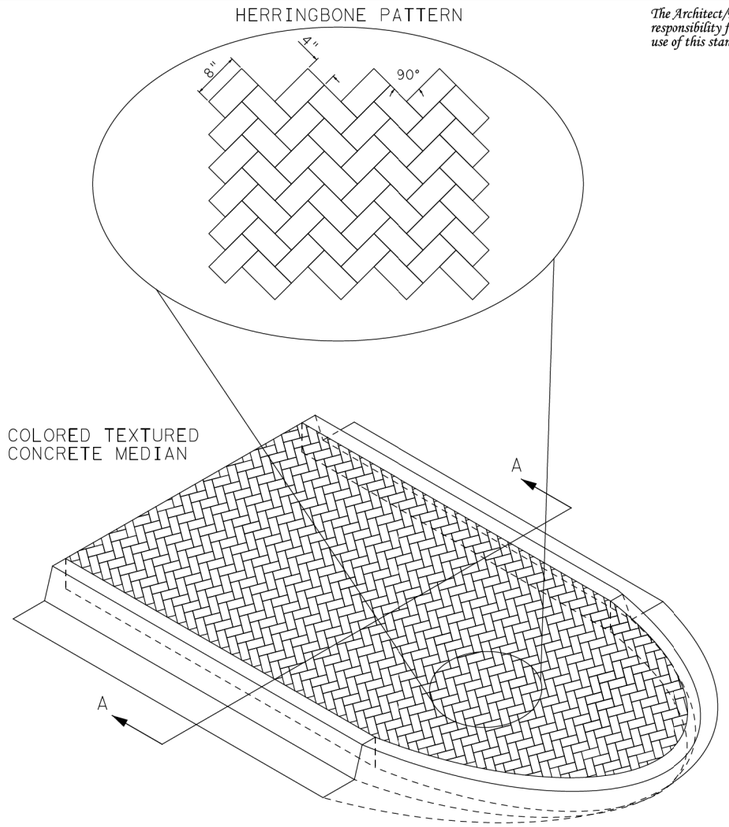

The Architect/Engineer assumes responsibility for appropriate use of this standard.

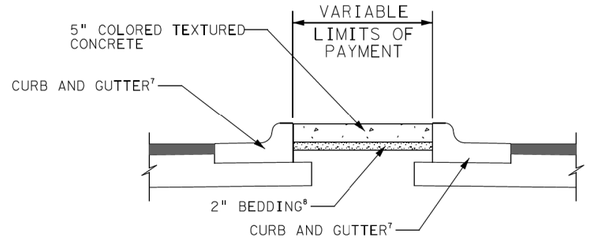

SECTION A-A

NOTES

1. USE CLASS A CONCRETE. PROVIDE COLORED WAX AS A CURING MEMBRANE MEETING THE REQUIREMENTS OF ASTM C309.
2. FOLLOW ITEM 528.3.1 FROM 2024 TXDOT STANDARD SPECIFICATIONS FOR CONSTRUCTION AND MAINTENANCE BUT USE TECHNICAL SPECS SECTION C2 - CONCRETE FOR STRUCTURES INSTEAD OF TXDOT ITEM 420 CONCRETE SUBSTRUCTURES.
3. USE FIBERS MEETING REQUIREMENTS OF DMS-4450, "FIBERS FOR CONCRETE" FROM TXDOT'S DEPARTMENTAL MATERIALS SPECIFICATION, TO REPLACE REINFORCING STEEL IN CLASS A CONCRETE.
5. PAVERS ARE 4"X8" AT 90° ANGLE.
6. USE TERRA COTTA DEEP COLOR, A SYNERGY INTEGRAL COLOR FROM THE PRISM CORPORATION.
7. FOLLOW TECHNICAL SPECS SECTION C4 - CURB AND GUTTER AND DETAIL SD- 06.
8. BEDDING MAY BE SAND, BASE, OR RAP BEDDING. FURNISH BASE MEETING THE REQUIREMENT FOR ANY TYPE OR GRADE IN ACCORDANCE WITH TECHNICAL SPECS SECTION SD4 - FLEXIBLE BASE. BASE COMPRESSIVE STRENGTHS ARE WAIVED. RAP MUST BE 100% PASSING A 1 IN. SIEVE. BEDDING MUST BE PLACED USING ORDINARY COMPACTION.

GEORGETOWN TEXAS

CITY OF GEORGETOWN
CONSTRUCTION STANDARDS AND DETAILS

COLORED TEXTURED CONCRETE MEDIAN PATTERN

PAGE 1 OF 1

REVISION NOTE:
DRAWING NAME:
SCALE: NTS
DATE: 1/8/24
DRAWN BY: REC
APPROVED BY:

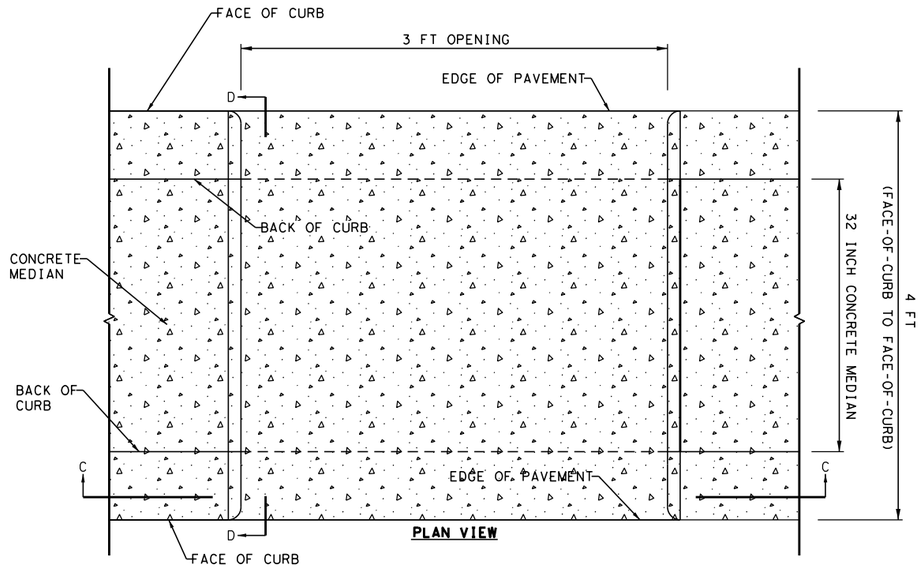

PLAN VIEW

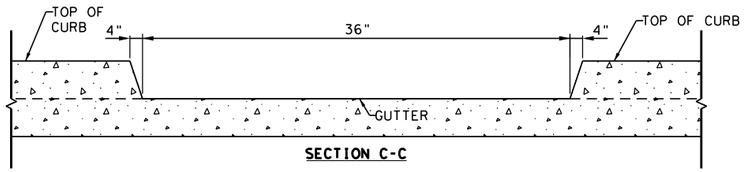

SECTION C-C

CURB CUT DETAIL

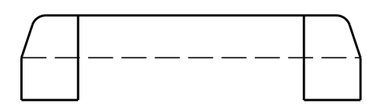

SECTION D-D

TYPE II CURB
5" - 5 ¾" HEIGHT

STATE OF TEXAS
ELENA RAMON
141765
LICENSED
PROFESSIONAL ENGINEER

Elena Ramon
3/12/2025

GEORGETOWN TEXAS EST.1848

BGE, Inc.
101 West Louis Henna Blvd, Suite 400, Austin, TX 78728
Tel: 512-879-0400 • www.bgeinc.com
TBPE Registration No. F-1046

SHELL ROAD

MISC CONCRETE CURB, MEDIAN & SIDEWALK DETAILS

SHEET 4 OF 6

SHEET NO.
127

DATE: 3/12/2025 3:08:37 PM
FILE: G:\TXC\Projects\City_Georgetown\10767-00 Shell Road\03_CADD\01_Shts\03-RDWY\Stds\SHELL_Misc_Details_04.dgn 3/12/2025 3:08:37 PM

The Architect/Engineer assumes responsibility for appropriate use of this standard.

NOTES:

1. COMMERCIAL SIDEWALKS WIDTHS – 6'
   RESIDENTIAL SIDEWALKS WIDTHS – 5'
2. ALL SLOPES ARE MAXIMUM ALLOWABLE. FLATTER SLOPES THAT WILL STILL DRAIN PROPERLY ARE ENCOURAGED.
3. ALL CONCRETE SURFACES SHALL RECEIVE A LIGHT BROOM FINISH UNLESS NOTED OTHERWISE IN THE PLANS.
4. FOR PURPOSES OF WARNING, THE CURB RAMPS SHALL HAVE A LIGHT REFLECTIVE VALUE AND TEXTURE THAT SIGNIFICANTLY CONTRASTS WITH THAT OF ADJOINING PEDESTRIAN ROUTES.
5. TEXTURES MAY CONSIST OF PAVERS WITH TRUNCATED DOMED SURFACES OR GROOVES. TEXTURES ARE REQUIRED TO BE DETECTABLE UNDERFOOT. SURFACES THAT WOULD ALLOW WATER TO ACCUMULATE ARE PROHIBITED.
6. COLOR CONTRAST, FOR EXAMPLE, CAN BE ACCOMPLISHED WITH COLORED CONCRETE PAVERS THAT HAVE TRUNCATED DOMES OR BY COLORED STAINED CONCRETE WITH GROOVES, EITHER OF WHICH WOULD PROVIDE A CONTRAST WITH TYPICALLY LIGHT COLORED CONCRETE.
7. ADDITIONAL INFORMATION ON CURB RAMP LOCATION, DESIGN, VISIBILITY AND TEXTURE MAY BE FOUND IN THE CURRENT EDITION OF THE TEXAS ACCESSIBILITY STANDARDS (TAS) PREPARED AND ADMINISTERED BY THE TEXAS DEPARTMENT OF LICENSING AND REGULATION (TDLR).
8. RAISED MEDIANS SEPARATE OPPOSING DIRECTIONS OF TRAFFIC AND PROVIDE A REFUGE AREA FOR PEDESTRIANS IF THEY ARE UNABLE TO CROSS THE ENTIRE ROADWAY IN THE ALLOTTED SIGNAL PHASE. TO SERVE AS A REFUGE AREA, THE MEDIAN SHOULD BE A MINIMUM OF 4 FEET WIDE. MEDIANS SHOULD BE DESIGNED TO PROVIDE ACCESSIBLE PASSAGE OVER OR THROUGH THEM.
9. ALL SIDEWALK PLANS AND DETAILS SHALL BE SUBMITTED AND APPROVED BY THE TEXAS DEPARTMENT OF LICENSING AND REGUALTION (TDLR).
10. ANY PART OF THE ACCESSIBLE ROUTE WITH A SLOPE GRATER THAN 1:20 (5%) SHALL BE CONSIDERED A RAMP. IF A RAMP HAS A RISE GREATER THAN 6 INCHES OR A HORIZONTAL PROJECTION GREATER THAN 72 INCHES, THEN IT SHALL HAVE HANDRAILS ON BOTH SIDES. THE ONLY EXCEPTION IS AT CURB RAMPS. HANDRAILS ARE NOT REQUIRED ON CURB RAMPS. CURB RAMPS SHALL BE PROVIDED WHERE EVER AN ACCESSIBLE ROUTE CROSSES (PENETRATES) A CURB. CURB RAMPS ARE GENERALLY INTERPRETED AS ONLY THE PORTION TYING DIRECTLY INTO THE ROADWAY.
11. TRAFFIC SIGNAL OR ILLUMINATION POLES, GROUND BOXES, CONTROLLER BOXES, SIGNS, DRAINAGE FACILITIES AND OTHER ITEMS SHALL BE PLACED SO NOT TO OBSTRUCT THE ACCESSIBLE ROUTE.
12. ALL SIDEWALKS WILL BE DOWELED INTO EXISTING SIDEWALKS, DRIVEWALKS, DRIVEWAYS, INLET BOXES, RETAINING WALLS, ETC.
13. ALL SIDEWALK CROSS–SLOPES SHALL NOT EXCEED 1:50, UNLESS A VARIANCE IS PROVIDED BY TDLR.

REVISION NOTE: ADOPTED 6/21/2006

EST. 1848 GEORGETOWN TEXAS
Georgetown Utility Systems
Your Community Owned Utility

CITY OF GEORGETOWN
CONSTRUCTION STANDARDS AND DETAILS
PEDESTRIAN RAMPS GENERAL NOTES

DRAWING NAME: SD28
SCALE: NTS | DATE: 1/2003
DRAWN BY: MRS | APPROVED BY: TRB

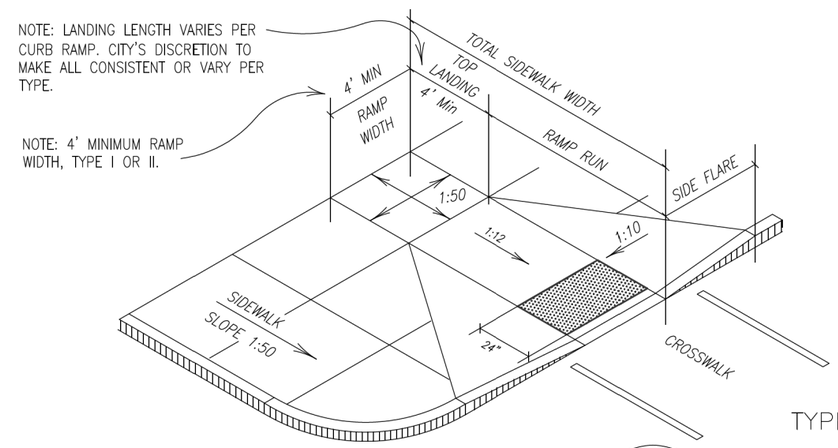

TYPE 1

PERPENDICULAR CURB RAMPS

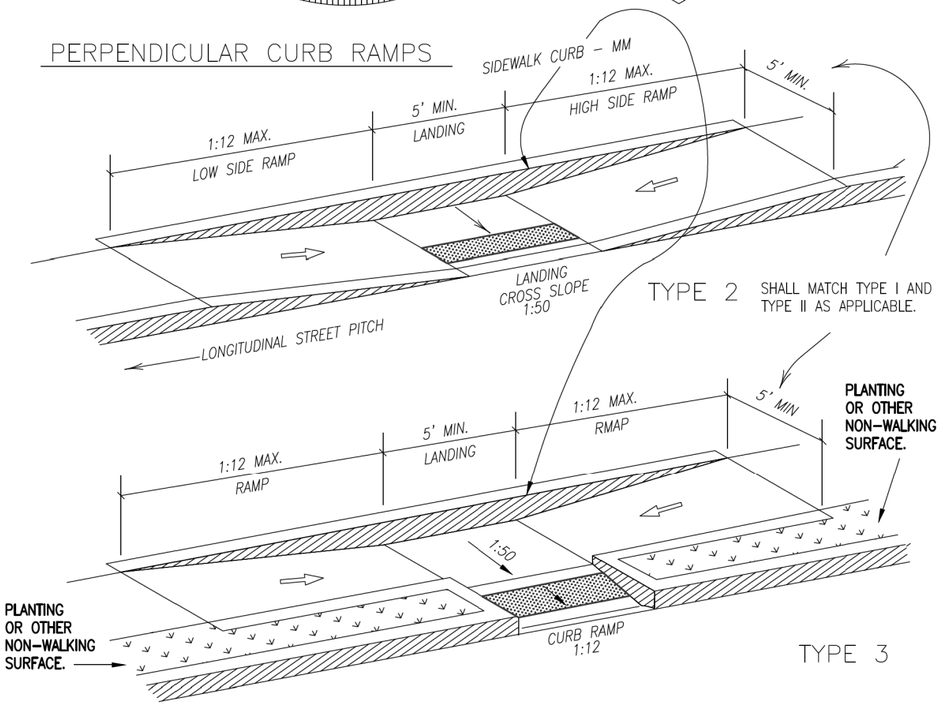

TYPE 2 SHALL MATCH TYPE I AND TYPE II AS APPLICABLE.

TYPE 3

The Architect/Engineer assumes responsibility for appropriate use of this standard.

PARALLEL CURB RAMPS

REVISED ON: 04/2016
REVISED ON: 06/2015
REVISED ON: 06/2006

GEORGETOWN TEXAS
more than welcome

CITY OF GEORGETOWN
CONSTRUCTION STANDARDS AND DETAILS
SIDEWALK RAMP DETAILS
TYPE 1–3

DRAWING NAME: SD31
SCALE: NTS | DATE: 1/2003
DRAWN BY: MRS | APPROVED BY: TRB

STATE OF TEXAS
ELENA RAMON
141765
LICENSED PROFESSIONAL ENGINEER

3/12/2025

EST. 1848 GEORGETOWN TEXAS

BGE, Inc.
101 West Louis Henna Blvd, Suite 400, Austin, TX 78728
Tel: 512-879-0400 • www.bgeinc.com
TBPE Registration No. F-1046

SHELL ROAD

MISC CONCRETE CURB, MEDIAN & SIDEWALK DETAILS

SHEET 5 OF 6

SHEET NO. 128

DATE: 3/12/2025 3:08:38 PM
FILE: G:\TXC\Projects\City Georgetown\10767-00 Shell Road\03 CADD\01 Shts\03-RDWY\Stds\SHELL Misc Details 05.dgn 3/12/2025 3:08:38 PM
DW: CK: DW: CK:

The Architect/Engineer assumes responsibility for appropriate use of this standard.

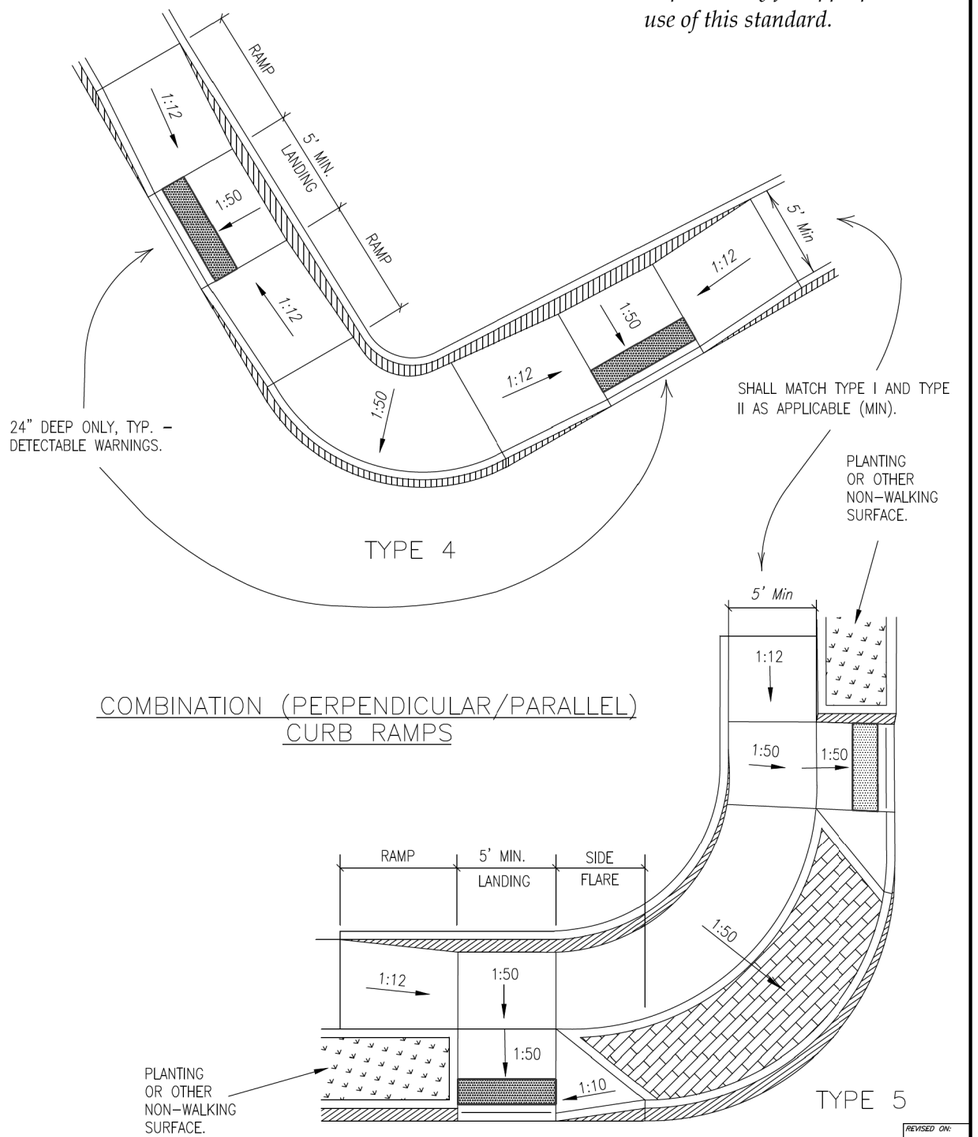

COMBINATION (PERPENDICULAR/PARALLEL) CURB RAMPS

REVISED ON:
04/2016
REVISED ON:
07/2015
REVISED ON:
06/2006

GEORGETOWN TEXAS
more than welcome

CITY OF GEORGETOWN
CONSTRUCTION STANDARDS AND DETAILS

SIDEWALK RAMP DETAIL TYPES 4 & 5

DRAWING NAME:	
SD33	
SCALE: NTS	DATE: 1/2003
DRAWN BY: MRS	APPROVED BY: TRB

STATE OF TEXAS
ELENA RAMON
141765
LICENSED PROFESSIONAL ENGINEER

3/12/2025

EST.1848 GEORGETOWN TEXAS

BGE, Inc.
101 West Louis Henna Blvd, Suite 400, Austin, TX 78728
Tel: 512-879-0400 • www.bgeinc.com
TBPE Registration No. F-1046

SHELL ROAD

MISC CONCRETE CURB, MEDIAN & SIDEWALK DETAILS

SHEET 6 OF 6

SHEET NO. 129

DATE: 3/12/2025 3:08:40 PM
FILE: G:\TXC\Projects\City Georgetown\10767-00 Shell Road\03_CADD\01 Shts\03-RDWY\Stds\SHELL Misc Details 06.dgn 3/12/2025 3:08:40 PM

DISCLAIMER:
The use of this standard is governed by the "Texas Engineering Practice Act". No warranty of any kind is made by TxDOT for any purpose whatsoever. TxDOT assumes no responsibility for the conversion of this standard to other formats or for incorrect results or damages resulting from its use.

DATE:
FILE:

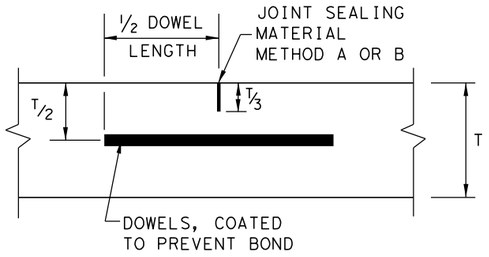

TRANSVERSE CONTRACTION JOINT
SECTION X-X

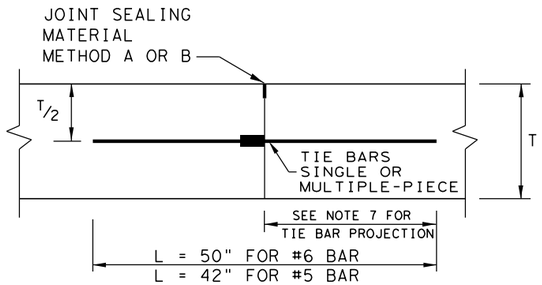

LONGITUDINAL CONSTRUCTION JOINT
SECTION Y-Y

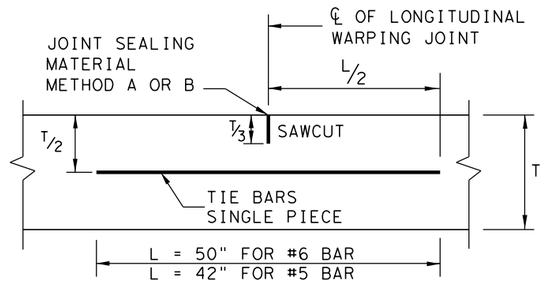

LONGITUDINAL WARPING JOINT
SECTION Z-Z

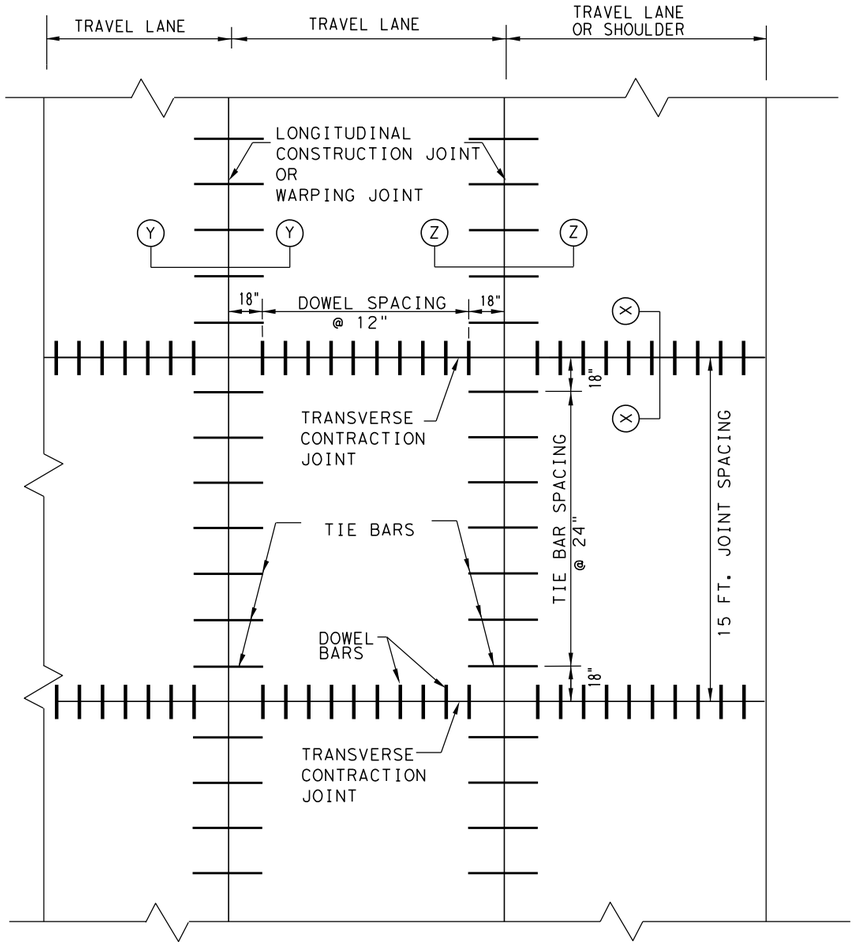

TYPICAL PAVEMENT LAYOUT
PLAN VIEW (NOT TO SCALE)

TABLE NO.1 DOWELS (SMOOTH BARS)		
SLAB THICKNESS T (IN.)	BAR DIA. AND LENGTH	AVERAGE SPACING (IN.)
6 to 7.5	1" X 18"	12
8 to 10	1 1/4" X 18"	12
>= 10.5	1 1/2" X 18"	12

TABLE NO.2 TIE BARS (DEFORMED BARS)		
SLAB THICKNESS T, (IN.)	BAR SIZE	AVERAGE SPACING (IN.)
6 to 7.5	#5	24
>= 8	#6	24

GENERAL NOTES

1. DETAILS FOR PAVEMENT WIDTH, PAVEMENT THICKNESS AND THE CROWN CROSS-SLOPE SHALL BE SHOWN ELSEWHERE IN THE PLANS. FOR PAVEMENTS WIDER THAN 100 FT. WITHOUT A FREE LONGITUDINAL JOINT, ADDITIONAL DETAILS MAY BE SHOWN ELSEWHERE IN THE PLANS.
2. FOR FURTHER INFORMATION REGARDING THE PLACEMENT OF CONCRETE AND LOAD TRANSFER DEVICES REFER TO THE GOVERNING SPECIFICATION FOR "CONCRETE PAVEMENT".
3. THE SPACING BETWEEN TRANSVERSE CONTRACTION JOINTS SHALL BE 15 FT. UNLESS OTHERWISE SHOWN IN THE PLANS.
4. TRANSVERSE CONSTRUCTION JOINTS MAY BE FORMED BY USE OF METAL OR WOOD FORMS EQUAL IN DEPTH TO THE DEPTH OF PAVEMENT, OR BY METHODS APPROVED BY THE ENGINEER.
5. USE HAND-OPERATED IMMERSION VIBRATORS TO CONSOLIDATE THE CONCRETE ADJACENT TO ALL THE FORMED JOINTS.
6. PAVEMENT WIDTHS OF MORE THAN 15 FT. SHALL HAVE A LONGITUDINAL JOINT (SECTION Z-Z OR SECTION Y-Y). THESE JOINTS SHALL BE LOCATED WITHIN 6 IN. OF THE LANE LINE UNLESS THE JOINT LOCATION IS SHOWN ELSEWHERE ON THE PLANS.
7. THE MINIMUM PROJECTION OF TIE BARS INTO THE ADJACENT PLACEMENT IS 22.5 IN. FOR #6 BARS AND 18.5 IN. FOR #5 BARS.
8. WHEN TYING CONCRETE GUTTER AT A LONGITUDINAL JOINT, THE TIE BAR LENGTH OR POSITION MAY BE ADJUSTED. PROVIDE 3 IN. OF CONCRETE COVER FROM THE BACK OF GUTTER TO THE END OF TIE BAR.
9. REPLACE MISSING OR DAMAGED TIE BARS WITHOUT ADDITIONAL COMPENSATION BY DRILLING MIN. 10 IN. DEEP AND GROUTING TIE BARS WITH TYPE III, CLASS C EPOXY. MEET THE PULL-OUT TEST REQUIREMENTS IN ITEM 361.
10. WHEN A MONOLITHIIC CURB IS SPECIFIED, THE JOINT IN THE CURB SHALL COINCIDE WITH PAVEMENT JOINTS AND MAY BE FORMED BY ANY MEANS APPROVED BY THE ENGINEER.
11. DOWEL BAR PLACEMENT TOLERANCE SHALL BE +/- 1/4 IN. HORIZONTALLY AND VERTICALLY UNLESS OTHERWISE SPECIFIED. WHERE DOWEL BAR BASKETS ARE USED, REMOVE OR CUT THE SHIPPING WIRES.
12. THE DETAIL FOR JOINT SEALANT AND RESERVOIR IS SHOWN ON STANDARD SHEET "CONCRETE PAVING DETAILS, JOINT SEALS."

Texas Department of Transportation

Design Division Standard

CONCRETE PAVEMENT CONTRACTION DESIGN

T-6 to 12 INCHES

CPCD-24

FILE: cpcd24.dgn	DN: CES		DN: KM	DW:	CK: AN
© TxDOT: Sept 2024	CONT	SECT	JOB		HIGHWAY
REVISIONS					
	DIST	COUNTY			SHEET NO.
					130

DISCLAIMER:
The use of this standard is governed by the "Texas Engineering Practice Act". No warranty of any kind is made by TxDOT for any purpose whatsoever. TxDOT assumes no responsibility for the conversion of this standard to other formats or for incorrect results or damages resulting from its use.

DATE:
FILE:

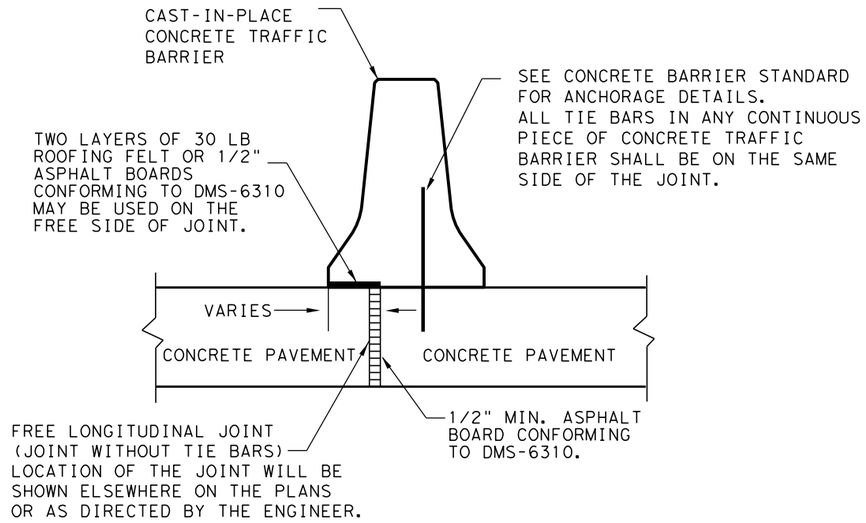

FREE LONGITUDINAL JOINT DETAIL

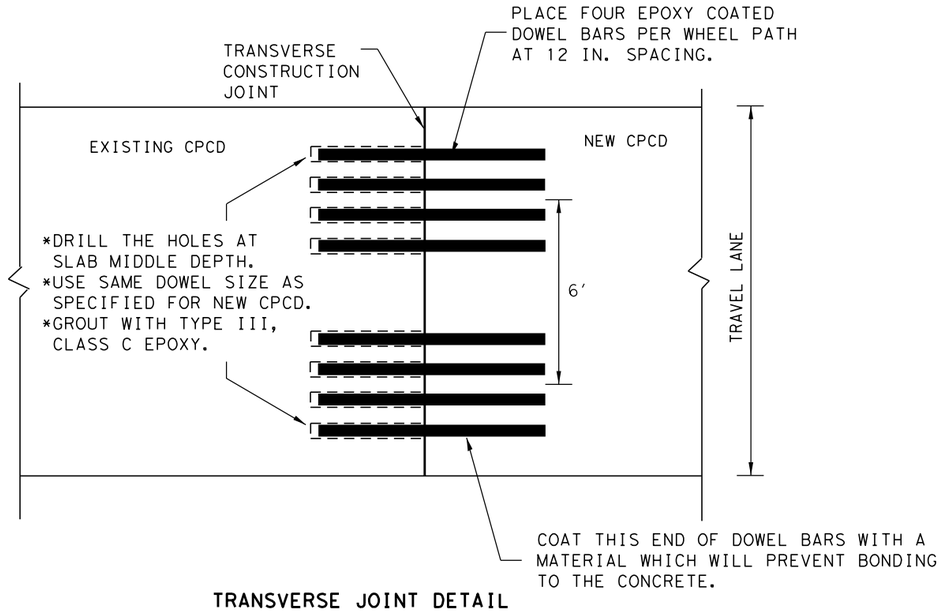

TRANSVERSE JOINT DETAIL

EXISTING CPCD TO NEW CPCD

PLAN VIEW (NOT TO SCALE)

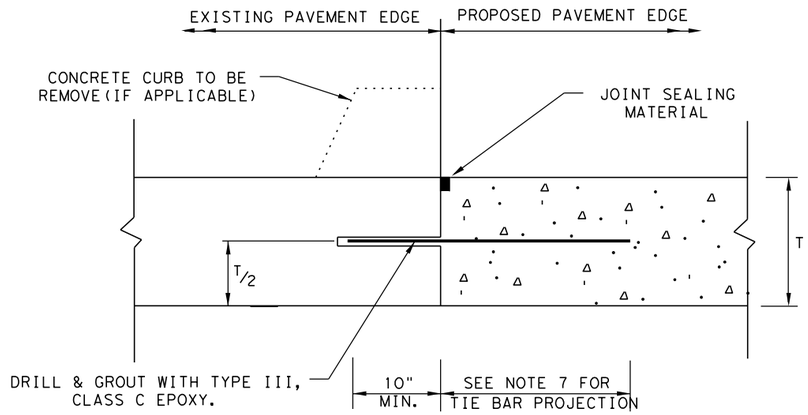

1. USE A DRILL BIT WITH A DIAMETER THAT IS 1/8 IN. GREATER THAN THAT OF THE TIE BAR DIAMETER.
2. BEFORE CONCRETE PLACEMENT, PERFORM PULL-OUT TESTS ON EPOXY-GROUTED TIE BARS IN ACCORDANCE WITH ITEM 360.
3. SPACE TIE BARS AT 24" SPACING. USE #6 TIE BARS FOR 8" AND THICKER PAVEMENTS, USE #5 TIE BARS FOR LESS THAN 8" THICK PAVEMENTS.
4. THE TRANSVERSE JOINTS OF PROPOSED PAVEMENT SHALL COINCIDE WITH EXISTING PAVEMENT JOINTS UNLESS OTHERWISE SHOWN ON THE PLANS.

LONGITUDINAL WIDENING JOINT DETAIL

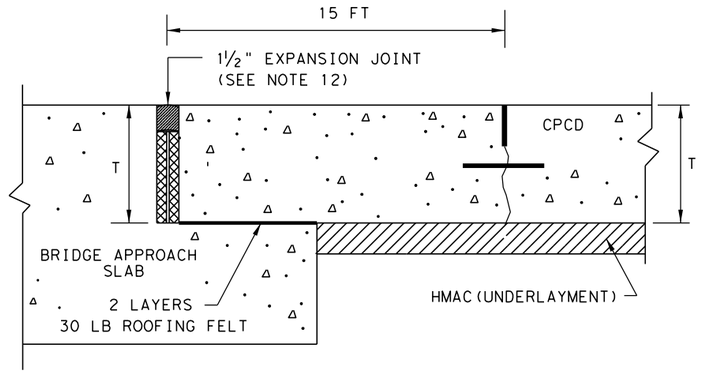

TRANSVERSE EXPANSION JOINT DETAIL

AT BRIDGE APPROACH

Texas Department of Transportation

Design Division Standard

CONCRETE PAVEMENT CONTRACTION DESIGN

T-6 to 12 INCHES

CPCD-24

FILE: cpcd24.dgn	DN: CES		DN: KM	DW:		CK: AN
© TxDOT: Sept 2024	CONT	SECT	JOB		HIGHWAY	
REVISIONS						
	DIST	COUNTY				SHEET NO.
						131

DISCLAIMER:
The use of this standard is governed by the "Texas Engineering Practice Act". No warranty of any kind is made by TxDOT for any purpose whatsoever. TxDOT assumes no responsibility for the conversion of this standard to other formats or for incorrect results or damages resulting from its use.

DATE: 3/12/2025 3:08:43 PM
FILE: G:\TXC\Projects\City_Georgetown\10767-00 Shell Road\03_CADD\01_Shts\03-ROWY\Stds\cccg22.dgn

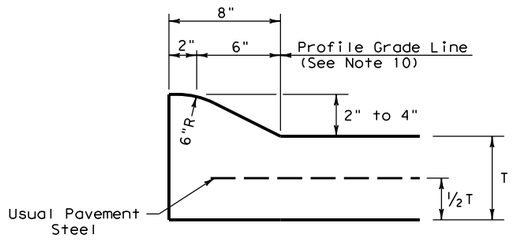

TYPE I CURB (MONOLITHIC)
2" - 4" HEIGHT

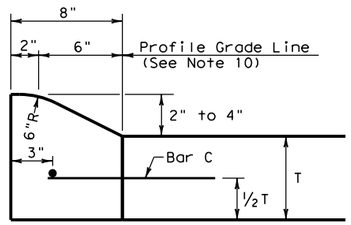

TYPE I CURB
2" - 4" HEIGHT

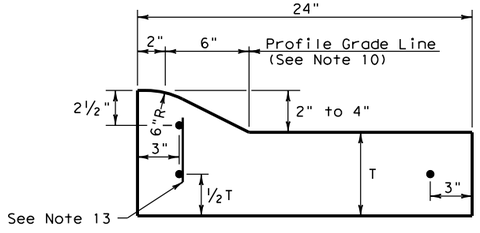

TYPE I CURB AND GUTTER
2" - 4" HEIGHT

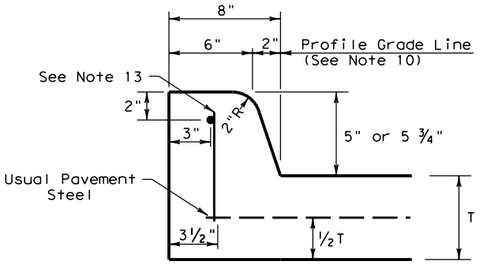

TYPE II CURB (MONOLITHIC)
5" - 5 ¾" HEIGHT

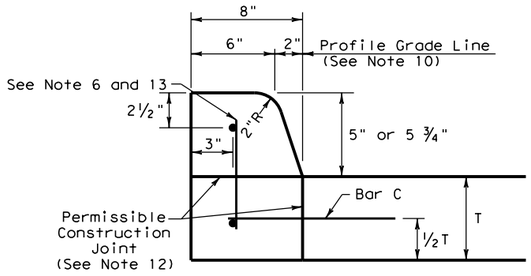

TYPE II CURB
5" - 5 ¾" HEIGHT

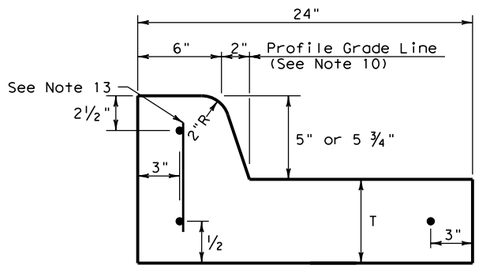

TYPE II CURB AND GUTTER
5" - 5 ¾" HEIGHT

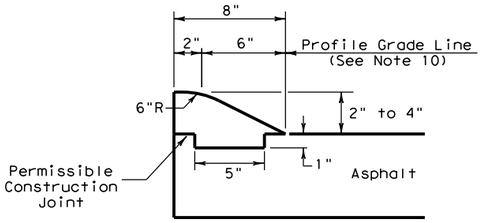

TYPE III CURB (KEYED)
2" - 4" HEIGHT

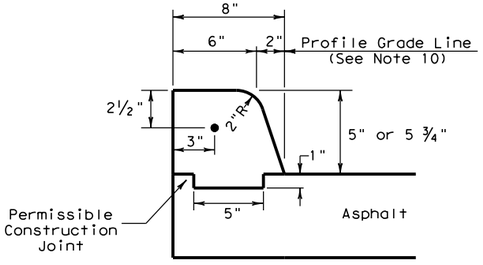

TYPE IV CURB (KEYED)
5" - 5 ¾" HEIGHT

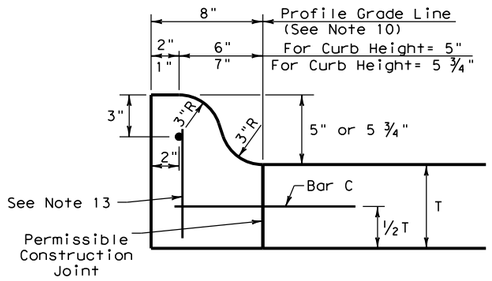

TYPE IIa CURB
5" - 5 ¾" HEIGHT

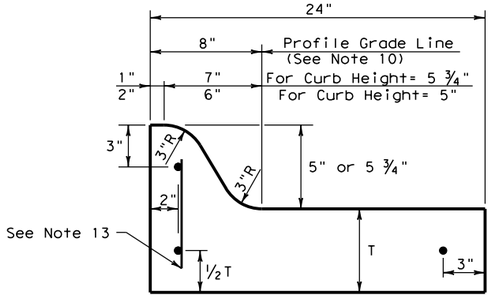

TYPE IIa CURB AND GUTTER
5" - 5 ¾" HEIGHT

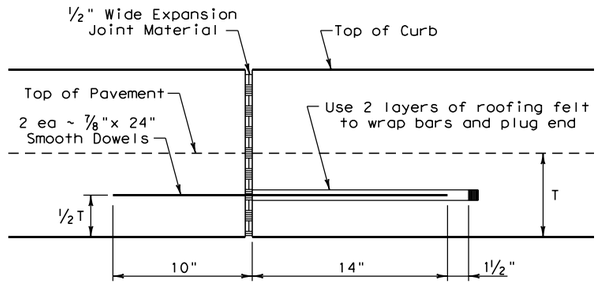

EXPANSION JOINT DETAIL

CURB TRANSITION NOTE:
Field conditions may require a longer or shorter transition, and shall be shown elsewhere in the plans, or as directed by the Engineer.

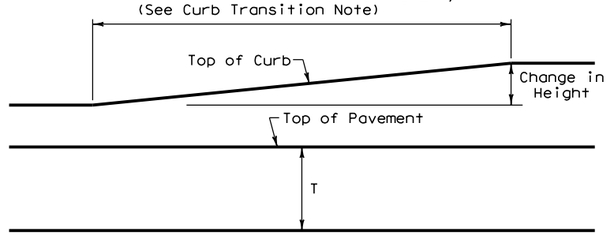

CURB TRANSITION
Note: To be paid for as Highest Curb

GENERAL NOTES

1. All materials and construction shall be in accordance with Item 529, "Concrete Curb, Gutter, and Combined Curb and Gutter."
2. Concrete shall be Class A.
3. When reinforcing bars are used, they shall be No.4 unless otherwise shown. The use of fiber reinforced concrete in lieu of reinforcing steel is acceptable. Use fibers meeting the requirements of DMS 4550, "Fibers for Concrete," and dose fibers in accordance with Material Producers List (MPL) "Fibers for Class A and B Concrete Applications."
4. Round exposed sharp edges with a rounding tool, to a minimum radius of ¼ inch.
5. All existing curbs and driveways to be removed shall be sawed or removed at existing joints.
6. Where concrete curb is to be placed on existing concrete pavement, Bar B may be drilled and grouted in place, or may be inserted into fresh concrete.
7. Expansion and contraction joints shall be constructed to match pavement joints in all curbs and curb and gutter adjacent to jointed concrete pavement. Where placement of curb or curb and gutter is not adjacent to concrete pavement, expansion joints shall be provided at structures, curb returns at streets, and at locations directed by The Engineer.
8. Vertical and horizontal dowel bars and transverse reinforcing bars shall be placed at four feet C~C.
9. Dimension 'T' shown is the thickness of concrete pavement. When curb is installed adjacent to flexible pavement dimension 'T' is 8" maximum.
10. Usual profile grade line. Refer to typical sections and plan-profile sheets for exact locations.
11. One-half inch expansion joint material shall be provided where curb or curb and gutter is adjacent to sidewalk or riprap.
12. When horizontal permissible construction joints are used, the longitudinal pavement steel shall be placed in accordance with pavement details shown elsewhere in the plans. Reinforcing steel for curb section shall then conform to that required for concrete curb.
13. Bar B placement as needed (typically at four ft. C-C) to support curb reinforcing steel during concrete placement.



BAR B

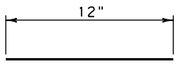

BAR C

Texas Department of Transportation

Design Division Standard

CONCRETE CURB AND CURB AND GUTTER

CCCG-22

FILE: cccg21.dgn	DN: TXDOT	CK: AN	DW: CS	CK: KM
© TxDOT: JUNE 2022	CONT	SECT	JOB	HIGHWAY
REVISIONS				
	DIST	COUNTY		SHEET NO.
				132

DISCLAIMER:
The use of this standard is governed by the "Texas Engineering Practice Act". No warranty of any kind is made by TxDOT for any purpose whatsoever. TxDOT assumes no responsibility for the conversion of this standard to other formats or for incorrect results or damages resulting from its use.

DATE: 3/12/2025
FILE: G:\TXC\Projects\City_Georgetown\10767-00 Shell Road\03_CADD\01_Shts\03-RDWY\Stds\ped18.dgn

TYPE 1

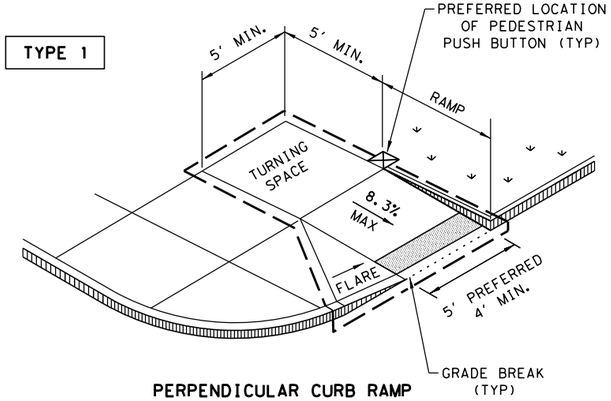

PERPENDICULAR CURB RAMP

TYPE 2

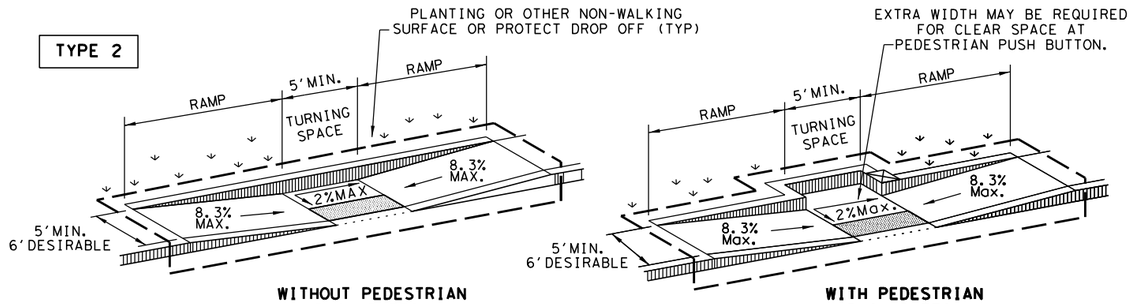

WITHOUT PEDESTRIAN PUSH BUTTON

WITH PEDESTRIAN PUSH BUTTON

PARALLEL CURB RAMP

TYPE 3

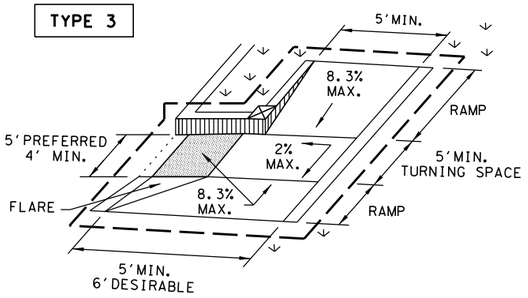

TYPE 6

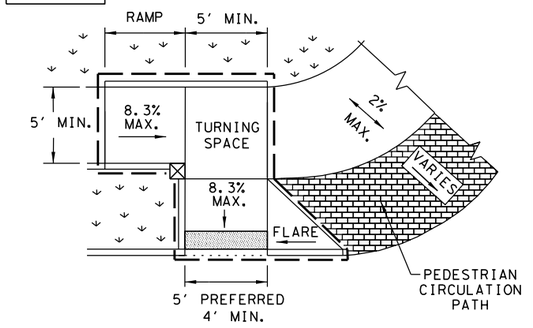

COMBINATION CURB RAMPS

TYPE 20

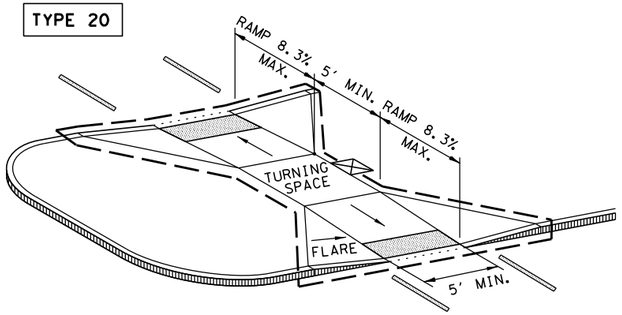

CURB RAMPS AT MEDIAN ISLANDS

TYPE 7

(SIDEWALK SET BACK FROM CURB)

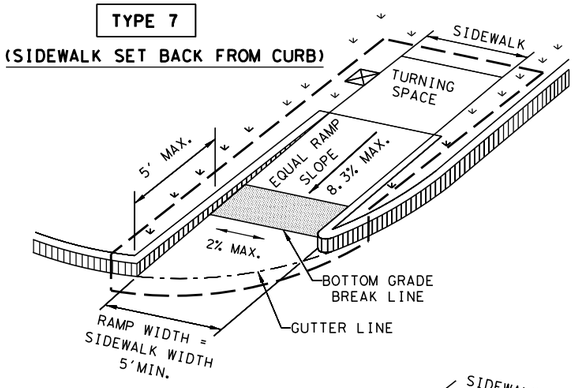

CROSS SLOPE NOT TO EXCEED 2% ON ANY PORTION OF RAMP, TURNING SPACE OR TRANSITION TO STREET.

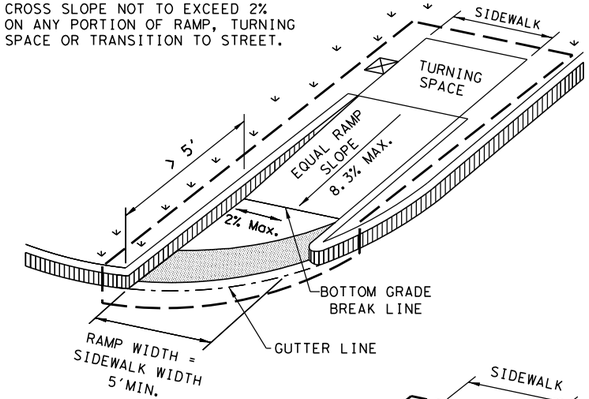

TYPE 10

(SIDEWALK ADJACENT TO CURB)

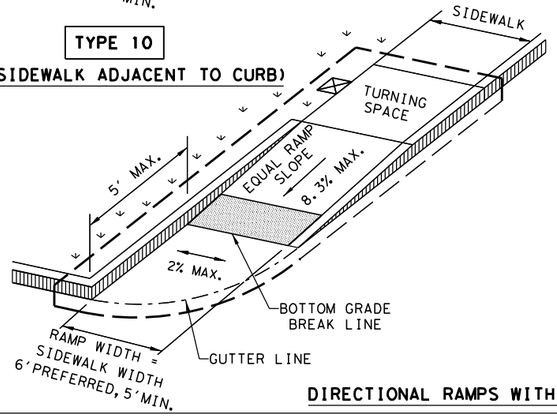

CROSS SLOPE NOT TO EXCEED 2% ON ANY PORTION OF RAMP, TURNING SPACE OR TRANSITION TO STREET.

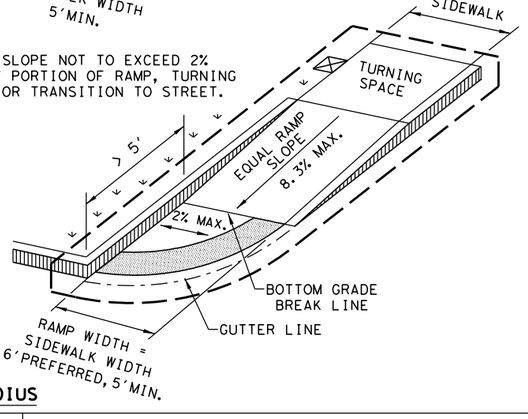

DIRECTIONAL RAMPS WITHIN RADIUS

TYPE 5

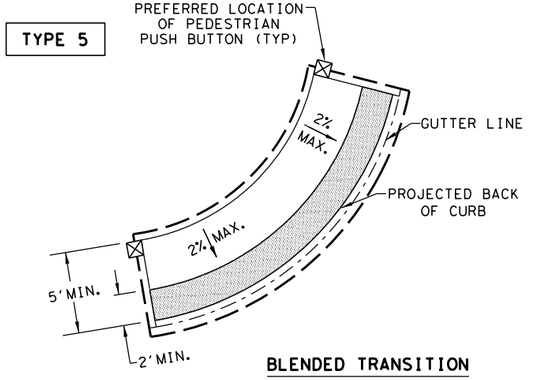

BLENDED TRANSITION
(FLUSH LANDING)

TYPE 21

INSTALL DETECTABLE WARNING SURFACE AT EACH END OF THE CUT-THROUGH RAMP WITH A MINIMUM 2' USUAL SIDEWALK SURFACE BETWEEN. IF MEDIAN IS LESS THAN 6' WIDE, ELIMINATE DETECTABLE WARNING SURFACES.

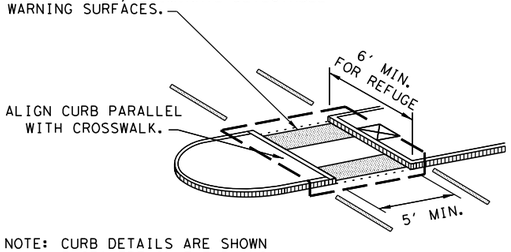

NOTE: CURB DETAILS ARE SHOWN ELSEWHERE IN THE PLANS.

TYPE 22

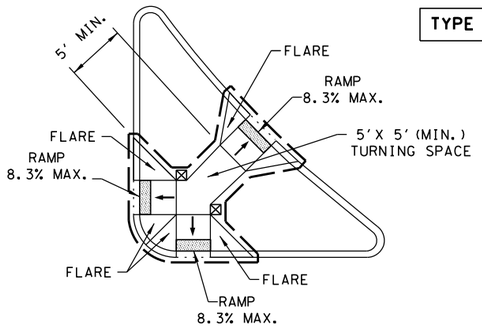

COMBINATION ISLAND RAMPS

BOTTOM GRADE BREAK OF CURB RAMP WILL NORMALLY BE AT GUTTER LINE. SURFACE SLOPES AT GRADE BREAKS SHALL BE FLUSH.

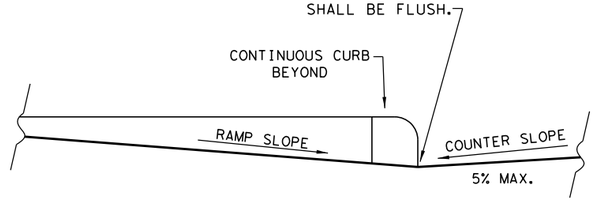

TYPICAL SECTION OF PERPENDICULAR CURB RAMP AT CONNECTION TO ROADWAY

NOTES / LEGEND:

SEE GENERAL NOTES ON SHEET 2 OF 4 FOR MORE INFORMATION.

DENOTES PLANTING OR NON-WALKING SURFACE NOT PART OF PEDESTRIAN CIRCULATION PATH.

DETECTABLE WARNING SURFACE

DENOTES PREFERRED LOCATION OF PEDESTRIAN PUSH BUTTON IF APPLICABLE.

GUTTER LINE

GRADE BREAK

RAMP LIMITS OF PAYMENT

SHEET 1 OF 4

Texas Department of Transportation

Design Division Standard

PEDESTRIAN FACILITIES CURB RAMPS

PED-18

FILE: ped18	DN: TxDOT		DW: VP	CK: KM	CK: PK & JG
© TxDOT: MARCH, 2002	CONT	SECT	JOB		HIGHWAY
REVISIONS					
REVISED 08, 2005 REVISED 06, 2012 REVISED 01, 2018	DIST	COUNTY			SHEET NO.
					133

DISCLAIMER:
The use of this standard is governed by the "Texas Engineering Practice Act". No warranty of any kind is made by TxDOT for any purpose whatsoever. TxDOT assumes no responsibility for the conversion of this standard to other formats or for incorrect results or damages resulting from its use.

FILE: G:\TXC\Projects\City_Georgetown\10767-00 Shell Road\03_CADD\01_Shts\03-RDWY\Stds\ped18.dgn
3/12/2025

GENERAL NOTES

CURB RAMPS

1. Install a curb ramp or blended transition at each pedestrian street crossing.
2. All slopes shown are maximum allowable. Cross slopes of 1.5% and lesser running should be used. Adjust curb ramp length or grade of approach sidewalks as directed.
3. Maximum allowable cross slope on sidewalk and curb ramp surfaces is 2%.
4. The minimum sidewalk width is 5'. Where the sidewalk is adjacent to the back of curb, a 6' sidewalk width is desirable. Where a 5' sidewalk cannot be provided due to site constraints, sidewalk width may be reduced to 4' for short distances. 5'x 5' passing areas at intervals not to exceed 200' are required.
5. Turning Spaces shall be 5'x 5' minimum. Cross slope shall be maximum 2%.
6. Clear space at the bottom of curb ramps shall be a minimum of 4'x 4' wholly contained within the crosswalk and wholly outside the parallel vehicular travel path.
7. Provide flared sides where the pedestrian circulation path crosses the curb ramp. Flared sides shall be sloped at 10% maximum, measured parallel to the curb. Returned curbs may be used only where pedestrians would not normally walk across the ramp, either because the adjacent surface is planted, substantially obstructed, or otherwise protected.
8. Additional information on curb ramp location, design, light reflective value and texture may be found in the latest draft of the Proposed Guidelines for Pedestrian Facilities in the Public Right of Way (PROWAG) as published by the U.S. Architectural and Transportation Barriers Compliance Board (Access Board).
9. To serve as a pedestrian refuge area, the median should be a minimum of 6' wide, measured from back of curbs. Medians should be designed to provide accessible passage over or through them.
10. Small channelization islands, which do not provide a minimum 5'x 5' landing at the top of curb ramps, shall be cut through level with the surface of the street.
11. Crosswalk dimensions, crosswalk markings and stop bar locations shall be as shown elsewhere in the plans. At intersections where crosswalk markings are not required, curb ramps shall align with theoretical crosswalks unless otherwise directed.
12. Provide curb ramps to connect the pedestrian access route at each pedestrian street crossing. Handrails are not required on curb ramps.
13. Curb ramps and landings shall be constructed and paid for in accordance with Item 531 "Sidewalks".
14. Place concrete at a minimum depth of 5" for ramps, flares and landings, unless otherwise directed.
15. Furnish and install No. 3 reinforcing steel bars at 18" o.c. both ways, unless otherwise directed.
16. Provide a smooth transition where the curb ramps connect to the street.
17. Curbs shown on sheet 1 within the limits of payment are considered part of the curb ramp for payment, whether it is concrete curb, gutter, or combined curb and gutter.
18. Existing features that comply with applicalble standards may remain in place unless otherwise shown on the plans.

DETECTABLE WARNING MATERIAL

19. Curb ramps must contain a detectable warning surface that consists of raised truncated domes complying with PROWAG. The surface must contrast visually with adjoining surfaces, including side flares. Furnish and install an approved cast-in-place dark brown or dark red detectable warning surface material adjacent to uncolored concrete, unless specified elsewhere in the plans.
20. Detectable Warning Materials must meet TxDOT Departmental Materials Specification DMS 4350 and be listed on the Material Producer List. Install products in accordance with manufacturer's specifications.
21. Detectable warning surfaces must be firm, stable and slip resistant.
22. Detectable warning surfaces shall be a minimum of 24 inches in depth in the direction of pedestrian travel, and extend the full width of the curb ramp or landing where the pedestrian access route enters the street.
23. Detectable warning surfaces shall be located so that the edge nearest the curb line is at the back of curb and neither end of that edge is greater than 5 feet from the back of curb. Detectable warning surfaces may be curved along the corner radius.
24. Shaded areas on Sheet 1 of 4 indicate the approximate location for the detectable warning surface for each curb ramp type.

DETECTABLE WARNING PAVERS (IF USED)

25. Furnish detectable warning paver units meeting all requirements of ASTM C-936, C-33. Lay in a two by two unit basket weave pattern or as directed.
26. Lay full-size units first followed by closure units consisting of at least 25 percent (25%) of a full unit. Cut detectable warning paver units using a power saw.

SIDEWALKS

27. Provide clear ground space at operable parts, including pedestrian push buttons. Operable parts shall be placed within unobstructed reach range specified in PROWAG section R406.
28. Place traffic signal or illumination poles, ground boxes, controller boxes, signs, drainage facilities and other items so as not to obstruct the pedestrian access route or clear ground space.
29. Street grades and cross slopes shall be as shown elsewhere in the plans.
30. Changes in level greater than 1/4 inch are not permitted.
31. The least possible grade should be used to maximize accessibility. The running slope of sidewalks and crosswalks within the public right of way may follow the grade of the parallel roadway. Where a continuous grade greater than five percent (5%) must be provided, handrails may be desirable to improve accessibility. Handrails may also be needed to protect pedestrians from potentially hazardous conditions. If provided, handrails shall comply with PROWAG R409.
32. Handrail extensions shall not protrude into the usable landing area or into intersecting pedestrian routes.
33. Driveways and turnouts shall be constructed and paid for in accordance with Item "Intersections, Driveways and Turnouts". Sidewalks shall be constructed and paid for in accordance with Item, "Sidewalks".
34. Sidewalk details are shown elsewhere in the plans.

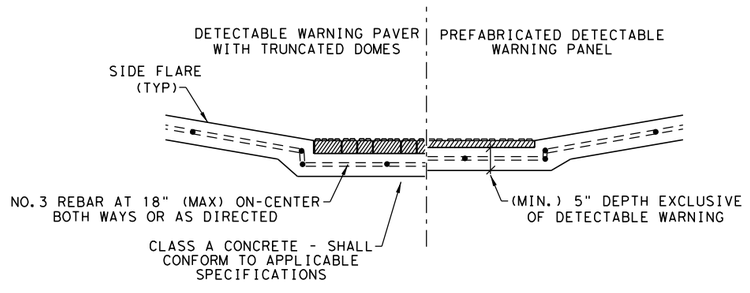

SECTION VIEW DETAIL
CURB RAMP AT DETECTIBLE WARNINGS

DETECTABLE WARNING SURFACE DETAILS

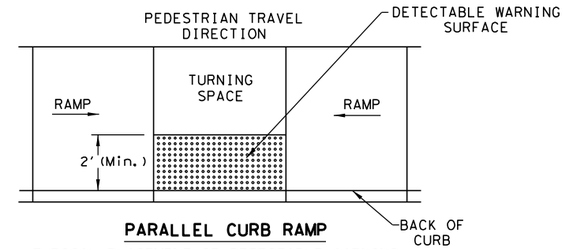

PARALLEL CURB RAMP
TYPICAL PLACEMENT OF DETECTABLE WARNING SURFACE ON LANDING AT STREET EDGE.

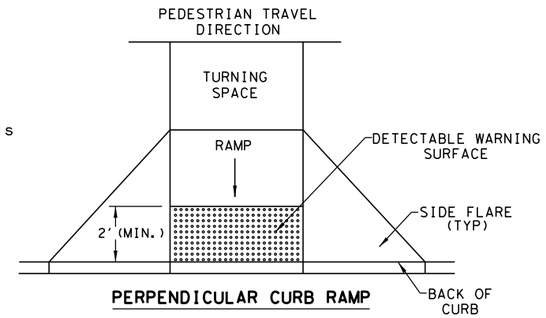

PERPENDICULAR CURB RAMP
TYPICAL PLACEMENT OF DETECTABLE WARNING SURFACE ON SLOPING RAMP RUN.

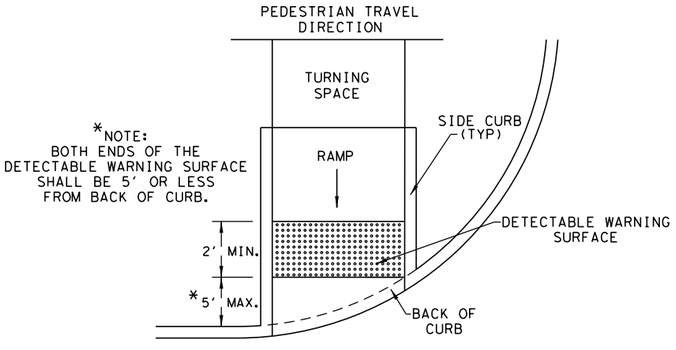

DIRECTIONAL CURB RAMP
TYPICAL PLACEMENT OF DETECTABLE WARNING SURFACE ON SLOPING RAMP RUN.

Texas Department of Transportation | Design Division Standard

PEDESTRIAN FACILITIES CURB RAMPS

PED-18

FILE: ped18	DN: TxDOT	DW: VP	CK: KM	CK: PK & JG
© TxDOT: MARCH, 2002	CONT	SECT	JOB	HIGHWAY
REVISIONS				
REVISED 08, 2005 REVISED 06, 2012 REVISED 01, 2018	DIST	COUNTY		SHEET NO.
				134

DISCLAIMER:
The use of this standard is governed by the "Texas Engineering Practice Act". No warranty of any kind is made by TxDOT for any purpose whatsoever. TxDOT assumes no responsibility for the conversion of this standard to other formats or for incorrect results or damages resulting from its use.

DATE: 3/12/2025
FILE: G:\TXC\Projects\City_Georgetown\10767-00 Shell Road\03_CADD\01_Shts\03-RDWY\Srds\ped18.dgn

SIDEWALK TREATMENT AT DRIVEWAYS

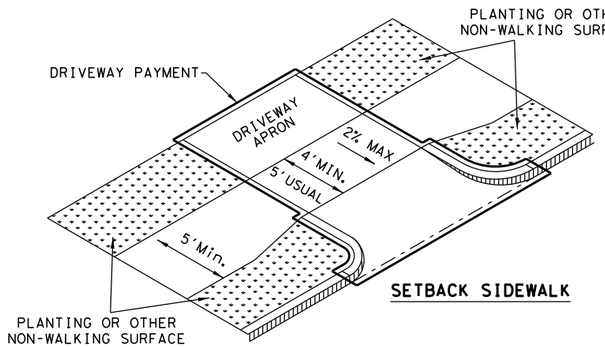

SETBACK SIDEWALK

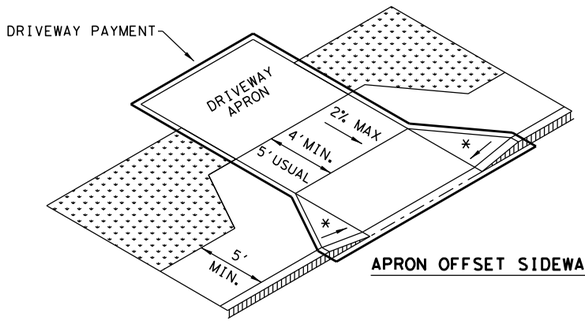

APRON OFFSET SIDEWALK

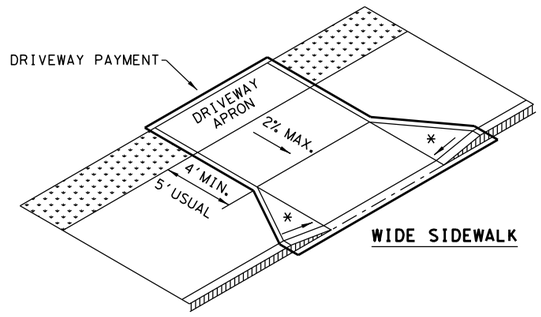

WIDE SIDEWALK

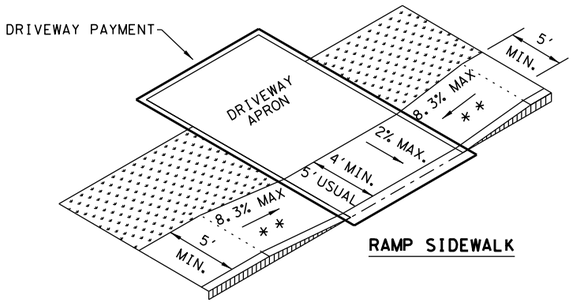

RAMP SIDEWALK

NOTES:

* WHERE DRIVEWAYS CROSS THE PEDESTRIAN ROUTE, SIDES SHALL BE FLARED AT 10% MAX SLOPE.

* * IF CURB HEIGHT IS GREATER THAN 6 INCHES, USE GRADE LESS THAN OR EQUAL TO 5%. HANDRAIL AND DETECTABLE WARNING ARE NOT REQUIRED.

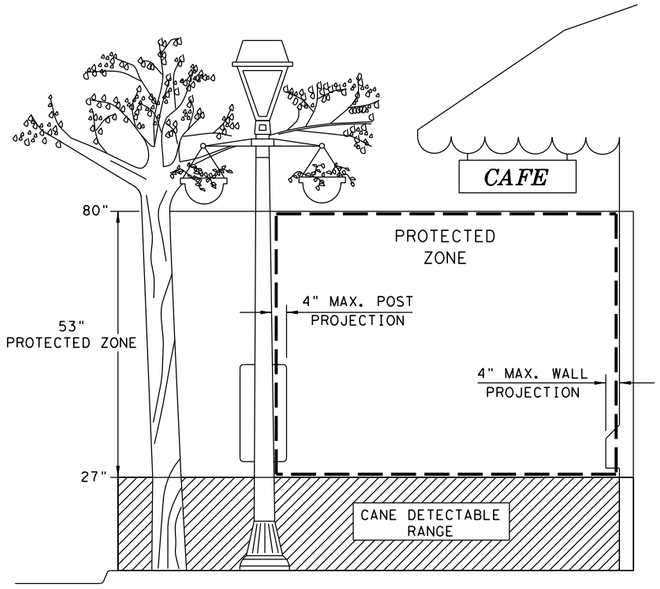

PROTECTED ZONE

NOTE: IN PEDESTRIAN CIRCULATION AREA, MAXIMUM 4" PROJECTION FOR POST OR WALL MOUNTED OBJECTS BETWEEN 27" AND 80" ABOVE THE SURFACE.

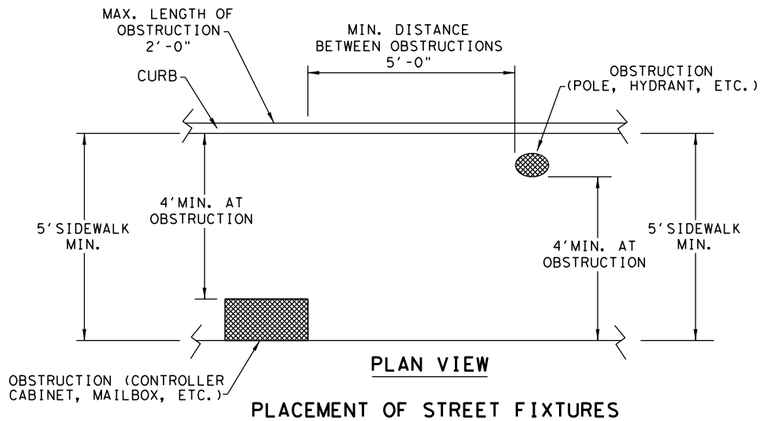

PLAN VIEW

PLACEMENT OF STREET FIXTURES

NOTE: ITEMS NOT INTENDED FOR PUBLIC USE. MINIMUM 4' X 4' CLEAR GROUND SPACE REQUIRED AT PUBLIC USE FIXTURES.

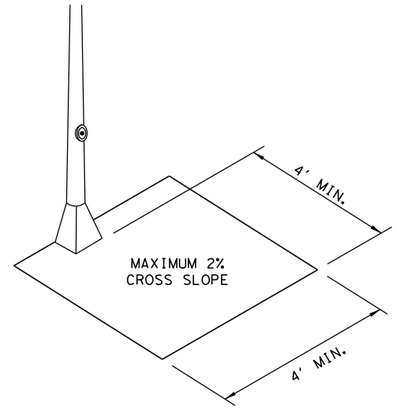

CLEAR SPACE ADJACENT TO PEDESTRIAN PUSH BUTTON

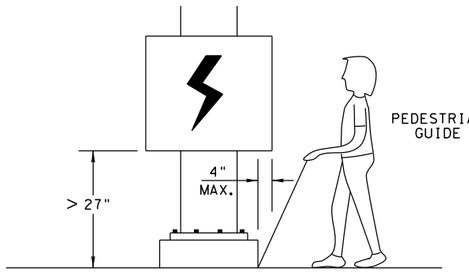

WHEN AN OBSTRUCTION OF A HEIGHT GREATER THAN 27" FROM THE SURFACE WOULD CREATE A PROTRUSION OF MORE THAN 4" INTO THE PEDESTRIAN CIRCULATION AREA, CONSTRUCT ADDITIONAL CURB OR FOUNDATION AT THE BOTTOM TO PROVIDE A MAXIMUM 4" OVERHANG.

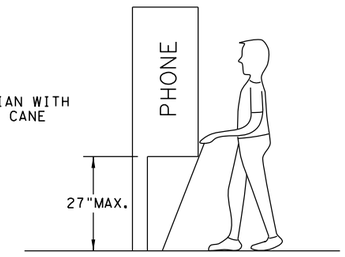

PROTRUDING OBJECTS OF A HEIGHT ≤ 27" ARE DETECTABLE BY CANE AND DO NOT REQUIRE ADDITIONAL TREATMENT.

DETECTION BARRIER FOR VERTICAL CLEARANCE < 80"

Texas Department of Transportation

Design Division Standard

PEDESTRIAN FACILITIES
CURB RAMPS

PED-18

FILE: ped18	DN: TxDOT		DW: VP	CK: KM	CK: PK & JG
© TxDOT: MARCH, 2002	CONT	SECT	JOB		HIGHWAY
REVISIONS					
REVISED 08,2005 REVISED 06,2012 REVISED 01,2018	DIST	COUNTY			SHEET NO.
					135

DISCLAIMER:
The use of this standard is governed by the "Texas Engineering Practice Act". No warranty of any kind is made by TxDOT for any purpose whatsoever. TxDOT assumes no responsibility for the conversion of this standard to other formats or for incorrect results or damages resulting from its use.

DATE: 3/12/2025
FILE: G:\TXC\Projects\City_Georgetown\10767-00 Shell Road\03_CADD\01_Shts\03-ROWY\Stds\ped18.dgn

TYPICAL CROSSING LAYOUTS

SEE SHEET 1 OF 4 FOR DETAILS AND DIMENSIONS

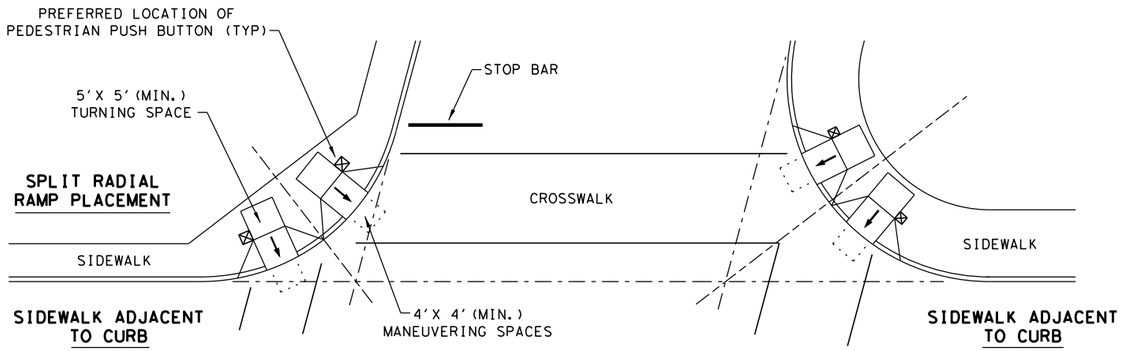

SKEWED INTERSECTION WITH "LARGE" RADIUS

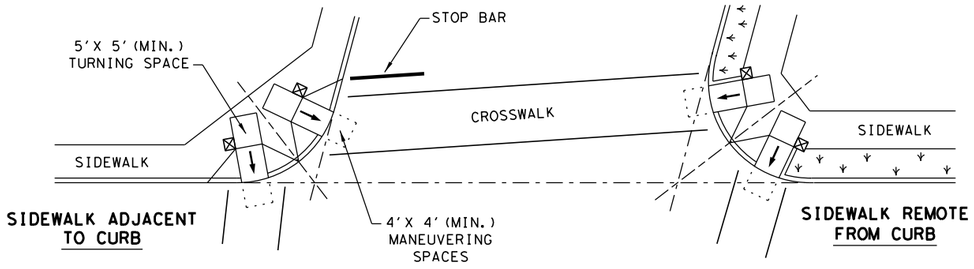

SKEWED INTERSECTION WITH "SMALL" RADIUS

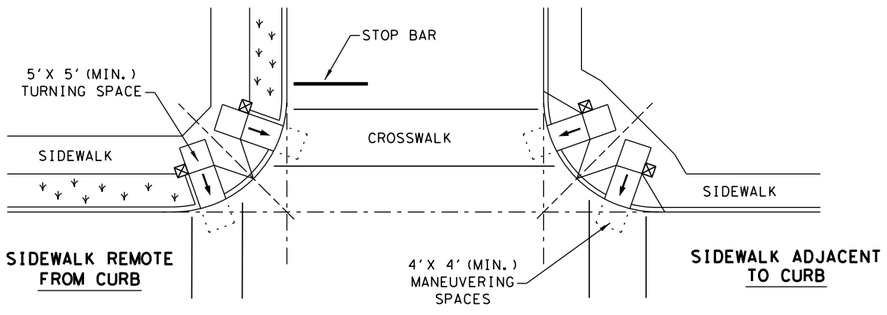

NORMAL INTERSECTION WITH "SMALL" RADIUS

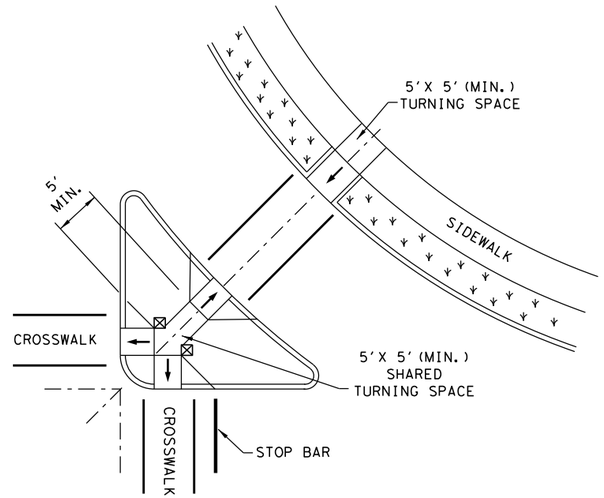

AT INTERSECTION
W/FREE RIGHT TURN & ISLAND

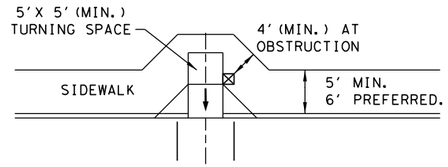

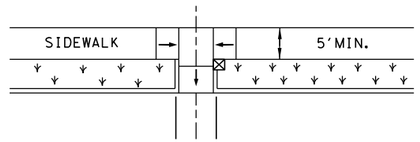

MID-BLOCK PLACEMENT
PERPENDICULAR RAMPS

LEGEND:

SHOWS DOWNWARD SLOPE. →

DENOTES PREFERRED LOCATION OF PEDESTRIAN PUSH BUTTON (IF APPLICABLE). ⊠

DENOTES PLANTING OR NON-WALKING SURFACE NOT PART OF PEDESTRIAN CIRCULATION PATH.

Texas Department of Transportation — Design Division Standard

PEDESTRIAN FACILITIES CURB RAMPS

PED-18

FILE: ped18	DN: TxDOT	DW: VP	CK: KM	CK: PK & JG	
© TxDOT: MARCH, 2002	CONT	SECT	JOB	HIGHWAY	
REVISIONS					
REVISED 08, 2005 REVISED 06, 2012 REVISED 01, 2018	DIST	COUNTY		SHEET NO.	
				136	

DISCLAIMER:
The use of this standard is governed by the "Texas Engineering Practice Act". No warranty of any kind is made by TxDOT for any purpose whatsoever. TxDOT assumes no responsibility for the conversion of this standard to other formats or for incorrect results or damages resulting from its use.

DATE: 3/12/2025
FILE: G:\TXC\Projects\City_Georgetown\10767-00 Shell Road\03_CADD\01_Shts\03-RDWY\Stds\prd13.dgn

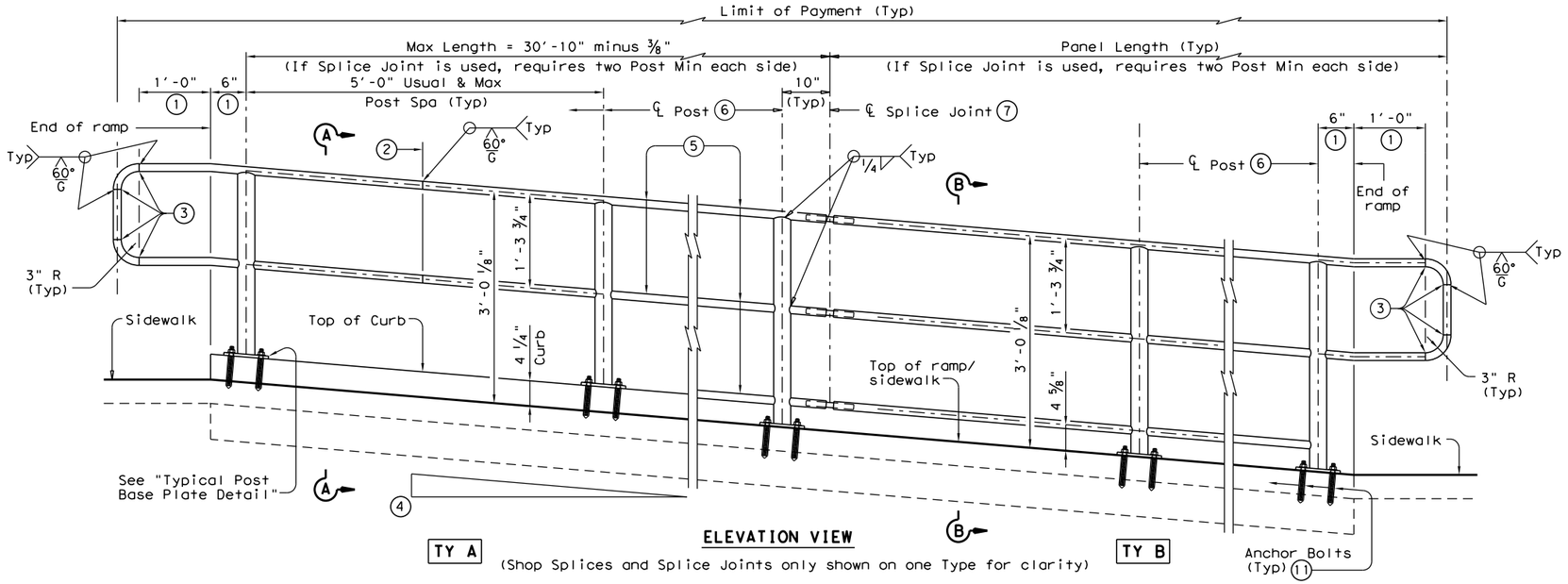

ELEVATION VIEW

(Shop Splices and Splice Joints only shown on one Type for clarity)

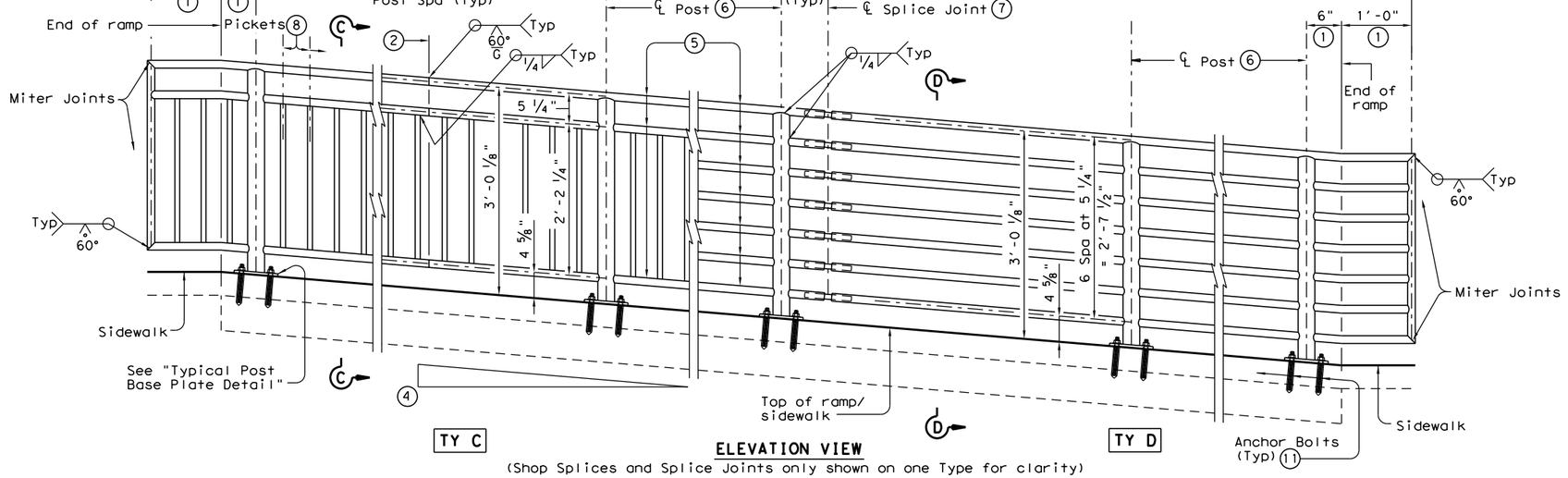

ELEVATION VIEW

(Shop Splices and Splice Joints only shown on one Type for clarity)

RECOMMENDED USAGE (9)(10)	
Dropoff Height/ Condition	Recommended Rail Options
< 30" dropoff	TY A, TY B, TY C, or TY D
≥ 30" dropoff, or along Bike Path	TY E or TY F

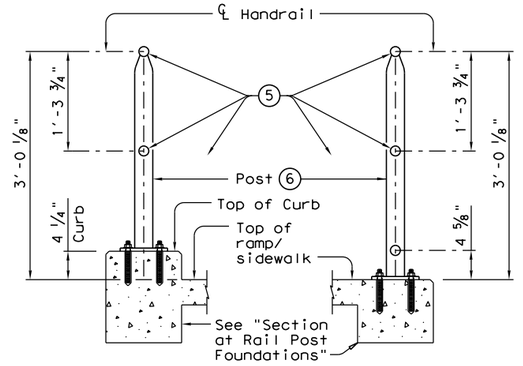

SECTION A-A
(Showing Handrail **TY A**)

SECTION B-B
(Showing Handrail **TY B**)

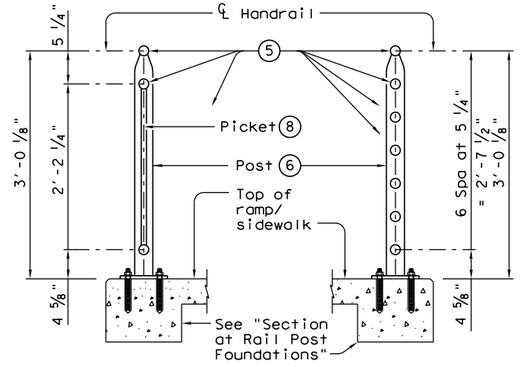

SECTION C-C
(Showing Handrail **TY C**)

SECTION D-D
(Showing Handrail **TY D**)

1. Parallel to ground.
2. One shop splice per panel is permitted with minimum 85 percent penetration. The weld may be square groove or single vee groove. Grind smooth.
3. Shop splice is permitted with minimum 85 percent penetration. The weld may be square groove or single vee groove. Grind smooth.
4. See Ramp Details located elsewhere in plans for ramp slope and dimensions. Maximum ramp slope will not exceed 8.3 percent. Level landing required for each 30" rise if grade exceeds 5 percent.
5. 1 ½" Dia. Standard Pipe (1.900" O.D., 0.145" wall thickness). Parallel to ramp / sidewalk. Provide holes as needed in 1 ½" Dia. pipe for galvanizing drainage and venting.
6. 2 ½" Dia. Standard Pipe (2.875" O.D., 0.203" wall thickness). See "Post Mount Detail" for crimping and trimming post to fit Dia. of top rail. Provide holes as needed in post for galvanizing drainage and venting. Plumb all posts.
7. See "Handrail Fabrication Details" for Splice Joints.
8. ℄ ⅝" Dia. Round Bar equal spacing at 4 ½" Max. Plumb all pickets.
9. When needed for accessibility (grade > 5 percent) or as needed for pedestrian safety.
10. Not to be used on bridges.
11. See "General Notes" for anchor bolt information.

SHEET 1 OF 3

Texas Department of Transportation

Design Division Standard

PEDESTRIAN HANDRAIL DETAILS

PRD-13

FILE: prd13.dgn	DN: TxDOT	CK: AM	DW: JTR	CK: CGL
©TxDOT Decmeber 2006	CONT	SECT	JOB	HIGHWAY
REVISIONS REVISED MAY, 2013 (VP)	DIST	COUNTY		SHEET NO.
				137

DISCLAIMER:
The use of this standard is governed by the "Texas Engineering Practice Act". No warranty of any kind is made by TxDOT for any purpose whatsoever. TxDOT assumes no responsibility for the conversion of this standard to other formats or for incorrect results or damages resulting from its use.

DATE: 3/12/2025
FILE: G:\TXC\Projects\City_Georgetown\10767-00 Shell Road\03_CADD\01_Shts\03-RDWY\Stds\prd13.dgn

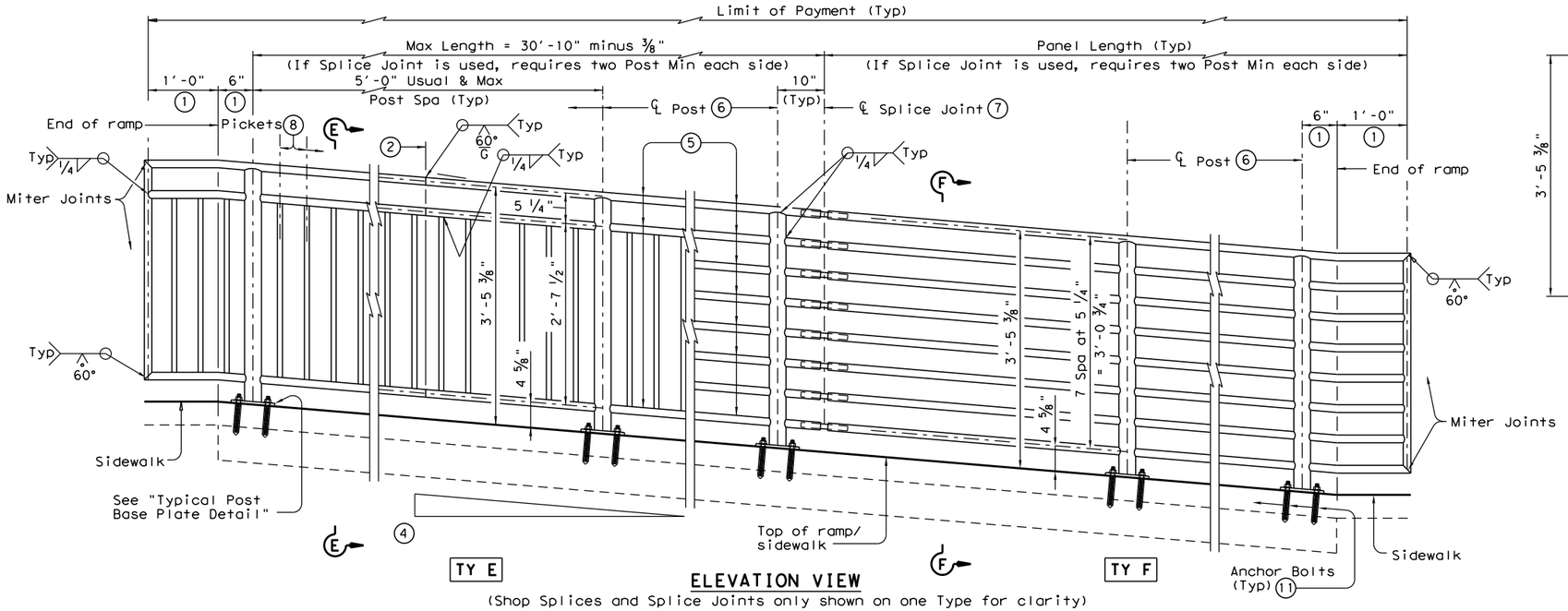

ELEVATION VIEW
(Shop Splices and Splice Joints only shown on one Type for clarity)

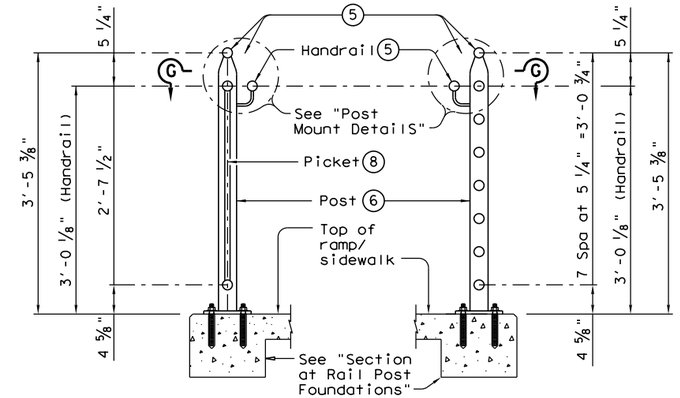

SECTION E-E
(Showing Handrail TY E)

SECTION F-F
(Showing Handrail TY F)

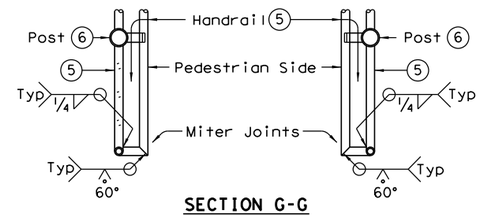

SECTION G-G
(Showing Handrail Termination)

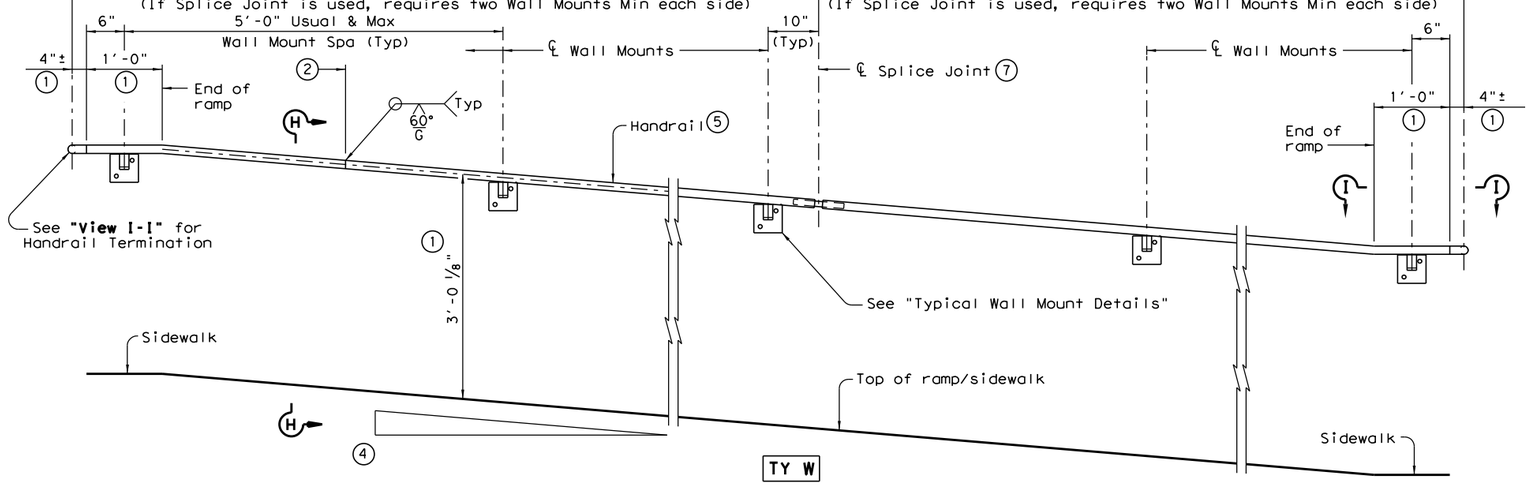

ELEVATION VIEW

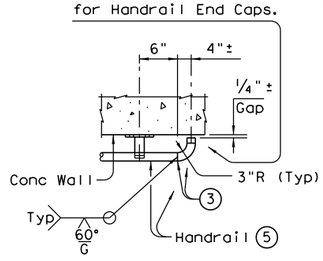

VIEW I-I
(Showing Handrail Termination)

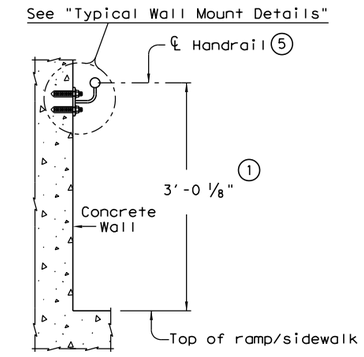

SECTION H-H
(Showing Handrail TY W)

(1) Parallel to ground.

(2) One shop splice per panel is permitted with minimum 85 percent penetration. The weld may be square groove or single vee groove. Grind smooth.

(3) Shop splice is permitted with minimum 85 percent penetration. The weld may be square groove or single vee groove. Grind smooth.

(4) See Ramp Details located elsewhere in plans for ramp slope and dimensions. Maximum ramp slope will not exceed 8.3 percent. Level landing required for each 30" rise if grade exceeds 5 percent.

(5) 1 ½" Dia. Standard Pipe (1.900" O.D., 0.145" wall thickness). Parallel to ramp / sidewalk. Provide holes as needed in 1 ½" Dia. pipe for galvanizing drainage and venting.

(6) 2 ½" Dia. Standard Pipe (2.875" O.D., 0.203" wall thickness). See "Post Mount Detail" for crimping and trimming post to fit Dia. of top rail. Provide holes as needed in post for galvanizing drainage and venting. Plumb all posts.

(7) See "Handrail Fabrication Details" for Splice Joints.

(8) ℄ ⅝" Dia. Round Bar equal spacing at 4 ½" Max. Plumb all pickets.

(11) See "General Notes" for anchor bolt information.

SHEET 2 OF 3

Texas Department of Transportation | Design Division Standard

PEDESTRIAN HANDRAIL DETAILS

PRD-13

FILE: prd13.dgn	DN: TxDOT	CK: AM	DW: JTR	CK: CGL
©TxDOT December 2006	CONT	SECT	JOB	HIGHWAY
REVISIONS REVISED MAY, 2013 (VP)	DIST	COUNTY		SHEET NO.
				138

DISCLAIMER:
The use of this standard is governed by the "Texas Engineering Practice Act". No warranty of any kind is made by TxDOT for any purpose whatsoever. TxDOT assumes no responsibility for the conversion of this standard to other formats or for incorrect results or damages resulting from its use.

DATE: 3/12/2025
FILE: G:\TXC\Projects\City_Georgetown\10767-00 Shell Road\03_CADD\01_Shts\03-RDWY\Stds\prd13.dgn

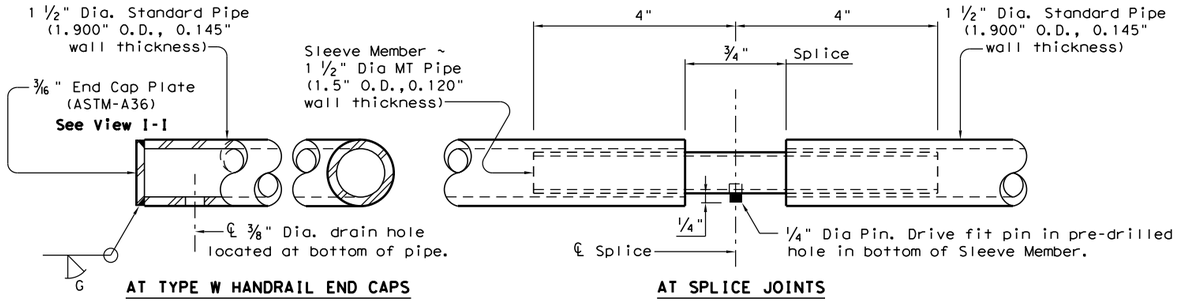

AT TYPE W HANDRAIL END CAPS

AT SPLICE JOINTS

HANDRAIL FABRICATION DETAILS

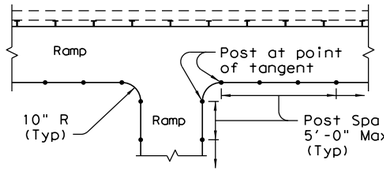

RAMP INTERSECTION

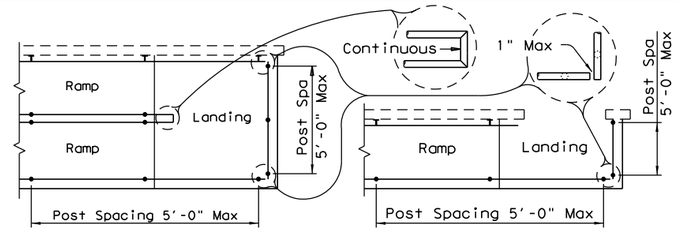

MULTI-LEVEL RAMP

SINGLE-LEVEL RAMP

PLAN SHOWING RAIL AT RAMP CONDITIONS

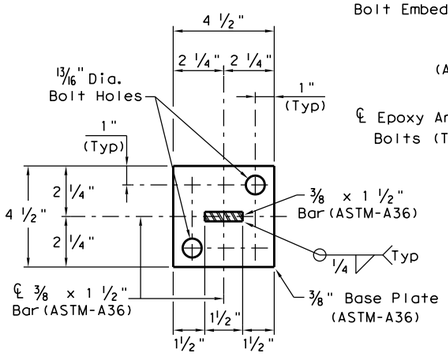

SECTION J-J
(Anchor Bolts not shown for clarity)

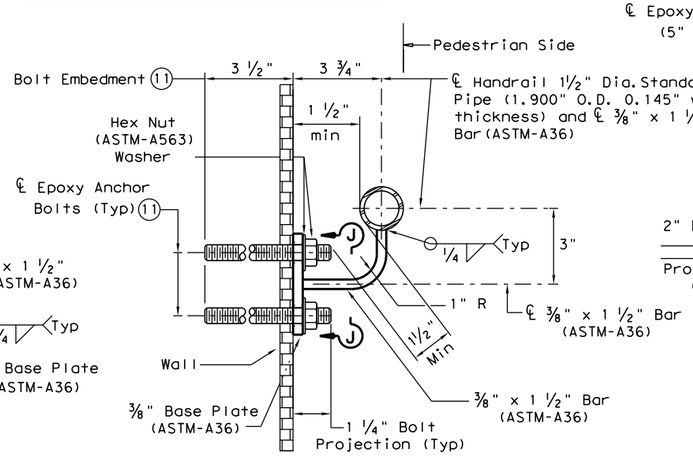

SECTION AT WALL MOUNT

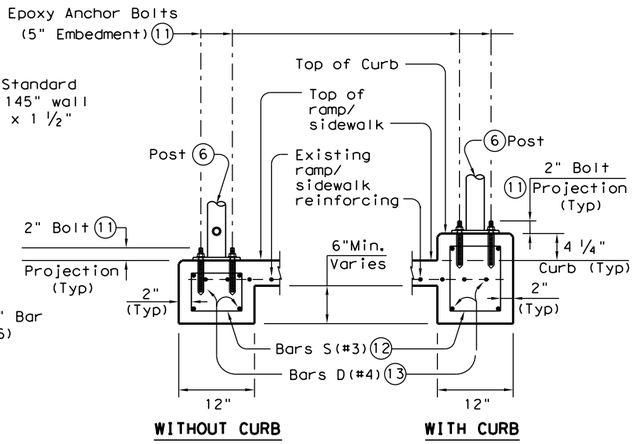

WITHOUT CURB

WITH CURB

SECTION AT RAIL POST FOUNDATIONS

TYPICAL WALL MOUNT DETAILS

GENERAL NOTES

Designed according to ADAAG, Texas Accessibility Standards, Uniform Building Code, and AASHTO LRFD Specifications.

Handrail anchorage details shown on this standard may require modification for select structure types. See appropriate details elsewhere in plans for these modifications.

Pipe will conform to ASTM-A53 Grade B or A500 Grade B. Steel plates and steel bars will conform to ASTM-A36. Mechanical tubing (MT) will conform to ASTM A513 Grade 1015 or higher. Galvanize all steel components except reinforcing steel unless noted otherwise.

Concrete for foundations will be in accordance with Item 531 "Sidewalks". All reinforcing steel must be Grade 60. Bar laps, where required, will be as follows: Uncoated ~ #4 = 1'-5" Epoxy coated ~ #4 = 2'-1"

When the plans require painted steel, follow the requirements for painting galvanized steel in Item 446, "Cleaning and Painting Steel". Sleeve Members will receive galvanization and only get field painted after installation unless directed otherwise by Engineer.

Epoxy Anchor bolts for wall mount and post base plate will be ⅝" Dia. ASTM A36 threaded rods with one hex nut and one hardened steel washer at each bolt. ⅝" Dia. threaded rod embedment depth for wall mounts is 3 ½" and embedment depth for post base plate is 5".

Embed threaded rods into concrete with a Type III (Class C) epoxy meeting the requirements of DMS-6100, "Epoxies and Adhesives". Mix and dispense adhesive with the manufacturer's static mixing nozzle/dual cartridge system. Core drill holes (percussion drilling not permitted).

At the contractor's option the post base plate anchor bolts may be cast with the Ramp/Sidewalk (See Cast-in-Place Anchor Bolt Options).

Optional cast-in-place anchor bolts will be ⅝" Dia ASTM A307 Grade A bolts (or A36 threaded rods with one tack welded hex nut each) with one hex nut and one hardened steel washer at each bolt. Embedment depth of cast-in-place bolt will be 8" for post base plate.

Handrails and any wall or other surface adjacent to them will be free of any sharp or abrasive elements.

Submit shop drawings to the Engineer unless otherwise noted. For curved handrail applications, fabricate the handrail to the curve if radius is less than 600 ft. Shop drawings are required when rail is fabricated to the curve.

For all handrails, erection drawings will be submitted to the Engineer for approval to ensure proper installation.

Drawings will show handrail mount locations with bolts setting, spacing, ramp slope, and/or splice joint locations, and handrail lengths with identification showing where each handrail goes on the layout.

Payment for concrete sidewalks or curb ramps will be paid for in accordance with Item 531 "Sidewalks".

Payment for all items shown is to be included in unit price bid in accordance with Item 450 "Railing" of the type specified.

All exposed edges will be rounded or chamfered to approximately ⅛" by grinding.

(5) 1 ½" Dia. Standard Pipe (1.900" O.D., 0.145" wall thickness). Parallel to ramp/sidewalk. Provide holes as needed in 1 ½" Dia. pipe for galvanizing drainage and venting.

(6) 2 ½" Dia. Standard Pipe (2.875" O.D., 0.203" wall thickness). Plumb all posts. See "Post Mount Detail" for crimping and trimming post to fit the diamenter of top rail. Provide holes as needed in post for galvanizing drainage and venting.

(11) See "General Notes" for anchor bolt information.

(12) Bars S(#3) spaced at 12" Max (Spaced 3" from outside edge of overall length of Ramp/Sidewalk).

(13) Provide 1 ½" end cover to Bars D(#4) from outside edge of overall length of Ramp/Sidewalk.

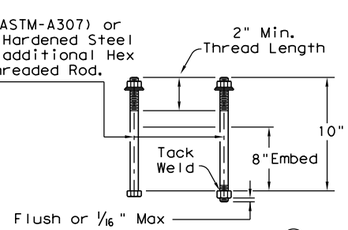

CAST-IN-PLACE ANCHOR BOLT OPTIONS
(Used for Post Base Plate only)

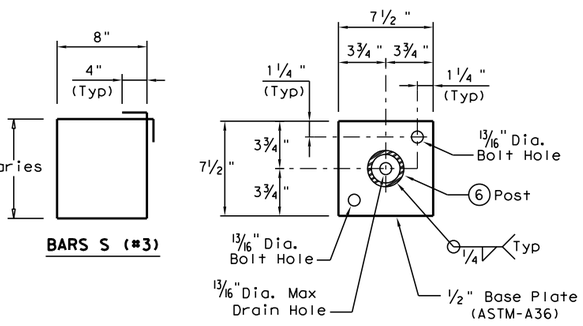

TYPICAL POST BASE PLATE DETAIL

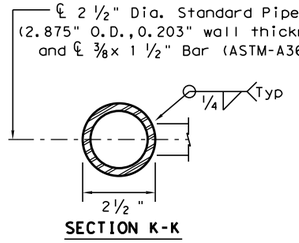

SECTION K-K

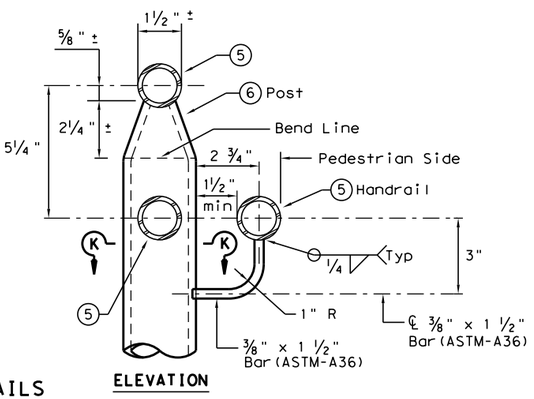

ELEVATION

POST MOUNT DETAILS

SHEET 3 OF 3

Texas Department of Transportation

Design Division Standard

PEDESTRIAN HANDRAIL DETAILS

PRD-13

FILE: prd13.dgn	DN: TxDOT	CK: AM	DW: JTR	CK: CGL
©TxDOT December 2006	CONT	SECT	JOB	HIGHWAY
REVISIONS REVISED MAY, 2013 (VP)				
	DIST	COUNTY		SHEET NO.
				139

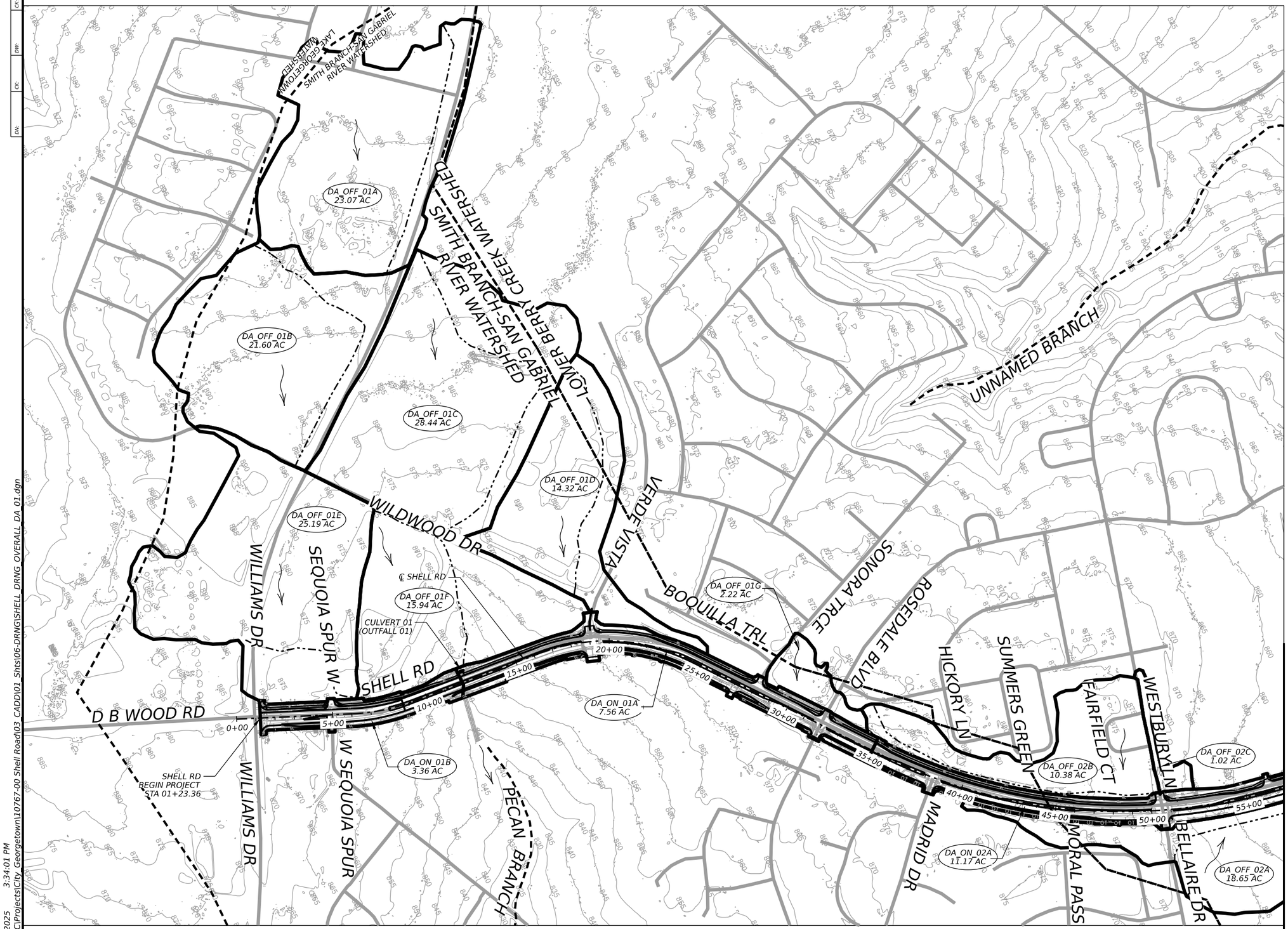

LEGEND

- XXX-XXX X.XX AC — DRAINAGE AREA ID
- FLOW DIRECTION
- DRAINAGE AREA BOUNDARY
- DITCH LINE

NOTE

- CONTOUR SOURCE: 2015 CITY OF GEORGETOWN LIDAR DATA

0 250 500

SCALE: 1" = 500'

STATE OF TEXAS
ALEXIS WOFFENDEN
117162
LICENSED
PROFESSIONAL ENGINEER

2/14/2025

EST.1848 GEORGETOWN TEXAS

BGE, Inc.
101 West Louis Henna Blvd, Suite 400, Austin, TX 78728
Tel: 512-879-0400 • www.bgeinc.com
TBPE Registration No. F-1046

SHELL ROAD

OVERALL DRAINAGE AREA MAP

SHEET 1 OF 2

SHEET NO. 140

DATE: 2/24/2025 3:34:01 PM
FILE: G:\TXC\Projects\City Georgetown\10767-00 Shell Road\03_CADD\01 Shts\06-DRNG\SHELL DRNG OVERALL DA 01.dgn

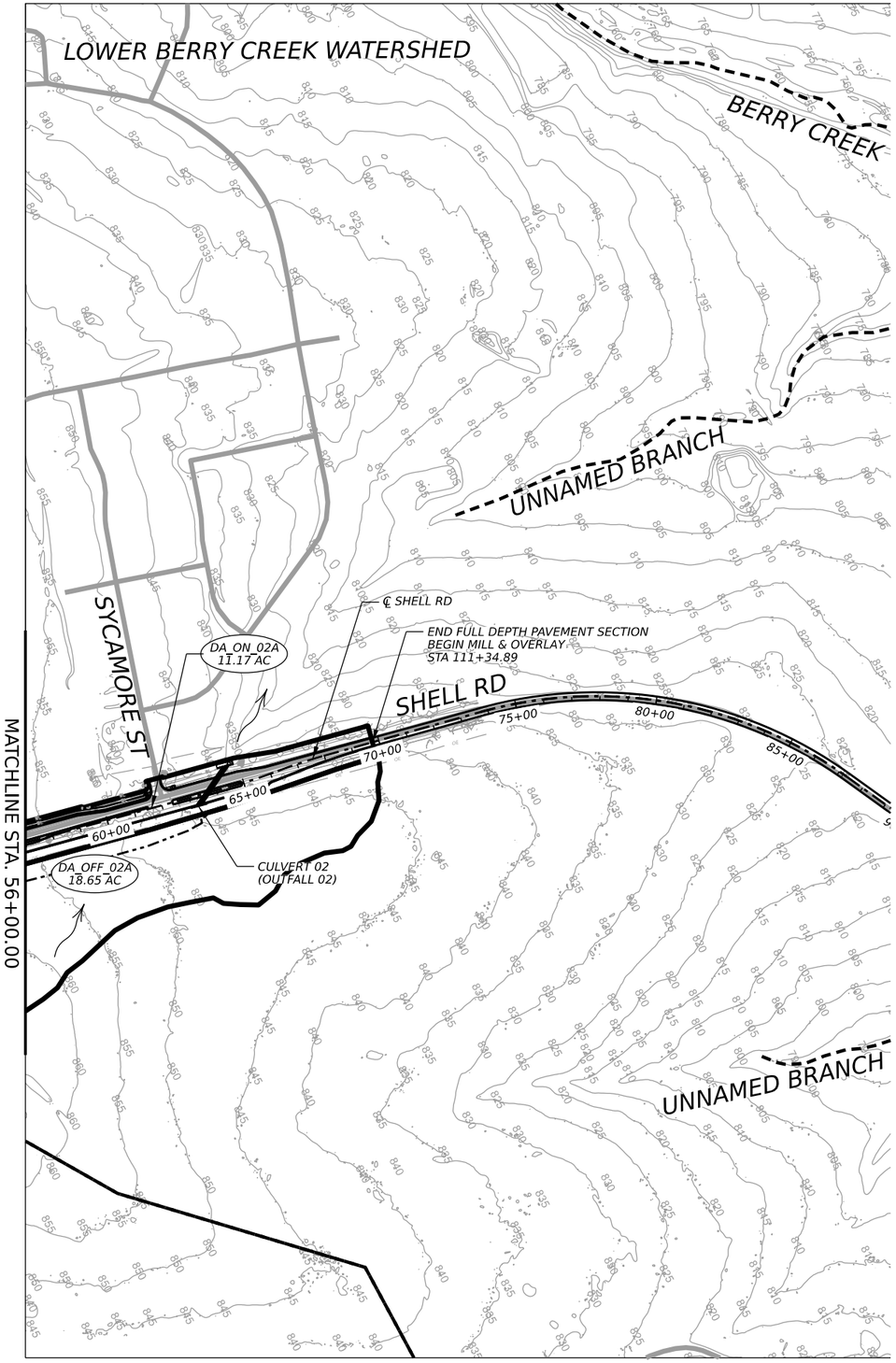

LEGEND

- XXX-XXX / X.XX AC — DRAINAGE AREA ID
- FLOW DIRECTION
- DRAINAGE AREA BOUNDARY
- DITCH LINE

NOTE

- CONTOUR SOURCE: 2015 CITY OF GEORGETOWN LIDAR DATA

0 250 500

SCALE: 1" = 500'

STATE OF TEXAS
ALEXIS WOFFENDEN
117162
LICENSED
PROFESSIONAL ENGINEER

2/14/2025

EST. 1848 GEORGETOWN TEXAS

BGE, Inc.
101 West Louis Henna Blvd, Suite 400, Austin, TX 78728
Tel: 512-879-0400 • www.bgeinc.com
TBPE Registration No. F-1046

SHELL ROAD

OVERALL DRAINAGE AREA MAP

SHEET 2 OF 2

SHEET NO. 141

DATE: 2/24/2025 3:34:03 PM
FILE: G:\TXC\Projects\City Georgetown\10767-00 Shell Road\03 CADD\01_Shts\06-DRNG\SHELL_DRNG_OVERALL_DA_02.dgn

CK:
DW:
CK:
DW:

Time of Concentration (Existing Condition)

BASIN INFORMATION		SHEET FLOW (<= 100 FEET)				SHALLOW CONC. FLOW			OPEN CHANNEL FLOW				SHEET FLOW		SHALLOW CONC. FLOW			OPEN CHANNEL FLOW			TOTAL			SCS UH		Hydraulic Radius Calculations										
DRAINAGE BASIN	AREA (ac)	US ELEV. (FT)	DS ELEV. (FT)	LENGTH (FT)	ROUGHNESS COEFFICIENT n	DS ELEV. (FT)	LENGTH (FT)	PAVED (P) OR UNPAVED (U)	DS ELEV. (FT)	LENGTH (FT)	HYDRAULIC RADIUS (FT)	MANNING'S N VALUE	SLOPE (FT/FT)	T1 (HR)	SLOPE (FT/FT)	VELOCITY (FT/SEC)	T2 (HR)	SLOPE (FT/FT)	VELOCITY (FT/SEC)	T3 (HR)	TIME OF CONCENTRATION TC=T1+T2+T3 (HR)	TIME OF CONCENTRATION TC=T1+T2+T3 (MIN)	TC USED (6 MIN MINIM (MIN)	LAG TIME T_LAG=0.6 TC (MIN)	DRAINAGE BASIN	Fore Slope (H:1)	Bottom Width (ft)	Back Slope (H:1)	Avg Flow Depth (ft)	Fore Slope Width (ft)	Fore Slope Hypotenuse (ft)	Back Slope Width (ft)	Back Slope Hypotenuse (ft)	XS Area (ft²)	Wetted Perimeter (ft)	Hydraulic Radius [A/P] (ft)
DA_OFF_01A	23.07	902.35	902.11	100	0.150	902.00	60	U	896.15	1203	0.12	0.035	0.002	0.36	0.002	0.69	0.02	0.005	0.74	0.45	**0.84**	**50.4**	**50.4**	**30**	DA_OFF_01A	30	0	30	0.3	7.5	7.5	7.5	7.5	1.88	15.0	0.12
DA_OFF_01B	21.60	901.34	900.80	100	0.150	890.98	623	U	886.38	827	0.12	0.035	0.005	0.26	0.016	2.02	0.09	0.006	0.78	0.29	**0.64**	**38.4**	**38.4**	**23**	DA_OFF_01B	6	0	6	0.3	1.5	1.5	1.5	1.5	0.38	3.0	0.12
DA_OFF_01C	28.44	896.43	895.57	100	0.150	869.58	1880	U	869.57	54	0.14	0.035	0.009	0.22	0.014	1.90	0.28	0.000	0.16	0.10	**0.59**	**35.4**	**35.4**	**21**	DA_OFF_01C	20	4	10	0.2	4.0	4.0	2.0	2.0	1.40	10.0	0.14
DA_OFF_01D	14.32	883.18	881.67	100	0.011	872.81	1167	P	872.71	29	0.05	0.035	0.015	0.02	0.008	1.77	0.18	0.003	0.34	0.02	**0.23**	**13.7**	**13.7**	**8**	DA_OFF_01D	40	0	20	0.1	4.0	4.0	2.0	2.0	0.30	6.0	0.05
DA_OFF_01E	25.19	888.39	887.71	100	0.150	886.41	230	U	883.05	876	0.25	0.035	0.007	0.24	0.006	1.21	0.05	0.004	1.04	0.23	**0.53**	**31.6**	**31.6**	**20**	DA_OFF_01E	16	0	4	0.5	8.0	8.0	2.0	2.1	2.50	10.1	0.25
						883.05			865.62	786		0.016						0.022	6.00	0.04	**0.04**	**2.2**	**33.8**			Storm Drain										
DA_OFF_01F	15.94	875.20	872.14	100	0.150	857.77	814	U	852.59	149	0.25	0.035	0.031	0.13	0.018	2.14	0.11	0.035	3.14	0.01	**0.25**	**15.0**	**15.0**	**9**	DA_OFF_01F	15	0	20	0.5	7.5	7.5	10.0	10.0	4.38	17.5	0.25
DA_OFF_01G	2.22	881.11	881.07	100	0.150	874.03	444	U	873.58	21	0.12	0.035	0.000	0.73	0.016	2.03	0.06	0.021	1.53	0.00	**0.79**	**47.7**	**47.7**	**29**	DA_OFF_01G	6	0	6	0.3	1.5	1.5	1.5	1.5	0.38	3.0	0.12
DA_OFF_02A	18.65	870.26	868.16	100	0.150	844.70	1208	U	844.23	55	0.10	0.035	0.021	0.15	0.019	2.25	0.15	0.009	0.84	0.02	**0.32**	**19.2**	**19.2**	**12**	DA_OFF_02A	40	0	40	0.2	8.0	8.0	8.0	8.0	1.60	16.0	0.10
DA_OFF_02B	10.38	880.49	880.16	100	0.011	879.21	496	U	869.44	1056	0.50	0.035	0.003	0.04	0.002	0.71	0.19	0.009	2.56	0.11	**0.35**	**20.9**	**20.9**	**13**	DA_OFF_02B	7.5	0	7.5	1.0	7.5	7.6	7.5	7.6	7.50	15.1	0.50
DA_OFF_02C	1.02	873.10	872.97	100	0.011	870.09	486	P	864.42	158		0.035	0.001	0.06	0.006	1.57	0.09	0.036	6.00	0.01	**0.15**	**9.0**	**9.0**	**5**	DA_OFF_02C	Storm Drain										
DA_ON_01A	7.56	879.34	879.01	23	0.011	878.23	11	U	850.93	2320	0.35	0.035	0.014	0.01	0.072	4.32	0.00	0.012	2.28	0.28	**0.29**	**17.4**	**17.4**	**10**	DA_ON_01A	12	0	12	0.7	8.4	8.4	8.4	8.4	5.88	16.9	0.35
DA_ON_01B	3.36	875.69	874.59	52	0.011	872.93	48	U	850.93	999	0.25	0.035	0.021	0.01	0.035	3.00	0.00	0.022	2.49	0.11	**0.13**	**7.6**	**7.6**	**5**	DA_ON_01B	6	0	12	0.5	3.0	3.0	6.0	6.0	2.25	9.1	0.25
DA_ON_02A	11.17	879.32	879.23	17	0.011	878.72	15	U	840.22	2871	0.32	0.035	0.006	0.01	0.034	2.97	0.00	0.013	2.32	0.34	**0.35**	**21.2**	**21.2**	**13**	DA_ON_02A	12	0	12	0.7	7.8	7.8	7.8	7.8	5.07	15.7	0.32

Curve Number (Existing Condition)

CURVE NUMBER CALCULATIONS

ID	Area (ac)	Rating	Cover Type	CN	Drainage Area ID	Drainage Area (ac)	Drainage Area (sq-mi)	Weighted CN
DA_OFF_01A	14.21	D	Commercial and business	95	DA_OFF_01A	23.07	0.0360	92
DA_OFF_01A	4.81	D	Good condition (grass cover > 75%)	80				
DA_OFF_01A	4.05	D	Paved; curbs and storm drains (excluding right-of-way)	98				
DA_OFF_01B	8.07	D	Commercial and business	95	DA_OFF_01B	21.60	0.0337	88
DA_OFF_01B	10.20	D	Good condition (grass cover > 75%)	80				
DA_OFF_01B	3.33	D	Paved; curbs and storm drains (excluding right-of-way)	98				
DA_OFF_01C	9.12	D	Commercial and business	95	DA_OFF_01C	28.44	0.0444	86
DA_OFF_01C	15.78	D	Good condition (grass cover > 75%)	80				
DA_OFF_01C	1.81	D	Paved; curbs and storm drains (excluding right-of-way)	98				
DA_OFF_01C	1.74	D	Residential - 1/4 acre	87				
DA_OFF_01D	0.11	D	Good condition (grass cover > 75%)	80	DA_OFF_01D	14.32	0.0224	87
DA_OFF_01D	14.21	D	Residential - 1/4 acre	87				
DA_OFF_01E	21.41	D	Commercial and business	95	DA_OFF_01E	25.19	0.0394	95
DA_OFF_01E	3.78	D	Paved; curbs and storm drains (excluding right-of-way)	98				
DA_OFF_01F	4.83	D	Commercial and business	95	DA_OFF_01F	15.94	0.0249	85
DA_OFF_01F	10.76	D	Good condition (grass cover > 75%)	80				
DA_OFF_01F	0.04	D	Paved; curbs and storm drains (excluding right-of-way)	98				
DA_OFF_01F	0.31	D	Residential - 1/4 acre	87				
DA_OFF_01G	2.22	D	Residential - 1/4 acre	87	DA_OFF_01G	2.22	0.0035	87
DA_OFF_02A	18.65	D	Good condition (grass cover > 75%)	80	DA_OFF_02A	18.65	0.0291	80
DA_OFF_02B	10.38	D	Residential - 1/4 acre	87	DA_OFF_02B	10.38	0.0162	87
DA_OFF_02C	1.02	D	Residential - 1/4 acre	87	DA_OFF_02C	1.02	0.0016	87
DA_ON_01A	4.93	D	Good condition (grass cover > 75%)	80	DA_ON_01A	7.56	0.0118	86
DA_ON_01A	2.62	D	Paved; curbs and storm drains (excluding right-of-way)	98				
DA_ON_01B	1.41	D	Good condition (grass cover > 75%)	80	DA_ON_01B	3.36	0.0052	90
DA_ON_01B	1.94	D	Paved; curbs and storm drains (excluding right-of-way)	98				
DA_ON_02A	7.88	D	Good condition (grass cover > 75%)	80	DA_ON_02A	11.17	0.0175	85
DA_ON_02A	3.29	D	Paved; curbs and storm drains (excluding right-of-way)	98				

Runoff Computations (Existing Condition)

Runoff Computations - Table 01: Existing Condition

HMS INPUT				HMS OUTPUT					
						Discharge (cfs)			
Subbasin	Area (sq-mi)	CN	Lag Time (min)	Hydrologic Element	Area (sq-mi)	p = 50% 2-yr	p = 10% 10-yr	p = 4% 25-yr	p = 1% 100-yr
DA_OFF_01A	0.0360	92	30	DA_OFF_01A	0.0360	38.90	68.40	86.20	114.50
DA_OFF_01B	0.0337	88	23	DA_OFF_01B	0.0337	36.70	69.40	89.10	120.30
DA_OFF_01C	0.0444	86	21	DA_OFF_01C	0.0444	47.50	92.40	119.60	162.90
DA_OFF_01D	0.0224	87	8	DA_OFF_01D	0.0224	37.90	72.00	92.40	124.70
DA_OFF_01E	0.0394	95	20	DA_OFF_01E	0.0394	57.10	95.30	118.20	155.00
DA_OFF_01F	0.0249	85	9	DA_OFF_01F	0.0249	36.70	72.90	94.80	129.50
DA_OFF_01G	0.0035	87	29	DA_OFF_01G	0.0035	3.20	6.20	8.10	11.00
DA_OFF_02A	0.0291	80	12	DA_OFF_02A	0.0291	31.50	69.00	92.40	129.90
DA_OFF_02B	0.0162	87	13	DA_OFF_02B	0.0162	22.50	43.00	55.30	74.70
DA_OFF_02C	0.0016	87	5	DA_OFF_02C	0.0016	2.90	5.50	7.00	9.50
DA_ON_01A	0.0118	86	10	DA_ON_01A	0.0118	17.40	33.30	42.80	58.20
DA_ON_01B	0.0052	90	5	DA_ON_01B	0.0052	10.50	18.70	23.70	31.50
DA_ON_02A	0.0175	85	13	DA_ON_02A	0.0175	22.50	44.60	58.10	79.30
				CULVERT_01	0.2213	219.90	412.30	529.00	715.70
				CULVERT_02	0.0644	74.30	151.90	200.30	277.40

NOTE

- SEE SHELL ROAD WIDENING:PS&E DRAINAGE REPORT (FEBRUARY 2025) FOR DETAILED ANALYSIS AND DISCUSSION.
- THE PEAK FLOWS FOR HYDROGRAPH METHOD WERE DETERMINED USING A HEC-HMS 4.8 HYDROLOGIC MODEL.

STATE OF TEXAS
ALEXIS WOFFENDEN
117162
LICENSED
PROFESSIONAL ENGINEER

2/14/2025

EST. 1848 GEORGETOWN TEXAS

BGE, Inc.
101 West Louis Henna Blvd, Suite 400, Austin, TX 78728
Tel: 512-879-0400 • www.bgeinc.com
TBPE Registration No. F-1046

SHELL ROAD

EXISTING HYDROLOGY DATA CULVERT

SHEET 1 OF 2

SHEET NO. 142

DATE: 2/24/2025 3:34:04 PM
FILE: G:\TXC\Projects\City Georgetown\10767-00 Shell Road\03_CADD\01_Shts\06-DRNG\SHELL_DRNG_CULV HYDROLOGY_DATA_01.dgn

Time of Concentration (Proposed Condition)

BASIN INFORMATION		SHEET FLOW (<= 100 FEET)				SHALLOW CONC. FLOW			OPEN CHANNEL FLOW				SHEET FLOW		SHALLOW CONC. FLOW			OPEN CHANNEL FLOW			TOTAL			SCS UH		Hydraulic Radius Calculations										
DRAINAGE BASIN	AREA (ac)	US ELEV. (FT)	DS ELEV. (FT)	LENGTH (FT)	ROUGHNESS COEFFICIENT n	DS ELEV. (FT)	LENGTH (FT)	PAVED (P) OR UNPAVED (U)	DS ELEV. (FT)	LENGTH (FT)	HYDRAULIC RADIUS (FT)	MANNING'S N VALUE	SLOPE (FT/FT)	T1 (HR)	SLOPE (FT/FT)	VELOCITY (FT/SEC)	T2 (HR)	SLOPE (FT/FT)	VELOCITY (FT/SEC)	T3 (HR)	TIME OF CONCENTRATION TC=T1+T2+T3 (HR)	TIME OF CONCENTRATION TC=T1+T2+T3 (MIN)	TC USED (6 MIN MINIM (MIN)	LAG TIME T_LAG=0.6 TC (MIN)	DRAINAGE BASIN	Fore Slope (H:1)	Bottom Width (ft)	Back Slope (H:1)	Avg Flow Depth (ft)	Fore Slope Width (ft)	Fore Slope Hypotenuse (ft)	Back Slope Width (ft)	Back Slope Hypotenuse (ft)	XS Area (ft²)	Wetted Perimeter (ft)	Hydraulic Radius [A/P] (ft)
DA_OFF_01A	23.07	902.35	902.11	100	0.150	902.00	60	U	896.15	1203	0.12	0.035	0.002	0.36	0.002	0.69	0.02	0.005	0.74	0.45	**0.84**	**50.4**	**50.4**	**30**	DA_OFF_01A	30	0	30	0.3	7.5	7.5	7.5	7.5	1.88	15.0	0.12
DA_OFF_01B	21.60	901.34	900.80	100	0.150	890.98	623	U	886.38	827	0.12	0.035	0.005	0.26	0.016	2.02	0.09	0.006	0.78	0.29	**0.64**	**38.4**	**38.4**	**23**	DA_OFF_01B	6	0	6	0.3	1.5	1.5	1.5	1.5	0.38	3.0	0.12
DA_OFF_01C	28.44	896.43	895.57	100	0.150	869.58	1880	U	869.57	54	0.14	0.035	0.009	0.22	0.014	1.90	0.28	0.000	0.16	0.10	**0.59**	**35.4**	**35.4**	**21**	DA_OFF_01C	20	4	10	0.2	4.0	4.0	2.0	2.0	1.40	10.0	0.14
DA_OFF_01D	14.32	883.18	881.67	100	0.011	872.81	1167	P	872.71	29	0.05	0.035	0.015	0.02	0.008	1.77	0.18	0.003	0.34	0.02	**0.23**	**13.7**	**13.7**	**8**	DA_OFF_01D	40	0	20	0.1	4.0	4.0	2.0	2.0	0.30	6.0	0.05
DA_OFF_01E	25.19	888.39	887.71	100	0.150	886.41	230	U	883.05	876	0.25	0.035	0.007	0.24	0.006	1.21	0.05	0.004	1.04	0.23	**0.53**	**31.6**	**31.6**	**20**	DA_OFF_01E	16	0	4	0.5	8.0	8.0	2.0	2.1	2.50	10.1	0.25
						883.05			865.62	786	0.00	0.016						0.022	6.00	0.04	**0.04**	**2.2**	**33.8**			Storm Drain										
DA_OFF_01F	15.94	875.20	872.14	100	0.150	857.77	814	U	852.59	149	0.25	0.035	0.031	0.13	0.018	2.14	0.11	0.035	3.14	0.01	**0.25**	**15.0**	**15.0**	**9**	DA_OFF_01F	15	0	20	0.5	7.5	7.5	10.0	10.0	4.38	17.5	0.25
DA_OFF_01G	2.22	881.11	881.07	100	0.150	874.03	444	U	873.58	21	0.12	0.035	0.000	0.73	0.016	2.03	0.06	0.021	1.53	0.00	**0.79**	**47.7**	**47.7**	**29**	DA_OFF_01G	6	0	6	0.3	1.5	1.5	1.5	1.5	0.38	3.0	0.12
DA_OFF_02A	18.65	870.26	868.16	100	0.150	844.70	1208	U	844.23	55	0.10	0.035	0.021	0.15	0.019	2.25	0.15	0.009	0.84	0.02	**0.32**	**19.2**	**19.2**	**12**	DA_OFF_02A	40	0	40	0.2	8.0	8.0	8.0	8.0	1.60	16.0	0.10
DA_OFF_02B	10.38	880.49	880.16	100	0.011	879.21	496	U	869.44	1056	0.50	0.035	0.003	0.04	0.002	0.71	0.19	0.009	2.56	0.11	**0.35**	**20.9**	**20.9**	**13**	DA_OFF_02B	7.5	0	7.5	1.0	7.5	7.6	7.5	7.6	7.50	15.1	0.50
DA_OFF_02C	1.02	873.10	872.97	100	0.011	870.09	486	P	864.42	158	0.00	0.035	0.001	0.06	0.006	1.57	0.09	0.036	6.00	0.01	**0.15**	**9.0**	**9.0**	**5**	DA_OFF_02C	Storm Drain										
DA_ON_01A	7.56	880.07	879.09	49	0.011	878.84	154	U	850.93	2139	0.00	0.035	0.020	0.01	0.002	0.66	0.07	0.013	6.00	0.10	**0.18**	**10.5**	**10.5**	**6**	DA_ON_01A	Storm Drain										
DA_ON_01B	3.36	875.69	874.66	47	0.011	872.93	53	P	850.93	993	0.00	0.035	0.022	0.01	0.033	3.67	0.00	0.022	6.00	0.05	**0.06**	**3.6**	**6.0**	**4**	DA_ON_01B	Storm Drain										
DA_ON_02A	11.17	880.07	879.27	37	0.011	878.97	46	U	840.22	2810	0.00	0.035	0.022	0.01	0.007	1.30	0.01	0.014	6.00	0.13	**0.15**	**8.9**	**8.9**	**5**	DA_ON_02A	Storm Drain										

Curve Number (Proposed Condition)

CURVE NUMBER CALCULATIONS

ID	Area (ac)	Rating	Cover Type	CN	Drainage Area ID	Drainage Area (ac)	Drainage Area (sq-mi)	Product	Weighted CN
DA_ON_01A	2.43	D	Good condition (grass cover > 75%)	80	DA_ON_01A	7.56	0.0118	194.07	92
DA_ON_01A	5.13	D	Paved; curbs and storm drains (excluding right-of-way)	98					
DA_ON_01B	1.06	D	Good condition (grass cover > 75%)	80					92
DA_ON_01B	2.30	D	Paved; curbs and storm drains (excluding right-of-way)	98					
DA_ON_02A	4.74	D	Good condition (grass cover > 75%)	80				224.93	90
DA_ON_02A	6.43	D	Paved; curbs and storm drains (excluding right-of-way)	98					

Runoff Computations (Proposed Condition)

Runoff Computations - Table 01: Proposed Condition

HMS INPUT				HMS OUTPUT					
						Discharge (cfs)			
Subbasin	Area (sq-mi)	CN	Lag Time (min)	Hydrologic Element	Area (sq-mi)	p = 50%	p = 10%	p = 4%	p = 1%
						2-yr	10-yr	25-yr	100-yr
DA_OFF_01A	0.0360	92	30	DA_OFF_01A	0.0360	38.90	68.40	86.20	114.50
DA_OFF_01B	0.0337	88	23	DA_OFF_01B	0.0337	36.70	69.40	89.10	120.30
DA_OFF_01C	0.0444	86	21	DA_OFF_01C	0.0444	47.50	92.40	119.60	162.90
DA_OFF_01D	0.0224	87	8	DA_OFF_01D	0.0224	37.90	72.00	92.40	124.70
DA_OFF_01E	0.0394	95	20	DA_OFF_01E	0.0394	57.10	95.30	118.20	155.00
DA_OFF_01F	0.0249	85	9	DA_OFF_01F	0.0249	36.70	72.90	94.80	129.50
DA_OFF_01G	0.0035	87	29	DA_OFF_01G	0.0035	3.20	6.20	8.10	11.00
DA_OFF_02A	0.0291	80	12	DA_OFF_02A	0.0291	31.50	69.00	92.40	129.90
DA_OFF_02B	0.0162	87	13	DA_OFF_02B	0.0162	22.50	43.00	55.30	74.70
DA_OFF_02C	0.0016	87	5	DA_OFF_02C	0.0016	2.90	5.50	7.00	9.50
DA_ON_01A	0.0118	92	6	DA_ON_01A	0.0118	25.30	43.60	54.60	71.90
DA_ON_01B	0.0052	92	4	DA_ON_01B	0.0052	12.40	21.50	26.90	35.50
DA_ON_02A	0.0175	90	5	DA_ON_02A	0.0175	35.40	62.90	79.70	106.00
				CULVERT_01	0.2213	217.90	406.20	520.30	706.30
				CULVERT_02	0.0644	76.60	153.50	200.90	276.90

NOTE

- SEE SHELL ROAD WIDENING:PS&E DRAINAGE REPORT (FEBRUARY 2025) FOR DETAILED ANALYSIS AND DISCUSSION.
- THE PEAK FLOWS FOR HYDROGRAPH METHOD WERE DETERMINED USING A HEC-HMS 4.8 HYDROLOGIC MODEL.

STATE OF TEXAS
ALEXIS WOFFENDEN
117162
LICENSED
PROFESSIONAL ENGINEER

2/14/2025

EST. 1848 GEORGETOWN TEXAS

BGE, Inc.
101 West Louis Henna Blvd, Suite 400, Austin, TX 78728
Tel: 512-879-0400 • www.bgeinc.com
TBPE Registration No. F-1046

SHELL ROAD

PROPOSED HYDROLOGY DATA CULVERT

SHEET 2 OF 2

SHEET NO. 143

DATE: 2/24/2025 3:34:06 PM
FILE: G:\TXC\Projects\City Georgetown\10767-00 Shell Road\03 CADD\01 Shts\06-DRNG\SHELL_DRNG_CULV HYDROLOGY DATA 02.dgn

Time of Concentration (Proposed)

BASIN INFORMATION		SHEET FLOW (<= 100 FEET)				SHALLOW CONCENTRATED FLOW			OPEN CHANNEL FLOW				SHEET FLOW		SHALLOW CONCENTRATED FLOW			OPEN CHANNEL FLOW			TOTAL		
DRAINAGE BASIN	AREA (ac)	US ELEV. (FT)	DS ELEV. (FT)	LENGTH (FT)	ROUGHNESS COEFFICIENT n	DS ELEV. (FT)	LENGTH (FT)	PAVED (P) OR UNPAVED (U)	DS ELEV. (FT)	LENGTH (FT)	HYDRAULIC RADIUS (FT)	MANNING'S N VALUE	SLOPE (FT/FT)	T_c (HR)	SLOPE (FT/FT)	VELOCITY (FT/SEC)	T_c (HR)	SLOPE (FT/FT)	VELOCITY (FT/SEC)	T_c (HR)	TIME OF CONCENTRATION $T_c=T_c+T_c+T_n$		T_c USED (5 MIN MINIMUM)
																					(HR)	(MIN)	(MIN)
DA_DITCH_03	6.02	878.42	878.25	100	0.150	878.00	190	U	868.83	1486	0.40	0.035	0.002	0.42	0.001	0.59	0.09	0.006	1.81	0.23	**0.74**	**44.2**	**44.2**
DA_SS_SUMMERSGREEN	2.97	879.35	879.18	100	0.011	874.09	183	P	871.24	420	0.00	0.013	0.002	0.05	0.028	3.39	0.02	0.007	6.00	0.02	**0.09**	**5.2**	**5.2**
DA_DITCH_01	0.53	869.03	864.90	100	0.011	863.77	201	P	853.18	308	0.24	0.035	0.041	0.01	0.006	1.52	0.04	0.034	3.02	0.03	**0.08**	**4.8**	**5.0**
DA_DITCH_02	2.32	872.96	869.04	100	0.011	861.15	357	U	854.63	202	0.12	0.035	0.039	0.01	0.022	2.40	0.04	0.032	1.84	0.03	**0.09**	**5.2**	**5.2**
DA_DITCH_04	2.41	852.16	850.53	100	0.011	848.30	221	U	843.10	286	0.69	0.035	0.016	0.02	0.010	1.62	0.04	0.018	4.49	0.02	**0.08**	**4.6**	**5.0**

RUNOFF COEFFICIENT

Drainage Basin	Total Area	Pavement	Commercial	Residential	Grass/Unpaved	Recreation/Railroad	Industrial	Area Sum	C Value
		C	C	C	C	C	C		
		0.95	0.70	0.60	0.36	0.40	0.80		
	(acre)	(acre)	(acre)	(acre)	(acre)	(acre)	(acre)	(acre)	
DA_DITCH_03	6.02	0.02		3.06	2.94			6.02	**0.48**
DA_SS_SUMMERSGREEN	2.97	0.62		1.91	0.45			2.97	**0.64**
DA_DITCH_01	0.53	0.10			0.43			0.53	**0.47**
DA_DITCH_02	2.32	0.19			2.13			2.32	**0.41**
DA_DITCH_04	2.41				2.41			2.41	**0.36**

DISCHARGE CALCULATION

Drainage Basin	AREA (acres)	TC (min)	C	Design Event	Watershed	I - 25 yr (in/hr)	Q25 (cfs)	I - 100 yr (in/hr)	Q100 (cfs)
DA_DITCH_03	6.02	44.17	0.48	25 YR	Smith Branch - San Gabriel River	4.45	12.97	5.55	16.17
DA_SS_SUMMERSGREEN	2.97	5.16	0.64	25 YR	Lower Berry Creek	9.78	18.49	11.82	22.33
DA_DITCH_01	0.53	5.00	0.47	25 YR	Smith Branch - San Gabriel River	9.84	2.49	11.88	3.00
DA_DITCH_02	2.32	5.19	0.41	25 YR	Smith Branch - San Gabriel River	9.77	9.24	11.80	11.16
DA_DITCH_04	2.41	5.00	0.36	25 YR	Lower Berry Creek	9.84	8.53	11.88	10.30

CK:
DW:
CK:
DW:

DATE: 3/14/2025 9:03:34 AM
FILE: G:\TXC\Projects\City Georgetown\10767-00 Shell Road\03 CADD\01 Shts\06-DRNG\SHELL DRNG DITCH CALCS 01.dgn

STATE OF TEXAS
ALEXIS WOFFENDEN
117162
LICENSED PROFESSIONAL ENGINEER

3/14/2025

EST. 1848 GEORGETOWN TEXAS

BGE, Inc.
101 West Louis Henna Blvd, Suite 400, Austin, TX 78728
Tel: 512-879-0400 • www.bgeinc.com
TBPE Registration No. F-1046

SHELL ROAD

DITCH CALCULATIONS

25-YR DITCH CALCULATIONS

NAME	DRAINAGE BASIN ID	DRAINAGE AREA (AC)	DESIGN EVENT	INTENSITY (IN/HR)	BASELINE	STA	FLOW LINE	BOTTOM WIDTH (FT)	FRONT SLOPE (FT)	BACK SLOPE (FT)	DITCH SLOPE (%)	CTRL ELEV (LOWEST)	WATER SURFACE ELEV	ALLOWABLE DEPTH (FT)	COMPUTED DEPTH (ft)	FREEBOARD (FT)	MANNING'S N	SHEAR STRESS (LBS/SQ. FT)	VELOCITY (FT/S)	INCREMENTAL DITCH FLOW (CFS)	DITCH CAPACITY (CFS)	DISCHARGE (CFS)	SIDE OF ROAD (LT/ RT)	DITCH LINER TYPE
DITCH_01	DA_DITCH_01	0.53	25 YR	9.84	SHELL	9+00	859.63	0.00	3	3	1.98	861.31	860.15	1.68	0.52	1.16	0.035	0.64	2.34	1.86	19.77	2.49	LT	GRASS
DITCH_01	DA_DITCH_01	0.53	25 YR	9.84	SHELL	9+50	858.64	0.00	3	3	1.98	860.27	859.17	1.63	0.53	1.10	0.035	0.65	2.37	1.99	18.92	2.49	LT	GRASS
DITCH_01	DA_DITCH_01	0.53	25 YR	9.84	SHELL	10+00	857.57	0.00	3	3	2.14	859.05	858.10	1.48	0.53	0.95	0.035	0.71	2.48	2.11	16.30	2.49	LT	GRASS
DITCH_01	DA_DITCH_01	0.53	25 YR	9.84	SHELL	10+50	854.02	0.00	3	3	2.28	857.40	856.97	3.38	0.54	0.43	0.035	0.77	2.58	2.24	88.32	2.49	LT	GRASS
DITCH_01	DA_DITCH_01	0.53	25 YR	9.84	SHELL	11+00	854.02	0.00	10	3	4.82	854.68	854.37	0.66	0.35	0.31	0.035	1.06	2.90	2.36	8.22	2.49	LT	GRASS
DITCH_01	DA_DITCH_01	0.53	25 YR	9.84	SHELL	11+50	852.15	0.00	12	3	3.74	853.75	852.51	1.60	0.36	1.24	0.035	0.84	2.58	2.49	49.60	2.49	LT	GRASS
DITCH_02	DA_DITCH_02	2.32	25 YR	9.77	SHELL	18+00	864.44	0.00	3	3	1.28	865.74	865.09	1.30	0.65	0.65	0.035	0.52	2.18	2.77	11.05	9.24	LT	GRASS
DITCH_02	DA_DITCH_02	2.32	25 YR	9.77	SHELL	17+50	863.80	0.00	3	3	1.28	864.83	864.53	1.03	0.73	0.30	0.035	0.58	2.34	3.70	7.46	9.24	LT	GRASS
DITCH_02	DA_DITCH_02	2.32	25 YR	9.77	SHELL	17+00	863.13	0.00	3	3	1.34	864.49	863.91	1.36	0.78	0.58	0.035	0.65	2.52	4.62	13.98	9.24	LT	GRASS
DITCH_02	DA_DITCH_02	2.32	25 YR	9.77	SHELL	16+50	862.49	0.00	3	3	1.28	863.57	863.33	1.08	0.84	0.24	0.035	0.67	2.59	5.55	9.07	9.24	LT	GRASS
DITCH_02	DA_DITCH_02	2.32	25 YR	9.77	SHELL	16+00	861.49	0.00	3	3	2.00	862.37	862.31	0.88	0.82	0.06	0.035	1.03	3.19	6.47	7.40	9.24	LT	GRASS
DITCH_02	DA_DITCH_02	2.32	25 YR	9.77	SHELL	15+50	860.12	0.00	3	3	2.74	861.08	860.92	0.96	0.80	0.16	0.035	1.36	3.65	6.93	10.08	9.24	LT	GRASS
DITCH_02	DA_DITCH_02	2.32	25 YR	9.77	SHELL	15+00	859.24	0.00	3	3	1.76	860.30	860.13	1.06	0.89	0.17	0.035	0.97	3.14	7.39	10.58	9.24	LT	GRASS
DITCH_02	DA_DITCH_02	2.32	25 YR	9.77	SHELL	14+50	858.23	0.00	3	3	2.02	859.38	859.11	1.15	0.88	0.27	0.035	1.11	3.36	7.86	13.32	9.24	LT	GRASS
DITCH_02	DA_DITCH_02	2.32	25 YR	9.77	SHELL	14+00	857.12	0.00	3	3	2.22	858.48	858.01	1.36	0.89	0.47	0.035	1.23	3.53	8.32	19.57	9.24	LT	GRASS
DITCH_02	DA_DITCH_02	2.32	25 YR	9.77	SHELL	13+50	855.93	0.00	3	3	2.38	857.18	856.82	1.25	0.89	0.36	0.035	1.33	3.67	8.78	17.20	9.24	LT	GRASS
DITCH_02	DA_DITCH_02	2.32	25 YR	9.77	SHELL	13+00	854.17	0.00	25	3	3.52	857.29	854.64	3.12	0.47	2.65	0.035	1.03	3.01	9.24	410.52	9.24	LT	GRASS
DITCH_03	DA_DITCH_03	6.02	25 YR	4.45	SHELL	33+00	878.30	4.13	2	2	0.20	878.87	878.52	0.57	0.22	0.35	0.035	0.03	0.64	0.65	1.93	12.97	LT	CONCRETE
DITCH_03	DA_DITCH_03	6.02	25 YR	4.45	SHELL	33+50	878.20	4.66	2	2	0.20	879.21	878.41	1.01	0.21	0.80	0.035	0.03	0.62	0.65	4.19	12.97	LT	CONCRETE
DITCH_03	DA_DITCH_03	6.02	25 YR	4.45	SHELL	34+00	878.10	3.30	2	2	0.20	879.10	878.47	1.00	0.37	0.63	0.035	0.05	0.86	1.30	4.55	12.97	LT	CONCRETE
DITCH_03	DA_DITCH_03	6.02	25 YR	4.45	SHELL	34+50	878.00	2.20	2	2	0.20	879.24	878.46	1.24	0.46	0.78	0.035	0.06	0.91	1.30	5.31	12.97	LT	CONCRETE
DITCH_03	DA_DITCH_03	6.02	25 YR	4.45	SHELL	35+00	877.84	0.00	2	2	0.32	879.73	878.71	1.89	0.87	1.02	0.035	0.17	1.28	1.95	9.15	12.97	LT	CONCRETE
DITCH_03	DA_DITCH_03	6.02	25 YR	4.45	SHELL	35+50	877.03	0.00	2	2	1.62	879.51	877.67	2.48	0.64	1.84	0.035	0.65	2.35	1.95	28.93	12.97	LT	CONCRETE
DITCH_03	DA_DITCH_03	6.02	25 YR	4.45	SHELL	36+00	876.95	0.00	3	3	0.16	879.05	877.89	2.10	0.94	1.16	0.035	0.09	0.99	2.59	13.06	12.97	LT	GRASS
DITCH_03	DA_DITCH_03	6.02	25 YR	4.45	SHELL	36+50	876.80	1.65	3	3	0.30	878.38	877.41	1.58	0.61	0.97	0.035	0.11	1.23	2.59	12.41	12.97	LT	GRASS
DITCH_03	DA_DITCH_03	6.02	25 YR	4.45	SHELL	37+00	876.65	1.77	3	3	0.30	878.25	877.31	1.60	0.66	0.94	0.035	0.12	1.30	3.24	13.66	12.97	LT	GRASS
DITCH_03	DA_DITCH_03	6.02	25 YR	4.45	SHELL	37+50	876.55	1.35	3	3	0.20	878.39	877.33	1.84	0.78	1.06	0.035	0.10	1.13	3.24	14.25	12.97	LT	GRASS
DITCH_03	DA_DITCH_03	6.02	25 YR	4.45	SHELL	38+00	876.45	1.23	3	3	0.20	878.42	877.31	1.97	0.86	1.11	0.035	0.11	1.18	3.89	16.64	12.97	LT	GRASS
DITCH_03	DA_DITCH_03	6.02	25 YR	4.45	SHELL	38+50	876.40	0.50	3	3	0.10	878.74	877.51	2.34	1.11	1.23	0.035	0.07	0.92	3.89	16.13	12.97	LT	GRASS
DITCH_03	DA_DITCH_03	6.02	25 YR	4.45	SHELL	39+00	876.32	0.00	3	3	0.16	878.96	877.47	2.64	1.15	1.49	0.035	0.12	1.14	4.54	23.74	12.97	LT	GRASS
DITCH_03	DA_DITCH_03	6.02	25 YR	4.45	SHELL	39+50	876.13	0.00	3	3	0.38	878.77	877.11	2.64	0.98	1.66	0.035	0.23	1.57	4.54	32.84	12.97	LT	GRASS
DITCH_03	DA_DITCH_03	6.02	25 YR	4.45	SHELL	40+00	875.98	0.00	3	3	0.30	878.65	877.06	2.67	1.08	1.59	0.035	0.20	1.49	5.19	31.79	12.97	LT	GRASS
DITCH_03	DA_DITCH_03	6.02	25 YR	4.45	SHELL	40+50	875.85	1.62	3	3	0.26	878.04	876.72	2.19	0.87	1.32	0.035	0.14	1.40	5.19	25.06	12.97	LT	GRASS
DITCH_03	DA_DITCH_03	6.02	25 YR	4.45	SHELL	41+00	875.72	0.00	3	3	0.26	878.46	876.88	2.74	1.16	1.58	0.035	0.19	1.45	5.84	32.67	12.97	LT	GRASS
DITCH_03	DA_DITCH_03	6.02	25 YR	4.45	SHELL	41+50	875.50	2.55	3	3	0.44	877.39	876.22	1.89	0.72	1.17	0.035	0.20	1.72	5.84	26.71	12.97	LT	GRASS
DITCH_03	DA_DITCH_03	6.02	25 YR	4.45	SHELL	42+00	875.35	3.86	3	3	0.30	876.83	876.07	1.48	0.72	0.76	0.035	0.13	1.49	6.48	18.35	12.97	LT	GRASS
DITCH_03	DA_DITCH_03	6.02	25 YR	4.45	SHELL	42+50	875.00	3.61	3	3	0.70	876.40	875.59	1.40	0.59	0.81	0.035	0.26	2.03	6.48	22.23	12.97	LT	GRASS
DITCH_03	DA_DITCH_03	6.02	25 YR	4.45	SHELL	43+00	874.80	2.62	3	3	0.40	876.51	875.61	1.71	0.81	0.90	0.035	0.20	1.75	7.13	23.20	12.97	LT	GRASS
DITCH_03	DA_DITCH_03	6.02	25 YR	4.45	SHELL	43+50	874.60	1.90	3	3	0.40	876.52	875.48	1.92	0.88	1.04	0.035	0.22	1.77	7.13	26.07	12.97	LT	GRASS
DITCH_03	DA_DITCH_03	6.02	25 YR	4.45	SHELL	44+00	874.34	0.00	3	3	0.52	876.78	875.47	2.44	1.13	1.31	0.035	0.37	2.02	7.78	36.11	12.97	LT	GRASS
DITCH_03	DA_DITCH_03	6.02	25 YR	4.45	SHELL	44+50	874.04	0.00	3	3	0.60	876.39	875.18	2.35	1.14	1.21	0.035	0.43	2.18	8.43	36.05	12.97	LT	GRASS
DITCH_03	DA_DITCH_03	6.02	25 YR	4.45	SHELL	45+00	873.85	0.00	3	3	0.38	876.26	875.12	2.41	1.27	1.14	0.035	0.30	1.87	9.08	32.55	12.97	LT	GRASS
DITCH_03	DA_DITCH_03	6.02	25 YR	4.45	SHELL	45+50	873.48	0.00	3	3	0.74	875.86	874.63	2.38	1.15	1.23	0.035	0.53	2.44	9.73	41.46	12.97	LT	GRASS
DITCH_03	DA_DITCH_03	6.02	25 YR	4.45	SHELL	46+00	873.35	8.00	3	3	0.26	875.09	874.05	1.74	0.70	1.04	0.035	0.11	1.48	10.38	34.03	12.97	LT	GRASS
DITCH_03	DA_DITCH_03	6.02	25 YR	4.45	SHELL	46+50	873.22	11.10	3	3	0.26	874.29	873.81	1.07	0.59	0.48	0.035	0.10	1.38	10.38	21.10	12.97	LT	GRASS
DITCH_03	DA_DITCH_03	6.02	25 YR	4.45	SHELL	47+00	872.17	9.40	3	3	2.10	873.33	872.81	1.16	0.64	0.52	0.035	0.84	4.07	29.51	60.86	12.97	LT	GRASS
DITCH_03	DA_DITCH_03	6.02	25 YR	4.45	SHELL	47+50	871.50	8.60	3	3	1.34	872.94	872.26	1.44	0.76	0.68	0.035	0.64	3.56	29.51	66.30	12.97	LT	GRASS
DITCH_03	DA_DITCH_03	6.02	25 YR	4.45	SHELL	48+00	871.00	8.80	3	3	1.00	872.61	871.83	1.61	0.83	0.78	0.035	0.52	3.23	30.16	70.96	12.97	LT	GRASS
DITCH_03	DA_DITCH_03	6.02	25 YR	4.45	SHELL	48+50	870.50	9.70	3	3	1.00	872.13	871.29	1.63	0.79	0.84	0.035	0.49	3.18	30.16	75.52	12.97	LT	GRASS
DITCH_03	DA_DITCH_03	6.02	25 YR	4.45	SHELL	49+00	870.05	13.00	3	3	0.90	871.06	870.75	1.01	0.70	0.31	0.035	0.40	2.90	30.81	46.88	12.97	LT	GRASS
DITCH_03	DA_DITCH_03	6.02	25 YR	4.45	SHELL	49+50	868.79	10.30	3	3	2.52	870.42	869.39	1.63	0.60	1.03	0.035	0.94	4.33	31.46	107.24	12.97	LT	GRASS
DITCH_03	DA_DITCH_03	6.02	25 YR	4.45	SHELL	50+00	868.00	6.30	3	3	1.58	869.35	868.87	1.35	0.87	0.48	0.035	0.86	4.04	31.46	56.45	12.97	LT	GRASS
DITCH_04	DA_DITCH_04	2.41	25 YR	9.84	SHELL	63+50	839.34	0.00	2	2	0.28	843.11	840.90	3.77	1.56	2.21	0.035	0.27	1.76	8.53	50.14	8.53	RT	CONCRETE
DITCH_04	DA_DITCH_04	2.41	25 YR	9.84	SHELL	64+00	839.48	0.00	3	2	0.70	842.62	840.55	3.14	1.07	2.07	0.035	0.47	2.23	6.40	54.91	8.53	RT	GRASS
DITCH_04	DA_DITCH_04	2.41	25 YR	9.84	SHELL	64+50	839.83	0.00	3	2	1.34	842.23	840.28	2.40	0.45	1.95	0.035	0.37	1.72	0.85	24.73	8.53	RT	GRASS
DITCH_04	DA_DITCH_04	2.41	25 YR	9.84	SHELL	65+00	840.50	2.39	3	3	1.34	841.78	840.63	1.28	0.13	1.15	0.035	0.11	1.16	0.43	9.23	8.53	RT	GRASS

STATE OF TEXAS
ALEXIS WOFFENDEN
117162
LICENSED
PROFESSIONAL ENGINEER

2/14/2025

EST.1848
GEORGETOWN
TEXAS

BGE, Inc.
101 West Louis Henna Blvd, Suite 400, Austin, TX 78728
Tel: 512-879-0400 • www.bgeinc.com
TBPE Registration No. F-1046

SHELL ROAD

DITCH CALCULATIONS

DATE: 2/24/2025 3:34:07 PM
FILE: G:\TXC\Projects\City Georgetown\10767-00 Shell Road\03_CADD\01 Shts\06-DRNG\SHELL_DRNG_DITCH_CALCS_02.dgn

100-YR DITCH CALCULATIONS

NAME	DRAINAGE BASIN ID	DRAINAGE AREA (AC)	DESIGN EVENT	INTENSITY (IN/HR)	BASELINE	STA	FLOW LINE	BOTTOM WIDTH (FT)	FRONT SLOPE (FT)	BACK SLOPE (FT)	DITCH SLOPE (%)	CTRL ELEV (LOWEST)	WATER SURFACE ELEV	ALLOWABLE DEPTH (FT)	COMPUTED DEPTH (ft)	FREEBOARD (FT)	MANNING'S N	SHEAR STRESS (LBS/SQ. FT)	VELOCITY (FT/S)	INCREMENTAL DITCH FLOW (CFS)	DITCH CAPACITY (CFS)	DISCHARGE (CFS)	SIDE OF ROAD (LT/ RT)	DITCH LINER TYPE
DITCH_01	DA_DITCH_01	0.53	100YR	11.88	SHELL	9+00	859.63	0.00	3	3	1.98	861.31	860.18	1.68	0.55	1.13	0.035	0.68	2.45	2.25	20.75	3.00	LT	GRASS
DITCH_01	DA_DITCH_01	0.53	100YR	11.88	SHELL	9+50	858.64	0.00	3	3	1.98	860.27	859.21	1.63	0.57	1.06	0.035	0.70	2.49	2.40	19.85	3.00	LT	GRASS
DITCH_01	DA_DITCH_01	0.53	100YR	11.88	SHELL	10+00	857.57	0.00	3	3	2.14	859.05	858.14	1.48	0.57	0.91	0.035	0.76	2.60	2.55	17.11	3.00	LT	GRASS
DITCH_01	DA_DITCH_01	0.53	100YR	11.88	SHELL	10+50	854.02	0.00	3	3	2.28	857.40	857.01	3.38	0.58	0.39	0.035	0.82	2.70	2.70	92.68	3.00	LT	GRASS
DITCH_01	DA_DITCH_01	0.53	100YR	11.88	SHELL	11+00	854.02	0.00	10	3	4.82	854.68	854.40	0.66	0.38	0.28	0.035	1.14	3.05	2.85	8.63	3.00	LT	GRASS
DITCH_01	DA_DITCH_01	0.53	100YR	11.88	SHELL	11+50	852.15	0.00	12	3	3.74	853.75	852.53	1.60	0.38	1.22	0.035	0.90	2.71	3.00	52.05	3.00	LT	GRASS
DITCH_02	DA_DITCH_02	2.32	100YR	11.80	SHELL	18+00	864.44	0.00	3	3	1.28	865.74	865.14	1.30	0.70	0.60	0.035	0.56	2.30	3.35	11.65	11.16	LT	GRASS
DITCH_02	DA_DITCH_02	2.32	100YR	11.80	SHELL	17+50	863.80	0.00	3	3	1.28	864.83	864.58	1.03	0.78	0.25	0.035	0.62	2.47	4.47	7.86	11.16	LT	GRASS
DITCH_02	DA_DITCH_02	2.32	100YR	11.80	SHELL	17+00	863.13	0.00	3	3	1.34	864.49	863.97	1.36	0.84	0.52	0.035	0.70	2.66	5.58	14.74	11.16	LT	GRASS
DITCH_02	DA_DITCH_02	2.32	100YR	11.80	SHELL	16+50	862.49	0.00	3	3	1.28	863.57	863.39	1.08	0.90	0.18	0.035	0.72	2.73	6.70	9.56	11.16	LT	GRASS
DITCH_02	DA_DITCH_02	2.32	100YR	11.80	SHELL	16+00	861.49	0.00	3	3	2.00	862.37	862.37	0.88	0.88	0.00	0.035	1.10	3.36	7.81	7.80	11.16	LT	GRASS
DITCH_02	DA_DITCH_02	2.32	100YR	11.80	SHELL	15+50	860.12	0.00	3	3	2.74	861.08	860.97	0.96	0.85	0.11	0.035	1.46	3.84	8.37	10.63	11.16	LT	GRASS
DITCH_02	DA_DITCH_02	2.32	100YR	11.80	SHELL	15+00	859.24	0.00	3	3	1.76	860.30	860.19	1.06	0.95	0.11	0.035	1.04	3.31	8.93	11.15	11.16	LT	GRASS
DITCH_02	DA_DITCH_02	2.32	100YR	11.80	SHELL	14+50	858.23	0.00	3	3	2.02	859.38	859.18	1.15	0.95	0.20	0.035	1.19	3.54	9.49	14.03	11.16	LT	GRASS
DITCH_02	DA_DITCH_02	2.32	100YR	11.80	SHELL	14+00	857.12	0.00	3	3	2.22	858.48	858.07	1.36	0.95	0.41	0.035	1.31	3.72	10.05	20.63	11.16	LT	GRASS
DITCH_02	DA_DITCH_02	2.32	100YR	11.80	SHELL	13+50	855.93	0.00	3	3	2.38	857.18	856.89	1.25	0.96	0.29	0.035	1.42	3.87	10.60	18.13	11.16	LT	GRASS
DITCH_02	DA_DITCH_02	2.32	100YR	11.80	SHELL	13+00	854.17	0.00	25	3	3.52	857.29	854.67	3.12	0.50	2.62	0.035	1.10	3.16	11.16	430.51	11.16	LT	GRASS
DITCH_03	DA_DITCH_03	6.02	100YR	5.55	SHELL	33+00	878.30	4.13	2	2	0.20	878.87	878.55	0.57	0.25	0.32	0.035	0.03	0.70	0.81	2.09	16.17	LT	CONCRETE
DITCH_03	DA_DITCH_03	6.02	100YR	5.55	SHELL	33+50	878.20	4.66	2	2	0.20	879.21	878.43	1.01	0.23	0.78	0.035	0.03	0.67	0.81	4.54	16.17	LT	CONCRETE
DITCH_03	DA_DITCH_03	6.02	100YR	5.55	SHELL	34+00	878.10	3.30	2	2	0.20	879.10	878.52	1.00	0.42	0.58	0.035	0.05	0.92	1.62	4.88	16.17	LT	CONCRETE
DITCH_03	DA_DITCH_03	6.02	100YR	5.55	SHELL	34+50	878.00	2.20	2	2	0.20	879.24	878.51	1.24	0.51	0.73	0.035	0.06	0.98	1.62	5.66	16.17	LT	CONCRETE
DITCH_03	DA_DITCH_03	6.02	100YR	5.55	SHELL	35+00	877.84	0.00	2	2	0.32	879.73	878.79	1.89	0.95	0.94	0.035	0.19	1.35	2.43	9.68	16.17	LT	CONCRETE
DITCH_03	DA_DITCH_03	6.02	100YR	5.55	SHELL	35+50	877.03	0.00	2	2	1.62	879.51	877.73	2.48	0.70	1.78	0.035	0.71	2.49	2.43	30.62	16.17	LT	CONCRETE
DITCH_03	DA_DITCH_03	6.02	100YR	5.55	SHELL	36+00	876.95	0.00	3	3	0.16	879.05	877.97	2.10	1.02	1.08	0.035	0.10	1.04	3.23	13.82	16.17	LT	GRASS
DITCH_03	DA_DITCH_03	6.02	100YR	5.55	SHELL	36+50	876.80	1.65	3	3	0.30	878.38	877.48	1.58	0.68	0.90	0.035	0.13	1.30	3.23	13.15	16.17	LT	GRASS
DITCH_03	DA_DITCH_03	6.02	100YR	5.55	SHELL	37+00	876.65	1.77	3	3	0.30	878.25	877.39	1.60	0.74	0.86	0.035	0.14	1.38	4.04	14.49	16.17	LT	GRASS
DITCH_03	DA_DITCH_03	6.02	100YR	5.55	SHELL	37+50	876.55	1.35	3	3	0.20	878.39	877.41	1.84	0.86	0.98	0.035	0.11	1.19	4.04	15.10	16.17	LT	GRASS
DITCH_03	DA_DITCH_03	6.02	100YR	5.55	SHELL	38+00	876.45	1.23	3	3	0.20	878.42	877.40	1.97	0.95	1.02	0.035	0.12	1.25	4.85	17.62	16.17	LT	GRASS
DITCH_03	DA_DITCH_03	6.02	100YR	5.55	SHELL	38+50	876.40	0.50	3	3	0.10	878.74	877.61	2.34	1.21	1.13	0.035	0.08	0.97	4.85	17.07	16.17	LT	GRASS
DITCH_03	DA_DITCH_03	6.02	100YR	5.55	SHELL	39+00	876.32	0.00	3	3	0.16	878.96	877.57	2.64	1.25	1.39	0.035	0.13	1.20	5.66	25.12	16.17	LT	GRASS
DITCH_03	DA_DITCH_03	6.02	100YR	5.55	SHELL	39+50	876.13	0.00	3	3	0.38	878.77	877.20	2.64	1.07	1.57	0.035	0.25	1.66	5.66	34.75	16.17	LT	GRASS
DITCH_03	DA_DITCH_03	6.02	100YR	5.55	SHELL	40+00	875.98	0.00	3	3	0.30	878.65	877.15	2.67	1.17	1.50	0.035	0.22	1.57	6.47	33.63	16.17	LT	GRASS
DITCH_03	DA_DITCH_03	6.02	100YR	5.55	SHELL	40+50	875.85	1.62	3	3	0.26	878.04	876.82	2.19	0.97	1.22	0.035	0.16	1.48	6.47	26.55	16.17	LT	GRASS
DITCH_03	DA_DITCH_03	6.02	100YR	5.55	SHELL	41+00	875.72	0.00	3	3	0.26	878.46	876.98	2.74	1.26	1.48	0.035	0.20	1.53	7.28	34.57	16.17	LT	GRASS
DITCH_03	DA_DITCH_03	6.02	100YR	5.55	SHELL	41+50	875.50	2.55	3	3	0.44	877.39	876.30	1.89	0.80	1.09	0.035	0.22	1.83	7.28	28.36	16.17	LT	GRASS
DITCH_03	DA_DITCH_03	6.02	100YR	5.55	SHELL	42+00	875.35	3.86	3	3	0.30	876.83	876.16	1.48	0.81	0.67	0.035	0.15	1.59	8.09	19.55	16.17	LT	GRASS
DITCH_03	DA_DITCH_03	6.02	100YR	5.55	SHELL	42+50	875.00	3.61	3	3	0.70	876.40	875.67	1.40	0.67	0.73	0.035	0.29	2.17	8.09	23.71	16.17	LT	GRASS
DITCH_03	DA_DITCH_03	6.02	100YR	5.55	SHELL	43+00	874.80	2.62	3	3	0.40	876.51	875.70	1.71	0.90	0.81	0.035	0.22	1.86	8.89	24.62	16.17	LT	GRASS
DITCH_03	DA_DITCH_03	6.02	100YR	5.55	SHELL	43+50	874.60	1.90	3	3	0.40	876.52	875.58	1.92	0.98	0.94	0.035	0.24	1.88	8.89	27.64	16.17	LT	GRASS
DITCH_03	DA_DITCH_03	6.02	100YR	5.55	SHELL	44+00	874.34	0.00	3	3	0.52	876.78	875.57	2.44	1.23	1.21	0.035	0.40	2.14	9.70	38.21	16.17	LT	GRASS
DITCH_03	DA_DITCH_03	6.02	100YR	5.55	SHELL	44+50	874.04	0.00	3	3	0.60	876.39	875.27	2.35	1.23	1.12	0.035	0.46	2.30	10.51	38.15	16.17	LT	GRASS
DITCH_03	DA_DITCH_03	6.02	100YR	5.55	SHELL	45+00	873.85	0.00	3	3	0.38	876.26	875.23	2.41	1.38	1.03	0.035	0.33	1.98	11.32	34.44	16.17	LT	GRASS
DITCH_03	DA_DITCH_03	6.02	100YR	5.55	SHELL	45+50	873.48	0.00	3	3	0.74	875.86	874.73	2.38	1.25	1.13	0.035	0.58	2.58	12.13	43.87	16.17	LT	GRASS
DITCH_03	DA_DITCH_03	6.02	100YR	5.55	SHELL	46+00	873.35	8.00	3	3	0.26	875.09	874.14	1.74	0.79	0.95	0.035	0.13	1.59	12.94	36.52	16.17	LT	GRASS
DITCH_03	DA_DITCH_03	6.02	100YR	5.55	SHELL	46+50	873.22	11.10	3	3	0.26	874.29	873.88	1.07	0.66	0.41	0.035	0.11	1.49	12.94	22.76	16.17	LT	GRASS
DITCH_03	DA_DITCH_03	6.02	100YR	5.55	SHELL	47+00	872.17	9.40	3	3	2.10	873.33	872.89	1.16	0.72	0.44	0.035	0.94	4.35	36.07	64.98	16.17	LT	GRASS
DITCH_03	DA_DITCH_03	6.02	100YR	5.55	SHELL	47+50	871.50	8.60	3	3	1.34	872.94	872.35	1.44	0.85	0.59	0.035	0.71	3.80	36.07	70.62	16.17	LT	GRASS
DITCH_03	DA_DITCH_03	6.02	100YR	5.55	SHELL	48+00	871.00	8.80	3	3	1.00	872.61	871.93	1.61	0.93	0.68	0.035	0.58	3.44	36.88	75.56	16.17	LT	GRASS
DITCH_03	DA_DITCH_03	6.02	100YR	5.55	SHELL	48+50	870.50	9.70	3	3	1.00	872.13	871.38	1.63	0.88	0.75	0.035	0.55	3.39	36.88	80.52	16.17	LT	GRASS
DITCH_03	DA_DITCH_03	6.02	100YR	5.55	SHELL	49+00	870.05	13.00	3	3	0.90	871.06	870.84	1.01	0.79	0.22	0.035	0.44	3.10	37.69	50.17	16.17	LT	GRASS
DITCH_03	DA_DITCH_03	6.02	100YR	5.55	SHELL	49+50	868.79	10.30	3	3	2.52	870.42	869.46	1.63	0.67	0.96	0.035	1.06	4.63	38.50	114.70	16.17	LT	GRASS
DITCH_03	DA_DITCH_03	6.02	100YR	5.55	SHELL	50+00	868.00	6.30	3	3	1.58	869.35	868.97	1.35	0.97	0.38	0.035	0.96	4.29	38.50	59.92	16.17	LT	GRASS
DITCH_04	DA_DITCH_04	2.41	100YR	11.88	SHELL	63+50	839.34	0.00	2	2	0.28	843.11	841.01	3.77	1.67	2.10	0.035	0.29	1.85	10.30	52.57	10.30	RT	CONCRETE
DITCH_04	DA_DITCH_04	2.41	100YR	11.88	SHELL	64+00	839.48	0.00	3	2	0.70	842.62	840.63	3.14	1.15	1.99	0.035	0.50	2.34	7.73	57.57	10.30	RT	GRASS
DITCH_04	DA_DITCH_04	2.41	100YR	11.88	SHELL	64+50	839.83	0.00	3	2	1.34	842.23	840.31	2.40	0.48	1.92	0.035	0.40	1.80	1.03	25.93	10.30	RT	GRASS
DITCH_04	DA_DITCH_04	2.41	100YR	11.88	SHELL	65+00	840.50	2.39	3	3	1.34	841.78	840.65	1.28	0.15	1.13	0.035	0.12	1.23	0.52	9.83	10.30	RT	GRASS

STATE OF TEXAS
ALEXIS WOFFENDEN
117162
LICENSED
PROFESSIONAL ENGINEER

2/14/2025

EST.1848 GEORGETOWN TEXAS

BGE, Inc.
101 West Louis Henna Blvd, Suite 400, Austin, TX 78728
Tel: 512-879-0400 • www.bgeinc.com
TBPE Registration No. F-1046

SHELL ROAD

DITCH CALCULATIONS

SHEET 3 OF 3

SHEET NO. 146

DATE: 2/24/2025 3:34:09 PM
FILE: G:\TX\C\Projects\City_Georgetown\10767-00 Shell Road\03_CADD\01_Shts\06-DRNG\SHELL_DRNG_DITCH_CALCS_03.dgn



LEGEND

- XXX-XXX / X.XX AC — DRAINAGE AREA ID
- FLOW DIRECTION
- DRAINAGE AREA BOUNDARY
- DITCH LINE

NOTE

- RATIONAL METHOD WAS USED FOR ONSITE DRAINAGE AREAS.
- A MINIMUM TC OF 5 MINUTES WAS ASSUMED.
- RUNOFF COEFFICIENTS FOR PAVEMENT AND GRASS WERE USED.

0 50 100

SCALE: 1" = 100'

STATE OF TEXAS
ALEXIS WOFFENDEN
117162
LICENSED
PROFESSIONAL ENGINEER

2/14/2025

EST.1848 GEORGETOWN TEXAS

BGE, Inc.
101 West Louis Henna Blvd, Suite 400, Austin, TX 78728
Tel: 512-879-0400 • www.bgeinc.com
TBPE Registration No. F-1046

SHELL ROAD

DRAINAGE AREA MAP

SHEET 1 OF 7

SHEET NO. 147

DATE: 2/24/2025 3:34:12 PM
FILE: G:\TXC\Projects\City Georgetown\10767-00 Shell Road\03 CADD\01 Shts\06-DRNG\SHELL DRNG DA 01.dgn

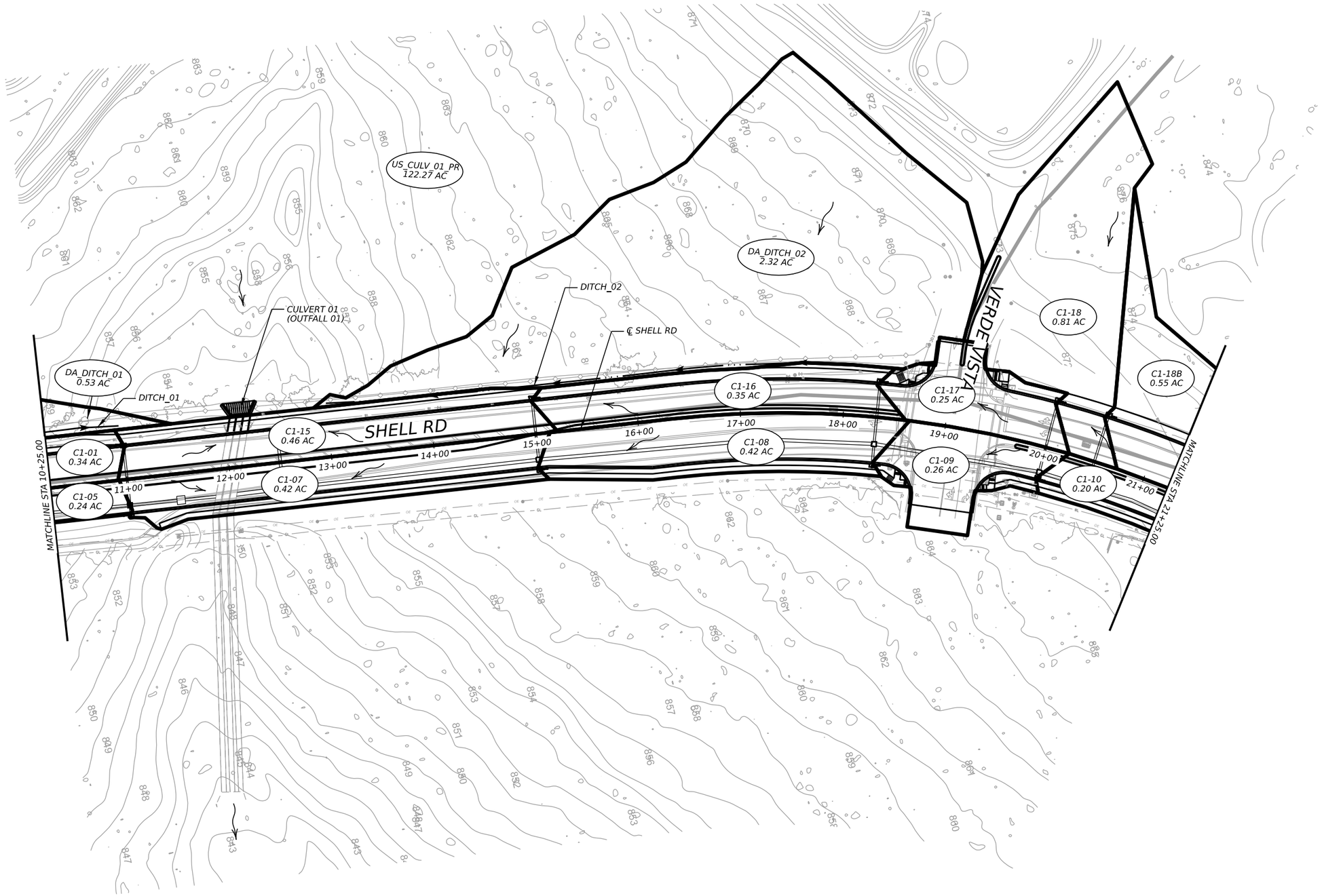

LEGEND

- XXX-XXX / X.XX AC — DRAINAGE AREA ID
- FLOW DIRECTION
- DRAINAGE AREA BOUNDARY
- DITCH LINE

NOTE

- RATIONAL METHOD WAS USED FOR ONSITE DRAINAGE AREAS.
- A MINIMUM TC OF 5 MINUTES WAS ASSUMED.
- RUNOFF COEFFICIENTS FOR PAVEMENT AND GRASS WERE USED.

0 50 100

SCALE: 1" = 100'

STATE OF TEXAS
ALEXIS WOFFENDEN
117162
LICENSED
PROFESSIONAL ENGINEER

2/14/2025

EST.1848 GEORGETOWN TEXAS

BGE, Inc.
101 West Louis Henna Blvd, Suite 400, Austin, TX 78728
Tel: 512-879-0400 • www.bgeinc.com
TBPE Registration No. F-1046

SHELL ROAD

DRAINAGE AREA MAP

SHEET 2 OF 7

SHEET NO. 148

DATE: 2/24/2025 3:34:14 PM
FILE: G:\TXC\Projects\City Georgetown\10767-00 Shell Road\03 CADD\01 Shts\06-DRNG\SHELL_DRNG_DA_02.dgn

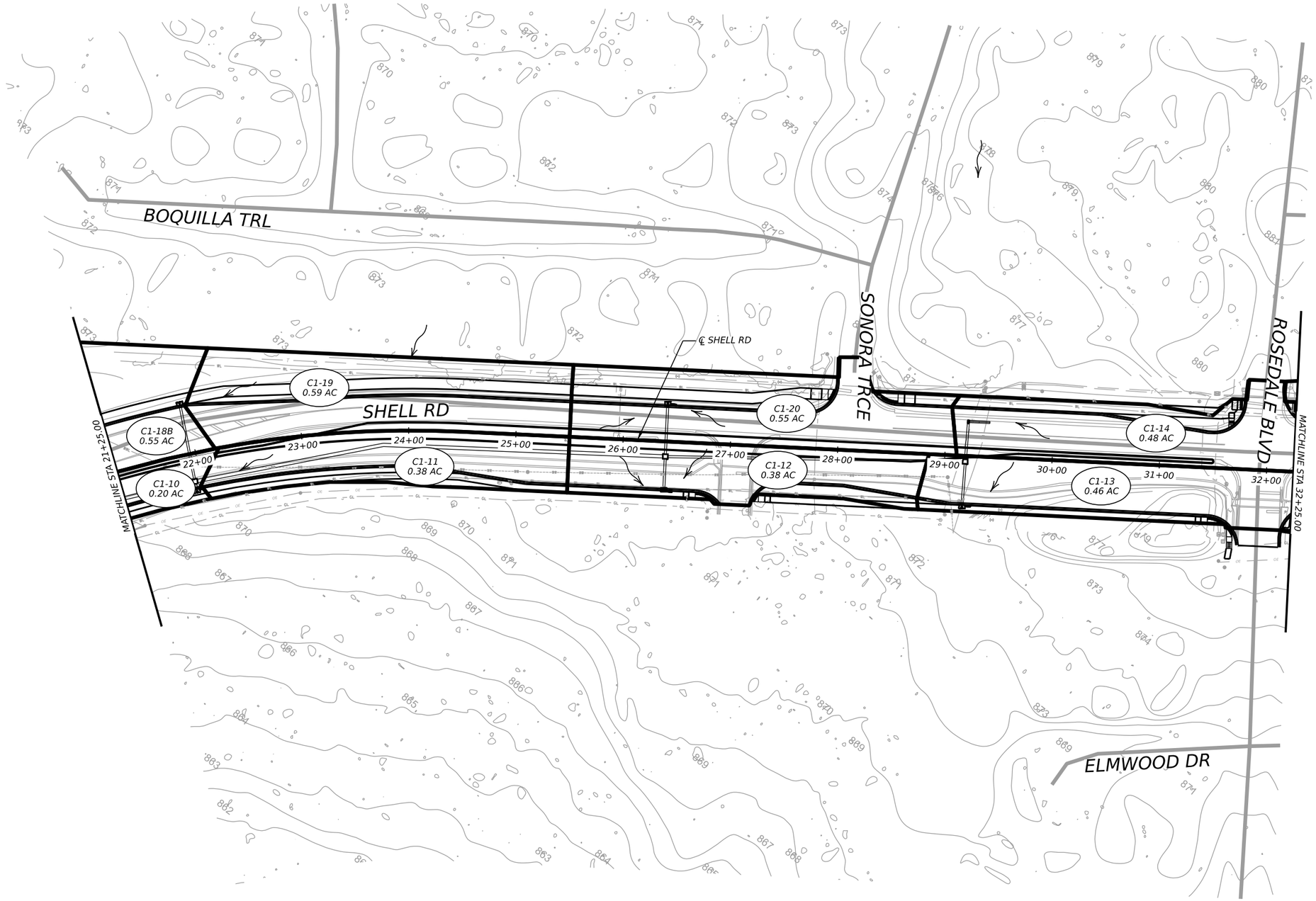

LEGEND

XXX-XXX
X.XX AC — DRAINAGE AREA ID

FLOW DIRECTION

DRAINAGE AREA BOUNDARY

DITCH LINE

NOTE

- RATIONAL METHOD WAS USED FOR ONSITE DRAINAGE AREAS.
- A MINIMUM TC OF 5 MINUTES WAS ASSUMED.
- RUNOFF COEFFICIENTS FOR PAVEMENT AND GRASS WERE USED.

0 50 100
SCALE: 1" = 100'

STATE OF TEXAS
ALEXIS WOFFENDEN
117162
LICENSED
PROFESSIONAL ENGINEER

2/14/2025

EST.1848 GEORGETOWN TEXAS

BGE, Inc.
101 West Louis Henna Blvd, Suite 400, Austin, TX 78728
Tel: 512-879-0400 • www.bgeinc.com
TBPE Registration No. F-1046

SHELL ROAD

DRAINAGE AREA MAP

SHEET 3 OF 7

SHEET NO. 149

DATE: 2/24/2025 3:34:16 PM
FILE: G:\TXC\Projects\City Georgetown\10767-00 Shell Road\03_CADD\01 Shts\06-DRNG\SHELL_DRNG_DA_03.dgn

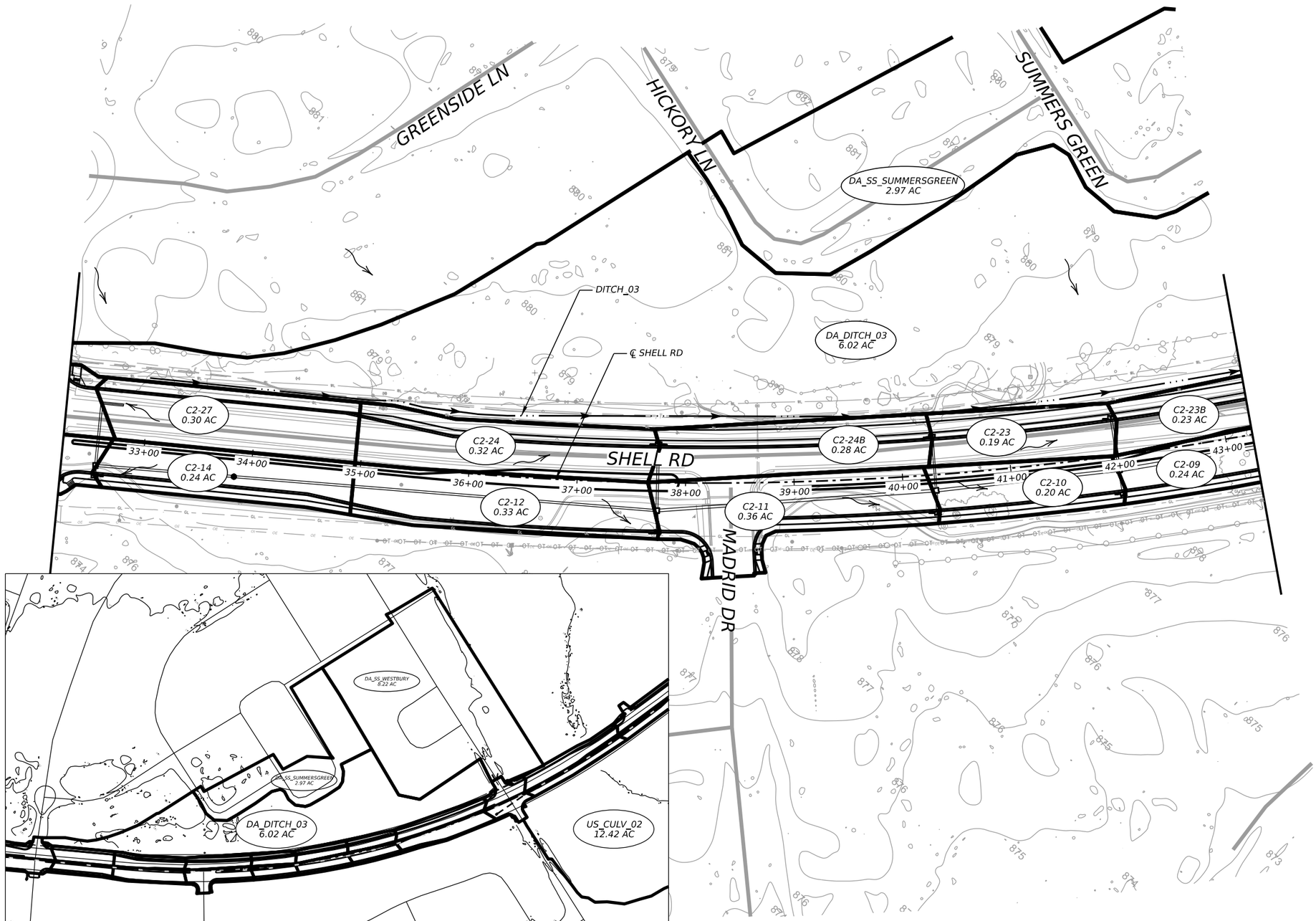

INSET

LEGEND

XXX-XXX
X.XX AC — DRAINAGE AREA ID

FLOW DIRECTION

DRAINAGE AREA BOUNDARY

DITCH LINE

NOTE

- RATIONAL METHOD WAS USED FOR ONSITE DRAINAGE AREAS.
- A MINIMUM TC OF 5 MINUTES WAS ASSUMED.
- RUNOFF COEFFICIENTS FOR PAVEMENT AND GRASS WERE USED.

0 50 100

SCALE: 1" = 100'

STATE OF TEXAS
ALEXIS WOFFENDEN
117162
LICENSED
PROFESSIONAL ENGINEER

3/14/2025

EST.1848 GEORGETOWN TEXAS

BGE, Inc.
101 West Louis Henna Blvd, Suite 400, Austin, TX 78728
Tel: 512-879-0400 • www.bgeinc.com
TBPE Registration No. F-1046

SHELL ROAD

DRAINAGE AREA MAP

SHEET 4 OF 7

SHEET NO. 150

DATE: 3/14/2025 1:26:58 PM
FILE: G:\TXC\Projects\City Georgetown\10767-00 Shell Road\03 CADD\01 Shts\06-DRNG\SHELL_DRNG_DA_04.dgn

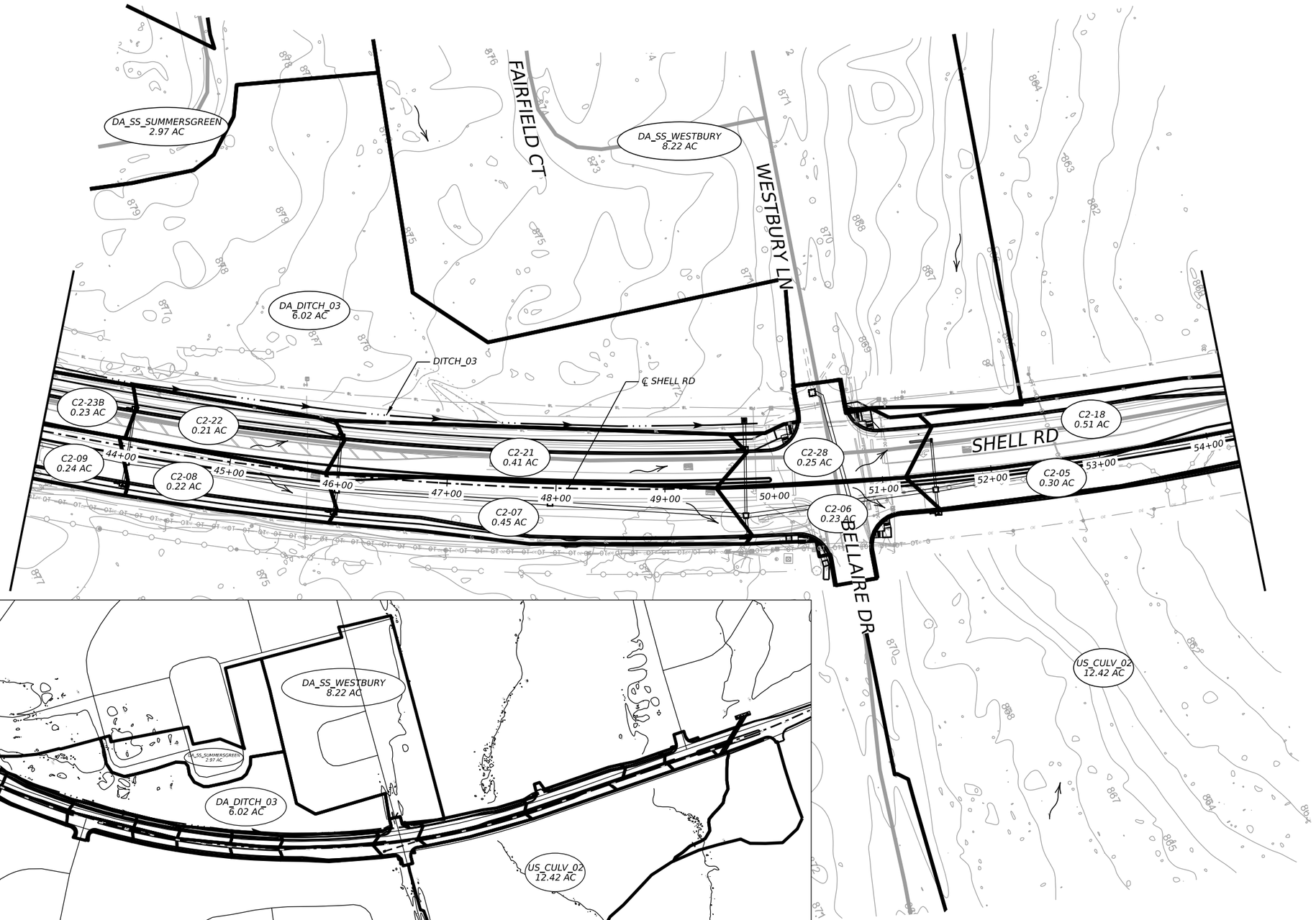

INSET

LEGEND

XXX-XXX
X.XX AC — DRAINAGE AREA ID

FLOW DIRECTION

DRAINAGE AREA BOUNDARY

DITCH LINE

NOTE

- RATIONAL METHOD WAS USED FOR ONSITE DRAINAGE AREAS.
- A MINIMUM TC OF 5 MINUTES WAS ASSUMED.
- RUNOFF COEFFICIENTS FOR PAVEMENT AND GRASS WERE USED.

0 50 100

SCALE: 1" = 100'

STATE OF TEXAS
ALEXIS WOFFENDEN
117162
LICENSED
PROFESSIONAL ENGINEER

3/14/2025

EST.1848 GEORGETOWN TEXAS

BGE, Inc.
101 West Louis Henna Blvd, Suite 400, Austin, TX 78728
Tel: 512-879-0400 • www.bgeinc.com
TBPE Registration No. F-1046

SHELL ROAD

DRAINAGE AREA MAP

SHEET 5 OF 7

SHEET NO. 151

DATE: 3/14/2025 12:47:49 PM
FILE: G:\TXC\Projects\City Georgetown\10767-00 Shell Road\03_CADD\01 Shts\06-DRNG\SHELL_DRNG_DA 05.dgn

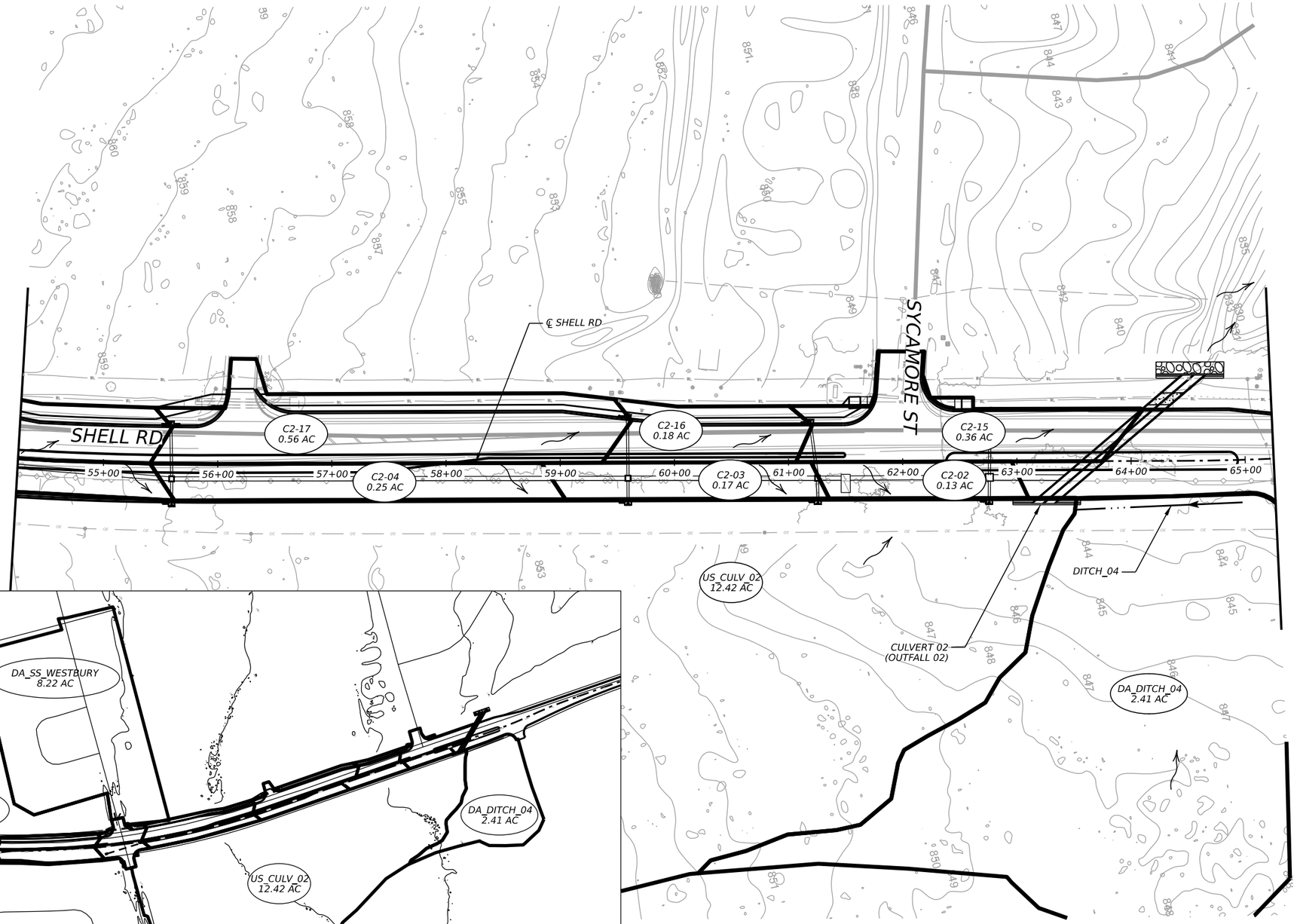

INSET

LEGEND

- XXX-XXX / X.XX AC — DRAINAGE AREA ID
- FLOW DIRECTION
- DRAINAGE AREA BOUNDARY
- DITCH LINE

NOTE

- RATIONAL METHOD WAS USED FOR ONSITE DRAINAGE AREAS.
- A MINIMUM TC OF 5 MINUTES WAS ASSUMED.
- RUNOFF COEFFICIENTS FOR PAVEMENT AND GRASS WERE USED.

0 50 100

SCALE: 1" = 100'

STATE OF TEXAS
ALEXIS WOFFENDEN
117162
LICENSED
PROFESSIONAL ENGINEER

3/14/2025

EST. 1848 GEORGETOWN TEXAS

BGE, Inc.
101 West Louis Henna Blvd, Suite 400, Austin, TX 78728
Tel: 512-879-0400 • www.bgeinc.com
TBPE Registration No. F-1046

SHELL ROAD

DRAINAGE AREA MAP

SHEET 6 OF 7

SHEET NO. 152

DATE: 3/14/2025 1:02:20 PM
FILE: G:\TXC\Projects\City Georgetown\10767-00 Shell Road\03 CADD\01_Shts\06-DRNG\SHELL_DRNG_DA_06.dgn

DW: CK: DW: CK:

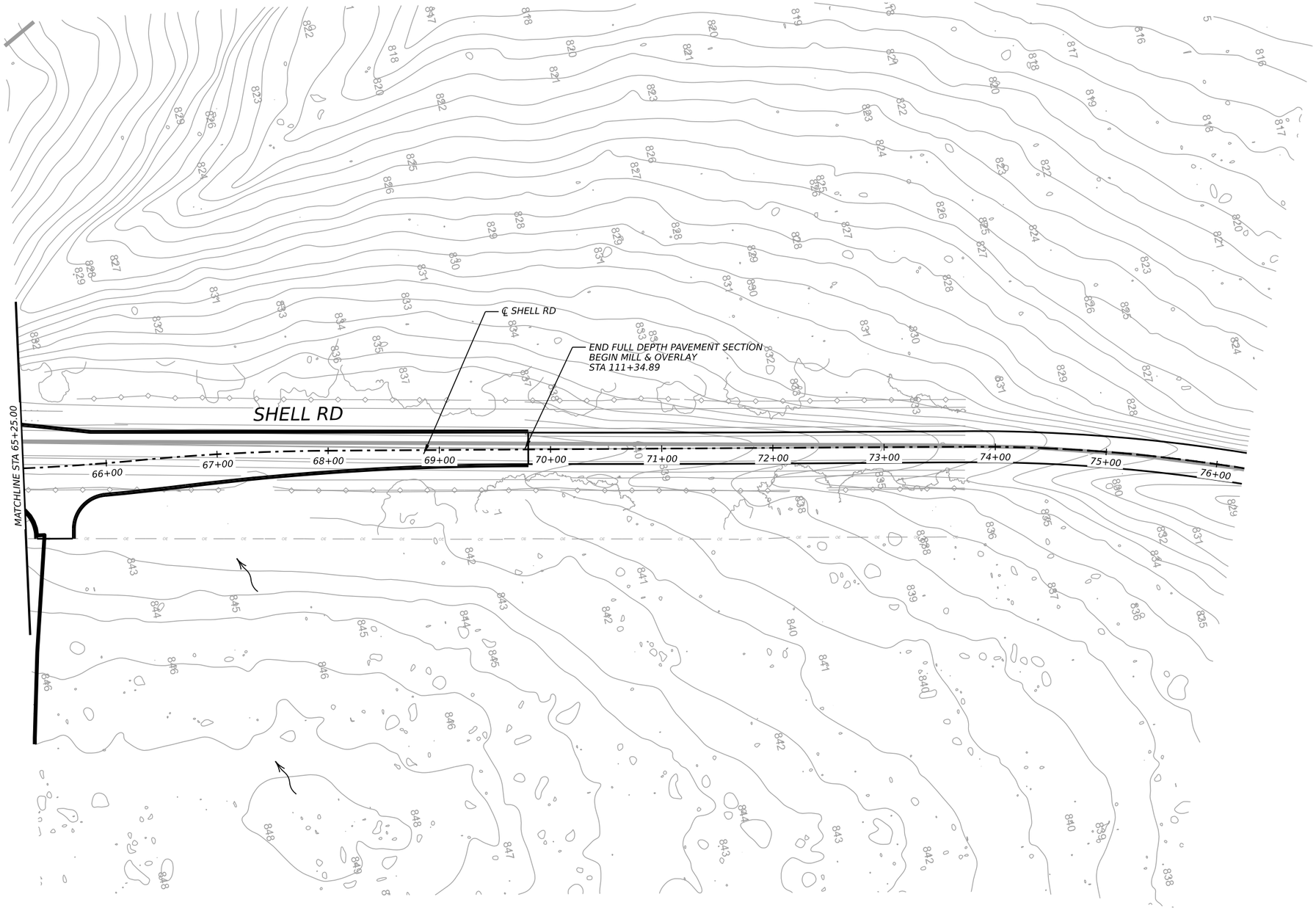

LEGEND

- XXX-XXX / X.XX AC — DRAINAGE AREA ID
- FLOW DIRECTION
- DRAINAGE AREA BOUNDARY
- DITCH LINE

NOTE

- RATIONAL METHOD WAS USED FOR ONSITE DRAINAGE AREAS.
- A MINIMUM TC OF 5 MINUTES WAS ASSUMED.
- RUNOFF COEFFICIENTS FOR PAVEMENT AND GRASS WERE USED.

0 50 100

SCALE: 1" = 100'

STATE OF TEXAS
ALEXIS WOFFENDEN
117162
LICENSED
PROFESSIONAL ENGINEER

2/14/2025

EST.1848 GEORGETOWN TEXAS

BGE, Inc.
101 West Louis Henna Blvd, Suite 400, Austin, TX 78728
Tel: 512-879-0400 • www.bgeinc.com
TBPE Registration No. F-1046

SHELL ROAD

DRAINAGE AREA MAP

SHEET 7 OF 7

SHEET NO. 153

DATE: 2/24/2025 3:34:23 PM
FILE: G:\TXC\Projects\City Georgetown\10767-00 Shell Road\03_CADD\01 Shts\06-DRNG\SHELL_DRNG_DA_07.dgn

DRAINAGE AREA CALCULATIONS

Drainage Area		Composite C-Value	Sub-Area 1 (Pavement)	Sub-Area 1 C-Value	Sub-Area 2 (Grass)	Sub-Area 2 C-Value	Sub-Area 3 (Residential)	Sub-Area 3 C-Value	TC Used	Intensity I2	Discharge Q2	Intensity I10	Discharge Q10	Intensity I25	Discharge Q25	Intensity I100	Discharge Q100
ID	ACRES		ACRES		ACRES		ACRES		MIN	IN/HR	CFS	IN/HR	CFS	IN/HR	CFS	IN/HR	CFS
SYSTEM C1																	
C1-01	0.34	0.93							5	6.48	2.06	8.64	2.75	9.84	3.14	11.88	3.79
C1-02	0.47	0.93							5	6.48	2.84	8.64	3.79	9.84	4.31	11.88	5.21
C1-03	0.35	0.93							5	6.48	2.13	8.64	2.84	9.84	3.23	11.88	3.90
C1-04	0.40	0.93							5	6.48	2.43	8.64	3.25	9.84	3.70	11.88	4.46
C1-05	0.24	0.93							5	6.48	1.44	8.64	1.92	9.84	2.18	11.88	2.64
C1-06	0.43	0.93							5	6.48	2.62	8.64	3.49	9.84	3.97	11.88	4.80
C1-07	0.42	0.93							5	6.48	2.56	8.64	3.41	9.84	3.89	11.88	4.69
C1-08	0.42	0.93							5	6.48	2.58	8.64	3.43	9.84	3.91	11.88	4.72
C1-09	0.26	0.93							5	6.48	1.57	8.64	2.10	9.84	2.39	11.88	2.89
C1-10	0.20	0.93							5	6.48	1.22	8.64	1.63	9.84	1.86	11.88	2.24
C1-11	0.38	0.93							5	6.48	2.28	8.64	3.04	9.84	3.46	11.88	4.17
C1-12	0.38	0.93							5	6.48	2.30	8.64	3.07	9.84	3.49	11.88	4.22
C1-13	0.46	0.93							5	6.48	2.77	8.64	3.70	9.84	4.21	11.88	5.09
C1-14	0.48	0.93							5	6.48	2.91	8.64	3.88	9.84	4.42	11.88	5.34
C1-15	0.46	0.93							5	6.48	2.80	8.64	3.74	9.84	4.25	11.88	5.14
C1-16	0.36	0.93							5	6.48	2.16	8.64	2.87	9.84	3.27	11.88	3.95
C1-17	0.25	0.93							5	6.48	1.53	8.64	2.05	9.84	2.33	11.88	2.81
C1-18	0.81	0.58	0.31	0.95	0.50	0.36			5	6.48	3.10	8.64	4.13	9.84	4.71	11.88	5.68
C1-18B	0.55	0.57	0.19	0.95	0.36	0.36			5	6.48	2.03	8.64	2.70	9.84	3.08	11.88	3.72
C1-19	0.59	0.70	0.34	0.95	0.25	0.36			5	6.48	2.71	8.64	3.62	9.84	4.12	11.88	4.97
C1-20	0.55	0.79	0.40	0.95	0.15	0.36			5	6.48	2.81	8.64	3.75	9.84	4.27	11.88	5.16
SYSTEM C2																	
C2-02	0.13	0.93							5	6.48	0.78	8.64	1.04	9.84	1.19	11.88	1.43
C2-03	0.17	0.93							5	6.48	1.04	8.64	1.39	9.84	1.58	11.88	1.91
C2-04	0.25	0.93							5	6.48	1.53	8.64	2.04	9.84	2.32	11.88	2.80
C2-05	0.30	0.93							5	6.48	1.80	8.64	2.40	9.84	2.73	11.88	3.29
C2-06	0.23	0.93							5	6.48	1.37	8.64	1.82	9.84	2.08	11.88	2.51
C2-07	0.45	0.93							5	6.48	2.72	8.64	3.63	9.84	4.13	11.88	4.99
C2-08	0.22	0.93							5	6.48	1.31	8.64	1.75	9.84	2.00	11.88	2.41
C2-09	0.24	0.93							5	6.48	1.44	8.64	1.92	9.84	2.19	11.88	2.64
C2-10	0.20	0.93							5	6.48	1.19	8.64	1.59	9.84	1.81	11.88	2.18
C2-11	0.36	0.93							5	6.48	2.21	8.64	2.95	9.84	3.36	11.88	4.05
C2-12	0.33	0.93							5	6.48	2.00	8.64	2.67	9.84	3.04	11.88	3.67
C2-14	0.24	0.93							5	6.48	1.47	8.64	1.96	9.84	2.23	11.88	2.69
C2-15	0.36	0.93							5	6.48	2.19	8.64	2.92	9.84	3.33	11.88	4.02
C2-16	0.19	0.93							5	6.48	1.12	8.64	1.50	9.84	1.71	11.88	2.06
C2-17	0.56	0.93							5	6.48	3.41	8.64	4.54	9.84	5.17	11.88	6.25
C2-18	0.51	0.93							5	6.48	3.12	8.64	4.17	9.84	4.74	11.88	5.73
C2-21	0.41	0.93							5	6.48	2.50	8.64	3.33	9.84	3.80	11.88	4.58
C2-22	0.21	0.93							5	6.48	1.30	8.64	1.74	9.84	1.98	11.88	2.39
C2-23	0.19	0.93							5	6.48	1.16	8.64	1.54	9.84	1.76	11.88	2.12
C2-23B	0.23	0.93							5	6.48	1.38	8.64	1.84	9.84	2.09	11.88	2.53
C2-24	0.32	0.93							5	6.48	1.92	8.64	2.56	9.84	2.91	11.88	3.52
C2-24B	0.28	0.93							5	6.48	1.72	8.64	2.29	9.84	2.61	11.88	3.15
C2-27	0.30	0.93							5	6.48	1.83	8.64	2.44	9.84	2.78	11.88	3.35
C2-28	0.25	0.93							5	6.48	1.54	8.64	2.05	9.84	2.34	11.88	2.82
C2-DITCH-03	6.02	0.48	0.02	0.95	3.06	0.36	2.94	0.60	46	2.50	7.34	3.66	10.77	4.37	12.85	5.45	16.03
SS_SUMMERGREEN	2.98	0.64	0.62	0.95	0.44	0.36	1.91	0.60	6	6.17	11.78	8.26	15.78	9.44	18.03	11.42	21.81
SS_WESTBURY	8.22	0.66	1.75	0.95	0.58	0.36	5.90	0.60	6	6.17	33.62	8.26	45.03	9.44	51.45	11.42	62.25
US_CULV_02	12.42	0.50							5	6.48	40.57	8.64	54.11	9.84	61.60	11.88	74.38

STATE OF TEXAS
ALEXIS WOFFENDEN
117162
LICENSED
PROFESSIONAL ENGINEER
2/14/2025

EST.1848 GEORGETOWN TEXAS

BGE, Inc.
101 West Louis Henna Blvd, Suite 400, Austin, TX 78728
Tel: 512-879-0400 • www.bgeinc.com
TBPE Registration No. F-1046

SHELL ROAD

HYDROLOGY DATA
STORM SEWER

SHEET 1 OF 1

SHEET NO. 154

DATE: 2/24/2025 3:34:24 PM
FILE: G:\TX\Projects\City_Georgetown\10767-00 Shell Road\03_CADD\01_Shts\06-DRNG\SHELL_DRNG_HYD_DATA_01.dgn

NODE CONFIGURATION

Node ID	Node Type	Library Item Name	Reference Chain	Station	Offset (ft)	Profile Type	Elevation (ft)	Longitudinal Slope (%)	Cross Slope (%)	Curb Length	Grate Length (ft)	Clogging Factor (%)
SYSTEM C1												
C1-01	Curb Inlet	PCU 3' Left	SHELL CL	11+00	-33.33	On Grade	857.12	1.11	3.00	9	4.96	0.00
C1-01A	Junction	PJB 4x4	SHELL CL	11+00	25.31		857.36					
C1-02	Curb Inlet	PCU 3' Left	SHELL CL	8+00	-41.31	On Grade	861.72	1.15	3.00	9	4.96	0.00
C1-02A	Junction	PJB 4x4	SHELL CL	8+00	27.14		861.67					
C1-03	Curb Inlet	PCU 3' Left	SHELL CL	4+19	-30.73	On Grade	868.13	2.03	3.00	9	4.96	0.00
C1-03A	Junction	PJB 4x4	SHELL CL	4+23	34.88		867.44					
C1-04	Curb Inlet	PCU 3' Right	SHELL CL	4+26	53.07	On Grade	866.84	2.20	3.00	9	4.96	0.00
C1-05	Curb Inlet	PCO 3' Right	SHELL CL	11+00	33.35	On Grade	857.12	1.11	3.00	10		
C1-06	Curb Inlet	PCO 3' Right	SHELL CL	8+00	35.14	On Grade	860.77	1.49	3.00	10		
C1-07	Curb Inlet	PCO 3' Left	SHELL CL	12+50	33.33	In Sag	856.48		3.00	10		
C1-08	Curb Inlet	PCO 3' Left	SHELL CL	15+00	33.33	On Grade	859.73	1.84	3.00	10		
C1-09	Curb Inlet	PCO 3' Left	SHELL CL	18+33	45.33	On Grade	866.18	1.93	3.00	10		
C1-10	Curb Inlet	PCU 3' Left	SHELL CL	20+00	31.33	On Grade	869.09	1.37	3.00	9	4.96	0.00
C1-11	Curb Inlet	PCO 3' Left	SHELL CL	21+94	33.33	On Grade	870.99	0.79	3.00	10		
C1-12	Curb Inlet	PCU 3' Left	SHELL CL	26+40	45.33	In Sag	871.78		3.00	9	4.96	50.00
C1-13	Curb Inlet	PCO 3' Left	SHELL CL	29+18	45.33	On Grade	872.65	0.96	3.00	10		
C1-14	Trench Drain	Trench Drain	SHELL CL	29+20	-32.07	On Grade	872.67	0.98	2.00		2.50	0.00
C1-14A	Junction	PJB 4x4	SHELL CL	29+19	5.22		873.86					
C1-15	Curb Inlet	PCU 3' Right	SHELL CL	12+50	-33.48	In Sag	856.48		3.00	9	4.96	50.00
C1-15A	Junction	PJB 4x4	SHELL CL	12+50	25.52		856.71					
C1-16	Curb Inlet	PCO 3' Right	SHELL CL	15+00	-33.33	On Grade	859.73	1.84	3.00	10		
C1-16A	Junction	PJB 4x4	SHELL CL	15+00	25.12		859.98					
C1-17	Curb Inlet	PCO 3' Right	SHELL CL	18+33	-33.33	On Grade	866.37	1.78	3.00	10		
C1-17A	Junction	PJB 4x4	SHELL CL	18+33	26.39		866.46					
C1-18	Curb Inlet	PCO 3' Right	SHELL CL	20+00	-45.33	On Grade	868.91	1.26	3.00	10		
C1-18A	Junction	PJB 4x4	SHELL CL	20+00	25.18		869.22					
C1-18B	Curb Inlet	PCO 3' Right	SHELL CL	20+49	-45.50	On Grade	869.52	1.15	3.00	10		
C1-19	Curb Inlet	PCO 3' Right	SHELL CL	21+95	-45.33	On Grade	870.82	0.79	3.00	10		
C1-19A	Junction	PJB 4x4	SHELL CL	21+94	26.41		871.09					
C1-19B	Junction	PJB 4x4	SHELL CL	20+49	25.69		869.77					
C1-20	Curb Inlet	PCO 3' Right	SHELL CL	26+40	-33.33	In Sag	872.14		3.00	10		
C1-20A	Junction	PJB 4x4	SHELL CL	26+40	13.97		872.72					
C1-JF01	Jellyfish Filter	Jellyfish Filter	SHELL CL	11+50	25.79		856.90					
US_CULV_01_PR	Headwall	FW-0 deg HW5.5	SHELL CL	12+16	-50.30		855.99					
SYSTEM C2												
C2-02	Curb Inlet	PCO 3' Right	SHELL CL	62+76	33.45	On Grade	844.43	1.78	3.00	10		
C2-03	Curb Inlet	PCO 3' Right	SHELL CL	61+26	33.33	On Grade	847.18	1.98	3.00	10		
C2-04	Curb Inlet	PCO 3' Right	SHELL CL	59+59	33.33	On Grade	850.72	2.16	3.00	10		
C2-05	Curb Inlet	PCO 3' Right	SHELL CL	55+60	33.34	On Grade	858.76	1.66	3.00	10		
C2-06	Curb Inlet	PCO 3' Right	SHELL CL	51+48	33.33	On Grade	866.43	2.02	3.00	10		
C2-07	Curb Inlet	PCU 3' Right	SHELL CL	49+75	45.58	On Grade	869.90	2.11	3.00	9	4.96	
C2-08	Curb Inlet	PCO 3' Right	SHELL CL	46+00	33.34	On Grade	875.78	0.88	3.00	10		
C2-09	Curb Inlet	PCO 3' Right	SHELL CL	44+06	33.33	On Grade	876.88	0.30	3.00	10		
C2-09A	Junction	PJB 4x4	SHELL CL	44+06	14.39		877.17					
C2-10	Curb Inlet	PCO 3' Right	SHELL CL	42+00	33.58	On Grade	877.51	0.30	3.00	10		
C2-11	Curb Inlet	PCO 3' Right	SHELL CL	40+30	33.33	On Grade	878.03	0.30	3.00	10		
C2-11A	Junction	PJB 4x4	SHELL CL	40+30	14.57		878.31					
C2-12	Curb Inlet	PCU 3' Right	SHELL CL	37+75	45.58	On Grade	878.62	0.30	3.00	9	4.96	
C2-14	Curb Inlet	PCO 3' Left	SHELL CL	32+57	33.33	On Grade	877.48	1.30	3.00	10		
C2-15	Trench Drain	Trench Drain	SHELL CL	62+77	-31.84	On Grade	844.06	1.78	2.00	0	2.50	
C2-15A	Junction	PJB 6x6 - 15'	SHELL CL	62+76	13.93		845.01					
C2-16	Curb Inlet	PCO 3' Left	SHELL CL	61+19	-33.33	On Grade	847.31	2.02	3.00	10		
C2-16A	Junction	PJB 4x4	SHELL CL	61+25	14.20		847.76					
C2-17	Curb Inlet	PCO 3' Left	SHELL CL	59+59	-38.47	On Grade	850.57	1.79	2.00	10		
C2-17A	Junction	PJB 4x4	SHELL CL	59+59	13.66		851.31					
C2-18	Curb Inlet	PCO 3' Both	SHELL CL	55+59	-33.33	On Grade	858.78	1.70	2.00	10		
C2-18A	Junction	PJB 4x4	SHELL CL	55+60	13.25		859.07					
C2-21	Curb Inlet	PCO 3' Left	SHELL CL	49+75	-33.82	On Grade	870.08	2.17	2.00	10		
C2-21A	Junction	PJB 4x4	SHELL CL	49+74	25.93		870.22					
C2-21B	Junction	PJB 4x4	SHELL CL	50+69	18.13		868.29					
C2-21C	Junction	wye connection	SHELL CL	50+49	-80.20		868.92					
C2-22	Curb Inlet	PCO 3' Left	SHELL CL	45+99	-33.34	On Grade	875.79	0.90	3.00	10		
C2-22A	Junction	PJB 4x4	SHELL CL	46+00	14.40		876.06					
C2-22B	Junction	PJB 4x4	SHELL CL	47+95	14.30		873.69					
C2-22C	Ditch Inlet	PAZD RG 4'x4'	SHELL CL	49+75	-61.31	In Sag	868.30	(N/A)	1.00	0		
C2-23	Curb Inlet	PCO 3' Left	SHELL CL	41+98	-33.50	On Grade	877.52	0.31	3.00	10		
C2-23A	Junction	PJB 4x4	SHELL CL	41+99	13.40		877.81					
C2-23B	Curb Inlet	PCO 3' Left	SHELL CL	44+06	-33.34	On Grade	876.88	0.31	2.00	10		
C2-24	Curb Inlet	PCO 3' Both	SHELL CL	37+75	-33.50	On Grade	878.8	0.31	2.00	14		
C2-24A	Junction	PJB 4x4	SHELL CL	37+74	25.68		878.92					
C2-24B	Curb Inlet	PCO 3' Left	SHELL CL	40+30	-33.33	On Grade	878.03	0.30	2.00	10		
C2-26	Junction	PJB 4x4	SHELL CL	32+57	25.70		877.71					
C2-26A	Junction	PRM 48	SHELL CL	33+85	23.48		878.73					
C2-27	Trench Drain	Trench Drain	SHELL CL	32+57	-32.00	On Grade	877.20	0.13	1.00	0	2.50	
C2-28	Trench Drain	Trench Drain	SHELL CL	51+48	-32.00	On Grade	866.39	4.52	2.00	0	2.50	
C2-28A	Junction	PJB 4x4	SHELL CL	51+48	13.72		866.73					
C2-JF01	Jellyfish Filter	Jellyfish Filter	SHELL CL	61+50	14.14		847.71					
DS_CULV_02	Headwall	FW-S deg HW8	SHELL CL	64+55	-74.92		836.53					
JB-EX-SS-01	Junction	JB (5'x5')	SHELL CL	50+40	-83.80		869.29					
US_CULV_02	Headwall	FW-S deg HW8	SHELL CL	63+23	36.88		838.61					
WYE-C02	Junction	wye connection	SHELL CL	63+50	14.38		838.53					

STATE OF TEXAS
ALEXIS WOFFENDEN
117162
LICENSED
PROFESSIONAL ENGINEER
2/14/2025

EST. 1848 GEORGETOWN TEXAS

BGE, Inc.
101 West Louis Henna Blvd, Suite 400, Austin, TX 78728
Tel: 512-879-0400 • www.bgeinc.com
TBPE Registration No. F-1046

SHELL ROAD

HYDRAULIC DATA
NODE
CONFIGURATION

SHEET 1 OF 1

SHEET NO. 155

DATE: 2/24/2025 3:34:25 PM
FILE: G:\TXC\Projects\City Georgetown\10767-00 Shell Road\03 CADD\01 Shts\06-DRNG\SHELL_DRNG_HYD_DATA_04.dgn

INLET HYDRAULICS - 25 YEAR

Inlet ID	Type	Profile Type	Q Intercepted (cfs)	Q Passed (cfs)	By Pass Node ID	Q Pass Through Intersection	Computed Ponded Width (ft)	Computed Ponded Depth (ft)	Allowable Ponded Depth (ft)	Headloss (ft)	Spread Manning's N Value	Notes
SYSTEM C1												
C1-01	Curb	On Grade	3.25	0.10	C1-15		6.72	0.41	0.50	0.00	0.013	
C1-02	Curb	On Grade	4.20	0.21	C1-01		7.67	0.44	0.50	0.00	0.013	
C1-03	Curb	On Grade	3.13	0.10	C1-02	Yes	5.56	0.37	0.50	0.00	0.013	
C1-04	Curb	On Grade	3.54	0.15	C1-06	Yes	5.87	0.38	0.50	0.00	0.013	
C1-05	Curb	On Grade	2.65	0.90	C1-07		7.46	0.43	0.50	0.00	0.015	
C1-06	Curb	On Grade	2.76	1.37	C1-05		7.47	0.43	0.50	0.00	0.015	
C1-07	Curb	In Sag	6.45	0.00			7.36	0.49	0.50	0.00	0.013	
C1-08	Curb	On Grade	2.77	1.67	C1-07		7.35	0.43	0.50	0.00	0.015	
C1-09	Curb	On Grade	1.91	0.52	C1-08		5.17	0.36	0.50	0.00	0.015	
C1-10	Curb	On Grade	2.52	0.04	C1-09	Yes	5.44	0.37	0.50	0.00	0.013	
C1-11	Curb	On Grade	2.76	0.70	C1-10		8.01	0.45	0.50	0.00	0.015	
C1-12	Curb	In Sag	4.69	0.00			2.49	0.49	0.50	0.00	0.013	
C1-13	Curb	On Grade	3.02	1.19	C1-12	Yes	8.40	0.46	0.50	0.00	0.015	
C1-14	Trench Drain	On Grade	0.91	3.51	C1-20	Yes	11.69	0.23	0.50	0.00	0.013	
C1-15	Curb	In Sag	6.71	0.00			6.93	0.47	0.50	0.00	0.013	
C1-16	Curb	On Grade	3.12	2.36	C1-15		8.16	0.45	0.50	0.00	0.015	
C1-17	Curb	On Grade	3.08	2.21	C1-16		8.09	0.45	0.50	0.00	0.015	
C1-18	Curb	On Grade	2.97	2.96	C1-17	Yes	10.20	0.31	0.50	0.00	0.015	
C1-18B	Curb	On Grade	2.89	1.23	C1-18		7.96	0.44	0.50	0.00	0.015	
C1-19	Curb	On Grade	3.08	1.04	C1-18B		8.71	0.47	0.50	0.00	0.015	
C1-20	Curb	In Sag	7.78	0.00			6.00	0.56	0.50	0.00	0.013	
SYSTEM C2												
C2-02	Curb	On Grade	1.41	0.06			1.94	0.32	0.50	0.00	0.015	
C2-03	Curb	On Grade	1.90	0.29	C2-02		3.12	0.37	0.50	0.00	0.015	
C2-04	Curb	On Grade	2.28	0.61	C2-03		4.12	0.40	0.50	0.00	0.015	
C2-05	Curb	On Grade	2.47	0.57	C2-04		4.88	0.42	0.50	0.00	0.015	
C2-06	Curb	On Grade	1.93	0.31	C2-05		3.17	0.37	0.50	0.00	0.015	
C2-07	Curb	On Grade	4.01	0.16	C2-06	Yes	5.11	0.43	0.50	0.00	0.013	
C2-08	Curb	On Grade	1.95	0.04	C2-07		4.45	0.41	0.50	0.00	0.015	
C2-09	Curb	On Grade	2.19	0.00	C2-08		7.11	0.49	0.50	0.00	0.015	
C2-10	Curb	On Grade	2.03	0.00	C2-09		6.82	0.48	0.50	0.00	0.015	
C2-11	Curb	On Grade	3.19	0.22	C2-10		9.75	0.48	0.50	0.00	0.015	
C2-12	Curb	On Grade	3.17	0.06	C2-11	Yes	9.71	0.45	0.50	0.00	0.015	
C2-14	Curb	On Grade	2.05	0.18	C1-13	Yes	4.09	0.40	0.50	0.00	0.015	
C2-15	Trench Drain	On Grade	1.11	6.21			12.62	0.25	0.50	0.00	0.013	
C2-16	Curb	On Grade	3.45	4.00	C2-15	Yes	8.61	0.42	0.50	0.00	0.013	
C2-17	Curb	On Grade	3.43	5.74	C2-16		12.58	0.47	0.50	0.00	0.013	
C2-18	Curb	On Grade	4.15	4.00	C2-17	Yes	12.05	0.46	0.50	0.00	0.013	
C2-21	Curb	On Grade	2.17	1.78	C2-28	Yes	7.85	0.38	0.50	0.10	0.013	
C2-22	Curb	On Grade	1.86	0.15	C2-21		5.83	0.34	0.50	0.00	0.015	
C2-22C	Ditch	In Sag	21.20	0.00			64.37	0.64	0.50	0.00	0.013	
C2-23	Curb	On Grade	2.40	0.04	C2-22		8.49	0.42	0.50	0.00	0.015	
C2-23B	Curb	On Grade	1.97	0.12			9.45	0.41	0.50	0.00	0.013	
C2-24	Curb	On Grade	4.06	0.68	C2-23		13.87	0.50	0.50	0.00	0.013	
C2-24B	Curb	On Grade	2.31	0.30			10.58	0.43	0.50	0.00	0.013	
C2-27	Trench Drain	On Grade	0.95	1.83	C1-14	Yes	22.14	0.22	0.50	0.00	0.013	
C2-28	Trench Drain	On Grade	0.72	3.40	C2-18		8.55	0.17	0.50	0.00	0.013	

STATE OF TEXAS
ALEXIS WOFFENDEN
117162
LICENSED
PROFESSIONAL ENGINEER
2/14/2025

EST. 1848 GEORGETOWN TEXAS

BGE, Inc.
101 West Louis Henna Blvd, Suite 400, Austin, TX 78728
Tel: 512-879-0400 • www.bgeinc.com
TBPE Registration No. F-1046

SHELL ROAD

HYDRAULIC DATA
INLET
HYDRAULICS

SHEET 1 OF 2

SHEET NO.
156

DATE: 2/24/2025 3:34:26 PM
FILE: G:\TXC\Projects\City Georgetown\10767-00 Shell Road\03 CADD\01 Shts\06-DRNG\SHELL_DRNG_HYD_DATA_05.dgn

INLET HYDRAULICS - 100 YEAR

Inlet ID	Type	Profile Type	Q Intercepted (cfs)	Q Passed (cfs)	By Pass Node ID	Computed Ponded Width (ft)	Computed Ponded Depth (ft)	Allowable Ponded Depth (ft)	Headloss (ft)	Spread Manning's N Value	Notes
SYSTEM C1											
C1-01	Curb	On Grade	3.95	0.17	C1-15	7.48	0.43	0.50	0.00	0.013	
C1-02	Curb	On Grade	5.05	0.33	C1-01	8.45	0.46	0.50	0.00	0.013	
C1-03	Curb	On Grade	3.72	0.18	C1-02	6.20	0.39	0.50	0.00	0.013	
C1-04	Curb	On Grade	4.20	0.26	C1-06	6.53	0.40	0.50	0.00	0.013	
C1-05	Curb	On Grade	3.10	1.49	C1-07	8.46	0.46	0.50	0.00	0.015	
C1-06	Curb	On Grade	3.11	1.95	C1-05	8.26	0.45	0.50	0.00	0.015	
C1-07	Curb	In Sag	8.58	0.00		8.07	0.53	0.50	0.00	0.013	
C1-08	Curb	On Grade	3.14	2.40	C1-07	8.20	0.45	0.50	0.00	0.015	
C1-09	Curb	On Grade	2.17	0.82	C1-08	5.86	0.38	0.50	0.00	0.015	
C1-10	Curb	On Grade	3.21	0.10	C1-09	6.31	0.39	0.50	0.00	0.013	
C1-11	Curb	On Grade	3.11	1.07	C1-10	8.76	0.47	0.50	0.00	0.015	
C1-12	Curb	In Sag	5.92	0.00		2.74	0.53	0.50	0.00	0.013	
C1-13	Curb	On Grade	3.38	1.70	C1-12	9.18	0.48	0.50	0.00	0.015	
C1-14	Trench Drain	On Grade	1.02	4.31	C1-20	12.54	0.25	0.50	0.00	0.013	
C1-15	Curb	In Sag	8.96	0.00		7.88	0.53	0.50	0.00	0.013	
C1-16	Curb	On Grade	3.67	3.65	C1-15	9.34	0.49	0.50	0.00	0.015	
C1-17	Curb	On Grade	3.59	3.37	C1-16	9.20	0.48	0.50	0.00	0.015	
C1-18	Curb	On Grade	3.45	4.14	C1-17	11.18	0.34	0.50	0.00	0.015	
C1-18B	Curb	On Grade	3.33	1.90	C1-18	8.92	0.47	0.50	0.00	0.015	
C1-19	Curb	On Grade	3.46	1.52	C1-18B	9.50	0.49	0.50	0.00	0.015	
C1-20	Curb	In Sag	9.47	0.00		6.38	0.59	0.50	0.00	0.013	
SYSTEM C2											
C2-02	Curb	On Grade	1.84	0.21		3.05	0.37	0.50	0.00	0.015	
C2-03	Curb	On Grade	2.36	0.61	C2-02	4.40	0.41	0.50	0.00	0.015	
C2-04	Curb	On Grade	2.71	1.06	C2-03	5.23	0.43	0.50	0.00	0.015	
C2-05	Curb	On Grade	2.87	0.96	C2-04	5.86	0.45	0.50	0.00	0.015	
C2-06	Curb	On Grade	2.25	0.54	C2-05	4.11	0.40	0.50	0.00	0.015	
C2-07	Curb	On Grade	4.84	0.29	C2-06	5.98	0.45	0.50	0.00	0.013	
C2-08	Curb	On Grade	2.28	0.13	C2-07	5.25	0.43	0.50	0.00	0.015	
C2-09	Curb	On Grade	2.64	0.00	C2-08	7.96	0.51	0.50	0.00	0.015	
C2-10	Curb	On Grade	2.65	0.00	C2-09	8.01	0.51	0.50	0.00	0.015	
C2-11	Curb	On Grade	3.68	0.47	C2-10	10.66	0.51	0.50	0.00	0.015	
C2-12	Curb	On Grade	3.91	0.10	C2-11	10.70	0.48	0.50	0.00	0.015	
C2-14	Curb	On Grade	2.36	0.34	C1-13	4.89	0.42	0.50	0.00	0.015	
C2-15	Trench Drain	On Grade	1.35	8.59		14.15	0.28	0.50	0.00	0.013	
C2-16	Curb	On Grade	4.04	5.92	C2-15	9.84	0.46	0.50	0.00	0.013	
C2-17	Curb	On Grade	3.88	7.90	C2-16	14.05	0.50	0.50	0.00	0.013	
C2-18	Curb	On Grade	4.69	5.53	C2-17	13.34	0.49	0.50	0.00	0.013	
C2-21	Curb	On Grade	2.43	2.52	C2-28	8.89	0.40	0.50	0.15	0.013	
C2-22	Curb	On Grade	2.25	0.37	C2-21	6.73	0.36	0.50	0.00	0.015	
C2-22C	Ditch	In Sag	26.45	0.00		69.47	0.69	0.50	0.00	0.013	
C2-23	Curb	On Grade	3.04	0.23	C2-22	9.71	0.45	0.50	0.00	0.015	
C2-23B	Curb	On Grade	2.26	0.27		10.38	0.43	0.50	0.00	0.013	
C2-24	Curb	On Grade	4.65	1.15	C2-23	15.12	0.52	0.50	0.00	0.013	
C2-24B	Curb	On Grade	2.62	0.53		11.57	0.45	0.50	0.00	0.013	
C2-27	Trench Drain	On Grade	1.08	2.27	C1-14	23.77	0.24	0.50	0.00	0.013	
C2-28	Trench Drain	On Grade	0.85	4.49	C2-18	9.42	0.19	0.50	0.00	0.013	

CK:
DW:
CK:
DW:

DATE: 2/24/2025 3:34:27 PM
FILE: G:\TX\Projects\City Georgetown\10767-00 Shell Road\03 CADD\01 Shts\06-DRNG\SHELL_DRNG_HYD_DATA_06.dgn

STATE OF TEXAS
ALEXIS WOFFENDEN
117162
LICENSED
PROFESSIONAL ENGINEER
2/14/2025

EST.1848
GEORGETOWN
TEXAS

BGE, Inc.
101 West Louis Henna Blvd, Suite 400, Austin, TX 78728
Tel: 512-879-0400 • www.bgeinc.com
TBPE Registration No. F-1046

SHELL ROAD

HYDRAULIC DATA
INLET
HYDRAULICS

SHEET 2 OF 2

SHEET NO.
157

LINK CONFIGURATION

Link ID	Upstream Node	Downstream Node	Shape	Material	Number of Barrels	Construction Actual Length (ft)	Unified Hydraulic Length (ft)	Manning's N Value	Slope (%)	Size	Invert Upstream (ft)	Invert Downstream (ft)	Beginning Pipe Cover (ft)	End Pipe Cover (ft)
SYSTEM C1														
C1-01	C1-01	C1-01A	Circle	Concrete	1	54.89	58.39	0.013	0.26	18"	851.50	851.36	3.91	4.29
C1-01A	C1-01A	C1-JF01	Circle	Concrete	1	46.00	50.00	0.013	1.00	24"	851.36	850.90	3.75	3.75
C1-01B	C1-JF01	OUT_CULV_01_EX	Circle	Concrete	1	42.18	44.18	0.013	0.92	24"	850.90	850.51	3.75	2.24
C1-02	C1-02	C1-02A	Circle	Concrete	1	64.71	68.21	0.013	0.51	18"	855.72	855.39	4.29	4.57
C1-02A	C1-02A	C1-01A	Circle	Concrete	1	299.11	303.09	0.013	1.27	24"	855.16	851.36	4.26	3.75
C1-03	C1-03	C1-03A	Circle	Concrete	1	62.00	65.48	0.013	2.37	18"	862.13	860.66	4.29	5.07
C1-03A	C1-03A	C1-02A	Circle	Concrete	1	378.76	382.76	0.013	1.05	18"	860.66	856.67	5.07	3.29
C1-04	C1-04	C1-03A	Circle	Concrete	1	14.72	18.17	0.013	1.24	18"	860.84	860.66	4.29	5.07
C1-05	C1-05	C1-01A	Circle	Concrete	1	6.04	10.04	0.013	10.59	18"	852.00	851.36	3.41	4.29
C1-06	C1-06	C1-02A	Circle	Concrete	1	6.00	10.00	0.013	0.52	18"	855.29	855.26	3.77	4.70
C1-07	C1-07	C1-15A	Circle	Concrete	1	4.81	9.81	0.013	18.70	24"	851.00	850.10	3.23	4.36
C1-08	C1-08	C1-16A	Circle	Concrete	1	6.21	10.21	0.013	11.78	18"	853.73	853.00	4.29	5.27
C1-10	C1-10	C1-18A	Circle	Concrete	1	2.41	5.91	0.013	94.40	18"	863.09	860.82	4.29	6.69
C1-11	C1-11	C1-19A	Circle	Concrete	1	4.92	8.92	0.013	71.19	18"	864.99	861.49	4.29	7.90
C1-12	C1-12	C1-20A	Circle	Concrete	1	27.61	31.11	0.013	0.51	18"	862.32	862.18	7.75	8.83
C1-13	C1-13	C1-14A	Circle	Concrete	1	38.13	42.13	0.013	0.89	18"	866.64	866.30	4.30	5.85
C1-14	C1-14	C1-14A	Circle	Concrete	1	35.30	37.30	0.013	1.05	18"	866.67	866.30	4.29	5.85
C1-14A	C1-14A	C1-20A	Circle	Concrete	1	275.52	279.52	0.013	1.50	18"	866.30	862.18	5.85	8.83
C1-15	C1-15	C1-15A	Circle	Concrete	1	54.25	58.75	0.013	0.83	24"	850.55	850.10	3.68	4.36
C1-15A	C1-15A	OUT_CULV_01_EX	Circle	Concrete	1	52.83	55.83	0.013	1.12	36"	850.10	849.51	3.28	2.16
C1-16	C1-16	C1-16A	Circle	Concrete	1	56.45	60.45	0.013	1.30	18"	853.73	853.00	4.29	5.27
C1-16A	C1-16A	C1-15A	Circle	Concrete	1	245.00	250.00	0.013	1.18	30"	853.00	850.10	4.19	3.82
C1-17	C1-17	C1-17A	Circle	Concrete	1	57.72	61.72	0.013	2.36	18"	860.36	859.00	4.30	5.75
C1-17A	C1-17A	C1-16A	Circle	Concrete	1	323.15	327.14	0.013	1.86	30"	859.00	853.00	4.67	4.19
C1-18	C1-18	C1-18A	Circle	Concrete	1	68.51	72.51	0.013	3.05	18"	862.91	860.82	4.29	6.69
C1-18A	C1-18A	C1-17A	Circle	Concrete	1	158.98	162.96	0.013	1.14	30"	860.82	859.00	5.61	4.67
C1-18B	C1-18B	C1-19B	Circle	Concrete	1	69.19	73.19	0.013	0.74	18"	861.50	860.99	6.31	7.07
C1-19	C1-19	C1-19A	Circle	Concrete	1	69.75	73.75	0.013	4.78	18"	864.82	861.49	4.29	7.90
C1-19A	C1-19A	C1-19B	Circle	Concrete	1	137.00	141.00	0.013	0.36	30"	861.49	860.99	6.81	5.99
C1-19B	C1-19B	C1-18A	Circle	Concrete	1	44.10	48.10	0.013	0.39	30"	860.99	860.82	5.99	5.61
C1-20	C1-20	C1-20A	Circle	Concrete	1	45.31	49.31	0.013	8.72	18"	866.13	862.18	4.30	8.83
C1-20A	C1-20A	C1-19A	Circle	Concrete	1	437.53	441.53	0.013	0.16	30"	862.18	861.49	7.74	6.81
C1-21	C1-09	C1-17A	Circle	Concrete	1	16.95	20.95	0.013	6.91	18"	860.17	859.00	4.30	5.75
SYSTEM C2														
C2-02	C2-02	C2-15A	Circle	Concrete	1	17.02	21.52	0.013	0.48	18"	839.39	839.31	3.33	3.99
C2-03	C2-03	C2-16A	Circle	Concrete	1	17.63	21.13	0.013	2.33	18"	841.50	841.09	3.97	4.97
C2-04	C2-04	C2-17A	Circle	Concrete	1	18.18	21.68	0.013	2.04	18"	845.00	844.63	4.01	4.97
C2-05	C2-05	C2-18A	Circle	Concrete	1	18.59	22.09	0.013	1.80	18"	853.00	852.67	4.05	4.69
C2-06	C2-06	C2-28A	Circle	Concrete	1	18.12	21.62	0.013	3.66	18"	861.00	860.34	3.72	4.68
C2-07	C2-07	C2-21A	Circle	Concrete	1	17.71	19.46	0.013	0.51	18"	863.96	863.87	4.23	4.64
C2-08	C2-08	C2-22A	Circle	Concrete	1	16.94	20.94	0.013	0.50	18"	869.79	869.71	4.28	4.65
C2-09	C2-09	C2-09A	Circle	Concrete	1	17.45	20.95	0.013	0.50	18"	870.88	870.79	4.30	4.67
C2-09A	C2-09A	C2-22A	Circle	Concrete	1	190.47	194.47	0.013	0.35	30"	864.86	864.20	9.52	9.07
C2-10	C2-10	C2-23A	Circle	Concrete	1	18.71	22.20	0.013	0.50	18"	871.51	871.42	4.29	4.69
C2-11	C2-11	C2-11A	Circle	Concrete	1	17.26	20.76	0.013	0.50	18"	872.03	871.94	4.29	4.66
C2-11A	C2-11A	C2-23A	Circle	Concrete	1	165.82	169.82	0.013	0.15	30"	865.75	865.50	9.77	9.52
C2-12	C2-12	C2-24A	Circle	Concrete	1	16.19	19.68	0.013	0.57	18"	872.62	872.53	4.29	4.68
C2-14	C2-14	C2-26	Circle	Concrete	1	6.14	9.64	0.013	0.50	18"	871.49	871.46	4.28	4.54
C2-15	C2-15	C2-15A	Circle	Concrete	1	42.77	45.77	0.013	0.43	18"	839.49	839.31	2.86	3.99
C2-15A	C2-15A	WYE-C02	Box	Concrete	1	70.68	73.68	0.013	1.14	4x2	839.31	838.51	3.28	3.00
C2-16	C2-16	C2-16A	Circle	Concrete	1	46.43	49.90	0.013	0.52	18"	841.31	841.07	4.30	4.99
C2-16A	C2-16A	C2-JF01	Circle	Concrete	1	20.72	24.72	0.013	1.12	36"	841.00	840.77	3.43	3.60
C2-16B	C2-JF01	C2-15A	Circle	Concrete	1	120.94	125.94	0.013	1.17	36"	840.77	839.36	3.60	2.32
C2-17	C2-17	C2-17A	Circle	Concrete	1	50.63	54.12	0.013	0.51	18"	844.57	844.31	4.29	5.29
C2-17A	C2-17A	C2-16A	Circle	Concrete	1	162.00	166.00	0.013	1.98	36"	844.20	841.00	3.78	3.43
C2-18	C2-18	C2-18A	Circle	Concrete	1	44.60	48.60	0.013	1.64	18"	853.50	852.77	3.57	4.59
C2-18A	C2-18A	C2-17A	Circle	Concrete	1	395.73	399.73	0.013	2.12	36"	852.57	844.20	3.16	3.78
C2-21	C2-21	C2-21A	Circle	Concrete	1	57.75	61.75	0.013	1.09	24"	864.50	863.87	3.33	4.10
C2-21A	C2-21A	C2-21B	Circle	Concrete	1	92.57	96.56	0.013	1.74	36"	862.34	860.73	4.55	4.23
C2-21B	C2-21B	C2-28A	Circle	Concrete	1	75.10	79.10	0.013	1.69	36"	860.73	859.46	4.23	3.94
C2-21C	C2-21C	C2-21B	Circle	Concrete	1	98.33	100.32	0.013	2.46	30"	863.42	861.00	2.71	4.50
C2-22	C2-22	C2-22A	Circle	Concrete	1	46.25	49.75	0.013	0.49	18"	869.79	869.56	4.29	4.80
C2-22A	C2-22A	C2-22B	Circle	Concrete	1	191.96	195.96	0.013	0.51	30"	864.20	863.23	9.07	7.67
C2-22B	C2-22B	C2-21A	Circle	Concrete	1	176.23	180.22	0.013	0.22	36"	862.73	862.34	7.63	4.55
C2-22C	C2-22C	C2-21	Circle	Concrete	1	21.99	25.49	0.013	1.36	24"	864.80	864.50	1.25	3.33
C2-23	C2-23	C2-23A	Circle	Concrete	1	45.42	48.92	0.013	0.50	18"	871.52	871.29	4.29	4.81
C2-23A	C2-23A	C2-09A	Circle	Concrete	1	204.47	208.47	0.013	0.31	30"	865.50	864.86	9.52	9.52
C2-23B	C2-23B	C2-09A	Circle	Concrete	1	46.23	49.73	0.013	2.85	18"	872.11	870.79	3.07	4.67
C2-24	C2-24	C2-24A	Circle	Concrete	1	57.68	61.18	0.013	0.50	18"	872.80	872.51	4.29	4.70
C2-24A	C2-24A	C2-11A	Circle	Concrete	1	253.99	257.98	0.013	0.30	24"	867.00	866.25	9.67	9.81
C2-24B	C2-24B	C2-11A	Circle	Concrete	1	46.40	49.90	0.013	2.86	18"	873.27	871.94	3.05	4.66
C2-26	C2-26	C2-26A	Circle	Concrete	1	123.85	127.85	0.013	0.86	18"	871.36	870.29	4.64	6.73
C2-26A	C2-26A	C2-24A	Circle	Concrete	1	387.06	391.05	0.013	0.72	18"	870.29	867.50	6.73	9.71
C2-27	C2-27	C2-26	Circle	Concrete	1	55.70	57.70	0.013	2.06	18"	873.00	871.85	2.49	4.15
C2-28	C2-28	C2-28A	Circle	Concrete	1	43.72	45.72	0.013	0.99	18"	860.39	859.96	4.29	5.07
C2-28A	C2-28A	C2-18A	Circle	Concrete	1	409.72	413.72	0.013	1.68	36"	859.46	852.57	3.94	3.16
CULV_02A	US_CULV_02	WYE-C02	Box	Concrete	2	34.77	34.77	0.013	1.21	6x3	838.60	838.18		1.50
CULV_02B	WYE-C02	DS_CULV_02	Box	Concrete	2	138.04	138.04	0.013	1.20	6x3	838.18	836.53	1.50	
JB-EX-SS-01	JB-EX-SS-01	C2-21C	Circle	Concrete	1	7.17	9.22	0.013	5.16	30"	863.79	863.42	2.71	2.71

CAC
DW
CAC
DW

DATE: 3/12/2025 1:17:02 PM
FILE: G:\TXC\Projects\City Georgetown\10767-00 Shell Road\03_CADD\01 Shts\06-DRNG\SHELL_DRNG_HYD_DATA_07.dgn

STATE OF TEXAS
ALEXIS WOFFENDEN
117162
LICENSED
PROFESSIONAL ENGINEER

3/12/2025

EST.1848
GEORGETOWN
TEXAS

BGE, Inc.
101 West Louis Henna Blvd, Suite 400, Austin, TX 78728
Tel: 512-879-0400 • www.bgeinc.com
TBPE Registration No. F-1046

SHELL ROAD

HYDRAULIC DATA
LINK
CONFIGURATION

LINK HYDRAULICS - 25 YEAR

Link ID	Link Discharge (cfs)	Link Capacity (cfs)	Uniform Depth (ft)	Uniform Velocity (ft/s)	Critical Depth (ft)	Critical Velocity (ft/s)	Friction Slope (%)	Actual Velocity Upstream (ft/s)	Actual Velocity Downstream (ft/s)	Actual Depth Upstream (ft)	Actual Depth Downstream (ft)	HGL Upstream (ft)	HGL Downstream (ft)
SYSTEM C1													
C1-01	3.25	5.14	0.86	1.84	0.69	4.70	0.10	1.84	1.84	2.80	2.89	854.30	854.25
C1-01A	18.40	21.70	1.41	5.86	1.54	7.05	0.66	5.86	5.86	2.82	2.95	854.18	853.85
C1-01B	18.31	21.25	1.43	5.83	1.54	7.04	0.66	5.83	5.83	2.87	2.97	853.77	853.48
C1-02	4.20	7.33	0.81	4.29	0.79	5.03	0.25	3.75	2.85	0.91	1.16	856.63	856.55
C1-02A	13.11	25.33	1.02	8.13	1.30	6.47	0.82	6.05	4.17	1.30	2.93	856.46	854.29
C1-03	3.13	15.74	0.45	6.94	0.67	4.65	1.86	4.07	2.24	0.67	1.10	862.81	861.77
C1-03A	6.64	10.73	0.85	6.39	1.00	5.66	1.03	5.32	6.39	1.00	0.85	861.66	857.52
C1-04	3.54	10.53	0.60	5.37	0.72	4.81	0.18	3.13	2.50	0.92	1.12	861.76	861.78
C1-05	2.65	26.51	0.32	1.50	0.62	4.46	0.06	1.50	1.50	2.24	2.87	854.24	854.23
C1-06	2.76	5.86	0.72	3.27	0.63	4.50	0.07	1.77	1.74	1.24	1.26	856.53	856.52
C1-07	6.45	68.51	0.41	2.05	0.90	5.38	0.08	2.05	2.05	3.45	4.34	854.45	854.44
C1-08	2.77	28.11	0.32	1.57	0.63	4.51	0.07	1.57	1.57	2.78	3.50	856.51	856.50
C1-10	2.52	65.14	0.20	17.80	0.60	4.40	21.04	3.81	1.43	0.60	1.82	863.69	862.64
C1-11	2.76	65.83	0.21	18.39	0.63	4.50	27.97	3.91	1.56	0.63	1.84	865.62	863.33
C1-12	4.69	7.05	0.89	2.65	0.83	5.17	0.20	2.65	2.65	1.91	1.99	864.23	864.17
C1-13	3.02	9.44	0.58	4.75	0.66	4.61	0.62	4.03	2.86	0.66	0.86	867.30	867.17
C1-14	0.91	10.46	0.30	3.63	0.35	3.38	0.13	2.84	0.97	0.35	0.79	867.03	867.09
C1-14A	3.90	12.76	0.57	6.35	0.76	4.93	1.11	4.37	2.21	0.76	1.99	867.06	864.17
C1-15	6.71	19.80	0.80	2.14	0.92	5.44	0.09	2.14	2.14	3.95	4.35	854.50	854.45
C1-15A	46.99	68.56	1.82	6.65	2.23	8.48	0.50	6.65	6.65	4.30	4.61	854.12	854.40
C1-16	3.12	11.56	0.53	1.77	0.67	4.65	0.09	1.77	1.77	2.83	3.51	856.56	856.51
C1-16A	36.27	44.17	1.72	7.39	2.04	8.11	0.78	7.39	7.39	3.46	4.40	856.46	854.50
C1-17	3.08	15.60	0.45	6.87	0.67	4.64	0.45	4.05	1.74	0.67	1.96	861.03	860.96
C1-17A	31.55	55.55	1.35	11.68	1.91	7.85	1.42	7.82	6.43	1.91	3.59	860.91	856.59
C1-18	2.97	17.84	0.41	7.48	0.66	4.59	1.55	4.01	1.68	0.66	1.83	863.57	862.65
C1-18A	27.37	43.35	1.44	9.34	1.78	7.58	1.07	7.30	6.27	1.78	2.08	862.60	861.08
C1-18B	2.89	8.78	0.59	4.45	0.65	4.56	0.08	1.63	1.63	1.49	1.95	862.99	862.94
C1-19	3.08	22.33	0.38	8.87	0.67	4.64	3.21	4.05	1.74	0.67	1.84	865.49	863.33
C1-19A	20.23	24.38	1.74	5.55	1.53	7.01	0.29	5.31	4.89	1.81	1.96	863.30	862.95
C1-19B	22.56	24.38	1.90	5.64	1.62	7.21	0.34	5.58	5.55	1.92	1.93	862.91	862.75
C1-20	7.78	29.74	0.52	14.17	1.08	5.90	6.54	5.71	4.40	1.08	2.02	867.21	864.20
C1-20A	15.89	16.24	2.00	3.77	1.35	6.58	0.17	3.86	4.04	1.95	1.87	864.13	863.35
C1-21	1.91	24.84	0.28	8.31	0.52	4.09	0.05	2.28	1.08	0.72	1.94	860.89	860.94
SYSTEM C2													
C2-02	1.41	6.50	0.48	0.80	0.45	3.79	0.02	0.80	0.80	4.25	4.33	843.64	843.64
C2-03	1.90	14.66	0.37	1.08	0.52	4.09	0.03	1.08	1.08	3.86	4.26	845.35	845.36
C2-04	2.28	13.75	0.41	1.29	0.57	4.29	0.05	1.29	1.29	2.03	2.39	847.02	847.03
C2-05	2.47	12.93	0.44	1.40	0.59	4.37	0.06	1.40	1.40	2.18	2.50	855.17	855.18
C2-06	1.93	18.39	0.33	1.09	0.52	4.10	0.03	1.09	1.09	1.95	2.61	862.95	862.96
C2-07	4.01	7.16	0.80	4.17	0.77	4.97	0.33	3.80	3.52	0.86	0.92	864.80	864.83
C2-08	1.95	6.68	0.56	3.28	0.53	4.12	0.42	3.28	3.53	0.56	0.53	870.23	870.35
C2-09	2.19	6.78	0.59	3.42	0.56	4.24	0.43	3.42	3.65	0.59	0.56	871.35	871.47
C2-09A	22.24	23.86	1.91	5.52	1.60	7.19	0.34	5.52	5.51	1.91	1.92	866.12	866.77
C2-10	2.03	6.82	0.56	3.37	0.54	4.16	0.43	3.37	3.57	0.56	0.54	871.95	872.07
C2-11	3.19	6.77	0.72	3.78	0.68	4.68	0.44	3.79	4.09	0.72	0.68	872.62	872.75
C2-11A	15.08	15.74	1.96	3.65	1.31	6.49	0.16	3.77	3.84	1.90	1.86	867.36	867.65
C2-12	3.17	7.18	0.70	3.94	0.68	4.67	0.47	3.94	4.09	0.70	0.68	873.21	873.32
C2-14	2.05	5.93	0.61	3.05	0.54	4.17	0.28	2.94	2.90	0.62	0.63	872.09	872.11
C2-15	1.11	6.65	0.42	0.63	0.39	3.56	0.01	0.63	0.63	4.15	4.33	843.64	843.64
C2-15A	68.85	72.87	1.57	10.96	2.00	8.02	0.83	8.61	10.46	2.00	1.65	840.16	841.31
C2-16	3.45	7.28	0.73	1.95	0.71	4.77	0.11	1.95	1.95	4.14	4.32	845.39	845.45
C2-16A	67.97	64.57	2.63	9.62	2.63	9.20	1.04	9.62	9.62	4.32	4.30	845.07	845.32
C2-16B	67.94	70.57	2.36	9.61	2.63	9.20	1.04	9.61	9.61	4.16	4.27	843.63	844.93
C2-17	3.43	7.28	0.72	1.94	0.71	4.77	0.11	1.94	1.94	2.52	2.73	847.04	847.09
C2-17A	65.79	92.60	1.87	14.22	2.60	9.14	0.97	9.59	9.31	2.79	4.47	845.48	847.00
C2-18	4.15	12.88	0.59	2.35	0.78	5.01	0.16	2.35	2.35	1.76	2.42	855.19	855.26
C2-18A	63.65	96.51	1.78	14.58	2.56	9.08	2.07	9.89	9.09	2.56	2.91	847.11	855.14
C2-21	22.15	22.85	1.59	8.29	1.68	7.35	1.00	7.86	8.29	1.68	1.59	865.46	866.18
C2-21A	36.37	86.14	1.36	11.67	1.96	7.94	1.35	7.43	5.50	1.96	2.65	863.38	864.30
C2-21B	60.05	84.51	1.87	12.98	2.50	8.97	1.58	9.53	9.08	2.50	2.65	862.11	863.23
C2-21C	51.42	63.72	1.70	14.45	2.32	8.63	1.90	10.83	10.48	2.32	2.95	863.95	865.74
C2-22	1.86	7.08	0.52	3.38	0.51	4.07	0.46	3.38	3.48	0.52	0.51	870.07	870.31
C2-22A	25.27	28.85	1.81	6.63	1.71	7.42	0.50	6.63	7.05	1.81	1.71	864.95	866.01
C2-22B	24.89	30.99	2.04	4.87	1.61	7.20	0.20	4.80	4.72	2.06	2.10	864.44	864.79
C2-22C	21.20	24.54	1.43	8.79	1.65	7.28	1.09	7.65	7.17	1.65	1.78	866.28	866.45
C2-23	2.40	7.16	0.60	3.65	0.59	4.34	0.47	3.65	3.75	0.60	0.59	871.88	872.12
C2-23A	18.84	22.73	1.74	5.18	1.47	6.88	0.25	4.96	4.49	1.81	1.99	866.85	867.31
C2-23B	1.97	17.09	0.34	6.44	0.53	4.13	2.11	3.54	6.44	0.53	0.34	871.13	872.64
C2-24	4.06	7.21	0.81	4.20	0.77	4.98	0.48	4.20	4.43	0.81	0.77	873.28	873.61
C2-24A	10.14	12.20	1.39	4.34	1.14	6.06	0.29	4.34	4.26	1.39	1.42	867.67	868.40
C2-24B	2.31	17.13	0.37	6.76	0.57	4.30	2.07	3.71	6.76	0.57	0.37	872.31	873.84
C2-26	3.00	9.59	0.58	4.80	0.66	4.60	0.83	4.02	3.86	0.66	0.68	870.97	872.02
C2-26A	3.00	8.88	0.60	4.54	0.66	4.60	0.67	4.02	2.44	0.66	0.98	868.48	870.95
C2-27	0.95	14.82	0.26	4.71	0.36	3.42	1.80	2.88	4.71	0.36	0.26	872.11	873.36
C2-28	0.72	10.21	0.27	0.41	0.32	3.18	0.00	0.41	0.41	1.61	2.04	862.00	862.00
C2-28A	61.14	86.06	1.87	13.21	2.52	9.01	1.65	9.64	8.98	2.52	2.76	855.33	861.98
CULV_02A	61.60	973.93	0.63	8.14	0.94	5.49	0.86	5.49	4.04	0.94	1.27	839.45	839.54
CULV_02B	95.48	969.02	0.84	9.45	1.25	6.35	0.95	6.35	9.42	1.25	0.84	837.37	839.43
JB-EX-SS-01	51.45	82.18	1.43	10.48	2.32	8.64	1.57	10.48	10.48	3.19	3.42	866.84	866.98

STATE OF TEXAS
ALEXIS WOFFENDEN
117162
LICENSED
PROFESSIONAL ENGINEER

3/12/2025

EST. 1848
GEORGETOWN
TEXAS

BGE, Inc.
101 West Louis Henna Blvd, Suite 400, Austin, TX 78728
Tel: 512-879-0400 • www.bgeinc.com
TBPE Registration No. F-1046

SHELL ROAD

HYDRAULIC DATA
LINK
HYDRAULICS

DATE: 3/12/2025 1:21:36 PM
FILE: G:\TXC\Projects\City Georgetown\10767-00 Shell Road\03 CADD\01 Shts\06-DRNG\SHELL_DRNG_HYD_DATA_08.dgn

LINK HYDRAULICS - 100 YEAR

Link ID	Link Discharge (cfs)	Link Capacity (cfs)	Uniform Depth (ft)	Uniform Velocity (ft/s)	Critical Depth (ft)	Critical Velocity (ft/s)	Friction Slope (%)	Actual Velocity Upstream (ft/s)	Actual Velocity Downstream (ft/s)	Actual Depth Upstream (ft)	Actual Depth Downstream (ft)	HGL Upstream (ft)	HGL Downstream (ft)
SYSTEM C1													
C1-01	3.95	5.14	0.98	2.23	0.76	4.95	0.14	2.23	2.23	3.64	3.69	855.14	855.05
C1-01A	21.89	21.70	1.66	6.97	1.67	7.33	0.94	6.97	6.97	3.58	3.57	854.94	854.47
C1-01B	21.81	21.25	1.69	6.94	1.67	7.33	0.93	6.94	6.94	3.45	3.43	854.35	853.94
C1-02	5.05	7.33	0.92	4.47	0.86	5.28	0.25	3.72	3.10	1.08	1.30	856.80	856.69
C1-02A	15.51	25.33	1.13	8.47	1.42	6.76	0.57	6.50	4.94	1.42	3.76	856.58	855.12
C1-03	3.72	15.74	0.50	7.29	0.74	4.87	1.81	4.31	2.42	0.74	1.22	862.87	861.88
C1-03A	7.89	10.73	0.96	6.64	1.09	5.92	1.03	5.74	6.64	1.09	0.96	861.75	857.63
C1-04	4.20	10.53	0.66	5.62	0.79	5.03	0.19	3.19	2.68	1.05	1.24	861.89	861.90
C1-05	3.10	26.51	0.35	1.75	0.67	4.64	0.09	1.75	1.75	3.04	3.67	855.04	855.03
C1-06	3.11	5.86	0.78	3.36	0.67	4.65	0.08	1.84	1.82	1.37	1.39	856.66	856.65
C1-07	8.58	68.51	0.48	2.73	1.04	5.80	0.14	2.73	2.73	4.27	5.16	855.27	855.26
C1-08	3.14	28.11	0.34	1.78	0.67	4.66	0.09	1.78	1.78	4.48	5.20	858.21	858.20
C1-10	3.21	65.14	0.23	19.13	0.68	4.69	19.68	4.11	1.82	0.68	2.00	863.77	862.82
C1-11	3.11	65.83	0.22	19.08	0.67	4.65	24.74	4.06	1.76	0.67	2.18	865.66	863.66
C1-12	5.92	7.05	1.05	3.35	0.94	5.50	0.32	3.35	3.35	2.39	2.44	864.71	864.62
C1-13	3.38	9.44	0.62	4.90	0.70	4.75	0.60	4.17	2.96	0.70	0.92	867.34	867.23
C1-14	1.02	10.46	0.32	3.76	0.38	3.48	0.10	2.55	1.01	0.42	0.84	867.09	867.14
C1-14A	4.38	12.76	0.61	6.55	0.80	5.08	0.97	4.55	2.48	0.80	2.44	867.10	864.62
C1-15	8.96	19.80	0.94	2.85	1.07	5.86	0.16	2.85	2.85	4.80	5.16	855.35	855.26
C1-15A	57.91	68.56	2.11	8.19	2.46	8.90	0.75	8.19	8.19	5.07	5.24	854.75	855.17
C1-16	3.67	11.56	0.58	2.07	0.73	4.85	0.12	2.07	2.07	4.55	5.21	858.29	858.21
C1-16A	43.19	44.17	2.00	8.80	2.19	8.40	1.11	8.80	8.80	5.12	5.25	858.12	855.35
C1-17	3.59	15.60	0.49	7.17	0.72	4.82	0.27	4.26	2.03	0.72	2.14	861.08	861.14
C1-17A	37.66	55.55	1.51	12.16	2.08	8.17	0.91	8.64	7.67	2.08	5.36	861.08	858.36
C1-18	3.45	17.84	0.45	7.81	0.71	4.77	1.39	4.20	1.95	0.71	2.01	863.62	862.83
C1-18A	32.78	43.35	1.62	9.71	1.95	7.92	1.05	7.98	6.96	1.95	2.29	862.77	861.29
C1-18B	3.33	8.78	0.64	1.88	0.69	4.73	0.10	1.88	1.88	1.77	2.20	863.27	863.19
C1-19	3.46	22.33	0.40	9.17	0.71	4.78	2.82	4.20	1.96	0.71	2.18	865.53	863.67
C1-19A	24.17	24.38	2.03	5.66	1.67	7.34	0.32	5.39	5.24	2.14	2.22	863.63	863.21
C1-19B	26.89	24.38	(N/A)	5.48	1.77	7.54	0.40	5.94	6.03	2.17	2.13	863.16	862.95
C1-20	9.47	29.74	0.58	14.95	1.19	6.19	5.77	6.30	5.36	1.19	2.46	867.32	864.64
C1-20A	19.23	16.24	(N/A)	3.92	1.49	6.92	0.19	3.98	4.19	2.39	2.21	864.57	863.70
C1-21	2.17	24.84	0.30	8.64	0.56	4.23	0.05	1.92	1.23	0.92	2.11	861.09	861.11
SYSTEM C2													
C2-02	1.84	6.50	0.55	1.04	0.51	4.05	0.03	1.04	1.04	5.63	5.70	845.01	845.02
C2-03	2.36	14.66	0.41	1.33	0.58	4.32	0.05	1.33	1.33	6.22	6.62	847.71	847.72
C2-04	2.71	13.75	0.45	1.53	0.62	4.48	0.07	1.53	1.53	5.30	5.66	850.29	850.31
C2-05	2.87	12.93	0.48	1.62	0.64	4.55	0.07	1.62	1.62	3.14	3.46	856.13	856.15
C2-06	2.25	18.39	0.35	1.28	0.57	4.27	0.05	1.28	1.28	2.58	3.23	863.57	863.58
C2-07	4.84	7.16	0.90	4.35	0.85	5.22	0.20	3.12	2.99	1.23	1.29	865.16	865.19
C2-08	2.28	6.68	0.60	3.42	0.57	4.28	0.42	3.42	3.69	0.60	0.57	870.28	870.39
C2-09	2.64	6.78	0.65	3.60	0.62	4.45	0.43	3.60	3.86	0.65	0.62	871.41	871.53
C2-09A	26.56	23.86	(N/A)	5.41	1.76	7.52	0.36	5.58	5.70	2.33	2.26	866.46	867.19
C2-10	2.65	6.82	0.65	3.61	0.62	4.46	0.43	3.61	3.87	0.65	0.62	872.03	872.16
C2-11	3.68	6.77	0.79	3.91	0.73	4.86	0.44	3.94	4.29	0.78	0.73	872.68	872.81
C2-11A	17.59	15.74	(N/A)	3.58	1.42	6.76	0.16	3.65	3.66	2.38	2.36	867.86	868.13
C2-12	3.91	7.18	0.79	4.15	0.76	4.93	0.48	4.15	4.38	0.79	0.76	873.28	873.41
C2-14	2.36	5.93	0.66	3.16	0.58	4.32	0.27	3.01	2.96	0.68	0.69	872.15	872.17
C2-15	1.35	6.65	0.46	0.76	0.43	3.74	0.02	0.76	0.76	5.53	5.70	845.01	845.02
C2-15A	85.19	72.87	1.84	10.65	2.00	8.02	1.09	10.65	10.65	2.00	2.00	840.51	841.31
C2-16	4.04	7.28	0.80	2.29	0.77	4.98	0.15	2.29	2.29	6.53	6.69	847.76	847.84
C2-16A	83.97	64.57	(N/A)	11.88	2.80	9.50	1.59	11.88	11.88	6.65	6.49	847.26	847.66
C2-16B	83.94	70.57	(N/A)	11.87	2.80	9.50	1.58	11.87	11.87	6.24	5.65	845.01	847.01
C2-17	3.88	7.28	0.78	2.20	0.75	4.92	0.14	2.20	2.20	5.82	6.01	850.32	850.39
C2-17A	81.33	92.60	2.18	11.51	2.78	9.46	1.49	11.51	11.51	6.03	6.76	847.76	850.23
C2-18	4.69	12.88	0.63	2.65	0.83	5.17	0.20	2.65	2.65	2.75	3.39	856.16	856.25
C2-18A	78.91	96.51	2.06	11.16	2.76	9.42	1.40	11.16	11.16	3.51	6.29	850.49	856.09
C2-21	27.55	22.85	(N/A)	8.77	1.82	7.65	1.43	8.77	9.18	2.19	1.82	865.69	866.69
C2-21A	45.04	86.14	1.54	12.32	2.19	8.39	1.31	8.16	6.41	2.19	2.93	863.66	864.53
C2-21B	74.60	84.51	2.19	13.50	2.71	9.35	1.54	11.09	10.63	2.71	2.92	862.38	863.44
C2-21C	62.22	63.72	2.00	12.68	2.41	8.80	2.30	12.68	12.68	3.32	3.43	864.43	866.74
C2-22	2.25	7.08	0.58	3.56	0.57	4.27	0.46	3.56	3.68	0.58	0.57	870.13	870.37
C2-22A	30.18	28.85	2.17	6.67	1.87	7.76	0.53	6.74	7.61	2.14	1.88	865.12	866.34
C2-22B	29.75	30.99	2.36	4.99	1.77	7.54	0.22	4.99	4.98	2.36	2.36	864.70	865.09
C2-22C	26.45	24.54	(N/A)	8.42	1.80	7.60	1.37	8.42	8.42	2.39	2.34	866.84	867.19
C2-23	3.04	7.16	0.68	3.88	0.66	4.62	0.47	3.88	4.03	0.68	0.66	871.96	872.20
C2-23A	22.50	22.73	2.03	5.28	1.61	7.21	0.26	4.76	4.63	2.30	2.42	867.28	867.80
C2-23B	2.26	17.09	0.37	6.70	0.57	4.27	2.07	3.68	6.70	0.57	0.37	871.16	872.67
C2-24	4.65	7.21	0.88	4.34	0.83	5.16	0.48	4.34	4.64	0.88	0.83	873.34	873.68
C2-24A	11.90	12.20	1.60	4.43	1.24	6.32	0.24	4.07	3.86	1.75	1.91	868.16	868.76
C2-24B	2.62	17.13	0.40	7.01	0.61	4.44	2.03	3.85	7.01	0.61	0.40	872.34	873.88
C2-26	3.44	9.59	0.62	4.97	0.71	4.77	0.83	4.20	4.02	0.71	0.73	871.03	872.07
C2-26A	3.44	8.88	0.65	4.70	0.71	4.77	0.61	4.20	2.06	0.71	1.34	868.84	871.00
C2-27	1.08	14.82	0.27	4.89	0.39	3.53	1.78	2.98	4.89	0.39	0.27	872.13	873.39
C2-28	0.85	10.21	0.29	0.48	0.34	3.32	0.01	0.48	0.48	1.83	2.26	862.21	862.21
C2-28A	75.93	86.06	2.19	13.74	2.73	9.37	1.44	11.24	10.74	2.73	3.82	856.39	862.19
CULV_02A	74.38	973.93	0.71	8.70	1.06	5.84	0.77	5.84	4.23	1.06	1.47	839.65	839.66
CULV_02B	118.41	969.02	0.97	10.16	1.45	6.82	0.92	6.82	10.04	1.45	0.98	837.51	839.63
JB-EX-SS-01	62.25	82.18	1.63	12.68	2.41	8.80	2.30	12.68	12.68	5.03	5.19	868.61	868.82

STATE OF TEXAS
ALEXIS WOFFENDEN
117162
LICENSED
PROFESSIONAL ENGINEER

3/12/2025

EST. 1848
GEORGETOWN
TEXAS

BGE, Inc.
101 West Louis Henna Blvd, Suite 400, Austin, TX 78728
Tel: 512-879-0400 • www.bgeinc.com
TBPE Registration No. F-1046

SHELL ROAD

HYDRAULIC DATA
LINK
HYDRAULICS

SHEET 2 OF 2

SHEET NO.
160

DATE: 3/12/2025 1:21:57 PM
FILE: G:\TXC\Projects\City Georgetown\10767-00 Shell Road\03 CADD\01 Shts\06-DRNG\SHELL_DRNG_HYD_DATA_09.dgn

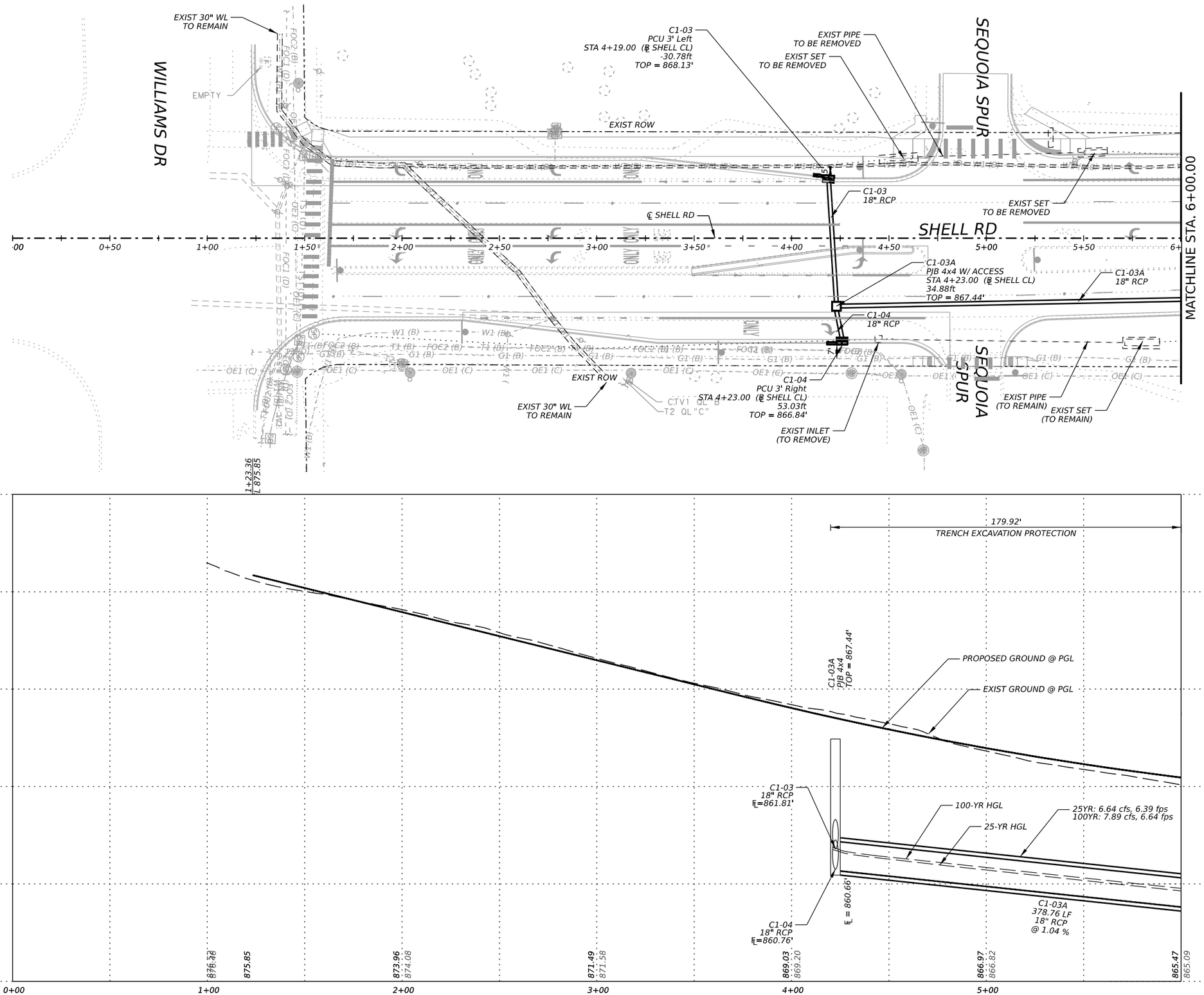

NOTES:
- GUTTER FLOW DOES NOT CROSS STREETS WHEN 25-YEAR PEAK FLOWS EXCEED 4 CFS.
- 25-YEAR PEAK FLOWS DO NOT EXCEED STREET CAPACITY.
- 100-YEAR PEAK FLOWS DO NOT EXCEED ROW CAPACITY.
-SAG INLET SPREAD WAS CALCULATED ASSUMING HALF OF THE LONGITUDINAL SLOPE BOTH LEFT AND RIGHT.
-CONTRACTOR TO LOCATE AND VERIFY UTILITIES PRIOR TO CONSTRUCTION.

0 25 50
SCALE: 1" = 50' H
1" = 5' V

STATE OF TEXAS
ALEXIS WOFFENDEN
117162
LICENSED
PROFESSIONAL ENGINEER
2/14/2025

EST. 1848 GEORGETOWN TEXAS

BGE, Inc.
101 West Louis Henna Blvd, Suite 400, Austin, TX 78728
Tel: 512-879-0400 • www.bgeinc.com
TBPE Registration No. F-1046

SHELL ROAD

STORM SEWER PLAN & PROFILE SYSTEM C1

SHEET 1 OF 12

SHEET NO. 161

DATE: 2/24/2025 3:34:34 PM
FILE: G:\TXC\Projects\City Georgetown\10767-00 Shell Road\03 CADD\01 Shts\06-DRNG\SHELL_DRNG_PP01.dgn

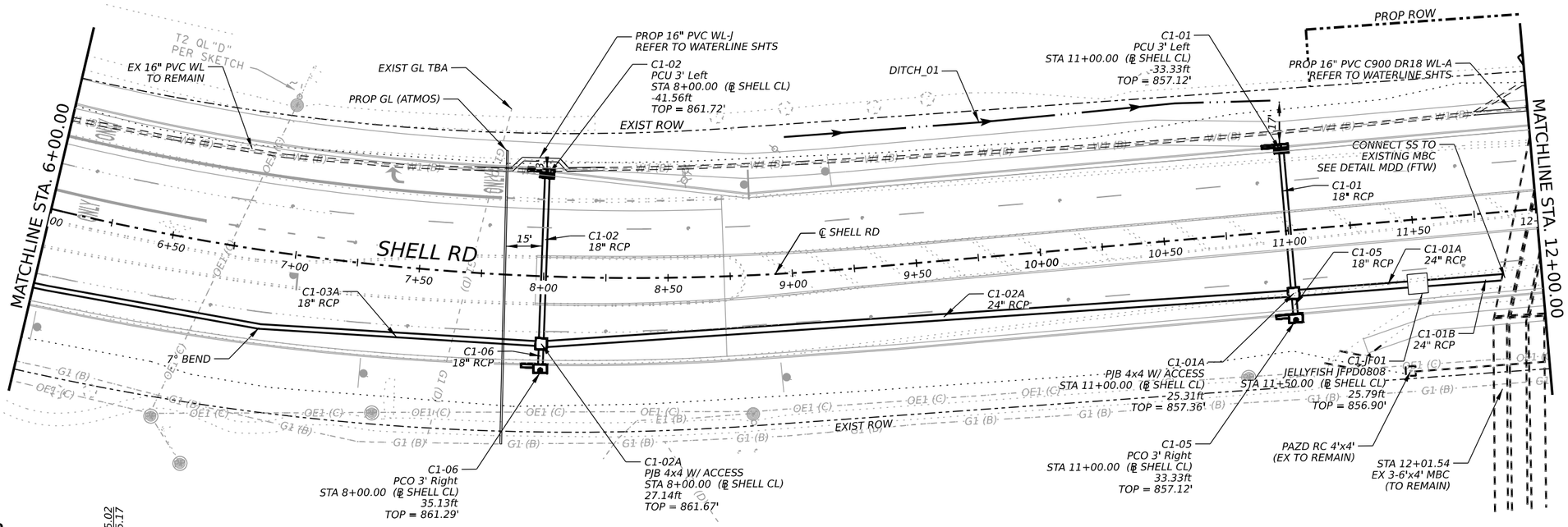

NOTES:
- GUTTER FLOW DOES NOT CROSS STREETS WHEN 25-YEAR PEAK FLOWS EXCEED 4 CFS.
- 25-YEAR PEAK FLOWS DO NOT EXCEED STREET CAPACITY.
- 100-YEAR PEAK FLOWS DO NOT EXCEED ROW CAPACITY.
- SAG INLET SPREAD WAS CALCULATED ASSUMING HALF OF THE LONGITUDINAL SLOPE BOTH LEFT AND RIGHT.
- CONTRACTOR TO LOCATE AND VERIFY UTILITIES PRIOR TO CONSTRUCTION.

SCALE: 1" = 50' H
1" = 5' V

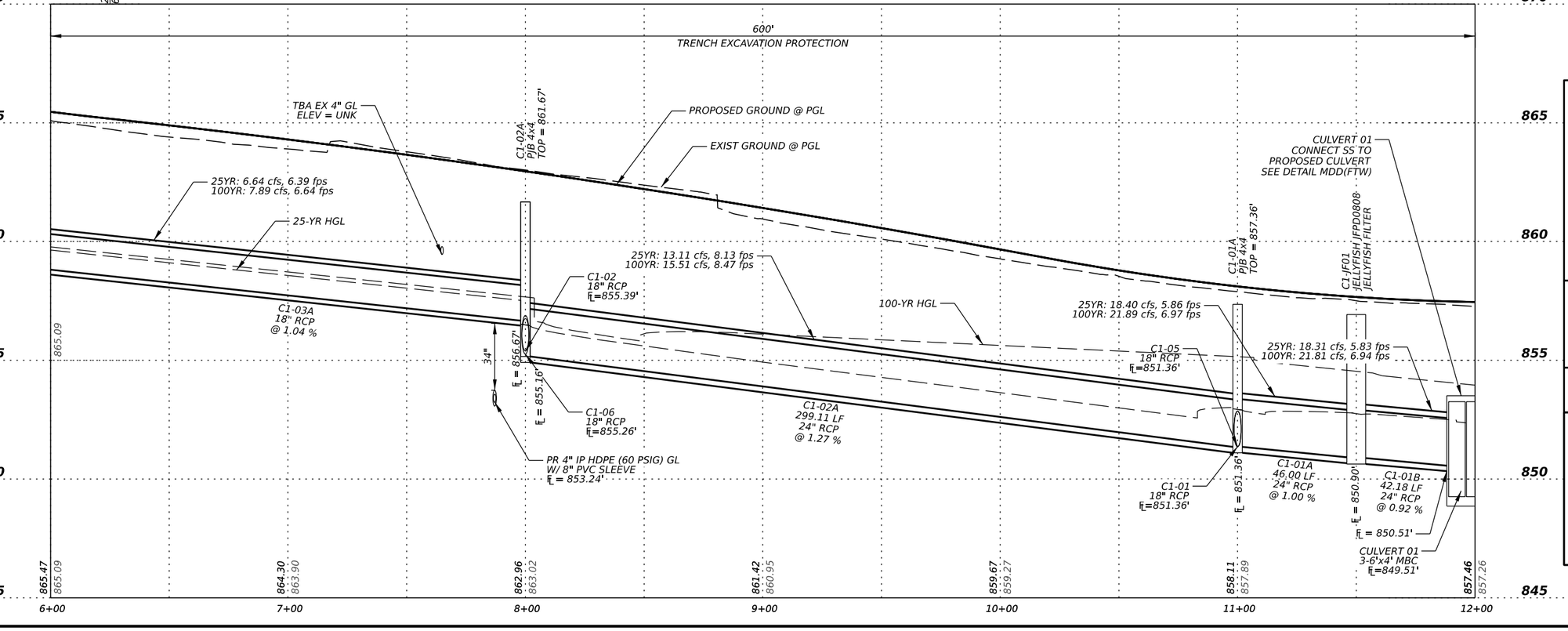

STATE OF TEXAS
ALEXIS WOFFENDEN
117162
LICENSED
PROFESSIONAL ENGINEER
2/14/2025

EST. 1848 GEORGETOWN TEXAS

BGE, Inc.
101 West Louis Henna Blvd, Suite 400, Austin, TX 78728
Tel: 512-879-0400 • www.bgeinc.com
TBPE Registration No. F-1046

SHELL ROAD

STORM SEWER PLAN & PROFILE SYSTEM C1

SHEET 2 OF 12

SHEET NO. 162

DATE: 2/24/2025 3:34:36 PM
FILE: G:\TXC\Projects\City Georgetown\10767-00 Shell Road\03 CADD\01 Shts\06-DRNG\SHELL_DRNG_PP02.dgn

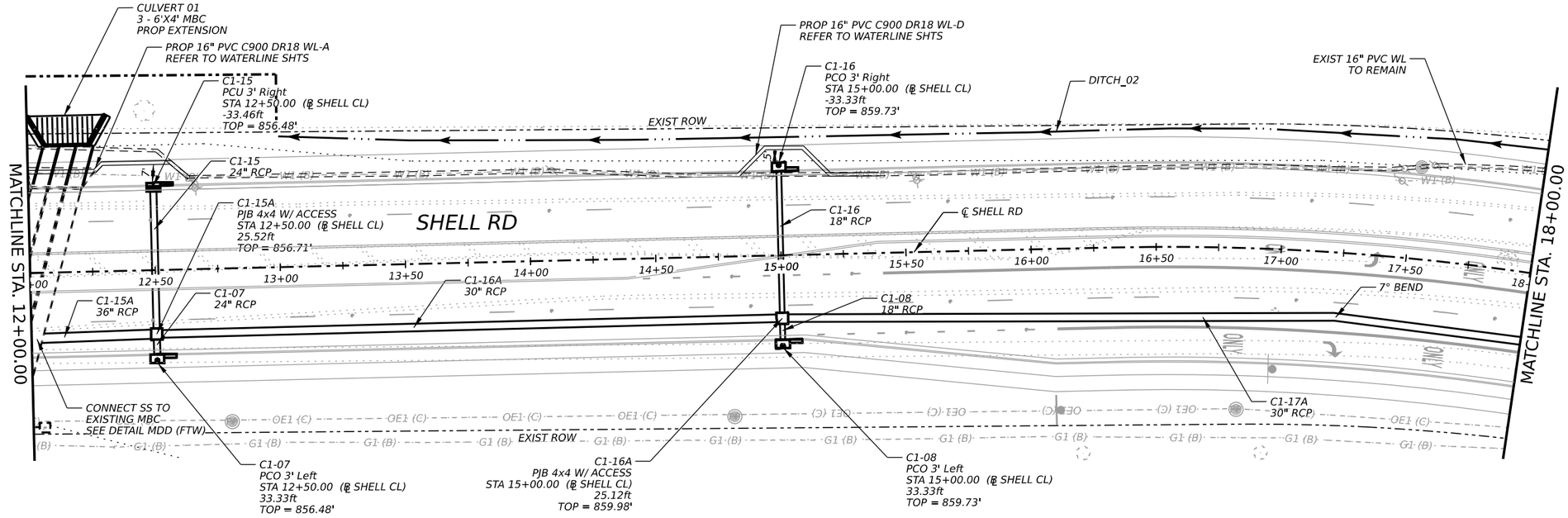

NOTES:
- GUTTER FLOW DOES NOT CROSS STREETS WHEN 25-YEAR PEAK FLOWS EXCEED 4 CFS.
- 25-YEAR PEAK FLOWS DO NOT EXCEED STREET CAPACITY.
- 100-YEAR PEAK FLOWS DO NOT EXCEED ROW CAPACITY.
-SAG INLET SPREAD WAS CALCULATED ASSUMING HALF OF THE LONGITUDINAL SLOPE BOTH LEFT AND RIGHT.
-CONTRACTOR TO LOCATE AND VERIFY UTILITIES PRIOR TO CONSTRUCTION.

SCALE: 1" = 50' H
1" = 5' V

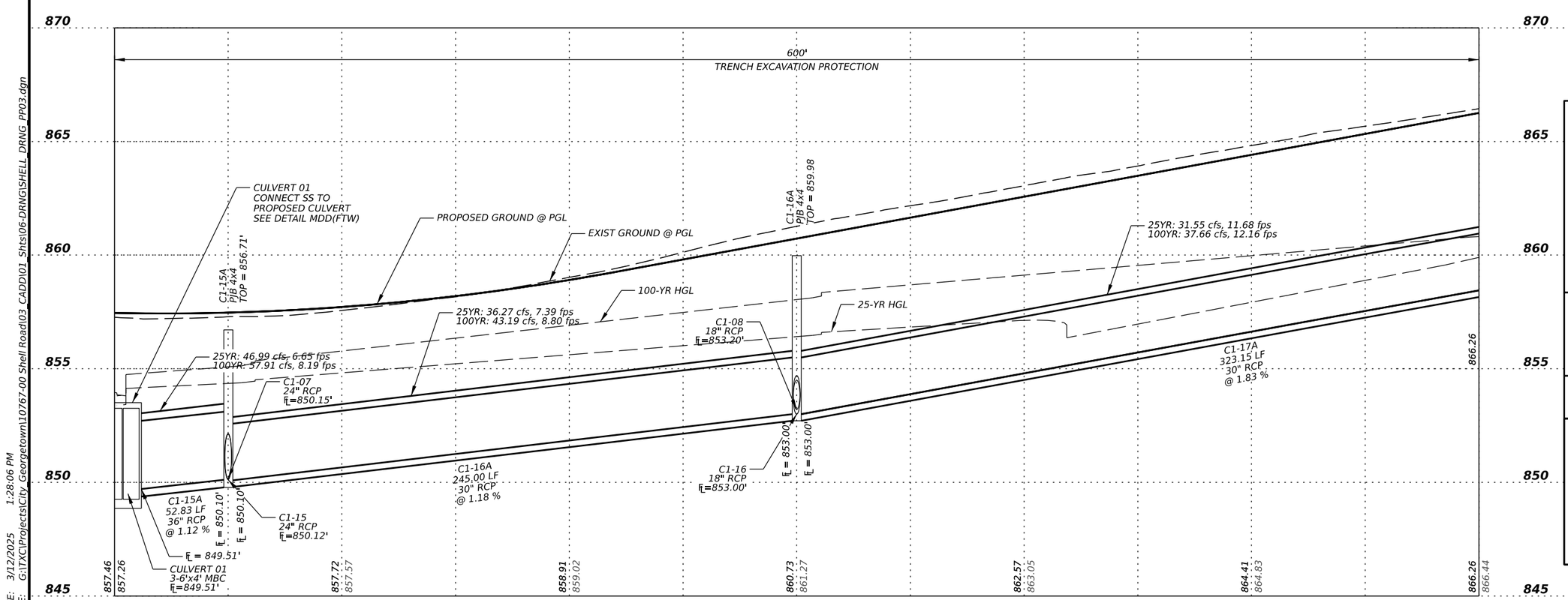

DATE: 3/12/2025 1:28:06 PM
FILE: G:\TXC\Projects\City Georgetown\10767-00 Shell Road\03 CADD\01 Shts\06-DRNG\SHELL_DRNG_PP03.dgn

STATE OF TEXAS
ALEXIS WOFFENDEN
117162
LICENSED
PROFESSIONAL ENGINEER

3/12/2025

EST.1848
GEORGETOWN
TEXAS

BGE, Inc.
101 West Louis Henna Blvd, Suite 400, Austin, TX 78728
Tel: 512-879-0400 • www.bgeinc.com
TBPE Registration No. F-1046

SHELL ROAD

STORM SEWER PLAN & PROFILE SYSTEM C1

SHEET 3 OF 12

SHEET NO. 163

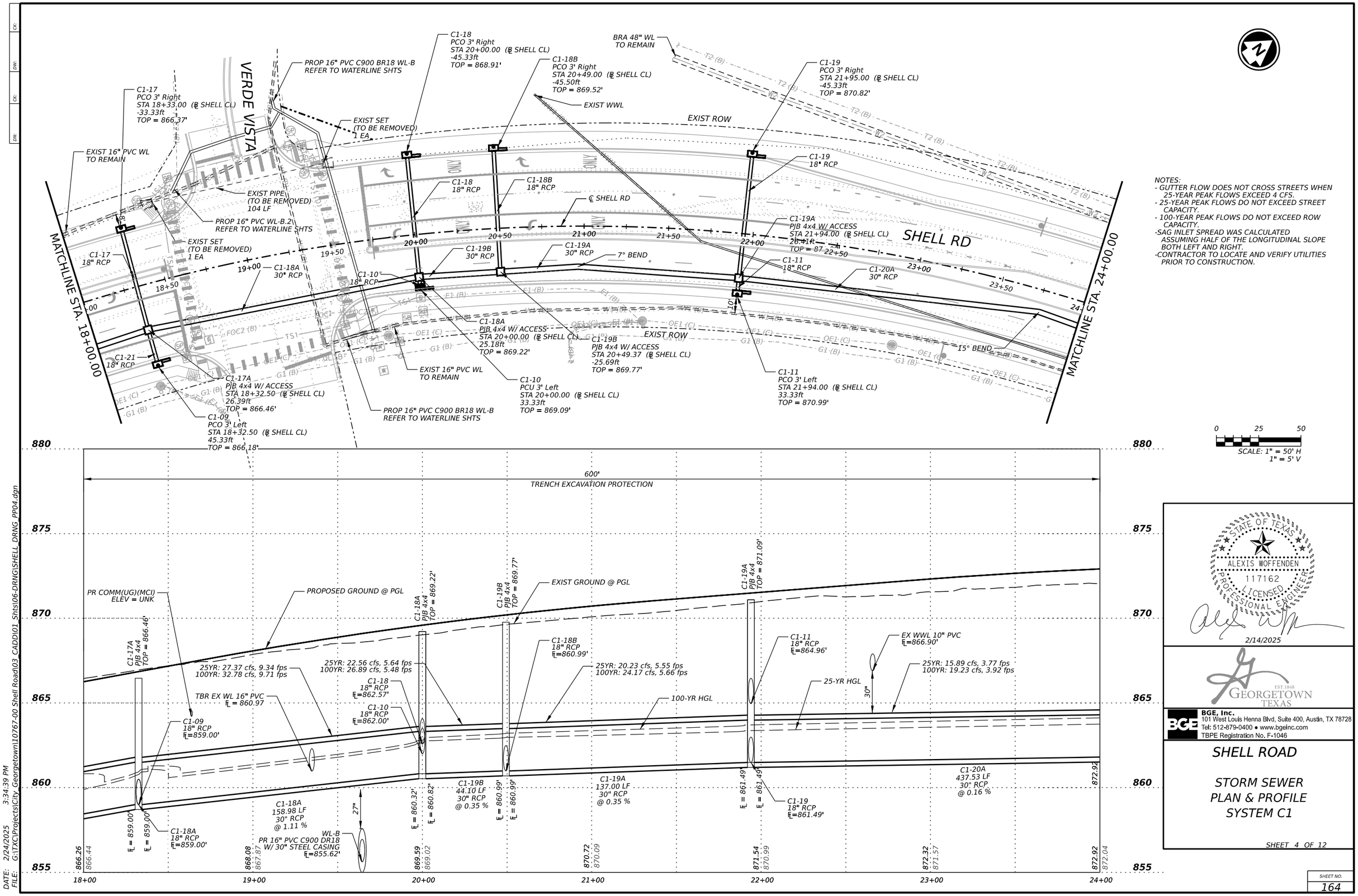

NOTES:
- GUTTER FLOW DOES NOT CROSS STREETS WHEN 25-YEAR PEAK FLOWS EXCEED 4 CFS.
- 25-YEAR PEAK FLOWS DO NOT EXCEED STREET CAPACITY.
- 100-YEAR PEAK FLOWS DO NOT EXCEED ROW CAPACITY.
- SAG INLET SPREAD WAS CALCULATED ASSUMING HALF OF THE LONGITUDINAL SLOPE BOTH LEFT AND RIGHT.
- CONTRACTOR TO LOCATE AND VERIFY UTILITIES PRIOR TO CONSTRUCTION.

SCALE: 1" = 50' H
1" = 5' V

ALEXIS WOFFENDEN
117162
LICENSED PROFESSIONAL ENGINEER
STATE OF TEXAS
2/14/2025

EST. 1848 GEORGETOWN TEXAS

BGE, Inc.
101 West Louis Henna Blvd, Suite 400, Austin, TX 78728
Tel: 512-879-0400 • www.bgeinc.com
TBPE Registration No. F-1046

SHELL ROAD

STORM SEWER PLAN & PROFILE SYSTEM C1

SHEET 4 OF 12

SHEET NO. 164

DATE: 2/24/2025 3:34:39 PM
FILE: G:\TXC\Projects\City Georgetown\10767-00 Shell Road\03 CADD\01 Shts\06-DRNG\SHELL DRNG PP04.dgn

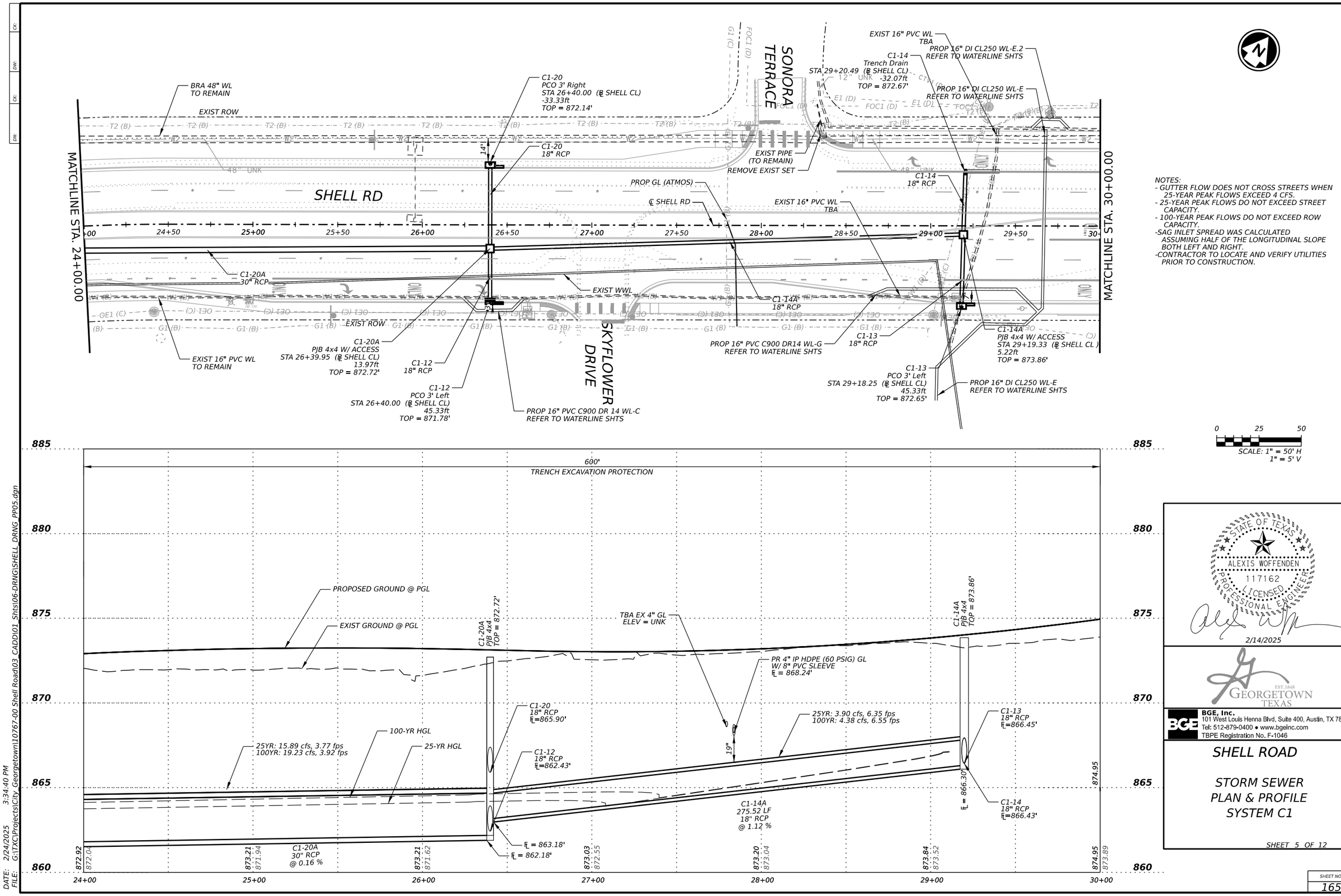

NOTES:
- GUTTER FLOW DOES NOT CROSS STREETS WHEN 25-YEAR PEAK FLOWS EXCEED 4 CFS.
- 25-YEAR PEAK FLOWS DO NOT EXCEED STREET CAPACITY.
- 100-YEAR PEAK FLOWS DO NOT EXCEED ROW CAPACITY.
-SAG INLET SPREAD WAS CALCULATED ASSUMING HALF OF THE LONGITUDINAL SLOPE BOTH LEFT AND RIGHT.
-CONTRACTOR TO LOCATE AND VERIFY UTILITIES PRIOR TO CONSTRUCTION.

0 25 50

SCALE: 1" = 50' H
1" = 5' V

STATE OF TEXAS
ALEXIS WOFFENDEN
117162
LICENSED
PROFESSIONAL ENGINEER
2/14/2025

EST. 1848 GEORGETOWN TEXAS

BGE, Inc.
101 West Louis Henna Blvd, Suite 400, Austin, TX 78728
Tel: 512-879-0400 • www.bgeinc.com
TBPE Registration No. F-1046

SHELL ROAD

STORM SEWER PLAN & PROFILE SYSTEM C1

SHEET 5 OF 12

SHEET NO. 165

DATE: 2/24/2025 3:34:40 PM
FILE: G:\TXC\Projects\City Georgetown\10767-00 Shell Road\03 CADD\01 Shts\06-DRNG\SHELL_DRNG_PP05.dgn

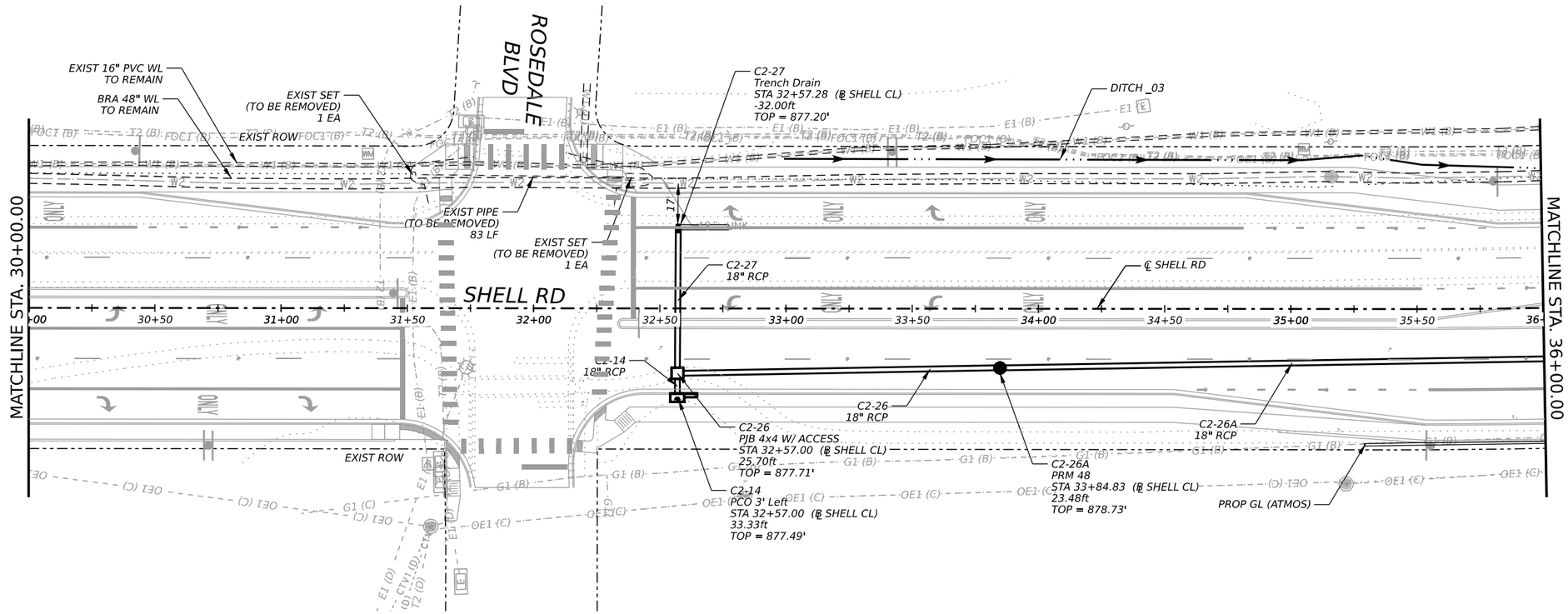

NOTES:
- GUTTER FLOW DOES NOT CROSS STREETS WHEN 25-YEAR PEAK FLOWS EXCEED 4 CFS.
- 25-YEAR PEAK FLOWS DO NOT EXCEED STREET CAPACITY.
- 100-YEAR PEAK FLOWS DO NOT EXCEED ROW CAPACITY.
- SAG INLET SPREAD WAS CALCULATED ASSUMING HALF OF THE LONGITUDINAL SLOPE BOTH LEFT AND RIGHT.
- CONTRACTOR TO LOCATE AND VERIFY UTILITIES PRIOR TO CONSTRUCTION.

0 25 50

SCALE: 1" = 50' H
1" = 5' V

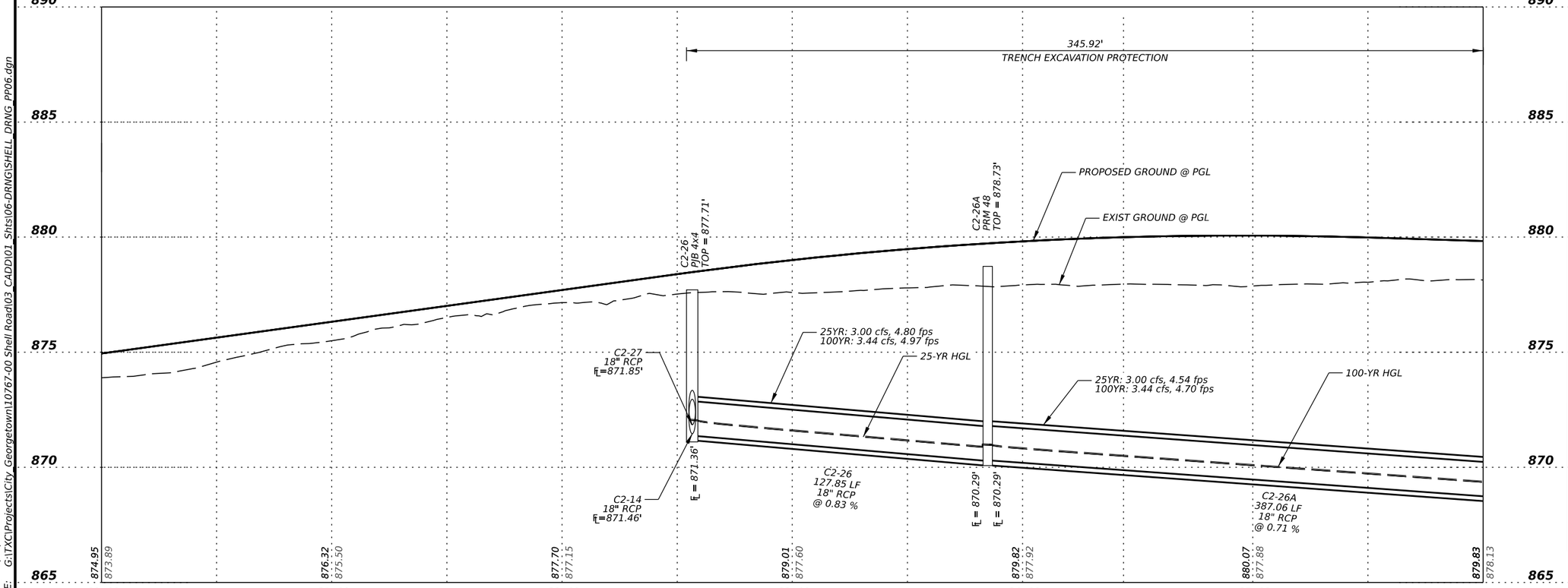

STATE OF TEXAS
ALEXIS WOFFENDEN
117162
LICENSED
PROFESSIONAL ENGINEER
2/14/2025

EST. 1848 GEORGETOWN TEXAS

BGE, Inc.
101 West Louis Henna Blvd, Suite 400, Austin, TX 78728
Tel: 512-879-0400 • www.bgeinc.com
TBPE Registration No. F-1046

SHELL ROAD

STORM SEWER PLAN & PROFILE SYSTEM C2

SHEET 6 OF 12

SHEET NO. 166

DATE: 2/24/2025 3:34:41 PM
FILE: G:\TX\Projects\City Georgetown\10767-00 Shell Road\03 CADD\01 Shts\06-DRNG\SHELL_DRNG_PP06.dgn

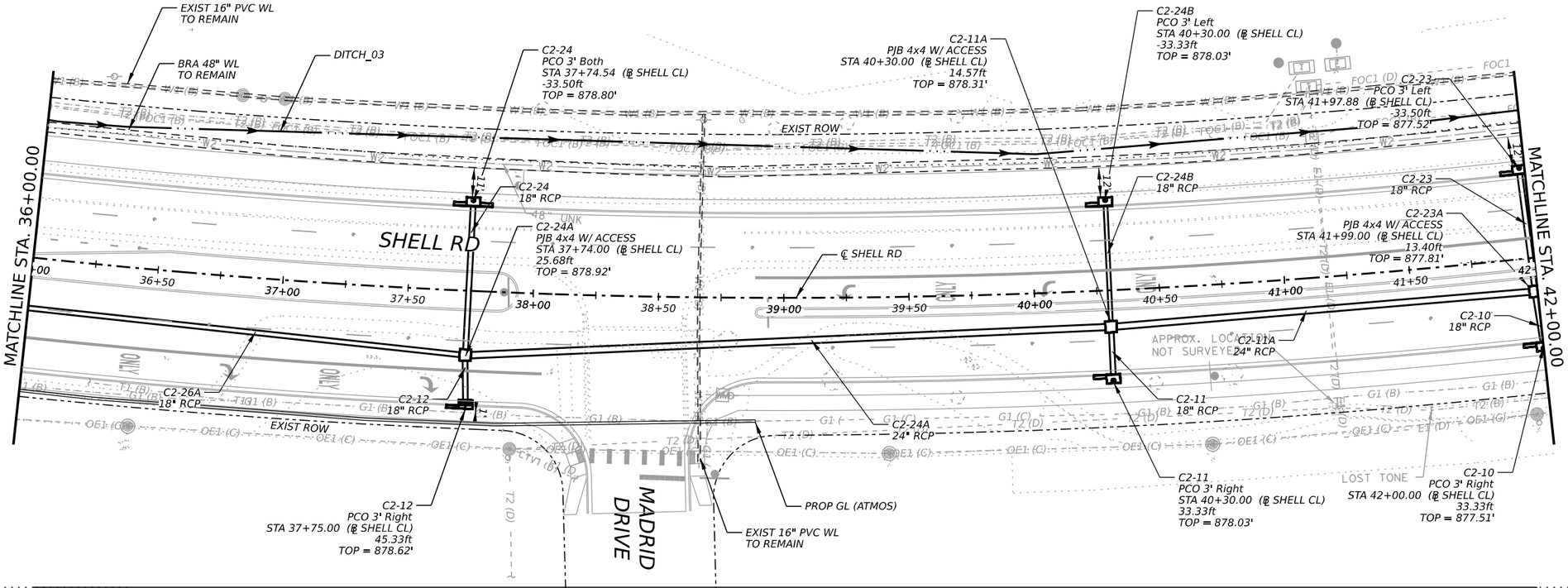

NOTES:
- GUTTER FLOW DOES NOT CROSS STREETS WHEN 25-YEAR PEAK FLOWS EXCEED 4 CFS.
- 25-YEAR PEAK FLOWS DO NOT EXCEED STREET CAPACITY.
- 100-YEAR PEAK FLOWS DO NOT EXCEED ROW CAPACITY.
-SAG INLET SPREAD WAS CALCULATED ASSUMING HALF OF THE LONGITUDINAL SLOPE BOTH LEFT AND RIGHT.
-CONTRACTOR TO LOCATE AND VERIFY UTILITIES PRIOR TO CONSTRUCTION.

0 25 50

SCALE: 1" = 50' H
1" = 5' V

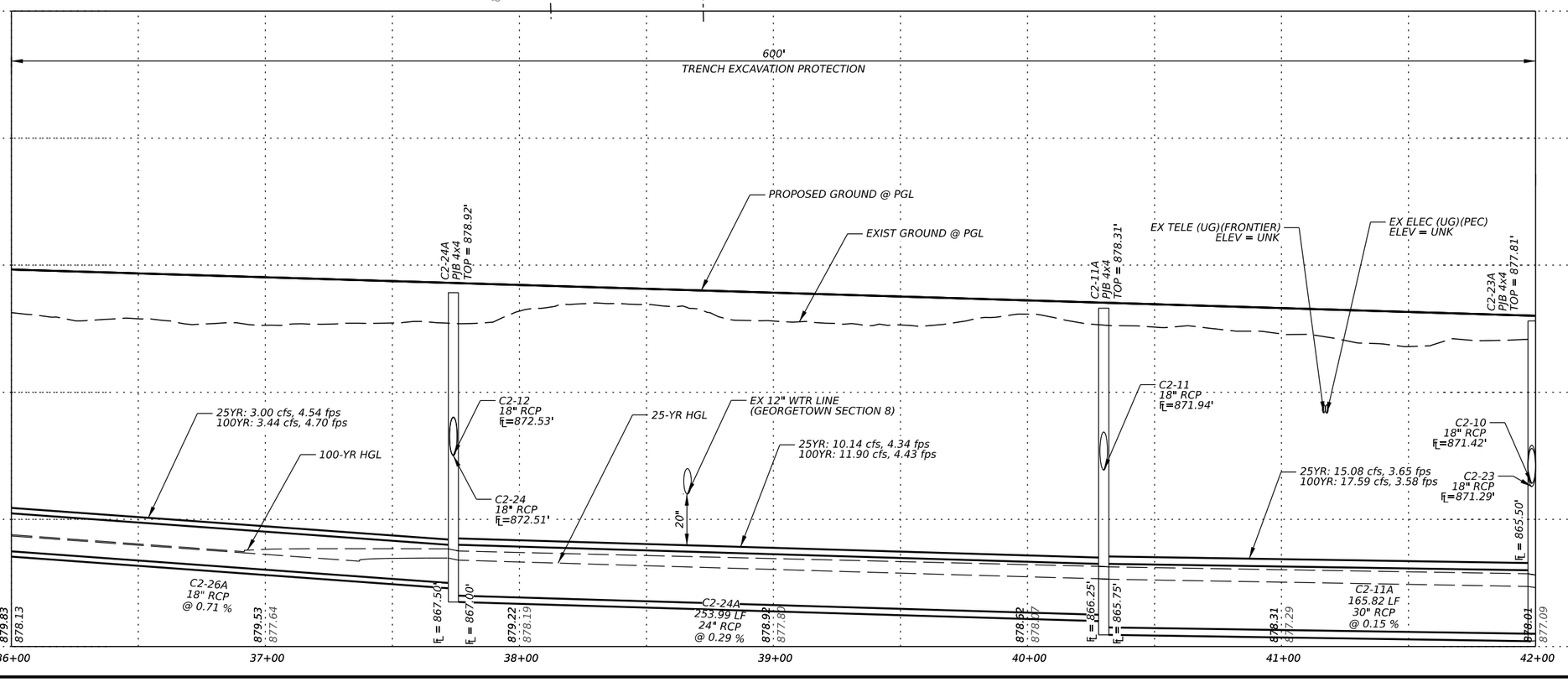

STATE OF TEXAS
ALEXIS WOFFENDEN
117162
LICENSED
PROFESSIONAL ENGINEER
2/14/2025

EST. 1848
GEORGETOWN
TEXAS

BGE, Inc.
101 West Louis Henna Blvd, Suite 400, Austin, TX 78728
Tel: 512-879-0400 • www.bgeinc.com
TBPE Registration No. F-1046

SHELL ROAD

STORM SEWER PLAN & PROFILE SYSTEM C2

SHEET 7 OF 12

SHEET NO. 167

DATE: 2/24/2025 3:34:42 PM
FILE: G:\TXC\Projects\City Georgetown\10767-00 Shell Road\03 CADD\01 Shts\06-DRNG\SHELL_DRNG_PP07.dgn

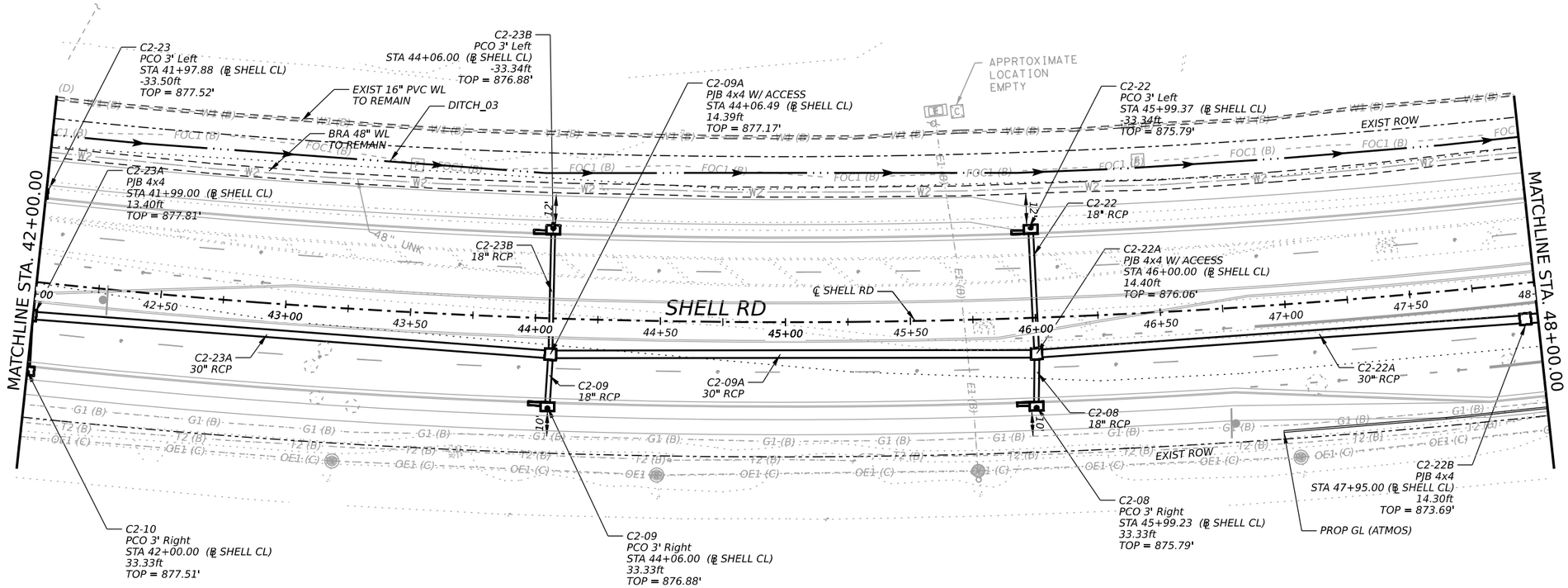

NOTES:
- GUTTER FLOW DOES NOT CROSS STREETS WHEN 25-YEAR PEAK FLOWS EXCEED 4 CFS.
- 25-YEAR PEAK FLOWS DO NOT EXCEED STREET CAPACITY.
- 100-YEAR PEAK FLOWS DO NOT EXCEED ROW CAPACITY.
-SAG INLET SPREAD WAS CALCULATED ASSUMING HALF OF THE LONGITUDINAL SLOPE BOTH LEFT AND RIGHT.
-CONTRACTOR TO LOCATE AND VERIFY UTILITIES PRIOR TO CONSTRUCTION.

0 25 50

SCALE: 1" = 50' H
1" = 5' V

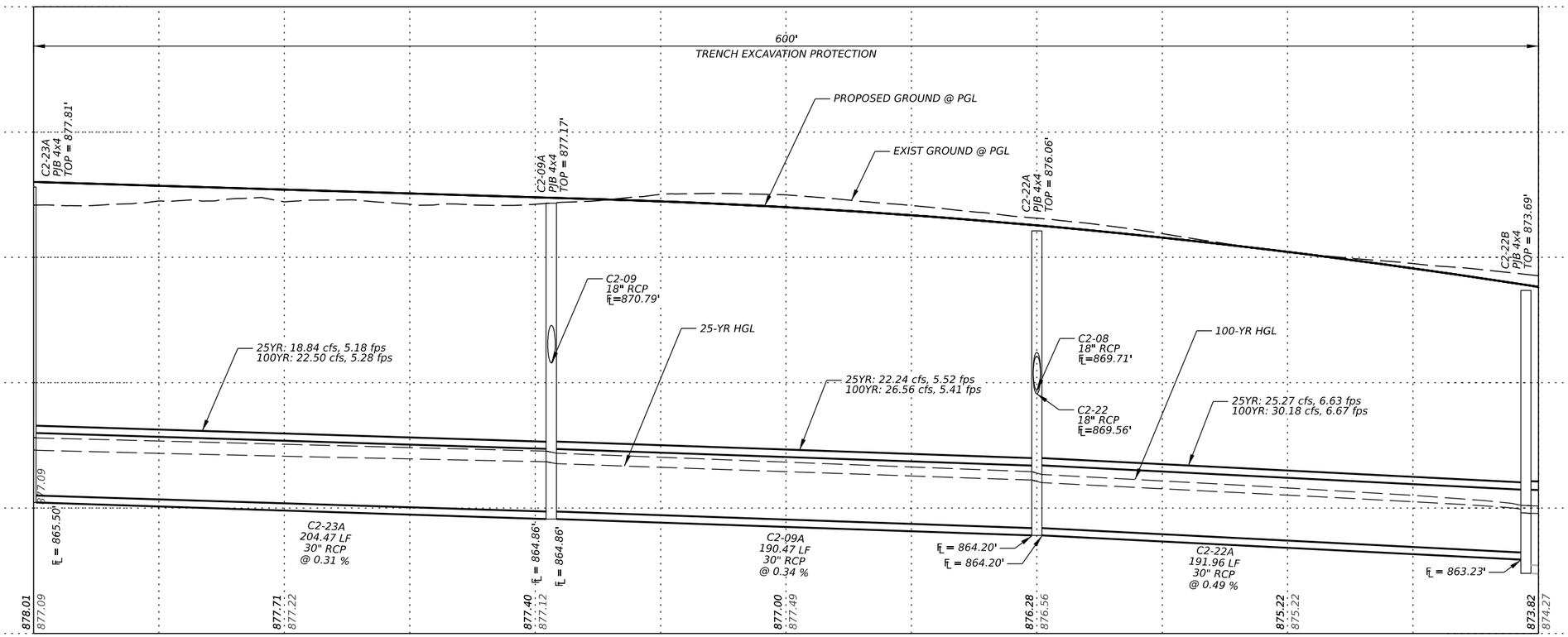



2/14/2025

GEORGETOWN TEXAS EST. 1848

BGE, Inc.
101 West Louis Henna Blvd, Suite 400, Austin, TX 78728
Tel: 512-879-0400 • www.bgeinc.com
TBPE Registration No. F-1046

SHELL ROAD

STORM SEWER PLAN & PROFILE SYSTEM C2

DATE: 2/24/2025 3:34:44 PM
FILE: G:\TXC\Projects\City Georgetown\10767-00 Shell Road\03 CADD\01 Shts\06-DRNG\SHELL_DRNG_PP08.dgn

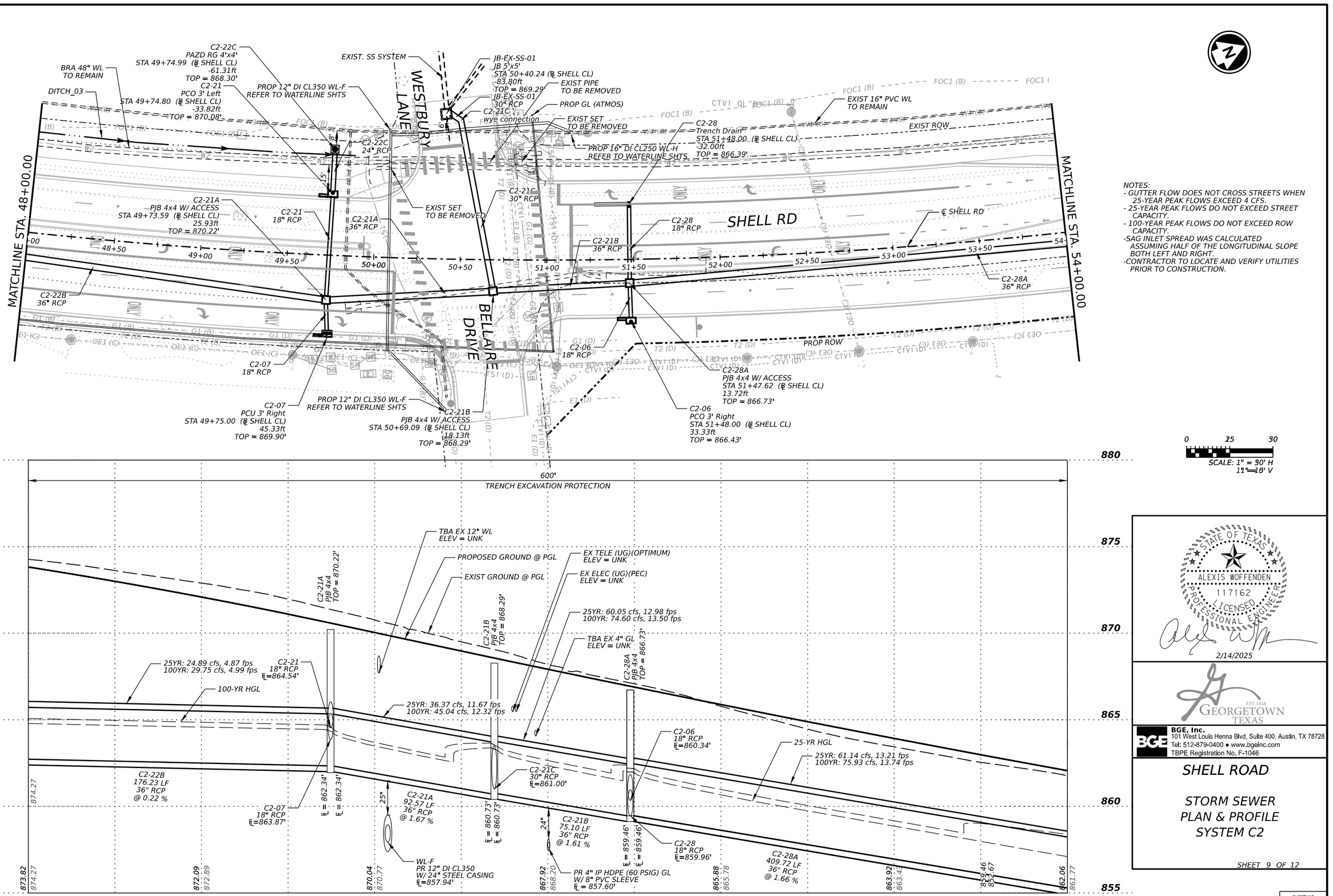

NOTES:
- GUTTER FLOW DOES NOT CROSS STREETS WHEN 25-YEAR PEAK FLOWS EXCEED 4 CFS.
- 25-YEAR PEAK FLOWS DO NOT EXCEED STREET CAPACITY.
- 100-YEAR PEAK FLOWS DO NOT EXCEED ROW CAPACITY.
- SAG INLET SPREAD WAS CALCULATED ASSUMING HALF OF THE LONGITUDINAL SLOPE BOTH LEFT AND RIGHT.
- CONTRACTOR TO LOCATE AND VERIFY UTILITIES PRIOR TO CONSTRUCTION.

0 25 50

SCALE: 1" = 50' H
1" = 10' V

STATE OF TEXAS
ALEXIS WOFFENDEN
117162
LICENSED
PROFESSIONAL ENGINEER
2/14/2025

EST. 1848 GEORGETOWN TEXAS

BGE, Inc.
101 West Louis Henna Blvd, Suite 400, Austin, TX 78728
Tel: 512-879-0400 • www.bgeinc.com
TBPE Registration No. F-1046

SHELL ROAD

STORM SEWER PLAN & PROFILE SYSTEM C2

SHEET 9 OF 12

SHEET NO. 169

DATE: 2/24/2025 3:34:45 PM
FILE: G:\TXC\Projects\City Georgetown\10767-00 Shell Road\03 CADD\01 Shts\06-DRNG\SHELL_DRNG_PP09.dgn

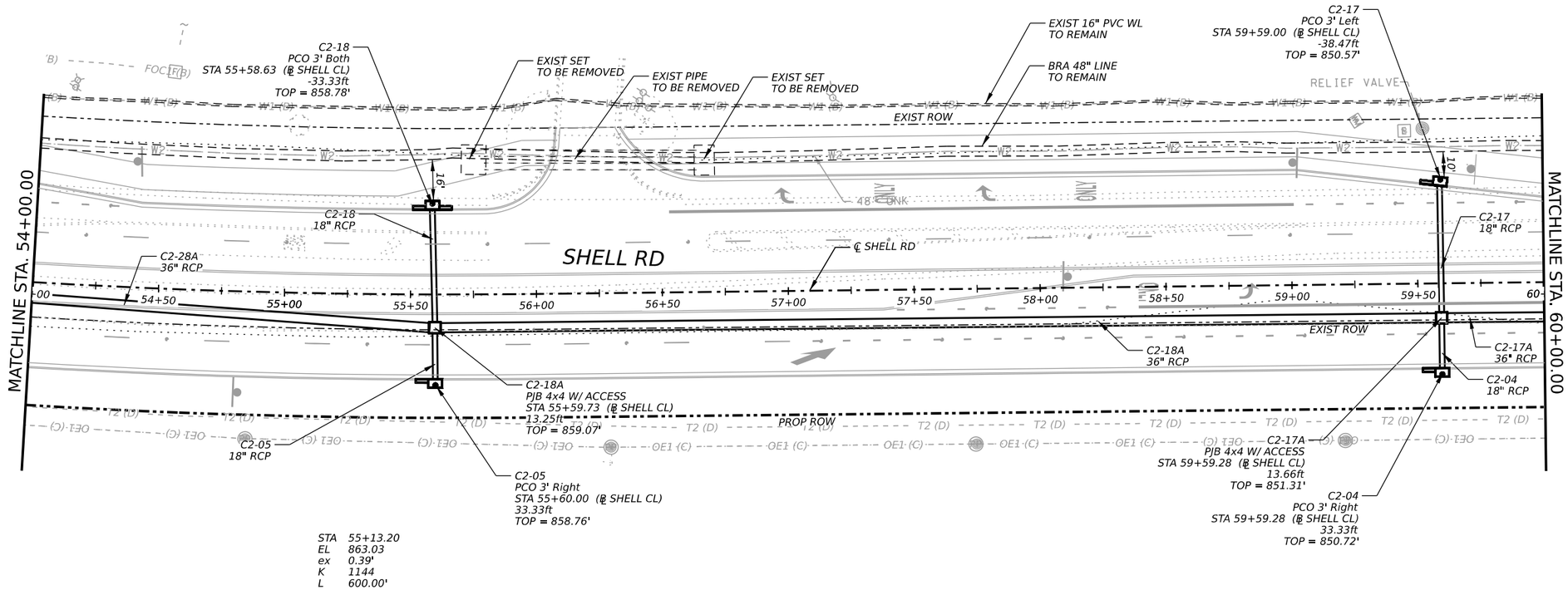

NOTES:
- GUTTER FLOW DOES NOT CROSS STREETS WHEN 25-YEAR PEAK FLOWS EXCEED 4 CFS.
- 25-YEAR PEAK FLOWS DO NOT EXCEED STREET CAPACITY.
- 100-YEAR PEAK FLOWS DO NOT EXCEED ROW CAPACITY.
- SAG INLET SPREAD WAS CALCULATED ASSUMING HALF OF THE LONGITUDINAL SLOPE BOTH LEFT AND RIGHT.
- CONTRACTOR TO LOCATE AND VERIFY UTILITIES PRIOR TO CONSTRUCTION.

SCALE: 1" = 50' H
1" = 5' V

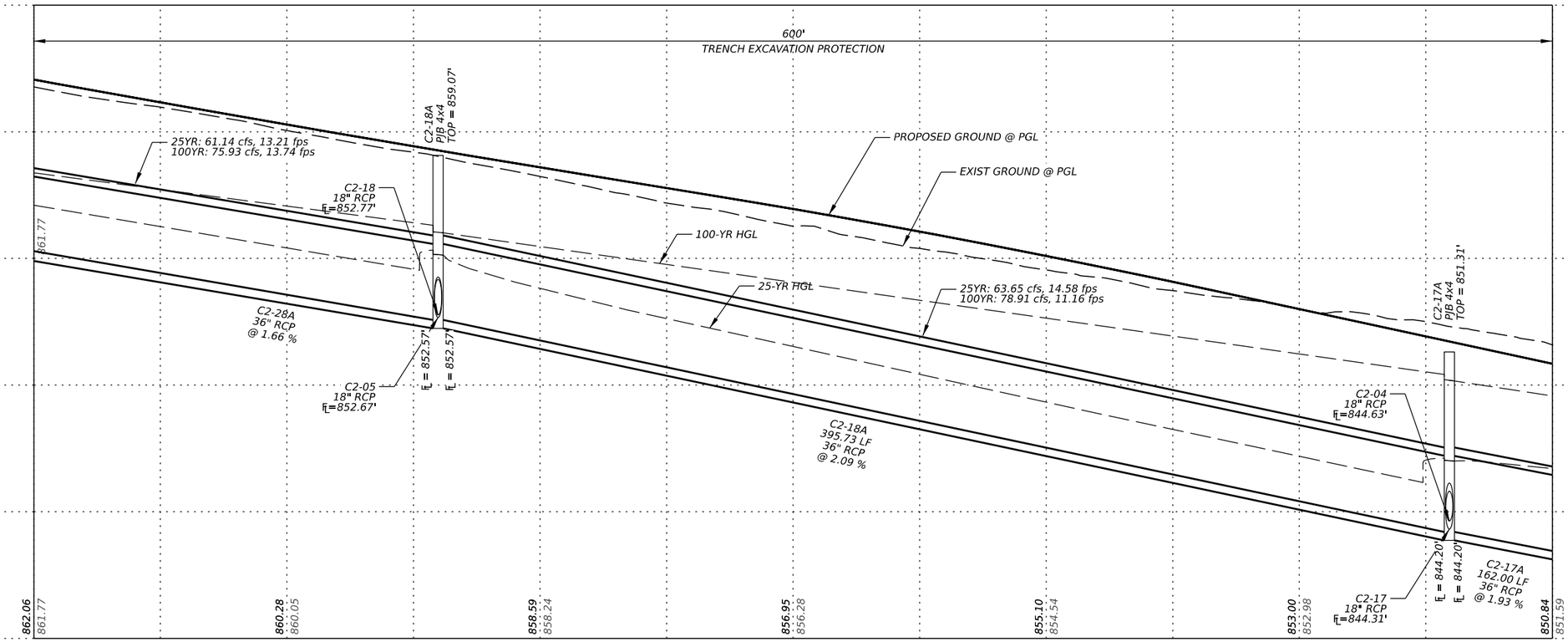

STATE OF TEXAS
ALEXIS WOFFENDEN
117162
LICENSED
PROFESSIONAL ENGINEER
2/14/2025

EST. 1848 GEORGETOWN TEXAS

BGE, Inc.
101 West Louis Henna Blvd, Suite 400, Austin, TX 78728
Tel: 512-879-0400 • www.bgeinc.com
TBPE Registration No. F-1046

SHELL ROAD

STORM SEWER PLAN & PROFILE SYSTEM C2

DATE: 2/24/2025 3:34:46 PM
FILE: G:\TXC\Projects\City Georgetown\10767-00 Shell Road\03 CADD\01 Shts\06-DRNG\SHELL_DRNG_PP10.dgn

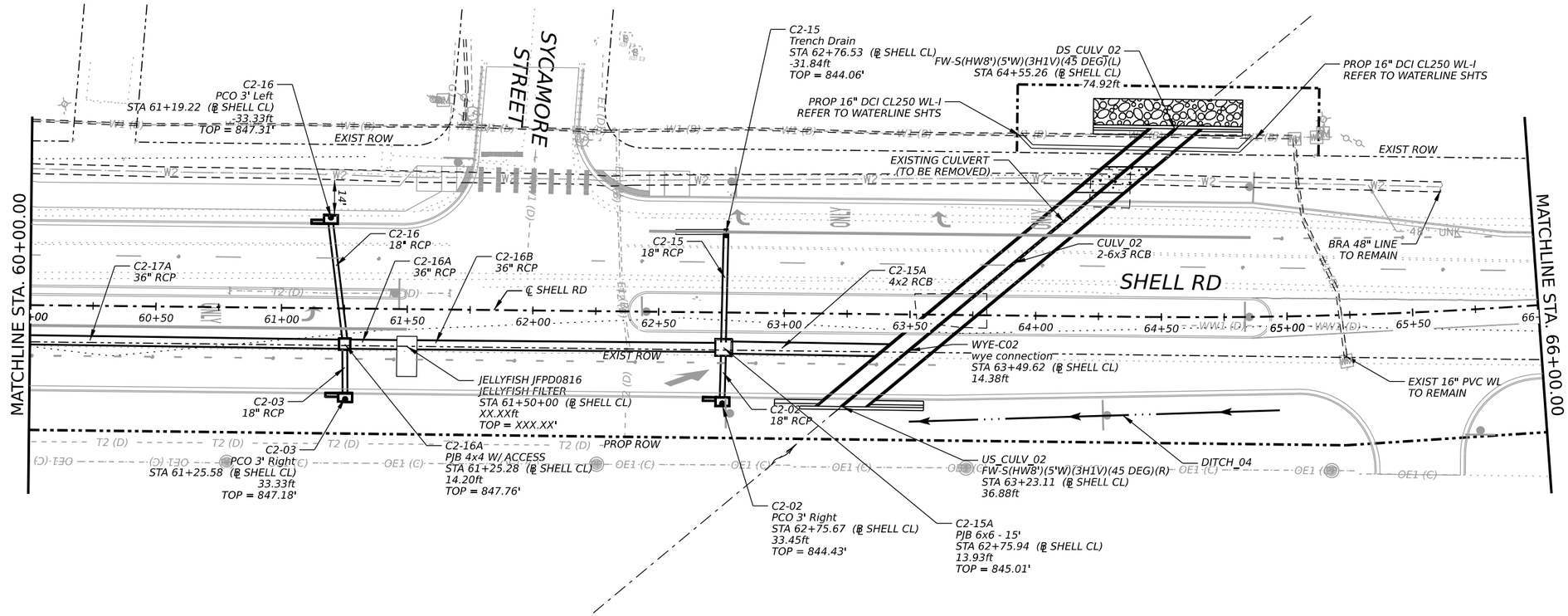

NOTES:
- GUTTER FLOW DOES NOT CROSS STREETS WHEN 25-YEAR PEAK FLOWS EXCEED 4 CFS.
- 25-YEAR PEAK FLOWS DO NOT EXCEED STREET CAPACITY.
- 100-YEAR PEAK FLOWS DO NOT EXCEED ROW CAPACITY.
-SAG INLET SPREAD WAS CALCULATED ASSUMING HALF OF THE LONGITUDINAL SLOPE BOTH LEFT AND RIGHT.
-CONTRACTOR TO LOCATE AND VERIFY UTILITIES PRIOR TO CONSTRUCTION.

0 25 50
SCALE: 1" = 50' H
1" = 5' V

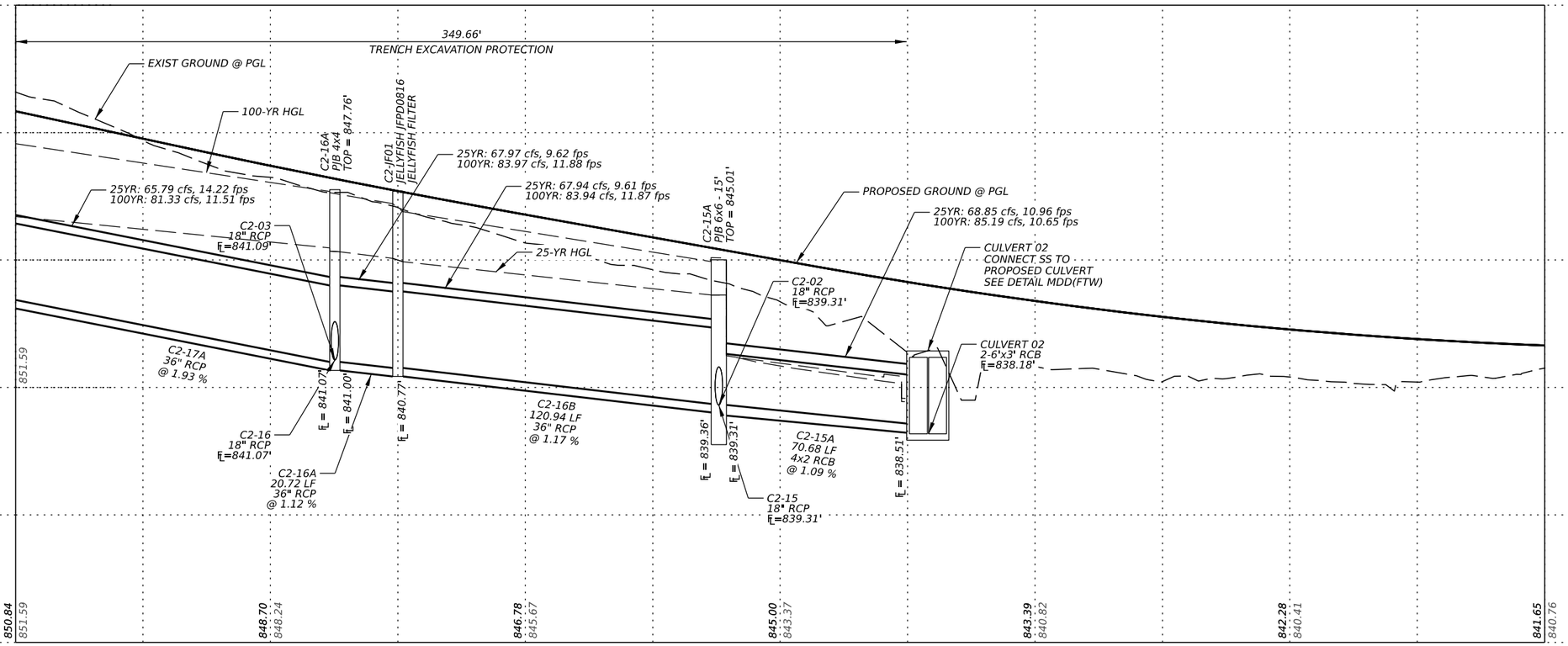

STATE OF TEXAS
ALEXIS WOFFENDEN
117162
LICENSED
PROFESSIONAL ENGINEER
3/14/2025

EST.1848 GEORGETOWN TEXAS

BGE, Inc.
101 West Louis Henna Blvd, Suite 400, Austin, TX 78728
Tel: 512-879-0400 • www.bgeinc.com
TBPE Registration No. F-1046

SHELL ROAD

STORM SEWER PLAN & PROFILE SYSTEM C2

SHEET 11 OF 12

SHEET NO. 171

DATE: 3/14/2025 11:14:06 AM
FILE: G:\TXC\Projects\City Georgetown\10767-00 Shell Road\03 CADD\01 Shts\06-DRNG\SHELL_DRNG_PP11.dgn

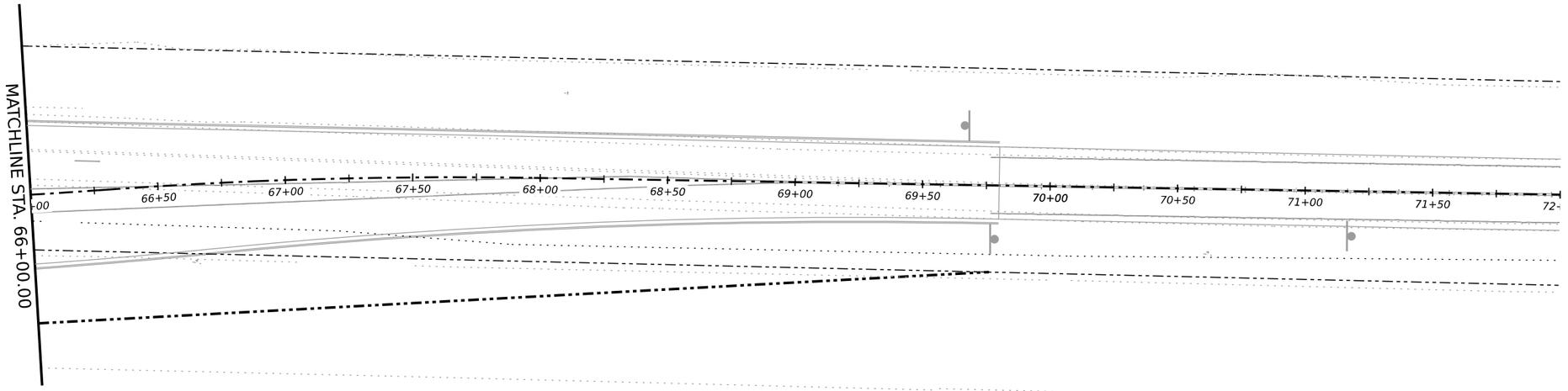

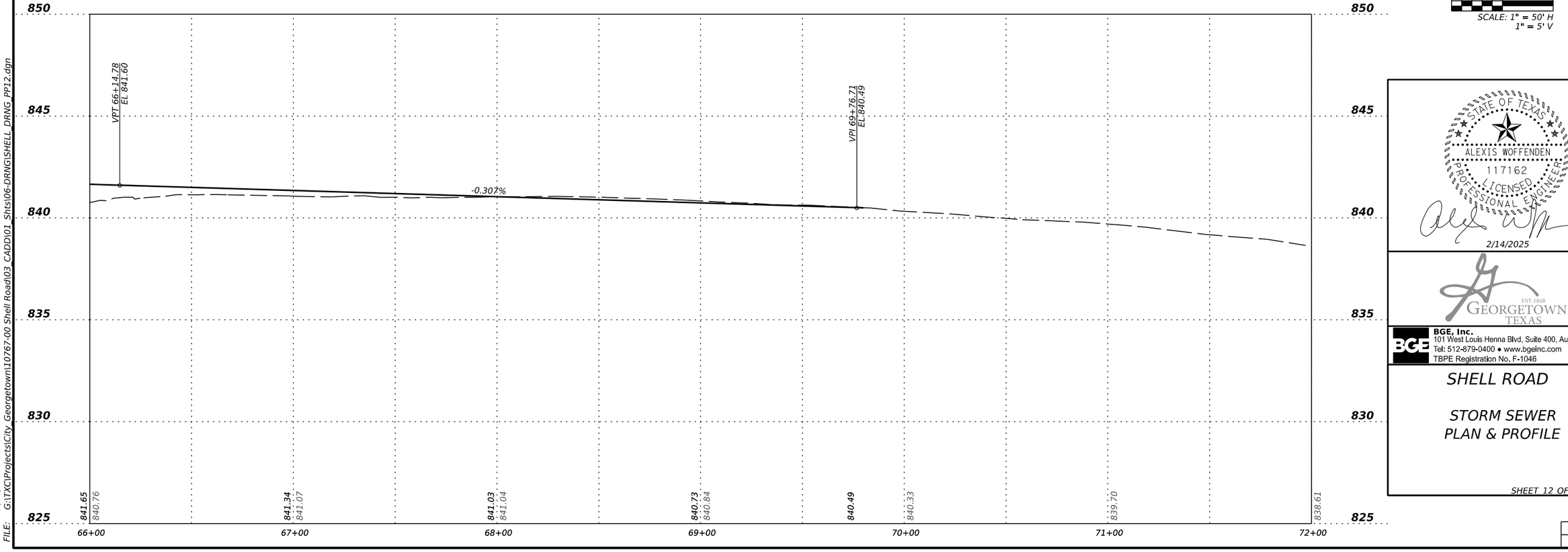

0 25 50

SCALE: 1" = 50' H
1" = 5' V

STATE OF TEXAS
ALEXIS WOFFENDEN
117162
LICENSED
PROFESSIONAL ENGINEER

2/14/2025

EST. 1848
GEORGETOWN
TEXAS

BGE, Inc.
101 West Louis Henna Blvd, Suite 400, Austin, TX 78728
Tel: 512-879-0400 • www.bgeinc.com
TBPE Registration No. F-1046

SHELL ROAD

STORM SEWER PLAN & PROFILE

SHEET 12 OF 12

SHEET NO. 172

DATE: 2/24/2025 3:34:49 PM
FILE: G:\TXC\Projects\City Georgetown\10767-00 Shell Road\03 CADD\01 Shts\06-DRNG\SHELL DRNG PP12.dgn

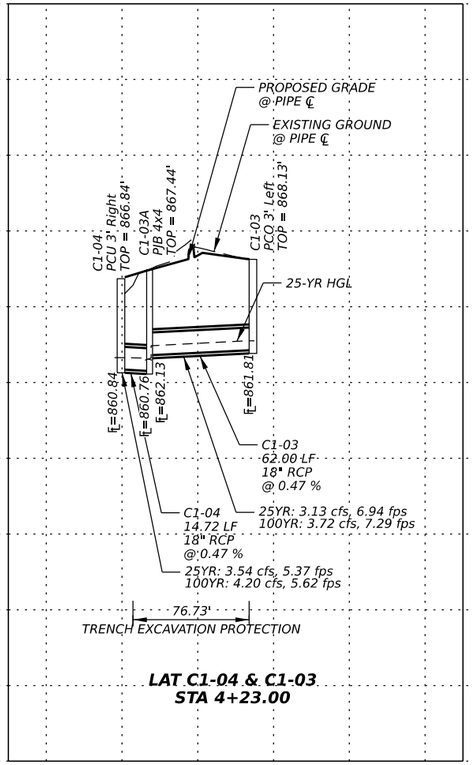

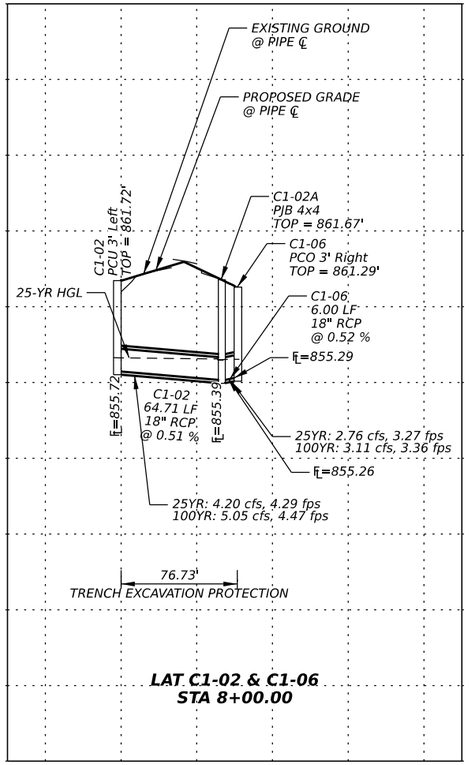

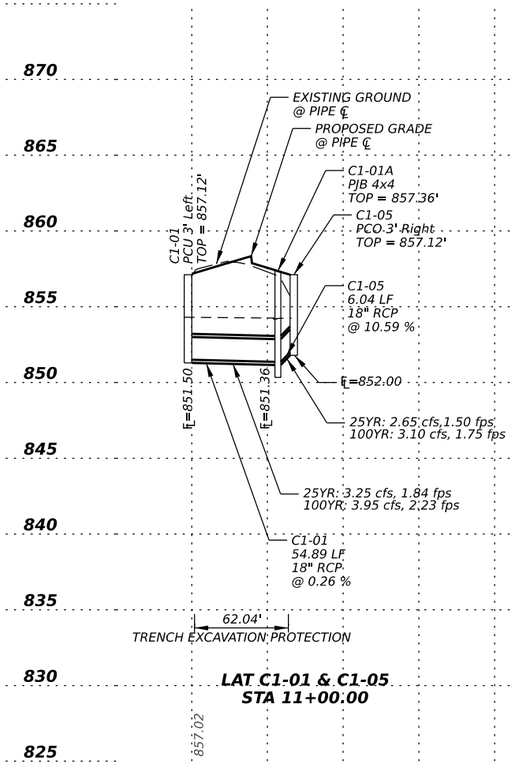

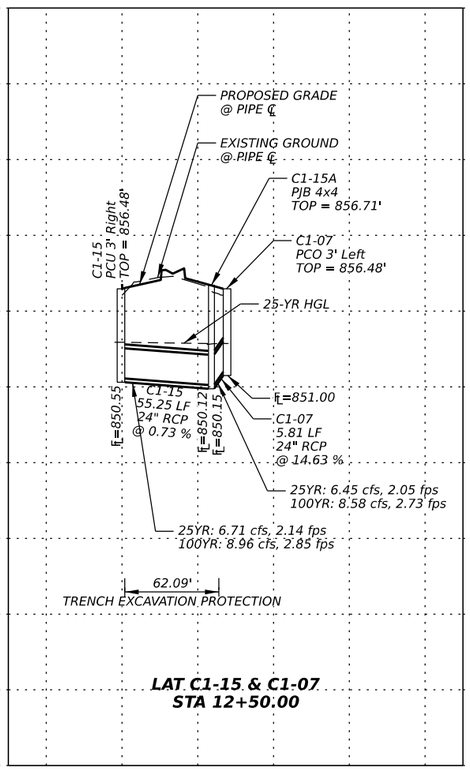

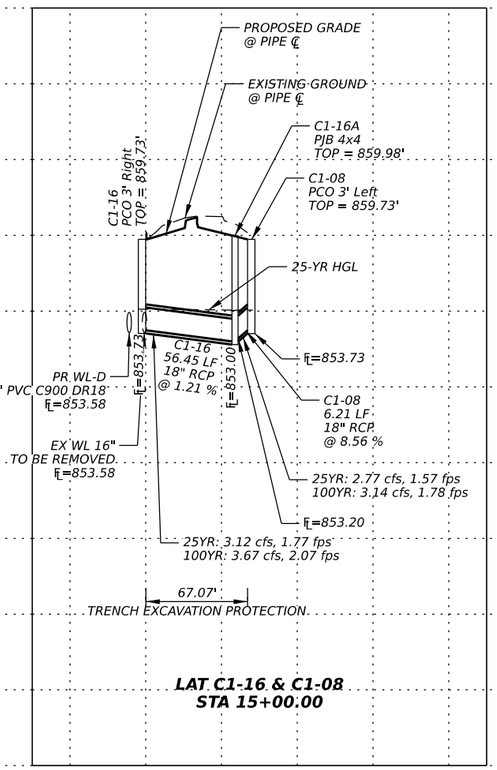

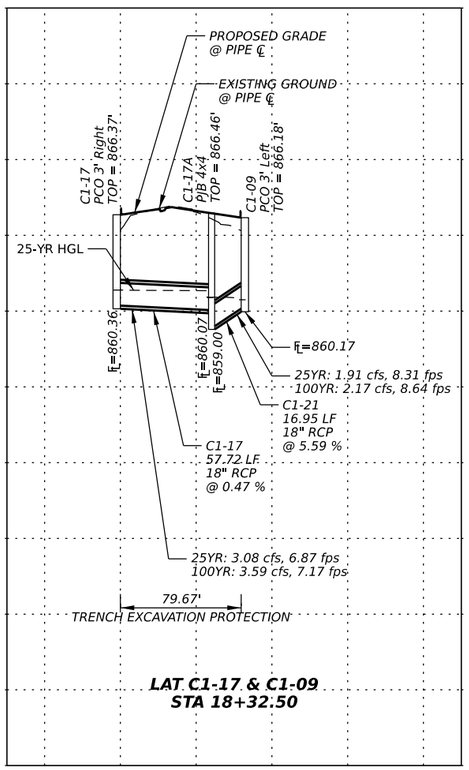

0 50 100
SCALE: 1" = 100' H
1" = 10' V

STATE OF TEXAS
ALEXIS WOFFENDEN
117162
LICENSED
PROFESSIONAL ENGINEER
2/14/2025

GEORGETOWN TEXAS EST.1848

BGE, Inc.
101 West Louis Henna Blvd, Suite 400, Austin, TX 78728
Tel: 512-879-0400 • www.bgeinc.com
TBPE Registration No. F-1046

SHELL ROAD

STORM SEWER LATERALS

SHEET 1 OF 4

SHEET NO. 173

DATE: 2/24/2025 3:34:51 PM
FILE: G:\TXC\Projects\City Georgetown\10767-00 Shell Road\03 CADD\01 Shts\06-DRNG\SHELL DRNG LAT 01.dgn

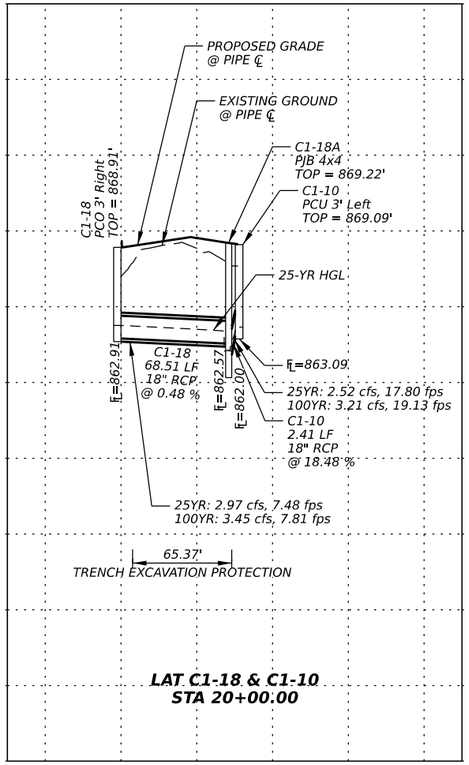

LAT C1-18 & C1-10
STA 20+00.00

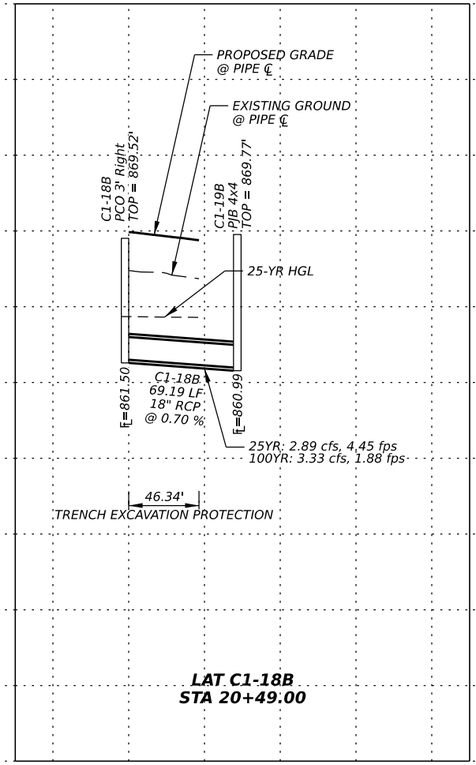

LAT C1-18B
STA 20+49.00

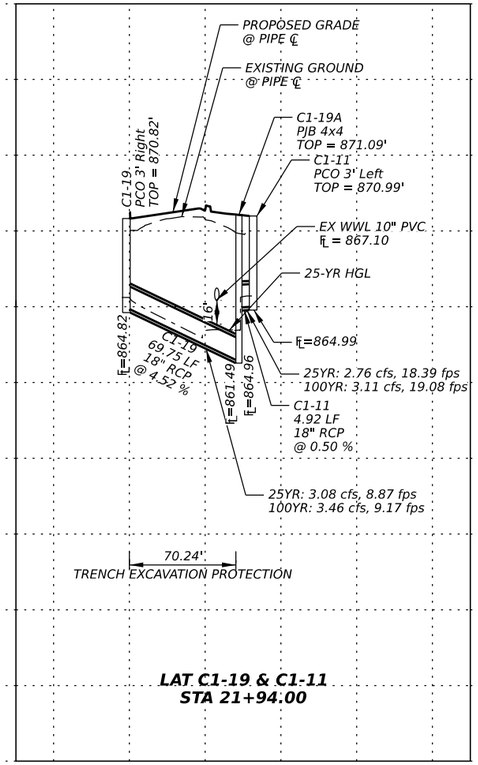

LAT C1-19 & C1-11
STA 21+94.00

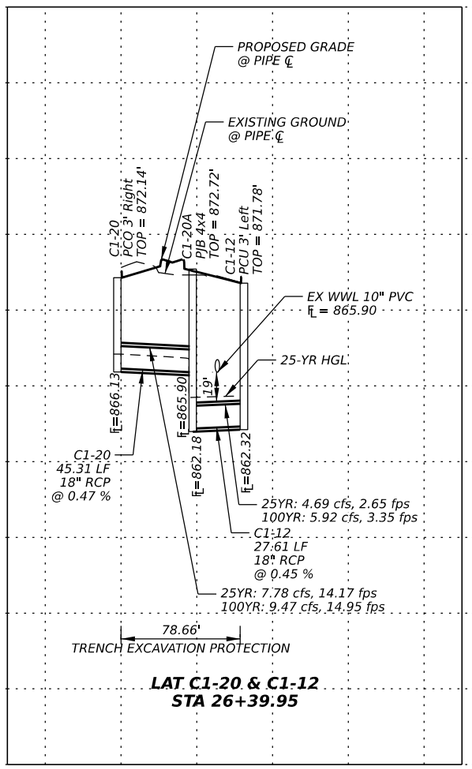

LAT C1-20 & C1-12
STA 26+39.95

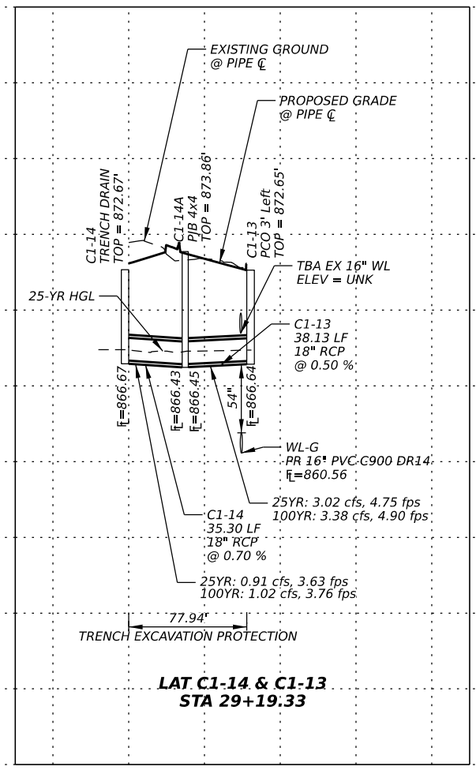

LAT C1-14 & C1-13
STA 29+19.33

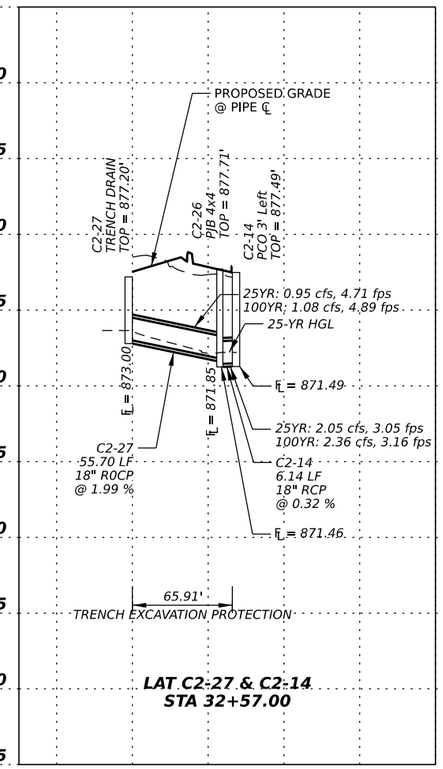

LAT C2-27 & C2-14
STA 32+57.00

0 50 100

SCALE: 1" = 100' H
1" = 10' V

STATE OF TEXAS
ALEXIS WOFFENDEN
117162
LICENSED
PROFESSIONAL ENGINEER
2/14/2025

EST. 1848 GEORGETOWN TEXAS

BGE, Inc.
101 West Louis Henna Blvd, Suite 400, Austin, TX 78728
Tel: 512-879-0400 • www.bgeinc.com
TBPE Registration No. F-1046

SHELL ROAD

STORM SEWER LATERALS

SHEET 2 OF 4

SHEET NO. 174

DATE: 2/24/2025 3:34:53 PM
FILE: G:\TXC\Projects\City Georgetown\10767-00 Shell Road\03 CADD\01 Shts\06-DRNG\SHELL_DRNG_LAT 02.dgn

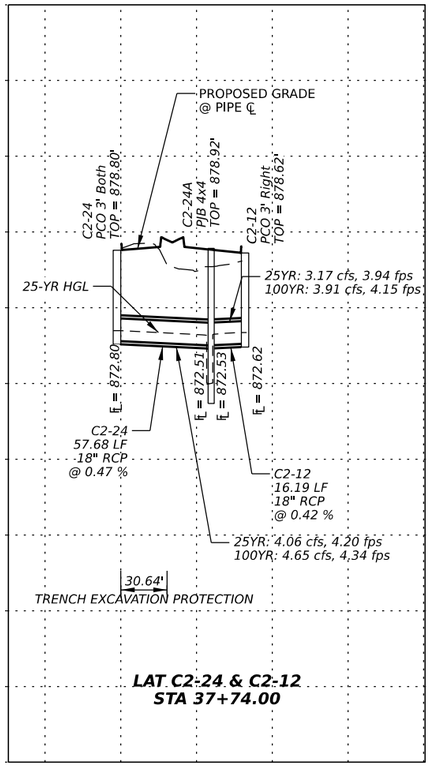

LAT C2-24 & C2-12
STA 37+74.00

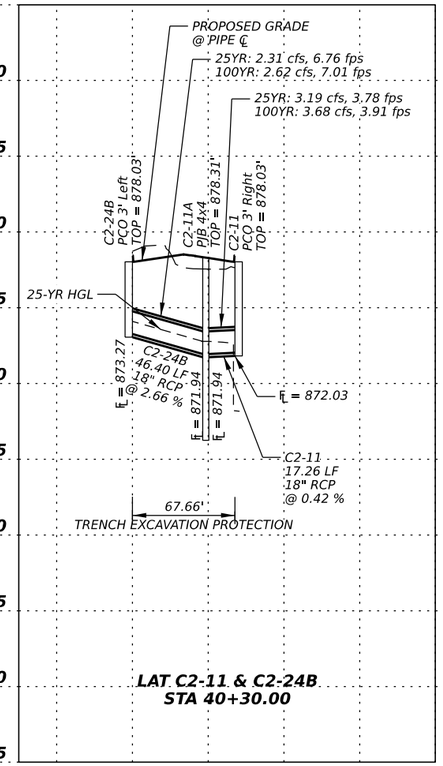

LAT C2-11 & C2-24B
STA 40+30.00

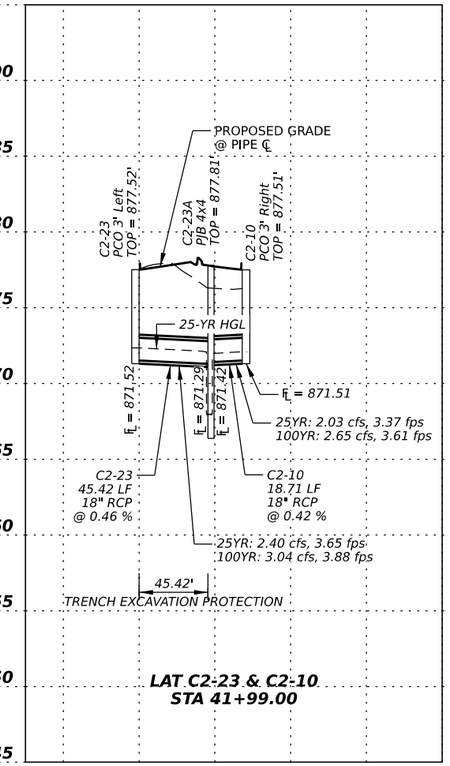

LAT C2-23 & C2-10
STA 41+99.00

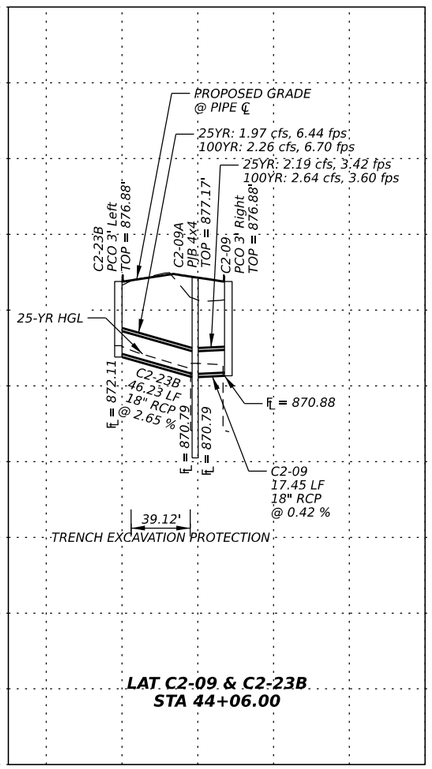

LAT C2-09 & C2-23B
STA 44+06.00

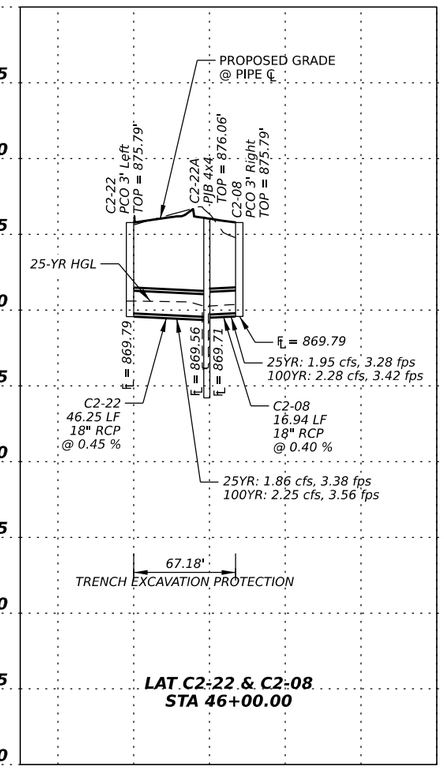

LAT C2-22 & C2-08
STA 46+00.00

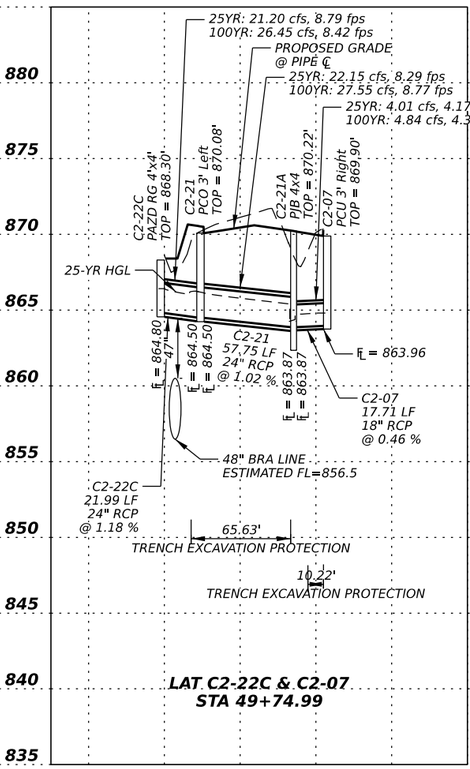

LAT C2-22C & C2-07
STA 49+74.99

0 50 100

SCALE: 1" = 100' H
1" = 10' V

STATE OF TEXAS
ALEXIS WOFFENDEN
117162
LICENSED
PROFESSIONAL ENGINEER

2/14/2025

EST. 1848 GEORGETOWN TEXAS

BGE, Inc.
101 West Louis Henna Blvd, Suite 400, Austin, TX 78728
Tel: 512-879-0400 • www.bgeinc.com
TBPE Registration No. F-1046

SHELL ROAD

STORM SEWER LATERALS

SHEET 3 OF 4

SHEET NO. 175

DATE: 2/24/2025 3:34:54 PM
FILE: G:\TXC\Projects\City Georgetown\10767-00 Shell Road\03 CADD\01 Shts\06-DRNG\SHELL_DRNG_LAT 03.dgn

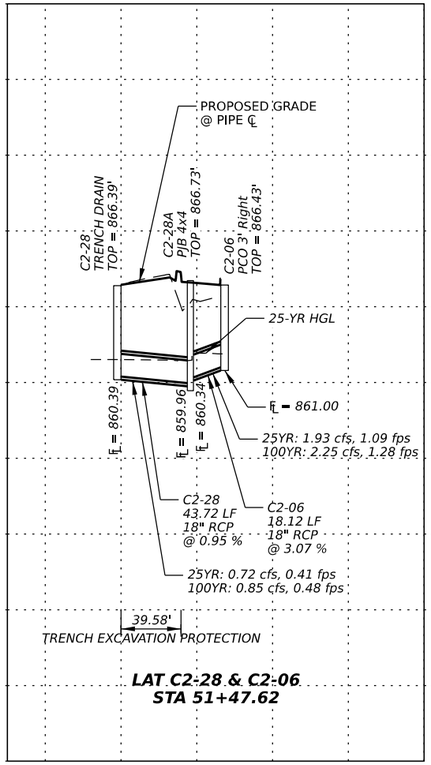

LAT C2-28 & C2-06
STA 51+47.62

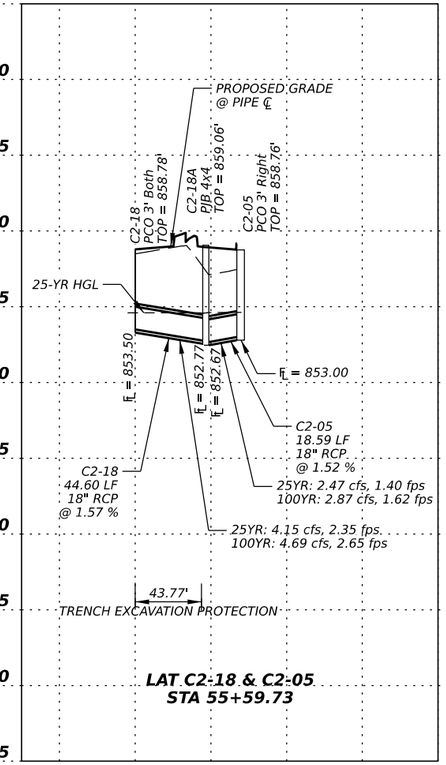

LAT C2-18 & C2-05
STA 55+59.73

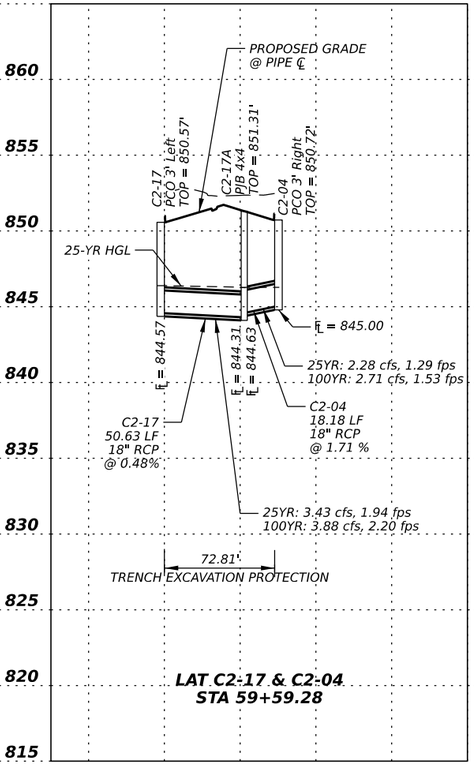

LAT C2-17 & C2-04
STA 59+59.28

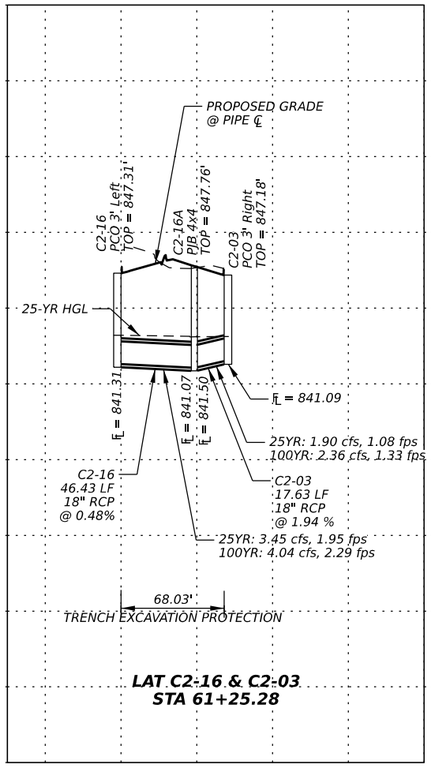

LAT C2-16 & C2-03
STA 61+25.28

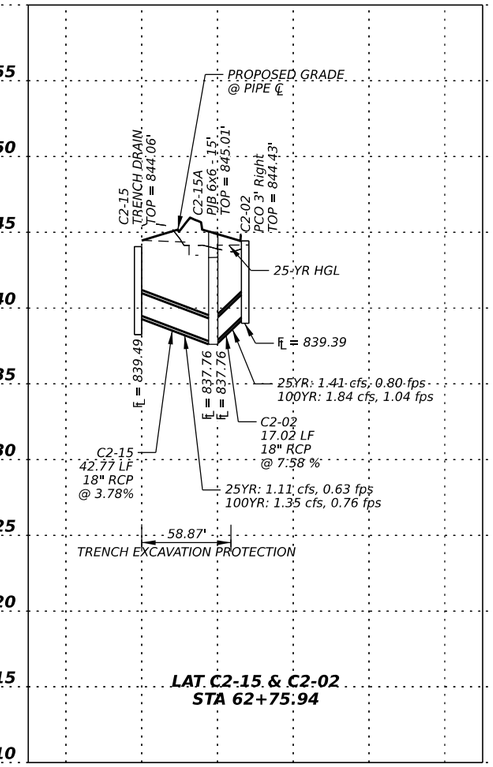

LAT C2-15 & C2-02
STA 62+75.94

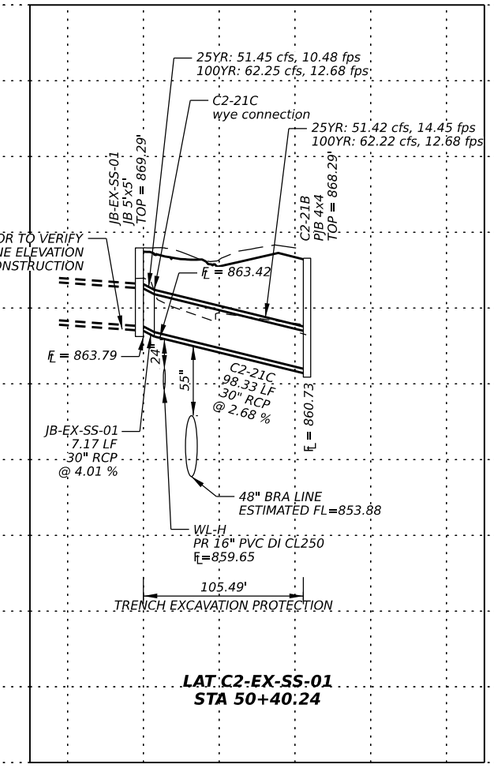

LAT C2-EX-SS-01
STA 50+40.24

0 50 100
SCALE: 1" = 100' H
1" = 10' V

STATE OF TEXAS
ALEXIS WOFFENDEN
117162
LICENSED
PROFESSIONAL ENGINEER

3/14/2025

EST.1848
GEORGETOWN
TEXAS

BGE, Inc.
101 West Louis Henna Blvd, Suite 400, Austin, TX 78728
Tel: 512-879-0400 • www.bgeinc.com
TBPE Registration No. F-1046

SHELL ROAD

STORM SEWER LATERALS

SHEET 4 OF 4

SHEET NO. 176

DATE: 3/14/2025 11:08:11 AM
FILE: G:\TXC\Projects\City Georgetown\10767-00 Shell Road\03 CADD\01 Shts\06-DRNG\SHELL_DRNG_LAT 04.dgn

EXISTING

HY-8 VERSION 7.60 EXISTING CULVERT ANALYSIS SHELL RD CULVERT_01

CULVERT SUMMARY TABLE: CULVERT_01 STA 12+01

	Discharge Names	Total Discharge (cfs)	Culvert Discharge (cfs)	Headwater Elevation (ft)	Inlet Control Depth (ft)	Outlet Control Depth (ft)	Flow Type	Normal Depth (ft)	Critical Depth (ft)	Outlet Depth (ft)	Tailwater Depth (ft)	Outlet Velocity (ft/s)	Tailwater Velocity (ft/s)
	2-YEAR	219.90	219.90	852.87	2.78	0.0*	1-JS1t	0.84	1.67	3.57	3.57	3.43	4.33
	10-YEAR	412.30	412.30	854.37	4.28	0.0*	5-S2n	1.29	2.54	1.32	4.51	17.36	5.06
*	25-YEAR	529.00	529.00	855.32	5.23	0.0*	5-JS1f	1.53	2.99	4.00	4.96	7.35	5.39
**	100-YEAR	715.70	715.70	857.14	7.05	1.30	5-S2n	1.89	3.66	1.97	5.55	20.16	5.81

* DESIGN FLOW IS 25-YEAR EVENT.
** CHECK FLOW IS 100-YEAR EVENT.

****

Straight Culvert

Inlet Elevation (invert): 850.09 ft, Outlet Elevation (invert): 841.78 ft

Culvert Length: 351.10 ft, Culvert Slope: 0.0237

****

SITE DATA - CULVERT_01 STA 12+01

Site Data Option: Culvert Invert Data
Inlet Station: 0.00 ft
Inlet Elevation: 850.09 ft
Outlet Station: 351.00 ft
Outlet Elevation: 841.78 ft
Number of Barrels: 3

TAILWATER CHANNEL DATA - CULVERT_01 EX

Tailwater Channel Option: Triangular Channel
Side Slope (H:V): 4.00 (_:1)
Channel Slope: 0.0050
Channel Manning's n: 0.0350
Channel Invert Elevation: 841.78 ft

CULVERT DATA SUMMARY - CULVERT_01 STA 12+01

Barrel Shape: Concrete Box
Barrel Span: 6.00 ft
Barrel Rise: 4.00 ft
Barrel Material: Concrete
Embedment: 0.00 in
Barrel Manning's n: 0.0120
Culvert Type: Straight
Inlet Configuration: 1:1 Bevel (45º flare) Wingwall
Inlet Depression: None

ROADWAY DATA FOR CROSSING - CULVERT_01 EX

Roadway Profile Shape: Constant Roadway Elevation
Crest Length: 100.00 ft
Crest Elevation: 857.45 ft
Roadway Surface: Paved
Roadway Top Width: 51.00 ft

EXISTING CULVERT FLOW TABLE AT CROSSING CULVERT_01

SUMMARY OF CULVERT FLOWS AT CROSSING: CULVERT_01 EX

Headwater Elevation (ft)	Discharge Names	Total Discharge (cfs)	CULVERT_01 STA 12+01 Discharge (cfs)	Roadway Discharge (cfs)	Iterations
852.87	2-YEAR	219.90	219.90	0.00	1.00
854.37	10-YEAR	412.30	412.30	0.00	1.00
855.32	25-YEAR	529.00	529.00	0.00	1.00
857.14	100-YEAR	715.70	715.70	0.00	1.00
857.45	Overtopping	743.05	743.05	0.00	Overtopping

PROPOSED

HY-8 VERSION 7.60 PROPOSED CULVERT ANALYSIS SHELL RD CULVERT_01

CULVERT SUMMARY TABLE: CULVERT_01 STA 12+01

	Discharge Names	Total Discharge (cfs)	Culvert Discharge (cfs)	Headwater Elevation (ft)	Inlet Control Depth (ft)	Outlet Control Depth (ft)	Flow Type	Normal Depth (ft)	Critical Depth (ft)	Outlet Depth (ft)	Tailwater Depth (ft)	Outlet Velocity (ft/s)	Tailwater Velocity (ft/s)
	2-YEAR	217.90	217.90	852.74	2.50	0.0*	1-JS1t	0.85	1.66	3.55	3.55	3.41	4.32
	10-YEAR	406.20	406.20	854.17	3.93	0.0*	1-S2n	1.29	2.51	1.29	4.49	17.56	5.04
*	25-YEAR	520.30	520.30	855.02	4.78	0.0*	5-JS1f	1.52	2.96	4.00	4.92	7.23	5.36
**	100-YEAR	706.30	706.30	856.55	6.31	0.65	5-S2n	1.89	3.63	1.97	5.52	19.96	5.79

* DESIGN FLOW IS 25-YEAR EVENT.
** CHECK FLOW IS 100-YEAR EVENT.

****

Straight Culvert

Inlet Elevation (invert): **850.24** ft, Outlet Elevation (invert): 841.78 ft

Culvert Length: **367.00** ft, Culvert Slope: 0.0222

****

SITE DATA - CULVERT_01 STA 12+01

Site Data Option: Culvert Invert Data
Inlet Station: 0.00 ft
Inlet Elevation: 850.24 ft
Outlet Station: 367.00 ft
Outlet Elevation: 841.78 ft
Number of Barrels: 3

TAILWATER CHANNEL DATA - CULVERT_01 PR

Tailwater Channel Option: Triangular Channel
Side Slope (H:V): 4.00 (_:1)
Channel Slope: 0.0050
Channel Manning's n: 0.0350
Channel Invert Elevation: 841.78 ft

CULVERT DATA SUMMARY - CULVERT_01 STA 12+01

Barrel Shape: Concrete Box
Barrel Span: 6.00 ft
Barrel Rise: 4.00 ft
Barrel Material: Concrete
Embedment: 0.00 in
Barrel Manning's n: 0.0120
Culvert Type: Straight
Inlet Configuration: 1:1 Bevel (45º flare) Wingwall
Inlet Depression: None

ROADWAY DATA FOR CROSSING - CULVERT_01 PR

Roadway Profile Shape: Constant Roadway Elevation
Crest Length: 100.00 ft
Crest Elevation: 857.69 ft
Roadway Surface: Paved
Roadway Top Width: 90.00 ft

PROPOSED CULVERT FLOW TABLE AT CROSSING CULVERT_01

SUMMARY OF CULVERT FLOWS AT CROSSING: CULVERT_01 PR

Headwater Elevation (ft)	Discharge Names	Total Discharge (cfs)	CULVERT_01 STA 12+01 Discharge (cfs)	Roadway Discharge (cfs)	Iterations
852.74	2-YEAR	217.90	217.90	0.00	1.00
854.17	10-YEAR	406.20	406.20	0.00	1.00
855.02	25-YEAR	520.30	520.30	0.00	1.00
856.55	100-YEAR	706.30	706.30	0.00	1.00
857.69	Overtopping	825.66	825.66	0.00	Overtopping

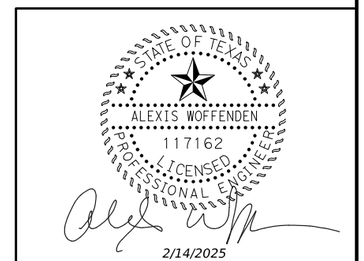

2/14/2025

EST.1848 GEORGETOWN TEXAS

BGE, Inc.
101 West Louis Henna Blvd, Suite 400, Austin, TX 78728
Tel: 512-879-0400 • www.bgeinc.com
TBPE Registration No. F-1046

SHELL ROAD

HYDRAULIC DATA
CULVERT 01

DATE: 2/24/2025 3:34:55 PM
FILE: G:\TXC\Projects\City Georgetown\10767-00 Shell Road\03 CADD\01 Shts\06-DRNG\SHELL_DRNG_HYD_DATA_02.dgn

EXISTING

HY-8 VERSION 7.60 EXISTING CULVERT ANALYSIS SHELL RD CULVERT_02

CULVERT SUMMARY TABLE: CULVERT_02 STA 63+67

	Discharge Names	Total Discharge (cfs)	Culvert Discharge (cfs)	Headwater Elevation (ft)	Inlet Control Depth (ft)	Outlet Control Depth (ft)	Flow Type	Normal Depth (ft)	Critical Depth (ft)	Outlet Depth (ft)	Tailwater Depth (ft)	Outlet Velocity (ft/s)	Tailwater Velocity (ft/s)
	2-YEAR	74.30	74.30	843.57	4.44	1.88	5-S2n	2.01	2.61	2.04	2.37	11.52	3.30
	10-YEAR	151.90	86.68	844.23	5.10	2.96	5-S2n	2.21	2.82	2.24	3.10	11.99	3.94
*	25-YEAR	200.30	89.30	844.38	5.25	3.44	5-S2n	2.25	2.87	2.28	3.44	12.08	4.23
**	100-YEAR	277.40	92.76	844.59	5.46	4.07	5-S2n	2.30	2.92	2.33	3.89	12.19	4.58

* DESIGN FLOW IS 25-YEAR EVENT.
** CHECK FLOW IS 100-YEAR EVENT.

****

Straight Culvert

Inlet Elevation (invert): 839.13 ft, Outlet Elevation (invert): 836.77 ft

Culvert Length: 66.04 ft, Culvert Slope: 0.0358

****

SITE DATA - CULVERT_02 STA 63+67

Site Data Option: Culvert Invert Data
Inlet Station: 0.00 ft
Inlet Elevation: 839.13 ft
Outlet Station: 66.00 ft
Outlet Elevation: 836.77 ft
Number of Barrels: 1

TAILWATER CHANNEL DATA - CULVERT_02 EX

Tailwater Channel Option: Triangular Channel
Side Slope (H:V): 4.00 (_:1)
Channel Slope: 0.0050
Channel Manning's n: 0.0350
Channel Invert Elevation: 836.77 ft

CULVERT DATA SUMMARY - CULVERT_02 STA 63+67

Barrel Shape: Circular
Barrel Diameter: 4.00 ft
Barrel Material: Corrugated Steel
Embedment: 0.00 in
Barrel Manning's n: 0.0240
Culvert Type: Straight
Inlet Configuration: Thin Edge Projecting
Inlet Depression: None

ROADWAY DATA FOR CROSSING - CULVERT_02 EX

Roadway Profile Shape: Constant Roadway Elevation
Crest Length: 100.00 ft
Crest Elevation: 843.87 ft
Roadway Surface: Paved
Roadway Top Width: 27.00 ft

EXISTING CULVERT FLOW TABLE AT CROSSING CULVERT_02

SUMMARY OF CULVERT FLOWS AT CROSSING: CULVERT_02 EX

Headwater Elevation (ft)	Discharge Names	Total Discharge (cfs)	CULVERT_02 STA 63+67 Discharge (cfs)	Roadway Discharge (cfs)	Iterations
843.57	2-YEAR	74.30	74.30	0.00	1.00
844.23	10-YEAR	151.90	86.68	65.15	6.00
844.38	25-YEAR	200.30	89.30	110.81	4.00
844.59	100-YEAR	277.40	92.76	184.24	3.00
843.87	Overtopping	80.12	80.12	0.00	Overtopping

PROPOSED

HY-8 VERSION 7.60 PROPOSED CULVERT ANALYSIS SHELL RD CULVERT_02

CULVERT SUMMARY TABLE: CULVERT_02 STA 63+67

	Discharge Names	Total Discharge (cfs)	Culvert Discharge (cfs)	Headwater Elevation (ft)	Inlet Control Depth (ft)	Outlet Control Depth (ft)	Flow Type	Normal Depth (ft)	Critical Depth (ft)	Outlet Depth (ft)	Tailwater Depth (ft)	Outlet Velocity (ft/s)	Tailwater Velocity (ft/s)
	2-YEAR	76.60	76.60	840.43	1.83	0.49	1-JS1t	0.69	1.08	2.40	2.40	2.66	3.32
	10-YEAR	153.50	153.50	841.50	2.90	1.67	1-JS1f	1.09	1.72	3.00	3.12	4.26	3.95
*	25-YEAR	200.90	200.90	842.13	3.53	2.45	5-JS1f	1.31	2.06	3.00	3.45	5.58	4.23
**	100-YEAR	276.90	276.90	843.30	4.70	3.86	5-JS1f	1.64	2.55	3.00	3.89	7.69	4.58

* DESIGN FLOW IS 25-YEAR EVENT.
** CHECK FLOW IS 100-YEAR EVENT.

****

Straight Culvert

Inlet Elevation (invert): 838.60 ft, Outlet Elevation (invert): 836.53 ft

Culvert Length: **173.00** ft, Culvert Slope: 0.0120

****

SITE DATA - CULVERT_02 STA 63+67

Site Data Option: Culvert Invert Data
Inlet Station: 0.00 ft
Inlet Elevation: 838.60 ft
Outlet Station: 173.00 ft
Outlet Elevation: 836.53 ft
Number of Barrels: 2

TAILWATER CHANNEL DATA - CULVERT_02 PR

Tailwater Channel Option: Triangular Channel
Side Slope (H:V): 4.00 (_:1)
Channel Slope: 0.0050
Channel Manning's n: 0.0350
Channel Invert Elevation: 836.53 ft

CULVERT DATA SUMMARY - CULVERT_02 STA 63+67

Barrel Shape: Concrete Box
Barrel Span: 6.00 ft
Barrel Rise: 3.00 ft
Barrel Material: Concrete
Embedment: 0.00 in
Barrel Manning's n: 0.0120
Culvert Type: Straight
Inlet Configuration: Square Edge (90º) Headwall
Inlet Depression: None

ROADWAY DATA FOR CROSSING - CULVERT_02 PR

Roadway Profile Shape: Constant Roadway Elevation
Crest Length: 100.00 ft
Crest Elevation: 844.42 ft
Roadway Surface: Paved
Roadway Top Width: 86.00 ft

PROPOSED CULVERT FLOW TABLE AT CROSSING CULVERT_02

SUMMARY OF CULVERT FLOWS AT CROSSING: CULVERT_02 PR

Headwater Elevation (ft)	Discharge Names	Total Discharge (cfs)	CULVERT_02 STA 63+67 Discharge (cfs)	Roadway Discharge (cfs)	Iterations
840.43	2-YEAR	76.60	76.60	0.00	1.00
841.50	10-YEAR	153.50	153.50	0.00	1.00
842.13	25-YEAR	200.90	200.90	0.00	1.00
843.30	100-YEAR	276.90	276.90	0.00	1.00
844.42	Overtopping	335.64	335.64	0.00	Overtopping

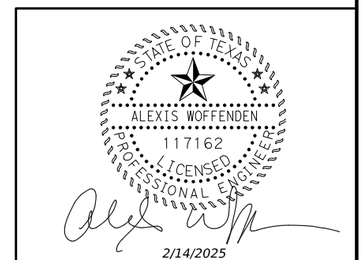

2/14/2025

EST. 1848 GEORGETOWN TEXAS

BGE, Inc.
101 West Louis Henna Blvd, Suite 400, Austin, TX 78728
Tel: 512-879-0400 ● www.bgeinc.com
TBPE Registration No. F-1046

SHELL ROAD

HYDRAULIC DATA
CULVERT 02

DATE: 2/24/2025 3:34:56 PM
FILE: G:\TX\Projects\City Georgetown\10767-00 Shell Road\03 CADD\01 Shts\06-DRNG\SHELL_DRNG_HYD_DATA_03.dgn

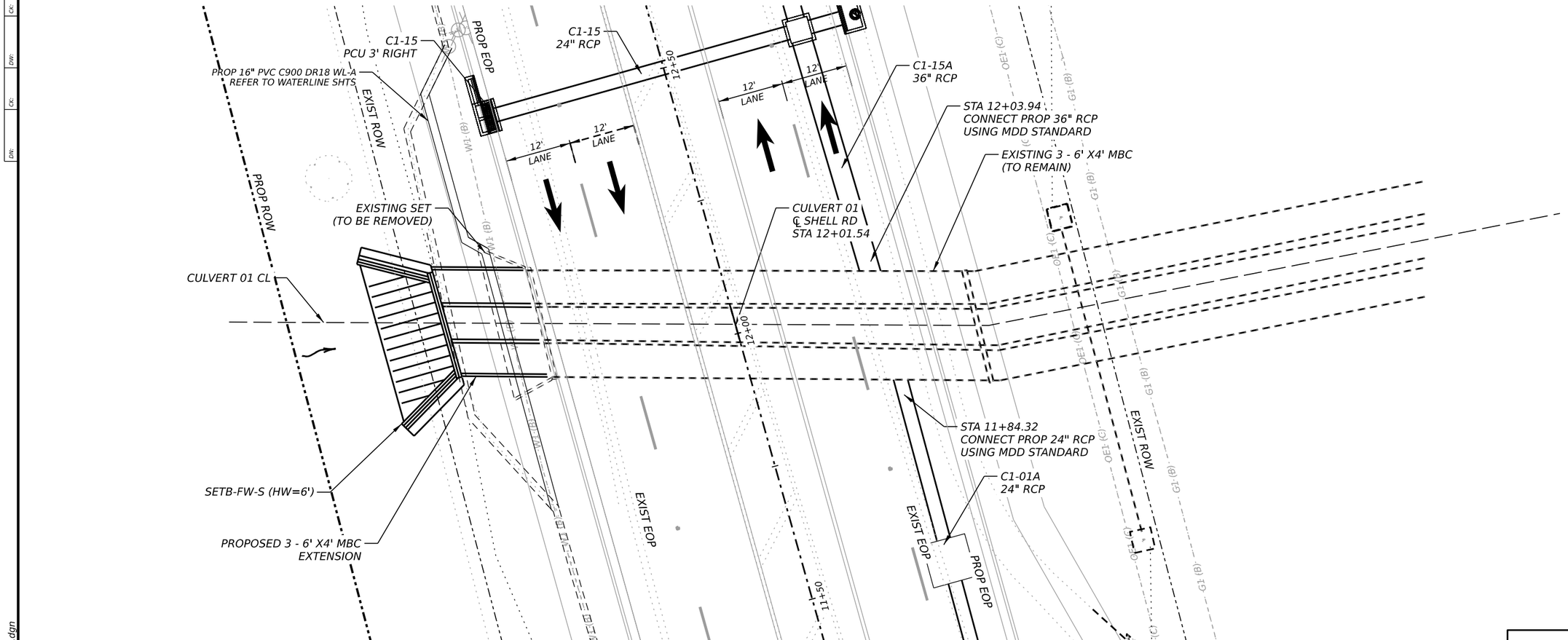

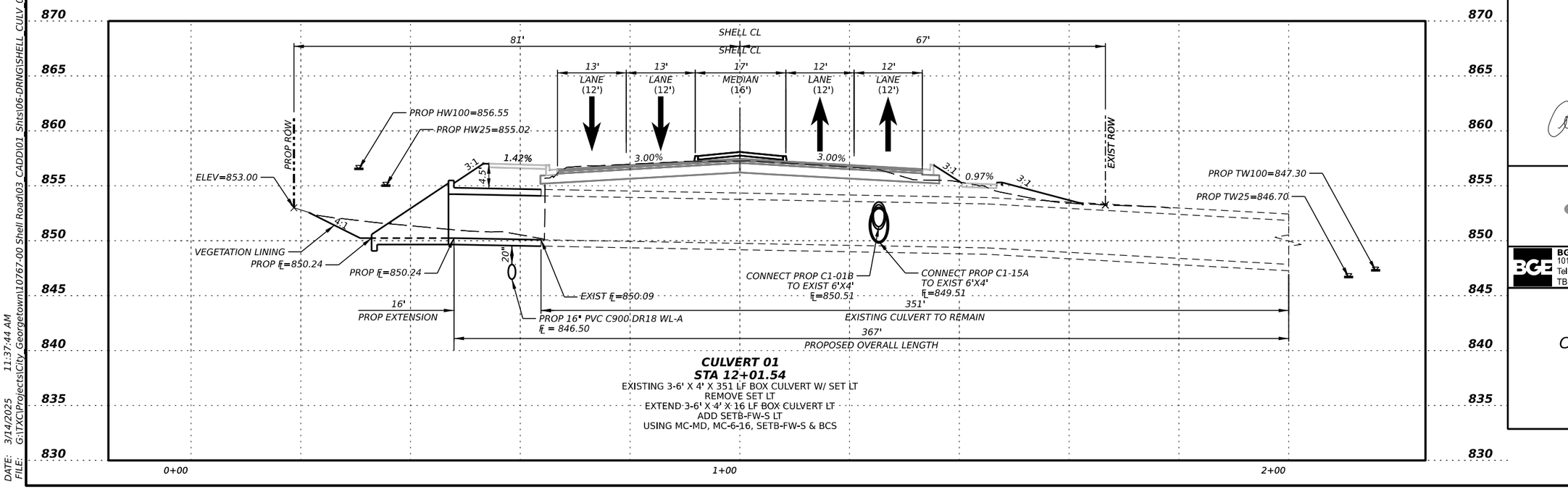

CULVERT 01
STA 12+01.54

EXISTING 3-6' X 4' X 351 LF BOX CULVERT W/ SET LT
REMOVE SET LT
EXTEND 3-6' X 4' X 16 LF BOX CULVERT LT
ADD SETB-FW-S LT
USING MC-MD, MC-6-16, SETB-FW-S & BCS

STATE OF TEXAS
ALEXIS WOFFENDEN
117162
LICENSED
PROFESSIONAL ENGINEER

3/14/2025

GEORGETOWN TEXAS
EST.1848

BGE, Inc.
101 West Louis Henna Blvd, Suite 400, Austin, TX 78728
Tel: 512-879-0400 • www.bgeinc.com
TBPE Registration No. F-1046

SHELL ROAD

CULVERT LAYOUTS
CULVERT 01
STA 12+01

SHEET 1 OF 2

SHEET NO. 179

DATE: 3/14/2025 11:37:44 AM
FILE: G:\TXC\Projects\City Georgetown\10767-00 Shell Road\03_CADD\01_Shts\06-DRNG\SHELL_CULV_01.dgn

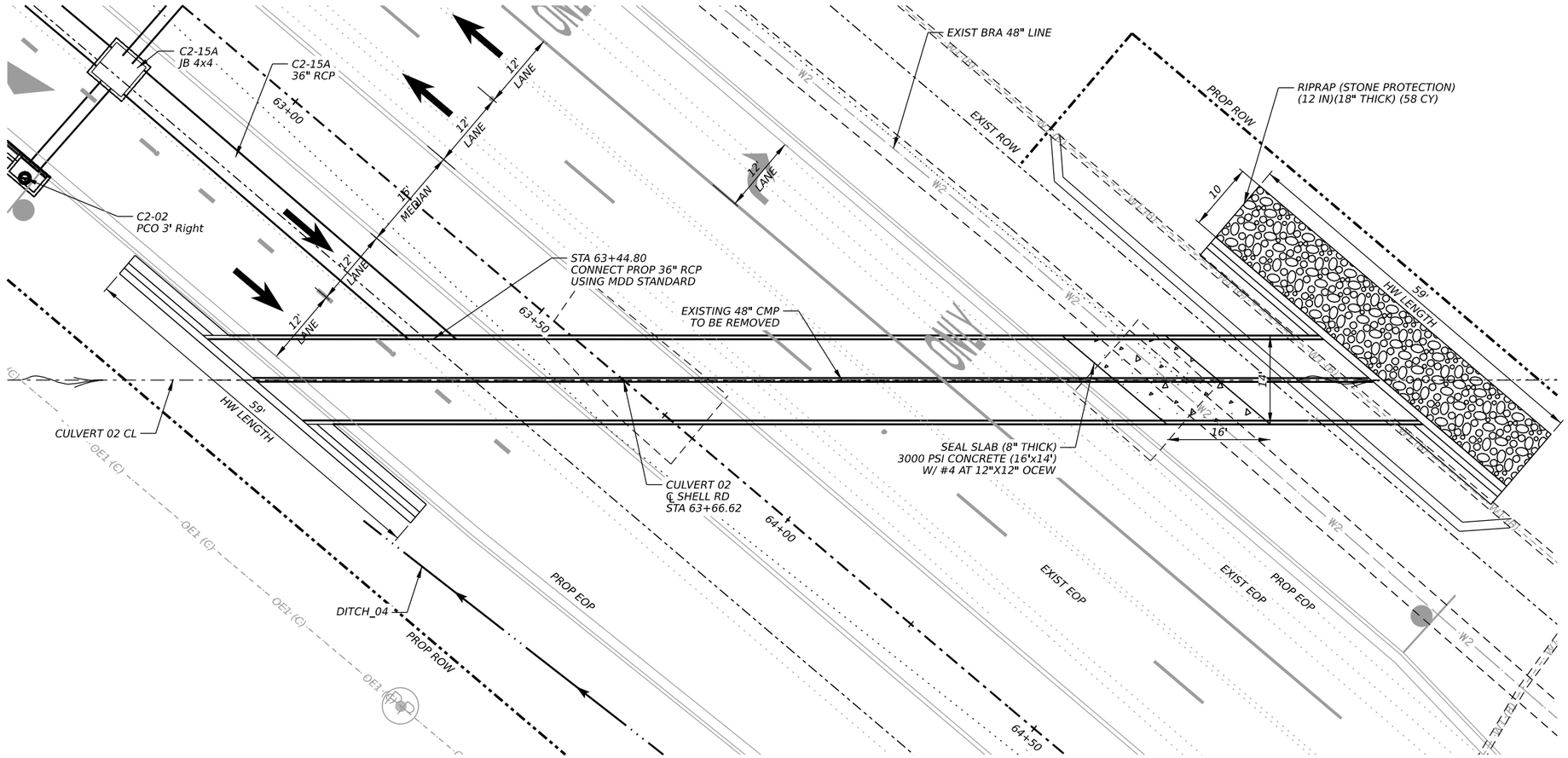

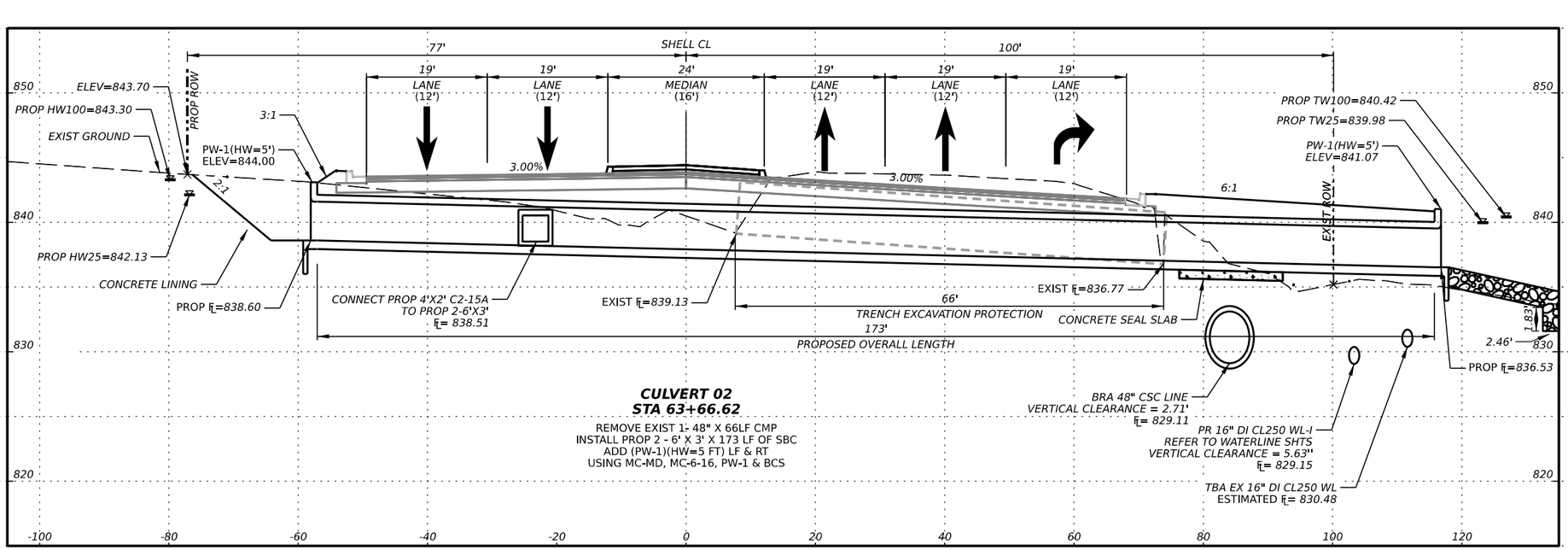

CULVERT 02
STA 63+66.62

REMOVE EXIST 1- 48" X 66LF CMP
INSTALL PROP 2 - 6' X 3' X 173 LF OF SBC
ADD (PW-1)(HW=5 FT) LF & RT
USING MC-MD, MC-6-16, PW-1 & BCS

STATE OF TEXAS
ALEXIS WOFFENDEN
117162
LICENSED
PROFESSIONAL ENGINEER
2/14/2025

GEORGETOWN
EST.1848
TEXAS

BGE, Inc.
101 West Louis Henna Blvd, Suite 400, Austin, TX 78728
Tel: 512-879-0400 • www.bgeinc.com
TBPE Registration No. F-1046

SHELL ROAD

CULVERT LAYOUTS
CULVERT 02
STA 63+67

SHEET 2 OF 2

SHEET NO. 180

DATE: 2/24/2025 3:35:04 PM
FILE: G:\TXC\Projects\City Georgetown\10767-00 Shell Road\03_CADD\01_Shts\06-DRNG\SHELL_CULV_02.dgn

Culvert Station and/or Creek Name followed by applicable end (Lt, Rt or Both)	Description of Box Culvert No. Spans ~ Span X Height	Max Fill Height (Ft)	Applicable Box Culvert Standard (4)	Applicable Wingwall or End Treatment Standard	Skew Angle (0°,15°, 30° or 45°)	Side Slope or Channel Slope Ratio (SL:1)	T Culvert Top Slab Thickness (In)	U Culvert Wall Thickness (In)	C Estimated Curb Height (Ft)	Hw Height of Wingwall (1) (Ft)	A Curb to End of Wingwall (Ft)	B 0 set of End of Wingwall (Ft)	Lw Length of Longest Wingwall (Ft)	Ltw Culvert Toewall Length (Ft)	Atw Anchor Toewall Length (Ft)	Riprap Apron (CY)	Class "C" Conc (Curb) (2) (CY)	Class "C" Conc (Wingwall) (3) (CY)	Total Wingwall Area (SF)
CULVERT 01 - STA 12+01.54 (Lt)	3 ~ 6' X 4'	6'	MC-6-16	SETB-FW-S	15	3:1	9"	7"	1.000	5.500	15.500	8.949	17.898	N/A	28.792	4.9	0.8	7.9	N/A
CULVERT 02 - STA 63+66.62 (Both)	2 ~ 6' X 3'	1.35'	MC-6-16	PW-1	45	3:1	9"	7"	1.000	4.750	N/A	N/A	20.153	19.445	N/A	0.0	1.4	28.4	382

DISCLAIMER:
The use of this standard is governed by the "Texas Engineering Practice Act". No warranty of any kind is made by TxDOT for any purpose whatsoever. TxDOT assumes no responsibility for the conversion by TxDOT for any purpose whatsoever. TxDOT assumes no responsibility for the conversion results or damages resulting from its use.

DATE: 2/14/2025 11:18:02 AM
FILE: G:\TXC\Projects\City_Georgetown\10767-00 Shell Road\03_CADD\01_Shts\06-DRNG\SHTS\bcsstde1-20.dgn

NOTES:
Skew = 0° on SW-0, FW-0, SETB-CD, SETB-SW-0, and SETB-FW-0 standard sheets;
30° maximum for safety end treatment

SL:1 = Horizontal : 1 Vertical
· Side slope at culvert for flared or straight wingwalls.
· Channel slope for parallel wingwalls.
· Slope must be 3:1 or flatter for safety end treatments.

T = Box culvert top slab thickness. Dimension can be found on the applicable box culvert standard sheet.

U = Box culvert wall thickness. Dimension can be found on the applicable box culvert standard sheet.

C = Curb height

See applicable wing or end treatment standard sheets for calculations of Hw, A, B, Lw, Ltw, Atw, and Total Wingwall Area.

Hw = Height of wingwall

A = Distance from face of curb to end of wingwall (not applicable to parallel or straight wingwalls)

B = Offset of end of wingwall (not applicable to parallel or straight wingwalls)

Lw = Length of longest wingwall.

Ltw = Length of culvert toewall (not applicable when using riprap apron)

Atw = Length of anchor toewall (applicable to safety end treatment only)
Total Wingwall Area = Wingwall area in sq. ft. for two wingwalls (one structure end) if Lt or Rt.
Area for four wingwalls (two structure ends) if Both.

(1) Round the wall heights shown to the nearest foot for bidding purposes.

(2) Concrete volume shown is for box culvert curb only. For curbs using the Box Culvert Rail Mounting Details (RAC) standard sheet quantities shown must be increased by a factor of 2.25. If Class S concrete is required for the top slab of the culvert, also provide Class S concrete for the curb. Curb concrete is considered part of the Box Culvert for payment.

(3) Concrete volume shown is total of wings, footings, culvert toewall (if any), anchor toewalls (if any) and wingwall toewalls. Riprap aprons, culverts, and curb quantities are not included.

(4) Regardless of the type of culvert shown on this sheet, the Contractor has the option of furnishing cast-in-place or precast culverts unless otherwise shown elsewhere on the plans. If the Contractor elects to provide culverts of a different type than those shown on this sheet, it is the Contractor's responsibility to make the necessary adjustments to the dimensions and quantities shown.

STATE OF TEXAS
ALEXIS WOFFENDEN
117162
LICENSED
PROFESSIONAL ENGINEER
2/14/2025

SPECIAL NOTE:
This sheet is a supplement to the box culvert standards. It is to be filled out by the culvert specifier and provides dimensions for the construction of the box culvert wingwalls and safety end treatments.

An Excel 2010 spreadsheet to assist in completing this table can be downloaded from the Bridge Standards (English) web page on the TxDOT web site. The completed sheet must be signed, sealed, and dated by a licensed Professional Engineer.

Texas Department of Transportation

Bridge Division Standard

BOX CULVERT SUPPLEMENT
WINGS AND END TREATMENTS

BCS

FILE: bcsstde1-20.dgn	DN: TxDOT	CK: TxDOT	DW: TxDOT	CK: TxDOT
©TxDOT February 2020	CONT	SECT	JOB	HIGHWAY
REVISIONS				
	DIST	COUNTY		SHEET NO.
				181

The Architect/Engineer assumes responsibility for appropriate use of this standard.

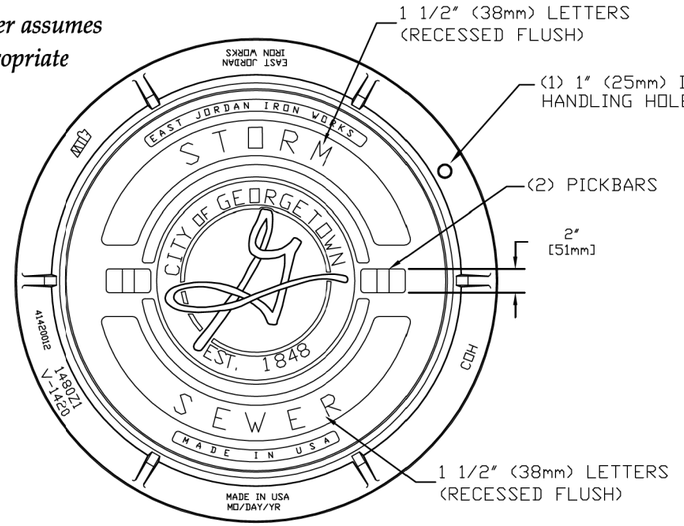

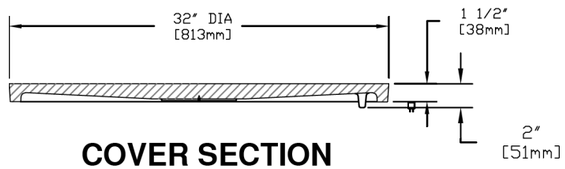

COVER SECTION

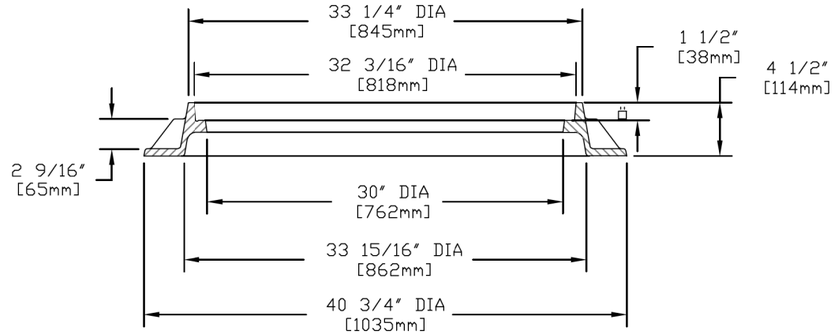

FRAME SECTION

NOTES:

1. STANDARD STORM SEWER MANHOLE SET TO BE EAST JORDAN IRON WORKS, INC. CATALOG NO. 1480A V-1420\1480Z1, COVER TO BE STAMPED WITH "STORM SEWER".
2. STANDARD STORM SEWER MANHOLE SET TO BE HEAVY DUTY LOAD RATED.
3. FOR MORE DETAILED SPECIFICATIONS REFER TO EAST JORDAN IRON WORKS, INC. REFERENCE PRODUCT DRAWING 41420012 00148391.
4. FOR BOLTED STORM SEWER MANHOLE SET REFER TO DETAIL SD11A.

REVISION NOTE: ADOPTED 6/21/2006

EST.1848 GEORGETOWN TEXAS
Georgetown Utility Systems
Your Community Owned Utility

CITY OF GEORGETOWN
CONSTRUCTION STANDARDS AND DETAILS

STANDARD STORM SEWER
MANHOLE SET

DRAWING NAME: SD11

SCALE:	DATE:
NTS	1/2003
DRAWN BY:	APPROVED BY:
MRS	TRB

STATE OF TEXAS
ALEXIS WOFFENDEN
117162
LICENSED
PROFESSIONAL ENGINEER
2/14/2025

EST.1848 GEORGETOWN TEXAS

BGE, Inc.
101 West Louis Henna Blvd, Suite 400, Austin, TX 78728
Tel: 512-879-0400 • www.bgeinc.com
TBPE Registration No. F-1046

SHELL ROAD

CITY OF GEORGETOWN
SD11

SHEET 1 OF 1

SHEET NO. 182

DATE: 2/14/2025 11:18:03 AM
FILE: G:\TXC\Projects\City Georgetown\10767-00 Shell Road\03 CADD\01 Shts\06-DRNG\Stds\SD11.dgn

The Architect/Engineer assumes responsibility for appropriate use of this standard.

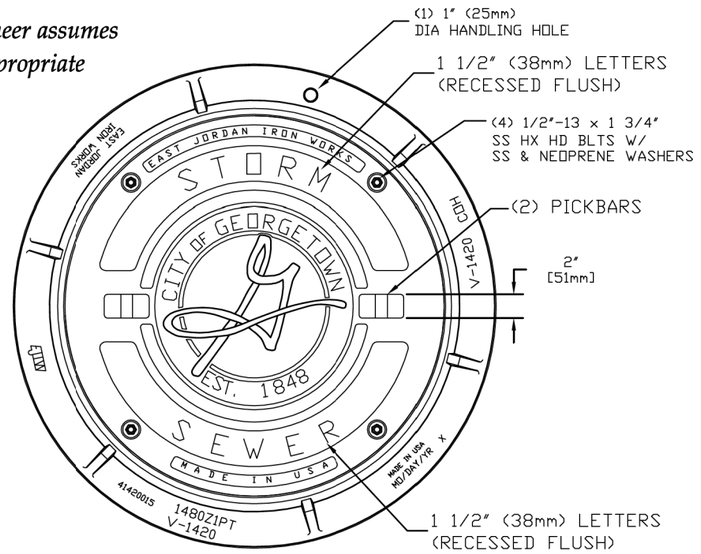

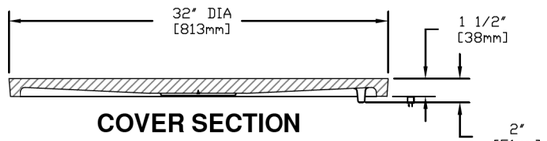

COVER SECTION

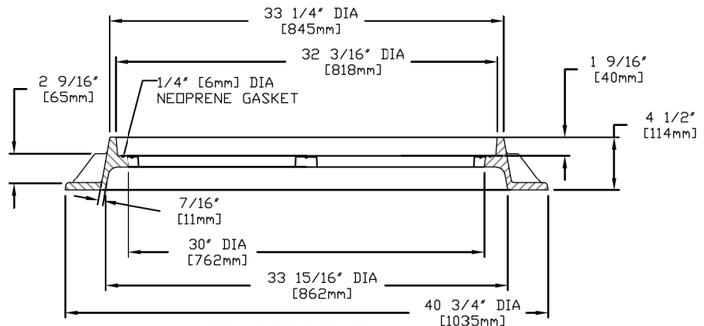

FRAME SECTION

NOTES:

1. BOLTED STORM SEWER MANHOLE SET TO BE EAST JORDAN IRON WORKS, INC. CATALOG NO. 1480APT V-1420\1480Z1PT. COVER TO BE STAMPED WITH "STORM SEWER"
2. BOLTED STORM SEWER MANHOLE SET TO BE HEAVY DUTY LOAD RATED.
3. FOR MORE DETAILED SPECIFICATIONS REFER TO EAST JORDAN IRON WORKS, INC. REFERENCE PRODUCT DRAWING 00148393 41420015.
4. FOR STANDARD STORM SEWER MANHOLE SET REFER TO DETAIL SD11.

REVISION NOTE: *ADOPTED 6/21/2006*

EST. 1848 GEORGETOWN TEXAS
Georgetown Utility Systems
Your Community Owned Utility

CITY OF GEORGETOWN
CONSTRUCTION STANDARDS AND DETAILS

BOLTED STORM SEWER MANHOLE SET

DRAWING NAME: SD11A

SCALE:	DATE:
NTS	1/2006
DRAWN BY:	APPROVED BY:
MRS	TRB

STATE OF TEXAS
ALEXIS WOFFENDEN
117162
LICENSED
PROFESSIONAL ENGINEER
2/14/2025

EST. 1848 GEORGETOWN TEXAS

BGE, Inc.
101 West Louis Henna Blvd, Suite 400, Austin, TX 78728
Tel: 512-879-0400 • www.bgeinc.com
TBPE Registration No. F-1046

SHELL ROAD

CITY OF GEORGETOWN
SD11A

SHEET 1 OF 1

SHEET NO. 183

DATE: 2/14/2025 11:18:05 AM
FILE: G:\TXC\Projects\City Georgetown\10767-00 Shell Road\03 CADD\01 Shts\06-DRNG\Stds\SD11A.dgn

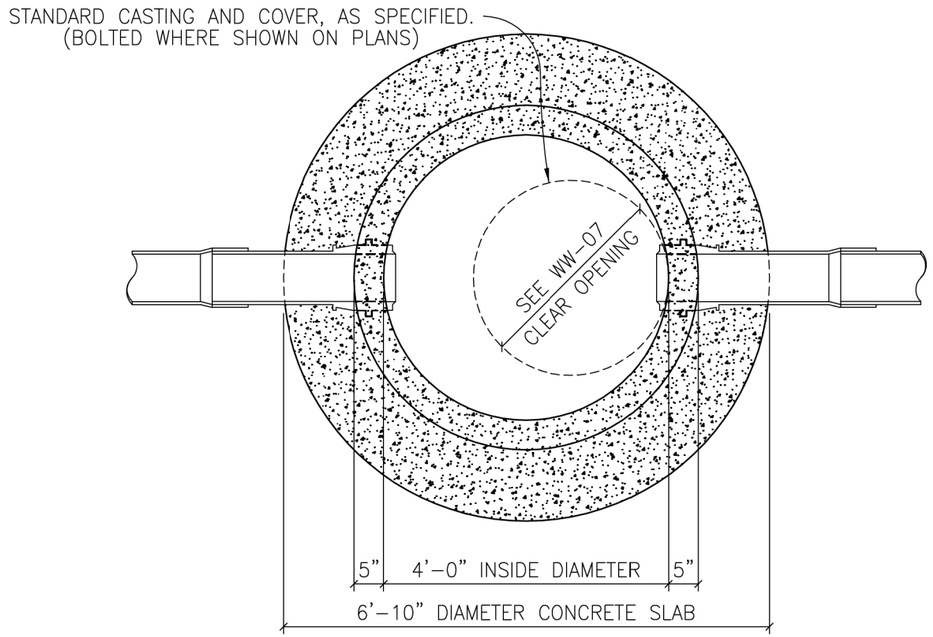

MANHOLE PLAN

CITY OF GEORGETOWN NOTES:

MANHOLE DETAILS SHALL REFLECT THE CITY'S MINIMUM SPECIFICATIONS, AS STATED BELOW:

A. ALL MANHOLES SHALL BE 48" I.D., R.C.P., CLASS III, WITH RUBBER O-RING GASKET JOINTS CONFORMING TO ASTM C478, C433 AND C76.

B. ALL MANHOLES SHALL HAVE FRAME AND COVER, AS MANUFACTURED BY EAST JORDAN IRON WORKS (AS PER DETAIL # WW-07) OR APPROVED EQUIVALENT.

C. ALL MANHOLES SHALL BE CONCRETE WITH CAST IRON FRAME AND COVER.

D. ALL MANHOLES SHALL HAVE AN ECCENTRIC CONE.

E. MANHOLES MAY HAVE A FLAT LID, IF APPROVED BY CITY OF GEORGETOWN, BEING 12" THICK WITH A MINIMUM 30" OPENING, AS MANUFACTURED BY CALVERT CONCRETE OR APPROVED EQUAL M.F.G. CONFORMING TO ASTM C478, 5000 P.S.I. CONCRETE, TRAFFIC BEARING, AND O-RING JOINT CONFORMING TO ASTM C443.

F. INVERTS AND FLEXIBLE SEAL BOOTS, PER ASTM C-923, SHALL BE CAST INTO BASE SECTION.

G. MINIMUM DROP BETWEEN INVERTS SHALL BE ONE-TENTH OF A FOOT (0.1').

H. GRADE RINGS WITH AN I.D. TO MATCH FRAMES CLEAR OPENING WITH A MAXIMUM OF FIVE (5) GRADE RINGS ARE ALLOWED.

The Architect/Engineer assumes responsibility for appropriate use of this standard.

EST. 1848 GEORGETOWN TEXAS
Georgetown Utility Systems
Your Community Owned Utility

CITY OF GEORGETOWN
CONSTRUCTION STANDARDS AND DETAILS

STANDARD STORM SEWER MANHOLE PLAN

REVISION NOTE: ADOPTED 6/21/2006

DRAWING NAME: SD12

SCALE:	DATE:
NTS	1/2003
DRAWN BY:	APPROVED BY:
MRS	TRB

STATE OF TEXAS
ALEXIS WOFFENDEN
117162
LICENSED
PROFESSIONAL ENGINEER
2/14/2025

EST. 1848 GEORGETOWN TEXAS

BGE, Inc.
101 West Louis Henna Blvd, Suite 400, Austin, TX 78728
Tel: 512-879-0400 • www.bgeinc.com
TBPE Registration No. F-1046

SHELL ROAD

CITY OF GEORGETOWN
SD12

SHEET 1 OF 1

SHEET NO. 184

DATE: 2/14/2025 11:18:07 AM
FILE: G:\TXC\Projects\City Georgetown\10767-00 Shell Road\03 CADD\01 Shts\06-DRNG\Stds\SD12.dgn

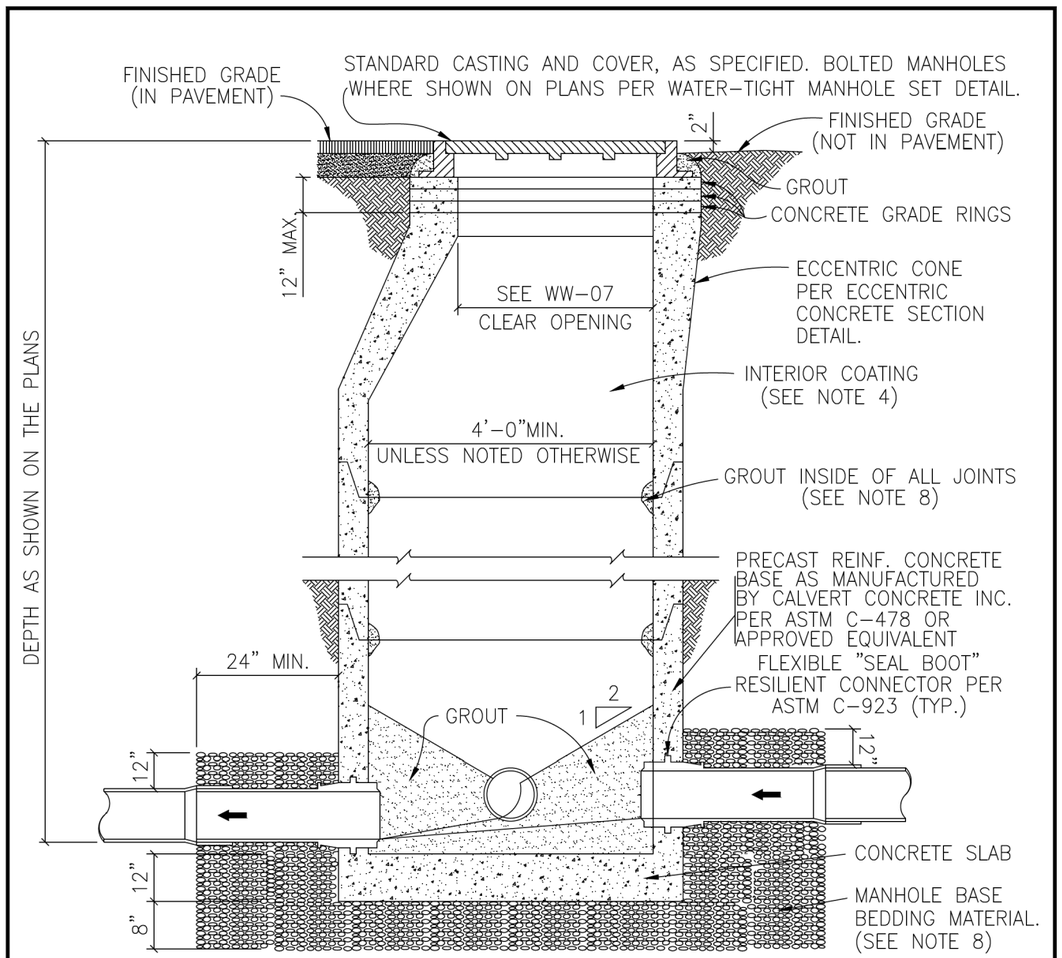

NOTES:

1. MANHOLES SHALL BE PRECAST ASTM C–478 BELL AND SPIGOT WITH PROFILE GASKET – SINGLE OFF–SET JOINTS.
2. SEE PLANS AND MANHOLE SCHEDULE, FOR MANHOLE SIZE, LOCATION, CONFIGURATION, TYPE OF TOP SECTION, VENTING REQUIREMENTS, PIPE SIZE AND TYPES.
3. SEE SPECIFICATIONS ON MATERIALS AND CONSTRUCTION.
4. AN 80 MIL COAT OF RAVEN LINING SYSTEMS, RAVEN 405 ULTRA HIGH BUILD EPOXY COATING, OR SPRAY WALL EPOXY COATING, OR APPROVED EQUAL, TO BE APPLIED TO ENTIRE INTERIOR OF EACH STORM SEWER MANHOLE AND UNDERSIDE OF FLAT TOPS.
5. ALL MANHOLE COVERS SHALL BE BOLTED AND GASKETTED WHEN MANHOLES ARE LOCATED OUT FROM PAVEMENT.
6. MANHOLES TO BE VENTED ARE IDENTIFIED ON MANHOLE SCHEDULE. REFERENCE MANHOLE VENT DETAIL.
7. MANHOLES ARE TO BE DESIGNED TO RESIST LATERAL AND VERTICAL SOIL FORCES RESULTING FROM MANHOLE DEPTH. ADDITIONALLY, MANHOLES LOCATED IN PAVEMENT TO BE DESIGNED FOR HS–20 TRAFFIC LOADS.
8. GROUT SHALL MEET THE REQUIREMENTS AS STATED BY THE COATING MANUFACTURER.
9. ALL PVC PIPE SHALL BE REMOVED FROM INVERT.
10. MANHOLE BASE BEDDING MATERIAL SPECS. FOR 3/4" WASHED GRAVEL:
    SIEVE SIZE 2", PERCENT (%) RETAINED 0
    SIEVE SIZE 1 1/2", % RETAINED 0–10
    SIEVE SIZE 1", % RETAINED 45–80
    SIEVE SIZE 3/4", % RETAINED 85–100
    SIEVE SIZE 3/8", % RETAINED 95–100

The Architect/Engineer assumes responsibility for appropriate use of this standard.

REVISED ON: 06/2006

GEORGETOWN TEXAS
more than welcome

CITY OF GEORGETOWN
CONSTRUCTION STANDARDS AND DETAILS

STANDARD STORM SEWER
MANHOLE – SECTION

DRAWING NAME: SD13

SCALE:	DATE:
NTS	1/2003
DRAWN BY:	APPROVED BY:
MRS	TRB

STATE OF TEXAS
ALEXIS WOFFENDEN
117162
LICENSED
PROFESSIONAL ENGINEER
2/14/2025

EST.1848 GEORGETOWN TEXAS

BGE, Inc.
101 West Louis Henna Blvd, Suite 400, Austin, TX 78728
Tel: 512-879-0400 • www.bgeinc.com
TBPE Registration No. F-1046

SHELL ROAD

CITY OF GEORGETOWN
SD13

SHEET 1 OF 1

SHEET NO. 185

DATE: 2/14/2025 11:18:09 AM
FILE: G:\TXC\Projects\City Georgetown\10767-00 Shell Road\03 CADD\01 Shts\06-DRNG\Stds\SD13.dgn

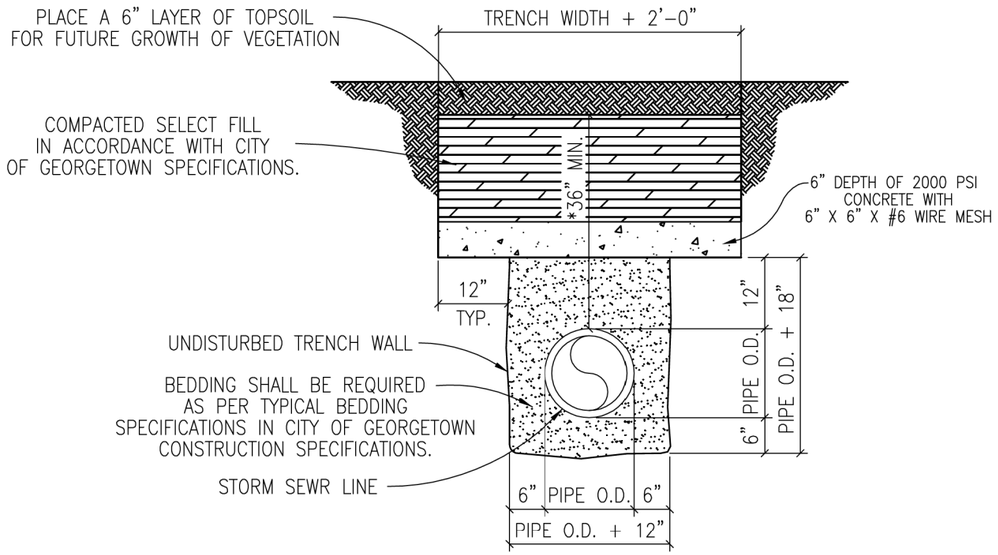

TRENCH WIDTHS

*PIPE LESS THAN 20" DIAMETER
1'-0" + PIPE O.D.

*20" DIAMETER PIPE AND LARGER
2'-0" + PIPE O.D.

The Architect/Engineer assumes responsibility for appropriate use of this standard.

REVISION NOTE: ADOPTED 6/21/2006

EST.1848 GEORGETOWN TEXAS
Georgetown Utility Systems
Your Community Owned Utility

CITY OF GEORGETOWN
CONSTRUCTION STANDARDS AND DETAILS

CONCRETE TRANCH CAP DETAIL
FOR STORM SEWER

DRAWING NAME: SD39

SCALE:	DATE:
NTS	1/2003
DRAWN BY:	APPROVED BY:
MRS	TRB

STATE OF TEXAS
ALEXIS WOFFENDEN
117162
LICENSED
PROFESSIONAL ENGINEER
2/14/2025

EST.1848 GEORGETOWN TEXAS

BGE, Inc.
101 West Louis Henna Blvd, Suite 400, Austin, TX 78728
Tel: 512-879-0400 • www.bgeinc.com
TBPE Registration No. F-1046

SHELL ROAD

CITY OF GEORGETOWN
SD39

SHEET 1 OF 1

SHEET NO. 186

DATE: 2/14/2025 11:18:12 AM
FILE: G:\TXC\Projects\City Georgetown\10767-00 Shell Road\03 CADD\01 Shts\06-DRNG\Stds\SD39.dgn

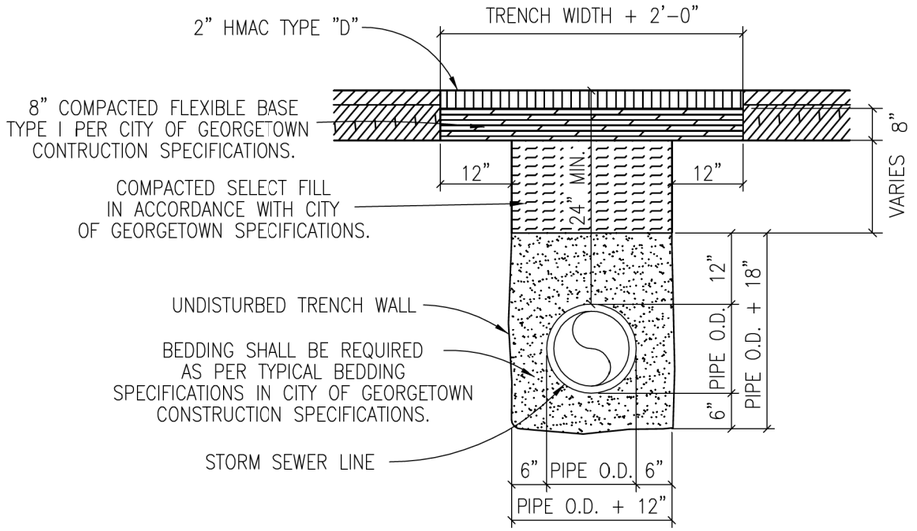

TRENCH WIDTHS

*PIPE LESS THAN 20" DIAMETER
1'-0" + PIPE O.D.

*20" DIAMETER PIPE AND LARGER
2'-0" + PIPE O.D.

NOTES:

1. REPLACED BASE MATERIAL OVER DITCH SHALL BE TWICE THE THICKNESS OF THE ORIGINAL BASE.
2. BASE MATERIAL SHALL BE IN LIFTS NOT TO EXCEED 6" AND EACH LIFT THOROUGHLY ROLLED OR TAMPED TO SPECIFIED MAXIMUM DENSITY.
3. ASPHALT CONCRETE PAVEMENT JOINTS SHALL BE MECHANICALLY SAWED.
4. SURFACE MATERIAL WILL BE CONSISTENT WITH THE EXISTING SURFACE.
5. DENSITY TESTS SHALL BE TAKEN IN ACCORDANCE WITH THE CITY OF GEORGETOWN CONSTRUCTION SPECIFICATIONS AND STANDARDS.
6. CONTRACTOR OR ENGINEER MAY USE FLOWABLE BACKFILL AS AN ALTERNATE BACKFILL MATERIAL (SEE C9 FLOWABLE BACKFILL FOR THE SPECIFICATION).

The Architect/Engineer assumes responsibility for appropriate use of this standard.

REVISION NOTE: ADOPTED 6/21/2006

EST. 1848 GEORGETOWN TEXAS
Georgetown Utility Systems
Your Community Owned Utility

CITY OF GEORGETOWN
CONSTRUCTION STANDARDS AND DETAILS

TRENCH, EMBEDMENT AND PAVEMENT REPLACEMENT DETAIL UNDER EXISTING ROADWAY FOR STORM SEWER

DRAWING NAME:	
SD40	
SCALE: NTS	DATE: 1/2003
DRAWN BY: MRS	APPROVED BY: TRB

STATE OF TEXAS
ALEXIS WOFFENDEN
117162
LICENSED PROFESSIONAL ENGINEER
2/14/2025

EST. 1848 GEORGETOWN TEXAS

BGE, Inc.
101 West Louis Henna Blvd, Suite 400, Austin, TX 78728
Tel: 512-879-0400 • www.bgeinc.com
TBPE Registration No. F-1046

SHELL ROAD

CITY OF GEORGETOWN
SD40

SHEET 1 OF 1

SHEET NO. 187

DATE: 2/14/2025 11:18:14 AM
FILE: G:\TX\Projects\City Georgetown\10767-00 Shell Road\03 CADD\01 Shts\06-DRNG\Stds\SD40.dgn

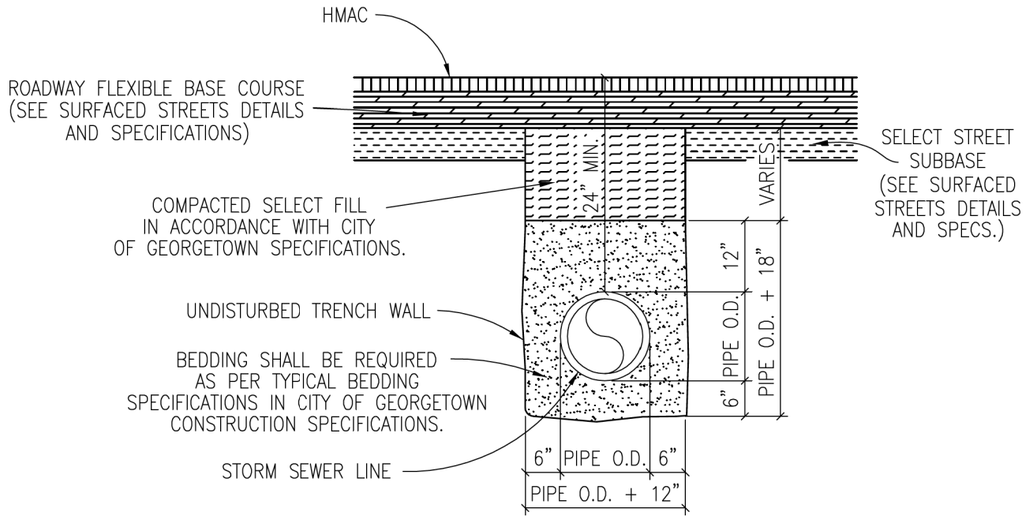

NOTES:

1. DENSITY TESTS SHALL BE TAKEN IN ACCORDANCE WITH THE CITY OF GEORGETOWN CONSTRUCTION SPECIFICATIONS AND STANDARDS.
2. CONTRACTOR OR ENGINEER MAY USE FLOWABLE BACKFILL AS AN ALTERNATE BACKFILL MATERIAL (SEE C9 FLOWABLE BACKFILL FOR THE SPECIFICATION).

TRENCH WIDTHS

*PIPE LESS THAN 20" DIAMETER
1'–0" + PIPE O.D.

*20" DIAMETER PIPE AND LARGER
2'–0" + PIPE O.D.

The Architect/Engineer assumes responsibility for appropriate use of this standard.

REVISION NOTE: ADOPTED 6/21/2006

EST. 1848 GEORGETOWN TEXAS
Georgetown Utility Systems
Your Community Owned Utility

CITY OF GEORGETOWN
CONSTRUCTION STANDARDS AND DETAILS

TRENCH AND EMBEDMENT DETAIL
UNDER PROPOSED ROADWAY
FOR STORM SEWER

DRAWING NAME: SD41

SCALE:	DATE:
NTS	1/2003
DRAWN BY: MRS	APPROVED BY: TRB

STATE OF TEXAS
ALEXIS WOFFENDEN
117162
LICENSED
PROFESSIONAL ENGINEER
2/14/2025

EST. 1848 GEORGETOWN TEXAS

BGE, Inc.
101 West Louis Henna Blvd, Suite 400, Austin, TX 78728
Tel: 512-879-0400 • www.bgeinc.com
TBPE Registration No. F-1046

SHELL ROAD

CITY OF GEORGETOWN
SD41

SHEET 1 OF 1

SHEET NO. 188

DATE: 2/14/2025 11:18:16 AM
FILE: G:\TXC\Projects\City Georgetown\10767-00 Shell Road\03 CADD\01 Shts\06-DRNG\Stds\SD41.dgn

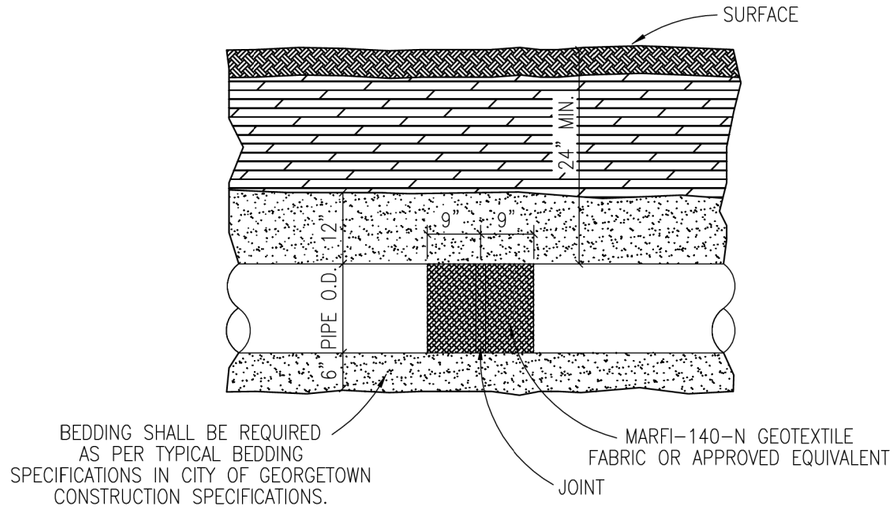

NOTES

1. PIPE SHALL BE REINFORCED CONCRETE PIPE CLASS III UNLESS THE DEPTH OF PIPE REQUIRES A STRONGER CLASS.
2. ALL FITTINGS AND WYES SHALL BE MANUFACTURED AND NOT CONSTRUCTED ON THE PROJECT WITHOUT PRIOR APPROVAL FROM THE CITY.
3. ALL JOINTS SHALL BE WRAPPED WITH MARF1-140-N GEOTEXTILE FABRIC OR APPROVED EQUIVALENT. EACH JOINT SHALL BE WRAPPED WITH 18" WIDE FABRIC CENTERED ON THE JOINT.

The Architect/Engineer assumes responsibility for appropriate use of this standard.

EST. 1848 GEORGETOWN TEXAS
Georgetown Utility Systems
Your Community Owned Utility

CITY OF GEORGETOWN
CONSTRUCTION STANDARDS AND DETAILS

TRENCH AND EMBEDMENT DETAIL (PROFILE) FOR STORM SEWER

REVISION NOTE: ADOPTED 6/21/2006

DRAWING NAME: SD42

SCALE:	DATE:
NTS	1/2003
DRAWN BY:	APPROVED BY:
MRS	TRB

STATE OF TEXAS
ALEXIS WOFFENDEN
117162
LICENSED PROFESSIONAL ENGINEER
2/14/2025

EST. 1848 GEORGETOWN TEXAS

BGE, Inc.
101 West Louis Henna Blvd, Suite 400, Austin, TX 78728
Tel: 512-879-0400 • www.bgeinc.com
TBPE Registration No. F-1046

SHELL ROAD

CITY OF GEORGETOWN
SD42

SHEET 1 OF 1

SHEET NO. 189

DATE: 2/14/2025 11:18:18 AM
FILE: G:\TXC\Projects\City Georgetown\10767-00 Shell Road\03 CADD\01 Shts\06-DRNG\Stds\SD42.dgn

DISCLAIMER:
The use of this standard is governed by the "Texas Engineering Practice Act". No warranty of any kind is made by TxDOT for any purpose whatsoever. TxDOT assumes no responsibility for the conversion of this standard to other formats or for incorrect results or damages resulting from its use.

DATE: 3/14/2025 11:28:17 AM
FILE: G:\TXC\Projects\City_Georgetown\10767-00 Shell Road\03_CADD\01_Shts\06-DRNG\Stds\CD-SCC-MD-20.dgn

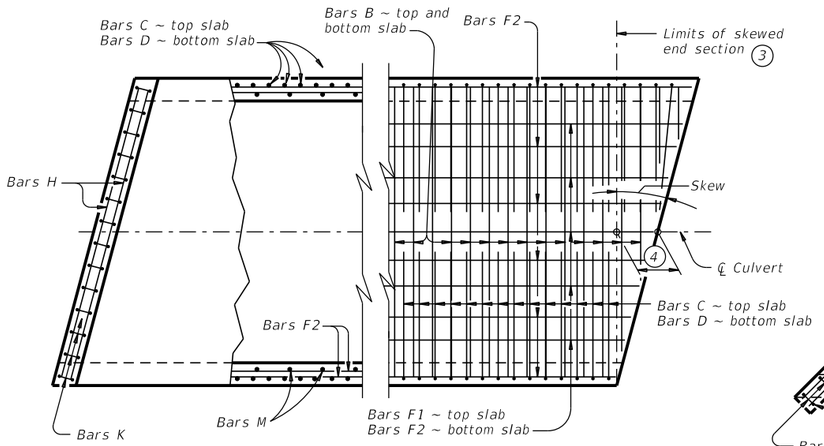

PLAN OF SKEWED ENDS ~ FROM 0° TO 15° (7)

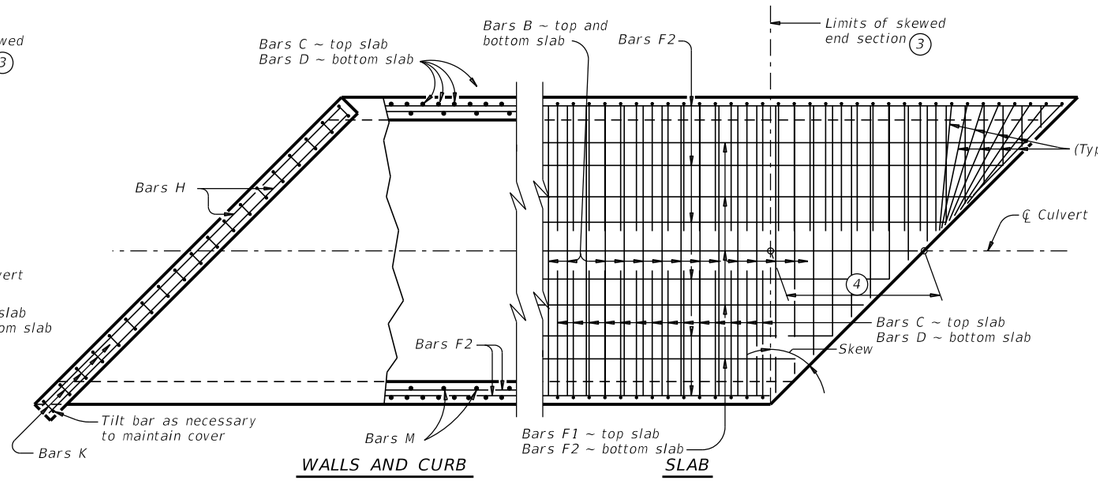

PLAN OF SKEWED ENDS ~ OVER 30° TO 45°

(1) For skewed box culverts with less than 2'-0" of fill, break back the top slab to provide a 1'-10" minimum lap of the existing longitudinal bars in the extension.
For non-skewed box culverts with less than 2'-0" of fill and for skewed or non-skewed culverts with a fill depth of 2'-0" or greater, break back the top slab to provide a 1'-10" minimum lap of the existing longitudinal bars with the longitudinal bars in the extension. Alternatively, if the box is non-skewed, embed #6 anchor bars with a Type III, C, D , E, or F anchor adhesive into the existing walls, top and bottom slab at 1'-6" center-to-center spacing. Minimum embedment depth is 8". Anchor adhesive chosen must be able to achieve a basic bond strength in tension, Nba, of 26.4 kips. Submit signed and sealed calculations or the manufacturer's published literature showing the proposed anchor adhesive's ability to develop this load to the Engineer for approval prior to use. Anchor installation, including hole size, drilling, and clean out, must be in accordance with Item 450, "Railing." Test adhesive anchors in accordance with Item 450.3.3, "Tests." Test 3 anchors per 100 anchors installed.
Break back wings and apron as necessary to install the extension. Clean and extend the exposed wingwall and apron reinforcing into the extension. When lengthening existing box culverts with dimensions different than current standard dimensions, form horizontal and vertical transitions as directed by the Engineer. Match bottom slabs to maintain an uninterrupted flow line. Field bend existing and new reinforcing into transitions and maintain specified cover requirements. For top slabs of culverts with overlay, with 1-to-2 course surface treatment, or with the top slab as the final riding surface, adjust the "H" dimension to provide a smooth riding surface.

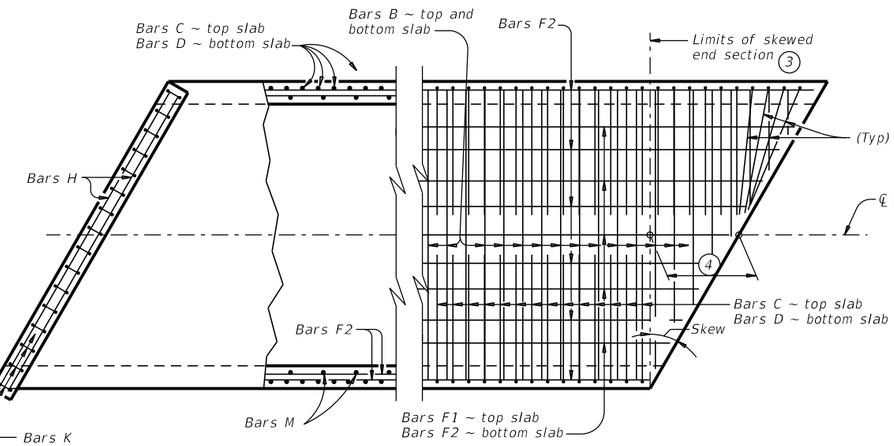

PLAN OF SKEWED ENDS ~ OVER 15° TO 30°

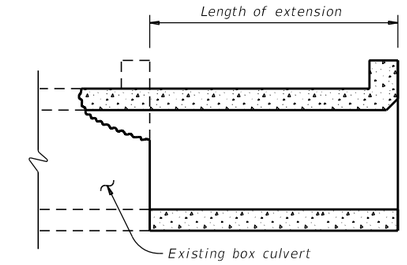

LENGTHENING DETAIL (1)

(2) When the spacing between Bars B becomes less than half of the normal spacing, cut bars to avoid conflict.

(3) The length of Bars B vary in the skewed end sections.

(4) [One half of overall width] x [tangent of the skew angle]

(5) Place Bars F1 and F2 continuously through the angle section. Bend Bars F1 and F2 to remain parallel to the walls of the box culvert.

(6) When necessary to avoid conflict in acute corners, shorten the slab extension leg of Bars C and Bars D to a minimum of 1'-6" for skews of 30° thru 45°.

(7) At the Contractor's option, for skews of 15° or less, place Bars B, C, and D parallel to the skewed end while maintaining spacing along centerline of box. Increase lengths of Bars B shown on the Single Box Culverts Cast-In-Place (SCC) standards sheets to accommodate the skew.

CONSTRUCTION NOTES:
Do not use permanent forms.
When required, lap Bars H 1'-8" for uncoated or galvanized bars.
Provide a minimum of 1 ½" clear cover.

MATERIAL NOTES:
Provide Grade 60 reinforcing steel.
Provide galvanized reinforcing steel, if required elsewhere in the plans.
Provide Class C concrete ($f'c$ = 3,600 psi) with these exceptions:
provide Class S concrete ($f'c$ = 4,000 psi) for top slabs of culverts with overlay, with 1-to-2 course surface treatment, or with the top slab as the final riding surface.

GENERAL NOTES:
Designed according to AASHTO LRFD Bridge Design Specifications.
Refer to Single Box Culverts Cast-in-Place (SCC) standard sheets for details of straight sections of culvert.
For skewed sections and angle sections, refer to Single Box Culverts Cast-in-Place (SCC) standard sheets for slab and wall dimensions, bar sizes, maximum bar spacing, and any other details not shown.
For skewed ends with curbs, adjust length of Bars H, number of Bars K, curb concrete volume, and reinforcing steel weight by dividing the values shown on the culvert Single Box Culverts Cast-In-Place (SCC) standard sheets by the cosine of the skew angle.

Cover dimensions are clear dimensions, unless noted otherwise.

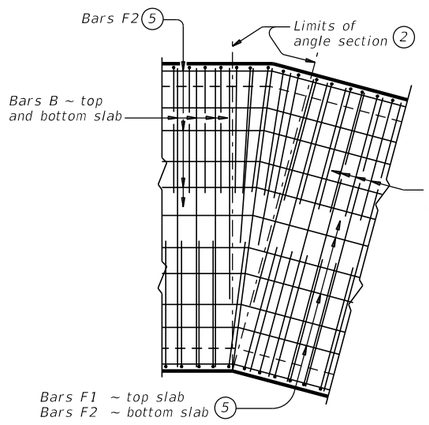

PLAN OF ANGLE SECTION ~ FROM 0° TO 15°

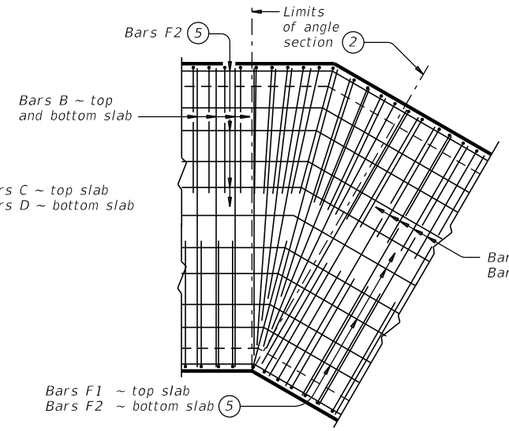

PLAN OF ANGLE SECTION ~ OVER 15° TO 30°

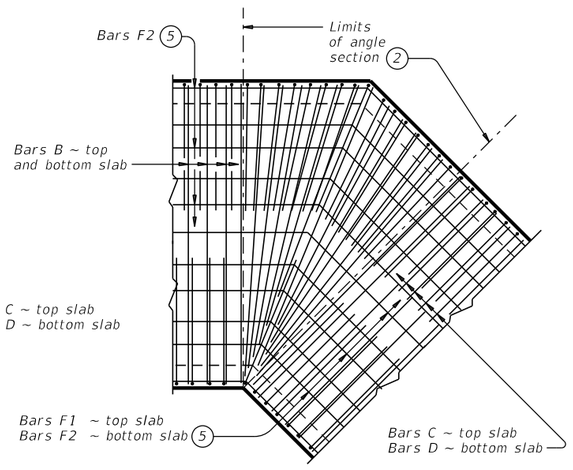

PLAN OF ANGLE SECTION ~ OVER 30° TO 45°

HL93 LOADING

Texas Department of Transportation

Bridge Division Standard

SINGLE BOX CULVERTS CAST-IN-PLACE MISCELLANEOUS DETAILS

SCC-MD

FILE: CD-SCC-MD-20.dgn	DN: TxDOT	CK: TxDOT	DW: TxDOT	CK: TxDOT
©TxDOT February 2020	CONT	SECT	JOB	HIGHWAY
REVISIONS	DIST	COUNTY		SHEET NO.
				190

DISCLAIMER:
The use of this standard is governed by the "Texas Engineering Practice Act". No warranty of any kind is made by TxDOT for any purpose whatsoever. TxDOT assumes no responsibility for the conversion of this standard to other formats or for incorrect results or damages resulting from its use.

DATE:
FILE:

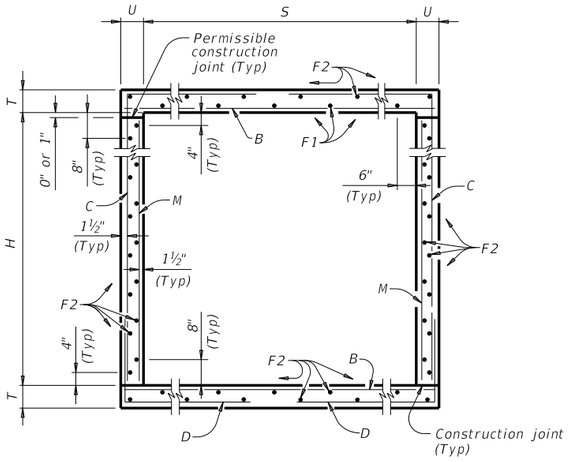

TYPICAL SECTION

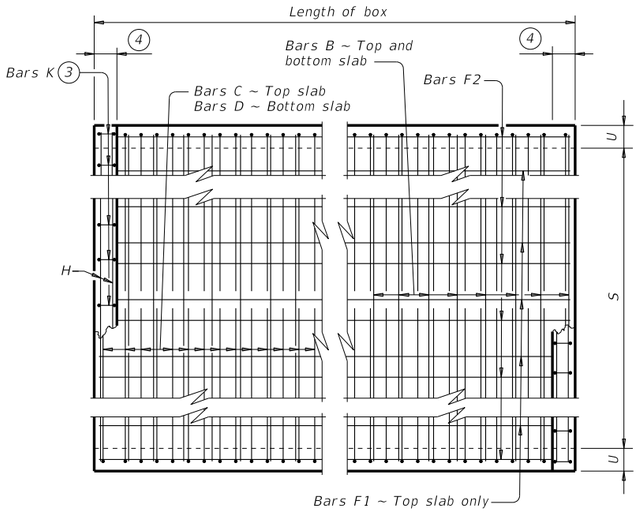

PLAN OF REINF STEEL

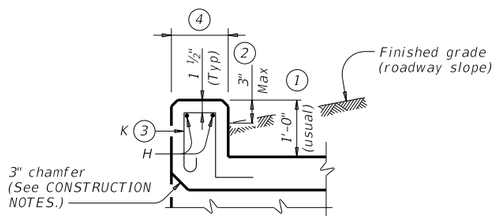

SECTION THRU CURB

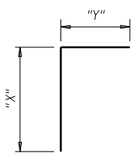

BARS C

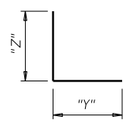

BARS D

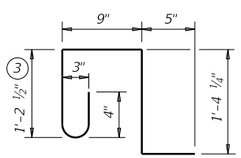

BARS K (#4)
(Spa = 1'-0" Max)
(Length = 4'-2")

1. 0" Min to 5'-0" Max. Estimated curb heights are shown elsewhere in the plans. For structures with pedestrian rail or curbs taller than 1'-0", refer to the Extended Curb Details (ECD) standard sheet. For structures with T631 or T631LS bridge rail, refer to the Mounting Details for T631 & T631LS Rails (T631-CM) standard sheet. Refer to the Rail Anchorage Curb (RAC) standard sheet for structures with bridge rail other than T631 or T631LS.

2. For vehicle safety, the following requirements must be met:
   - For structures without bridge rail, construct curbs no more than 3" above finished grade.
   - For structures with bridge rail, construct curbs flush with finished grade.

   Reduce curb heights, if necessary, to meet the above requirements. No changes will be made in quantities and no additional compensation will be allowed for this work.

3. For curbs less than 1'-0" high, tilt Bars K or reduce bar height as necessary to maintain cover. For curbs less than 3" high, Bars K may be omitted.

4. 1'-0" typical. 2'-3" when the Rail Anchorage Curb (RAC) standard sheet is referred to elsewhere in the plans.

The Contractor may replace Bars B, C, D, E, F1, F2, M, Y, and/or Z with deformed welded wire reinforcement (WWR) meeting the requirements of ASTM A1064. The area of required reinforcement may be reduced by the ratio of 60 ksi / 70 ksi. Spacing of WWR is limited to 4" Min and 18" Max. When required, provide lap splices in the WWR of the same length required for the equivalent bar size, rounded up for wire sizes between conventional bar sizes. The lap length required for WWR is never less than the lap length required for uncoated #4 bars.

Example conversion: Replacing No. 6 Gr 60 at 6" Spacing with WWR.
Required WWR = (0.44 sq. in. per 0.5 ft.) x (60 ksi / 70 ksi) = 0.755 sq. in. per ft.
If D30.6 wire is used to meet the 0.755 sq. in. per ft. requirement in this example, the required spacing = (0.306 sq. in.) / (0.755 sq. in. per ft.) x (12 in. per ft.) = 4.86" Max spacing. Required lap length for the provided D30.6 wire is 2'-1" (the same minimum lap length required for uncoated #5 bars, as listed under MATERIAL NOTES).

CONSTRUCTION NOTES:

Do not use permanent forms.

Chamfer the bottom edge of the top slab 3" at the entrance.

Optionally, raise construction joints shown at the flow line by a maximum of 6". If this option is taken, Bars M may be cut off or raised, Bars C and D may be reversed.

MATERIAL NOTES:

Provide Grade 60 reinforcing steel.

Provide galvanized reinforcing steel if required elsewhere in the plans.

Provide Class C concrete (f'c = 3,600 psi) for culvert barrel and curb, with the following exceptions: provide Class S concrete (f'c = 4,000 psi) for top slabs of:

- culverts with overlay,
- culverts with 1-to-2 course surface treatment, or
- culverts with the top slab as the final riding surface.

Provide bar laps, where required, as follows:

- Uncoated or galvanized ~ #4 = 1'-8" Min
- Uncoated or galvanized ~ #5 = 2'-1" Min

GENERAL NOTES:

Designed according to AASHTO LRFD Bridge Design Specifications for the range of fill heights shown.

See the Single Box Culverts Cast-In-Place Miscellaneous Detail (SCC-MD) standard sheet for details pertaining to skewed ends, angle sections, and lengthening.

Cover dimensions are clear dimensions, unless noted otherwise.
Reinforcing bar dimensions shown are out-to-out of bar.

HL93 LOADING SHEET 1 OF 2

Texas Department of Transportation

Bridge Division Standard

SINGLE BOX CULVERTS CAST-IN-PLACE
0' TO 30' FILL

SCC-3 & 4

FILE: CD-SCC34-21.dgn	DN: TBE	CK: BMP	DW: TxDOT	CK: TxDOT
©TxDOT February 2020	CONT	SECT	JOB	HIGHWAY
REVISIONS				
04/2021 Updated X values.	DIST	COUNTY		SHEET NO.
				191

DISCLAIMER:
The use of this standard is governed by the "Texas Engineering Practice Act". No warranty of any kind is made by TxDOT for any purpose whatsoever. TxDOT assumes no responsibility for the conversion of this standard to other formats or for incorrect results or damages resulting from its use.

DATE:
FILE:

SECTION DIMENSIONS				(5) FILL HEIGHT	BILLS OF REINFORCING STEEL (For Box Length = 40 feet)																										QUANTITIES					
					Bars B					Bars C							Bars D							Bars M ~ #4				Bars F1 ~ #4 at 18" Spa			Bars F2 ~ #4 at 18" Spa			Bars H 4 ~ #4		Bars K		Per Foot of Barrel		Curb		Total	
S	H	T	U		No.	Size	Spa	Length	Weight	No.	Size	Spa	Length	Weight	" X "	" Y "	No.	Size	Spa	Length	Weight	" Y "	" Z "	No.	Spa	Length	Weight	No.	Length	Wt	No.	Length	Weight	Length	Wt	No.	Wt	Conc (CY)	Reinf (Lb)	Conc (CY)	Reinf (Lb)	Conc (CY)	Reinf (Lb)
3' – 0"	2' – 0"	8"	7"	30'	108	#5	9"	3' – 11"	441	108	#4	9"	5' – 4"	385	2' – 6"	2' – 10"	108	#4	9"	5' – 1"	367	2' – 10"	2' – 3"	108	9"	2' – 0"	144	3	39' – 9"	80	19	39' – 9"	505	3' – 11"	10	10	28	0.292	48.1	0.3	38	12.0	1,960
3' – 0"	3' – 0"	8"	7"	30'	108	#5	9"	3' – 11"	441	108	#4	9"	6' – 4"	457	3' – 6"	2' – 10"	108	#4	9"	5' – 1"	367	2' – 10"	2' – 3"	108	9"	3' – 0"	216	3	39' – 9"	80	23	39' – 9"	611	3' – 11"	10	10	28	0.335	54.3	0.3	38	13.7	2,210
4' – 0"	2' – 0"	8"	7"	30'	108	#5	9"	4' – 11"	554	162	#4	6"	5' – 8"	613	2' – 6"	3' – 2"	162	#4	6"	5' – 5"	586	3' – 2"	2' – 3"	108	9"	2' – 0"	144	3	39' – 9"	80	21	39' – 9"	558	4' – 11"	13	12	33	0.342	63.4	0.4	46	14.1	2,581
4' – 0"	3' – 0"	8"	7"	30'	108	#5	9"	4' – 11"	554	162	#4	6"	6' – 8"	721	3' – 6"	3' – 2"	162	#4	6"	5' – 5"	586	3' – 2"	2' – 3"	108	9"	3' – 0"	216	3	39' – 9"	80	25	39' – 9"	664	4' – 11"	13	12	33	0.385	70.5	0.4	46	15.8	2,867
4' – 0"	4' – 0"	8"	7"	30'	108	#5	9"	4' – 11"	554	162	#4	6"	7' – 8"	830	4' – 6"	3' – 2"	162	#4	6"	5' – 5"	586	3' – 2"	2' – 3"	108	9"	4' – 0"	289	3	39' – 9"	80	25	39' – 9"	664	4' – 11"	13	12	33	0.428	75.1	0.4	46	17.5	3,049

(5) For direct traffic culverts (fill height ≤ 2 ft.), identify the required box size and select the option with the minimum fill height.

HL93 LOADING SHEET 2 OF 2

Texas Department of Transportation

Bridge Division Standard

SINGLE BOX CULVERTS CAST-IN-PLACE

0' TO 30' FILL

SCC-3 & 4

FILE: CD-SCC34-21.dgn	DN: TBE	CK: BMP	DW: TxDOT	CK: TxDOT
©TxDOT February 2020	CONT	SECT	JOB	HIGHWAY
REVISIONS				
04/2021 Updated X values.	DIST	COUNTY		SHEET NO.
				192

DISCLAIMER:
The use of this standard is governed by the "Texas Engineering Practice Act". No warranty of any kind is made by TxDOT for any purpose whatsoever. TxDOT assumes no responsibility for the conversion of this standard to other formats or for incorrect results or damages resulting from its use.

DATE: 3/12/2025 3:10:26 PM
FILE: G:\TXC\Projects\City_Georgetown\10767-00 Shell Road\03_CADD\01_Shts\06-DRNG\Shts\CD-SCC08-21.dgn

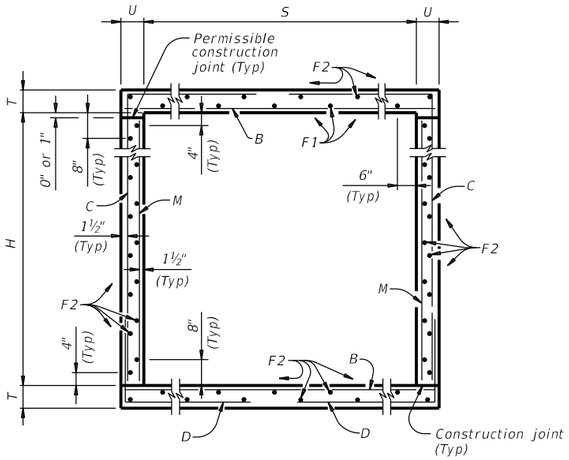

TYPICAL SECTION

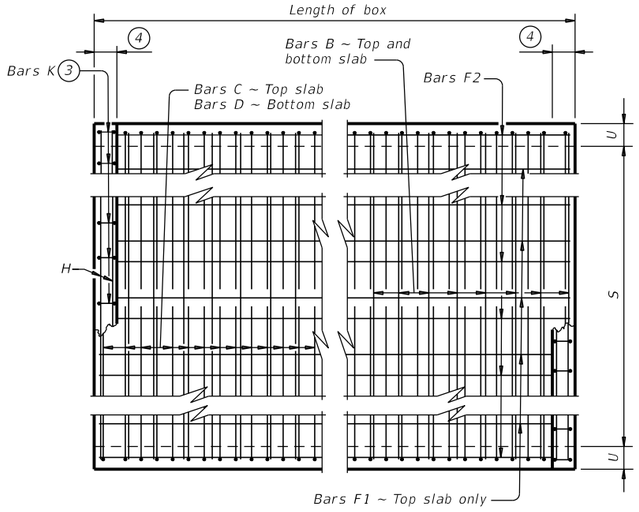

PLAN OF REINF STEEL

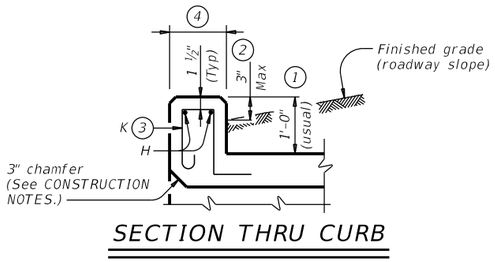

SECTION THRU CURB

1. 0" Min to 5'-0" Max. Estimated curb heights are shown elsewhere in the plans. For structures with pedestrian rail or curbs taller than 1'-0", refer to the Extended Curb Details (ECD) standard sheet. For structures with T631 or T631LS bridge rail, refer to the Mounting Details for T631 & T631LS Rails (T631-CM) standard sheet. Refer to the Rail Anchorage Curb (RAC) standard sheet for structures with bridge rail other than T631 or T631LS.

2. For vehicle safety, the following requirements must be met:
   · For structures without bridge rail, construct curbs no more than 3" above finished grade.
   · For structures with bridge rail, construct curbs flush with finished grade.
   Reduce curb heights, if necessary, to meet the above requirements. No changes will be made in quantities and no additional compensation will be allowed for this work.

3. For curbs less than 1'-0" high, tilt Bars K or reduce bar height as necessary to maintain cover. For curbs less than 3" high, Bars K may be omitted.

4. 1'-0" typical. 2'-3" when the Rail Anchorage Curb (RAC) standard sheet is referred to elsewhere in the plans.

The Contractor may replace Bars B, C, D, E, F1, F2, M, Y, and/or Z with deformed welded wire reinforcement (WWR) meeting the requirements of ASTM A1064. The area of required reinforcement may be reduced by the ratio of 60 ksi / 70 ksi. Spacing of WWR is limited to 4" Min and 18" Max. When required, provide lap splices in the WWR of the same length required for the equivalent bar size, rounded up for wire sizes between conventional bar sizes. The lap length required for WWR is never less than the lap length required for uncoated #4 bars.

Example conversion: Replacing No. 6 Gr 60 at 6" Spacing with WWR.
Required WWR = (0.44 sq. in. per 0.5 ft.) x (60 ksi / 70 ksi) = 0.755 sq. in. per ft.
If D30.6 wire is used to meet the 0.755 sq. in. per ft. requirement in this example, the required spacing = (0.306 sq. in.) / (0.755 sq. in. per ft.) x (12 in. per ft.) = 4.86" Max spacing. Required lap length for the provided D30.6 wire is 2'-1" (the same minimum lap length required for uncoated #5 bars, as listed under MATERIAL NOTES).

CONSTRUCTION NOTES:

Do not use permanent forms.
Chamfer the bottom edge of the top slab 3" at the entrance.
Optionally, raise construction joints shown at the flow line by a maximum of 6". If this option is taken, Bars M may be cut off or raised, Bars C and D may be reversed.

MATERIAL NOTES:

Provide Grade 60 reinforcing steel.
Provide galvanized reinforcing steel if required elsewhere in the plans.
Provide Class C concrete ($f'c$ = 3,600 psi) for culvert barrel and curb, with the following exceptions: provide Class S concrete ($f'c$ = 4,000 psi) for top slabs of:
· culverts with overlay,
· culverts with 1-to-2 course surface treatment, or
· culverts with the top slab as the final riding surface.
Provide bar laps, where required, as follows:
· Uncoated or galvanized ~ #4 = 1'-8" Min
· Uncoated or galvanized ~ #5 = 2'-1" Min
· Uncoated or galvanized ~ #6 = 2'-6" Min

GENERAL NOTES:

Designed according to AASHTO LRFD Bridge Design Specifications for the range of fill heights shown.
See the Single Box Culverts Cast-In-Place Miscellaneous Detail (SCC-MD) standard sheet for details pertaining to skewed ends, angle sections, and lengthening.

Cover dimensions are clear dimensions, unless noted otherwise.
Reinforcing bar dimensions shown are out-to-out of bar.

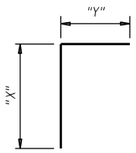

BARS C

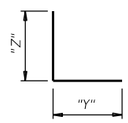

BARS D

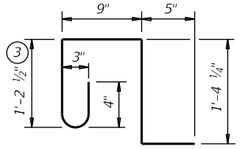

BARS K (#4)
(Spa = 1'-0" Max)
(Length = 4'-2")

HL93 LOADING SHEET 1 OF 2

Texas Department of Transportation | Bridge Division Standard

SINGLE BOX CULVERTS CAST-IN-PLACE
0' TO 30' FILL

SCC-8

FILE: CD-SCC08-21.dgn	DN: TBE	CK: BMP	DW: TxDOT	CK: TxDOT
©TxDOT February 2020	CONT	SECT	JOB	HIGHWAY
REVISIONS 04/2021 Updated X values.	DIST	COUNTY		SHEET NO.
				193

DISCLAIMER:
The use of this standard is governed by the "Texas Engineering Practice Act". No warranty of any kind is made by TxDOT for any purpose whatsoever. TxDOT assumes no responsibility for the conversion of this standard to other formats or for incorrect results or damages resulting from its use.

DATE: 3/12/2025 3:10:26 PM
FILE: G:\TXC\Projects\City_Georgetown\10767-00 Shell Road\03_CADD\01_Shts\06-DRNG\Sheet\CD-SCC08-21.dgn

SECTION DIMENSIONS				FILL HEIGHT (5)	BILLS OF REINFORCING STEEL (For Box Length = 40 feet)																														QUANTITIES					
					Bars B					Bars C							Bars D							Bars M ~ #4				Bars F1 ~ #4 at 18" Spa			Bars F2 ~ #4 at 18" Spa			Bars H 4 ~ #4		Bars K		Per Foot of Barrel		Curb		Total	
S	H	T	U		No.	Size	Spa	Length	Weight	No.	Size	Spa	Length	Weight	" X "	" Y "	No.	Size	Spa	Length	Weight	" Y "	" Z "	No.	Spa	Length	Weight	No.	Length	Wt	No.	Length	Weight	Length	Wt	No.	Wt	Conc (CY)	Reinf (Lb)	Conc (CY)	Reinf (Lb)	Conc (CY)	Reinf (Lb)
8' – 0"	3' – 0"	8"	7"	13'	162	#6	6"	8' – 11"	2,170	108	#6	9"	8' – 8"	1,406	3' – 6"	5' – 2"	108	#6	9"	8' – 3"	1,338	5' – 2"	3' – 1"	108	9"	3' – 0"	216	6	39' – 9"	159	32	39' – 9"	850	8' – 11"	24	20	56	0.582	153.5	0.7	80	24.0	6,219
8' – 0"	3' – 0"	8"	7"	16'	162	#6	6"	8' – 11"	2,170	108	#6	9"	8' – 8"	1,406	3' – 6"	5' – 2"	108	#6	9"	8' – 3"	1,338	5' – 2"	3' – 1"	108	9"	3' – 0"	216	6	39' – 9"	159	32	39' – 9"	850	8' – 11"	24	20	56	0.582	153.5	0.7	80	24.0	6,219
8' – 0"	3' – 0"	10"	8"	20'	162	#6	6"	9' – 1"	2,210	108	#6	9"	8' – 10"	1,433	3' – 8"	5' – 2"	108	#6	9"	8' – 5"	1,365	5' – 2"	3' – 3"	82	12"	3' – 0"	164	6	39' – 9"	159	32	39' – 9"	850	9' – 1"	24	22	61	0.724	154.5	0.7	85	29.6	6,266
8' – 0"	3' – 0"	11"	8"	23'	162	#6	6"	9' – 1"	2,210	108	#6	9"	8' – 11"	1,446	3' – 9"	5' – 2"	108	#6	9"	8' – 6"	1,379	5' – 2"	3' – 4"	82	12"	3' – 0"	164	6	39' – 9"	159	32	39' – 9"	850	9' – 1"	24	22	61	0.782	155.2	0.7	85	32.0	6,293
8' – 0"	3' – 0"	13"	9"	30'	162	#6	6"	9' – 3"	2,251	108	#6	9"	9' – 2"	1,487	3' – 11"	5' – 3"	108	#6	9"	8' – 9"	1,419	5' – 3"	3' – 6"	108	9"	3' – 0"	216	6	39' – 9"	159	32	39' – 9"	850	9' – 3"	25	22	61	0.929	159.6	0.7	86	37.9	6,468
8' – 0"	4' – 0"	8"	7"	13'	162	#6	6"	8' – 11"	2,170	108	#6	9"	9' – 8"	1,568	4' – 6"	5' – 2"	108	#6	9"	8' – 3"	1,338	5' – 2"	3' – 1"	108	9"	4' – 0"	289	6	39' – 9"	159	32	39' – 9"	850	8' – 11"	24	20	56	0.626	159.4	0.7	80	25.7	6,454
8' – 0"	4' – 0"	8"	7"	16'	162	#6	6"	8' – 11"	2,170	108	#6	9"	9' – 8"	1,568	4' – 6"	5' – 2"	108	#6	9"	8' – 3"	1,338	5' – 2"	3' – 1"	108	9"	4' – 0"	289	6	39' – 9"	159	32	39' – 9"	850	8' – 11"	24	20	56	0.626	159.4	0.7	80	25.7	6,454
8' – 0"	4' – 0"	10"	8"	20'	162	#6	6"	9' – 1"	2,210	108	#6	9"	9' – 10"	1,595	4' – 8"	5' – 2"	108	#6	9"	8' – 5"	1,365	5' – 2"	3' – 3"	82	12"	4' – 0"	219	6	39' – 9"	159	32	39' – 9"	850	9' – 1"	24	22	61	0.774	160.0	0.7	85	31.6	6,483
8' – 0"	4' – 0"	11"	8"	23'	162	#6	6"	9' – 1"	2,210	108	#6	9"	9' – 11"	1,609	4' – 9"	5' – 2"	108	#6	9"	8' – 6"	1,379	5' – 2"	3' – 4"	82	12"	4' – 0"	219	6	39' – 9"	159	32	39' – 9"	850	9' – 1"	24	22	61	0.831	160.7	0.7	85	33.9	6,511
8' – 0"	4' – 0"	13"	9"	30'	162	#6	6"	9' – 3"	2,251	108	#6	9"	10' – 2"	1,649	4' – 11"	5' – 3"	108	#6	9"	8' – 9"	1,419	5' – 3"	3' – 6"	108	9"	4' – 0"	289	6	39' – 9"	159	32	39' – 9"	850	9' – 3"	25	22	61	0.985	165.4	0.7	86	40.1	6,703
8' – 0"	5' – 0"	8"	7"	13'	162	#6	6"	8' – 11"	2,170	108	#6	9"	10' – 8"	1,730	5' – 6"	5' – 2"	108	#6	9"	8' – 3"	1,338	5' – 2"	3' – 1"	108	9"	5' – 0"	361	6	39' – 9"	159	36	39' – 9"	956	8' – 11"	24	20	56	0.669	167.9	0.7	80	27.4	6,794
8' – 0"	5' – 0"	8"	7"	16'	162	#6	6"	8' – 11"	2,170	108	#6	9"	10' – 8"	1,730	5' – 6"	5' – 2"	108	#6	9"	8' – 3"	1,338	5' – 2"	3' – 1"	108	9"	5' – 0"	361	6	39' – 9"	159	36	39' – 9"	956	8' – 11"	24	20	56	0.669	167.9	0.7	80	27.4	6,794
8' – 0"	5' – 0"	10"	8"	20'	162	#6	6"	9' – 1"	2,210	108	#6	9"	10' – 10"	1,757	5' – 8"	5' – 2"	108	#6	9"	8' – 5"	1,365	5' – 2"	3' – 3"	82	12"	5' – 0"	274	6	39' – 9"	159	36	39' – 9"	956	9' – 1"	24	22	61	0.823	168.0	0.7	85	33.6	6,806
8' – 0"	5' – 0"	11"	8"	23'	162	#6	6"	9' – 1"	2,210	108	#6	9"	10' – 11"	1,771	5' – 9"	5' – 2"	108	#6	9"	8' – 6"	1,379	5' – 2"	3' – 4"	82	12"	5' – 0"	274	6	39' – 9"	159	36	39' – 9"	956	9' – 1"	24	22	61	0.881	168.7	0.7	85	35.9	6,834
8' – 0"	5' – 0"	13"	9"	30'	162	#6	6"	9' – 3"	2,251	108	#6	9"	11' – 2"	1,811	5' – 11"	5' – 3"	108	#6	9"	8' – 9"	1,419	5' – 3"	3' – 6"	108	9"	5' – 0"	361	6	39' – 9"	159	36	39' – 9"	956	9' – 3"	25	22	61	1.040	173.9	0.7	86	42.3	7,043
8' – 0"	6' – 0"	8"	7"	13'	162	#6	6"	8' – 11"	2,170	108	#6	9"	11' – 8"	1,893	6' – 6"	5' – 2"	108	#6	9"	8' – 3"	1,338	5' – 2"	3' – 1"	108	9"	6' – 0"	433	6	39' – 9"	159	40	39' – 9"	1,062	8' – 11"	24	20	56	0.712	176.4	0.7	80	29.2	7,135
8' – 0"	6' – 0"	8"	7"	16'	162	#6	6"	8' – 11"	2,170	108	#6	9"	11' – 8"	1,893	6' – 6"	5' – 2"	108	#6	9"	8' – 3"	1,338	5' – 2"	3' – 1"	108	9"	6' – 0"	433	6	39' – 9"	159	40	39' – 9"	1,062	8' – 11"	24	20	56	0.712	176.4	0.7	80	29.2	7,135
8' – 0"	6' – 0"	10"	8"	20'	162	#6	6"	9' – 1"	2,210	108	#6	9"	11' – 10"	1,920	6' – 8"	5' – 2"	108	#6	9"	8' – 5"	1,365	5' – 2"	3' – 3"	82	12"	6' – 0"	329	6	39' – 9"	159	40	39' – 9"	1,062	9' – 1"	24	22	61	0.872	176.1	0.7	85	35.6	7,130
8' – 0"	6' – 0"	11"	8"	23'	162	#6	6"	9' – 1"	2,210	108	#6	9"	11' – 11"	1,933	6' – 9"	5' – 2"	108	#6	9"	8' – 6"	1,379	5' – 2"	3' – 4"	82	12"	6' – 0"	329	6	39' – 9"	159	40	39' – 9"	1,062	9' – 1"	24	22	61	0.930	176.8	0.7	85	37.9	7,157
8' – 0"	6' – 0"	13"	9"	30'	162	#6	6"	9' – 3"	2,251	108	#6	9"	12' – 2"	1,974	6' – 11"	5' – 3"	108	#6	9"	8' – 9"	1,419	5' – 3"	3' – 6"	108	9"	6' – 0"	433	6	39' – 9"	159	40	39' – 9"	1,062	9' – 3"	25	22	61	1.096	182.5	0.7	86	44.5	7,384
8' – 0"	7' – 0"	8"	7"	13'	162	#6	6"	8' – 11"	2,170	108	#6	9"	12' – 8"	2,055	7' – 6"	5' – 2"	108	#6	9"	8' – 3"	1,338	5' – 2"	3' – 1"	108	9"	7' – 0"	505	6	39' – 9"	159	40	39' – 9"	1,062	8' – 11"	24	20	56	0.755	182.2	0.7	80	30.9	7,369
8' – 0"	7' – 0"	8"	7"	16'	162	#6	6"	8' – 11"	2,170	162	#6	6"	12' – 8"	3,082	7' – 6"	5' – 2"	162	#6	6"	8' – 3"	2,007	5' – 2"	3' – 1"	108	9"	7' – 0"	505	6	39' – 9"	159	40	39' – 9"	1,062	8' – 11"	24	20	56	0.755	224.6	0.7	80	30.9	9,065
8' – 0"	7' – 0"	10"	8"	20'	162	#6	6"	9' – 1"	2,210	162	#6	6"	12' – 10"	3,123	7' – 8"	5' – 2"	162	#6	6"	8' – 5"	2,048	5' – 2"	3' – 3"	82	12"	7' – 0"	383	6	39' – 9"	159	40	39' – 9"	1,062	9' – 1"	24	22	61	0.922	224.6	0.7	85	37.6	9,070
8' – 0"	7' – 0"	11"	8"	23'	162	#6	6"	9' – 1"	2,210	162	#6	6"	12' – 11"	3,143	7' – 9"	5' – 2"	162	#6	6"	8' – 6"	2,068	5' – 2"	3' – 4"	82	12"	7' – 0"	383	6	39' – 9"	159	40	39' – 9"	1,062	9' – 1"	24	22	61	0.979	225.6	0.7	85	39.8	9,110
8' – 0"	7' – 0"	13"	9"	30'	162	#6	6"	9' – 3"	2,251	162	#6	6"	13' – 2"	3,204	7' – 11"	5' – 3"	162	#6	6"	8' – 9"	2,129	5' – 3"	3' – 6"	108	9"	7' – 0"	505	6	39' – 9"	159	40	39' – 9"	1,062	9' – 3"	25	22	61	1.151	232.8	0.7	86	46.7	9,396
8' – 0"	8' – 0"	8"	7"	13'	162	#6	6"	8' – 11"	2,170	108	#6	9"	13' – 8"	2,217	8' – 6"	5' – 2"	108	#6	9"	8' – 3"	1,338	5' – 2"	3' – 1"	108	9"	8' – 0"	577	6	39' – 9"	159	44	39' – 9"	1,168	8' – 11"	24	20	56	0.798	190.7	0.7	80	32.6	7,709
8' – 0"	8' – 0"	8"	7"	16'	162	#6	6"	8' – 11"	2,170	162	#6	6"	13' – 8"	3,325	8' – 6"	5' – 2"	162	#6	6"	8' – 3"	2,007	5' – 2"	3' – 1"	108	9"	8' – 0"	577	6	39' – 9"	159	44	39' – 9"	1,168	8' – 11"	24	20	56	0.798	235.2	0.7	80	32.6	9,486
8' – 0"	8' – 0"	10"	8"	20'	162	#6	6"	9' – 1"	2,210	162	#6	6"	13' – 10"	3,366	8' – 8"	5' – 2"	162	#6	6"	8' – 5"	2,048	5' – 2"	3' – 3"	108	9"	8' – 0"	577	6	39' – 9"	159	44	39' – 9"	1,168	9' – 1"	24	22	61	0.971	238.2	0.7	85	39.5	9,613
8' – 0"	8' – 0"	11"	8"	23'	162	#6	6"	9' – 1"	2,210	162	#6	6"	13' – 11"	3,386	8' – 9"	5' – 2"	162	#6	6"	8' – 6"	2,068	5' – 2"	3' – 4"	162	6"	8' – 0"	866	6	39' – 9"	159	44	39' – 9"	1,168	9' – 1"	24	22	61	1.029	246.4	0.7	85	41.8	9,942
8' – 0"	8' – 0"	13"	9"	30'	162	#6	6"	9' – 3"	2,251	162	#6	6"	14' – 2"	3,447	8' – 11"	5' – 3"	162	#6	6"	8' – 9"	2,129	5' – 3"	3' – 6"	162	6"	8' – 0"	866	6	39' – 9"	159	44	39' – 9"	1,168	9' – 3"	25	22	61	1.207	250.5	0.7	86	49.0	10,106

(5) For direct traffic culverts (fill height ≤ 2 ft.), identify the required box size and select the option with the minimum fill height.

HL93 LOADING SHEET 2 OF 2

Texas Department of Transportation | Bridge Division Standard

SINGLE BOX CULVERTS CAST-IN-PLACE
0' TO 30' FILL

SCC-8

FILE: CD-SCC08-21.dgn	DN: TBE	CK: BMP	DW: TxDOT	CK: TxDOT
©TxDOT February 2020	CONT	SECT	JOB	HIGHWAY
REVISIONS				
04/2021 Updated X values.	DIST	COUNTY		SHEET NO.
				194

DISCLAIMER:
The use of this standard is governed by the "Texas Engineering Practice Act". No warranty of any kind is made by TxDOT for any purpose whatsoever. TxDOT assumes no responsibility for the conversion of this standard to other formats or for incorrect results or damages resulting from its use.

DATE: 3/12/2025 3:10:27 PM
FILE: G:\TxDC\Projects\City_Georgetown\10767-00 Shell Road\03_CADD\01_Shts\06-DRNG\Sfds\CD-MC-MD-20.dgn

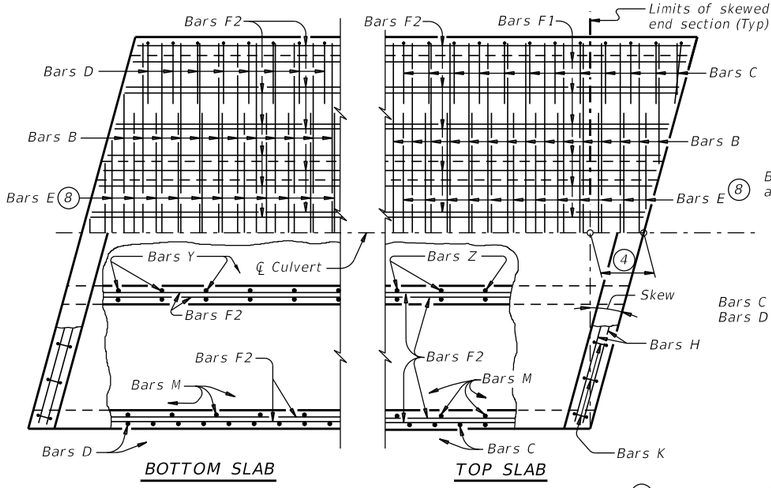

PLAN OF SKEWED ENDS ~ FROM 0° TO 15° 7

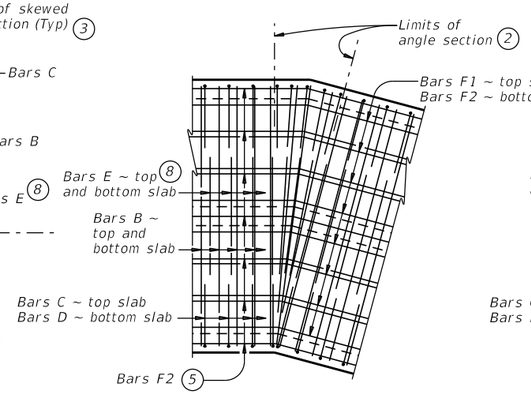

PLAN OF ANGLE SECTION ~ FROM 0° TO 15°

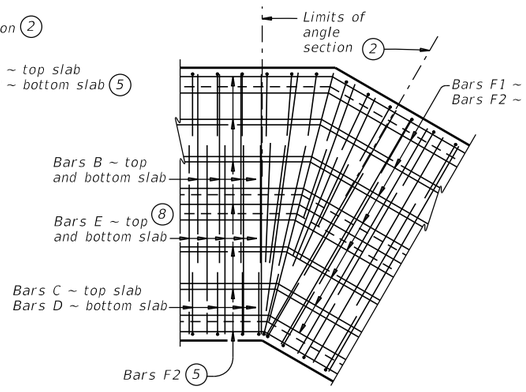

PLAN OF ANGLE SECTION ~ OVER 15° TO 30°

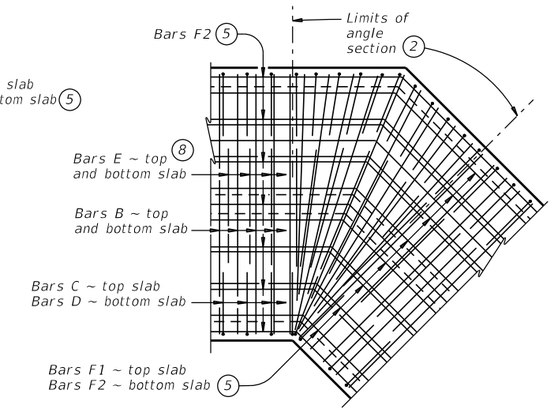

PLAN OF ANGLE SECTION ~ OVER 30° TO 45°

PLAN OF SKEWED ENDS ~ OVER 15° TO 30°

PLAN OF SKEWED ENDS ~ OVER 30° TO 45°

(1) For skewed box culverts with less than 2'-0" of fill, break back the top slab to provide a 1'-10" minimum lap of the existing longitudinal bars with the longitudinal bars in the extension.
For non-skewed box culverts with less than 2'-0" of fill and for skewed or non-skewed culverts with a fill depth of 2'-0" or greater, break back the top slab to provide a 1'-10" minimum lap of the existing longitudinal bars with the longitudinal bars in the extension. Alternatively, if the box is non-skewed, embed #6 anchor bars with a Type III, Class C, D, E, or F anchor adhesive into the existing walls, top and bottom slab at 1'-6" center-to-center spacing. Minimum embedment depth is 8". Anchor adhesive chosen must be able to achieve a basic bond strength in tension, Nba, of 26.4 kips. Submit signed and sealed calculations or the manufacturer's published literature showing the proposed anchor adhesive's ability to develop this load to the Engineer for approval prior to use. Anchor installation, including hole size, drilling, and clean out, must be in accordance with Item 450, "Railing." Test adhesive anchors in accordance with Item 450.3.3, "Tests." Test 3 anchors per 100 anchors installed.
Break back wings and apron as necessary to install the extension. Clean and extend the exposed wingwall and apron reinforcing into the extension. When lengthening existing box culverts with dimensions different than current standard dimensions, form horizontal and vertical transitions as directed by the Engineer. Match bottom slabs to maintain an uninterrupted flow line. Field bend existing and new reinforcing into transitions and maintain specified cover requirements. For top slabs of culverts with overlay, with 1-to-2 course surface treatment, or with the top slab as the final riding surface, adjust the "H" dimension to provide a smooth riding surface.

(2) When the spacing between Bars B or Bars E becomes less than half of the normal spacing, cut bars to avoid conflict.

(3) The length of Bars B and Bars E will vary in the skewed end sections.

(4) [One half of overall width] x [tangent of the skew angle]

(5) Place Bars F1 and F2 continuously through the angle section. Bend Bars F1 and F2 to remain parallel to the walls of the box culvert.

(6) When necessary to avoid conflict in acute corners, shorten the slab extension leg of Bars C and Bars D to a minimum of 1'-6" for skews of 30° thru 45°.

(7) At the Contractor's option, for skews of 15° or less, place Bars B, C, D, and E parallel to the skewed end while maintaining spacing along centerline of box. Increase lengths of Bars B and Bars E shown on the Multiple Box Culverts Cast-In-Place (MC) standard sheets to accommodate the skew.

(8) Extend Bars E as shown on the MC standard sheet for direct traffic culverts.

LENGTHENING DETAIL (1)

CONSTRUCTION NOTES:
Do not use permanent forms.
When required, lap Bars H 1'-8" for uncoated or galvanized bars.
Provide a minimum of 1 ½" clear cover.

MATERIAL NOTES:
Provide Grade 60 reinforcing steel.
Provide galvanized reinforcing steel, if required elsewhere in the plans.
Provide Class C concrete ($f'c$ = 3,600 psi) with these exceptions: provide Class S concrete ($f'c$ = 4,000 psi) for top slabs of culverts with overlay, with 1-to-2 course surface treatment, or with the top slab as the final riding surface.

GENERAL NOTES:
Designed according to AASHTO LRFD Bridge Design Specifications.
Refer to Multiple Box Culverts Cast-in-Place (MC) standard sheets for details of straight sections of culvert.
For skewed sections and angle sections, refer to Multiple Box Culverts Cast-in-Place (MC) standard sheets for slab and wall dimensions, bar sizes, maximum bar spacing, and any other details not shown.
For skewed ends with curbs, adjust length of Bars H, number of Bars K, curb concrete volume, and reinforcing steel weight by dividing the values shown on the Multiple Box Culverts Cast-In-Place (MC) standard sheets by the cosine of the skew angle.

Cover dimensions are clear dimensions, unless noted otherwise.

HL93 LOADING

Texas Department of Transportation

Bridge Division Standard

MULTIPLE BOX CULVERTS CAST-IN-PLACE MISCELLANEOUS DETAILS

MC-MD

FILE: CD-MC-MD-20.dgn	DN: TxDOT	CK: TxDOT	DW: TxDOT	CK: TxDOT
©TxDOT February 2020	CONT	SECT	JOB	HIGHWAY
REVISIONS				
	DIST	COUNTY		SHEET NO.
				195

DISCLAIMER:
The use of this standard is governed by the "Texas Engineering Practice Act". No warranty of any kind is made by TxDOT for any purpose whatsoever. TxDOT assumes no responsibility for the conversion of this standard to other formats or for incorrect results or damages resulting from its use.

DATE: 3/12/2025 3:10:28 PM
FILE: G:\TXC\Projects\City_Georgetown\10767-00 Shell Road\03_CADD\01_Shts\06-DRNG\SPDS\mc616ste-20.dgn

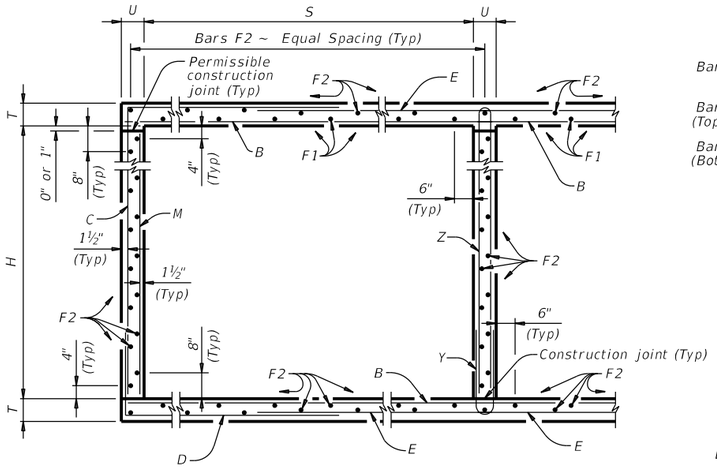

TYPICAL SECTION

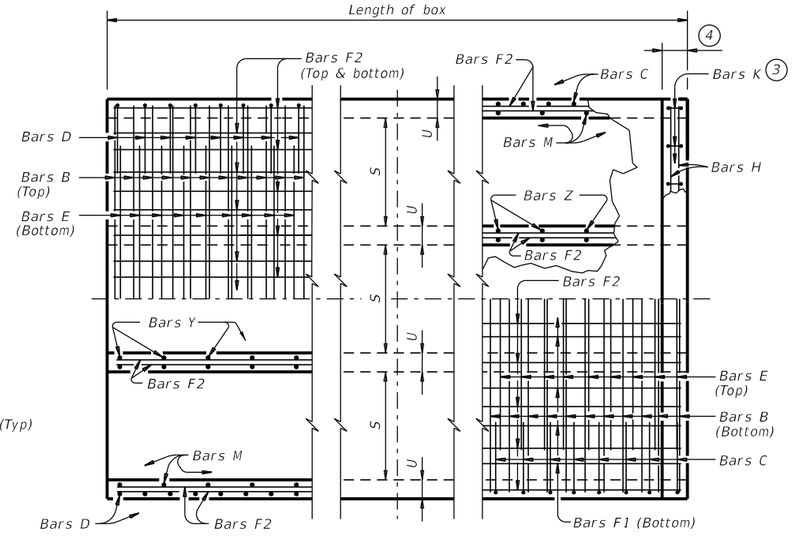

BOTTOM SLAB TOP SLAB

PART PLANS

1. 0" Min to 5'-0" Max. Estimated curb heights are shown elsewhere in the plans. For structures with pedestrian rail or curbs taller than 1'-0", refer to the Extended Curb Details (ECD) standard sheet. For structures with T631 or T631LS bridge rail, refer to the Mounting Details for T631 & T631LS Rails (T631-CM) standard sheet. Refer to the Rail Anchorage Curb (RAC) standard sheet for structures with bridge rail other than T631 or T631LS.

2. For vehicle safety, the following requirements must be met:
   · For structures without bridge rail, construct curbs no more than 3" above finished grade.
   · For structures with bridge rail, construct curbs flush with finished grade.
   Reduce curb heights, if necessary, to meet the above requirements. No changes will be made in quantities and no additional compensation will be allowed for this work.

3. For curbs less than 1'-0" high, tilt Bars K or reduce bar height as necessary to maintain cover. For curbs less than 3" high, Bars K may be omitted.

4. 1'-0" typical. 2'-3" when the Rail Anchorage Curb (RAC) standard sheet is referred to elsewhere in the plans.

The Contractor may replace Bars B, C, D, E, F1, F2, M, Y, and/or Z with deformed welded wire reinforcement (WWR) meeting the requirements of ASTM A1064. The area of required reinforcement may be reduced by the ratio of 60 ksi / 70 ksi. Spacing of WWR is limited to 4" Min and 18" Max. When required, provide lap splices in the WWR of the same length required for the equivalent bar size, rounded up for wire sizes between conventional bar sizes. The lap length required for WWR is never less than the lap length required for uncoated #4 bars.

Example conversion: Replacing No. 6 Gr 60 at 6" Spacing with WWR
Required WWR = (0.44 sq. in. per 0.5 ft.) x (60 ksi / 70 ksi) = 0.755 sq. in. per ft.
If D30.6 wire is used to meet the 0.755 sq. in. per ft. requirement in this example, the required spacing = (0.306 sq. in.) / (0.755 sq. in. per ft.) x (12 in. per ft.) = 4.86"
Max spacing. Required lap length for the provided D30.6 wire is 2'-1" (the same minimum lap length required for uncoated #5 bars, as listed under MATERIAL NOTES).

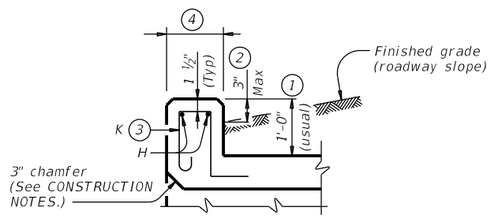

SECTION THRU CURB

TABLE OF BAR DIMENSIONS

H	"X"	"Y"
2'-0"	2'-7 ½"	4'-1"
3'-0"	3'-7 ½"	4'-1"
4'-0"	4'-7 ½"	4'-1"
5'-0"	5'-7 ½"	4'-1"
6'-0"	6'-7 ½"	4'-1"

CONSTRUCTION NOTES:

Do not use permanent forms.
Chamfer the bottom edge of the top slab 3" at the entrance.
Optionally, raise construction joints shown at the flow line by a maximum of 6". If this option is taken, Bars M may be cut off or raised, Bars C and D may be reversed, and Bars Y and Z may be reversed.

MATERIAL NOTES:

Provide Grade 60 reinforcing steel.
Provide galvanized reinforcing steel if required elsewhere in the plans.
Provide Class C concrete (f'c = 3,600 psi) for culvert barrel and curb, with the following exceptions: provide Class S concrete (f'c = 4,000 psi) for top slabs of:
· culverts with overlay,
· culverts with 1-to-2 course surface treatment, or
· culverts with the top slab as the final riding surface.
Provide bar laps, where required, as follows:
· Uncoated or galvanized ~ #4 = 1'-8" Min
· Uncoated or galvanized ~ #5 = 2'-1" Min
· Uncoated or galvanized ~ #6 = 2'-6" Min

GENERAL NOTES:

Designed according to AASHTO LRFD Bridge Design Specifications for the range of fill heights shown.
See the Multiple Box Culverts Cast-In-Place Miscellaneous Detail (MC-MD) standard sheet for details pertaining to skewed ends, angle sections, and lengthening.

Cover dimensions are clear dimensions, unless noted otherwise.
Reinforcing bar dimensions shown are out-to-out of bar.

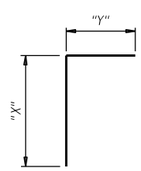

BARS C

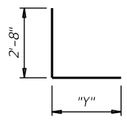

BARS D

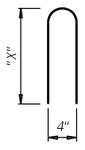

BARS Z

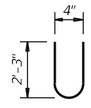

BARS Y

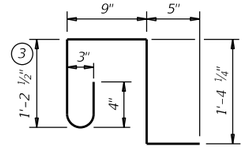

BARS K (#4)
(Spa = 1'-0" Max)
(Length = 4'-2")

HL93 LOADING SHEET 1 OF 2

Texas Department of Transportation | Bridge Division Standard

MULTIPLE BOX CULVERTS CAST-IN-PLACE
6'-0" SPAN
0' TO 16' FILL

MC-6-16

FILE: mc616ste-20.dgn	DN: TBE	CK: BMP	DW: TxDOT	CK: TxDOT
©TxDOT February 2020	CONT	SECT	JOB	HIGHWAY
REVISIONS				
	DIST	COUNTY		SHEET NO.
				196

NUMBER OF SPANS	SECTION DIMENSIONS				BILLS OF REINFORCING STEEL (For Box Length = 40 feet)																																QUANTITIES					
					Bars B					Bars C & D							Bars E					Bars F1 ~ #4				Bars F2 ~ #4				Bars M ~ #4				Bars Y & Z ~ #4								Bars H 4 ~ #4		Bars K		Per Foot of Barrel		Curb		Total	
	S	H	T	U	No.	Size	Spa	Length	Wt	No.	Size	Spa	Bars C Length	Bars C Wt	Bars D Length	Bars D Wt	No.	Size	Spa	Length	Wt	No.	Spa	Length	Wt	No.	Spa	Length	Wt	No.	Spa	Length	Wt	No.	Spa	Bars Y Length	Bars Y Wt	Bars Z Length	Bars Z Wt	Length	Wt	No.	Wt	Conc (CY)	Renf (Lb)	Conc (CY)	Renf (Lb)	Conc (CY)	Renf (Lb)
2	6' – 0"	2' – 0"	9"	7"	108	#6	9"	13' – 6"	2,190	108	#5	9"	6' – 8"	751	6' – 9"	760	108	#6	9"	10' – 2"	1,649	10	18"	39' – 9"	266	44	18"	39' – 9"	1,168	108	9"	2' – 0"	144	54	9"	4' – 9"	171	5' – 5"	195	13' – 6"	36	30	84	0.894	182.4	1.0	120	36.8	7,414
3	6' – 0"	2' – 0"	9"	7"	108	#6	9"	20' – 1"	3,258	108	#5	9"	6' – 8"	751	6' – 9"	760	108	#6	9"	16' – 9"	2,717	15	18"	39' – 9"	398	63	18"	39' – 9"	1,673	108	9"	2' – 0"	144	108	9"	4' – 9"	343	5' – 5"	391	20' – 1"	54	44	122	1.302	260.9	1.5	176	53.6	10,611
4	6' – 0"	2' – 0"	9"	7"	108	#6	9"	26' – 8"	4,326	108	#5	9"	6' – 8"	751	6' – 9"	760	108	#6	9"	23' – 4"	3,785	20	18"	39' – 9"	531	82	18"	39' – 9"	2,177	108	9"	2' – 0"	144	162	9"	4' – 9"	514	5' – 5"	586	26' – 8"	71	56	156	1.711	339.4	2.0	227	70.4	13,801
5	6' – 0"	2' – 0"	9"	7"	108	#6	9"	33' – 3"	5,394	108	#5	9"	6' – 8"	751	6' – 9"	760	108	#6	9"	29' – 11"	4,853	25	18"	39' – 9"	664	101	18"	39' – 9"	2,682	108	9"	2' – 0"	144	216	9"	4' – 9"	685	5' – 5"	782	33' – 3"	89	70	195	2.120	417.9	2.5	284	87.3	16,999
6	6' – 0"	2' – 0"	9"	7"	108	#6	9"	39' – 10"	6,462	108	#5	9"	6' – 8"	751	6' – 9"	760	108	#6	9"	36' – 6"	5,921	30	18"	39' – 9"	797	120	18"	39' – 9"	3,186	108	9"	2' – 0"	144	270	9"	4' – 9"	857	5' – 5"	977	39' – 10"	106	82	228	2.529	496.4	3.0	334	104.1	20,189
2	6' – 0"	3' – 0"	9"	7"	108	#6	9"	13' – 6"	2,190	108	#5	9"	7' – 8"	864	6' – 9"	760	108	#6	9"	10' – 2"	1,649	10	18"	39' – 9"	266	50	18"	39' – 9"	1,328	108	9"	3' – 0"	216	54	9"	4' – 9"	171	7' – 5"	268	13' – 6"	36	30	84	0.958	192.8	1.0	120	39.3	7,832
3	6' – 0"	3' – 0"	9"	7"	108	#6	9"	20' – 1"	3,258	108	#5	9"	7' – 8"	864	6' – 9"	760	108	#6	9"	16' – 9"	2,717	15	18"	39' – 9"	398	71	18"	39' – 9"	1,885	108	9"	3' – 0"	216	108	9"	4' – 9"	343	7' – 5"	535	20' – 1"	54	44	122	1.389	274.4	1.5	176	57.1	11,152
4	6' – 0"	3' – 0"	9"	7"	108	#6	9"	26' – 8"	4,326	108	#5	9"	7' – 8"	864	6' – 9"	760	108	#6	9"	23' – 4"	3,785	20	18"	39' – 9"	531	92	18"	39' – 9"	2,443	108	9"	3' – 0"	216	162	9"	4' – 9"	514	7' – 5"	803	26' – 8"	71	56	156	1.819	356.1	2.0	227	74.7	14,469
5	6' – 0"	3' – 0"	9"	7"	108	#6	9"	33' – 3"	5,394	108	#5	9"	7' – 8"	864	6' – 9"	760	108	#6	9"	29' – 11"	4,853	25	18"	39' – 9"	664	113	18"	39' – 9"	3,000	108	9"	3' – 0"	216	216	9"	4' – 9"	685	7' – 5"	1,070	33' – 3"	89	70	195	2.250	437.7	2.5	284	92.5	17,790
6	6' – 0"	3' – 0"	9"	7"	108	#6	9"	39' – 10"	6,462	108	#5	9"	7' – 8"	864	6' – 9"	760	108	#6	9"	36' – 6"	5,921	30	18"	39' – 9"	797	134	18"	39' – 9"	3,558	108	9"	3' – 0"	216	270	9"	4' – 9"	857	7' – 5"	1,338	39' – 10"	106	82	228	2.681	519.3	3.0	334	110.2	21,107
2	6' – 0"	4' – 0"	9"	7"	108	#6	9"	13' – 6"	2,190	108	#5	9"	8' – 8"	976	6' – 9"	760	108	#6	9"	10' – 2"	1,649	10	18"	39' – 9"	266	50	18"	39' – 9"	1,328	108	9"	4' – 0"	289	54	9"	4' – 9"	171	9' – 5"	340	13' – 6"	36	30	84	1.023	199.2	1.0	120	41.9	8,089
3	6' – 0"	4' – 0"	9"	7"	108	#6	9"	20' – 1"	3,258	108	#5	9"	8' – 8"	976	6' – 9"	760	108	#6	9"	16' – 9"	2,717	15	18"	39' – 9"	398	71	18"	39' – 9"	1,885	108	9"	4' – 0"	289	108	9"	4' – 9"	343	9' – 5"	679	20' – 1"	54	44	122	1.475	282.6	1.5	176	60.5	11,481
4	6' – 0"	4' – 0"	9"	7"	108	#6	9"	26' – 8"	4,326	108	#5	9"	8' – 8"	976	6' – 9"	760	108	#6	9"	23' – 4"	3,785	20	18"	39' – 9"	531	92	18"	39' – 9"	2,443	108	9"	4' – 0"	289	162	9"	4' – 9"	514	9' – 5"	1,019	26' – 8"	71	56	156	1.927	366.1	2.0	227	79.1	14,870
5	6' – 0"	4' – 0"	9"	7"	108	#6	9"	33' – 3"	5,394	108	#5	9"	8' – 8"	976	6' – 9"	760	108	#6	9"	29' – 11"	4,853	25	18"	39' – 9"	664	113	18"	39' – 9"	3,000	108	9"	4' – 0"	289	216	9"	4' – 9"	685	9' – 5"	1,359	33' – 3"	89	70	195	2.380	449.5	2.5	284	97.7	18,264
6	6' – 0"	4' – 0"	9"	7"	108	#6	9"	39' – 10"	6,462	108	#5	9"	8' – 8"	976	6' – 9"	760	108	#6	9"	36' – 6"	5,921	30	18"	39' – 9"	797	134	18"	39' – 9"	3,558	108	9"	4' – 0"	289	270	9"	4' – 9"	857	9' – 5"	1,698	39' – 10"	106	82	228	2.832	533.0	3.0	334	116.2	21,652
2	6' – 0"	5' – 0"	9"	7"	108	#6	9"	13' – 6"	2,190	108	#5	9"	9' – 8"	1,089	6' – 9"	760	108	#6	9"	10' – 2"	1,649	10	18"	39' – 9"	266	56	18"	39' – 9"	1,487	108	9"	5' – 0"	361	54	9"	4' – 9"	171	11' – 5"	412	13' – 6"	36	30	84	1.088	209.6	1.0	120	44.5	8,505
3	6' – 0"	5' – 0"	9"	7"	108	#6	9"	20' – 1"	3,258	108	#5	9"	9' – 8"	1,089	6' – 9"	760	108	#6	9"	16' – 9"	2,717	15	18"	39' – 9"	398	79	18"	39' – 9"	2,098	108	9"	5' – 0"	361	108	9"	4' – 9"	343	11' – 5"	824	20' – 1"	54	44	122	1.562	296.2	1.5	176	64.0	12,024
4	6' – 0"	5' – 0"	9"	7"	108	#6	9"	26' – 8"	4,326	108	#5	9"	9' – 8"	1,089	6' – 9"	760	108	#6	9"	23' – 4"	3,785	20	18"	39' – 9"	531	102	18"	39' – 9"	2,708	108	9"	5' – 0"	361	162	9"	4' – 9"	514	11' – 5"	1,235	26' – 8"	71	56	156	2.035	382.7	2.0	227	83.4	15,536
5	6' – 0"	5' – 0"	9"	7"	108	#6	9"	33' – 3"	5,394	108	#5	9"	9' – 8"	1,089	6' – 9"	760	108	#6	9"	29' – 11"	4,853	25	18"	39' – 9"	664	125	18"	39' – 9"	3,319	108	9"	5' – 0"	361	216	9"	4' – 9"	685	11' – 5"	1,647	33' – 3"	89	70	195	2.509	469.3	2.5	284	102.8	19,056
6	6' – 0"	5' – 0"	9"	7"	108	#6	9"	39' – 10"	6,462	108	#5	9"	9' – 8"	1,089	6' – 9"	760	108	#6	9"	36' – 6"	5,921	30	18"	39' – 9"	797	148	18"	39' – 9"	3,930	108	9"	5' – 0"	361	270	9"	4' – 9"	857	11' – 5"	2,059	39' – 10"	106	82	228	2.983	555.9	3.0	334	122.3	22,570
2	6' – 0"	6' – 0"	9"	7"	108	#6	9"	13' – 6"	2,190	108	#5	9"	10' – 8"	1,202	6' – 9"	760	108	#6	9"	10' – 2"	1,649	10	18"	39' – 9"	266	62	18"	39' – 9"	1,646	108	9"	6' – 0"	433	54	9"	4' – 9"	171	13' – 5"	484	13' – 6"	36	30	84	1.153	220.0	1.0	120	47.1	8,921
3	6' – 0"	6' – 0"	9"	7"	108	#6	9"	20' – 1"	3,258	108	#5	9"	10' – 8"	1,202	6' – 9"	760	108	#6	9"	16' – 9"	2,717	15	18"	39' – 9"	398	87	18"	39' – 9"	2,310	108	9"	6' – 0"	433	108	9"	4' – 9"	343	13' – 5"	968	20' – 1"	54	44	122	1.648	309.7	1.5	176	67.4	12,565
4	6' – 0"	6' – 0"	9"	7"	108	#6	9"	26' – 8"	4,326	108	#5	9"	10' – 8"	1,202	6' – 9"	760	108	#6	9"	23' – 4"	3,785	20	18"	39' – 9"	531	112	18"	39' – 9"	2,974	108	9"	6' – 0"	433	162	9"	4' – 9"	514	13' – 5"	1,452	26' – 8"	71	56	156	2.144	399.4	2.0	227	87.7	16,204
5	6' – 0"	6' – 0"	9"	7"	108	#6	9"	33' – 3"	5,394	108	#5	9"	10' – 8"	1,202	6' – 9"	760	108	#6	9"	29' – 11"	4,853	25	18"	39' – 9"	664	137	18"	39' – 9"	3,638	108	9"	6' – 0"	433	216	9"	4' – 9"	685	13' – 5"	1,936	33' – 3"	89	70	195	2.639	489.1	2.5	284	108.0	19,849
6	6' – 0"	6' – 0"	9"	7"	108	#6	9"	39' – 10"	6,462	108	#5	9"	10' – 8"	1,202	6' – 9"	760	108	#6	9"	36' – 6"	5,921	30	18"	39' – 9"	797	162	18"	39' – 9"	4,302	108	9"	6' – 0"	433	270	9"	4' – 9"	857	13' – 5"	2,420	39' – 10"	106	82	228	3.134	578.9	3.0	334	128.3	23,488

DISCLAIMER:
The use of this standard is governed by the "Texas Engineering Practice Act". No warranty of any kind is made by TxDOT for any purpose whatsoever. TxDOT assumes no responsibility for the conversion by TxDOT incorrect results or damages resulting from its use.

DATE: 3/12/2025 3:10:29 PM
FILE: G:\TxDOT\Projects\City_Georgetown\10767-00 Shell Road\03_CADD\01_Shts\06-DRNG\SHTS\mc616ste-20.dgn

HL93 LOADING SHEET 2 OF 2

Texas Department of Transportation | Bridge Division Standard

MULTIPLE BOX CULVERTS
CAST-IN-PLACE
6'-0" SPAN
0' TO 16' FILL

MC-6-16

FILE: mc616ste-20.dgn	DN: TBE	CK: BMP	DW: TxDOT	CK: TxDOT
©TxDOT February 2020	CONT	SECT	JOB	HIGHWAY
REVISIONS				
	DIST	COUNTY		SHEET NO.
				197

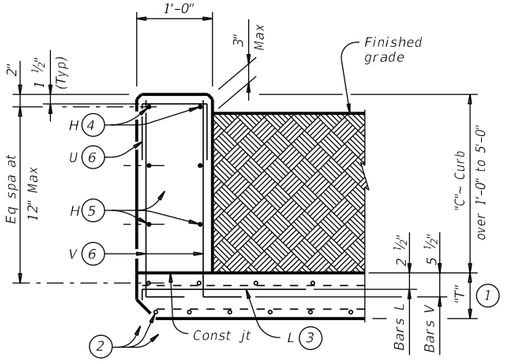

TYPICAL SECTION

Used for curbs over 1'-0" to 5'-0"

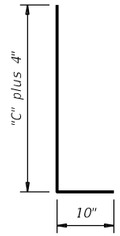

BARS V (#5) (6)

Spaced at 12" Max

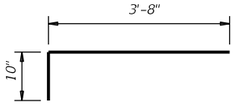

BARS L (#5) (3)

Spaced at 12" Max

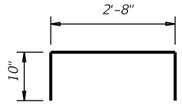

OPTIONAL BARS L (#5) (3) (7)

Spaced at 12" Max

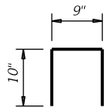

BARS U (#4) (6)

Spaced at 12" Max

(1) "T" is equal to the culvert top slab thickness. For precast boxes with slabs less than 8" thick, see SCP-MD standard for additional details.

(2) Adjust normal culvert slab bars as necessary to clear obstructions.

(3) Place bars L as shown. Tilt hook as necessary to maintain cover.

(4) Place normal culvert curb bars H(#4) as shown. Adjust as necessary to clear obstructions.

(5) Additional bars H(#4) as required to maintain 12" Max spacing.

(6) Replace normal culvert curb bars K with one bar U and two bars V as shown spaced at 12" Max. Adjust length of bars V as necessary to maintain clear cover.

(7) Optional bars L are to be used only for precast box culverts with 3'-0" closure pour.

(8) Quantities shown are for Contractor's information only. Quantities are per linear foot of curb length. The value in table can be interpolated for intermediate values of curb height, "C". Quantity includes bars K (when applicable).

TABLE OF ESTIMATED CURB QUANTITIES (8)

Curb Height "C"	Conc (CY/LF)	Reinf Steel (Lb/LF)
1'-0"	0.037	10.4
1'-6"	0.056	14.5
2'-0"	0.074	15.6
2'-6"	0.093	18.0
3'-0"	0.111	19.0
3'-6"	0.130	21.3
4'-0"	0.148	22.4
4'-6"	0.167	24.8
5'-0"	0.185	25.9

CONSTRUCTION NOTES:

Adjust reinforcing steel as necessary to provide 1 ¼" cover.
For vehicle safety, top of the curb must not project more than 3" above the finished grade.

MATERIAL NOTES:

Provide Grade 60 reinforcing steel.
Provide galvanized reinforcing steel if required elsewhere in the plans.
Provide Class "C" concrete (f'_c = 3,600 psi) minimum for curbs.
Provide bar laps, where required, as follows:
· Uncoated or galvanized ~ #4 = 1'-8" Min

GENERAL NOTES:

Designed according to AASHTO LRFD Bridge Design Specifications.
These extended curb details have sufficient strength to allow for future retrofit of Type T631 or T631LS railing. These details are suitable for use with PR11, PR22 and PR3 type rails. These details are not suitable for the mounting of other rail types. For new construction using T631 or T631LS railing, use the T631-CM standard.
This Curb is considered as part of the Box Culvert for payment.

Cover dimensions are clear dimensions, unless noted otherwise.
Reinforcing bar dimensions shown are out-to-out of bar.

Texas Department of Transportation

Bridge Division Standard

EXTENDED CURB DETAILS FOR BOX CULVERTS WITH CURBS OVER 1'-0" TO 5'-0" TALL

ECD

FILE: CD-ECD-20.dgn	DN: GAF	CK: TxDOT	DW: TxDOT	CK: GAF
©TxDOT February 2020	CONT	SECT	JOB	HIGHWAY
REVISIONS				
	DIST	COUNTY		SHEET NO.
				198

DISCLAIMER:
The use of this standard is governed by the "Texas Engineering Practice Act". No warranty of any kind is made by TxDOT for any purpose whatsoever. TxDOT assumes no responsibility for the conversion of this standard to other formats or for incorrect results or damages resulting from its use.

DATE: 3/12/2025 3:10:30 PM
FILE: G:\TXC\Projects\City_Georgetown\10767-00 Shell Road\03_CADD\01_Snts\06-DRNG\Stds\CD-ECD-20.dgn

DISCLAIMER :
THE USE OF THIS STANDARD IS GOVERNED BY THE "TEXAS ENGINEERING PRACTICE ACT". NO WARRANTY OF ANY KIND IS MADE BY TXDOT FOR ANY PURPOSE WHATSOEVER. TXDOT ASSUMES NO RESPONSIBILITY FOR THE CONVERSION OF THIS STANDARD TO OTHER FORMATS OR FOR INCORRECT RESULTS OR DAMAGES RESULTING FROM ITS USE.

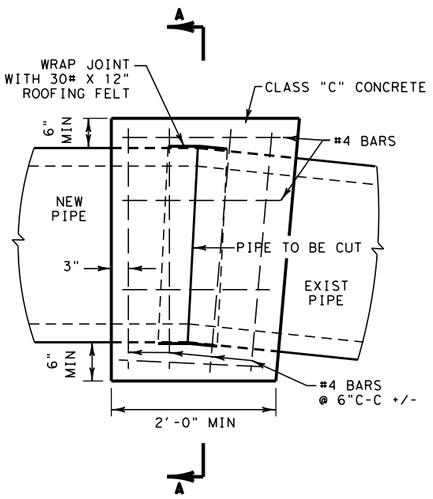

PLAN/ELEVATION

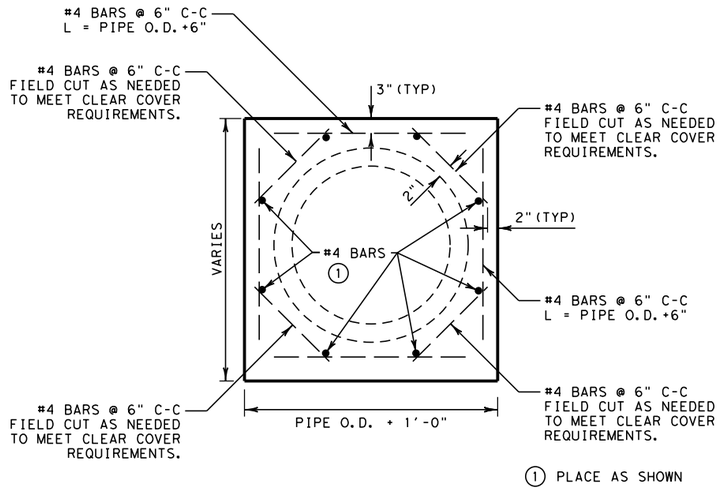

SECTION A-A

PIPE COLLAR DETAIL

FOR HORIZONTAL OR VERTICAL PLACEMENT
N.T.S.

PIPE COLLAR GENERAL NOTES

1. THE CONTRACTOR SHALL TAKE STEPS TO ENSURE A SMOOTH JOINT ALONG THE INSIDE WALL OF PIPE.
2. ANY SPILLAGE OF CONCRETE THROUGH THE JOINT SHALL BE REMOVED AND THE INSIDE PIPE SURFACES SMOOTHED AS DIRECTED BY THE ENGINEER.
3. PIPE COLLARS WILL NOT BE PAID FOR DIRECTLY, BUT SHALL BE CONSIDERED SUBSIDIARY TO ITEM 464.

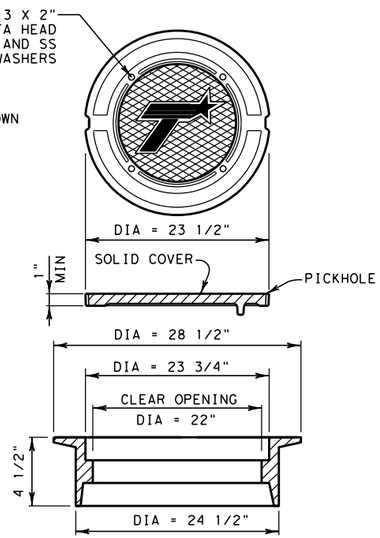

NOTE:
USE CITY OF GEORGETOWN MANHOLE COVER.

RING AND COVER DETAILS

MANHOLES AND CURB INLETS
N.T.S.

RING AND COVER SHALL CONFORM TO THE REQUIREMENTS OF ITEM 471 AND SHALL BE INCLUDED IN THE CURRENT TXDOT "APPROVED CAST IRON PRODUCTS SHEETS"

DIMENSIONS SHOWN ARE APPROXIMATE; ACTUAL DIMENSIONS PER MANUFACTURE/FABRICATOR.

IF RING AND COVER ARE LOCATED IN PAVEMENT; SECURE COVER WITH BOLTS AS SHOWN.

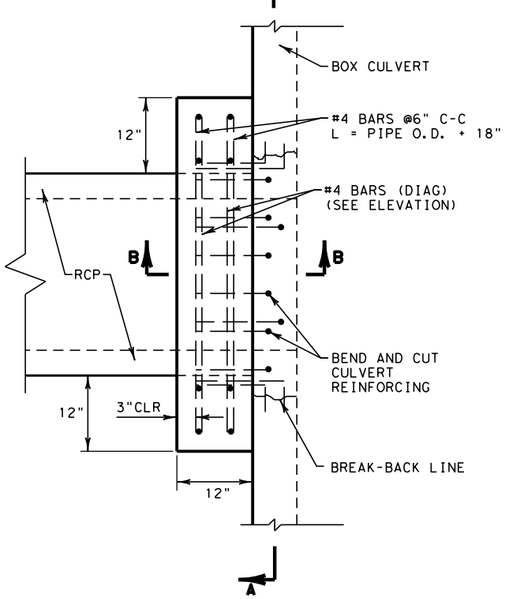

PLAN VIEW

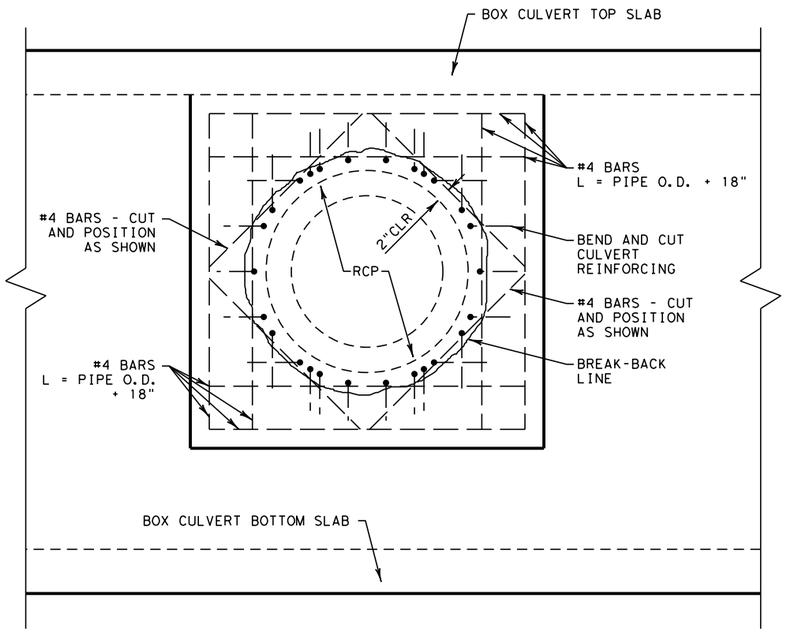

SECTION A-A

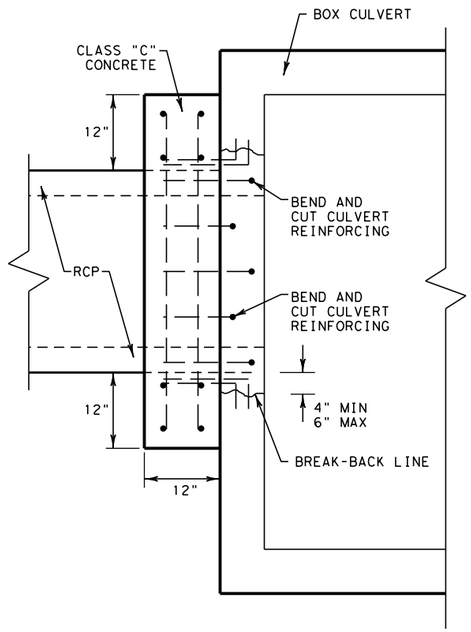

SECTION B-B

PIPE STUB-IN CONNECTION TO BOX CULVERT OR EXISTING DRAINAGE STRUCTURE

N.T.S.

PIPE STUB-IN GENERAL NOTES

1. SAW CUT A MAXIMUM 1/2" DEPTH AT BREAK-BACK LINE. USE REMOVAL METHODS THAT WILL NOT DAMAGE REMAINING CONCRETE OR CULVERT REINFORCING.
2. EXPOSE AND CLEAN BOX CULVERT REINFORCING. BEND BARS INTO PROPOSED CONNECTION AND TIE TO CONNECTION REINFORCING.
3. ROUGHEN AND CLEAN EXISTING CONCRETE SURFACES THAT ARE IN CONTACT WITH NEW CONCRETE BEFORE PLACING FORMS.
4. MATERIAL & LABOR FOR PIPE/BOX CONNECTIONS WILL NOT BE PAID FOR DIRECTLY, BUT WILL BE SUBSIDIARY TO ITEMS 462 AND 464.

©2022 by Texas Department of Transportation; All Rights Reserved

Texas Department of Transportation

Fort Worth District Standard

MISCELLANEOUS DRAINAGE DETAILS
MDD(FTW)

ORIGINAL DRAWING: 05/2019	mdd-ftw.dgn	FED.RD. DIV.NO.	PROJECT NO.		SHEET NO.
DATE	REVISIONS	6			199
05/2019	NEW STANDARD	STATE	STATE DIST.NO.	COUNTY	
07/2022	REVISE AND CORRECT RING AND COVER NOTES	TEXAS	FTW		
		CONT.	SECT.	JOB	HIGHWAY NO.

http://www.dot.state.tx.us/ftw/specinfo/standard.htm
3/12/2025 3:10:31 PM
$PATH$
G:\TXC\Projects\City_Georgetown\10767-00 Shell Road\03_CADD\01_Shts\06-DRNG\Stds\mdd-ftw.dgn

DISCLAIMER :
THE USE OF THIS STANDARD IS GOVERNED BY THE "TEXAS ENGINEERING PRACTICE ACT". NO WARRANTY OF ANY KIND IS MADE BY TXDOT FOR ANY PURPOSE WHATSOEVER. TXDOT ASSUMES NO RESPONSIBILITY FOR THE CONVERSION OF THIS STANDARD TO OTHER FORMATS OR FOR INCORRECT RESULTS OR DAMAGES RESULTING FROM ITS USE.

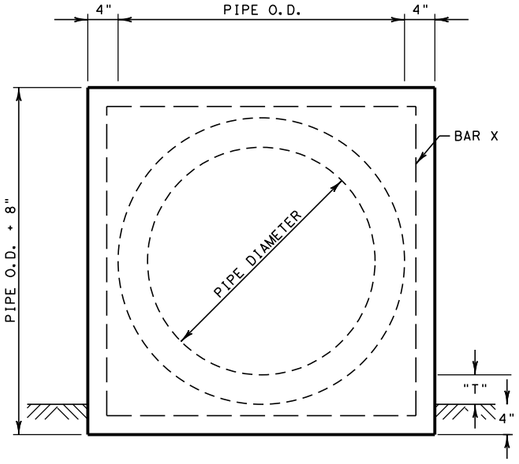

FRONT ELEVATION

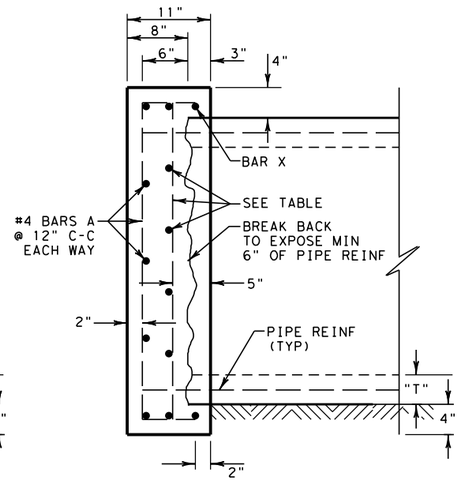

SIDE ELEVATION

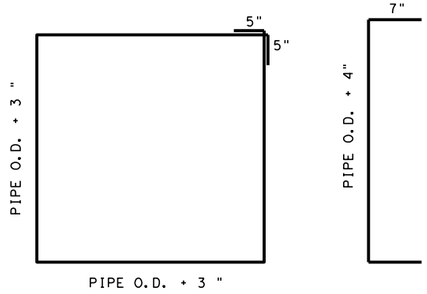

#4 BAR X

#4 BAR A

INNER REINFORCING SIZE/SPACING		
PIPE DIA(IN)	MAXIMUM DEPTH	
	15'	30'
<48	#4 @ 12" C-C	#4 @ 12" C-C
60	#4 @ 12" C-C	#4 @ 10" C-C
72	#4 @ 12" C-C	#5 @ 10" C-C
84	#4 @ 10" C-C	#5 @ 8" C-C

PIPE END CAP GENERAL NOTES

1. "T" = PIPE WALL THICKNESS.
2. ALL CONCRETE SHALL BE CLASS "C".
3. ALL REINFORCING STEEL SHALL BE GRADE 60.
4. OCTAGONAL PLUG MAY BE USED IN LIEU OF SQUARE. PROVIDE 4" MINIMUM COVER OVER OUTSIDE OF PIPE. DIMENSIONS OF PIPE PLUG AND REINFORCING TO BE AS APPROVED.

DRAINAGE PIPE END CAP OR PLUG DETAILS

N.T.S.

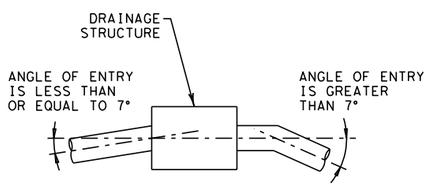

CONNECT PIPES WITHIN 7° OF NORMAL TO INLET OR MANHOLE. IF NECESSARY, USE PIPE ELBOW OR CURVED APPROACH ALIGNMENT TO STAY WITHIN THIS LIMIT.

PIPE CONNECTION

N.T.S.

1. APPROX 2" HOT MIX, TYPE C, OR AS DIRECTED.
2. APPROX 10" HOT MIX BASE, TYPE B, OR AS DIRECTED.
3. CEMENT STABILIZED BACKFILL IN ACCORDANCE WITH ITEM 400.3.3.1, 400.3.3.2, 400.3.3.3., AND 400.3.3.4.

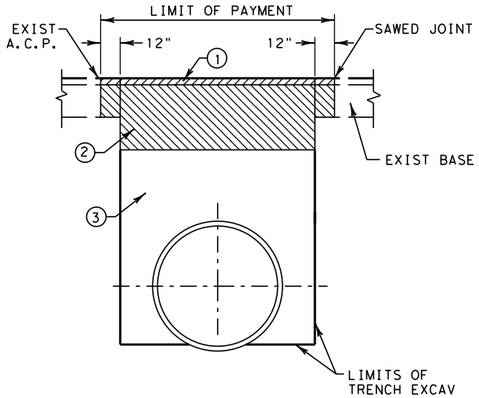

ASPHALT PAVEMENT

1. CLASS "A", "P", OR "HES" CONCRETE PAVEMENT. MATCH EXISTING PAVEMENT DEPTH. USE CLASS "HES" IF OPENING TO TRAFFIC LESS THAN 72 HOURS AFTER PLACEMENT.
2. 4" COLD MIX ASPHALT BASE. PLACE BASE MATERIAL IN ACCORDANCE WITH ITEM 361.2.2.2.
3. CEMENT STABILIZED BACKFILL IN ACCORDANCE WITH ITEM 400.3.3.1, 400.3.3.2, 400.3.3.3., AND 400.3.3.4.
4. AT CONTRACTOR'S OPTION, USE FULL-DEPTH SAW CUT AND TIE TO EXISTING PAVEMENT IN ACCORDANCE WITH ITEM 361.4.2. FOR PARTIAL DEPTH SAW CUT, EXPOSE MINIMUM 8" OF LONGITUDINAL REINFORCING AND CONSTRUCT 8" WELDED LAP (MATCH LONGITUDINAL PAVEMENT REINFORCEMENT).

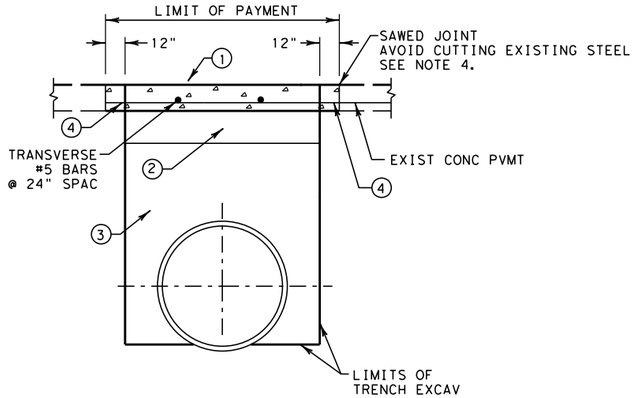

CONCRETE PAVEMENT

CUTTING AND RESTORING PAVEMENT DETAILS

N.T.S.

CUTTING AND RESTORING PAVEMENT GENERAL NOTES

1. HOT MIX OR CONCRETE PAVEMENT WILL NOT BE PAID FOR DIRECTLY, BUT WILL BE SUBSIDIARY TO CUTTING AND RESTORING PAVEMENT.
2. CONCRETE CURB OR CURB AND GUTTER WILL BE INCLUDED IN AREA OF "CUTTING AND RESTORING PAVEMENT". CONSTRUCT CURB OR CURB AND GUTTER ACCORDING TO PLAN DETAILS, OR AS DIRECTED. REMOVAL AND REPLACMENT OF CONCRETE CURB OR CURB AND GUTTER WILL NOT BE PAID FOR DIRECTLY, BUT WILL BE SUBSIDIARY TO CUTTING AND RESTORING PAVEMENT.
3. CEMENT STABILIZED BACKFILL WILL BE MEASURED AND PAID FOR IN ACCORDANCE WITH ITEM 400.
4. SEE STANDARD JS (FTW) FOR JOINT SEALING DETAILS.
5. "NON-EXCAVATABLE" FLOWABLE BACKFILL, AS DEFINED BY ITEM 401, TABLE 2, MAY BE USED AS A SUBSITITUTE FOR CEMENT STABILIZED BACKFILL, WITH THE FOLLOWING CONSTRAINTS:
   a). PLACE FLOWABLE FILL IN LIFTS NOT EXCEEDING 2 FEET IN DEPTH; PLACE EACH SUCCESSIVE LIFT WHEN THE PREVIOUS LIFT HAS STIFFENED/HARDENED (HAS LOST ITS FLOWABILITY).
   b). NO ADJUSTMENT IN PAYMENT WILL BE MADE FOR SUBSTITUTION OF FLOWABLE FILL IN LIEU OF CEMENT STABILIZED BACKFILL.

©2022 by Texas Department of Transportation;
All Rights Reserved

Texas Department of Transportation — Fort Worth District Standard

MISCELLANEOUS DRAINAGE DETAILS
MDD(FTW)

ORIGINAL DRAWING: 05/2019	mdd-ftw.dgn	FED.RD. DIV.NO.	PROJECT NO.	SHEET NO.
DATE	REVISIONS	6		200
05/2019	NEW STANDARD	STATE	STATE DIST.NO.	COUNTY
07/2022	REVISE CUT & RESTORE PAVEMENTS FOR CSB & FLOWABLE FILL; ALLOW OCTAGONAL PIPE PLUG; EDIT GENERAL NOTES	TEXAS	FTW	
		CONT.	SECT.	JOB / HIGHWAY NO.

http://www.dot.state.tx.us/ftw/specinfo/standard.htm
3/12/2025 3:10:31 PM
$PATH$
G:\TXC\Projects\City_Georgetown\10767-00 Shell Road\03_CADD\01_Shts\06-DRNG\Stds\mdd-ftw.dgn

DISCLAIMER :
THE USE OF THIS STANDARD IS GOVERNED BY THE "TEXAS ENGINEERING PRACTICE ACT". NO WARRANTY OF ANY KIND IS MADE BY TXDOT FOR ANY PURPOSE WHATSOEVER. TXDOT ASSUMES NO RESPONSIBILITY FOR THE CONVERSION OF THIS STANDARD TO OTHER FORMATS OR FOR INCORRECT RESULTS OR DAMAGES RESULTING FROM ITS USE.

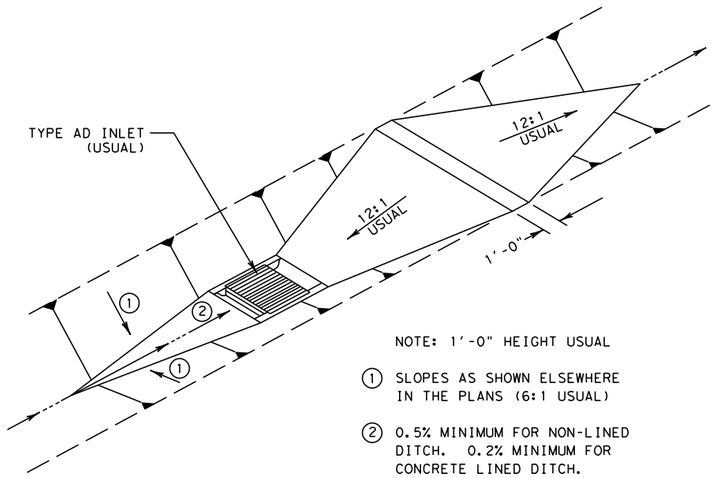

NOTE: 1'-0" HEIGHT USUAL

① SLOPES AS SHOWN ELSEWHERE IN THE PLANS (6:1 USUAL)

② 0.5% MINIMUM FOR NON-LINED DITCH. 0.2% MINIMUM FOR CONCRETE LINED DITCH.

CONTINUOUS DITCH

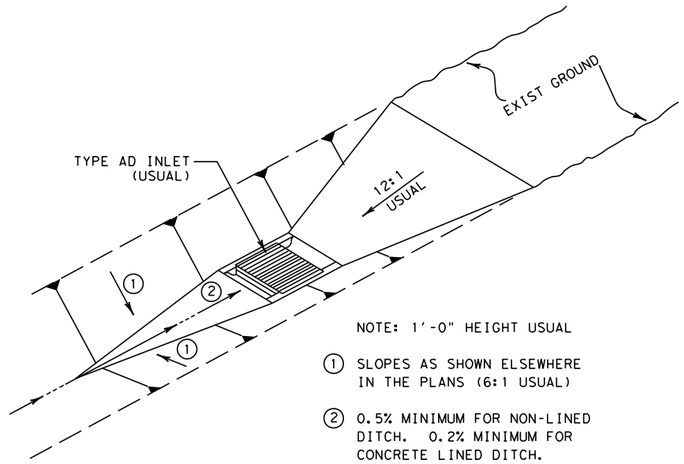

NOTE: 1'-0" HEIGHT USUAL

① SLOPES AS SHOWN ELSEWHERE IN THE PLANS (6:1 USUAL)

② 0.5% MINIMUM FOR NON-LINED DITCH. 0.2% MINIMUM FOR CONCRETE LINED DITCH.

DITCH TERMINATION

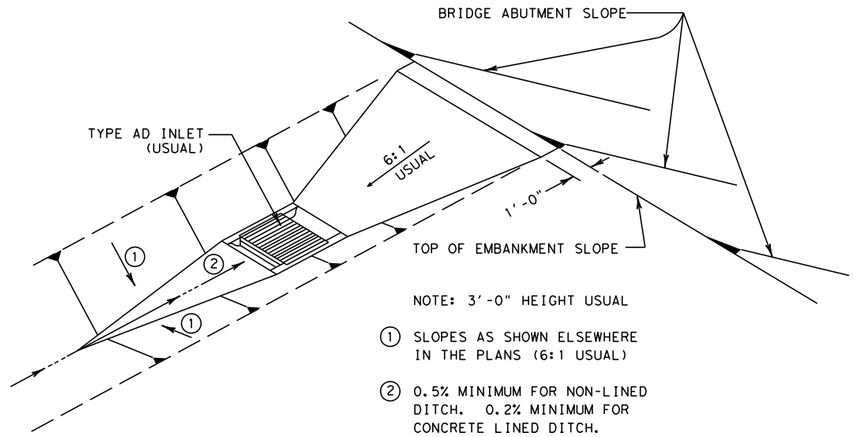

NOTE: 3'-0" HEIGHT USUAL

① SLOPES AS SHOWN ELSEWHERE IN THE PLANS (6:1 USUAL)

② 0.5% MINIMUM FOR NON-LINED DITCH. 0.2% MINIMUM FOR CONCRETE LINED DITCH.

DITCH TERMINATION AT BRIDGE END

DITCH BLOCK GENERAL NOTES

1. DITCH BLOCK AND INLET LOCATIONS SHOWN ELSEWHERE IN THE PLANS.
2. DITCH BLOCKS WILL NOT BE PAID FOR DIRECTLY, BUT WILL BE SUBSIDIARY TO THE VARIOUS BID ITEMS.

DITCH BLOCK DETAILS

N.T.S.

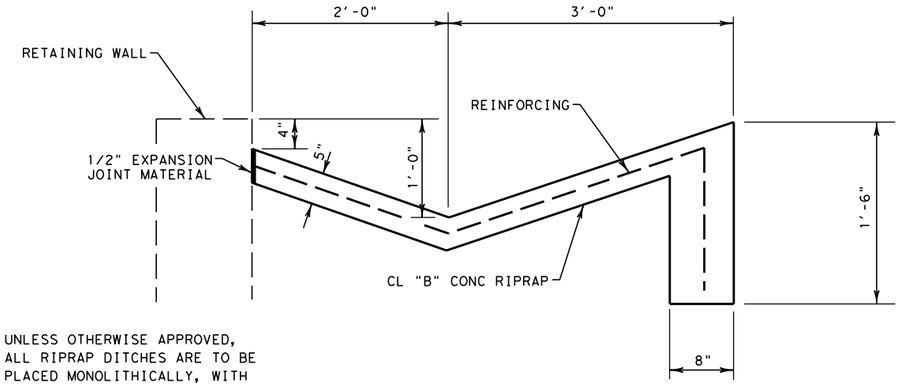

UNLESS OTHERWISE APPROVED, ALL RIPRAP DITCHES ARE TO BE PLACED MONOLITHICALLY, WITH NO CONSTRUCTION JOINTS.

RIPRAP DITCH AT RETAINING WALL

N.T.S.

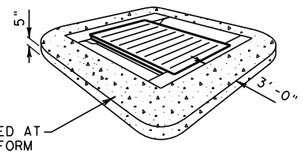

RIPRAP TO BE PLACED AT EACH INLET TO CONFORM TO ADJACENT SLOPES.
SINGLE INLET: 1 CY
DOUBLE INLET: 2 CY

TYPICAL RIPRAP APRON DETAIL

TYPE AD INLET SHOWN
TYPE AD-2 INLET IS SIMILAR

Texas Department of Transportation — Fort Worth District Standard

MISCELLANEOUS DRAINAGE DETAILS
MDD(FTW)

ORIGINAL DRAWING: 05/2019	mdd-ftw.dgn	FED.RD. DIV.NO.	PROJECT NO.	SHEET NO.
DATE	REVISIONS	6		201
05/2019	NEW STANDARD	STATE	STATE DIST.NO.	COUNTY
07/2022	ADD NOTE FOR MONOLITHIC PLACEMENT OF RIPRAP DITCHES	TEXAS	FTW	
		CONT.	SECT.	JOB / HIGHWAY NO.

©2022 by Texas Department of Transportation; All Rights Reserved

http://www.dot.state.tx.us/ftw/specinfo/standard.htm
3/12/2025 3:10:31 PM
$PATH$
G:\TXC\Projects\City_Georgetown\10767-00 Shell Road\03_CADD\01_Shts\06-DRNG\Stds\mdd-ftw.dgn

DISCLAIMER:
The use of this standard is governed by the "Texas Engineering Practice Act". No warranty of any kind is made by TxDOT for any purpose whatsoever. TxDOT assumes no responsibility for the conversion of this standard to other formats or for incorrect results or damages resulting from its use.

DATE: 3/12/2025 3:10:32 PM
FILE: G:\TxDOT\Projects\City_Georgetown\10767-00 Shell Road\03_CADD\01_Shts\06-DRNG\Srds\CD-PW-20.dgn

TABLE OF DIMENSIONS AND REINFORCING STEEL
(Wings for one structure end)

Dimensions					Variable Reinforcing				Estimated Quantities per ft of wing (2~wings) (4)		Estimated Quantities per ft of Toewall (1~toewall)	
					Bars J1		Bars J2					
Maximum Wingwall Height Hw	W	X	Y	Z	Size	Spa	Size	Spa	Reinf Lb/Ft)	Conc (CY/Ft)	Reinf (Lb/Ft)	Conc (CY/Ft)
2'-6"	2'-10"	10"	1'-0"	7"	#4	1'-0"	#4	1'-0"	48.64	0.406	6.85	0.071
2'-9"	2'-10"	10"	1'-0"	7"	#4	1'-0"	#4	1'-0"	49.31	0.424	6.85	0.071
3'-0"	2'-10"	10"	1'-0"	7"	#4	1'-0"	#4	1'-0"	49.98	0.444	6.85	0.071
3'-3"	2'-10"	10"	1'-0"	7"	#4	1'-0"	#4	1'-0"	53.32	0.462	6.85	0.071
3'-6"	2'-10"	10"	1'-0"	7"	#4	1'-0"	#4	1'-0"	53.98	0.480	6.85	0.071
4'-0"	3'-2"	1'-2"	1'-0"	7"	#4	1'-0"	#4	1'-0"	55.77	0.532	6.85	0.071
4'-6"	3'-2"	1'-2"	1'-0"	7"	#4	1'-0"	#4	1'-0"	59.77	0.568	6.85	0.071
5'-0"	3'-9"	1'-7"	1'-2"	7"	#4	1'-0"	#4	1'-0"	63.45	0.632	6.96	0.075
5'-6"	3'-9"	1'-7"	1'-2"	7"	#4	1'-0"	#4	1'-0"	67.46	0.668	6.96	0.075
6'-0"	4'-4"	2'-0"	1'-4"	7"	#5	1'-0"	#5	1'-0"	80.67	0.730	7.07	0.078
6'-6"	4'-4"	2'-0"	1'-4"	7"	#5	1'-0"	#5	1'-0"	85.05	0.768	7.07	0.078
7'-0"	5'-0"	2'-3"	1'-9"	8"	#5	1'-0"	#5	1'-0"	92.15	0.864	8.07	0.093
7'-6"	5'-0"	2'-3"	1'-9"	8"	#5	1'-0"	#5	1'-0"	96.54	0.902	8.07	0.093
8'-0"	5'-6"	2'-8"	1'-10"	8"	#5	6"	#5	6"	139.04	0.962	8.13	0.095
8'-6"	5'-6"	2'-8"	1'-10"	8"	#5	6"	#5	6"	144.47	1.000	8.13	0.095
9'-6"	6'-0"	2'-10"	2'-2"	9"	#5	6"	#5	6"	156.93	1.136	8.41	0.110
10'-6"	6'-5"	3'-0"	2'-5"	9"	#6	6"	#5	6"	196.27	1.234	8.57	0.117
11'-6"	7'-2"	3'-6"	2'-8"	11"	#6	6"	#6	6"	230.13	1.438	9.52	0.140
12'-6"	7'-8"	3'-9"	2'-11"	1'-0"	#7	6"	#6	6"	283.41	1.592	9.74	0.157
13'-6"	8'-2"	4'-0"	3'-2"	1'-2"	#8	6"	#6	6"	348.72	1.804	10.02	0.186
14'-6"	8'-10"	4'-5"	3'-5"	1'-4"	#9	6"	#6	6"	432.94	2.046	10.30	0.218
15'-6"	9'-6"	4'-10"	3'-8"	1'-6"	#9	6"	#7	6"	489.52	2.302	11.24	0.253
16'-0"	9'-11"	5'-0"	3'-11"	1'-7"	#9	6"	#7	6"	505.72	2.448	11.47	0.279

TABLE OF WINGWALL REINFORCING
(2~wings)

Bar	Size	No.	Spa
D1	#6	~	1'-0"
D2	#6	~	1'-0"
E1	#4	~	1'-0"
F	#4	~	1'-0"
G	#6	~	8"
M1	#4	4	~
P	#4	~	1'-0"
V	#4	~	1'-0"

TABLE OF TOEWALL REINFORCING

Bar	Size	No.	Spa
J3	#4	~	1'-0"
M2	#4	2	~
E2	#4	~	1'-0"

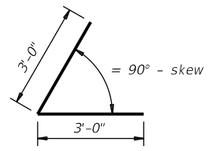

BARS D1

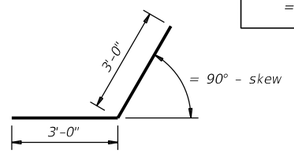

BARS D2

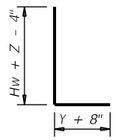

BARS J1

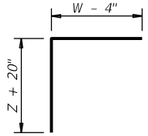

BARS J2

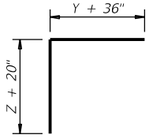

BARS J3

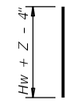

BARS V

WING DIMENSION FORMULAS:

(All values are in feet.)

Hw = H + T + C
Lw = (Hw) (SL) ÷ cosine (θ) for Type PW-1
= (Hw - 1') (SL) ÷ cosine (θ) for Type PW-2 and Hw ≥ 4'
= (Hw - 0.5') (SL) ÷ cosine (θ) for Type PW-2 and Hw < 4'

For cast-in-place culverts:
Ltw = [(N) (S) + (N + 1) (U)] ÷ cosine (θ)

For precast culverts:
Ltw = [(N) (2 U + S) + (N - 1) (0.5')] ÷ cosine (θ)
Total Wingwall Area (two wings ~ SF)
= (2)(Hw)(Lw) for Type PW-1
= (2)(Hw)(Lw) - 6 SF for Type PW-2 and Hw ≥ 4'
= (2)(Hw)(Lw) - 1.5 SF for Type PW-2 and Hw < 4'

Hw = Height of wingwall
Lw = Length of wingwall
Ltw = Culvert toewall length
N = Number of culvert spans
SL:1 = Channel slope ratio. (horizontal: 1 vertical, usual value is 2:1)
θ = Culvert skew

See applicable box culvert standard sheet for S, H, T, and U values.

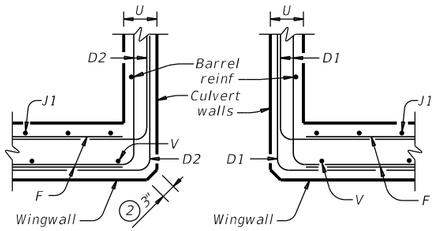

SECTION C-C - PW-1

1. Skew = 0°
2. At discharge end, chamfer may be ¾" minimum.
3. For 15° skew ~ 1"
   For 30° skew ~ 2"
   For 45° skew ~ 3"
4. Quantities shown are for two Type PW-1 wings. Adjust concrete volume for Type PW-2 wings. To determine estimated quantities for two wings, multiply the tabulated values by Lw. Quantities shown do not include weight of Bars D.
5. Provide weepholes for Hw = 5'-0" and greater. Fill around weepholes with coarse gravel.
6. Extend Bars E2 1'-6" minimum into the wingwall footing.
7. Lap Bars M1 1'-6" minimum with Bars M2.
8. Place Bars G as shown, equally spaced at 8" maximum. Provide at least two pairs of Bars G per wing.
9. 0" Min to 5'-0" Max. Estimated curb heights are shown elsewhere in the plans. For structures with pedestrian rail or curbs taller than 1'-0, refer to the Extended Curb Details (ECD) standard sheet. For structures with T631 or T631LS bridge rail, refer to the Mounting Details for T631 & T631LS Rails (T631-CM) standard sheet. Refer to the Box Culvert Rail Mounting Details (RAC) standard sheet for structures with bridge rail other than T631 or T631LS.
10. For vehicle safety, the following requirements must be met:
    - For structures without bridge rail, construct curbs no more than 3" above finished grade.
    - For structures with bridge rail, construct curbs flush with finished grade.

    Reduce curb heights, if necessary, to meet the above requirements. No changes will be made in quantities and no additional compensation will be allowed for this work.
11. 1'-0" typical. 2'-3" when the Box Culvert Rail Mounting Details (RAC) standard sheet is referred to elsewhere in the plans.
12. 3'-0" for Hw < 4'.
13. 6" for Hw < 4'.

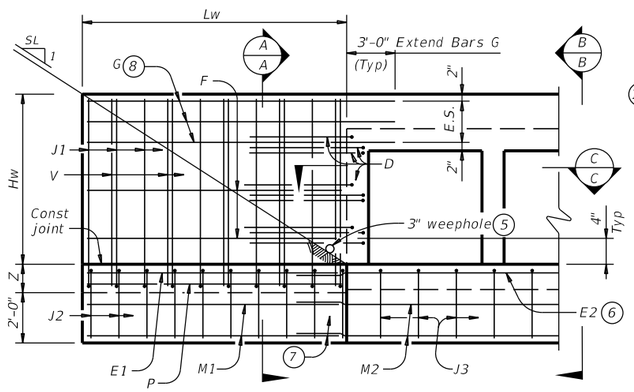

PARTIAL ELEVATION - PW-1

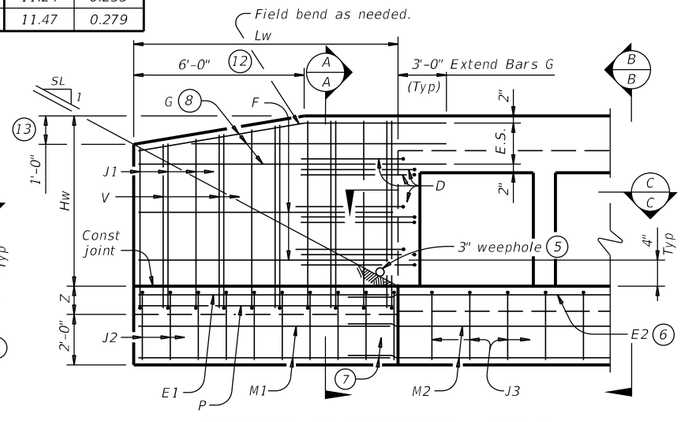

PARTIAL ELEVATION - PW-2

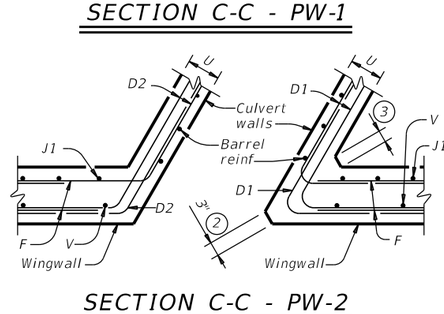

SECTION C-C - PW-2

DESIGNER NOTES:

Type PW-1 can be used for all applications and must be used if railing is to be mounted to the wingwall.
Type PW-2 can only be used for applications without a railing mounted to the wingwall.

MATERIAL NOTES:

Provide Class C concrete (f'_c=3,600 psi).
Provide Grade 60 reinforcing steel.
Provide galvanized reinforcing steel if required elsewhere in the plans.

GENERAL NOTES:

Designed in accordance with AASHTO LRFD Bridge Design Specifications.
Depth of toewalls for wingwalls and culverts may be reduced or eliminated when founded on solid rock, when directed by the Engineer.
See Box Culvert Supplement (BCS) standard sheet for wingwall type and additional dimensions and information.
Quantities for concrete and reinforcing steel resulting from the formulas given on this sheet are for the Contractor's information only.

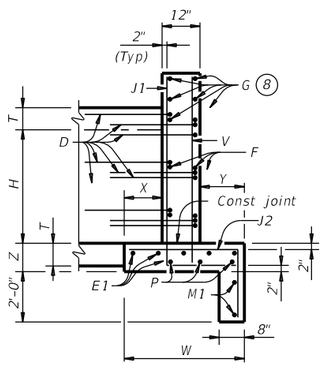

SECTION A-A
(Showing wing reinforcement.)

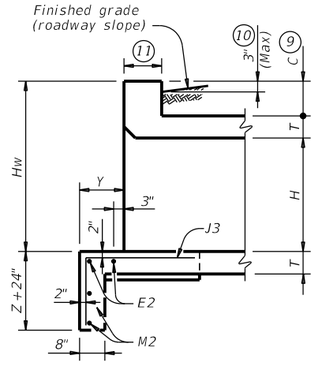

SECTION B-B
(Showing wing reinforcement.)

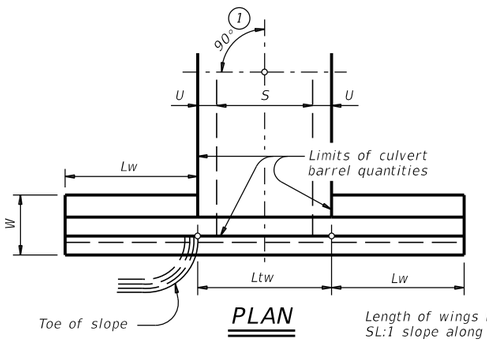

PLAN

DETAILS FOR NON-SKEWED BOX CULVERTS

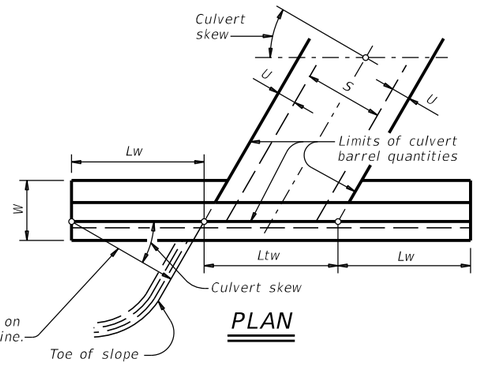

PLAN

DETAILS FOR SKEWED BOX CULVERTS
(Showing 30° skew.)

Cover dimensions are clear dimensions, unless noted otherwise.
Reinforcing dimensions are out-to-out of bars.

Texas Department of Transportation
Bridge Division Standard

CONCRETE WINGWALLS
WITH PARALLEL WINGS FOR BOX CULVERTS
TYPES PW-1 AND PW-2

PW

FILE: CD-PW-20.dgn	DN: GAF	CK: CAT	DW: TxDOT	CK: TxDOT
©TxDOT February 2020	CONT	SECT	JOB	HIGHWAY
REVISIONS				
	DIST	COUNTY		SHEET NO.
				202

TABLE OF DIMENSIONS AND REINFORCING STEEL
(Wings for One Structure End)

Dimensions					Variable Reinforcing				Estimated Quantities per ft of wing length (Two~Wings) (3)	
					Bars J1		Bars J2			
Maximum Wingwall Height (10) Hw	W	X	Y	Z	Size	Spa	Size	Spa	Reinf (Lb/Ft)	Conc (CY/Ft)
2'-6"	2'- 5"	1'- 0"	9"	7"	#4	1'-0"	#4	1'-0"	33.73	0.248
3'-0"	2'- 5"	1'- 0"	9"	7"	#4	1'-0"	#4	1'-0"	37.07	0.261
3'-6"	2'- 5"	1'- 0"	9"	7"	#4	1'-0"	#4	1'-0"	37.74	0.273
4'-0"	2'- 5"	1'- 0"	9"	7"	#4	1'-0"	#4	1'-0"	38.41	0.285
4'-6"	3'- 2"	1'- 6"	1'- 0"	7"	#4	1'-0"	#4	1'-0"	41.75	0.330
5'-0"	3'- 2"	1'- 6"	1'- 0"	7"	#4	1'-0"	#4	1'-0"	45.09	0.343
5'-6"	3'- 2"	1'- 6"	1'- 0"	7"	#4	1'-0"	#4	1'-0"	45.75	0.355
6'-0"	3'- 2"	1'- 6"	1'- 0"	7"	#4	1'-0"	#4	1'-0"	46.42	0.367
7'-0"	3'- 8"	1'- 9"	1'- 3"	7"	#4	1'-0"	#4	1'-0"	52.77	0.414
8'-0"	4'- 2"	2'- 0"	1'- 6"	8"	#5	1'-0"	#4	1'-0"	60.19	0.486
9'-0"	4'- 8"	2'- 3"	1'- 9"	8"	#4	6"	#4	6"	81.49	0.535
10'-0"	5'- 2"	2'- 6"	2'- 0"	8"	#5	6"	#4	6"	97.25	0.584
11'-0"	5'- 8"	2'- 9"	2'- 3"	8"	#6	6"	#5	6"	133.65	0.634
12'-0"	6'- 2"	3'- 0"	2'- 6"	9"	#7	6"	#5	6"	162.29	0.721

TABLE OF WINGWALL REINFORCING (Two~Wings)

Bar	Size	No.	Spa
DL & DS	#5	~	1'-0"
E	#4	~	1'-0"
F	#4	~	1'-0"
G	#6	4	~
M	#4	4	~
P	#4	~	1'-0"
RL	#5	3	~
RS	#5	3	~
V	#4	~	1'-0"

TABLE OF ESTIMATED CULVERT TOEWALL QUANTITIES

Bar	Size	No.	Spa
L	#4	~	1'-6"
Q	#4	1	~
Reinf (Lb/Ft)			2.45
Conc (CY/Ft)			0.037

TABLE OF ESTIMATED ANCHOR TOEWALL QUANTITIES

Bar	Size	No.	Spa
K	#4	~	1'-0"
N	#5	6	~
OL	#4	3	~
OS	#4	3	~
Reinf (Lb/Ft)			9.82
Conc (CY/Ft)			0.074

(1) Extend Bars P 3'-0" Min into bottom slab of box culvert.

(2) Adjust to t as necessary to maintain 11#2" clearcover and 4" Min between bars.

(3) Quantities shown are based on an average wing height for two wings (one structure end). To determine total quantities for two wings multiply the tabulated values by 0.5 (A+Lw).

(4) Recommended values of slope are: 3:1, 4:1, and 6:1. Provide 3:1 or atter slope.

(5) When shown elsewhere on the plans, construct 5" deep concrete riprap. Payment for riprap is as required by Item 432, "Riprap". Unless otherwise shown on the plans or directed by the Engineer, extend construction joints or grooved joints, oriented in the direction of ow, across the full distance of the riprap, at intervals of approximately 20'. When such riprap is provided, the culvert toewall shown in SECTION B–B is not required.

(6) At Contractor's option, end the culvert toewall ush with wingwall toewall. Adjust reinforcing as needed.

(7) 3" Min to 5'-0" Max. Estimated curb heights are shown elsewhere in the plans. For structures without railing and curbs taller than 1'-0", refer to the Extended Curb Details (ECD) standard sheet.

(8) For vehicle safety, reduce curb heights, if necessary, to provide a maximum 3" projection above nished grade. No changes will be made in quantities and no additional compensation will be allowed for this work.

(9) Culvert skew (limit to 15° or 30°)

(10) See Table of Maximum Wing Heights for various slopes. Height is limited based on a 33'–6" maximum safety pipe runner length.

(11) Typical wingwall angle for all skews.

TABLE OF MAXIMUM WING HEIGHTS (10)

Side Slope	Hw Max
3:1	11'- 5"
4:1	8'–10"
6:1	6'– 1"

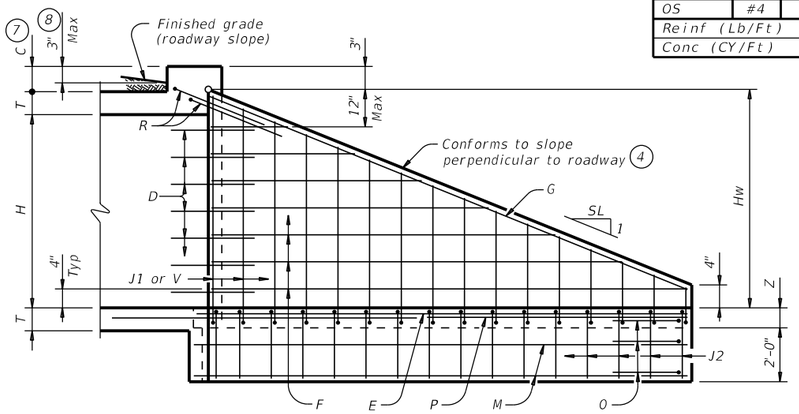

INSIDE ELEVATION OF WINGWALL

(Showing reinforcing. Culvert and culvert toewall reinforcing not shown for clarity.)

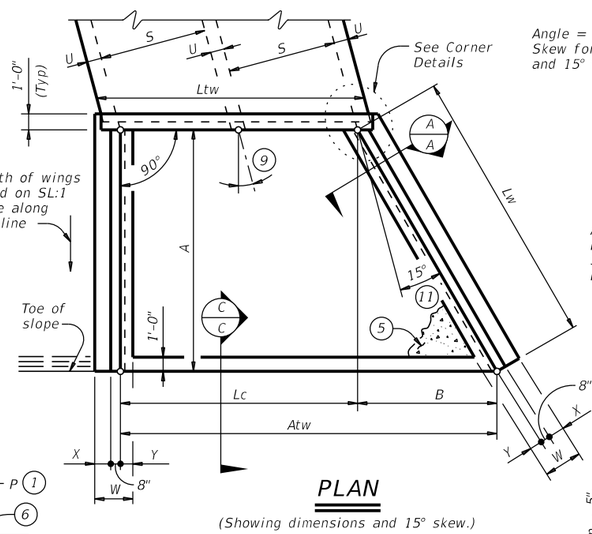

PLAN

(Showing dimensions and 15° skew.)

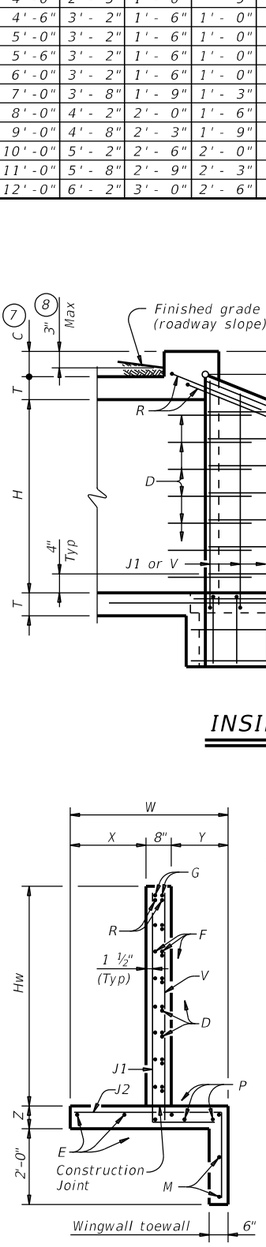

SECTION A-A

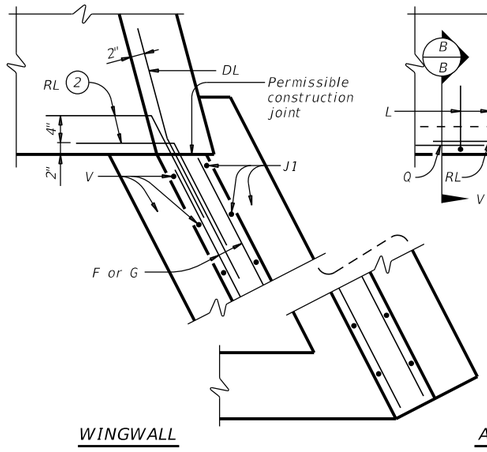

WINGWALL

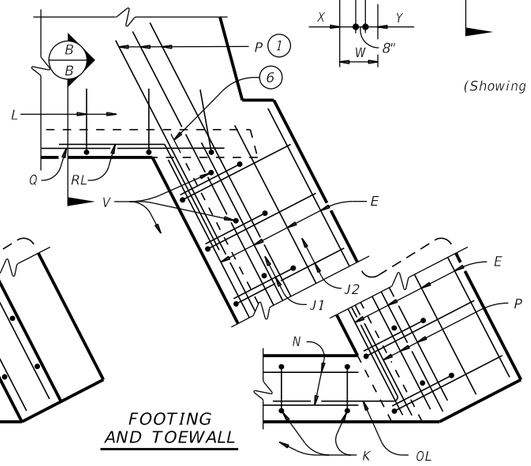

FOOTING AND TOEWALL

CORNER DETAILS

(Culvert and culvert toewall reinforcing not shown for clarity.)

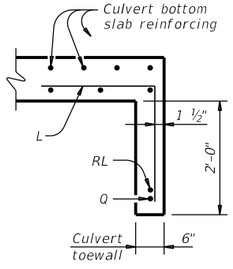

SECTION B-B (5)

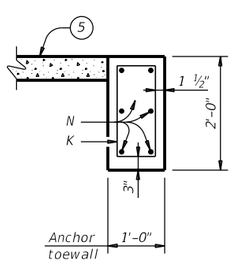

SECTION C-C

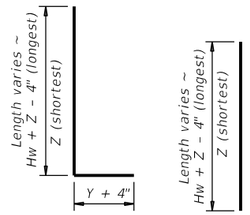

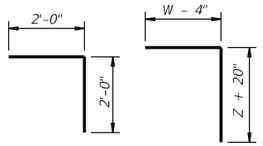

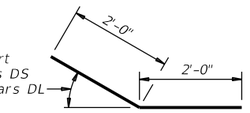

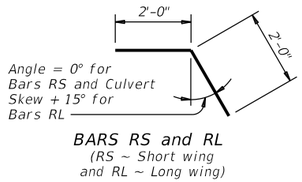

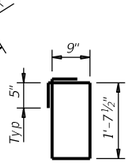

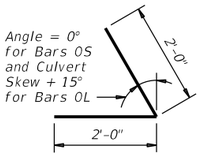

WING DIMENSION CALCULATIONS:

Formulas:

Hw = H + T + C – 0.250' (10)
A = (Hw – 0.333') (SL)
B = (A) [tan (θ + 15°)]
Lw = (A) ÷ [cos (θ + 15°)]

For cast–in–place culverts:

Ltw = [(N) (S) + (N + 1) (U)] ÷ (cos θ)

For precast culverts:

Ltw = [(N) (2U + S) + (N – 1) (0.500')] ÷ (cos θ)

Lc = (Ltw) – (2U) ÷ (cos θ)
Atw = (Lc) + (B)
Total Wingwall Area (two wings ~ S.F.) = (0.5) (Hw + 0.333') (Lw + A)

Hw = Height of wingwall (feet)
SL:1 = Side slope ratio (horizontal : 1 vertical)
Lw = Length of wingwall (feet)
Ltw = Culvert toewall length (feet)
Lc = Culvert curb between wings (feet)
Atw = Anchor toewall length (feet)
N = Number of culvert spans
θ = Culvert skew

See applicable box culvert standard for H, S, T, and U values.
See Table of Maximum Wall Heights for limits on Hw.

MATERIAL NOTES:

Provide Grade 60 reinforcing steel.

Provide galvanized reinforcing steel if required elsewhere in the plans.

Synthetic bers listed on the "Fibers for Concrete" Material Producer List (MPL) may be used in lieu of steel reinforcing in riprap concrete unless noted otherwise.

Provide Class "C" concrete (f`c = 3,600 psi).

Adjust reinforcing as necessary to provide a minimum clear cover of 1 ½".

Provide pipe runners and anchor pipes meeting the requirements of ASTM A53 (Type E or S, Gr B), ASTM A500 Gr B, or API 5LX52.

Provide ASTM A307 bolts and nuts.

Provide ASTM A36 steel plates.

Galvanize all steel components, except reinforcing unless required elsewherein the plans, after fabrication.

Repair galvanizing damaged during transport or construction in accordance with the Item 445, "Galvanizing".

For optional adhesive anchors, install adhesive anchorages in accordance with the manufacturer's instructions including hole size, drilling equipment and method, hole cleaning equipment and method, mixing and dispensing adhesive, and anchor insertion. Do not alter the manufacturer's mixing nozzle or dispenser. Provide anchorage rods that are clean and free of grease, oil, or any other foreign material. Demonstrate hole cleaning method to the Engineer for approval and continue the approved process for all anchorage locations. Test adhesive anchors in accordance with Item 450.3.3, "Tests." Test 3 anchors per 100 anchors installed.

GENERAL NOTES:

Designed according to AASHTO LRFD Bridge Design Speci cations.

The safety end treatments shown herein are intended for use in those installations where out of control vehicles are likely to traverse the openings approximately perpendicular to the pipe runners.

Pipe runners are designed for a traversing load of 1,800 pounds at yield as recommended by Research Report 280–1, "Safety Treatment of Roadside Cross–Drainage Structures", Texas Transportation Institute, March 1981.

When structure is founded on solid rock, depth of toewalls for culverts and wingwalls may be reduced or eliminated as directed by the Engineer.

All bolts, nuts, washers, brackets, angles, and pipe runners are considered parts of the safety end treatment for payment

The quantities for pipe runners, reinforcing steel, and concrete, resulting from the formulas given herein are for Contractor's information only.

See Box Culvert Supplement (BCS) standard sheet for additional dimensions and information.

Cover dimensions are clear dimensions, unless noted otherwise. Reinforcing dimensions are out–to–out of bars.

SHEET 1 OF 3

Texas Department of Transportation

Bridge Division Standard

SAFETY END TREATMENT WITH FLARED WINGS

FOR 15° AND 30° SKEW BOX CULVERTS
TYPE I ~ CROSS DRAINAGE

SETB-FW-S

FILE: setbfsse-20.dgn	DN: GAF	CK: CAT	DW: TxDOT	CK: TxDOT
©TxDOT February 2020	CONT	SECT	JOB	HIGHWAY
REVISIONS				
	DIST	COUNTY		SHEET NO.
				203

DISCLAIMER:
The use of this standard is governed by the "Texas Engineering Practice Act". No warranty of any kind is made by TxDOT for any purpose whatsoever. TxDOT assumes no responsibility for the conversion of this standard to other formats or for incorrect results or damages resulting from its use.

DATE: 3/12/2025 3:10:33 PM
FILE: G:\TXC\Projects\City_Georgetown\10767-00 Shell Road\03_CADD\01_Shts\06-DRNG\SPDs\setbfsse-20.dgn

DISCLAIMER:
The use of this standard is governed by the "Texas Engineering Practice Act". No warranty of any kind is made by TxDOT for any purpose whatsoever. TxDOT assumes no responsibility for the conversion for any purpose whatsoever. TxDOT assumes no responsibility for the conversion of this standard to other formats or for incorrect results or damages resulting from its use.

DATE: 3/12/2025 3:10:33 PM
FILE: G:\TXC\Projects\City_Georgetown\10767-00 Shell Road\03_CADD\01_Shts\06-DRNG\SDs\setbfsse-20.dgn

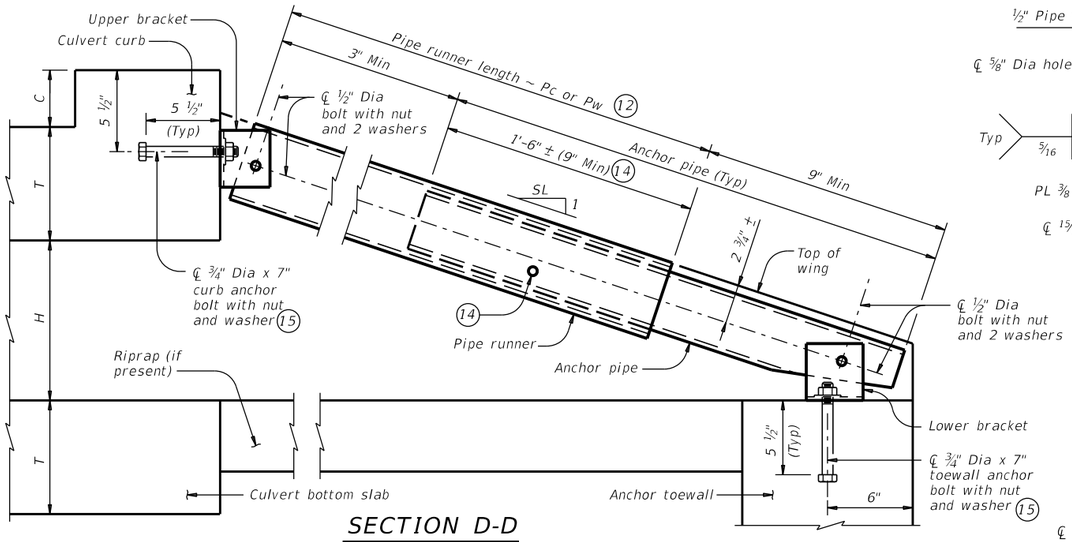

SECTION D-D

(Showing curb pipe runner. Except for upper bracket, wingwall pipe runners are similar.)

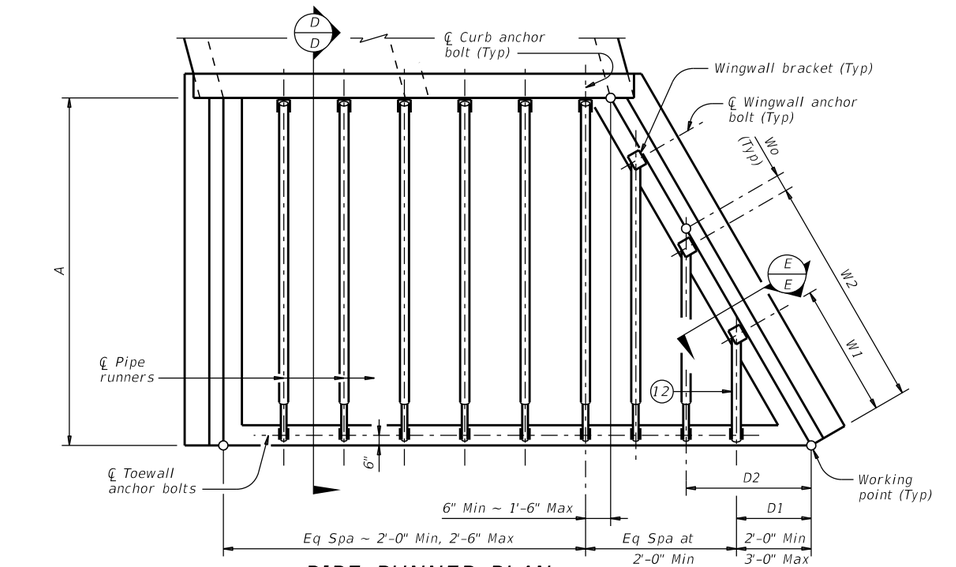

PIPE RUNNER PLAN

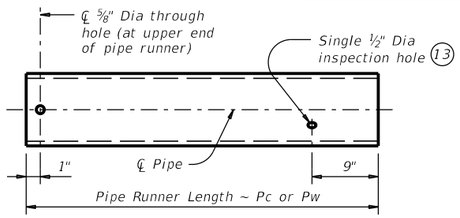

Note: Use pipe diameter required for curb pipe runner for wingwall pipe runner.

PIPE RUNNER DETAILS

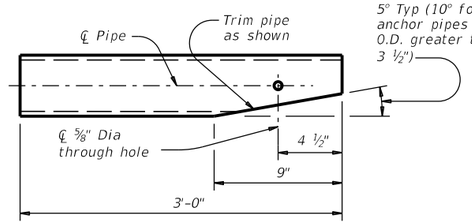

ANCHOR PIPE DETAILS

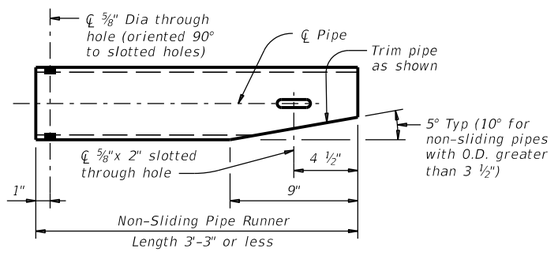

Note: Pipe size is the same as required for curb pipe runner. Adjust the corresponding lower bracket accordingly.

NON-SLIDING PIPE RUNNER DETAILS

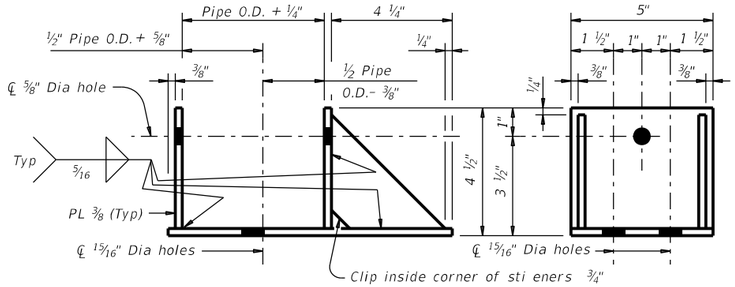

ELEVATION

SIDE VIEW

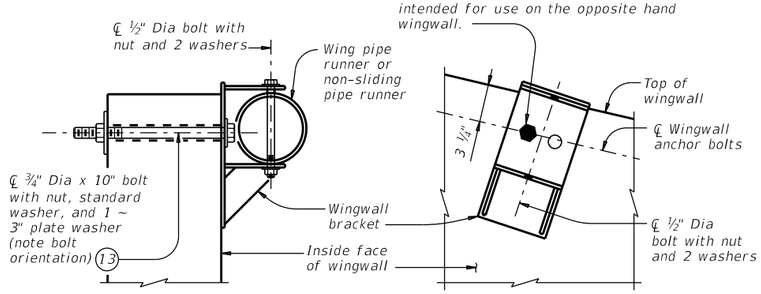

SECTION E-E

(Showing installed bracket.)

ELEVATION

(Showing installed bracket normal to wall. Pipe not shown for clarity.)

Note: Match wingwall bracket to the upper curb bracket size.

WINGWALL BRACKET DETAILS

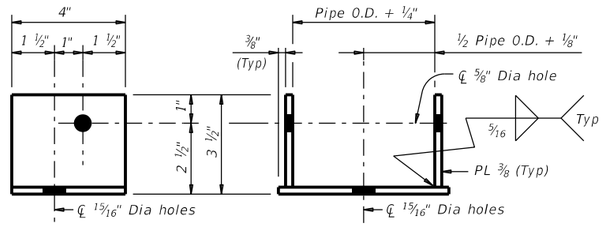

SIDE VIEW

ELEVATION

Note: Match upper and lower brackets, except for the brackets used with non-sliding pipe runners, to the required pipe diameters as shown in the table.

UPPER AND LOWER BRACKET DETAILS

MAXIMUM PIPE RUNNER LENGTHS AND REQUIRED PIPE RUNNER AND ANCHOR PIPE SIZES

Maximum Pipe Runner Length (Pc or Pw)	Required Pipe Runner Size			Required Anchor Pipe Size		
	Pipe Size	Pipe O.D.	Pipe I.D.	Pipe Size	Pipe O.D.	Pipe I.D.
9'-4"	3" STD	3.500"	3.068"	2" STD	2.375"	2.067"
19'-0"	4" STD	4.500"	4.026"	3" STD	3.500"	3.068"
33'-6"	5" STD	5.563"	5.047"	4" STD	4.500"	4.026"

(12) If pipe runner length (Pw) is 1'-9" or less, replace the normal pipe runner and anchor pipe with a single non-sliding pipe runner. See Non-Sliding Pipe Runner Details for additional information.

(13) At Contractor's option, ⅞" diameter hole may be formed or cored drilled. Percussion drilling is not permitted. Adjust placement of reinforcing steel as necessary to avoid bolt holes.

(14) After installation of pipe runner, use the ½" inspection hole to ensure that the lap of the anchor pipe with the pipe runner is adequate.

(15) At Contractor's option, an adhesive anchor may be used. Provide ¾" Dia adhesive anchors that meet the requirements of ASTM A307, Gr A fully threaded rods. Embed threaded rods into curb, wingwalls, and toewall using a Type III, Class C, D, E, or F anchor adhesive. Minimum embedment depth is 5 ½". Provide anchor adhesive able to achieve a basic bond strength in tension, Nba, of 20 kips. Submit signed and sealed calculations or the manufacturer's published literature showing the proposed anchor adhesive's ability to develop this load to the Engineer for approval prior to use.

PIPE RUNNER DIMENSION CALCULATIONS:

Wn = (K3) (Dn) – (Wo)
Pwn = (Dn) (K2) – (2.063')
Pw1 Non-Sliding Pipe Runner (If required) = (D1) (K2) – (0.563')
Pc = (A) (K1) – (1.688')

Wn = Distance from working point to centerline anchor bolt measured along bottom inside face of wing (feet)
Dn = Distance from working point to centerline pipe runner measured along outside face of anchor toewall (feet)
Pw = Wingwall pipe runner length (feet)
Pc = Curb pipe runner length (feet)
K = Constant values for use in formulas

Slope SL:1	K1	K2~15° Skew	K2~30° Skew
3:1 ~	1.054 ~	1.826 ~	1.054
4:1 ~	1.031 ~	1.785 ~	1.031
6:1 ~	1.014 ~	1.756 ~	1.014

K3 = 15° Skew ~ 2.000
30° Skew ~ 1.414
n = Wing pipe runner number
Wo = 15° Skew ~ 5"
30° Skew ~ 2 ½"

Texas Department of Transportation

Bridge Division Standard

SAFETY END TREATMENT WITH FLARED WINGS

FOR 15° AND 30° SKEW BOX CULVERTS
TYPE I ~ CROSS DRAINAGE

SETB-FW-S

FILE: setbfsse-20.dgn	DN: GAF	CK: CAT	DW: TxDOT	CK: TxDOT
©TxDOT February 2020 REVISIONS	CONT	SECT	JOB	HIGHWAY
	DIST	COUNTY		SHEET NO.
				204

Culvert Station and/or Creek name followed by applicable end (Lt, Rt or Both) (16)	Lc (Ft)	L1 (Ft)	L2 No. Spa	L2 Spa at (Ft)	L2 Overall Length (Ft)	D1 (Ft)	L3 No. Spa	L3 Spa at (Ft)	L3 Overall Length (Ft)	W1 (Ft)	L4 No. Spa	L4 Spa at (Ft)	L4 Overall Length (Ft)	L5 (Ft)	Curb Pipe Runner (Pc) No.	Curb Pipe Runner (Pc) Length (Ft)	Longest Wing Pipe Runner (Pw) (Ft)	Shortest Wing Pipe Runner (Pw) (Ft)	Non-Sliding Wing Pipe Runner (if applicable) (Ft)	Curb, Wing, and/or Non-Sliding Pipe Runners Size (3",4" or 5")	Curb, Wing, and/or Non-Sliding Pipe Runners Total Length (16) (Ft)	3'-0" Anchor Pipe Size (2",3" or 4")	3'-0" Anchor Pipe Total Length (16) (Ft)
CULVERT 01 - STA 12+01.54 (Lt)	19.843	0.500	8	2.418	19.343	3.000	4	2.358	9.432	5.583	3	4.716	14.148	4.133	8	19.625	15.917	3.292	N/A	5"	195.417	4"	36.000

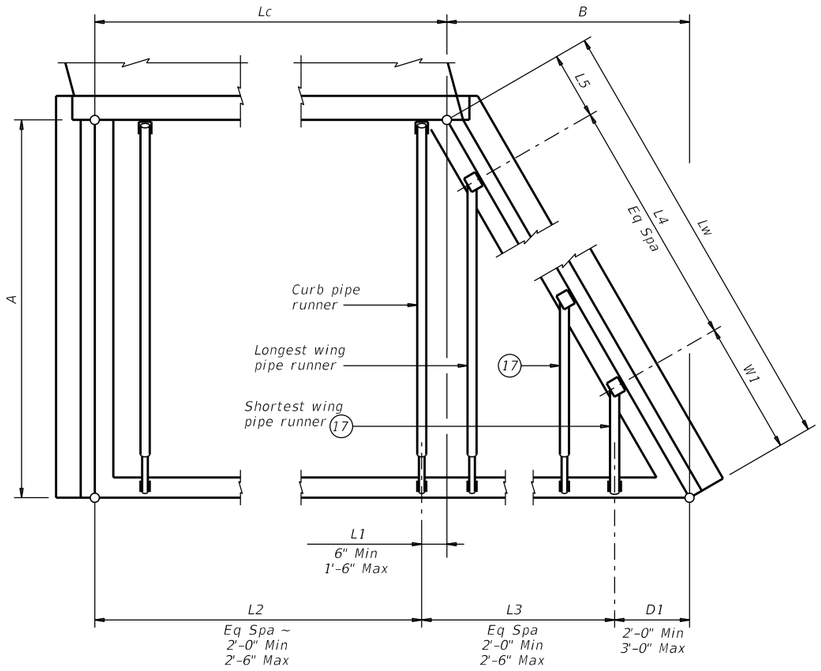

PIPE RUNNER LAYOUT

Note: Right forward culvert skew shown, actual culvert skew may be opposite hand.

(16) Quantities shown are for one structure end if Lt or Rt. Quantities shown are for two structure ends if Both.

(17) If the outermost wing pipe runner is a non-sliding pipe runner, consider the next outermost wing pipe runner as the shortest.

SPECIAL NOTE:

This tabular sheet is to be filled out by the culvert specifier and provides information for the construction details and quantities of pipe runners.

An Excel 2010 spreadsheet to assist in completing this table can be downloaded from the Bridge Standards (English) web page on the TxDOT web site. The completed sheet must be signed, sealed, and dated by a licensed Professional Engineer.

Note that the tabular quantities are given for estimating purposes only. It is likely that these quantities will change due to field conditions. Therefore, all dimensions must be verified by the Contractor in the field prior to fabrication of the safety end treatment components.

DISCLAIMER:
The use of this standard is governed by the "Texas Engineering Practice Act". No warranty of any kind is made by TxDOT for any purpose whatsoever. TxDOT assumes no responsibility for the conversion for any purpose whatsoever. TxDOT assumes no responsibility for incorrect results or damages resulting from its use.

DATE: 3/12/2025 3:10:34 PM
FILE: G:\TXC\Projects\City_Georgetown\10767-00 Shell Road\03_CADD\01_Shts\06-DRNG\SPDS\setbfsse20.dgn
setbfsse-20.dgn

SHEET 3 OF 3

Texas Department of Transportation

Bridge Division Standard

SAFETY END TREATMENT WITH FLARED WINGS

FOR 15° AND 30° SKEW BOX CULVERTS
TYPE I ~ CROSS DRAINAGE

SETB-FW-S

FILE: setbfsse-20.dgn	DN: TxDOT	CK: TxDOT	DW: TxDOT	CK: TxDOT
©TxDOT February 2020	CONT	SECT	JOB	HIGHWAY
REVISIONS				
	DIST	COUNTY		SHEET NO.
				205

DISCLAIMER :
THE USE OF THIS STANDARD IS GOVERNED BY THE "TEXAS ENGINEERING PRACTICE ACT". NO WARRANTY OF ANY KIND IS MADE BY TXDOT FOR ANY PURPOSE WHATSOEVER. TXDOT ASSUMES NO RESPONSIBILITY FOR THE CONVERSION OF THIS STANDARD TO OTHER FORMATS OR FOR INCORRECT RESULTS OR DAMAGES RESULTING FROM ITS USE.

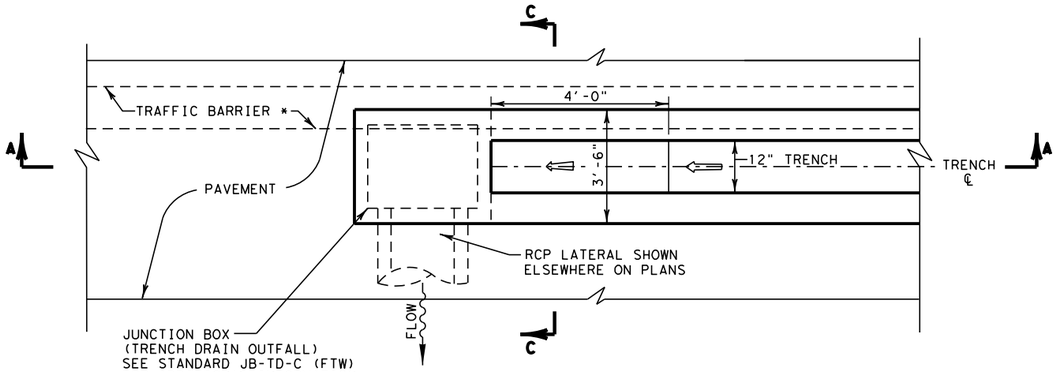

PLAN VIEW
N.T.S.

* WHERE SHOWN ON PLANS

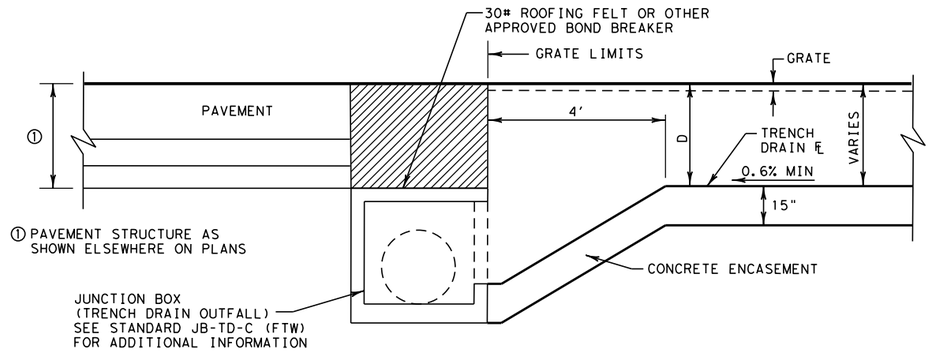

SECTION A-A
N.T.S.

SOLID CONCRETE (NO TRENCH) MATCH DEPTH OF PAVEMENT STRUCTURE. EXTEND CRCP TRANSVERSE REINFORCEMENT AND TRENCH DRAIN LONGITUDINAL REINFORCEMENT THROUGH CONCRETE. CONCRETE BLOCK TO BE SUBSIDIARY TO TRENCH DRAIN.

SINGLE DRAIN

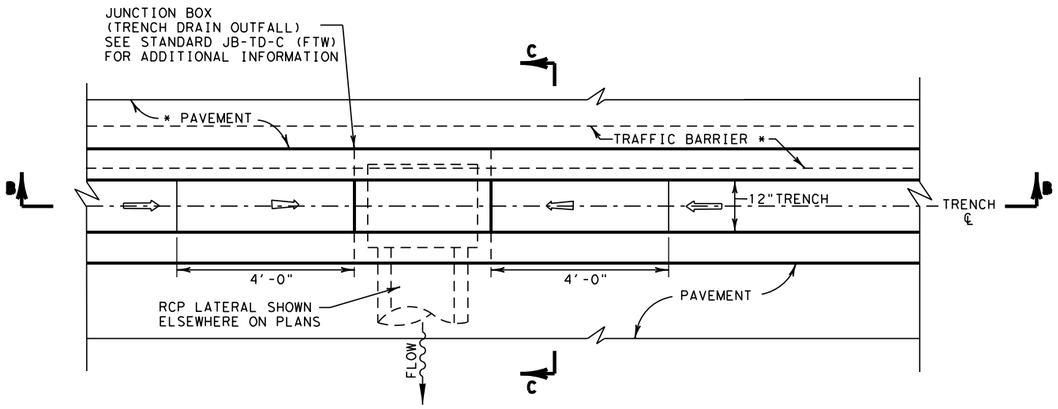

PLAN VIEW
N.T.S.

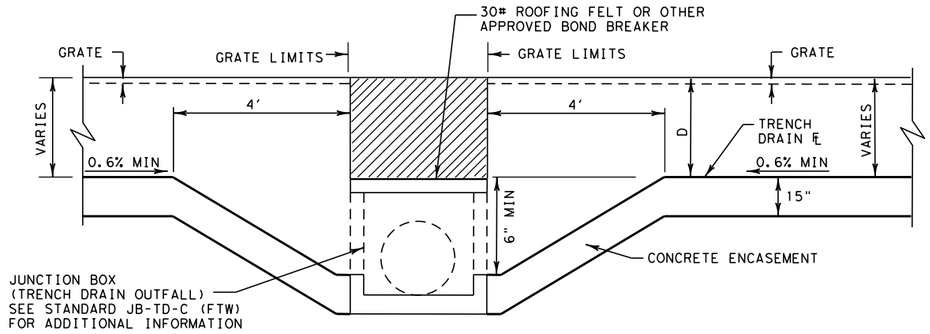

SECTION B-B
N.T.S.

DUAL DRAIN

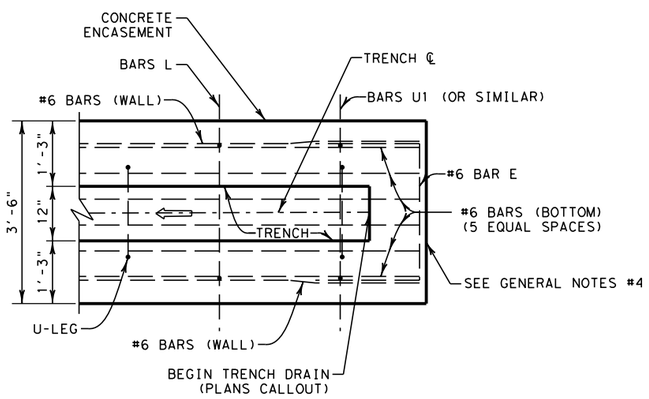

PLAN VIEW
N.T.S.

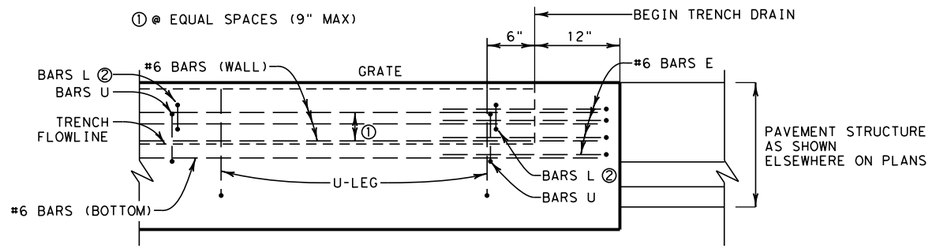

ELEVATION VIEW
N.T.S.

② OMIT FOR SINGLE LAYER OF REINFORCING

BEGIN TRENCH DETAILS

GENERAL NOTES

1. ALL CONCRETE SHALL BE CLASS "C".
2. ALL REINFORCING STEEL SHALL BE GRADE 60.
3. PROPRIETARY TRENCH DRAIN SYSTEMS ARE ALLOWED. SUBMIT MANUFACTURE'S DRAWINGS AND DETAILS FOR APPROVAL, PRIOR TO CONSTRUCTION.
4. PLACE A SEALED 1/2" CONSTRUCTION JOINT ALONG ALL VERTICAL FACES ABUTTING CONCRETE PAVEMENT. USE CLASS 5 OR 8 JOINT SEALANT TO SEAL THE JOINT. SEE STANDARD JS(FTW) FOR ADDITIONAL INFORMATION.
5. JUNCTION BOXES FOR TRENCH DRAIN OUTFALL WILL NOT BE PAID FOR DIRECTLY, BUT WILL BE CONSIDERED SUBSIDIARY TO ITEM 474.

Texas Department of Transportation

Fort Worth District Standard

TRENCH DRAIN (CAST-IN-PLACE) TD-C(FTW)

ORIGINAL DRAWING: 05/2019	tdc-ftw.dgn	FED.RD. DIV.NO.	PROJECT NO.	SHEET NO.
DATE	REVISIONS	6		206
05/2019	NEW STANDARD	STATE	STATE DIST.NO.	COUNTY
11/2020	REVISE JOINT NOMENCLATURE	TEXAS	FTW	
		CONT.	SECT.	JOB / HIGHWAY NO.

©2020 by Texas Department of Transportation; All Rights Reserved

http://www.dot.state.tx.us/ftw/speciinfo/standard.htm
3/12/2025 3:11:05 PM
$PATH$
G:\TXC\Projects\City_Georgetown\10767-00 Shell Road\03_CADD\01_Shts\06-DRNG\Stds\tdc-ftw.dgn

DISCLAIMER :
THE USE OF THIS STANDARD IS GOVERNED BY THE "TEXAS ENGINEERING PRACTICE ACT". NO WARRANTY OF ANY KIND IS MADE BY TXDOT FOR ANY PURPOSE WHATSOEVER. TXDOT ASSUMES NO RESPONSIBILITY FOR THE CONVERSION OF THIS STANDARD TO OTHER FORMATS OR FOR INCORRECT RESULTS OR DAMAGES RESULTING FROM ITS USE.

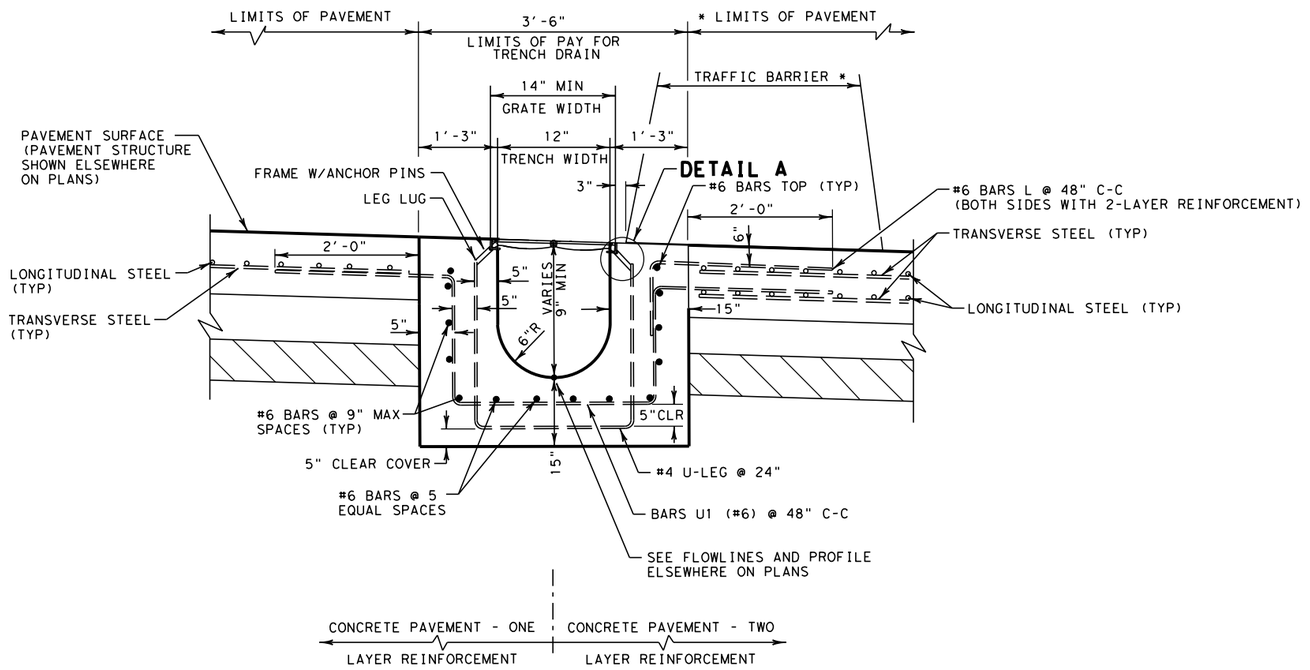

SECTION C-C
(CONCRETE PAVEMENT)
N.T.S.

* WHERE SHOWN ON PLANS

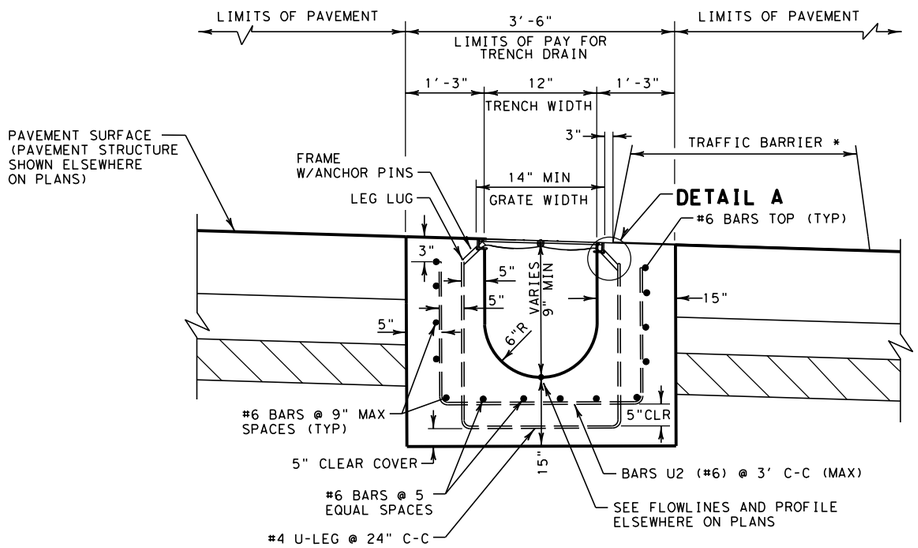

SECTION D-D
(ASPHALT PAVEMENT)
N.T.S.

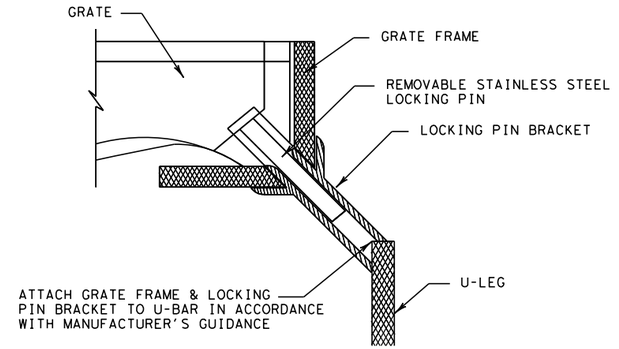

DETAIL A
GRATE RETAINER PIN - REMOVABLE
MINIMUM ONE LOCKING PIN
PLACED IN EACH CORNER OF GRATE
N.T.S.

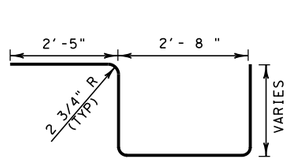

#6 BARS U1
(CONC PAVEMENT ONE SIDES)

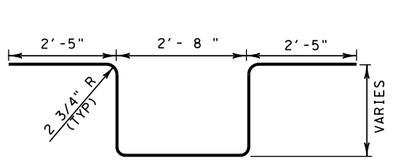

#6 BARS U1
(CONC PAVEMENT BOTH SIDES)

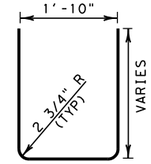

#4 U-LEG

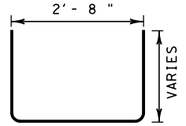

#6 BARS U2
(ASPHALT PAVEMENT)

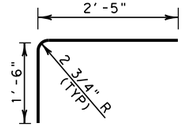

#6 BARS L
(USE ONLY WITH
2 LAYER REINFORCEMENT)

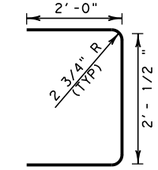

#6 BARS E

SHEET 2 OF 2 SHEETS

Texas Department of Transportation | Fort Worth District Standard

TRENCH DRAIN
(CAST-IN-PLACE)
TD-C(FTW)

ORIGINAL DRAWING: 05/2019	tdc-ftw.dgn	FED.RD. DIV.NO.	PROJECT NO.	SHEET NO.
DATE	REVISIONS	6		207
05/2019	NEW STANDARD	STATE	STATE DIST.NO.	COUNTY
11/2020	REVISE JOINT NOMENCLATURE	TEXAS	FTW	
		CONT.	SECT.	JOB / HIGHWAY NO.

©2020 by Texas Department of Transportation;
All Rights Reserved

http://www.dot.state.tx.us/ftw/specinfo/standard.htm
3/12/2025 3:11:05 PM
$PATH$
G:\TXC\Projects\City_Georgetown\10767-00 Shell Road\03_CADD\01_Shts\06-DRNG\Stds\tdc-ftw.dgn

DISCLAIMER:
The use of this standard is governed by the "Texas Engineering Practice Act". No warranty of any kind is made by TxDOT for any purpose whatsoever. TxDOT assumes no responsibility for the conversion of this standard to other formats or for incorrect results or damages resulting from its use.

DATE:
FILE:

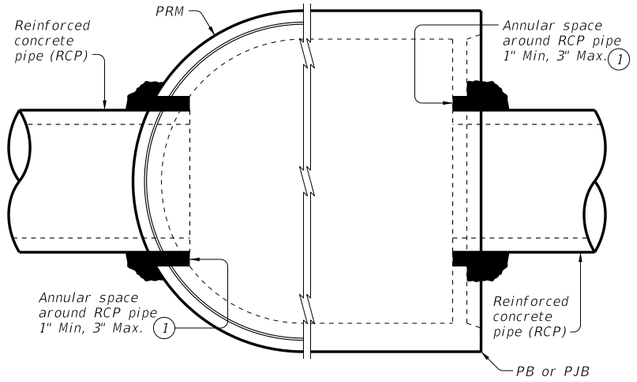

PRECAST ROUND MANHOLE (PRM) WITH THROUGH-HOLE

PRECAST BASE (PB) OR PRECAST JUNCTION BOX (PJB) WITH THIN-WALL KNOCK-OUT

TYPICAL HALF PLAN

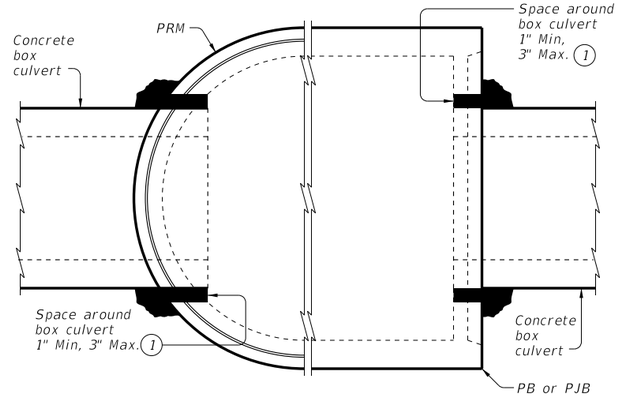

PRECAST ROUND MANHOLE (PRM) WITH THROUGH-HOLE

PRECAST BASE (PB) OR PRECAST JUNCTION BOX (PJB) WITH THIN-WALL KNOCK-OUT

TYPICAL HALF PLAN

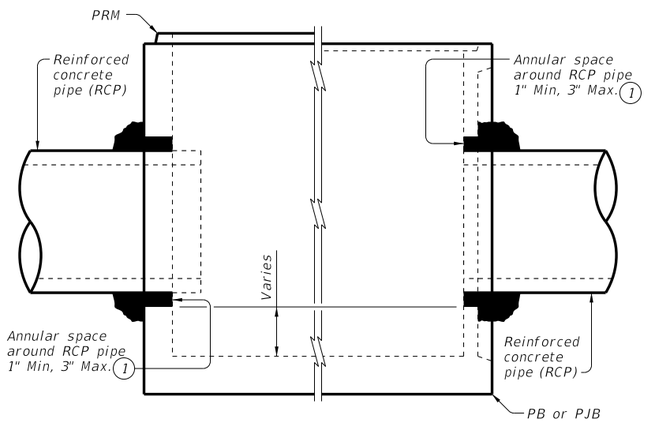

PRECAST ROUND MANHOLE (PRM) WITH THROUGH-HOLE

PRECAST BASE (PB) OR PRECAST JUNCTION BOX (PJB) WITH THIN-WALL KNOCK-OUT

TYPICAL HALF ELEVATION

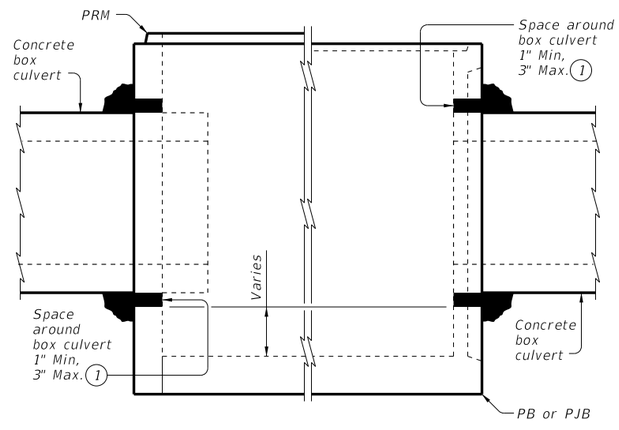

PRECAST ROUND MANHOLE (PRM) WITH THROUGH-HOLE

PRECAST BASE (PB) OR PRECAST JUNCTION BOX (PJB) WITH THIN-WALL KNOCK-OUT

TYPICAL HALF ELEVATION

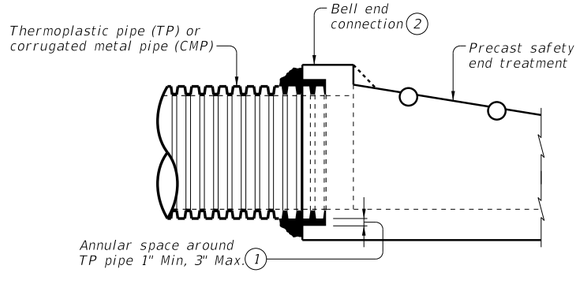

TYPICAL PARTIAL ELEVATION OF PRECAST SAFETY END TREATMENTS

Showing square PSET for parallel drainage, cross drainage shown similar.

(1) Completely fill the void between the precast structure and the connecting pipe or box with cementitious grouts and mortars in accordance with DMS-4675 "Cementitious Grouts and Mortars for Miscellaneous Application."

(2) For thermoplastic pipe, do not use bell or spigot for grouted connections. Remove the bell or spigot from the pipe by cutting between two exterior corrugations of the pipe before connecting and grouting the thermoplastic pipe to the structure.

CONSTRUCTION NOTES:

Do not grout rubber gasket joints without Manufacturer's recommendations.

Do not use bricks, masonry blocks, native stone, or similar materials in conjunction with grouted connections when filling void spaces around pipes or box culverts.

MATERIAL NOTES:

Provide grouted connections in accordance with DMS-4675, "Cementitious Grouts and Mortars for Miscellaneous Application."

GENERAL NOTES:

See applicable standards for notes and details not shown:
- Precast Base (PB)
- Precast Junction Box (PJB)
- Precast Round Manhole (PRM)
- Precast Safety End Treatments C/D Square (PSET-SC)
- Precast Safety End Treatments P/D Square (PSET-SP)

Provide Concrete Box Culverts in accordance with Item 462, "Concrete Box Culverts and Drains."

Provide Reinforced Concrete Pipe (RCP) in accordance with Item 464, "Reinforced Concrete Pipe."

Provide Thermoplastic Pipe (TP) in accordance with Item 468, "Thermoplastic Pipe Culverts and Drains".

Payment for grouted connections is considered subsidiary to other bid Items.

Texas Department of Transportation

Bridge Division Standard

PIPE AND BOX GROUTED CONNECTIONS FOR PRECAST STRUCTURES

PBGC

FILE: CD-PBGC-24.dgn	DN: TxDOT	CK: TAR	DW: JTR	CK: TAR
©TxDOT February 2020	CONT	SECT	JOB	HIGHWAY
REVISIONS				
06-2024: Updated notes.	DIST	COUNTY		SHEET NO.
				208

DISCLAIMER:
The use of this standard is governed by the "Texas Engineering Practice Act". No warranty of any kind is made by TxDOT for any purpose whatsoever. TxDOT assumes no responsibility for the conversion of this standard to other formats or for incorrect results or damages resulting from its use.

DATE: 3/12/2025 3:11:06 PM
FILE: G:\TXC\Projects\City_Georgetown\10767-00 Shell Road\03_CADD\01_Shts\06-DRNG\Stds\CD-PJB-20.dgn

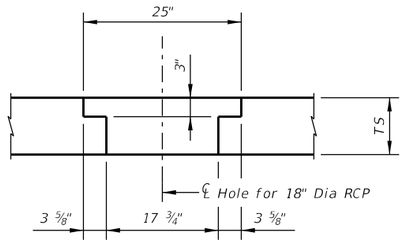

DETAIL "B"

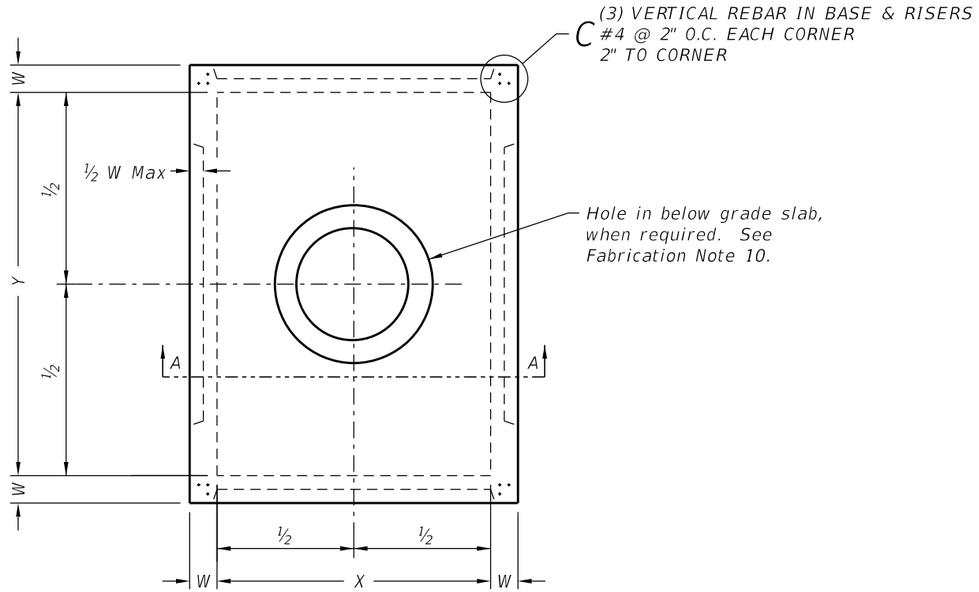

PLAN VIEW

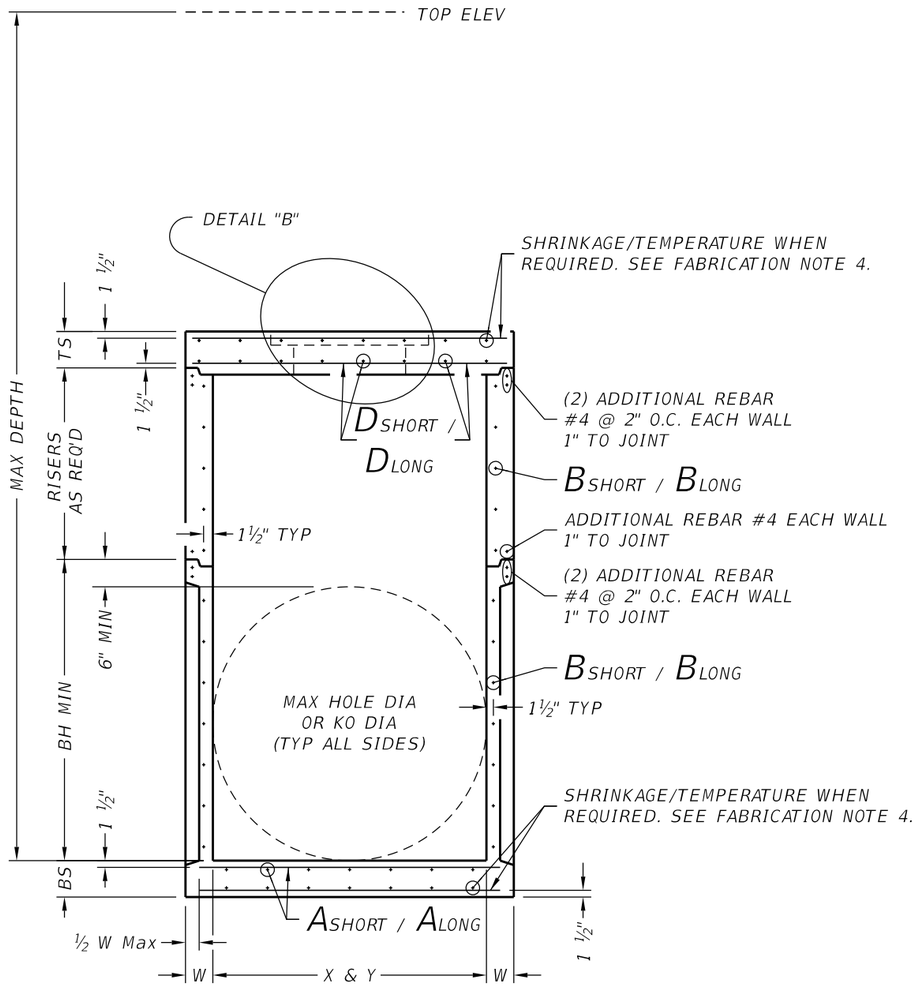

SECTION A-A

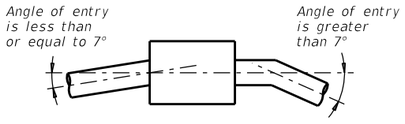

PIPE CONNECTION DETAIL

Connect pipes within 7° of normal to PJB wall. If necessary, use pipe elbow or curved approach alignment to stay within this limit.

FABRICATION NOTES:

1. Provide Class "H" concrete in accordance with Item 421 and having a minimum compressive strength of 5,000 psi.
2. Provide Grade 60 reinforcing steel or equivalent area of WWR.
3. Provide typical clear cover of 1 ½" to reinforcing steel at interior or exterior walls.
4. Walls or slabs with a thickness of 8" or greater require shrinkage and temperature reinforcing steel. Provide steel area = 0.11 in²/ft each way.
5. No substitution is allowed for vertical and horizontal #4 bars in corners.
6. Manufacture base and risers to nearest 3" increment.
7. Design tongue and groove joints for full closure on both shoulders. Minimum spigot depth is ¾".
8. Provide lifting devices in conformance with Manufacturer's recommendations.
9. See sheet PDD for sizes, dimensions, and reinforcing steel not shown.
10. Provide hole in below grade slab only when PJB is installed with inlet type POD.

INSTALLATION NOTES:

1. Inverts (benching) to be provided by Contractor. Concrete or mortar used for invert is subsidiary to junction box.
2. Seal tongue and groove joints with preformed or bulk mastic in conformance with Manufacturer's recommendations. Tongue and groove joints may be grouted no more than 1" between each section, or ½ the joint depth, whichever is greater.
3. Do not grout rubber gasket joints without Manufacturer's recommendation.
4. For rigid pipe, cut hole in thin wall panel (KO) 4" Max, 2" Min larger than pipe OD.
5. For exible pipe, consult boot/seal Manufacturer's speci cation for placement tolerance and hole size. Center pipe in hole and install boot/seal per Manufacturer's speci cation.

GENERAL NOTES:

1. Precast Junction Box consists of base slab, base unit, risers (as required), and below grade slab. See sheet PDD for sizes.
2. Designed according to ASTM C913.
3. Payment for junction box is per Item 465 "Junction Boxes, Manholes, and Inlets" by type and size.

Cover dimensions are clear dimensions, unless noted otherwise.

HL93 LOADING

Texas Department of Transportation | Bridge Division Standard

PRECAST JUNCTION BOX

PJB

FILE: CD-PJB-20.dgn	DN: TxDOT	CK: TxDOT	DW: TxDOT	CK: TxDOT
©TxDOT February 2020	CONT	SECT	JOB	HIGHWAY
REVISIONS				
	DIST	COUNTY		SHEET NO.
				209

	Size	MAX DEPTH = 15 ft. to top of BASE SLAB										MAX DEPTH = 25 ft. to top of BASE SLAB										Min Height (See Gen Note 3)	Max HOLE DIA (See Fab Note 2)	Max KO DIA (See Fab Note 2)
		Base Slab			Base Unit or Riser Walls			Below Grade Slab (w/PJB) Reducing Slab (w/PB)				Base Slab			Base Unit or Riser Walls			Below Grade Slab (w/PJB) Reducing Slab (w/PB)						
		Short Span Reinf Steel Area	Long Span Reinf Steel Area	Thickness	Short Span Reinf Steel Area	Long Span Reinf Steel Area	Thickness	Reduced Riser Size	Short Span Reinf Steel Area	Long Span Reinf Steel Area	Thickness	Short Span Reinf Steel Area	Long Span Reinf Steel Area	Thickness	Short Span Reinf Steel Area	Long Span Reinf Steel Area	Thickness	Reduced Riser Size	Short Span Reinf Steel Area	Long Span Reinf Steel Area	Thickness			
	X x Y	Ashort	Along	BS	Bshort	Blong	W	RWSxRWL or ID	Dshort	Dlong	TS	Ashort	Along	BS	Bshort	Blong	W	RWSxRWL or ID	Dshort	Dlong	TS	BH MIN	HOLE DIA	KO DIA
	ft.	in^2/ft	in^2/ft	in.	in^2/ft	in^2/ft	in.	ft. **	in^2/ft	in^2/ft	in.	in^2/ft	in^2/ft	in.	in^2/ft	in^2/ft	in.	ft. **	in^2/ft	in^2/ft	in.	ft.	in.	in.
Precast Junction Box (PJB)	3x3	0.23	0.23	6	0.19	0.19	6	N/A	0.37	0.37	9	0.29	0.29	6	0.24	0.24	6	N/A	0.37	0.37	9	3.5	36	36
	4x4	0.29	0.29	6	0.24	0.24	6	N/A	0.41	0.41	9	0.47	0.47	6	0.38	0.38	6	N/A	0.41	0.41	9	4.5	48	48
	3x5	0.29	0.18	6	0.19	0.35	6	N/A	0.48	0.48	9	0.39	0.18	6	0.23	0.59	6	N/A	0.48	0.48	9	3.5	36/60	36/60
	4x5	0.36	0.18	6	0.22	0.34	6	N/A	0.42	0.42	9	0.53	0.26	6	0.39	0.59	6	N/A	0.42	0.42	9	4.5	48/60	48/60
	5x5	0.36	0.36	6	0.34	0.34	6	N/A	0.43	0.43	9	0.62	0.62	6	0.59	0.59	6	N/A	0.43	0.43	9	5.5	60	60
	5x6	0.27	0.27	9	0.34	0.45	6	N/A	0.48	0.48	9	0.47	0.45	9	0.38	0.54	8	N/A	0.48	0.48	9	5.5	60/72	60/72
	6x6	0.27	0.27	9	0.45	0.45	6	N/A	0.56	0.56	9	0.52	0.52	9	0.54	0.54	8	N/A	0.56	0.56	9	6.5	72	72
	8x8	0.46	0.46	9	0.51	0.51	8	N/A	0.45	0.45	12	0.87	0.87	9	0.59	0.59	10	N/A	0.45	0.45	12	8.5	96	72
Precast Base (PB)	3x3	0.23	0.23	6	0.19	0.19	6	N/A	N/A	N/A	N/A	0.29	0.29	6	0.24	0.24	6	N/A	N/A	N/A	N/A	3.5	36	36
	4x4	0.29	0.29	6	0.24	0.24	6	N/A	N/A	N/A	N/A	0.47	0.47	6	0.38	0.38	6	N/A	N/A	N/A	N/A	4.5	48	48
	3x5	0.29	0.18	6	0.19	0.35	6	3x3	0.30	0.34	9	0.39	0.18	6	0.23	0.59	6	3x3	0.40	0.40	9	3.5	36/60	36/60
	4x5	0.36	0.18	6	0.22	0.34	6	3x3	0.30	0.30	9	0.53	0.26	6	0.39	0.59	6	3x3	0.46	0.37	9	4.5	48/60	48/60
	4x5	0.36	0.18	6	0.22	0.34	6	4x4	0.30	0.30	9	0.53	0.26	6	0.39	0.59	6	4x4	0.39	0.39	9	4.5	48/60	48/60
	4x5	0.36	0.18	6	0.22	0.34	6	48"	0.39	0.39	9	0.53	0.26	6	0.39	0.59	6	48"	0.47	0.47	9	4.5	48/60	48/60
	4x5	0.36	0.18	6	0.22	0.34	6	3x5	0.33	0.40	9	0.53	0.26	6	0.39	0.59	6	3x5	0.48	0.48	9	4.5	48/60	48/60
	5x5	0.36	0.36	6	0.34	0.34	6	3x3	0.34	0.34	9	0.62	0.62	6	0.59	0.59	6	3x3	0.53	0.53	9	5.5	60	60
	5x5	0.36	0.36	6	0.34	0.34	6	4x4	0.36	0.36	9	0.62	0.62	6	0.59	0.59	6	4x4	0.64	0.64	9	5.5	60	60
	5x5	0.38	0.38	6	0.34	0.34	6	48"	0.36	0.36	9	0.62	0.62	6	0.59	0.59	6	48"	0.64	0.64	9	5.5	60	60
	5x5	0.36	0.36	6	0.34	0.34	6	3x5	0.34	0.40	9	0.62	0.62	6	0.59	0.59	6	3x5	0.53	0.53	9	5.5	60	60
	5x6	0.31	0.31	9	0.34	0.45	6	3x3	0.34	0.34	9	0.47	0.45	9	0.38	0.54	8	3x3	0.61	0.50	9	5.5	60/72	60/72
	5x6	0.27	0.27	9	0.34	0.45	6	4x4	0.36	0.45	9	0.47	0.45	9	0.38	0.54	8	4x4	0.74	0.57	9	5.5	60/72	60/72
	5x6	0.29	0.29	9	0.34	0.45	6	48"	0.36	0.45	9	0.47	0.45	9	0.38	0.54	8	48"	0.74	0.57	9	5.5	60/72	60/72
	5x6	0.29	0.29	9	0.34	0.45	6	3x5	0.45	0.45	9	0.47	0.45	9	0.38	0.54	8	3x5	0.61	0.61	9	5.5	60/72	60/72
	6x6	0.29	0.29	9	0.45	0.45	6	3x3	0.41	0.41	9	0.52	0.52	9	0.54	0.54	8	3x3	0.74	0.74	9	6.5	72	72
	6x6	0.27	0.27	9	0.45	0.45	6	4x4	0.45	0.45	9	0.52	0.52	9	0.54	0.54	8	4x4	0.87	0.87	9	6.5	72	72
	6x6	0.29	0.29	9	0.45	0.45	6	48"	0.45	0.45	9	0.52	0.52	9	0.54	0.54	8	48"	0.87	0.87	9	6.5	72	72
	6x6	0.29	0.29	9	0.45	0.45	6	3x5	0.45	0.45	9	0.52	0.52	9	0.54	0.54	8	3x5	0.87	0.87	9	6.5	72	72
	8x8	0.52	0.52	9	0.51	0.51	8	3x3	0.61	0.61	12	0.91	0.91	9	0.70	0.70	10	3x3	0.85	0.85	12	8.5	96	72
	8x8	0.52	0.52	9	0.51	0.51	8	4x4	0.70	0.70	12	0.87	0.87	9	0.70	0.70	10	4x4	1.01	1.01	12	8.5	96	72
	8x8	0.52	0.52	9	0.51	0.51	8	48"	0.70	0.70	12	0.87	0.87	9	0.70	0.70	10	48"	1.01	1.01	12	8.5	96	72
	8x8	0.52	0.52	9	0.51	0.51	8	3x5	0.70	0.85	12	0.87	0.87	9	0.70	0.70	10	3x5	1.01	1.01	12	8.5	96	72

** Unless otherwise indicated.

FABRICATION NOTES:
1. Maximum spacing of reinforcement is 8".
2. At manufacturer's option, provide cast or cored holes or thin wall panels (KO) to the maximum diameter shown for each. When no penetration is required, it is acceptable to provide a wall with no sectional reduction.

GENERAL NOTES:
1. Precast Junction Box consists of base slab, base unit, risers (as required), and below grade slab. See sheet PJB for details.
2. Precast Base consists of base slab, base unit, risers (as required), reducing slab (as required), and reduced risers (as required). See sheet PB for details.
3. Min Height shown is for stock base units. Use stock base units whenever practical. Smaller height base units can be used in special installation circumstances, when noted elsewhere in the plans. Absolute minimum height of base units is 2'-6".

HL93 LOADING

Texas Department of Transportation | Bridge Division Standard

DESIGN DATA FOR PRECAST BASE AND JUNCTION BOX

PDD

FILE: CD-PDD-20.dgn	DN: TxDOT	CK: TxDOT	DW: TxDOT	CK: TxDOT
©TxDOT February 2020	CONT	SECT	JOB	HIGHWAY
REVISIONS				
	DIST	COUNTY		SHEET NO.
				210

DISCLAIMER:
The use of this standard is governed by the "Texas Engineering Practice Act". No warranty of any kind is made by TxDOT for any purpose whatsoever. TxDOT assumes no responsibility for the conversion of this standard to other formats or for incorrect results or damages resulting from its use.

DATE: 3/12/2025 3:11:07 PM
FILE: G:\TXC\Projects\City_Georgetown\10767-00 Shell Road\03_CADD\01_Shts\06-DRNG\Stds\CD-PDD-20.dgn

DISCLAIMER:
The use of this standard is governed by the "Texas Engineering Practice Act". No warranty of any kind is made by TxDOT for any purpose whatsoever. TxDOT assumes no responsibility for the conversion of this standard to other formats or for incorrect results or damages resulting from its use.

DATE: 3/12/2025 3:11:08 PM
FILE: G:\TXC\Projects\City_Georgetown\10767-00 Shell Road\03_CADD\01_Shts\06-DRNG\Stds\CD-PCU-23.dgn

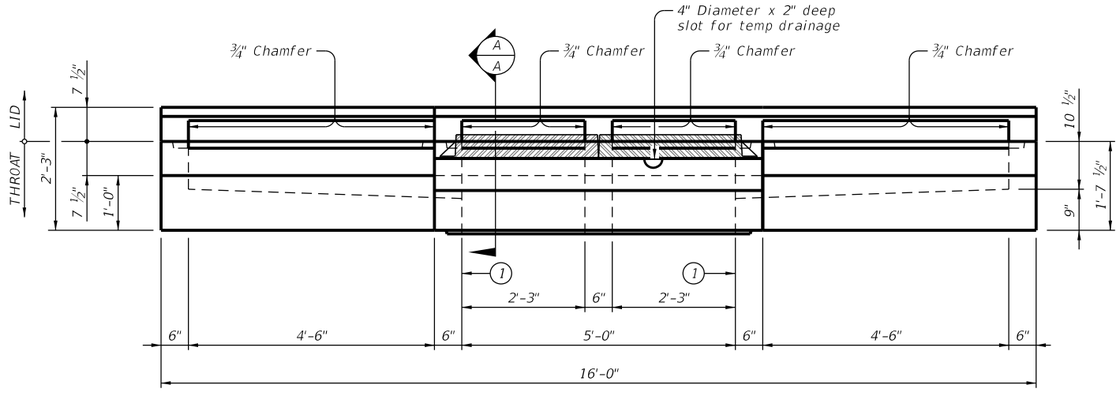

FRONT VIEW

(Showing left and right extensions)

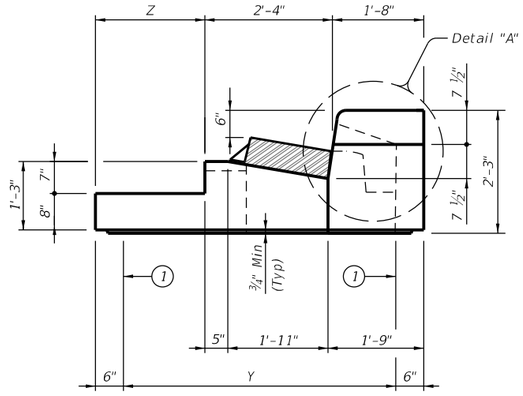

SECTION A-A

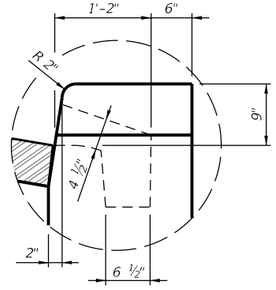

DETAIL "A"

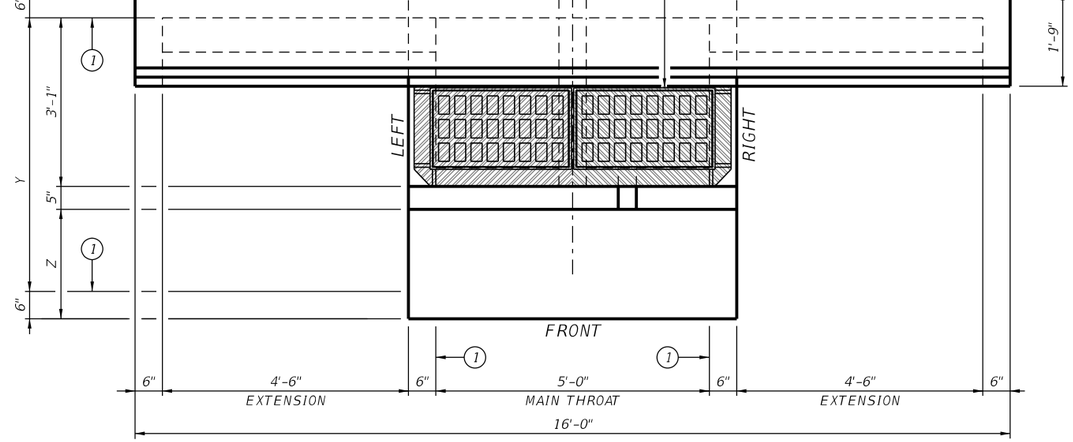

PLAN VIEW

(Showing left and right extensions)

TABLE OF VARIABLE DIMENSIONS	
Size (Y)	Z
3'	0'
4'	1'
5'	2'
6'	3'

(1) Matches inside face of wall of precast base or riser below inlet.

(2) Reference point is located where the ℄ of the main throat intersects the normal gutter line. See Curb and Gutter Transition Details for PCO Inlet (CGT-PCO) standard for more information.

HS20 LOADING

Texas Department of Transportation

Bridge Division Standard

PRECAST CURB INLET UNDER ROADWAY

PCU

FILE: CD-PCU-23.dgn	DN: TxDOT	CK: TxDOT	DW: TxDOT	CK: TxDOT
©TxDOT February 2020	CONT	SECT	JOB	HIGHWAY
REVISIONS				
06-2023: Added reference point.	DIST	COUNTY		SHEET NO.
				211

DISCLAIMER:
The use of this standard is governed by the "Texas Engineering Practice Act". No warranty of any kind is made by TxDOT for any purpose whatsoever. TxDOT assumes no responsibility for the conversion of this standard to other formats or for incorrect results or damages resulting from its use.

DATE:
FILE:

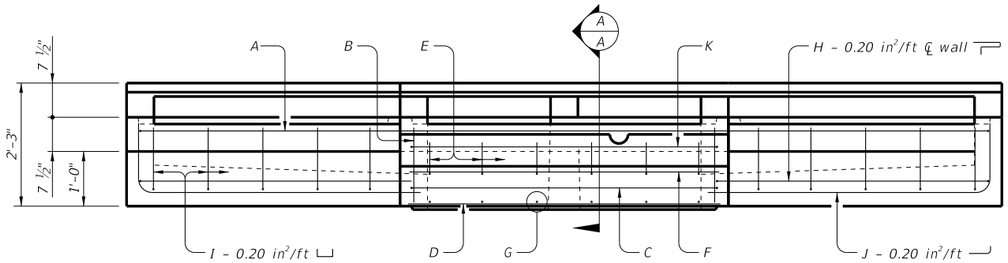

FRONT VIEW

(Showing left and right extensions)

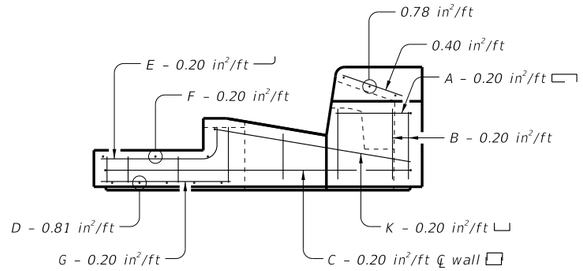

SECTION A-A

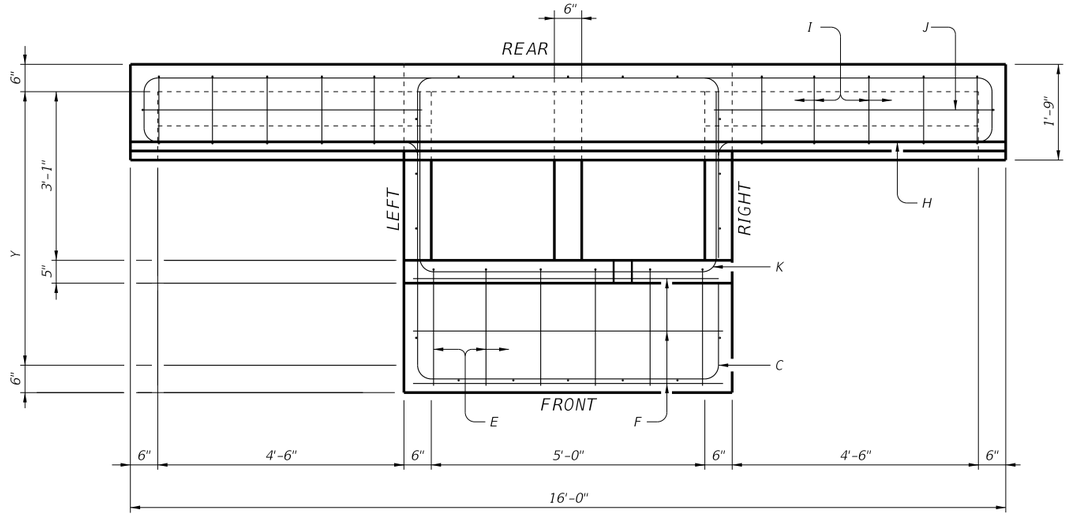

PLAN VIEW

(Showing left and right extensions)

FABRICATION NOTES:

1. Provide Class "H" concrete in accordance with Item 421 and having a minimum compressive strength of 5,000 psi.
2. Provide Grade 60 reinforcing steel or equivalent area of WWR.
3. Provide typical clear cover of 1 ½" to reinforcing steel from surface of concrete or lower outside shoulder.
4. Extensions may be right, left, both or none. Provide extensions as specified elsewhere in plans.
5. Design tongue and groove joints for full closure on both shoulders. Minimum spigot depth is ¾". Top slab may employ a butt joint with dowels at the Contractor's option.
6. Provide lifting devices in conformance with Manufacturer's recommendations.
7. Chamfer vertical edges on inlet lid ¾" as shown in Front View, sheet 1.

INSTALLATION NOTES:

1. Inlet throat is placed under roadway and intended for direct traffic. Inlet lid is not for direct traffic. Do not place Inlet lid in roadway.
2. Seal tongue and groove joints and butt joints with preformed or bulk mastic in conformance with Manufacturer's recommendations. Tongue and groove joints may be grouted no more than 1" between each section, or ½ the joint depth, whichever is greater.
3. Do not grout rubber gasket joints without Manufacturer's recommendation.

GENERAL NOTES:

1. Designed according to ASTM C913.
2. Open area of main throat = 324 sq in. Open area of one extension throat = 324 sq in.
3. Payment for inlet is per Item 465, "Junction Boxes, Manholes and Inlets" by type, size and extension placement. Extensions are subsidiary to inlet.

HS20 LOADING

Texas Department of Transportation

Bridge Division Standard

PRECAST CURB INLET UNDER ROADWAY

PCU

FILE: CD-PCU-23.dgn	DN: TxDOT	CK: TxDOT	DW: TxDOT	CK: TxDOT
©TxDOT February 2020	CONT	SECT	JOB	HIGHWAY
REVISIONS				
06-2023: Added reference point.	DIST	COUNTY		SHEET NO.
				212

DISCLAIMER:
The use of this standard is governed by the "Texas Engineering Practice Act". No warranty of any kind is made by TxDOT for any purpose whatsoever. TxDOT assumes no responsibility for the conversion of this standard to other formats or for incorrect results or damages resulting from its use.

DATE: 3/12/2025 3:11:09 PM
FILE: G:\TXC\Projects\City_Georgetown\10767-00 Shell Road\03_CADD\01_Shts\06-DRNG\Shts\CD-CGT-PCU-23.dgn

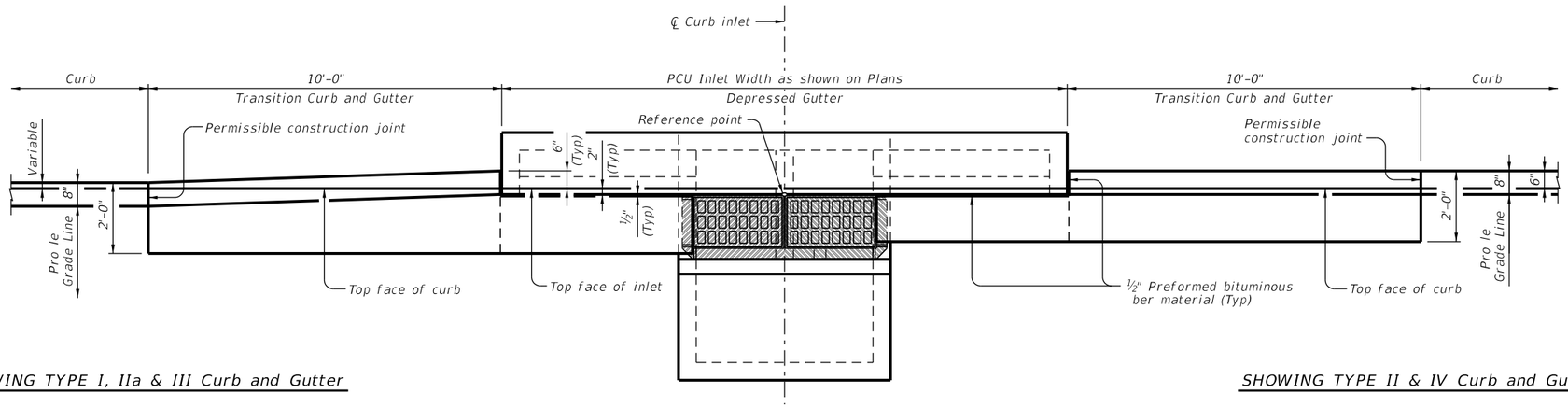

SHOWING TYPE I, IIa & III Curb and Gutter

SHOWING TYPE II & IV Curb and Gutter

PLAN

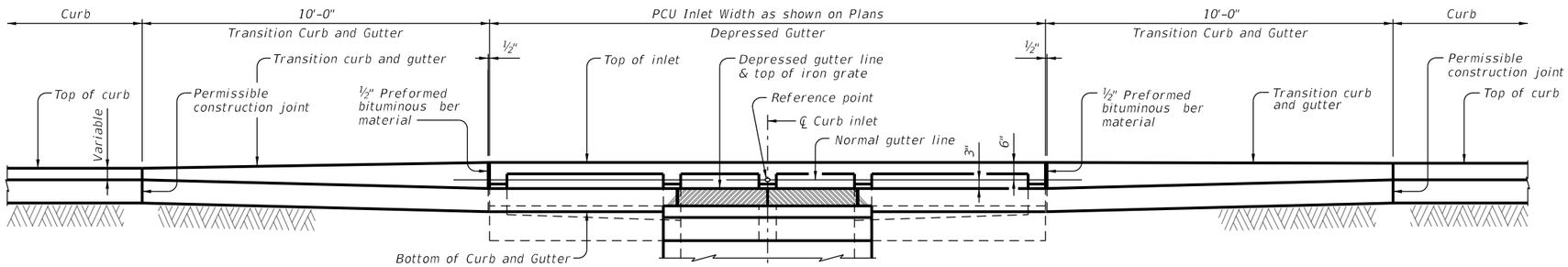

SHOWING TYPE I, IIa & III Curb and Gutter

SHOWING TYPE II & IV Curb and Gutter

ELEVATION

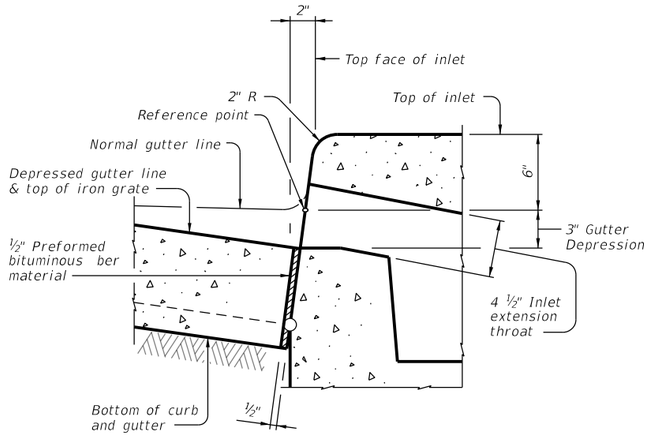

SECTION AT GUTTER AND INLET

(Reinforcing steel not shown for clarity.)

CONSTRUCTION NOTES:

Align top face of curb with PCU Inlet as shown.

MATERIAL NOTES:

Provide ½" Preformed Bituminous Fiber Material.

GENERAL NOTES:

Reference point is located where the ℄ of the main throat intersects the normal gutter line.

See Precast Curb Inlet Under Roadway standard PCU for details and notes not shown.

See Concrete Curb and Curb and Gutter standard CCCG-22 for details and notes not shown.

Curb and Gutter Transitions is paid for and in accordance with Item 529, "Concrete Curb, Gutter, and Combined Curb and Gutter."

Preformed Bituminous Fiber Material is subsidiary to PCU Inlet.

Texas Department of Transportation

Bridge Division Standard

CURB AND GUTTER TRANSITION DETAILS FOR PCU INLET

CGT-PCU

FILE: CD-CGT-PCU-23.dgn	DN: TxDOT	CK: AES	DW: JTR	CK: AES
©TxDOT February 2020	CONT	SECT	JOB	HIGHWAY
REVISIONS				
06-2023: Added reference point.	DIST	COUNTY		SHEET NO.
				213

DISCLAIMER:
The use of this standard is governed by the "Texas Engineering Practice Act". No warranty of any kind is made by TxDOT for any purpose whatsoever. TxDOT assumes no responsibility for the conversion of this standard to other formats or for incorrect results or damages resulting from its use.

DATE: 3/12/2025 3:11:09 PM
FILE: G:\TXC\Projects\City_Georgetown\10767-00 Shell Road\03_CADD\01_Shts\06-DRNG\Stds\MS-CRR-19.dgn

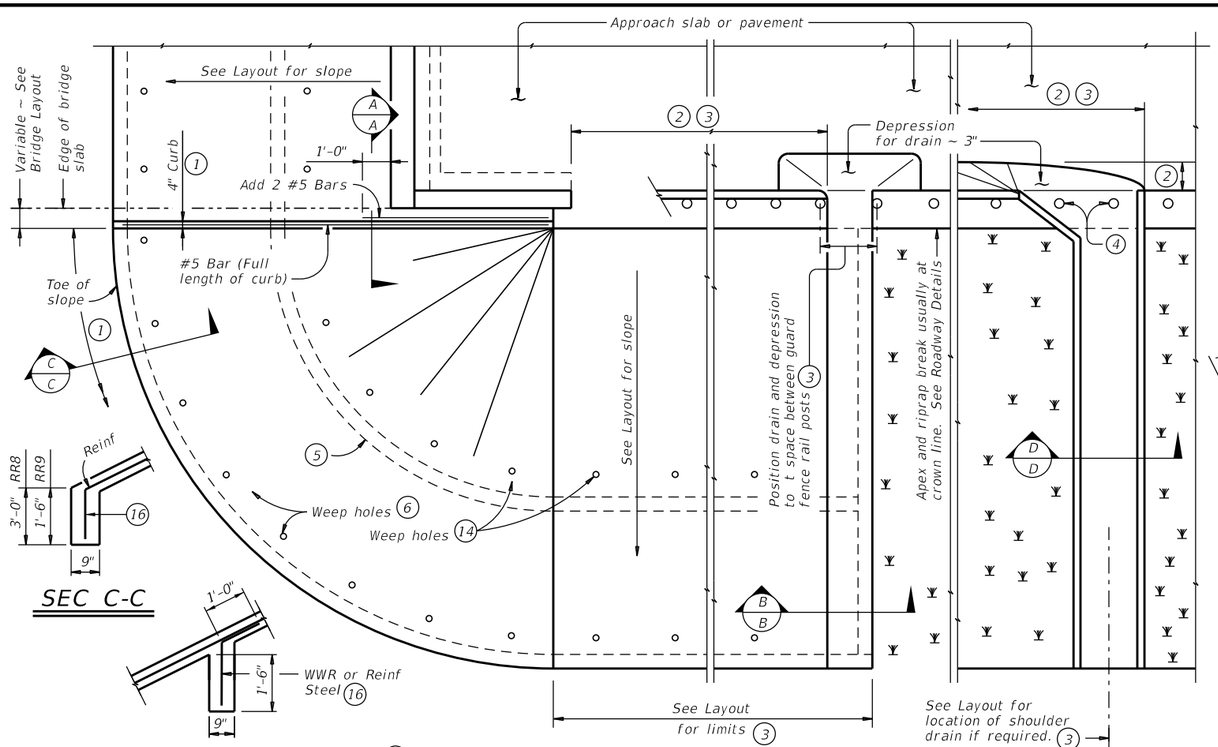

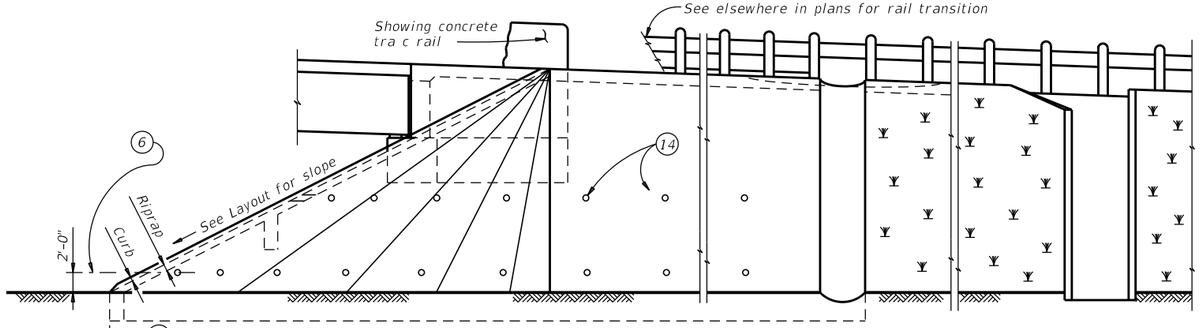

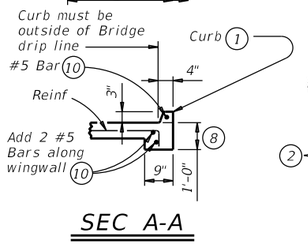

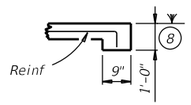

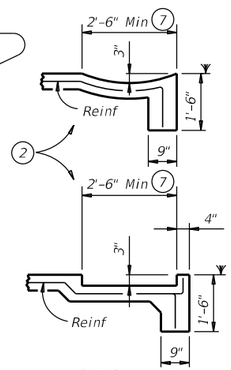

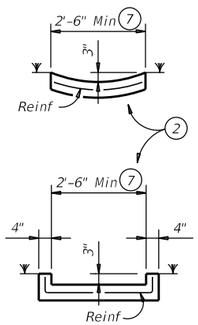

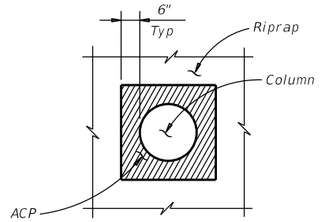

RIPRAP DETAIL AT COLUMNS

(As directed by the Engineer)

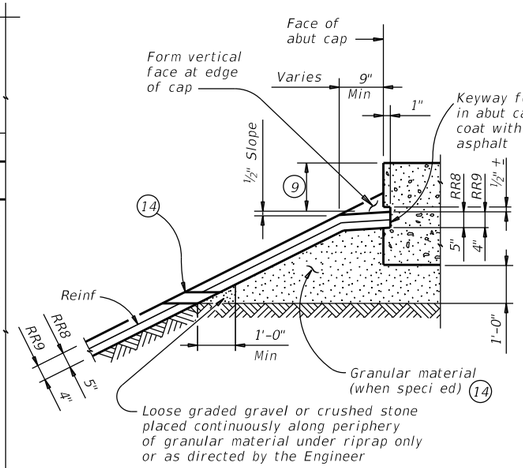

SHOWING KEYWAY OPTION

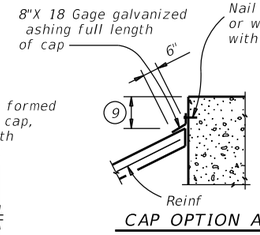

CAP OPTION A

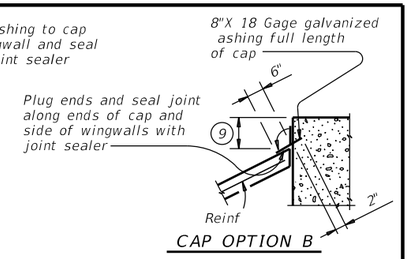

CAP OPTION B

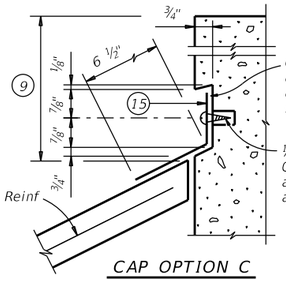

CAP OPTION C

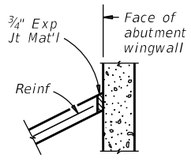

SECT THRU RIPRAP AT WINGWALL (12)

SECTIONS THRU RIPRAP AT CAP (11)

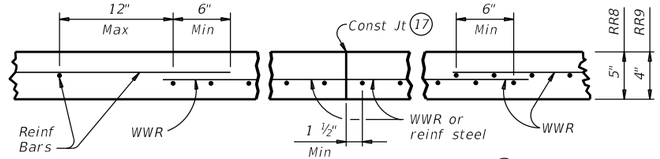

REINFORCEMENT DETAILS (13)

See General Notes for optional synthetic ber reinforcement.

(1) When riprap is shown extended around header on layout, extend slab and toewall as shown and eliminate 4" curb.

(2) Limits and con guration of drains and depressions are as shown elsewhere in plans or as directed by the Engineer.

(3) Location of shoulder drain must consider limitations imposed by rail transition. Do not locate shoulder drains at expansion joints between approach slab and concrete pavement.

(4) See details elsewhere in plans for installation of guard fence posts through concrete riprap.

(5) Provide intermediate toewall only when designated elsewhere in the plans or included in the speci cations.

(6) Provide lower level of 2" Dia weep holes at 10' c-c backed by 1 CF packet of gravel and galvanized hardware cloth at all locations unless directed by the Engineer to eliminate.

(7) Use wider or other drain con gurations if shown elsewhere in plans or if directed by the Engineer.

(8) Wall extension may be reduced or modi ed if approved by the Engineer. Increase wall extension to 1'-6" whenever the optional intermediate toewall is called for in the plans.

(9) Top of cap to top of riprap dimension varies as directed by the Engineer. Should be 9" Min for beam/slab type bridges and 1'-6" for slab span, box beam, or slab beam bridges.

(10) #5 bars shown are required even when synthetic ber reinforcing option is selected.

(11) Provide sealing option for joint between the face of cap and riprap as designated by the Engineer or as shown elsewhere on plans.

(12) Flashing (shown in Cap Option A) may be used at wingwall in addition to Exp Jt Mat'l if shown on plans or directed by the Engineer.

(13) Provide #3 reinforcing bars at 18" Spa c-c. Provide Welded Wire Reinforcement (WWR) as 6x6-D2.9xD2.9 or D3xD3. Combinations of WWR and reinforcing bars may be used if both are permitted. Use lap splices of a minimum 6 inches, measured from the transverse wire of WWR, and the ends of reinforcing bars.

(14) If granular material is speci ed, provide upper level of 2" Dia weep holes at 10' c-c backed by galvanized hardware cloth.

(15) 8" x 18 Gage Galv Sheet Metal

(16) Provide WWR or #3 bars, with 1'-0" extension into slope.

(17) WWR or reinforcing steel is continuous through riprap construction joints. Provide WWR or reinforcing steel that extends 1'-1" minimum into adjacent riprap on each side of construction joint even if synthetic reinforcing ber is utilized.

FOR CONTRACTOR'S INFORMATION ONLY:
5" of RR8 = 0.015 CY/SF
4" of RR9 = 0.012 CY/SF
#3 Reinf at 18" c-c = 0.501 Lbs/SF
6x6-D3xD3 = 0.408 Lbs/SF

GENERAL NOTES:

Provide Class "B" concrete (f'c = 2,000 psi) unless noted elsewhere in plans.

Provide Grade 60 reinforcing steel.

Provide deformed welded wire reinforcement (WWR) meeting ASTM A1064, unless otherwise shown.

Provide reinforcing bars, deformed WWR, or any suitable combination of both types for riprap reinforcing, unless speci ed elsewhere in the plans.

Optionally synthetic bers may be used if approved by the Engineer. Provide synthetic bers listed on the "Fibers for Concrete" Material Producer List (MPL) in lieu of steel reinforcing in riprap concrete.

Install construction joints or grooved joints extending the full slant slope height at intervals of approximately 20 feet unless otherwise directed by the Engineer.

Hardware cloth, loose grade stone behind weep holes, ashing, or other sealing material are subsidiary to the bid item "Riprap".

See Layout for limits of riprap.

RR8 is to be used on stream crossings.

RR9 is to be used on other embankments.

Texas Department of Transportation

Bridge Division Standard

CONCRETE RIPRAP AND SHOULDER DRAINS
EMBANKMENTS AT BRIDGE ENDS (TYPES RR8 & RR9)

CRR

FILE: MS-CRR-19.dgn	DN: TxDOT	CK: TxDOT	DW: TxDOT	CK: TxDOT
©TxDOT April 2019 REVISIONS	CONT	SECT	JOB	HIGHWAY
	DIST	COUNTY		SHEET NO.
				214

DISCLAIMER:
The use of this standard is governed by the "Texas Engineering Practice Act." No warranty of any kind is made by TxDOT for any purpose whatsoever. TxDOT assumes no responsibility for the conversion of this standard to other formats or for incorrect results or damages resulting from its use.

DATE:
FILE:

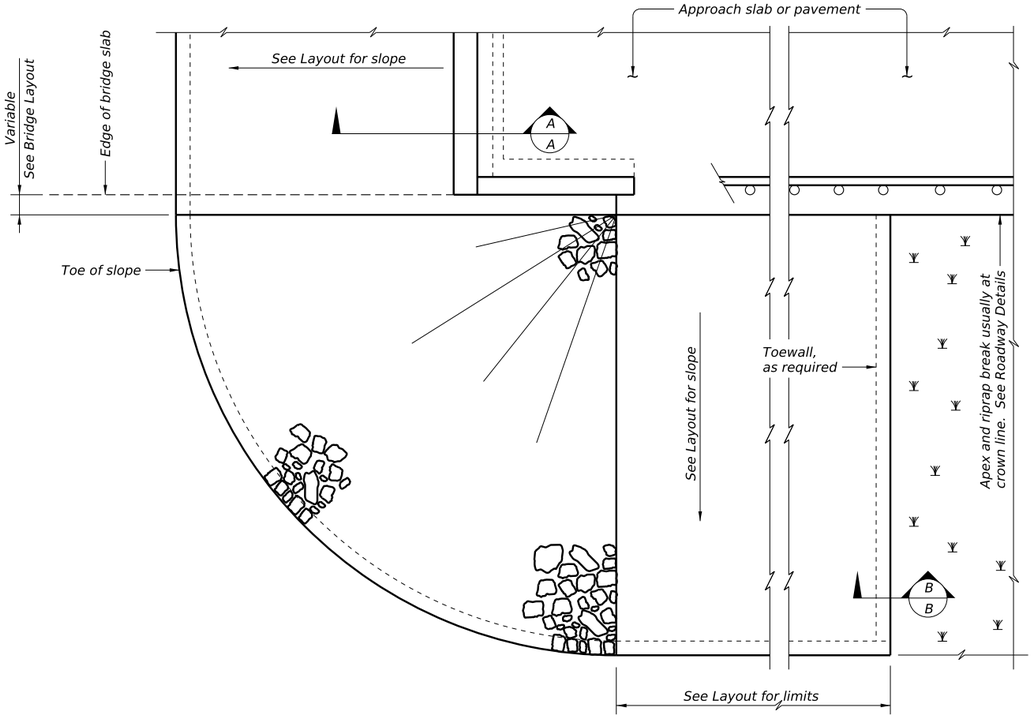

PLAN

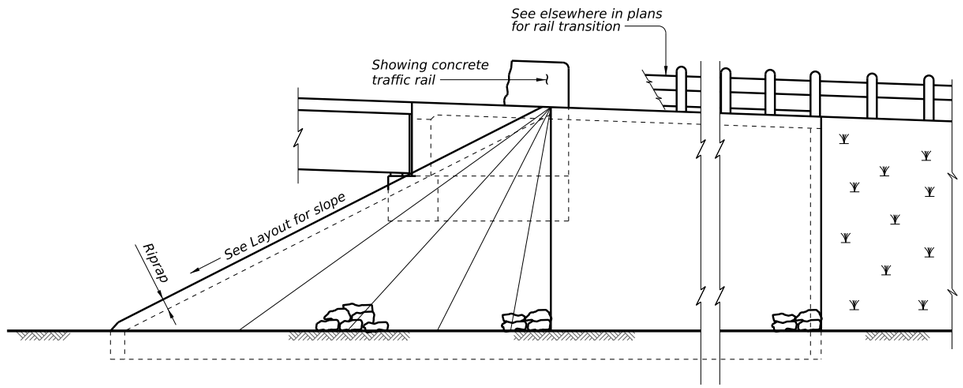

ELEVATION

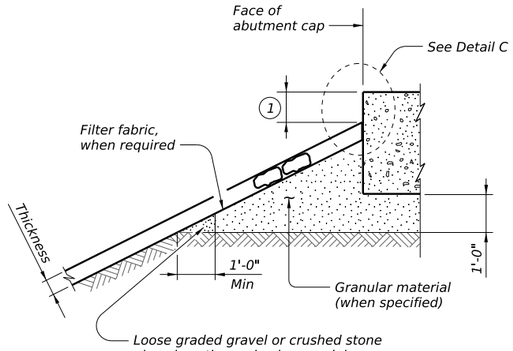

SECTION A-A AT CAP

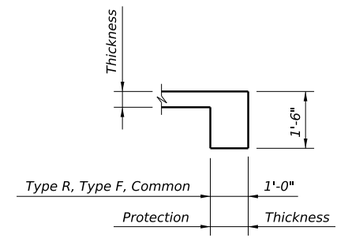

SECTION B-B

Provide toewall when shoulder drain is located adjacent to limits of stone riprap. Omit toewall when thickness of protection riprap is greater than 18".

(1) Top of cap to top of riprap dimension varies as directed by the Engineer. Provide 9" Min for beam/slab type bridges and 1'-6" for slab span, box beam, or slab beam bridges.

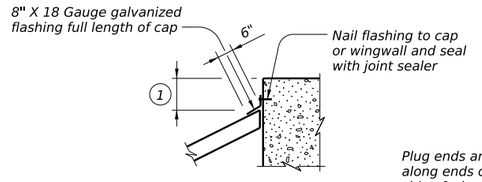

CAP OPTION A

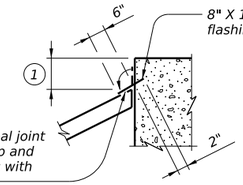

CAP OPTION B

DETAIL C

GENERAL NOTES:

Refer to Item 432, "Riprap" for stone size and gradation, and construction details. See Layout for limits and thickness of riprap specified.

See elsewhere in plans for locations and details of shoulder drains.

Texas Department of Transportation

Bridge Division Standard

STONE RIPRAP

SRR

FILE: MS-SRR-19.dgn	DN: TxDOT	CK: TxDOT	DW: TxDOT	CK: TxDOT
©TxDOT October 2024	CONT	SECT	JOB	HIGHWAY
REVISIONS				
	DIST	COUNTY		SHEET NO.
				215

DISCLAIMER:
The use of this standard is governed by the "Texas Engineering Practice Act." No warranty of any kind is made by TxDOT for any purpose whatsoever. TxDOT assumes no responsibility for the conversion of this standard to other formats or for incorrect results or damages resulting from its use.

DATE:
FILE:

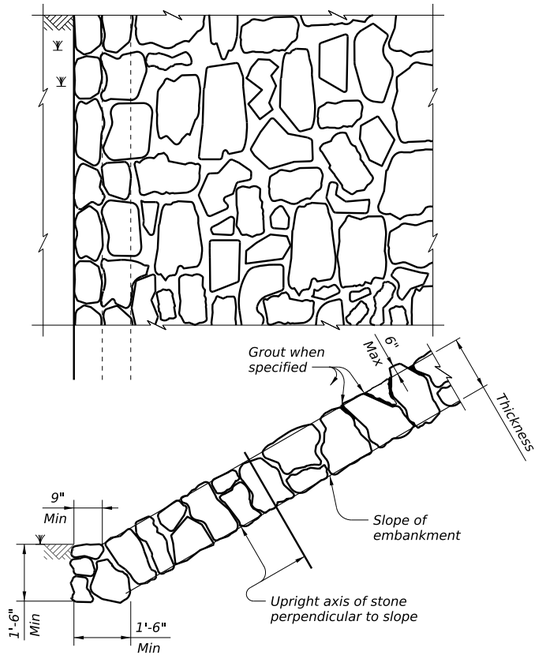

FIGURE 1 ~ TYPE R STONE RIPRAP

Dry or grouted

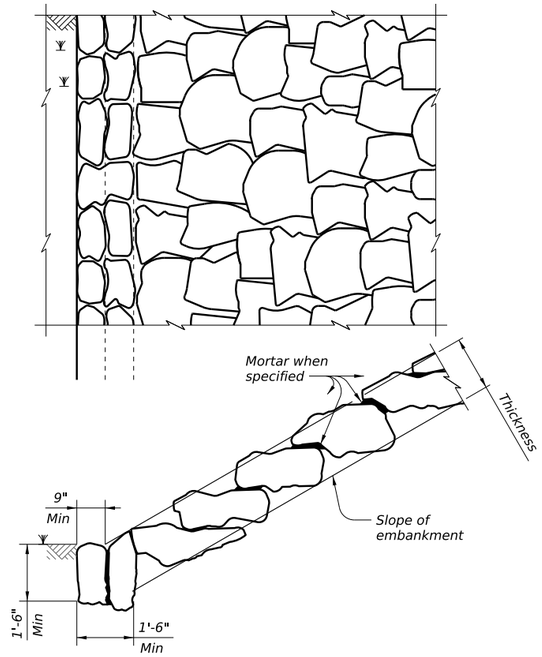

FIGURE 2 ~ TYPE F STONE RIPRAP

Dry or mortared

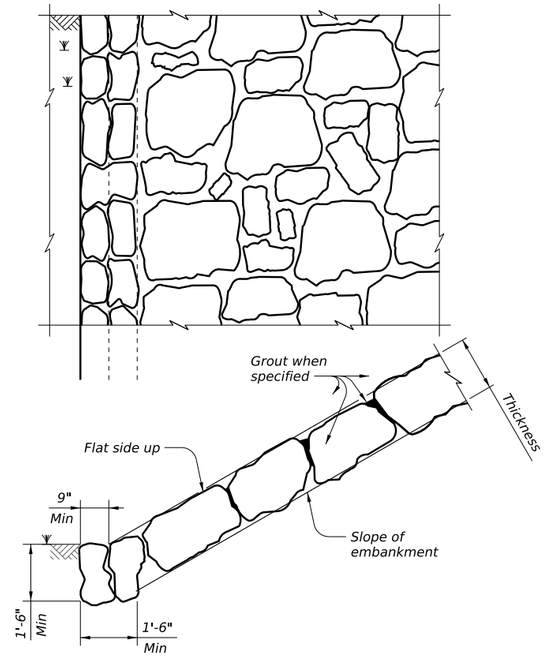

FIGURE 3 ~ TYPE F STONE RIPRAP

Grouted

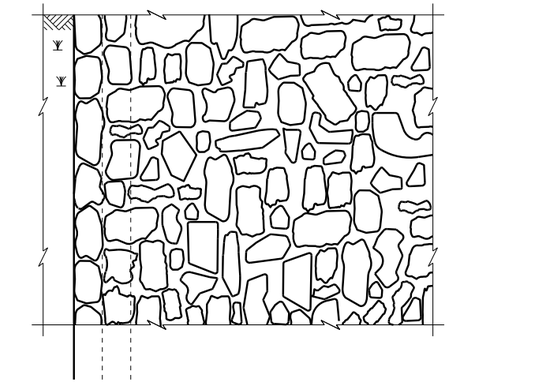

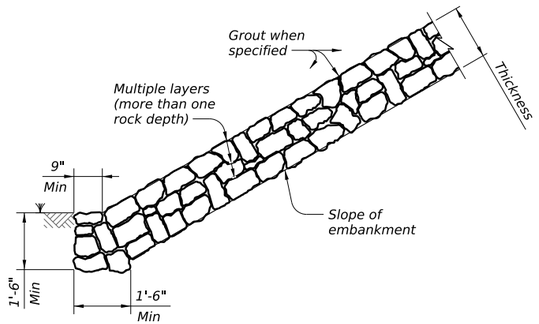

FIGURE 4 ~ COMMON STONE RIPRAP

Dry or grouted

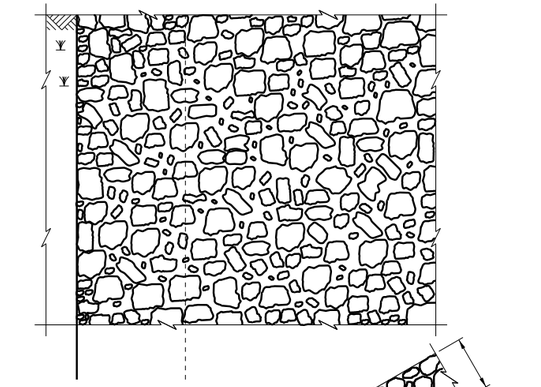

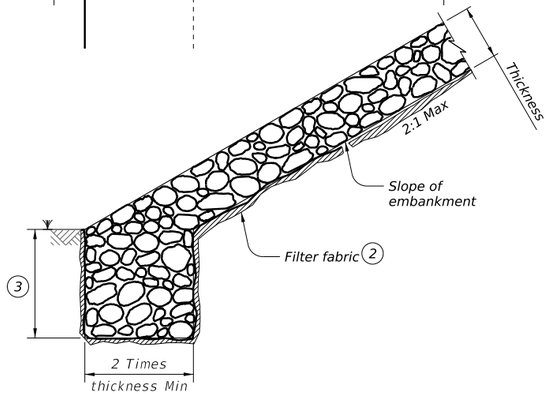

FIGURE 5 ~ PROTECTION STONE RIPRAP (5)

(2) *Provide bedding material instead of filter fabric if shown elsewhere in plans. See Layout for thickness of bedding material.*

(3) *Minimum toe depth is 2 times the riprap thickness (typical) or as shown elsewhere in the plans.*

(4) *"Y" and Height need to be defined. See layout or detail sheet for values if this option is used.*

(5) *List Stone Protection as size (XX inch) and thickness (YY inch) on the layout.*
Example: Riprap (Stone Protection) XX inch, Thickness = YY inch.

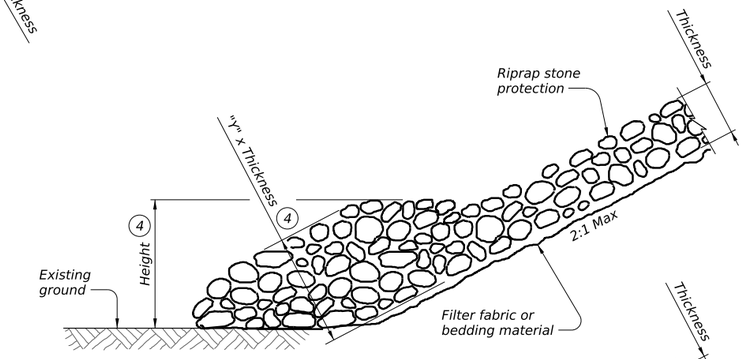

MOUNDED TOE

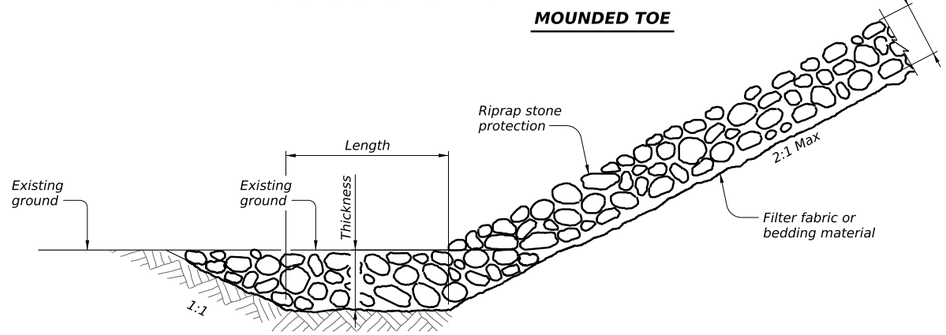

EXTENDED ROCK FILLED TRENCH

PROTECTION STONE RIPRAP TOE OPTIONS (5)

Texas Department of Transportation

Bridge Division Standard

STONE RIPRAP

SRR

FILE: MS-SRR-19.dgn	DN: TxDOT	CK: TxDOT	DW: TxDOT	CK: TxDOT
©TxDOT October 2024	CONT	SECT	JOB	HIGHWAY
REVISIONS				
	DIST	COUNTY		SHEET NO.
				216

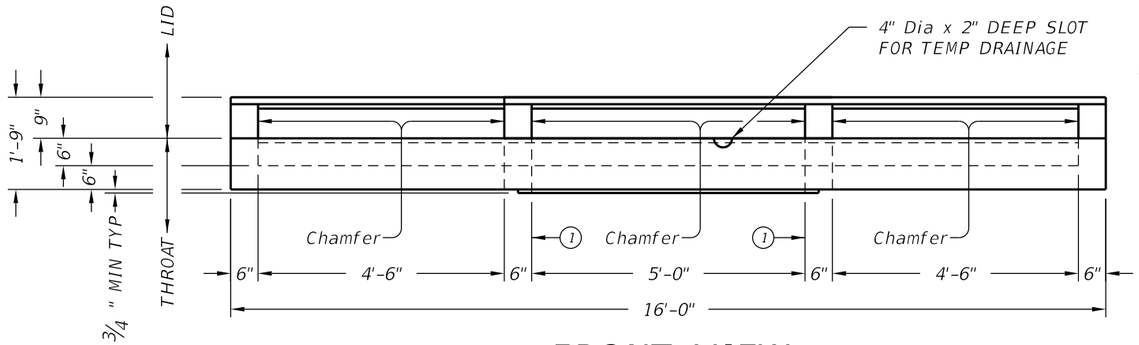

FRONT VIEW

(SHOWING LEFT AND RIGHT EXTENSIONS)

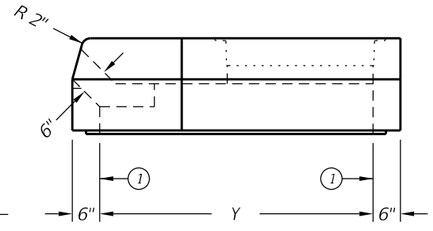

RIGHT VIEW

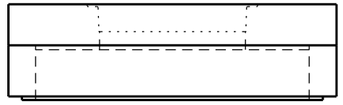

REAR VIEW

(EXTENSIONS NOT SHOWN)

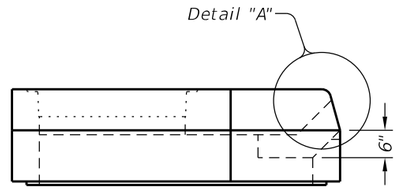

LEFT VIEW

1 Matches inside face of wall of precast base or riser below inlet.

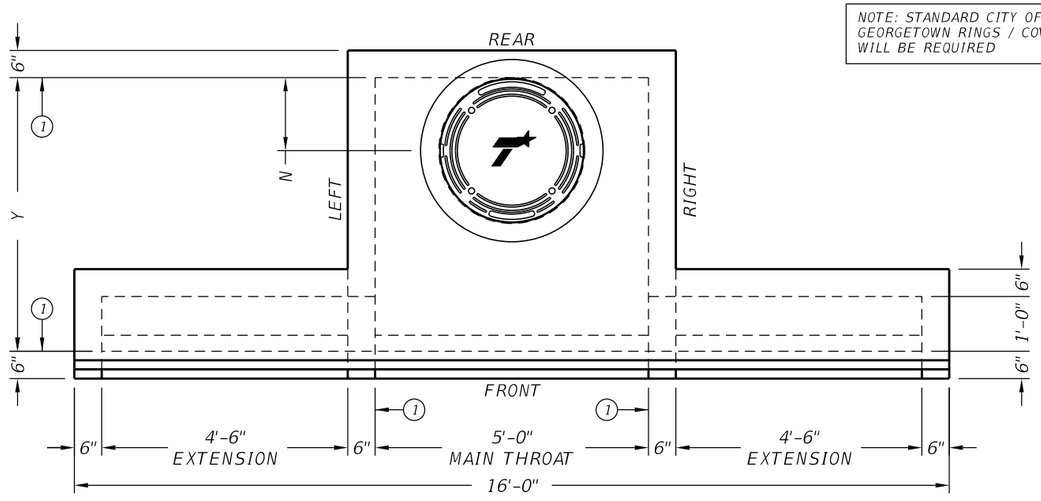

PLAN VIEW

(SHOWING LEFT AND RIGHT EXTENSIONS)

NOTE: STANDARD CITY OF GEORGETOWN RINGS / COVERS WILL BE REQUIRED

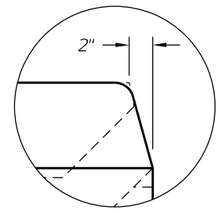

DETAIL "A"

HS20 LOADING

SHEET 1 OF 2

Texas Department of Transportation

Bridge Division Standard

PRECAST CURB INLET OUTSIDE ROADWAY

PCO

FILE: prestd03-20.dgn	DN: TxDOT	CK: TxDOT	DW: TxDOT	CK: TxDOT
©TxDOT February 2020	CONT	SECT	JOB	HIGHWAY
REVISIONS				
	DIST	COUNTY		SHEET NO.
				217

DISCLAIMER:
The use of this standard is governed by the "Texas Engineering Practice Act". No warranty of any kind is made by TxDOT for any purpose whatsoever. TxDOT assumes no responsibility for the conversion of this standard to other formats or for incorrect results or damages resulting from its use.

DATE: 3/12/2025 3:11:12 PM
FILE: G:\TXC\Projects\City_Georgetown\10767-00 Shell Road\03_CADD\01_Shts\06-DRNG\STDS\PCO.dgn

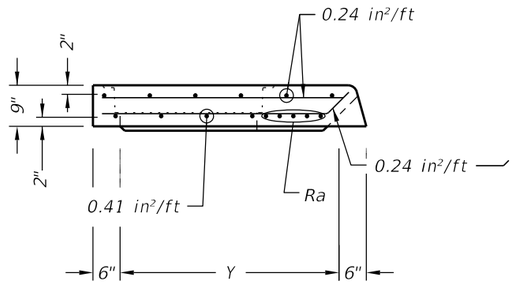

LID SECTION A-A

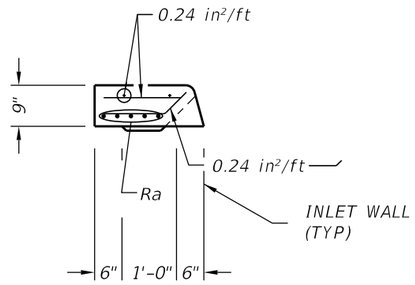

LID SECTION B-B

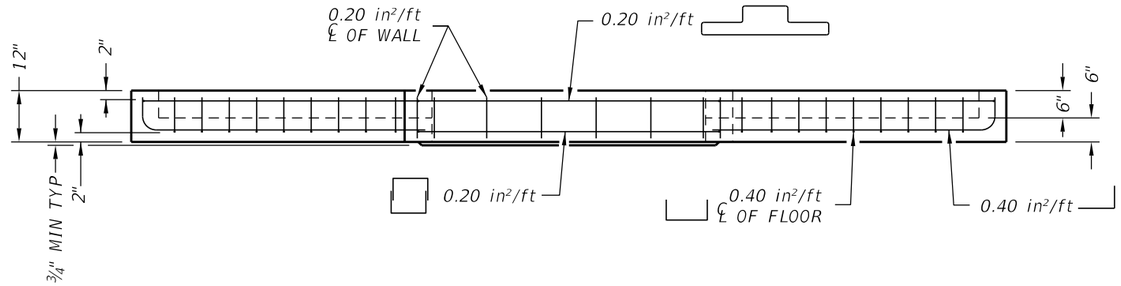

THROAT ELEVATION VIEW

(SHOWING LEFT AND RIGHT EXTENSIONS)

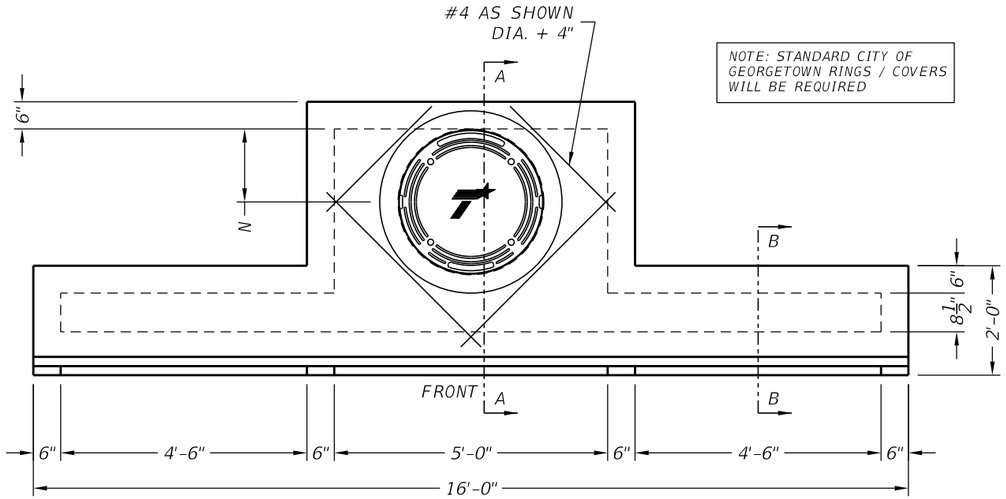

NOTE: STANDARD CITY OF GEORGETOWN RINGS / COVERS WILL BE REQUIRED

LID PLAN VIEW

(SHOWING LEFT AND RIGHT EXTENSIONS)

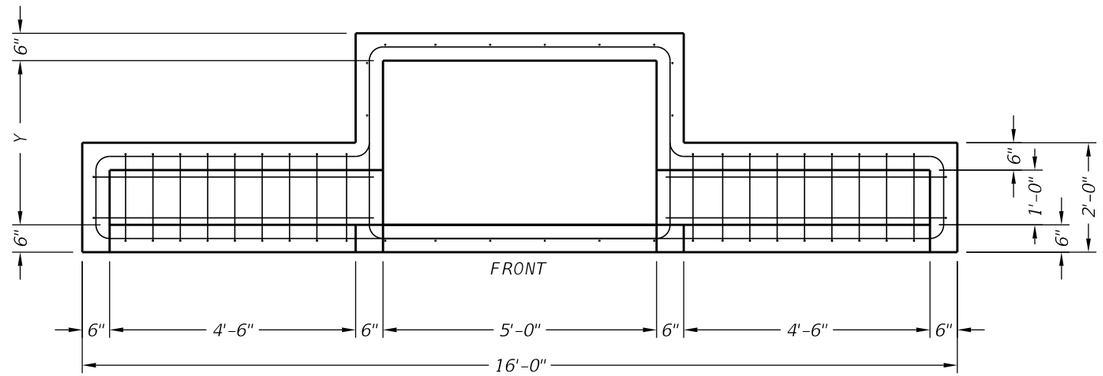

THROAT PLAN VIEW

(SHOWING LEFT AND RIGHT EXTENSIONS)

SIZE (Y)	N	MH DIA*	Ra
3'	9"	18"	(4) #5 Additional
4'	16"	32"	(4) #5 Additional
5'	16"	32"	(4) #5 Additional
6'	16"	32"	(4) #5 Additional

* Nominal ring and cover size.

NOTE: STANDARD CORR RINGS / COVERS WILL BE REQUIRED

FABRICATION NOTES:

1. Provide Class "H" concrete in accordance with Item 421 and having a minimum compressive strength of 5,000 psi.
2. Provide Grade 60 reinforcing steel or equivalent area of WWR.
3. Extensions may be right, left, both or none. Provide extensions as speci ed elsewhere in the plans.
4. Design tongue and groove joints for full closure on both shoulders. Minimum spigot depth is ¾". Lid may employ a butt joint with dowels at the Contractor's option.
5. Provide lifting devices in conformance with Manufacturer's recommendations.
6. Provide cast iron solid cover, unless noted otherwise elsewhere in the plans.
7. Chamfer vertical edges of inlet lid ¾" as shown in Front View, sheet 1.

INSTALLATION NOTES:

1. Inlet throat and lid are not intended for direct tra c. Do not place in roadway.
2. Seal tongue and groove joints and butt joints with preformed or bulk mastic in conformance with Manufacturer's recommendations. Tongue and groove joints may be grouted no more than 1" between each section, or ½ the joint depth, whichever is greater.
3. Do not grout rubber gasket joints without Manufacturer's recommendation.

GENERAL NOTES:

1. Designed according to ASTM C913.
2. Open area of main throat = 360 sq in. Open area of one extension throat = 324 sq in.
3. Payment for inlet is per Item 465, "Junction Boxes, Manholes, and Inlets" by type, size, and extension placement. Extensions are subsidiary to inlet.

Cover dimensions are clear dimensions, unless noted otherwise.

HS20 LOADING SHEET 2 OF 2

Texas Department of Transportation | Bridge Division Standard

PRECAST CURB INLET OUTSIDE ROADWAY

PCO

FILE: prestd03-20.dgn	DN: TxDOT	CK: TxDOT	DW: TxDOT	CK: TxDOT
©TxDOT February 2020	CONT	SECT	JOB	HIGHWAY
REVISIONS	DIST	COUNTY		SHEET NO. 218

DISCLAIMER:
The use of this standard is governed by the "Texas Engineering Practice Act". No warranty of any kind is made by TxDOT for any purpose whatsoever. TxDOT assumes no responsibility for the conversion of this standard to other formats or for incorrect results or damages resulting from its use.

DATE: 3/12/2025 3:11:12 PM
FILE: G:\TXC\Projects\City_Georgetown\10767-00 Shell Road\03_CADD\01_Shts\06-DRNG\Stds\PCO.dgn

DISCLAIMER:
The use of this standard is governed by the "Texas Engineering Practice Act". No warranty of any kind is made by TxDOT for any purpose whatsoever. TxDOT assumes no responsibility for the conversion of this standard to other formats or for incorrect results or damages resulting from its use.

DATE: 3/12/2025 3:11:13 PM
FILE: G:\TXC\Projects\City_Georgetown\10767-00 Shell Road\03_CADD\01_Shts\06-DRNG\SHTS\CGT-PCO.dgn

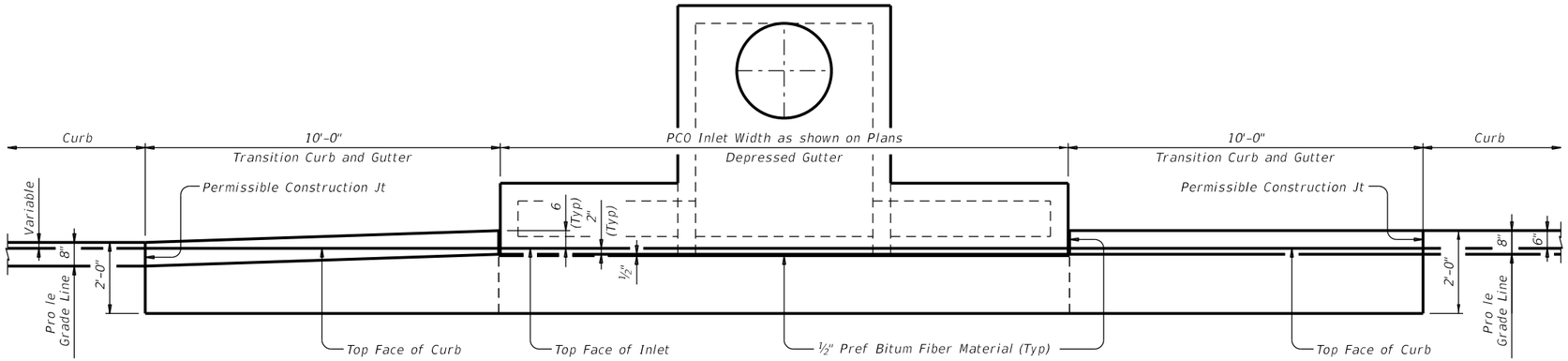

SHOWING TYPE I, IIa & III Curb and Gutter

SHOWING TYPE II & IV Curb and Gutter

PLAN

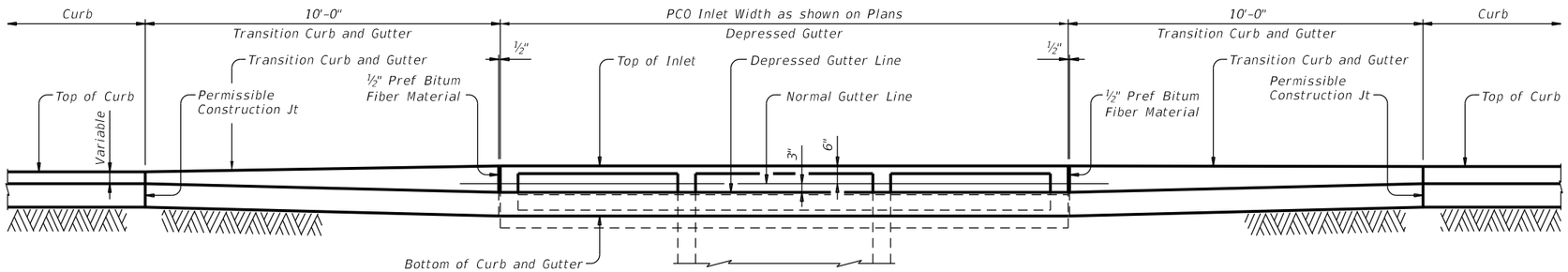

SHOWING TYPE I, IIa & III Curb and Gutter

SHOWING TYPE II & IV Curb and Gutter

ELEVATION

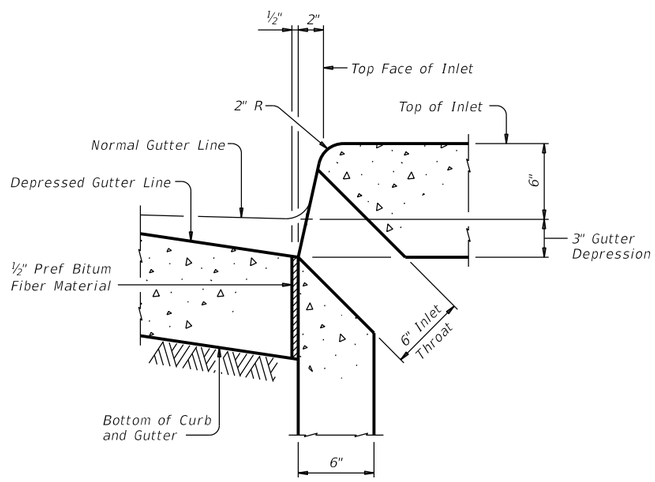

SECTION AT GUTTER AND INLET

Reinforcing steel not shown for clarity.

CONSTRUCTION NOTES:
Align top face of curb with PCO Inlet as shown.

MATERIAL NOTES:
Provide ½" Preformed Bituminous Fiber Material.

GENERAL NOTES:
See Precast Curb Inlet Outside Roadway (PCO) standard for details and notes not shown.
See Concrete Curb and Curb and Gutter (CCCG-12) standard for details and notes not shown.
Curb and Gutter Transitions is paid for and in accordance with Item 529, "Concrete Curb, Gutter, and Combined Curb and Gutter."
Preformed Bituminous Fiber Material is subsidiary to PCO Inlet.

Texas Department of Transportation

Bridge Division Standard

CURB AND GUTTER TRANSITION DETAILS FOR PCO INLET

CGT-PCO

FILE: prestd13-20.dgn	DN: TxDOT	CK: AES	DW: JTR	CK: AES
©TxDOT February 2020	CONT	SECT	JOB	HIGHWAY
REVISIONS				
	DIST	COUNTY		SHEET NO.
				219

DISCLAIMER:
The use of this standard is governed by the "Texas Engineering Practice Act". No warranty of any kind is made by TxDOT for any purpose whatsoever. TxDOT assumes no responsibility for the conversion of this standard to other formats or for incorrect results or damages resulting from its use.

DATE: 3/12/2025 3:11:13 PM
FILE: G:\TxCProjects\City_Georgetown\10767-00 Shell Road\03_CADD\01_Shts\06-DRNG\Sfds\CD-PAZD-20.dgn

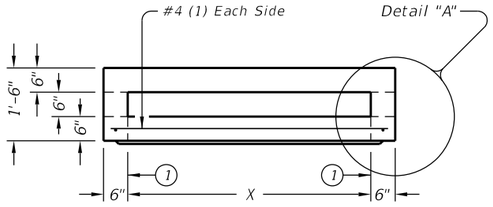

ELEVATION VIEW

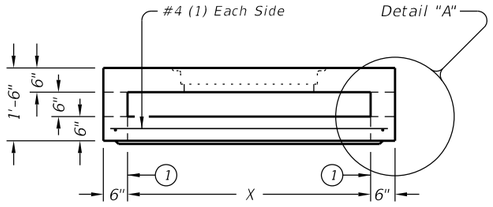

ELEVATION VIEW

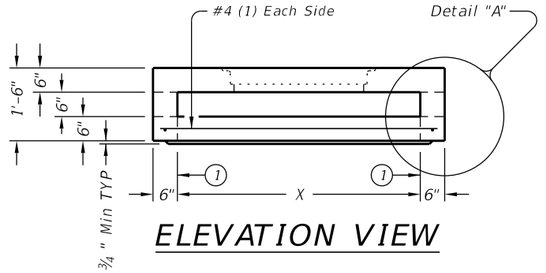

ELEVATION VIEW

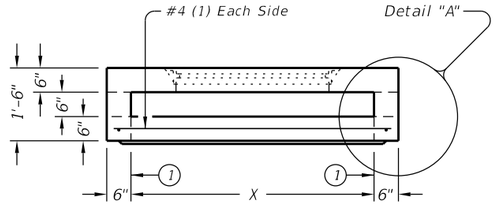

ELEVATION VIEW

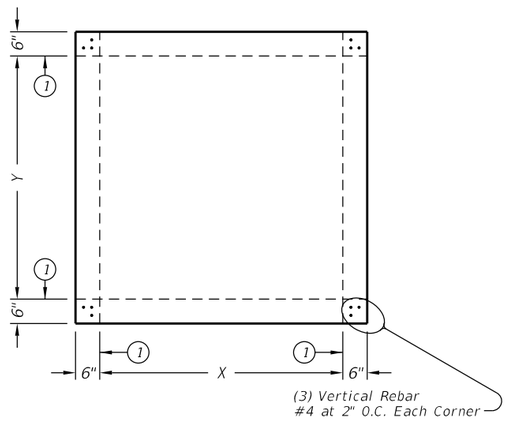

PLAN VIEW

NO OPENINGS

STYLE 'SL'

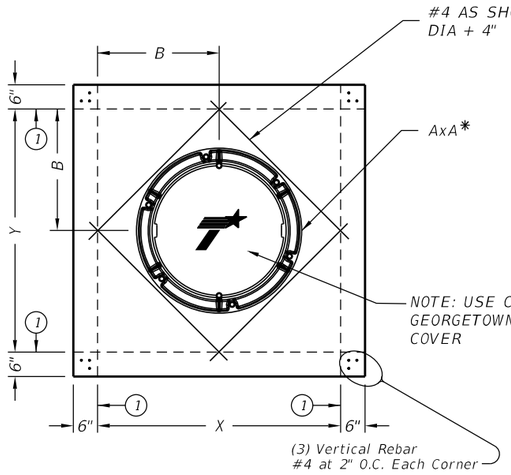

PLAN VIEW

32" DIA CAST-IN RING & COVER

STYLE 'RC'

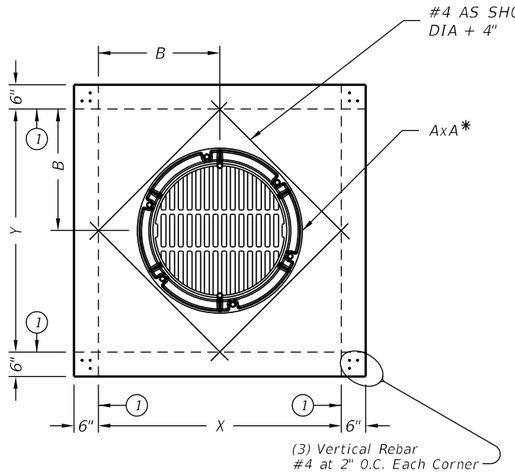

PLAN VIEW

32" DIA CAST-IN RING & GRATE

STYLE 'RG'

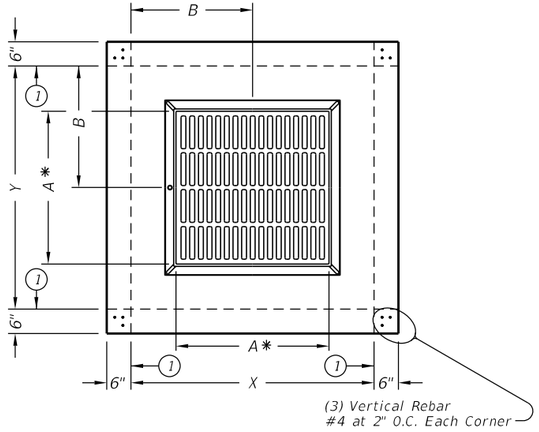

PLAN VIEW

CAST-IN FRAME & GRATE

STYLE 'FG'

(1) Matches inside face of wall of precast base or riser below inlet.

Style	Size (X x Y)	A x A *	B x B	Short Span Reinf Steel Area	Long Span Reinf Steel Area
SL	3'x3'	n/a	n/a	0.37 in²/ft	0.37 in²/ft
RC,RG	3'x3'	32" Dia	1.5'x1.5'	0.37 in²/ft	0.37 in²/ft
FG	3'x3'	3'x3'	1.5'x1.5'	0.37 in²/ft	0.37 in²/ft
SL	4'x4'	n/a	n/a	0.34 in²/ft	0.34 in²/ft
RC,RG	4'x4'	32" Dia	2'x2'	0.34 in²/ft	0.34 in²/ft
FG	4'x4'	3'x3'	2'x2'	0.34 in²/ft	0.34 in²/ft
FG	4'x4'	4'x4'	2'x2'	0.34 in²/ft	0.34 in²/ft
SL	5'x5'	n/a	n/a	0.43 in²/ft	0.43 in²/ft
RC,RG	5'x5'	32" Dia	2.5'x2.5'	0.68 in²/ft	0.68 in²/ft
FG	5'x5'	3'x3'	2.5'x2.5'	0.43 in²/ft	0.43 in²/ft
FG	5'x5'	4'x4'	2.5'x2.5'	0.43 in²/ft	0.43 in²/ft

* Nominal frame/grate or ring/cover size.

FABRICATION NOTES:

1. Provide Class "H" concrete in accordance with Item 421 and having a minimum compressive strength of 5,000 psi.
2. Provide Grade 60 reinforcing steel or equivalent area of WWR.
3. Provide clear cover of ¾" to reinforcing from bottom of slab for structural reinforcement. Place short span reinforcing closest to surface.
4. No substitution is allowed for diagonal #4 bars around openings.
5. Design tongue and groove joints for full closure on both shoulders. Minimum spigot depth is ¾".
6. Provide lifting devices in conformance with Manufacturer's recommendations.

INSTALLATION NOTES:

1. PAZD is for use in ditches and medians outside of the horizontal clearance (clear zone). Precast Area Zone Drain is not intended for direct tra c and may not be placed in roadway.
2. Seal tongue and groove joints with preformed or bulk mastic in conformance with Manufacturer's recommendations. Tongue and groove joints may be grouted no more than 1" between each section, or ½ the joint depth, whichever is greater.
3. Do not grout rubber gasket joints without Manufacturer's recommendation.

GENERAL NOTES:

1. Designed according to ASTM C913.
2. Payment for inlet is per Item 465, "Junction Boxes, Manholes, and Inlets" by type, style, size, and opening size (when applicable).

Construct cast-in-place reinforced concrete apron when shown elsewhere in plans. Use Class "A" concrete. Apron is subsidiary to PAZD. Apron is 1'-6" Min width around precast zone drain.

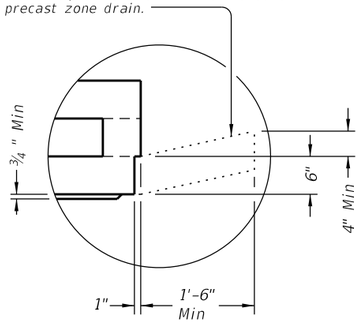

DETAIL "A"

(Reinforcing not shown for clarity)

When an apron is to be cast around PAZD, use detail above to create an apron ledge on all 4 sides.

Texas Department of Transportation

Bridge Division Standard

PRECAST AREA ZONE DRAIN

PAZD

FILE:	DN: TxDOT	CK: TxDOT	DN: TxDOT	CK: TxDOT
©TxDOT February 2020	CONT	SECT	JOB	HIGHWAY
REVISIONS				
	DIST	COUNTY		SHEET NO.
				220

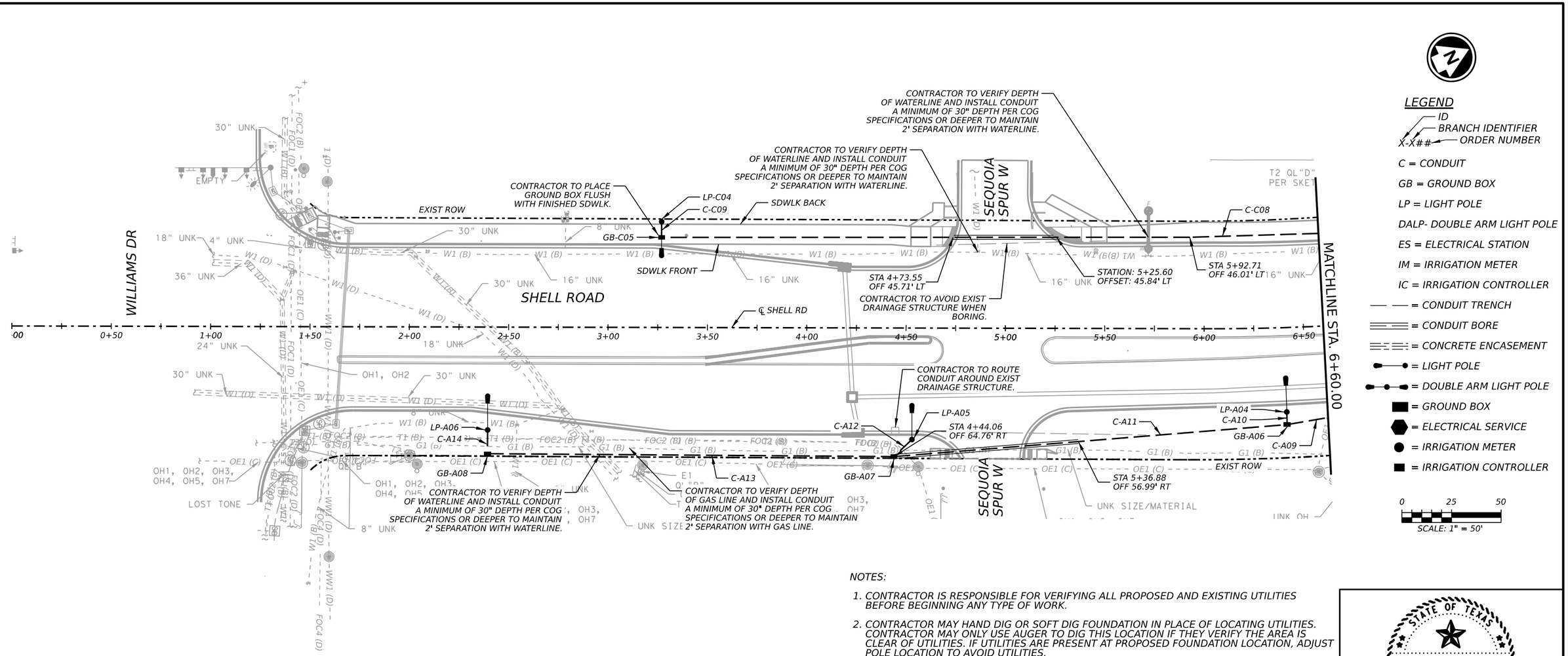

LEGEND

- ID
- BRANCH IDENTIFIER
- ORDER NUMBER

X-X##

C = CONDUIT

GB = GROUND BOX

LP = LIGHT POLE

DALP- DOUBLE ARM LIGHT POLE

ES = ELECTRICAL STATION

IM = IRRIGATION METER

IC = IRRIGATION CONTROLLER

= CONDUIT TRENCH

= CONDUIT BORE

= CONCRETE ENCASEMENT

= LIGHT POLE

= DOUBLE ARM LIGHT POLE

= GROUND BOX

= ELECTRICAL SERVICE

= IRRIGATION METER

= IRRIGATION CONTROLLER

0 25 50

SCALE: 1" = 50'

CONDUIT RUN NO.	FROM	TO	1" (SCH 40) (PVC) CONDUIT	2" (SCH 40) (PVC) CONDUIT	GUR2-S (24" X 24") (TRENCHING)	GUR2-S (30" X 24") (TRENCHING)	GUR2-S (36" X 24") (BORING)	NUMBER OF CONDUCTORS IN CONDUIT	ELEC CONDR (NO.1/0) ALUMINUM TPLX	ELEC CONDR (NO.12) COPPER DPLX
			LF	LF	LF	LF	LF	EA	LF	LF
C-A09	GB-A04	GB-A06		25		25		1	30	
C-A10	GB-A06	LP-A04	11		11			1		16
C-A11	GB-A06	GB-A07		207		109	98	1	212	
C-A12	GB-A07	LP-A05	23		23			1		28
C-A13	GB-A07	GB-A08		209		209		1	214	
C-A14	GB-A08	LP-A06	16		16			1		21
C-C08	GB-C04	GB-C05		339		280	59	1	344	
C-C09	GB-C05	LP-C04	12		12			1		17

ITEM NO.	DESCRIPTION	QUANTITY	UNIT
GUSL-CF-B	CONCRETE FOUNDATION STREETLIGHT POLE	24	LF
GUSL-35-1	STREETLIGHT 35' BRUSHED ALUMINUM SINGLE	4	EA
GUM50-P-1	1" (SCH 40) (PVC) CONDUIT	62	LF
GUM50-P-2	2" (SCH 40) (PVC) CONDUIT	780	LF
GUR2-S (24" X 24") (TRENCH)	1" (SCH 40) (PVC) CONDUIT (TRENCH)	62	LF
GUR2-S (30" X 24") (TRENCH)	2" (SCH 40) (PVC) CONDUIT (TRENCH)	623	LF
GUR2-S (36" X 24") (BORING)	2" (SCH 40) (PVC) CONDUIT (BORE)	157	LF
GUK6-SL	JUNCTION BOX	4	EA
SS00001	ELEC CONDR (NO.1/0) ALUMINUM TPLX	800	LF
SS00002	ELEC CONDR (NO.12) COPPER DPLX	82	LF

ILLUMINATION COMPONENT LOCATION		
ID NO.	STATION	OFFSET
LP-A04	06+40.26	42.48' RT
GB-A06	06+40.26	48.85' RT
LP-A05	04+53.06	56.13' RT
GB-A07	04+44.06	64.76' RT
LP-A06	02+39.51	51.84' RT
GB-A08	02+39.43	63.81' RT
LP-C04	03+26.87	53.24' LT
GB-C05	03+26.87	45.35' LT

NOTES:

1. CONTRACTOR IS RESPONSIBLE FOR VERIFYING ALL PROPOSED AND EXISTING UTILITIES BEFORE BEGINNING ANY TYPE OF WORK.
2. CONTRACTOR MAY HAND DIG OR SOFT DIG FOUNDATION IN PLACE OF LOCATING UTILITIES. CONTRACTOR MAY ONLY USE AUGER TO DIG THIS LOCATION IF THEY VERIFY THE AREA IS CLEAR OF UTILITIES. IF UTILITIES ARE PRESENT AT PROPOSED FOUNDATION LOCATION, ADJUST POLE LOCATION TO AVOID UTILITIES.
3. ALL ILLUMINATION WORK SHALL BE DONE IN ACCORDANCE WITH COG SPECIFICATIONS.
4. CONDUIT TO BE INSTALLED AT A MINIMUM DEPTH OF 30" FOR PRIMARY CONDUIT (2" CONDUITS WITH #1/0 AL TPLX) AND 24" FOR SECONDARY CONDUIT (1" CONDUITS WITH #12/2 CU DPLX) PER COG SPECIFICATIONS. CONDUIT MAY BE INSTALLED DEEPER TO MAINTAIN A 2' SEPARATION WITH UTILITIES. CONDUIT DEPTH VARYING WILL NOT BE PAID FOR DIRECTLY BUT WILL BE CONSIDERED SUBSIDIARY TO VARIOUS BID ITEMS.
5. TRENCH CONDUIT IS QUANTIFIED AND PAID FOR USING A DEPTH OF 30" FOR PRIMARY CONDUIT RUNS AND 24" FOR SECONDARY CONDUIT RUNS. NO ADDITIONAL PAYMENT WILL BE MADE FOR INSTALLING CONDUIT DEEPER THAN MINIMUM DEPTH TO AVOID UTILITIES.
6. ALL FOUNDATIONS ARE STANDARD 6 FOOT DEPTH.
7. STREETLIGHT PRIMARY WILL BE #1/0 AL TPLX IN A 2" PVC CONDUIT FROM HANDHOLE TO HANDHOLE. THE STREETLIGHTS WILL BE FED FROM A HANDHOLE VIA #12/2 CU DPLX CABLE IN A 1" PVC CONDUIT. IRRIGATION POINTS WILL BE FED OFF STREETLIGHT PRIMARY FROM PROPOSED HANDHOLES TO PROPOSED METER LOCATIONS VIA #1/0 AL TPLX IN A 2" PVC CONDUIT.
8. ABOVE GROUND RISER CONDUIT & CONDUCTORS FROM COG ELECTRIC OVERHEAD ELECTRICAL LINE TO FIRST GROUND BOX WILL BE FURNISHED BY COG ELECTRIC. FINAL TERMINATION OF THESE CONDUCTORS TO ILLUMINATION UNDERGROUND PRIMARY CONDUCTORS INSTALLED BY THE CONTRACTOR TO BE PROVIDED BY COG ELECTRIC. UNDERGROUND CONDUIT FROM FIRST GROUND BOX IN ILLUMINATION SYSTEM TO COG ELECTRIC OVERHEAD ELECTRICAL POLE SHALL BE FURNISHED & INSTALLED BY CONTRACTOR AS SHOWN IN THE PLANS & PAID FOR USING PERTINENT BID ITEMS.
9. PROPOSED LIGHT FIXTURES SHALL HAVE INTEGRATED PHOTOCELLS AS SHOWN IN COG STANDARDS. PHOTOCELLS WILL BE MOUNTED ONTO PROPOSED LIGHT AS SHOWN IN COG ELECTRICAL STANDARDS.
10. PROPOSED IRRIGATION METER & PEDESTAL TO BE APPROVED BY COG ELECTRIC.
11. CONTRACTOR TO PROVIDE ALL EQUIPMENT, MATERIALS, & LABOR TO CONNECT IRRIGATION CONTROLLER TO ELECTRICAL SERVICE & METER AS APPROVED BY COG.
12. CONTRACTOR TO FURNISH & INSTALL ELECTRICAL SERVICE PANEL AND BREAKERS AS APPROVED BY COG FOR IRRIGATION CONTROLLER ELECTRICAL SERVICES.

STATE OF TEXAS
HUNTER T. KUTACH
151241
LICENSED
PROFESSIONAL ENGINEER

3/12/2025

GEORGETOWN TEXAS EST. 1848

BGE, Inc.
101 West Louis Henna Blvd, Suite 400, Austin, TX 78728
Tel: 512-879-0400 • www.bgeinc.com
TBPE Registration No. F-1046

SHELL ROAD

ILLUMINATION LAYOUT

SHEET 1 OF 11

SHEET NO. 221

DATE: 3/12/2025 2:26:24 PM
FILE: G:\TXC\Projects\City Georgetown\10767-00 Shell Road\03 CADD\01 Shts\10-ILLUM\ILLUMINATION 01.dgn

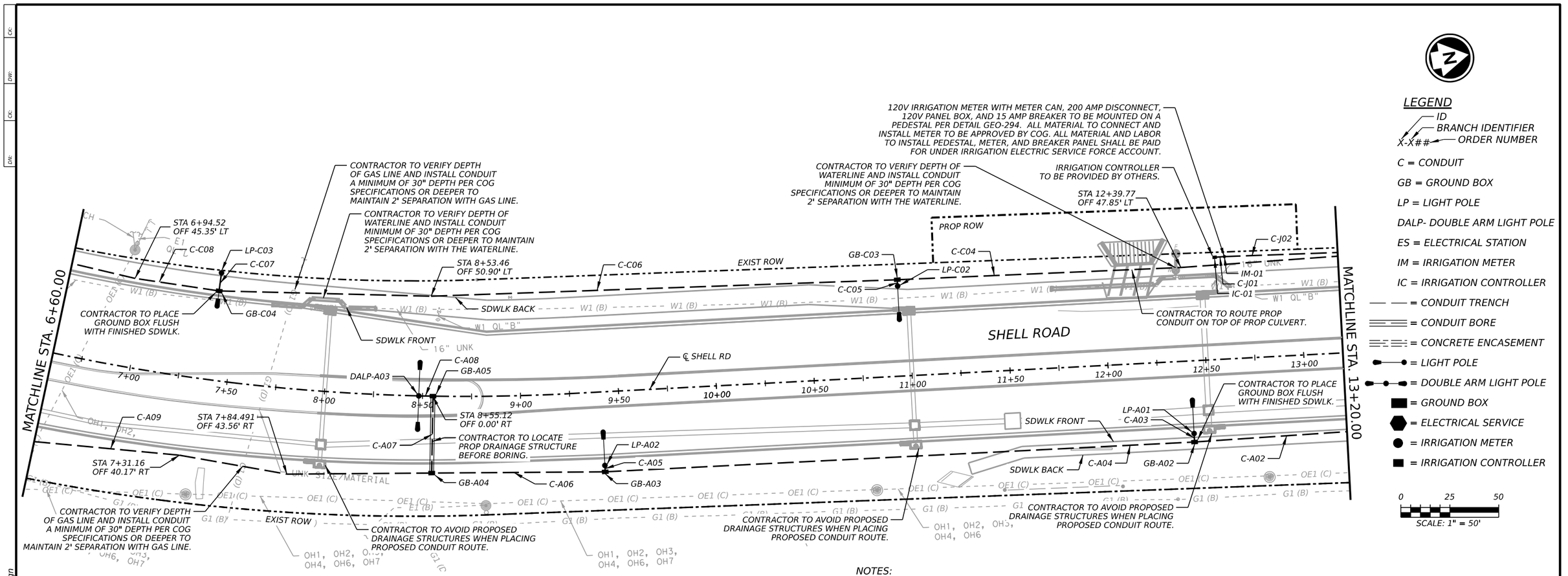

LEGEND

- ID
- BRANCH IDENTIFIER
- X-X## — ORDER NUMBER

C = CONDUIT

GB = GROUND BOX

LP = LIGHT POLE

DALP- DOUBLE ARM LIGHT POLE

ES = ELECTRICAL STATION

IM = IRRIGATION METER

IC = IRRIGATION CONTROLLER

= CONDUIT TRENCH

= CONDUIT BORE

= CONCRETE ENCASEMENT

= LIGHT POLE

= DOUBLE ARM LIGHT POLE

= GROUND BOX

= ELECTRICAL SERVICE

= IRRIGATION METER

= IRRIGATION CONTROLLER

0 25 50

SCALE: 1" = 50'

CONDUIT RUN NO.	FROM	TO	1" (SCH 40) (PVC) CONDUIT	2" (SCH 40) (PVC) CONDUIT	GUR2-S (24" X 24") (TRENCHING)	GUR2-S (30" X 24") (TRENCHING)	GUR2-S (36" X 24") (BORING)	NUMBER OF CONDUCTORS IN CONDUIT	ELEC CONDR (NO.1/0) ALUMINUM TPLX	ELEC CONDR (NO.12) COPPER DPLX
			LF	LF	LF	LF	LF	EA	LF	LF
C-A02	GB-A01	GB-A02		82		82		1	87	
C-A03	GB-A02	LP-A01	8		8			1		13
C-A04	GB-A02	GB-A03		305		305		1	310	
C-A05	GB-A03	LP-A02	6		6			1		11
C-A06	GB-A03	GB-A04		93		93		1	98	
C-A07	GB-A04	GB-A05		44			44	1	49	
C-A08	GB-A05	DALP-A03	12		12			1		17
C-A09	GB-A04	GB-A06		208		208		1	213	
C-C04	GB-C02	GB-C03		230		230		1	235	
C-C05	GB-C03	LP-C02	8		8			1		13
C-C06	GB-C03	GB-C04		350		350		1	355	
C-C07	GB-C04	LP-C03	12		12			1		17
C-C08	GB-C04	GB-C05		81		81		1	86	
C-J01	IC-01	IM-01	9		9			1		14
C-J02	IM-01	GB-C02		62		62		1	67	

ITEM NO.	DESCRIPTION	QUANTITY	UNIT
GUSL-CF-B	CONCRETE FOUNDATION STREETLIGHT POLE	30	LF
GUSL-35-1	STREETLIGHT 35' BRUSHED ALUMINUM SINGLE	4	EA
GUSL-35-2	STREETLIGHT 35' BRUSHED ALUMINUM DOUBLE	1	EA
GUM50-P-1	1" (SCH 40) (PVC) CONDUIT	55	LF
GUM50-P-2	2" (SCH 40) (PVC) CONDUIT	1455	LF
GUR2-S (24" X 24") (TRENCH)	1" (SCH 40) (PVC) CONDUIT (TRENCH)	55	LF
GUR2-S (30" X 24") (TRENCH)	2" (SCH 40) (PVC) CONDUIT (TRENCH)	1411	LF
GUR2-S (36" X 24") (BORING)	2" (SCH 40) (PVC) CONDUIT (BORE)	44	LF
GUK6-SL	JUNCTION BOX	6	EA
SS00001	ELEC CONDR (NO.1/0) ALUMINUM TPLX	1500	LF
SS00002	ELEC CONDR (NO.12) COPPER DPLX	85	LF
SS00003	IRRIGATION METER	1	EA

ILLUMINATION COMPONENT LOCATION		
ID NO.	STATION	OFFSET
LP-A01	12+42.08	37.02' RT
GB-A02	12+42.08	41.40' RT
LP-A02	09+41.09	37.52' RT
GB-A03	09+41.09	40.77' RT
GB-A04	08+55.28	39.23' RT
GB-A05	08+55.33	00.00' RT
DALP-A03	08+48.11	00.00' RT
LP-C02	10+95.01	46.00' LT
GB-C03	10+95.01	49.25' LT
LP-C03	07+39.93	54.86' LT
GB-C04	07+39.94	45.55' LT
IM-01	12+62.22	52.24' LT
IC-01	12+57.22	52.18'LT

NOTES:

1. CONTRACTOR IS RESPONSIBLE FOR VERIFYING ALL PROPOSED AND EXISTING UTILITIES BEFORE BEGINNING ANY TYPE OF WORK.
2. CONTRACTOR MAY HAND DIG OR SOFT DIG FOUNDATION IN PLACE OF LOCATING UTILITIES. CONTRACTOR MAY ONLY USE AUGER TO DIG THIS LOCATION IF THEY VERIFY THE AREA IS CLEAR OF UTILITIES. IF UTILITIES ARE PRESENT AT PROPOSED FOUNDATION LOCATION, ADJUST POLE LOCATION TO AVOID UTILITIES.
3. ALL ILLUMINATION WORK SHALL BE DONE IN ACCORDANCE WITH COG SPECIFICATIONS.
4. CONDUIT TO BE INSTALLED AT A MINIMUM DEPTH OF 30" FOR PRIMARY CONDUIT (2" CONDUITS WITH #1/0 AL TPLX) AND 24" FOR SECONDARY CONDUIT (1" CONDUITS WITH #12/2 CU DPLX) PER COG SPECIFICATIONS. CONDUIT MAY BE INSTALLED DEEPER TO MAINTAIN A 2' SEPARATION WITH UTILITIES. CONDUIT DEPTH VARYING WILL NOT BE PAID FOR DIRECTLY BUT WILL BE CONSIDERED SUBSIDIARY TO VARIOUS BID ITEMS.
5. TRENCH CONDUIT IS QUANTIFIED AND PAID FOR USING A DEPTH OF 30" FOR PRIMARY CONDUIT RUNS AND 24" FOR SECONDARY CONDUIT RUNS. NO ADDITIONAL PAYMENT WILL BE MADE FOR INSTALLING CONDUIT DEEPER THAN MINIMUM DEPTH TO AVOID UTILITIES.
6. ALL FOUNDATIONS ARE STANDARD 6 FOOT DEPTH.
7. STREETLIGHT PRIMARY WILL BE #1/0 AL TPLX IN A 2" PVC CONDUIT FROM HANDHOLE TO HANDHOLE. THE STREETLIGHTS WILL BE FED FROM A HANDHOLE VIA #12/2 CU DPLX CABLE IN A 1" PVC CONDUIT. IRRIGATION POINTS WILL BE FED OFF STREETLIGHT PRIMARY FROM PROPOSED HANDHOLES TO PROPOSED METER LOCATIONS VIA #1/0 AL TPLX IN A 2" PVC CONDUIT.
8. ABOVE GROUND RISER CONDUIT & CONDUCTORS FROM COG ELECTRIC OVERHEAD ELECTRICAL LINE TO FIRST GROUND BOX WILL BE FURNISHED BY COG ELECTRIC. FINAL TERMINATION OF THESE CONDUCTORS TO ILLUMINATION UNDERGROUND PRIMARY CONDUCTORS INSTALLED BY THE CONTRACTOR TO BE PROVIDED BY COG ELECTRIC. UNDERGROUND CONDUIT FROM FIRST GROUND BOX IN ILLUMINATION SYSTEM TO COG ELECTRIC OVERHEAD ELECTRICAL POLE SHALL BE FURNISHED & INSTALLED BY CONTRACTOR AS SHOWN IN THE PLANS & PAID FOR USING PERTINENT BID ITEMS.
9. PROPOSED LIGHT FIXTURES SHALL HAVE INTEGRATED PHOTOCELLS AS SHOWN IN COG STANDARDS. PHOTOCELLS WILL BE MOUNTED ONTO PROPOSED LIGHT AS SHOWN IN COG ELECTRICAL STANDARDS.
10. PROPOSED IRRIGATION METER & PEDESTAL TO BE APPROVED BY COG ELECTRIC.
11. CONTRACTOR TO PROVIDE ALL EQUIPMENT, MATERIALS, & LABOR TO CONNECT IRRIGATION CONTROLLER TO ELECTRICAL SERVICE & METER AS APPROVED BY COG.
12. CONTRACTOR TO FURNISH & INSTALL ELECTRICAL SERVICE PANEL AND BREAKERS AS APPROVED BY COG FOR IRRIGATION CONTROLLER ELECTRICAL SERVICES.

STATE OF TEXAS
HUNTER T. KUTACH
151241
LICENSED
PROFESSIONAL ENGINEER
3/12/2025

EST.1848 GEORGETOWN TEXAS

BGE, Inc.
101 West Louis Henna Blvd, Suite 400, Austin, TX 78728
Tel: 512-879-0400 • www.bgeinc.com
TBPE Registration No. F-1046

SHELL ROAD

ILLUMINATION LAYOUT

SHEET 2 OF 11

SHEET NO. 222

DATE: 3/12/2025 2:26:30 PM
FILE: G:\TXC\Projects\City_Georgetown\10767-00 Shell Road\03_CADD\01_Shts\10-ILLUM\ILLUMINATION_02.dgn

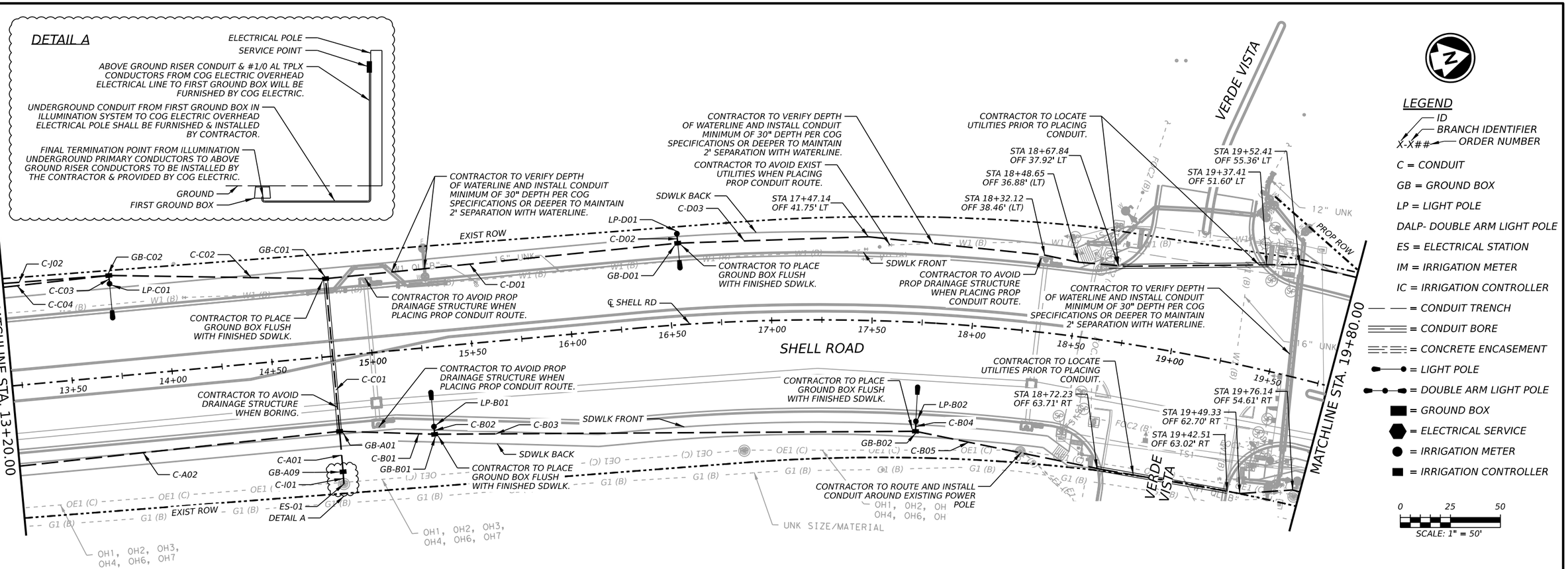

CONDUIT RUN NO.	FROM	TO	1" (SCH 40) (PVC) CONDUIT	2" (SCH 40) (PVC) CONDUIT	GUR2-S (24" X 24") (TRENCHING)	GUR2-S (30" X 24") (TRENCHING)	GUR2-S (36" X 24") (BORING)	NUMBER OF CONDUCTORS IN CONDUIT	ELEC CONDR (NO.1/0) ALUMINUM TPLX	ELEC CONDR (NO.12) COPPER DPLX
			LF	LF	LF	LF	LF	EA	LF	LF
C-A01	GB-A09	GB-A01		22		22		1	27	
C-A02	GB-A01	GB-A02		161		161		1	166	
C-B01	GB-A01	GB-B01		52		52		1	57	
C-B02	GB-B01	LP-B01	8		8			1		13
C-B03	GB-B01	GB-B02		244		244		1	249	
C-B04	GB-B02	LP-B02	9		9			1		14
C-B05	GB-B02	GB-B03		203		132	71	1	208	
C-C01	GB-A01	GB-C01		81			81	1	86	
C-C02	GB-C01	GB-C02		113		113		1	118	
C-C03	GB-C02	LP-C01	9		9			1		14
C-C04	GB-C02	GB-C03		57		57		1	62	
C-D01	GB-C01	GB-D01		181		181		1	186	
C-D02	GB-D01	LP-D01	9		9			1		14
C-D03	GB-D01	GB-D02		349		265	84	1	354	
C-I01	GB-A09	ES-01		11		11				
C-J02	IM-01	GB-C02		57		57		1	62	

ITEM NO.	DESCRIPTION	QUANTITY	UNIT
GUSL-CF-B	CONCRETE FOUNDATION STREETLIGHT POLE	24	LF
GUSL-35-1	STREETLIGHT 35' BRUSHED ALUMINUM SINGLE	4	EA
GUM50-P-1	1" (SCH 40) (PVC) CONDUIT	35	LF
GUM50-P-2	2" (SCH 40) (PVC) CONDUIT	1531	LF
GUR2-S (24" X 24") (TRENCH)	1" (SCH 40) (PVC) CONDUIT (TRENCH)	35	LF
GUR2-S (30" X 24") (TRENCH)	2" (SCH 40) (PVC) CONDUIT (TRENCH)	1295	LF
GUR2-S (36" X 24") (BORING)	2" (SCH 40) (PVC) CONDUIT (BORE)	236	LF
GUK6-SL	JUNCTION BOX	6	EA
SS00001	ELEC CONDR (NO.1/0) ALUMINUM TPLX	1575	LF
SS00002	ELEC CONDR (NO.12) COPPER DPLX	55	LF

ILLUMINATION COMPONENT LOCATION		
ID NO.	STATION	OFFSET
GB-A09	14+80.21	57.79' RT
GB-A01	14+80.37	37.56' RT
LP-B01	15+27.43	39+54' RT
GB-B01	15+27.43	43.41' RT
LP-B02	17+74.42	49.37' RT
GB-B02	17+74.42	54.37' RT
GB-C01	14+80.37	38.91' LT
LP-C01	13+73.43	46.46' LT
GB-C02	13+72.95	50.41' LT
LP-D01	16+55.76	45.40' LT
GB-D01	16+55.87	40.64' LT

NOTES:

1. CONTRACTOR IS RESPONSIBLE FOR VERIFYING ALL PROPOSED AND EXISTING UTILITIES BEFORE BEGINNING ANY TYPE OF WORK.
2. CONTRACTOR MAY HAND DIG OR SOFT DIG FOUNDATION IN PLACE OF LOCATING UTILITIES. CONTRACTOR MAY ONLY USE AUGER TO DIG THIS LOCATION IF THEY VERIFY THE AREA IS CLEAR OF UTILITIES. IF UTILITIES ARE PRESENT AT PROPOSED FOUNDATION LOCATION, ADJUST POLE LOCATION TO AVOID UTILITIES.
3. ALL ILLUMINATION WORK SHALL BE DONE IN ACCORDANCE WITH COG SPECIFICATIONS.
4. CONDUIT TO BE INSTALLED AT A MINIMUM DEPTH OF 30" FOR PRIMARY CONDUIT (2" CONDUITS WITH #1/0 AL TPLX) AND 24" FOR SECONDARY CONDUIT (1" CONDUITS WITH #12/2 CU DPLX) PER COG SPECIFICATIONS. CONDUIT MAY BE INSTALLED DEEPER TO MAINTAIN A 2' SEPARATION WITH UTILITIES. CONDUIT DEPTH VARYING WILL NOT BE PAID FOR DIRECTLY BUT WILL BE CONSIDERED SUBSIDIARY TO VARIOUS BID ITEMS.
5. TRENCH CONDUIT IS QUANTIFIED AND PAID FOR USING A DEPTH OF 30" FOR PRIMARY CONDUIT RUNS AND 24" FOR SECONDARY CONDUIT RUNS. NO ADDITIONAL PAYMENT WILL BE MADE FOR INSTALLING CONDUIT DEEPER THAN MINIMUM DEPTH TO AVOID UTILITIES.
6. ALL FOUNDATIONS ARE STANDARD 6 FOOT DEPTH.
7. STREETLIGHT PRIMARY WILL BE #1/0 AL TPLX IN A 2" PVC CONDUIT FROM HANDHOLE TO HANDHOLE. THE STREETLIGHTS WILL BE FED FROM A HANDHOLE VIA #12/2 CU DPLX CABLE IN A 1" PVC CONDUIT. IRRIGATION POINTS WILL BE FED OFF STREETLIGHT PRIMARY FROM PROPOSED HANDHOLES TO PROPOSED METER LOCATIONS VIA #1/0 AL TPLX IN A 2" PVC CONDUIT.
8. ABOVE GROUND RISER CONDUIT & CONDUCTORS FROM COG ELECTRIC OVERHEAD ELECTRICAL LINE TO FIRST GROUND BOX WILL BE FURNISHED BY COG ELECTRIC. FINAL TERMINATION OF THESE CONDUCTORS TO ILLUMINATION UNDERGROUND PRIMARY CONDUCTORS INSTALLED BY THE CONTRACTOR TO BE PROVIDED BY COG ELECTRIC. UNDERGROUND CONDUIT FROM FIRST GROUND BOX IN ILLUMINATION SYSTEM TO COG ELECTRIC OVERHEAD ELECTRICAL POLE SHALL BE FURNISHED & INSTALLED BY CONTRACTOR AS SHOWN IN THE PLANS & PAID FOR USING PERTINENT BID ITEMS.
9. PROPOSED LIGHT FIXTURES SHALL HAVE INTEGRATED PHOTOCELLS AS SHOWN IN COG STANDARDS. PHOTOCELLS WILL BE MOUNTED ONTO PROPOSED LIGHT AS SHOWN IN COG ELECTRICAL STANDARDS.
10. PROPOSED IRRIGATION METER & PEDESTAL TO BE APPROVED BY COG ELECTRIC.
11. CONTRACTOR TO PROVIDE ALL EQUIPMENT, MATERIALS, & LABOR TO CONNECT IRRIGATION CONTROLLER TO ELECTRICAL SERVICE & METER AS APPROVED BY COG.
12. CONTRACTOR TO FURNISH & INSTALL ELECTRICAL SERVICE PANEL AND BREAKERS AS APPROVED BY COG FOR IRRIGATION CONTROLLER ELECTRICAL SERVICES.

STATE OF TEXAS
HUNTER T. KUTACH
151241
LICENSED
PROFESSIONAL ENGINEER
3/12/2025

EST.1848 GEORGETOWN TEXAS

BGE, Inc.
101 West Louis Henna Blvd, Suite 400, Austin, TX 78728
Tel: 512-879-0400 • www.bgeinc.com
TBPE Registration No. F-1046

SHELL ROAD

ILLUMINATION LAYOUT

SHEET 3 OF 11

SHEET NO. 223

DATE: 3/12/2025 2:26:33 PM
FILE: G:\TXC\Projects\City Georgetown\10767-00 Shell Road\03 CADD\01 Shts\10-ILLUMINILLUMINATION 03.dgn

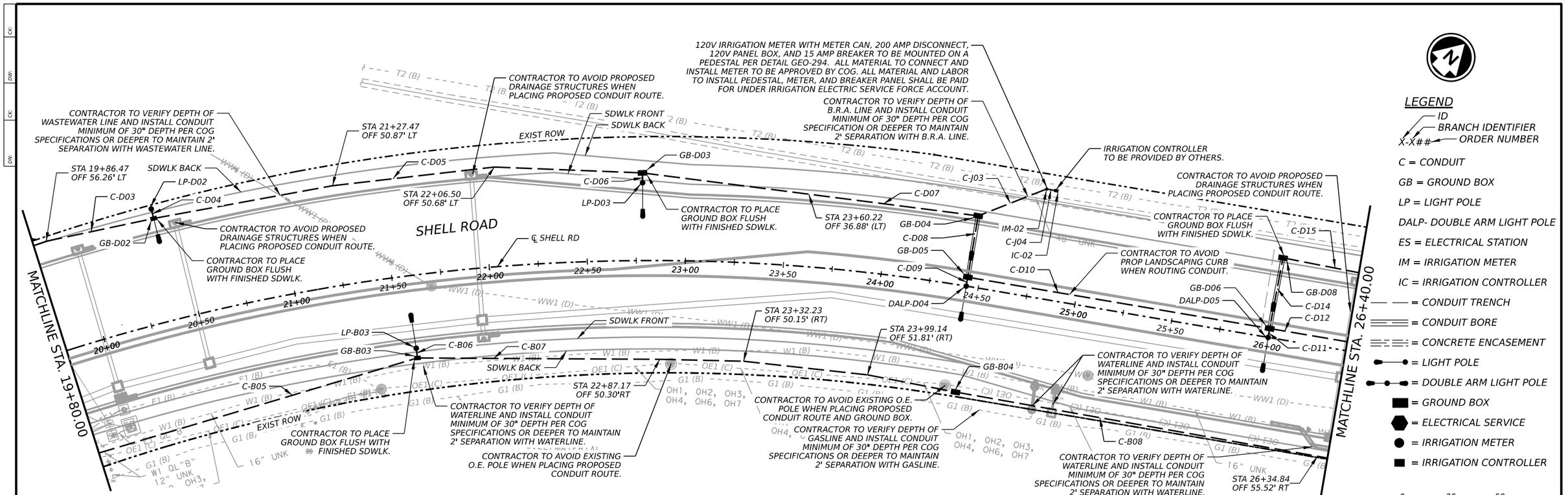

CONDUIT RUN NO.	FROM	TO	1" (SCH 40) (PVC) CONDUIT	2" (SCH 40) (PVC) CONDUIT	GUR2-S (24" X 24") (TRENCHING)	GUR2-S (30" X 24") (TRENCHING)	GUR2-S (36" X 24") (BORING)	NUMBER OF CONDUCTORS IN CONDUIT	ELEC CONDR (NO.1/0) ALUMINUM TPLX	ELEC CONDR (NO.12) COPPER DPLX
			LF	LF	LF	LF	LF	EA	LF	LF
C-B05	GB-B02	GB-B03		174		174		1	179	
C-B06	GB-B03	LP-B03	9		9			1		14
C-B07	GB-B03	GB-B04		280		280		1	285	
C-B08	GB-B04	GB-B05		197		197		1	202	
C-D03	GB-D01	GB-D02		67		67		1	72	
C-D04	GB-D02	LP-D02	9		9			1		14
C-D05	GB-D02	GB-D03		256		256		1	261	
C-D06	GB-D03	LP-D03	9		9			1		14
C-D07	GB-D03	GB-D04		177		177		1	182	
C-D08	GB-D04	GB-D05		36			36	1	41	
C-D09	GB-D05	DALP-D04	9		9			1		14
C-D10	GB-D05	GB-D06		161		161		1	166	
C-D11	GB-D06	DALP-D05	5		5			1		10
C-D12	GB-D06	GB-D07		44		44		1	49	
C-D14	GB-D06	GB-D08		41			41	1	46	
C-D15	GB-D08	GB-D09		44		44		1	49	
C-J03	GB-D04	IM-02		42		42		1	47	
C-J04	IM-02	IC-02	9		9			1		14

ITEM NO.	DESCRIPTION	QUANTITY	UNIT
GUSL-CF-B	CONCRETE FOUNDATION STREETLIGHT POLE	30	LF
GUSL-35-1	STREETLIGHT 35'BRUSHED ALUMINUM SINGLE	3	EA
GUSL-35-2	STREETLIGHT 35'BRUSHED ALUMINUM DOUBLE	2	EA
GUM50-P-1	1" (SCH 40) (PVC) CONDUIT	50	LF
GUM50-P-2	2" (SCH 40) (PVC) CONDUIT	1519	LF
GUR2-S (24" X 24") (TRENCH)	1" (SCH 40) (PVC) CONDUIT (TRENCH)	50	LF
GUR2-S (30" X 24") (TRENCH)	2" (SCH 40) (PVC) CONDUIT (TRENCH)	1442	LF
GUR2-S (36" X 24") (BORING)	2" (SCH 40) (PVC) CONDUIT (BORE)	77	LF
GUK6-SL	JUNCTION BOX	8	EA
SS00001	ELEC CONDR (NO.1/0) ALUMINUM TPLX	1579	LF
SS00001	ELEC CONDR (NO.12) COPPER DPLX	80	LF
SS00002	IRRIGATION METER	1	EA

ILLUMINATION COMPONENT LOCATION		
ID NO.	STATION	OFFSET
LP-B03	21+57.87	37.11' RT
GB-B03	21+57.87	42.11' RT
GB-B04	24+47.46	53.97' RT
LP-D02	20+39.42	57.71' LT
GB-D02	20+39.42	52.71' LT
LP-D03	22+78.38	39.65' LT
GB-D03	22+78.38	44.65' LT
GB-D04	24+44.08	36.29' LT
DALP-D04	24+43.87	00.00' LT
GB-D05	24+43.90	04.63' LT
DALP-D05	25+99.91	00.00' LT
GB-D06	25+99.91	04.61' LT
GB-D08	26+00.61	41.21' LT
IM-02	24+75.99	55.59' LT
IC-02	24+80.99	55.58' LT

NOTES:

1. CONTRACTOR IS RESPONSIBLE FOR VERIFYING ALL PROPOSED AND EXISTING UTILITIES BEFORE BEGINNING ANY TYPE OF WORK.
2. CONTRACTOR MAY HAND DIG OR SOFT DIG FOUNDATION IN PLACE OF LOCATING UTILITIES. CONTRACTOR MAY ONLY USE AUGER TO DIG THIS LOCATION IF THEY VERIFY THE AREA IS CLEAR OF UTILITIES. IF UTILITIES ARE PRESENT AT PROPOSED FOUNDATION LOCATION, ADJUST POLE LOCATION TO AVOID UTILITIES.
3. ALL ILLUMINATION WORK SHALL BE DONE IN ACCORDANCE WITH COG SPECIFICATIONS.
4. CONDUIT TO BE INSTALLED AT A MINIMUM DEPTH OF 30" FOR PRIMARY CONDUIT (2" CONDUITS WITH #1/0 AL TPLX) AND 24" FOR SECONDARY CONDUIT (1" CONDUITS WITH #12/2 CU DPLX) PER COG SPECIFICATIONS. CONDUIT MAY BE INSTALLED DEEPER TO MAINTAIN A 2' SEPARATION WITH UTILITIES. CONDUIT DEPTH VARYING WILL NOT BE PAID FOR DIRECTLY BUT WILL BE CONSIDERED SUBSIDIARY TO VARIOUS BID ITEMS.
5. TRENCH CONDUIT IS QUANTIFIED AND PAID FOR USING A DEPTH OF 30" FOR PRIMARY CONDUIT RUNS AND 24" FOR SECONDARY CONDUIT RUNS. NO ADDITIONAL PAYMENT WILL BE MADE FOR INSTALLING CONDUIT DEEPER THAN MINIMUM DEPTH TO AVOID UTILITIES.
6. ALL FOUNDATIONS ARE STANDARD 6 FOOT DEPTH.
7. STREETLIGHT PRIMARY WILL BE #1/0 AL TPLX IN A 2" PVC CONDUIT FROM HANDHOLE TO HANDHOLE. THE STREETLIGHTS WILL BE FED FROM A HANDHOLE VIA #12/2 CU DPLX CABLE IN A 1" PVC CONDUIT. IRRIGATION POINTS WILL BE FED OFF STREETLIGHT PRIMARY FROM PROPOSED HANDHOLES TO PROPOSED METER LOCATIONS VIA #1/0 AL TPLX IN A 2" PVC CONDUIT.
8. ABOVE GROUND RISER CONDUIT & CONDUCTORS FROM COG ELECTRIC OVERHEAD ELECTRICAL LINE TO FIRST GROUND BOX WILL BE FURNISHED BY COG ELECTRIC. FINAL TERMINATION OF THESE CONDUCTORS TO ILLUMINATION UNDERGROUND PRIMARY CONDUCTORS INSTALLED BY THE CONTRACTOR TO BE PROVIDED BY COG ELECTRIC. UNDERGROUND CONDUIT FROM FIRST GROUND BOX IN ILLUMINATION SYSTEM TO COG ELECTRIC OVERHEAD ELECTRICAL POLE SHALL BE FURNISHED & INSTALLED BY CONTRACTOR AS SHOWN IN THE PLANS & PAID FOR USING PERTINENT BID ITEMS.
9. PROPOSED LIGHT FIXTURES SHALL HAVE INTEGRATED PHOTOCELLS AS SHOWN IN COG STANDARDS. PHOTOCELLS WILL BE MOUNTED ONTO PROPOSED LIGHT AS SHOWN IN COG ELECTRICAL STANDARDS.
10. PROPOSED IRRIGATION METER & PEDESTAL TO BE APPROVED BY COG ELECTRIC.
11. CONTRACTOR TO PROVIDE ALL EQUIPMENT, MATERIALS, & LABOR TO CONNECT IRRIGATION CONTROLLER TO ELECTRICAL SERVICE & METER AS APPROVED BY COG.
12. CONTRACTOR TO FURNISH & INSTALL ELECTRICAL SERVICE PANEL AND BREAKERS AS APPROVED BY COG FOR IRRIGATION CONTROLLER ELECTRICAL SERVICES.

STATE OF TEXAS
HUNTER T. KUTACH
151241
LICENSED
PROFESSIONAL ENGINEER
3/12/2025

GEORGETOWN TEXAS EST.1848

BGE, Inc.
101 West Louis Henna Blvd, Suite 400, Austin, TX 78728
Tel: 512-879-0400 • www.bgeinc.com
TBPE Registration No. F-1046

SHELL ROAD

ILLUMINATION LAYOUT

SHEET 4 OF 11

SHEET NO. 224

DATE: 3/12/2025 2:26:37 PM
FILE: G:\TXC\Projects\City Georgetown\10767-00 Shell Road\03 CADD\01 Shts\10-ILLUMINILLUMINATION 04.dgn

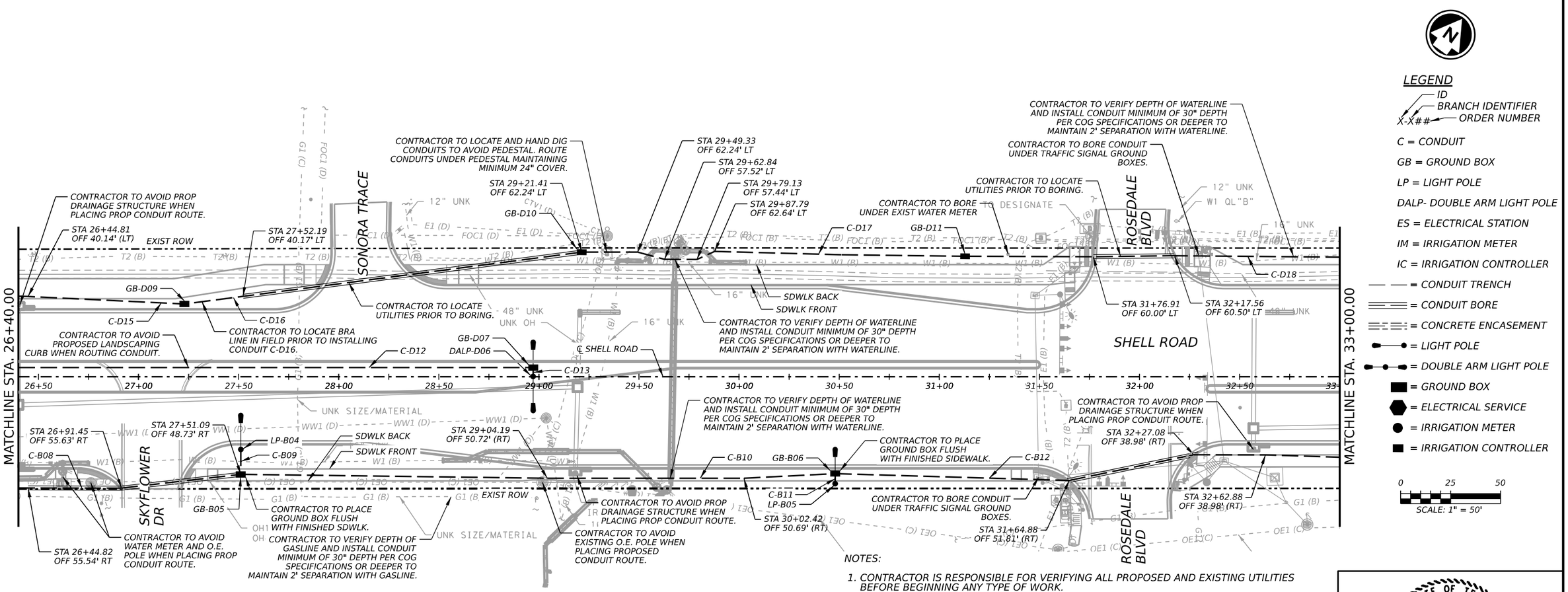

CONDUIT RUN NO.	FROM	TO	1" (SCH 40) (PVC) CONDUIT	2" (SCH 40) (PVC) CONDUIT	GUR2-S (24" X 24") (TRENCHING)	GUR2-S (30" X 24") (TRENCHING)	GUR2-S (36" X 24") (BORING)	NUMBER OF CONDUCTORS IN CONDUIT	ELEC CONDR (NO.1/0) ALUMINUM TPLX	ELEC CONDR (NO.12) COPPER DPLX
			LF	LF	LF	LF	LF	EA	LF	LF
C-B08	GB-B04	GB-B05		120		9	111	1	125	
C-B09	GB-B05	LP-B04	17		17			1		22
C-B10	GB-B05	GB-B06		303		303		1	308	
C-B11	GB-B06	LP-B05	9		9			1		14
C-B12	GB-B06	GB-B07		262		191	71	1	267	
C-D12	GB-D06	GB-D07		262		262		1	267	
C-D13	GB-D07	DALP-D06	9		9			1		14
C-D15	GB-D08	GB-D09		88		88		1	93	
C-D16	GB-D09	GB-D10		209		34	175	1	214	
C-D17	GB-D10	GB-D11		197		197		1	202	
C-D18	GB-D11	GB-D12		196		150	46	1	201	

ITEM NO.	DESCRIPTION	QUANTITY	UNIT
GUSL-CF-B	CONCRETE FOUNDATION STREETLIGHT POLE	18	LF
GUSL-35-1	STREETLIGHT 35' BRUSHED ALUMINUM SINGLE	2	EA
GUSL-35-2	STREETLIGHT 35' BRUSHED ALUMINUM DOUBLE	1	EA
GUM50-P-1	1" (SCH 40) (PVC) CONDUIT	35	LF
GUM50-P-2	2" (SCH 40) (PVC) CONDUIT	1637	LF
GUR2-S (24" X 24") (TRENCH)	1" (SCH 40) (PVC) CONDUIT (TRENCH)	35	LF
GUR2-S (30" X 24") (TRENCH)	2" (SCH 40) (PVC) CONDUIT (TRENCH)	1234	LF
GUR2-S (36" X 24") (BORING)	2" (SCH 40) (PVC) CONDUIT (BORE)	403	LF
GUK6-SL	JUNCTION BOX	6	EA
SS00001	ELEC CONDR (NO.1/0) ALUMINUM TPLX	1677	LF
SS00002	ELEC CONDR (NO.12) COPPER DPLX	50	LF

ILLUMINATION COMPONENT LOCATION		
ID NO.	STATION	OFFSET
LP-B04	27+51.06	36.33' RT
GB-B05	27+51.09	48.73' RT
LP-B05	30+48.36	52.84' RT
GB-B06	30+48.00	48.39' RT
GB-D07	28+97.14	04.61' LT
DALP-D06	28+97.14	00.00' LT
GB-D09	27+22.94	36.36' LT
GB-D10	29+21.41	62.24' LT
GB-D11	31+12.89	60.19' LT

NOTES:

1. CONTRACTOR IS RESPONSIBLE FOR VERIFYING ALL PROPOSED AND EXISTING UTILITIES BEFORE BEGINNING ANY TYPE OF WORK.
2. CONTRACTOR MAY HAND DIG OR SOFT DIG FOUNDATION IN PLACE OF LOCATING UTILITIES. CONTRACTOR MAY ONLY USE AUGER TO DIG THIS LOCATION IF THEY VERIFY THE AREA IS CLEAR OF UTILITIES. IF UTILITIES ARE PRESENT AT PROPOSED FOUNDATION LOCATION, ADJUST POLE LOCATION TO AVOID UTILITIES.
3. ALL ILLUMINATION WORK SHALL BE DONE IN ACCORDANCE WITH COG SPECIFICATIONS.
4. CONDUIT TO BE INSTALLED AT A MINIMUM DEPTH OF 30" FOR PRIMARY CONDUIT (2" CONDUITS WITH #1/0 AL TPLX) AND 24" FOR SECONDARY CONDUIT (1" CONDUITS WITH #12/2 CU DPLX) PER COG SPECIFICATIONS. CONDUIT MAY BE INSTALLED DEEPER TO MAINTAIN A 2' SEPARATION WITH UTILITIES. CONDUIT DEPTH VARYING WILL NOT BE PAID FOR DIRECTLY BUT WILL BE CONSIDERED SUBSIDIARY TO VARIOUS BID ITEMS.
5. TRENCH CONDUIT IS QUANTIFIED AND PAID FOR USING A DEPTH OF 30" FOR PRIMARY CONDUIT RUNS AND 24" FOR SECONDARY CONDUIT RUNS. NO ADDITIONAL PAYMENT WILL BE MADE FOR INSTALLING CONDUIT DEEPER THAN MINIMUM DEPTH TO AVOID UTILITIES.
6. ALL FOUNDATIONS ARE STANDARD 6 FOOT DEPTH.
7. STREETLIGHT PRIMARY WILL BE #1/0 AL TPLX IN A 2" PVC CONDUIT FROM HANDHOLE TO HANDHOLE. THE STREETLIGHTS WILL BE FED FROM A HANDHOLE VIA #12/2 CU DPLX CABLE IN A 1" PVC CONDUIT. IRRIGATION POINTS WILL BE FED OFF STREETLIGHT PRIMARY FROM PROPOSED HANDHOLES TO PROPOSED METER LOCATIONS VIA #1/0 AL TPLX IN A 2" PVC CONDUIT.
8. ABOVE GROUND RISER CONDUIT & CONDUCTORS FROM COG ELECTRIC OVERHEAD ELECTRICAL LINE TO FIRST GROUND BOX WILL BE FURNISHED BY COG ELECTRIC. FINAL TERMINATION OF THESE CONDUCTORS TO ILLUMINATION UNDERGROUND PRIMARY CONDUCTORS INSTALLED BY THE CONTRACTOR TO BE PROVIDED BY COG ELECTRIC. UNDERGROUND CONDUIT FROM FIRST GROUND BOX IN ILLUMINATION SYSTEM TO COG ELECTRIC OVERHEAD ELECTRICAL POLE SHALL BE FURNISHED & INSTALLED BY CONTRACTOR AS SHOWN IN THE PLANS & PAID FOR USING PERTINENT BID ITEMS.
9. PROPOSED LIGHT FIXTURES SHALL HAVE INTEGRATED PHOTOCELLS AS SHOWN IN COG STANDARDS. PHOTOCELLS WILL BE MOUNTED ONTO PROPOSED LIGHT AS SHOWN IN COG ELECTRICAL STANDARDS.
10. PROPOSED IRRIGATION METER & PEDESTAL TO BE APPROVED BY COG ELECTRIC.
11. CONTRACTOR TO PROVIDE ALL EQUIPMENT, MATERIALS, & LABOR TO CONNECT IRRIGATION CONTROLLER TO ELECTRICAL SERVICE & METER AS APPROVED BY COG.
12. CONTRACTOR TO FURNISH & INSTALL ELECTRICAL SERVICE PANEL AND BREAKERS AS APPROVED BY COG FOR IRRIGATION CONTROLLER ELECTRICAL SERVICES.

STATE OF TEXAS
HUNTER T. KUTACH
151241
LICENSED
PROFESSIONAL ENGINEER
3/12/2025

GEORGETOWN TEXAS EST.1848

BGE, Inc.
101 West Louis Henna Blvd, Suite 400, Austin, TX 78728
Tel: 512-879-0400 • www.bgeinc.com
TBPE Registration No. F-1046

SHELL ROAD

ILLUMINATION LAYOUT

SHEET 5 OF 11

SHEET NO. 225

DATE: 3/12/2025 2:26:41 PM
FILE: G:\TXC\Projects\City Georgetown\10767-00 Shell Road\03_CADD\01_Shts\10-ILLUM\ILLUMINATION_05.dgn

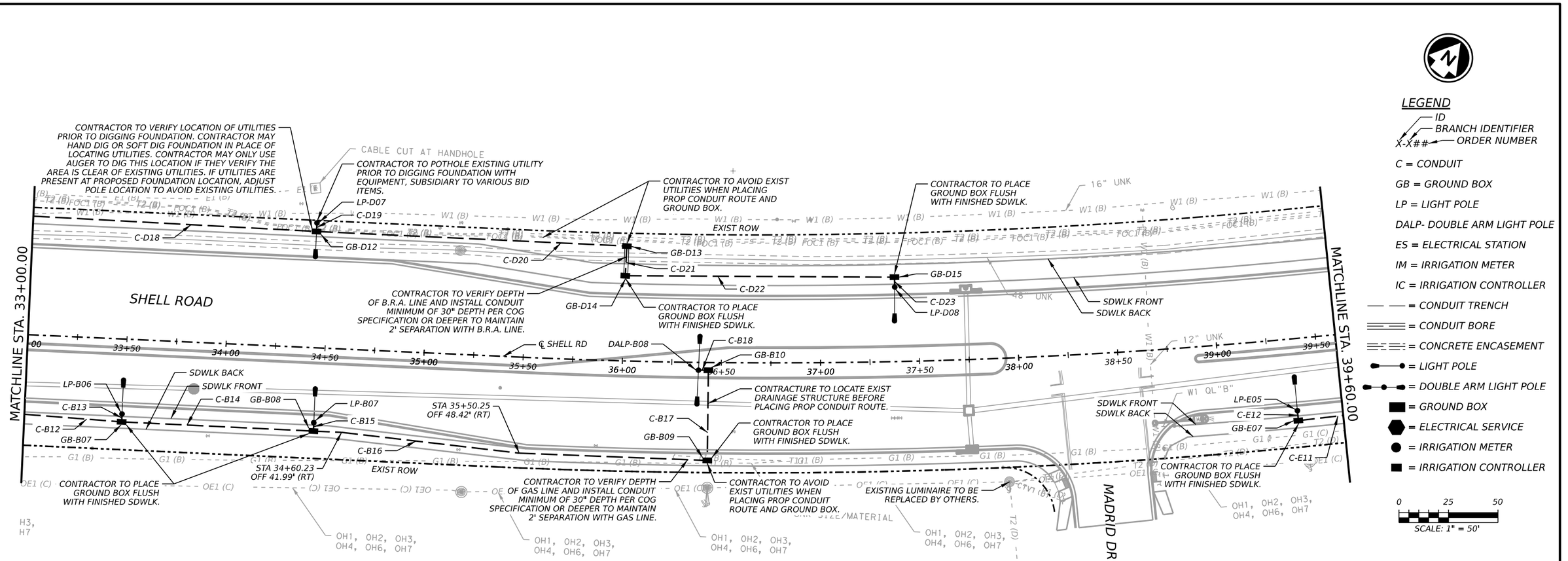

CONDUIT RUN NO.	FROM	TO	1" (SCH 40) (PVC) CONDUIT	2" (SCH 40) (PVC) CONDUIT	GUR2-S (24" X 24") (TRENCHING)	GUR2-S (30" X 24") (TRENCHING)	GUR2-S (36" X 24") (BORING)	NUMBER OF CONDUCTORS IN CONDUIT	ELEC CONDR (NO.1/0) ALUMINUM TPLX	ELEC CONDR (NO.12) COPPER DPLX
			LF	LF	LF	LF	LF	EA	LF	LF
C-B12	GB-B06	GB-B07		54		54		1	59	
C-B13	GB-B07	LP-B06	12		12			1		17
C-B14	GB-B07	GB-B08		101		101		1	106	
C-B15	GB-B08	LP-B07	9		9			1		14
C-B16	GB-B08	GB-B09		204		204		1	209	
C-B17	GB-B09	GB-B10		50		50		1	55	
C-B18	GB-B10	DALP-B08	9		9			1		14
C-D18	GB-D11	GB-D12		87		87		1	92	
C-D19	GB-D12	LP-D07	9		9			1		14
C-D20	GB-D12	GB-D13		161		161		1	166	
C-D21	GB-D13	GB-D14		19			19	1	24	
C-D22	GB-D14	GB-D15		140		140		1	145	
C-D23	GB-D15	LP-D08	9		9			1		14
C-E11	GB-E06	GB-E07		27		27		1	32	
C-E12	GB-E07	LP-E05	9		9			1		14

ITEM NO.	DESCRIPTION	QUANTITY	UNIT
GUSL-CF-B	CONCRETE FOUNDATION STREETLIGHT POLE	36	LF
GUSL-35-1	STREETLIGHT 35' BRUSHED ALUMINUM SINGLE	5	EA
GUSL-35-2	STREETLIGHT 35' BRUSHED ALUMINUM DOUBLE	1	EA
GUM50-P-1	1" (SCH 40) (PVC) CONDUIT	57	LF
GUM50-P-2	2" (SCH 40) (PVC) CONDUIT	843	LF
GUR2-S (24" X 24") (TRENCH)	1" (SCH 40) (PVC) CONDUIT (TRENCH)	57	LF
GUR2-S (30" X 24") (TRENCH)	2" (SCH 40) (PVC) CONDUIT (TRENCH)	824	LF
GUR2-S (36" X 24") (BORING)	2" (SCH 40) (PVC) CONDUIT (BORE)	19	LF
GUK6-SL	JUNCTION BOX	9	EA
SS00001	ELEC CONDR (NO.1/0) ALUMINUM TPLX	888	LF
SS00002	ELEC CONDR (NO.12) COPPER DPLX	87	LF

ILLUMINATION COMPONENT LOCATION		
ID NO.	STATION	OFFSET
LP-B06	33+49.19	37.79' RT
GB-B07	33+49.19	41.79' RT
GB-B08	34+46.06	42.00' RT
LP-B07	34+46.00	37.78' RT
GB-B09	36+43.50	49.35' RT
GB-B10	36+43.51	03.90' RT
DALP-B08	36+38.52	03.90' RT
LP-D07	34+43.02	62.94' LT
GB-D12	34+43.02	58.56' LT
GB-D13	36+00.77	57.88' LT
GB-D14	36+00.38	42.93' LT
GB-D15	37+38.26	42.59' LT
LP-D08	37+38.26	37.59' LT
GB-E07	39+37.55	41.35' RT
LP-E05	39+37.55	36.35' RT

NOTES:

1. CONTRACTOR IS RESPONSIBLE FOR VERIFYING ALL PROPOSED AND EXISTING UTILITIES BEFORE BEGINNING ANY TYPE OF WORK.
2. CONTRACTOR MAY HAND DIG OR SOFT DIG FOUNDATION IN PLACE OF LOCATING UTILITIES. CONTRACTOR MAY ONLY USE AUGER TO DIG THIS LOCATION IF THEY VERIFY THE AREA IS CLEAR OF UTILITIES. IF UTILITIES ARE PRESENT AT PROPOSED FOUNDATION LOCATION, ADJUST POLE LOCATION TO AVOID UTILITIES.
3. ALL ILLUMINATION WORK SHALL BE DONE IN ACCORDANCE WITH COG SPECIFICATIONS.
4. CONDUIT TO BE INSTALLED AT A MINIMUM DEPTH OF 30" FOR PRIMARY CONDUIT (2" CONDUITS WITH #1/0 AL TPLX) AND 24" FOR SECONDARY CONDUIT (1" CONDUITS WITH #12/2 CU DPLX) PER COG SPECIFICATIONS. CONDUIT MAY BE INSTALLED DEEPER TO MAINTAIN A 2' SEPARATION WITH UTILITIES. CONDUIT DEPTH VARYING WILL NOT BE PAID FOR DIRECTLY BUT WILL BE CONSIDERED SUBSIDIARY TO VARIOUS BID ITEMS.
5. TRENCH CONDUIT IS QUANTIFIED AND PAID FOR USING A DEPTH OF 30" FOR PRIMARY CONDUIT RUNS AND 24" FOR SECONDARY CONDUIT RUNS. NO ADDITIONAL PAYMENT WILL BE MADE FOR INSTALLING CONDUIT DEEPER THAN MINIMUM DEPTH TO AVOID UTILITIES.
6. ALL FOUNDATIONS ARE STANDARD 6 FOOT DEPTH.
7. STREETLIGHT PRIMARY WILL BE #1/0 AL TPLX IN A 2" PVC CONDUIT FROM HANDHOLE TO HANDHOLE. THE STREETLIGHTS WILL BE FED FROM A HANDHOLE VIA #12/2 CU DPLX CABLE IN A 1" PVC CONDUIT. IRRIGATION POINTS WILL BE FED OFF STREETLIGHT PRIMARY FROM PROPOSED HANDHOLES TO PROPOSED METER LOCATIONS VIA #1/0 AL TPLX IN A 2" PVC CONDUIT.
8. ABOVE GROUND RISER CONDUIT & CONDUCTORS FROM COG ELECTRIC OVERHEAD ELECTRICAL LINE TO FIRST GROUND BOX WILL BE FURNISHED BY COG ELECTRIC. FINAL TERMINATION OF THESE CONDUCTORS TO ILLUMINATION UNDERGROUND PRIMARY CONDUCTORS INSTALLED BY THE CONTRACTOR TO BE PROVIDED BY COG ELECTRIC. UNDERGROUND CONDUIT FROM FIRST GROUND BOX IN ILLUMINATION SYSTEM TO COG ELECTRIC OVERHEAD ELECTRICAL POLE SHALL BE FURNISHED & INSTALLED BY CONTRACTOR AS SHOWN IN THE PLANS & PAID FOR USING PERTINENT BID ITEMS.
9. PROPOSED LIGHT FIXTURES SHALL HAVE INTEGRATED PHOTOCELLS AS SHOWN IN COG STANDARDS. PHOTOCELLS WILL BE MOUNTED ONTO PROPOSED LIGHT AS SHOWN IN COG ELECTRICAL STANDARDS.
10. PROPOSED IRRIGATION METER & PEDESTAL TO BE APPROVED BY COG ELECTRIC.
11. CONTRACTOR TO PROVIDE ALL EQUIPMENT, MATERIALS, & LABOR TO CONNECT IRRIGATION CONTROLLER TO ELECTRICAL SERVICE & METER AS APPROVED BY COG.
12. CONTRACTOR TO FURNISH & INSTALL ELECTRICAL SERVICE PANEL AND BREAKERS AS APPROVED BY COG FOR IRRIGATION CONTROLLER ELECTRICAL SERVICES.

STATE OF TEXAS
HUNTER T. KUTACH
151241
LICENSED
PROFESSIONAL ENGINEER
3/12/2025

EST.1848 GEORGETOWN TEXAS

BGE, Inc.
101 West Louis Henna Blvd, Suite 400, Austin, TX 78728
Tel: 512-879-0400 • www.bgeinc.com
TBPE Registration No. F-1046

SHELL ROAD

ILLUMINATION LAYOUT

SHEET 6 OF 11

SHEET NO. 226

DATE: 3/12/2025 2:26:44 PM
FILE: G:\TXC\Projects\City Georgetown\10767-00 Shell Road\03 CADD\01 Shts\10-ILLUMILLUMINATION_06.dgn

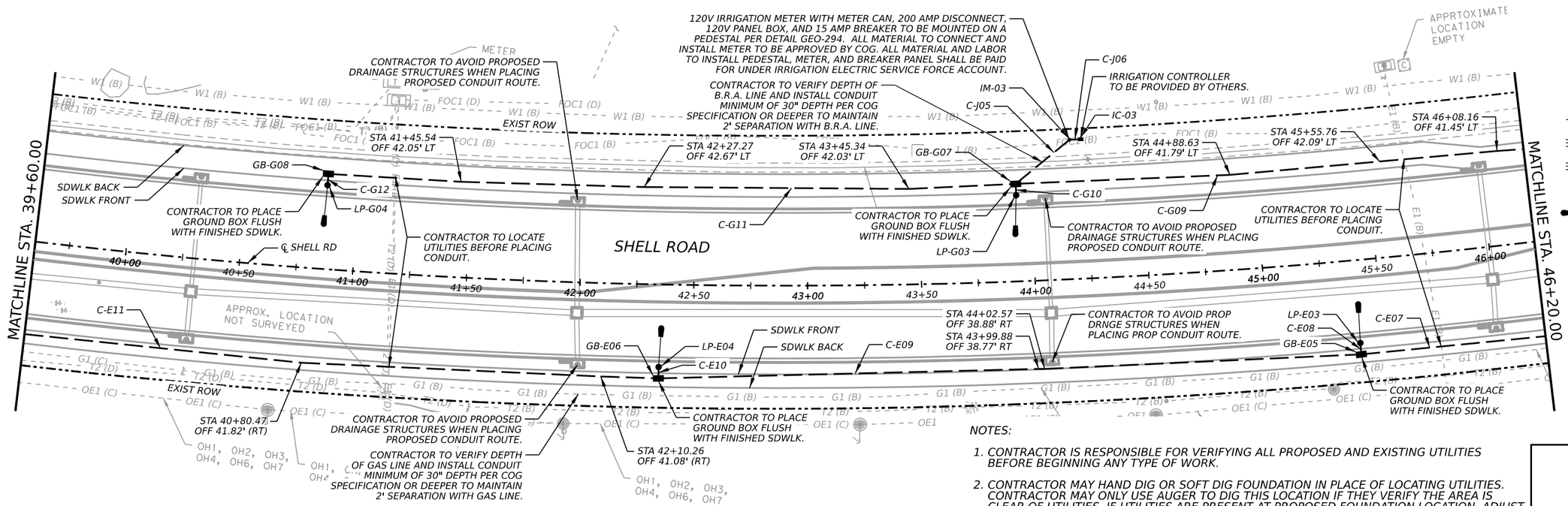

LEGEND

- ID
- BRANCH IDENTIFIER
- X-X## ORDER NUMBER

C = CONDUIT

GB = GROUND BOX

LP = LIGHT POLE

DALP- DOUBLE ARM LIGHT POLE

ES = ELECTRICAL STATION

IM = IRRIGATION METER

IC = IRRIGATION CONTROLLER

= CONDUIT TRENCH

= CONDUIT BORE

= CONCRETE ENCASEMENT

= LIGHT POLE

= DOUBLE ARM LIGHT POLE

= GROUND BOX

= ELECTRICAL SERVICE

= IRRIGATION METER

= IRRIGATION CONTROLLER

0 25 50

SCALE: 1" = 50'

CONDUIT RUN NO.	FROM	TO	1" (SCH 40) (PVC) CONDUIT	2" (SCH 40) (PVC) CONDUIT	GUR2-S (24" X 24") (TRENCHING)	GUR2-S (30" X 24") (TRENCHING)	GUR2-S (36" X 24") (BORING)	NUMBER OF CONDUCTORS IN CONDUIT	ELEC CONDR (NO.1/0) ALUMINUM TPLX	ELEC CONDR (NO.12) COPPER DPLX
			LF	LF	LF	LF	LF	EA	LF	LF
C-E07	GB-E04	GB-E05		86		86		1	91	
C-E08	GB-E05	LP-E03	9		9			1		14
C-E09	GB-E05	GB-E06		311		311		1	316	
C-E10	GB-E06	LP-E04	9		9			1		14
C-E11	GB-E06	GB-E07		284		284		1	289	
C-G09	GB-G06	GB-G07		228		228		1	233	
C-G10	GB-G07	LP-G03	9		9			1		14
C-G11	GB-G07	GB-G08		307		307		1	312	
C-G12	GB-G08	LP-G04	9		9			1		14
C-J05	GB-G07	IM-03		35		35		1	40	
C-J06	IM-03	IC-03	9		9			1		14

ITEM NO.	DESCRIPTION	QUANTITY	UNIT
GUSL-CF-B	CONCRETE FOUNDATION STREETLIGHT POLE	24	LF
GUSL-35-1	STREETLIGHT 35' BRUSHED ALUMINUM SINGLE	4	EA
GUM50-P-1	1" (SCH 40) (PVC) CONDUIT	45	LF
GUM50-P-2	2" (SCH 40) (PVC) CONDUIT	1251	LF
GUR2-S (24" X 24") (TRENCH)	1" (SCH 40) (PVC) CONDUIT (TRENCH)	45	LF
GUR2-S (30" X 24") (TRENCH)	2" (SCH 40) (PVC) CONDUIT (TRENCH)	1251	LF
GUK6-SL	JUNCTION BOX	4	EA
SS00001	ELEC CONDR (NO.1/0) ALUMINUM TPLX	1281	LF
SS00002	ELEC CONDR (NO.12) COPPER DPLX	70	LF
SS00003	IRRIGATION METER	1	EA

ILLUMINATION COMPONENT LOCATION		
ID NO.	STATION	OFFSET
LP-E03	45+39.87	36.55' RT
GB-E05	45+39.75	41.61' RT
LP-E04	42+35.04	36.38' RT
GB-E06	42+35.21	41.28' RT
GB-G07	43+92.98	42.89' LT
LP-G03	43+92.98	37.89' LT
GB-G08	40+86.24	41.90' LT
LP-G04	40+86.24	36.90' LT
IM-03	44+17.85	61.32' LT
IC-03	44+22.96	61.31' LT

NOTES:

1. CONTRACTOR IS RESPONSIBLE FOR VERIFYING ALL PROPOSED AND EXISTING UTILITIES BEFORE BEGINNING ANY TYPE OF WORK.
2. CONTRACTOR MAY HAND DIG OR SOFT DIG FOUNDATION IN PLACE OF LOCATING UTILITIES. CONTRACTOR MAY ONLY USE AUGER TO DIG THIS LOCATION IF THEY VERIFY THE AREA IS CLEAR OF UTILITIES. IF UTILITIES ARE PRESENT AT PROPOSED FOUNDATION LOCATION, ADJUST POLE LOCATION TO AVOID UTILITIES.
3. ALL ILLUMINATION WORK SHALL BE DONE IN ACCORDANCE WITH COG SPECIFICATIONS.
4. CONDUIT TO BE INSTALLED AT A MINIMUM DEPTH OF 30" FOR PRIMARY CONDUIT (2" CONDUITS WITH #1/0 AL TPLX) AND 24" FOR SECONDARY CONDUIT (1" CONDUITS WITH #12/2 CU DPLX) PER COG SPECIFICATIONS. CONDUIT MAY BE INSTALLED DEEPER TO MAINTAIN A 2' SEPARATION WITH UTILITIES. CONDUIT DEPTH VARYING WILL NOT BE PAID FOR DIRECTLY BUT WILL BE CONSIDERED SUBSIDIARY TO VARIOUS BID ITEMS.
5. TRENCH CONDUIT IS QUANTIFIED AND PAID FOR USING A DEPTH OF 30" FOR PRIMARY CONDUIT RUNS AND 24" FOR SECONDARY CONDUIT RUNS. NO ADDITIONAL PAYMENT WILL BE MADE FOR INSTALLING CONDUIT DEEPER THAN MINIMUM DEPTH TO AVOID UTILITIES.
6. ALL FOUNDATIONS ARE STANDARD 6 FOOT DEPTH.
7. STREETLIGHT PRIMARY WILL BE #1/0 AL TPLX IN A 2" PVC CONDUIT FROM HANDHOLE TO HANDHOLE. THE STREETLIGHTS WILL BE FED FROM A HANDHOLE VIA #12/2 CU DPLX CABLE IN A 1" PVC CONDUIT. IRRIGATION POINTS WILL BE FED OFF STREETLIGHT PRIMARY FROM PROPOSED HANDHOLES TO PROPOSED METER LOCATIONS VIA #1/0 AL TPLX IN A 2" PVC CONDUIT.
8. ABOVE GROUND RISER CONDUIT & CONDUCTORS FROM COG ELECTRIC OVERHEAD ELECTRICAL LINE TO FIRST GROUND BOX WILL BE FURNISHED BY COG ELECTRIC. FINAL TERMINATION OF THESE CONDUCTORS TO ILLUMINATION UNDERGROUND PRIMARY CONDUCTORS INSTALLED BY THE CONTRACTOR TO BE PROVIDED BY COG ELECTRIC. UNDERGROUND CONDUIT FROM FIRST GROUND BOX IN ILLUMINATION SYSTEM TO COG ELECTRIC OVERHEAD ELECTRICAL POLE SHALL BE FURNISHED & INSTALLED BY CONTRACTOR AS SHOWN IN THE PLANS & PAID FOR USING PERTINENT BID ITEMS.
9. PROPOSED LIGHT FIXTURES SHALL HAVE INTEGRATED PHOTOCELLS AS SHOWN IN COG STANDARDS. PHOTOCELLS WILL BE MOUNTED ONTO PROPOSED LIGHT AS SHOWN IN COG ELECTRICAL STANDARDS.
10. PROPOSED IRRIGATION METER & PEDESTAL TO BE APPROVED BY COG ELECTRIC.
11. CONTRACTOR TO PROVIDE ALL EQUIPMENT, MATERIALS, & LABOR TO CONNECT IRRIGATION CONTROLLER TO ELECTRICAL SERVICE & METER AS APPROVED BY COG.
12. CONTRACTOR TO FURNISH & INSTALL ELECTRICAL SERVICE PANEL AND BREAKERS AS APPROVED BY COG FOR IRRIGATION CONTROLLER ELECTRICAL SERVICES.

STATE OF TEXAS
HUNTER T. KUTACH
151241
LICENSED
PROFESSIONAL ENGINEER
3/12/2025

EST.1848 GEORGETOWN TEXAS

BGE, Inc.
101 West Louis Henna Blvd, Suite 400, Austin, TX 78728
Tel: 512-879-0400 • www.bgeinc.com
TBPE Registration No. F-1046

SHELL ROAD

ILLUMINATION LAYOUT

SHEET 7 OF 11

SHEET NO. 227

DATE: 3/12/2025 2:26:47 PM
FILE: G:\TXC\Projects\City Georgetown\10767-00 Shell Road\03 CADD\01 Shts\10-ILLUMINILLUMINATION 07.dgn

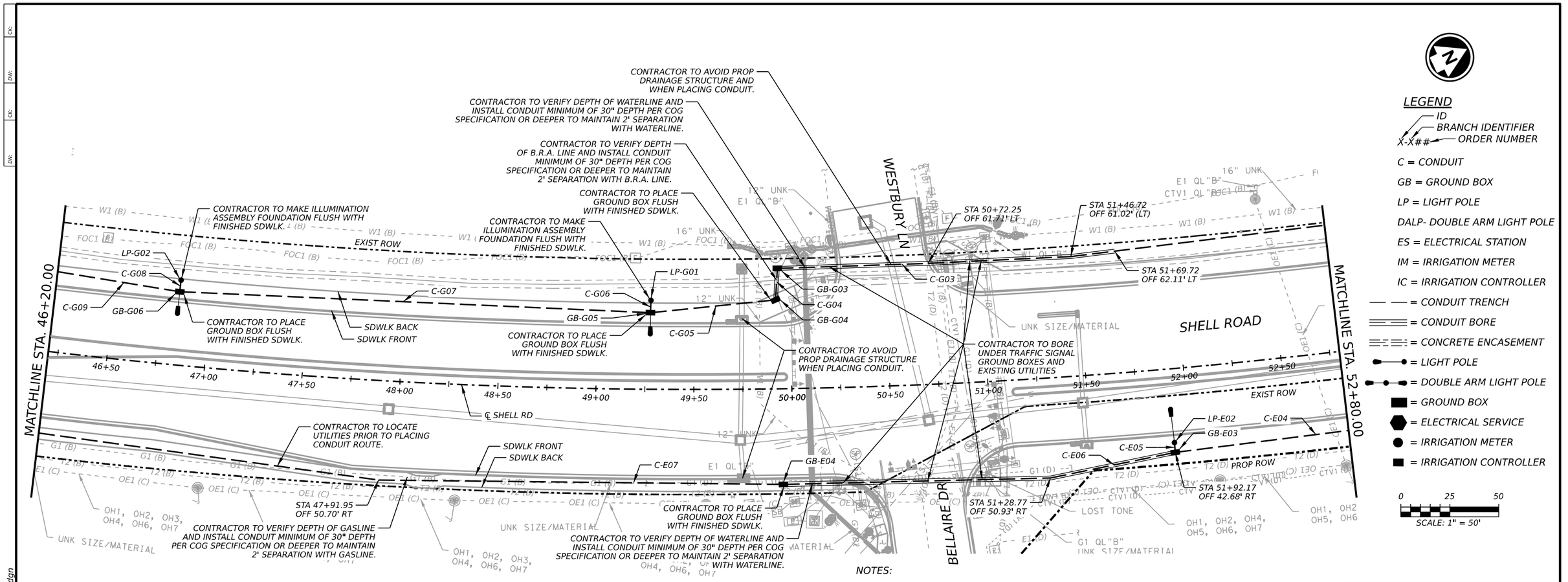

LEGEND

- ID
- BRANCH IDENTIFIER
- ORDER NUMBER

X-X##

C = CONDUIT

GB = GROUND BOX

LP = LIGHT POLE

DALP- DOUBLE ARM LIGHT POLE

ES = ELECTRICAL STATION

IM = IRRIGATION METER

IC = IRRIGATION CONTROLLER

= CONDUIT TRENCH

= CONDUIT BORE

= CONCRETE ENCASEMENT

= LIGHT POLE

= DOUBLE ARM LIGHT POLE

= GROUND BOX

= ELECTRICAL SERVICE

= IRRIGATION METER

= IRRIGATION CONTROLLER

0 25 50

SCALE: 1" = 50'

CONDUIT RUN NO.	FROM	TO	1" (SCH 40) (PVC) CONDUIT	2" (SCH 40) (PVC) CONDUIT	GUR2-S (24" X 24") (TRENCHING)	GUR2-S (30" X 24") (TRENCHING)	GUR2-S (36" X 24") (BORING)	NUMBER OF CONDUCTORS IN CONDUIT	ELEC CONDR (NO.1/0) ALUMINUM TPLX	ELEC CONDR (NO.12) COPPER DPLX
			LF	LF	LF	LF	LF	EA	LF	LF
C-E04	GB-E02	GB-E03		94		94		1	99	
C-E05	GB-E03	LP-E02	9		9			1		14
C-E06	GB-E03	GB-E04		209			209	1	214	
C-E07	GB-E04	GB-E05		386		386		1	391	
C-G03	GB-G02	GB-G03		292		112	180	1	297	
C-G04	GB-G03	GB-G04		24			24	1	29	
C-G05	GB-G04	GB-G05		69		69		1	74	
C-G06	GB-G05	LP-G01	9		9			1		14
C-G07	GB-G05	GB-G06		245		245		1	250	
C-G08	GB-G06	LP-G02	9		9			1		14
C-G09	GB-G06	GB-G07		67		67		1	72	

ITEM NO.	DESCRIPTION	QUANTITY	UNIT
GUSL-CF-B	CONCRETE FOUNDATION STREETLIGHT POLE	18	LF
GUSL-35-1	STREETLIGHT 35' BRUSHED ALUMINUM SINGLE	3	EA
GUM50-P-1	1" (SCH 40) (PVC) CONDUIT	27	LF
GUM50-P-2	2" (SCH 40) (PVC) CONDUIT	1386	LF
GUR2-S (24" X 24") (TRENCH)	1" (SCH 40) (PVC) CONDUIT (TRENCH)	27	LF
GUR2-S (30" X 24") (TRENCH)	2" (SCH 40) (PVC) CONDUIT (TRENCH)	973	LF
GUR2-S (36" X 24") (BORING)	2" (SCH 40) (PVC) CONDUIT (BORE)	413	LF
GUK6-SL	JUNCTION BOX	6	EA
SS00001	ELEC CONDR (NO.1/0) ALUMINUM TPLX	1426	LF
SS00002	ELEC CONDR (NO.12) COPPER DPLX	42	LF

ILLUMINATION COMPONENT LOCATION		
GB-E03	51+92.17	42.68' RT
LP-E02	51+92.17	37.67' RT
GB-E04	49+94.93	48.79' RT
GB-G03	49+93.51	61.40' LT
GB-G04	49+92.35	45.37' LT
GB-G05	49+27.59	39.07' LT
LP-G01	49+27.79	45.32' LT
GB-G06	46+83.85	37.36' LT
LP-G02	46+83.97	43.32' LT

NOTES:

1. CONTRACTOR IS RESPONSIBLE FOR VERIFYING ALL PROPOSED AND EXISTING UTILITIES BEFORE BEGINNING ANY TYPE OF WORK.
2. CONTRACTOR MAY HAND DIG OR SOFT DIG FOUNDATION IN PLACE OF LOCATING UTILITIES. CONTRACTOR MAY ONLY USE AUGER TO DIG THIS LOCATION IF THEY VERIFY THE AREA IS CLEAR OF UTILITIES. IF UTILITIES ARE PRESENT AT PROPOSED FOUNDATION LOCATION, ADJUST POLE LOCATION TO AVOID UTILITIES.
3. ALL ILLUMINATION WORK SHALL BE DONE IN ACCORDANCE WITH COG SPECIFICATIONS.
4. CONDUIT TO BE INSTALLED AT A MINIMUM DEPTH OF 30" FOR PRIMARY CONDUIT (2" CONDUITS WITH #1/0 AL TPLX) AND 24" FOR SECONDARY CONDUIT (1" CONDUITS WITH #12/2 CU DPLX) PER COG SPECIFICATIONS. CONDUIT MAY BE INSTALLED DEEPER TO MAINTAIN A 2' SEPARATION WITH UTILITIES. CONDUIT DEPTH VARYING WILL NOT BE PAID FOR DIRECTLY BUT WILL BE CONSIDERED SUBSIDIARY TO VARIOUS BID ITEMS.
5. TRENCH CONDUIT IS QUANTIFIED AND PAID FOR USING A DEPTH OF 30" FOR PRIMARY CONDUIT RUNS AND 24" FOR SECONDARY CONDUIT RUNS. NO ADDITIONAL PAYMENT WILL BE MADE FOR INSTALLING CONDUIT DEEPER THAN MINIMUM DEPTH TO AVOID UTILITIES.
6. ALL FOUNDATIONS ARE STANDARD 6 FOOT DEPTH.
7. STREETLIGHT PRIMARY WILL BE #1/0 AL TPLX IN A 2" PVC CONDUIT FROM HANDHOLE TO HANDHOLE. THE STREETLIGHTS WILL BE FED FROM A HANDHOLE VIA #12/2 CU DPLX CABLE IN A 1" PVC CONDUIT. IRRIGATION POINTS WILL BE FED OFF STREETLIGHT PRIMARY FROM PROPOSED HANDHOLES TO PROPOSED METER LOCATIONS VIA #1/0 AL TPLX IN A 2" PVC CONDUIT.
8. ABOVE GROUND RISER CONDUIT & CONDUCTORS FROM COG ELECTRIC OVERHEAD ELECTRICAL LINE TO FIRST GROUND BOX WILL BE FURNISHED BY COG ELECTRIC. FINAL TERMINATION OF THESE CONDUCTORS TO ILLUMINATION UNDERGROUND PRIMARY CONDUCTORS INSTALLED BY THE CONTRACTOR TO BE PROVIDED BY COG ELECTRIC. UNDERGROUND CONDUIT FROM FIRST GROUND BOX IN ILLUMINATION SYSTEM TO COG ELECTRIC OVERHEAD ELECTRICAL POLE SHALL BE FURNISHED & INSTALLED BY CONTRACTOR AS SHOWN IN THE PLANS & PAID FOR USING PERTINENT BID ITEMS.
9. PROPOSED LIGHT FIXTURES SHALL HAVE INTEGRATED PHOTOCELLS AS SHOWN IN COG STANDARDS. PHOTOCELLS WILL BE MOUNTED ONTO PROPOSED LIGHT AS SHOWN IN COG ELECTRICAL STANDARDS.
10. PROPOSED IRRIGATION METER & PEDESTAL TO BE APPROVED BY COG ELECTRIC.
11. CONTRACTOR TO PROVIDE ALL EQUIPMENT, MATERIALS, & LABOR TO CONNECT IRRIGATION CONTROLLER TO ELECTRICAL SERVICE & METER AS APPROVED BY COG.
12. CONTRACTOR TO FURNISH & INSTALL ELECTRICAL SERVICE PANEL AND BREAKERS AS APPROVED BY COG FOR IRRIGATION CONTROLLER ELECTRICAL SERVICES.

STATE OF TEXAS
HUNTER T. KUTACH
151241
LICENSED
PROFESSIONAL ENGINEER

3/12/2025

GEORGETOWN TEXAS EST.1848

BGE, Inc.
101 West Louis Henna Blvd, Suite 400, Austin, TX 78728
Tel: 512-879-0400 • www.bgeinc.com
TBPE Registration No. F-1046

SHELL ROAD

ILLUMINATION LAYOUT

SHEET 8 OF 11

SHEET NO. 228

DATE: 3/12/2025 2:26:50 PM
FILE: G:\TXC\Projects\City_Georgetown\10767-00 Shell Road\03_CADD\01_Shts\10-ILLUM\ILLUMINATION_08.dgn

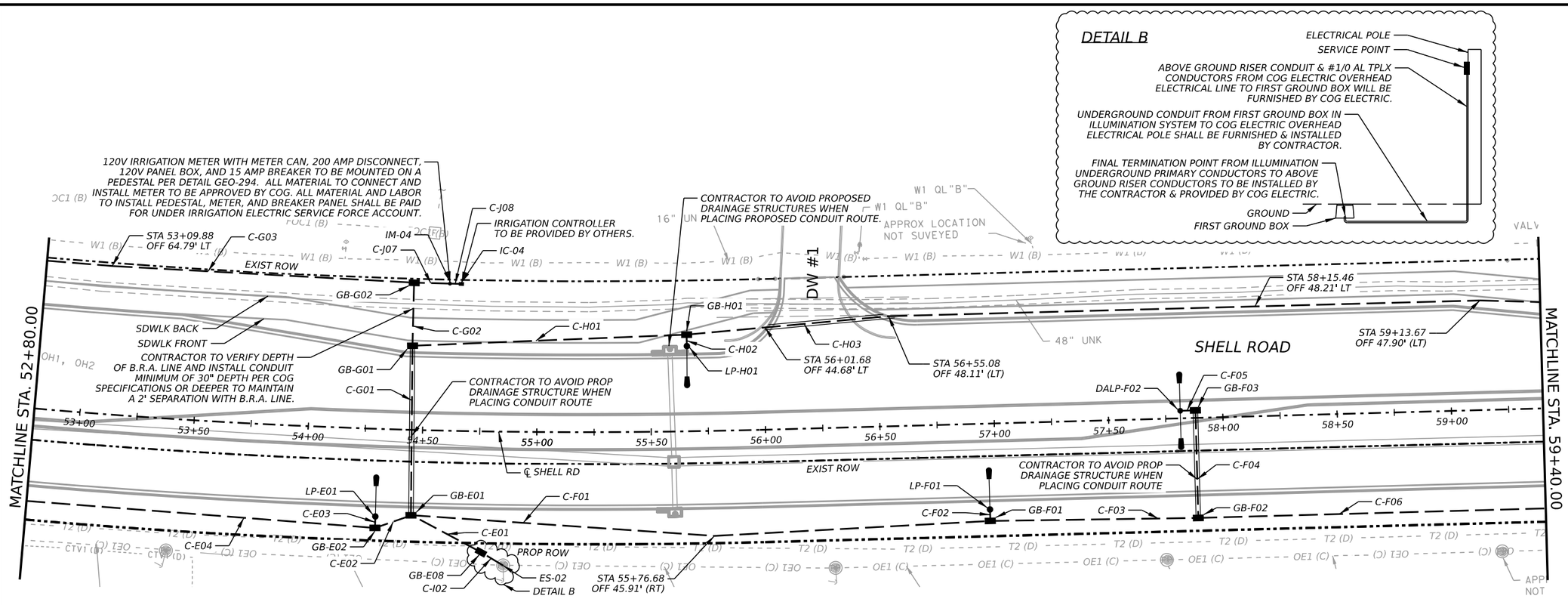

CONDUIT RUN NO.	FROM	TO	1" (SCH 40) (PVC) CONDUIT	2" (SCH 40) (PVC) CONDUIT	GUR2-S (24" X 24") (TRENCHING)	GUR2-S (30" X 24") (TRENCHING)	GUR2-S (36" X 24") (BORING)	NUMBER OF CONDUCTORS IN CONDUIT	ELEC CONDR (NO.1/0) ALUMINUM TPLX	ELEC CONDR (NO.12) COPPER DPLX
			LF	LF	LF	LF	LF	EA	LF	LF
C-E01	GB-E08	GB-E01		41		41		1	46	
C-E02	GB-E01	GB-E02		21		21		1	26	
C-E03	GB-E02	LP-E01	9		9			1		14
C-E04	GB-E02	GB-E03		157		157		1	162	
C-F01	GB-E01	GB-F01		258		258		1	263	
C-F02	GB-F01	LP-F01	9		9			1		14
C-F03	GB-F01	GB-F02		95		95		1	100	
C-F04	GB-F02	GB-F03		52			52	1	57	
C-F05	GB-F03	DALP-F02	11		11			1		16
C-F06	GB-F02	GB-F04		159		159		1	164	
C-G01	GB-E01	GB-G01		79			79	1	84	
C-G02	GB-G01	GB-G02		32		32		1	37	
C-G03	GB-G02	GB-G03		165		165		1	170	
C-H01	GB-G01	GB-H01		124		124		1	129	
C-H02	GB-H01	LP-H01	9		9			1		14
C-H03	GB-H01	GB-H02		382		320	62	1	387	
C-I02	GB-E08	ES-02		16		16				
C-J07	GB-G02	IM-04		20		20		1	25	
C-J08	IM-04	IC-04	9		9			1		14

ITEM NO.	DESCRIPTION	QUANTITY	UNIT
GUSL-CF-B	CONCRETE FOUNDATION STREETLIGHT POLE	24	LF
GUSL-35-1	STREETLIGHT 35' BRUSHED ALUMINUM SINGLE	3	EA
GUSL-35-2	STREETLIGHT 35' BRUSHED ALUMINUM DOUBLE	1	EA
GUM50-P-1	1" (SCH 40) (PVC) CONDUIT	47	LF
GUM50-P-2	2" (SCH 40) (PVC) CONDUIT	1601	LF
GUR2-S (24" X 24") (TRENCH)	1" (SCH 40) (PVC) CONDUIT (TRENCH)	47	LF
GUR2-S (30" X 24") (TRENCH)	2" (SCH 40) (PVC) CONDUIT (TRENCH)	1408	LF
GUR2-S (36" X 24") (BORING)	2" (SCH 40) (PVC) CONDUIT (BORE)	193	LF
GUK6-SL	JUNCTION BOX	8	EA
SS00001	ELEC CONDR (NO.1/0) ALUMINUM TPLX	1650	LF
SS00002	ELEC CONDR (NO.12) COPPER DPLX	72	LF
SS00003	IRRIGATION METER	1	EA

ILLUMINATION COMPONENT LOCATION		
GB-E08	54+76.34	52.81' RT
GB-E01	54+46.25	37.32' RT
GB-E02	54+30.58	43.31' RT
LP-E01	54+30.58	38.31' RT
LP-F01	56+97.11	37.53' RT
GB-F01	56+97.11	42.53' RT
GB-F02	57+88.07	43.71' RT
GB-F03	57+88.07	03.32' LT
DALP-F02	57+81.44	03.32' LT
GB-G01	54+44.60	36.72' LT
GB-G02	54+44.55	64.33' LT
LP-H01	55+66.15	37.25' LT
GB-H01	55+65.73	42.26' LT
IM-04	54+60.59	64.25' LT
IC-04	54+65.71	64.21' LT

NOTES:

1. CONTRACTOR IS RESPONSIBLE FOR VERIFYING ALL PROPOSED AND EXISTING UTILITIES BEFORE BEGINNING ANY TYPE OF WORK.
2. CONTRACTOR MAY HAND DIG OR SOFT DIG FOUNDATION IN PLACE OF LOCATING UTILITIES. CONTRACTOR MAY ONLY USE AUGER TO DIG THIS LOCATION IF THEY VERIFY THE AREA IS CLEAR OF UTILITIES. IF UTILITIES ARE PRESENT AT PROPOSED FOUNDATION LOCATION, ADJUST POLE LOCATION TO AVOID UTILITIES.
3. ALL ILLUMINATION WORK SHALL BE DONE IN ACCORDANCE WITH COG SPECIFICATIONS.
4. CONDUIT TO BE INSTALLED AT A MINIMUM DEPTH OF 30" FOR PRIMARY CONDUIT (2" CONDUITS WITH #1/0 AL TPLX) AND 24" FOR SECONDARY CONDUIT (1" CONDUITS WITH #12/2 CU DPLX) PER COG SPECIFICATIONS. CONDUIT MAY BE INSTALLED DEEPER TO MAINTAIN A 2' SEPARATION WITH UTILITIES. CONDUIT DEPTH VARYING WILL NOT BE PAID FOR DIRECTLY BUT WILL BE CONSIDERED SUBSIDIARY TO VARIOUS BID ITEMS.
5. TRENCH CONDUIT IS QUANTIFIED AND PAID FOR USING A DEPTH OF 30" FOR PRIMARY CONDUIT RUNS AND 24" FOR SECONDARY CONDUIT RUNS. NO ADDITIONAL PAYMENT WILL BE MADE FOR INSTALLING CONDUIT DEEPER THAN MINIMUM DEPTH TO AVOID UTILITIES.
6. ALL FOUNDATIONS ARE STANDARD 6 FOOT DEPTH.
7. STREETLIGHT PRIMARY WILL BE #1/0 AL TPLX IN A 2" PVC CONDUIT FROM HANDHOLE TO HANDHOLE. THE STREETLIGHTS WILL BE FED FROM A HANDHOLE VIA #12/2 CU DPLX CABLE IN A 1" PVC CONDUIT. IRRIGATION POINTS WILL BE FED OFF STREETLIGHT PRIMARY FROM PROPOSED HANDHOLES TO PROPOSED METER LOCATIONS VIA #1/0 AL TPLX IN A 2" PVC CONDUIT.
8. ABOVE GROUND RISER CONDUIT & CONDUCTORS FROM COG ELECTRIC OVERHEAD ELECTRICAL LINE TO FIRST GROUND BOX WILL BE FURNISHED BY COG ELECTRIC. FINAL TERMINATION OF THESE CONDUCTORS TO ILLUMINATION UNDERGROUND PRIMARY CONDUCTORS INSTALLED BY THE CONTRACTOR TO BE PROVIDED BY COG ELECTRIC. UNDERGROUND CONDUIT FROM FIRST GROUND BOX IN ILLUMINATION SYSTEM TO COG ELECTRIC OVERHEAD ELECTRICAL POLE SHALL BE FURNISHED & INSTALLED BY CONTRACTOR AS SHOWN IN THE PLANS & PAID FOR USING PERTINENT BID ITEMS.
9. PROPOSED LIGHT FIXTURES SHALL HAVE INTEGRATED PHOTOCELLS AS SHOWN IN COG STANDARDS. PHOTOCELLS WILL BE MOUNTED ONTO PROPOSED LIGHT AS SHOWN IN COG ELECTRICAL STANDARDS.
10. PROPOSED IRRIGATION METER & PEDESTAL TO BE APPROVED BY COG ELECTRIC.
11. CONTRACTOR TO PROVIDE ALL EQUIPMENT, MATERIALS, & LABOR TO CONNECT IRRIGATION CONTROLLER TO ELECTRICAL SERVICE & METER AS APPROVED BY COG.
12. CONTRACTOR TO FURNISH & INSTALL ELECTRICAL SERVICE PANEL AND BREAKERS AS APPROVED BY COG FOR IRRIGATION CONTROLLER ELECTRICAL SERVICES.

STATE OF TEXAS
HUNTER T. KUTACH
151241
LICENSED
PROFESSIONAL ENGINEER
3/12/2025

GEORGETOWN TEXAS EST.1848

BGE, Inc.
101 West Louis Henna Blvd, Suite 400, Austin, TX 78728
Tel: 512-879-0400 • www.bgeinc.com
TBPE Registration No. F-1046

SHELL ROAD

ILLUMINATION LAYOUT

SHEET 9 OF 11

SHEET NO. 229

DATE: 3/12/2025 2:26:53 PM
FILE: G:\TXC\Projects\City Georgetown\10767-00 Shell Road\03 CADD\01 Shts\10-ILLUMINILLUMINATION 09.dgn

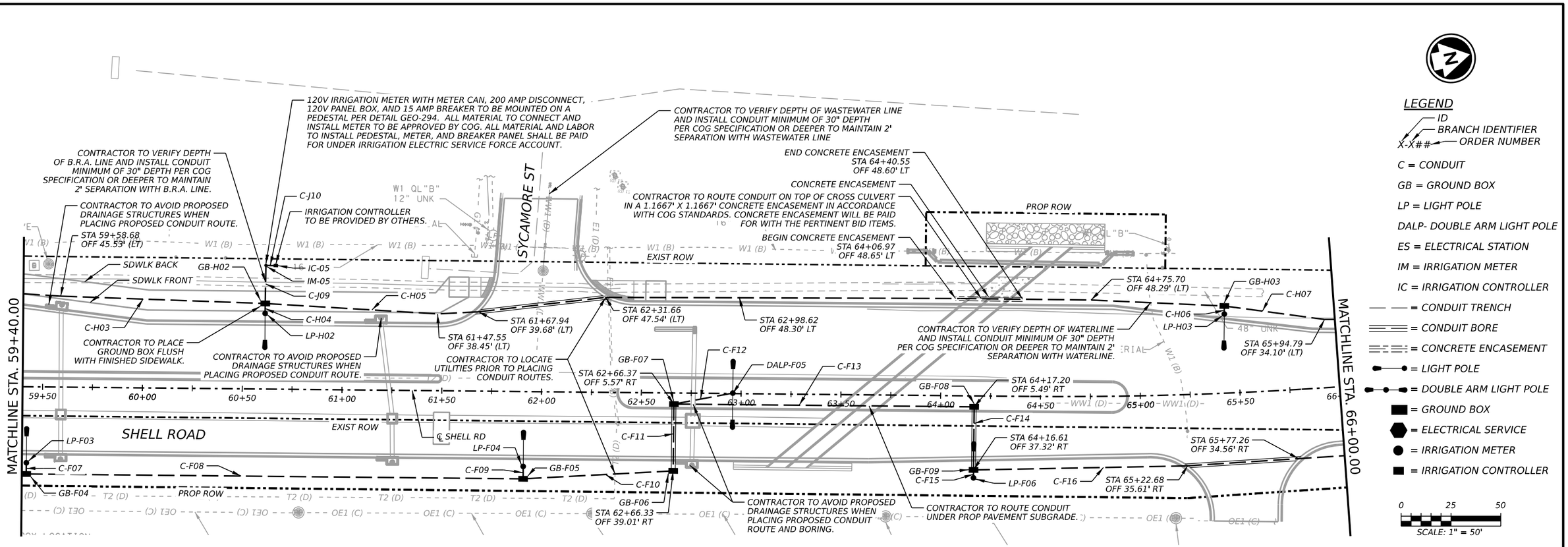

CONDUIT RUN NO.	FROM	TO	1" (SCH 40) (PVC) CONDUIT	2" (SCH 40) (PVC) CONDUIT	GUR2-S (24" X 24") (TRENCHING)	GUR2-S (30" X 24") (TRENCHING)	GUR2-S (36" X 24") (BORING)	NUMBER OF CONDUCTORS IN CONDUIT	ELEC CONDR (NO.1/0) ALUMINUM TPLX	ELEC CONDR (NO.12) COPPER DPLX
			LF	LF	LF	LF	LF	EA	LF	LF
C-F07	GB-F04	LP-F03	10		10			1		15
C-F08	GB-F04	GB-F05		253		253		1	258	
C-F09	GB-F05	LP-F04	11		11			1		16
C-F10	GB-F05	GB-F06		80		80		1	85	
C-F11	GB-F06	GB-F07		39			39	1	44	
C-F12	GB-F07	DALP-F05	34		34			1		39
C-F13	GB-F07	GB-F08		155		155		1	160	
C-F14	GB-F08	GB-F09		37			37	1	42	
C-F15	GB-F09	LP-F06	8		8			1		13
C-F16	GB-F09	GB-F10		195		132	63	1	200	
C-H03	GB-H01	GB-H02		126		126		1	131	
C-H04	GB-H02	LP-H02	9		9			1		14
C-H05	GB-H02	GB-H03		490		418	72	1	495	
C-H06	GB-H03	LP-H03	8		8			1		13
C-H07	GB-H03	GB-H04		60		60		1	65	
C-J09	GB-H02	IM-05		24		24		1	29	
C-J10	IM-05	IC-05	9		9			1		14

ITEM NO.	DESCRIPTION	QUANTITY	UNIT
GUSL-CF-B	CONCRETE FOUNDATION STREETLIGHT POLE	36	LF
GUSL-35-1	STREETLIGHT 35' BRUSHED ALUMINUM SINGLE	5	EA
GUSL-35-2	STREETLIGHT 35' BRUSHED ALUMINUM DOUBLE	1	EA
GUM50-P-1	1" (SCH 40) (PVC) CONDUIT	89	LF
GUM50-P-2	2" (SCH 40) (PVC) CONDUIT	1459	LF
GUR2-S (24" X 24") (TRENCH)	1" (SCH 40) (PVC) CONDUIT (TRENCH)	89	LF
GUR2-S (30" X 24") (TRENCH)	2" (SCH 40) (PVC) CONDUIT (TRENCH)	1248	LF
GUR2-S (36" X 24") (BORING)	2" (SCH 40) (PVC) CONDUIT (BORE)	211	LF
GUK6-SL	JUNCTION BOX	8	EA
SS00001	ELEC CONDR (NO.1/0) ALUMINUM TPLX	1509	LF
SS00002	ELEC CONDR (NO.12) COPPER DPLX	124	LF
SS00003	IRRIGATION METER	1	EA
SS00004	CONCRETE ENCASEMENT	34	LF

ILLUMINATION COMPONENT LOCATION		
LP-F03	59+42.23	38.08' RT
GB-F04	59+42.34	43.90' RT
GB-F05	61+91.18	43.71' RT
LP-F04	61+91.18	37.52' RT
GB-F06	62+66.33	39.01' RT
GB-F07	62+66.37	05.57' RT
DALP-F05	62+95.84	00.00' RT
GB-F08	64+17.20	05.49' RT
GB-F09	64+16.61	37.32' RT
LP-F06	64+16.61	41.09' RT
GB-H02	60+61.18	42.87' LT
LP-H02	60+61.18	37.87' LT
GB-H03	65+43.99	43.66' LT
LP-H03	65+43.77	39.66' LT
IM-05	60+61.33	61.90' LT
IC-05	60+66.33	61.86' LT

NOTES:

1. CONTRACTOR IS RESPONSIBLE FOR VERIFYING ALL PROPOSED AND EXISTING UTILITIES BEFORE BEGINNING ANY TYPE OF WORK.
2. CONTRACTOR MAY HAND DIG OR SOFT DIG FOUNDATION IN PLACE OF LOCATING UTILITIES. CONTRACTOR MAY ONLY USE AUGER TO DIG THIS LOCATION IF THEY VERIFY THE AREA IS CLEAR OF UTILITIES. IF UTILITIES ARE PRESENT AT PROPOSED FOUNDATION LOCATION, ADJUST POLE LOCATION TO AVOID UTILITIES.
3. ALL ILLUMINATION WORK SHALL BE DONE IN ACCORDANCE WITH COG SPECIFICATIONS.
4. CONDUIT TO BE INSTALLED AT A MINIMUM DEPTH OF 30" FOR PRIMARY CONDUIT (2" CONDUITS WITH #1/0 AL TPLX) AND 24" FOR SECONDARY CONDUIT (1" CONDUITS WITH #12/2 CU DPLX) PER COG SPECIFICATIONS. CONDUIT MAY BE INSTALLED DEEPER TO MAINTAIN A 2' SEPARATION WITH UTILITIES. CONDUIT DEPTH VARYING WILL NOT BE PAID FOR DIRECTLY BUT WILL BE CONSIDERED SUBSIDIARY TO VARIOUS BID ITEMS.
5. TRENCH CONDUIT IS QUANTIFIED AND PAID FOR USING A DEPTH OF 30" FOR PRIMARY CONDUIT RUNS AND 24" FOR SECONDARY CONDUIT RUNS. NO ADDITIONAL PAYMENT WILL BE MADE FOR INSTALLING CONDUIT DEEPER THAN MINIMUM DEPTH TO AVOID UTILITIES.
6. ALL FOUNDATIONS ARE STANDARD 6 FOOT DEPTH.
7. STREETLIGHT PRIMARY WILL BE #1/0 AL TPLX IN A 2" PVC CONDUIT FROM HANDHOLE TO HANDHOLE. THE STREETLIGHTS WILL BE FED FROM A HANDHOLE VIA #12/2 CU DPLX CABLE IN A 1" PVC CONDUIT. IRRIGATION POINTS WILL BE FED OFF STREETLIGHT PRIMARY FROM PROPOSED HANDHOLES TO PROPOSED METER LOCATIONS VIA #1/0 AL TPLX IN A 2" PVC CONDUIT.
8. ABOVE GROUND RISER CONDUIT & CONDUCTORS FROM COG ELECTRIC OVERHEAD ELECTRICAL LINE TO FIRST GROUND BOX WILL BE FURNISHED BY COG ELECTRIC. FINAL TERMINATION OF THESE CONDUCTORS TO ILLUMINATION UNDERGROUND PRIMARY CONDUCTORS INSTALLED BY THE CONTRACTOR TO BE PROVIDED BY COG ELECTRIC. UNDERGROUND CONDUIT FROM FIRST GROUND BOX IN ILLUMINATION SYSTEM TO COG ELECTRIC OVERHEAD ELECTRICAL POLE SHALL BE FURNISHED & INSTALLED BY CONTRACTOR AS SHOWN IN THE PLANS & PAID FOR USING PERTINENT BID ITEMS.
9. PROPOSED LIGHT FIXTURES SHALL HAVE INTEGRATED PHOTOCELLS AS SHOWN IN COG STANDARDS. PHOTOCELLS WILL BE MOUNTED ONTO PROPOSED LIGHT AS SHOWN IN COG ELECTRICAL STANDARDS.
10. PROPOSED IRRIGATION METER & PEDESTAL TO BE APPROVED BY COG ELECTRIC.
11. CONTRACTOR TO PROVIDE ALL EQUIPMENT, MATERIALS, & LABOR TO CONNECT IRRIGATION CONTROLLER TO ELECTRICAL SERVICE & METER AS APPROVED BY COG.
12. CONTRACTOR TO FURNISH & INSTALL ELECTRICAL SERVICE PANEL AND BREAKERS AS APPROVED BY COG FOR IRRIGATION CONTROLLER ELECTRICAL SERVICES.

STATE OF TEXAS
HUNTER T. KUTACH
151241
LICENSED
PROFESSIONAL ENGINEER
3/12/2025

GEORGETOWN TEXAS EST. 1848

BGE, Inc.
101 West Louis Henna Blvd, Suite 400, Austin, TX 78728
Tel: 512-879-0400 • www.bgeinc.com
TBPE Registration No. F-1046

SHELL ROAD

ILLUMINATION LAYOUT

SHEET 10 OF 11

SHEET NO. 230

DATE: 3/12/2025 2:26:57 PM
FILE: G:\TXC\Projects\City Georgetown\10767-00 Shell Road\03 CADD\01_Shts\10-ILLUMILLUMINATION_10.dgn

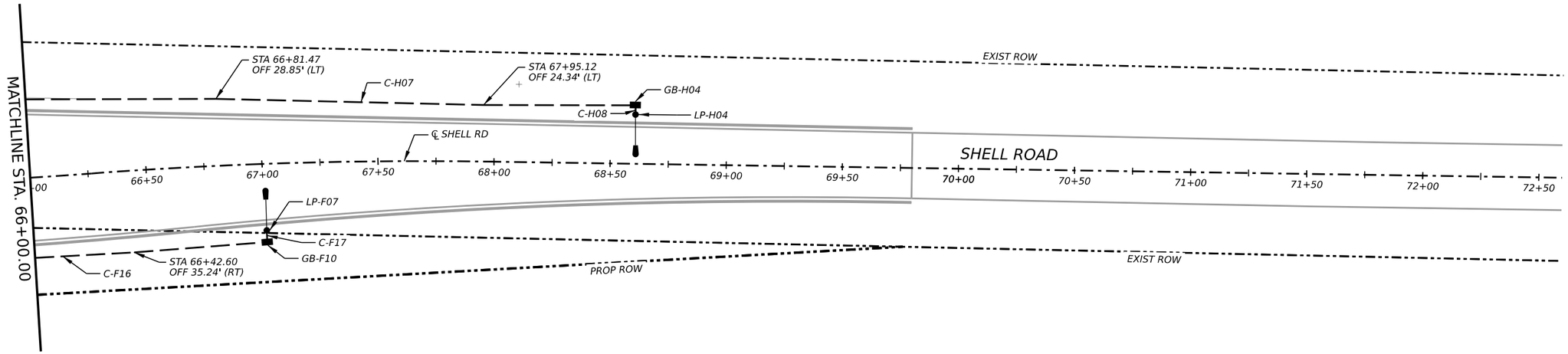

LEGEND

X-X## — ID: BRANCH IDENTIFIER; ORDER NUMBER

C = CONDUIT

GB = GROUND BOX

LP = LIGHT POLE

DALP- DOUBLE ARM LIGHT POLE

ES = ELECTRICAL STATION

IM = IRRIGATION METER

IC = IRRIGATION CONTROLLER

= CONDUIT TRENCH

= CONDUIT BORE

= CONCRETE ENCASEMENT

= LIGHT POLE

= DOUBLE ARM LIGHT POLE

= GROUND BOX

= ELECTRICAL SERVICE

= IRRIGATION METER

= IRRIGATION CONTROLLER

0 25 50

SCALE: 1" = 50'

CONDUIT RUN NO.	FROM	TO	1" (SCH 40) (PVC) CONDUIT	2" (SCH 40) (PVC) CONDUIT	GUR2-S (24" X 24") (TRENCHING)	GUR2-S (30" X 24") (TRENCHING)	GUR2-S (36" X 24") (BORING)	NUMBER OF CONDUCTORS IN CONDUIT	ELEC CONDR (NO.1/0) ALUMINUM TPLX	ELEC CONDR (NO.12) COPPER DPLX
			LF	LF	LF	LF	LF	EA	LF	LF
C-F16	GB-F09	GB-F10		105		105		1	110	
C-F17	GB-F10	LP-F07	9		9			1		14
C-H07	GB-H03	GB-H04		267		267		1	272	
C-H08	GB-H04	LP-FH04	8		8			1		13

ITEM NO.	DESCRIPTION	QUANTITY	UNIT
GUSL-CF-B	CONCRETE FOUNDATION STREETLIGHT POLE	12	LF
GUSL-35-1	STREETLIGHT 35' BRUSHED ALUMINUM SINGLE	2	EA
GUM50-P-1	1" (SCH 40) (PVC) CONDUIT	17	LF
GUM50-P-2	2" (SCH 40) (PVC) CONDUIT	372	LF
GUR2-S (24" X 24") (TRENCH)	1" (SCH 40) (PVC) CONDUIT (TRENCH)	17	LF
GUR2-S (30" X 24") (TRENCH)	2" (SCH 40) (PVC) CONDUIT (TRENCH)	372	LF
GUR2-S (36" X 24") (BORING)	2" (SCH 40) (PVC) CONDUIT (BORE)		LF
GUK6-SL	JUNCTION BOX	2	EA
SS00001	ELEC CONDR (NO.1/0) ALUMINUM TPLX	382	LF
SS00002	ELEC CONDR (NO.12) COPPER DPLX	27	LF

ILLUMINATION COMPONENT LOCATION		
LP-F07	67+01.08	28.66' RT
GB-F10	67+01.08	33.66' RT
GB-H04	68+60.64	25.20' LT
LP-H04	68+60.62	21.20' LT

NOTES:

1. CONTRACTOR IS RESPONSIBLE FOR VERIFYING ALL PROPOSED AND EXISTING UTILITIES BEFORE BEGINNING ANY TYPE OF WORK.
2. CONTRACTOR MAY HAND DIG OR SOFT DIG FOUNDATION IN PLACE OF LOCATING UTILITIES. CONTRACTOR MAY ONLY USE AUGER TO DIG THIS LOCATION IF THEY VERIFY THE AREA IS CLEAR OF UTILITIES. IF UTILITIES ARE PRESENT AT PROPOSED FOUNDATION LOCATION, ADJUST POLE LOCATION TO AVOID UTILITIES.
3. ALL ILLUMINATION WORK SHALL BE DONE IN ACCORDANCE WITH COG SPECIFICATIONS.
4. CONDUIT TO BE INSTALLED AT A MINIMUM DEPTH OF 30" FOR PRIMARY CONDUIT (2" CONDUITS WITH #1/0 AL TPLX) AND 24" FOR SECONDARY CONDUIT (1" CONDUITS WITH #12/2 CU DPLX) PER COG SPECIFICATIONS. CONDUIT MAY BE INSTALLED DEEPER TO MAINTAIN A 2' SEPARATION WITH UTILITIES. CONDUIT DEPTH VARYING WILL NOT BE PAID FOR DIRECTLY BUT WILL BE CONSIDERED SUBSIDIARY TO VARIOUS BID ITEMS.
5. TRENCH CONDUIT IS QUANTIFIED AND PAID FOR USING A DEPTH OF 30" FOR PRIMARY CONDUIT RUNS AND 24" FOR SECONDARY CONDUIT RUNS. NO ADDITIONAL PAYMENT WILL BE MADE FOR INSTALLING CONDUIT DEEPER THAN MINIMUM DEPTH TO AVOID UTILITIES.
6. ALL FOUNDATIONS ARE STANDARD 6 FOOT DEPTH.
7. STREETLIGHT PRIMARY WILL BE #1/0 AL TPLX IN A 2" PVC CONDUIT FROM HANDHOLE TO HANDHOLE. THE STREETLIGHTS WILL BE FED FROM A HANDHOLE VIA #12/2 CU DPLX CABLE IN A 1" PVC CONDUIT. IRRIGATION POINTS WILL BE FED OFF STREETLIGHT PRIMARY FROM PROPOSED HANDHOLES TO PROPOSED METER LOCATIONS VIA #1/0 AL TPLX IN A 2" PVC CONDUIT.
8. ABOVE GROUND RISER CONDUIT & CONDUCTORS FROM COG ELECTRIC OVERHEAD ELECTRICAL LINE TO FIRST GROUND BOX WILL BE FURNISHED BY COG ELECTRIC. FINAL TERMINATION OF THESE CONDUCTORS TO ILLUMINATION UNDERGROUND PRIMARY CONDUCTORS INSTALLED BY THE CONTRACTOR TO BE PROVIDED BY COG ELECTRIC. UNDERGROUND CONDUIT FROM FIRST GROUND BOX IN ILLUMINATION SYSTEM TO COG ELECTRIC OVERHEAD ELECTRICAL POLE SHALL BE FURNISHED & INSTALLED BY CONTRACTOR AS SHOWN IN THE PLANS & PAID FOR USING PERTINENT BID ITEMS.
9. PROPOSED LIGHT FIXTURES SHALL HAVE INTEGRATED PHOTOCELLS AS SHOWN IN COG STANDARDS. PHOTOCELLS WILL BE MOUNTED ONTO PROPOSED LIGHT AS SHOWN IN COG ELECTRICAL STANDARDS.
10. PROPOSED IRRIGATION METER & PEDESTAL TO BE APPROVED BY COG ELECTRIC.
11. CONTRACTOR TO PROVIDE ALL EQUIPMENT, MATERIALS, & LABOR TO CONNECT IRRIGATION CONTROLLER TO ELECTRICAL SERVICE & METER AS APPROVED BY COG.
12. CONTRACTOR TO FURNISH & INSTALL ELECTRICAL SERVICE PANEL AND BREAKERS AS APPROVED BY COG FOR IRRIGATION CONTROLLER ELECTRICAL SERVICES.

STATE OF TEXAS
HUNTER T. KUTACH
151241
LICENSED
PROFESSIONAL ENGINEER

3/12/2025

GEORGETOWN TEXAS EST.1848

BGE, Inc.
101 West Louis Henna Blvd, Suite 400, Austin, TX 78728
Tel: 512-879-0400 • www.bgeinc.com
TBPE Registration No. F-1046

SHELL ROAD

ILLUMINATION LAYOUT

SHEET 11 OF 11

SHEET NO. 231

DATE: 3/12/2025 2:27:00 PM
FILE: G:\TXC\Projects\City Georgetown\10767-00 Shell Road\03 CADD\01 Shts\10-ILLUMINILLUMINATION 11.dgn

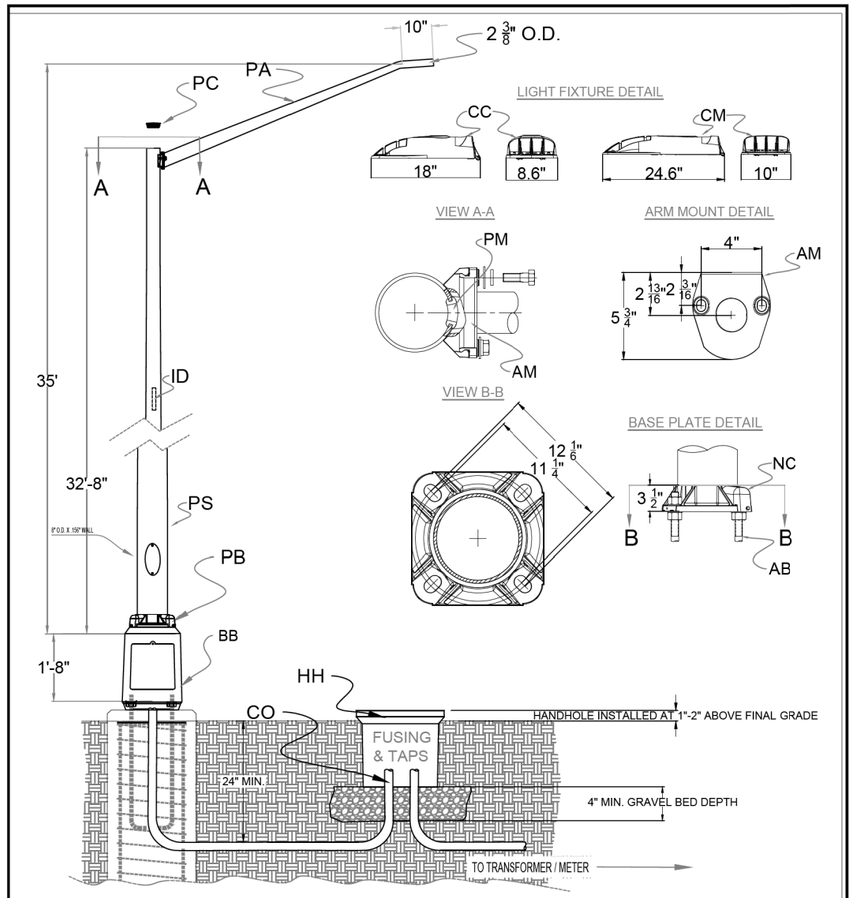

NOTES:

1. Fusing is only to be located in the underground hand holes located a minimum of 2 ft from the base of the light. Access doors on pole shaft are NOT to be used for fusing. Quick disconnect type fuse holders shall meet or exceed Bussman BK/HEB-AA 30 Amp 600 volt that will accept the 10 Amp Tron time-delay fuses "FNQ 10". The cartridge fuse size is $\frac{13}{32}$" x 1 $\frac{1}{3}$"
2. Fusing is to be installed on each energized conductor serving the light. Fuse holder shall be installed so that the exposed end shall be free of energized parts when disconnected.

The Architect/Engineer assumes responsibility for appropriate use of this standard.

GEORGETOWN TEXAS	CITY OF GEORGETOWN CONSTRUCTION STANDARDS AND DETAILS STREETLIGHT 35' BRUSHED ALUMINUM SINGLE ARM	DRAWING NAME: GEO-116 SCALE: N.T.S. / DATE: 8/21/24 DRAWN BY: ATS / APPROVED BY: COG-E	GUSL-35-1

MATERIALS		
DWG ID	*DESCRIPTION*	*QTY*
PA	*SIMPLEX ARM 8' X 32" X 3.5" (1MA0832S45-A49446B)*	*1*
PC	*POLE TOP CAP 4.5"*	*1*
PS	*POLE SHAFT 35' (RTA 35 80E US8 PLN NDR ST RFD345119)*	*1*
ID	*INTERNAL DAMPENER*	*1*
CO	*2" SCHEDULE 40 CONDUIT*	*TBD*
HH	*UNDERGROUND QUATZITE HANDHOLE (SEE GEO-206, UK5-USL)*	*1*
NC	*CAST ALUMINUM BOLT ON NUT COVERS*	*4*
PB	*CAST ALUMINUM POLE BASE*	*1*
AM	*SIMPLEX ARM MOUNT*	*1*
PM	*SIMPLEX ALUMINUM POLE MOUNT*	*1*
CC	*AUTOCONNECT SERIES ACC 100W*	*2*
CM	*AUTOCONNECT SERIES ACM 250W*	*2*
AB	*ANCHOR BOLTS (LEX1 ABSET RFD345119)*	*4*
BB	*BREAKABLE BASE, AKRON, TB2-20*	*1*

NOTES:

1. Fusing is only to be located in the underground hand holes located a minimum of 2 ft from the base of the light. Access doors on pole shaft are NOT to be used for fusing. Quick disconnect type fuse holders shall meet or exceed Bussman BK/HEB-AA 30 Amp 600 volt that will accept the 10 Amp Tron time-delay fuses "FNQ 10". The cartridge fuse size is $\frac{13}{32}$" x 1 $\frac{1}{3}$"
2. Fusing is to be installed on each energized conductor serving the light. Fuse holder shall be installed so that the exposed end shall be free of energized parts when disconnected.

The Architect/Engineer assumes responsibility for appropriate use of this standard.

GEORGETOWN TEXAS	CITY OF GEORGETOWN CONSTRUCTION STANDARDS AND DETAILS STREETLIGHT 35' BRUSHED ALUMINUM SINGLE ARM	DRAWING NAME: GEO-116 SCALE: N.T.S. / DATE: 8/21/24 DRAWN BY: ATS / APPROVED BY: COG-E	GUSL-35-1

STATE OF TEXAS
HUNTER T. KUTACH
151241
LICENSED PROFESSIONAL ENGINEER
3/12/2025

GEORGETOWN TEXAS EST.1848

BGE, Inc.
101 West Louis Henna Blvd, Suite 400, Austin, TX 78728
Tel: 512-879-0400 • www.bgeinc.com
TBPE Registration No. F-1046

SHELL ROAD

CITY OF GEORGETOWN
GEO-116

SHEET 1 OF 1

SHEET NO. 232

DATE: 3/12/2025 2:27:09 PM
FILE: G:\TX\Projects\City Georgetown\10767-00 Shell Road\03_CADD\01 Shts\10-ILLUM\Stds\COG STREELIGHT DRAWINGS.dgn

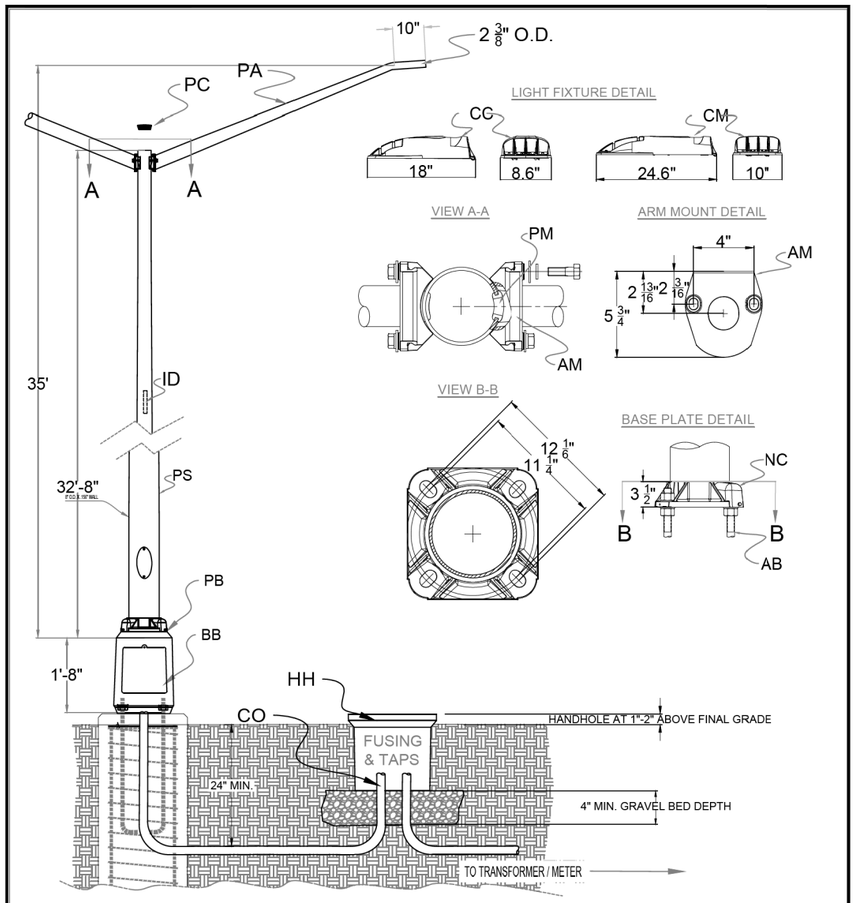

NOTES:

1. Fusing is only to be located in the underground hand holes located a minimum of 2 ft from the base of the light. Access doors on pole shaft are NOT to be used for fusing. Quick disconnect type fuse holders shall meet or exceed Bussman BK/HEB-AA 30 Amp 600 volt that will accept the 10 Amp Tron time-delay fuses "FNQ 10". The cartridge fuse size is $\frac{13}{32}$" x 1 $\frac{1}{3}$"
2. Fusing is to be installed on each energized conductor serving the light. Fuse holder shall be installed so that the exposed end shall be free of energized parts when disconnected.

The Architect/Engineer assumes responsibility for appropriate use of this standard.

GEORGETOWN TEXAS	CITY OF GEORGETOWN CONSTRUCTION STANDARDS AND DETAILS STREETLIGHT 35' BRUSHED ALUMINUM DOUBLE ARM	DRAWING NAME: GEO-117 SCALE: N.T.S. / DATE: 8/21/24 DRAWN BY: ATS / APPROVED BY: COG-E	GUSL-35-2

MATERIALS		
DWG ID	*DESCRIPTION*	*QTY*
PA	*SIMPLEX ARM 8' X 32" X 3.5" (2MA0832S45-A49446B)*	*2*
PC	*POLE TOP CAP 4.5"*	*1*
PS	*POLE SHAFT 35' (RTA 35 80E 2US8 PLN NDR ST RFD345120)*	*1*
ID	*INTERNAL DAMPENER*	*1*
CO	*2" SCHEDULE 40 CONDUIT*	*TBD*
HH	*UNDERGROUND QUATZITE HANDHOLE (SEE GEO-206, UK5-USL)*	*1*
NC	*CAST ALUMINUM BOLT ON NUT COVERS*	*4*
PB	*CAST ALUMINUM POLE BASE*	*1*
AM	*SIMPLEX ARM MOUNT*	*2*
PM	*SIMPLEX ALUMINUM POLE MOUNT*	*2*
CC	*AUTOCONNECT SERIES ACC 100W*	*2*
CM	*AUTOCONNECT SERIES ACM 250W*	*2*
AB	*ANCHOR BOLTS (LEX1 ABSET RFD345120)*	*4*
BB	*BREAKABLE BASE, AKRON, TB2-20*	*1*

NOTES:

1. Fusing is only to be located in the underground hand holes located a minimum of 2 ft from the base of the light. Access doors on pole shaft are NOT to be used for fusing. Quick disconnect type fuse holders shall meet or exceed Bussman BK/HEB-AA 30 Amp 600 volt that will accept the 10 Amp Tron time-delay fuses "FNQ 10". The cartridge fuse size is $\frac{13}{32}$" x 1 $\frac{1}{3}$"
2. Fusing is to be installed on each energized conductor serving the light. Fuse holder shall be installed so that the exposed end shall be free of energized parts when disconnected.

The Architect/Engineer assumes responsibility for appropriate use of this standard.

GEORGETOWN TEXAS	CITY OF GEORGETOWN CONSTRUCTION STANDARDS AND DETAILS STREETLIGHT 35' BRUSHED ALUMINUM DOUBLE ARM	DRAWING NAME: GEO-117 SCALE: N.T.S. / DATE: 8/21/24 DRAWN BY: ATS / APPROVED BY: COG-E	GUSL-35-2

STATE OF TEXAS
HUNTER T. KUTACH
151241
LICENSED
PROFESSIONAL ENGINEER
3/12/2025

GEORGETOWN TEXAS EST.1848

BGE, Inc.
101 West Louis Henna Blvd, Suite 400, Austin, TX 78728
Tel: 512-879-0400 • www.bgeinc.com
TBPE Registration No. F-1046

SHELL ROAD

CITY OF GEORGETOWN
GEO-117

SHEET 1 OF 1

SHEET NO. 233

DATE: 3/12/2025 2:27:12 PM
FILE: G:\TXC\Projects\City Georgetown\10767-00 Shell Road\03 CADD\01 Shts\10-ILLUMStds\COG STREELIGHT DRAWINGS.dgn

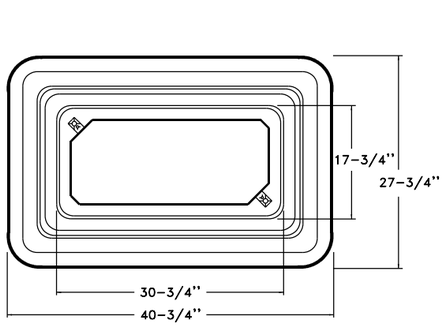

BOX - PLAN VIEW

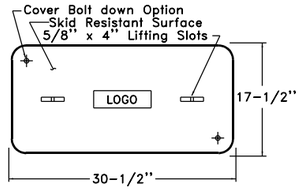

COVER

Optional Cast Iron Reader Lids Available

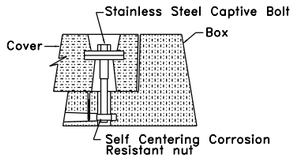

COVER BOLT DOWN OPTION

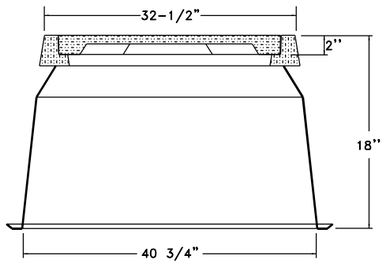

BOX - COVER SECTION

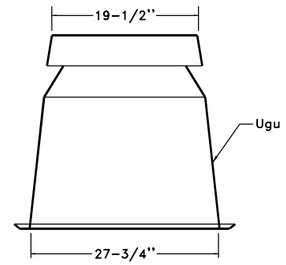

END VIEW

The Architect/Engineer assumes responsibility for appropriate use of this standard.

REVISION NOTE: ADOPTED 6/21/2006			
CITY OF GEORGETOWN CONSTRUCTION STANDARDS AND DETAILS 24.9/14.4 kV PRIMARY 600V SECONDARY – (JUNCTION BOX, COVER, AND EXTENSION) PAGE 1 OF 2	DRAWING NAME: GEO-206		
	SCALE: NTS	DATE: 5/30/03	GUK6, GUK6-SL, GUK6-TL
	DRAWN BY: KJH	APPROVED BY: CCS	

MATERIAL LIST

ITEM NO.	STOCK NO.	DESCRIPTION	GUK6	GUK6-SL	GUK6-TL
Ugu	360044	Sub-surface Box and Lid, 13" x 24" x 18"		1	1
Ugu	360045	Sub-surface Box and Lid, 17" x 30" x 18"	1		

Notes:

1. This assembly unit to be constructed out of polymer concrete and reinforced polyester.
2. This unit is to be set even with finish grade.
3. Place in logo area "CITY OF GEORGETOWN ELECTRICAL".

References:

See GUK6 – Used for Secondary Junction Box
See GUK6-SL – Used for Streetlight Circuit
See GUK6-TL – Used for Traffic Light Circuit

The Architect/Engineer assumes responsibility for appropriate use of this standard.

REVISION NOTE: ADOPTED 6/21/2006			
CITY OF GEORGETOWN CONSTRUCTION STANDARDS AND DETAILS 24.9/14.4 kV PRIMARY 600V SECONDARY (JUNCTION BOX, COVER, AND EXTENSION) PAGE 2 OF 2	DRAWING NAME: GEO-206A		
	SCALE: NTS	DATE: 5/30/03	GUK6, GUK6-SL, GUK6-TL
	DRAWN BY: GBY	APPROVED BY: CCS	



3/12/2025

BGE, Inc.
101 West Louis Henna Blvd, Suite 400, Austin, TX 78728
Tel: 512-879-0400 • www.bgeinc.com
TBPE Registration No. F-1046

SHELL ROAD

CITY OF GEORGETOWN
GEO-206

SHEET 1 OF 1

SHEET NO. 234

DATE: 3/12/2025 2:27:15 PM
FILE: G:\TXC\Projects\City Georgetown\10767-00 Shell Road\03 CADD\01 Shts\10-ILLUMStds\COG STDS.dgn

Notes:

1. All electric primary conduit shall be installed below all other utilities and private underground lines whenever possible. All electric secondary conduit shall be installed under water lines whenever possible. Any exception to this specification must have written approval from the City.
2. Electric primary conduit shall be installed with a minimum of 2' vertical and 5' horizontal clearance from water mains, wastewater, storm water, and private underground lines. Any exception to this specification must have written approval from the City.
3. Electric primary conduit shall be installed with a minimum of 2' vertical and 5' horizontal clearance from natural gas lines. Any exception to this specification must have written approval from the City.
4. Electric primary conduit shall be installed with a minimum of 1' vertical and/or 1' horizontal clearance from communications lines. Any exception to this specification must have written approval from the City.

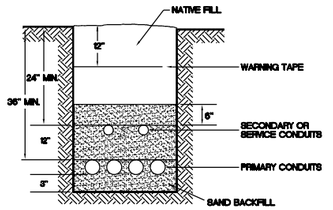

TYPICAL TRENCH DETAIL
CONDUIT SIZE AND NUMBER MAY VARY

5. Electric primary conduit when installed above water mains and pressurized wastewater lines, with 2' of vertical clearance or greater, shall be capped with 6" of concrete when crossing these lines. The concrete cap shall be installed 4" above electric conduit(s); 5' each side of the outside diameter of the water main or pressurized wastewater lines.
6. Electric primary conduit when installed below water mains and pressurized wastewater lines with 2' vertical clearance or greater, does not require a concrete cap when crossing these lines.
7. Electric primary conduit installed with less than 2' of vertical and 5' of horizontal clearance from water mains, pressurized wastewater and private underground lines, shall be encased in 6" of concrete. Concrete encasement to be installed around conduit until a minimum of 2' of vertical and 5' of horizontal clearance has been met. Concrete encasements will began 5' before and end 5' from the end where conduit are installed less than 2' vertical and 5' horizontal from the above lines. This must have City approval before installation of conduit.
8. All concrete shall have red dye or coloring added to concrete before concrete has been placed in trench.

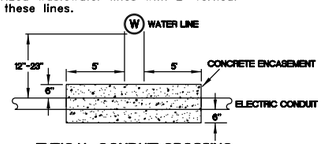

TYPICAL CONDUIT CROSSING
CONDUIT SIZE AND NUMBER MAY VARY

9. Conduit shall be electrical grade, gray schedule #40 PVC conduit. Conduit shall meet the NEC and ASTM standards for installation of underground electrical conduit.
10. All conduit installations shall be owned by the City and shall be inspected by the City before backfill of trench.
11. Where conduit terminates in a pad, install bell end on each conduit.
12. Where multiple rows of conduit are required, duct spacers are to be installed every 5' with 3" of seperation between conduits and trench wall. Then sand backfill is to be installed around conduit.
13. Primary conduit shall have 12" of 3/8" F washed gravel bedding prior to placing 6" wide "CAUTION" tape. Final backfilling can then be placed.
14. 1800 lbs Mule Tape with sequential footage markings, or equivalent, shall be run through all conduit and tied off on both ends of conduit.

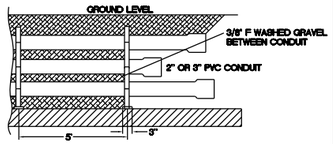

TYPICAL DUCT SPACING

15. All conduit for future use shall be stubbed up and capped.
16. Secondary service conduit to be stubbed out 5' outside of the utility easement into prospective lots. End of conduit to be staked with a piece of PVC conduit 30" above ground line.
17. Long sweep elbows shall be used at all bends in conduit runs. 2" and 3" conduit shall require a minimum bend radius of 36". 4" conduit shall require a minimum bend radius of 48".
18. Use long sweep PVC concrete encased elbows at all single-phase transformer pads and in conductor pulls 200' in length or less. Long sweep galvanized steel conduit elbows to be used in all other installations.
19. Water services and taps shall be placed above electric conduit with a minimum separation of 12". Water services and taps maybe placed below electric conduit only with City's written approval.
20. Where electric conduit crosses roadways, the trench shall be backfilled with 3/8" F washed gravel then base and compacted or backfilled with flowable backfill in accordance with City specifications. All trenches outside of roadways shall be backfilled and compacted to 95% standard density in accordance with City specifications.
21. Where electric conduit crosses roadways, the minimum depth of cover is 36" from the top of proposed finished roadway elevation.

References:

GUM50	Conduit Specifications
GUR3	3/8" F washed gravel or approved equal

Specification letter codes

GUR2- R or S + (size)
Example: GUR2-R (42" x 12") is a trench in rock at 42" deep x 12" wide

The Architect/Engineer assumes responsibility for appropriate use of this standard.

REVISION NOTE: ADOPTED 6/21/2006

GEORGETOWN TEXAS EST. 1848 — Georgetown Utility Systems — Your Community Owned Utility

CITY OF GEORGETOWN
CONSTRUCTION STANDARDS AND DETAILS
MISCELLANEOUS UG CONDUIT INSTALLATION
PAGE 1 OF 3

DRAWING NAME: GEO-225

SCALE:	DATE:	GUM-50-P_
NTS	4/7/05	GUM-50-S_
DRAWN BY: MRC	APPROVED BY: MRC	

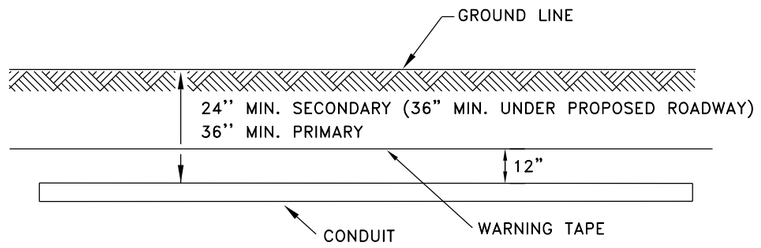

SPECIFICATION LETTER AND NUMBER CODES:
GUM50-(P or S)-(DIAMETER)

EXAMPLE: GUM50-S-3
IS 3'' STEEL CONDUIT

MATERIAL	-P-2	-P-3	-P-4	-P-6
1-1'' PVC Conduit				
1-2'' PVC Conduit	1			
1-3'' PVC Conduit		1		
1-4'' PVC Conduit			1	
1-6'' PVC Conduit				1

MATERIAL	-S-2	-S-3	-S-4	-S-6
1-2'' Steel Conduit	1			
1-3'' Steel Conduit		1		
1-4'' Steel Conduit			1	
1-6'' Steel Conduit				1

Notes:

Specify trench unit separately

Reference:

GUR2 Trench specifications

The Architect/Engineer assumes responsibility for appropriate use of this standard.

REVISION NOTE: ADOPTED 6/21/2006

GEORGETOWN TEXAS EST. 1848 — Georgetown Utility Systems — Your Community Owned Utility

CITY OF GEORGETOWN
CONSTRUCTION STANDARDS AND DETAILS
MISCELLANEOUS UG CONDUIT INSTALLATION
PAGE 2 OF 3

DRAWING NAME: GEO-225A

SCALE:	DATE:	GUM-50-P-_
NTS	6/12/03	GUM-50-S-_
DRAWN BY: MRC	APPROVED BY: CCS	

STATE OF TEXAS — HUNTER T. KUTACH — 151241 — LICENSED PROFESSIONAL ENGINEER
3/12/2025

GEORGETOWN TEXAS EST. 1848

BGE, Inc.
101 West Louis Henna Blvd, Suite 400, Austin, TX 78728
Tel: 512-879-0400 • www.bgeinc.com
TBPE Registration No. F-1046

SHELL ROAD

CITY OF GEORGETOWN
GEO-225

SHEET 1 OF 2

SHEET NO. 235

DATE: 3/12/2025 2:27:16 PM
FILE: G:\TXC\Projects\City Georgetown\10767-00 Shell Road\03 CADD\01 Shts\10-ILLUMStds\COG STDS.dgn

CK:
DW:
CK:
DW:

MATERIAL LIST

ITEM NO.	STOCK NO.	DESCRIPTION	QTY.

This Page Intentionally Left Blank

The Architect/Engineer assumes responsibility for appropriate use of this standard.

GEORGETOWN TEXAS EST. 1848 Georgetown Utility Systems Your Community Owned Utility	CITY OF GEORGETOWN CONSTRUCTION STANDARDS AND DETAILS MISCELLANEOUS UG CONDUIT INSTALLATION PAGE 3 OF 3	REVISION NOTE: ADOPTED 6/21/2006 DRAWING NAME: GEO-225B SCALE: NTS; DATE: 6/2/03; DRAWN BY: GBY; APPROVED BY: CCS	GUM-50-P-_ GUM-50-S-_

NOTES:

1. All electric primary conduit shall be installed below all other utilities and private underground lines whenever possible. All electric secondary conduit shall be installed under water lines whenever possible. Any exception to this specification must have written approval from the City.
2. Electric primary conduit shall be installed with a minimum of 2' vertical and 2' horizontal clearance from water mains, wastewater, storm water, and private underground lines. Any exception to this specification must have written approval from the City
3. Electric primary conduit shall be installed with a minimum of 2' vertical and 2' horizontal clearance from natural gas lines. Any exception to this specification must have written approval from the City.
4. Electric primary conduit shall be installed with a minimum of 1' vertical clearance from communications lines. Any exception to this specification must have written approval from the City.
5. Electric primary conduit when installed above water mains and pressurized wastewater lines, with 2' of vertical clearance or greater, shall be capped with 6" of concrete when crossing these lines. The concrete cap shall be installed 4" above electric conduit(s); 5' each side of the outside diameter of the water main or pressurized wastewater lines.
6. Electric primary conduit when installed below water mains and pressurized wastewater lines with 2' vertical clearance or greater, does not require a concrete cap when crossing these lines.
7. Electric primary conduit installed with less than 2' of vertical and 2' of horizontal clearance from water mains, pressurized wastewater and private underground lines, shall be encased in 6" of concrete. Concrete encasement to be installed around the conduit until a minimum of 2' of vertical and 2' of horizontal clearance has been met. Concrete encasements will begin 5' from the end where conduit are installed less than 2' vertical and 2' horizontal from the above lines. This must have City approval before installation of conduit.
8. All concrete shall have red dye or coloring added to the top surface of the concrete.
9. Conduit shall be electrical grade, gray schedule #40 PVC conduit. Conduit shall meet the NEC and ASTM standards for installation of underground electrical conduit.
10. All conduit installations shall be owned by the City and shall be inspected by the City before backfill of trench.
11. Where conduit terminates in a pad, install bell end on each conduit.
12. Where multiple rows of conduit are required, duct spacers are to be installed every 5' with 3" of separation between conduits and trench wall. Then sand backfill is to be installed around conduit.
13. Primary conduit shall have 12" of sand bedding prior to placing 6" wide "CAUTION" tape. Final backfilling can then be placed.
14. 2500 lbs Mule Tape with sequential footage markings, or equivalent, shall be run through all conduit and tied off on both ends of conduit.
15. All conduit for future use shall be either stubbed up and capped, or dead-ended underground with a cap and an electric marker.
16. Secondary service conduit to be stubbed out 5' outside of the utility easement into prospective lots. End of conduit to be staked with a piece of PVC conduit 30" above ground line.
17. Long sweep elbows shall be used at all bends in Primary conduit runs. 2" and 3" conduit shall require a minimum bend radius of 36". 4" conduit shall require a minimum bend radius of 48". 6" conduit shall require a minimum bend radius of 60".
18. Use galvanized steel conduit elbows on all 90 degree bends.
19. Water services and taps shall be placed above electric conduit with a minimum separation of 12". Water services and taps maybe placed below electric conduit only with City's written approval.
20. Where electric conduit crosses roadways, the trench shall be backfilled with 3/8" F washed gravel and then backfilled with flowable backfill in accordance with City specifications. All trenches outside of roadways shall be backfilled and compacted to 95% standard density in accordance with City specifications. Any exception to this rule must have written approval from the city.
21. Where electric conduit crosses roadways, the minimum depth of cover is 30" from the top of proposed finished roadway elevation.
22. Use 24" sweeping elbows on all Secondary conduit runs.

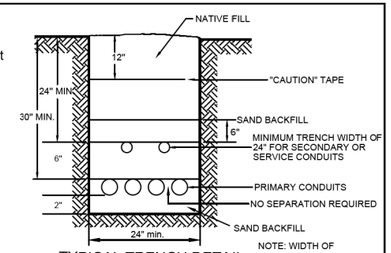

TYPICAL TRENCH DETAIL

CONDUIT SIZE AND NUMBER MAY VARY

NOTE: WIDTH OF TRENCH WILL VARY DEPENDING ON NUMBER AND SIZE OF CONDUITS. A MINIMUM WIDTH OF 24" IS REQUIRED FOR PRIMARY CONDUIT.

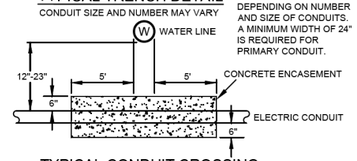

TYPICAL CONDUIT CROSSING

CONDUIT SIZE AND NUMBER MAY VARY

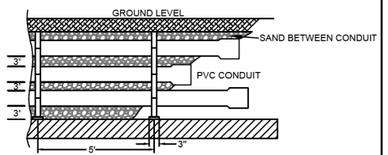

TYPICAL CONDUIT SPACER SPACING

The Architect/Engineer assumes responsibility for appropriate use of this standard.

References:

GUM50	Conduit Specifications
GUR3	3/8" F washed gravel or approved equal

Specification letter codes

GUR2- R or S + (size)
Example: GUR2-R (42" x 12")
is a trench in rock at 42" deep x 12" wide

GEORGETOWN TEXAS EST. 1848 Georgetown Utility Systems Your Community Owned Utility	CITY OF GEORGETOWN CONSTRUCTION STANDARDS AND DETAILS ELECTRIC CONDUIT INSTALLATION SPECIFICATIONS FOR ELECTRIC UTILITIES WITHIN ETJ PAGE 2 OF 2	REVISION NOTE: ADOPTED 11-01-17 DRAWING NAME: GEO-226 SCALE: NTS; DATE: 10-31-17; DRAWN BY: MRC; APPROVED BY: -	GUR2-R_, GUM2-S_

STATE OF TEXAS
HUNTER T. KUTACH
151241
LICENSED
PROFESSIONAL ENGINEER

3/12/2025

GEORGETOWN TEXAS EST. 1848

BGE, Inc.
101 West Louis Henna Blvd, Suite 400, Austin, TX 78728
Tel: 512-879-0400 • www.bgeinc.com
TBPE Registration No. F-1046

SHELL ROAD

CITY OF GEORGETOWN
GEO-225 & GEO-226

SHEET 2 OF 2

SHEET NO. 236

DATE: 3/12/2025 2:27:17 PM
FILE: G:\TXC\Projects\City Georgetown\10767-00 Shell Road\03_CADD\01_Shts\10-ILLUM\Stds\COG STDS.dgn

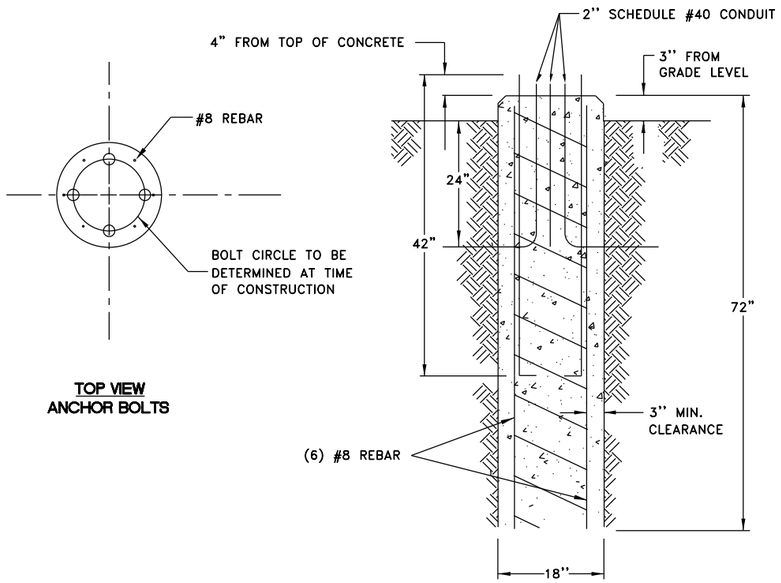

TOP VIEW
ANCHOR BOLTS

SIDE VIEW

Notes:

1. "R" designates installation in rock.
2. #3 Spiral, 4" pitch.
3. 4-1/4" anchor bolt, 42" long with 4" projection from concrete.
4. Anchor bolt: 6" thread top, 2' to be galvanized.
5. Anchor bolt to be a 326, with 2 nuts and 2 square washers.
6. (6) #8 vertical rebar.
7. All concrete to be 3,000 PSI grade.
8. Foundation to have 1" chamfer on top to prevent chipping.

The Architect/Engineer assumes responsibility for appropriate use of this standard.

GEORGETOWN TEXAS Georgetown Utility Systems	CITY OF GEORGETOWN CONSTRUCTION STANDARDS AND DETAILS CONCRETE FOUNDATION STREETLIGHT POLE (18" DIAMETER X 72" DEPTH) PAGE 1 OF 2	REVISION NOTE: ADOPTED 6/21/2006 DRAWING NAME: GEO-236		
		SCALE: NTS	DATE: 6/2/03	GUSL-CF-B, GUSL-CF-BR
		DRAWN BY: SCE	APPROVED BY: CCS	

MATERIAL LIST

ITEM NO.	STOCK NO.	DESCRIPTION	QTY.

This Page Intentionally Left Blank

The Architect/Engineer assumes responsibility for appropriate use of this standard.

GEORGETOWN TEXAS Georgetown Utility Systems	CITY OF GEORGETOWN CONSTRUCTION STANDARDS AND DETAILS CONCRETE FOUNDATION STREETLIGHT POLE (18" DIAMETER X 72" DEPTH) PAGE 2 OF 2	REVISION NOTE: ADOPTED 6/21/2006 DRAWING NAME: GEO-236A		
		SCALE: NTS	DATE: 6/2/03	GUSL-CF-B, GUSL-CF-BR
		DRAWN BY: GBY	APPROVED BY: CCS	

STATE OF TEXAS
HUNTER T. KUTACH
151241
LICENSED
PROFESSIONAL ENGINEER

3/12/2025

GEORGETOWN TEXAS EST. 1848

BGE, Inc.
101 West Louis Henna Blvd, Suite 400, Austin, TX 78728
Tel: 512-879-0400 • www.bgeinc.com
TBPE Registration No. F-1046

SHELL ROAD

CITY OF GEORGETOWN
GEO-236

SHEET 1 OF 1

SHEET NO. 237

DATE: 3/12/2025 2:27:18 PM
FILE: G:\TXC\Projects\City Georgetown\10767-00 Shell Road\103 CADD\01 Shts\10-ILLUMStds\COG STDS.dgn

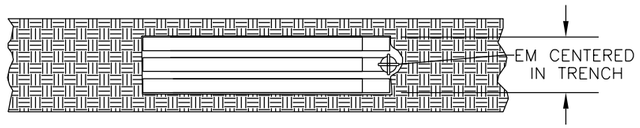

PLAN VIEW

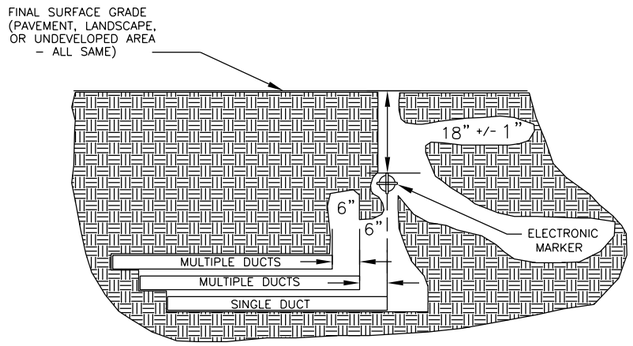

ELEVATION VIEW

NOTES:

1. ELECTRONIC MARKERS SHALL BE TEMPO/TEXTRON, MODEL 160 OMNI MARKERS, RED IN COLOR TO INDICATE ELECTRIC POWER
2. THE MARKERS SHALL BE INSTALLED AT A DEPTH OF 18" BELOW GRADE DIRECTLY ABOVE THE END OF THE CONDUIT STUB–OUT, AND IN THE CENTER OF THE TRENCH.

The Architect/Engineer assumes responsibility for appropriate use of this standard.

EST. 1848 GEORGETOWN TEXAS Georgetown Utility Systems *Your Community Owned Utility*	CITY OF GEORGETOWN CONSTRUCTION STANDARDS AND DETAILS **CONDUIT STUB–OUT & ELECTRONIC MARKER INSTALLATION**	REVISION NOTE: *ADOPTED 6/21/2006* DRAWING NAME: UGDEM1.1 SCALE: NTS · DATE: 11/05 DRAWN BY: JLW · APPROVED BY: MWM

STATE OF TEXAS
HUNTER T. KUTACH
151241
LICENSED
PROFESSIONAL ENGINEER
3/12/2025

EST. 1848 GEORGETOWN TEXAS

BGE, Inc.
101 West Louis Henna Blvd, Suite 400, Austin, TX 78728
Tel: 512-879-0400 • www.bgeinc.com
TBPE Registration No. F-1046

SHELL ROAD

CITY OF GEORGETOWN
UGDEM1.1

SHEET 1 OF 1

SHEET NO. 238

DATE: 3/12/2025 2:27:19 PM
FILE: G:\TXC\Projects\City Georgetown\10767-00 Shell Road\03_CADD\01 Shts\10-ILLUM\Stds\COG STDS.dgn

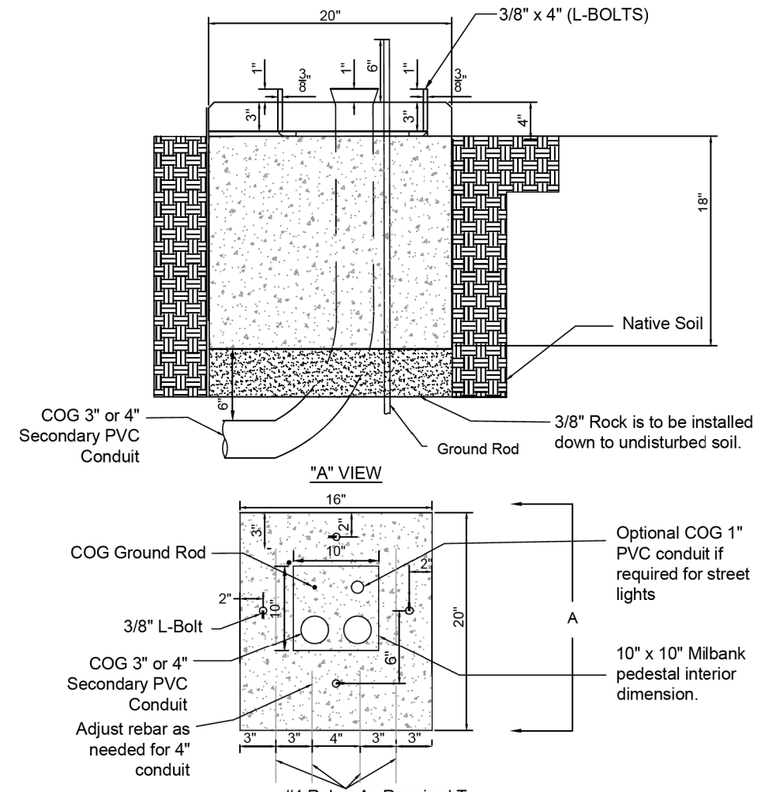

Notes:

1. Concrete testing, 3000 lbs per sq inch; 3% ± 1.5% entrained air, 3/4" max. size aggregate.
2. #4 reinforcing steel, ATSM-A615 grade 60, place approximately 4" on-center each way and securely tied together.
3. Minimum concrete cover over reinforcing steel 3" unless noted otherwise.
4. Trowel or Broom finish, leaving no depressions.
5. Use flowable fill for backfill, not native soil, under pad.
6. Ground rod shall extend 6" above the concrete pad.
7. Rebar to be extended 2 feet into sidewalk from pedestal.
8. Bell ends to be installed on all conduits located at pad sites.
9. 3/8" x 4" Galvanized "L" bolts with nuts and 1" washers. Bolts to be 1" above concrete with clean threads.
10. Pad to extend 4" above the finished grade.

The Architect/Engineer assumes responsibility for appropriate use of this standard.

EST.1848 GEORGETOWN TEXAS
Georgetown Utility Systems
Your Community Owned Utility

CITY OF GEORGETOWN

CONSTRUCTION STANDARDS AND DETAILS
120/240 V SECONDARY SINGLE-PHASE
METER PEDESTAL CONCRETE PAD

PAGE 1 OF 1

REVISION NOTE	06-11-20 MRC
DRAWING NUMBER	GEO-294
SCALE: NTS	DATE: 06-10-2020
DRAWN BY: JAM	APPROVED BY: -

GUM1-5C-SP

STATE OF TEXAS
HUNTER T. KUTACH
151241
LICENSED
PROFESSIONAL ENGINEER
3/12/2025

EST.1848 GEORGETOWN TEXAS

BGE, Inc.
101 West Louis Henna Blvd, Suite 400, Austin, TX 78728
Tel: 512-879-0400 • www.bgeinc.com
TBPE Registration No. F-1046

SHELL ROAD

CITY OF GEORGETOWN
GEO-294

SHEET 1 OF 1

SHEET NO. 239

DATE: 3/12/2025 2:27:20 PM
FILE: G:\TXC\Projects\City Georgetown\10767-00 Shell Road\03_CADD\01 Shts\10-ILLUM\Stds\COG STDS.dgn

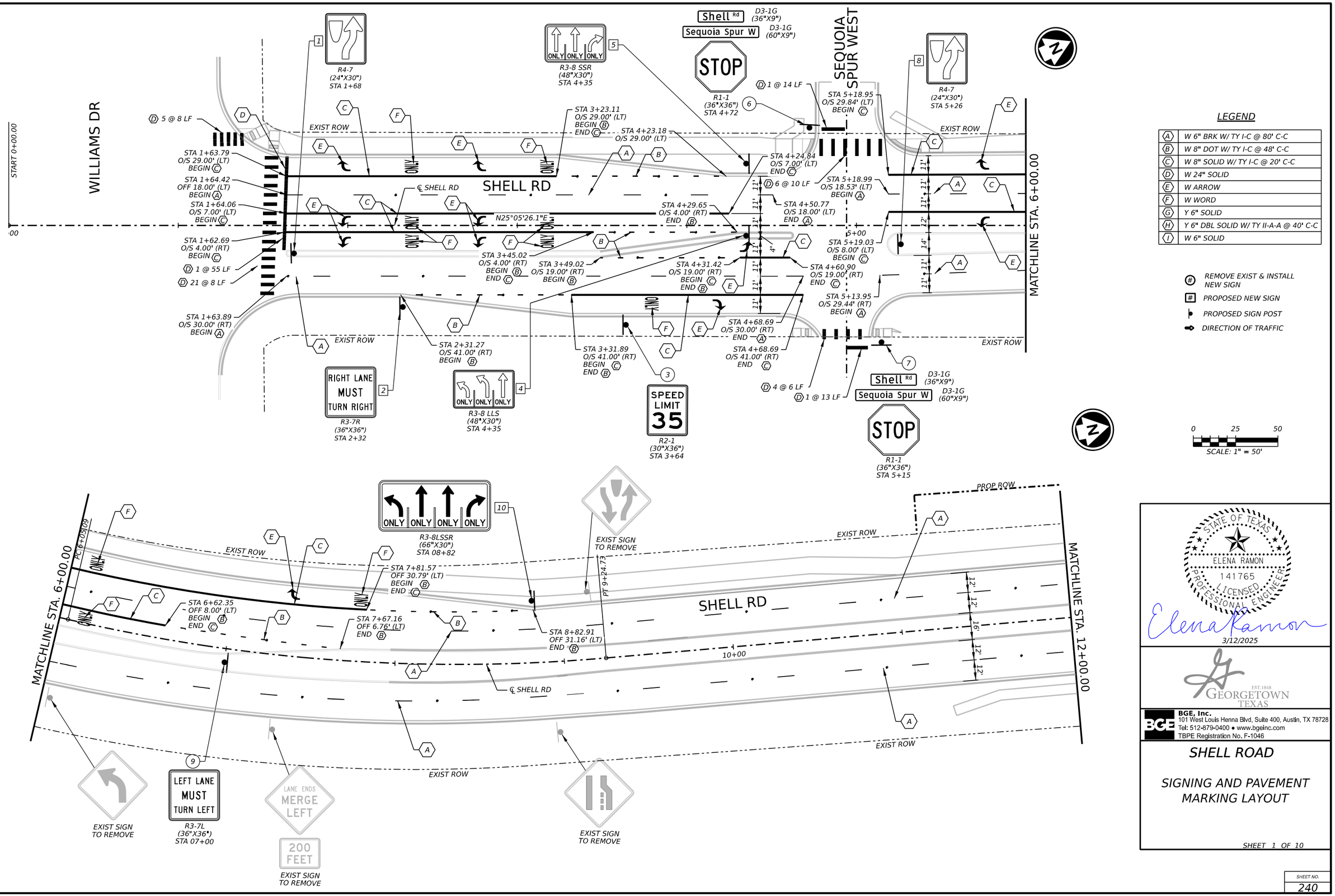

LEGEND

A	W 6" BRK W/ TY I-C @ 80' C-C
B	W 8" DOT W/ TY I-C @ 48' C-C
C	W 8" SOLID W/ TY I-C @ 20' C-C
D	W 24" SOLID
E	W ARROW
F	W WORD
G	Y 6" SOLID
H	Y 6" DBL SOLID W/ TY II-A-A @ 40' C-C
I	W 6" SOLID

(#) REMOVE EXIST & INSTALL NEW SIGN

[#] PROPOSED NEW SIGN

PROPOSED SIGN POST

DIRECTION OF TRAFFIC

STATE OF TEXAS
ELENA RAMON
141765
LICENSED
PROFESSIONAL ENGINEER
Elena Ramon
3/12/2025

EST. 1848 GEORGETOWN TEXAS

BGE, Inc.
101 West Louis Henna Blvd, Suite 400, Austin, TX 78728
Tel: 512-879-0400 • www.bgeinc.com
TBPE Registration No. F-1046

SHELL ROAD

SIGNING AND PAVEMENT MARKING LAYOUT

SHEET 1 OF 10

SHEET NO. 240

DATE: 3/12/2025 3:12:27 PM
FILE: G:\TXC\Projects\City Georgetown\10767-00 Shell Road\03 CADD\01 Shts\08-SPMD\Shell_SPMD_01.dgn

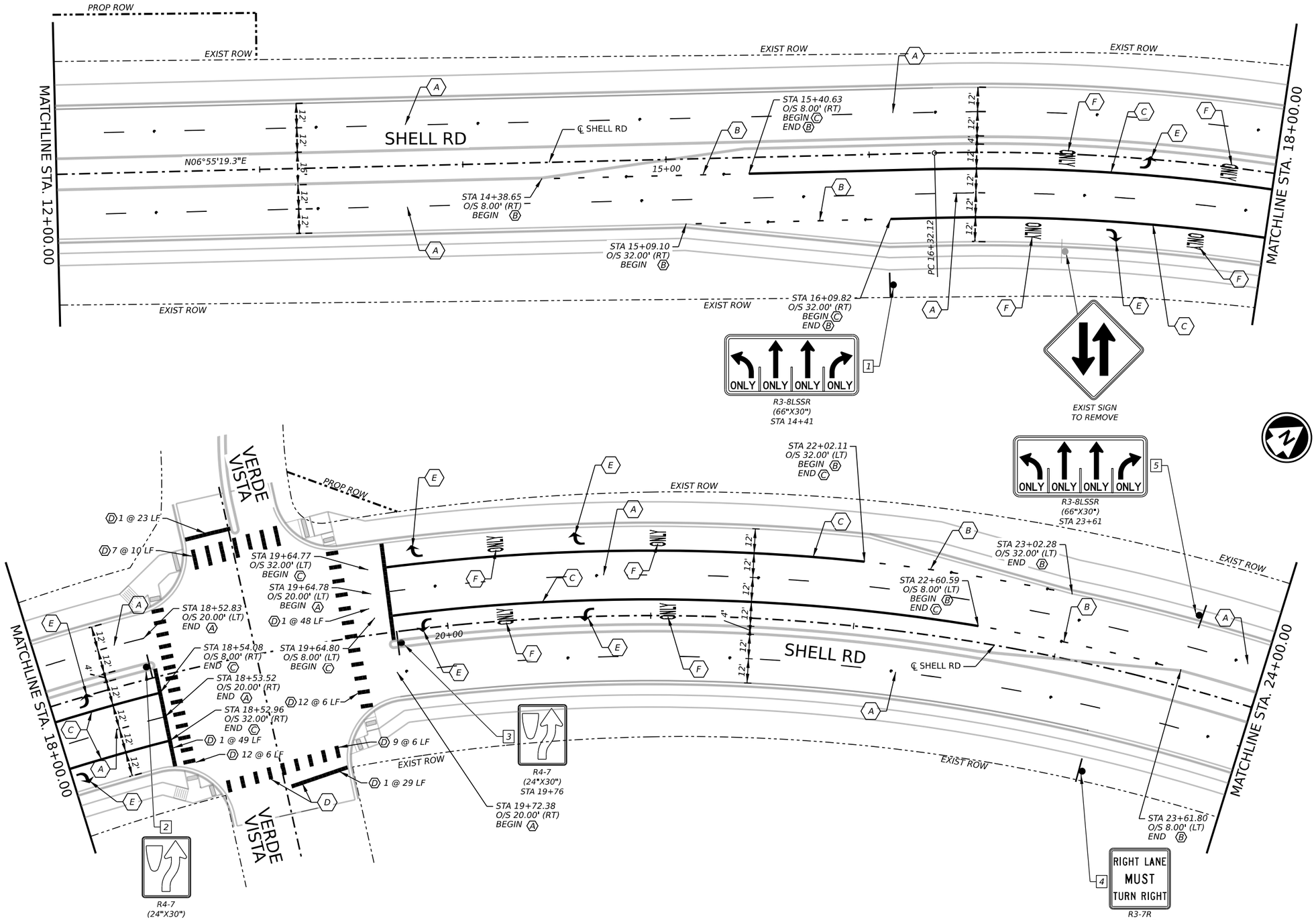

LEGEND

A	W 6" BRK W/ TY I-C @ 80' C-C
B	W 8" DOT W/ TY I-C @ 48' C-C
C	W 8" SOLID W/ TY I-C @ 20' C-C
D	W 24" SOLID
E	W ARROW
F	W WORD
G	Y 6" SOLID
H	Y 6" DBL SOLID W/ TY II-A-A @ 40' C-C
I	W 6" SOLID

- (#) REMOVE EXIST & INSTALL NEW SIGN
- [#] PROPOSED NEW SIGN
- PROPOSED SIGN POST
- DIRECTION OF TRAFFIC

0 25 50
SCALE: 1" = 50'

STATE OF TEXAS
ELENA RAMON
141765
LICENSED
PROFESSIONAL ENGINEER
3/12/2025

EST.1848 GEORGETOWN TEXAS

BGE, Inc.
101 West Louis Henna Blvd, Suite 400, Austin, TX 78728
Tel: 512-879-0400 • www.bgeinc.com
TBPE Registration No. F-1046

SHELL ROAD

SIGNING AND PAVEMENT MARKING LAYOUT

SHEET 2 OF 10

SHEET NO. 241

DATE: 3/12/2025 3:12:33 PM
FILE: G:\TXC\Projects\City Georgetown\10767-00 Shell Road\03_CADD\01 Shts\08-SPMD\Shell_SPMD_02.dgn

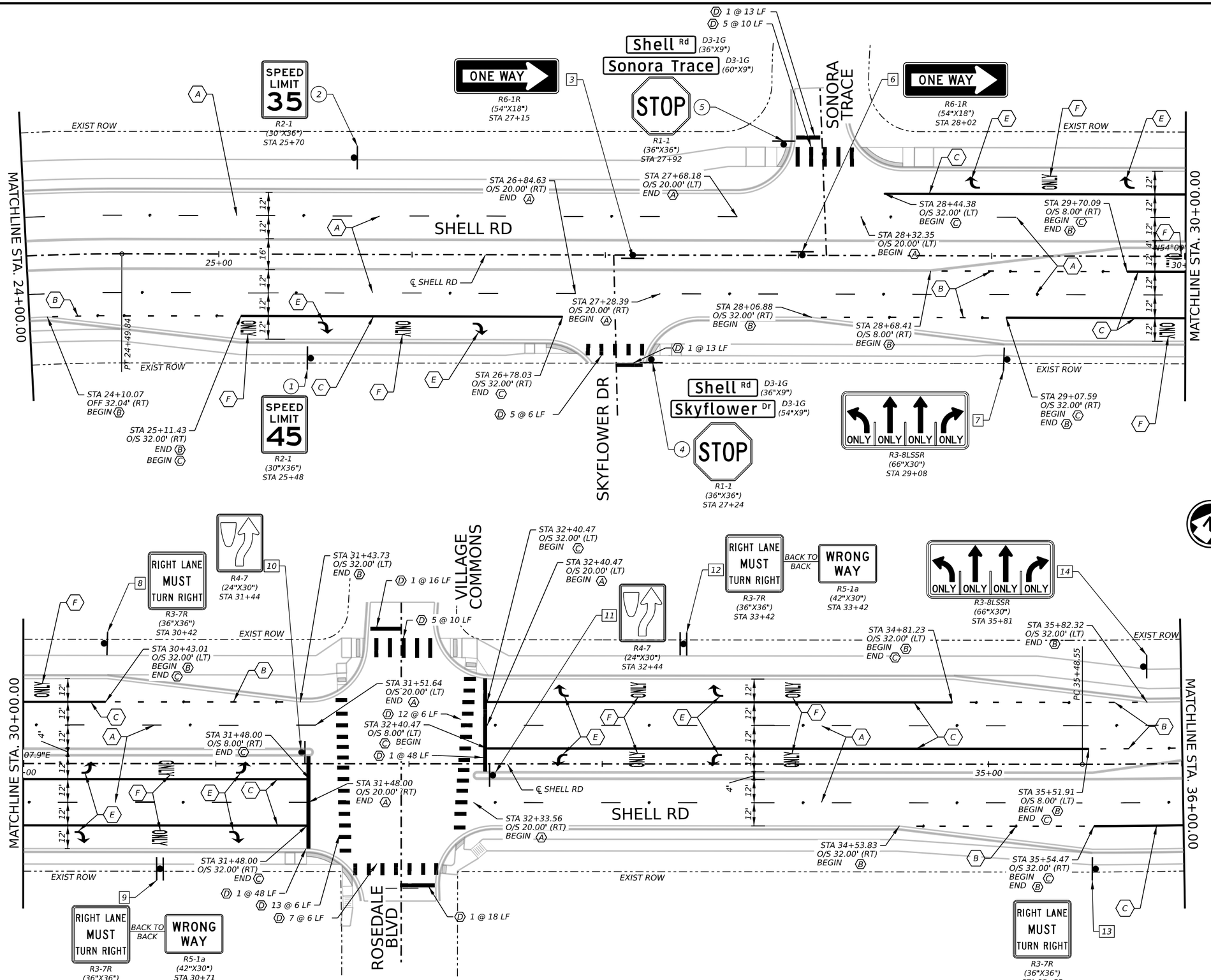

LEGEND

A	W 6" BRK W/ TY I-C @ 80' C-C
B	W 8" DOT W/ TY I-C @ 48' C-C
C	W 8" SOLID W/ TY I-C @ 20' C-C
D	W 24" SOLID
E	W ARROW
F	W WORD
G	Y 6" SOLID
H	Y 6" DBL SOLID W/ TY II-A-A @ 40' C-C
I	W 6" SOLID

- (#) REMOVE EXIST & INSTALL NEW SIGN
- [#] PROPOSED NEW SIGN
- PROPOSED SIGN POST
- DIRECTION OF TRAFFIC

0 25 50

SCALE: 1" = 50'

STATE OF TEXAS
ELENA RAMON
141765
LICENSED
PROFESSIONAL ENGINEER

Elena Ramon

3/12/2025

EST.1848 GEORGETOWN TEXAS

BGE, Inc.
101 West Louis Henna Blvd, Suite 400, Austin, TX 78728
Tel: 512-879-0400 • www.bgeinc.com
TBPE Registration No. F-1046

SHELL ROAD

SIGNING AND PAVEMENT MARKING LAYOUT

SHEET 3 OF 10

SHEET NO. 242

DATE: 3/12/2025 3:12:41 PM
FILE: G:\TXC\Projects\City Georgetown\10767-00 Shell Road\03 CADD\01_Shts\08-SPMD\Shell_SPMD_03.dgn

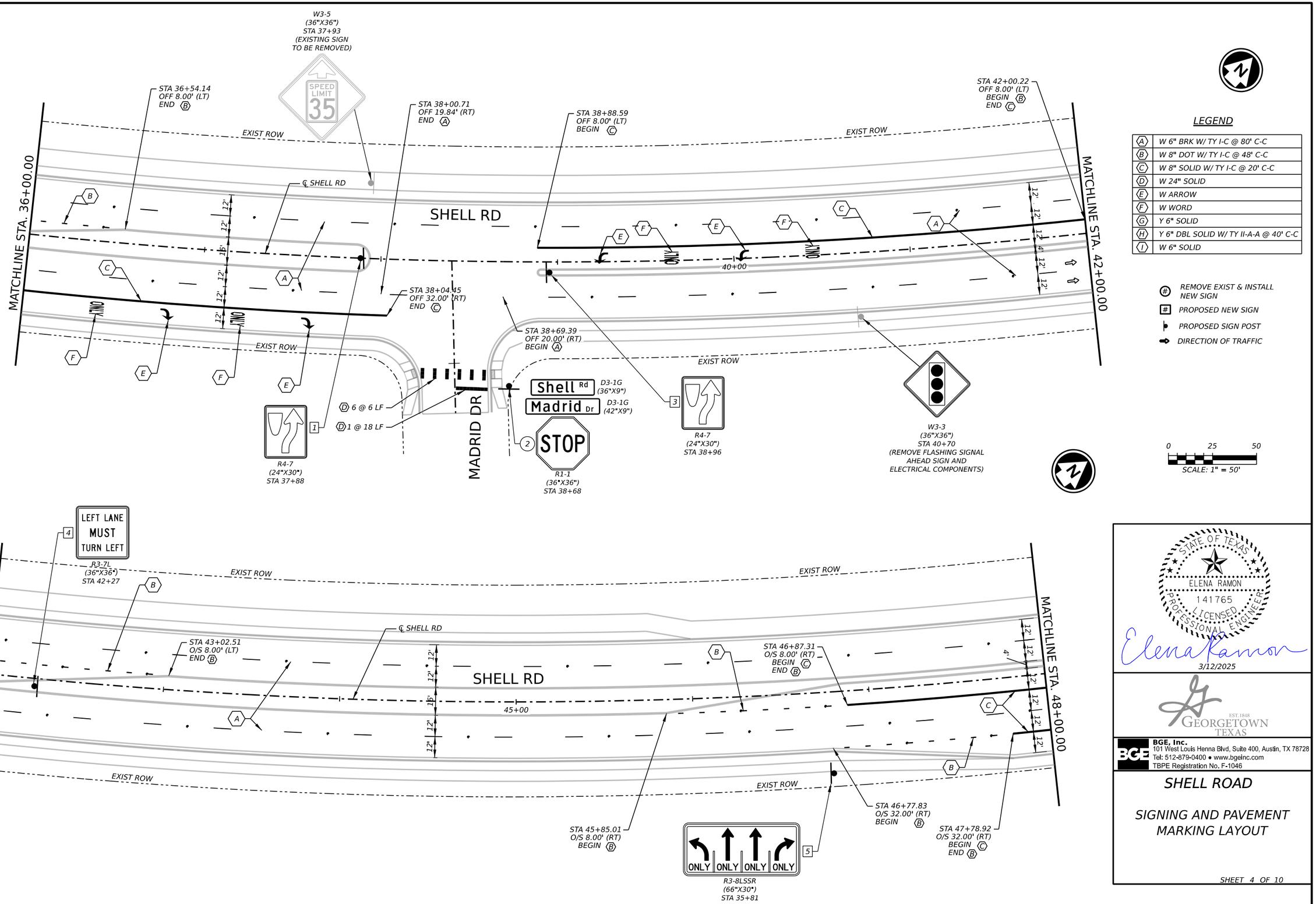

STATE OF TEXAS
ELENA RAMON
141765
LICENSED PROFESSIONAL ENGINEER

3/12/2025

EST.1848 GEORGETOWN TEXAS

BGE, Inc.
101 West Louis Henna Blvd, Suite 400, Austin, TX 78728
Tel: 512-879-0400 • www.bgeinc.com
TBPE Registration No. F-1046

SHELL ROAD

SIGNING AND PAVEMENT MARKING LAYOUT

SHEET 4 OF 10

SHEET NO. 243

DATE: 3/12/2025 3:12:49 PM
FILE: G:\TXC\Projects\City Georgetown\10767-00 Shell Road\03_CADD\01 Shts\08-SPMD\Shell_SPMD_04.dgn

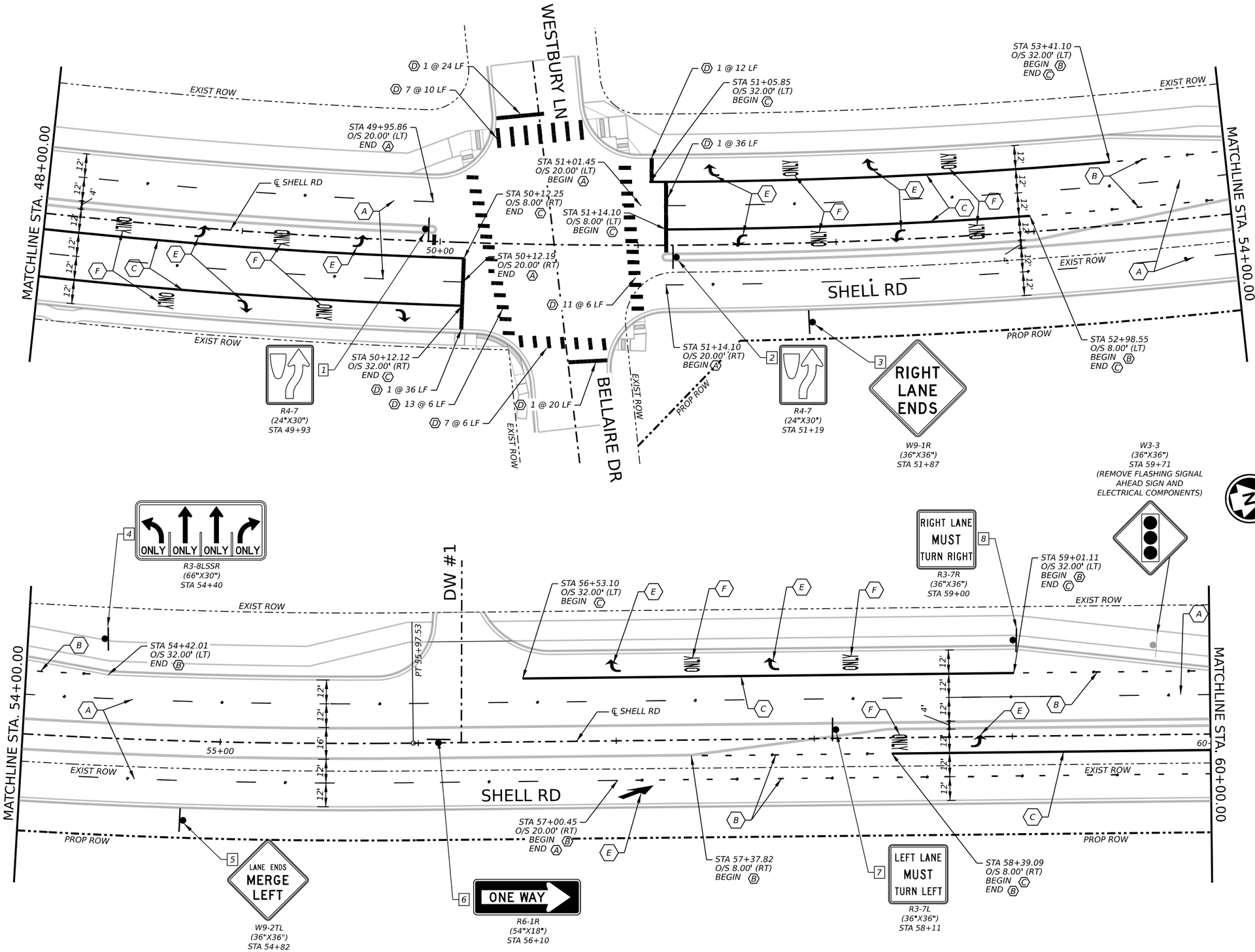

LEGEND

A	W 6" BRK W/ TY I-C @ 80' C-C
B	W 8" DOT W/ TY I-C @ 48' C-C
C	W 8" SOLID W/ TY I-C @ 20' C-C
D	W 24" SOLID
E	W ARROW
F	W WORD
G	Y 6" SOLID
H	Y 6" DBL SOLID W/ TY II-A-A @ 40' C-C
I	W 6" SOLID

- (#) REMOVE EXIST & INSTALL NEW SIGN
- [#] PROPOSED NEW SIGN
- PROPOSED SIGN POST
- DIRECTION OF TRAFFIC

0 25 50
SCALE: 1" = 50'

STATE OF TEXAS
ELENA RAMON
141765
LICENSED PROFESSIONAL ENGINEER
3/12/2025

EST.1848 GEORGETOWN TEXAS

BGE, Inc.
101 West Louis Henna Blvd, Suite 400, Austin, TX 78728
Tel: 512-879-0400 • www.bgeinc.com
TBPE Registration No. F-1046

SHELL ROAD

SIGNING AND PAVEMENT MARKING LAYOUT

SHEET 5 OF 10

SHEET NO. 244

DATE: 3/12/2025 3:12:56 PM
FILE: G:\TXC\Projects\City Georgetown\10767-00 Shell Road\03_CADD\01 Shts\08-SPMD\Shell_SPMD_05.dgn

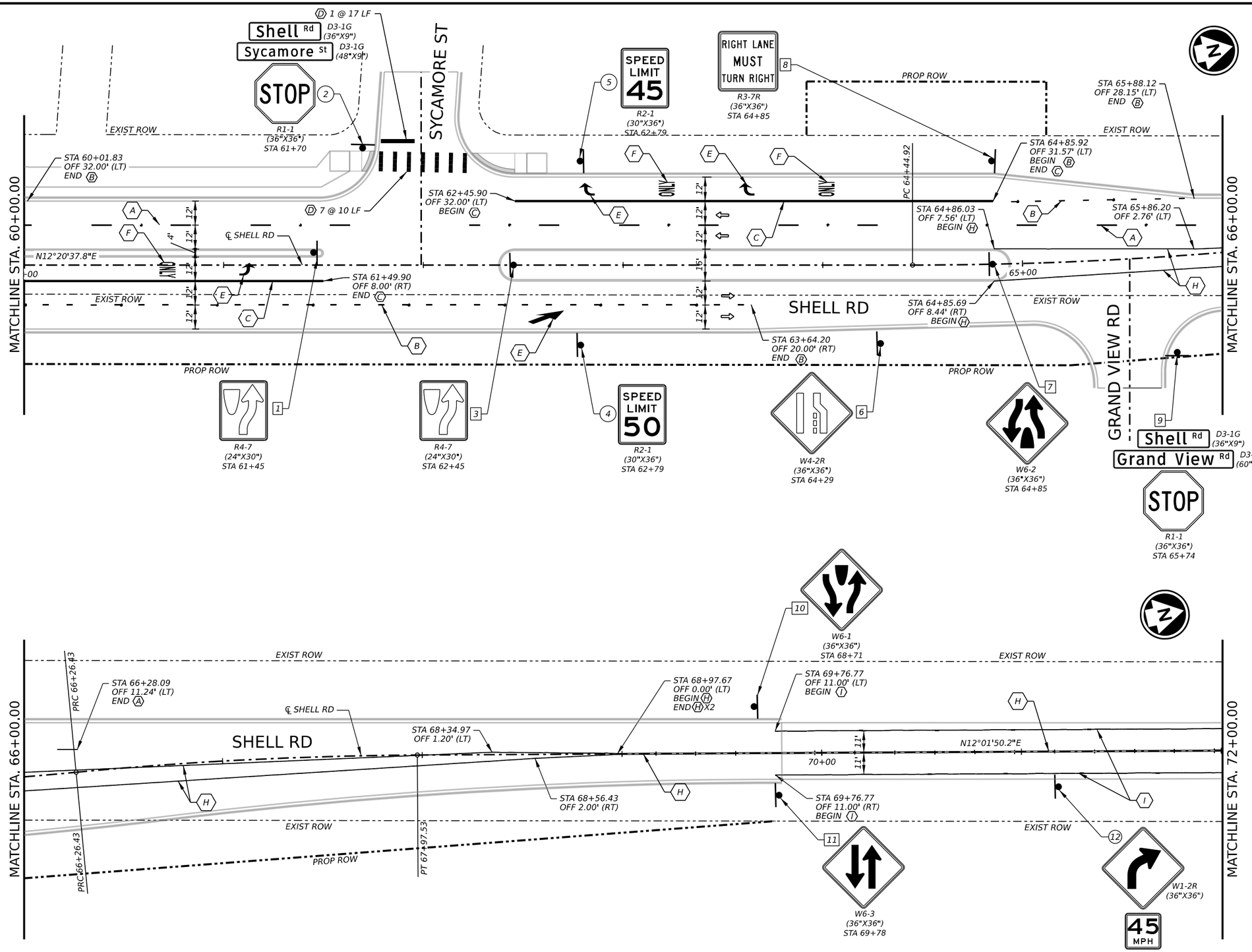

LEGEND

A	W 6" BRK W/ TY I-C @ 80' C-C
B	W 8" DOT W/ TY I-C @ 48' C-C
C	W 8" SOLID W/ TY I-C @ 20' C-C
D	W 24" SOLID
E	W ARROW
F	W WORD
G	Y 6" SOLID
H	Y 6" DBL SOLID W/ TY II-A-A @ 40' C-C
I	W 6" SOLID

REMOVE EXIST & INSTALL NEW SIGN

PROPOSED NEW SIGN

PROPOSED SIGN POST

DIRECTION OF TRAFFIC

STATE OF TEXAS
ELENA RAMON
141765
LICENSED PROFESSIONAL ENGINEER

3/12/2025

GEORGETOWN TEXAS EST.1848

BGE, Inc.
101 West Louis Henna Blvd, Suite 400, Austin, TX 78728
Tel: 512-879-0400 • www.bgeinc.com
TBPE Registration No. F-1046

SHELL ROAD

SIGNING AND PAVEMENT MARKING LAYOUT

SHEET 6 OF 10

SHEET NO. 245

DATE: 3/12/2025 3:13:05 PM
FILE: G:\TXC\Projects\City Georgetown\10767-00 Shell Road\03_CADD\01 Shts\08-SPMD\Shell_SPMD_06.dgn

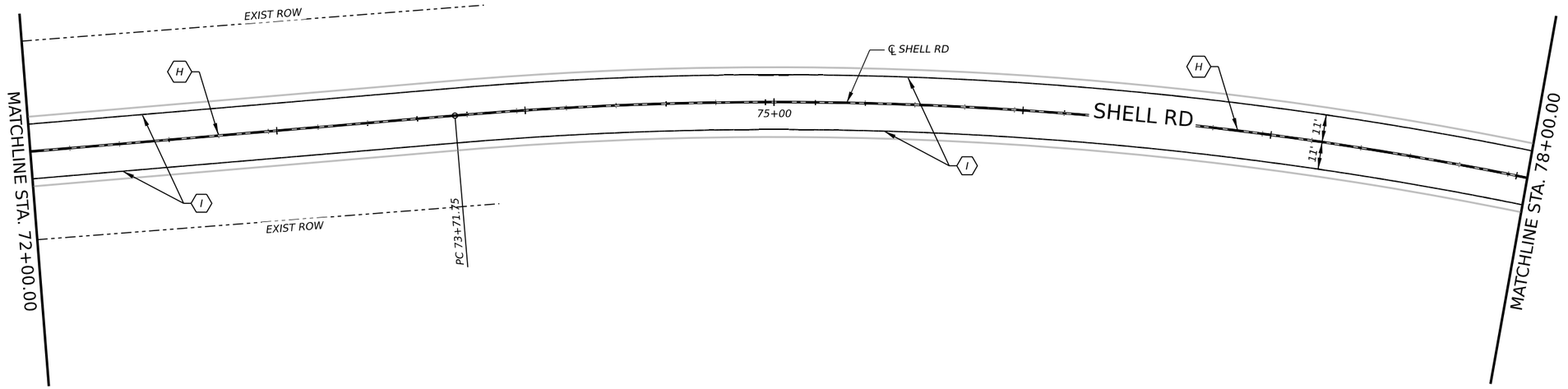

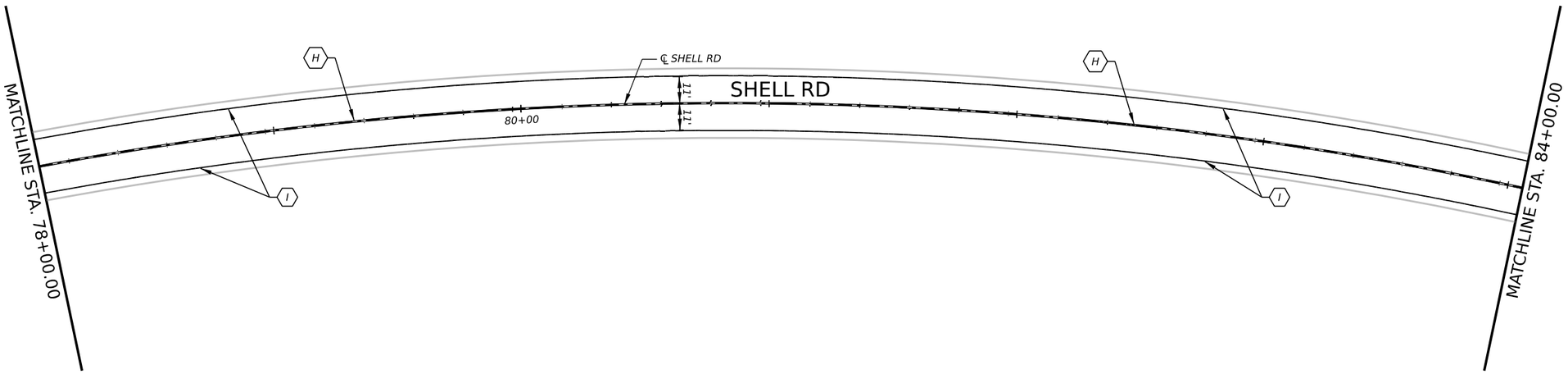

LEGEND

A	W 6" BRK W/ TY I-C @ 80' C-C
B	W 8" DOT W/ TY I-C @ 48' C-C
C	W 8" SOLID W/ TY I-C @ 20' C-C
D	W 24" SOLID
E	W ARROW
F	W WORD
G	Y 6" SOLID
H	Y 6" DBL SOLID W/ TY II-A-A @ 40' C-C
I	W 6" SOLID

REMOVE EXIST & INSTALL NEW SIGN

PROPOSED NEW SIGN

PROPOSED SIGN POST

DIRECTION OF TRAFFIC

0 25 50

SCALE: 1" = 50'

STATE OF TEXAS
ELENA RAMON
141765
LICENSED
PROFESSIONAL ENGINEER

3/12/2025

EST.1848
GEORGETOWN
TEXAS

BGE, Inc.
101 West Louis Henna Blvd, Suite 400, Austin, TX 78728
Tel: 512-879-0400 • www.bgeinc.com
TBPE Registration No. F-1046

SHELL ROAD

SIGNING AND PAVEMENT MARKING LAYOUT

SHEET 7 OF 10

SHEET NO. 246

DATE: 3/12/2025 3:13:07 PM
FILE: G:\TXC\Projects\City Georgetown\10767-00 Shell Road\03_CADD\01 Shts\08-SPMD\Shell_SPMD_07.dgn

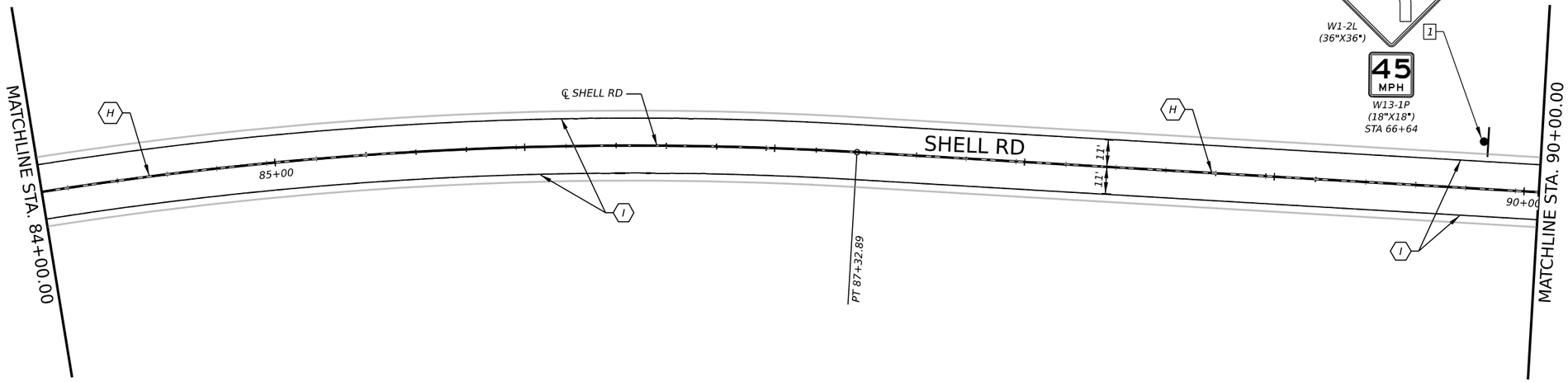

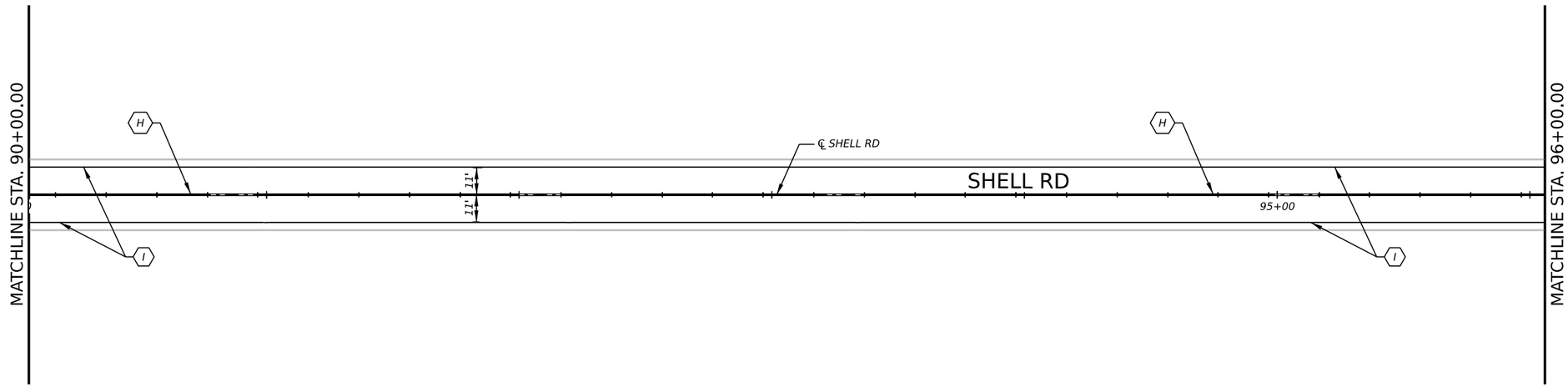

LEGEND

A	W 6" BRK W/ TY I-C @ 80' C-C
B	W 8" DOT W/ TY I-C @ 48' C-C
C	W 8" SOLID W/ TY I-C @ 20' C-C
D	W 24" SOLID
E	W ARROW
F	W WORD
G	Y 6" SOLID
H	Y 6" DBL SOLID W/ TY II-A-A @ 40' C-C
I	W 6" SOLID

- # REMOVE EXIST & INSTALL NEW SIGN
- # PROPOSED NEW SIGN
- PROPOSED SIGN POST
- DIRECTION OF TRAFFIC

0 25 50

SCALE: 1" = 50'

STATE OF TEXAS
ELENA RAMON
141765
LICENSED
PROFESSIONAL ENGINEER

Elena Ramon

3/12/2025

EST.1848 GEORGETOWN TEXAS

BGE, Inc.
101 West Louis Henna Blvd, Suite 400, Austin, TX 78728
Tel: 512-879-0400 • www.bgeinc.com
TBPE Registration No. F-1046

SHELL ROAD

SIGNING AND PAVEMENT MARKING LAYOUT

SHEET 8 OF 10

SHEET NO. 247

DATE: 3/12/2025 3:13:08 PM
FILE: G:\TXC\Projects\City Georgetown\10767-00 Shell Road\03 CADD\01 Shts\08-SPMD\Shell_SPMD_08.dgn

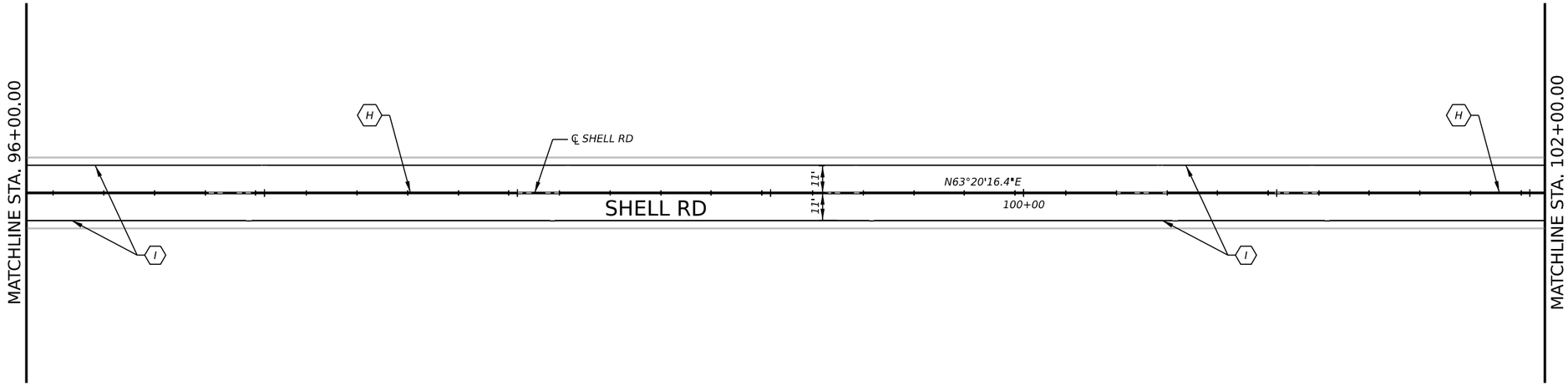

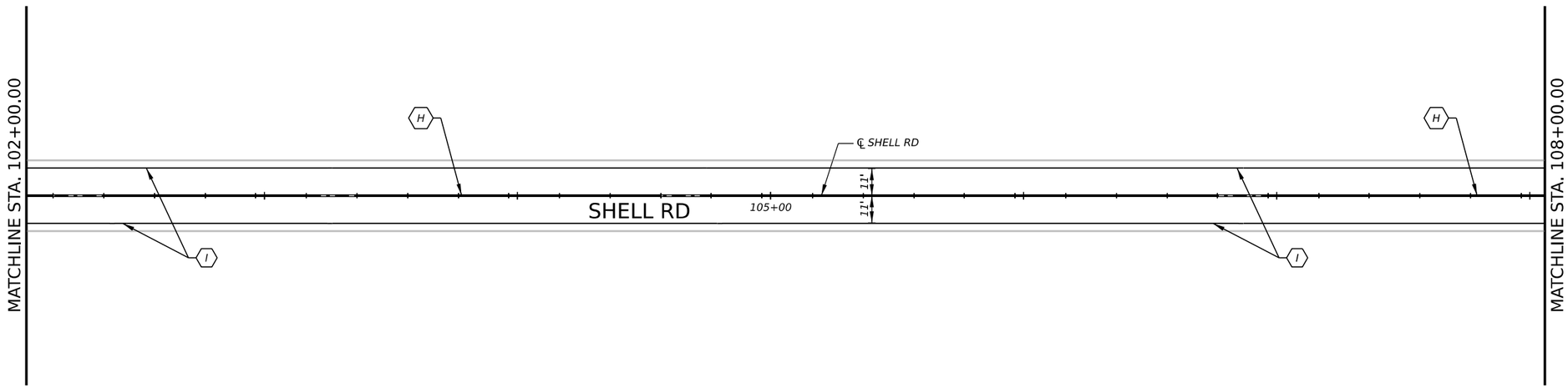

LEGEND

A	W 6" BRK W/ TY I-C @ 80' C-C
B	W 8" DOT W/ TY I-C @ 48' C-C
C	W 8" SOLID W/ TY I-C @ 20' C-C
D	W 24" SOLID
E	W ARROW
F	W WORD
G	Y 6" SOLID
H	Y 6" DBL SOLID W/ TY II-A-A @ 40' C-C
I	W 6" SOLID

REMOVE EXIST & INSTALL NEW SIGN

PROPOSED NEW SIGN

PROPOSED SIGN POST

DIRECTION OF TRAFFIC

0 25 50

SCALE: 1" = 50'

STATE OF TEXAS
ELENA RAMON
141765
LICENSED
PROFESSIONAL ENGINEER

3/12/2025

EST.1848 GEORGETOWN TEXAS

BGE, Inc.
101 West Louis Henna Blvd, Suite 400, Austin, TX 78728
Tel: 512-879-0400 • www.bgeinc.com
TBPE Registration No. F-1046

SHELL ROAD

SIGNING AND PAVEMENT MARKING LAYOUT

SHEET 9 OF 10

SHEET NO. 248

DATE: 3/12/2025 3:13:09 PM
FILE: G:\TX\Projects\City Georgetown\10767-00 Shell Road\03_CADD\01_Shts\08-SPMD\Shell_SPMD_09.dgn

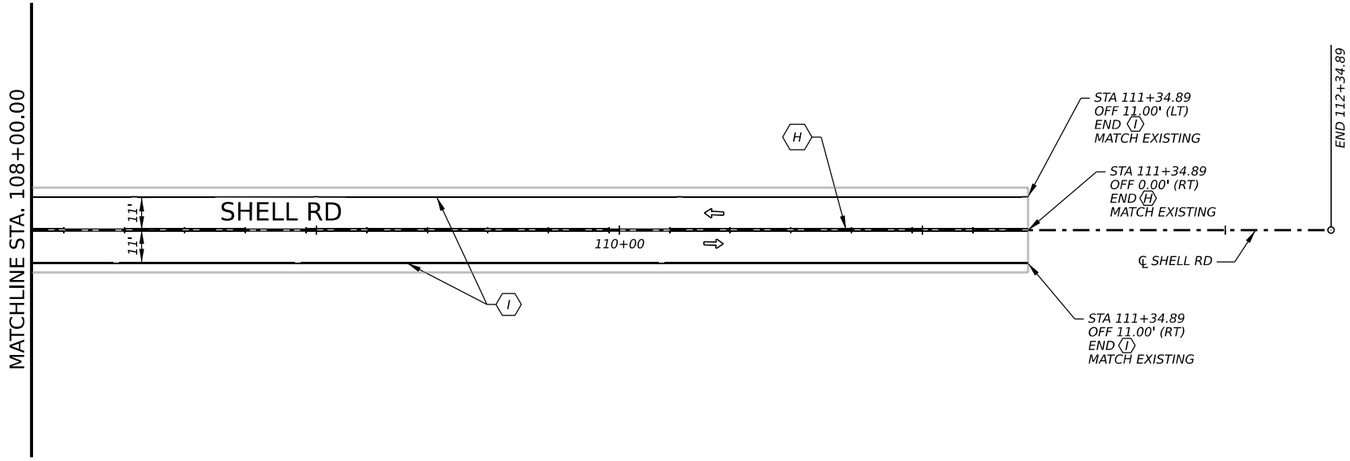

LEGEND

A	W 6" BRK W/ TY I-C @ 80' C-C
B	W 8" DOT W/ TY I-C @ 48' C-C
C	W 8" SOLID W/ TY I-C @ 20' C-C
D	W 24" SOLID
E	W ARROW
F	W WORD
G	Y 6" SOLID
H	Y 6" DBL SOLID W/ TY II-A-A @ 40' C-C
I	W 6" SOLID

(#) REMOVE EXIST & INSTALL NEW SIGN

[#] PROPOSED NEW SIGN

PROPOSED SIGN POST

DIRECTION OF TRAFFIC

0 25 50

SCALE: 1" = 50'

STATE OF TEXAS
ELENA RAMON
141765
LICENSED
PROFESSIONAL ENGINEER

3/12/2025

EST. 1848 GEORGETOWN TEXAS

BGE, Inc.
101 West Louis Henna Blvd, Suite 400, Austin, TX 78728
Tel: 512-879-0400 • www.bgeinc.com
TBPE Registration No. F-1046

SHELL ROAD

SIGNING AND PAVEMENT MARKING LAYOUT

SHEET 10 OF 10

SHEET NO. 249

DATE: 3/12/2025 3:13:10 PM
FILE: G:\TXC\Projects\City Georgetown\10767-00 Shell Road\03 CADD\01 Shts\08-SPMD\Shell_SPMD_10.dgn

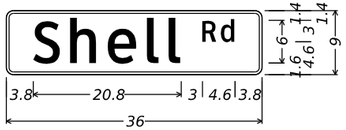

D3-1G(1) 4in;
1.0" Radius, 0.4" Border, White on Blue;
"Shell", ClearviewHwy-3-W;
"Rd", ClearviewHwy-3-W;

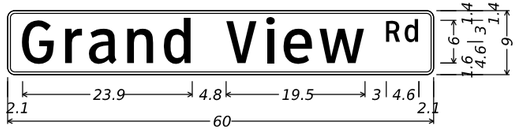

D3-1G(1) 4in;
1.0" Radius, 0.4" Border, White on Blue;
"Grand View", ClearviewHwy-3-W 90% spacing;
"Rd", ClearviewHwy-3-W;

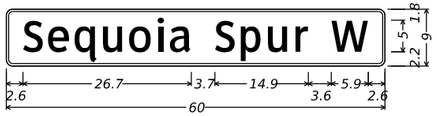

D3-1G(1) 4in;
1.0" Radius, 0.4" Border, White on Blue;
"Sequoia Spur W", ClearviewHwy-3-W 80% spacing;

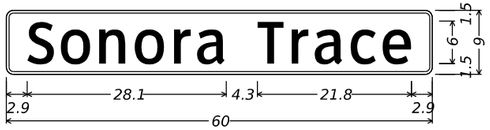

D3-1G(1) 4in;
1.0" Radius, 0.4" Border, White on Blue;
"Sonora Trace", ClearviewHwy-3-W 80% spacing;

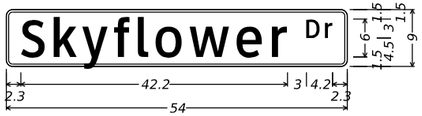

D3-1G(1) 4in;
1.0" Radius, 0.4" Border, White on Blue;
"Skyflower", ClearviewHwy-3-W;
"Dr", ClearviewHwy-3-W;

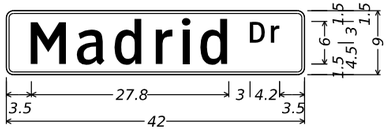

D3-1G(1) 4in;
1.0" Radius, 0.4" Border, White on Blue;
"Madrid", ClearviewHwy-3-W;
"Dr", ClearviewHwy-3-W;

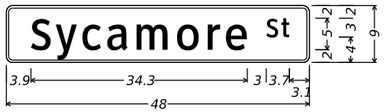

D3-1G(1) 4in;
1.0" Radius, 0.4" Border, White on Blue;
"Sycamore", ClearviewHwy-3-W;
"St", ClearviewHwy-3-W;



EST.1848
GEORGETOWN
TEXAS

BGE, Inc.
101 West Louis Henna Blvd, Suite 400, Austin, TX 78728
Tel: 512-879-0400 • www.bgeinc.com
TBPE Registration No. F-1046

SHELL ROAD

SMALL SIGN DETAIL

SHEET 1 OF 1

SHEET NO.
250

DATE: 3/12/2025 3:13:11 PM
FILE: G:\TXC\Projects\City Georgetown\10767-00 Shell Road\03 CADD\01 Shts\08-SPMD\Shell SIGN DTL 01.dgn

DISCLAIMER:
The use of this standard is governed by the "Texas Engineering Practice Act". No warranty of any kind is made by TxDOT for any purpose whatsoever. TxDOT assumes no responsibility for the conversion of this standard to other formats or for incorrect results or damages resulting from its use.

DATE: 3/12/2025 3:13:12 PM
FILE: G:\TXC\Projects\City_Georgetown\10767-00 Shell Road\03_CADD\01_Shts\06-SHMD-STDS-20dom1-20.dgn

REFLECTOR UNIT SIZES FOR DELINEATORS AND OBJECT MARKERS

	SIZE 1	SIZE 2	SIZE 3	SIZE 4
DEVICE	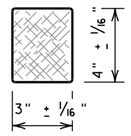	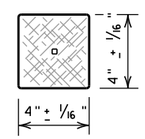	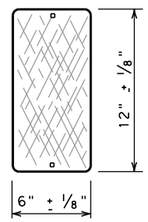	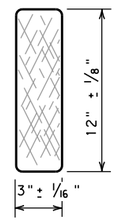
SHEETING	Yellow, White or Red Type B or C reflective sheeting			
NOTE	1. Size 1 and 4 - Direct applied reflective sheeting for use on flexible post (flx). 2. Size 2 and 3 - For use on wing channel (wc) post only. Use approved metal, plastic or fiberglass backplate with 17/64" mounting holes.			

DELINEATORS

	SINGLE		DOUBLE	
DEVICE	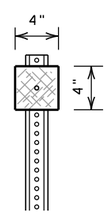	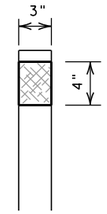	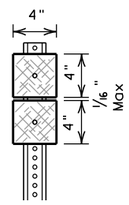	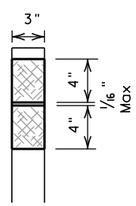
	1-Size 2 reflector unit	1-Size 1 reflector unit	2-Size 2 reflector units	2-Size 1 reflector units
SHEETING	Yellow, White or Red Type B or C Reflective Sheeting			
POST TYPE	WC	YFLX, WFLX	WC	YFLX, WFLX
MOUNT TYPE	GND	GND, SRF	GND	GND, SRF

D & OM DESCRIPTIVE CODES

INSTL DEL ASSM (D-XX)SZ X (XXXX)XXX(XX)

NUMBER OF REFLECTORS
S = Single
D = Double

COLOR OF REFLECTORS
W = White
Y = Yellow
R = Red

REFLECTOR UNIT SIZE
1 or 2

TYPE OF POST OR DELINEATOR
WC = Wing Channel Post
YFLX = Yellow Flexible Post
WFLX = White Flexible Post
BRF = Barrier Reflector

TYPE OF MOUNT
GND = Embedded (drivable or set in concrete)
CTB = Concrete Barrier Mount
GF1 or GF2 = Guard Fence Attachment
SRF = Surface Mount

DIRECTION
If Required
BI = Bi-Directional
BR = Bi-Directional with red on back

INSTL OM ASSM (OM-XX) (XXXX)XXX(XX)

TYPE OF OBJECT MARKER
1, 2, 3, or 4

NUMBER OF REFLECTORS OR DIRECTION
X = 3-Size 2 reflector units (Type 2 only)
Y = 1-Size 3 reflector unit (Type 2 only)
Z = 3-Size 1 or 1-Size 4 reflector unit(s) (Type 2 only)
L = Left Side (Type 3 Object Marker only)
R = Right Side (Type 3 Object Marker only)
C = Center (Type 3 Object Marker only)

TYPE OF POST
WC = Wing Channel Post
WFLX = White Flexible Post
TWT = Thin Walled Tubing

TYPE OF MOUNT
GND = Embedded (drivable)
SRF = Surface Mount
WAS = Wedge Anchor Steel
WAP = Wedge Anchor Plastic

DIRECTION
If Required
BI = Bi-Directional

OBJECT MARKERS

	Type 1 (OM-1)	Type 2 (OM-2)			Type 3 (OM-3)			Type 4 (OM-4)
	OM-1	OM-2X	OM-2Y	OM-2Z	OM-3L	OM-3R	OM-3C	OM-4
DEVICE	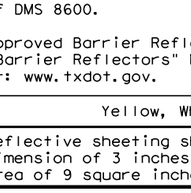	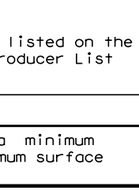 3-Size 2 reflector units	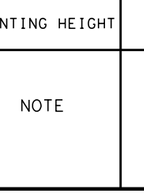 1-Size 3 reflector unit	 3-Size 1 reflector units or 1-Size 4 reflector unit	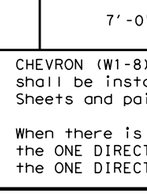	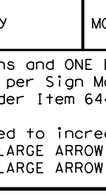	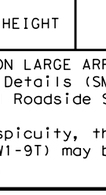	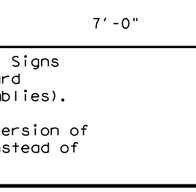
SHEETING	Yellow-Type B_{FL} or C_{FL} Sheeting	Yellow - Type B or C Sheeting			Alternating acrylic black and retroflective yellow - Type B_{FL} or C_{FL} Sheeting			Red -Type B_{FL} or C_{FL} Sheeting
POST TYPE	TWT	WC	WC	WFLX	TWT			TWT
MOUNT TYPE	WAS, WAP	GND	GND	GND, SRF	WAS, WAP			WAS, WAP

DEPARTMENTAL MATERIAL SPECIFICATIONS

FLEXIBLE DELINEATOR & OBJECT MARKER POSTS (EMBEDDED & SURFACE MOUNT TYPES)	DMS-4400
SIGN FACE MATERIALS	DMS-8300
DELINEATORS, OBJECT MARKERS AND BARRIER REFLECTORS	DMS-8600

BARRIER REFLECTORS (BRF)

	GF1	GF2	CTB
DEVICE	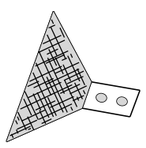		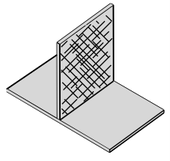
	1. Barrier reflectors shall meet the requirements of DMS 8600. 2. Approved Barrier Reflectors are listed on the "Barrier Reflectors" Material Producer List at: www.txdot.gov.		
SHEETING	Yellow, White, Red		
NOTE	1. Reflective sheeting shall have a minimum dimension of 3 inches and minimum surface area of 9 square inches.		

CHEVRONS

DEVICE	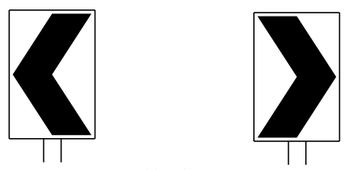 W1-8			
SIZE (W x L)	18"x 24" (Conventional)	24"x 30" (Conventional Oversize)	30"x 36" (Expressway)	36" x 48" (Freeway)
MOUNTING HEIGHT	4'-0" or 7'-0"		7'-0" Only	
NOTE	1. CHEVRON (W1-8) signs and ONE DIRECTION LARGE ARROW (W1-6) Signs shall be installed per Sign Mounting Details (SMD) Standard Sheets and paid under Item 644 (Small Roadside Sign Assemblies). 2. When there is a need to increase conspicuity, the Texas version of the ONE DIRECTION LARGE ARROW sign (W1-9T) may be used instead of the ONE DIRECTION LARGE ARROW (W1-6).			

ONE DIRECTION LARGE ARROW

DEVICE	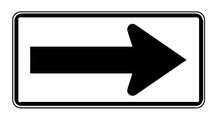 W1-6	
SIZE (W x L)	48" x 24" (Conventional)	60" x 30" (Expressway & Freeway)
MOUNTING HEIGHT	7'-0"	

NOTE:

Delineator and object marker substrates and sign substrates shall be 0.080" Aluminum sign blank to conform to ASTM B-209 Alloy 6061-T6 or approved alternative.

Texas Department of Transportation

Traffic Safety Division Standard

DELINEATOR & OBJECT MARKER MATERIAL DESCRIPTION

D & OM(1)-20

FILE: dom1-20.dgn	DN: TXDOT	CK: TXDOT	DW: TXDOT	CK: TXDOT
©TxDOT August 2004	CONT	SECT	JOB	HIGHWAY
REVISIONS				
10-09 3-15	DIST	COUNTY		SHEET NO.
4-10 7-20				251

20A

DISCLAIMER:
The use of this standard is governed by the "Texas Engineering Practice Act". No warranty of any kind is made by TxDOT for any purpose whatsoever. TxDOT assumes no responsibility for the conversion of this standard to other formats or for incorrect results or damages resulting from its use.

DATE: 3/12/2025 3:13:12 PM
FILE: G:\TXC\Projects\City_Georgetown\10767-00 Shell Road\03_CADD\01_Shts\06-SHMS\dom2-20.dgn

POST TYPE AND SUPPORT FOUNDATION DETAILS

WING CHANNEL (WC)

GND

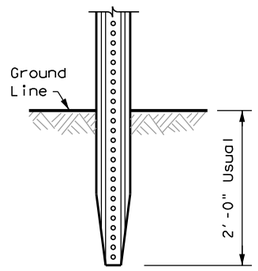

NOTES

1. Embedded Wing Channel (WC) post option may be used for Type 2 Object Markers and Delineators only.
2. 1.12 lbs/ft steel per ASTM A 1011 SS Gr. 50, or ASTM A499.

FLEXIBLE POSTS (YFLX, WFLX)

GND

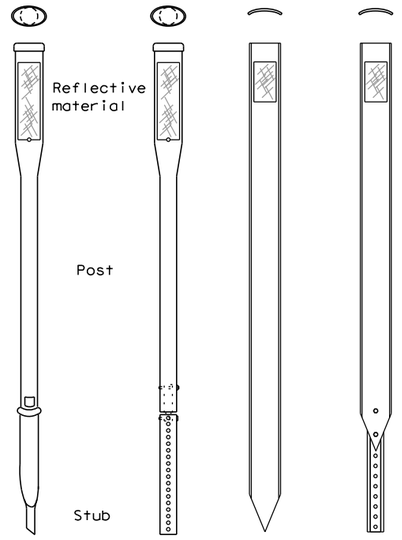

EMBEDDED

SRF

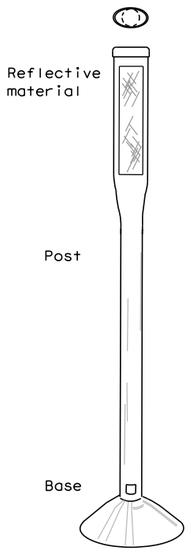

SURFACE MOUNT

NOTES

1. See "Flexible Delineator and Object Marker Posts" Material Producer List for approved devices.
2. Install per manufacturer's recommendations.
3. Post length may vary to meet field conditions.
4. When using yellow delineators with flexible posts to separate opposing direction of travel, such as centerline or median use, the flexible posts shall be yellow.

WEDGE ANCHOR SYSTEMS

WAS

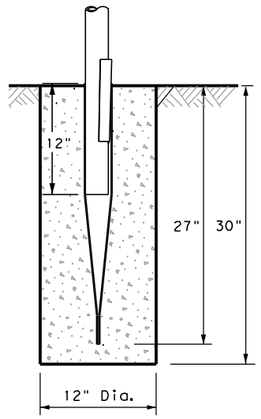

STEEL

WAP

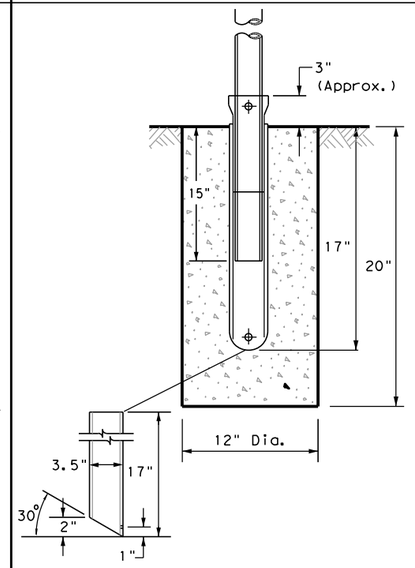

PLASTIC

NOTE

1. Install per manufacturer's recommendations.

TYPE OF BARRIER MOUNTS

GUARD FENCE ATTACHMENT

GF1

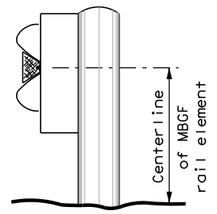

GF2

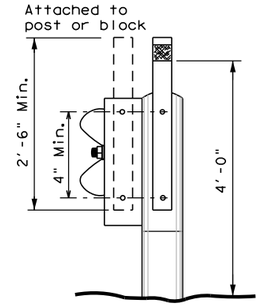

CONCRETE TRAFFIC BARRIER (CTB)

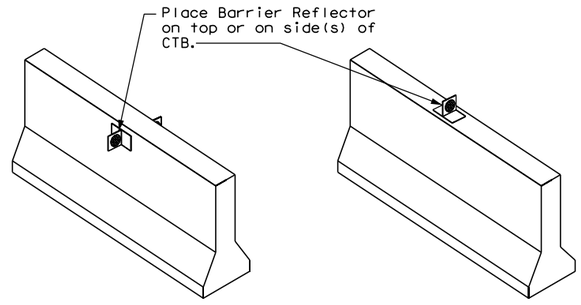

GENERAL NOTES

1. Place delineators on a section of roadway at a consistent distance from the edge of pavement.
2. Where a restriction prevents consistent placement from the pavement edge, place the affected object markers in line with the innermost edge of the obstruction.
3. When Type 2 object markers and delineators are more than 8'-0" from the edge of the pavement, it may not be possible to maintain a height of approximately 4'-0". If this is the case, place the object marker or delineator as close to the desired height as possible.
4. Install all delineators, object markers and barrier reflectors in accordance with the manufacturer's recommendation.
5. Barrier reflectors should be installed a minimum of 18 inches above the edge of the pavement surface.
6. Diagonal stripes on Type 3 object markers shall slope down toward the intended travel lane.

TYPES 1, 3, AND 4 OBJECT MARKERS AND CHEVRONS

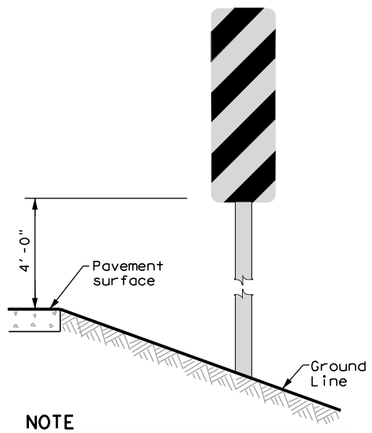

NOTE

Mounting at 4 feet to the bottom of the chevron is permitted for chevrons that will not exceed a height of 6'-6" to the top of the chevron (sizes 24" x 30" and smaller)

CHEVRONS AND ONE DIRECTION LARGE ARROW SIGN

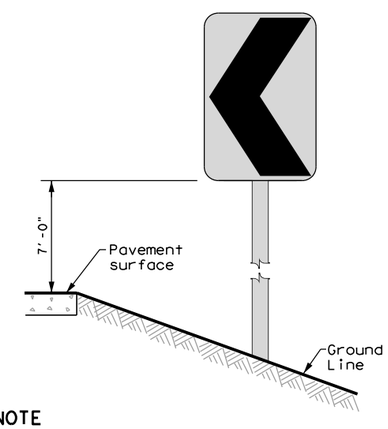

NOTE

Chevrons 30" x 36" and larger shall be mounted at a height of 7' to the bottom of the chevron. Chevron sign and ONE DIRECTION LARGE ARROW sign (W1-9T) shall be installed per SMD standard sheets and paid under item 644.

DELINEATORS AND TYPE 2 OBJECT MARKERS

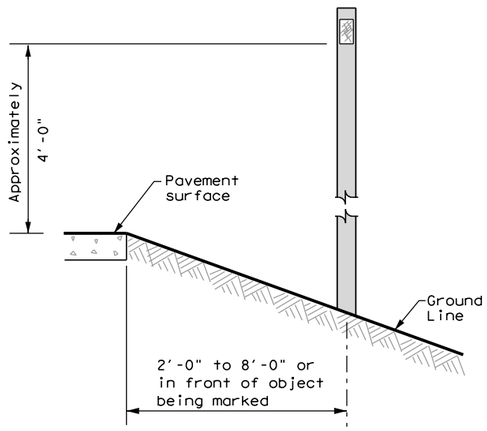

See general notes 1, 2 and 3.

Texas Department of Transportation

Traffic Safety Division Standard

DELINEATOR & OBJECT MARKER INSTALLATION

D & OM(2)-20

FILE: dom2-20.dgn	DN: TXDOT	CK: TXDOT	DW: TXDOT	CK: TXDOT
©TxDOT August 2004	CONT	SECT	JOB	HIGHWAY
REVISIONS				
10-09 3-15	DIST	COUNTY		SHEET NO.
4-10 7-20				252

20B

DISCLAIMER:
The use of this standard is governed by the "Texas Engineering Practice Act". No warranty of any kind is made by TxDOT for any purpose whatsoever. TxDOT assumes no responsibility for the conversion of this standard to other formats or for incorrect results or damages resulting from its use.

DATE: 3/12/2025 3:13:16 PM
FILE: G:\TXC\Projects\City_Georgetown\10767-00 Shell Road\03_CADD\01_Shts\06-SHMD-STDGdm3-20.dgn

MINIMUM WARNING DEVICES AT CURVES WITH ADVISORY SPEEDS

Amount by which Advisory Speed is less than Posted Speed	Curve Advisory Speed	
	Turn (30 MPH or less)	Curve (35 MPH or more)
5 MPH & 10 MPH	• RPMs	• RPMs
15 MPH & 20 MPH	• RPMs and One Direction Large Arrow sign	• RPMs and Chevrons; or • RPMs and One Direction Large Arrow sign where geometric conditions or roadside obstacles prevent the installation of chevrons.
25 MPH & more	• RPMs and Chevrons; or • RPMs and One Direction Large Arrow sign where geometric conditions or roadside obstacles prevent the installation of chevrons	• RPMs and Chevrons

SUGGESTED SPACING FOR DELINEATORS ON HORIZONTAL CURVES

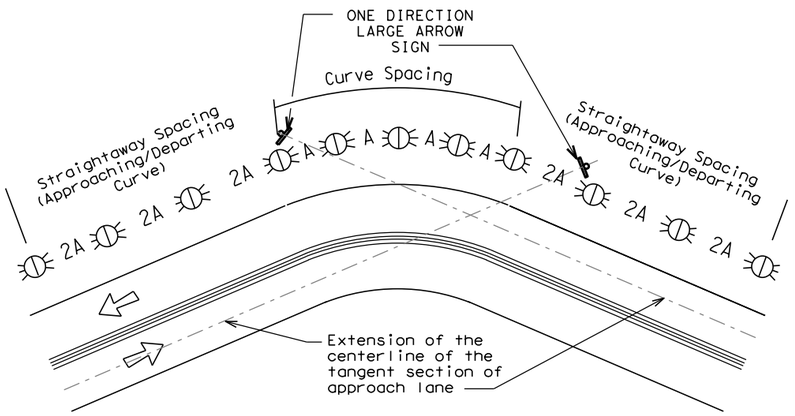

NOTE

ONE DIRECTION LARGE ARROW (W1-6) sign should be located at approximately and perpendicular to the extension of the centerline of the tangent section of approach lane.

SUGGESTED SPACING FOR CHEVRONS ON HORIZONTAL CURVES

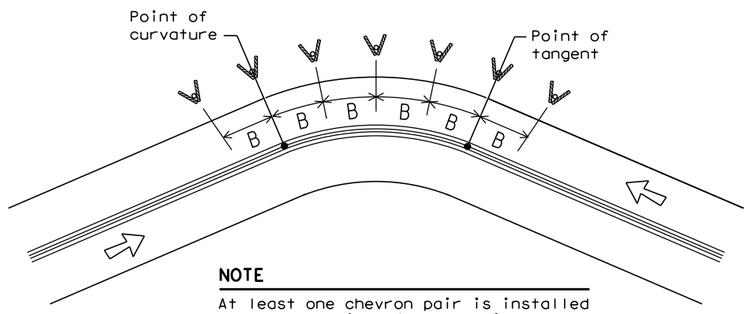

NOTE

At least one chevron pair is installed beyond the point of tangent in tangent section.

DELINEATOR AND CHEVRON SPACING

WHEN DEGREE OF CURVE OR RADIUS IS KNOWN

Degree of Curve	FEET			
	Radius of Curve	Spacing in Curve	Spacing in Straightaway	Chevron Spacing in Curve
		A	2A	B
1	5730	225	450	——
2	2865	160	320	——
3	1910	130	260	200
4	1433	110	220	160
5	1146	100	200	160
6	955	90	180	160
7	819	85	170	160
8	716	75	150	160
9	637	75	150	120
10	573	70	140	120
11	521	65	130	120
12	478	60	120	120
13	441	60	120	120
14	409	55	110	80
15	382	55	110	80
16	358	55	110	80
19	302	50	100	80
23	249	40	80	80
29	198	35	70	40
38	151	30	60	40
57	101	20	40	40

Curve delineator approach and departure spacing should include 3 delineators spaced at 2A. This spacing should be used during design preparation or when the degree of curve is known.

DELINEATOR AND CHEVRON SPACING

WHEN DEGREE OF CURVE OR RADIUS IS NOT KNOWN

Advisory Speed (MPH)	Spacing in Curve	Spacing in Straightaway	Chevron Spacing in Curve
	A	2xA	B
65	130	260	200
60	110	220	160
55	100	200	160
50	85	170	160
45	75	150	120
40	70	140	120
35	60	120	120
30	55	110	80
25	50	100	80
20	40	80	80
15	35	70	40

If the degree of curve is not known, delineator spacing may be determined based on the Advisory Speed of the curve. Use the delineator curve spacing for each Advisory Speed (MPH).

DELINEATOR AND OBJECT MARKER APPLICATION AND SPACING

CONDITION	REQUIRED TREATMENT	MINIMUM SPACING
Frwy./Exp. Tangent	RPMs	See PM-series and FPM-series standard sheets
Frwy./Exp. Curve	Single delineators on right side	See delineator spacing table
Frwy/Exp.Ramp	Single delineators on at least one side of ramp (should be on outside of curves) (see Detail 3 on D&OM(4))	100 feet on ramp tangents Use delineator spacing table for ramp curves ("straightway spacing" does not apply to ramp curves)
Acceleration/Deceleration Lane	Double delineators (see Detail 3 on D&OM(4))	100 feet (See Detail 3 on D & OM (4))
Truck Escape Ramp	Single red delineators on both sides	50 feet
Bridge Rail (steel or concrete)and Metal Beam Guard Fence	Bi-Directional Delineators when undivided with one lane each direction Single Delineators when multiple lanes each direction	Equal spacing (100'max) but not less than 3 delineators
Concrete Traffic Barrier (CTB) or Steel Traffic Barrier	Barrier reflectors matching the color of the edge line	Equal spacing 100' max
Cable Barrier	Reflectors matching the color of the edge line	Every 5th cable barrier post (up to 100'max)
Guard Rail Terminus/Impact Head	Divided highway - Object marker on approach end Undivided 2-lane highways - Object marker on approach and departure end	Requires reflective sheeting provided by manufacturer per D & OM (VIA) or a Type 3 Object Marker (OM-3) in front of the terminal end See D & OM (5) and D & OM (6)
Bridges with no Approach Rail	Type 3 Object Marker (OM-3) at end of rail and 3 single delineators approaching rail	See D & OM(5)
Reduced Width Approaches to Bridge Rail	Type 2 and Type 3 Object Markers (OM-3) and 3 single delineators approaching bridge	Requires reflective sheeting provided by manufacturer per D & OM (VIA) or a Type 3 Object Marker (OM-3) in front of the terminal end See D & OM (5)
Culverts without MBGF	Type 2 Object Markers	See Detail 2 on D & OM(4)
Crossovers	Double yellow delineators and RPMs	See Detail 1 on D & OM (4)
Pavement Narrowing (lane merge) on Freeways/Expressway	Single delineators adjacent to affected lane for full length of transition	100 feet

NOTES

1. Unless indicated otherwise, the delineator or barrier reflector color shall conform to the color of the pavement edge line on the side of the road where the delineators or barrier reflectors are placed.
2. Barrier reflectors may be used to replace required delineators.
3. Single red delineators may be mounted on the back side of delineator posts for wrong way driver applications

LEGEND	
	Bi-directional Delineator
	Delineator
	Sign

Texas Department of Transportation

Traffic Safety Division Standard

DELINEATOR & OBJECT MARKER PLACEMENT DETAILS

D & OM(3)-20

FILE: dom3-20.dgn	DN: TXDOT	CK: TXDOT	DW: TXDOT	CK: TXDOT
©TxDOT August 2004	CONT	SECT	JOB	HIGHWAY
REVISIONS				
3-15 8-15	DIST	COUNTY		SHEET NO.
8-15 7-20				253

20C

DISCLAIMER:
The use of this standard is governed by the "Texas Engineering Practice Act". No warranty of any kind is made by TxDOT for any purpose whatsoever. TxDOT assumes no responsibility for the conversion of this standard to other formats or for incorrect results or damages resulting from its use.

DATE: 3/12/2025 3:13:16 PM
FILE: G:\TXC\Projects\City_Georgetown\10767-00 Shell Road\03_CADD\01_Shts\08-SHWS\dom4-2018.dgn

CROSSOVERS

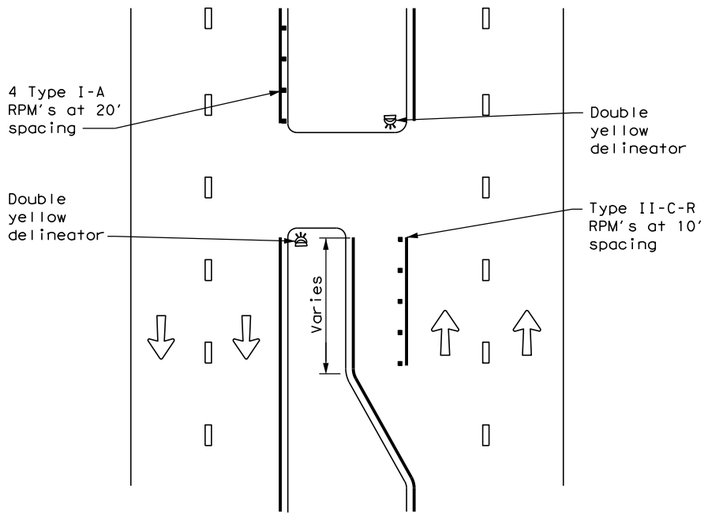

DETAIL 1

FOR CULVERTS WITHOUT MBGF

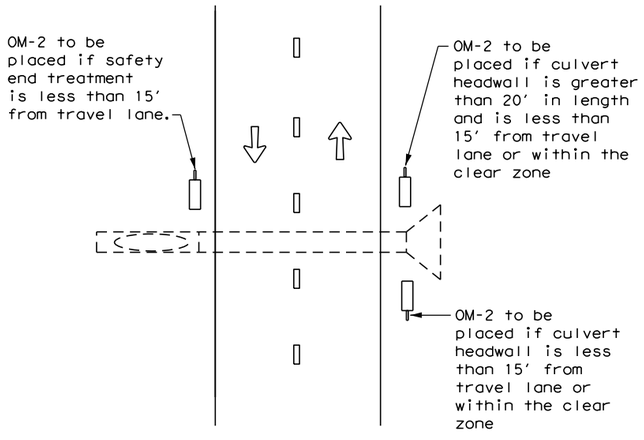

DETAIL 2

FREEWAY DELINEATION FOR RAMPS AND ACCELERATION/DECELERATION LANES

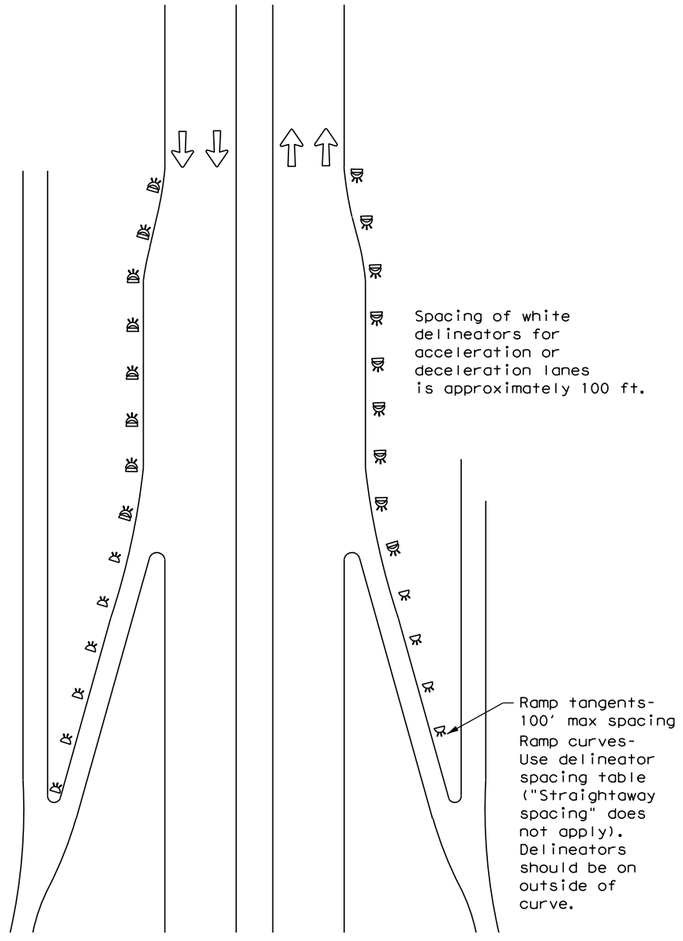

DETAIL 3

TYPICAL APPLICATION OF DEAD END BARRICADE

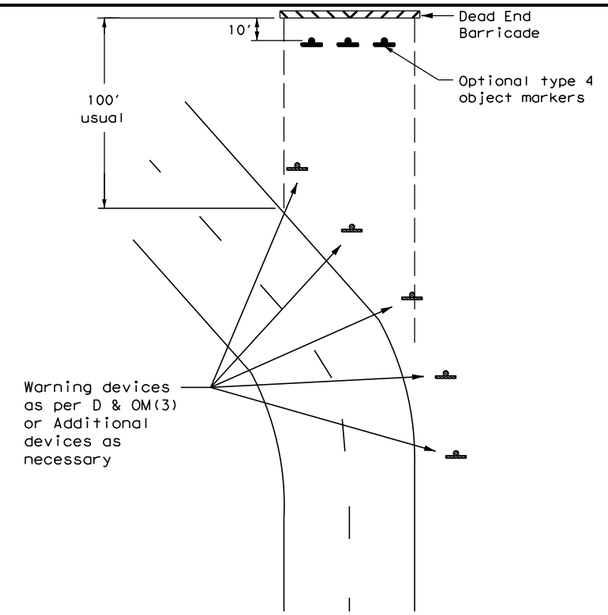

DETAIL 4

TYPICAL DEAD END BARRICADE INSTALLATION

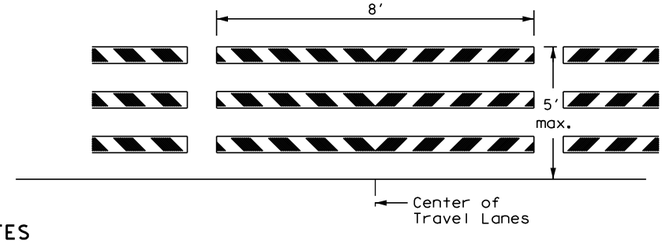

NOTES

1. Barricade striping shall be red and white reflective sheeting for all permanent road closures.
2. Barricade striping is red and white sloping toward the center of the roadway.
3. Type 3 Barricade Supports should be anchored to soil or pavement as described in compliant Work Zone Traffic Control Devices List, section D.2.f and D.2.g.

DETAIL 5

LEGEND	
	Bidirectional Delineator
	Delineator
	OM-3
	Barricade
	Sign
	OM-2
	Double Delineator

Texas Department of Transportation

Traffic Safety Division Standard

DELINEATOR & OBJECT MARKER PLACEMENT DETAILS

D & OM(4)-20

FILE: dom4-20.dgn	DN: TXDOT	CK: TXDOT	DW: TXDOT	CK: TXDOT
©TxDOT August 2004	CONT	SECT	JOB	HIGHWAY
REVISIONS 3-15 7-20	DIST	COUNTY		SHEET NO. 254

20D

DISCLAIMER:
The use of this standard is governed by the "Texas Engineering Practice Act". No warranty of any kind is made by TxDOT for any purpose whatsoever. TxDOT assumes no responsibility for the conversion of this standard to other formats or for incorrect results or damages resulting from its use.

DATE: 3/12/2025 3:13:17 PM
FILE: G:\TXC\Projects\City_Georgetown\10767-00 Shell Road\03_CADD\01_Shts\08-SPM@1=22.dgn

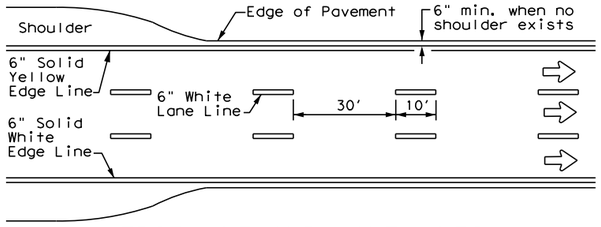

EDGE LINE AND LANE LINES ONE-WAY ROADWAY WITH OR WITHOUT SHOULDERS

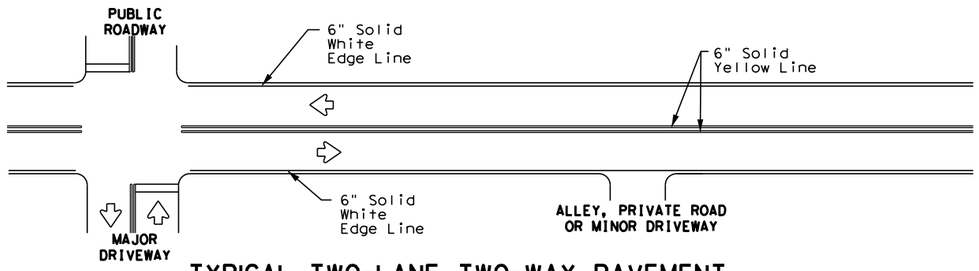

TYPICAL TWO-LANE, TWO-WAY PAVEMENT MARKINGS THROUGH INTERSECTIONS

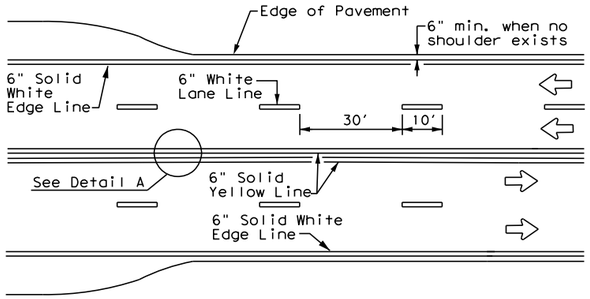

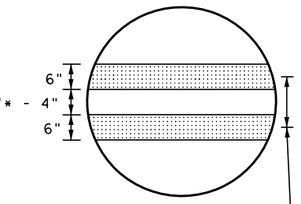

DETAIL "A"

9"** min. - 10" typ.
(18" max. for traveled way greater than 48' only)

CENTERLINE AND LANE LINES FOUR LANE TWO-WAY ROADWAY WITH OR WITHOUT SHOULDERS

* 2" minimum for restripe projects when approved by the Engineer.

** 8" minimum for restripe projects when approved by the Engineer.

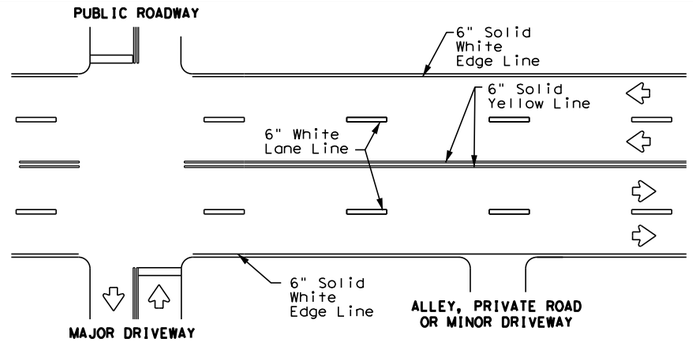

TYPICAL MULTI-LANE, TWO-WAY PAVEMENT MARKINGS THROUGH INTERSECTIONS

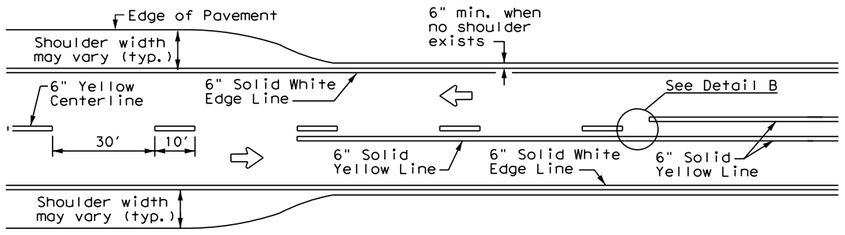

TWO LANE TWO-WAY ROADWAY WITH OR WITHOUT SHOULDERS

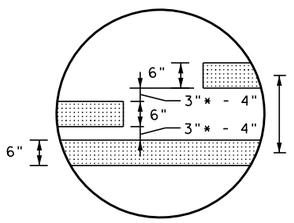

DETAIL "B"

* 2" minimum for restripe projects when approved by the Engineer.

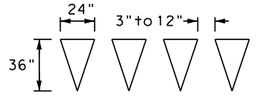

For posted speed on road being marked equal to or greater than 45 MPH.

YIELD LINES

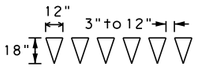

For posted speed on road being marked equal to or less than 40 MPH.

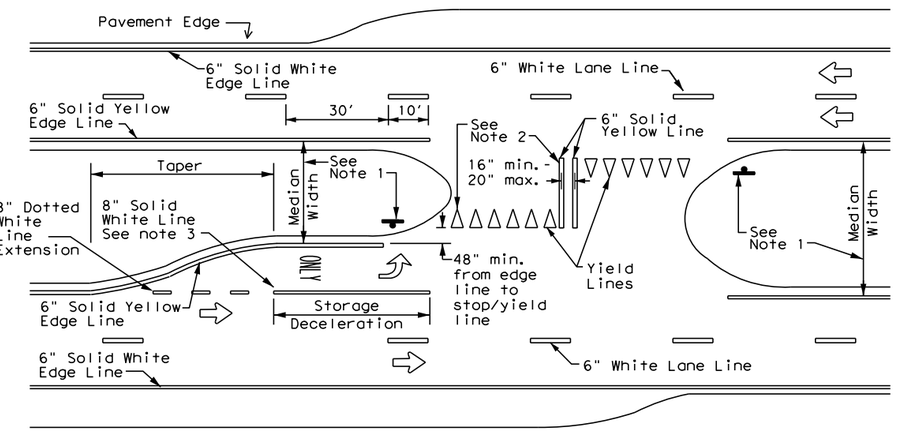

FOUR LANE DIVIDED ROADWAY CROSSOVERS

NOTES

1. Where divided highways are separated by median widths at the median opening itself of 30 feet or more, median openings shall be signed as two separate intersections.
   Each median opening has two width measurements, with one measurement for each approach. The narrow median width will be the controlling width to determine if signs are required. Yield signs are the typical intersection control. Stop signs and stop bars are optional as determined by the Engineer.
2. Install median striping (double yellow centerlines and stop lines/yield lines) when a 50' or greater median centerline can be placed. Stop lines shall only be used with stop signs. Yield lines shall only be used with yield signs.
3. Length of turn bays, including taper, deceleration, and storage lengths shall be as shown on the plans or as directed by the Engineer.

GENERAL NOTES

1. Edge line striping shall be as shown in the plans or as directed by the Engineer. The edge line should not be placed less than 6 inches from the edge of pavement. This distance may vary due to pavement raveling or other conditions. Edge lines are not required in curb and gutter sections of roadways.
2. The traveled way includes only that portion of the roadway used for vehicular travel. It does not include the parking lanes, sidewalks, berms and shoulders. The traveled ways shall be measured from the center of edge line to the center of edge line of a two lane roadway.

MATERIAL SPECIFICATIONS	
PAVEMENT MARKERS (REFLECTORIZED)	DMS-4200
EPOXY AND ADHESIVES	DMS-6100
BITUMINOUS ADHESIVE FOR PAVEMENT MARKERS	DMS-6130
TRAFFIC PAINT	DMS-8200
HOT APPLIED THERMOPLASTIC	DMS-8220
PERMANENT PREFABRICATED PAVEMENT MARKINGS	DMS-8240

All pavement marking materials shall meet the required Departmental Material Specifications as specified by the plans.

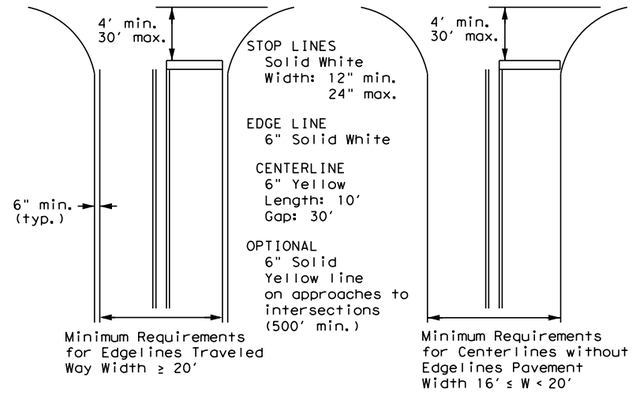

NOTE: Traveled way is exclusive of shoulder widths. Refer to General Note 2 for additional details.

GUIDE FOR PLACEMENT OF STOP LINES, EDGE LINE & CENTERLINE

Based on Traveled Way and Pavement Widths for Undivided Roadways

Texas Department of Transportation

Traffic Safety Division Standard

TYPICAL STANDARD PAVEMENT MARKINGS

PM(1)-22

FILE: pm1-22.dgn	DN:	CK:	DW:	CK:
© TxDOT December 2022	CONT	SECT	JOB	HIGHWAY
REVISIONS 11-78 8-00 6-20 8-95 3-03 12-22 5-00 2-12	DIST	COUNTY		SHEET NO. 255

22A

REFLECTIVE RAISED PAVEMENT MARKERS FOR VEHICLE POSITIONING GUIDANCE

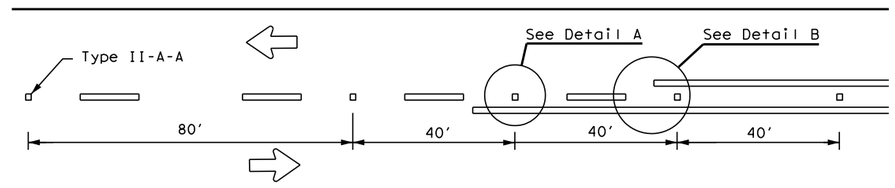

CENTERLINE FOR ALL TWO LANE TWO-WAY ROADWAYS

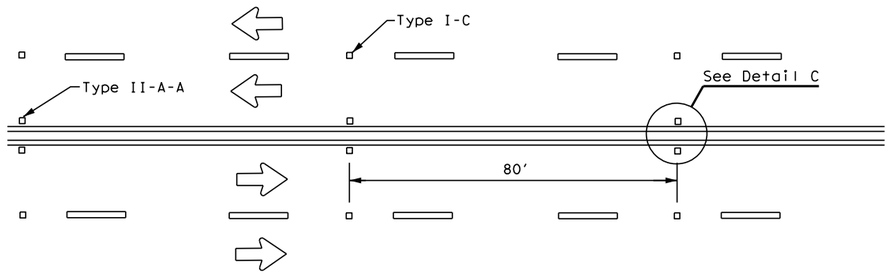

CENTERLINE & LANE LINES FOR FOUR LANE TWO-WAY ROADWAYS

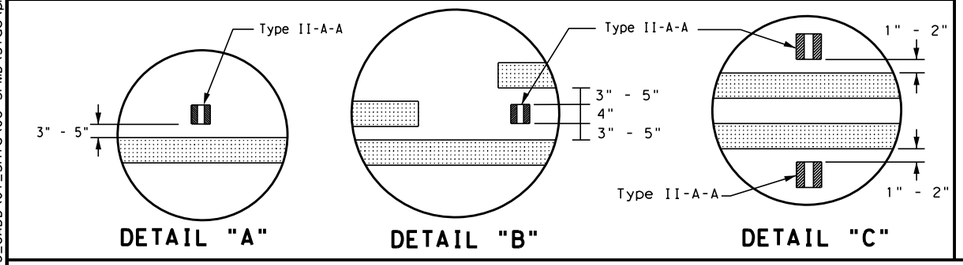

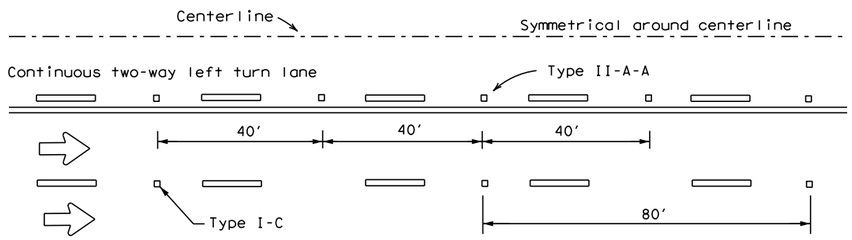

CENTERLINE AND LANE LINES FOR TWO-WAY LEFT TURN LANE

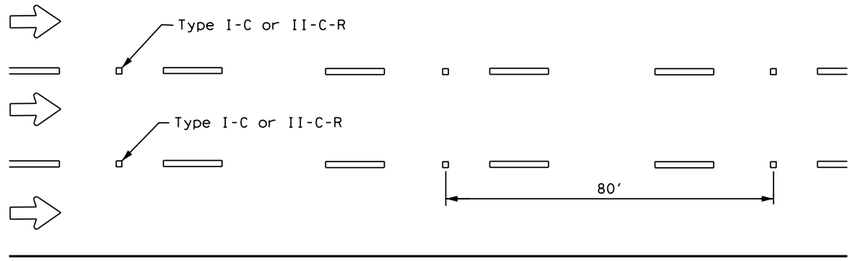

LANE LINES FOR ONE-WAY ROADWAY (NON-FREEWAY FACILITIES)

Raised pavement markers Type II-C-R shall have clear face toward normal traffic and red face toward wrong-way traffic.

See Note 3.

MATERIAL SPECIFICATIONS	
PAVEMENT MARKERS (REFLECTORIZED)	DMS-4200
EPOXY AND ADHESIVES	DMS-6100
BITUMINOUS ADHESIVE FOR PAVEMENT MARKERS	DMS-6130
TRAFFIC PAINT	DMS-8200
HOT APPLIED THERMOPLASTIC	DMS-8220
PERMANENT PREFABRICATED PAVEMENT MARKINGS	DMS-8240

All pavement marking materials shall meet the required Departmental Material Specifications as specified by the plans.

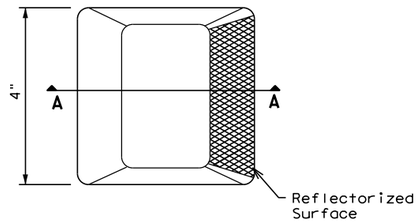

Type I (Top View)

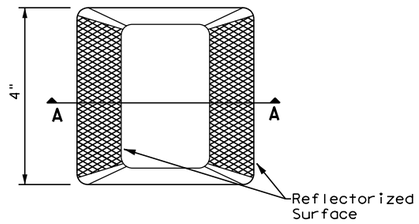

Type II (Top View)

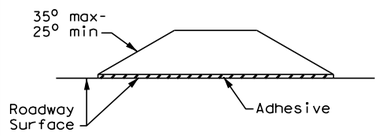

SECTION A

RAISED PAVEMENT MARKERS

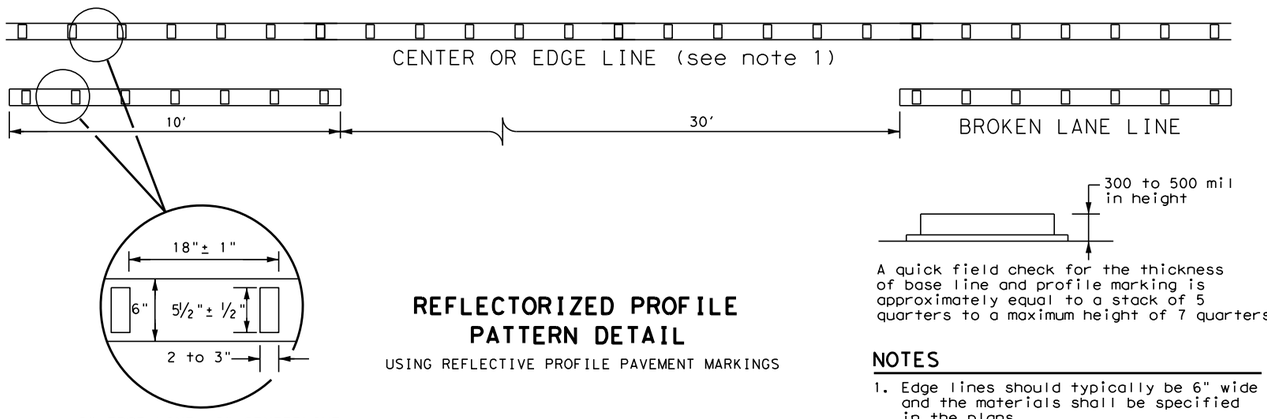

6" EDGE LINE, 6" CENTERLINE OR 6" LANE LINE

REFLECTORIZED PROFILE PATTERN DETAIL

USING REFLECTIVE PROFILE PAVEMENT MARKINGS

A quick field check for the thickness of base line and profile marking is approximately equal to a stack of 5 quarters to a maximum height of 7 quarters.

NOTES

1. Edge lines should typically be 6" wide and the materials shall be specified in the plans.
2. Profile markings shall not be placed on roadways with a posted speed limit of 45 MPH or less.

GENERAL NOTES

1. All raised pavement markers placed along broken lines shall be placed in line with and midway between the stripes.
2. On concrete pavements, the raised pavement markers should be placed to one side of the longitudinal joints.
3. Use raised pavement marker Type I-C with undivided roadways, flush medians, and two way left turn lanes. Use raised pavement marker Type II-C-R with divided highways and raised medians.

Texas Department of Transportation

Traffic Safety Division Standard

POSITION GUIDANCE USING RAISED MARKERS REFLECTORIZED PROFILE MARKINGS PM(2)-22

FILE: pm2-22.dgn	DN:	CK:	DW:	CK:
©TxDOT December 2022	CONT	SECT	JOB	HIGHWAY
REVISIONS 4-77 8-00 6-20 4-92 2-10 12-22 5-00 2-12	DIST	COUNTY		SHEET NO. 256

22B

DISCLAIMER:
The use of this standard is governed by the "Texas Engineering Practice Act". No warranty of any kind is made by TxDOT for any purpose whatsoever. TxDOT assumes no responsibility for the conversion of this standard to other formats or for incorrect results or damages resulting from its use.

DATE: 3/12/2025 3:13:17 PM
FILE: G:\TxC\Projects\City_Georgetown\10767-00 Shell Road\03_CADD\01_Shts\05-SHW\SHWD0M2-22-1tgn

DISCLAIMER:
The use of this standard is governed by the "Texas Engineering Practice Act". No warranty of any kind is made by TxDOT for any purpose whatsoever. TxDOT assumes no responsibility for the conversion of this standard to other formats or for incorrect results or damages resulting from its use.

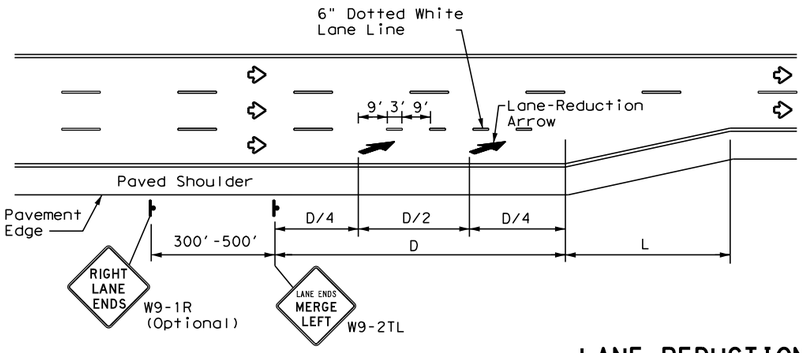

LANE REDUCTION

NOTES

1. Lane reduction pavement markings are used where the number of through lanes is reduced because of narrowing of the roadway or because of a section of on-street parking in what would otherwise be a through lane. For Texas Super 2 Passing Lanes, see TS2(PL) standard sheets.
2. On divided highways, an additional RIGHT LANE ENDS (W9-1R) sign may be installed in the median aligned with the W9-1R sign on the right side of the highway.
3. Lane reduction arrows are required for speeds of 45 mph or greater. An optional third lane reduction arrow may be added based on engineering judgement. If used, the optional third lane reduction arrow should be centered between the first and last lane reduction arrows.
4. For lane reductions on Freeways and Expressways, signing shall conform to the TxDOT Freeway Signing Handbook.

ADVANCED WARNING SIGN DISTANCE (D)		
Posted Speed	D (ft)	L (ft)
30 MPH	460	$L=\frac{WS^2}{60}$
35 MPH	565	
40 MPH	670	
45 MPH	775	L=WS
50 MPH	885	
55 MPH	990	
60 MPH	1,100	
65 MPH	1,200	
70 MPH	1,250	
75 MPH	1,350	

GENERAL NOTES

1. Lane use word and arrow markings shall be used where through lanes approaching an intersection become mandatory turn lanes. Lane use word and arrow markings should be used in auxiliary lanes of substantial length. Lane use arrow markings or word and arrow markings may be used in other lanes and turn bays for emphasis. Details for words and arrows are as shown in the Standard Highway Sign Designs for Texas.
2. When lane-use words and arrow markings are used, two sets of arrows should be used if the length of the bay is greater than 180 feet. When a single lane use arrow or word and arrow marking is used for a short turn lane, it should be located at or near the upstream end of the full-width turn lane.
3. Use raised pavement marker Type I-C with undivided highways, flush medians and two way left turn lanes. Use raised pavement marker Type II-C-R with divided highways and raised medians.
4. Length of turn bays, including taper, deceleration, and storage lengths shall be as shown on the plans or as directed by the Engineer. See Chapter 3 of the Roadway Design Manual for additional information on turning lanes or storage lengths.

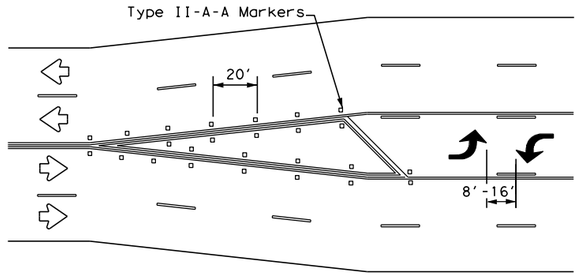

A two-way left-turn (TWLT) lane-use arrow pavement marking should be used at or just downstream from the beginning of a two-way left-turn lane within a corridor. Repeating the marking after each intersection or dedicated turn bay is not required unless stated elsewhere in the plans.

TYPICAL TRANSITION FOR TWLTL AND DIVIDED HIGHWAY

MATERIAL SPECIFICATIONS	
PAVEMENT MARKERS (REFLECTORIZED)	DMS-4200
EPOXY AND ADHESIVES	DMS-6100
BITUMINOUS ADHESIVE FOR PAVEMENT MARKERS	DMS-6130
TRAFFIC PAINT	DMS-8200
HOT APPLIED THERMOPLASTIC	DMS-8220
PERMANENT PREFABRICATED PAVEMENT MARKINGS	DMS-8240

All pavement marking materials shall meet the required Departmental Material Specifications as specified by the plans.

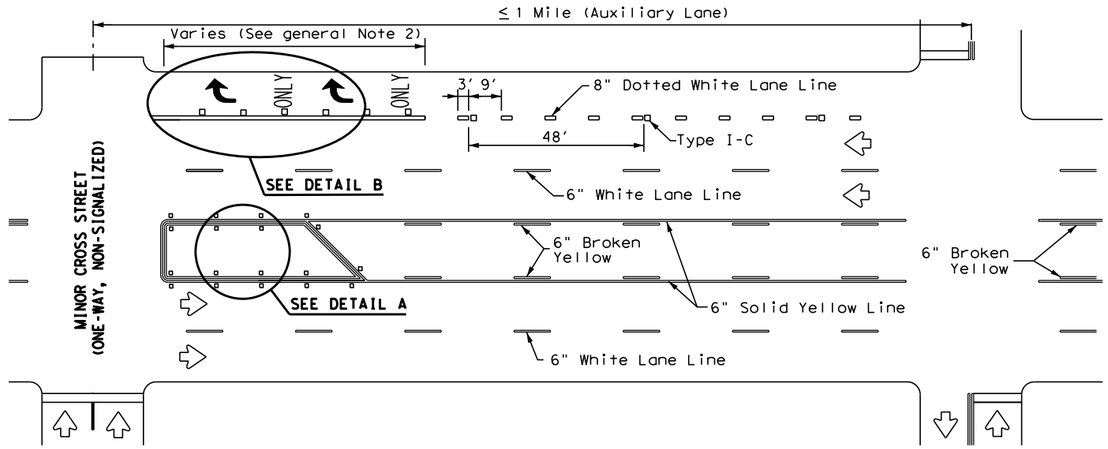

TYPICAL TWLTL AT ONE-WAY STREET AND RIGHT TURN AUXILIARY LANE

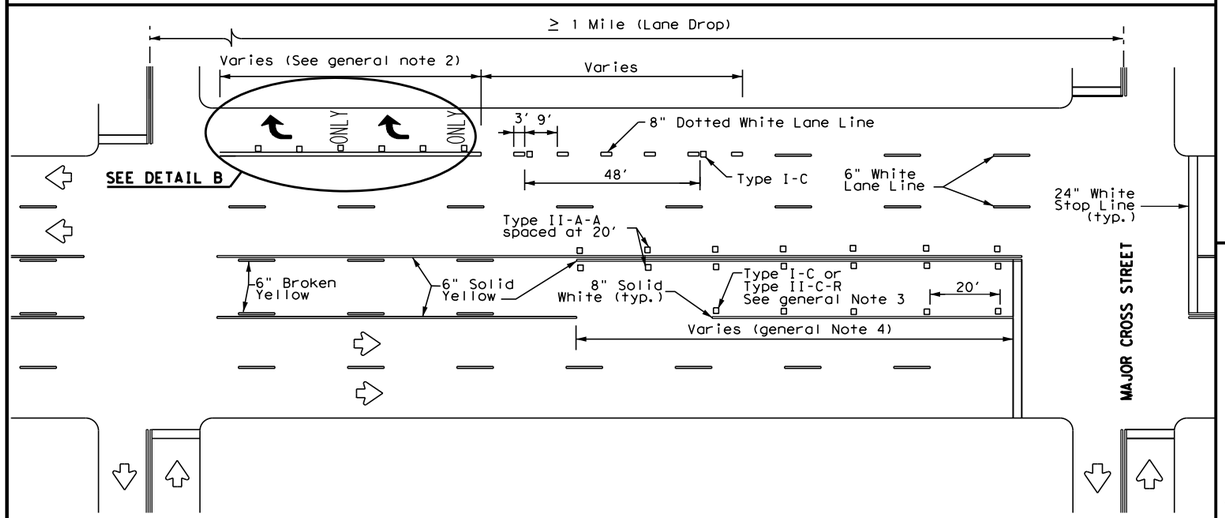

TYPICAL TWLTL AT TWO-WAY CROSS STREET AND RIGHT TURN LANE DROP

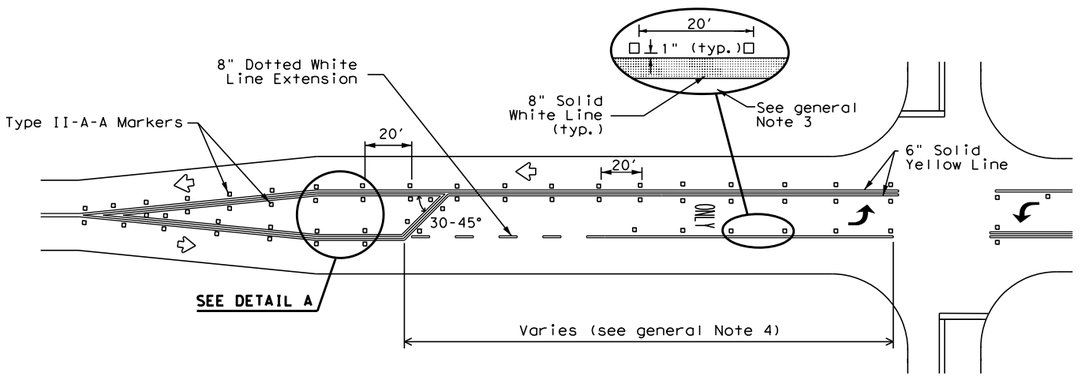

TYPICAL TWO-LANE ROADWAY INTERSECTION WITH LEFT TURN BAYS

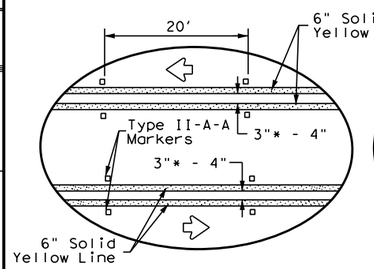

DETAIL A

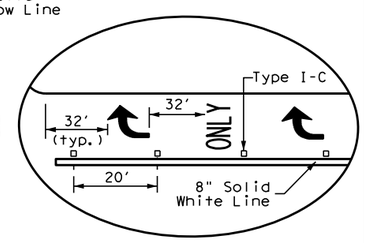

DETAIL B

* 2" minimum allowed for restripe projects when approved by the Engineer.

Texas Department of Transportation

Traffic Safety Division Standard

TWO-WAY LEFT TURN LANES, RURAL LEFT TURN BAYS, AND LANE REDUCTION PAVEMENT MARKINGS

PM(3)-22

FILE: pm3-22.dgn	DN:	CK:	DW:	CK:
© TxDOT December 2022	CONT	SECT	JOB	HIGHWAY
REVISIONS 4-98 3-03 6-20 5-00 2-10 12-22 8-00 2-12	DIST	COUNTY		SHEET NO. 257

22C

DATE:
FILE:

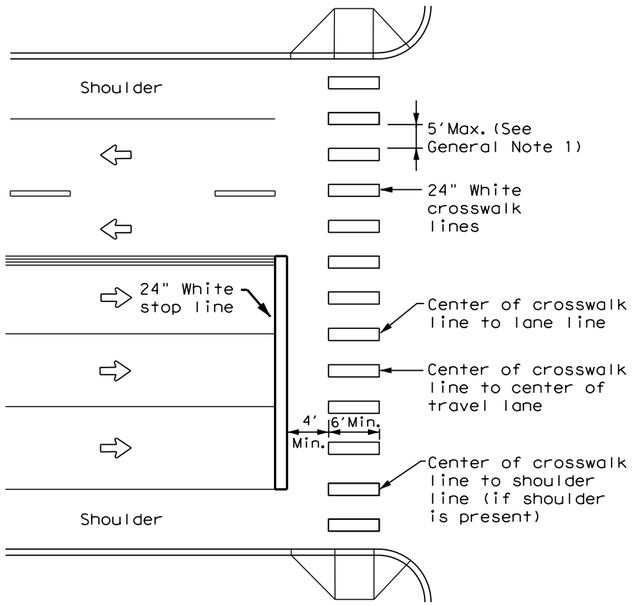

HIGH-VISIBILITY LONGITUDINAL CROSSWALK AT CONTROLLED APPROACH

GENERAL NOTES

1. Longitudinal crosswalk lines should not be placed in the wheel path of vehicles. Center the crosswalk lines on travel lanes, lane lines, and shoulder lines (if present).
2. A minimum 6" clear distance shall be provided to the curb face. If the last crosswalk line falls into this distance it must be omitted.
3. For divided roadways, adjustments in spacing of the crosswalk lines should be made in the median so that the crosswalk lines are maintained in their proper location across the travel portion of the roadway.
4. At skewed crosswalks, the crosswalk lines are to remain parallel to the lane lines.
5. Each crosswalk shall be a minimum of 6' wide.
6. The High-Visibility Longitudinal Crosswalk is the preferred crosswalk pattern on State Highways. Other crosswalk patterns as shown in the "Texas Manual on Uniform Traffic Control Devices" may be used. All crosswalk designs and dimension shall comply with the "Texas Manual on Uniform Traffic Control Devices."
7. Final placement of Stop Bar and Crosswalk shall be approved by the Engineer in the field.

MATERIAL SPECIFICATIONS	
PAVEMENT MARKERS (REFLECTORIZED)	DMS-4200
EPOXY AND ADHESIVES	DMS-6100
BITUMINOUS ADHESIVE FOR PAVEMENT MARKERS	DMS-6130
TRAFFIC PAINT	DMS-8200
HOT APPLIED THERMOPLASTIC	DMS-8220
PERMANENT PREFABRICATED PAVEMENT MARKINGS	DMS-8240

All pavement marking materials shall meet the required Departmental Material Specifications as specified by the plans.

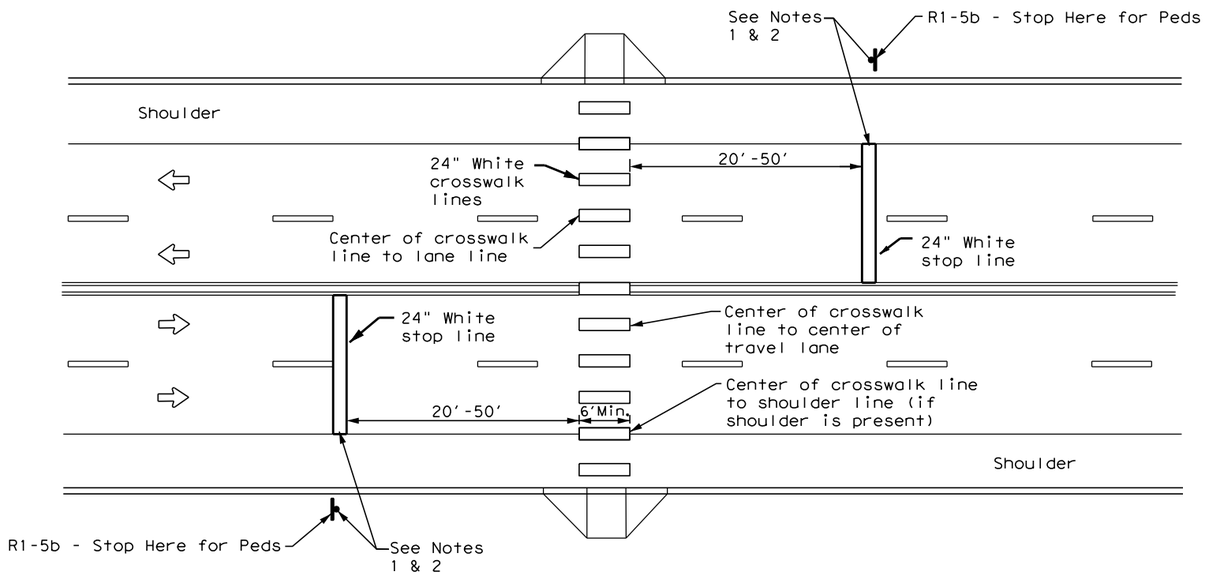

UNSIGNALIZED MID BLOCK HIGH-VISIBILITY LONGITUDINAL CROSSWALK

NOTES:

1. Use stop bars with "Stop Here for Pedestrians" signs at unsignalized mid block cross walks.
2. Use stop bars with "Stop Here on Red" signs at mid block crosswalks controlled by traffic signals or pedestrian hybrid beacons.

Texas Department of Transportation | Traffic Safety Division Standard

CROSSWALK PAVEMENT MARKINGS

PM(4)-22

FILE: pm4-22.dgn	DN:	CK:	DW:	CK:
©TxDOT June 2020	CONT	SECT	JOB	HIGHWAY
REVISIONS 3-22	DIST	COUNTY		SHEET NO. 258

22D

DISCLAIMER:
The use of this standard is governed by the "Texas Engineering Practice Act". No warranty of any kind is made by TxDOT for any purpose whatsoever. TxDOT assumes no responsibility for the conversion of this standard to other formats or for incorrect results or damages resulting from its use.

DATE: 3/12/2025 3:13:19 PM
FILE: G:\TXC\Projects\City_Georgetown\10767-00 Shell Road\03_CADD\01_Shts\08-SHD\PM4-22.dgn

DISCLAIMER: The use of this standard is governed by the "Texas Engineering Practice Act". No warranty of any kind is made by TxDOT for any purpose whatsoever. TxDOT assumes no responsibility for the conversion of this standard to other formats or for incorrect results or damages resulting from its use.

DATE: 3/12/2025 3:13:19 PM
FILE: G:\TxCVProjects\City\Georgetown\10767-00 Shell Road\03*CADD\01*Shts\08-SPMD\Stds\smdgen.dgn

SIGN SUPPORT DESCRIPTIVE CODES

(Descriptive Codes correspond to project estimate and quantities sheets)

SM RD SGN ASSM TY XXXXX(X)XX(X-XXXX)

Post Type

FRP = Fiberglass Reinforced Plastic Pipe (see SMD(FRP))
TWT = Thin-Walled Tubing (see SMD(TWT))
10BWG = 10 BWG Tubing (see SMD(SLIP-1) to (SLIP-3))
S80 = Schedule 80 Pipe (see SMD(SLIP-1) to (SLIP-3))

Number of Posts (1 or 2)

Anchor Type

UA = Universal Anchor - Concreted (see SMD(FRP) and (TWT))
UB = Universal Anchor - Bolted down (see SMD(FRP) and (TWT))
WS = Wedge Anchor Steel - (see SMD(TWT))
WP = Wedge Anchor Plastic (see SMD(TWT))
SA = Slipbase - Concreted (see SMD(SLIP-1) to (SLIP-3))
SB = Slipbase - Bolted Down (see SMD(SLIP-1) to (SLIP-3))

Sign Mounting Designation

P = Prefab. "Plain" (see SMD(SLIP-1) to (SLIP-3), (TWT), (FRP))
T = Prefab. "T" (see SMD(SLIP-1) to (SLIP-3), (TWT))
U = Prefab. "U" (see SMD(SLIP-1) to (SLIP-3))
IF REQUIRED
1EXT or 2EXT = Number of Extensions (see SMD(SLIP-1) to (SLIP-3), (TWT))
BM = Extruded Wind Beam (see SMD(SLIP-1) to (SLIP-3))
WC = 1.12 #/ft Wing Channel (see SMD(SLIP-1) to (SLIP-3))
EXAL = Extruded Aluminum Sign Panels (see SMD(SLIP-1))

REQUIRED CLEARANCE FOR BREAKAWAY SUPPORT

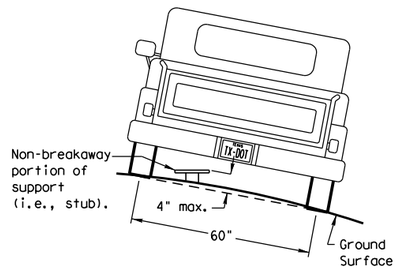

To avoid vehicle undercarriage snagging, any substantial remains of a breakaway support, when it is broken away, should not project more than 4 inches above a 60-inch chord (i.e., typical space between wheel paths).

SIGN LOCATION

PAVED SHOULDERS

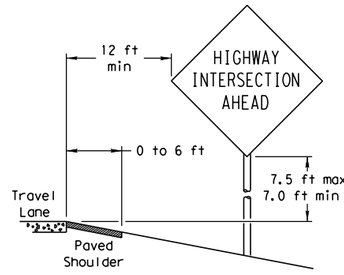

LESS THAN 6 FT. WIDE

When the shoulder is 6 ft. or less in width, the sign must be placed at least 12 ft. from the edge of the travel lane.

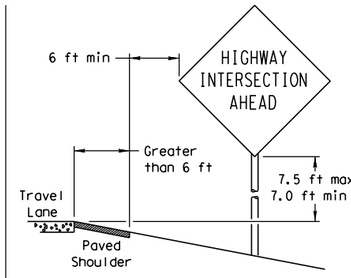

GREATER THAN 6 FT. WIDE

When the shoulder is greater than 6 ft in width, the sign must be placed at least 6 ft. from the edge of the shoulder.

T-INTERSECTION

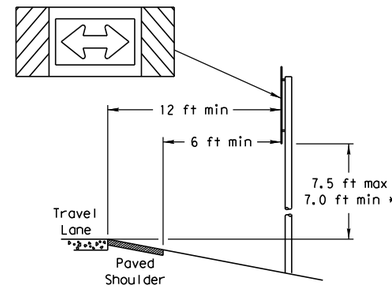

When this sign is needed at the end of a two-lane, two way roadway, the right edge of the sign should be in line with the centerline of the roadway. Place as close to ROW as practical.

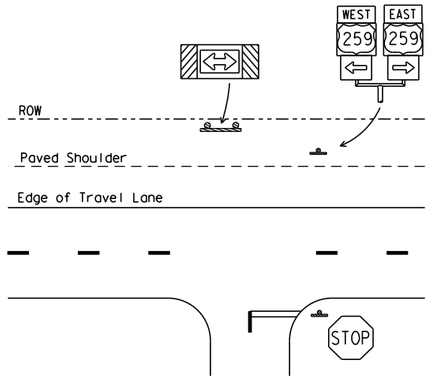

BEHIND BARRIER

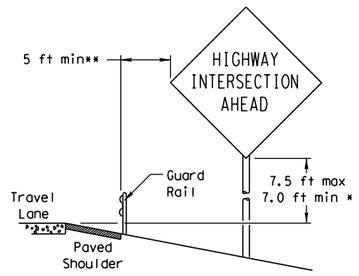

BEHIND GUARDRAIL

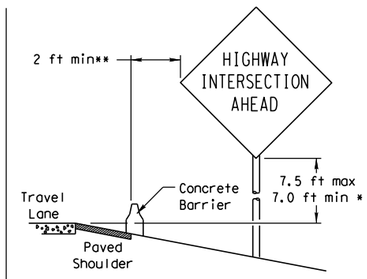

BEHIND CONCRETE BARRIER

**Sign clearance based on distance required for proper guard rail or concrete barrier performance.

No more than 2 sign posts should be located within a 7 ft. circle.

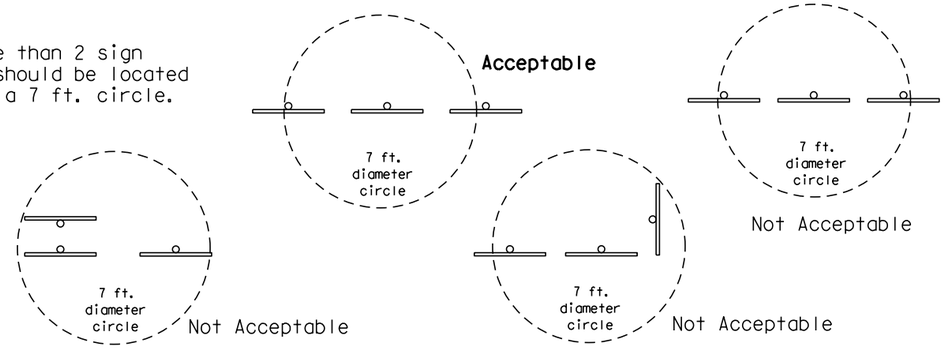

TYPICAL SIGN ATTACHMENT DETAIL

Single Signs

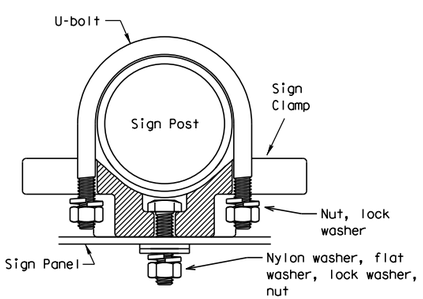

Bolts used to mount sign panels to the clamp are 5/16-18 UNC galvanized square head with nut, nylon washer, flat washer and lock washer. The bolt length is 1 inch for aluminum.

When two sign clamps are used to mount signs back-to-back, use a 5/16-18 UNC galvanized hex head per ASTM A307 with nut and helical-spring lock washer. The approximate bolt lengths for various post sizes and sign clamp types are given in the table at right. The bolt length may need to be adjusted depending upon field conditions.

Sign clamps may be either the specific size clamp or the universal clamp.

Back-to-Back Signs

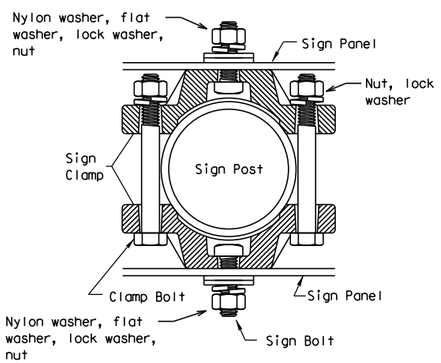

Pipe Diameter	Approximate Bolt Length	
	Specific Clamp	Universal Clamp
2" nominal	3"	3 or 3 1/2"
2 1/2" nominal	3 or 3 1/2"	3 1/2 or 4"
3" nominal	3 1/2 or 4"	4 1/2"

SIGNS WITH PLAQUES

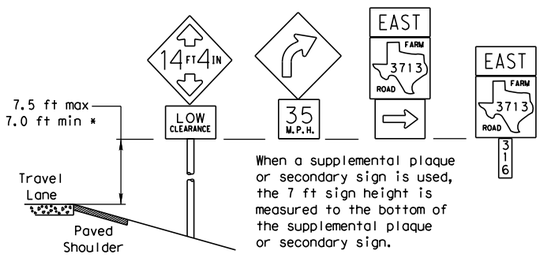

When a supplemental plaque or secondary sign is used, the 7 ft sign height is measured to the bottom of the supplemental plaque or secondary sign.

CURB & GUTTER OR RAISED ISLAND

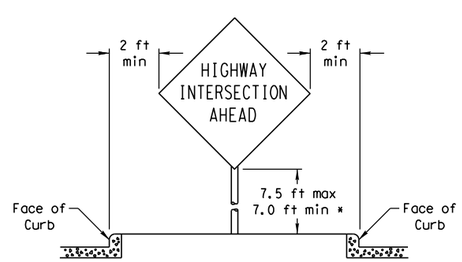

RESTRICTED RIGHT-OF-WAY

(When 6 ft min. is not possible.)

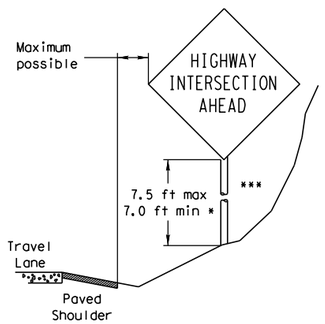

Right-of-way restrictions may be created by rocks, water, vegetation, forest, buildings, a narrow island, or other factors.

In situations where a lateral restriction prevents the minimum horizontal clearance from the edge of the travel lane, signs should be placed as far from the travel lane as practical.

*** Post may be shorter if protected by guardrail or if Engineer determines the post could not be hit due to extreme slope.

* Signs shall be mounted using the following condition that results in the greatest sign elevation:

(1) a minimum of 7 to a maximum of 7.5 feet above the edge of the travel lane or

(2) a minimum of 7 to a maximum of 7.5 feet above the grade at the base of the support when sign is installed on the backslope.

The maximum values may be increased when directed by the Engineer.

See the Traffic Operations Division website for detailed drawings of sign clamps, Triangular Slipbase System components and Wedge Anchor System components.

The website address is:
http://www.txdot.gov/publications/traffic.htm

Texas Department of Transportation
Traffic Operations Division

SIGN MOUNTING DETAILS SMALL ROADSIDE SIGNS GENERAL NOTES & DETAILS

SMD(GEN)-08

©TxDOT July 2002

DN: TXDOT	CK: TXDOT	DW: TXDOT	CK: TXDOT

CONT	SECT	JOB	HIGHWAY

DIST	COUNTY	SHEET NO.
		259

9-08 REVISIONS

DISCLAIMER: The use of this standard is governed by the "Texas Engineering Practice Act". No warranty of any kind is made by TxDOT for any purpose whatsoever. TxDOT assumes no responsibility for the conversion of this standard to other formats or for incorrect results or damages resulting from its use.

DATE: 3/12/2025 3:13:20 PM
FILE: G:\TXC\Projects\City*Georgetown\10767-00 Shell Road\03*CADD\01*Shts\08-SPMD\Stds\smdsi.dgn

TRIANGULAR SLIPBASE INSTALLATION GENERAL REQUIREMENTS

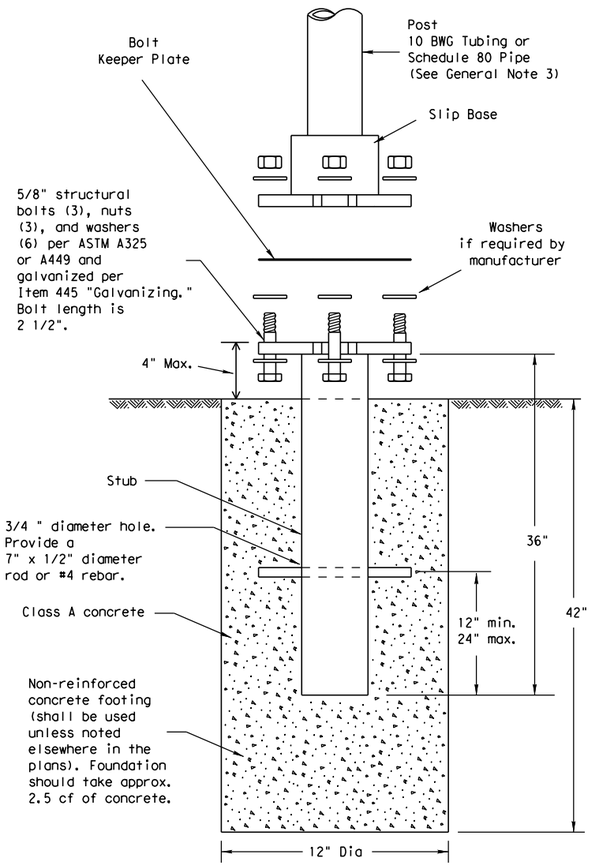

SM RD SGN ASSM TY XXXXX(X)SA(X-XXXX)

NOTE

There are various devices approved for the Triangular Slipbase System. Please reference the Material Producer List for approved slip base systems. http://www.txdot.gov/business/producer_list.htm The devices shall be installed per manufacturers' recommendations. Installation procedures shall be provided to the Engineer by Contractor.

GENERAL NOTES:

1. Slip base shall be permanently marked to indicate manufacturer. Method, design, and location of marking are subject to approval of the TxDOT Traffic Standards Engineer.
2. Material used as post with this system shall conform to the following specifications:
   10 BWG Tubing (2.875" outside diameter)
   - 0.134" nominal wall thickness
   - Seamless or electric-resistance welded steel tubing or pipe
   - Steel shall be HSLAS Gr 55 per ASTM A1011 or ASTM A1008
   - Other steels may be used if they meet the following:
     - 55,000 PSI minimum yield strength
     - 70,000 PSI minimum tensile strength
     - 20% minimum elongation in 2"
   - Wall thickness (uncoated) shall be within the range of 0.122" to 0.138"
   - Outside diameter (uncoated) shall be within the range of 2.867" to 2.883"
   - Galvanization per ASTM A123 or ASTM A653 G210. For precoated steel tubing (ASTM A653), recoat tube outside diameter weld seam by metallizing with zinc wire per ASTM B833.

   Schedule 80 Pipe (2.875" outside diameter)
   - 0.276" nominal wall thickness
   - Steel tubing per ASTM A500 Gr C
   - Other seamless or electric-resistance welded steel tubing or pipe with equivalent outside diameter and wall thickness may be used if they meet the following:
     - 46,000 PSI minimum yield strength
     - 62,000 PSI minimum tensile strength
     - 21% minimum elongation in 2"
   - Wall thickness (uncoated) shall be within the range of 0.248" to 0.304"
   - Outside diameter (uncoated) shall be within the range of 2.855" to 2.895"
   - Galvanization per ASTM A123
3. See the Traffic Operations Division website for detailed drawings of sign clamps and Texas Universal Triangular Slipbase System components. The website address is: http://www.txdot.gov/publications/traffic.htm
4. Sign supports shall not be spliced except where shown. Sign support posts shall not be spliced.

ASSEMBLY PROCEDURE

Foundation
1. Prepare 12-inch diameter by 42-inch deep hole. If solid rock is encountered, the depth of the foundation may be reduced such that it is embedded a minimum of 18 inches into the solid rock.
2. The Engineer may permit batches of concrete less than 2 cubic yards to be mixed with a portable, motor-driven concrete mixer. For small placements less than 0.5 cubic yards, hand mixing in a suitable container may be allowed by Engineer. Concrete shall be Class A.
3. Push the pipe end of the slip base stub into the center of the concrete. Rotate the stub back and forth while pushing it down into the concrete to assure good contact between the concrete and stub. Continue to work the stub into the concrete until it is between 2 to 4 inches above the ground.
4. Plumb the stub. Allow a minimum of 4 days to set, unless otherwise directed by the Engineer.
5. The triangular slipbase system is multidirectional and is designed to release when struck from any direction.

Support
1. Cut support so that the bottom of the sign will be 7 to 7.5 feet above the edge of the travelway (i.e., edge of the closest lane) when slip plate is below the edge of pavement or 7 to 7.5 feet above slip plate when the slip plate is above the edge of the travelway. The cut shall be plumb and straight.
2. Attach sign to support using connections shown. When multiple signs are installed on the same support, ensure the minimum clearance between each sign is maintained. See SMD(SLIP-2) for clearances based on sign types.

CONCRETE ANCHOR

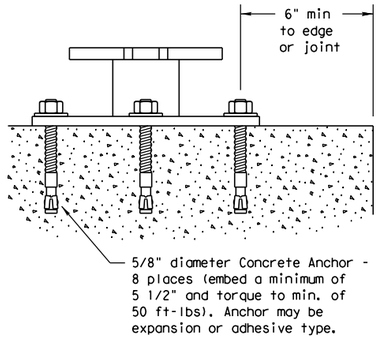

SM RD SGN ASSM TY XXXXX(X)SB(X-XXXX)

Concrete anchor consists of 5/8" diameter stud bolt with UNC series bolt threads on the upper end. Heavy hex nut per ASTM A563, and hardened washer per ASTM F436. The stud bolt shall have a minimum yield and ultimate tensile strength of 50 and 75 KSI, respectively. Nuts, bolts and washers shall be galvanized per Item 445, "Galvanizing." Adhesive type anchors shall have stud bolts installed with Type III epoxy per DMS-6100, "Epoxies and Adhesives." Adhesive anchors may be loaded after adequate epoxy cure time per the manufacturer's recommendations. Top of bolt shall extend at least flush with top of the nut when installed. The anchor, when installed in 4000 psi normal-weight concrete with a 5 1/2" minimum embedment, shall have a minimum allowable tension and shear of 3900 and 3100 psi, respectively.

Texas Department of Transportation
Traffic Operations Division

SIGN MOUNTING DETAILS SMALL ROADSIDE SIGNS TRIANGULAR SLIPBASE SYSTEM

SMD(SLIP-1)-08

© TxDOT July 2002

DN: TXDOT	CK: TXDOT	DW: TXDOT	CK: TXDOT

REVISIONS	CONT	SECT	JOB	HIGHWAY
9-08				
	DIST	COUNTY		SHEET NO.
				260

DISCLAIMER: The use of this standard is governed by the "Texas Engineering Practice Act". No warranty of any kind is made by TxDOT for any purpose whatsoever. TxDOT assumes no responsibility for the conversion of this standard to other formats or for incorrect results or damages resulting from its use.

DATE: 3/12/2025 3:13:21 PM
FILE: G:\TXC\Projects\City*Georgetown\10767-00 Shell Road\03*CADD\01*Shts\08-SPMD\Shds\smds2.dgn

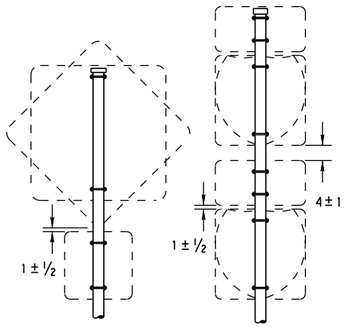

SM RD SGN ASSM TY XXXXX(1)XX(P)

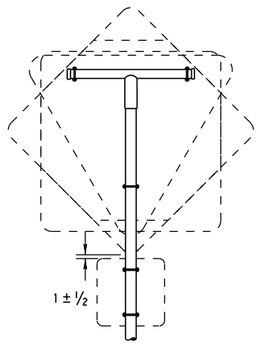

SM RD SGN ASSM TY XXXXX(1)XX(T)

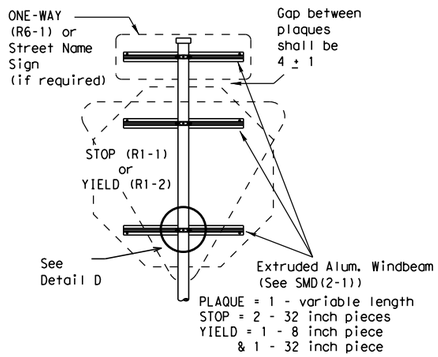

SM RD SGN ASSM TY XXXXX(1)XX(P-BM)

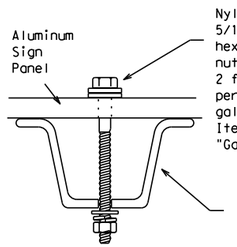

Detail A

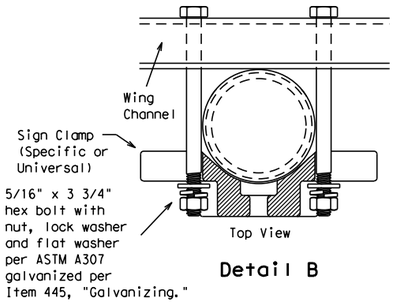

Detail B

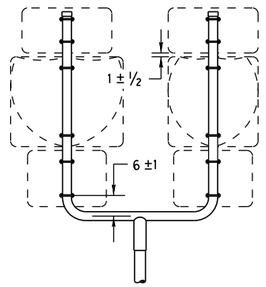

SM RD SGN ASSM TY XXXXX(1)XX(U)

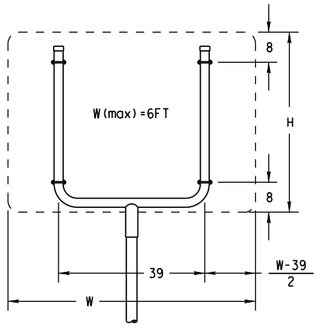

SM RD SGN ASSM TY XXXXX(1)XX(U)

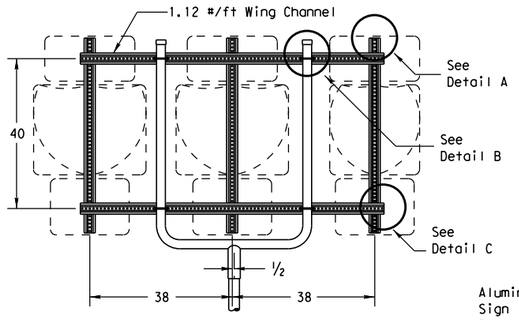

SM RD SGN ASSM TY XXXXX(1)XX(U-WC)
(See Note 11)

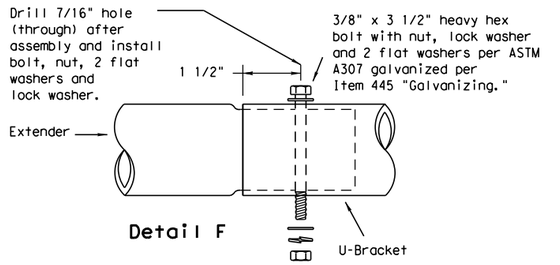

Detail F

Splices shall only be allowed behind the sign substrate.

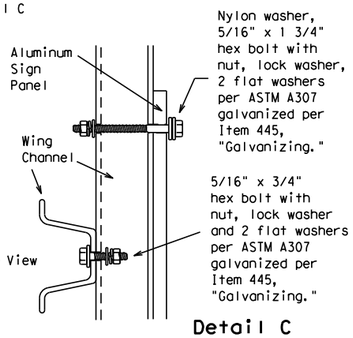

Detail C

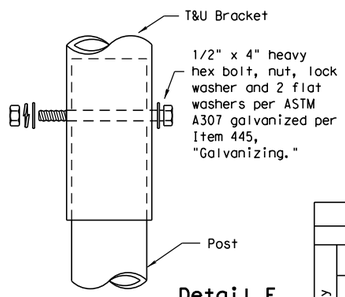

Detail E

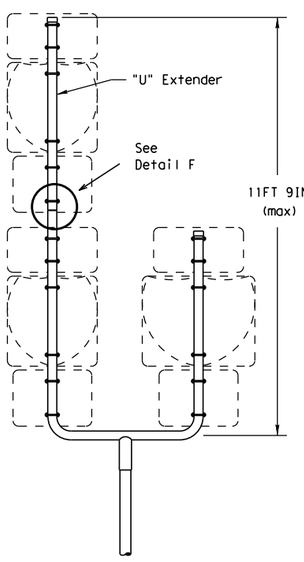

SM RD SGN ASSM TY S80(1)XX(U-1EXT)

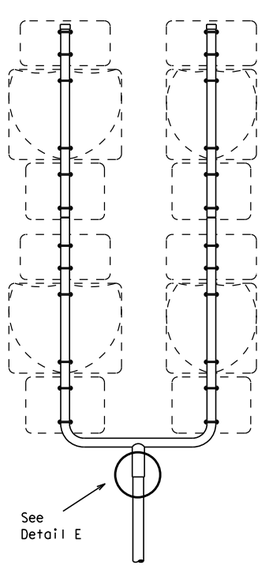

SM RD SGN ASSM TY S80(1)XX(U-2EXT)

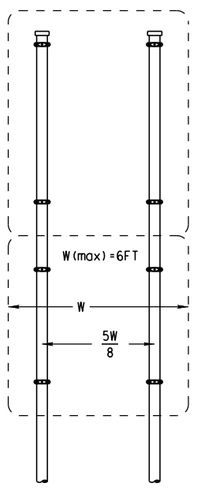

SM RD SGN ASSYM TY XXXXX(2)XX(P)

SIDE VIEW

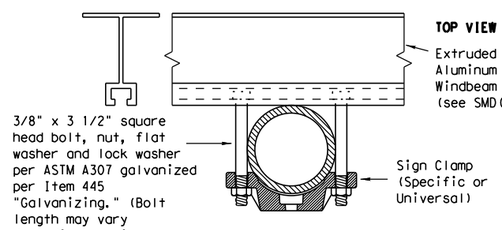

Detail D

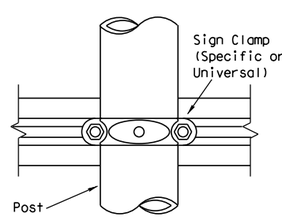

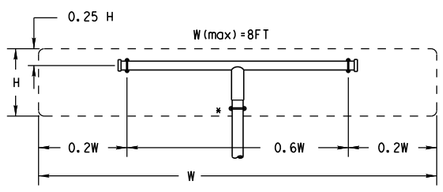

SM RD SGN ASSM TY XXXXX(1)XX(T)
(* - See Note 12)

All dimensions are in english unless detailed otherwise.

FRICTION CAP DETAIL

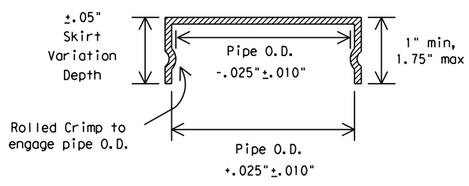

Friction caps may be manufactured from hot rolled or cold rolled steel sheets. The minimum sheet metal thickness shall be 24 gauge for all cap sizes.

The rim edges shall be reasonably straight and smooth. Caps shall be sized and formed in such a manner as to produce a drive-on friction fit and have no tendency to rock when seated on the pipe. The depth shall be sufficient to give positive protection against entrance of rainwater. They shall be free of sharp creases or indentations and show no evidence of metal fracture.

Caps shall have an electrodeposited coating of zinc in accordance with the requirements of ASTM B633 Class FE/ZN 8.

GENERAL NOTES:

1.

SIGN SUPPORT	# OF POSTS	MAX. SIGN AREA
10 BWG	1	16 SF
10 BWG	2	32 SF
Sch 80	1	32 SF
Sch 80	2	64 SF

2. The Engineer may require that a Schedule 80 post be used in place of a 10 BWG where a sign height is abnormally high due to a fill slope.
3. Sign supports shall not be spliced except where shown. Sign support posts shall not be spliced.
4. Aluminum sign blanks shall conform to Departmental Material Specifications DMS-7110 and shall have the following minimum thicknesses: 0.080 for signs less than 7.5 sq. ft., 0.100 for signs 7.5 to 15 sq. ft., and 0.125 for signs greater than 15 sq. ft.
5. Signs that require specific supports due to reasons in addition to windloading are indicated on the "REQUIRED SUPPORT" table on this sheet.
6. For horizontal rectangular signs fabricated from flat aluminum, T-brackets are used for signs 24 inches or less in height. U-brackets are used for signs of greater height.
7. When two triangular slipbase supports are used to support a single sign, they shall not be "rigidly" connected to each other except through the sign panel. This will allow each support to act independently when impacted by an errant vehicle.
8. Wing channel shall meet ASTM A 1011 SS Gr 50 and be galvanized per ASTM A 123.
9. Excess pipe, wing channel, or windbeam shall be cut off so that it does not extend beyond the sign panel (i.e., excess support shall not be visible when the sign is viewed from the front.) Repair galvanized coating at cut support ends per Item 445, "Galvanizing."
10. Additional route markers may be added vertically, provided the total sign area does not exceed the maximum allowable amount per Note 1.
11. Additional sign clamp required on the "T-bracket" post for 24 inch height signs. Place the clamp 3 inches above bottom of sign when possible.
12. Post open ends shall be fitted with Friction Caps.
13. Sign blanks shall be the sizes and shapes shown on the plans.

REQUIRED SUPPORT

	SIGN DESCRIPTION	SUPPORT
Regulatory	48-inch STOP sign (R1-1)	TY 10BWG(1)XX(T) TY 10BWG(1)XX(P-BM)
	60-inch YIELD sign (R1-2)	TY 10BWG(1)XX(T) TY 10BWG(1)XX(P-BM)
	48x16-inch ONE-WAY sign (R6-1)	TY 10BWG(1)XX(T) TY 10BWG(1)XX(P-BM)
	36x48, 48x36, and 48x48-inch signs	TY 10BWG(1)XX(T)
	48x60-inch signs	TY S80(1)XX(T)
Warning	48x48-inch signs (diamond or square)	TY 10BWG(1)XX(T)
	48x60-inch signs	TY S80(1)XX(T)
	48-inch Advance School X-ing sign (S1-1)	TY 10BWG(1)XX(T)
	48-inch School X-ing sign (S2-1)	TY 10BWG(1)XX(T)
	Large Arrow sign (W1-6 & W1-7)	TY 10BWG(1)XX(T)

Texas Department of Transportation
Traffic Operations Division

SIGN MOUNTING DETAILS SMALL ROADSIDE SIGNS TRIANGULAR SLIPBASE SYSTEM

SMD(SLIP-2)-08

©TxDOT July 2002

DN: TXDOT	CK: TXDOT	DW: TXDOT	CK: TXDOT
CONT	SECT	JOB	HIGHWAY
DIST	COUNTY		SHEET NO.
			261

9-08 REVISIONS

26C

DISCLAIMER: The use of this standard is governed by the "Texas Engineering Practice Act". No warranty of any kind is made by TxDOT for any purpose whatsoever. TxDOT assumes no responsibility for the conversion of this standard to other formats or for incorrect results or damages resulting from its use.

DATE: 3/12/2025 3:13:21 PM
FILE: G:\TXC\Projects\City*Georgetown\10767-00 Shell Road\03*CADD\01*Shts\08-SPMD\Stds\smds3.dgn

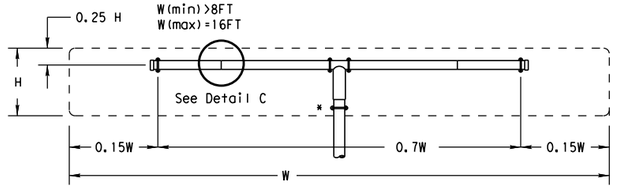

SM RD SGN ASSM TY XXXXX(1)XX(T-2EXT)

(* - See Note 12)

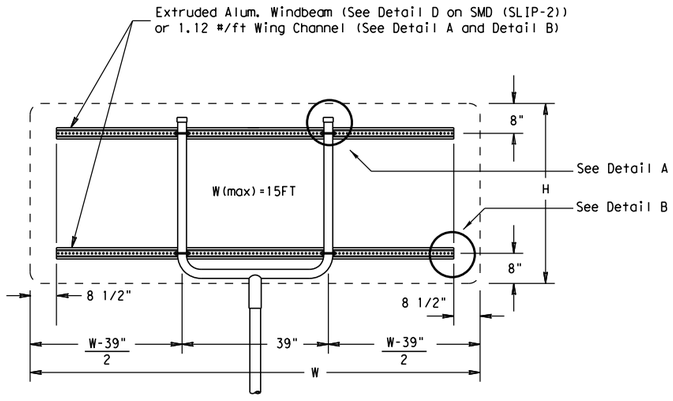

SM RD SGN ASSM TY XXXXX(1)XX(U-XX)

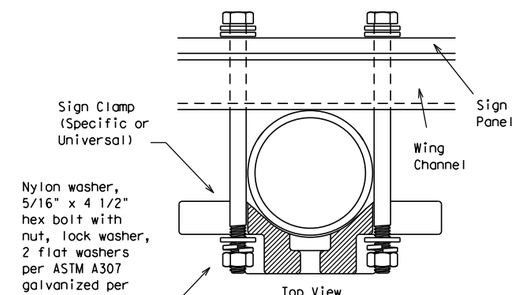

Detail A

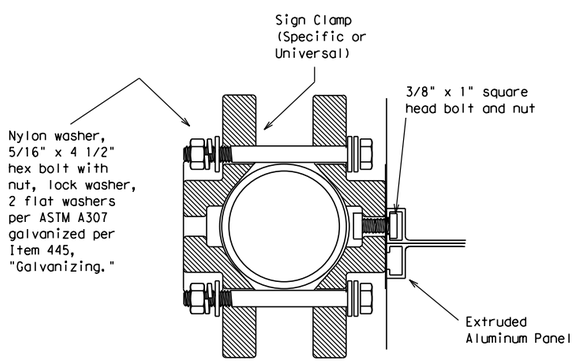

Detail D
EXTRUDED ALUMINUM SIGN WITH T BRACKET

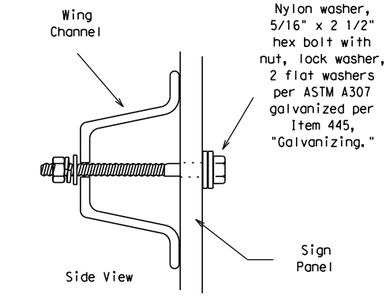

Detail B

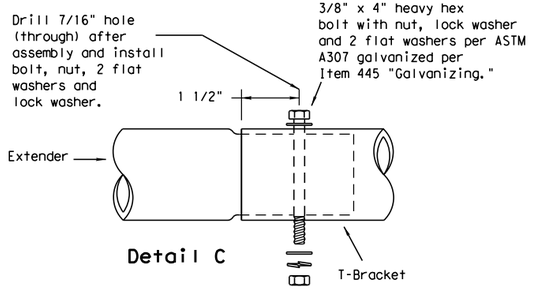

Detail C

Splices shall only be allowed behind the sign substrate.

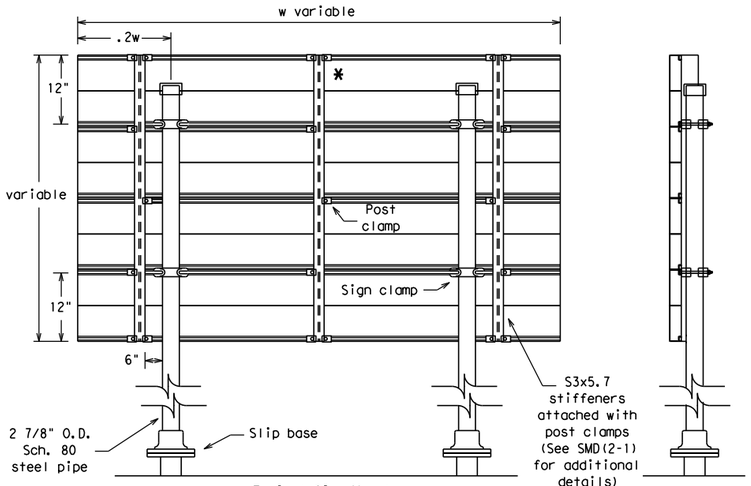

Typical Sign Mount

SM RD SGN ASSM TY S80(2)XX(P-EXAL)

* Additional stiffener placed at approximate center of signs when sign width is greater than 10'.

See Detail E
for clamp installation

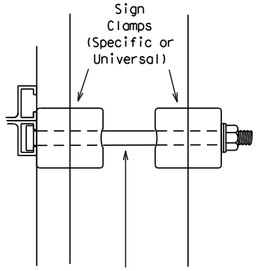

Detail E

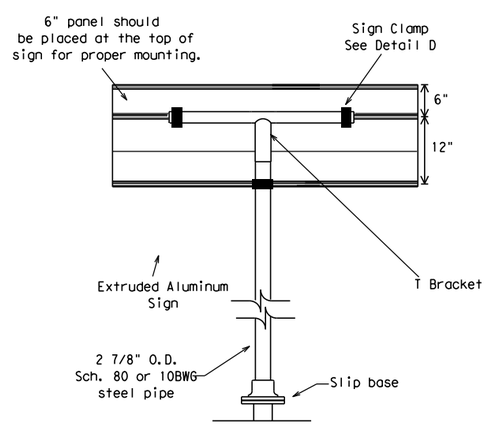

Extruded Aluminum Sign
With T Bracket

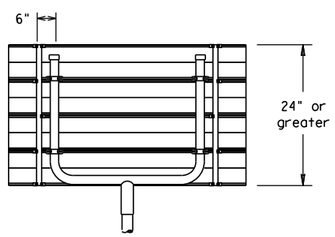

Use Extruded Alum. Windbeam as stiffeners
See SMD (2-1) for additional details

See Detail E
for clamp installation

GENERAL NOTES:

SIGN SUPPORT	# OF POSTS	MAX. SIGN AREA
10 BWG	1	16 SF
10 BWG	2	32 SF
Sch 80	1	32 SF
Sch 80	2	64 SF

1. The Engineer may require that a Schedule 80 post be used in place of a 10 BWG where a sign height is abnormally high due to a fill slope.
2. Sign supports shall not be spliced except where shown. Sign support posts shall not be spliced.
3. Aluminum sign blanks shall conform to Departmental Material Specifications DMS-7110 and shall have the following minimum thicknesses: 0.080 for signs less than 7.5 sq. ft., 0.100 for signs 7.5 to 15 sq. ft., and 0.125 for signs greater than 15 sq. ft.
4. Signs that require specific supports due to reasons in addition to windloading are indicated on the "REQUIRED SUPPORT" table on this sheet.
5. For horizontal rectangular signs fabricated from flat aluminum, T-brackets are used for signs 24 inches or less in height. U-brackets are used for signs of greater height.
6. When two triangular slipbase supports are used to support a single sign, they shall not be "rigidly" connected to each other except through the sign panel. This will allow each support to act independently when impacted by an errant vehicle.
7. Wing channel shall meet ASTM A 1011 SS Gr 50 and be galvanized per ASTM A 123.
8. Excess pipe, wing channel, or windbeam shall be cut off so that it does not extend beyond the sign panel (i.e., excess support shall not be visible when the sign is viewed from the front.) Repair galvanized coating at cut support ends per Item 445, "Galvanizing."
9. Sign blanks shall be the sizes and shapes shown on the plans.
10. Additional sign clamp required on the "T-bracket" post for 24 inch high signs. Place the clamp 3 inches above bottom of sign when possible.
11. Post open ends shall be fitted with Friction Caps.

REQUIRED SUPPORT		
	SIGN DESCRIPTION	SUPPORT
Regulatory	48-inch STOP sign (R1-1)	TY 10BWG(1)XX(T) TY 10BWG(1)XX(P-BM)
	60-inch YIELD sign (R1-2)	TY 10BWG(1)XX(T) TY 10BWG(1)XX(P-BM)
	48x16-inch ONE-WAY sign (R6-1)	TY 10BWG(1)XX(T) TY 10BWG(1)XX(P-BM)
	36x48, 48x36, and 48x48-inch signs	TY 10BWG(1)XX(T)
	48x60-inch signs	TY S80(1)XX(T)
Warning	48x48-inch signs (diamond or square)	TY 10BWG(1)XX(T)
	48x60-inch signs	TY S80(1)XX(T)
	48-inch Advance School X-ing sign (S1-1)	TY 10BWG(1)XX(T)
	48-inch School X-ing sign (S2-1)	TY 10BWG(1)XX(T)
	Large Arrow sign (W1-6 & W1-7)	TY 10BWG(1)XX(T)

Texas Department of Transportation
Traffic Operations Division

SIGN MOUNTING DETAILS
SMALL ROADSIDE SIGNS
TRIANGULAR SLIPBASE SYSTEM

SMD(SLIP-3)-08

©TxDOT July 2002

DN: TXDOT	CK: TXDOT	DW: TXDOT	CK: TXDOT

CONT	SECT	JOB	HIGHWAY

DIST	COUNTY	SHEET NO.
		262

9-08 REVISIONS

DISCLAIMER:
The use of this standard is governed by the "Texas Engineering Practice Act". No warranty of any kind is made by TxDOT for any purpose whatsoever. TxDOT assumes no responsibility for the conversion of this standard to other formats or for incorrect results or damages resulting from its use.

DATE: 3/12/2025 3:13:22 PM
FILE: G:\TxC\Projects\City*Georgetown\10767-00 Shell Road\03*CADD\01*Shts\08-SPMD\Stds\smdtwt.dgn

Wedge Anchor Steel System

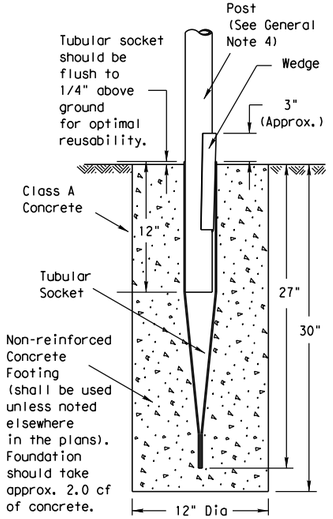

SM RD SGN ASSM TY TWT(X)WS(X)

Wedge Anchor High Density Polyethylene (HDPE) System

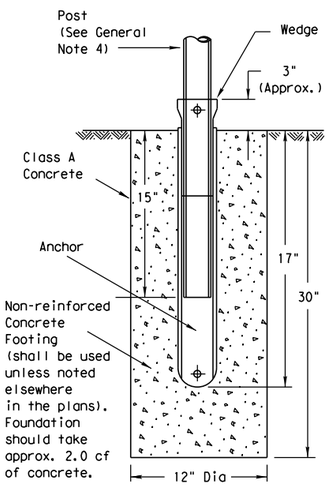

SMD RD SGN ASSM TY TWT(X)WP(X)

Universal Anchor System with Thin-Walled Tubing Post

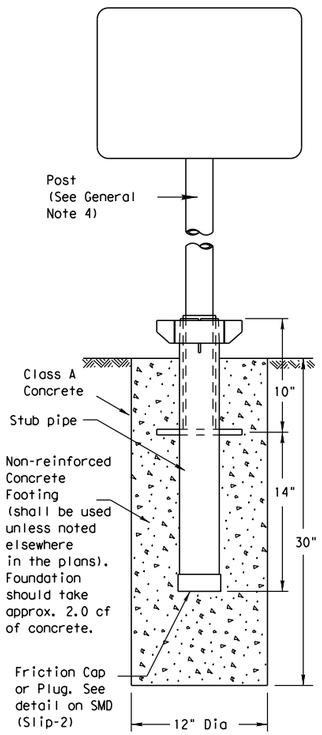

SM RD SGN ASSM TY TWT(X)UA(P)

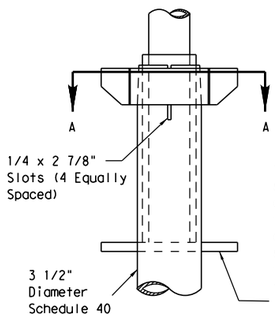

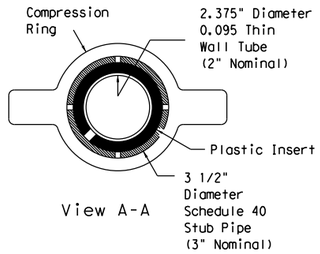

View A-A

Plastic insert must be used when using the TWT with either the Universal Anchor System or the Bolt Down Universal Anchor System. The insert should be approx. 10" long and cover the tubing from just above the top of the stub pipe to the bottom of the sign post when using the Universal Anchor System. The insert should be cut to approx. 4 1/2" when used with the Bolt Down Universal Anchor System.

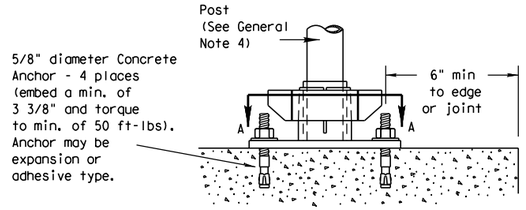

Concrete anchor consists of 5/8" diameter stud bolt with UNC series bolt threads on the upper end. A heavy hex nut per ASTM A563 and hardened washer per ASTM F436. The stud bolt shall have minimum yield and ultimate tensile strengths of 50 and 75 ksi, respectively. Nuts, bolts and washers shall be galvanized per Item 445, "Galvanizing." Top of bolt shall extend at least flush with top of nut when installed. The anchor, when installed in 4000 psi normal-weight concrete with a 3 3/8" minimum embedment, shall have a minimum allowable tension and shear of 2450 and 1525 psi, respectively. Adhesive type anchors shall have stud bolts installed with Type III epoxy per DMS-6100, "Epoxies and Adhesives." Adhesive anchors may be loaded after adequate epoxy cure time per the manufacturer's recommendations.

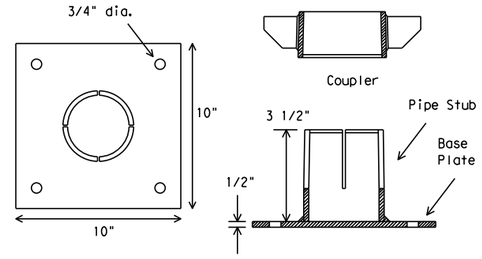

SM RD SGN ASSM TY TWT(X)UB(P)

Sign Installation Using a Prefabricated T-Bracket for Thin-Wall Tubing Post

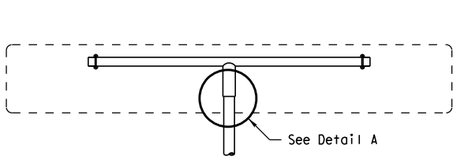

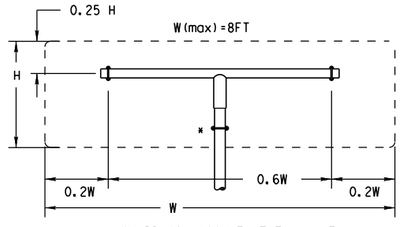

SM RD SGN ASSM TY TWT(X)XX(T)
(* - See General Note 6)

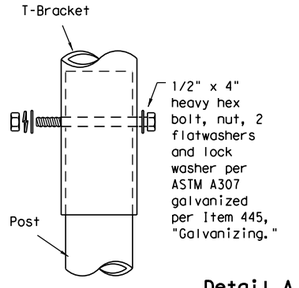

Detail A

9/16" hole may need to be drilled through post to accommodate bolt.

NOTE

The devices shall be installed per manufacturer's recommendations.
Installation procedures shall be provided to the Engineer by Contractor.

GENERAL NOTES:

1. The Wedge Anchor System and the Universal Anchor System with thin wall tubing post may be used to support up to 10 square feet of sign area.
2. The tubular socket, wedge and prefabricated T-bracket shall be permanently marked to indicate manufacturer. Method, design, and location of marking are subject to the approval of the TxDOT Traffic Standards Engineer.
3. Except for posts (13 BWG Tubing), clamps, nuts and bolts, all components shall be prequalified. A list of prequalified vendors may be obtained from the Material Producer List web page. The website address is: http://www.txdot.gov/business/producer list.htm
4. Material used as post with this system shall conform to the following specifications:
   13 BWG Tubing (2.375" outside diameter) (TWT)
   0.095" nominal wall thickness
   Seamless or electric-resistance welded steel tubing
   Steel shall be HSLAS Gr 55 per ASTM A1011 or ASTM A1008
   Other steels may be used if they meet the following:
   55,000 PSI minimum yield strength
   70,000 PSI minimum tensile strength
   18% minimum elongation in 2"
   Wall thickness (uncoated) shall be within the range of .083" to .099"
   Outside diameter (uncoated) shall be within the range of 2.369" to 2.381"
   Galvanization per ASTM 123 or ASTM A653 G210. For precoated steel tubing (ASTM A653), recoat tube outside diameter weld seam by metallizing with zinc wire per ASTM B833.
5. Sign blanks shall be the sizes and shapes shown on the plans.
6. Additional sign clamp required on the "T-bracket" post for 24" high signs. Place clamp at least 3" above bottom of sign when possible.
7. Sign supports shall not be spliced except where shown. Sign support posts shall not be spliced.
8. See the Traffic Operations Division website for detailed drawings of sign clamps and Wedge Anchor System components. The website address is: http://www.txdot.gov/publications/traffic.htm

WEDGE ANCHOR SYSTEM INSTALLATION PROCEDURE

1. Dig foundation hole. Where solid rock is encountered at ground level, the foundation shall be a minimum depth of 18". When solid rock is encountered below ground level, the foundation shall extend in the solid rock a minimum depth of 18" or provide a minimum foundation depth of 30". If solid rock is encountered, the socket/stub may be reduced in length as required to a minimum length of 18". Any material removed from the socket/stub shall be from the bottom and the clearance requirements given on SMD(GEN) must be followed. The inner surfaces of the socket/stub must remain free of concrete or other debris.
2. The Engineer may permit batches of concrete less than 2 cubic yards to be mixed with a portable, motor driven concrete mixer. For small placements less than 0.5 cubic yards, hand mixing in a suitable container may be allowed by Engineer. Place concrete into hole until it is approximately flush with the ground. Concrete shall be Class A.
3. Insert tubular socket into concrete until top of socket is approximaely 1/4 " above the concrete footing.
4. Plumb the socket. Allow a minimum 4 days for concrete to set, unless otherwise directed by Engineer..
5. Attach the sign to the sign post.
6. Insert the sign post into socket and align sign face with roadway.
7. Drive the wedge into the socket to secure post. This will leave approximately 3 inches of the wedge exposed.

UNIVERSAL ANCHOR SYSTEM INSTALLATION PROCEDURE

1. Dig foundation hole. Where solid rock is encountered at ground level, the foundation shall be a minimum depth of 18". When solid rock is encountered below ground level, the foundation shall extend in the solid rock a minimum depth of 18" or provide a minimum foundation depth of 30". If solid rock is encountered, the socket/stub may be reduced in length as required to a minimum length of 18". Any material removed from the socket/stub shall be from the bottom and the clearance requirements given on SMD(GEN) must be followed. The inner surfaces of the socket/stub must remain free of concrete or other debris.
2. Insert base post in hole to depths shown and backfill hole with concrete.
3. Level and plumb the base post using a torpedo level and allow concrete adequate time to set. The bottom of the slots provided in the stub pipe shall remain above the top of the concrete foundation.
4. Attach the sign to the sign post.
5. Install plastic insert around bottom of post.
6. Insert sign post into base post. Lower until the post comes to rest on steel rod.
7. Seat compression ring using a hammer. Typically, the top of compression ring will be approximately level with top of stub post when optimally installed.
8. Check sign post by hand to ensure it is unable to turn. If loose, increase the tightening of the compression ring.

Texas Department of Transportation
Traffic Operations Division

SIGN MOUNTING DETAILS SMALL ROADSIDE SIGNS WEDGE & UNIVERSAL ANCHOR WITH THIN WALL TUBING POST

SMD(TWT)-08

©TxDOT July 2002

DN: TXDOT	CK: TXDOT	DW: TXDOT	CK: TXDOT

CONT	SECT	JOB	HIGHWAY

DIST	COUNTY	SHEET NO.
		263

9-08 REVISIONS

26E

DISCLAIMER:
The use of this standard is governed by the "Texas Engineering Practice Act". No warranty of any kind is made by TxDOT for any purpose whatsoever. TxDOT assumes no responsibility for the conversion of this standard to other formats or for incorrect results or damages resulting from its use.

LEVELS DISPLAYED
1 | 2

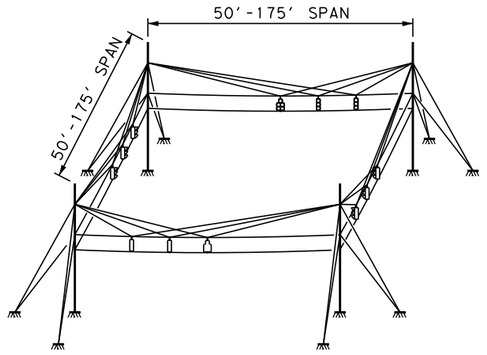

RECTANGULAR BOX CONFIGURATION

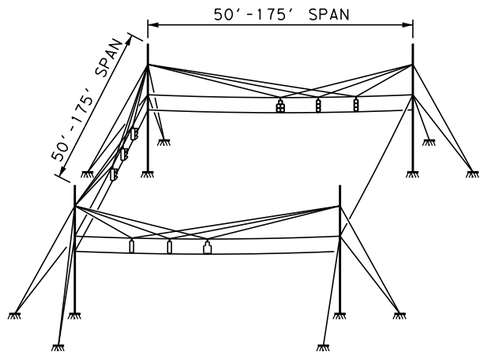

C-BOX CONFIGURATION

SIGNAL HEAD TYPE	'Y'
HORIZONTAL	1'-8" ±
VERTICAL	4'-0" ±

DESIGN CRITERIA:

1. SIGNAL HEAD DESIGN DEAD LOADS AND WIND AREAS SHOWN IN TABLE BELOW. VALUES INCLUDE BACKPLATES.
2. DESIGN IS BASED ON ONE 5 OR 4-SECTION HEAD AND ONE OR MORE ADDITIONAL 3-SECTION HEAD(S).
3. WEIGHT OF INDIVIDUAL ⅜" CABLE IS 0.273 LB/FT AND ⅜16" CABLE IS 0.080 LB/FT.
4. WEIGHT OF SWAY CABLE IS ASSUMED TO BE 0.65 LB/FT, WHICH INCLUDES AN ALLOWANCE FOR CONDUCTOR CABLE AND MISCELLANEOUS HARDWARE.
5. DESIGN WIND SPEED EQUALS 80 MPH PLUS A 1.3 GUST FACTOR (CURRENT AASHTO SPECIFICATIONS FOR SIGNS, LUMINAIRES AND TRAFFIC SIGNALS USE EQUIVALENT 90 MPH WITH A 1.14 GUST FACTOR).
6. IMPORTANCE FACTOR = 0.71 (10-YEAR DESIGN LIFE)
7. DESIGN WIND PRESSURE ON CABLES ARE ASSUMED AS 1.0 LB/FT.
8. DESIGN CONTAINS ALLOWANCE FOR A MAXIMUM 30 SQ. FT. OF 0.100 IN. THICK ALUMINUM SIGNS PER SPAN.
9. DESIGN CONTAINS ALLOWANCE FOR A 60 LB. LUMINAIRE HAVING AN EFFECTIVE PROJECTED AREA (ACTUAL AREA TIMES DRAG COEFFICIENT) OF 1.6 SQ. FT.
10. DESIGN ICE LOAD OF 3 PSF IS CONSIDERED AROUND SURFACES OF SUPPORTS, WIRES, SIGNALS AND ONE FACE OF SIGN PANELS ONLY.

SIGNAL HEAD DESIGN VALUES

SIGNAL HEAD TYPE	WT. PER HEAD	WIND AREA ◆
5-SECTION, 12" LENS	125 LBS	9.6 SQ. FT.
4-SECTION, 12" LENS	100 LBS	7.6 SQ. FT.
3-SECTION, 12" LENS	75 LBS	5.6 SQ. FT.

◆ EFFECTIVE PROJECTED DESIGN WIND AREA (ACTUAL AREA TIMES DRAG COEFFICIENT)

MATERIALS

TIMBER POLE	ANSI CLASS 2 TREATED TIMBER POLE
STEEL CABLE	ASTM A475, 7 WIRE, UTILITIES GRADE, GALVANIZED, ⅜" DIAMETER EXCEPT AS NOTED
SIGNAL HEADS	POLYCARBONATE HOUSING & LENS, LED LAMP WITH 12" LENS

SHIPPING PARTS LIST

DESCRIPTION	QUANTITY	UNIT
40' TIMBER POLE ①		EA
⅜" STEEL CABLE		FT
⅜16" STEEL CABLE		FT
8' LUMINAIRE ARM		EA

① SHIP EACH POLE WITH THE FOLLOWING: A BARE #6 AWG (AMERICAN WIRE GAUGE) COPPER ELECTRICAL CONDUCTOR FROM THE TOP OF THE POLE TO THE BUTT WRAP OR COPPER BUTT PLATE, PROTECTIVE ELECTRICAL CONDUCTOR TO A HEIGHT OF 8 FT. ABOVE FINISHED GRADE, BRANDING OF SUPPLIER, PLANT, SPECIES, PRESERVATIVE CODE & CLASS LENGTH 2 CLAMP-ON SIMPLEX. FOR A PROJECT REQUIRING 10 POLES OR LESS, THE CONTRACTOR MAY PURCHASE POLES LOCALLY IF SOURCE AND TREATMENT ARE DOCUMENTED.

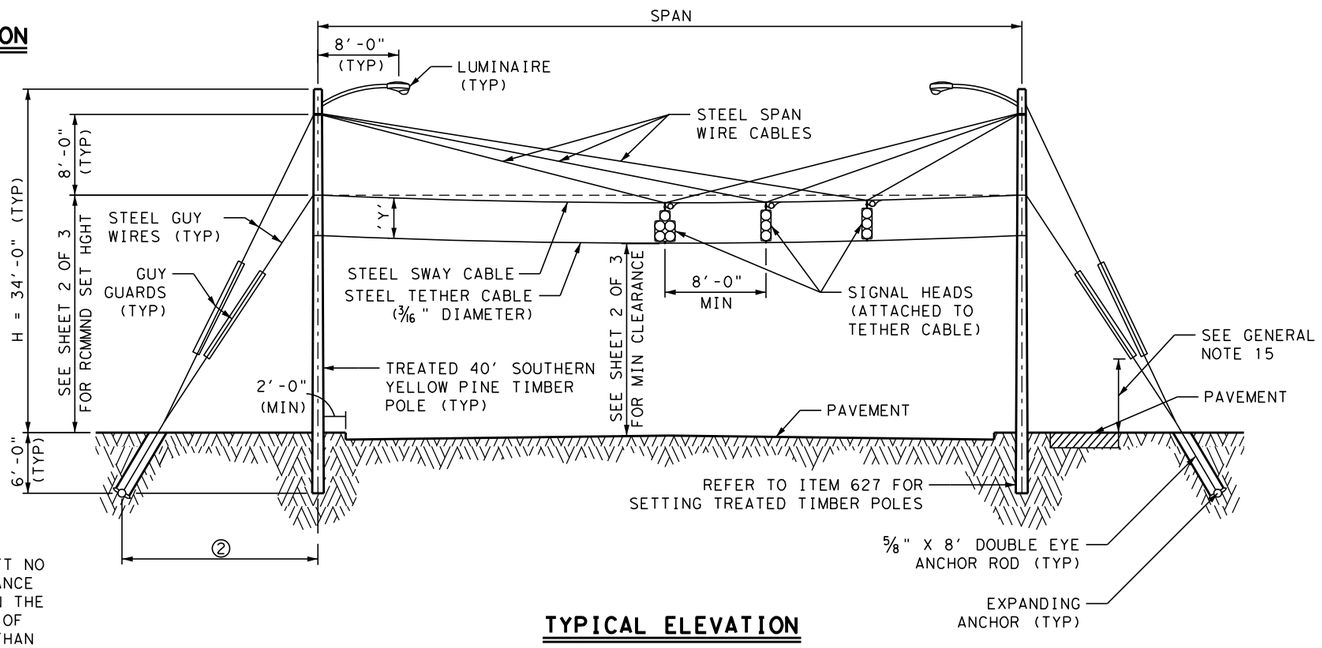

TYPICAL ELEVATION

(VERTICAL SIGNALS SHOWN, HORIZONTAL SIGNALS SIMILAR)

② LOCATE THE EMBEDDED TIP OF GUY ANCHOR A DISTANCE FROM PILE BUTT NO GREATER THAN THE VERTICAL DISTANCE MEASURED ALONG THE POLE BETWEEN THE GROUND LINE AND THE ATTACHMENT OF LOWEST GUY AND NEVER ANY LESS THAN 1/3 OF THAT DISTANCE.

GENERAL NOTES:

1. DESIGN CONFORMS TO AASHTO STANDARD SPECIFICATIONS FOR STRUCTURAL SUPPORTS FOR HIGHWAY SIGNS, LUMINAIRES, AND TRAFFIC SIGNALS, 5TH EDITION.
2. THIS STANDARD IS ONLY APPLICABLE FOR RECTANGULAR OR C-BOX CONFIGURATIONS (AS SHOWN) WITH SPAN LENGTHS RANGING FROM 50'TO 175' IN EITHER DIRECTION.
3. FOR CONSTRUCTION REQUIREMENTS AND SEQUENCING, SEE SHEET 2 OF 3.
4. FOR ELECTRICAL AND MISCELLANEOUS DETAILS, SEE SHEET 3 OF 3.
5. SEE LAYOUT FOR LOCATIONS OF SIGNALS, SIGNS AND LUMINAIRES.
6. MINIMUM ALLOWABLE SOIL STRENGTH IS 20 BLOWS/12" PER THE TEXAS CONE PENETRATION TEST (TCP).
7. SEE SHEET 3 OF 3 FOR LUMINAIRE ARM AND CONNECTION DETAILS.
8. TEMPORARY TRAFFIC SIGNALS SHALL BE PAID FOR AND IN ACCORDANCE WITH ITEM 681.
9. ZINC-COATED STEEL WIRE STRAND SHALL BE IN ACCORDANCE ITEM 625.
10. TREATED TIMBER POLES SHALL BE IN ACCORDANCE WITH ITEM 627. FOR A PROJECT REQUIRING 10 POLES OR LESS, CONTRACTOR MAY PURCHASE LOCAL POLES IF SOURCE AND TREATMENT ARE DOCUMENTED.
11. VEHICLE AND PEDESTRIAN SIGNAL HEADS SHALL BE IN ACCORDANCE WITH ITEM 682.
12. TRAFFIC SIGNAL CABLES SHALL BE IN ACCORDANCE WITH ITEM 684.
13. CONTRACTOR SHALL NOT INSTALL ANY SPAN WIRE, SWAY, OR GUY WIRE CABLES AROUND EXISTING AERIAL UTILITIES. CLEARANCE SHALL BE IN ACCORDANCE WITH THE LATEST VERSION OF THE NATIONAL ELECTRIC CODE (NEC).
14. IF PEDESTRIAN ACCOMMODATIONS ARE TO BE INSTALLED, PEDESTRIAN SIGNAL HEADS AND PUSH BUTTONS SHOULD BE INSTALLED ON SEPARATE PEDESTAL POLES.
15. A MINIMUM 8' VERTICAL CLEARANCE SHALL BE PROVIDED BETWEEN SIDEWALK AND GUY WIRE. THE CLOSEST GUY WIRE TO THE SIDEWALK SHALL HAVE YELLOW PLASTIC TUBING.
16. DRILLED HOLE DIAMETER SHALL BE 18" MININUM OR A MINIMUM HOLE SIZE EQUAL TO THE POLE BUTT DIAMETER PLUS 8".
17. FILL MATERIAL SHALL BE TAMPED IN 6" LIFTS. A GRADE 7 OR 8 CONCRETE AGGREGATE OR DRILL CUTTINGS (IF GRANULAR AND NOT LARGER THAN ¾") MAY BE USED AS FILL.

EXPANDING ANCHOR NOTES:

1. HOLE SHALL BE DRILLED AT AN ANGLE INLINE WITH THE GUY (45° TO 60° TYPICAL).
2. OTHER ANCHOR TYPES (DISC OR SCREW TYPE) MAY BE USED WITH ENGINEER'S APPROVAL.
3. HOLE SIZE SHALL BE SLIGHTLY LARGER THAN THE UNEXPANDED ANCHOR, PER MANUFACTURER'S SPECIFICATIONS.
4. ALL ANCHORS SHALL BE INSTALLED PER MANUFACTURER'S SPECIFICATIONS. ALL BLADES SHALL BE WEDGED INTO UNDISTURBED SOIL.
5. FOLLOWING INSTALLATION OF THE ANCHOR AND ANCHOR ROD, BACKFILL HOLE AND THOROUGHLY TAMP.

Texas Department of Transportation
Fort Worth District

TRAFFIC SIGNAL SUPPORT STRUCTURES TIMBER POLE ASSEMBLIES

(80 MPH WIND ZONE)

TP-80(12) (FTW)

FILE: TP80.DGN	DN: JDS	CK: RSW	DW: JDS	CK: RSW
©TxDOT SEPTEMBER 2012	CONT	SECT	JOB	HIGHWAY
REVISIONS				
	DIST	COUNTY		SHEET NO.
				264

CONSTRUCTION REQUIREMENTS AND SEQUENCING

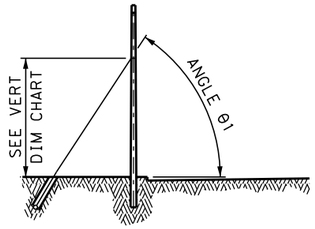

STEP 1 - SET POLE & STRESS LOWER GUY WIRE

STEP 1 NOTES:
1. CONSTRUCTION MAY PROCEED IN ONLY ONE DIRECTION AT A TIME.
2. SET THE POLES PLUMB AND THE EXPANDING ANCHORS PER MANUFACTURER'S RECOMMENDATIONS.
3. BACKFILL HOLES FOR ANCHOR, ANCHOR ROD & POLES PER ITEM 627.
4. STRESS LOWER GUY WIRE TO:
   INITIAL TENSION = 500 LB / COS θ1 ②

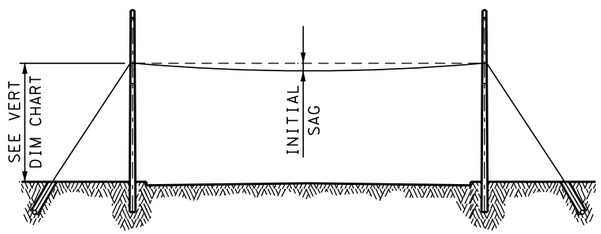

STEP 2 - STRESS SWAY CABLE

STEP 2 NOTES:
1. INSTALL AND STRESS THE STEEL SWAY CABLE PER THE INITIAL SWAY CABLE PROFILE CHART.
2. INITIAL SAG IS THE MAXIMUM DISTANCE BETWEEN THE SWAY CABLE AND A STRAIGHT LINE BETWEEN THE SUPPORT POINTS ON THE TIMBER POLES.
3. INITIAL SAG REQUIREMENTS DO NOT ACCOUNT FOR WEIGHT OF CONDUCTOR CABLE. CONDUCTOR CABLE IS TO BE ATTACHED IN STEP 4.
4. THIS IS THE FINAL STEP FOR THE OPEN END (SPAN WITHOUT SIGNALS) IN THE C-BOX CONFIGURATION.

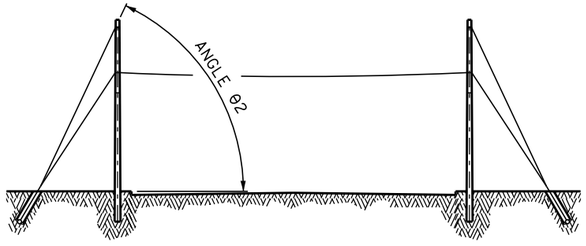

STEP 3 - STRESS UPPER GUY WIRE

STEP 3 NOTES:
1. INSTALL THE UPPER STEEL GUY WIRE. CONNECT TO ANCHOR ROD FROM STEP 1.
2. DETERMINE HORIZONTAL COMPONENT OF STRESSING FORCE BASED ON THE SPAN LENGTH AND THE NUMBER OF SIGNAL HEADS FROM UPPER GUY WIRE INITIAL TENSION CHART.
3. STRESS UPPER GUY WIRE TO:
   INITIAL TENSION = HORIZ COMPONENT / COS θ2 ③

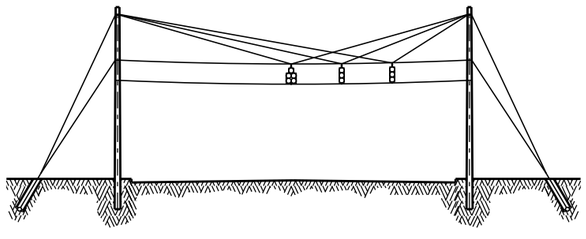

STEP 4 - INSTALL SIGNAL HEADS & ATTACHMENTS

STEP 4 NOTES:
1. ATTACH SIGNAL HEADS TO STEEL SWAY CABLE.
2. INSTALL STEEL SPAN WIRE CABLES AND SIGNALS. STRESS SPAN WIRE CABLES UNTIL THE SIGNALS CAN BE ATTACHED TO SWAY CABLE AND NOT CAUSE DEFLECTION IN THE SWAY CABLE FROM THE WEIGHT OF THE SIGNAL HEADS.
3. FOLLOWING THE STRESSING OF ALL SPAN WIRE CABLES, CONSTRUCTION MAY PROCEED IN THE PERPENDICULAR DIRECTION OR PROCEED WITH THE INSTALLATION OF THE TETHER CABLE, CONDUCTOR CABLE AND ALL OTHER ATTACHMENTS.
4. VERIFY MINIMUM FINAL CLEARANCE AFTER ALL ATTACHMENTS.

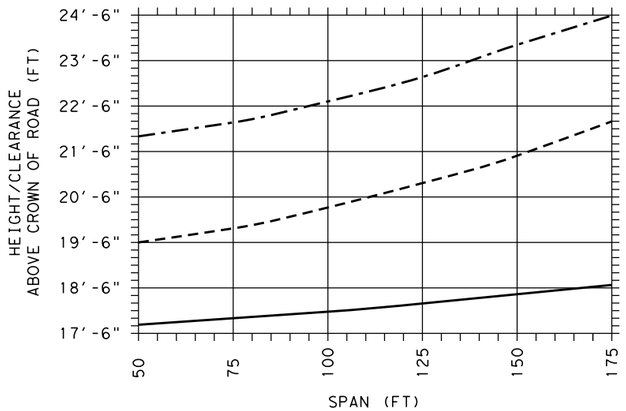

RECOMMENDED HEIGHT OF SWAY CABLE SUPPORT W/ VERTICAL SIGNALS ①

RECOMMENDED HEIGHT OF SWAY CABLE SUPPORT W/ HORIZONTAL SIGNALS ①

MINIMUM FINAL CLEARANCE AFTER ALL ATTACHMENTS ②

① RECOMMENDED HEIGHT DOES NOT ACCOUNT FOR INTERSECTION OR SITE GRADING AND ADJUSTMENTS MAY BE NECESSARY. CONTRACTOR MUST VERIFY THAT THE MINIMUM FINAL CLEARANCE BETWEEN THE PAVEMENT AND SIGNAL HEAD OR TETHER CABLE IS SATISFIED.

② FINAL CLEARANCE ALLOWS DEFLECTION DUE TO ICE LOADING.

VERTICAL DIMENSIONS

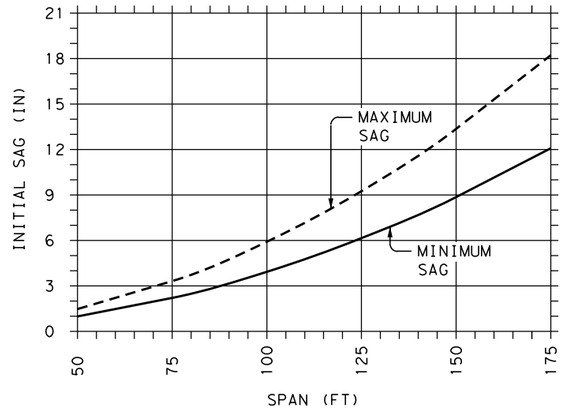

TENSION = 700 LB ③

TENSION = 1,050 LB

③ TENSIONS SHOWN ARE CABLE FORCES AND DO NOT ACCOUNT FOR FRICTION IN EQUIPMENT DURING STRESSING OPERATIONS.

SWAY CABLE PROFILE

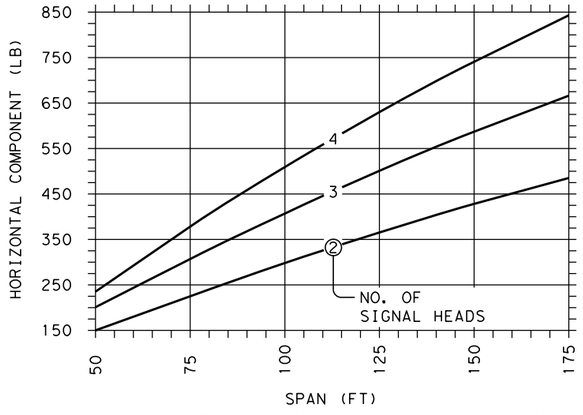

UPPER GUY WIRE INITIAL TENSION

NOTES:

1. SEE SHEET 1 OF 3 FOR GENERAL NOTES.
2. MINIMUM ALLOWABLE SOIL STRENGTH IS 20 BLOWS/12" PER THE TEXAS CONE PENETRATION TEST (TCP).

DISCLAIMER:
The use of this standard is governed by the "Texas Engineering Practice Act". No warranty of any kind is made by TxDOT for any purpose whatsoever. TxDOT assumes no responsibility for the conversion of this standard to other formats or for incorrect results or damages resulting from its use.

LEVELS DISPLAYED
1 2

SHEET 2 OF 3

Texas Department of Transportation
Fort Worth District

TRAFFIC SIGNAL SUPPORT STRUCTURES TIMBER POLE ASSEMBLIES

(80 MPH WIND ZONE)

TP-80(12) (FTW)

FILE: TP80.DGN	DN: JDS	CK: RSW	DW: JDS	CK: RSW
© TxDOT SEPTEMBER 2012	CONT	SECT	JOB	HIGHWAY
REVISIONS				
	DIST	COUNTY		SHEET NO.
				265

DISCLAIMER:
The use of this standard is governed by the "Texas Engineering Practice Act". No warranty of any kind is made by TxDOT for any purpose whatsoever. TxDOT assumes no responsibility for the conversion of this standard to other formats or for incorrect results or damages resulting from its use.

LEVELS DISPLAYED
1 2

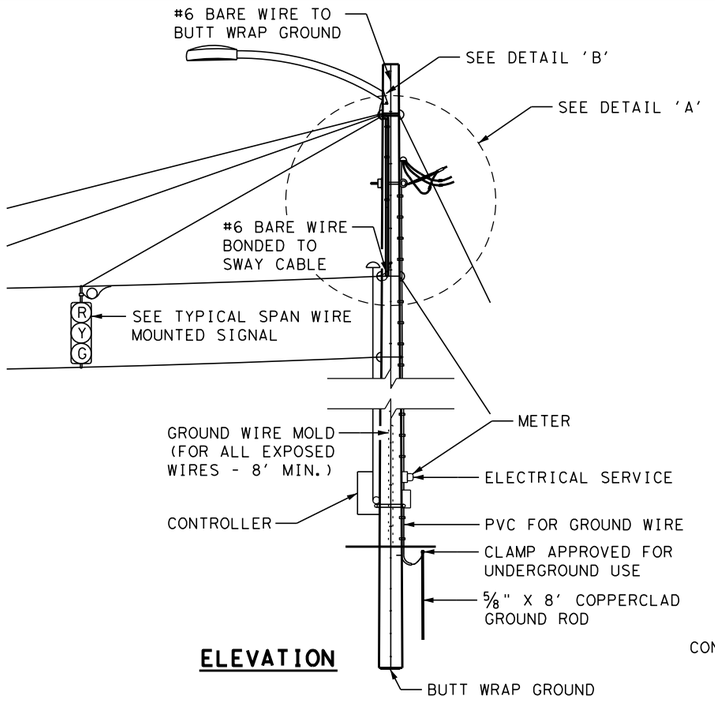

ELEVATION

ELECTRICAL NOTES:

1. ALL CONDUITS SHOWN ARE TYPICAL. CONDUIT SIZES MAY VARY. REFER TO THE LAYOUT FOR ACTUAL SIZES.
2. SEE LAYOUT FOR CONDUCTOR SIZE.
3. ALL UNDERGROUND CONDUIT SHALL BE A MINIMUM OF 2' BELOW GROUND LEVEL.
4. ALL CONDUITS SHALL BE SEALED.
5. SERVICE WIRING SHALL BE XHHW. GROUNDING TYPE INSULATED BUSHINGS SHALL BE INSTALLED ON EVERY CONDUIT ENTERING SERVICE ENCLOSURE.
6. ALL CONDUIT ATTACHED TO THE WOOD POLE SHALL BE RIGID METAL CONDUIT (RMC).
7. CONDUIT SHALL NOT ENTER CABINET FROM THE TOP.

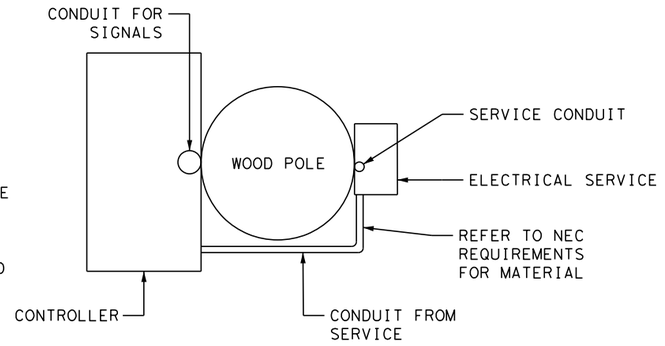

PLAN

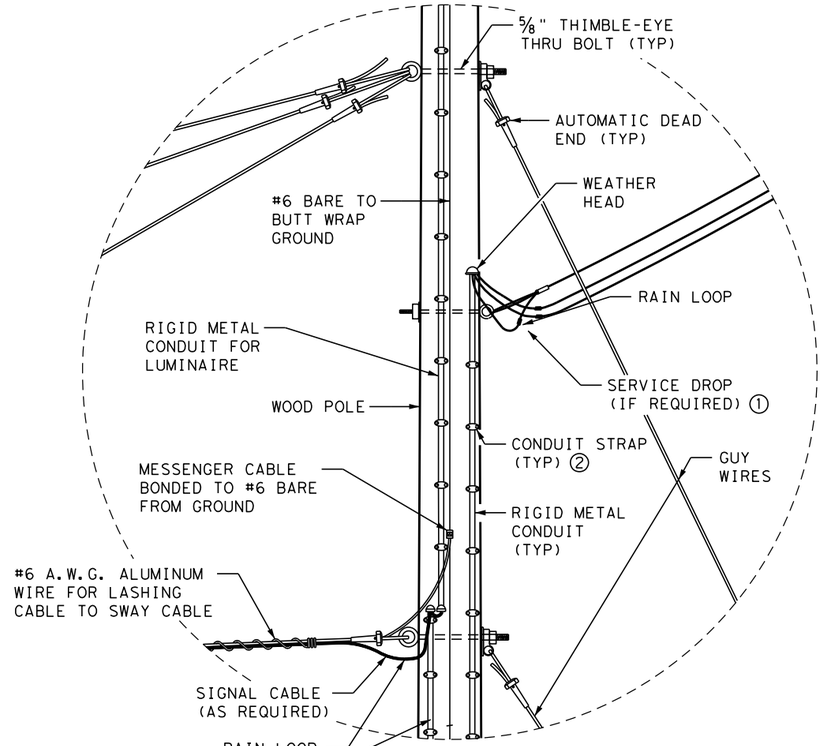

DETAIL 'A'

① SERVICE DROP POINT MIN. 6" BELOW WEATHER HEAD

② CONDUIT STRAPS SPACED MAX. 5' ON CENTER

③ ALL SPAN WIRE AND SWAY CABLES SHALL BE BONDED TOGETHER AT EACH POLE AND TO THE #6 BARE WIRE (BUTT WRAP) AT EACH POLE

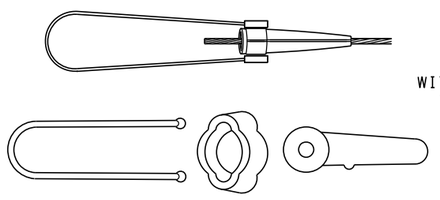

AUTOMATIC DEAD END

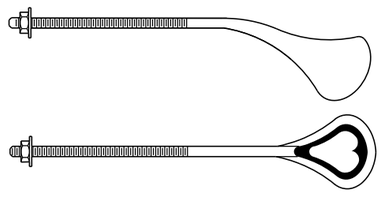

5/8" THIMBLE-EYE THRU BOLT



5/8" THIMBLE-EYE NUT

POLE MOUNTED SERVICE

(CONTRACTOR SHALL ATTACH SERVICE ENCLOSURE WITH GALVANIZED CHANNEL. GAIN POLE IN TWO PLACES TO PROVIDE FLAT SURFACES. REFER TO ED(4)-03)

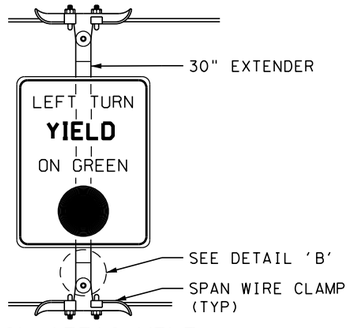

SIGN ATTACHMENT

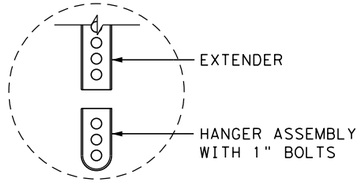

DETAIL 'B'

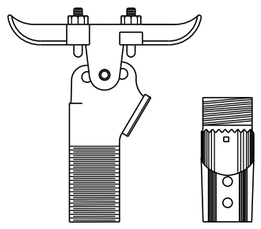

TOP **BOTTOM**

SPAN WIRE HANGER DETAIL

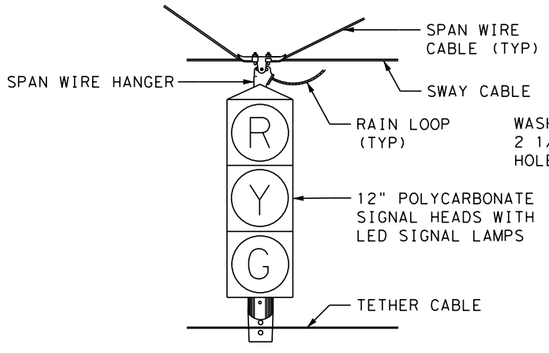

TYPICAL SPAN WIRE MOUNTED SIGNAL

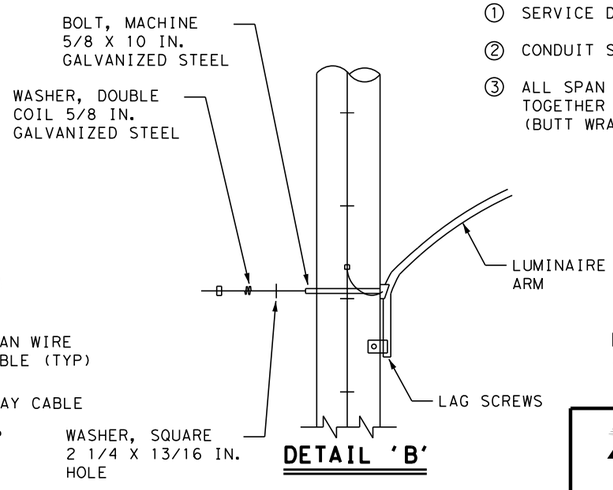

DETAIL 'B'

① 4 - 1/2" x 1 1/4" BRACKET MOUNTING BOLTS SUPPLIED WITH POLE (2 BOLTS PER POSITION).

② ARM HAS HOLE WITH 1/2" RUBBER GROMMET FOR CONDUCTOR ENTRY WHEN SERVED OVERHEAD.

③ ARM WILL ACCOMMODATE OVERHEAD OR UNDERGROUND FEEDS

NOTES:

1. SEE SHEET 1 OF 3 FOR GENERAL NOTES.

Texas Department of Transportation
Fort Worth District

TRAFFIC SIGNAL SUPPORT STRUCTURES TIMBER POLE ASSEMBLIES

(80 MPH WIND ZONE)

TP-80(12) (FTW)

FILE: TP80.DGN	DN: JDS	CK: RSW	DW: JDS	CK: RSW
© TxDOT SEPTEMBER 2012	CONT	SECT	JOB	HIGHWAY
REVISIONS				
	DIST	COUNTY		SHEET NO.
				266

REQUIREMENTS FOR OVERHEAD AND LARGE GROUND-MOUNTED SIGNS

TYPICAL EXAMPLES

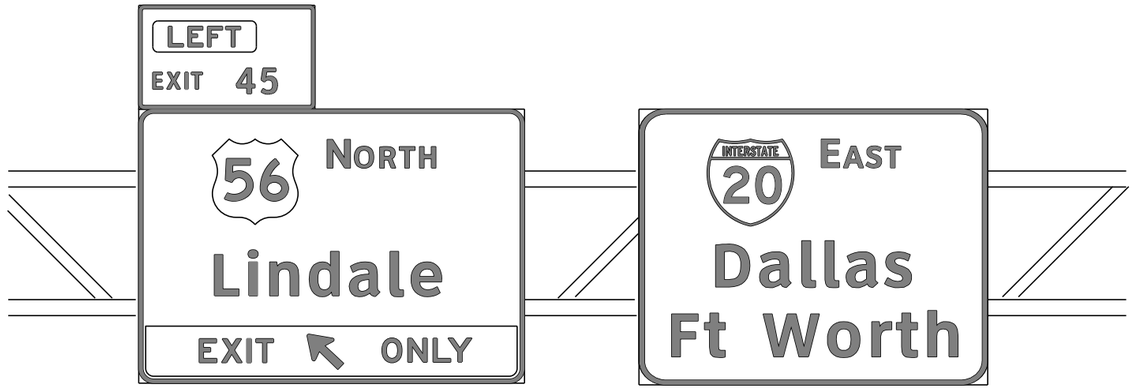









GENERAL NOTES

1. Signs to be furnished shall be as detailed elsewhere in the plans and/or as shown on sign summary sheet. Standard sign designs and arrow dimensions can be found in the "Standard Highway Sign Designs for Texas" (SHSD).
2. Black legend shall use the Federal Highway Administration (FHWA) Standard Highway Alphabets (B, C, D, E, Emod, or F).
   White legend shall use the Clearview Alphabet.
   The following Clearview fonts shall be used to replace the existing white FHWA lettering, when not specified in the SHSD or in the plans.

B	CV-1W
C	CV-2W
D	CV-3W
E	CV-4W
Emod	CV-5WR
F	CV-6W

3. Lateral spacing between letters and numerals shall conform with the SHSD, and any approved changes thereto. Lateral spacing of legend shall provide a balanced appearance when spacing is not shown.
4. Black legend shall be applied by screening process or cut-out acrylic non-reflective black film to background sheeting, or combination thereof.
5. White legend and borders shall be cut-out white sheeting applied to colored background sheeting.
6. Information regarding borders and radii for signs is found in the "Standard Highway Sign Designs for Texas". Dimensions shown and described for borders and corner radii on parent sign are nominal. Borders may vary in width as much as 1/2 inch. Corner radii above 3 inches may vary in width as much as 1 inch. Borders and corner radii within a parent sign must be of matching widths. The sign area outside the corner radius need not be trimmed or rounded if fabricated from an extruded material.
7. Sign substrate for ground-mounted signs shall be any material that meets the Departmental Material Specification requirements of DMS-7110 or approved alternative. Sign substrate for overhead signs shall be any material that meets DMS-7110. Exit Number Panels attached above the parent sign shall be made with the same substrate and sheeting as the parent sign.
8. Mounting details of attachments to parent sign face are shown on Standard Plan Sheet TSR(5). Mounting details of exit number panels above parent sign are shown in the "SMD series" Standard Plan Sheets.
9. Background sheeting shall be applied to the substrate per sheeting manufacturer's recommendations. Sheeting will not be allowed to bridge the horizontal gap between panels.
10. Cut all legend, symbols, borders, and direct applied sign attachments at panel joints.

DEPARTMENTAL MATERIAL SPECIFICATIONS	
ALUMINUM SIGN BLANKS	DMS-7110
SIGN FACE MATERIALS	DMS-8300

The Standard Highway Sign Designs for Texas (SHSD) can be found at the following website.

http://www.txdot.gov/

SHEETING REQUIREMENTS		
USAGE	COLOR	SIGN FACE MATERIAL
BACKGROUND	WHITE	TYPE B OR C SHEETING
BACKGROUND	ALL OTHERS	TYPE B OR C SHEETING
LEGEND & BORDERS	WHITE	TYPE D SHEETING
LEGEND & BORDERS	BLACK	ACRYLIC NON-REFLECTIVE FILM

Texas Department of Transportation

Traffic Operations Division Standard

TYPICAL SIGN REQUIREMENTS

TSR(1)-13

FILE: tsr1-13.dgn	DN: TxDOT	CK: TxDOT	DW: TxDOT	CK: TxDOT
© TxDOT October 2003	CONT	SECT	JOB	HIGHWAY
REVISIONS 12-03 7-13 9-08	DIST	COUNTY		SHEET NO. 267

DISCLAIMER:
The use of this standard is governed by the "Texas Engineering Practice Act". No warranty of any kind is made by TxDOT for any purpose whatsoever. TxDOT assumes no responsibility for the conversion of this standard to other formats or for incorrect results or damages resulting from its use.

DATE: 3/12/2025 3:13:24 PM
FILE: G:\TXC\Projects\City_Georgetown\10767-00 Shell Road\03_CADD\01_Shts\08-SMD\SHSD\TSR1-13.dgn

DISCLAIMER:
The use of this standard is governed by the "Texas Engineering Practice Act". No warranty of any kind is made by TxDOT for any purpose whatsoever. TxDOT assumes no responsibility for the conversion of this standard to other formats or for incorrect results or damages resulting from its use.

DATE: 3/12/2025 3:13:24 PM
FILE: G:\TxDC\Projects\City_Georgetown\10767-00 Shell Road\03_CADD\01_Shts\06-SMD\SMD(TSR2)-13.dgn

REQUIREMENTS FOR ATTACHMENTS TO OVERHEAD AND LARGE GROUND MOUNTED SIGNS

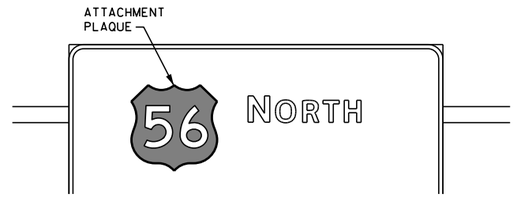

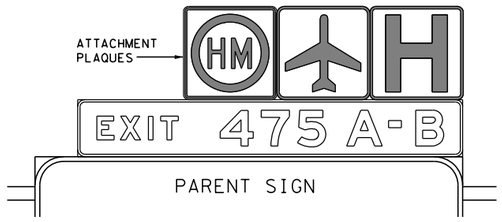

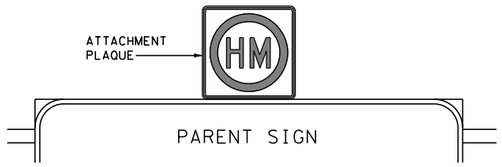

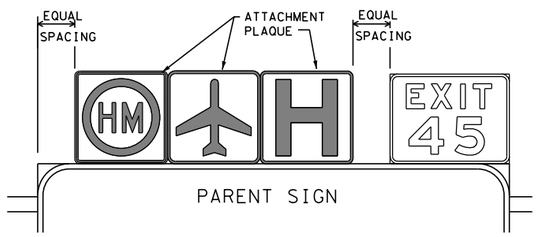

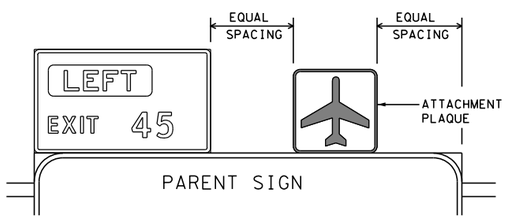

TYPICAL EXAMPLES

DEPARTMENTAL MATERIAL SPECIFICATIONS	
ALUMINUM SIGN BLANKS	DMS-7110
SIGN FACE MATERIALS	DMS-8300

SHEETING REQUIREMENTS		
USAGE	COLOR	SIGN FACE MATERIAL
BACKGROUND	ALL	TYPE B OR C SHEETING
LEGEND & BORDERS	BLACK	ACRYLIC NON-REFLECTIVE FILM
LEGEND & BORDERS	ALL OTHERS	TYPE B OR C SHEETING

GENERAL NOTES

1. Signs to be furnished shall be as detailed elsewhere in the plans and/or as shown on sign tabulation sheet. Standard sign designs and arrow dimensions can be found in the "Standard Highway Sign Designs for Texas" (SHSD).
2. Route Marker legends (ie. IH, US, SH and FM shields) shall use the Federal Highway Administration (FHWA) Standard Highway Alphabets (B, C, D, E, Emod, or F).
3. Lateral spacing between letters and numerals shall conform with the SHSD, and any approved changes thereto. Lateral spacing of legend shall provide a balanced appearance when spacing is not shown.
4. Black legend and borders shall be applied by screening process or cut-out acrylic non-reflective black film to background sheeting, or combination thereof.
5. White legend and borders shall be applied by screening process with transparent colored ink, transparent colored overlay film to white background sheeting or cut-out white sheeting to colored background sheeting, or combination thereof.
6. Colored legend and borders shall be applied by screening process with transparent colored ink, transparent colored overlay film or colored sheeting to white background sheeting, or combination thereof.
7. Route markers and other attachments within the parent sign face shall be direct applied unless otherwise specified in the plans. Attachments not direct applied shall use 0.063 inch thick one piece sheet aluminum signs (Type A).
8. General Service Plaques shall be 0.080 inch thick and Routing Plaques shall be 0.100 inch thick.
9. The priority for Routing Plaques shall be (left to right) Hazardous Material, Airport then Hospital. See examples for mounting location.
10. Mounting details of attachments to parent signs face are shown on Standard Plan Sheet TSR(5). Mounting details of sign plaque attachments above and below parent sign are shown in the "SMD series" Standard Plan Sheets.
11. Plaques shall be horizontally centered at the top of the parent sign. If an exit number panel exists, the plaque shall be centered between the edge of the parent sign and the edge of the exit number panel. The plaque may be placed above the exit number panel when there is insufficient space.



TYPICAL EXAMPLES

REQUIREMENTS FOR EXIT ONLY AND LEFT EXIT PANELS

DEPARTMENTAL MATERIAL SPECIFICATIONS	
ALUMINUM SIGN BLANKS	DMS-7110
SIGN FACE MATERIALS	DMS-8300

SHEETING REQUIREMENTS FOR OVERHEAD EXIT PANELS		
USAGE	COLOR	SIGN FACE MATERIAL
BACKGROUND	FLUORESCENT YELLOW	TYPE B_{FL} OR C_{FL} SHEETING
LEGEND	BLACK	ACRYLIC NON-REFLECTIVE FILM

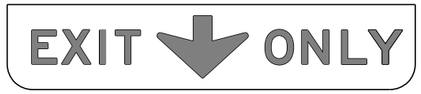





TYPICAL EXAMPLES

GENERAL NOTES

1. Signs to be furnished shall be as detailed elsewhere in the plans and/or as shown on sign tabulation sheet. Standard sign designs and arrow dimensions can be found in the "Standard Highway Sign Designs for Texas" (SHSD). Individual panel sizes shown in the plans may be adjusted to fit actual parent sign sizes if necessary.
2. Exit Panel legend shall use the Federal Highway Administration (FHWA)Standard Highway Alphabets E Series.
3. Lateral spacing between letters and numerals shall conform with the SHSD, and any approved changes thereto. Lateral spacing of legend shall provide a balanced appearance when spacing is not shown.
4. Black legend shall be applied by screening process or cut-out acrylic non-reflective black film to yellow background sheeting, or combination thereof.
5. Exit Only and Left Exit panels within the parent sign face shall be direct applied unless otherwise specified in the plans. Panels not direct applied shall use 0.063 inch thick one piece sheet aluminum signs (Type A).
6. Mounting details of Exit Only and Left Exit panel attachments to parent signs face are shown on Standard Plan Sheet TSR(5).

The Standard Highway Sign Designs for Texas (SHSD) can be found at the following website.

http://www.txdot.gov/

Texas Department of Transportation

Traffic Operations Division Standard

TYPICAL SIGN REQUIREMENTS

TSR(2)-13

FILE: tsr2-13.dgn	DN: TxDOT	CK: TxDOT	DW: TxDOT	CK: TxDOT
©TxDOT October 2003	CONT	SECT	JOB	HIGHWAY
REVISIONS				
12-03 7-13	DIST	COUNTY		SHEET NO.
9-08				268

2

DISCLAIMER:
The use of this standard is governed by the "Texas Engineering Practice Act". No warranty of any kind is made by TxDOT for any purpose whatsoever. TxDOT assumes no responsibility for the conversion of this standard to other formats or for incorrect results or damages resulting from its use.

DATE: 3/12/2025 3:13:25 PM
FILE: G:\TXC\Projects\City_Georgetown\10767-00 Shell Road\03_CADD\01_Shts\08-SHM@SRD\tsr3-13.dgn

REQUIREMENTS FOR INDEPENDENT MOUNTED ROUTE SIGNS

SHEETING REQUIREMENTS		
USAGE	COLOR	SIGN FACE MATERIAL
BACKGROUND	WHITE	TYPE A SHEETING
BACKGROUND	ALL OTHERS	TYPE B OR C SHEETING
LEGEND & BORDERS	WHITE	TYPE A SHEETING
LEGEND & BORDERS	BLACK	ACRYLIC NON-REFLECTIVE FILM
LEGEND & BORDERS	ALL OTHERS	TYPE B or C SHEETING



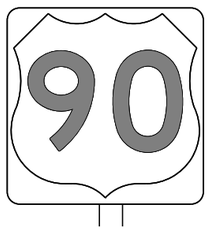



TYPICAL EXAMPLES

REQUIREMENTS FOR BLUE, BROWN & GREEN D AND I SERIES GUIDE SIGNS

SHEETING REQUIREMENTS		
USAGE	COLOR	SIGN FACE MATERIAL
BACKGROUND	ALL	TYPE B OR C SHEETING
LEGEND & BORDERS	WHITE	TYPE D SHEETING
LEGEND, SYMBOLS & BORDERS	ALL OTHERS	TYPE B OR C SHEETING









TYPICAL EXAMPLES

GENERAL NOTES

1. Signs to be furnished shall be as detailed elsewhere in the plans and/or as shown on sign tabulation sheet. Standard sign designs and arrow dimensions can be found in the "Standard Highway Sign Designs for Texas" (SHSD).

2. White legend shall use the Clearview Alphabet. The following Clearview fonts shall be used to replace the existing white Federal Highway Administration (FHWA) Standard Highway Alphabets, when not specified in the SHSD, or in the plans.

B	CV-1W
C	CV-2W
D	CV-3W
E	CV-4W
Emod	CV-5WR
F	CV-6W

3. Route sign legend (ie. IH, US, SH and FM shields) shall use the Federal Highway Administration (FHWA) Standard Highway Alphabets B, C, D, E, Emod or F).

4. Lateral spacing between letters and numerals shall conform with the SHSD, and any approved changes thereto. Lateral spacing of legend shall provide a balanced appearance when spacing is not shown.

5. Independent mounted route sign with white or colored legend and borders shall be applied by screening process with transparent color ink, transparent colored overlay film to white background sheeting or cut-out white sheeting to colored background sheeting, or combination thereof. White legend, symbols and borders on all other signs shall be cut-out white sheeting applied to colored background sheeting.

6. Information regarding borders and radii for signs is found in the "Standard Highway Sign Designs for Texas". Dimensions shown and described for borders and corner radii on parent sign are nominal. Borders may vary in width as much as 1/2 inch. Corner radii above 3 inches may vary in width as much as 1 inch. Borders and corner radii within a parent sign must be of matching widths. The sign area outside the corner radius should be trimmed or rounded.

7. Sign substrate shall be any material that meets the Departmental Material Specification requirements of DMS-7110 or approved alternative.

8. Mounting details of roadside signs are shown in the "SMD series" Standard Plan Sheets.

DEPARTMENTAL MATERIAL SPECIFICATIONS	
ALUMINUM SIGN BLANKS	DMS-7110
SIGN FACE MATERIALS	DMS-8300

ALUMINUM SIGN BLANKS THICKNESS	
Square Feet	Minimum Thickness
Less than 7.5	0.080
7.5 to 15	0.100
Greater than 15	0.125

The Standard Highway Sign Designs for Texas (SHSD) can be found at the following website.

http://www.txdot.gov/

Texas Department of Transportation

Traffic Operations Division Standard

TYPICAL SIGN REQUIREMENTS

TSR(3)-13

FILE: tsr3-13.dgn	DN: TxDOT	CK: TxDOT	DW: TxDOT	CK: TxDOT
©TxDOT October 2003	CONT	SECT	JOB	HIGHWAY
REVISIONS				
12-03 7-13	DIST	COUNTY		SHEET NO.
9-08				269

3

REQUIREMENTS FOR RED BACKGROUND REGULATORY SIGNS

(STOP, YIELD, DO NOT ENTER AND WRONG WAY SIGNS)

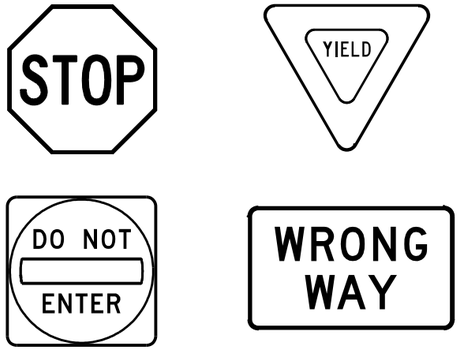

REQUIREMENTS FOR FOUR SPECIFIC SIGNS ONLY

SHEETING REQUIREMENTS		
USAGE	COLOR	SIGN FACE MATERIAL
BACKGROUND	RED	TYPE B OR C SHEETING
BACKGROUND	WHITE	TYPE B OR C SHEETING
LEGEND & BORDERS	WHITE	TYPE B OR C SHEETING
LEGEND	RED	TYPE B OR C SHEETING

REQUIREMENTS FOR WHITE BACKGROUND REGULATORY SIGNS

(EXCLUDING STOP, YIELD, DO NOT ENTER AND WRONG WAY SIGNS)



TYPICAL EXAMPLES

SHEETING REQUIREMENTS		
USAGE	COLOR	SIGN FACE MATERIAL
BACKGROUND	WHITE	TYPE A SHEETING
BACKGROUND	ALL OTHERS	TYPE B OR C SHEETING
LEGEND, BORDERS AND SYMBOLS	BLACK	ACRYLIC NON-REFLECTIVE FILM
LEGEND, BORDERS AND SYMBOLS	ALL OTHER	TYPE B OR C SHEETING

REQUIREMENTS FOR WARNING SIGNS

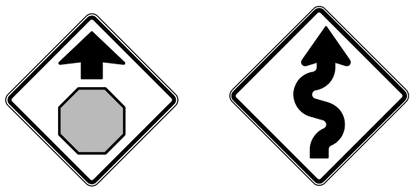

TYPICAL EXAMPLES

SHEETING REQUIREMENTS		
USAGE	COLOR	SIGN FACE MATERIAL
BACKGROUND	FLOURESCENT YELLOW	TYPE B_{FL} OR C_{FL} SHEETING
LEGEND & BORDERS	BLACK	ACRYLIC NON-REFLECTIVE FILM
LEGEND & SYMBOLS	ALL OTHER	TYPE B OR C SHEETING

REQUIREMENTS FOR SCHOOL SIGNS



TYPICAL EXAMPLES

SHEETING REQUIREMENTS		
USAGE	COLOR	SIGN FACE MATERIAL
BACKGROUND	WHITE	TYPE A SHEETING
BACKGROUND	FLOURESCENT YELLOW GREEN	TYPE B_{FL} OR C_{FL} SHEETING
LEGEND, BORDERS AND SYMBOLS	BLACK	ACRYLIC NON-REFLECTIVE FILM
SYMBOLS	RED	TYPE B OR C SHEETING

GENERAL NOTES

1. Signs to be furnished shall be as detailed elsewhere in the plans and/or as shown on sign tabulation sheet. Standard sign designs and arrow dimensions can be found in the "Standard Highway Sign Designs for Texas" (SHSD).
2. Sign legend shall use the Federal Highway Administration (FHWA) Standard Highway Alphabets (B, C, D, E, Emod or F).
3. Lateral spacing between letters and numerals shall conform with the SHSD, and any approved changes thereto. Lateral spacing of legend shall provide a balanced appearance when spacing is not shown.
4. Black legend and borders shall be applied by screening process or cut-out acrylic non-reflective black film to background sheeting, or combination thereof.
5. White legend and borders shall be applied by screening process with transparent colored ink, transparent colored overlay film to white background sheeting or cut-out white sheeting to colored background sheeting, or combination thereof.
6. Colored legend shall be applied by screening process with transparent colored ink, transparent colored overlay film or colored sheeting to background sheeting, or combination thereof.
7. Sign substrate shall be any material that meets the Departmental Material Specification requirements of DMS-7110 or approved alternative.
8. Mounting details for roadside mounted signs are shown in the "SMD series" Standard Plan Sheets.

ALUMINUM SIGN BLANKS THICKNESS	
Square Feet	Minimum Thickness
Less than 7.5	0.080
7.5 to 15	0.100
Greater than 15	0.125

DEPARTMENTAL MATERIAL SPECIFICATIONS	
ALUMINUM SIGN BLANKS	DMS-7110
SIGN FACE MATERIALS	DMS-8300

The Standard Highway Sign Designs for Texas (SHSD) can be found at the following website.

http://www.txdot.gov/

Texas Department of Transportation

Traffic Operations Division Standard

TYPICAL SIGN REQUIREMENTS

TSR(4)-13

FILE: tsr4-13.dgn	DN: TxDOT	CK: TxDOT	DW: TxDOT	CK: TxDOT
© TxDOT October 2003	CONT	SECT	JOB	HIGHWAY
REVISIONS 12-03 7-13 9-08	DIST	COUNTY		SHEET NO. 270

4

DISCLAIMER:
The use of this standard is governed by the "Texas Engineering Practice Act". No warranty of any kind is made by TxDOT for any purpose whatsoever. TxDOT assumes no responsibility for the conversion of this standard to other formats or for incorrect results or damages resulting from its use.

DATE: 3/12/2025 3:13:25 PM
FILE: G:\TXC\Projects\City_Georgetown\10767-00 Shell Road\03_CADD\01_Shts\08-SMD\SHSD\TSR4-13.dgn

DISCLAIMER:
The use of this standard is governed by the "Texas Engineering Practice Act". No warranty of any kind is made by TxDOT for any purpose whatsoever. TxDOT assumes no responsibility for the conversion of this standard to other formats or for incorrect results or damages resulting from its use.

DATE: 3/12/2025 3:13:26 PM
FILE: G:\TXC\Projects\City_Georgetown\10767-00 Shell Road\03_CADD\01_Shts\06-SHW\tsr5-13.dgn

ARROW DETAILS

for Large Ground-Mounted and Overhead Guide Signs

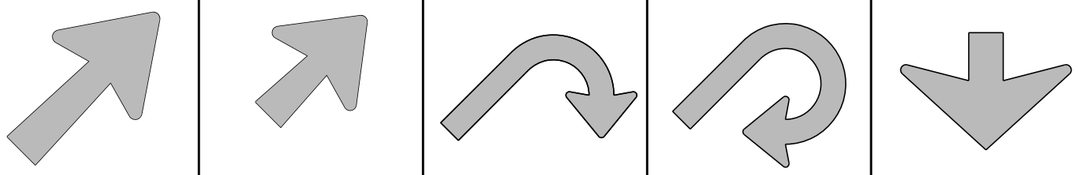

TYPE	LETTER SIZE	USE
A-1	10.67" U/L and 10" Caps	Single Lane Exits
A-2	13.33" U/L and 12" Caps	
A-3	16" & 20" U/L	
B-1	10.67" U/L and 10" Caps	Multiple Lane Exits
B-2	13.33" U/L and 12" Caps	
B-3	16" & 20" U/L	

CODE	USED ON SIGN NO.
E-3	E5-1aT
E-4	E5-1bT

NOTE

Arrow dimensions are shown in the "Standard Highway Sign Designs for Texas" manual.

The Standard Highway Sign Designs for Texas (SHSD) can be found at the following website.

http://www.txdot.gov/

SIGN BLANK PUNCHING DETAILS FOR ATTACHMENTS WHEN SPECIFIED TO BE TYPE A ALUMINUM SIGNS (FOR MOUNTING TO GUIDE SIGN FACE)

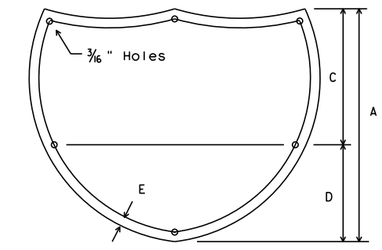

INTERSTATE ROUTE MARKERS

A	C	D	E
36	21	15	1 1/2
48	28	20	1 3/4

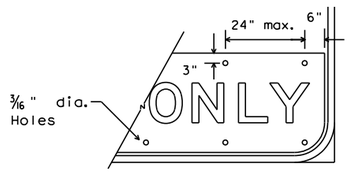

EXIT ONLY PANEL

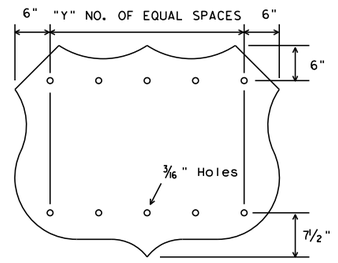

U.S. ROUTE MARKERS

Sign Size	"Y"
24x24	2
30x24	3
36x36	3
45x36	4
48x48	4
60x48	5

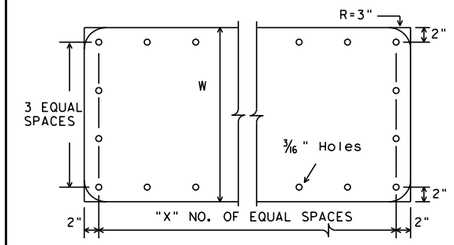

STATE ROUTE MARKERS

No. of Digits	W	X
4	24	4
4	36	5
4	48	6
3	24	3
3	36	4
3	48	5

MOUNTING DETAILS OF ATTACHMENTS TO GUIDE SIGN FACE ("EXIT ONLY" AND "LEFT EXIT" PANELS, ROUTE MARKERS AND OTHER ATTACHMENTS)

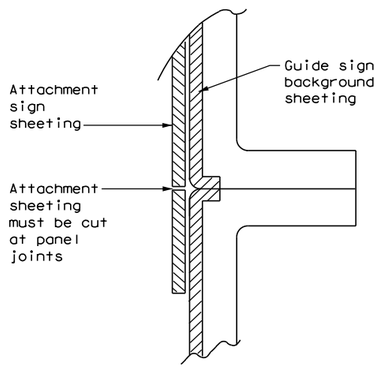

DIRECT APPLIED ATTACHMENT

NOTE:

1. Sheeting for legend, symbols, and borders must be cut at panel joints.
2. Direct applied attachment signs will be subsidiary to "Aluminum Signs" or "Fiberglass Signs".

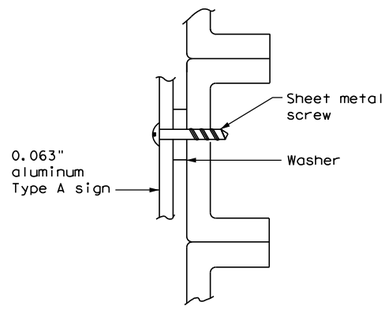

SCREW ATTACHMENT

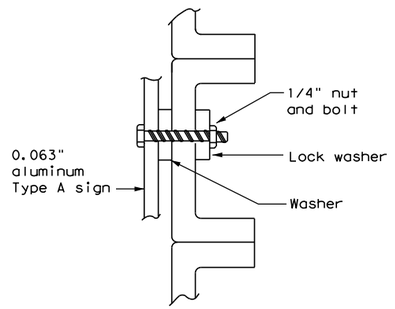

NUT/BOLT ATTACHMENT

NOTE:

Furnish Type A aluminum sign attachments only when specified in the plans. These signs will be paid for under "Aluminum Signs".

ARROW DETAILS

for Destination Signs (Type D)

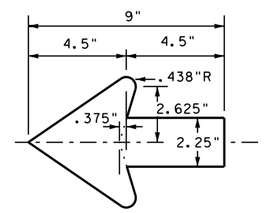

Standard arrow to be used with 6 inch letters.

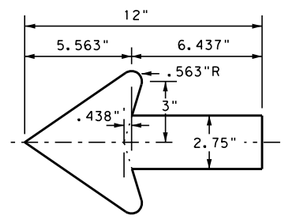

Standard arrow to be used with 8 inch letters.

Texas Department of Transportation

Traffic Operations Division Standard

TYPICAL SIGN REQUIREMENTS

TSR(5)-13

FILE: tsr5-13.dgn	DN: TxDOT	CK: TxDOT	DW: TxDOT	CK: TxDOT
©TxDOT October 2003	CONT	SECT	JOB	HIGHWAY
REVISIONS				
12-03 7-13	DIST	COUNTY		SHEET NO.
9-08				271

5

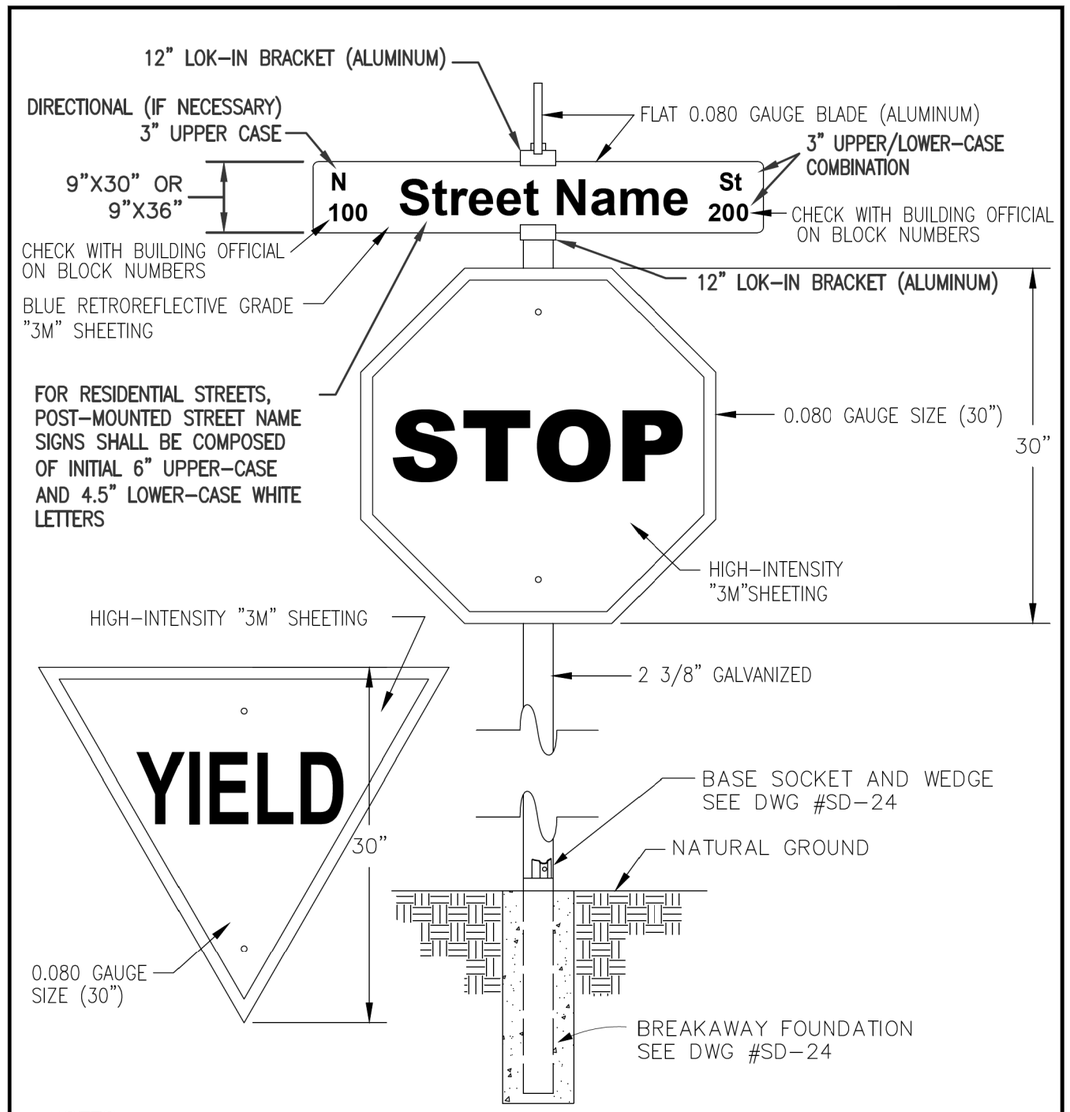

NOTES:

1. 7-FOOT MIN. HEIGHT FROM GROUND TO BOTTOM OF SIGN.
2. ALL SIGNS TO BE IN CONFORMANCE WITH THE CURRENT EDITION OF THE TEXAS MANUAL OF UNIFORM TRAFFIC CONTROL DEVICES (TMUTCD).
3. ALL SIGNAGE SHEETINGS SHALL BE HIGH-INTENSITY "3M" SHEETING
4. ANY MODIFICATION TO THIS STANDARD SHALL BE SUBMITTED FOR APPROVAL.

The Architect/Engineer assumes responsibility for appropriate use of this standard.

REVISED ON: 01/2014 WBD
REVISED ON: 04/2016

GEORGETOWN TEXAS
more than welcome

CITY OF GEORGETOWN
CONSTRUCTION STANDARDS AND DETAILS

STANDARD STREET SIGN DETAIL

DRAWING NAME: SD25

SCALE:	DATE:
NTS	1/2003
DRAWN BY:	APPROVED BY:
MRS/AP	TRB

STATE OF TEXAS
ELENA RAMON
141765
LICENSED
PROFESSIONAL ENGINEER

Elena Ramon
3/12/2025

EST. 1848 GEORGETOWN TEXAS

BGE, Inc.
101 West Louis Henna Blvd, Suite 400, Austin, TX 78728
Tel: 512-879-0400 • www.bgeinc.com
TBPE Registration No. F-1046

SHELL ROAD

STANDARD STREET SIGN DETAIL

SHEET 1 OF 1

SHEET NO. 272

DATE: 3/12/2025 3:13:27 PM
FILE: G:\TXC\Projects\City Georgetown\10767-00 Shell Road\103 CADD\01 Shts\08-SPM\DStds\CoG SIGN STD 01.dgn

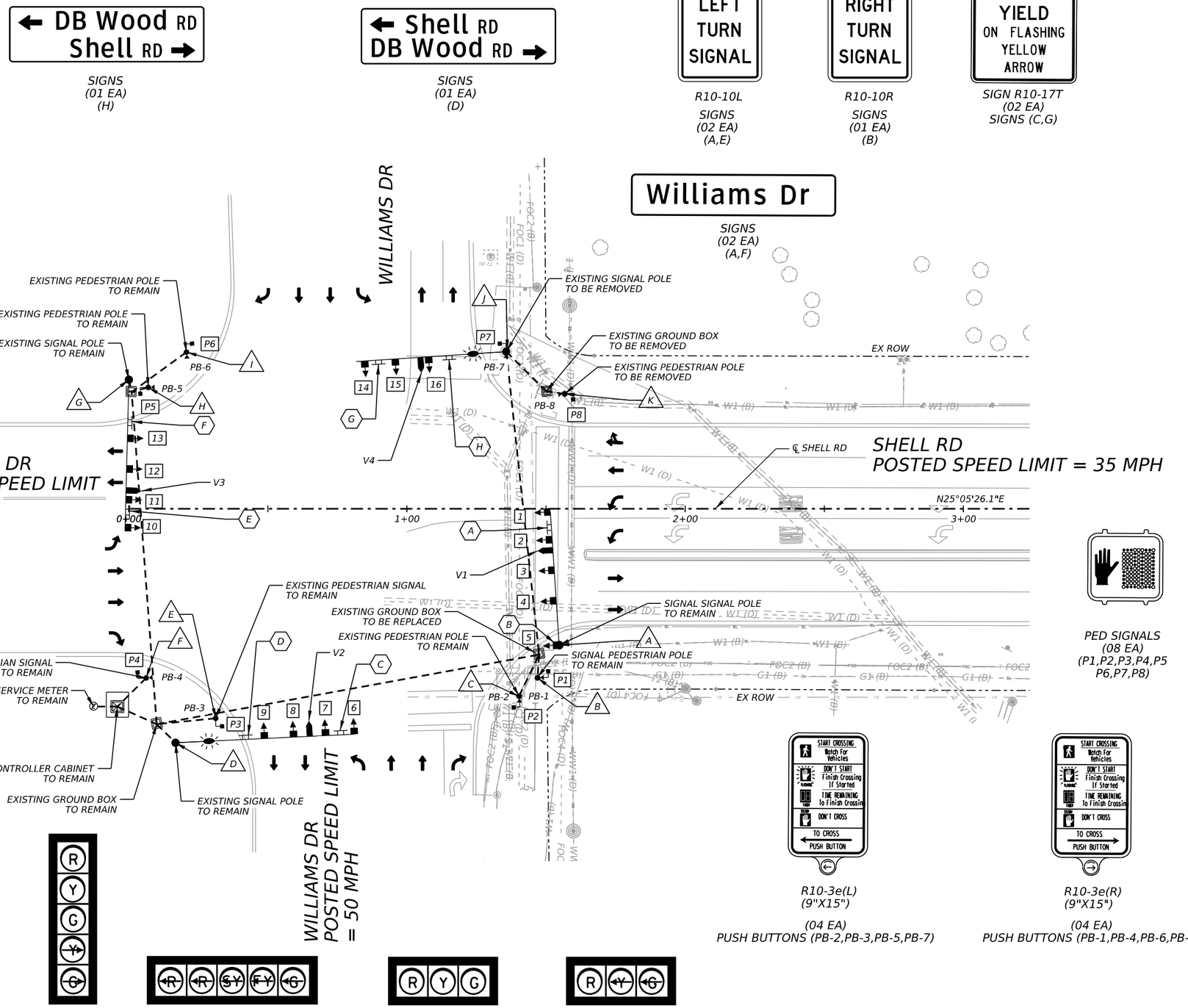

EXISTING LEGEND

- EX SIGNAL POLE AND MAST ARM
- EXISTING DIRECTION OF TRAFFIC
- EXISTING PEDESTRIAN SIGNAL POLE /LUMINAIRE POLE
- EXISTING GROUND MOUNTED CONTROLLER CABINET
- EX GROUND BOX TYPE D W/ APRON
- EX ELECTRICAL SERVICE METER
- EX UNDERGROUND CONDUIT
- EX SIGN ID
- EX PED POLE
- EX PED SIGNAL ID
- EX HEAD SIGNAL ID
- EX LUMINIARE
- EX SIGN
- EX SIGNAL HEAD
- EX CAMERA
- EX PEDESTRIAN SIGNAL HEAD W/ PUSH BUTTON

0 20 40

SCALE: 1" = 40'

STATE OF TEXAS
SHAUN E. SPIVEY
114567
LICENSED
PROFESSIONAL ENGINEER
3/12/2025

GEORGETOWN TEXAS EST.1848

BGE, Inc.
7330 San Pedro, Suite 202, San Antonio, TX 78216
Tel: 210-581-3600 ● www.bgeinc.com
TBPE Registration No. F-1046

SHELL ROAD

EXISTING SIGNAL LAYOUT SHELL RD & WILLIAMS DR

SHEET 1 OF 1

SHEET NO. 273

DATE: 3/11/2025 5:19:03 PM
FILE: G:\TXC\Projects\City Georgetown\10767-00 Shell Road\03 CADD\01 Shts\13-SGNL\SHELL_EXIST_SIGNAL_01.dgn

PROPOSED MAST-ARM SIGNS



R10-10R
(30"X36")
③



R10-17T
(36"X42")
①



DOUBLE-SIDED ILLUMINATED STREET NAME SIGN
(ILSN) (SHELL RD)
②

PROPOSED SIGNALS

12" L.E.D. SIGNALS W/ BACKPLATES



SIGNALS
2 3



LEFT TURN SIGNAL
1



RIGHT TURN SIGNAL
4 5

PROPOSED PEDESTRIAN SIGNALS AND PUSH BUTTONS



R10-3e(L)
(9"X15")
PB-1 PB-2



PED SIGNALS
P-1 P-2

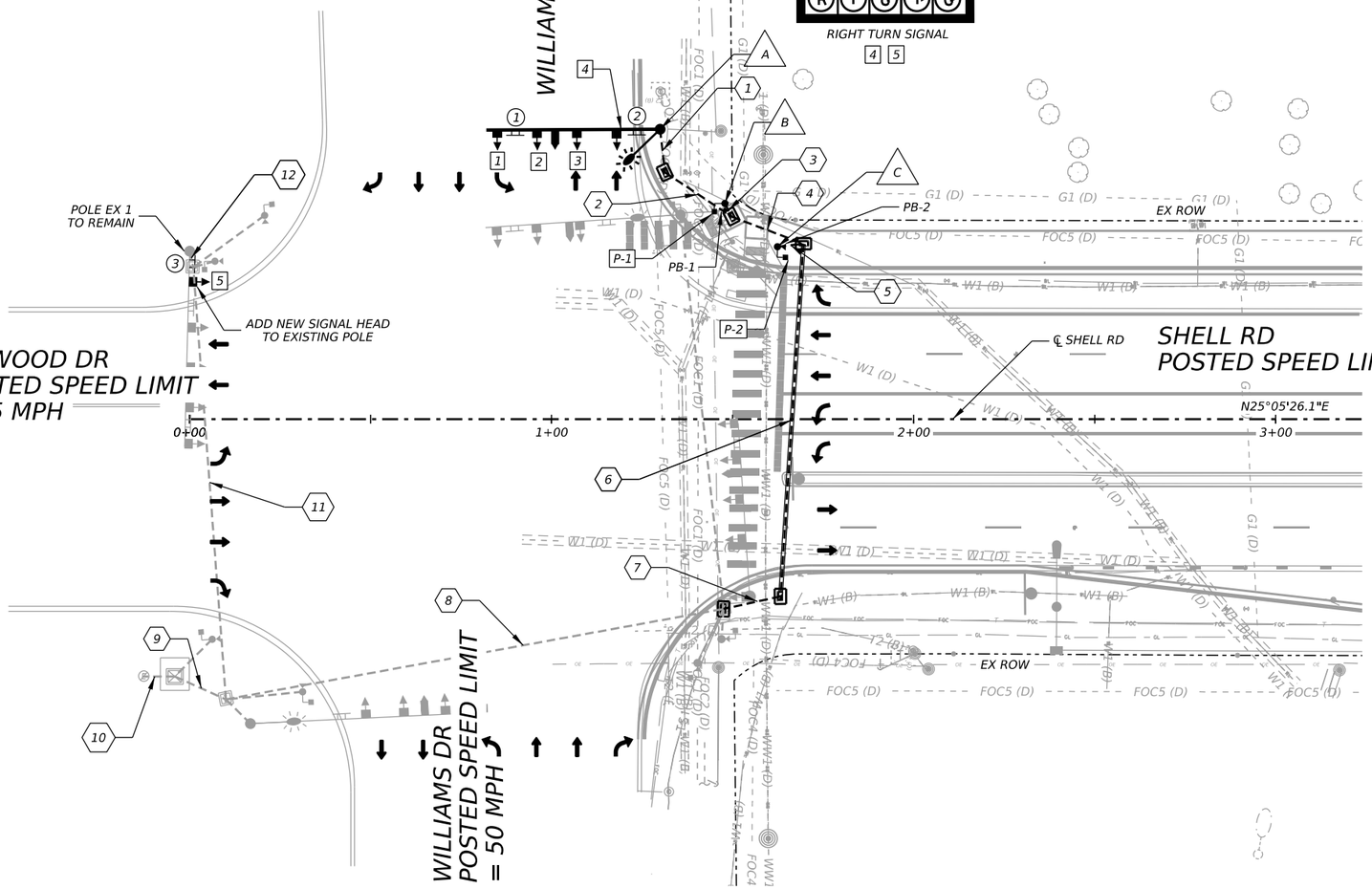

PROPOSED LEGEND

- A — SIGNAL/ PEDESTRIAN POLE IDENTIFIER
- SIGNAL POLE AND MAST ARM
- PROP DIRECTION OF TRAFFIC
- SIGNAL HEAD
- 1 — SIGNAL HEAD NUMBER
- PEDESTRIAN SIGNAL HEAD (P-#) W/ PUSH BUTTON (PB-#)
- GROUND MOUNTED CONTROLLER CABINET
- GROUND BOX TYPE D W/ APRON
- ELECTRICAL SERVICE METER
- LUMINAIRE
- MOUNTED SIGN
- # — MOUNTED SIGN NUMBER
- VIVDS CAMERA
- UNDERGROUND CONDUIT
- # — CONDUIT RUN NUMBER
- Ø# — PHASING NUMBER

0 20 40
SCALE: 1" = 40'

NOTES:

1. CONTRACTOR SHALL POTHOLE SIGNAL POLE FOUNDATION LOCATIONS NEAR UNDERGROUND UTILITIES PRIOR TO INSTALLING POLE FOUNDATIONS.
2. CONTRACTOR SHALL CALL FOR LOCATES PRIOR TO COMMENCING EXCAVATION. ALL UTILITY LOCATIONS SHALL BE VERIFIED IN THE FIELD BY THE CONTRACTOR.
3. LOCATION OF SIGNAL POLES, CABINET AND ELECTRICAL SERVICE SHALL BE VERIFIED AND APPROVED BY THE CITY OF GEORGETOWN PRIOR TO CONSTRUCTION.
4. CONTRACTOR SHALL CONNECT FIELD WIRING TO CONTROLLER.
5. SIGNAL HEADS SHALL HAVE A MINIMUM OF 19.0-FT CLEARANCE ABOVE ROADWAY SURFACE.
6. TRAY CABLE SHALL BE RUN IN 2-IN CONDUIT SEPARATE FROM THE SIGNAL CABLE.

NOTES: (CONTINUED)

7. LUMINAIRES SHOWN AT ANGLE FOR CLARITY. ACTUAL LOCATION OF LUMINAIRES TO BE OVER MAST ARMS.
8. SIDEWALK SHALL BE EXTENDED UP TO SIGNAL POLES AS NEEDED TO PROVIDE ACCESS TO PEDESTRIAN PUSH BUTTONS.
9. CONTRACTOR TO FIELD-VERIFY HORIZONTAL AND VERTICAL LOCATIONS OF EXISTING UTILITIES PRIOR TO CONSTRUCTION.
10. CONTRACTOR TO HAND TRENCH ALL CONDUIT PLACEMENT LOCATIONS AT MINIMUM DEPTH, UNLESS OTHERWISE STATED.

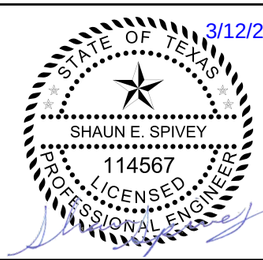

EST.1848 GEORGETOWN TEXAS

BGE, Inc.
101 West Louis Henna Blvd, Suite 400, Austin, TX 78728
Tel: 512-879-0400 • www.bgeinc.com
TBPE Registration No. F-1046

SHELL ROAD

PROPOSED SIGNAL LAYOUT SHELL RD & WILLIAMS DR

SHEET 1 OF 1

SHEET NO. 274

DATE: 3/11/2025 5:19:27 PM
FILE: G:\TXC\Projects\City Georgetown\10767-00 Shell Road\03_CADD\01 Shts\13-SGN\SHELL_SIGNAL_01.dgn

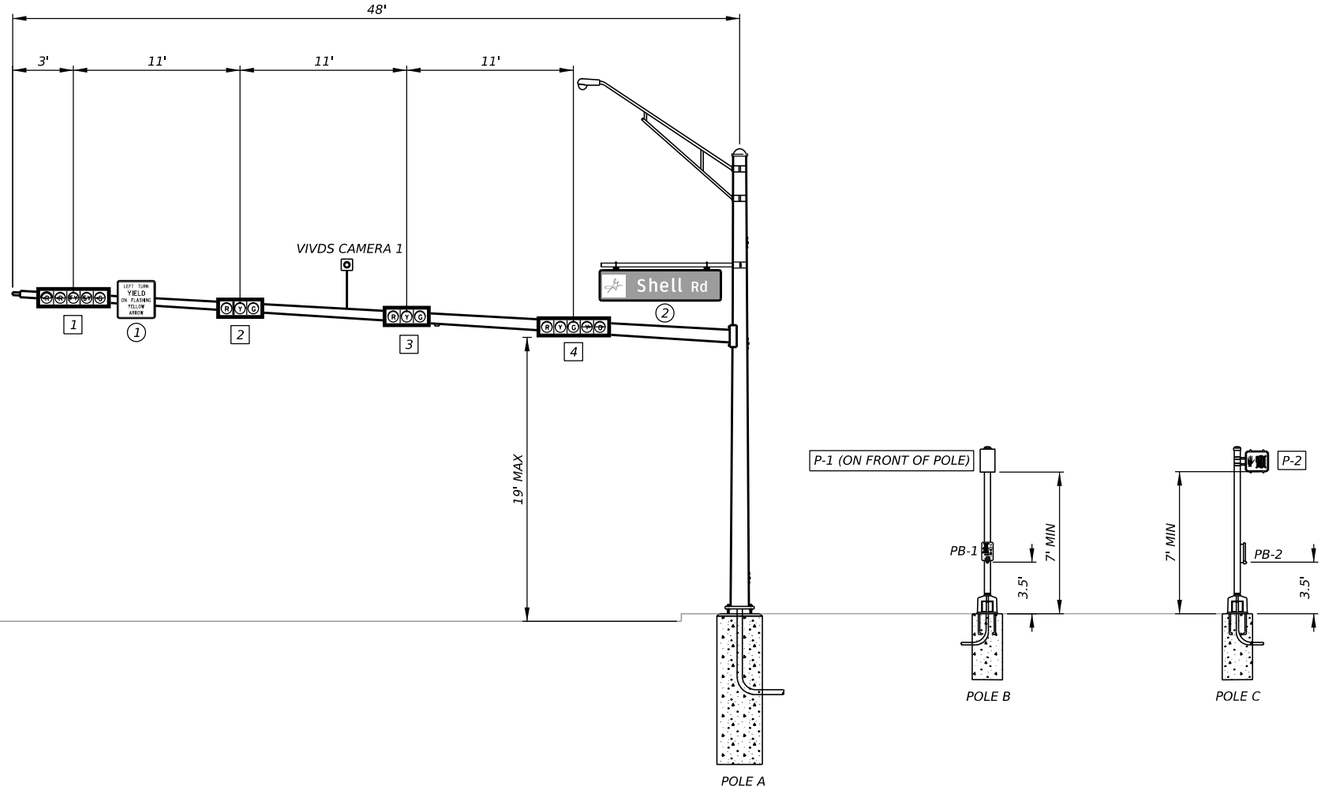

SHELL RD AT NW CORNER WILLIAMS DR

NOT TO SCALE

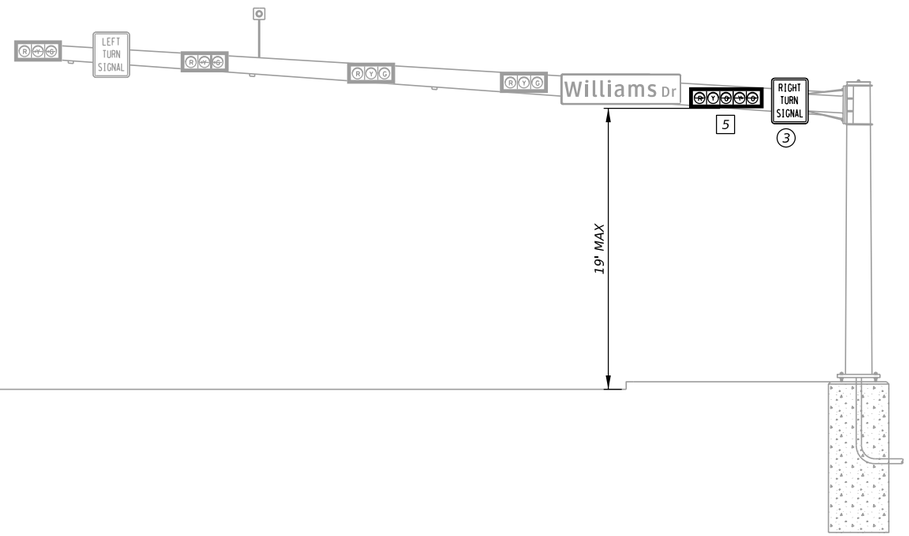

SHELL RD AT SW CORNER DB WOOD DR

NOT TO SCALE

3/12/2025

STATE OF TEXAS
SHAUN E. SPIVEY
114567
LICENSED
PROFESSIONAL ENGINEER

EST.1848 GEORGETOWN TEXAS

BGE, Inc.
101 West Louis Henna Blvd, Suite 400, Austin, TX 78728
Tel: 512-879-0400 • www.bgeinc.com
TBPE Registration No. F-1046

SHELL ROAD

PROPOSED SIGNAL ELEVATIONS SHELL RD & WILLIAMS DR

SHEET 1 OF 1

SHEET NO. 275

DATE: 3/11/2025 5:19:30 PM
FILE: G:\TXC\Projects\City Georgetown\10767-00 Shell Road\03_CADD\01 Shts\13-SGNLS\SHELL SIGNAL ELEVATION 01.dgn

CONDUIT AND CONDUCTOR SCHEDULE – SHELL RD INTERSECTION AT WILLIAMS DR																			
RUN NUMBER				1		2		3	4		5	6	7		8*	9*	10*	11*	12*
CONDUIT SIZE (IN)				3	2	3	2	3	3	2	3	3	3	2	EX	EX	EX	EX	EX
NUMBER OF CONDUITS				2	1	3	1	1	3	1	1	4	3	1	EX	EX	EX	EX	EX
LENGTH OF RUN (FT)				15	15	25	25	10	25	25	10	100	20	20	140	20	10	120	10
TRENCH (T) / BORE (B) / EXISTING (E) / AERIAL (A)				T	T	T	T	T	T	T	T	B	T	T	E	E	E	E	E
CABLE	CIRCUIT			NUMBER OF CABLES															
#6 XHHW (SOLID)	120 POWER HOT																		
	120 POWER COMMON																		
#6 BARE (SOLID)	BARE BOND GROUND			2	1	3	1	1	3	1	1	4	3	1	EX	EX	EX	EX	EX
#12 AWG 20/C TYPE A, STRANDED	SIGNALS	POLE	A	1		1			1			1	1		1	1			
		POLE	EX 1												1			1	1
#14 AWG 10/C TYPE A, STRANDED	PED SIGNALS	POLE	B					1	1			1	1		1	1			
		POLE	C								1	1	1		1	1			
#14 AWG 2/C TYPE C, STRANDED	PED APS PUSH BUTTONS	POLE	B					1	1			1	1		1	1			
		POLE	C								1	1	1		1	1			
#12 AWG 4/C TRAY CABLE	LUMINAIRES	POLE	A		1		1			1		1		1	1	1	1		
VIVDS POWER AND DATA CABLE	VIVDS	Ø	–	1		1			1			1	1		1	1			
ILSN POWER CABLE	ILSN	POLE	A		1		1			1		1		1	1	1	1		

* NOTE:
ALL OF THESE CONDUITS ARE EXISTING TO REMAIN, AND THEIR EXACT LOCATION, LENGTH AND NUMBER IS UNKNOWN, BUT IS ASSUMED BASED ON BEST AVAILABLE DATA. CONTRACTOR TO VERIFY EXISTING CONDUIT LOCATION, NUMBER AND LENGTHS.

CABLE TO POLE EX 1IS ASSUMED. IT IS POSSIBLE THAT POWER AND DATA FOR NEW SIGNAL HEAD CAN BE PUT IN EXISTING CABLE TO POLE EX 1. CONTRACTOR TO VERIFY EXISTING CABLE AVAILABILITY.

CABLE TERMINATION CHART – SHELL RD INTERSECTION AT WILLIAMS DR				
CONDUCTOR COLOR	FROM POLE A TO CONTROL	FROM POLE B TO CONTROL	FROM POLE C TO CONTROL	FROM POLE EX 1 TO CONTROL*
	CABLE 1	CABLE 2	CABLE 3	CABLE 4
BLACK	SPARE	SPARE	SPARE	SPARE
WHITE	S. COMMON	S. COMMON	S. COMMON	S. COMMON
RED	SH 2,3,4 R	SPARE	SPARE	SH 5 R
GREEN	SH 2,3,4 G	SPARE	SPARE	SH 5 G
ORANGE	SH 2,3,4 Y	SPARE	SPARE	SH 5 Y
BLUE	SPARE	SPARE	SPARE	SPARE
WHITE/BLACK	SPARE	SPARE	SPARE	SPARE
RED/BLACK	SH 1 RA	SPARE	SPARE	SPARE
GREEN/BLACK	SH 1,4 GA	P-1 DW	P-2 DW	SH 5 GA
ORANGE/BLACK	SH 1,4 YA	P-1 W	P-2 W	SH 5 YA
BLUE/BLACK	SPARE	–	–	SPARE
BLACK/WHITE	SPARE	–	–	SPARE
RED/WHITE	SPARE	–	–	SPARE
GREEN/WHITE	SPARE	–	–	SPARE
BLUE/WHITE	SPARE	–	–	SPARE
BLACK/RED	SH 1 FY	–	–	SPARE
WHITE/RED	SPARE	–	–	SPARE
ORANGE/RED	SPARE	–	–	SPARE
BLUE/RED	SPARE	–	–	SPARE
RED/GREEN	SPARE	–	–	SPARE

STATE OF TEXAS
SHAUN E. SPIVEY
114567
LICENSED
PROFESSIONAL ENGINEER
3/12/2025

EST.1848 GEORGETOWN TEXAS

BGE, Inc.
101 West Louis Henna Blvd, Suite 400, Austin, TX 78728
Tel: 512-879-0400 • www.bgeinc.com
TBPE Registration No. F-1046

SHELL ROAD

PROPOSED SIGNAL ELECTRICAL SCHEDULE SHELL RD & WILLIAMS DR

SHEET 1 OF 2

SHEET NO. 276

DATE: 3/11/2025 5:19:31 PM
FILE: G:\TXC\Projects\City Georgetown\10767-00 Shell Road\03 CADD\01 Shts\13-SGNLS\SHELL SIGNAL PROP ELEC SCHEDULE.dgn

CK:
DW:
CK:
DW:

POLE SCHEDULE – SHELL RD INTERSECTION AT WILLIAMS DR

POLE				A	B	C	EX 1*
POLE TYPE				SMA-80	PED	PED	EX
POLE HEIGHT (FT)				30	10	10	EX
MAST ARM LENGTH (FT)				48	N/A	N/A	EX
LUMINAIRES				1	N/A	N/A	N/A
FOUNDATION TYPE				36-A	24-A	24-A	N/A
FOUNDATION DEPTH (FT)				14	6	6	N/A
CABLE	CIRCUIT			NUMBER OF CABLES			
#12 AWG 7/C TYPE A, STRANDED	SIGNALS	POLE	A	3			
		POLE	EX 1				1
#12 AWG 5/C TYPE A, STRANDED	PED SIGNALS	POLE	B		1		
		POLE	C			1	
#14 AWG 2/C TYPE C, STRANDED	PED APS PUSH BUTTONS	POLE	B		1		
		POLE	C			1	
#12 AWG 4/C TRAY CABLE	LUMINAIRES	POLE	A	1			
ILSN POWER CABLE	ILSN	POLE	A	1			
VIVDS POWER AND DATA CABLE	VIVDS	Ø	–	1			

* NOTE:
DATA ON POLE AND WIRING IS BASED ON BEST AVAILABLE INFORMATION. CONTRACTOR TO VERIFY POLE INFORMATION AND IF EXISTING POLE WIRING IS SUFFICIENT FOR NEW SIGNAL HEAD.

ACCESSIBLE PEDESTRIAN SIGNAL (APS) UNIT MESSAGE INFORMATION – SHELL RD INTERSECTION AT WILLIAMS DR

APS UNIT NO.	ACKNOWLEDGE DEFAULT "WAIT"	EXTENDED PRESS MESSAGE	WALK PHASE MESSAGE
		"WAIT TO CROSS (STREET NAME) AT (STREET NAME)"	"(STREET NAME) WALK SIGN IS ON TO CROSS, (STREET NAME)" OR TONE
P1	YES	WILLIAMS DR AT SHELL RD	WILLIAMS DR
P2	YES	SHELL RD AT WILLIAMS DR	SHELL RD

POLE AND EQUIPMENT INFORMATION

ID	DESCRIPTION/ATTACHMENTS	STATION	OFFSET	FOUNDATION ELEV
A	INSTALL 30-FT SMA-80 ON 14-FT DRILLED SHAFT FOUNDATION (36-A) WITH 48' MAST ARM, ONE LUMINAIRE, ONE ITERIS VIVDS CAMERA, ONE R10-17T SIGN, ONE D3-1G SIGN, FOUR VEHICLE SIGNAL HEADS, AS INDICATED ON LAYOUT.	1+29.98	80.07' LT	LEVEL WITH SIDEWALK
B	INSTALL 10-FT STEEL PEDESTAL POLE ON 6-FT DRILLED SHAFT FOUNDATION (24-A), ONE LED COUNTDOWN PEDESTRIAN SIGNAL HEAD, ONE PEDESTRIAN PUSH BUTTON WITH AUDIBLE PEDESTRIAN SIGNAL UNIT AND ONE R10-3e(L) SIGN AS INDICATED ON LAYOUT.	1+47.88	59.55' LT	LEVEL WITH SIDEWALK
C	INSTALL 10-FT STEEL PEDESTAL POLE ON 6-FT DRILLED SHAFT FOUNDATION (24-A), ONE LED COUNTDOWN PEDESTRIAN SIGNAL HEAD, ONE PEDESTRIAN PUSH BUTTON WITH AUDIBLE PEDESTRIAN SIGNAL UNIT AND ONE R10-3e(L) SIGN AS INDICATED ON LAYOUT.	1+62.42	47.64' LT	LEVEL WITH SIDEWALK
EX 1	INSTALL ONE VEHICLE SIGNAL HEAD, ONE R10-10R SIGN	EX	EX	EX

3/12/2025

STATE OF TEXAS
SHAUN E. SPIVEY
114567
LICENSED
PROFESSIONAL ENGINEER

EST.1848 GEORGETOWN TEXAS

BGE, Inc.
101 West Louis Henna Blvd, Suite 400, Austin, TX 78728
Tel: 512-879-0400 • www.bgeinc.com
TBPE Registration No. F-1046

SHELL ROAD

PROPOSED SIGNAL ELECTRICAL SCHEDULE SHELL RD & WILLIAMS DR

SHEET 2 OF 2

SHEET NO.
277

DATE: 3/11/2025 5:19:32 PM
FILE: G:\TXC\Projects\City Georgetown\10767-00 Shell Road\03 CADD\01 Shts\13-SGNLS\SHELL SIGNAL PROP ELEC SCHEDULE.dgn

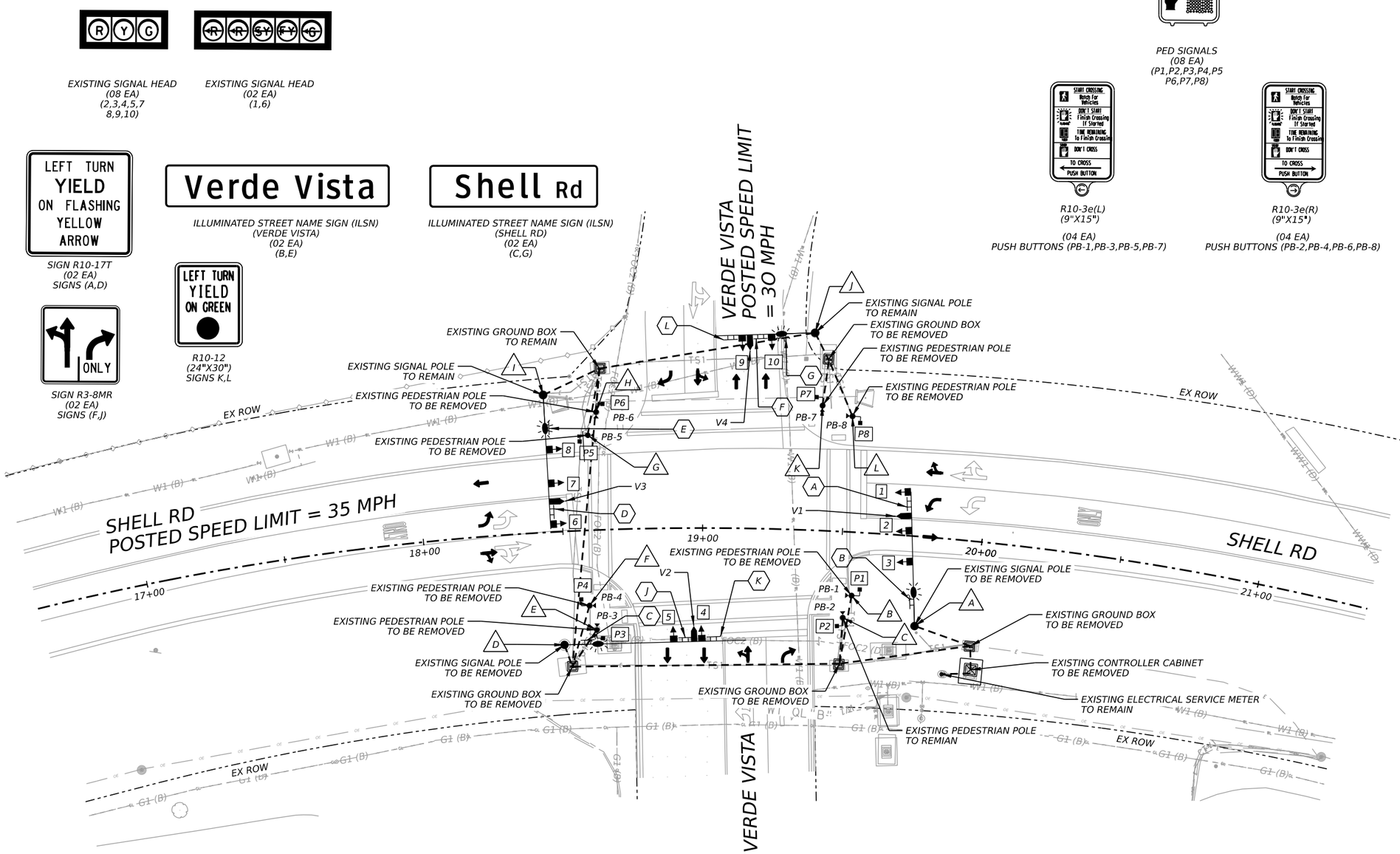

EXISTING LEGEND

- EX SIGNAL POLE AND MAST ARM
- EXISTING DIRECTION OF TRAFFIC
- EXISTING PEDESTRIAN SIGNAL POLE /LUMINAIRE POLE
- EXISTING GROUND MOUNTED CONTROLLER CABINET
- EX GROUND BOX TYPE D W/ APRON
- EX ELECTRICAL SERVICE METER
- EX UNDERGROUND CONDUIT
- EX SIGN ID
- EX PED POLE
- EX PED SIGNAL ID
- EX HEAD SIGNAL ID
- EX LUMINIARE
- EX SIGN
- EX SIGNAL HEAD
- EX CAMERA
- EX PEDESTRIAN SIGNAL HEAD W/ PUSH BUTTON

0 20 40

SCALE: 1" = 40'

STATE OF TEXAS
SHAUN E. SPIVEY
114567
LICENSED
PROFESSIONAL ENGINEER
3/12/2025

EST.1848
GEORGETOWN
TEXAS

BGE, Inc.
101 West Louis Henna Blvd, Suite 400, Austin, TX 78728
Tel: 512-879-0400 • www.bgeinc.com
TBPE Registration No. F-1046

SHELL ROAD

EXISTING SIGNAL LAYOUT SHELL RD & VERDE VISTA

SHEET 1 OF 1

SHEET NO. 278

DATE: 3/11/2025 5:19:35 PM
FILE: G:\TXC\Projects\City Georgetown\10767-00 Shell Road\03_CADD\01 Shts\13-SGNL\SHELL EXIST SIGNAL 02.dgn

PROPOSED MAST-ARM SIGNS



R10-17T
(36"X42")
(1)



R10-12
(30"X36")
(4)



DOUBLE-SIDED ILLUMINATED STREET NAME SIGN (ILSN) (SHELL RD) (3)



DOUBLE-SIDE ILLUMINATED STREET NAME SIGN (ILSN) (VERDE VISTA) (2)

PHASING DIAGRAM

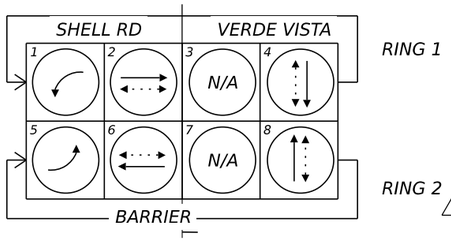

PROPOSED SIGNALS

12" L.E.D. SIGNALS W/ BACKPLATES

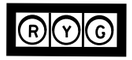

SIGNALS
2 3 4 5 6 10



SIGNALS
1

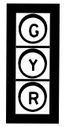

11 14

PROPOSED PEDESTRIAN SIGNALS AND PUSH BUTTONS



R10-3e(L)
(9"X15")

PB-1, PB-3, PB-4, PB-6, PB-8



R10-3e(R)
(9"X15")

PB-2, PB-5, PB-7



PED SIGNALS

P-1 P-2
P-3 P-4
P-5 P-6
P-7 P-8

PROPOSED LEGEND

- A — SIGNAL/ PEDESTRIAN POLE IDENTIFIER
- SIGNAL POLE AND MAST ARM
- PROP DIRECTION OF TRAFFIC
- SIGNAL HEAD
- 1 — SIGNAL HEAD NUMBER
- PEDESTRIAN SIGNAL HEAD (P-#) W/ PUSH BUTTON (PB-#)
- GROUND MOUNTED CONTROLLER CABINET
- GROUND BOX TYPE D W/ APRON
- ELECTRICAL SERVICE METER
- LUMINAIRE
- MOUNTED SIGN
- # — MOUNTED SIGN NUMBER
- VIVDS CAMERA
- UNDERGROUND CONDUIT
- # — CONDUIT RUN NUMBER
- Ø# — PHASING NUMBER

0 20 40
SCALE: 1" = 40'

NOTES:

1. CONTRACTOR SHALL POTHOLE SIGNAL POLE FOUNDATION LOCATIONS NEAR UNDERGROUND UTILITIES PRIOR TO INSTALLING POLE FOUNDATIONS.
2. CONTRACTOR SHALL CALL FOR LOCATES PRIOR TO COMMENCING EXCAVATION. ALL UTILITY LOCATIONS SHALL BE VERIFIED IN THE FIELD BY THE CONTRACTOR.
3. LOCATION OF SIGNAL POLES, CABINET AND ELECTRICAL SERVICE SHALL BE VERIFIED AND APPROVED BY THE CITY OF GEORGETOWN PRIOR TO CONSTRUCTION.
4. CONTRACTOR SHALL CONNECT FIELD WIRING TO CONTROLLER.
5. SIGNAL HEADS SHALL HAVE A MINIMUM OF 19.0-FT CLEARANCE ABOVE ROADWAY SURFACE.
6. TRAY CABLE SHALL BE RUN IN 2-IN CONDUIT SEPARATE FROM THE SIGNAL CABLE.

NOTES: (CONTINUED)

7. LUMINAIRES SHOWN AT ANGLE FOR CLARITY. ACTUAL LOCATION OF LUMINAIRES TO BE OVER MAST ARMS.
8. SIDEWALK SHALL BE EXTENDED UP TO SIGNAL POLES AS NEEDED TO PROVIDE ACCESS TO PEDESTRIAN PUSH BUTTONS.
9. CONTRACTOR TO FIELD-VERIFY HORIZONTAL AND VERTICAL LOCATIONS OF EXISTING UTILITIES PRIOR TO CONSTRUCTION.
10. CONTRACTOR TO HAND TRENCH ALL CONDUIT PLACEMENT LOCATIONS AT MINIMUM DEPTH, UNLESS OTHERWISE STATED.

STATE OF TEXAS
SHAUN E. SPIVEY
114567
LICENSED
PROFESSIONAL ENGINEER
3/12/2025

GEORGETOWN TEXAS EST.1848

BGE, Inc.
101 West Louis Henna Blvd, Suite 400, Austin, TX 78728
Tel: 512-879-0400 • www.bgeinc.com
TBPE Registration No. F-1046

SHELL ROAD

PROPOSED SIGNAL LAYOUT SHELL RD & VERDE VISTA

SHEET 1 OF 1

SHEET NO. 279

DATE: 3/11/2025 5:19:50 PM
FILE: G:\TXC\Projects\City Georgetown\10767-00 Shell Road\03 CADD\01 Shts\13-SGNLS\SHELL SIGNAL 02.dgn

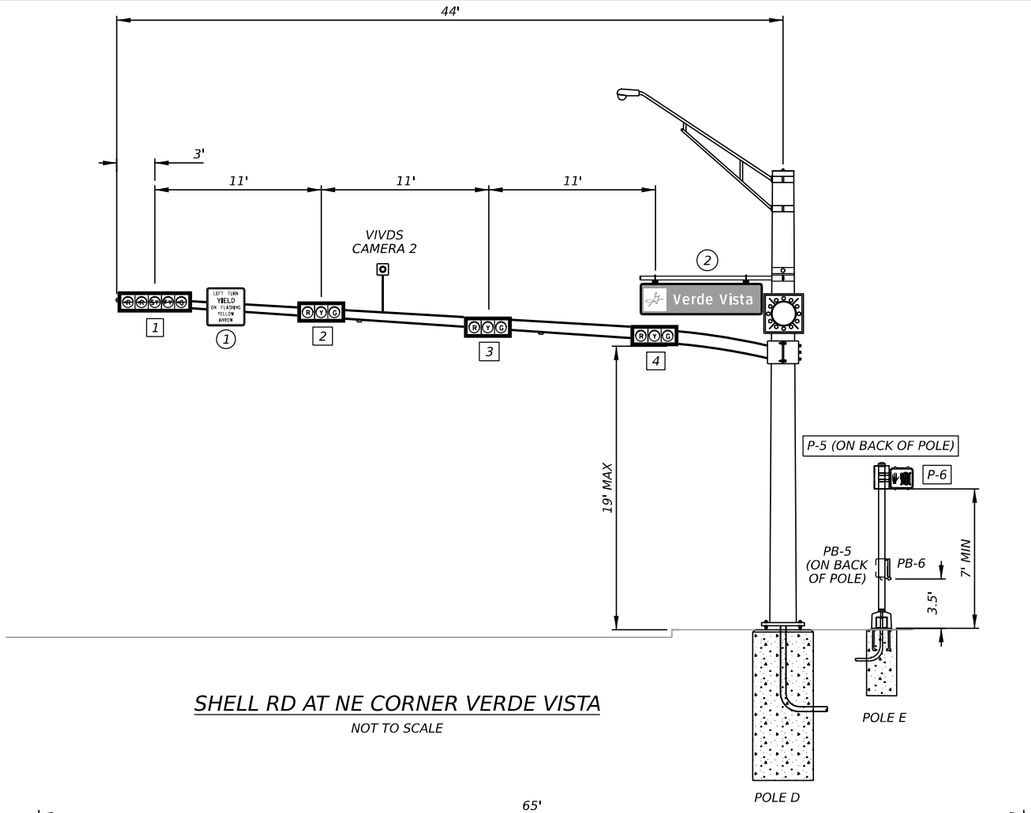

SHELL RD AT NE CORNER VERDE VISTA

NOT TO SCALE

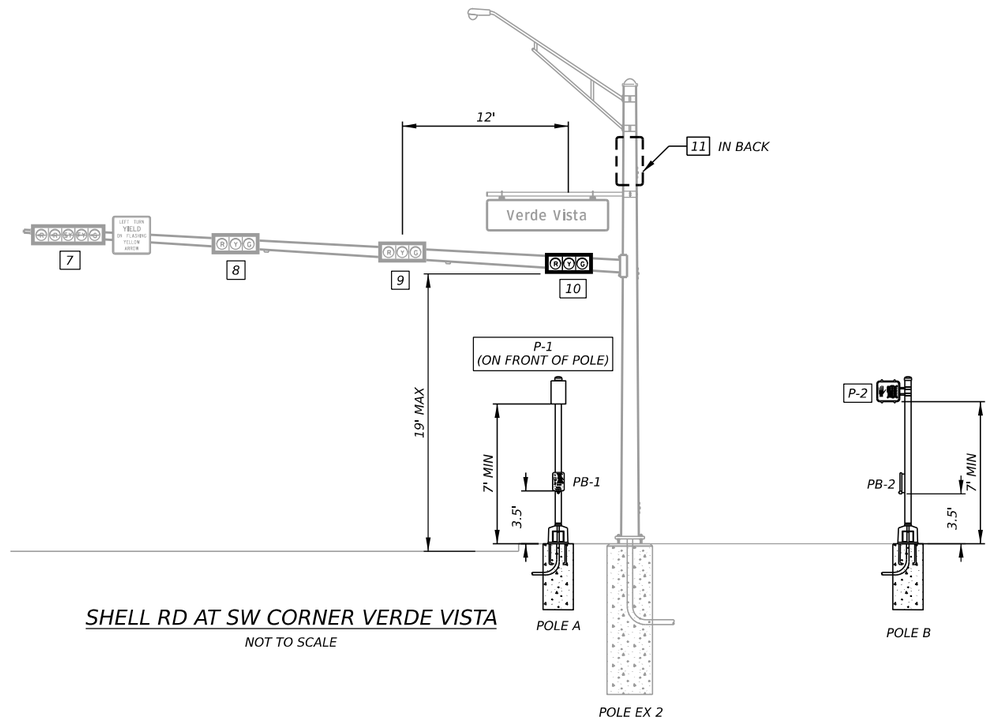

SHELL RD AT SW CORNER VERDE VISTA

NOT TO SCALE

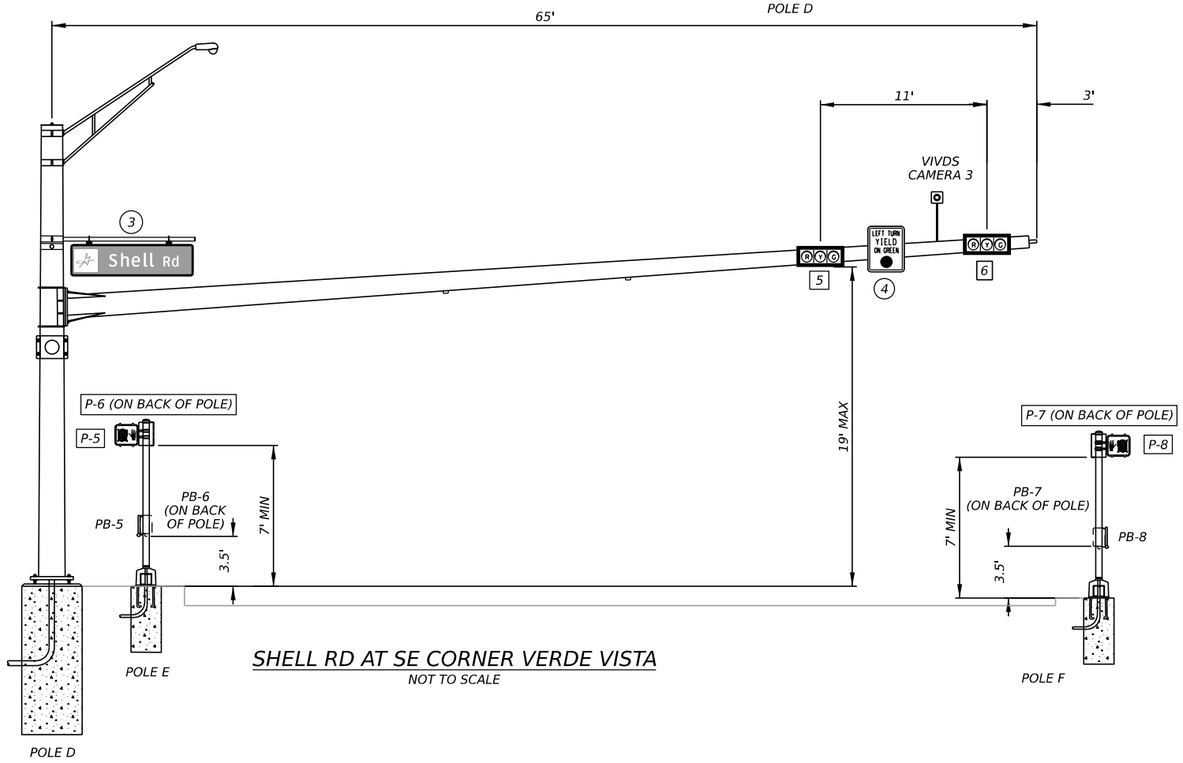

SHELL RD AT SE CORNER VERDE VISTA

NOT TO SCALE

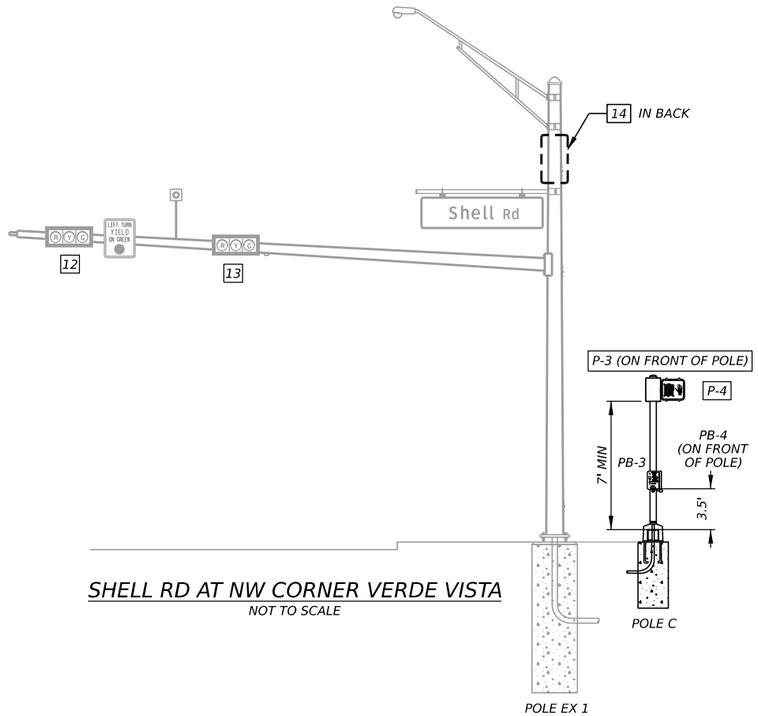

SHELL RD AT NW CORNER VERDE VISTA

NOT TO SCALE

3/12/2025

STATE OF TEXAS
SHAUN E. SPIVEY
114567
LICENSED
PROFESSIONAL ENGINEER

EST.1848
GEORGETOWN
TEXAS

BGE, Inc.
101 West Louis Henna Blvd, Suite 400, Austin, TX 78728
Tel: 512-879-0400 • www.bgeinc.com
TBPE Registration No. F-1046

SHELL ROAD

PROPOSED SIGNAL ELEVATIONS SHELL RD & VERDE VISTA

SHEET 1 OF 1

SHEET NO. 280

DATE: 3/11/2025 5:19:53 PM
FILE: G:\TX\Projects\City Georgetown\10767-00 Shell Road\03 CADD\01 Shts\13-SGNL\SHELL SIGNAL ELEVATION 01.dgn

CONDUIT AND CONDUCTOR SCHEDULE - SHELL RD INTERSECTION AT VERDE VISTA

RUN NUMBER				1	2	3	4	5		6		7	8		9	10	11	12	13		14	15		16
CONDUIT SIZE (IN)				3	2	3	3	3	2	3	2	3	3	2	3	3	3	3	3	2	3	3	2	3
NUMBER OF CONDUITS				4	1	4	4	3	1	2	1	1	2	1	1	4	1	4	3	1	1	2	1	1
LENGTH OF RUN (FT)				15	10	15	115	20	20	10	10	10	30	30	40	135	15	95	20	20	15	25	25	10
TRENCH (T) / BORE (B) / EXISTING (E) / AERIAL (A)				T	T	T	T	T	T	T	T	T	T	T	T	T	T	T	T	T	T	T	T	T
CABLE	CIRCUIT			NUMBER OF CABLES																				
#6 XHHW (SOLID)	120 POWER HOT			1																				
	120 POWER COMMON			1																				
#6 BARE (SOLID)	BARE BOND GROUND			4	1	4	4	3	1	2	1	1	2	1	1	4	1	4	3	1	1	2	1	1
#12 AWG 20/C TYPE A, STRANDED	SIGNALS	Ø	1+6			2	1	1		1						1		1	1			1		
		Ø	2+5			2							1			1		1	1			1		
		Ø	8			1	1	1		1														
		Ø	4			1							1											
#12 AWG 10/C TYPE A, STRANDED	PED SIGNALS	POLE	A			1										1		1						1
		POLE	B			1										1		1	1		1			
		POLE	C			1	1	1				1												
		POLE	E			1									1									
		POLE	F			1										1	1							
#14 AWG 2/C TYPE C, STRANDED	PED APS PUSH BUTTONS	POLE	A			1										1		1						1
		POLE	B			1										1		1	1		1			
		POLE	C			2	2	2				2												
		POLE	E			2									2									
		POLE	F			2										2	2							
#12 AWG 4/C TRAY CABLE	LUMINAIRES	POLE	D		1									1										
		POLE	EX 1		1		1		1		1													
		POLE	EX 2		1											1		1		1			1	
VIVDS POWER AND DATA CABLE	VIVDS	Ø	1+6			1										1		1	1			1		
		Ø	2+5			1							1											
		Ø	8			1																		
		Ø	4			1							1											
#12 AWG 3/C TRAY CABLE	ILSN	POLE	D		2									2										
		POLE	EX 1		1		1		1		1													
		POLE	EX 2		1											1		1		1			1	

ACCESSIBLE PEDESTRIAN SIGNAL (APS) UNIT MESSAGE INFORMATION - SHELL RD INTERSECTION AT VERDE VISTA

APS UNIT NO.	ACKNOWLEDGE DEFAULT "WAIT"	EXTENDED PRESS MESSAGE	WALK PHASE MESSAGE
		"WAIT TO CROSS (STREET NAME) AT (STREET NAME)"	"(STREET NAME) WALK SIGN IS ON TO CROSS, (STREET NAME)" OR TONE
P1	YES	SHELL RD AT VERDE VISTA	SHELL RD
P2	YES	VERDE VISTA AT SHELL RD	VERDE VISTA
P3	YES	VERDE VISTA AT SHELL RD	VERDE VISTA
P4	YES	SHELL RD AT VERDE VISTA	SHELL RD
P5	YES	SHELL RD AT VERDE VISTA	SHELL RD
P6	YES	VERDE VISTA AT SHELL RD	VERDE VISTA
P7	YES	VERDE VISTA AT SHELL RD	VERDE VISTA
P8	YES	SHELL RD AT VERDE VISTA	SHELL RD

3/12/2025

STATE OF TEXAS
SHAUN E. SPIVEY
114567
LICENSED
PROFESSIONAL ENGINEER

GEORGETOWN TEXAS EST.1848

BGE, Inc.
101 West Louis Henna Blvd, Suite 400, Austin, TX 78728
Tel: 512-879-0400 • www.bgeinc.com
TBPE Registration No. F-1046

SHELL ROAD

PROPOSED SIGNAL ELECTRICAL SCHEDULE SHELL RD & VERDE VISTA

SHEET 1 OF 3

SHEET NO. 281

DATE: 3/11/2025 5:19:55 PM
FILE: G:\TX\Projects\City Georgetown\10767-00 Shell Road\03_CADD\01 Shts\13-SGNL\SHELL SIGNAL PROP ELEC SCHEDULE.dgn

POLE SCHEDULE - SHELL RD INTERSECTION AT VERDE VISTA											
POLE				A	B	C	D	E	F	EX 1	EX 2
POLE TYPE				PED	PED	PED	LMA-100	PED	PED	N/A	N/A
POLE HEIGHT (FT)				10	10	10	30	10	10	30	30
MAST ARM LENGTH (FT)				N/A	N/A	N/A	65,44	N/A	N/A	36	48
LUMINAIRES				N/A	N/A	N/A	1	N/A	N/A	1	1
FOUNDATION TYPE				24-A	24-A	24-A	48-A	24-A	24-A	N/A	N/A
FOUNDATION DEPTH (FT)				6	6	6	22	6	6	N/A	N/A
CABLE	CIRCUIT			NUMBER OF CABLES							
#12 AWG 7/C TYPE A, STRANDED	SIGNALS	Ø	1+6							1	1
		Ø	2+5				3				1
		Ø	4				1				
#12 AWG 5/C TYPE A, STRANDED	PED SIGNALS	POLE	A	1							
		POLE	B		1						
		POLE	C			2					
		POLE	E					2			
		POLE	F						2		
#14 AWG 2/C TYPE C, STRANDED	PED APS PUSH BUTTONS	POLE	A	1							
		POLE	B		1						
		POLE	C			2					
		POLE	E					2			
		POLE	F						2		
#12 AWG 4/C TRAY CABLE	LUMINAIRES	POLE	D				1				
VIVDS POWER AND DATA CABLE	VIVDS	Ø	2+5				1				
		Ø	4				1				
#12 AWG 3/C TRAY CABLE	ILSN	POLE	D				2				

3/12/2025

STATE OF TEXAS
SHAUN E. SPIVEY
114567
LICENSED
PROFESSIONAL ENGINEER

EST.1848 GEORGETOWN TEXAS

BGE, Inc.
101 West Louis Henna Blvd, Suite 400, Austin, TX 78728
Tel: 512-879-0400 • www.bgeinc.com
TBPE Registration No. F-1046

SHELL ROAD

PROPOSED SIGNAL ELECTRICAL SCHEDULE SHELL RD & VERDE VISTA

SHEET 2 OF 3

SHEET NO. 282

DATE: 3/11/2025 5:19:55 PM
FILE: G:\TXC\Projects\City Georgetown\10767-00 Shell Road\03_CADD\01 Shts\13-SGNLS\SHELL SIGNAL PROP ELEC SCHEDULE.dgn

CABLE TERMINATION CHART – SHELL RD INTERSECTION AT VERDE VISTA											
CONDUCTOR COLOR	FROM POLE A TO CONTROL	FROM POLE B TO CONTROL	FROM POLE C TO CONTROL	FROM POLE D TO CONTROL	FROM POLE D TO CONTROL	FROM POLE E TO CONTROL	FROM POLE F TO CONTROL	FROM POLE EX 1 TO CONTROL	FROM POLE EX 1 TO CONTROL	FROM POLE EX 2 TO CONTROL	FROM POLE EX 2 TO CONTROL
	CABLE 1	CABLE 2	CABLE 3	CABLE 4	CABLE 5	CABLE 6	CABLE 7	CABLE 7	CABLE 8	CABLE 9	CABLE 10
BLACK	SPARE	SPARE	SPARE	SPARE	SPARE	SPARE	SPARE	SPARE	SPARE	SPARE	SPARE
WHITE	S. COMMON	S. COMMON	S. COMMON	S. COMMON	S. COMMON	S. COMMON	S. COMMON	S. COMMON	S. COMMON	S. COMMON	S. COMMON
RED	SPARE	SPARE	SPARE	SH 2,3,4 Ø2 R	SH 5, 6 Ø4 R	SPARE	SPARE	SH 12, 13 Ø8 R	SH 14 Ø6 R	SH 8, 9, 10 Ø6 R	SH 11 Ø2 R
GREEN	SPARE	SPARE	SPARE	SH 2,3,4 Ø2 G	SH 5, 6 Ø4 G	SPARE	SPARE	SH 12, 13 Ø8 G	SH 14 Ø6 G	SH 8, 9, 10 Ø6 G	SH 11 Ø2 G
ORANGE	SPARE	SPARE	SPARE	SH 2,3,4 Ø2 Y	SH 5, 6 Ø4 Y	SPARE	SPARE	SH 12, 13 Ø8 Y	SH 14 Ø6 Y	SH 8, 9, 10 Ø6 Y	SH 11 Ø2 Y
BLUE	SPARE	SPARE	SPARE	SPARE	SPARE	SPARE	SPARE	SPARE	SPARE	SPARE	SPARE
WHITE/BLACK	SPARE	SPARE	P-4 Ø8 DW	SPARE	SPARE	P-6 Ø2 DW	P-8 Ø4 DW	SPARE	SPARE	SPARE	SPARE
RED/BLACK	SPARE	SPARE	P-4 Ø8 W	SH 1 Ø5 RA	SPARE	P-6 Ø2 W	P-8 Ø4 W	SPARE	SPARE	SH 7 Ø1 RA	SPARE
GREEN/BLACK	P-1 Ø4 DW	P-2 Ø6 DW	P-3 Ø6 DW	SH 1 Ø5 GA	SPARE	P-5 Ø8 DW	P-7 Ø2 DW	SPARE	SPARE	SH 7 Ø1 GA	SPARE
ORANGE/BLACK	P-1 Ø4 W	P-2 Ø6 W	P-3 Ø6 W	SH 1 Ø5 YA	SPARE	P-5 Ø8 W	P-7 Ø2 W	SPARE	SPARE	SH 7 Ø1 YA	SPARE
BLUE/BLACK	–	–	–	SPARE	SPARE	–	–	SPARE	SPARE	SPARE	SPARE
BLACK/WHITE	–	–	–	SPARE	SPARE	–	–	SPARE	SPARE	SPARE	SPARE
RED/WHITE	–	–	–	SPARE	SPARE	–	–	SPARE	SPARE	SPARE	SPARE
GREEN/WHITE	–	–	–	SPARE	SPARE	–	–	SPARE	SPARE	SPARE	SPARE
BLUE/WHITE	–	–	–	SPARE	SPARE	–	–	SPARE	SPARE	SPARE	SPARE
BLACK/RED	–	–	–	SH 1 Ø5 FY	SPARE	–	–	SPARE	SPARE	SH 7 Ø1 FY	SPARE
WHITE/RED	–	–	–	SPARE	SPARE	–	–	SPARE	SPARE	SPARE	SPARE
ORANGE/RED	–	–	–	SPARE	SPARE	–	–	SPARE	SPARE	SPARE	SPARE
BLUE/RED	–	–	–	SPARE	SPARE	–	–	SPARE	SPARE	SPARE	SPARE
RED/GREEN	–	–	–	SPARE	SPARE	–	–	SPARE	SPARE	SPARE	SPARE

POLE AND EQUIPMENT INFORMATION				
ID	DESCRIPTION/ATTACHMENTS	STATION	OFFSET	FOUNDATION ELEV
A	INSTALL 10-FT STEEL PEDESTAL POLE ON 6-FT DRILLED SHAFT FOUNDATION (24-A), ONE LED COUNTDOWN PEDESTRIAN SIGNAL HEAD, ONE PEDESTRIAN PUSH BUTTON WITH AUDIBLE PEDESTRIAN SIGNAL UNIT AND ONE R10-3e(L) SIGN AS INDICATED ON LAYOUT.	18+59.83	40.22' LT	LEVEL WITH SIDEWALK
B	INSTALL 10-FT STEEL PEDESTAL POLE ON 6-FT DRILLED SHAFT FOUNDATION (24-A), ONE LED COUNTDOWN PEDESTRIAN SIGNAL HEAD, ONE PEDESTRIAN PUSH BUTTON WITH AUDIBLE PEDESTRIAN SIGNAL UNIT AND ONE R10-3e(R) SIGN AS INDICATED ON LAYOUT.	18+76.89	57.41' LT	LEVEL WITH SIDEWALK
C	INSTALL 10-FT STEEL PEDESTAL POLE ON 6-FT DRILLED SHAFT FOUNDATION (24-A), TWO LED COUNTDOWN PEDESTRIAN SIGNAL HEAD, TWO PEDESTRIAN PUSH BUTTON WITH AUDIBLE PEDESTRIAN SIGNAL UNIT AND TWO R10-3e(L) SIGNS AS INDICATED ON LAYOUT.	19+47.90	61.73' LT	LEVEL WITH SIDEWALK
D	INSTALL 30-FT LMA-100 ON 22-FT DRILLED SHAFT FOUNDATION (48-A) WITH ONE 65' MAST ARM, ONE 44' MAST ARM , ONE LUMINAIRE, TWO ITERIS VIVDS CAMERA, ONE R10-17T SIGN, , ONE R10-12 SIGN, TWO ILSN SIGN, AND SIX VEHICLE SIGNAL HEADS, AS INDICATED ON LAYOUT.	19+60.94	43.03' RT	LEVEL WITH SIDEWALK
E	INSTALL 10-FT STEEL PEDESTAL POLE ON 6-FT DRILLED SHAFT FOUNDATION (24-A), TWO LED COUNTDOWN PEDESTRIAN SIGNAL HEAD, TWO PEDESTRIAN PUSH BUTTON WITH AUDIBLE PEDESTRIAN SIGNAL UNIT AND ONE R10-3e(L) SIGN AND ONE R10-3e(R) SIGN AS INDICATED ON LAYOUT.	19+52.35	47.86' RT	LEVEL WITH SIDEWALK
F	INSTALL 10-FT STEEL PEDESTAL POLE ON 6-FT DRILLED SHAFT FOUNDATION (24-A), TWO LED COUNTDOWN PEDESTRIAN SIGNAL HEAD, TWO PEDESTRIAN PUSH BUTTON WITH AUDIBLE PEDESTRIAN SIGNAL UNIT AND ONE R10-3e(L) SIGN AND ONE R10-3e(R) SIGN AS INDICATED ON LAYOUT.	18+63.27	57.86' RT	LEVEL WITH SIDEWALK
EX 1	INSTALL ONE VEHICLE SIGNAL HEAD AS INDICATED ON LAYOUT.	EX	EX	EXISTING
EX 2	INSTALL TWO VEHICLE SIGNAL HEADS AS INDICATED ON LAYOUT.	EX	EX	EXISTING
Y	INSTALL SIEMENS M60 TRAFFIC SIGNAL CONTROLLER AND CABINET ON CONCRETE FOUNDATION WITH TXDOT COMMUNICATIONS PACKAGE AS DETAILED IN GENERAL NOTES.	20+00.70	47.11' RT	N/A

STATE OF TEXAS
SHAUN E. SPIVEY
114567
LICENSED
PROFESSIONAL ENGINEER
3/12/2025

EST.1848 GEORGETOWN TEXAS

BGE, Inc.
101 West Louis Henna Blvd, Suite 400, Austin, TX 78728
Tel: 512-879-0400 • www.bgeinc.com
TBPE Registration No. F-1046

SHELL ROAD

PROPOSED SIGNAL
ELECTRICAL SCHEDULE
SHELL RD &
VERDE VISTA

SHEET 3 OF 3

SHEET NO. 283

DATE: 3/11/2025 5:19:56 PM
FILE: G:\TXC\Projects\City Georgetown\10767-00 Shell Road\03_CADD\01 Shts\13-SGNLS\SHELL_SIGNAL_PROP_ELEC_SCHEDULE.dgn

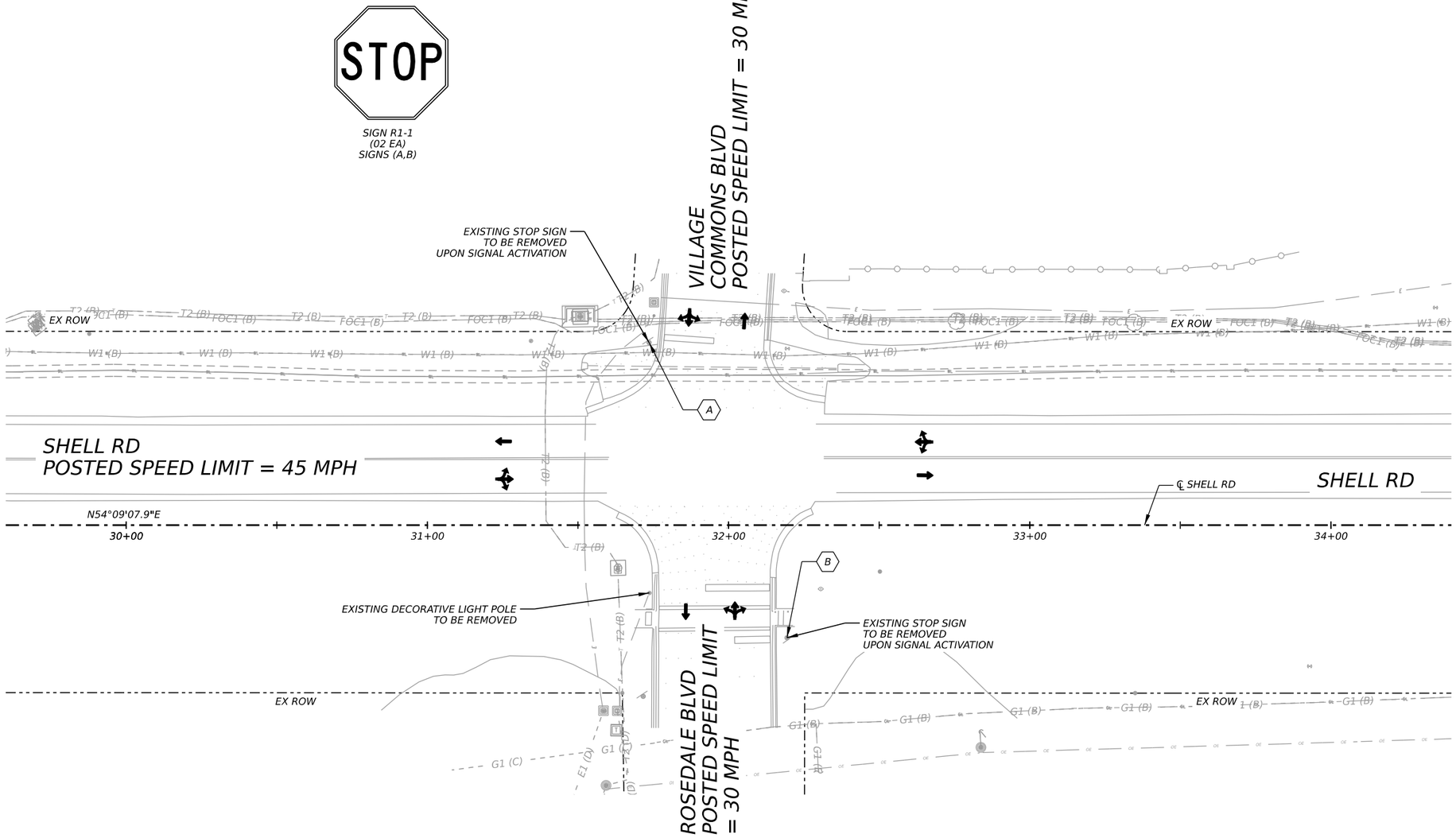

EXISTING LEGEND

- EX SIGNAL POLE AND MAST ARM
- EXISTING DIRECTION OF TRAFFIC
- EXISTING PEDESTRIAN SIGNAL POLE /LUMINAIRE POLE
- EXISTING GROUND MOUNTED CONTROLLER CABINET
- EX GROUND BOX TYPE D W/ APRON
- EX ELECTRICAL SERVICE METER
- EX UNDERGROUND CONDUIT
- EX SIGN ID
- EX PED POLE
- EX PED SIGNAL ID
- EX HEAD SIGNAL ID
- EX LUMINIARE
- EX SIGN
- EX SIGNAL HEAD
- EX CAMERA
- EX PEDESTRIAN SIGNAL HEAD W/ PUSH BUTTON

0 20 40
SCALE: 1" = 40'

STATE OF TEXAS
SHAUN E. SPIVEY
114567
LICENSED
PROFESSIONAL ENGINEER
3/12/2025

EST. 1848 GEORGETOWN TEXAS

BGE, Inc.
101 West Louis Henna Blvd, Suite 400, Austin, TX 78728
Tel: 512-879-0400 • www.bgeinc.com
TBPE Registration No. F-1046

SHELL ROAD

EXISTING INTERSECTION LAYOUT SHELL RD & ROSEDALE/VILLAGE COMMONS

SHEET 1 OF 1

SHEET NO. 284

DATE: 3/11/2025 5:19:58 PM
FILE: G:\TXC\Projects\City Georgetown\10767-00 Shell Road\03 CADD\01 Shts\13-SGNL\SHELL_EXIST_SIGNAL_03.dgn

PROPOSED MAST-ARM SIGNS



R10-17T
(36"X42")
(1) (5)



R10-12
(30"X36")
(3) (7)



DOUBLE-SIDED ILLUMINATED STREET NAME SIGN (ILSN) (SHELL RD)
(4) (8)



DOUBLE-SIDED ILLUMINATED STREET NAME SIGN (ILSN)
(VILLAGE COMMONS BLVD/ROSEDALE BLVD)
(2)



DOUBLE-SIDED ILLUMINATED STREET NAME SIGN (ILSN)
(ROSEDALE BLVD/VILLAGE COMMONS BLVD)
(6)

PROPOSED SIGNALS

12" L.E.D. SIGNALS W/ BACKPLATES



SIGNALS
2 3 4 5 6 8 9 10 11 12



SIGNALS
1 7

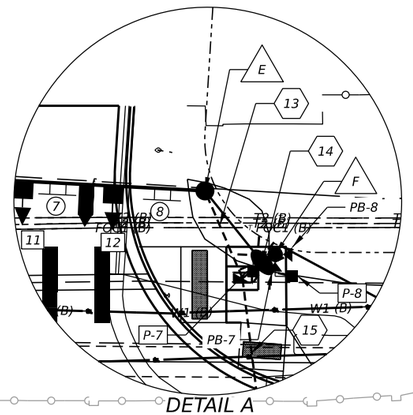

PROPOSED PEDESTRIAN SIGNALS AND PUSH BUTTONS

R10-3e(L)
(9"X15")

PB-2, PB-3, PB-4, PB-6, PB-7, PB-8

R10-3e(R)
(9"X15")

PB-1, PB-5,

PED SIGNALS

P-1	P-2
P-3	P-4
P-5	P-6
P-7	P-8

PHASING DIAGRAM

PROPOSED LEGEND

- A — SIGNAL/ PEDESTRIAN POLE IDENTIFIER
- SIGNAL POLE AND MAST ARM
- PROP DIRECTION OF TRAFFIC
- SIGNAL HEAD
- 1 — SIGNAL HEAD NUMBER
- PEDESTRIAN SIGNAL HEAD (P-#) W/ PUSH BUTTON (PB-#)
- GROUND MOUNTED CONTROLLER CABINET
- GROUND BOX TYPE D W/ APRON
- ELECTRICAL SERVICE METER
- LUMINAIRE
- MOUNTED SIGN
- MOUNTED SIGN NUMBER
- VIVDS CAMERA
- UNDERGROUND CONDUIT
- # — CONDUIT RUN NUMBER
- Ø# — PHASING NUMBER

0 20 40
SCALE: 1" = 40'

NOTES:

1. CONTRACTOR SHALL POTHOLE SIGNAL POLE FOUNDATION LOCATIONS NEAR UNDERGROUND UTILITIES PRIOR TO INSTALLING POLE FOUNDATIONS.
2. CONTRACTOR SHALL CALL FOR LOCATES PRIOR TO COMMENCING EXCAVATION. ALL UTILITY LOCATIONS SHALL BE VERIFIED IN THE FIELD BY THE CONTRACTOR.
3. LOCATION OF SIGNAL POLES, CABINET AND ELECTRICAL SERVICE SHALL BE VERIFIED AND APPROVED BY THE CITY OF GEORGETOWN PRIOR TO CONSTRUCTION.
4. CONTRACTOR SHALL CONNECT FIELD WIRING TO CONTROLLER.
5. SIGNAL HEADS SHALL HAVE A MINIMUM OF 19.0-FT CLEARANCE ABOVE ROADWAY SURFACE.
6. TRAY CABLE SHALL BE RUN IN 2-IN CONDUIT SEPARATE FROM THE SIGNAL CABLE.

NOTES: (CONTINUED)

7. LUMINAIRES SHOWN AT ANGLE FOR CLARITY. ACTUAL LOCATION OF LUMINAIRES TO BE OVER MAST ARMS.
8. SIDEWALK SHALL BE EXTENDED UP TO SIGNAL POLES AS NEEDED TO PROVIDE ACCESS TO PEDESTRIAN PUSH BUTTONS.
9. CONTRACTOR TO FIELD-VERIFY HORIZONTAL AND VERTICAL LOCATIONS OF EXISTING UTILITIES PRIOR TO CONSTRUCTION.
10. CONTRACTOR TO HAND TRENCH ALL CONDUIT PLACEMENT LOCATIONS AT MINIMUM DEPTH, UNLESS OTHERWISE STATED.

STATE OF TEXAS
SHAUN E. SPIVEY
114567
LICENSED
PROFESSIONAL ENGINEER
3/12/2025

EST. 1848 GEORGETOWN TEXAS

BGE, Inc.
101 West Louis Henna Blvd, Suite 400, Austin, TX 78728
Tel: 512-879-0400 • www.bgeinc.com
TBPE Registration No. F-1046

SHELL ROAD

PROPOSED SIGNAL LAYOUT SHELL RD & ROSEDALE/VILLAGE COMMONS

SHEET 1 OF 1

SHEET NO. 285

DATE: 3/11/2025 5:20:17 PM
FILE: G:\TXC\Projects\City Georgetown\10767-00 Shell Road\03 CADD\01 Shts\13-SGNL\SHELL SIGNAL 03.dgn

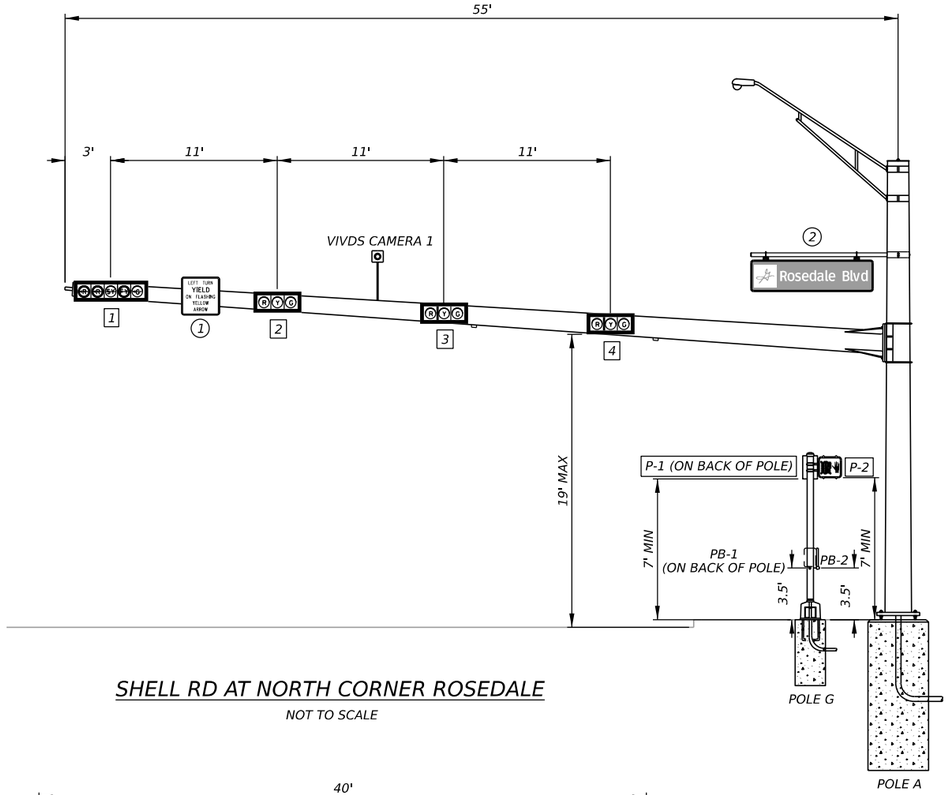

SHELL RD AT NORTH CORNER ROSEDALE

NOT TO SCALE

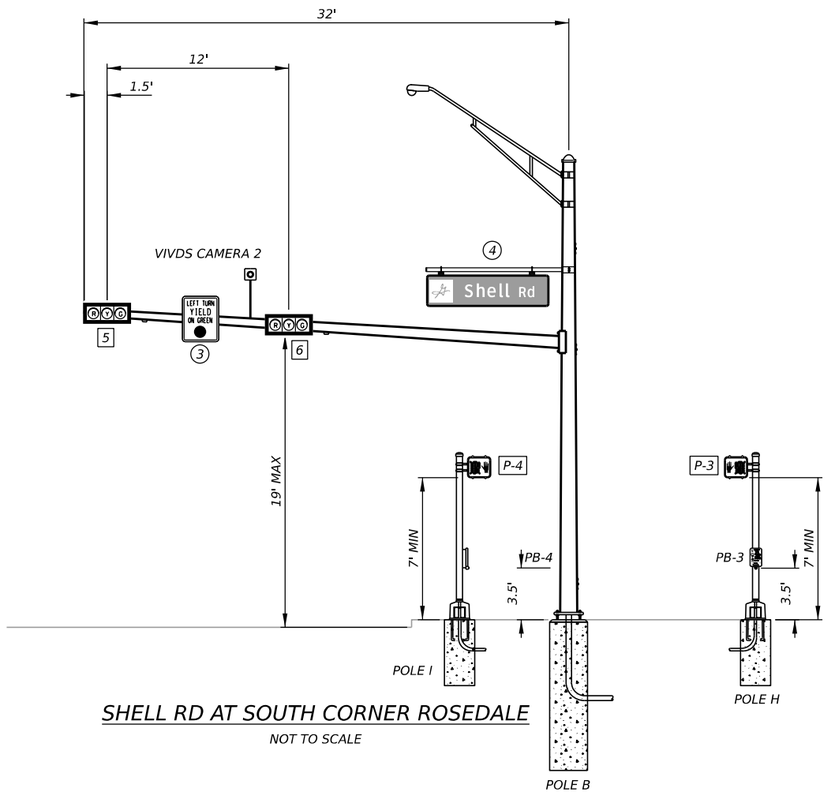

SHELL RD AT SOUTH CORNER ROSEDALE

NOT TO SCALE

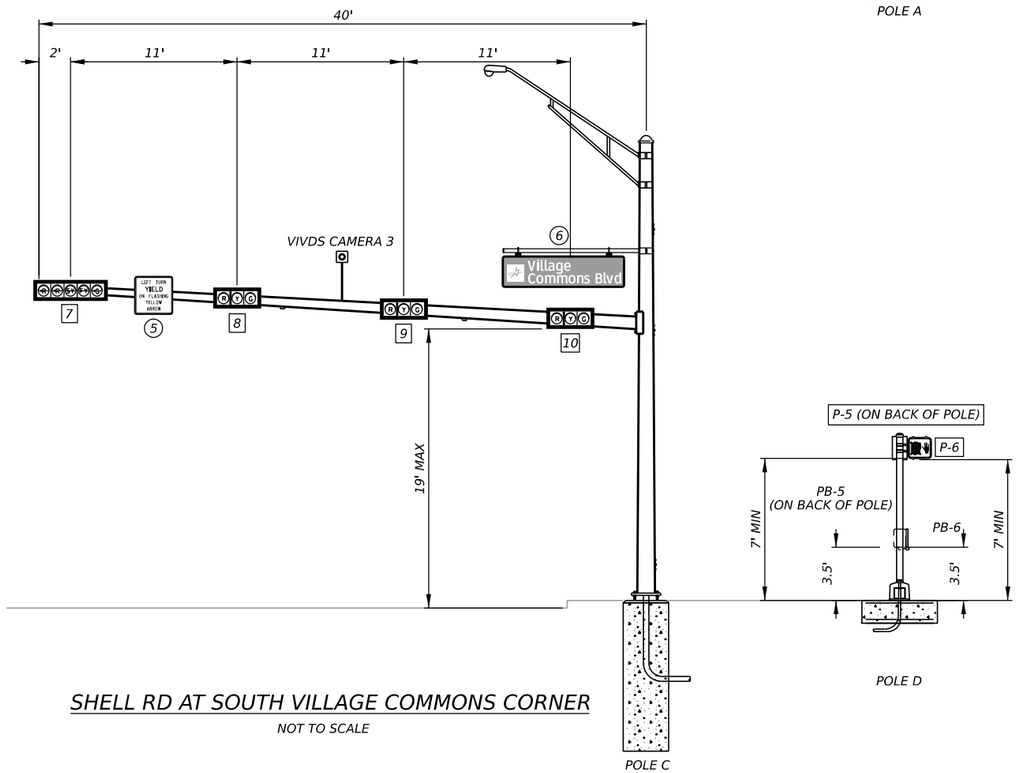

SHELL RD AT SOUTH VILLAGE COMMONS CORNER

NOT TO SCALE

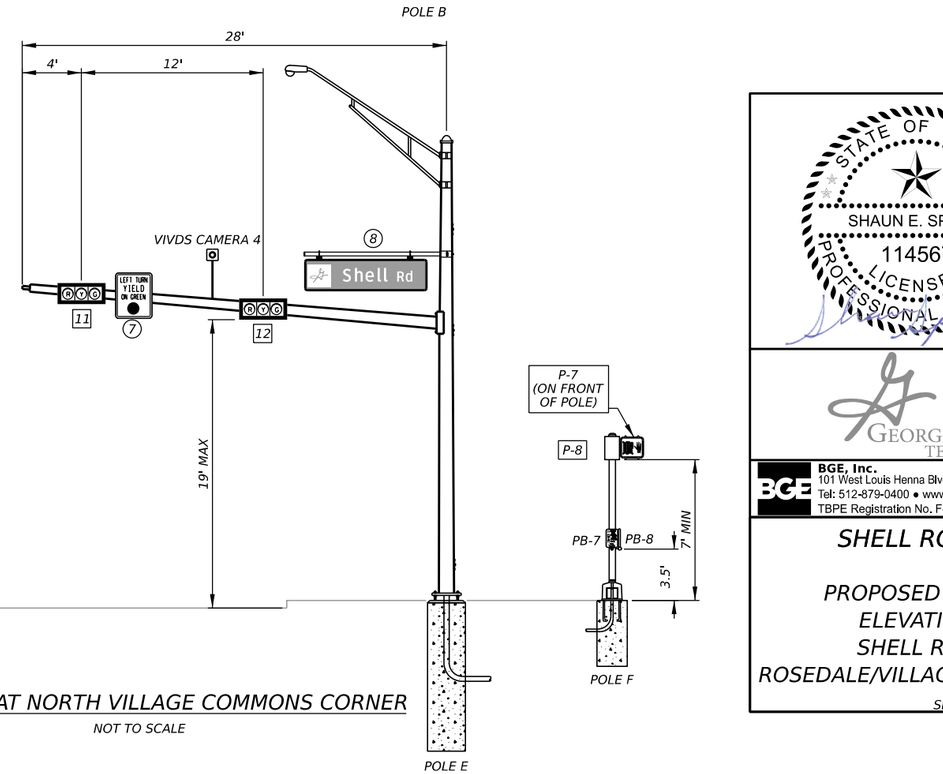

SHELL RD AT NORTH VILLAGE COMMONS CORNER

NOT TO SCALE

3/12/2025

STATE OF TEXAS
SHAUN E. SPIVEY
114567
LICENSED
PROFESSIONAL ENGINEER

EST.1848 GEORGETOWN TEXAS

BGE, Inc.
101 West Louis Henna Blvd, Suite 400, Austin, TX 78728
Tel: 512-879-0400 • www.bgeinc.com
TBPE Registration No. F-1046

SHELL ROAD

PROPOSED SIGNAL ELEVATIONS SHELL RD & ROSEDALE/VILLAGE COMMONS

SHEET 1 OF 1

SHEET NO. 286

DATE: 3/11/2025 5:20:22 PM
FILE: G:\TXC\Projects\City Georgetown\10767-00 Shell Road\03 CADD\01 Shts\13-SGNLS\SHELL_SIGNAL_ELEVATION_02.dgn

CONDUIT AND CONDUCTOR SCHEDULE – SHELL RD INTERSECTION AT ROSEDALE BLVD/VILLAGE COMMONS BLVD

RUN NUMBER				1	2	3	4	5	6		7	8		9	10	11	12		13		14	15	16	17		
CONDUIT SIZE (IN)				3	3	3	2	3	3	2	3	3	2	3	3	3	3	2	3	2	3	3	3	3		
NUMBER OF CONDUITS				1	4	4	1	1	2	1	4	2	1	1	4	1	2	1	2	1	1	4	2	1		
LENGTH OF RUN (FT)				20	15	30	40	25	15	15	95	15	15	10	95	25	15	15	15	15	10	105	20	15		
TRENCH (T) / BORE (B) / EXISTING (E) / AERIAL (A)				T	T	T	T	T	T	T	T	T	T	T	T	T	T	T	T	T	T	T	T	T		
CABLE	CIRCUIT			NUMBER OF CABLES																						
#6 XHHW (SOLID)	120 POWER HOT				1																					
	120 POWER COMMON				1																					
#6 BARE (SOLID)	BARE BOND GROUND			1	4	4	1	1	2	1	4	2	1	1	4	1	2	1	2	1	1	4	2	1		
#12 AWG 20/C TYPE A, STRANDED	SIGNALS	Ø	1+6			1					1				1		1									
		Ø	2+5			1			1																	
		Ø	8			1													1			1				
		Ø	4			1					1	1														
#14 AWG 10/C TYPE A, STRANDED	PED SIGNALS	POLE	D			1					1				1	1										
		POLE	F			1															1	1				
		POLE	G			1		1																		
		POLE	H			1					1			1												
		POLE	I			1					1												1	1		
#14 AWG 2/C TYPE C, STRANDED	PED APS PUSH BUTTONS	POLE	D			2					2				2	2										
		POLE	F			2															2	2				
		POLE	G			2		2																		
		POLE	H			1					1			1												
		POLE	I			1					1												1	1		
#12 AWG 4/C TRAY CABLE	LUMINAIRES	POLE	A				1			1																
		POLE	B				1				1		1													
		POLE	C				1				1				1			1								
		POLE	E				1													1		1				
VIVDS POWER AND DATA CABLE	VIVDS	Ø	1+6			1					1				1		1									
		Ø	2+5			1			1																	
		Ø	8			1													1			1				
		Ø	4			1					1	1														
#12 AWG 3/C TRAY CABLE	ILSN	POLE	A				1		1																	
		POLE	B				1				1	1														
		POLE	C				1				1				1		1									
		POLE	E				1												1			1				

ELECTRICAL SERVICE DATA – SHELL RD INTERSECTION AT ROSEDALE/ VILLAGE COMMONS BLVD

ELECTRICAL SERVICE DESCRIPTION (SEE 'ED(5)-14')	SERVICE CONDUIT SIZE	SERVICE CONDUCTORS NO./SIZE	SAFETY SWITCH AMPS	MAIN CKT. BKR. POLE/AMPS	TWO-POLE CONTRACTOR AMPS	PANELBD/LOADCENTER AMP RATING	BRANCH CIRCUIT ID	BRANCH CKT. BKR. POLE/AMPS	BRANCH CIRCUIT AMPS	KVA LOAD
ELC SRV TY D (120/240)070(NS)AL (E)PS(U)	2"	3/#6	N/A	2P/70	N/A	100	SIGNAL CONTROLLER ILSNS LUMINAIRES	1P/50 1P/20 2P/20	40 4 10	<7

3/12/2025

STATE OF TEXAS
SHAUN E. SPIVEY
114567
LICENSED
PROFESSIONAL ENGINEER

EST.1848 GEORGETOWN TEXAS

BGE, Inc.
101 West Louis Henna Blvd, Suite 400, Austin, TX 78728
Tel: 512-879-0400 • www.bgeinc.com
TBPE Registration No. F-1046

SHELL ROAD

PROPOSED SIGNAL ELECTRICAL SCHEDULE SHELL RD & ROSEDALE/VILLAGE COMMONS

SHEET 1 OF 4

SHEET NO. 287

DATE: 3/11/2025 5:20:23 PM
FILE: G:\TXC\Projects\City Georgetown\10767-00 Shell Road\03 CADD\01 Shts\13-SGNLS\SHELL SIGNAL PROP ELEC SCHEDULE.dgn

POLE SCHEDULE – SHELL RD INTERSECTION AT ROSEDALE BLVD/VILLAGE COMMONS BLVD												
POLE				A	B	C	D	E	F	G	H	I
POLE TYPE				LMA-100	SMA-80	SMA-80	PED	SMA-80	PED	PED	PED	PED
POLE HEIGHT (FT)				30	30	30	10	30	10	10	10	10
MAST ARM LENGTH (FT)				55	32	40	N/A	28	N/A	N/A	N/A	N/A
LUMINAIRES				1	1	1	N/A	1	N/A	N/A	N/A	N/A
FOUNDATION TYPE				48-A	30-A	36-A	SLAB	30-A	24-A	24-A	24-A	24-A
FOUNDATION DEPTH (FT)				22	12	14	1.5	12	6	6	6	6
CABLE	CIRCUIT			NUMBER OF CABLES								
#12 AWG 5/C TYPE A, STRANDED	SIGNALS	Ø	1+6			3						
		Ø	2+5	3								
		Ø	8					1				
		Ø	4		1							
#12 AWG 5/C TYPE A, STRANDED	PED SIGNALS	POLE	D				2					
		POLE	F						2			
		POLE	G							2		
		POLE	H								1	
		POLE	I									1
#14 AWG 2/C TYPE C, STRANDED	PED APS PUSH BUTTONS	POLE	D				2					
		POLE	F						2			
		POLE	G							2		
		POLE	H								1	
		POLE	I									1
#12 AWG 4/C TRAY CABLE	LUMINAIRES	POLE	A	1								
		POLE	B		1							
		POLE	C			1						
		POLE	E					1				
VIVDS POWER AND DATA CABLE	VIVDS	Ø	1+6			1						
		Ø	2+5	1								
		Ø	8					1				
		Ø	4		1							
#12 AWG 3/C TRAY CABLE	ILSN	POLE	A	1								
		POLE	B		1							
		POLE	C			1						
		POLE	E					1				

ACCESSIBLE PEDESTRIAN SIGNAL (APS) UNIT MESSAGE INFORMATION – SHELL RD INTERSECTION AT ROSEDALE/ VILLAGE COMMONS BLVD			
APS UNIT NO.	ACKNOWLEDGE DEFAULT "WAIT"	EXTENDED PRESS MESSAGE "WAIT TO CROSS (STREET NAME) AT (STREET NAME)"	WALK PHASE MESSAGE "(STREET NAME) WALK SIGN IS ON TO CROSS, (STREET NAME)" OR TONE
P1	YES	SHELL RD AT ROSEDALE BLVD	SHELL RD
P2	YES	ROSEDALE BLVD AT SHELL RD	ROSEDALE BLVD
P3	YES	ROSEDALE BLVD AT SHELL RD	ROSEDALE BLVD
P4	YES	SHELL RD AT ROSEDALE BLVD	SHELL RD
P5	YES	SHELL RD AT VILLAGE COMMONS BLVD	SHELL RD
P6	YES	VILLAGE COMMONS BLVD AT SHELL RD	VILLAGE COMMONS BLVD
P7	YES	VILLAGE COMMONS BLVD AT SHELL RD	VILLAGE COMMONS BLVD
P8	YES	SHELL RD AT VILLAGE COMMONS BLVD	SHELL RD

3/12/2025

STATE OF TEXAS
SHAUN E. SPIVEY
114567
LICENSED
PROFESSIONAL ENGINEER

EST. 1848 GEORGETOWN TEXAS

BGE, Inc.
101 West Louis Henna Blvd, Suite 400, Austin, TX 78728
Tel: 512-879-0400 • www.bgeinc.com
TBPE Registration No. F-1046

SHELL ROAD

PROPOSED SIGNAL ELECTRICAL SCHEDULE SHELL RD & ROSEDALE/VILLAGE COMMONS

SHEET 2 OF 4

SHEET NO. 288

DATE: 3/11/2025 5:20:24 PM
FILE: G:\TXC\Projects\City Georgetown\10767-00 Shell Road\03 CADD\01 Shts\13-SGNLS\SHELL_SIGNAL_PROP ELEC_SCHEDULE.dgn

POLE AND EQUIPMENT INFORMATION				
ID	DESCRIPTION/ATTACHMENTS	STATION	OFFSET	FOUNDATION ELEV
A	INSTALL 30-FT LMA-100 ON 22-FT DRILLED SHAFT FOUNDATION (48-A) WITH 55' MAST ARM, ONE LUMINAIRE, ONE ITERIS VIVDS CAMERA, ONE R10-17T SIGN, ONE ILSN SIGN, AND FOUR VEHICLE SIGNAL HEADS AS INDICATED ON LAYOUT.	32+33.63	52.70' RT	LEVEL WITH SIDEWALK
B	INSTALL 30-FT SMA-80 ON 12-FT DRILLED SHAFT FOUNDATION (30-A) WITH 32' MAST ARM, ONE LUMINAIRE, ONE ITERIS VIVDS CAMERA, ONE R10-12 SIGN, ONE ILSN SIGN, AND TWO VEHICLE SIGNAL HEADS AS INDICATED ON LAYOUT.	31+61.40	54.50' RT	LEVEL WITH SIDEWALK
C	INSTALL 30-FT SMA-80 ON 14-FT DRILLED SHAFT FOUNDATION (36-A) WITH 40' MAST ARM , ONE LUMINAIRE, ONE ITERIS VIVDS CAMERA, ONE R10-17T SIGN, ONE ILSN SIGN, AND FOUR VEHICLE SIGNAL HEADS, AS INDICATED ON LAYOUT.	31+60.34	41.12' LT	LEVEL WITH SIDEWALK
D	INSTALL 10-FT STEEL PEDESTAL POLE ON 1.5-FT SPREAD FOOTING SLAB FOUNDATION (SEE PED POLE SPREAD FOOTING STANDARD), TWO LED COUNTDOWN PEDESTRIAN SIGNAL HEADS, TWO PEDESTRIAN PUSH BUTTON WITH AUDIBLE PEDESTRIAN SIGNAL UNIT, ONE R10-3e(L) SIGN AND ONE R10-3e(R) SIGN AS INDICATED ON LAYOUT.	31+67.62	54.56' LT	LEVEL WITH SIDEWALK
E	INSTALL 30-FT SMA-80 ON 12-FT DRILLED SHAFT FOUNDATION (30-A) WITH 28' MAST ARM, ONE LUMINAIRE, ONE ITERIS VIVDS CAMERA, ONE R10-12 SIGN, ONE ILSN SIGN, TWO VEHICLE SIGNAL HEADS, AS INDICATED ON LAYOUT.	32+24.56	72.40' LT	LEVEL WITH SIDEWALK
F	INSTALL 10-FT STEEL PEDESTAL POLE ON 6-FT DRILLED SHAFT FOUNDATION (24-A), TWO LED COUNTDOWN PEDESTRIAN SIGNAL HEAD, TWO PEDESTRIAN PUSH BUTTON WITH AUDIBLE PEDESTRIAN SIGNAL UNIT, TWO R10-3e(L) SIGNS AS INDICATED ON LAYOUT.	32+33.83	64.02' LT	LEVEL WITH SIDEWALK
G	INSTALL 10-FT STEEL PEDESTAL POLE ON 6-FT DRILLED SHAFT FOUNDATION (24-A), TWO LED COUNTDOWN PEDESTRIAN SIGNAL HEAD, TWO PEDESTRIAN PUSH BUTTON WITH AUDIBLE PEDESTRIAN SIGNAL UNIT, ONE R10-3e(L) SIGN AND ONE R10-3e(R) SIGN AS INDICATED ON LAYOUT.	32+22.32	51.34' RT	LEVEL WITH SIDEWALK
H	INSTALL 10-FT STEEL PEDESTAL POLE ON 6-FT DRILLED SHAFT FOUNDATION (24-A), ONE LED COUNTDOWN PEDESTRIAN SIGNAL HEAD, ONE PEDESTRIAN PUSH BUTTON WITH AUDIBLE PEDESTRIAN SIGNAL UNIT AND ONE R10-3e(L) SIGN AS INDICATED ON LAYOUT.	31+51.61	53.05' RT	LEVEL WITH SIDEWALK
I	INSTALL 10-FT STEEL PEDESTAL POLE ON 6-FT DRILLED SHAFT FOUNDATION (24-A), ONE LED COUNTDOWN PEDESTRIAN SIGNAL HEAD, ONE PEDESTRIAN PUSH BUTTON WITH AUDIBLE PEDESTRIAN SIGNAL UNIT AND ONE R10-3e(L) SIGN AS INDICATED ON LAYOUT.	31+71.80	66.49' RT	LEVEL WITH SIDEWALK
X	INSTALL GUS ENERGY STEEL POLE AND METER WITH TxDOT TYPE-D SERVICE.	32+73.17	62.66' RT	N/A
Y	INSTALL SIEMENS M60 TRAFFIC SIGNAL CONTROLLER AND CABINET ON CONCRETE FOUNDATION WITH TXDOT COMMUNICATIONS PACKAGE AS DETAILED IN GENERAL NOTES.	32+67.62	50.38' RT	N/A

3/12/2025

STATE OF TEXAS
SHAUN E. SPIVEY
114567
LICENSED
PROFESSIONAL ENGINEER

EST.1848 GEORGETOWN TEXAS

BGE, Inc.
101 West Louis Henna Blvd, Suite 400, Austin, TX 78728
Tel: 512-879-0400 • www.bgeinc.com
TBPE Registration No. F-1046

SHELL ROAD

PROPOSED SIGNAL ELECTRICAL SCHEDULE SHELL RD & ROSEDALE/VILLAGE COMMONS

SHEET 3 OF 4

SHEET NO. 289

DATE: 3/11/2025 5:20:25 PM
FILE: G:\TXC\Projects\City Georgetown\10767-00 Shell Road\03 CADD\01 Shts\13-SGNL\SHELL_SIGNAL_PROP ELEC_SCHEDULE.dgn

CK
DW
CK
DW

CABLE TERMINATION CHART – SHELL RD INTERSECTION AT ROSEDALE/ VILLAGE COMMONS BLVD									
CONDUCTOR COLOR	FROM POLE A TO CONTROL	FROM POLE B TO CONTROL	FROM POLE C TO CONTROL	FROM POLE D TO CONTROL	FROM POLE E TO CONTROL	FROM POLE F TO CONTROL	FROM POLE G TO CONTROL	FROM POLE H TO CONTROL	FROM POLE I TO CONTROL
	CABLE 1	CABLE 2	CABLE 3	CABLE 4	CABLE 5	CABLE 6	CABLE 7	CABLE 8	CABLE 8
BLACK	SPARE	SPARE	SPARE	SPARE	SPARE	SPARE	SPARE	SPARE	SPARE
WHITE	S. COMMON	S. COMMON	S. COMMON	S. COMMON	S. COMMON	S. COMMON	S. COMMON	S. COMMON	S. COMMON
RED	SH 2,3,4 Ø2 R	SH 5, 6 Ø4 R	SH 8, 9, 10 Ø6 R	SPARE	SH 11, 12 Ø8 R	SPARE	SPARE	SPARE	SPARE
GREEN	SH 2,3,4 Ø2 G	SH 5, 6 Ø4 G	SH 8, 9, 10 Ø6 G	SPARE	SH 11, 12 Ø8 G	SPARE	SPARE	SPARE	SPARE
ORANGE	SH 2,3,4 Ø2 Y	SH 5, 6 Ø4 Y	SH 8, 9, 10 Ø6 Y	SPARE	SH 11, 12 Ø8 Y	SPARE	SPARE	SPARE	SPARE
BLUE	SPARE	SPARE	SPARE	SPARE	SPARE	SPARE	SPARE	SPARE	SPARE
WHITE/BLACK	SPARE	SPARE	SPARE	P-5 Ø4 DW	SPARE	P-7 Ø6 DW	P-1 Ø8 DW	SPARE	SPARE
RED/BLACK	SH 1 Ø5 RA	SPARE	SH 7 Ø1 RA	P-5 Ø4 W	SPARE	P-7 Ø6 W	P-1 Ø8 W	SPARE	SPARE
GREEN/BLACK	SH 1 Ø5 GA	SPARE	SH 7 Ø1 GA	P-6 Ø6 DW	SPARE	P-8 Ø8 DW	P-2 Ø2 DW	P-3 Ø2 DW	P-4 Ø4 DW
ORANGE/BLACK	SH 1 Ø5 YA	SPARE	SH 7 Ø1 YA	P-6 Ø6 W	SPARE	P-8 Ø8 W	P-2 Ø2 W	P-3 Ø2 W	P-4 Ø4 W
BLUE/BLACK	SPARE	SPARE	SPARE	–	SPARE	–	–	–	–
BLACK/WHITE	SPARE	SPARE	SPARE	–	SPARE	–	–	–	–
RED/WHITE	SPARE	SPARE	SPARE	–	SPARE	–	–	–	–
GREEN/WHITE	SPARE	SPARE	SPARE	–	SPARE	–	–	–	–
BLUE/WHITE	SPARE	SPARE	SPARE	–	SPARE	–	–	–	–
BLACK/RED	SH 1 Ø5 FY	SPARE	SH 7 Ø1 FY	–	SPARE	–	–	–	–
WHITE/RED	SPARE	SPARE	SPARE	–	SPARE	–	–	–	–
ORANGE/RED	SPARE	SPARE	SPARE	–	SPARE	–	–	–	–
BLUE/RED	SPARE	SPARE	SPARE	–	SPARE	–	–	–	–
RED/GREEN	SPARE	SPARE	SPARE	–	SPARE	–	–	–	–

DATE: 3/11/2025 5:20:25 PM
FILE: G:\TX\Projects\City Georgetown\10767-00 Shell Road\03_CADD\01 Shts\13-SGNL\SHELL_SIGNAL_PROP_ELEC_SCHEDULE.dgn

3/12/2025

STATE OF TEXAS
SHAUN E. SPIVEY
114567
LICENSED
PROFESSIONAL ENGINEER

EST. 1848
GEORGETOWN
TEXAS

BGE, Inc.
101 West Louis Henna Blvd, Suite 400, Austin, TX 78728
Tel: 512-879-0400 • www.bgeinc.com
TBPE Registration No. F-1046

SHELL ROAD

PROPOSED SIGNAL ELECTRICAL SCHEDULE SHELL RD & ROSEDALE/VILLAGE COMMONS

SHEET 4 OF 4

SHEET NO.
290

Westbury Ln

ILLUMINATED STREET NAME SIGN (ISLN)
(WESTBURY LN)
(01 EA)
(F)

Shell Rd

ILLUMINATED STREET NAME SIGN (ISLN)
(SHELL RD)
(02 EA)
(D,H)

Bellaire Dr

ILLUMINATED STREET NAME SIGN (ISLN)
(BELLAIRE DR)
(01 EA)
(B)



EXISTING SIGNAL HEAD
(08 EA)
(2,3,4,5,7
8,9,10)



EXISTING SIGNAL HEAD
(02 EA)
(1,6)

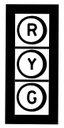

EXISTING SIGNAL HEAD
(02 EA)
(11,12)



SIGN R10-17T
(02 EA)
SIGNS (C,G)



SIGN R10-12
(02 EA)
SIGNS (A,E)

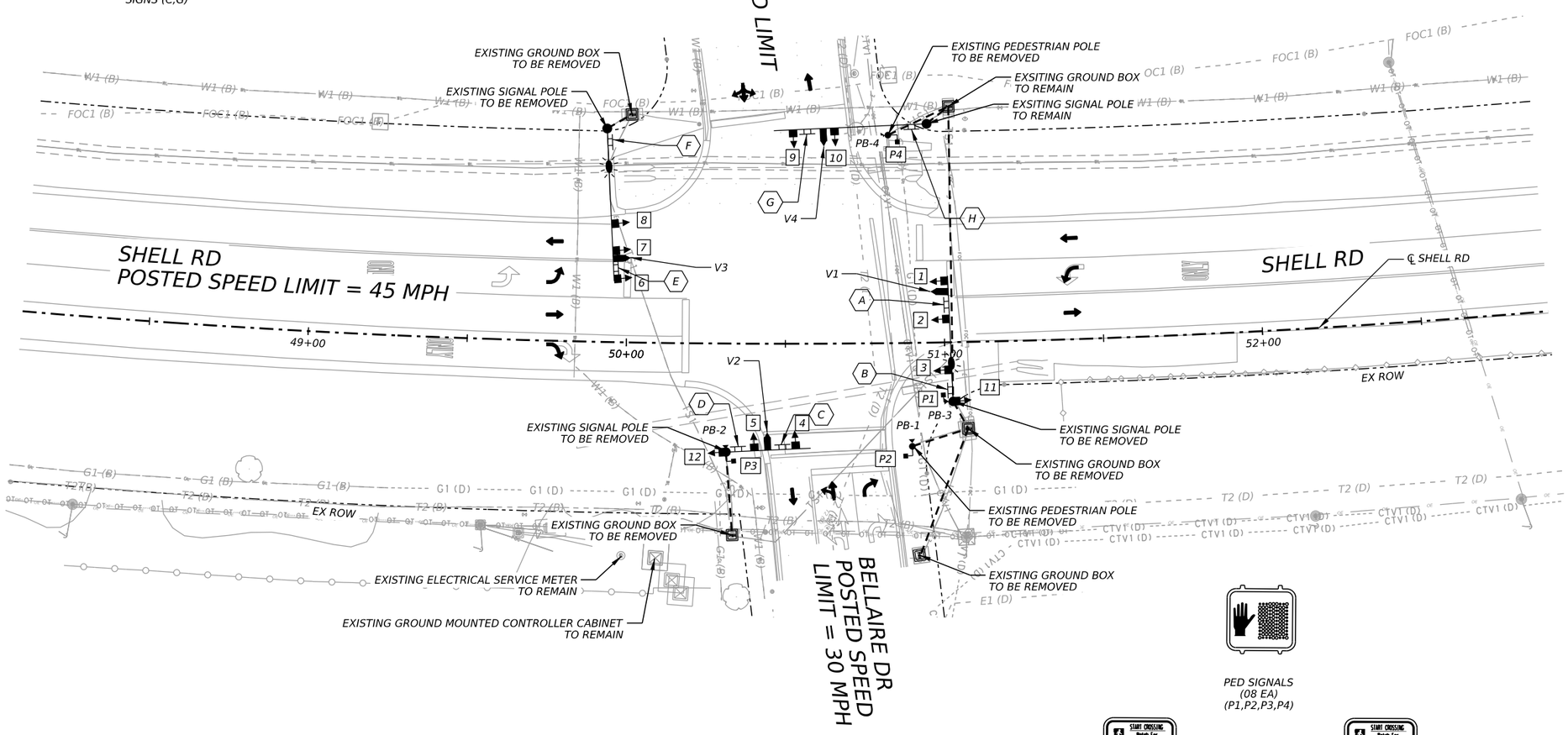

NOTE 1: ALL EXISTING SIGNAL EQUIPMENT BE REMOVE, INCLUDING CONTROLLER,POLES,MAST ARMS,PUSH BUTTONS ,SIGNS,LUMINAIRES,SIGNAL HEADS,GROUND BOXES,CONDUITS AND CABLEING UNLESS SPECIFIED OTHERWISE.

PED SIGNALS
(08 EA)
(P1,P2,P3,P4)



R10-3e(L)
(9"X15")

(02 EA)
PUSH BUTTONS (PB-1,PB-3)



R10-3e(R)
(9"X15")

(02 EA)
PUSH BUTTONS (PB-2,PB-4)

EXISTING LEGEND

- EX SIGNAL POLE AND MAST ARM
- EXISTING DIRECTION OF TRAFFIC
- EXISTING PEDESTRIAN SIGNAL POLE /LUMINAIRE POLE
- EXISTING GROUND MOUNTED CONTROLLER CABINET
- EX GROUND BOX TYPE D W/ APRON
- EX ELECTRICAL SERVICE METER
- EX UNDERGROUND CONDUIT
- EX SIGN ID
- EX PED POLE
- EX PED SIGNAL ID
- EX HEAD SIGNAL ID
- EX LUMINIARE
- EX SIGN
- EX SIGNAL HEAD
- EX CAMERA
- EX PEDESTRIAN SIGNAL HEAD W/ PUSH BUTTON

0 20 40
SCALE: 1" = 40'

STATE OF TEXAS
SHAUN E. SPIVEY
114567
LICENSED
PROFESSIONAL ENGINEER
3/12/2025

EST. 1848 GEORGETOWN TEXAS

BGE, Inc.
101 West Louis Henna Blvd, Suite 400, Austin, TX 78728
Tel: 512-879-0400 • www.bgeinc.com
TBPE Registration No. F-1046

SHELL ROAD

EXISTING SIGNAL LAYOUT SHELL RD & WESTBURY/BELLAIRE

SHEET 1 OF 1

SHEET NO.
291

DATE: 3/11/2025 5:20:28 PM
FILE: G:\TXC\Projects\City Georgetown\10767-00 Shell Road\03 CADD\01_Shts\13-SGNL\SHELL_EXIST_SIGNAL_04.dgn

PROPOSED MAST-ARM SIGNS



R10-17T
(36"X42")
(1) (5)



R10-12
(30"X36")
(3)



DOUBLE-SIDED ILLUMINATED STREET NAME SIGN
(ILSN) (BELLAIRE DR/WESTBURY LN)
(6)



DOUBLE-SIDED ILLUMINATED STREET NAME SIGN
(ILSN) (WESTBURY LN/BELLAIRE DR)
(2)



DOUBLE-SIDED ILLUMINATED STREET NAME SIGN
(ILSN) (SHELL RD)
(4)

PROPOSED SIGNALS

12" L.E.D. SIGNALS W/ BACKPLATES



SIGNALS
2 3 4 5 6 8 9 10



LEFT TURN SIGNAL
1 7

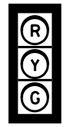

SIGNALS
13 14

PROPOSED PEDESTRIAN SIGNALS AND PUSH BUTTONS



R10-3e(L)
(9"X15")

PB-2, PB-3
PB-6, PB-7
PB-8



R10-3e(R)
(9"X15")

PB-1, PB-4,
PB-5



PED SIGNALS

P-1	P-2
P-3	P-4
P-5	P-6
P-7	P-8



PROPOSED LEGEND

- A — SIGNAL/ PEDESTRIAN POLE IDENTIFIER
- SIGNAL POLE AND MAST ARM
- PROP DIRECTION OF TRAFFIC
- SIGNAL HEAD
- 1 — SIGNAL HEAD NUMBER
- PEDESTRIAN SIGNAL HEAD (P-#) W/ PUSH BUTTON (PB-#)
- GROUND MOUNTED CONTROLLER CABINET
- GROUND BOX TYPE D W/ APRON
- ELECTRICAL SERVICE METER
- LUMINAIRE
- MOUNTED SIGN
- # — MOUNTED SIGN NUMBER
- VIVDS CAMERA
- UNDERGROUND CONDUIT
- # — CONDUIT RUN NUMBER
- Ø# — PHASING NUMBER

PHASING DIAGRAM

0 20 40
SCALE: 1" = 40'

NOTES:

1. CONTRACTOR SHALL POTHOLE SIGNAL POLE FOUNDATION LOCATIONS NEAR UNDERGROUND UTILITIES PRIOR TO INSTALLING POLE FOUNDATIONS.
2. CONTRACTOR SHALL CALL FOR LOCATES PRIOR TO COMMENCING EXCAVATION. ALL UTILITY LOCATIONS SHALL BE VERIFIED IN THE FIELD BY THE CONTRACTOR.
3. LOCATION OF SIGNAL POLES, CABINET AND ELECTRICAL SERVICE SHALL BE VERIFIED AND APPROVED BY THE CITY OF GEORGETOWN PRIOR TO CONSTRUCTION.
4. CONTRACTOR SHALL CONNECT FIELD WIRING TO CONTROLLER.
5. SIGNAL HEADS SHALL HAVE A MINIMUM OF 19.0-FT CLEARANCE ABOVE ROADWAY SURFACE.
6. TRAY CABLE SHALL BE RUN IN 2-IN CONDUIT SEPARATE FROM THE SIGNAL CABLE.

NOTES: (CONTINUED)

7. LUMINAIRES SHOWN AT ANGLE FOR CLARITY. ACTUAL LOCATION OF LUMINAIRES TO BE OVER MAST ARMS.
8. SIDEWALK SHALL BE EXTENDED UP TO SIGNAL POLES AS NEEDED TO PROVIDE ACCESS TO PEDESTRIAN PUSH BUTTONS.
9. CONTRACTOR TO FIELD-VERIFY HORIZONTAL AND VERTICAL LOCATIONS OF EXISTING UTILITIES PRIOR TO CONSTRUCTION.
10. CONTRACTOR TO HAND TRENCH ALL CONDUIT PLACEMENT LOCATIONS AT MINIMUM DEPTH, UNLESS OTHERWISE STATED.

STATE OF TEXAS
SHAUN E. SPIVEY
114567
LICENSED
PROFESSIONAL ENGINEER
3/12/2025

EST.1848 GEORGETOWN TEXAS

BGE, Inc.
101 West Louis Henna Blvd, Suite 400, Austin, TX 78728
Tel: 512-879-0400 • www.bgeinc.com
TBPE Registration No. F-1046

SHELL ROAD

PROPOSED SIGNAL LAYOUT SHELL RD & WESTBURY/BELLAIRE

SHEET 1 OF 1

SHEET NO. 292

DATE: 3/11/2025 5:20:44 PM
FILE: G:\TXC\Projects\City Georgetown\10767-00 Shell Road\03 CADD\01 Shts\13-SGNLS\SHELL SIGNAL 04.dgn

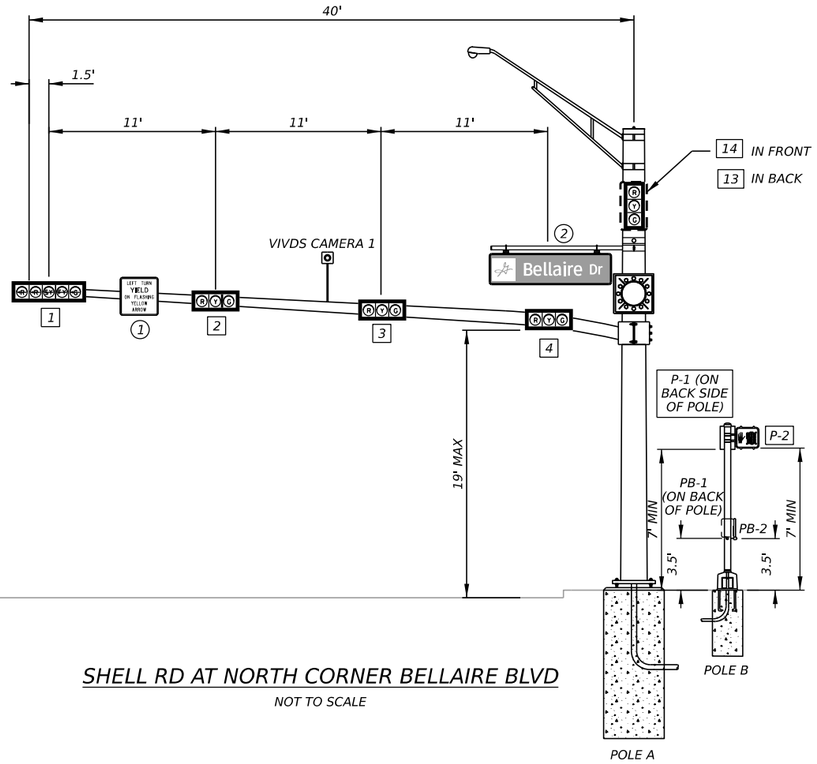

SHELL RD AT NORTH CORNER BELLAIRE BLVD

NOT TO SCALE

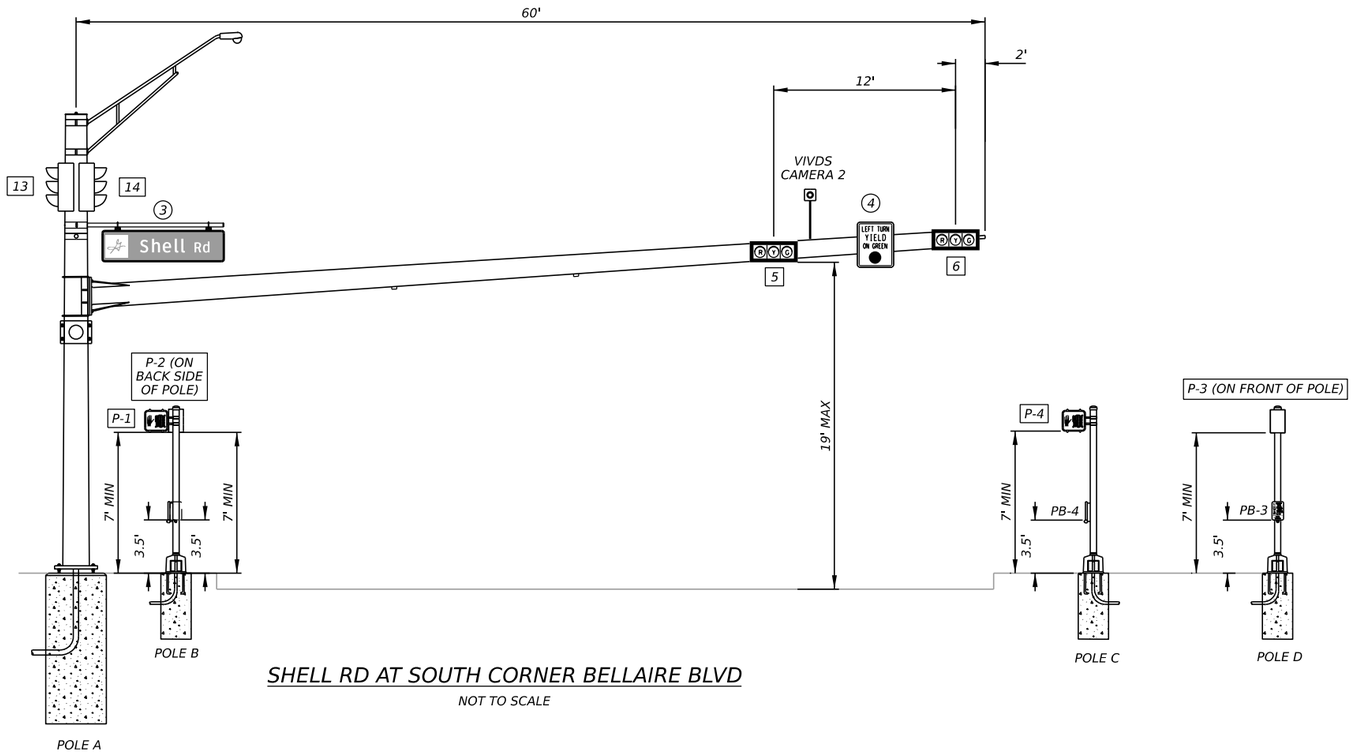

SHELL RD AT SOUTH CORNER BELLAIRE BLVD

NOT TO SCALE

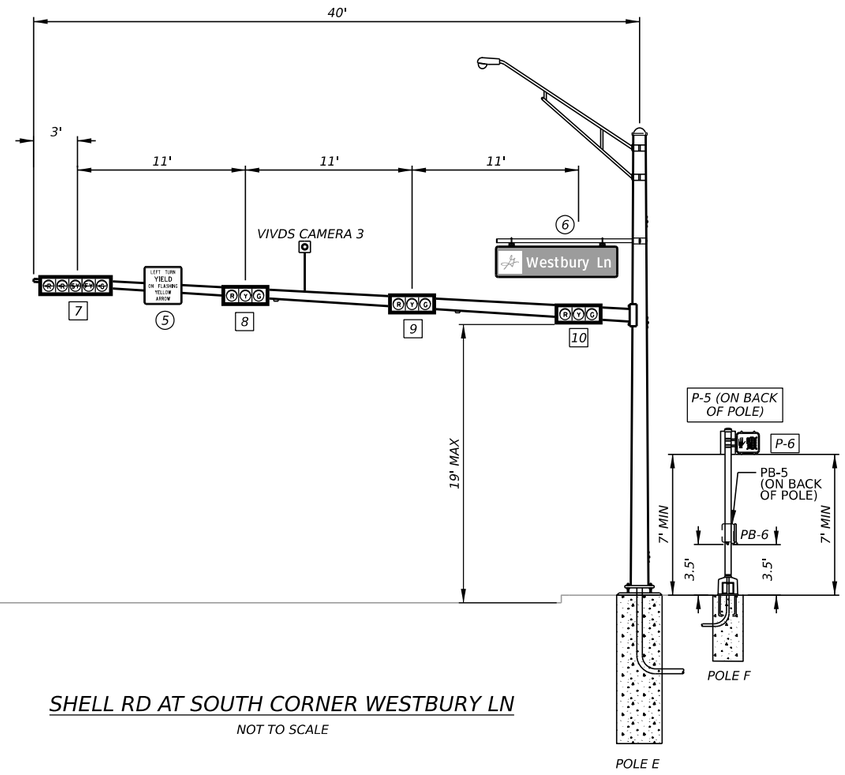

SHELL RD AT SOUTH CORNER WESTBURY LN

NOT TO SCALE

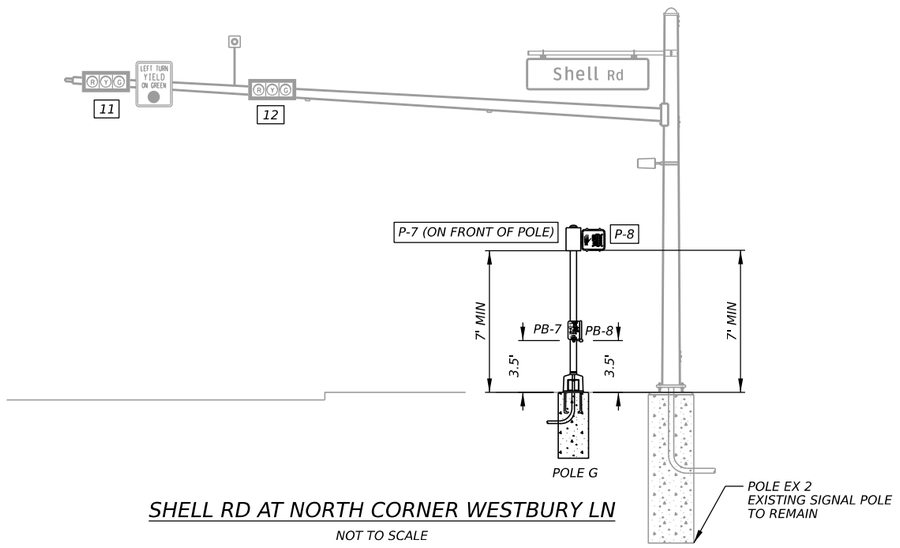

SHELL RD AT NORTH CORNER WESTBURY LN

NOT TO SCALE

3/12/2025

STATE OF TEXAS
SHAUN E. SPIVEY
114567
LICENSED
PROFESSIONAL ENGINEER

EST.1848 GEORGETOWN TEXAS

BGE, Inc.
101 West Louis Henna Blvd, Suite 400, Austin, TX 78728
Tel: 512-879-0400 • www.bgeinc.com
TBPE Registration No. F-1046

SHELL ROAD

PROPOSED SIGNAL ELEVATIONS SHELL RD & WESTBURY/BELLAIRE

SHEET 1 OF 1

SHEET NO. 293

DATE: 3/11/2025 5:20:47 PM
FILE: G:\TX\C\Projects\City Georgetown\10767-00 Shell Road\03 CADD\01 Shts\13-SGNL\SHELL SIGNAL ELEVATION 02.dgn

CONDUIT AND CONDUCTOR SCHEDULE - SHELL RD INTERSECTION AT BELLAIRE DR/WESTBURY LN

RUN NUMBER				1	2		3	4	5	6	7	8		9	10		11	12		13	14	15
CONDUIT SIZE (IN)				3	3	2	3	3	2	3	3	3	2	3	3	2	3	3	2	3	3	3
NUMBER OF CONDUITS				1	2	1	4	4	1	1	4	2	1	1	3	1	4	2	1	1	4	1
LENGTH OF RUN (FT)				20	10	10	95	25	30	10	100	10	10	15	25	25	85	10	10	15	120	25
TRENCH (T) / BORE (B) / EXISTING (E) / AERIAL (A)				T	T	T	T	T	T	T	T	T	T	T	T	T	T	E	E	T	T	T
CABLE	CIRCUIT			NUMBER OF CABLES																		
#6 XHHW (SOLID)	120 POWER HOT																					
	120 POWER COMMON																					
#6 BARE (SOLID)	BARE BOND GROUND			1	2	1	4	4	1	1	4	2	1	1	3	1	4	2	1	1	4	1
#12 AWG 20/C TYPE A, STRANDED	SIGNALS	Ø	1+6		1		1	2			1	1										
		Ø	2+5		1		1	1														
		Ø	8					1			1				1		1	1				
		Ø	4		1		1	1														
#14 AWG 10/C TYPE A, STRANDED	PED SIGNALS	POLE	B	1			1	1														
		POLE	C					1														1
		POLE	D					1		1												
		POLE	F					1			1			1								
		POLE	G					1			1				1		1			1		
#14 AWG 2/C TYPE C, STRANDED	PED APS PUSH BUTTONS	POLE	B	2			2	2														
		POLE	C					1														1
		POLE	D					1		1												
		POLE	F					2			2			2								
		POLE	G					2			2				2		2			2		
#12 AWG 4/C	LUMINAIRES	POLE	A			1	1		1													
		POLE	E						1		1		1									
VIVDS POWER AND DATA CABLE	VIVDS	Ø	1+6					1			1	1										
		Ø	2+5		1		1	1														
		Ø	8					1			1				1		1	1				
		Ø	4		1		1	1														
#12 AWG 3/C TRAY CABLE	ILSN	POLE	A			2	2		2													
		POLE	E						1		1		1									
		POLE	EX 1						1		1					1	1		1			

ACCESSIBLE PEDESTRIAN SIGNAL (APS) UNIT MESSAGE INFORMATION - SHELL RD INTERSECTION AT BELLAIRE DR/ WESTBURY LN

APS UNIT NO.	ACKNOWLEDGE DEFAULT "WAIT"	EXTENDED PRESS MESSAGE	WALK PHASE MESSAGE
		"WAIT TO CROSS (STREET NAME) AT (STREET NAME)"	"(STREET NAME) WALK SIGN IS ON TO CROSS, (STREET NAME)" OR TONE
P1	YES	SHELL RD AT BELLAIRE DR	SHELL RD
P2	YES	BELLAIRE BLVD AT SHELL RD	BELLAIRE DR
P3	YES	BELLAIRE BLVD AT SHELL RD	BELLAIRE DR
P4	YES	SHELL RD AT BELLAIRE DR	SHELL RD
P5	YES	SHELL RD AT WESTBURY LN	SHELL RD
P6	YES	WESTBURY LN AT SHELL RD	WESTBURY LN
P7	YES	WESTBURY LN AT SHELL RD	WESTBURY LN
P8	YES	SHELL RD AT WESTBURY LN	SHELL RD

3/12/2025

STATE OF TEXAS
SHAUN E. SPIVEY
114567
LICENSED
PROFESSIONAL ENGINEER

EST.1848 GEORGETOWN TEXAS

BGE, Inc.
101 West Louis Henna Blvd, Suite 400, Austin, TX 78728
Tel: 512-879-0400 • www.bgeinc.com
TBPE Registration No. F-1046

SHELL ROAD

PROPOSED SIGNAL ELECTRICAL SCHEDULE SHELL RD & WESTBURY/BELLAIRE

SHEET 1 OF 3

SHEET NO. 294

CK: DW: CK: DW:

DATE: 3/11/2025 5:20:48 PM
FILE: G:\TXC\Projects\City Georgetown\10767-00 Shell Road\03 CADD\01 Shts\13-SGNLS\SHELL SIGNAL PROP ELEC SCHEDULE.dgn

POLE SCHEDULE – SHELL RD INTERSECTION AT BELLAIRE DR											
POLE				A	B	C	D	E	F	G	EX 1
POLE TYPE				LMA-100	PED	PED	PED	SMA-80	PED	PED	SMA-80
POLE HEIGHT (FT)				30	10	10	10	30	10	10	25
MAST ARM LENGTH (FT)				60,40	N/A	N/A	N/A	40	N/A	N/A	40
LUMINAIRES				1	N/A	N/A	N/A	1	N/A	N/A	N/A
FOUNDATION TYPE				48-A	24-A	24-A	24-A	36-A	24-A	24-A	N/A
FOUNDATION DEPTH (FT)				22	6	6	6	14	6	6	N/A
CABLE	CIRCUIT			NUMBER OF CABLES							
#12 AWG 7/C TYPE A, STRANDED	SIGNALS	Ø	1+6	1				3			
		Ø	2+5	4							
		Ø	4	1							
#12 AWG 5/C TYPE A, STRANDED	PED SIGNALS	POLE	B		2						
		POLE	C			1					
		POLE	D				1				
		POLE	F						2		
		POLE	G							2	
#14 AWG 2/C TYPE C, STRANDED	PED APS PUSH BUTTONS	POLE	B		2						
		POLE	C			1					
		POLE	D				1				
		POLE	F						2		
		POLE	G							2	
#12 AWG 4/C TRAY CABLE	LUMINAIRES	POLE	A	1							
		POLE	E					1			
VIVDS POWER AND DATA CABLE	VIVDS	Ø	1+6					1			
		Ø	2+5	1							
		Ø	4	1							
#12 AWG 3/C TRAY CABLE	ILSN	POLE	A	2							
		POLE	E					1			

DATE: 3/11/2025 5:20:49 PM
FILE: G:\TXC\Projects\City Georgetown\10767-00 Shell Road\03 CADD\01 Shts\13-SGNLS\SHELL SIGNAL PROP ELEC SCHEDULE.dgn

CK: DW: CK: DW:

3/12/2025

STATE OF TEXAS
SHAUN E. SPIVEY
114567
LICENSED
PROFESSIONAL ENGINEER

EST.1848 GEORGETOWN TEXAS

BGE, Inc.
101 West Louis Henna Blvd, Suite 400, Austin, TX 78728
Tel: 512-879-0400 • www.bgeinc.com
TBPE Registration No. F-1046

SHELL ROAD

PROPOSED SIGNAL ELECTRICAL SCHEDULE SHELL RD & WESTBURY/BELLAIRE

SHEET 2 OF 3

CK
DW
CK
DW

CABLE TERMINATION CHART – SHELL RD INTERSECTION AT WESTBURY LN/BELLAIRE DR										
CONDUCTOR COLOR	FROM POLE A TO CONTROL	FROM POLE A TO CONTROL	FROM POLE A TO CONTROL	FROM POLE B TO CONTROL	FROM POLE C TO CONTROL	FROM POLE D TO CONTROL	FROM POLE E TO CONTROL	FROM POLE F TO CONTROL	FROM POLE G TO CONTROL	FROM POLE EX 1 TO CONTROL
	CABLE 1	CABLE 2	CABLE 3	CABLE 4	CABLE 5	CABLE 6	CABLE 7	CABLE 8	CABLE 9	CABLE 10
BLACK	SPARE	SPARE	SPARE	SPARE	SPARE	SPARE	SPARE	SPARE	SPARE	SPARE
WHITE	S. COMMON	S. COMMON	S. COMMON	S. COMMON	S. COMMON	S. COMMON	S. COMMON	S. COMMON	S. COMMON	S. COMMON
RED	SH 2,3,4,14 Ø2 R	SH 5, 6 Ø4 R	SH 13 Ø6 R	SPARE	SPARE	SPARE	SH 8, 9, 10 Ø6 R	SPARE	SPARE	SH 11, 12 Ø8 R
GREEN	SH 2,3,4,14 Ø2 G	SH 5, 6 Ø4 G	SH 13 Ø6 G	SPARE	SPARE	SPARE	SH 8, 9, 10 Ø6 G	SPARE	SPARE	SH 11, 12 Ø8 G
ORANGE	SH 2,3,4,14 Ø2 Y	SH 5, 6 Ø4 Y	SH 13 Ø6 Y	SPARE	SPARE	SPARE	SH 8, 9, 10 Ø6 Y	SPARE	SPARE	SH 11, 12 Ø8 Y
BLUE	SPARE	SPARE	SPARE	SPARE	SPARE	SPARE	SPARE	SPARE	SPARE	SPARE
WHITE/BLACK	SPARE	SPARE	SPARE	P-1 Ø8 DW	SPARE	SPARE	SPARE	P-5 Ø4 DW	P-7 Ø6 DW	SPARE
RED/BLACK	SH 1 Ø5 RA	SPARE	SPARE	P-1 Ø8 W	SPARE	SPARE	SH 7 Ø1 1 RA	P-5 Ø4 W	P-7 Ø6 W	SPARE
GREEN/BLACK	SH 1 Ø5 GA	SPARE	SPARE	P-2 Ø2 DW	P-4 Ø4 DW	P-3 Ø2 DW	SH 7 Ø1 1 GA	P-6 Ø6 DW	P-8 Ø8 DW	SPARE
ORANGE/BLACK	SH 1 Ø5 YA	SPARE	SPARE	P-2 Ø2 W	P-4 Ø4 W	P-3 Ø2 W	SH 7 Ø1 1 YA	P-6 Ø6 W	P-8 Ø8 W	SPARE
BLUE/BLACK	SPARE	SPARE	SPARE	–	–	–	SPARE	–	–	SPARE
BLACK/WHITE	SPARE	SPARE	SPARE	–	–	–	SPARE	–	–	SPARE
RED/WHITE	SPARE	SPARE	SPARE	–	–	–	SPARE	–	–	SPARE
GREEN/WHITE	SPARE	SPARE	SPARE	–	–	–	SPARE	–	–	SPARE
BLUE/WHITE	SPARE	SPARE	SPARE	–	–	–	SPARE	–	–	SPARE
BLACK/RED	SH 1 Ø5 FY	SPARE	SPARE	–	–	–	SH 7 Ø1 FY	–	–	SPARE
WHITE/RED	SPARE	SPARE	SPARE	–	–	–	SPARE	–	–	SPARE
ORANGE/RED	SPARE	SPARE	SPARE	–	–	–	SPARE	–	–	SPARE
BLUE/RED	SPARE	SPARE	SPARE	–	–	–	SPARE	–	–	SPARE
RED/GREEN	SPARE	SPARE	SPARE	–	–	–	SPARE	–	–	SPARE

POLE AND EQUIPMENT INFORMATION				
ID	DESCRIPTION/ATTACHMENTS	STATION	OFFSET	FOUNDATION ELEV
A	INSTALL 30-FT LMA-100 ON 22-FT DRILLED SHAFT FOUNDATION (48-A) WITH ONE 40' MAST ARM, ONE 60' MAST ARM, ONE LUMINAIRE, TWO ITERIS VIVDS CAMERA, ONE R10-17T SIGN, ONE R10-12 SIGN, TWO ILSN SIGN, AND EIGHT VEHICLE SIGNAL HEADS AS INDICATED ON LAYOUT.	51+06.21	39.92' RT	LEVEL WITH SIDEWALK
B	INSTALL 10-FT STEEL PEDESTAL POLE ON 6-FT DRILLED SHAFT FOUNDATION (24-A), TWO LED COUNTDOWN PEDESTRIAN SIGNAL HEAD, TWO PEDESTRIAN PUSH BUTTON WITH AUDIBLE PEDESTRIAN SIGNAL UNIT, ONE R10-3e(L) SIGN, AND ONE R10-3e(R) SIGN AS INDICATED ON LAYOUT.	50+97.06	46.14' RT	LEVEL WITH SIDEWALK
C	INSTALL 10-FT STEEL PEDESTAL POLE ON 6-FT DRILLED SHAFT FOUNDATION (24-A), ONE LED COUNTDOWN PEDESTRIAN SIGNAL HEAD, ONE PEDESTRIAN PUSH BUTTON WITH AUDIBLE PEDESTRIAN SIGNAL UNIT AND ONE R10-3e(R) SIGN AS INDICATED ON LAYOUT.	50+37.89	66.20' RT	LEVEL WITH SIDEWALK
D	INSTALL 10-FT STEEL PEDESTAL POLE ON 6-FT DRILLED SHAFT FOUNDATION (24-A), ONE LED COUNTDOWN PEDESTRIAN SIGNAL HEAD, ONE PEDESTRIAN PUSH BUTTON WITH AUDIBLE PEDESTRIAN SIGNAL UNIT AND ONE R10-3e(L) SIGN AS INDICATED ON LAYOUT.	50+22.80	54.06' RT	LEVEL WITH SIDEWALK
E	INSTALL 30-FT SMA-80 ON 14-FT DRILLED SHAFT FOUNDATION (36-A) WITH 44' MAST ARM, ONE LUMINAIRE, ONE ITERIS VIVDS CAMERA, ONE R10-17T SIGN, ONE ILSN SIGN, AND FOUR VEHICLE SIGNAL HEADS, AS INDICATED ON LAYOUT.	50+00.38	39.21' LT	LEVEL WITH SIDEWALK
F	INSTALL 10-FT STEEL PEDESTAL POLE ON 6-FT DRILLED SHAFT FOUNDATION (24-A), TWO LED COUNTDOWN PEDESTRIAN SIGNAL HEAD, TWO PEDESTRIAN PUSH BUTTON WITH AUDIBLE PEDESTRIAN SIGNAL UNIT, ONE R10-3e(L) SIGN, AND ONE R10-3e(R) SIGN AS INDICATED ON LAYOUT.	50+13.41	48.20' LT	LEVEL WITH SIDEWALK
G	INSTALL 10-FT STEEL PEDESTAL POLE ON 6-FT DRILLED SHAFT FOUNDATION (24-A), TWO LED COUNTDOWN PEDESTRIAN SIGNAL HEADS, TWO PEDESTRIAN PUSH BUTTONS WITH AUDIBLE PEDESTRIAN SIGNAL UNITS, AND TWO R10-3e(L) SIGNS AS INDICATED ON LAYOUT.	50+94.76	64.30' LT	LEVEL WITH SIDEWALK
Y	INSTALL TxDOT TRAFFIC SIGNAL CONTROLLER AND CABINET ON CONCRETE FOUNDATION WITH TXDOT COMMUNICATIONS PACKAGE AS DETAILED IN GENERAL NOTES. INSIDE NEW SIGNAL CONTROLLER AND CABINET, INSTALL ONE OPTICOM 764 MULTIMODE PHASE SELECTOR, ONE OPTICOM 768 AUXILIARY INTERFACE PANEL AND ONE OPTICOM 1040 GPS CARD RACK.	N/A	N/A	N/A

STATE OF TEXAS
SHAUN E. SPIVEY
114567
LICENSED
PROFESSIONAL ENGINEER
3/12/2025

EST. 1848
GEORGETOWN
TEXAS

BGE, Inc.
101 West Louis Henna Blvd, Suite 400, Austin, TX 78728
Tel: 512-879-0400 • www.bgeinc.com
TBPE Registration No. F-1046

SHELL ROAD

PROPOSED SIGNAL ELECTRICAL SCHEDULE SHELL RD & WESTBURY/BELLAIRE

SHEET 3 OF 3

SHEET NO.
296

DATE: 3/11/2025 5:20:49 PM
FILE: G:\TXC\Projects\City Georgetown\10767-00 Shell Road\03 CADD\01 Shts\13-SGNLS\SHELL SIGNAL PROP ELEC SCHEDULE.dgn

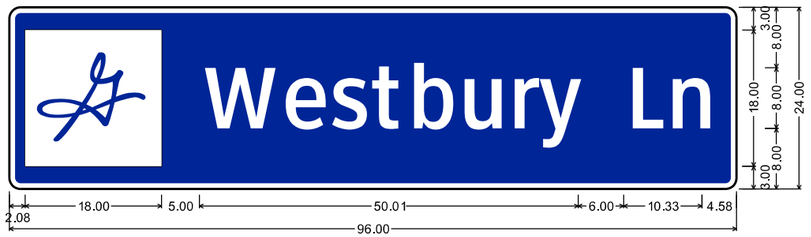

1.50" Radius, 0.75" Border, White on Blue;
"Westbury", ClearviewHwy-3-W 70% spacing;
"Ln", ClearviewHwy-3-W 70% spacing;

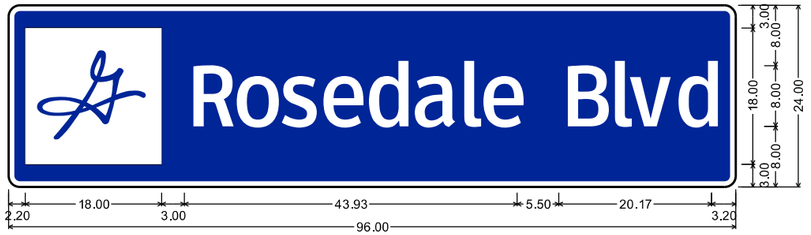

1.50" Radius, 0.75" Border, White on Blue;
"Rosedale", ClearviewHwy-3-W 40% spacing;
"Blvd", ClearviewHwy-3-W 40% spacing;

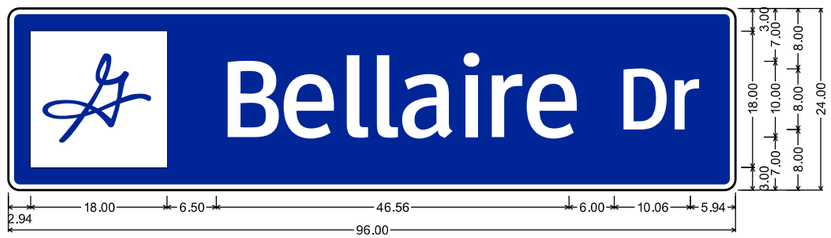

1.50" Radius, 0.75" Border, White on Blue;
"Bellaire", ClearviewHwy-3-W 50% spacing;
"Dr", ClearviewHwy-3-W 50% spacing;

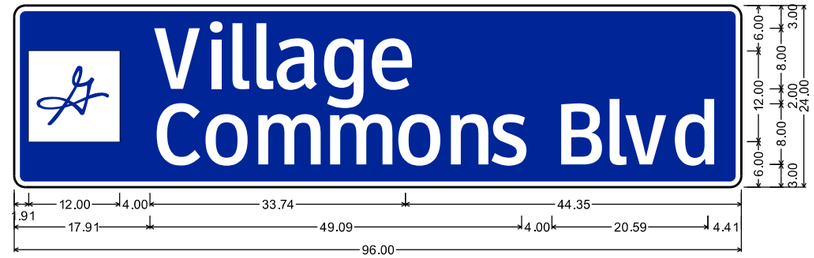

1.50" Radius, 0.75" Border, White on Blue;
"Village", ClearviewHwy-3-W 50% spacing;
"Commons", ClearviewHwy-3-W 50% spacing; "Blvd", ClearviewHwy-3-W 50% spacing;

EST.1848
GEORGETOWN
TEXAS

BGE, Inc.
101 West Louis Henna Blvd, Suite 400, Austin, TX 78728
Tel: 512-879-0400 • www.bgeinc.com
TBPE Registration No. F-1046

SHELL ROAD

SIGNAL SIGN DETAIL

SHEET 1 OF 2

SHEET NO.
297

DATE: 3/11/2025 5:20:52 PM
FILE: G:\TXC\Projects\City Georgetown\10767-00 Shell Road\03 CADD\01 Shts\13-SGNL\SHELL SIGNAL SIGNS.dgn

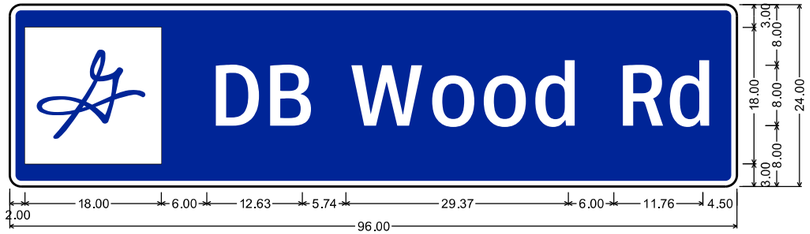

1.50" Radius, 0.75" Border, White on Blue;
"DB Wood", ClearviewHwy-3-W 70% spacing;
"Rd", ClearviewHwy-3-W 70% spacing;

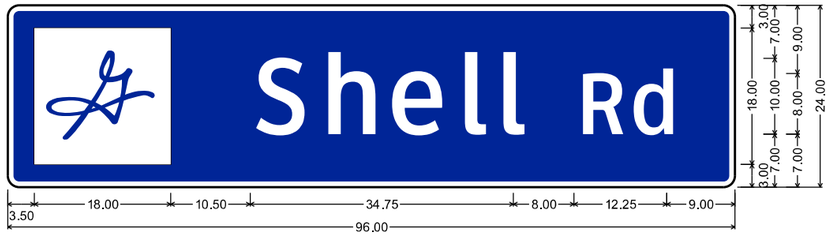

1.50" Radius, 0.75" Border, White on Blue;
"Shell", ClearviewHwy-3-W; "Rd", ClearviewHwy-3-W;



1.50" Radius, 0.75" Border, White on Blue;
"Verde Vista", ClearviewHwy-3-W 80% spacing;

STATE OF TEXAS
SHAUN E. SPIVEY
114567
LICENSED
PROFESSIONAL ENGINEER
3/12/2025

EST.1848 GEORGETOWN TEXAS

BGE, Inc.
101 West Louis Henna Blvd, Suite 400, Austin, TX 78728
Tel: 512-879-0400 • www.bgeinc.com
TBPE Registration No. F-1046

SHELL ROAD

SIGNAL SIGN DETAIL

SHEET 2 OF 2

SHEET NO. 298

DATE: 3/11/2025 5:20:52 PM
FILE: G:\TXC\Projects\City Georgetown\10767-00 Shell Road\03 CADD\01 Shts\13-SGNLS\SHELL_SIGNAL_SIGNS.dgn

DISCLAIMER: The use of this standard is governed by the "Texas Engineering Practice Act". No warranty of any kind is made by TxDOT for any purpose whatsoever. TxDOT assumes no responsibility for the conversion of this standard to other formats or for incorrect results or damages resulting from its use.

DATE: 3/11/2025 5:20:53 PM
FILE: G:\TXC\Projects\City*Georgetown\10767-00 Shell Road\03*CADD\01*Shts\13-SGNLS\Shts\sma-80.dgn

Arm Length	ROUND POLES					POLYGONAL POLES					Foundation Type
	D_B	D_{19}	D_{24}	D_{30}	① thk	D_B	D_{19}	D_{24}	D_{30}	① thk	
ft.	in.	in.	in.	in.	in.	in.	in.	in.	in.	in.	
20	10.5	7.8	7.1	6.3	.179	11.5	8.5	7.7	6.8	.179	30-A
24	11.0	8.3	7.6	6.8	.179	12.0	9.0	8.2	7.3	.179	30-A
28	11.5	8.8	8.1	7.3	.179	12.5	9.5	8.7	7.8	.179	30-A
32	12.5	9.8	9.1	8.3	.179	12.0	9.0	8.2	7.3	.239	30-A
36	12.0	9.3	8.6	7.8	.239	12.5	9.5	8.7	7.8	.239	36-A
40	12.0	9.3	8.6	7.8	.239	13.5	10.5	9.7	8.8	.239	36-A
44	12.5	9.8	9.1	8.3	.239	14.0	11.0	10.2	9.3	.239	36-A
48	13.0	10.3	9.6	8.8	.239	15.0	12.0	11.2	10.3	.239	36-A

Arm Length	ROUND ARMS					POLYGONAL ARMS				
	L_1	D_1	D_2	① thk	Rise	L_1	D_1	② D_2	① thk	Rise
ft.	ft.	in.	in.	in.		ft.	in.	in.	in.	
20	19.1	6.5	3.8	.179	1'-9"	19.1	7.0	3.5	.179	1'-8"
24	23.1	7.5	4.3	.179	1'-10"	23.1	7.5	3.5	.179	1'-9"
28	27.1	8.0	4.2	.179	1'-11"	27.1	8.0	3.5	.179	1'-10"
32	31.0	9.0	4.7	.179	2'-1"	31.0	9.0	3.5	.179	2'-0"
36	35.0	9.5	4.6	.179	2'-4"	35.0	10.0	3.5	.179	2'-1"
40	39.0	9.5	4.1	.239	2'-8"	39.0	9.5	3.5	.239	2'-3"
44	43.0	10.0	4.1	.239	2'-11"	43.0	10.0	3.5	.239	2'-6"
48	47.0	10.5	4.1	.239	3'-4"	47.0	11.0	3.5	.239	2'-9"

D_B = Pole Base O.D.
D_{19} = Pole Top O.D. with no Luminaire and no ILSN
D_{24} = Pole Top O.D. with ILSN w/out Luminaire
D_{30} = Pole Top O.D. with Luminaire
D_1 = Arm Base O.D.
D_2 = Arm End O.D.
L_1 = Shaft Length
L = Nominal Arm Length

① Thickness shown are minimums, thicker materials may be used.

② D_2 may be increased by up to 1" for polygonal arms.

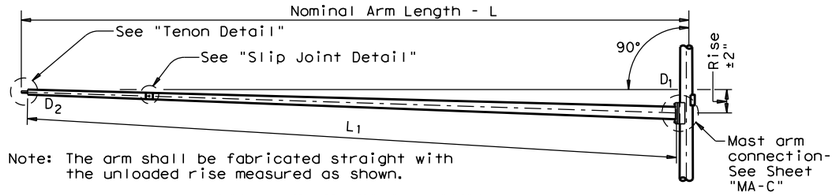

Note: The arm shall be fabricated straight with the unloaded rise measured as shown.

TRAFFIC SIGNAL ARM

(Fixed Mount)

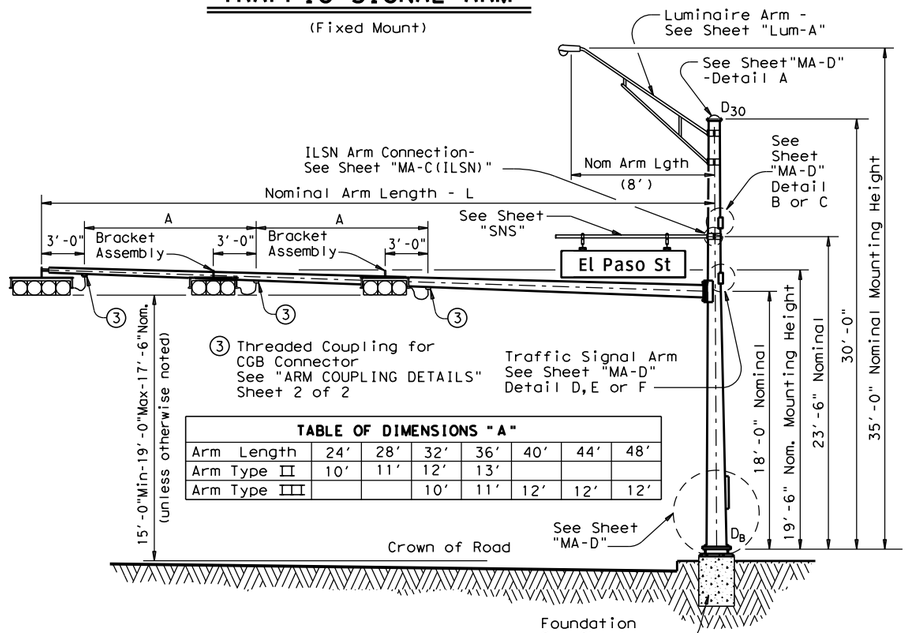

TABLE OF DIMENSIONS "A"

Arm Length	24'	28'	32'	36'	40'	44'	48'
Arm Type II	10'	11'	12'	13'			
Arm Type III			10'	11'	12'	12'	12'

STRUCTURE ASSEMBLY

SHIPPING PARTS LIST

Ship each pole with the following attached: enlarged hand hole, pole cap, fixed-arm connection bolts and washers and any additional hardware listed in the table.

Nominal Arm Length	30' Poles With Luminaire		24' Poles With ILSN		19' Poles With No Luminaire and No ILSN	
	Above hardware plus: One (or two if ILSN attached) small hand hole, clamp-on simplex		Above hardware plus one small hand hole		See note above	
ft	Designation	Quantity	Designation	Quantity	Designation	Quantity
20	20L-80		20S-80		20-80	
24	24L-80		24S-80		24-80	
28	28L-80	1	28S-80		28-80	
32	32L-80	1	32S-80		32-80	
36	36L-80		36S-80		36-80	
40	40L-80	2	40S-80		40-80	
44	44L-80		44S-80		44-80	
48	48L-80	1	48S-80		48-80	

Traffic Signal Arms (1 per Pole) Ship each arm with the listed equipment attached

Nominal Arm Length	Type I Arm (1 Signal)		Type II Arm (2 Signals)		Type III Arm (3 Signals)	
	1 CGB connector		1 Bracket Assembly and 2 CGB Connectors		2 Bracket Assemblies and 3 CGB Connectors	
ft	Designation	Quantity	Designation	Quantity	Designation	Quantity
20	20I-80					
24	24I-80		24II-80			
28	28I-80		28II-80	1		
32			32II-80	1	32III-80	
36			36II-80		36III-80	
40					40III-80	2
44					44III-80	
48					48III-80	1

Luminaire Arms (1 per 30' pole)

Nominal Arm Length	Quantity
8' Arm	5

ILSN Arm (Max. 2 per pole) Ship with clamps, bolts and washers

Nominal Arm Length	Quantity
7' Arm	
9' Arm	5

Anchor Bolt Assemblies (1 per pole)

Anchor Bolt Diameter	Anchor Bolt Length	Quantity
1 ½"	3'-4"	2
1 ¾"	3'-10"	3

Each anchor bolt assembly consists of the following: Top and Bottom templates, 4 anchor bolts, 8 nuts, 8 flat washers, and 4 nut anchor devices (Type 2) per Standard Drawing "TS-FD".

Templates may be removed for shipment.

SHEET 1 OF 2

Texas Department of Transportation
Traffic Operations Division

TRAFFIC SIGNAL SUPPORT STRUCTURES

SINGLE MAST ARM ASSEMBLY

(80 MPH WIND ZONE)

SMA-80(1)-12

© TxDOT August 1995

DN: MS	CK: JSY	DW: MWF	CK: JSY

REVISIONS
5-96
11-99
1-12

CONT	SECT	JOB	HIGHWAY

DIST	COUNTY	SHEET NO.
		299

122A

DISCLAIMER: The use of this standard is governed by the "Texas Engineering Practice Act". No warranty of any kind is made by TxDOT for any purpose whatsoever. TxDOT assumes no responsibility for the conversion of this standard to other formats or for incorrect results or damages resulting from its use.

DATE: 3/11/2025 5:20:53 PM
FILE: G:\TXC\Projects\City*Georgetown\10767-00 Snell Road\03*CADD\01*Shts\13-SGNLSYStds\sma-80.dgn

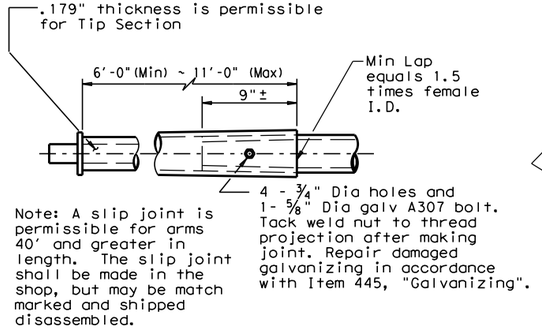

SLIP JOINT DETAIL

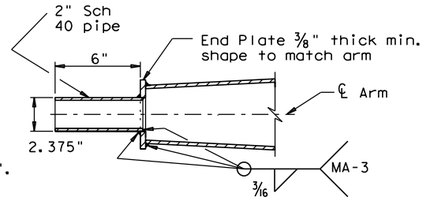

TENON DETAIL

Stainless steel bands (or Cables) and cast bracket as in "Astro-Brac", "Sky Bracket" or "Easy Bracket" with 1 ½" Dia Threaded Coupling.

BRACKET ASSEMBLY

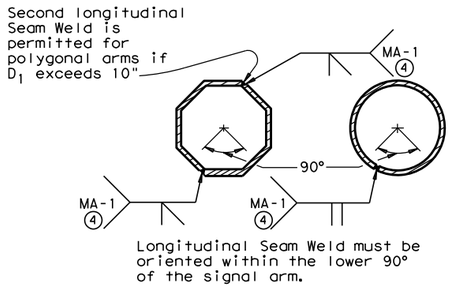

ARM WELD DETAIL

④ 60% Min. penetration 100% pemetration within 6" of circumferential base welds.

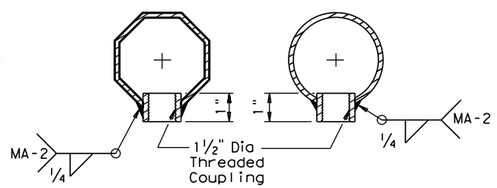

ARM COUPLING DETAILS

VIBRATION WARNING

Mast Arms of SMA and DMA structures and clamp-on Arms of LMA structures of approximately 40 ft or longer are subject to harmonic vertical vibrations in light wind conditions due to the aeroelastic characteristics of a few of the myriads of possible combinations of the following: signal numbers, weights and positions; existence/solidity of backplates; presence of additional attachments to the arm, such as signs and cameras; arm-wind orientation; and arm-pole stiffness.

Such vibrations may cause fatigue damage to the structure and may lead to galloping in moderate wind conditions which may further damage the structure and alarm the public. Tests have indicated that when wind is blowing toward the back side of signal heads having un-vented backplates attached the probability of unacceptable harmonic vibration and/or galloping is rather high.

If backplates are not required for improved visibility they should not be applied to the signal heads or, if they must be applied, they should be vented as a first and inexpensive measure to mitigate vibrations.

The traffic signal mast arms shall be visually inspected in 5 to 20 mph wind conditions after installation of signal heads and any attachments, including any required backpates. If vertical movements with a total excursion (maximum upward excursion to maximum downward excursion) of more than approximately 8" are observed at the arm tip, a damping plate shall be fitted to the arm. See "Damping Plate Mounting Details" on standard sheet, MA-DPD-10.

This visual inspection shall be repeated after each modification of the structure that could affect its aeroelastic response. Excessive vibrations shall not be allowed to continue for more than two days.

GENERAL NOTES:

Design conforms to 1994 AASHTO Standard Specifications for Structural Supports for Highway Signs, Luminaires, and Traffic Signals and Interim Specifications thereto. Design Wind Speed equals 80 mph plus a 1.3 gust factor.

Poles are designed to support one 8'-0" luminaire arm, one 9'-0" internally lighted street name sign and one traffic signal arm with a length as tabulated. The specified luminaire load applied at the end of the luminaire arm equals 60 lbs vertical dead load plus the horizontal wind load on an effective projected area of 1.6 sq ft. The specified internally lighted street name sign load applied 4.5 ft from the centerline of the pole equals 85 lbs vertical dead load plus horizontal wind load on an effective projected area of 11.5 sq ft. The specified signal load applied at the end of the traffic signal arm equals 180 lbs vertical dead load plus the horizontal wind load on an effective projected area of 32.4 sq ft (actual area times drag coefficient).

See Standard Sheet "MA-D" for pole details, "MA-C" for traffic signal arm connection details, "MA-C (ILSN)" for internally lighted street name sign arm connection details, "LUM-A" for luminaire arm and connection details, "SNS" for internally lighted street name sign details, and "TS-FD" for anchor bolt and foundation details. See "MA-C" for material specifications.

Fabrication shall be in accordance with Item 686, "Traffic Signal Pole Assemblies (Steel)" and with the details, dimensions, and weld procedures shown herein. Weld references call for preapproved weld procedures which the Fabricator must obtain prior to fabrication. Materials, fabrication tolerances, and shipping practices shall meet the requirements of this sheet and Item 686, "Traffic Signal Pole Assemblies (Steel)".

Unless otherwise noted, all parts shall be galvanized in accordance with Item 445, "Galvanizing", after fabrication.

Deviation from the details and dimensions shown herein require submission of shop drawings in accordance with Item 441, "Steel Structures". Alternate designs are not acceptable.

Texas Department of Transportation
Traffic Operations Division

TRAFFIC SIGNAL SUPPORT STRUCTURES

SINGLE MAST ARM ASSEMBLY

(80 MPH WIND ZONE)

SMA-80(2)-12

© TxDOT August 1995

DN: MS	CK: JSY	DW: MWF	CK: JSY

REVISIONS
5-96
1-12

CONT	SECT	JOB	HIGHWAY

DIST	COUNTY	SHEET NO.
		300

122B

DISCLAIMER: The use of this standard is governed by the "Texas Engineering Practice Act". No warranty of any kind is made by TxDOT for any purpose whatsoever. TxDOT assumes no responsibility for the conversion of this standard to other formats or for incorrect results or damages resulting from its use.

DATE: 3/11/2025 5:20:54 PM
FILE: G:\TxCVProjects\City\Georgetown\10767-00 Shell Road\03*CADD\01*Shts\13-SGNLS\Stds\lma.dgn

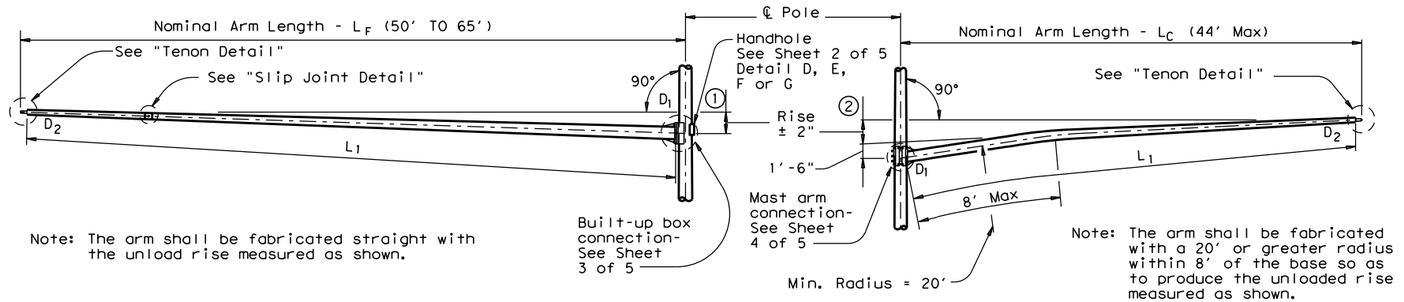

Note: The arm shall be fabricated straight with the unload rise measured as shown.

Note: The arm shall be fabricated with a 20' or greater radius within 8' of the base so as to produce the unloaded rise measured as shown.

FIXED MOUNT TRAFFIC SIGNAL ARM

① See Sheet 3 of 5 for Arm Rise

CLAMP-ON TRAFFIC SIGNAL ARM (IF REQUIRED)

② See Sheet 4 of 5 for Arm Rise and Clamp-on Arm Details

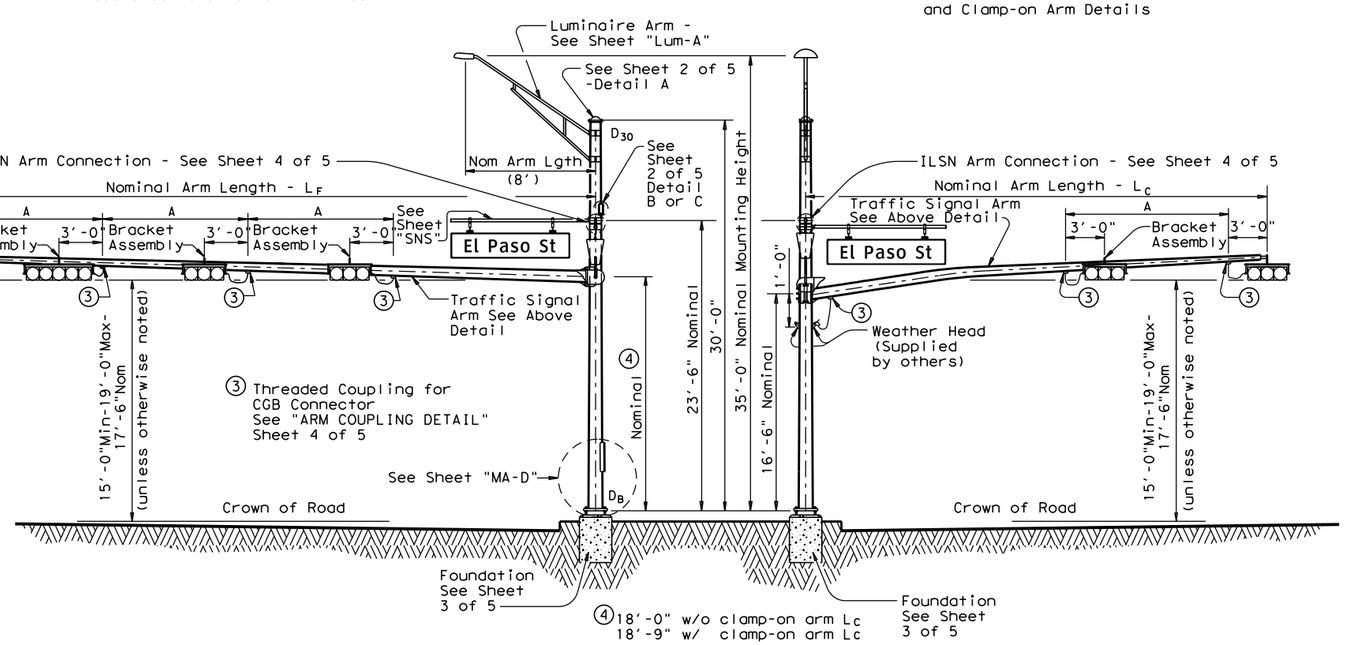

ELEVATION
(Showing fixed mount arm)

STRUCTURE ASSEMBLY

ELEVATION
(Showing clamp-on arm)

TABLE OF DIMENSIONS "A"										
Arm Length	24'	28'	32'	36'	40'	44'	50'	55'	60'	65'
Arm Type II	10'	11'	12'	13'						
Arm Type III			10'	11'	12'	12'				
Arm Type IV							12'	12'	12'	12'

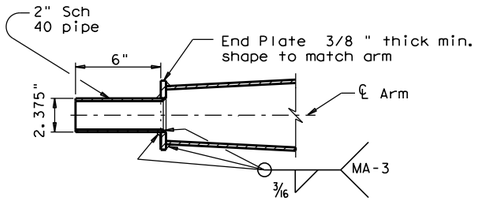

TENON DETAIL

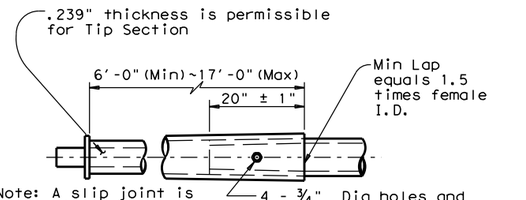

Note: A slip joint is permissible for arms 50' and greater in length. The slip joint shall be made in the shop, but may be match marked and shipped disassembled.

Tack weld nut to thread projection after making joint. Repair damaged galvanizing in accordance with Item 445,"Galvanizing".

SLIP JOINT DETAIL (FIXED MOUNT ARM)

GENERAL NOTES:

Design conforms to 1994 AASHTO Standard Specifications for Structural Supports for Highway Signs, Luminaires, and Traffic Signals and Interim Specifications thereto. Design Wind Speed can be either 100 mph or 80 mph plus a 1.3 gust factor. If clamp-on traffic signal is required, designs are based on an arm included angle of 90 degrees or more. Angles of less than approximately 75 degrees will require a special design.

Poles are designed to support one 8'-0" luminaire arm, two 9'-0" internally lighted street name (ILSN) signs and two traffic signal arms with limited length combinations.

Each arm with its related attachment is shown below

Arm	Equivalent DL ⑤	WL EPA ⑤⑥
8' Luminaire Arm	Luminaire 60 lbs	1.6 sq ft
9' ILSN Arm	Sign 85 lbs	11.5 sq ft
50' to 65' Fixed Mount Arm	Signal Loads 310 lbs	52 sq ft
Up to 44' Clamp-on Arm	Signal Loads 180 lbs	32.4 sq ft

⑤ Equivalent dead load plus horizontal wind load applied at the end of arm except ILSN arm, which applied 4.5' from the centerline of the pole.

⑥ Effective projected area (actual area times drag coefficient) for the application of horizontal wind load.

Except as noted in Sheet 1 thru 5 of 5, other details not covered shall refer to Standard Sheet "MA-D" for pole details, "LUM-A" for luminaire arm and connection details, "SNS" for internally lighted street name sign details, and "TS-FD" for anchor bolt and foundation details.

Fabrication shall be in accordance with Item 686, "Traffic Signal Pole Assemblies (Steel)" and with the details, dimensions, and weld procedures shown herein. Weld references call for preapproved weld procedures which the Fabricator must obtain prior to fabrication. Material, fabrication tolerances, and shipping practices shall also meet the requirements of this sheet and Item 686, "Traffic Signal Pole Assemblies (Steel)".

Unless otherwise noted, all parts shall be galvanized in accordance with Item 445, "Galvanizing" after fabrication.

Deviations from the details and dimensions shown herein require submission of shop drawings in accordance with the Item 441, "Steel Structures". Alternate designs are not acceptable.

Installation of damping plate for the long mast arm is not recommended.

Provision of the bracket assembly used to support the traffic signal heads shall be under the direction of the Engineer for approval.

Design also conforms to NCHRP Report 412 for fatigue resistance except that there are no stiffeners at the base plate. TxDOT is conducting tests to determine if stiffeners at the base plate will or will not result in optimal performance; depending upon the results of the tests, poles may need a retrofit to ensure optimal fatigue performance.

Texas Department of Transportation
Traffic Operations Division

TRAFFIC SIGNAL SUPPORT STRUCTURES
LONG MAST ARM ASSEMBLY (50 TO 65 FT) (80 AND 100 MPH WIND ZONE)
LMA(1)-12

Sheet 1 of 5

©TxDOT July 2000

DN: TXDOT	CK: TXDOT	DW: TXDOT	CK: TXDOT

REVISIONS	CONT	SECT	JOB	HIGHWAY
4-20-01				
1-12	DIST	COUNTY		SHEET NO.
				301

131A

DISCLAIMER: The use of this standard is governed by the "Texas Engineering Practice Act". No warranty of any kind is made by TxDOT for any purpose whatsoever. TxDOT assumes no responsibility for the conversion of this standard to other formats or for incorrect results or damages resulting from its use.

DATE: 3/11/2025 5:20:55 PM
FILE: G:\TXC\Projects\City*Georgetown\10767-00 Shell Road\03*CADD\01*Shts\13-SGNLS\Stds\lma.dgn

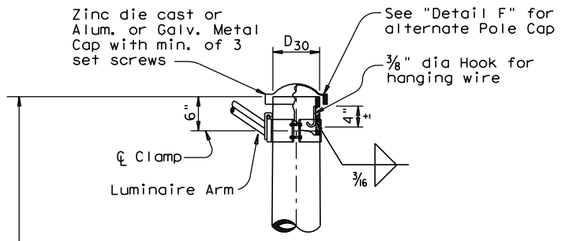

DETAIL A

(for pole with luminaire)

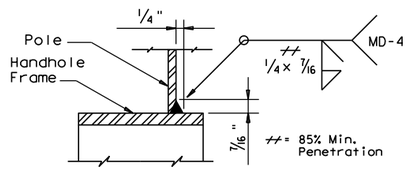

DETAIL H

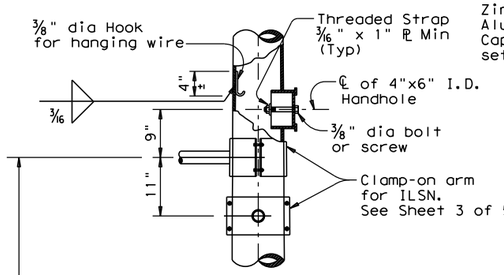

DETAIL B

(If ILSN applied)

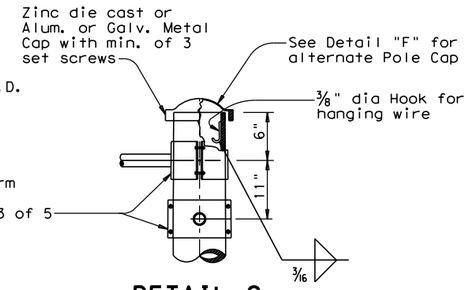

DETAIL C

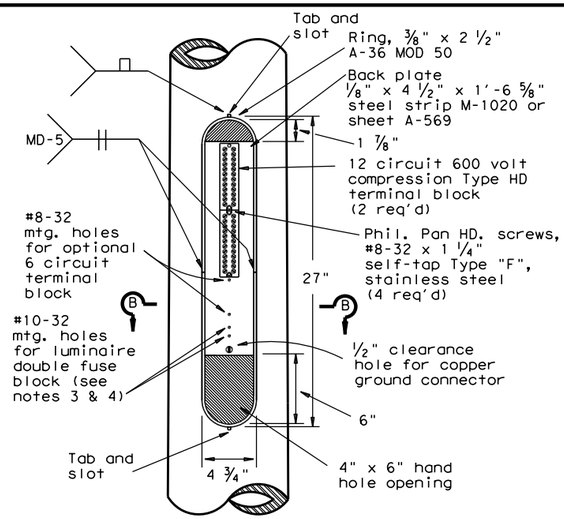

ACCESS COMPARTMENT

MATERIALS	
Round Shafts or Polygonal Shafts (7)	ASTM A595 Gr.A, A588, A1008 HSLAS Gr.50 Class 2, A1011 HSLAS Gr.50 Class 2, A572 Gr.50 or A1011 SS Gr.50 (8)
Plates (7)	ASTM A36, A588, or A572 Gr.50
Connection Bolts	ASTM A325, or A449 except where noted
Pin Bolts	ASTM A325
Pipe (7)	ASTM A53 Gr.B, A501, A1008 HSLAS-F Gr.50, A1011 HSLAS-F Gr.50
Misc. Hardware	Galvanized steel or stainless steel or as noted

(7) ASTM A572, A1008 HSLAS, A1011 HSLAS, A1008 HSLAS-F, A1011 HSLAS-F, or A1011 SS may have higher yield strengths but shall not have less elongation than the grade indicated.

(8) ASTM A1011 SS Gr.50 shall also have a minimum elongation of 18 percent in 8 inches or 23 percent in 2 inches. Material thickness in excess of those stipulated under A1011 SS will be acceptable providing the material meets all other A1011 SS requirements and the requirements of this item.

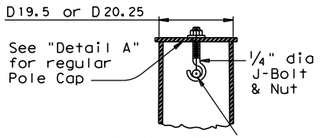

SECTION Y-Y

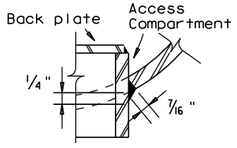

DETAIL J

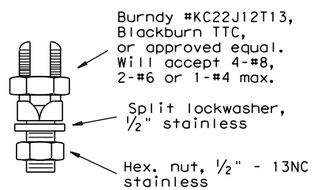

COPPER GROUND CONNECTOR

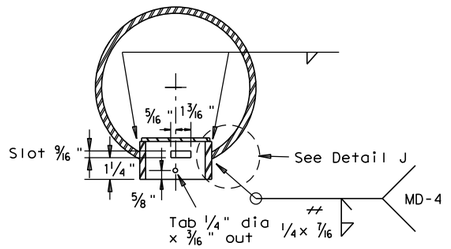

SECTION B-B

Opening for access compartment shall be no more than 1/16 inch wider than the access compartment itself.

ACCESS COMPARTMENT NOTES:

1. The cover shall be one piece formed from ABS plastic, shall be a pearl gray color, and shall be suitable for exposure to harsh sunlight and extreme weather. Cover shall latch with two screw latches and shall fit tightly to the enclosure ring to create a rainproof seal. Latch screws shall be 1/4-20 stainless flat socket head screws with tamper proof feature.
2. The pole manufacturer shall provide with each pole a separate kit consisting of: one cover with two latching assemblies, two terminal strips (Marathon #985GP12CU or approved equal), four #8-32 x 1 1/4" self tapping type "F" stainless steel pan head screws, and one ground connector (Blackburn TTC, Burndy KC22J12T13, or Ilsco SSS-5). The traffic signal contractor shall install the kit items in the field.
3. The screw hole spacing on the enclosure back plate shall be for two Marathon #985GP12 terminal strips, one Marathon #985GP06CU terminal strip, and one Bussmann #BM6032B fuse block.
4. Install one Bussmann #BM6032B, Littelfuse #L60030M-2C, or Ferraz-Shawmut #30352 fuse block for poles where luminaires are to be installed.

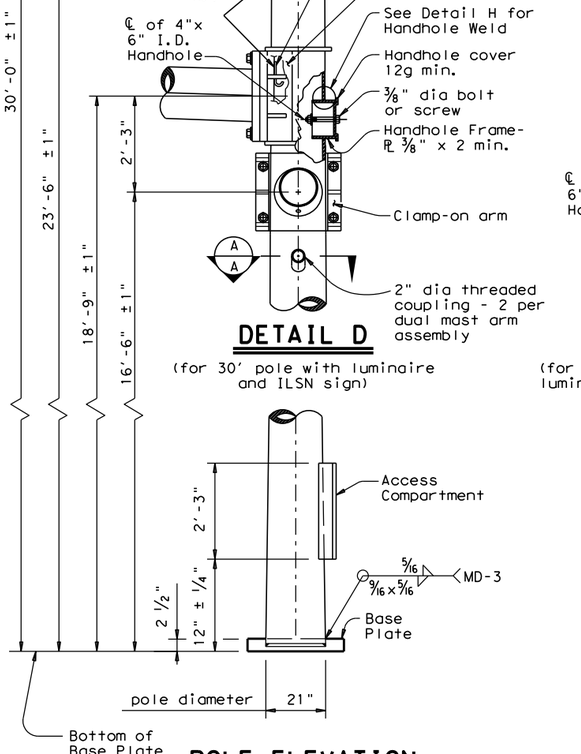

DETAIL D

(for 30' pole with luminaire and ILSN sign)

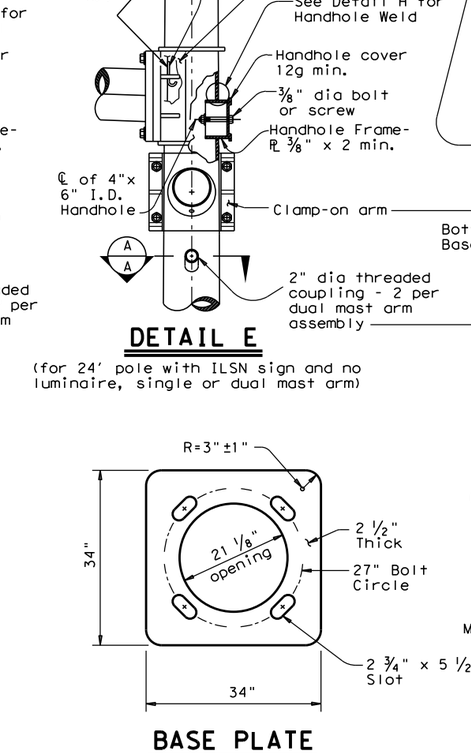

DETAIL E

(for 24' pole with ILSN sign and no luminaire, single or dual mast arm)

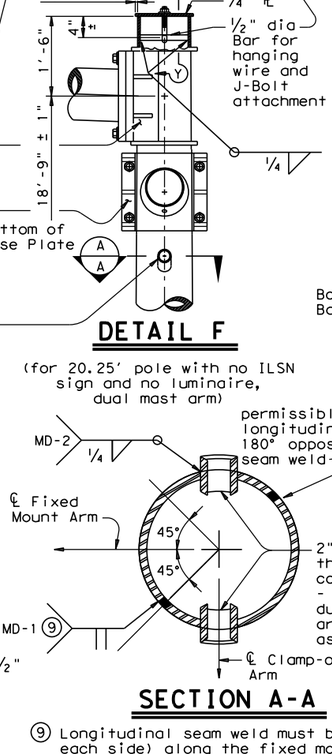

DETAIL F

(for 20.25' pole with no ILSN sign and no luminaire, dual mast arm)

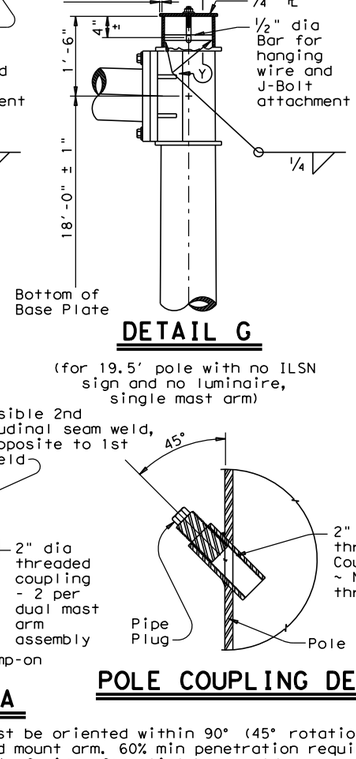

DETAIL G

(for 19.5' pole with no ILSN sign and no luminaire, single mast arm)

POLE ELEVATION

BASE PLATE

SECTION A-A

POLE COUPLING DETAIL

(9) Longitudinal seam weld must be oriented within 90° (45° rotation each side) along the fixed mount arm. 60% min penetration required, 100% penetration within 6" of circumferential base weld.

Texas Department of Transportation
Traffic Operations Division

TRAFFIC SIGNAL SUPPORT STRUCTURES
LONG MAST ARM ASSEMBLY (50 TO 65 FT) (80 AND 100 MPH WIND ZONE)

Sheet 2 of 5

LMA(2)-12

© TxDOT July 2000

DN: JSY	CK: ARC	DW: TGG	CK: JSY

REVISIONS
4-20-01
1-12

CONT	SECT	JOB	HIGHWAY

DIST	COUNTY	SHEET NO.
		302

131B

DISCLAIMER: The use of this standard is governed by the "Texas Engineering Practice Act". No warranty of any kind is made by TxDOT for any purpose whatsoever. TxDOT assumes no responsibility for the conversion of this standard to other formats or for incorrect results or damages resulting from its use.

DATE: 3/11/2025 5:20:55 PM
FILE: G:\TXC\Projects\City*Georgetown\10767-00 Shell Road\03*CADD\01*Shts\13-SGNLS\Stds\lma.dgn

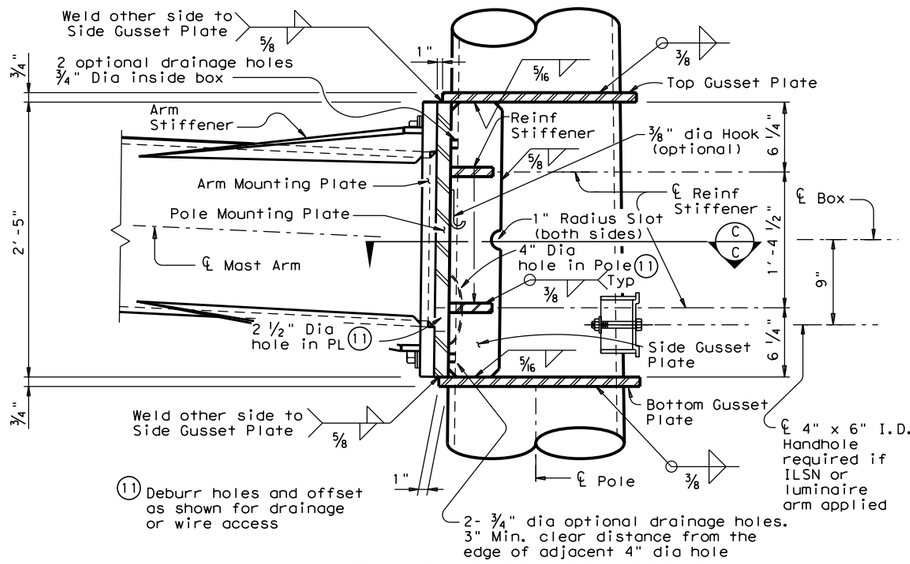

BUILT-UP BOX CONNECTION

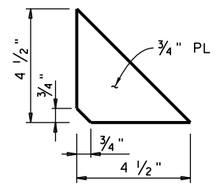

REINFORCING STIFFENER

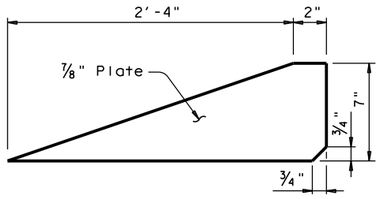

ARM STIFFENER
(Cut to match arm inclination and taper)

Provide Detail shown in SECTION F-F or equivalent 100% complete joint penetration weld from both sides.

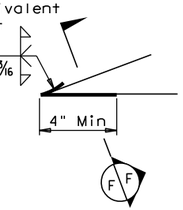

Only 4" length at tip of Arm Stiffener requires a complete joint penetration weld. Smooth weld radius to connect Stiffener. Only a fillet weld is required for the remaining weld length.

DETAIL "K"

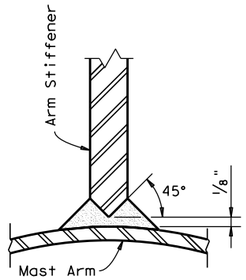

SECTION F-F

Fixed Mount Arm L_F	ROUND POLES (13)					Foundation Type
	D_B	$D_{19.5}$ or $D_{20.25}$	D_{24}	D_{30}	(12) thk	
ft.	in.	in.	in.	in.	in.	
50', 55' 60', 65'	21.0	18.2	17.6	16.8	.3125	48-A

Fixed Mount Arm L_F	ROUND ARMS (13)				
	L_1	D_1	D_2	(12) thk	Rise
ft.	ft.	in.	in.	in.	
50	49	18.5	11.7	.3125	3'- 3"
55	54	18.5	11.0	.3125	3'- 7"
60	59	18.5	10.3	.3125	3'-11"
65	64	18.5	9.6	.3125	4'- 4"

D_B = Pole Base O.D.
$D_{19.5}$ = Pole Top O.D. with no Luminaire and no ILSN (single mast arm)
$D_{20.25}$ = Pole Top O.D. with no Luminaire and no ILSN (dual mast arm)
D_{24} = Pole Top O.D. with ILSN w/out Luminaire
D_{30} = Pole Top O.D. with Luminaire
D_1 = Arm Base O.D.
D_2 = Arm End O.D.
L_1 = Shaft Length
L_F = Fixed Arm Length

(12) Thickness shown is minimum, thicker materials may be used.

(13) Shaft profile 16-sided or 18-sided is considered to be equivalent to round section.

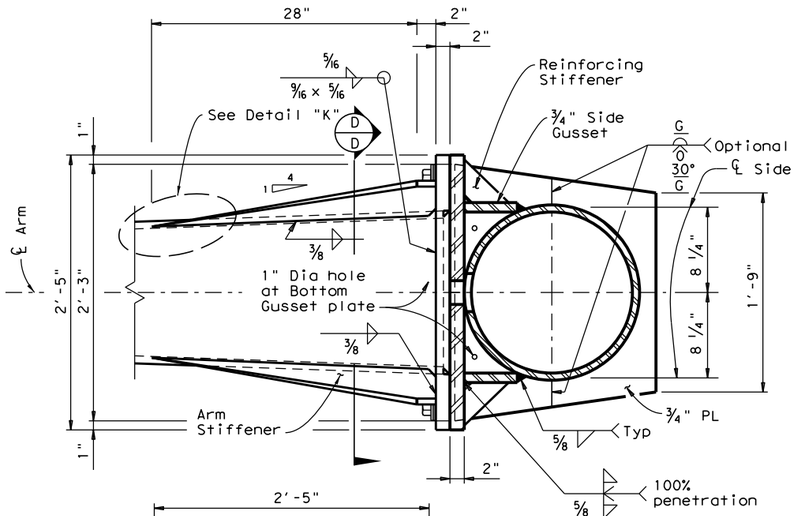

SECTION C-C

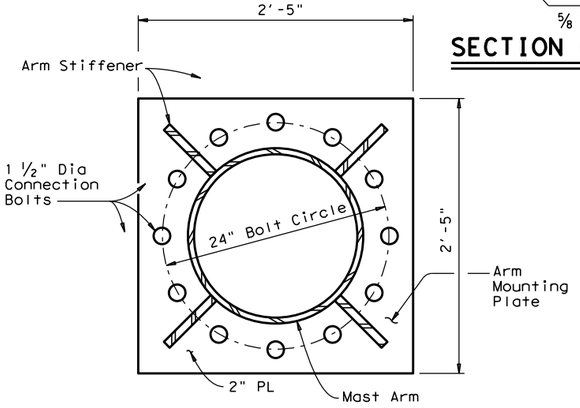

SECTION D-D

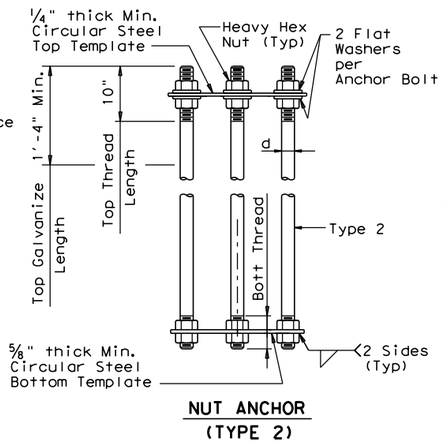

NUT ANCHOR
(TYPE 2)

ANCHOR BOLT ASSEMBLY

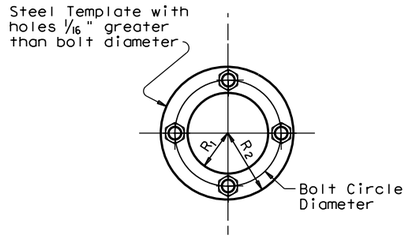

TEMPLATE DETAIL

ANCHOR BOLT & TEMPLATE SIZE						
Bolt Dia in.	Length ‡	Top Thread	Bottom Thread	Bolt Circle	R_2	R_1
2 1/2"	5'-2"	10"	6 1/2"	27"	16"	11"

‡ Min dimension given, longer bolts are acceptable.

FOUNDATION DESIGN TABLE													
FDN TYPE	DRILLED SHAFT DIA	REINFORCING STEEL		DRILLED SHAFT LENGTH-ft (16), (17), (18)			ANCHOR BOLT DESIGN (14)				FOUNDATION DESIGN LOAD (15)		TYPICAL APPLICATION
		VERT BARS	SPIRAL & PITCH	TEXAS CONE PENETROMETER N blows/ft			ANCHOR BOLT DIA	Fy (ksi)	BOLT CIR DIA	ANCHOR TYPE	MOMENT K-ft	SHEAR Kips	
				10	15	40							
48-A	48"	20 #9	#4 at 6"	21.9	19.5	14.7	2 1/2"	55	27"	2	490	10	50' to 65' Mast arm assembly.

SEE SHEET "TS-FD" FOR ADDITIONAL DETAILS.

(14) Anchor bolt design develops the foundation capacity given under Foundation Design Loads.

(15) Foundation Design Loads are the allowable moments and shears at the base of the structure.

(16) Field Penetrometer readings at a depth of approximately 3 to 5 feet may be used to adjust shaft lengths.

(17) If rock is encountered, the Drilled Shaft shall extend a minimum of two diameters into solid rock.

(18) Decimal lengths in Design Table are to allow interpolation for other penetrometer values. Round to nearest foot for entry into Summary Table.

GENERAL NOTES:

Built-up Box Connection: For the welded arm-to-pole connection as a build-up box configuration illustrated here is an example only, fabricators are required to submit a shop drawing of box connection for approval. The drawing shall specify the details of each box element, welds of arm-to-pole connection, arm-to-plate socket connection, and arm rise creation. Specify the proper location of drain holes along the pole. 2 1/2" dia hole in the pole mounting plate and 4" dia hole in the pole need to be aligned for wiring access or drainage. Arm stiffeners cut to match arm inclination and taper shall also be included.

The deviation from flat for either arm or pole mounting plate shall not exceed 1/32 in., which is measured along the center of mounting plate to a radial distance of 13.5 in. The deformed-from-flat connection between arm and pole mounting plates shall not be allowed if the center of both mounting plates cannot contact directly.

Fixed mount details are used for single mast arm assemblies and for the first arm on dual mast arm assemblies.

Texas Department of Transportation
Traffic Operations Division

TRAFFIC SIGNAL SUPPORT STRUCTURES
LONG MAST ARM ASSEMBLY (50 TO 65 FT) (80 AND 100 MPH WIND ZONE)

Sheet 3 of 5 LMA(3)-12

©TxDOT July 2000

DN: JSY	CK: ARC	DW: TGG	CK: JSY

REVISIONS
4-20-01
1-12

CONT	SECT	JOB	HIGHWAY
DIST	COUNTY		SHEET NO.
			303

131C

DISCLAIMER: The use of this standard is governed by the "Texas Engineering Practice Act". No warranty of any kind is made by TxDOT for any purpose whatsoever. TxDOT assumes no responsibility for the conversion of this standard to other formats or for incorrect results or damages resulting from its use.

DATE: 3/11/2025 5:20:55 PM
FILE: G:\TXC\Projects\City*Georgetown\10767-00 Shell Road\03*CADD\01*Shts\13-SGNLS\Std s\lma.dgn

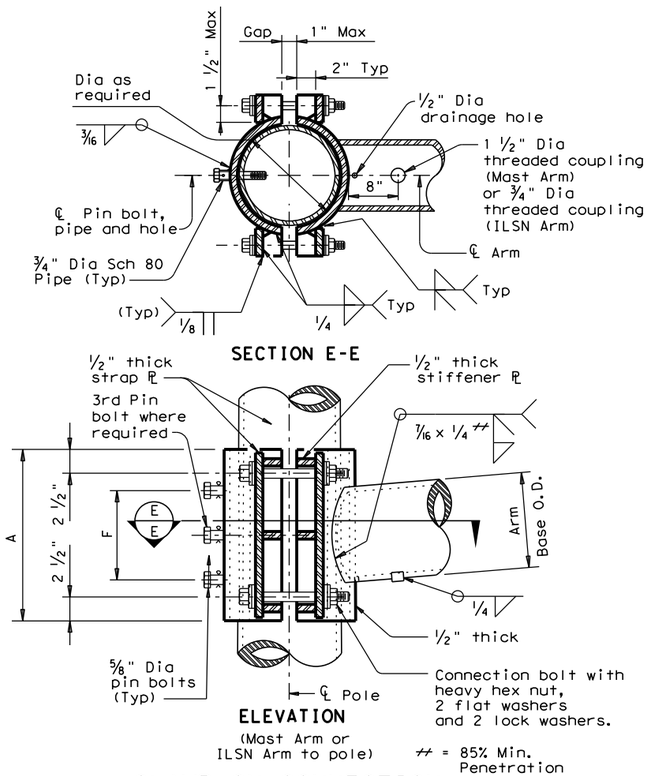

CLAMP-ON CONNECTION

80 MPH WIND

Clamp-on Arm Lc	ROUND ARMS					POLYGONAL ARMS				
	L_1	D_1	D_2	thk (12)	Rise	L_1	D_1	D_2	thk (12)	Rise
ft.	ft.	in.	in.	in.		ft.	in.	in.	in.	
20	19.1	6.5	3.8	.179	1'-9"	19.1	7.0	3.5	.179	1'-8"
24	23.1	7.5	4.3	.179	1'-10"	23.1	7.5	3.5	.179	1'-9"
28	27.1	8.0	4.2	.179	1'-11"	27.1	8.0	3.5	.179	1'-10"
32	31.0	9.0	4.7	.179	2'-1"	31.0	9.0	3.5	.179	2'-0"
36	35.0	9.5	4.6	.179	2'-4"	35.0	10.0	3.5	.179	2'-1"
40	39.0	9.5	4.1	.239	2'-8"	39.0	9.5	3.5	.239	2'-3"
44	43.0	10.0	4.1	.239	2'-11"	43.0	10.0	3.5	.239	2'-6"

100 MPH WIND

Clamp-on Arm Lc	ROUND ARMS					POLYGONAL ARMS				
	L_1	D_1	D_2	thk (12)	Rise	L_1	D_1	D_2	thk (12)	Rise
ft.	ft.	in.	in.	in.		ft.	in.	in.	in.	
20	19.1	8.0	5.3	.179	1'-8"	19.1	8.0	3.5	.179	1'-7"
24	23.1	9.0	5.8	.179	1'-9"	23.1	9.0	3.5	.179	1'-8"
28	27.1	9.5	5.7	.179	1'-10"	27.1	10.0	3.5	.179	1'-9"
32	31.0	9.5	5.2	.239	1'-11"	31.0	9.5	3.5	.239	1'-10"
36	35.0	10.0	5.1	.239	2'-0"	35.0	10.0	3.5	.239	1'-11"
40	39.0	10.5	5.1	.239	2'-3"	39.0	11.0	3.5	.239	2'-1"
44	43.0	11.0	5.1	.239	2'-8"	43.0	11.5	4.0	.239	2'-3"

D1 = Arm Base O.D.
D2 = Arm End O.D.
L1 = Shaft Length
Lc = Clamp-on Arm Length

(12) Thickness shown is minimum, thicker materials may be used.

CLAMP-ON ARM CONNECTION

ILSN Arm Size		A	F	4 Conn. Bolts	⅝" Dia. Pin Bolts
Sch 40 pipe Dia	Thick			Dia	No.
in.	in.	in.	in.	in.	ea
3	.216	10	4	¾	2

Mast Arm Size		A	F	4 Conn. Bolts	⅝" Dia. Pin Bolts
Base Dia	Thick			Dia	No.
in.	in.	in.	in.	in.	ea
6.5	.179	12	6	1	2
7.5	.179	14	8	1	2
8.0	.179	14	8	1	2
9.0	.179	16	10	1	2
9.5	.179	18	12	1 ¼	3
9.5	.239	18	12	1 ¼	3
10.0	.239	18	12	1 ¼	3
10.5	.239	18	12	1 ¼	3
11.0	.239	18	12	1 ¼	3
11.5	.239	18	12	1 ¼	3

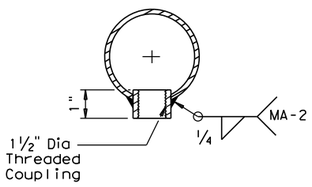

ARM COUPLING DETAIL

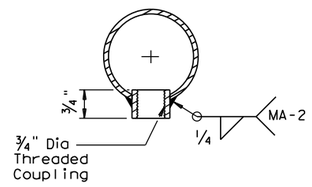

ILSN ARM COUPLING DETAIL

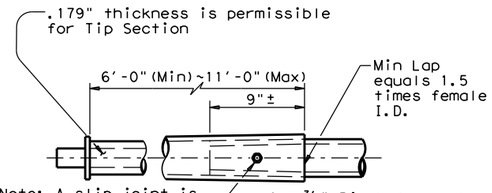

Note: A slip joint is permissible for arms 40' and greater in length. The slip joint shall be made in the shop, but may be match marked and shipped disassembled.

SLIP JOINT DETAIL (CLAMP-ON ARM)

Stainless steel bands (or Cables) and cast bracket as in "Astro-Brac", "Sky Bracket" or "Easy Bracket" with 1 ½" Dia Threaded Coupling.

BRACKET ASSEMBLY

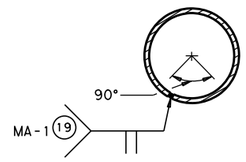

ARM WELD DETAIL

(19) Longitudinal Seam Weld must be oriented within the lower 90° of the signal arm.
60% Min penetration
100% penetration within 6" of circumferential base welds.

GENERAL NOTES:

Clamp-on details are used for the second arm on dual mast arm assemblies or ILSN arm support. For a clamp-on mast arm, a maximum 1 ½" wide vertical slotted hole may be cut in the front clamp plate to facilitate drainage during galvanizing. The slot shall be centered behind the arm and shall be no longer than the arm diameter minus 1". For an ILSN arm, a 1 ½" diameter hole shall be cut in the front clamp plate for wire access. A matched hole shall be field drilled through the pole to provide wire access after arm is oriented. Deburr both holes.

Where duplicate parts occur on a detail, welds shown for part shall apply to all similar parts on the detail.

Pin bolts are required to prevent rotation of clamp-on arms under design wind forces. Pin bolts shall be ASTM A325 with threads excluded from the shear plane. Pin bolt and ¾" diameter pipe shall have 3⁄16" diameter holes for a ⅛" diameter galvanized cotter pin. Back clamp plate shall be furnished with a ¾" diameter hole for each pin bolt. An 11⁄16" diameter hole for each pin bolt shall be field drilled through the pole after arm orientations have been approved by the Engineer.

Texas Department of Transportation
Traffic Operations Division

TRAFFIC SIGNAL SUPPORT STRUCTURES
LONG MAST ARM ASSEMBLY (50 TO 65 FT) (80 AND 100 MPH WIND ZONE)

Sheet 4 of 5 LMA(4)-12

© TxDOT November 2000

DN: JK	CK: GRB	DW: FDN	CK: CAL

REVISIONS
4-20-01
1-12

CONT	SECT	JOB	HIGHWAY

DIST	COUNTY	SHEET NO.
		304

131D

DISCLAIMER: The use of this standard is governed by the "Texas Engineering Practice Act". No warranty of any kind is made by TxDOT for any purpose whatsoever. TxDOT assumes no responsibility for the conversion of this standard to other formats or for incorrect results or damages resulting from its use.

DATE: 3/11/2025 5:20:56 PM
FILE: G:\TXC\Projects\City*Georgetown\10767-00 Snell Road\03*CADD\01*Shts\13-SGNLS\Stds\lma.dgn

Shipping Parts List

Ship each pole with the following attached: enlarged hand hole, pole cap, fixed arm connection bolts and washers, and any additional hardware listed in the table.

Nominal Arm Length	30' Poles with Luminaire: See note above plus: one (or two if ILSN attached) small hand hole, clamp-on simplex		24' Poles with ILSN: See note above plus one small hand hole		19.50' (Single Mast Arm) 20.25' (Dual Mast Arm) Poles with no Luminaire and no ILSN: See note above	
Single Mast Arm						
Lf ft.	Designation	Quantity	Designation	Quantity	Designation	Quantity
50	50L		50S		50	
55	55L	1	55S		55	
60	60L		60S		60	
65	65L		65S		65	
Dual Mast Arm						
Lf ft. / Lc ft.	Designation	Quantity	Designation	Quantity	Designation	Quantity
50 / 20	5020L		5020S		5020	
24	5024L		5024S		5024	
28	5028L		5028S		5028	
32	5032L		5032S		5032	
36	5036L		5036S		5036	
40	5040L		5040S		5040	
44	5044L		5044S		5044	
55 / 20	5520L		5520S		5520	
24	5524L		5524S		5524	
28	5528L		5528S		5528	
32	5532L		5532S		5532	
36	5536L		5536S		5536	
40	5540L		5540S		5540	
44	5544L		5544S		5544	
60 / 20	6020L		6020S		6020	
24	6024L		6024S		6024	
28	6028L		6028S		6028	
32	6032L		6032S		6032	
36	6036L		6036S		6036	
40	6040L	1	6040S		6040	
44	6044L		6044S		6044	
65 / 20	6520L		6520S		6520	
24	6524L		6524S		6524	
28	6528L		6528S		6528	
32	6532L		6532S		6532	
36	6536L		6536S		6536	
40	6540L		6540S		6540	
44	6544L	1	6544S		6544	

Foundation Summary Table **

Location Ident.	Avg. N Blow/ft.	No. Each	Drill Shaft *** Length (feet)
			48-A
VERDE VISTA			
POLE D		1	22
ROSEDALE BLVD			
POLE A		1	22
BELLAIRE DR			
POLE A		1	22
Total Drill Shaft Length			66

Notes

** Foundations may be listed separately or grouped according to similarity of location and type. Quantities are for the Contractor's information only.

*** Decimal lengths in Design Table are to allow interpolation for other penetrometer values. Round to nearest foot for entry into Summary Table.

Shipping Parts List

Traffic Signal Arms (Fixed Mount) (1 per pole)
Ship each arm with listed equipment attached

Nominal Arm Length	Type IV Arm (4 Signals) 3 Bracket Assembly and 4 CGB Connectors	
ft.	Designation	Quantity
50	50IV	
55	55IV	1
60	60IV	1
65	65IV	1

Luminaire Arms (1 per 30' pole)

Nominal Arm Length	Quantity
8' Arm	3

ILSN Arm (Max. 2 per pole) Ship with clamps, bolts and washers

Nominal Arm Length	Quantity
7' Arm	2
9' Arm	3

Traffic Signal Arms (80 MPH Clamp-On Mount) (1 per pole) Ship each arm with listed equipment attached

Nominal Arm Length	Type I Arm (1 Signal) 2 CGB connector and 1 clamp w/bolts and washers		Type II Arm (2 Signals) 1 Bracket Assembly and 3 CGB connectors, and 1 clamp w/bolts and washers		Type III Arm (3 Signals) 2 Bracket Assembly and 4 CGB connectors, and 1 clamp w/bolts and washers	
ft.	Designation	Quantity	Designation	Quantity	Designation	Quantity
20	20I-80					
24	24I-80		24II-80			
28	28I-80		28II-80			
32			32II-80		32III-80	
36			36II-80		36III-80	
40					40III-80	
44					44III-80	

Traffic Signal Arms (100 MPH Clamp-On Mount) (1 per pole) Ship each arm with listed equipment attached

Nominal Arm	Type I Arm (1 Signal) 2 CGB connector and 1 clamp w/bolts and washers		Type II Arm (2 Signals) 1 Bracket Assembly and 3 CGB connectors, and 1 clamp		Type III Arm (3 Signals) 2 Bracket Assembly and 4 CGB connectors, and 1 clamp	
ft.	Designation	Quantity	Designation	Quantity	Designation	Quantity
20	20I-100					
24	24I-100		24II-100			
28	28I-100		28II-100			
32			32II-100		32III-100	
36			36II-100		36III-100	
40					40III-100	1
44					44III-100	1

Anchor Bolt Assemblies (1 per pole)

Anchor Bolt Diameter	Anchor Bolt Length	Quantity
2 1/2 "	5' - 3"	3

Each anchor bolt assembly consists of the following: Top and bottom templates, 4 anchor bolts, 8 nuts, 8 flat washers and 4 nut anchor devices (type 2) per Standard Drawing "TS-FD". Templates may be removed for shipment.

Abbreviations
Lf= Fixed Arm Length
Lc= Clamp-on Arm Length (44' Max.)

Texas Department of Transportation
Traffic Operations Division

LONG MAST ARM ASSEMBLY PARTS LIST

LMA(5)-12

Sheet 5 of 5

© TxDOT November 2000

DN: JK	CK: GRB	DW: FDN	CK: CAL

REVISIONS
4-20-01
1-12

CONT	SECT	JOB	HIGHWAY
DIST	COUNTY		SHEET NO.
			305

131E

DISCLAIMER:
The use of this standard is governed by the "Texas Engineering Practice Act". No warranty of any kind is made by TxDOT for any purpose whatsoever. TxDOT assumes no responsibility for the conversion of this standard to other formats or for incorrect results or damages resulting from its use.

DATE: 3/11/2025 5:20:56 PM
FILE: G:\TXC\Projects\City_Georgetown\10767-00 Shell Road\03_CADD\01_Shts\13-SGNLS\Stds\cfa.dgn

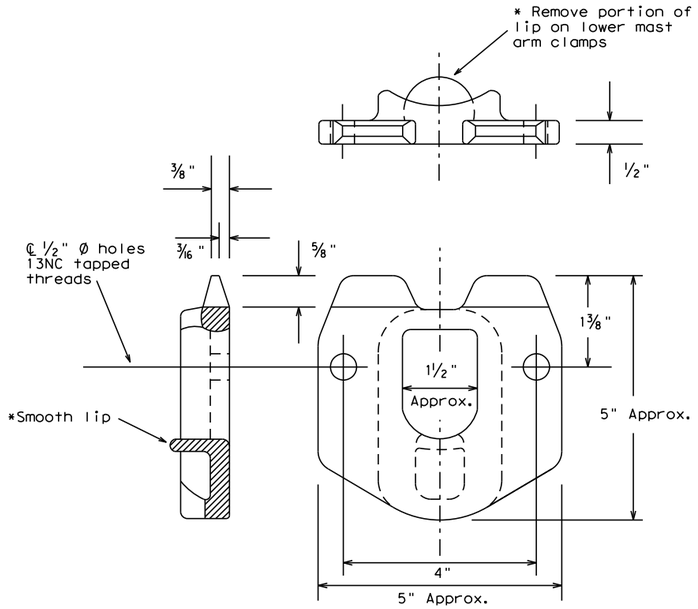

POLE SIMPLEX DETAILS

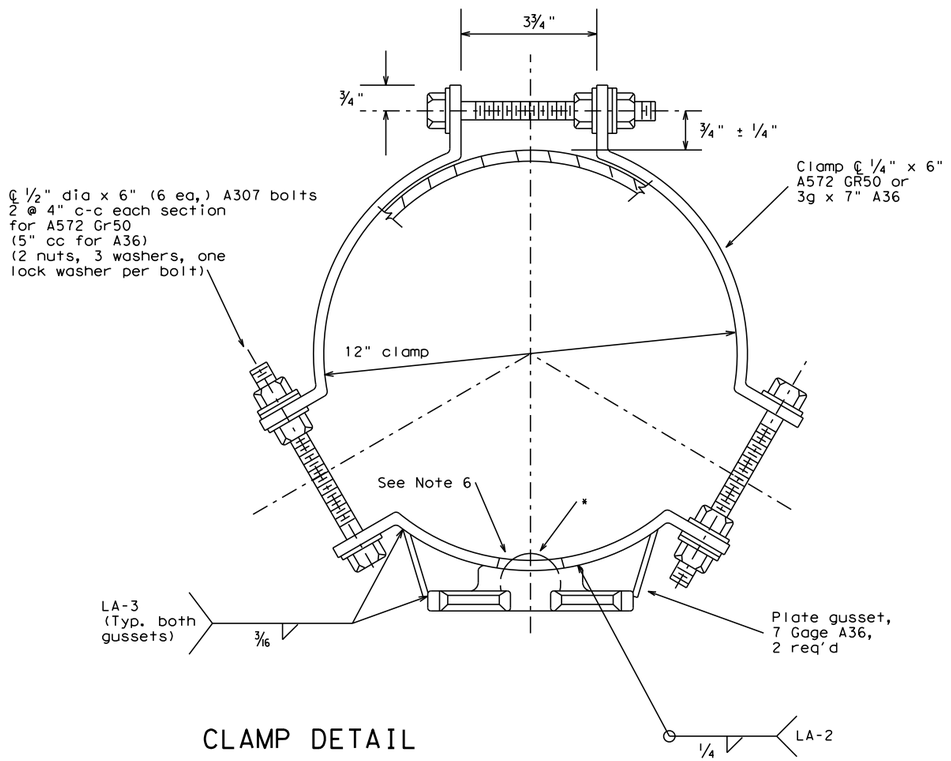

CLAMP DETAIL

OTHER MATERIALS:

1. Pole simplex shall be ASTM A27 GR65-35 or A148 GR80-50 or A576 GR1021. ASTM A576 must be suitable for forging and also meet minimum tensile of 65ksi, minimum yield of 35ksi, and a minimum elongation of 22 percent in 2 inches.
2. Welded tabs and backplates shall be ASTM A-36 steel or better.
3. Nylon insert locknuts shall conform to ASTM A563.

GENERAL NOTES:

1. Materials and fabrication shall be in accordance with Standard Sheet "MA-C" and with the details, dimensions, and weld procedures shown herein. Weld references call for preapproved weld procedures which the Fabricator must obtain prior to fabrication. In the absence of specified fabrication tolerances, dimensions shall be within the tolerances generally obtainable in normal fabrication practice.
2. All parts shall be galvanized after fabrication in accordance with Item 445, "Galvanizing". The throat of the Simplex shall be made free of all rough or sharp edges resulting from the galvanizing process.
3. Each simplex fitting shall be supplied with 2 ASTM A325 bolts, 1/2in. X 1 1/2in. and 2 lock washers. The bolts and lock washers shall be secured to the clamp with the other hardware items. The Fabricator shall ship clamp assembly together in a single package, including all bolts, nuts, and washers required for the clamp and simplex fitting.
4. Design conforms to 1994 AASHTO "Standard Specifications for Structural Supports for Highway Signs, Luminaires, and Traffic Signals" and interim revisions thereto. Design Wind Speed equals 80 mph plus a 1.3 gust factor. Clamps are designed to support a 60 lb. luminaire having an effective projected area (actual area times drag coefficient) of 1.6 sq.ft.,12 ft. maximum arm length.
5. Each assembly shall consist of one upper piece simplex fitting having a smooth lip and one lower piece simplex fitting with the lip removed.
6. Approximately 2 in. diameter hole in upper mast arm clamp.

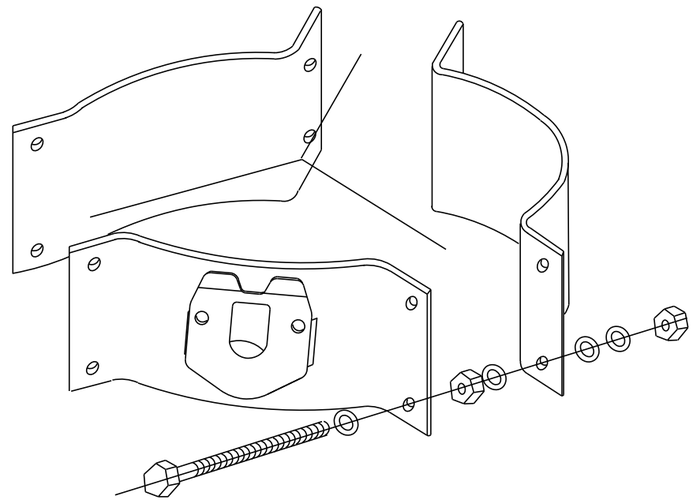

PROJECTION

For 8.9 - 12 inch diameter Signal Poles
(Two req'd for each mast arm)

Texas Department of Transportation
Traffic Operations Division

CLAMP ON FITTING ASSEMBLY FOR LUMINAIRE MAST ARM

CFA-12

© TxDOT	DN: KAB	CK: RES	DW: FDN	CK: CAL
REVISIONS	CONT	SECT	JOB	HIGHWAY
11-99				
1-12				
	DIST	COUNTY		SHEET NO.
				306

DISCLAIMER: The use of this standard is governed by the "Texas Engineering Practice Act". No warranty of any kind is made by TxDOT for any purpose whatsoever. TxDOT assumes no responsibility for the conversion of this standard to other formats or for incorrect results or damages resulting from its use.

DATE: 3/11/2025 5:20:57 PM
FILE: G:\TXC\Projects\City*Georgetown\10767-00 Shell Road\03*CADD\01*Shts\13-SGNLS\Stds\ts-fd (1).dgn

FOUNDATION DESIGN TABLE

FDN TYPE	DRILLED SHAFT DIA	REINFORCING STEEL		EMBEDDED DRILLED SHAFT LENGTH-ft ④, ⑤, ⑥			ANCHOR BOLT DESIGN ①				FOUNDATION DESIGN LOAD ②		TYPICAL APPLICATION
		VERT BARS	SPIRAL & PITCH	TEXAS CONE PENETROMETER N blows/ft			ANCHOR BOLT DIA	Fy (ksi)	BOLT CIR DIA	ANCHOR TYPE	MOMENT K-ft	SHEAR Kips	
				10	15	40							
24-A	24"	4- #5	#2 at 12"	5.7	5.3	4.5	¾"	36	12 ¾"	1	10	1	Pedestal pole, pedestal mounted controller.
30-A	30"	8- #9	#3 at 6"	11.3	10.3	8.0	1 ½"	55	17"	2	87	3	Mast arm assembly. (see Selection Table)
36-A	36"	10- #9	#3 at 6"	13.2	12.0	9.4	1 ¾"	55	19"	2	131	5	Mast arm assembly. (see Selection Table) 30' strain pole with or without luminaire.
36-B	36"	12- #9	#3 at 6"	15.2	13.6	10.4	2"	55	21"	2	190	7	Mast arm assembly. (see Selection Table) Strain pole taller than 30' & strain pole with mast arm
42-A	42"	14- #9	#3 at 6"	17.4	15.6	11.9	2 ¼"	55	23"	2	271	9	Mast arm assembly. (see Selection Table)

FOUNDATION SELECTION TABLE FOR STANDARD MAST ARM PLUS ILSN SUPPORT ASSEMBLIES (ft)

		FDN 30-A	FDN 36-A	FDN 36-B	FDN 42-A
80 MPH DESIGN WIND SPEED	MAX SINGLE ARM LENGTH	32'	48'		
	MAXIMUM DOUBLE ARM LENGTH COMBINATIONS	24' X 24'			
		28' X 28'			
		32' X 28'	32' X 32'		
			36' X 36'		
			40' X 36'		
			44' X 28'	44' X 36'	
100 MPH DESIGN WIND SPEED	MAX SINGLE ARM LENGTH		36'	44'	
	MAXIMUM DOUBLE ARM LENGTH COMBINATIONS		24' X 24'		
			28' X 28'		
			32' X 24'	32' X 32'	
				36' X 36'	
				40' x24'	40' X 36'
					44' x 36'

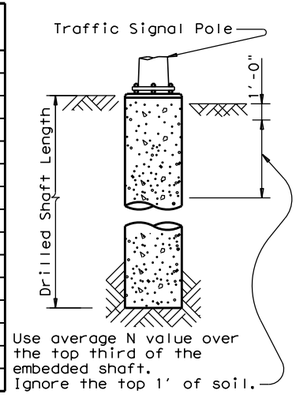

Use average N value over the top third of the embedded shaft. Ignore the top 1' of soil.

EXAMPLE:
1. For 80mph design wind speed, foundation 30-A can support up to a 32' arm with another arm up to 28'
2. For 100mph design wind speed, foundation 36-A can support a single 36' mast arm.

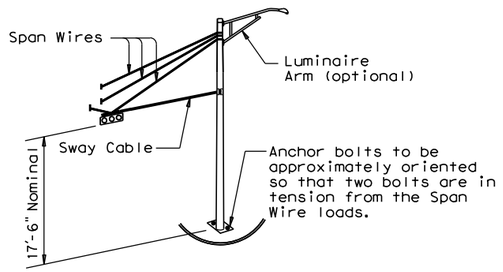

TYPICAL STRAIN POLE ASSEMBLY

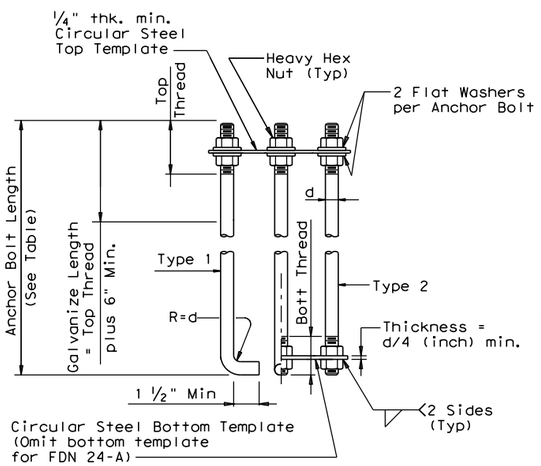

HOOKED ANCHOR (TYPE 1) NUT ANCHOR (TYPE 2)

ANCHOR BOLT ASSEMBLY

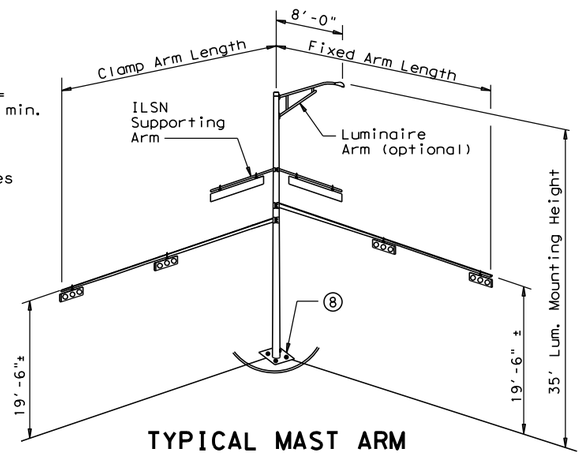

TYPICAL MAST ARM ASSEMBLY

⑧ Orient anchor bolts orthogonal with the fixed arm direction to ensure that two bolts are in tension under dead load.

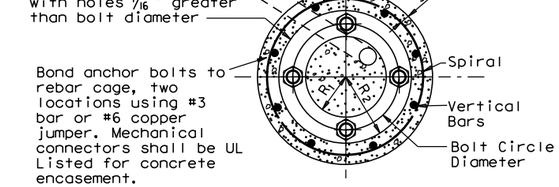

TOP VIEW

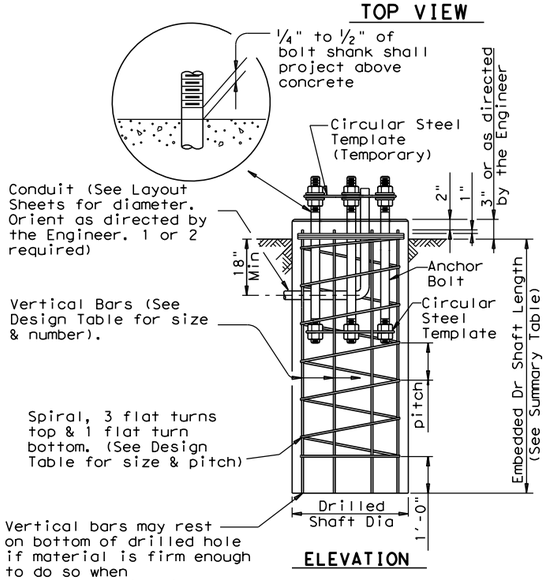

ELEVATION

FOUNDATION DETAILS

ANCHOR BOLT & TEMPLATE SIZES

BOLT DIA IN.	⑦ BOLT LENGTH	TOP THREAD	BOTTOM THREAD	BOLT CIRCLE	R2	R1
¾"	1'-6"	3"	—	12 ¾"	7 ⅛"	5 ⅝"
1 ½"	3'-4"	6"	4"	17"	10"	7"
1 ¾"	3'-10"	7"	4 ½"	19"	11 ¼"	7 ¾"
2"	4'-3"	8"	5"	21"	12 ½"	8 ½"
2 ¼"	4'-9"	9"	5 ½"	23"	13 ¾"	9 ¼"

⑦ Min dimensions given, longer bolts are acceptable.

NOTES:

① Anchor bolt design develops the foundation capacity given under Foundation Design Loads.

② Foundation Design Loads are the allowable moments and shears at the base of the structure.

③ Foundations may be listed separately or grouped according to similarity of location and type. Quantities are for the Contractor's information only.

④ Field Penetrometer readings at a depth of approximately 3 to 5 feet may be used to adjust shaft lengths.

⑤ If rock is encountered, the Drilled Shaft shall extend a minimum of two diameters into solid rock.

⑥ Decimal lengths in Design Table are to allow interpolation for other penetrometer values. Round to nearest foot for entry into Summary Table.

FOUNDATION SUMMARY TABLE ③

LOCATION IDENTIFICATION	AVG. N BLOW /ft.	FDN TYPE	NO. EA	DRILLED SHAFT LENGTH ⑥ (FEET)				
				24-A	30-A	36-A	36-B	42-A
WILLIAMS DR								
POLE A		36-A				14		
POLE B		24-A		6				
POLE C		24-A		6				
VERDE VISTA								
POLE A		24-A		6				
POLE B		24-A		6				
POLE C		24-A		6				
POLE E		24-A		6				
POLE F		24-A		6				
ROSEDALE BLVD								
POLE B		30-A			12			
POLE C		36-A				14		
POLE E		30-A			12			
POLE F		24-A		6				
POLE G		24-A		6				
POLE H		24-A		6				
POLE I		24-A		6				
BELLAIRE DR								
POLE B		24-A		6				
POLE C		24-A		6				
POLE D		24-A		6				
POLE E		36-A				14		
POLE F		24-A		6				
POLE G		24-A		6				
TOTAL DRILLED SHAFT LENGTHS				96	24	42		

GENERAL NOTES:

Design conforms to 1994 AASHTO Standard Specifications for Structural Supports for Highway Signs, Luminaires and Traffic Signals and interim revisions thereto.

Reinforcing steel shall conform to Item 440, "Reinforcing Steel".

Concrete shall be Class "C".

Threads for anchor bolts and nuts shall be rolled or cut threads of 8UN series up to 2" in diameter or UNC series for all sizes. Bolts and nuts shall have Class 2A and 2B fit tolerances. Galvanized nuts shall be tapped after galvanizing.

Anchor bolts that are larger than 1" in diameter shall conform to "alloy steel" or "medium-strength mild steel" per Item 449, "Anchor Bolts". Anchor bolts that are 1" in diameter or less shall conform to ASTM A36. Galvanize a minimum of the top end thread length plus 6" for all anchor bolts unless otherwise noted. Exposed washers and exposed nuts shall be galvanized. All galvanizing shall be in accordance with Item 445, "Galvanizing".

Templates and embedded nuts need not be galvanized. Lubricate and tighten anchor bolts when erecting the structure in accordance with Item 449, "Anchor Bolts".

Texas Department of Transportation
Traffic Operations Division

TRAFFIC SIGNAL POLE FOUNDATION

TS-FD-12

© TxDOT August 1995

DN: MS	CK: JSY	DW: MAO/MMF	CK: JSY/TEB
REVISIONS	CONT	SECT	JOB	HIGHWAY
5-96 11-98 1-12				
	DIST	COUNTY	SHEET NO.
			307

DISCLAIMER:
The use of this standard is governed by the "Texas Engineering Practice Act". No warranty of any kind is made by TxDOT for any purpose whatsoever. TxDOT assumes no responsibility for the conversion of this standard to other formats or for incorrect results or damages resulting from its use.

DATE: 3/11/2025 5:20:58 PM
FILE: G:\TxC\Projects\City_Georgetown\10767-00 Shell Road\03_CADD\01_Shts\ts-cf-21.dgn

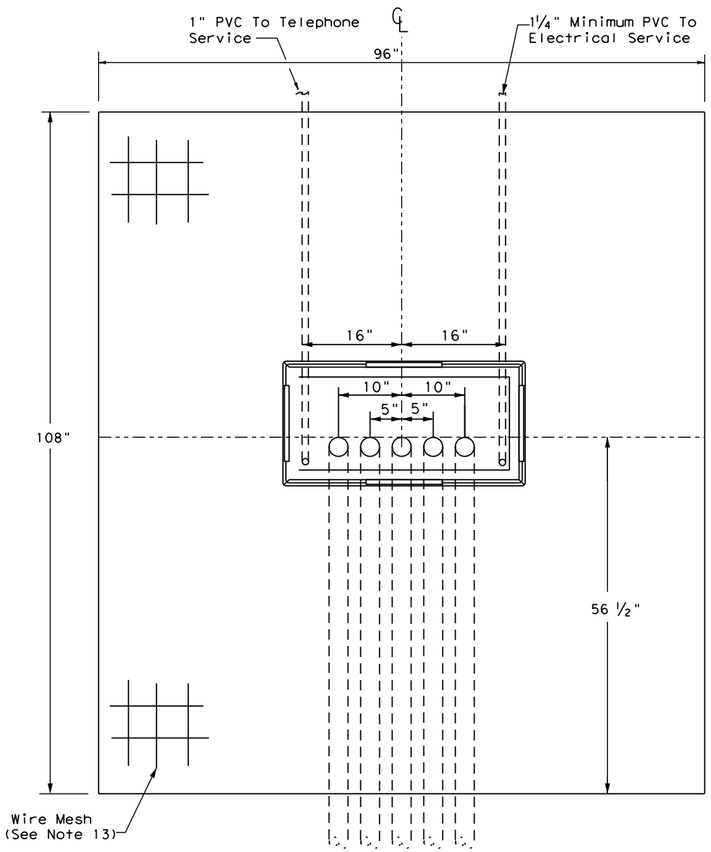

TOP VIEW

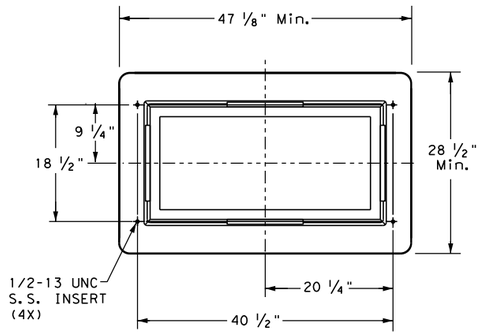

CABINET BASE

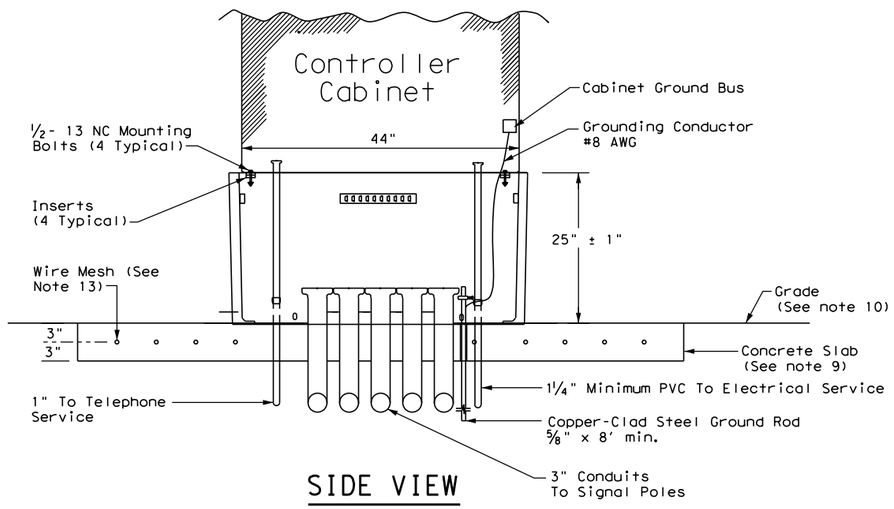

SIDE VIEW

TRAFFIC SIGNAL CONTROLLER BASE:

1. Provide a traffic signal controller base (cabinet base) manufactured of polymer concrete material consisting of calcareous and siliceous stone; glass fibers and thermoset polyester resin. The polymer concrete cabinet base must be reinforced on the inside of the cabinet base with fiberglass matting. Provide one of the following bases: Armorcast Part # A6001848X24, Quazite Model # PG3048Z709, or other as approved by TxDOT Traffic Safety Division.
2. The polymer concrete material must have a minimum compressive strength of 10,300 pounds per square inch (psi), minimum flexural strength of 3600 psi, and minimum shear strength of 3600 psi.
3. The polymer concrete cabinet base must conform to the dimensions shown and must accommodate a standard TxDOT basemount cabinet.
4. Supply the cabinet base with four 1#2"-13 UNC stainless steel inserts for attachment of the cabinet to the base. Inserts must withstand a minimum torque of 50 ft-lb and a minimum straight pull out strength of 750 lbs.
5. Provide the cabinet base with 4 cable racks mounted one on each side of the base 2" to 7 " from the top edge of the base. Unless approved otherwise, cable racks must be 1-1/2 x 9#16x 3#16inch steel channel with eight T-slots spaced at 1-1/2 inches. The cable racks must easily accommodate the insertion of tie wraps to attach field wiring to the racks to serve as strain relief. Secure cable racks to the base using 1#2"-13 UNC stainless steel screws and inserts.
6. The cabinet base, when secured to the concrete slab with controller cabinet attached, must withstand a minimum wind load of 125 mph or a 850 lb force applied at 49" above the bottom of the base without causing the base or cabinet to come out of their anchored position or cause any permanent deformation. The manufacturer must supply certification by an independent testing laboratory or sealed by a Texas Licensed Professional Engineer. Provide the cabinet base with hardware for attachment to a concrete slab.
7. The traffic signal base must be permanently marked either by impress or by permanent ink with the manufacturer's model number and name or logo.
8. Seal the base to the concrete with a silicone caulk bead and fastened to the slab per manufacturer's instructions.

CONCRETE SLAB:

9. Traffic signal controller pad must be a portland cement concrete slab poured in place, must conform to the dimensions shown, and must be level.
10. Grade earthwork such that it is flush with the concrete pad on all four sides, unless otherwise shown on the plans. Subsidiary to ITEM 680, four inch rip rap may be used in lieu of earthwork. Slopes shall gradually contour to match plans.
11. Bond a #8 AWG copper ground wire and an 8 ft ground rod bonded to the reinforcing mesh by a suitable UL Listed clamp and terminated to the cabinet grounding bus for the purpose of providing a local ground for the electrical grounding conductor. The electrical grounding conductor specified in Item 680-3.A.4 is required and must be terminated to the cabinet ground bus.
12. Install a PVC sleeve to prevent the ground rod from direct embedment in the slab.
13. Provide welded wire mesh 6X6-W2.9 X W2.9 for reinforcement. Provide joints and splices in the mesh with a minimum 6-inch overlap. Center the mesh between top and bottom and provide a minimum 3 inch cover on the edges.
14. Provide Class B concrete minimum for the slab in accordance with Item 421. Construct the slab in accordance with Item 531.

CONDUITS:

15. Stub up and run 3-inch conduits through the slab to the various traffic signal poles and ground boxes as shown on the layouts. Install the number of conduits as shown on layouts plus two additional 3 inch conduits for future use. Terminate the conduits with a bushing between 2 and 4-inches above the slab.
16. Extend conduits for future use at least 18-inches from the edge of the slab, terminate underground with a coupling, and cap and seal so that the seal can be removed without damaging the coupling. This must also apply to unused telephone conduit.
17. Stub up two separate conduits through the slab from the electrical and telephone services. Run the conduit for the electrical feed directly to the electrical service enclosure. Run the conduit for the telephone line directly to the telephone service, usually located on the same pole as the electrical service. Telephone must not under any circumstance share a conduit with any other function.
18. Terminate electric and telephone conduits above the slab with a coupling. After the base is installed, extend the conduits above the top of the base and secure to the base using a steel one-hole strap or similar suitable substitute.

CONTROLLER CABINET:

19. Anchor the controller cabinet to the base using four stainless steel 1/2-13 NC bolts.
20. The silicone caulk bead specified in Item 680.3.B must be RTV 133.

PAYMENT:

21. Bid TS-CF as subsidiary to Item 680.

Texas Department of Transportation

Traffic Safety Division Standard

TRAFFIC SIGNAL CONTROLLER CABINET BASE AND PAD
TS-CF-21

FILE: ts-cf-21.dgn	DN:	CK:	DW:	CK:
©TxDOT October 2000	CONT	SECT	JOB	HIGHWAY
REVISIONS 12-04 2-21	DIST	COUNTY		SHEET NO. 308

DISCLAIMER:
The use of this standard is governed by the "Texas Engineering Practice Act". No warranty of any kind is made by TxDOT for any purpose whatsoever. TxDOT assumes no responsibility for the conversion of this standard to other formats or for incorrect results or damages resulting from its use.

DATE: 3/11/2025 5:20:58 PM
FILE: G:\TxC\Projects\City_Georgetown\10767-00 Shell Road\03_CADD\01_Shts\ts-bp-20.dgn

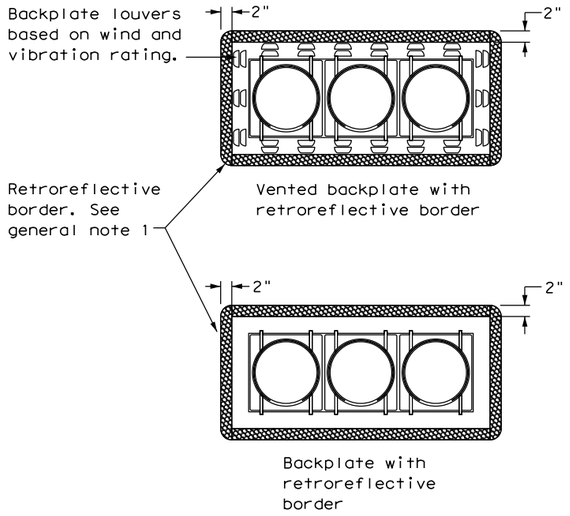

THREE-SECTION HEAD
HORIZONTAL OR VERTICAL

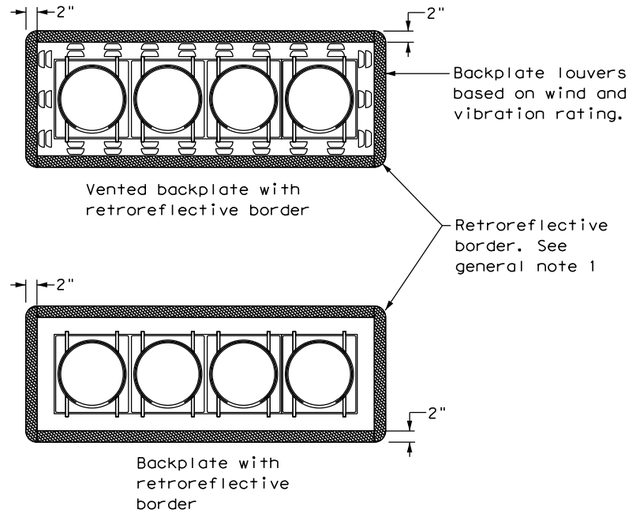

FOUR-SECTION HEAD
HORIZONTAL OR VERTICAL

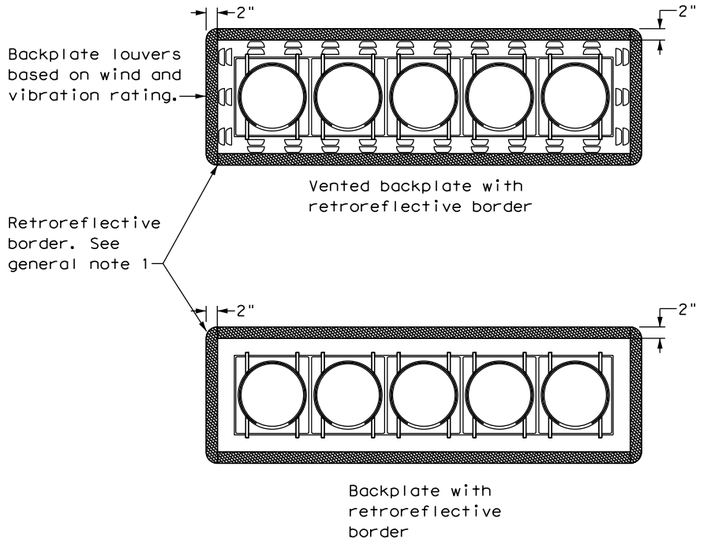

FIVE-SECTION HEAD
HORIZONTAL OR VERTICAL

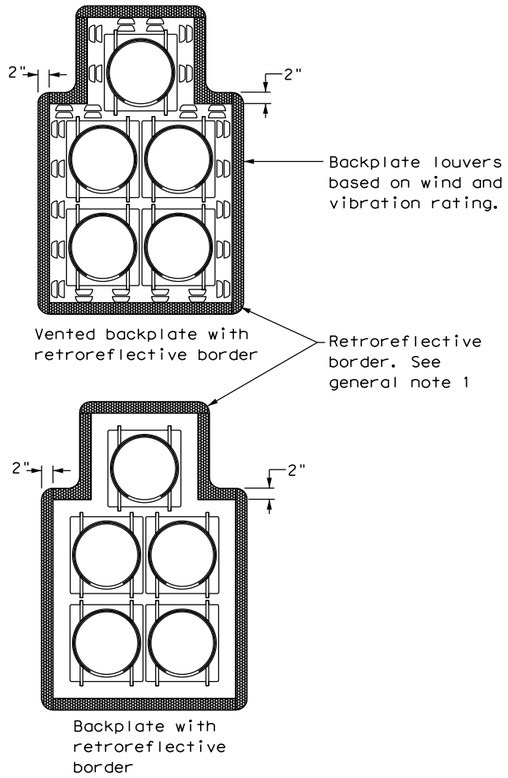

FIVE-SECTION HEAD
CLUSTER

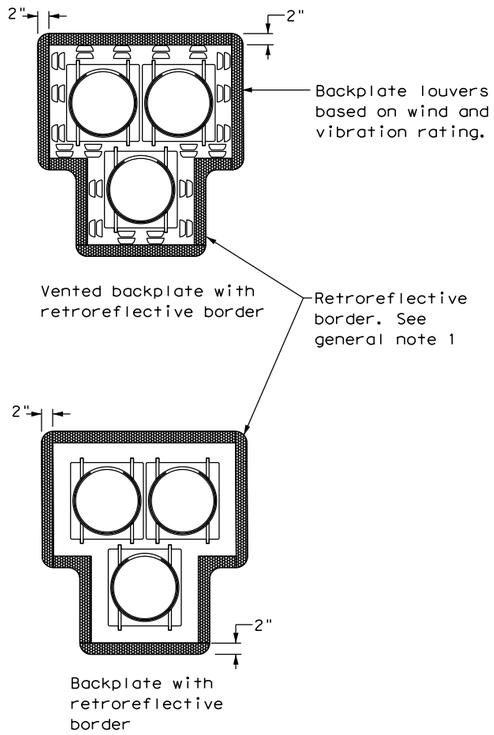

PEDESTRIAN HYBRID
BEACON

GENERAL NOTES:

1. Backplates are optional for traffic signals and pedestrian hybrid beacons. When backplates are used, a 2-inch wide fluorescent yellow AASHTO Type B_{FL} or C_{FL} retroreflective border conforming to TxDOT DMS-8300 is required. Place on all approaches when used.
2. Signal head and backplate compatability must be verified by the contractor prior to installation.
3. When using backplates on signal heads, venting is preferred to reduce cyclic vibration stress.
4. When a vented backplate is used, the retroreflective border must not be placed over the louvers.
5. This standard sheet applies to all signal heads with backplates, including but not limited to:
   - Pole mounted
   - Overhead mounted
   - Span wire mounted
   - Mast arm mounted
   - Vertical signal heads
   - Horizontal signal heads
   - Clustered signal heads
   - Pedestrian hybrid beacons

Texas Department of Transportation

Traffic Safety Division Standard

TRAFFIC SIGNAL HEAD WITH BACKPLATE

TS-BP-20

FILE: ts-bp-20.dgn	DN: TxDOT	CK: TxDOT	DW: TxDOT	CK: TxDOT
©TxDOT June 2020	CONT	SECT	JOB	HIGHWAY
REVISIONS				
	DIST	COUNTY		SHEET NO.
				309

DISCLAIMER: The use of this standard is governed by the "Texas Engineering Practice Act". No warranty of any kind is made by TxDOT for any purpose whatsoever. TxDOT assumes no responsibility for the conversion of this standard to other formats or for incorrect results or damages resulting from its use.

DATE: 3/11/2025 5:20:59 PM
FILE: G:\TXC\Projects\City*Georgetown\10767-00 Shell Road\03*CADD\01*Shts\13-SGNLS\Stds\lum-a.dgn

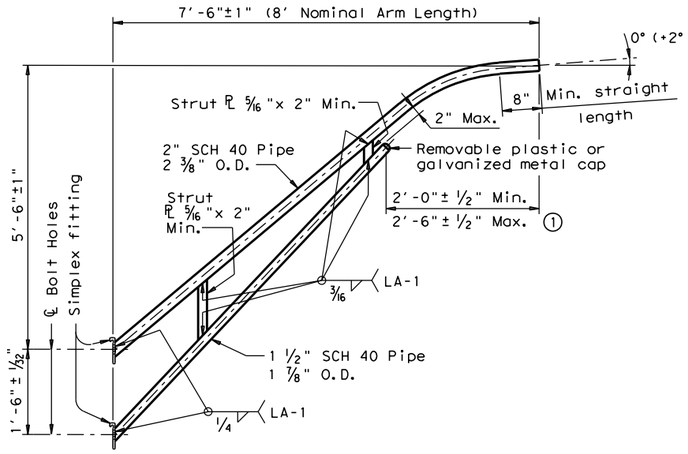

8-FOOT LUMINAIRE ARM

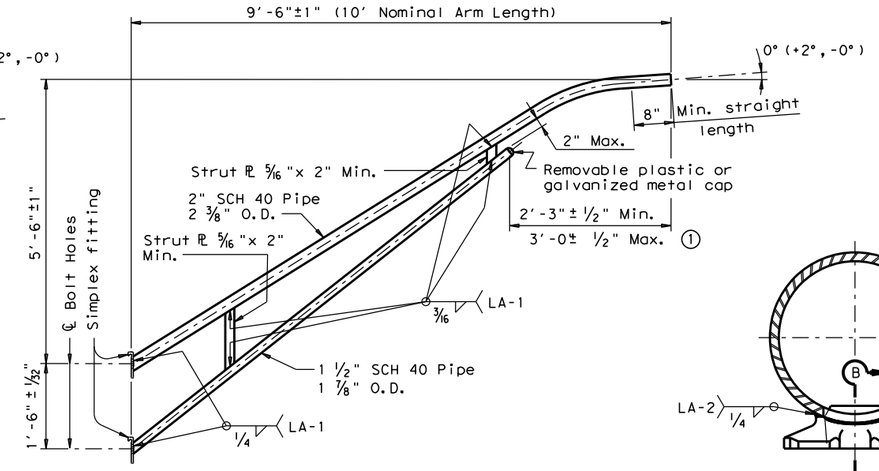

10-FOOT LUMINAIRE ARM

DIRECT ATTACHMENT DETAIL

MATERIALS	
Pole or Arm Simplex	ASTM A27 Gr.65-35 or A148 Gr.80-50, A576 Gr.1021 (3), or A36 (Arm only)
Arm Pipes	ASTM A53 Gr.B, A501, A1008 HSLAS-F Gr.50 (4), or A1011 HSLAS-F Gr.50 (4)
Arm Strut Plates (2)	ASTM A36, A572 Gr.50 (4), or A588
Misc.	ASTM designations as noted

(1) Dimensional limits are given to show acceptable variation in design. All of a Fabricator's production of a particular arm length shall have the same dimensions within specified tolerances.

(2) Any of the materials listed for plates may be used where the drawings do not specify a particular ASTM designation.

(3) A576 must be suitable for forging and also meet minimum tensile strength of 65 ksi, minimum yield of 35 ksi, and elongation in 2 inches of 22 percent.

(4) ASTM A572, A1008 HSLAS-F, and A1011 HSLAS-F may have higher yield strengths but shall not have less elongation than the grade indicated.

GENERAL NOTES:

Design conforms to 1994 AASHTO Standard Specifications for Structural Supports for Highway Signs, Luminaires, and Traffic Signals and Interim Revisions thereto. Design Wind Speed equals 90 mph plus a 1.3 gust factor. Arms are designed to support a 60 lb. luminaire having an effective projected area (actual area times drag coefficient) of 1.6 sq. ft.

Materials and fabrication shall be in accordance with Item 686, "Traffic Signal Pole Assemblies (Steel)" and with the details, dimensions, and weld procedures shown herein. Weld references call for preapproved weld procedures which the Fabricator must obtain prior to fabrication. In the absense of specified Fabricaton tolerances, dimensions shall be within the tolerances generally obtainable in normal fabrication practice.

Unless otherwise noted, all parts shall be galvanized after fabrication in accordance with Item 445, "Galvanizing".

Deviation from the details and dimensions shown herein require submission of shop drawings in accordance with Item 441, "Steel Structures". Alternate designs are not acceptable.

Each pole simplex fitting shall be supplied with 2 ASTM A325 bolts and 2 lock washers of the size specified. The bolts and lock washers shall be secured to the pole with the other hardware items called for in the plans. When clamp attachment is specified, the Fabricator shall ship the clamp assembly securely attached to the pole at the location shown on the plans.

If clamp assemblies are ordered without poles, the Fabricator shall ship one upper and one lower clamp assembly together in a single package, including all nuts and washers required for the clamps and simplex fittings.

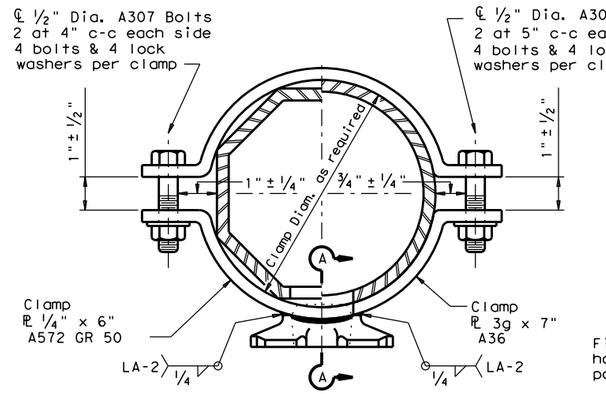

CLAMP ATTACHMENT DETAIL NO. 1 (HALF SECTION)

CLAMP ATTACHMENT DETAIL NO. 2 (HALF SECTION)

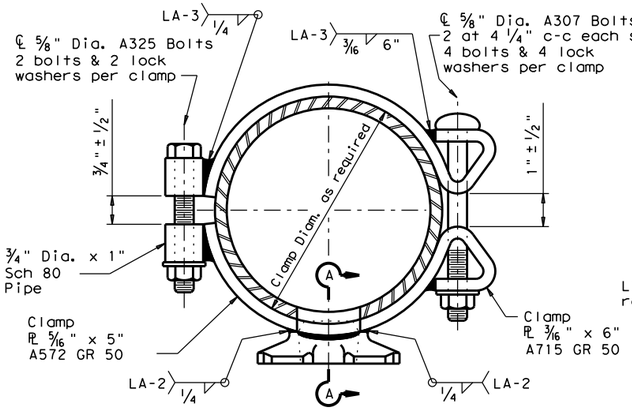

CLAMP ATTACHMENT DETAIL NO. 3 (HALF SECTION)

CLAMP ATTACHMENT DETAIL NO. 4 (HALF SECTION)

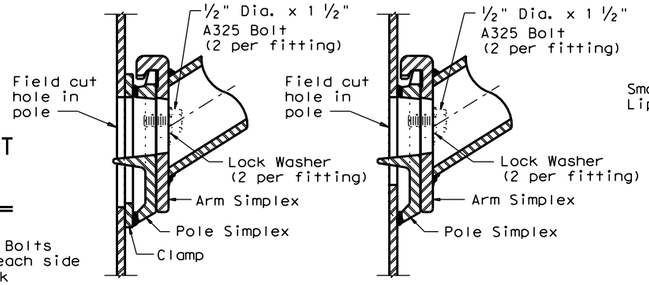

UPPER SIMPLEX FITTING

UPPER SIMPLEX FITTING

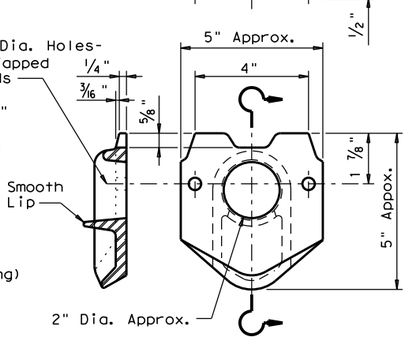

POLE SIMPLEX DETAIL

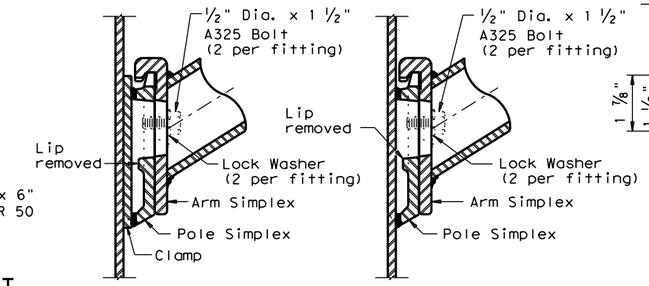

LOWER SIMPLEX FITTING

LOWER SIMPLEX FITTING

SECTON A-A

SECTON B-B

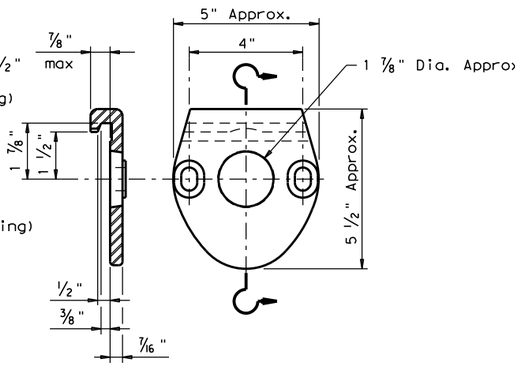

ARM SIMPLEX DETAIL

Texas Department of Transportation
Traffic Operations Division

STANDARD ASSEMBLY DRAWINGS FOR LUMINAIRE SUPPORT STRUCTURES

ARM DETAILS

LUM-A-12

© TxDOT August 1995

DN: LEH	CK: JSY	DW: LTT	CK: TEB

REVISIONS
5-96
1-99
1-12

CONT	SECT	JOB	HIGHWAY

DIST	COUNTY	SHEET NO.
		310

DISCLAIMER: The use of this standard is governed by the "Texas Engineering Practice Act". No warranty of any kind is made by TxDOT for any purpose whatsoever. TxDOT assumes no responsibility for the conversion of this standard to other formats or for incorrect results or damages resulting from its use.

DATE: 3/11/2025 5:21:00 PM
FILE: G:\TxCVProjects\City\Georgetown\10767-00 Shell Road\03*CADD\01*Shts\13-SGNLS\Stds\mac.dgn

ARM SIZE D_1 in.	ARM SIZE ∓ in.	A in.	B in.	C in.	D in.	E in.	CONN BOLT DIA in.
6.5	.179	12	9	9	6	1 ¾	1
7.5	.179	13	9	10	6	1 ¾	1
8.0	.179	14	10	11	7	2	1 ¼
9.0	.179	16	11	13	8	2	1 ¼
9.5	.179	17	12	14	9	2	1 ¼
9.5	.239	18	12	15	9	2	1 ¼
10.0	.239	18	12	15	9	2	1 ¼
10.5	.239	18	13	15	10	3	1 ½
11.0	.239	18	13	15	10	3	1 ½

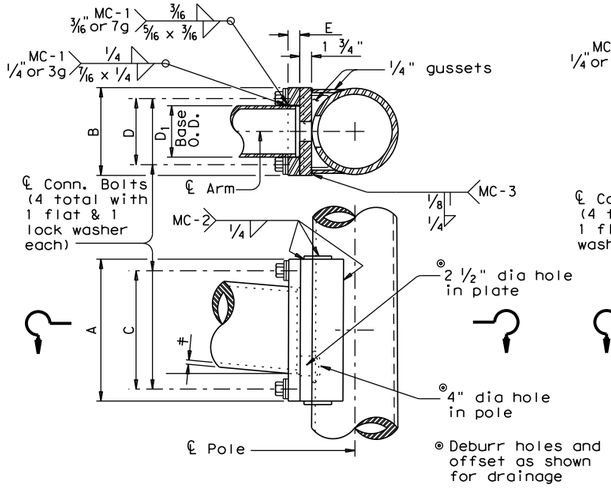

FIXED MOUNT DETAIL 1

ARM SIZE D_1 in.	ARM SIZE ∓ in.	A in.	F in.	CONN. BOLTS No. ea.	CONN. BOLTS Dia in.	PIN BOLTS No. ea.	PIN BOLTS Dia in.
6.5	.179	12	6	4	1	2	⅝
7.5	.179	14	8	4	1	2	⅝
8.0	.179	14	8	4	1	2	⅝
9.0	.179	16	10	4	1	2	⅝
9.5	.179	18	12	4	1 ¼	3	⅝
9.5	.239	18	12	4	1 ¼	3	⅝
10.0	.239	18	12	4	1 ¼	3	⅝

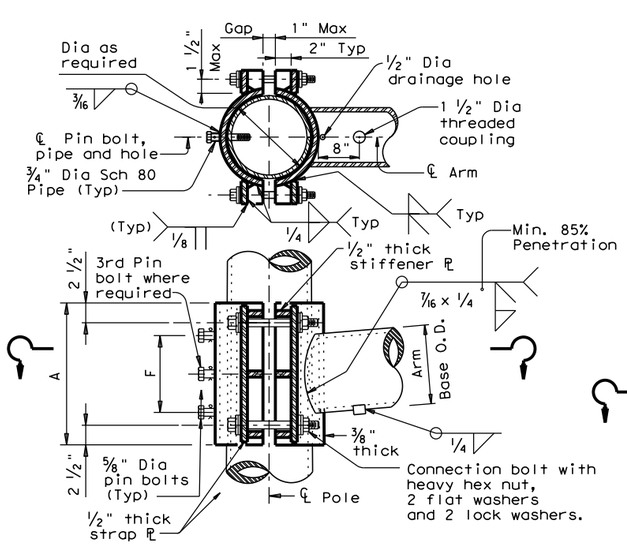

CLAMP-ON DETAIL 1

ARM SIZE D_1 in.	ARM SIZE ∓ in.	A in.	F in.	T in.	CONN. BOLTS No. ea.	CONN. BOLTS Dia in.	PIN BOLTS No. ea.	PIN BOLTS Dia in.
7.0	.179	12	6	¾	4	¾	2	⅝
7.5	.179	14	8	¾	4	¾	2	⅝
8.0	.179	14	8	¾	4	¾	2	⅝
9.0	.179	16	10	⅞	4	1	2	⅝
10.0	.179	18	10	⅞	4	1	2	⅝
9.5	.239	18	10	1	6	1	3	⅝
10.0	.239	18	10	1	6	1	3	⅝

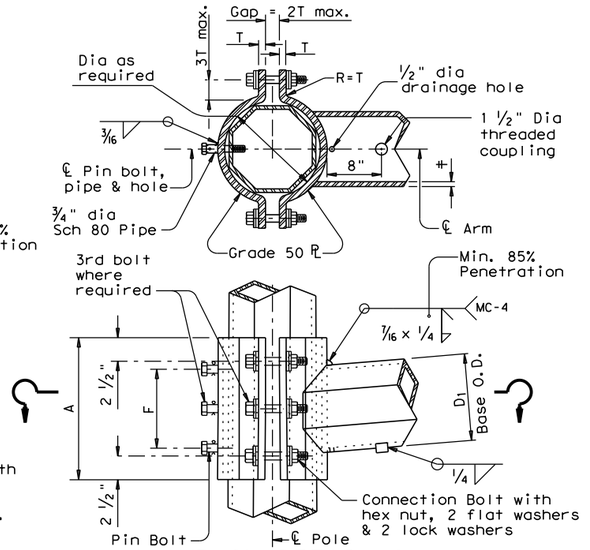

CLAMP-ON DETAIL 2

ARM SIZE D_1 in.	ARM SIZE ∓ in.	A in.	F in.	CONN. BOLTS No. ea.	CONN. BOLTS Dia in.	PIN BOLTS No. ea.	PIN BOLTS Dia in.
6.5	.179	12	6	4	1	2	⅝
7.5	.179	14	8	4	1	2	⅝
8.0	.179	14	8	4	1	2	⅝
9.0	.179	16	10	4	1	2	⅝
9.5	.179	18	12	6	1	3	⅝
9.5	.239	18	12	6	1	3	⅝
10.0	.239	18	12	6	1	3	⅝

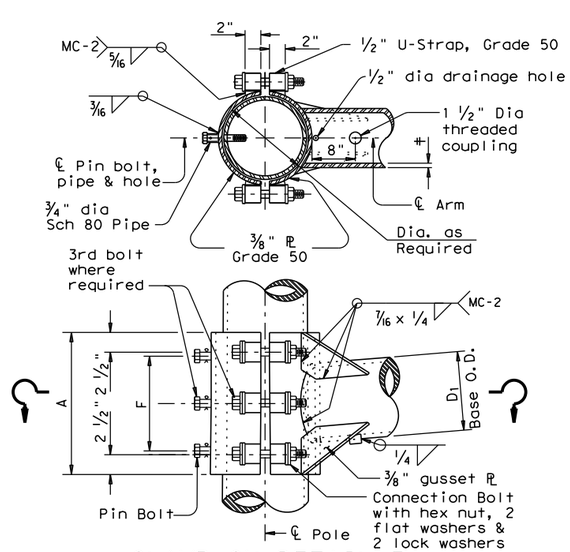

CLAMP-ON DETAIL 3

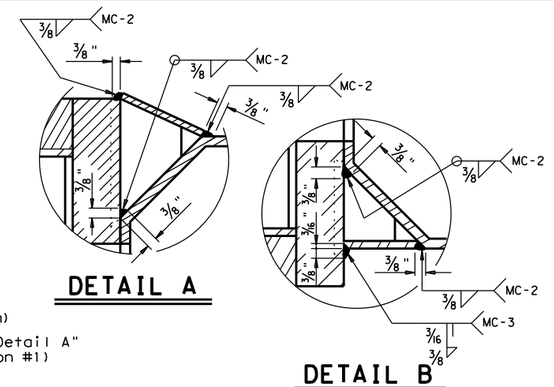

DETAIL A

DETAIL B

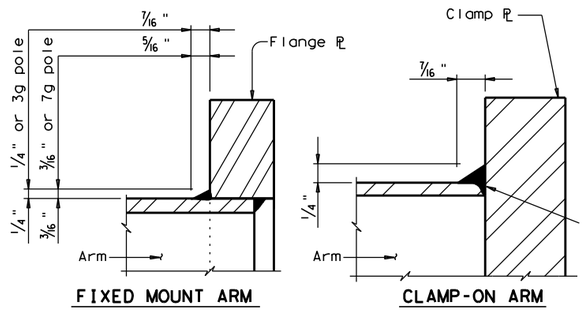

FIXED MOUNT ARM

CLAMP-ON ARM

ARM BASE WELD DETAILS

ARM SIZE D_1 in.	ARM SIZE ∓ in.	A in.	F in.	CONN. BOLTS No. ea.	CONN. BOLTS Dia in.	PIN BOLTS No. ea.	PIN BOLTS Dia in.
6.5	.179	12	6	4	1	2	⅝
7.5	.179	14	8	4	1	2	⅝
8.0	.179	14	8	4	1	2	⅝
9.0	.179	16	10	4	1	2	⅝
9.5	.179	18	12	6	1	3	⅝
9.5	.239	18	12	6	1	3	⅝
10.0	.239	18	12	6	1	3	⅝

MATERIALS

Round Shafts or Polygonal Shafts ①	ASTM A595 Gr.A, A588, A1008 HSLAS Gr.50 Class 2, A1011 HSLAS Gr.50 Class 2, A572 Gr.50 or A1011 SS Gr.50 ②
Plates ①	ASTM A36, A588, or A572 Gr.50
Connection Bolts	ASTM A325 or A449, except where noted
Pin Bolts	ASTM A325
Pipe ①	ASTM A53 Gr.B, A501, A1008 HSLAS-F Gr.50, A1011 HSLAS-F Gr.50
Misc. Hardware	Galvanized steel or stainless steel or as noted

① ASTM A572, A1008 HSLAS, A1011 HSLAS, A1008 HSLAS-F, A1011 HSLAS-F or A1011 SS may have higher yield strengths but shall not have less elongation than the grade indicated.

② ASTM A1011 SS Gr.50 material shall also have a minimum elongation of 18 percent in 8 inches or 23 percent in 2 inches. Material thickness in excess of those stipulated under A1011 SS will be acceptable providing the material meets all other A1011 SS requirements and the requirements of this item.

GENERAL NOTES:

Clamp-on details are used for the second arm on dual mast arm assemblies. A Maximum 1 ½" wide vertical slotted hole shall be cut in the front clamp plate to facilitate drainage during galvanizing. The slot shall be centered behind the arm and shall be no longer than the arm diameter minus 1"

Fixed mount details are used for single mast arm assemblies and for the first arm on dual mast arm assemblies.

Where duplicate parts occur on a detail, welds shown for one part shall apply to all similar parts on the detail.

Pin bolts are required to prevent rotation of clamp-on arms under design wind forces.

NOTE:

Pin bolts shall be A325 with threads excluded from the shear plane. Pin bolt and ¾" dia pipe shall have 3/16" dia holes for a 1/8" dia galvanized cotter pin. Back clamp plate shall be furnished with a ¾" dia hole for each pin bolt. An 11/16" dia hole for each pin bolt shall be field drilled through the pole after arm orientations have been approved by the Engineer.

Texas Department of Transportation
Traffic Operations Division

STANDARD ASSEMBLY FOR TRAFFIC SIGNAL SUPPORT STRUCTURES

MAST ARM CONNECTIONS

MA-C-12

©TxDOT August 1995

DN: MS	CK: JSY	DW: MMF	CK: JSY

REVISIONS
5-96
5-09
1-12

CONT	SECT	JOB	HIGHWAY

DIST	COUNTY	SHEET NO.
		311

126A

DISCLAIMER: The use of this standard is governed by the "Texas Engineering Practice Act". No warranty of any kind is made by TxDOT for any purpose whatsoever. TxDOT assumes no responsibility for the conversion of this standard to other formats or for incorrect results or damages resulting from its use.

DATE: 3/11/2025 5:21:01 PM
FILE: G:\TXC\Projects\City*Georgetown\10767-00 Shell Road\03*CADD\01*Shts\13-SGNLS\Shds\macilsn.dgn

TABLE OF DIMENSIONS for ILSN Support Arm Clamp-on Details 1, 2 and 3						
ILSN ARM SIZE	A	F	CONN. BOLTS		PIN BOLTS	
			No.	Dia	No.	Dia
	in.	in.	ea.	in.	ea.	in.
3 in. dia Schedule 40 Pipe	10	4	4	¾	2	⅝

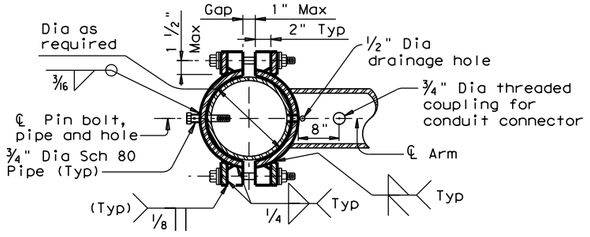

SECTION A-A

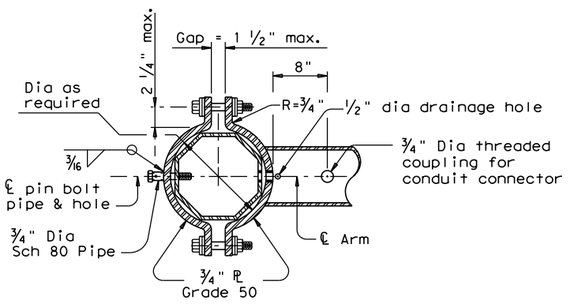

SECTION B-B

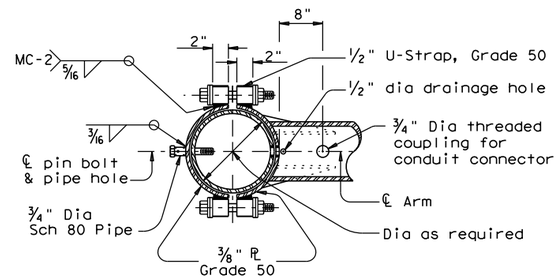

SECTION C-C

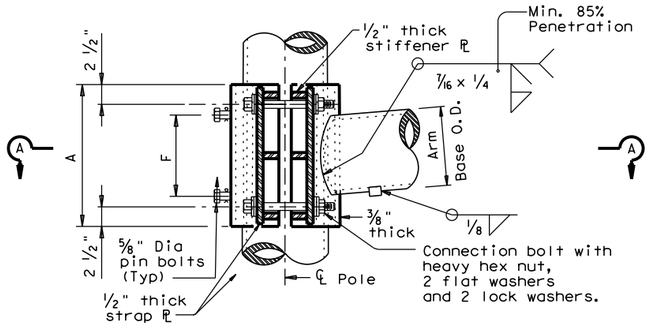

ILSN CLAMP-ON DETAIL 1

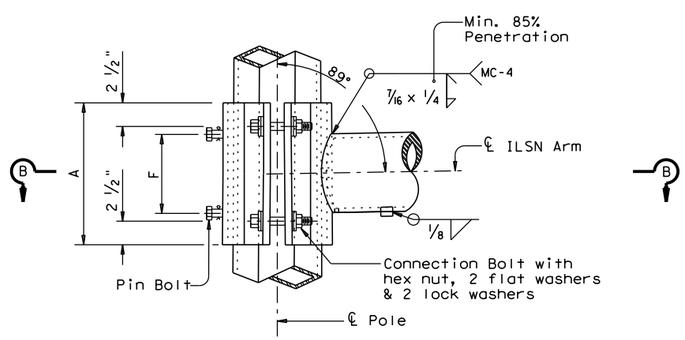

ILSN CLAMP-ON DETAIL 2

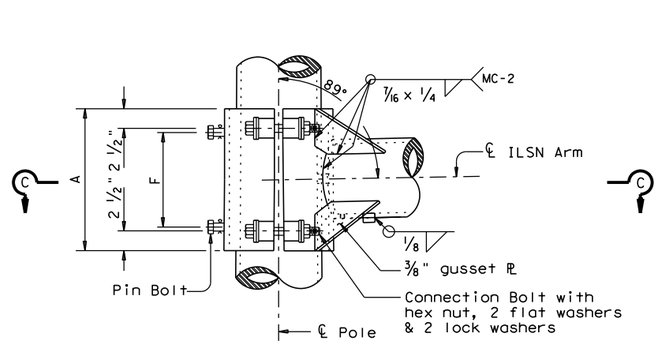

ILSN CLAMP-ON DETAIL 3

GENERAL NOTES:

Clamp-on details shall be used for ILSN support arm assemblies. A 1 ½" inch diameter hole shall be cut in the front clamp plate for wiring access. A matched hole shall be field drilled through the pole to provide wire access after arm is oriented. Deburr both holes.

Where duplicate parts occur on a detail, welds shown for one part shall apply to all similar parts on the details.

Pin bolts are required to prevent rotation of clamp-on arms under design wind forces.

NOTE:

Pin bolts shall be A325 with threads excluded from the shear plane. Pin bolt and ¾" dia pipe shall have 7/16" dia holes for a ⅛" dia galvanized cotter pin. Back clamp plate shall be furnished with a ¾" dia hole for each pin bolt. An 11/16" dia hole for each pin bolt shall be field drilled through the pole after arm orientations have been approved by the Engineer.

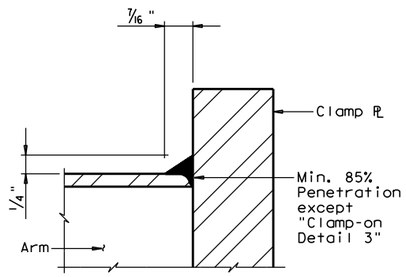

CLAMP-ON ARM

ARM BASE WELD DETAILS

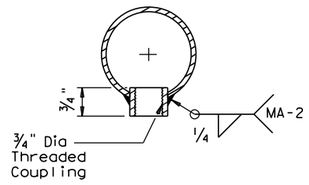

ILSN ARM COUPLING DETAIL

Texas Department of Transportation
Traffic Operations Division

STANDARD ASSEMBLY FOR TRAFFIC SIGNAL SUPPORT STRUCTURES

MAST-ARM CONNECTIONS

MA-C(ILSN)-12

© TxDOT August 1995	DN: MS	CK: JSY	DW: MMF	CK: JSY
REVISIONS	CONT	SECT	JOB	HIGHWAY
5-96				
1-12				
	DIST	COUNTY		SHEET NO.
				312

126B

DISCLAIMER: The use of this standard is governed by the "Texas Engineering Practice Act". No warranty of any kind is made by TxDOT for any purpose whatsoever. TxDOT assumes no responsibility for the conversion of this standard to other formats or for incorrect results or damages resulting from its use.

DATE: 3/11/2025 5:21:02 PM
FILE: G:\TXC\Projects\City*Georgetown\10767-00 Shell Road\03*CADD\01*Shts\13-SGNLS\Stds\mad.dgn

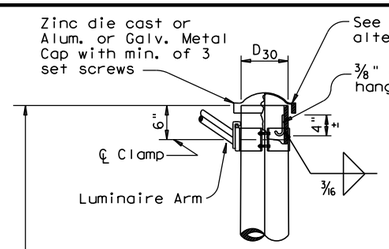

DETAIL A

(for pole with luminaire)

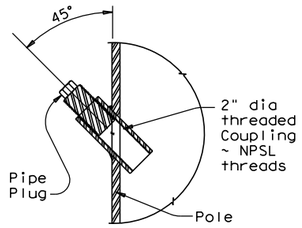

POLE COUPLING DETAIL

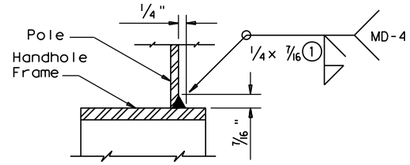

DETAIL G

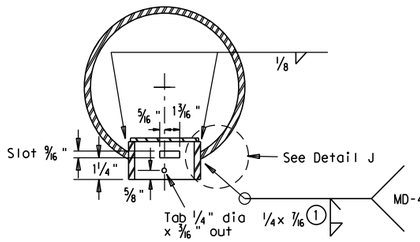

SECTION X-X

Opening for access compartment shall be no more than 1/16 inch wider than the access compartment itself.

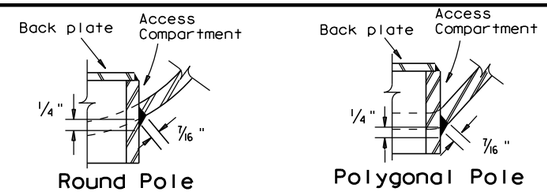

DETAIL J

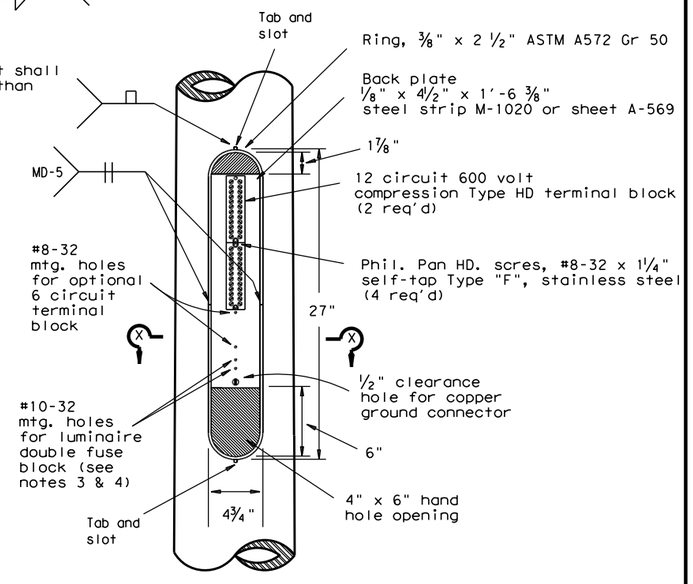

ACCESS COMPARTMENT

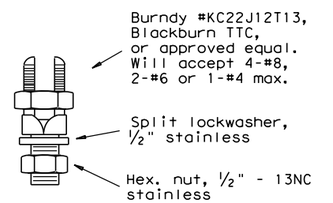

COPPER GROUND CONNECTOR

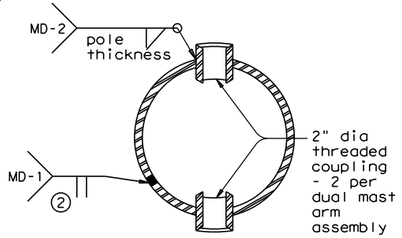

SECTION V-V

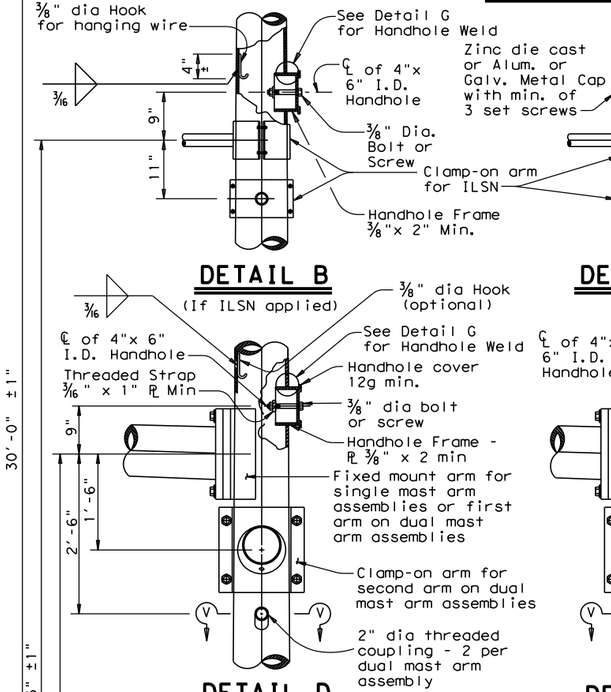

DETAIL B

(If ILSN applied)

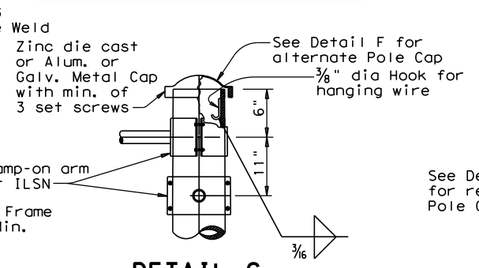

DETAIL C

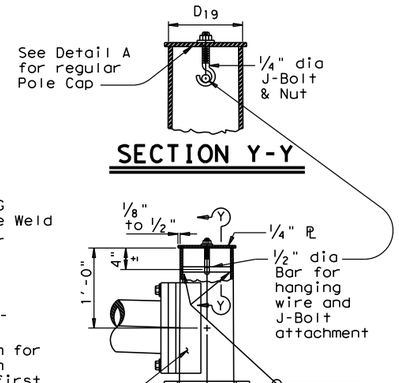

SECTION Y-Y

DETAIL D

(for 30' pole with luminaire and ILSN sign)

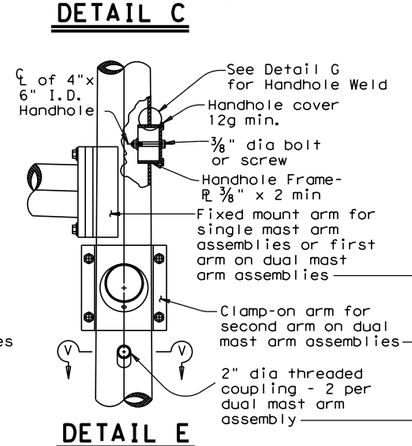

DETAIL E

(for 24' pole with ILSN sign and no luminaire)

DETAIL F

(for 19' pole with no ILSN sign and no luminaire)

Anchor Bolt Diameter	Bolt Hole Diameter	Slot Length	Bolt Circle Diameter	Base ℞ Dim. L x T	Adjust. Range
1 1/2"	1 3/4"	3 1/2"	17"	18" x 1 1/2"	13.4°
1 3/4"	2"	4"	19"	20" x 1 3/4"	13.5°
2"	2 1/4"	4 1/2"	21"	22" x 2"	13.6°
2 1/4"	2 1/2"	5"	23"	24" x 2 1/4"	13.7°

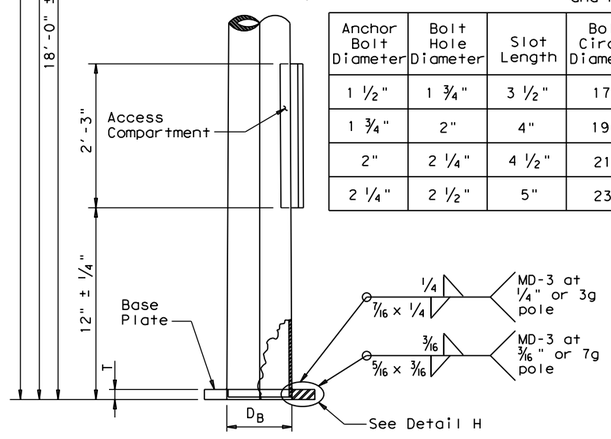

POLE ELEVATION

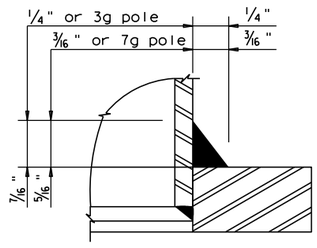

DETAIL H

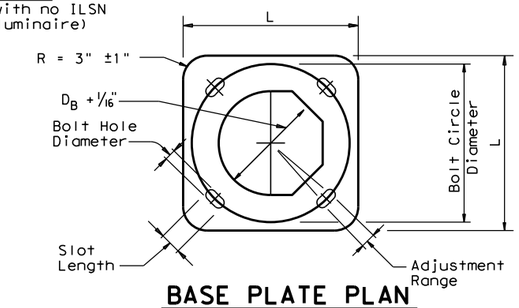

BASE PLATE PLAN

(1) 85% Min. penetration

(2) 60% Min. penetration 100% pemetration within 6" of circumferential base welds.

NOTES:

1. The cover shall be one piece formed from ABS plastic, shall be a pearl gray color, and shall be suitable for exposure to harsh sunlight and extreme weather. Cover shall latch with two screw latches and shall fit tightly to the enclosure ring to create a rainproof seal. Latch screws shall be 1/4-20 stainless flat socket head screws with tamper proof feature.
2. The pole manufacturer shall provide with each pole a separate kit consisting of: one cover with two latching assemblies, two terminal strips (Marathon #985GP12CU or approved equal), four #8-32 x 1 1/4" self tapping type "F" stainless steel pan head screws, and one ground connector (Blackburn TTC, Burndy KC22J12T13, or Ilsco SSS-5). The traffic signal contractor shall install the kit items in the field.
3. The screw hole spacing on the enclosure back plate shall be for two Marathon #985GP12 terminal strips, one Marathon #985GP06CU terminal strip, and one Bussmann #BM6032B fuse block.
4. Install one Bussmann #BM6032B, Littelfuse #L60030M-2C, or Ferraz-Shawmut #30352 fuse block for poles where luminaires are to be installed.

Texas Department of Transportation
Traffic Operations Division

TRAFFIC SIGNAL SUPPORT STRUCTURES MAST ARM POLE DETAILS

MA-D-12

© TxDOT August 1995

DN: MS	CK: JSY	DW: FDN	CK: CAL

REVISIONS
8-99
1-12

CONT	SECT	JOB	HIGHWAY

DIST	COUNTY	SHEET NO.
		313

DISCLAIMER:
The use of this standard is governed by the "Texas Engineering Practice Act". No warranty of any kind is made by TxDOT for any purpose whatsoever. TxDOT assumes no responsibility for the conversion of this standard to other formats or for incorrect results or damages resulting from its use.

DATE: 3/11/2025 5:21:02 PM
FILE: G:\TXC\Projects\City_Georgetown\10767-00 Shell Road\03_CADD\01_Shts\ma-dpd-20.dgn

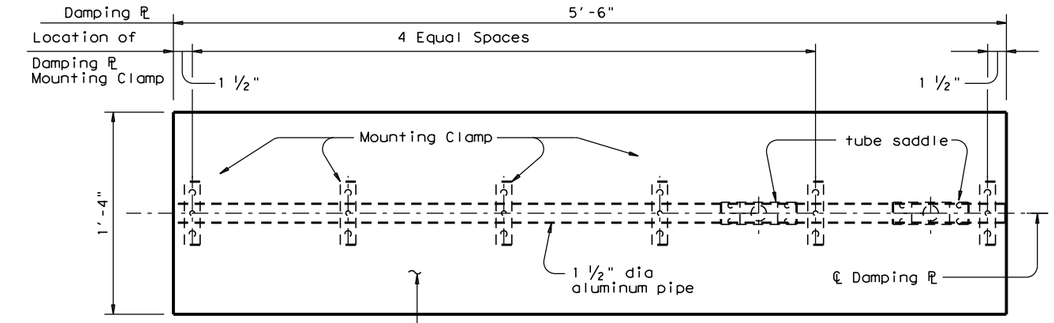

PLAN

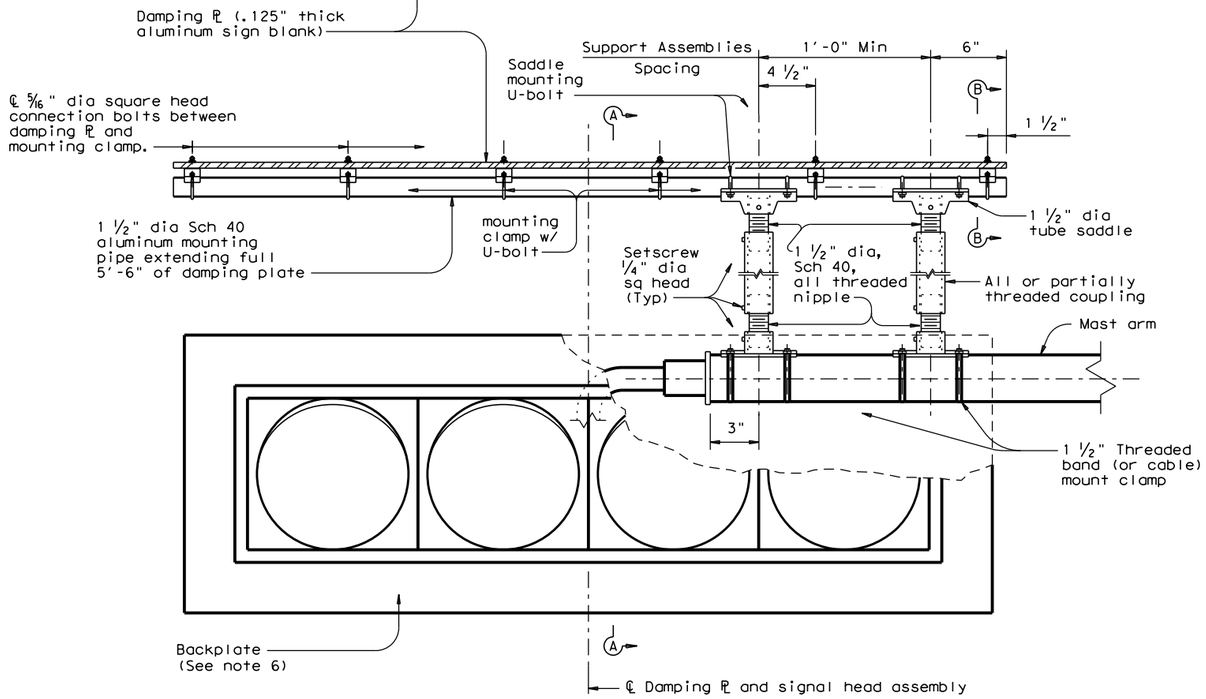

ELEVATION

DAMPING PLATE MOUNTING DETAILS

(Showing alternate placement of signal head)

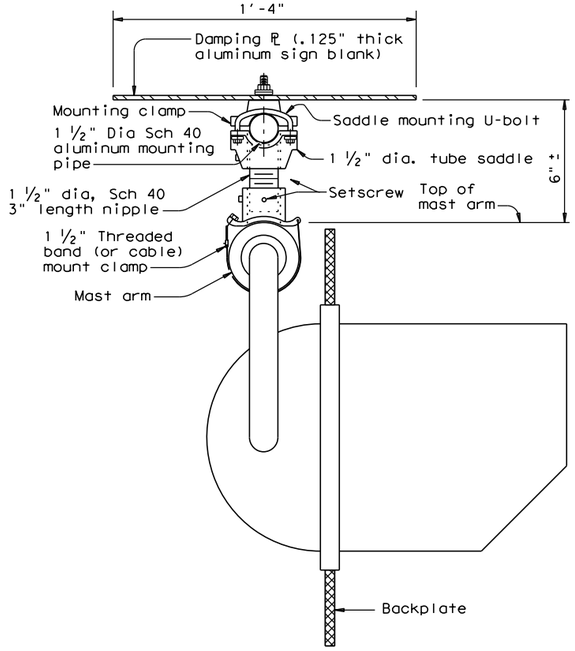

SECTION A-A

(Showing standard placement of signal head)
(Mounting clamp U-bolt is not shown for clarity)

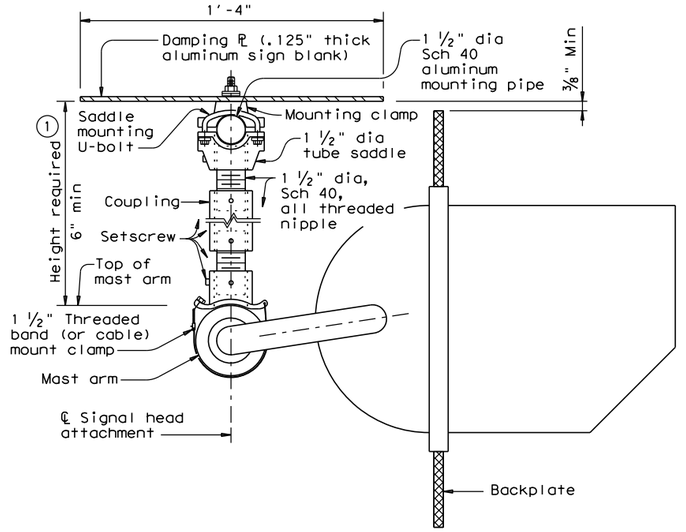

SECTION A-A

(Showing alternate placement of signal head)
(Mounting clamp U-bolt is not shown for clarity)

① Recommended supporting assemblies to achieve required height for horizontal section heads			
Height required	One nipple each length	Two nipples each length plus	One coupling each length
6"-6 ¾"	3"	-	-
7"-8 ½"	4"	-	-
9"-10 ½"	6"	-	-
11"-15 ½"	-	4"	5"
16"-24"	-	6"	10"

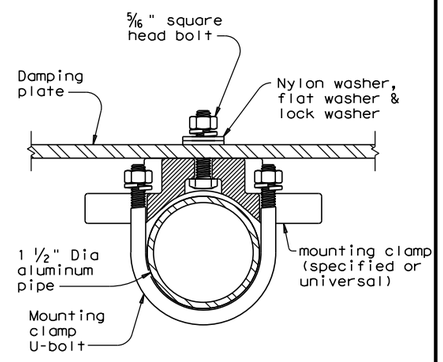

SECTION B-B

(Showing damping plate attachment)

GENERAL NOTES:

1. In accordance with the findings of TxDOT sponsored research, the installation of a damping plate in accordance with the details shown here at the end of signal mast arms of SMA and DMA standard structures reduces excessive harmonic vertical vibration, and thus fatigue damage. Any deviation from these details may reduce the effectiveness of this damping device.

2. Aluminum sign blank for damping plate will conform to Departmental Material Specifications DMS-7110. Materials for mast arm mounting clamp and tube saddle will be aluminum castings or aluminum alloys as in accordance with manufacturers' stipulations. Mounting pipe, pipe nipple and coupling will be aluminum alloy 6061-T6 or 6063-T6. Damping plate mounting clamp and u-bolt assemblies will conform to Standard sheet SMD(GEN). U-bolts for saddle mounting will have a minimum yield strength of 36 ksi.

3. Damping plate will be mounted horizontally. Position centerline of damping plate to align with centerline of mast arm or horizontal signal head assembly. Vertical clearance between signal head (with or without backing plate) and bottom of damping plate will be maintained as shown. The attachments shown here are examples only, other supporting details which meet both alignment and vertical clearance requirements are also acceptable.

4. Unless stipulated by the manufacturers, all steel parts will be galvanized finish in accordance with Standard Specification Item 445, "Galvanizing".

5. Contractor will verify applicable field dimensions before the installation.

6. Backplates are optional for traffic signals. When backplates are used, Backplates will have a 2-inch fluorescent yellow AASHTO Type B_{FL} or C_{FL} retroreflective border conforming to TxDOT DMS-8300 "Sign Face Materials." See Sheet TS-BP-20 for backplate details.

Texas Department of Transportation

Traffic Safety Division Standard

MAST ARM DAMPING PLATE DETAILS

MA-DPD-20

FILE: ma-dpd-20.dgn	DN: TxDOT	CK: TxDOT	DW: TxDOT	CK: TxDOT
©TxDOT January 2012	CONT	SECT	JOB	HIGHWAY
REVISIONS				
6-20	DIST	COUNTY		SHEET NO.
				314

INTERNALLY LIGHTED STREET NAME SIGN DETAILS

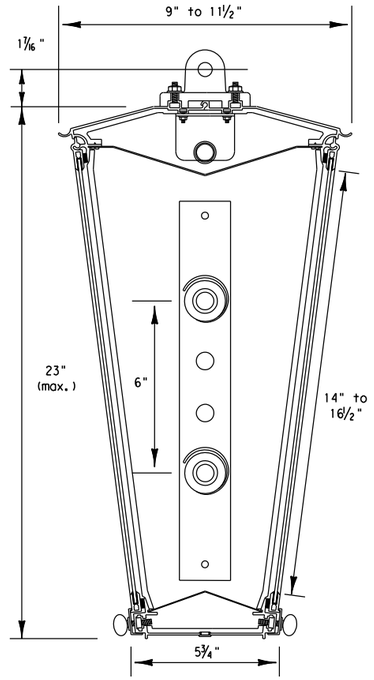

Section A-A

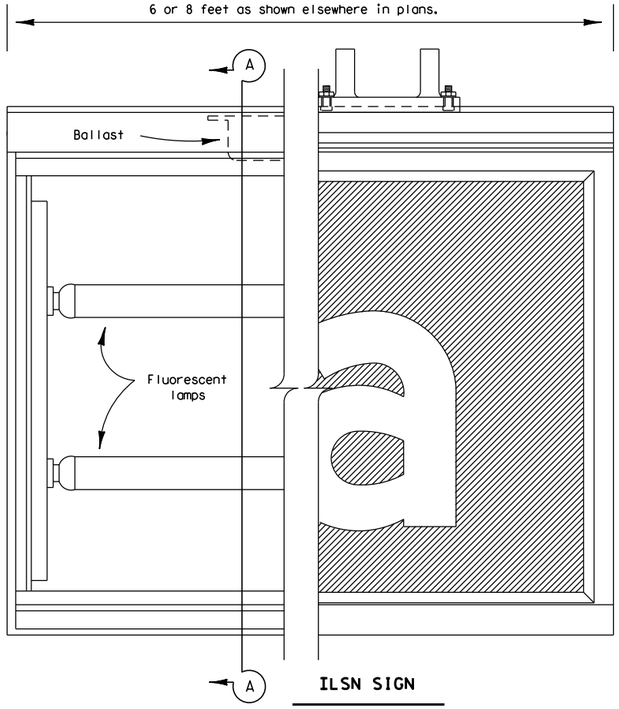

ILSN SIGN

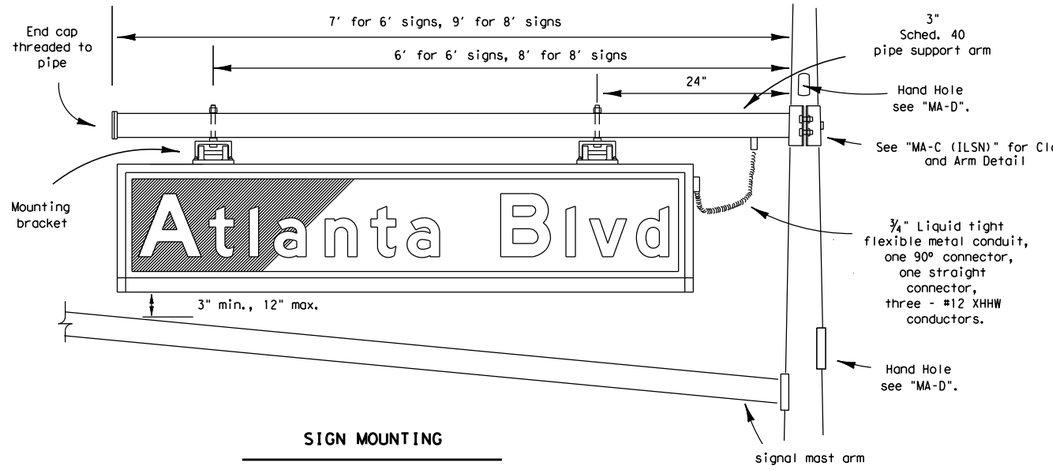

SIGN MOUNTING

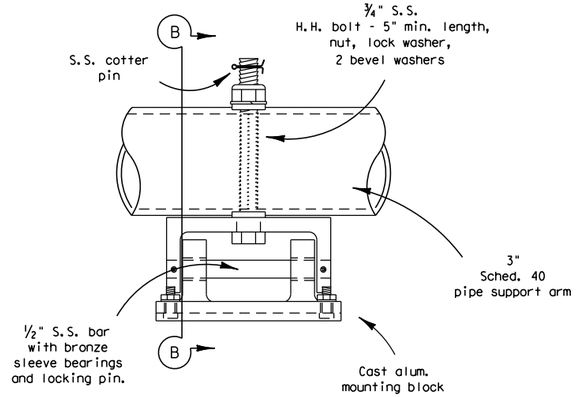

MOUNTING BRACKET

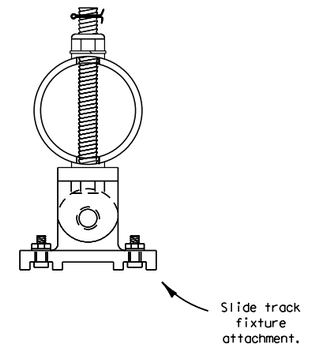

Section B-B

ILSN SIGN NOTES:

1. Eight foot ILSN sign shall not exceed 11.5 sq.ft. effective projected area (EPA) and shall not exceed a weight of 85 lbs.
   Six foot ILSN sign shall not exceed 8.7 sq.ft. EPA and shall not exceed a weight of 70 lbs.
2. Sign message shall be as shown elsewhere in the plans.
3. See Special Specification, "Internally Lighted Street Name Signs" for additional details.

EXPLANATION OF DESCRIPTION

ILSN Sign 6 S

- ILSN Sign: Internally lighted street name sign
- 6: Sign length; 6 or 8 ft.
- S: Single or double face

DISCLAIMER: The use of this standard is governed by the "Texas Engineering Practice Act". No warranty of any kind is made by TxDOT for any purpose whatsoever. TxDOT assumes no responsibility for the conversion of this standard to other formats or for incorrect results or damages resulting from its use.

DATE: 3/11/2025 5:21:03 PM
FILE: G:\TXC\Projects\City\Georgetown\10767-00 Snell Road\03*CADD\01*Shts\13-SGNLS\Stds\sns-95.dgn

Texas Department of Transportation
Traffic Operations Division

STREET NAME SIGN DETAILS (ILLUMINATED)

SNS-95

© TxDOT August 1995

DN: TXDOT	CK: TXDOT	DW: TXDOT	CK: TXDOT

REVISIONS

CONT	SECT	JOB	HIGHWAY

DIST	COUNTY	SHEET NO.
		315

DISCLAIMER:
The use of this standard is governed by the "Texas Engineering Practice Act". No warranty of any kind is made by TxDOT for any purpose whatsoever. TxDOT assumes no responsibility for the conversion of this standard to other formats or for incorrect results or damages resulting from its use.

DATE: 3/11/2025 5:21:04 PM
FILE: G:\TXC\Projects\City_Georgetown\10767-00 Shell Road\03_CADD\01_Shts\03-ZONE.dgn

NOTE: Structures north of ice line to be designed for ice.

ZONE 2
(90 MPH WIND)

ZONE 3
(80 MPH WIND)

ZONE 4
(70 MPH WIND)

ICE LINE

ZONE 4
(70 MPH WIND)

ICE LINE

ZONE 3
(80 MPH WIND)

ZONE 1
(100 MPH WIND)

LEGEND

ZONE 1 - = (100 MPH WIND)
ZONE 2 - = (90 MPH WIND)
ZONE 3 - = (80 MPH WIND)
ZONE 4 - = (70 MPH WIND)
= (ICE LINE)
= (DISTRICT LINES)

WIND VELOCITY & ICE ZONES FOR APPLICABLE OVERHEAD SIGN SUPPORTS, HIGH MAST POLES, AND TRAFFIC SIGNAL POLES

Based on 50 Year Mean Recurrence Interval of Fastest Mile Wind Velocity at 33 feet height.

THIS SHEET TO BE INCLUDED IN ALL P.S.&E. PACKAGES CONTAINING ONE OR MORE OF THE APPLICABLE STANDARD SHEETS LISTED HEREON

APPLICABLE STANDARDS SHEETS

OVERHEAD SIGN BRIDGE STANDARDS:

OSB-SE
OSB-Z#
OSB-Z#1
HOSB-Z#
HOSB-Z1L
HOSB-Z#1
OSBT
OSBC
OSBC-SC-Z#
OSBS-SC
OSB-FD
OSB-FD-SC

CANTILEVER OVERHEAD SIGN SUPPORT STANDARDS:

COSS-SE
COSS-Z#-10
HCOSS-Z#-10
COSS-Z21-10
COSS-Z#&Z#1-10
COSSD
COSSF
COSS-FD

Note: # = Wind Zone number 1, 2, 3 or 4

HIGH MAST ILLUMINATION POLE STANDARDS:

HMIP-98
HMIF-98

WALKWAYS AND BRACKETS STANDARDS:

SWW
SB(SWL-1)

TRAFFIC SIGNAL POLE STANDARDS:

SP-80
SP-100
SMA-80
SMA-100
DMA-80
DMA-100
MA-C
MAC(ILSN)
MAD-D
TS-FD
LUM-A
CFA
LMA
TS-C
MA-DPD

FOR HARRIS CO. ONLY
Zone line is just North of US 90, around on the North, West and South sides of IH 610 and down the West side of SH 288.

FOR JACKSON CO. ONLY
Zone line is just North of SH 616.

Texas Department of Transportation

Traffic Operations Division Standard

WIND VELOCITY AND ICE ZONES

WV & IZ-14

FILE: windice.dgn	DN: TxDOT	CK: TxDOT	DW: TxDOT	CK: TxDOT
© TxDOT April 1996	CONT	SECT	JOB	HIGHWAY
REVISIONS				
8-14-Added list of applicable standards, restricting use to structures designed for Fastest Mile wind speeds.	DIST	COUNTY		SHEET NO.
				316

DISCLAIMER:
The use of this standard is governed by the "Texas Engineering Practice Act". No warranty of any kind is made by TxDOT for any purpose whatsoever. TxDOT assumes no responsibility for the conversion of this standard to other formats or for incorrect results or damages resulting from its use.

DATE: 3/11/2025 5:21:04 PM
FILE: G:\TXC\Projects\City_Georgetown\10767-00 Shell Road\03_CADD\01_Shts\95-SDNE-SYS96ed1a-14.dgn

GENERAL NOTES FOR ALL ELECTRICAL WORK

1. The location of all conduits, junction boxes, ground boxes, and electrical services is diagrammatic and may be shifted to accommodate field conditions.

2. Provide new and unused materials. Ensure that all materials and installations comply with the applicable articles of the National Electrical Code (NEC), TxDOT standards and specifications, National Electrical Manufacturers Association (NEMA), and are listed by Underwriters Laboratories (UL) or a Nationally Recognized Testing Lab (NRTL). NRTLs such as Canadian Standard Association (CSA), Intertek Testing Services NA Inc., or FM Approvals LLC can be considered equivalent to UL. Where reference is made to NEMA listed devices, International Electrotechnical Commission (IEC) listed devices will not be considered an acceptable equal to a NEMA listed device. Acceptable devices may have both a NEMA and IEC listing. Faulty fabrication or poor workmanship in any material, equipment, or installation is justification for rejection. Replace or reinstall rejected material or equipment at no additional cost to the Department.

3. Miscellaneous nuts, bolts and hardware, except for high strength bolts, may be stainless steel when plans specify galvanized, provided the bolt size is ½ in. or less in diameter.

4. Provide the following test equipment as required by the Engineer to confirm compliance with the contract and the NEC: voltmeter, ammeter, megohm meter (1000 volt DC), ground resistance tester, torque wrenches, and torque screwdrivers. Ensure all equipment has been properly calibrated within the last year. Provide calibration certification to the Engineer upon request. Operate test equipment during inspection as requested by the Engineer.

5. Install grounding as shown on the plans and in accordance with the NEC. Ensure all metallic conduits; metal poles; luminaires; and metal enclosures are bonded to the equipment grounding conductor. Provide stranded bare copper or green insulated grounding conductors. Ground rods, connectors, and bonding jumpers are subsidiary to the various bid items.

6. When required by the Engineer, notify the Department in writing of materials from the Material Producers List (MPL) intended for use on each project. Prequalified materials are listed on the MPL on TxDOT's website under "Roadway Illumination and Electrical Supplies." No substitutions will be allowed for materials on this list.

CONDUIT

A. MATERIALS

1. Provide conduit, junction boxes, fittings, and hardware as per TxDOT Departmental Material Specification (DMS) 11030 "Conduit" and Item 618 "Conduit" of TxDOT's "Standard Specifications For Construction And Maintenance Of Highways, Streets, And Bridges," latest edition. Provide conduits listed under Item 618 on the MPL under "Roadway Illumination and Electrical Supplies." Provide conduit types according to the descriptive code or as shown on the plans. Do not substitute other types of conduits for those shown. Provide liquidtight flexible metal conduit (LFMC) when flexible conduit is called for on galvanized steel rigid metallic conduit (RMC) systems. Provide liquidtight flexible nonmetallic conduit (LFNC) when flexible conduit is called for on polyvinyl chloride (PVC) systems.

2. Provide galvanized steel RMC for all exposed conduits, unless otherwise shown on the plans. Properly bond all metal conduits.

3. Unless otherwise shown on the plans, provide junction boxes with a minimum size as shown in the following table, which applies to the greatest number of conductors entering the box through one conduit with no more than four conduits per box. When a mixture of conductor sizes is present, count the conductors as if all are of the larger size. For situations not applicable to the table, size junction boxes in accordance with NEC.

AWG	3 CONDUCTORS	5 CONDUCTORS	7 CONDUCTORS
#1	10" x 10" x 4"	12" x 12" x 4"	16" x 16" x 4"
#2	8" x 8" x 4"	10" x 10" x 4"	12" x 12" x 4"
#4	8" x 8" x 4"	10" x 10" x 4"	10" x 10" x 4"
#6	8" x 8" x 4"	8" x 8" x 4"	10" x 10" x 4"
#8	8" x 8" x 4"	8" x 8" x 4"	8" x 8" x 4"

4. Junction boxes with an internal volume of less than 100 cu. in. and supported by entering raceways must have threaded entries or hubs identified for the intended purpose and supported by connection of two or more rigid metal conduits. Secure conduit within 3 ft. of the enclosure or within 18 in. of the enclosure if all conduit entries are on the same side. Mechanically secure all junction boxes with an internal volume greater than 100 cu. inches.

5. Provide hot dipped galvanized cast iron or sand cast aluminum outlet boxes for junction boxes containing only 10 AWG or 12 AWG conductors. Do not use die cast aluminum boxes. Size outlet boxes according to the NEC.

6. Do not use intermediate metal conduit (IMC) or electrical metallic tubing (EMT) unless specifically required by the plan sheets. When EMT is called for, provide junction boxes made from galvanized steel sheeting, listed and approved for outdoor use, unless otherwise noted on the plans. Size all galvanized steel junction boxes in accordance with the NEC. Provide junction boxes for IMC conduit systems that meet the same requirements for junction boxes used with RMC systems.

7. Provide PVC junction boxes intended for outdoor use on PVC conduit systems, unless otherwise noted on the plans.

8. Provide PVC elbows in PVC conduit systems, unless otherwise shown on the plans. Use only a flat, high tensile strength polyester fiber pull tape for pulling conductors through the PVC conduit system. When galvanized steel RMC elbows are specifically called for in the plans and any portion of the RMC elbow is buried less than 18 in., ground the RMC elbow by means of a grounding bushing on a rigid metal extension. Grounding of the rigid metal elbow is not required if the entire RMC elbow is encased in a minimum of 2 in. of concrete. PVC extensions are allowed on these concrete encased rigid metal elbows. RMC or PVC elbows are subsidiary to various bid items.

9. When required, provide High-Density Polyethylene (HDPE) conduit with factory installed internal conductors according to Item 622 "Duct Cable." At the Contractor's request and with approval by the Engineer, substitute HDPE conduit with no conductors for bored schedule 40 or schedule 80 PVC conduit bid under Item 618. Ensure bored HDPE substituted for PVC is schedule 40 and of the same size PVC called for in the plans. Ensure the substituted HDPE meets the requirements of Item 622, except that the conduit is supplied without factory-installed conductors. Make the transition of the HDPE conduit to PVC (or RMC elbow when required) at the bore pit. Provide conduit of the size and schedule as shown on the plans. Do not extend substituted conduit into ground boxes or foundations. Provide PVC or galvanized steel RMC elbows as called for at all ground boxes and foundations.

10. Use two-hole straps when supporting 2 in. and larger conduits. On electrical service poles, properly sized stainless steel or hot dipped galvanized one-hole standoff straps are allowed on the service riser conduit.

B. CONSTRUCTION METHODS

1. Provide and install expansion joint conduit fittings on all structure-mounted conduits at the structure's expansion joints to allow for movement of the conduit. In addition, provide and install expansion joint fittings on all continuous runs of galvanized steel RMC conduit externally exposed on structures such as bridges at maximum intervals of 150 ft. When requested by the project Engineer, supply manufacturer's specification sheet for expansion joint conduit fittings. Repair or replace expansion joint fittings that do not allow for movement at no additional cost to the Department. Provide the method of determining the amount of expansion to the Engineer upon request. Do not use LFMC or LFNC as a substitute for the required expansion conduit fittings.

2. Space all conduit supports at maximum intervals of 5 ft. Install conduit spacers when attaching metal conduit to surface of concrete structures. See "Conduit Mounting Options" on ED(2). Install conduit support within 3 ft. of all enclosures and conduit terminations.

3. Do not attach conduit supports directly to pre-stressed concrete beams except as shown specifically in the plans or as approved by the Engineer.

4. Unless otherwise shown on the plans, jack or bore conduit placed beneath existing roadways, driveways, sidewalks, or after the base or surfacing operation has begun. Backfill and compact the bore pits below the conduit per Item 476 "Jacking, Boring, or Tunneling Pipe or Box" prior to installing conduit or duct cable to prevent bending of the connections.

5. When placing conduit in the sub-grade of new roadways, backfill all trenches with excavated material unless otherwise noted on the plans. When placing conduit in the sub-base of new roadways, backfill all trenches with cement-stabilized base as per requirements of Items 110 "Excavation", 400 "Excavation and Backfill for Structures", 401 "Flowable Backfill", 402 "Trench Excavation Protection", and 403 "Temporary Special Shoring."

6. Provide and place warning tape approximately 10 in. above all trenched conduit as per Item 618.

7. During construction, temporarily cap or plug open ends of all conduit and raceways immediately after installation to prevent entry of dirt, debris and animals. Temporary caps constructed of durable duct tape are allowed. Tightly fix the tape to the conduit opening. Clean out the conduit and prove it clear in accordance with Item 618 prior to installing any conductors.

8. Ensure conduit entry into the top of any enclosure is waterproof by installing conduit sealing hubs or using boxes with threaded bosses. This includes surface mounted safety switches, meter cans, service enclosures, auxiliary enclosures and junction boxes. Grounding bushings on water tight sealing hubs are not required.

9. Fit the ends of all PVC conduit terminations with bushings or bell end fittings. Provide and install a grounding type bushing on all metal conduit terminations.

10. Install a bonding jumper from each grounding bushing to the nearest ground rod, grounding lug, or equipment grounding conductor. Ensure all bonding jumpers are the same size as the equipment grounding conductor. Bonding of conduit used as a casing under roadways for duct cable is not required, if the duct extends the full length through the casing.

11. At all electrical services, install a 6 AWG solid copper grounding electrode conductor.

12. Place conduits entering ground boxes so that the conduit openings are between 3 in. and 6 in. from the bottom of the box. See the ground box detail on sheet ED(4).

13. Seal ends of all conduits with duct seal, expandable foam, or by other methods approved by the Engineer. Seal conduit immediately after completion of conductor installation and pull tests. Do not use duct tape as a permanent conduit sealant. Do not use silicone caulk as a conduit sealant.

14. File smooth the cut ends of all mounting strut and conduit. Before installing, paint the field cut ends of all mounting strut and RMC (threaded or non-threaded) with zinc rich paint (94% or more zinc content) to alleviate overspray. Use zinc rich paint to touch up galvanized material as allowed under Item 445 "Galvanizing." Do not paint non-galvanized material with a zinc rich paint as an alternative for materials required to be galvanized.

Texas Department of Transportation

Traffic Operations Division Standard

ELECTRICAL DETAILS CONDUITS & NOTES

ED(1)-14

FILE:	ed1-14.dgn	DN:	CK:	DW:	CK:
© TxDOT	October 2014	CONT	SECT	JOB	HIGHWAY
REVISIONS					
		DIST	COUNTY		SHEET NO.
					317

DISCLAIMER:
The use of this standard is governed by the "Texas Engineering Practice Act". No warranty of any kind is made by TxDOT for any purpose whatsoever. TxDOT assumes no responsibility for the conversion of this standard to other formats or for incorrect results or damages resulting from its use.

DATE: 3/11/2025 5:21:05 PM
FILE: G:\TXC\Projects\City_Georgetown\10767-00 Shell Road\03_CADD\01_Shts\ed2-14.dgn

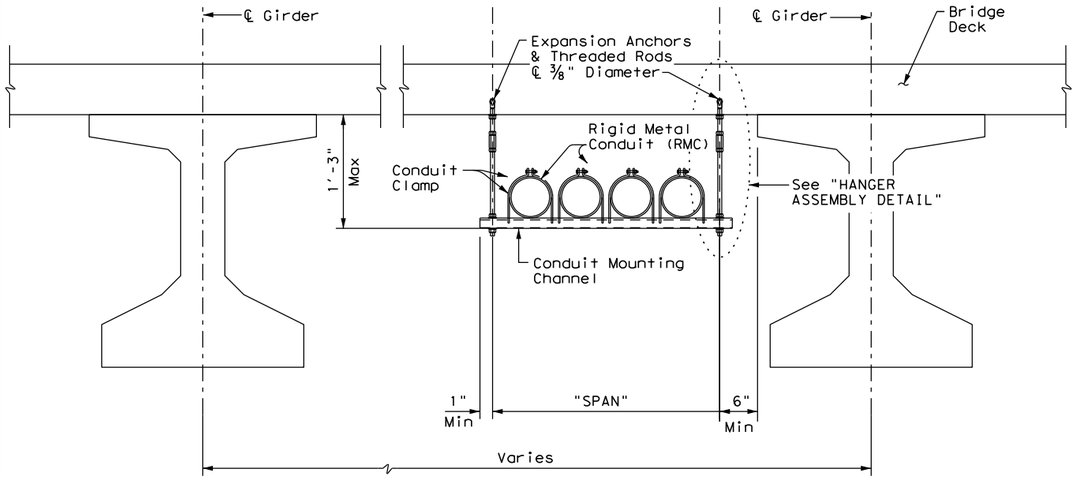

CONDUIT HANGING DETAIL

CONDUIT MOUNTING CHANNEL		
"SPAN"	"W" x "H"	"T"
less than 2'	1 5/8" x 1 3/8"	12 Ga.
2'-0" to 2'-6"	1 5/8" x 1 5/8"	12 Ga.
>2'-6" to 3'-0"	1 5/8" x 2 7/16"	12 Ga.

Channels with round or short slotted hole patterns are allowed, if the load carrying capacity is not reduced by more than 15%.

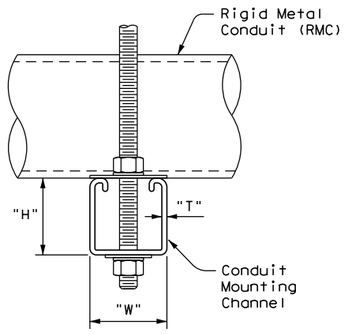

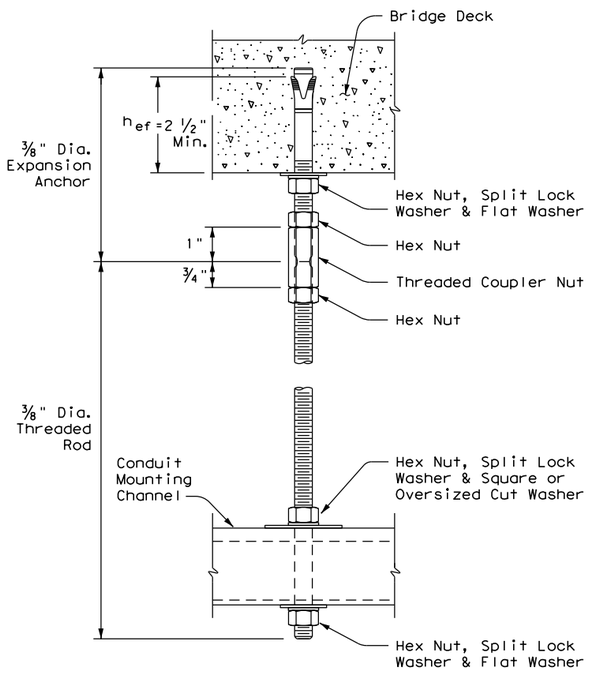

HANGER ASSEMBLY DETAIL

ELECTRIC CONDUIT TO BRIDGE DECK ATTACHMENT

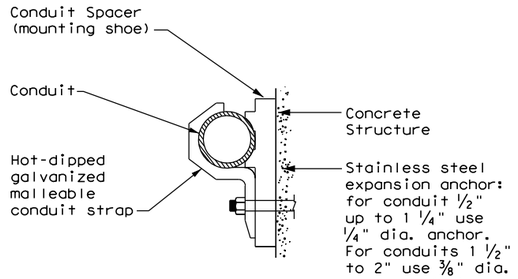

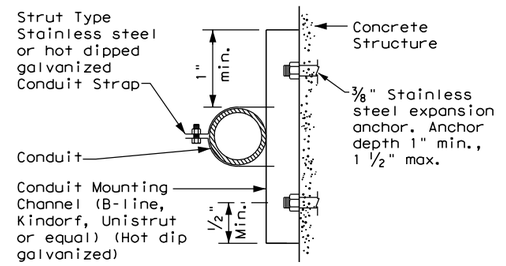

CONDUIT MOUNTING OPTIONS

Attachment to concrete surfaces
See ED(1)B.2

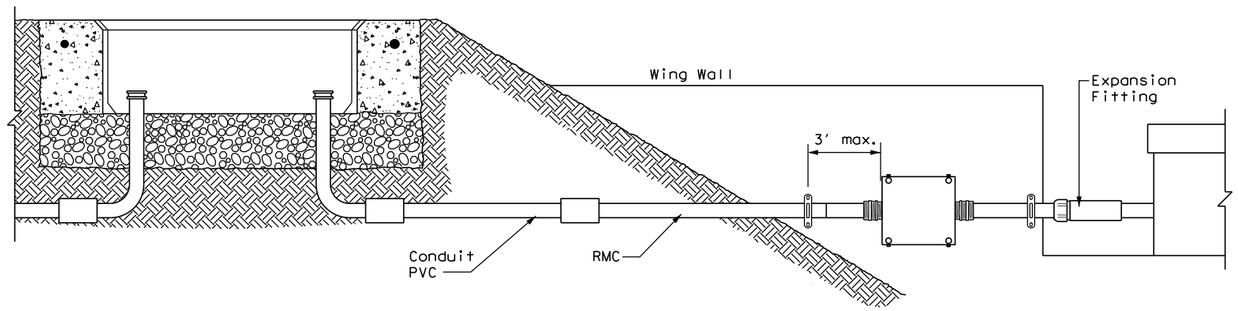

TYPICAL CONDUIT ENTRY TO BRIDGE STRUCTURE DETAIL

EXPANSION ANCHOR NOTES FOR BRIDGE DECK ATTACHMENT

1. Use torque controlled mechanical expansion anchors that are approved for use in cracked concrete by the International Code Council, Evaluation Service (ICC-ES). The chosen anchor product shall have a designated ICC-ES Evaluation Report number, and its approval status shall be maintained on the ICC-ES website under Division 031600 for Concrete Anchors.
2. Unless otherwise approved by the Engineer: do not use adhesive anchors; do not use expansion anchors that are not included in the ICC-ES approval list; and do not use expansion anchors that are only approved for use in uncracked concrete.
3. Use anchors manufactured with stainless steel expansion wedges. Anchors manufactured with carbon steel expansion wedges are not allowed. Anchor bodies can be either zinc-plated carbon steel or stainless steel. For application in marine environment, both the anchor body and expansion wedge shall be stainless steel.
4. Install anchors as shown on the plans and in accordance with the anchor manufacturer's published installation instructions. Arrange a field demonstration test to evaluate the procedures and tools. The test shall be witnessed and approved by the Engineer prior to furnishing anchors on the structure.
5. Prior to hole drilling, use rebar locator to ensure clearing of existing deck strands or reinforcement. Install anchors to ensure a minimum effective embedment depth, (h_{ef}), as shown. Increase (h_{ef})as needed to ensure sufficient thread length for proper torqueing and tightening of anchors.
6. Use anchors of minimum 1600 Lbs tensile capacity (minimum of steel, concrete breakout, and concrete pullout strengths as determined by ACI 318 Appendix D) at the required minimum embedment depth (h_{ef}). No lateral loads shall be introduced after conduit installation.

Texas Department of Transportation

Traffic Operations Division Standard

ELECTRICAL DETAILS
CONDUIT SUPPORTS

ED(2)-14

FILE: ed2-14.dgn	DN: TxDOT	CK: TxDOT	DW: TxDOT	CK: TxDOT
©TxDOT October 2014	CONT	SECT	JOB	HIGHWAY
REVISIONS				
	DIST	COUNTY		SHEET NO.
				318

71B

DISCLAIMER:
The use of this standard is governed by the "Texas Engineering Practice Act". No warranty of any kind is made by TxDOT for any purpose whatsoever. TxDOT assumes no responsibility for the conversion of this standard to other formats or for incorrect results or damages resulting from its use.

DATE: 3/11/2025 5:21:06 PM
FILE: G:\TXC\Projects\City_Georgetown\10767-00 Shell Road\03_CADD\01_Shts\ED3-SGNL-SAFGRD-ed3-14.dgn

ELECTRICAL CONDUCTORS

A. MATERIAL INFORMATION

1. Provide Type XHHW insulated conductors in accordance with Departmental Material Specification (DMS)11040 "Conductors" and Item 620 "Electrical Conductors." Provide conductors as listed on the Material Producers List (MPL) on the Department web site under "Roadway Illumination and Electrical Supplies" Item 620. Color code insulated conductors in conformance with the NEC. Identify grounded (neutral) conductors with white insulation. Identify grounding conductors (ground wires) with green insulation or bare conductors. Identify ungrounded (hot) conductors with any color insulation except green, white, or gray. Keep color scheme consistent throughout the wiring system. Identify conductors 6 American Wire Gauge (AWG) and smaller by continuous color jacket. Identify electrical conductors 4 AWG and larger by continuous color jacket or by colored tape. When identifying conductors with colored tape, mark at least 6 in. of the conductor's insulation with half laps of tape.
2. Provide a solid copper 6 AWG grounding electrode conductor to bond the electrical service equipment to the concrete encased grounding electrode or the ground rod at the service location. Connect the grounding electrode conductor to the ground rod with a UL listed connector in accordance with DMS 11040. Connect the grounding electrode conductor to the concrete encased grounding electrode as shown in the plans.
3. Where two or more circuits are present in one conduit or enclosure, permanently identify the conductors of each branch circuit by attaching a non-metallic tag around both circuit conductors at each accessible location. Provide tags with two straps, large enough to indicate circuit number, letter, or other identification as shown in the plans. Print circuit identification on the tag with a permanent marker.
4. Use listed compression or screw type pressure connectors, terminal blocks, or split bolt connectors for splicing as specified in DMS 11040. Use hot melt adhesive tape to fill the gap and seal the ends of heat shrink tubing. Provide UL listed gel-filled insulating splice covers. Splicing materials, insulating materials, breakaway disconnects, splice covers, and fuse holders are subsidiary to various bid items.

B. CONSTRUCTION METHODS

1. Use only a flat, high tensile strength polyester fiber pull tape for pulling conductors through the conduit system. After installing conductors in conduit, perform conductor pull test. If a conductor cannot be freely pulled, make any needed alterations or repairs at no additional cost to the department. Perform insulation resistance tests in accordance with Item 620. Coordinate with the Engineer to witness the tests.
2. Leave 2 ft. minimum, 3 ft. maximum length for each conductor up to the splice in ground boxes. Leave 3 ft. minimum, 4 ft. maximum length of conductor in ground boxes when pulled through with no splice. Leave 1 ft. minimum, 1.5 ft. maximum length of conductor at enclosures, weatherheads and pole bases.
3. Make splices only in junction boxes, ground boxes, pole bases, or electrical enclosures and use only listed compression or screw type pressure connectors, terminal blocks, or split bolt connectors. Insulate splices with heavy wall heat shrink tubing or gel-filled insulating splice covers to provide a watertight splice. Overlap conductor insulation with heat shrink tubing a minimum of 2 in. past both sides of the splice. Where heat shrink tubing may not shrink sufficiently to provide a watertight seal around the individual conductors, prior to heating the tubing, increase the diameter of the conductor insulation using hot melt adhesive tape to provide a watertight seal between the individual conductors and the heat shrink tubing. Ensure the tape extends past the heat shrink tubing. Use hot melt adhesive tape to fill the gap and seal the ends of heat shrink tubing. Heat shrink tubing that appears to have been burned, or overheated, is considered defective and must be replaced.
4. Size and install gel-filled insulating splice covers according to manufacturer's specifications when used in place of heat shrink tubing.
5. Wire nuts with factory applied waterproof sealant may be used for 8 AWG or smaller conductors in above ground junction boxes, but not in pole bases or ground boxes. Install wire nuts in an upright position to prevent the accumulation of water.
6. Support conductors in illumination poles with a J-hook at the top of the pole.
7. When terminating conductors, remove the insulation and jacketing material without nicking the individual strands of the conductor. Conductors with nicked individual conductor strands or removed strands will be considered damaged.
8. Replace conductors and cables that are damaged beyond repair or that fail an insulation resistance test at no additional cost to the department.
9. Do not repair damaged conductors with duct tape, electrical tape, or wire nuts. Use only approved splicing methods.
10. Do not terminate more than one conductor under a single connector, unless the connector is rated for multiple conductors. Do not exceed the pressure connector's listing for maximum number and size of conductors allowed.
11. Install breakaway connectors on conductors bid under Item 620 whenever those conductors pass through a breakaway support device. Follow manufacturer's instructions when terminating conductors to breakaway connectors. Properly torque threaded connections. Proper terminations are critical to the safe operation of breakaway devices. Trim waterproofing boots on breakaway connectors to fit snugly around the conductor to ensure waterproof connection. Only one conductor may enter a single opening in a boot. Provide waterproof boots with the correct number of openings. Leave unused openings factory sealed. Use prequalified breakaway connectors as shown on the MPL.
12. Provide and install a separate stranded equipment grounding conductor (EGC) in all conduits that contain circuit wiring of 50 volts or more. Unless shown elsewhere, size the EGC to be the same size as the largest current carrying conductor contained in the conduit. Ensure all EGCs are bonded together at every accessible location. For traffic signal installations, provide a minimum size 8 AWG EGC. The EGC is paid for under Item 620.

C. TEMPORARY WIRING

1. Install temporary conductors and electrical equipment in accordance with the NEC article "Temporary Installations" and Department standard sheets.
2. Provide a ground fault circuit interrupter (GFCI) for power outlets for portable electrical equipment, power tools, ice machines, ice storage bins and refrigerators located outdoors at grade. GFCI may be any one of the following: molded cord and plug set, receptacle, or circuit breaker type.
3. Use listed wire nuts with factory applied sealant for temporary wiring where approved.
4. Enclose conductor splices within a listed enclosure or ground box, or ensure the splices are more than 10 ft. above grade vertically and more than 5 ft. horizontally from any metal structure. Where installing temporary conductors in areas subject to vehicle traffic or mobile construction equipment, ensure the vertical clearance to ground is at least 18 ft. when measured at the lowest point. Ground messenger wires that support power conductors in conformance with the NEC.
5. Protect and when necessary repair any existing electrical conduits uncovered during the construction process in a timely manner and in conformance with the NEC.

GROUND RODS & GROUNDING ELECTRODES

A. MATERIAL INFORMATION

1. Provide and install a grounding electrode at electrical services. Provide ground rods according to DMS 11040 and the plans. Larger diameter or longer length rods may be called for in some specific locations, see the individual plans sheets. Concrete encased grounding electrodes may be called for in specific locations including electrical service, see individual plan sheets.

B. CONSTRUCTION METHODS

1. Furnish auxiliary ground rods for lightning protection and install in soil, concrete, or both, as called for in the plans. For ground rods installed in concrete, ensure the connection of the conductor to the ground rod is readily accessible for inspection or repairs. For ground rods installed in soil, ensure that the upper end is between 2 to 4 in. below finished grade.
2. Do not place ground rods in the same drilled hole as a timber pole.
3. Install ground rods so the imprinted part number is at the upper end of the rod.
4. Remove all non-conductive coatings such as concrete splatter from the rod at the clamp location.
5. Route all conductors as short and straight as possible for connection to lightning protection ground rods. When a bend is required, ensure a minimum radius bend of four inches for these conductors.
6. Unless otherwise called for in the plans, protect grounding electrode conductors with non-metallic conduit. When protecting grounding electrode conductors with metal conduit, provide and install a grounding type bushing and properly sized bonding jumper on each end of the metal conduit.
7. Written authorization is required before installing a ground rod in a horizontal trench for rocky soil or a solid rock bottom.

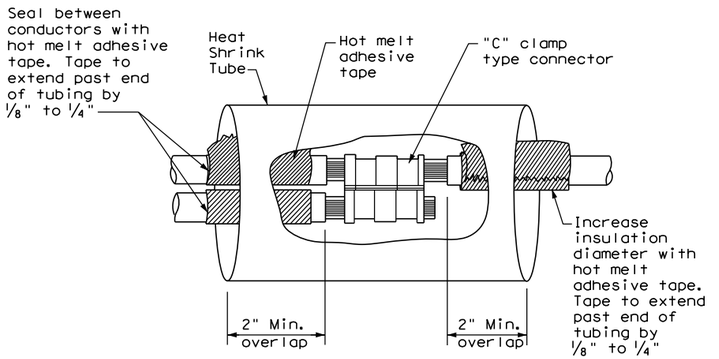

SPLICE OPTION 1
Compression Type

SPLICE OPTION 2
Split Bolt Type

SPLICE OPTION 3
Listed Screw Type

Texas Department of Transportation

Traffic Operations Division Standard

ELECTRICAL DETAILS CONDUCTORS

ED(3)-14

FILE:	ed3-14.dgn	DN: TxDOT	CK: TxDOT	DW: TxDOT	CK: TxDOT
© TxDOT	October 2014	CONT	SECT	JOB	HIGHWAY
REVISIONS					
		DIST	COUNTY		SHEET NO.
					319

71C

DISCLAIMER:
The use of this standard is governed by the "Texas Engineering Practice Act". No warranty of any kind is made by TxDOT for any purpose whatsoever. TxDOT assumes no responsibility for the conversion of this standard to other formats or for incorrect results or damages resulting from its use.

DATE: 3/11/2025 5:21:07 PM
FILE: G:\TxDC\Projects\City_Georgetown\10767-00 Shell Road\03_CADD\01_Shts\ed4-14.dgn

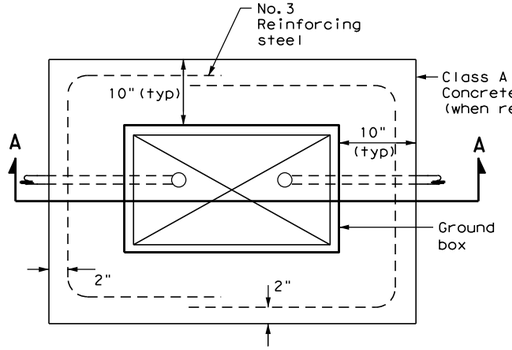

PLAN VIEW

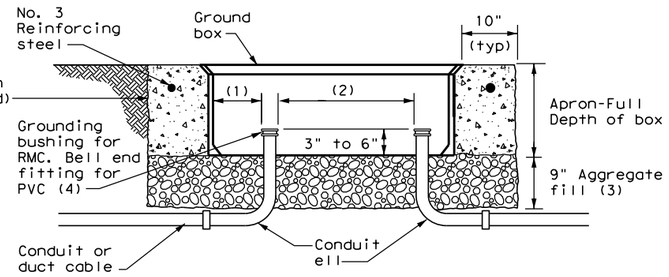

SECTION A - A

APRON FOR GROUND BOX

(1) Uniformly space ends of conduits within the ground box. Position ends of conduits so that ground box walls do not interfere with the installation of grounding bushings or bell end fittings.

(2) Maintain sufficient space between conduits to allow for proper installation of bushing.

(3) Place aggregate under the box, not in the box. Aggregate should not encroach on the interior volume of the box.

(4) Install a grounding bushing on the upper end of all RMC terminating in a ground box. Ground RMC elbows when any part of the elbow is less than 18 in. below the bottom of the ground box. Install a PVC bushing or bell end fitting on the upper end of all PVC conduits terminating in a ground box.

GROUND BOX DIMENSIONS	
TYPE	OUTSIDE DIMENSIONS (INCHES) (Width x Length X Depth)
A	12 X 23 X 11
B	12 X 23 X 22
C	16 X 29 X 11
D	16 X 29 X 22
E	12 X 23 X 17

GROUND BOX COVER DIMENSIONS								
TYPE	DIMENSIONS (INCHES)							
	H	I	J	K	L	M	N	P
A, B & E	23 1/4	23	13 3/4	13 1/2	9 7/8	5 1/8	1 3/8	2
C & D	30 1/2	30 1/4	17 1/2	17 1/4	13 1/4	6 3/4	1 3/8	2

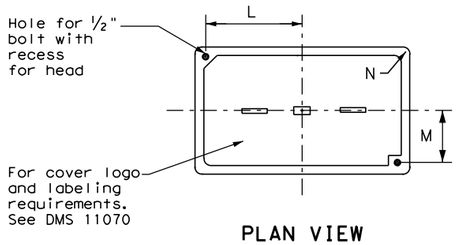

PLAN VIEW

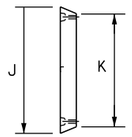

END

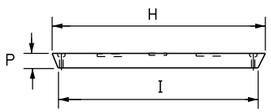

SIDE

GROUND BOX COVER

GROUND BOXES

A. MATERIALS

1. Provide polymer concrete ground boxes measuring 16x30x24 in. (WxLxD) or smaller in accordance with Departmental Material Specification (DMS) 11070 "Ground Boxes" and Item 624 "Ground Boxes."

2. Provide Type A, B, C, D, and E ground boxes as shown in the plans, and as listed on the Material Producers List (MPL) on the Department web site under "Roadway Illumination and Electrical Supplies," Item 624.

3. Ensure ground box cover is correctly labeled in accordance with DMS 11070.

4. Provide larger ground boxes in accordance with Item 624 and as shown in the plans.

B. CONSTRUCTION METHODS

1. Remove all gravel and dirt from conduit. Cap all conduits prior to placing aggregate and setting ground box. Provide Grade 3 or 4 coarse aggregate as shown on Table 2 of Item 302 "Aggregates for Surface Treatments." Ensure aggregate bed is in place and at least 9 inches deep, prior to setting the ground box. Install ground box on top of aggregate.

2. Cast ground box aprons in place. Reinforcing steel may be field bent. Ensure the depth of concrete for the apron extends from finished grade to the top of the aggregate bed under the box. Ground box aprons, including concrete and reinforcing steel, are subsidiary to ground boxes when called for by descriptive code.

3. Keep bolt holes in the box clear of dirt. Bolt covers down when not working in ground boxes.

4. Install all conduits and ells in a neat and workmanlike manner. Uniformly space conduits so grounding bushings and bell end fittings can easily be installed.

5. Temporarily seal all conduits in the ground box until conductors are installed.

6. Permanently seal conduits immediately after the completion of conductor installation and pull tests. Permanently seal the ends of all conduits with duct seal, expandable foam, or other method as approved. Do not use duct tape as a permanent conduit sealant. Do not use silicone caulk as a sealant.

7. When a ground rod is present in a ground box, bond all equipment grounding conductors together and to the ground rod with listed connectors.

8. When a type B or D ground box is stacked to meet volume requirements, it is allowable to cut an appropriately sized hole for conduit entry in the side wall at least 18 inches below grade.

9. If an existing ground box in the contract has a metal cover, bond the cover to the equipment grounding conductor with a 3 ft. long stranded bonding jumper the same size as the grounding conductor. The bonding jumper is subsidiary to various bid items. Verify existing ground boxes with metal covers are shown on the plans, with notes fully describing the work required.

10. If other ground boxes with metal covers are within the project limits but are not part of the contract, the Engineer may direct the Contractor to bond the metal covers, identifying the specific boxes in writing. This work will be paid for separately.

11. Bond metal ground box covers to the grounding conductor with a tank ground type lug.

Texas Department of Transportation

Traffic Operations Division Standard

ELECTRICAL DETAILS
GROUND BOXES

ED(4)-14

FILE: ed4-14.dgn	DN: TxDOT	CK: TxDOT	DW: TxDOT	CK: TxDOT
©TxDOT October 2014	CONT	SECT	JOB	HIGHWAY
REVISIONS				
	DIST	COUNTY		SHEET NO.
				320

71D

DISCLAIMER:
The use of this standard is governed by the "Texas Engineering Practice Act". No warranty of any kind is made by TxDOT for any purpose whatsoever. TxDOT assumes no responsibility for the conversion of this standard to other formats or for incorrect results or damages resulting from its use.

DATE: 3/11/2025 5:21:07 PM
FILE: G:\TxDOT Projects\City_Georgetown\10767-00 Shell Road\03_CADD\01_Shts\ED5-14ED5-14.dgn

ELECTRICAL SERVICES NOTES

1. Provide new materials. Ensure installation and materials comply with the applicable provisions of the National Electrical Code (NEC) and National Electrical Manufacturers Association (NEMA) standards. Ensure material is Underwriters Laboratories (UL) listed. Provide and install electrical service conduits, conductors, disconnects, contactors, circuit breaker panels, and branch circuit breakers as shown on the Electrical Service Data chart in the plans. Faulty fabrication or poor workmanship in material, equipment, or installation is justification for rejection. Where manufacturers provide warranties and guarantees as a customary trade practice, furnish these to the State.

2. Provide electrical services in accordance with Electrical Details standard sheets, Departmental Material Specification (DMS) 11080 "Electrical Services,"DMS 11081 "Electrical Services-Type A," DMS 11082 "Electrical Services-Type C," DMS 11083 "Electrical Services-Type D," DMS 11084 "Electrical Services-Type T," DMS 11085 "Electrical Services-Pedestal (PS)", and Item 628 "Electrical Services" of the Standard Specifications. Provide electrical service types A, C, and D, as listed on the Material Producers List (MPL) on the Department web site under "Roadway Illumination and Electrical Supplies," Item 628. Provide other service types as detailed on the plans.

3. Provide all work, materials, services, and any incidentals needed to install a complete electrical service as specified in the plans.

4. Coordinate with the Engineer and the utility provider for metering and compliance with utility requirements. Primary line extensions, connection charges, meter charges, and other charges by the utility company to provide power to the location are paid for in accordance with Item 628. Get approval for the costs associated with these charges prior to engaging the utility company to do the work. Consult with the utility provider to determine costs and requirements, and coordinate the work as approved.

5. The enclosure manufacturer will provide Master Lock Type 2 with brass tumblers keyed #2195 for all custom electrical enclosures. Installing Contractor is to provide Master Lock #2195 Type 2 with brass tumblers for "off the shelf" enclosures. Master Lock #2195 keys and locks become property of the State. Unless otherwise approved, do not energize electrical service equipment until locks are installed.

6. Enclosures with external disconnects that de-energize all equipment inside the enclosure do not need a dead front trim. Protect incoming line terminations from incidental contact as required by the NEC.

7. When galvanized is specified for nuts, screws, bolts or miscellaneous hardware, stainless steel may be used.

8. Provide wiring and electrical components rated for 75°C. Provide red, black, and white colored XHHW service entrance conductors of minimum size 6 American Wire Gauge (AWG). Identify size 6 AWG conductors by continuous color jacket. Identify electrical conductors sized 4 AWG and larger by continuous color jacket or by colored tape. Mark at least 6 inches of the conductor's insulation with half laps of colored tape, when identifying conductors. Ensure each service entrance conductor exits through a separately bushed non-metallic opening in the weatherhead. The lengths of the conductors outside the weatherhead are to be 12 inches minimum, 18 inches maximum, or as required by utility.

9. All electrical service conduit and conductors attached to the electrical service including the riser or the elbow below ground are subsidiary to the electrical service. For an underground utility feed, all service conduit and conductors after the elbow, including service conduit and conductors for the utility pole riser when furnished by the Contractor, will be paid for separately.

10. Provide rigid metal conduit (RMC) for all conduits on service, except for the ½ in. PVC conduit containing the electrical service grounding electrode conductor. Size the service entrance conduit as shown in the plans. Ensure conduit for branch circuit entry to enclosure is the same size as that shown on the layout sheets for branch circuit conduit. Extend all rigid metal conduits a minimum of 6 inches underground and then couple to the type and schedule of the conduit shown on the layout for that particular branch circuit. Install a grounding bushing on the RMC where it terminates in the service enclosure.

11. Use of liquidtight flexible metal conduit (LFMC) is allowed between the meter and service enclosure when they are mounted 90 to 180 degrees to each other. Size the LFMC the same size as service entrance conduit. LFMC must not exceed 3 feet in length. Strap LFMC within 1 foot of each end. LFMC less than 12 inches in length need not be strapped. Each end of LFMC must have a grounding bushing or be terminated with a grounding fitting. The LFMC must contain a grounded (neutral) conductor. Ensure any bend in LFMC never exceeds 180 degrees. A pull test is required on all installed conductors, with at least six inches of free conductor movement demonstrated to the satisfaction of the Engineer.

12. Ensure all mounting hardware and installation details of services conform to utility company specifications.

13. For all electrical service enclosures listed under Item 628 on the MPL, the UL 508 enclosure manufacturers will prepare and submit a schematic drawing unique to each service. Before shipment to the job site, place the applicable laminated schematic drawings and the laminated plan sheet showing the electrical service data chart used to build the enclosure in the enclosure's data pocket. The installing contractor will copy and laminate the actual project plan sheets detailing all equipment and branch circuits supplied by that service. The laminated plan sheets are to be placed in the service enclosure's document pocket. Reduce 11 in. x 17 in. plan sheets to 8 ½ in. x 11 in. before laminating. If the installation differs from the plan sheets, the installing contractor is to redline plan sheets before laminating.

14. When providing an "Off The Shelf" Type D or Type T service, provide laminated plan sheets detailing equipment and branch circuits supplied by that service. Reduce 11 in. x 17 in. plan sheets to 8 ½ in. x 11 in before laminating. Deliver these drawings before completion of the work to the Engineer, instead of placing in enclosure that has no door pocket.

15. Do not install conduit in the back wall of a service enclosure where it would penetrate the equipment mounting panel inside the enclosure. Provide grounding bushings on all metal conduits, and terminate bonding jumpers to grounding bus. Grounding bushings are not required when the end of the metal conduit is fitted with a conduit sealing hub or threaded boss, such as a meter base hub.

SERVICE ASSEMBLY ENCLOSURE

1. Provide threaded hub for all conduit entries into the top of enclosure.

2. Type galvanized steel (GS) enclosures may be used for Type C panelboards and for Type D and T services that do not use an enclosure mounted photocell or lighting contactor. Provide GS enclosures in accordance with DMS 11080, 11082, 11083, and 11084.

3. Provide aluminum (AL) and stainless steel (SS) enclosures for Types A, C, and D in accordance with DMS 11080, 11081, 11082, 11083, and 11084. Do not paint stainless steel.

4. Provide pedestal service (PS) enclosures in accordance with ED(9) and DMS 11080 and 11085. Do not provide GS pedestal services. If GS is shown in the PS descriptive code, provide an AL enclosure.

MAIN DISCONNECT & BRANCH CIRCUIT BREAKERS

1. Field drill flange-mounted remote operator handle if needed, to ensure handle is lockable in both the "On" and "Off" positions.

2. When the utility company provides a transformer larger than 50 KVA, verify that the available fault current is less than the circuit breaker's ampere interrupting capacity (AIC) rating and provide documentation from the electric utility provider to the Engineer.

PHOTOELECTRIC CONTROL

1. Provide photocell as listed on the MPL. Move, adjust, or shield the photocell from stray or ambient night time light to ensure proper operation. Mount photocell facing north when practical. Mount top of pole photocells as shown on Top Mounted Photocell Detail.

* ELECTRICAL SERVICE DATA

Elec. Service ID	Plan Sheet Number	Electrical Service Description	Service Conduit **Size	Service Conductors No./Size	Safety Switch Amps	Main Ckt. Bkr. Pole/Amps	Two-Pole Contractor Amps	Panelbd/ Loadcenter Amp Rating	Branch Circuit ID	Branch Ckt. Bkr. Pole/Amps	Branch Circuit Amps	KVA Load
SB 183	289	ELC SRV TY A 240/480 100(SS)AL(E)SF(U)	2"	3/#2	100	2P/100	100	N/A	Lighting NB	2P/40	26	28.1
									Lighting SB	2P/40	25	
									Underpass	1P/20	15	
NB Access	30	ELC SRV TY D 120/240 060(NS)SS(E)TS(O)	1 ¼"	3/#6	N/A	2P/60		100	Sig. Controller	1P/30	23	5.3
							30		Luminaires	2P/20	9	
									CCTV	1P/20	3	
2nd & Main	58	ELC SRV TY T 120/240 000(NS)GS(N)SP(O)	1 ¼"	3/#6	N/A	N/A	N/A	70	Flashing Beacon 1	1P/20	4	1.0
									Flashing Beacon 2	1P/20	4	

* Example only, not for construction. All new electrical services must have electrical service data chart specific to that service as shown in the plans.

** Verify service conduit size with utility. Size may change due to utility meter requirements. Ensure conduit size meets the National ELectrical Code.

EXPLANATION OF ELECTRICAL SERVICE DESCRIPTIVE CODE

ELEC SERV TY X XXX/XXX XXX (XX) XX (X) XX (X)

- Schematic Type
- Service Voltage V / V
- Disconnect Amp Rating
  000 indicates main lug only/
  Typically Type T
- (SS)= Safety Switch Ahead of Meter-Check with Utility
  (NS)= No safety Switch Ahead of Meter-Check with Utility
- Enclosure Type
  GS= Galvanized steel("off the shelf")
  SS= Stainless steel(Custom Enclosure)See MPL
  AL= Aluminum (Custom Enclosure)See MPL
- Photocell Mounting Location
  (E)= Inside Service/Enclosure Mounted
  (T)= Top of pole
  (L)= Luminaire mounted
  (N)= None/No Photocell or Lighting Contactor Required
- Service Support Type
  GC= Granite concrete
  OC= Other concrete
  TP= Timber pole
  SP= Steel pole
  SF= Steel frame
  OT= Pole by others or paid for separately
  EX= Existing pole
  TS= Service on traffic signal pole
  PS= Pedestal Service
- O= Overhead Service Feed from Utility
  U= Underground Service Feed from Utility

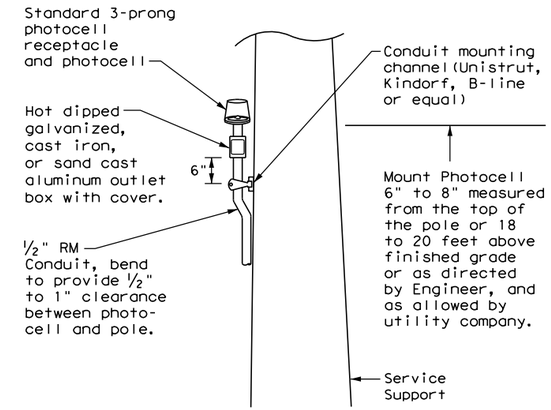

TOP MOUNTED PHOTOCELL

Install conduit strap maximum 3 feet from box. 5 foot maximum spacing between straps supporting conduit.

Texas Department of Transportation

Traffic Operations Division Standard

ELECTRICAL DETAILS SERVICE NOTES & DATA

ED(5)-14

FILE: ed5-14.dgn	DN: TxDOT	CK: TxDOT	DW: TxDOT	CK: TxDOT
©TxDOT October 2014	CONT	SECT	JOB	HIGHWAY
REVISIONS				
	DIST	COUNTY		SHEET NO.
				321

71E

DISCLAIMER:
The use of this standard is governed by the "Texas Engineering Practice Act". No warranty of any kind is made by TxDOT for any purpose whatsoever. TxDOT assumes no responsibility for the conversion of this standard to other formats or for incorrect results or damages resulting from its use.

DATE: 3/11/2025 5:21:08 PM
FILE: G:\TXC\Projects\City_Georgetown\10767-00 Shell Road\03_CADD\01_Shts\ed6-14.dgn

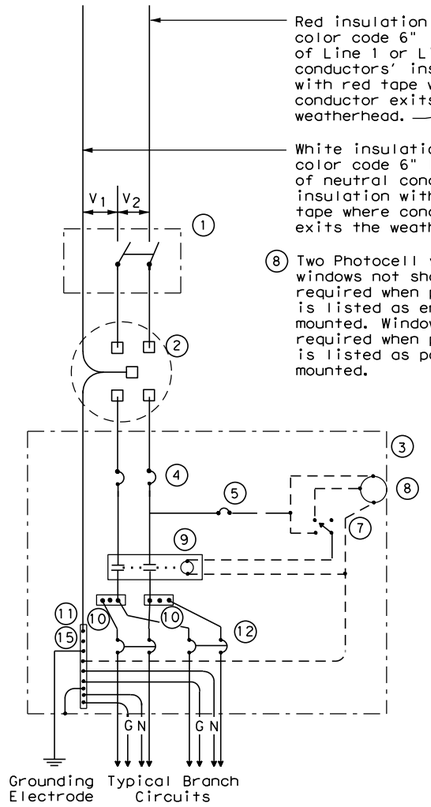

SCHEMATIC TYPE A
THREE WIRE

8 Two Photocell viewing windows not shown but required when photocell is listed as enclosure mounted. Windows not required when photocell is listed as pole top mounted.

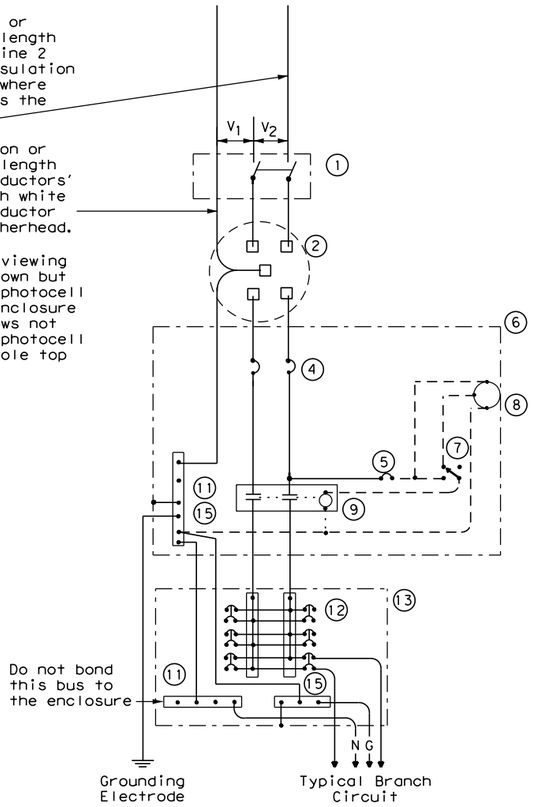

SCHEMATIC TYPE C
THREE WIRE

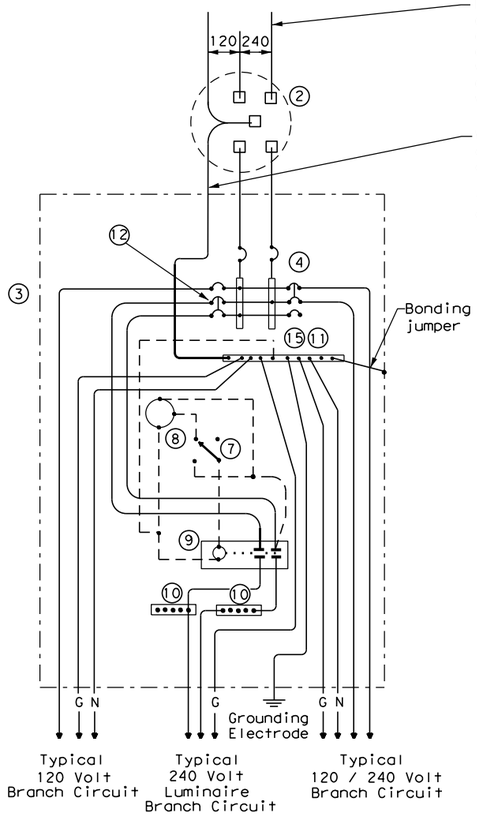

SCHEMATIC TYPE D - CUSTOM
120/240 VOLTS - THREE WIRE

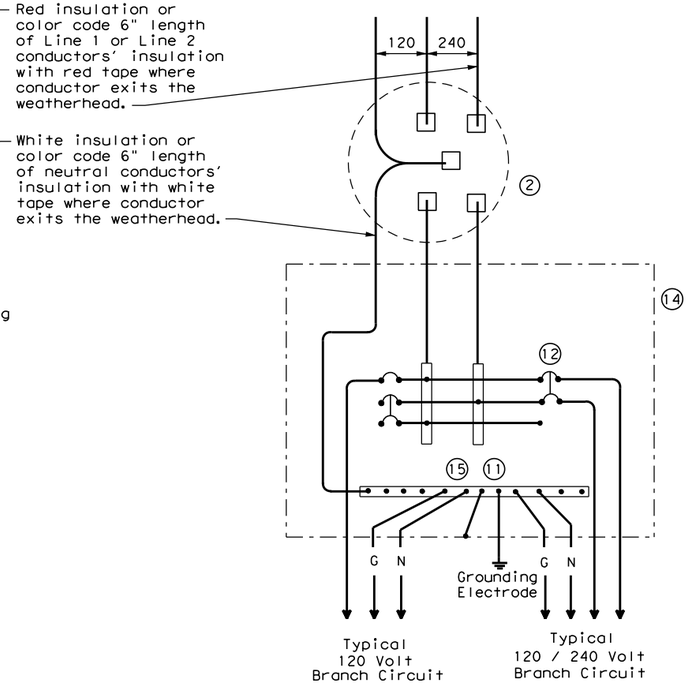

SCHEMATIC TYPE T
120/240 VOLTS - THREE WIRE

Galvanized steel-"Buy Off The Shelf" only. When required install photocell top of the pole or on luminaire only, no lighting contractor will be installed.

WIRING LEGEND	
———	Power Wiring
- - - -	Control Wiring
—N—	Neutral Conductor
—G—	Equipment grounding conductor-always required

SCHEMATIC LEGEND	
1	Safety Switch (when required)
2	Meter (when required-verify with electric utility provider)
3	Service Assembly Enclosure
4	Main Disconnect Breaker (See Electrical Service Data)
5	Circuit Breaker, 15 Amp (Control Circuit)
6	Auxiliary Enclosure
7	Control Station ("H-O-A" Switch)
8	Photo Electric Control (enclosure-mounted shown)
9	Lighting Contactor
10	Power Distribution Terminal Blocks
11	Neutral Bus
12	Branch Circuit Breaker (See Electrical Service Data)
13	Separate Circuit Breaker Panelboard
14	Load Center
15	Ground Bus

Texas Department of Transportation

Traffic Operations Division Standard

ELECTRICAL DETAILS SERVICE ENCLOSURE AND NOTES

ED(6)-14

FILE: ed6-14.dgn	DN: TxDOT	CK: TxDOT	DW: TxDOT	CK: TxDOT
©TxDOT October 2014	CONT	SECT	JOB	HIGHWAY
REVISIONS				
	DIST	COUNTY		SHEET NO.
				322

71F

SUPPORT TYPE STEEL POLE (SP) AND STEEL FRAME (SF)

1. Provide steel pole and steel frame supports as per TxDOT Departmental Material Specification (DMS)11080 "Electrical Services." Mount all equipment and conduit on 12 gauge galvanized steel or stainless steel channel strut, 1 ½ in. or 1 ⅝ in. wide by 1 in. up to 3 ¾ in. deep Unistrut, Kindorf, B-line or equal. Bolt or weld all channel and hardware to vertical members as approved. Do not stack channel. File smooth and paint field cut ends of all channel with zinc-rich paint before installing.

2. Provide poles for overhead service with an eyebolt or similar fitting for attachment of the service drop to the pole in conformance with the electric utility provider's specifications.

3. Provide and install galvanized ¾ in. x 18 in. x 4 in. (dia. x length x hook length) anchor bolts for underground service supports. Provide and install galvanized ¾ in. x 56 in. x 4 in. anchor bolts for overhead service supports. Ensure anchor bolts have 3 in of thread, with 3 ¼ in. to 3 ½ in. of the exposed anchor bolt projecting above finished foundation. Provide and install leveling nuts for all anchor bolts.

4. Bond one of the anchor bolts to the rebar cage with 6 AWG bare stranded copper conductor. Use listed mechanical connectors rated for embedment in concrete. See Inset B.

5. Furnish and install rigid metallic ells in all steel pole and steel frame foundations for all conduits entering the service from underground.

6. Use class C concrete for foundations. Ensure reinforcing steel is Grade 60 with 3" of unobstructed concrete cover.

7. Drill and tap steel poles and frames for ½ in. X 13 UNC tank ground fitting. For steel pole service supports, provide and install tank ground fitting 4 in. to 6 in. below electrical service enclosure. Provide properly sized hole through the bottom of the enclosure for the service grounding electrode conductor. Ensure electrical service grounding electrode conductor is as short and straight as possible from the enclosure to the tank ground fitting. For steel frame service supports, provide and install tank ground fitting on steel frame post. Install service grounding electrode conductor in a non-metallic conduit or tubing from the enclosure to the steel frame post. Connect electrical service grounding electrode conductor to the tank ground fitting. See steel frame and steel pole details and Inset A for more information. Size service entrance conduit and branch circuit conduit as shown in the plans. For underground conduit runs from the electrical service, extend RMC from the service enclosure to an RMC elbow, and then connect the schedule type and size of conduit shown in the plans. Provide and install grounding bushings where RMC terminates in the enclosure. Grounding bushings are not required when RMC is fitted into a sealing hub or threaded boss.

8. If Steel pole or frame is painted, bond each separate painted piece with a bonding jumper attached to a tapped hole.

9. Provide ¼" - 20 machine screws for bonding. Do not use sheet metal screws. Remove all non-conductive material at contact points. Terminate bonding jumpers with listed devices. Install minimum size 6 AWG stranded copper bonding jumpers. Make up all threaded bonding connections wrench tight.

10. Avoid contact of the service drop and service entrance conductors with the metal pole to prevent abrasion of the insulated conductors.

11. Shop drawings are not required for service support structure unless specifically stated elsewhere or directed by the Engineer.

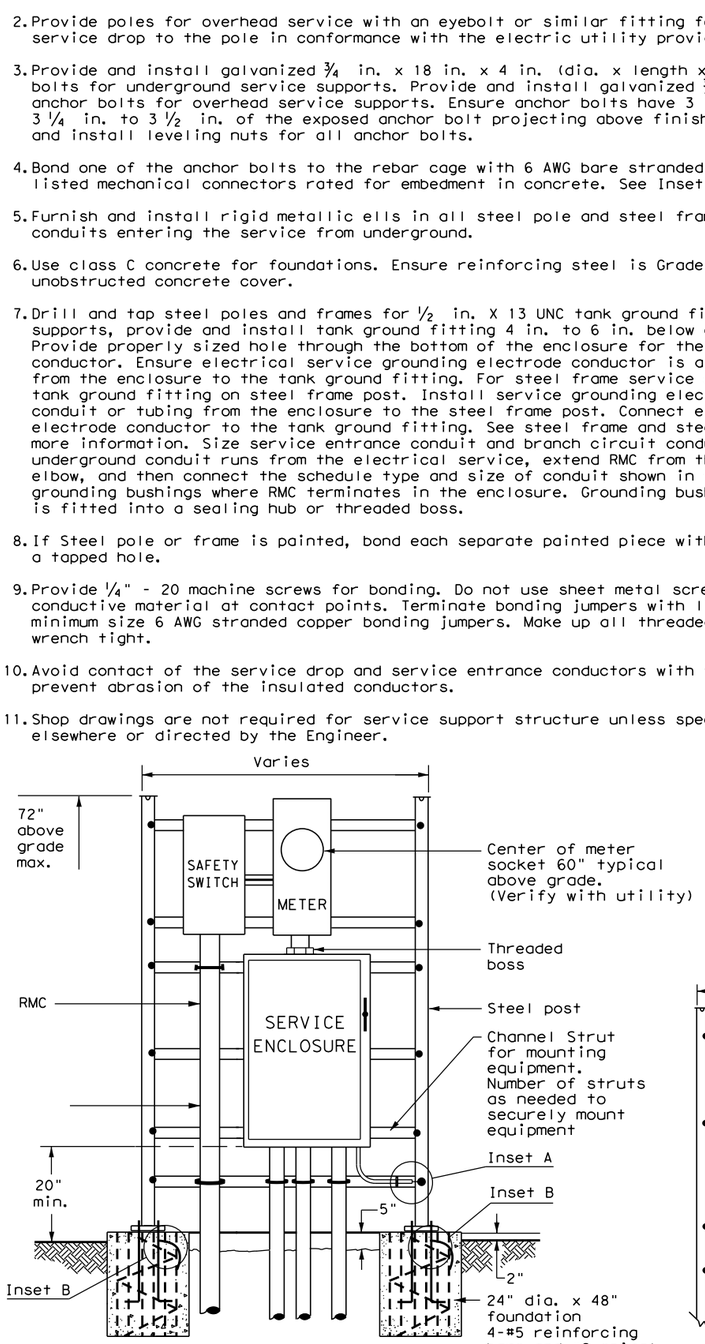

WITH SAFETY SWITCH

FRONT VIEW

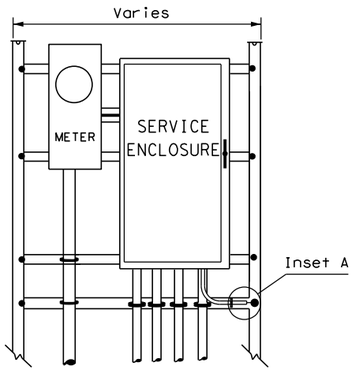

WITHOUT SAFETY SWITCH

SERVICE SUPPORT TYPE SF(U) - UNDERGROUND SERVICE

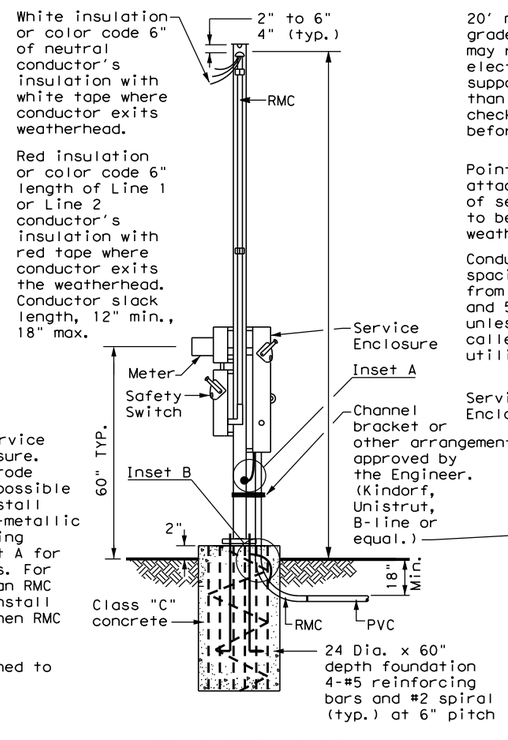

WITH SAFETY SWITCH

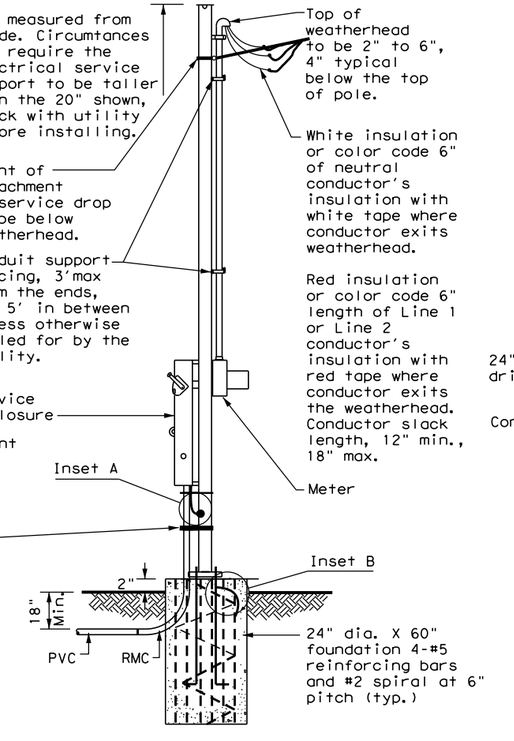

WITHOUT SAFETY SWITCH

SERVICE SUPPORT TYPE SP (O) - OVERHEAD SERVICE

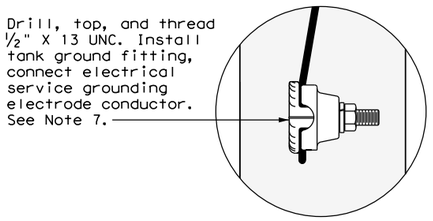

FRONT VIEW

INSET A

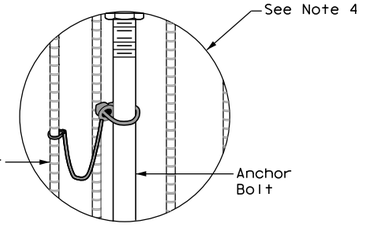

INSET B

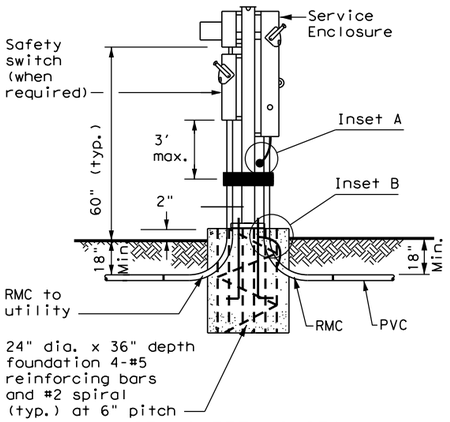

WITH SAFETY SWITCH

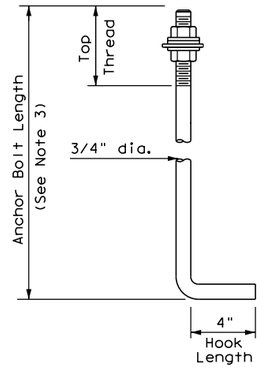

HOOKED ANCHOR DETAIL

SERVICE SUPPORT TYPE SP(U) - UNDERGROUND SERVICE

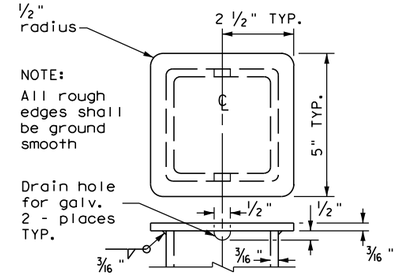

POLE TOP PLATE

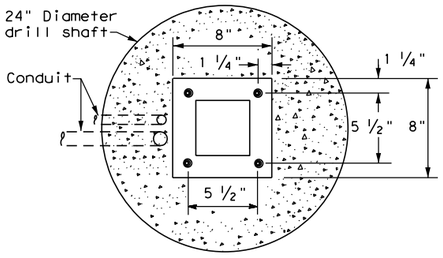

BASE PLATE DETAIL

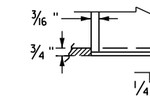

BOTTOM OF POLE

SERVICE SUPPORT TYPE SF & SP

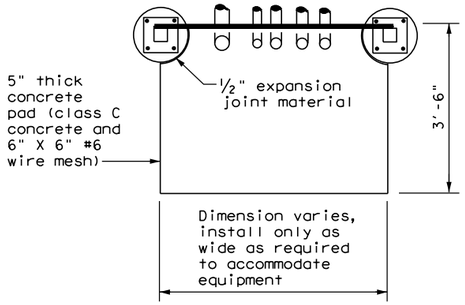

TOP VIEW

SERVICE SUPPORT TY SF (O) & SF (U)

Texas Department of Transportation

Traffic Operations Division Standard

ELECTRICAL DETAILS SERVICE SUPPORT TYPES SF & SP

ED(7)-14

FILE: ed7-14.dgn	DN: TxDOT	CK: TxDOT	DW: TxDOT	CK: TxDOT
©TxDOT October 2014	CONT	SECT	JOB	HIGHWAY
REVISIONS				
	DIST	COUNTY		SHEET NO.
				323

71G

DISCLAIMER:
The use of this standard is governed by the "Texas Engineering Practice Act". No warranty of any kind is made by TxDOT for any purpose whatsoever. TxDOT assumes no responsibility for the conversion of this standard to other formats or for incorrect results or damages resulting from its use.

DATE: 3/11/2025 5:21:09 PM
FILE: G:\TXC\Projects\City_Georgetown\10767-00 Shell Road\03_CADD\01_Shts\ED-STONE-SXXX(ed7-14).dgn

TRAFFIC SIGNAL NOTES

1. Do not pass luminaire conductors through the signal controller cabinet.
2. Include an equipment grounding conductor in all conduits throughout the electrical system. Bond all exposed metal parts to the grounding conductor.
3. Provide roadway luminaires, when required, in accordance with the material and construction sections of Item 610, "Roadway Illumination Assemblies," except for performance testing of luminaires. Test installed roadway luminaires for proper operation as a part of the associated traffic signal system test.
4. If internally illuminated street name signs are approved for use, ground the fixture to the pole with a 12 AWG green XHHW conductor.
5. Bond anchor bolts to rebar cage in two locations using #3 bars or 6 AWG stranded copper conductors. Use listed mechanical connectors rated for embedment in concrete. See TXDOT standard TS-FD for further details.
6. Drill and tap signal poles for ½ in. X 13 UNC tank ground fitting. Provide and install tank ground fitting 4 in. to 6 in. directly below electrical service enclosure. Provide properly sized hole through the bottom of the enclosure for the service grounding electrode conductor. Connect the electrical service grounding electrode conductor to the tank ground fitting. Ensure electrical service grounding electrode conductor is as short and straight as possible from the enclosure to the tank ground fitting. See Inset A detail for further information. Size service entrance conduit and branch circuit conduit as shown in the plans.
7. Mount electrical service enclosure and meter to signal pole with stainless steel bands. Ensure bands are a minimum width of ¾ in. Secure enclosures to bands using two-bolt brackets. Install brackets near top and bottom of each enclosure. Install properly sized stainless steel washers on each bolt in the enclosure. Band or drill and tap properly sized stand-off straps to signal pole for attaching conduit.
8. Conduct pull tests and insulation resistance tests on all illumination and power conductors as required in Item 620 "Electrical Conductors" and ED(3). To prevent electronics damage, do not conduct insulation resistance tests on traffic signal cables after termination.
9. Lock all enclosures and bolt down all ground box covers before applying power to the signal installation.
10. Terminate conduits entering the top of enclosures with a conduit-sealing hub or threaded boss such as meter hub. Install a grounding bushing on all metal conduits not connected to conduit-sealing hub or threaded boss. Bond the grounding bushing to the ground bus with a bonding jumper. Seal all conduits entering enclosures with duct seal or expanding foam. Do not use silicone to seal conduit ends.
11. For all conduits, ensure the burial depth is a minimum of 18". Ensure the minimum burial depth for conduit placed under a roadway is 24".

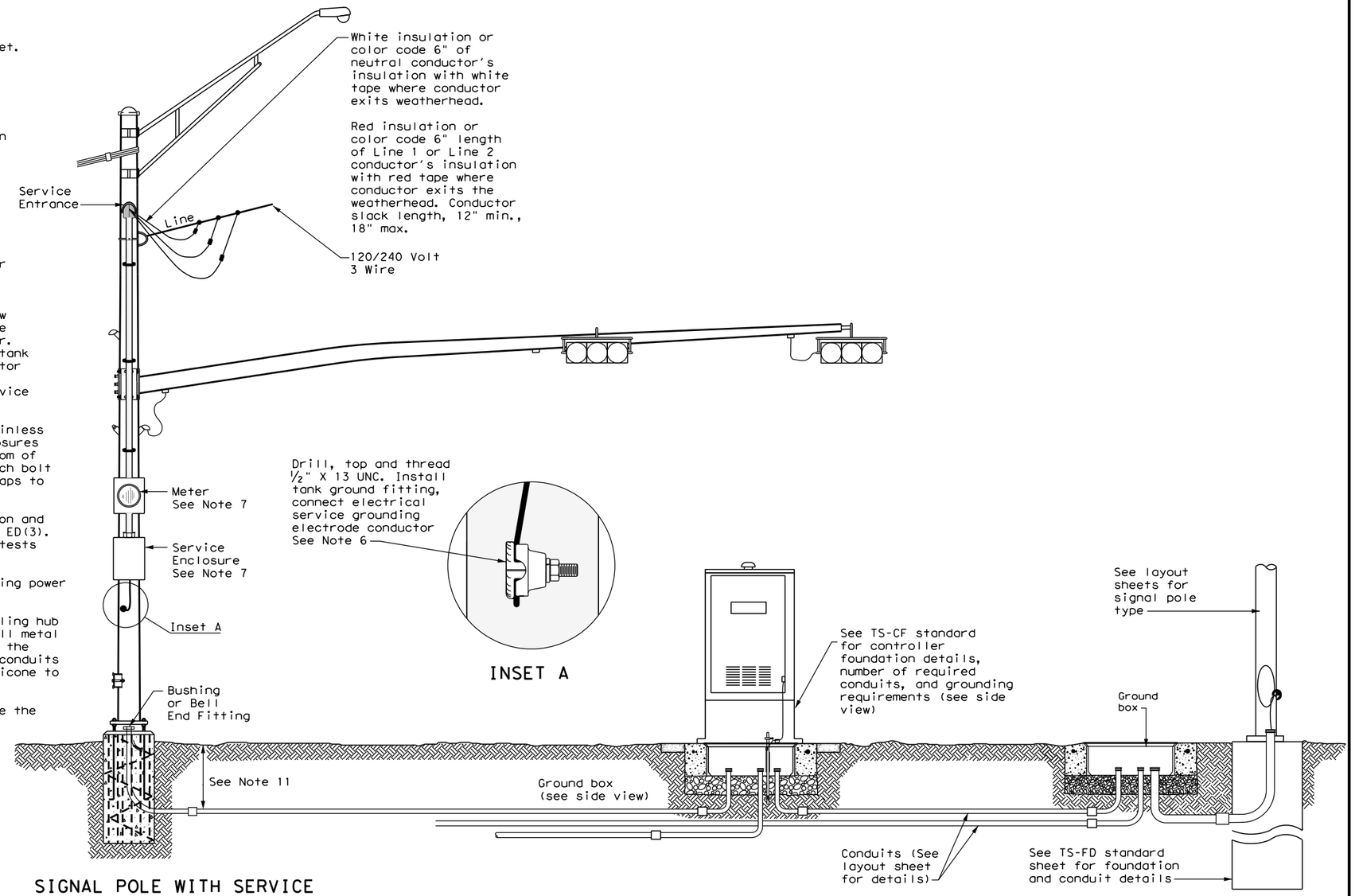

SIGNAL POLE WITH SERVICE

Type T electrical service mounted on signal pole shown as an example. See electrical details, layout sheets, and electrical service data chart for additional details.

SIGNAL CONTROLLER FRONT VIEW

SIGNAL POLE

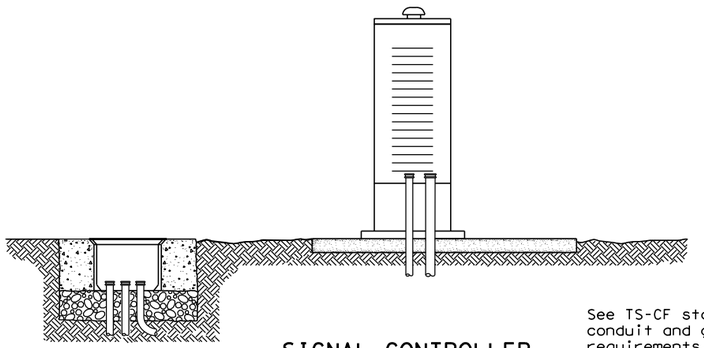

SIGNAL CONTROLLER SIDE VIEW

See TS-CF standard for conduit and grounding requirements. See layout sheets for ground box locations and any additional conduits that are required.

Texas Department of Transportation

Traffic Operations Division Standard

ELECTRICAL DETAILS TYPICAL TRAFFIC SIGNAL SYSTEM DETAILS

ED(8)-14

FILE: ed8-14.dgn	DN: TxDOT	CK: TxDOT	DW: TxDOT	CK: TxDOT
© TxDOT October 2014	CONT	SECT	JOB	HIGHWAY
REVISIONS				
	DIST	COUNTY		SHEET NO.
				324

71H

DISCLAIMER:
The use of this standard is governed by the "Texas Engineering Practice Act". No warranty of any kind is made by TxDOT for any purpose whatsoever. TxDOT assumes no responsibility for the conversion of this standard to other formats or for incorrect results or damages resulting from its use.

DATE: 3/11/2025 5:21:10 PM
FILE: G:\TXC\Projects\City_Georgetown\10767-00 Shell Road\03_CADD\01_Shts\TS-SIGNS\ED8-14.dgn

DISCLAIMER:
The use of this standard is governed by the "Texas Engineering Practice Act". No warranty of any kind is made by TxDOT for any purpose whatsoever. TxDOT assumes no responsibility for the conversion of this standard to other formats or for incorrect results or damages resulting from its use.

DATE: 3/11/2025 5:21:10 PM
FILE: G:\TxDOTProjects\City_Georgetown\10767-00 Shell Road\03_CADD\01_Shts\PS-ED9-14.dgn

PEDESTAL SERVICE NOTES

1. Manufacture pedestal electrical services in accordance with Departmental Material Specifications (DMS)11080 "Electrical Services", 11085 "Electrical Services-Pedestal (PS)" and Item 628 "Electrical Services. "Provide pedestal electrical services as listed on the Material Producers list (MPL) on the Department's web site under "Roadway Illumination and Electrical Supplies," Item 628. Ensure all mounting hardware and installation details of services meet utility company specifications. Contact the local utility company for approval of pedestal details prior to installing the electrical pedestal service. Submit any changes required by the utility company prior to manufacturing the pedestal enclosure.

2. When a meter socket is required, provide a socket with a minimum 100 amp rating that complies with local utility requirements.

3. Provide Class A or C concrete for pedestal service foundations in accordance with Item 420, "Concrete Substructures," except that concrete will not be paid for directly but is considered subsidiary to Item 628.

4. Provide #4 reinforcing steel for foundations in accordance with Item 440, "Reinforcement for Concrete."

5. Install ½ in. X 2 1⁄16 in. minimum length concrete single expansion type anchors for mounting pedestal enclosure to foundation. Anchor location to match mounting holes in each corner of enclosure. Secure each of the four corners of the pedestal enclosure to the anchors in the foundation with a ½ in. galvanized or stainless steel machine thread bolt, a properly sized locknut and a flat washer.

6. Finish top of concrete foundation in a neat and workmanlike manner. If leveling washers are used, ensure no more than ⅛ in. gap at any corner. Do not exceed a maximum dip or rise in the foundation of ⅛ in. per foot. When properly installed, ensure the top of the service enclosure is level front to back and side to side within ¼ in. Repair rocking or movement of the service enclosure at no additional cost to the department.

7. Do not use liquidtight flexible metal conduit (LFMC) on pedestal type services.

8. Ensure all elbows in the foundation are sized as per utility provider's conduit requirements for underground conduit and feeders. PVC extensions may be installed provided the ends of the rigid metal conduits are more than 2 in. below the top of the concrete foundation. Where extension conduits are metal, grounding bushings must be installed with a bonding jumper properly terminated.

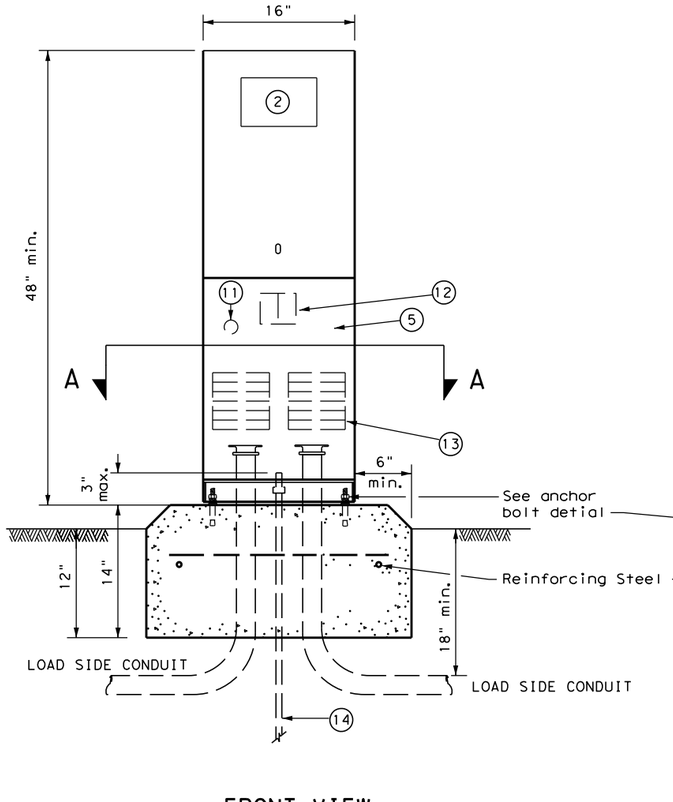

FRONT VIEW

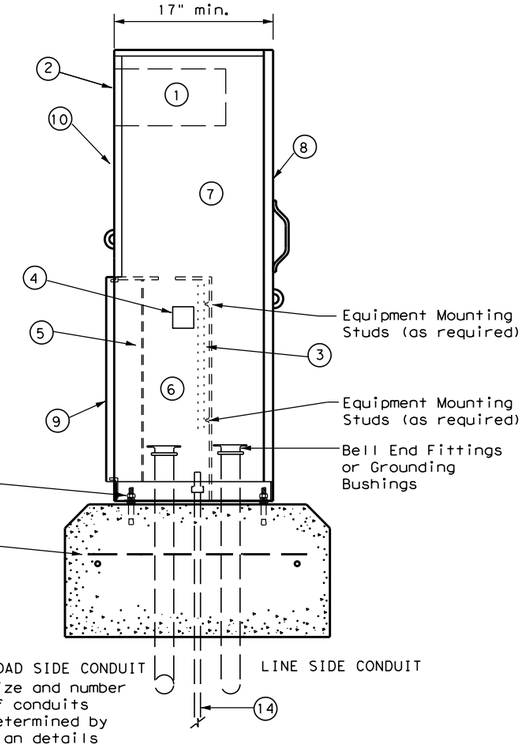

SIDE VIEW

TYPE C shown, TYPE A similar except that TYPE A shall have individual circuit breakers (CB) mounted on an equipment mounting panel. CB Handles shall protrude through hinged deadfront trim.

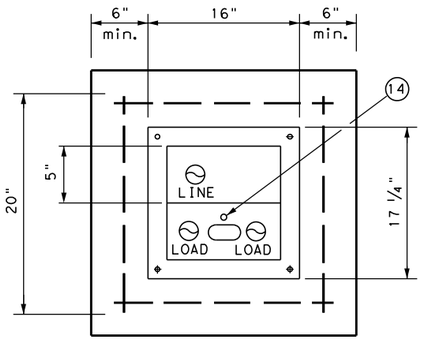

SECTION A-A

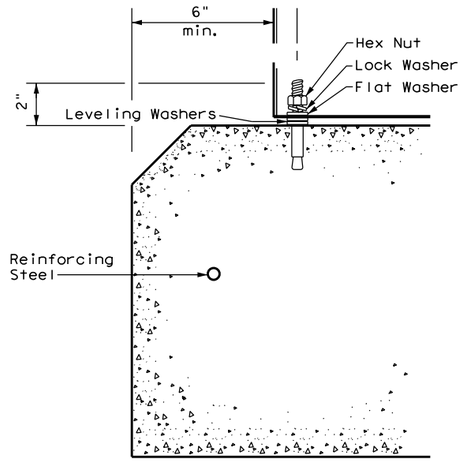

ANCHOR BOLT DETAIL

LEGEND	
1	Meter Socket, (when required)
2	Meter Socket Window, (when required)
3	Equipment Mounting Panel
4	Photo Electric Control Window, (When required)
5	Hinged Deadfront Trim
6	Load Side Conduit Trim
7	Line Side Conduit Area
8	Utility Access Door, with handle
9	Pedestal Door
10	Hinged Meter Access
11	Control Station (H-O-A Switch)
12	Main Disconnect
13	Branch Circuit Breakers
14	Copper Clad Ground Rod - 5/8" X 10'

Texas Department of Transportation

Traffic Operations Division Standard

ELECTRICAL DETAILS
ELECTRICAL SERVICE SUPPORT
PEDESTAL SERVICE TYPE PS
ED(9)-14

FILE: ed9-14.dgn	DN: TxDOT	CK: TxDOT	DW: TxDOT	CK: TxDOT
©TxDOT October 2014	CONT	SECT	JOB	HIGHWAY
REVISIONS				
	DIST	COUNTY		SHEET NO.
				325

71J

DISCLAIMER:
The use of this standard is governed by the "Texas Engineering Practice Act". No warranty of any kind is made by TxDOT for any purpose whatsoever. TxDOT assumes no responsibility for the conversion of this standard to other formats or for incorrect results or damages resulting from its use.

DATE: 3/11/2025 5:21:11 PM
FILE: G:\TxDOT\Projects\City_Georgetown\10767-00 Shell Road\03_CADD\01_Shts\PS-SDHE-SASS-ed10-24.dgn

TIMBER POLE (TP) SERVICE SUPPORT NOTES

1. Ensure electrical service support is a class 5 treated timber pole as per Item 627 "Treated Timber Poles." Embed timber pole to depth required in Item 627.
2. Conduit and electrical conductors attached to the electrical service pole and underground within 12 in. of service pole are not paid for directly but are subsidiary to the electrial service.
3. Install pole-top mounted photocell (T) on north side of pole, or in service enclosure (E) as required. See Electrical Service Data chart in plan set.
4. Gain pole as required to provide flat surface for each channel. Gain timber pole to 5/8 in. max. depth and 1 7/8 in. max. height. Gain pole in a neat and workmanlike manner.
5. Mount meter and service equipment on stainless steel or galvanized channel (Unistrut, Kindorf, or equal). Provide channel sized 1 in. to 3 3/4 in. maximum depth, and 1 1/2 in. to 1 5/8 in. maximum width. File smooth the cut ends of galvanized channel and paint with zinc rich paint before installing on pole. Secure each channel section to timber pole with two galvanized or SS lag bolts, 1/4 in. minimum diameter by 1 1/2 in. minimum length. Use a galvanized or SS flat washer on each lag bolt. Do not stack channel.
6. When excess length must be trimmed from poles, trim from the top end only.

(1) Class 5 pole, height as required

(2) Service drop from utility company (attached below weatherhead)

(3) Service conduit (RMC) and service entrance conductors - One Red, One Black, One White (See Electrical Service Data)

(4) Safety switch (when required)

(5) Meter (when required)

(6) Service enclosure

(7) 6 AWG bare grounding electrode conductor in 1/2 in. PVC to ground rod - extend 1/2 in. PVC 6 in. underground.

(8) 5/8 in. x 8 ft. Copper clad ground rod - drive ground rod to a depth of 2 in. to 4 in. below grade.

(9) RMC same size as branch circuit conduit.

(10) See pole-top mounted photocell detail on ED(5).

(11) When required by the serving utility provide bare 6 AWG copper conductor. Run wire from pole top to butt wrap or copper butt plate. Protect conductor with non-conductive material to a height of 8 ft. above finished grade.

(12) When required by utility, cut top of pole at an angle to enhance rain run off.

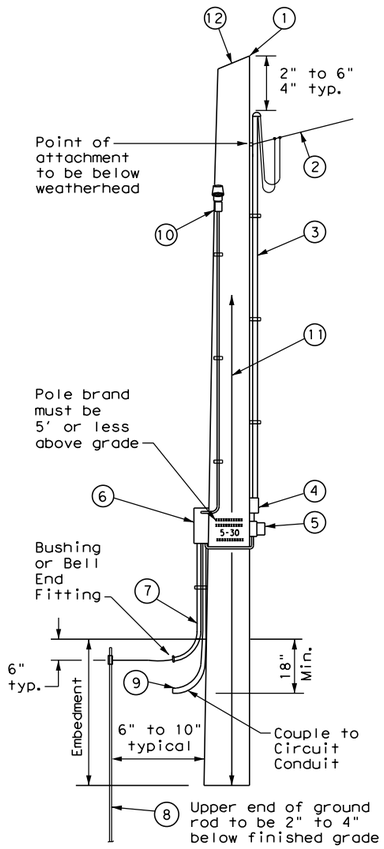

SERVICE SUPPORT TYPE TP (O)

GRANITE CONCRETE (GC) & OTHER CONCRETE (OC) NOTES

Ensure electrical service support structures bid as type Granite Concrete (GC) or Other Concrete (OC) meet the following requirements.

1. Provide GC and OC poles that meet the requirements of DMS 11080 "Electrical Services."
2. Provide prestressed concrete poles suitable for direct embedment into the ground without special foundations.
3. Verify poles are marked as required on DMS 11080. Location of marking should be approximately 4' above final grade. Use the two-point pickup locations when handling pole in horizontal position, and one-point pickup location for use in raising the pole to a vertical position. These marks are small but conspicuous.
4. Embed poles 42 in. or 10% of the length plus 2 ft., whichever is greater.
5. Ensure all installation details of services are in accordance with utility company specifications.
6. Install a one point rack or eye bolt bracket 6 inches to 12 inches below the weatherhead as an overhead service drop anchoring point for the electric utility.
7. Furnish and install galvanized or stainless steel channel strut 1 1/2 in. or 1 5/8 in. wide by 1 in. up to 3 3/4 in. deep (Unistrut, Kindorf, B-line or equal). Attach channel strut with stainless steel concrete anchors (max. 1" depth), square U-bolts or back to back channel strut with long bolts, or other secure mounting as approved by the Engineer. Ensure bolts are galvanized in accordance with ASTM A153. Do not stack channel struts.
8. Backfill the holes thoroughly by tamping in 6 in. lifts. After tamping to grade, place additional backfill material in a 6 inch high cone around the pole to allow for settling. Use material equal in composition and density to the surrounding area. Backfilling will not be paid for directly but is subsidiary to various bid items.

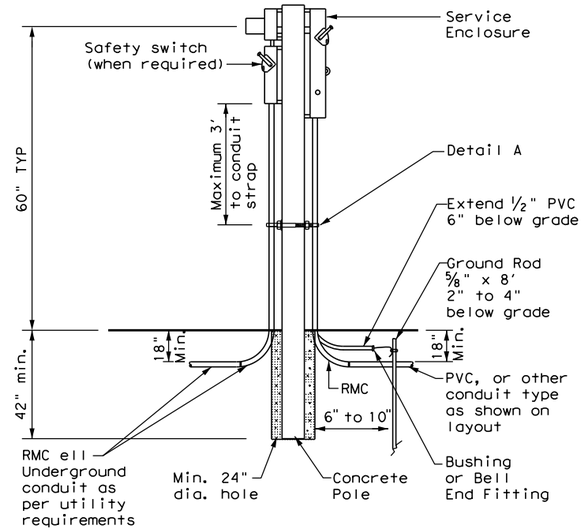

CONCRETE SERVICE SUPPORT
Underground (U)

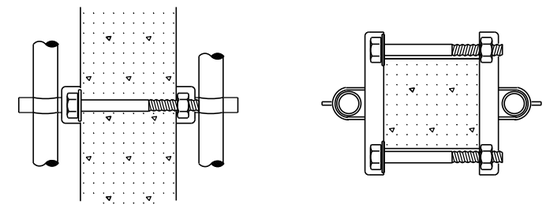

DETAIL A

See Note 7. Before installing channel that has been cut, file sharp edges and paint with zinc-rich paint. Ensure there is no paint splatter on the pole.

CONCRETE SERVICE SUPPORT
Overhead (O)

Texas Department of Transportation

Traffic Operations Division Standard

ELECTRICAL DETAILS SERVICE SUPPORT TYPES GC, OC, & TP

ED(10)-14

FILE: ed10-14.dgn	DN: TxDOT	CK: TxDOT	DW: TxDOT	CK: TxDOT
©TxDOT October 2014 REVISIONS	CONT	SECT	JOB	HIGHWAY
	DIST	COUNTY		SHEET NO.
				326

71K

DISCLAIMER:
The use of this standard is governed by the "Texas Engineering Practice Act". No warranty of any kind is made by TxDOT for any purpose whatsoever. TxDOT assumes no responsibility for the conversion of this standard to other formats or for incorrect results or damages resulting from its use.

DATE: 3/11/2025 5:21:12 PM
FILE: G:\TXC\Projects\City_Georgetown\10767-00 Shell Road\03_CADD\01_Shts\03-SDNE-SYSTEMS\ed09_ed11_ed14_ed16.dgn

DUCT CABLE & HDPE CONDUIT NOTES

1. Provide duct cable in accordance with Departmental Material Specification (DMS) 11060 "Duct Cable" and Item 622 "Duct Cable." Provide duct cable as listed on the Material Producer List (MPL) on the Department web site under "Roadway Illumination and Electrical Supplies" Item 622.

2. Provide High-Density Polyethylene (HDPE) conduit in accordance with DMS 11060 and Item 618, "Conduit." Provide HDPE as listed on the MPL on the Department web site under "Roadway Illumination and Electrical Supplies," Item 618.

3. Supply duct cable with a minimum 2 in. diameter, unless otherwise shown in the plans. Provide duct cable and HDPE conduit as shown by descriptive code or on the plans. Bend duct cable and HDPE conduit as recommended by the manufacturer, with a minimum bending radius of 26 in. for 2 in. duct. Follow manufacturers' recommendations when handling duct cable and HDPE conduit reels and during installation of duct cable and HDPE conduit.

4. Do not splice conductors within duct cable or HDPE conduit. Couple duct cable and HDPE entering a ground box or foundation to a PVC elbow. When galvanized steel RMC elbows are called for in the plans and any portion of the RMC elbow is buried less than 18" from possible contact, ground the RMC elbow.

5. Furnish and install duct cable with factory installed conductors, sized as shown in the plans and as required by the National Electrical Code (NEC). The NEC contains specific requirements for duct cable in Article, "Nonmetallic Underground Conduit with Conductors: Type NUCC."

6. When conduit casing is called for in the plans, extend duct cable or HDPE conduit through the conduit casing in one continuous length without connection to the casing.

7. Seal the ends of duct cable or HDPE conduit with duct seal, expandable foam, or other approved method after completing the pull tests required by Item 622.

8. Provide minimum cover of 24 in. under roadways, 18 in. in other locations, or as shown on the plans.

9. Furnish and install listed fittings to couple duct cable or HDPE conduit to other types of conduit. Duct cable and HDPE conduit may be field-threaded and spliced with PVC or RMC threaded couplings; connected with listed tie-wrap fittings; connected using listed coupling made of HDPE with stainless steel external banding clamps and locking rings; connected with approved electrofusion conduit couplings; or connected using an approved chemical fusion method using an epoxy or adhesive specifically designed for HDPE couplings and connectors all installed in accordance with their manufacturer's instructions. Do not use PVC glue on HDPE. Do not use water pipe fittings, or connect conduit with heat shrink tubing.

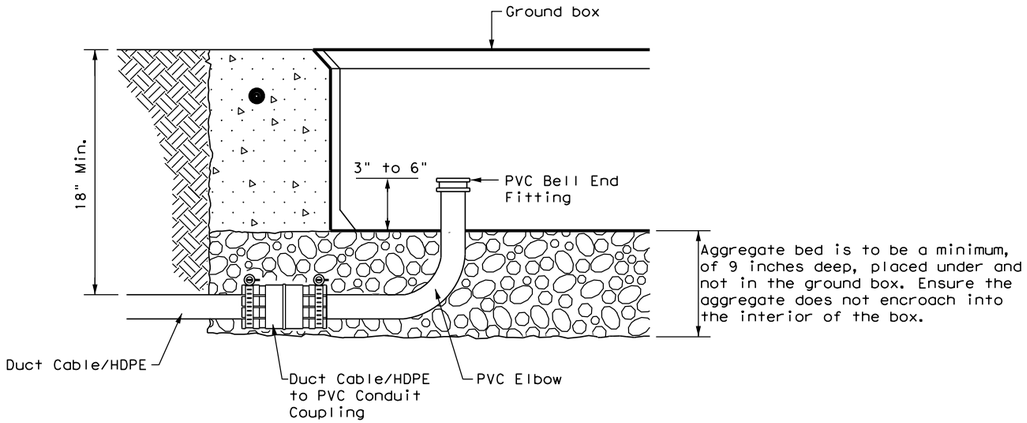

DUCT CABLE/HDPE AT GROUND BOX

When the upper end of an RMC Ell does not enter the ground box, it may be extended with a SCH-40 PVC conduit nipple and bell end, provided there is a minimum of 18" of cover over all parts of the elbow. If not, a rigid extension and ground bushing is required.

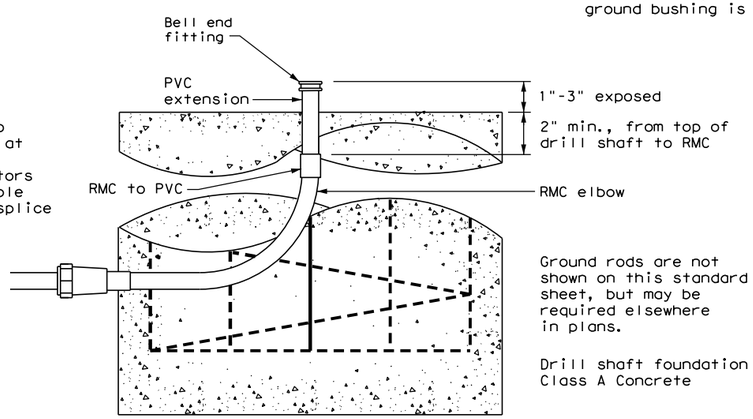

DUCT CABLE / HDPE AT FOUNDATION

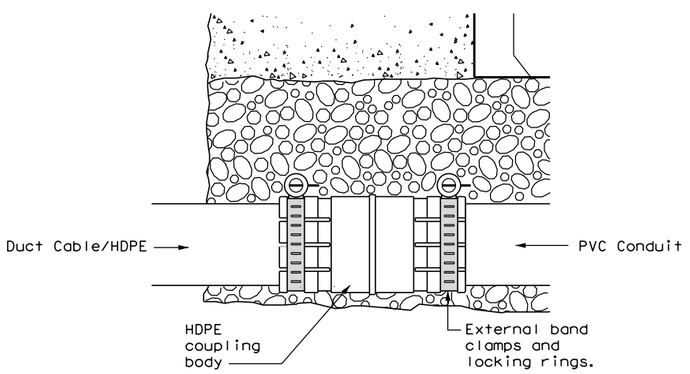

DUCT CABLE/HDPE TO PVC

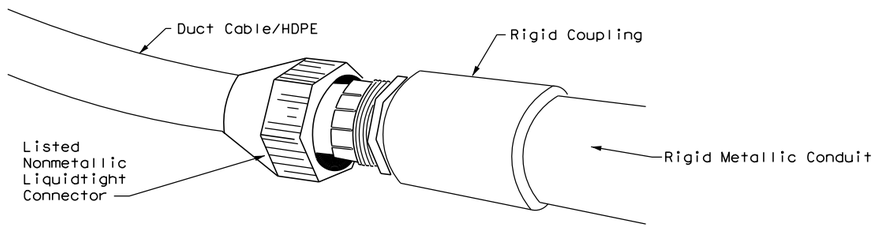

DUCT CABLE/HDPE TO RMC

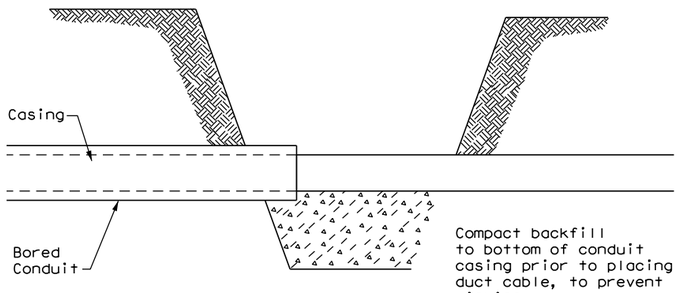

BORE PIT DETAIL

Texas Department of Transportation

Traffic Operations Division Standard

ELECTRICAL DETAILS
DUCT CABLE/ HDPE CONDUIT

ED(11)-14

FILE: ed11-14.dgn	DN: TxDOT	CK: TxDOT	DW: TxDOT	CK: TxDOT
©TxDOT October 2014 REVISIONS	CONT	SECT	JOB	HIGHWAY
	DIST	COUNTY		SHEET NO.
				327

71L

BATTERY BOX GROUND BOXES NOTES

A. MATERIALS

1. Provide polymer concrete or fiberglass reinforced plastic (FRP) battery box ground box and cover in accordance with Departmental Material Specification (DMS) 11071 "Battery Box Ground Boxes." Battery box will accommodate up to 4 batteries, each measuring 8 in. x 13.5 in. x 10 in. (W x L x D). Label battery box ground box cover in accordance with DMS 11071.

2. Supply a marine grade batteries with covers. Secure the marine grade batteries with covers to the stainless steel rack in the bottom of the ground box with tie down straps.

B. CONSTRUCTION METHODS

1. Ensure conduit entry will not interfere with placement of the batteries in the battery box ground box.

2. Remove all gravel and dirt from conduit. Cap all conduits prior to placing aggregate and setting battery box ground box. Provide Grade 3 or 4 coarse aggregate as shown on Table 2 of Item 302 "Aggregates for Surface Treatments." Ensure the aggregate bed is in place and is a minimum of 9 in. deep prior to setting the box. Install battery box ground box on top of aggregate.

3. Cast battery box aprons in place. Reinforcing steel may be field bent. Ensure the depth of concrete for the apron extends from finished grade to the top of the aggregate bed under the box. Battery box ground box aprons, including concrete and reinforcing steel, are subsidiary to battery box ground boxes when called for by descriptive code.

4. Bolt covers down when not working in battery box ground boxes. Keep bolt holes in the box clear of dirt.

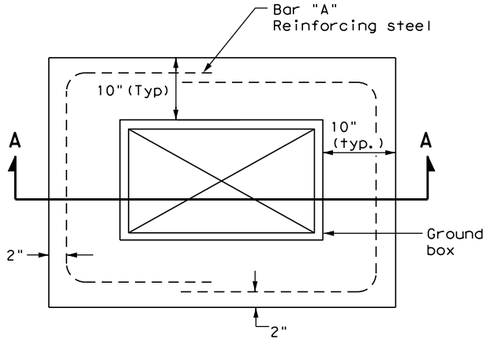

PLAN VIEW

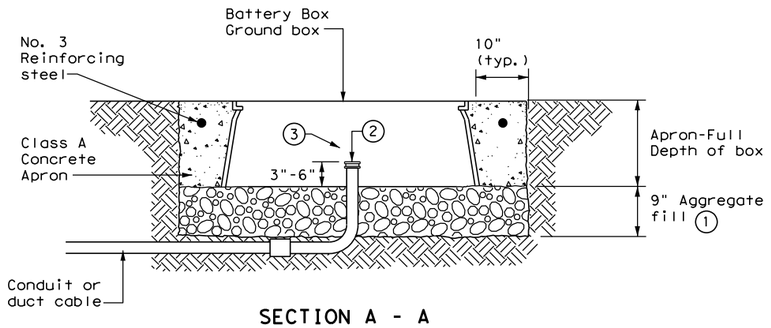

SECTION A - A

APRON FOR BATTERY BOX GROUND BOXES

1. Place aggregate under the box and not in the box. Aggregate should not encroach on the interior volume of the box.

2. Install bushing or bell end fitting on the upper end of all ells.

3. Install all conduits in a neat and workmanlike manner.

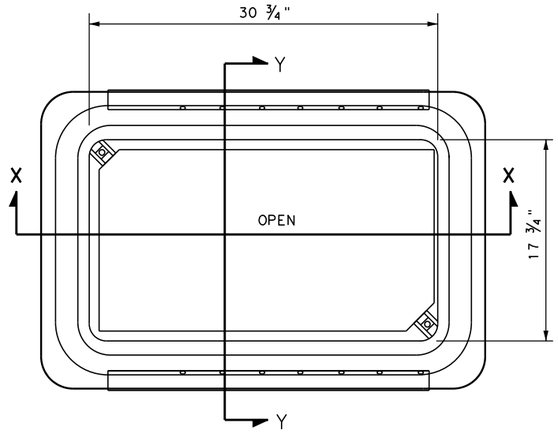

BATTERY BOX TOP VIEW

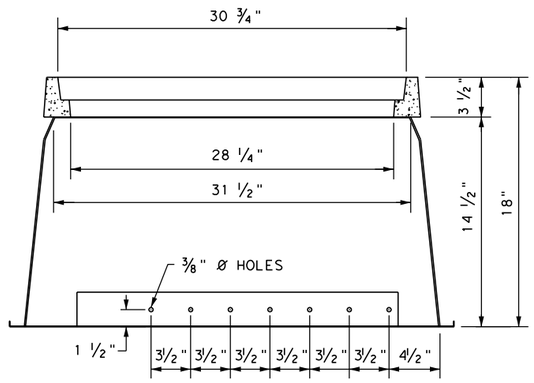

SECTION X-X

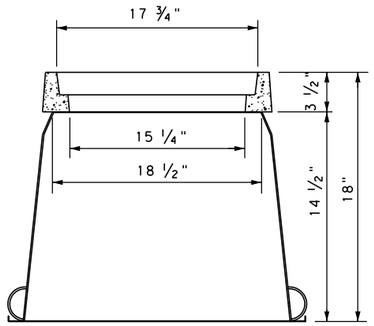

SECTION Y-Y

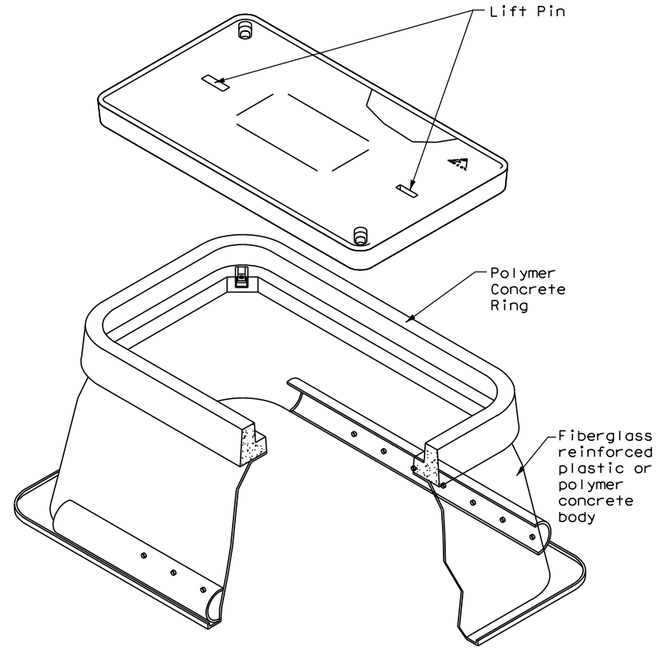

Texas Department of Transportation

Traffic Operations Division Standard

ELECTRICAL DETAILS BATTERY BOX GROUND BOXES

ED(12)-14

FILE: ed12-14.dgn	DN: TxDOT	CK: TxDOT	DW: TxDOT	CK: TxDOT
© TxDOT October 2014	CONT	SECT	JOB	HIGHWAY
REVISIONS				
	DIST	COUNTY		SHEET NO.
				328

71M

DISCLAIMER:
The use of this standard is governed by the "Texas Engineering Practice Act". No warranty of any kind is made by TxDOT for any purpose whatsoever. TxDOT assumes no responsibility for the conversion of this standard to other formats or for incorrect results or damages resulting from its use.

DATE: 3/11/2025 5:21:12 PM
FILE: G:\TXC\Projects\City_Georgetown\10767-00 Shell Road\03_CADD\01_Shts\03-SDNE-STD-ED12-14.dgn

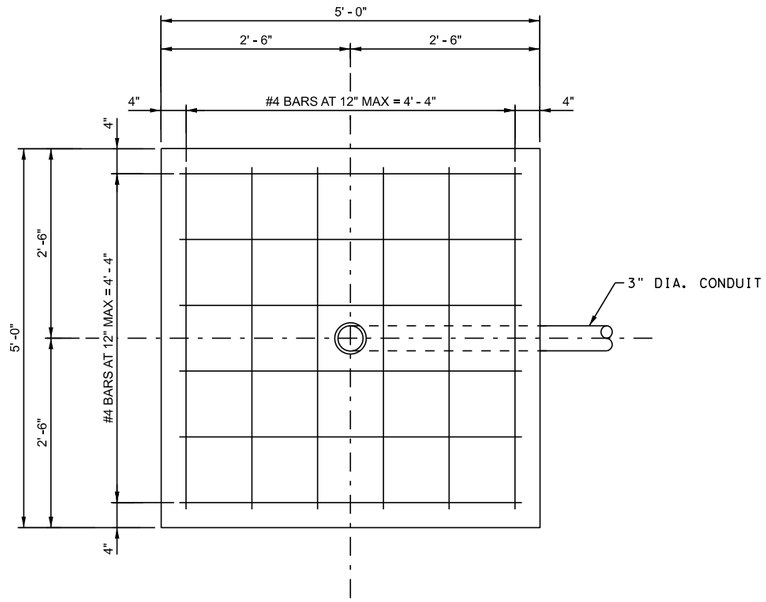

PLAN

N. T. S.

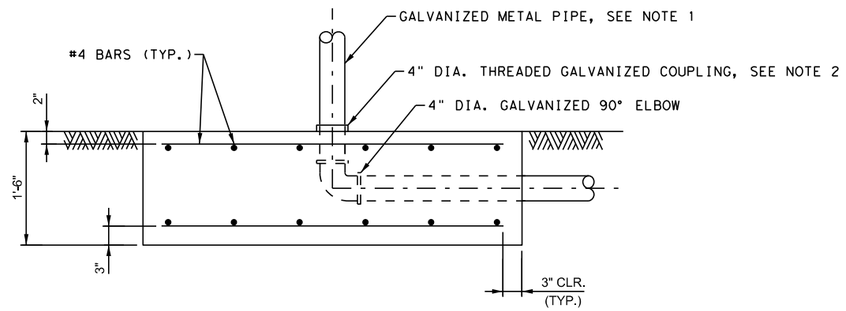

ELEVATION

N. T. S.

GENERAL NOTES:

1. 4" RIGID INTERMEDIATE GALVANIZED METAL PIPE, 4 1/4" NOMINAL I.D. WITH 1/8" WALL THICKNESS, 6 LBS. PER FOOT.

2. ENSURE COUPLING IS LEVEL AND PLUMB AND EXTENDS ABOVE CONCRETE SURFACE.

3. SEE STANDARD SPECIFICATION ITEM NO. 420 "CONCRETE SUBSTRUCTURES" FOR MEASUREMENT AND PAYMENT OF FOOTING.

MATERIAL NOTES:

CONCRETE SHALL BE CLASS "C", F'C = 3600 PSI.

REINFORCING STEEL SHALL CONFORM TO STANDARD SPECIFICATION ITEM NO. 440, "REINFORCEMENT FOR CONCRETE ", GRADE 60 MIN.

STATE OF TEXAS
SHAUN E. SPIVEY
114567
LICENSED
PROFESSIONAL ENGINEER
3/12/2025

GEORGETOWN TEXAS EST. 1848

BGE, Inc.
101 West Louis Henna Blvd, Suite 400, Austin, TX 78728
Tel: 512-879-0400 • www.bgeinc.com
TBPE Registration No. F-1046

SHELL ROAD

PED POLE SPREAD FOOTING

SHEET 1 OF 1

SHEET NO. 329

DATE: 3/11/2025 5:21:14 PM
FILE: G:\TXC\Projects\City Georgetown\10767-00 Shell Road\03 CADD\01 Shts\13-SGNL\Stds\PED POLE SPREAD FOOTING.dgn

STORMWATER POLLUTION PREVENTION PLAN (SWP3):

This SWP3 has been developed in accordance with the TPDES Construction General Permit TXR150000 (CGP). The Texas Department of Transportation (TxDOT) ensures that project specifications include adequate best management practices (BMPs) for this project.

For all projects with soil disturbing activity and for projects that have Environmental, Permits, Issues, and Commitments (EPICs) dependent on stormwater controls and water quality measures TxDOT will maintain a SWP3 with all pertinent records, correspondence, environmental documents, etc. at the project field office, Area Office, or electronically.

This SWP3 is consistent with requirements specified in applicable stormwater plans and the projects environmental permits, issues, and commitments (EPICs). A copy of the CGP is included in Attachment 2.12 of the SWP3 binder.

1.0 SITE/PROJECT DESCRIPTION

1.1 PROJECT CONTROL SECTION JOB (CSJ):

1.2 PROJECT LIMITS:

From: Williams Dr

To: 1800 ft Southwest of Shell Spur

1.3 PROJECT COORDINATES:

BEGIN: (Lat) 30.682938 ,(Long) -97.717760

END: (Lat) 30.705509 ,(Long) -97.697671

1.4 TOTAL PROJECT AREA (Acres): 28.80

1.5 TOTAL AREA TO BE DISTURBED (Acres): 23.83

1.6 NATURE OF CONSTRUCTION ACTIVITY:

TO CONSTRUCT THE WIDENING OF THE EXISTING 2-LANE ROADYWAY TO A 4-LANE DIVIDED ROADWAY WITH A SHARED USE PATH AND SIDEWALK.

1.7 MAJOR SOIL TYPES:

Soil Type	Description
CfB	Crawford clay, 1 to 3 percent slopes
DoC	Doss silty clay, moist, 1 to 5 percent slopes
EeB	Eckrant stony clay, 0 to 3 percent slopes, stony
ErE	Eckrant-Rock outcrop association, 1 to 10 percent slopes
GsB	Georgetown stony clay loam, 1 to 3 percent slopes

1.8 PROJECT SPECIFIC LOCATIONS (PSLs):

PSLs must be depicted on the Environmental Layout Sheets in Attachment 1.2 of this SWP3. PSLs may be identified during preconstruction meetings or during the construction process. Please choose from the options below:

- ☐ PSLs determined during preconstruction meeting
- ☐ PSLs determined during construction
- ☒ No PSLs planned for construction

Type	Sheet #s

All off-ROW PSLs required by the Contractor are the Contractor's responsibility. The Contractor shall secure all permits required by local, state, federal laws for off-ROW PSLs. The contractor shall provide diagrams, areas of disturbance, acreage, and BMPs for all off-ROW PSLs within one mile of the project.

1.9 CONSTRUCTION ACTIVITIES:

(Use the following list as a starting point when developing the Construction Activity Schedule and Ceasing Record in Attachment 2.5.)

- ☒ Mobilization
- ☒ Install sediment and erosion controls
- ☐ Blade existing topsoil into windrows, prep ROW, clear and grub
- ☒ Remove existing pavement
- ☒ Grading operations, excavation, and embankment
- ☒ Excavate and prepare subgrade for proposed pavement widening
- ☒ Remove existing culverts, safety end treatments (SETs)
- ☒ Remove existing metal beam guard fence (MBGF), bridge rail
- ☒ Install proposed pavement per plans
- ☒ Install culverts, culvert extensions, SETs
- ☐ Install mow strip, MBGF, bridge rail
- ☒ Place flex base
- ☒ Rework slopes, grade ditches
- ☐ Blade windrowed material back across slopes
- ☒ Revegetation of unpaved areas
- ☐ Achieve site stabilization and remove sediment and erosion control measures
- ☐ Other: _____
- ☐ Other: _____
- ☐ Other: _____

1.10 POTENTIAL POLLUTANTS AND SOURCES:

- ☒ Sediment laden stormwater from stormwater conveyance over disturbed area
- ☒ Fuels, oils, and lubricants from construction vehicles, equipment, and storage
- ☒ Solvents, paints, adhesives, etc. from various construction activities
- ☒ Transported soils from offsite vehicle tracking
- ☒ Construction debris and waste from various construction activities
- ☐ Contaminated water from excavation or dewatering pump-out water
- ☐ Sanitary waste from onsite restroom facilities
- ☐ Trash from various construction activities/receptacles
- ☐ Long-term stockpiles of material and waste
- ☐
- ☐ Other: _____
- ☐ Other: _____
- ☐ Other: _____

1.11 RECEIVING WATERS:

Receiving waters must be depicted on the Environmental Layout Sheets in Attachment 1.2 of this SWP3. Include Segment # for receiving waters.

Tributaries	Classified Waterbody
Pecan Branch	San Gabriel River

* Add (*) for impaired waterbodies with pollutant in ().

1.12 ROLES AND RESPONSIBILITIES: TxDOT

- ☒ Development of plans and specifications
- ☒ Submit Notice of Intent (NOI) to TCEQ (≥5 acres)
- ☒ Post Construction Site Notice
- ☒ Submit NOI/CSN to local MS4
- ☒ Perform SWP3 inspections
- ☒ Maintain SWP3 records and update to reflect daily operations
- ☒ Complete and submit Notice of Termination to TCEQ
- ☒ Maintain SWP3 records for 3 years
- ☐ Other: _____
- ☐ Other: _____
- ☐ Other: _____

1.13 ROLES AND RESPONSIBILITIES: CONTRACTOR

- ☒ Day To Day Operational Control
- ☒ Submit Notice of Intent (NOI) to TCEQ (≥5 acres)
- ☒ Post Construction Site Notice
- ☒ Submit NOI/CSN to local MS4
- ☒ Maintain schedule of major construction activities
- ☒ Install, maintain and modify BMPs
- ☒ Complete and submit Notice of Termination to TCEQ
- ☒ Maintain SWP3 records for 3 years
- ☐ Other: _____
- ☐ Other: _____
- ☐ Other: _____

1.14 LOCAL MUNICIPAL SEPARATE STORM SEWER SYSTEM (MS4) OPERATOR COORDINATION:

MS4 Entity

STORMWATER POLLUTION PREVENTION PLAN (SWP3)

© 2023

July 2023 Sheet 1 of 2

Texas Department of Transportation

FED. RD. DIV. NO.	PROJECT NO.	SHEET NO.
		330

STATE	STATE DIST.	COUNTY	
TEXAS			
CONT.	SECT.	JOB	HIGHWAY NO.

STORMWATER POLLUTION PREVENTION PLAN (SWP3):

2.0 BEST MANAGEMENT PRACTICES (BMPs) AND CONTROLS, INSPECTION, AND MAINTENANCE

The Contractor shall be the responsible party for implementing the BMPs described herein and for complying with the SWP3 for control of erosion and sedimentation during day-to-day operations. The Contractor shall implement changes to this SWP3 approved by TxDOT within the times specified in this SWP3 or the CGP.

2.1 EROSION CONTROL AND SOIL STABILIZATION BMPs:

T / P

- ☐ ☐ Protection of Existing Vegetation
- ☐ ☐ Vegetated Buffer Zones
- ☐ ☐ Soil Retention Blankets
- ☐ ☐ Geotextiles
- ☐ ☐ Mulching/ Hydromulching
- ☐ ☐ Soil Surface Treatments
- X ☐ Temporary Seeding
- ☐ X Permanent Planting, Sodding or Seeding
- X ☐ Biodegradable Erosion Control Logs
- X ☐ Rock Filter Dams/ Rock Check Dams
- ☐ ☐ Vertical Tracking
- ☐ ☐ Interceptor Swale
- ☐ ☐ Riprap
- ☐ ☐ Diversion Dike
- ☐ ☐ Temporary Pipe Slope Drain
- ☐ ☐ Embankment for Erosion Control
- ☐ ☐ Paved Flumes
- ☐ ☐ Other: _____
- ☐ ☐ Other: _____
- ☐ ☐ Other: _____
- ☐ ☐ Other: _____

2.2 SEDIMENT CONTROL BMPs:

T / P

- X ☐ Biodegradable Erosion Control Logs
- ☐ ☐ Dewatering Controls
- X ☐ Inlet Protection
- X ☐ Rock Filter Dams/ Rock Check Dams
- ☐ ☐ Sandbag Berms
- X ☐ Sediment Control Fence
- X ☐ Stabilized Construction Exit
- ☐ ☐ Floating Turbidity Barrier
- ☐ ☐ Vegetated Buffer Zones
- ☐ ☐ Vegetated Filter Strips
- ☐ ☐ Other: _____
- ☐ ☐ Other: _____
- ☐ ☐ Other: _____
- ☐ ☐ Other: _____

Refer to the Environmental Layout Sheets/ SWP3 Layout Sheets located in Attachment 1.2 of this SWP3

Sediment control BMPs requiring design capacity calculations (See SWP3 Attachment 1.3.):

T / P

- ☐ ☐ Sediment Trap
  - ☐ Calculated volume runoff from 2-year, 24-hour storm for each acre of disturbed area
  - ☐ 3,600 cubic feet of storage per acre drained
- ☐ ☐ Sedimentation Basin
  - ☐ Not required (<10 acres disturbed)
  - ☐ Required (>10 acres) and implemented.
    - ☐ Calculated volume runoff from 2-year, 24-hour storm for each acre of disturbed area
    - ☐ 3,600 cubic feet of storage per acre drained
  - ☐ Required (>10 acres), but not feasible due to:
    - ☐ Available area/Site geometry
    - ☐ Site slope/Drainage patterns
    - ☐ Site soils/Geotechnical factors
    - ☐ Public safety
    - ☐ Other: _____

2.3 PERMANENT CONTROLS:

(Coordinate post-construction BMPs with appropriate TxDOT maintenance sections.)

BMPs To Be Left In Place Post Construction:

Type	Stationing	
	From	To

Refer to the Environmental Layout Sheets/ SWP3 Layout Sheets located in Attachment 1.2 of this SWP3

2.4 OFFSITE VEHICLE TRACKING CONTROLS:

- ☐ Excess dirt/mud on road removed daily
- ☐ Haul roads dampened for dust control
- ☐ Loaded haul trucks to be covered with tarpaulin
- ☐ Stabilized construction exit
- ☐ Daily street sweeping
- ☐ Other: _____
- ☐ Other: _____
- ☐ Other: _____
- ☐ Other: _____

2.5 POLLUTION PREVENTION MEASURES:

- ☐ Chemical Management
- ☐ Concrete and Materials Waste Management
- ☐ Debris and Trash Management
- ☐ Dust Control
- ☐ Sanitary Facilities
- ☐ Other: _____
- ☐ Other: _____
- ☐ Other: _____
- ☐ Other: _____

2.6 VEGETATED BUFFER ZONES:

Natural vegetated buffers shall be maintained as feasible to protect adjacent surface waters. If vegetated natural buffer zones are not feasible due to site geometry, the appropriate additional sediment control measures have been incorporated into this SWP3.

Type	Stationing	
	From	To

Refer to the Environmental Layout Sheets/ SWP3 Layout Sheets located in Attachment 1.2 of this SWP3

2.7 ALLOWABLE NON-STORMWATER DISCHARGES:

- X Fire hydrant flushings
- X Irrigation drainage
- X Pavement washwater (where spills or leaks have not occurred, and detergents are not used)
- X Potable water sources
- X Springs
- X Uncontaminated groundwater
- X Water used to wash vehicles or control dust
- X Other allowable non-stormwater discharges as allowed by TPDES GP TXR150000.

2.8 DEWATERING:

Dewatering discharges of accumulated stormwater, groundwater, and surface water including discharges from dewatering of trenches, excavations, foundations, vaults, and other points of accumulation are prohibited unless managed by appropriate controls to prevent and minimize the offsite discharge of sediment and other pollutants.

2.9 INSPECTIONS:

All disturbed areas and erosion and sediment control devices shall be inspected at least once every seven (7) days. Inspections shall be performed by TxDOT as indicated on the Field Inspection and Maintenance Report Form 2118 and retained in Attachment 2.5 of this SWP3.

When dewatering activities are present, a daily inspection will be conducted once per day during those activities and documented in accordance with CGP and TxDOT requirements.

2.10 MAINTENANCE:

Control measures shall be properly installed according to specifications. If it is determined that a BMP or control measure is not operating effectively, maintenance must be accomplished as soon as possible and before the next anticipated rain event, but in no case later than 7 calendar days after being able to access the site. Maintenance shall be performed by the Contractor as indicated on the Field Inspection and Maintenance Report Form 2118 and retained in Attachment 2.5 of this SWP3.

STORMWATER POLLUTION PREVENTION PLAN (SWP3)

© 2023

July 2023 Sheet 2 of 2

Texas Department of Transportation

FED. RD. DIV. NO.	PROJECT NO.		SHEET NO.
			331
STATE	STATE DIST.	COUNTY	
TEXAS			
CONT.	SECT.	JOB	HIGHWAY NO.

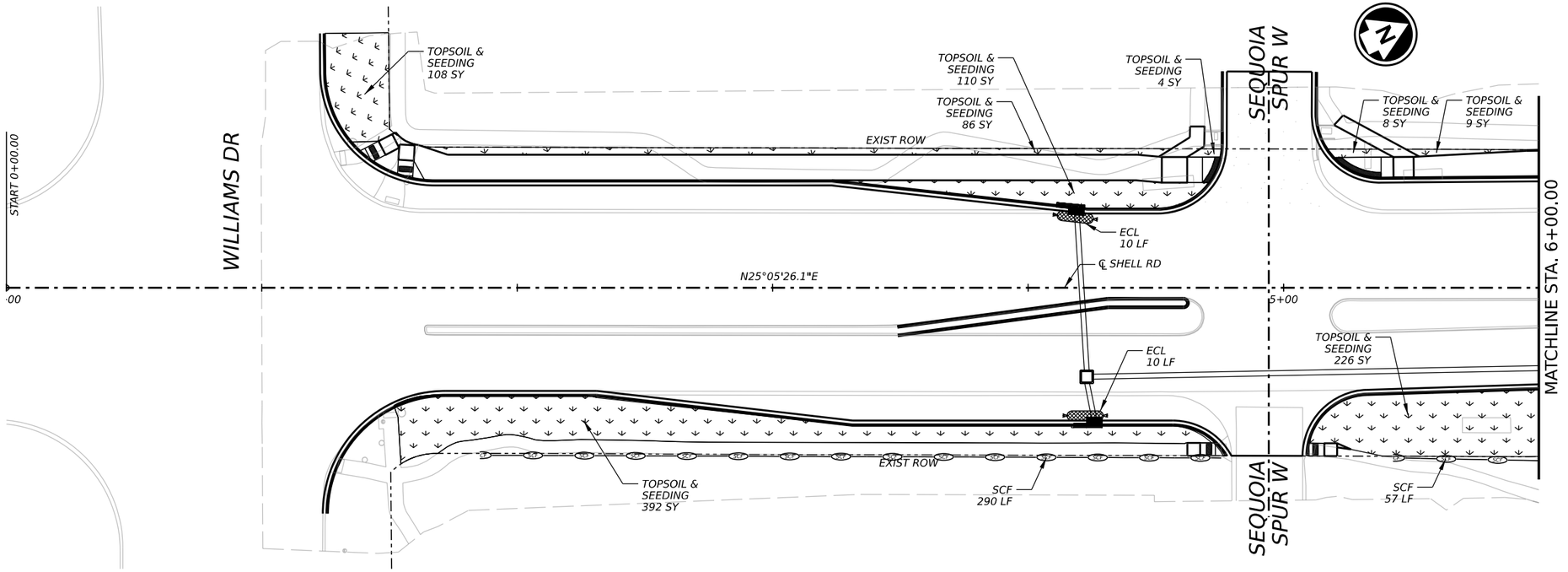

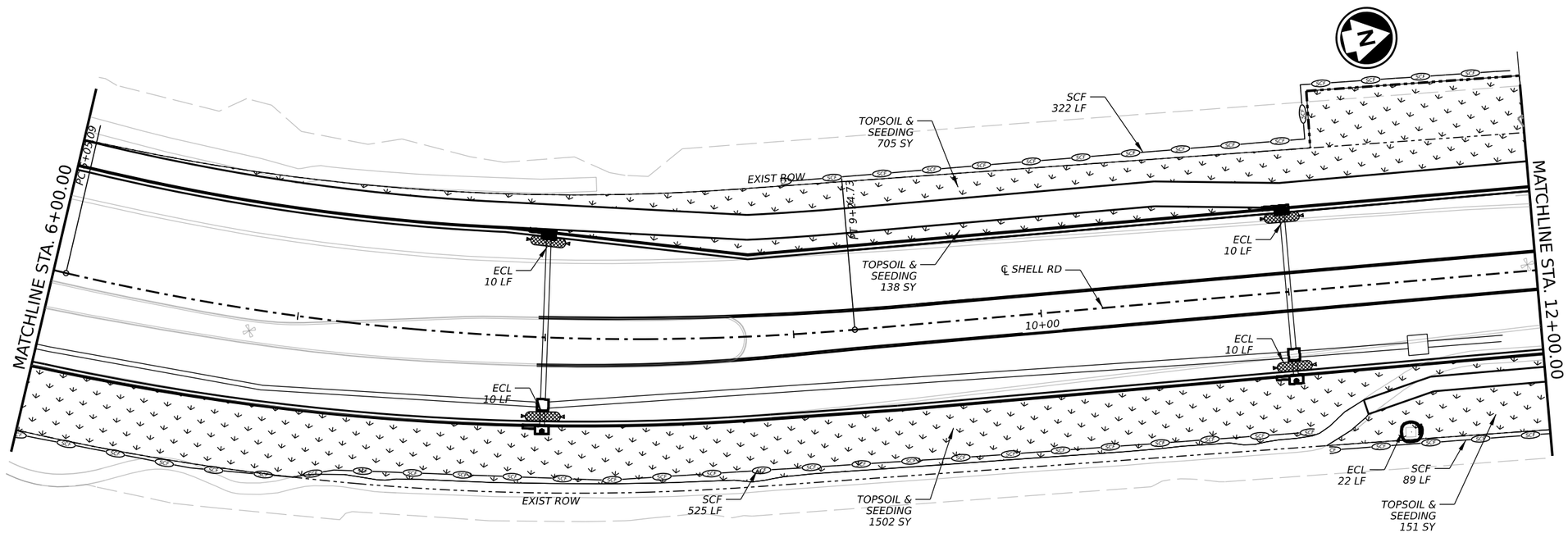

LEGEND

- SCF — TEMPORARY SEDIMENT CNTRL FENCE
- RFD3 — ROCK FILTER DAM
- EROSION CONTROL LOGS AT INLETS
- FLOW ARROWS
- TOPSOIL AND SEEDING

0 25 50

SCALE: 1" = 50'

STATE OF TEXAS
ELENA RAMON
141765
LICENSED PROFESSIONAL ENGINEER

3/12/2025

EST.1848 GEORGETOWN TEXAS

BGE, Inc.
101 West Louis Henna Blvd, Suite 400, Austin, TX 78728
Tel: 512-879-0400 • www.bgeinc.com
TBPE Registration No. F-1046

SHELL ROAD

ENVIRONMENTAL LAYOUTS

SHEET 1 OF 6

SHEET NO. 332

DATE: 3/12/2025 3:15:24 PM
FILE: G:\TXC\Projects\City Georgetown\10767-00 Shell Road\03 CADD\01 Shts\14-ENVISHELL_SW3P 01.dgn

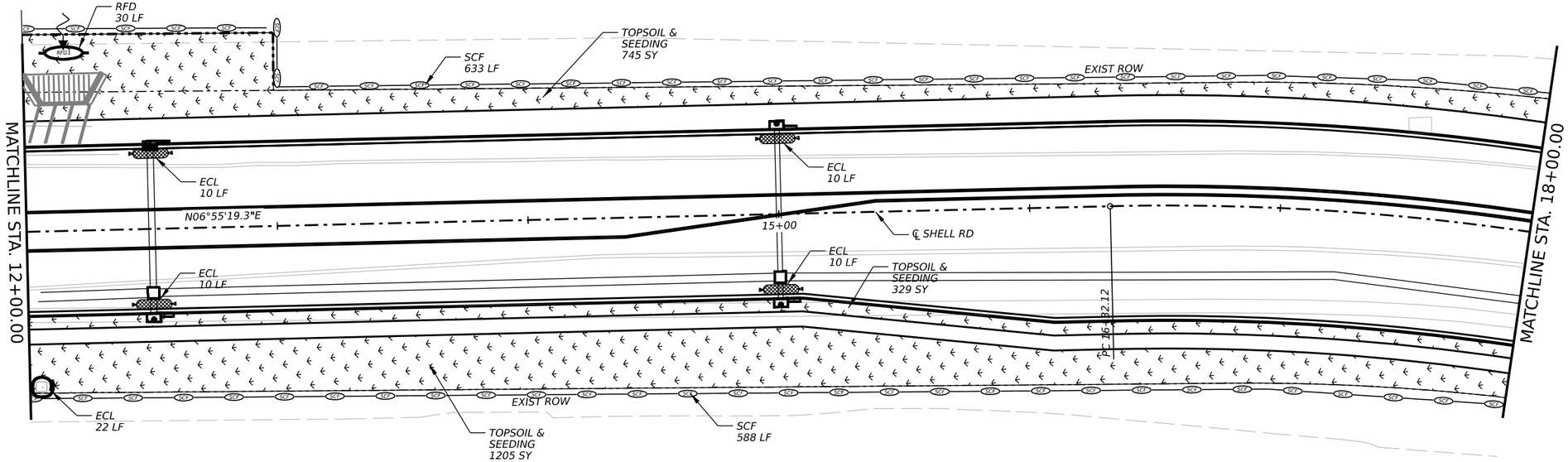

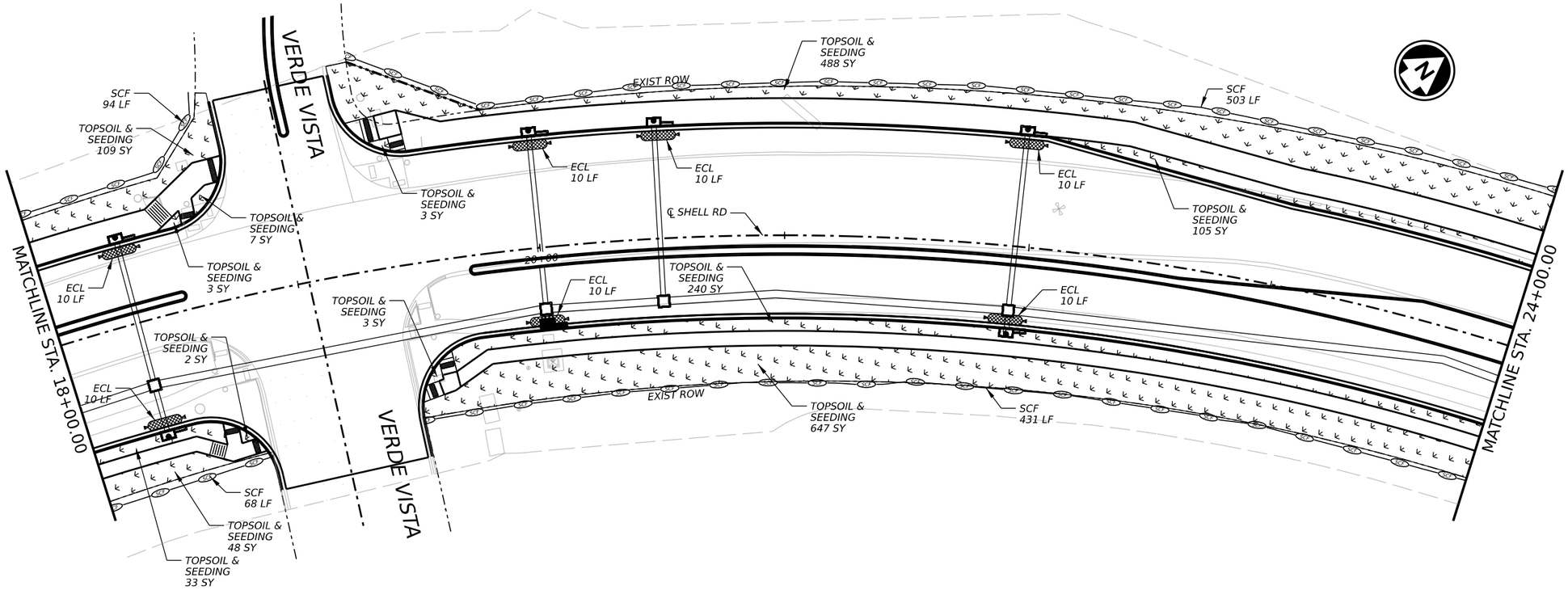

LEGEND

- SCF — TEMPORARY SEDIMENT CNTRL FENCE
- RFD3 — ROCK FILTER DAM
- EROSION CONTROL LOGS AT INLETS
- FLOW ARROWS
- TOPSOIL AND SEEDING

0 25 50

SCALE: 1" = 50'

STATE OF TEXAS
ELENA RAMON
141765
LICENSED
PROFESSIONAL ENGINEER

3/12/2025

EST.1848 GEORGETOWN TEXAS

BGE, Inc.
101 West Louis Henna Blvd, Suite 400, Austin, TX 78728
Tel: 512-879-0400 • www.bgeinc.com
TBPE Registration No. F-1046

SHELL ROAD

ENVIRONMENTAL LAYOUTS

SHEET 2 OF 6

SHEET NO. 333

DATE: 3/12/2025 3:15:25 PM
FILE: G:\TXC\Projects\City Georgetown\10767-00 Shell Road\03 CADD\01 Shts\14-ENVISHELL_SW3P 02.dgn

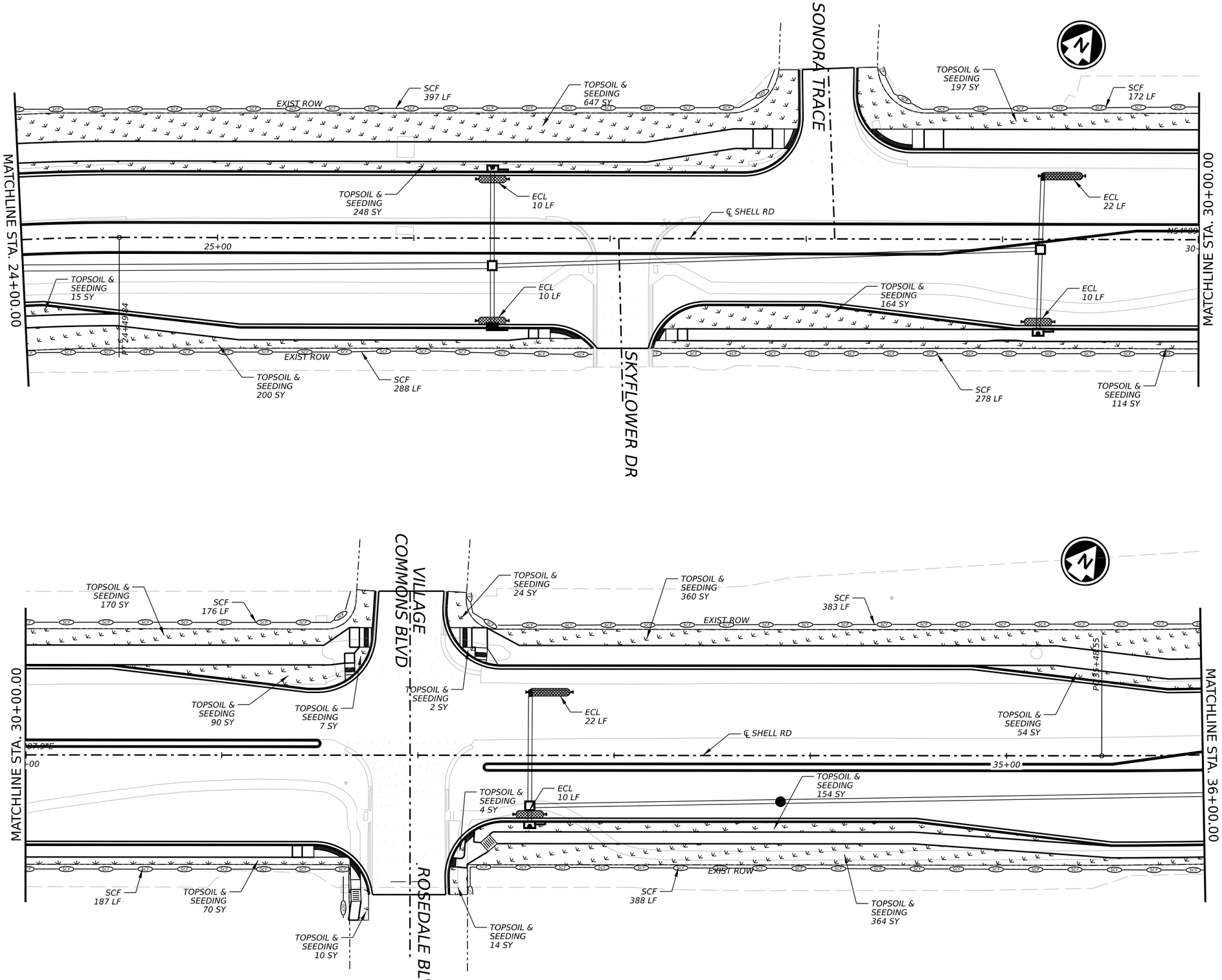

DATE: 3/12/2025 3:15:27 PM
FILE: G:\TXC\Projects\City Georgetown\10767-00 Shell Road\03 CADD\01 Shts\14-ENVISHELL_SW3P 03.dgn

STATE OF TEXAS
ELENA RAMON
141765
LICENSED
PROFESSIONAL ENGINEER
3/12/2025

EST.1848 GEORGETOWN TEXAS

BGE, Inc.
101 West Louis Henna Blvd, Suite 400, Austin, TX 78728
Tel: 512-879-0400 • www.bgeinc.com
TBPE Registration No. F-1046

SHELL ROAD

ENVIRONMENTAL LAYOUTS

SHEET 3 OF 6

SHEET NO. 334

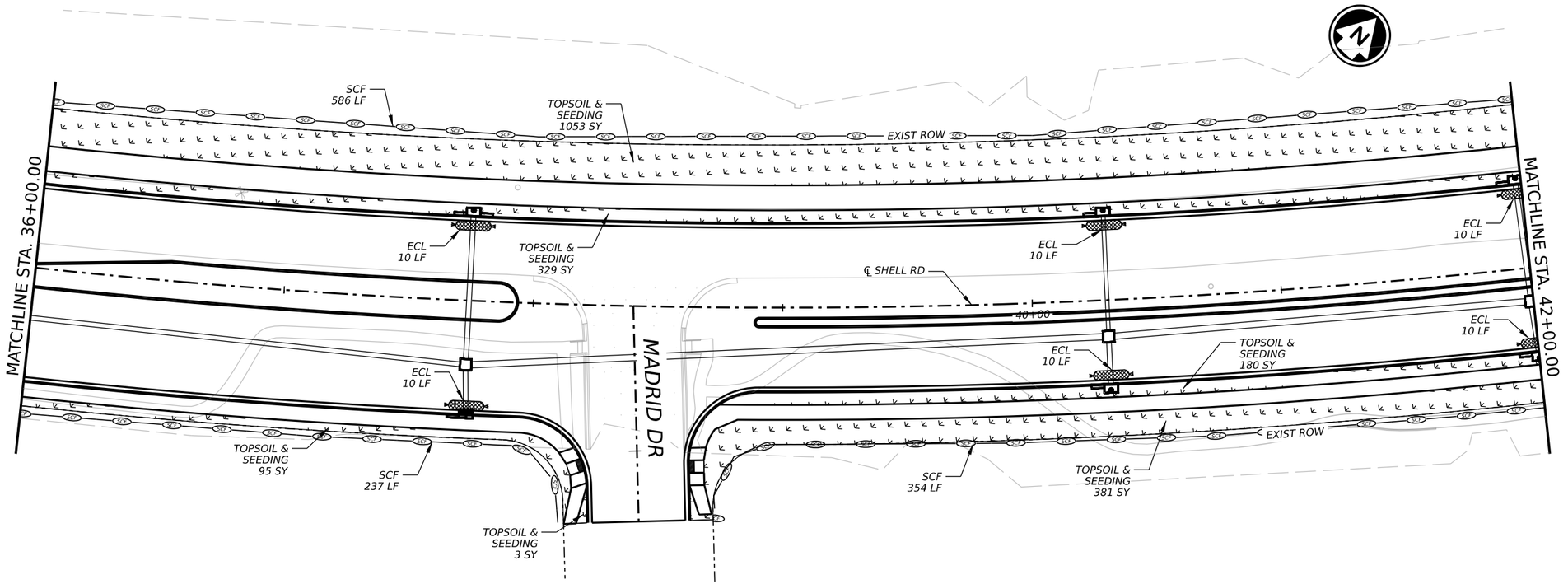

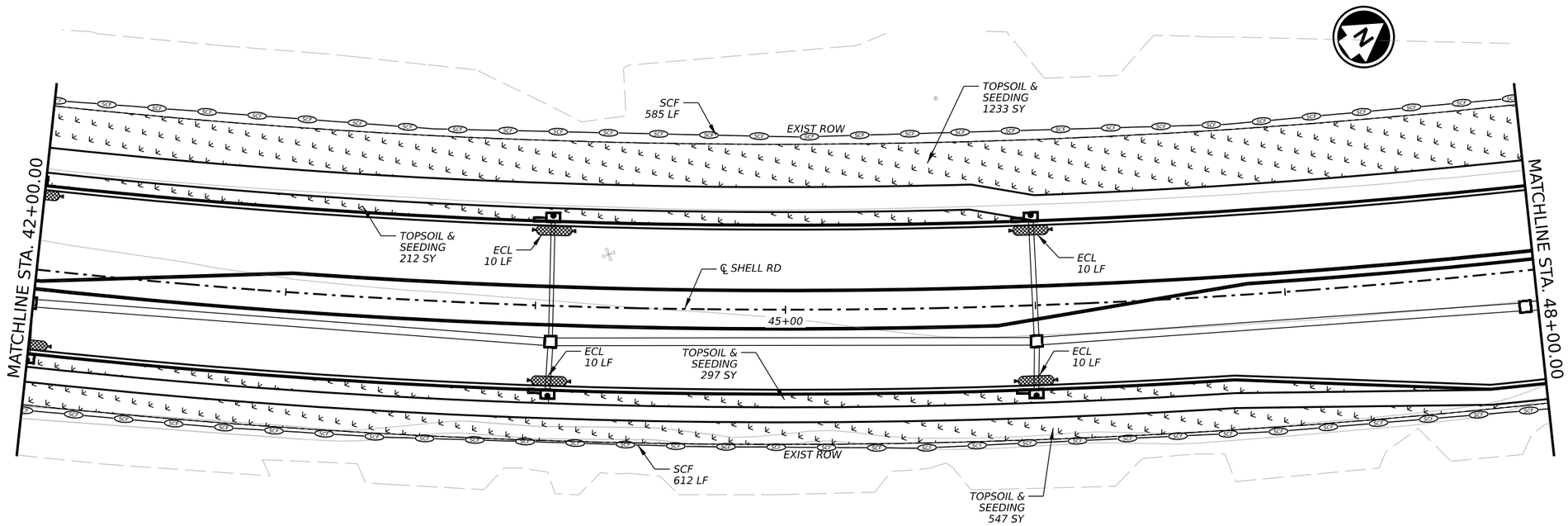

LEGEND

- SCF — TEMPORARY SEDIMENT CNTRL FENCE
- RFD3 — ROCK FILTER DAM
- EROSION CONTROL LOGS AT INLETS
- FLOW ARROWS
- TOPSOIL AND SEEDING

0 25 50

SCALE: 1" = 50'

STATE OF TEXAS
ELENA RAMON
141765
LICENSED
PROFESSIONAL ENGINEER

3/12/2025

EST.1848 GEORGETOWN TEXAS

BGE, Inc.
101 West Louis Henna Blvd, Suite 400, Austin, TX 78728
Tel: 512-879-0400 • www.bgeinc.com
TBPE Registration No. F-1046

SHELL ROAD

ENVIRONMENTAL LAYOUTS

SHEET 4 OF 6

SHEET NO. 335

DATE: 3/12/2025 3:15:29 PM
FILE: G:\TXC\Projects\City Georgetown\10767-00 Shell Road\03 CADD\01 Shts\14-ENV\SHELL_SW3P 04.dgn

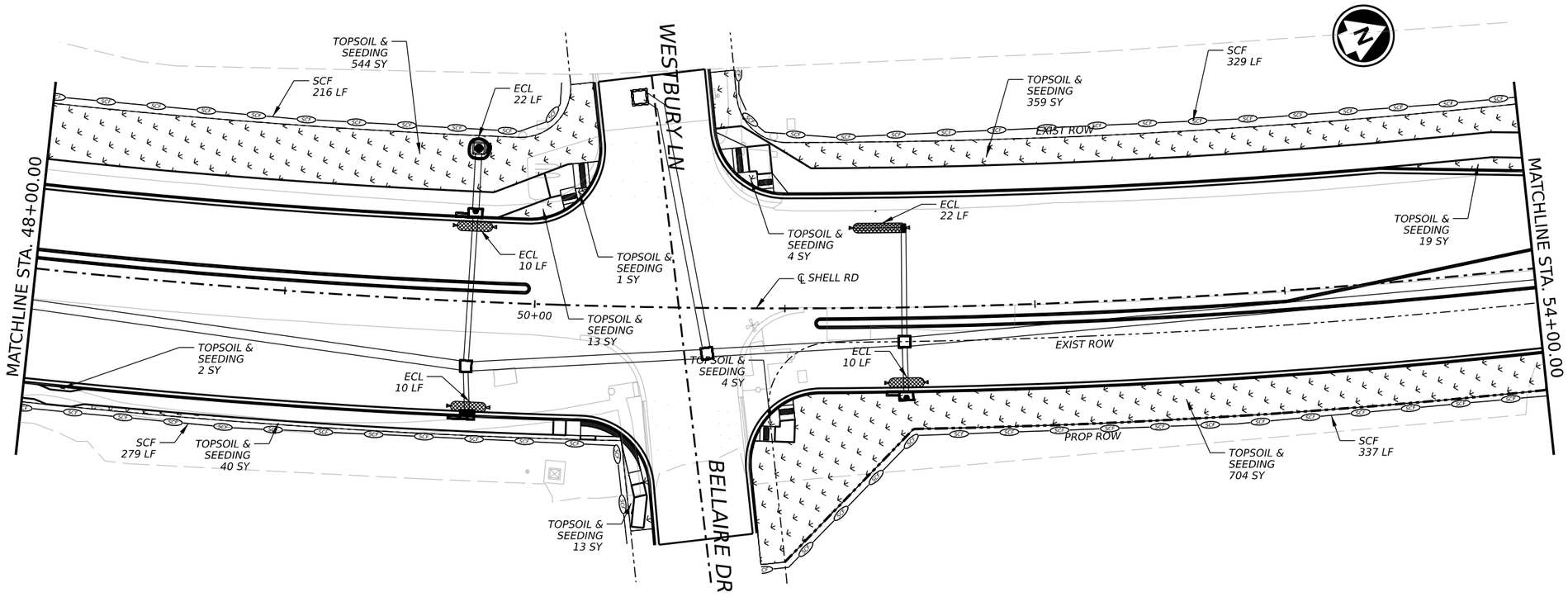

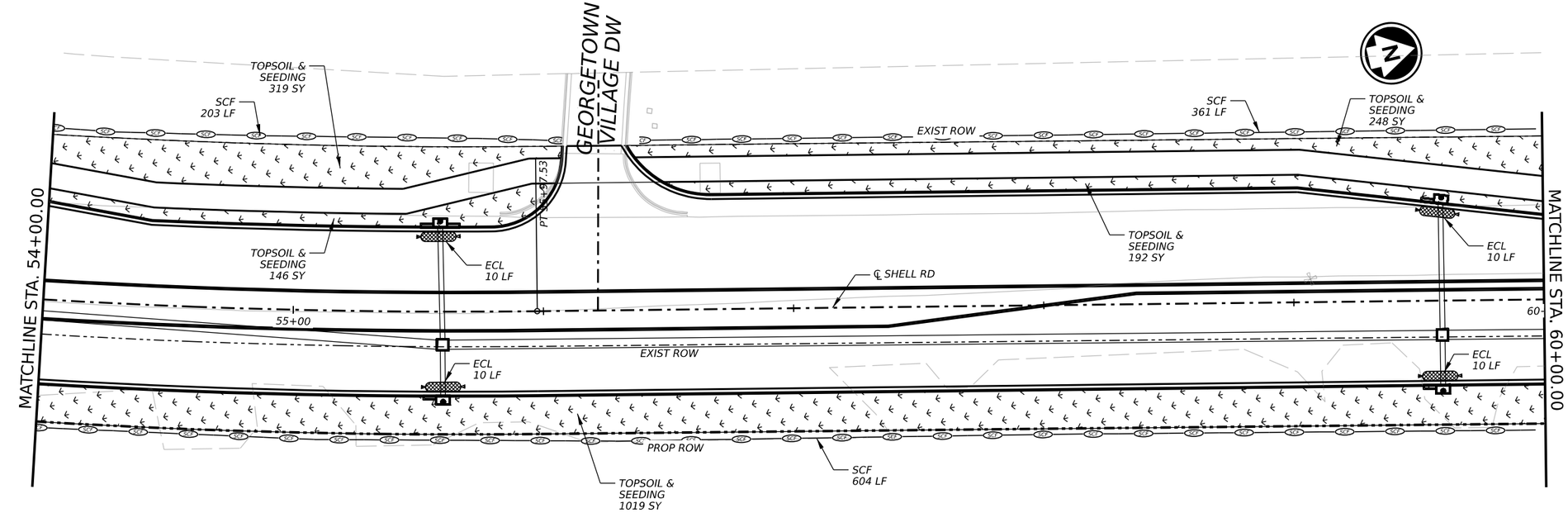

LEGEND

- SCF — TEMPORARY SEDIMENT CNTRL FENCE
- RFD3 — ROCK FILTER DAM
- EROSION CONTROL LOGS AT INLETS
- FLOW ARROWS
- TOPSOIL AND SEEDING

0 25 50

SCALE: 1" = 50'

STATE OF TEXAS
ELENA RAMON
141765
LICENSED
PROFESSIONAL ENGINEER

3/12/2025

EST. 1848 GEORGETOWN TEXAS

BGE, Inc.
101 West Louis Henna Blvd, Suite 400, Austin, TX 78728
Tel: 512-879-0400 • www.bgeinc.com
TBPE Registration No. F-1046

SHELL ROAD

ENVIRONMENTAL LAYOUTS

SHEET 5 OF 6

SHEET NO. 336

DATE: 3/12/2025 3:15:31 PM
FILE: G:\TXC\Projects\City Georgetown\10767-00 Shell Road\03 CADD\01 Shts\14-ENV\SHELL_SW3P 05.dgn

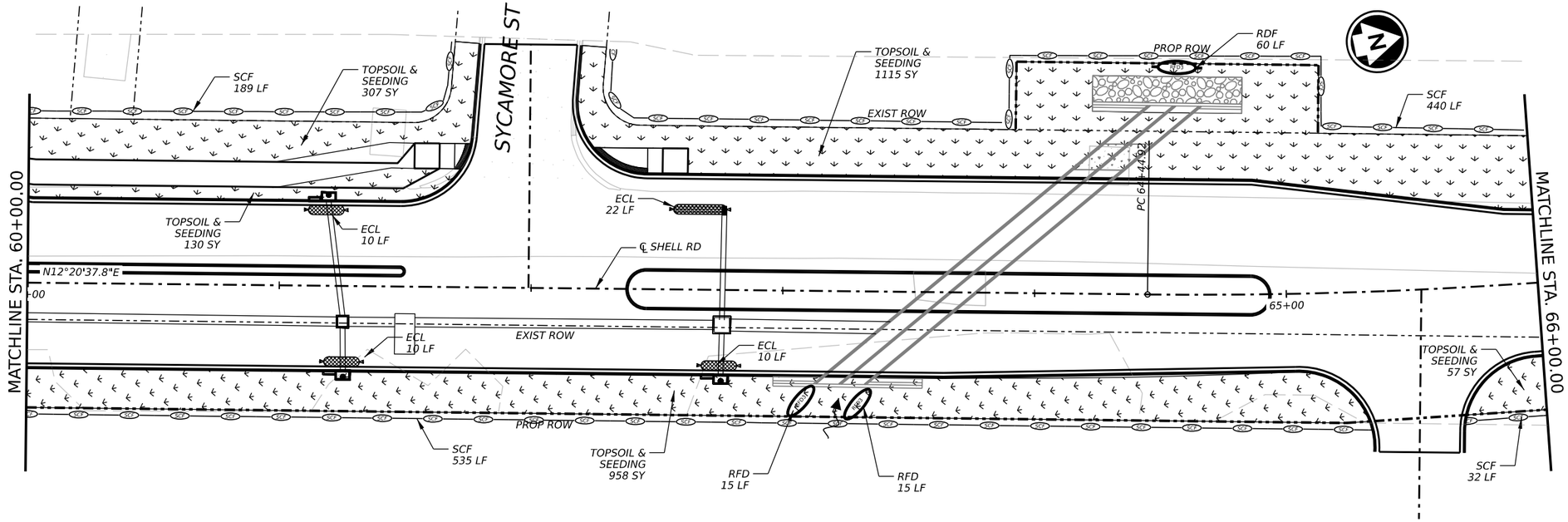

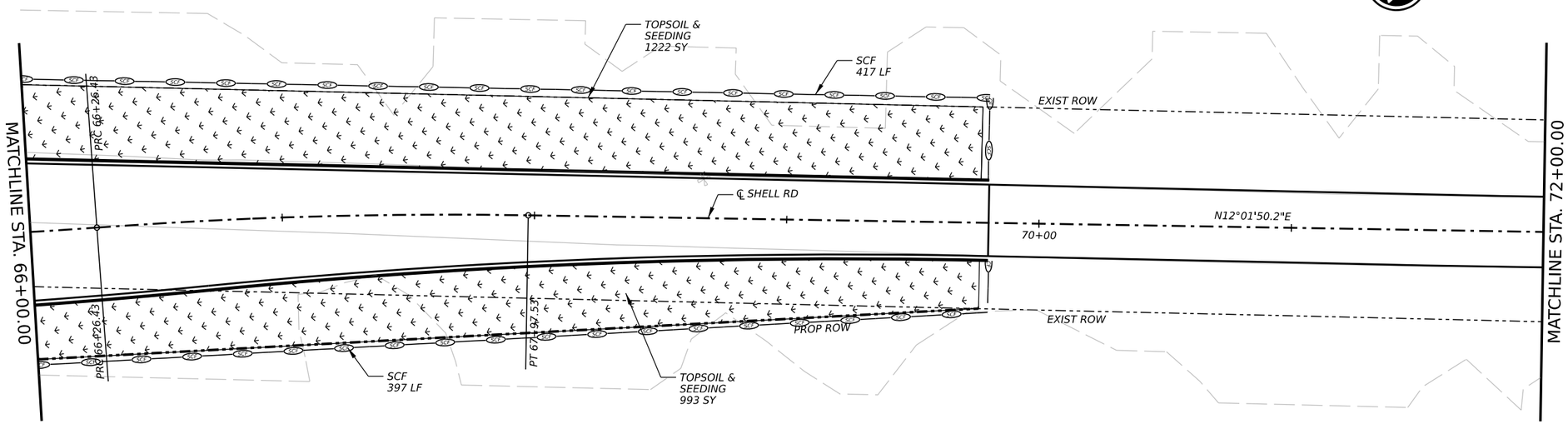

LEGEND

- SCF — TEMPORARY SEDIMENT CNTRL FENCE
- RFD3 — ROCK FILTER DAM
- EROSION CONTROL LOGS AT INLETS
- FLOW ARROWS
- TOPSOIL AND SEEDING

0 25 50

SCALE: 1" = 50'

STATE OF TEXAS
ELENA RAMON
141765
LICENSED
PROFESSIONAL ENGINEER

Elena Ramon

3/12/2025

EST.1848 GEORGETOWN TEXAS

BGE, Inc.
101 West Louis Henna Blvd, Suite 400, Austin, TX 78728
Tel: 512-879-0400 • www.bgeinc.com
TBPE Registration No. F-1046

SHELL ROAD

ENVIRONMENTAL LAYOUTS

SHEET 6 OF 6

SHEET NO. 337

DATE: 3/12/2025 3:15:33 PM
FILE: G:\TXC\Projects\City Georgetown\10767-00 Shell Road\03 CADD\01 Shts\14-ENVISHELL_SW3P 06.dgn

DISCLAIMER:
The use of this standard is governed by the "Texas Engineering Practice Act". No warranty of any kind is made by TxDOT for any purpose whatsoever. TxDOT assumes no responsibility for the conversion of this standard to other formats or for incorrect results or damages resulting from its use.

DATE:
FILE:

I. STORMWATER POLLUTION PREVENTION-CLEAN WATER ACT SECTION 402

TPDES TXR 150000: Stormwater Discharge Permit or Construction General Permit required for projects with 1 or more acres disturbed soil. Projects with any disturbed soil must protect for erosion and sedimentation in accordance with Item 506.

List MS4 Operator(s) that may receive discharges from this project. They may need to be notified prior to construction activities.

1. City of Georgetown

2.

☐ No Action Required ☒ Required Action

Action No.

1. Prevent stormwater pollution by controlling erosion and sedimentation in accordance with TPDES Permit TXR 150000
2. Comply with the SW3P and revise when necessary to control pollution or required by the Engineer.
3. Post Construction Site Notice (CSN) with SW3P information on or near the site, accessible to the public and TCEQ, EPA or other inspectors.
4. When Contractor project specific locations (PSL's) increase disturbed soil area to 5 acres or more, submit NOI to TCEQ and the Engineer.

II. WORK IN OR NEAR STREAMS, WATERBODIES AND WETLANDS CLEAN WATER ACT SECTIONS 401 AND 404

USACE Permit required for filling, dredging, excavating or other work in any water bodies, rivers, creeks, streams, wetlands or wet areas.

The Contractor must adhere to all of the terms and conditions associated with the following permit(s):

☒ No Permit Required
☐ Nationwide Permit 14 - PCN not Required (less than 1/10th acre waters or wetlands affected)
☐ Nationwide Permit 14 - PCN Required (1/10 to <1/2 acre, 1/3 in tidal waters)
☐ Individual 404 Permit Required
☐ Other Nationwide Permit Required: NWP# _____

Required Actions: List waters of the US permit applies to, location in project and check Best Management Practices planned to control erosion, sedimentation and post-project TSS.

1. N/A

2.

3.

4.

The elevation of the ordinary high water marks of any areas requiring work to be performed in the waters of the US requiring the use of a nationwide permit can be found on the Bridge Layouts.

Best Management Practices:

Erosion	Sedimentation	Post-Construction TSS
☒ Temporary Vegetation	☒ Silt Fence	☐ Vegetative Filter Strips
☐ Blankets/Matting	☒ Rock Berm	☐ Retention/Irrigation Systems
☐ Mulch	☐ Triangular Filter Dike	☐ Extended Detention Basin
☐ Sodding	☐ Sand Bag Berm	☐ Constructed Wetlands
☐ Interceptor Swale	☐ Straw Bale Dike	☐ Wet Basin
☐ Diversion Dike	☐ Brush Berms	☐ Erosion Control Compost
☐ Erosion Control Compost	☐ Erosion Control Compost	☐ Mulch Filter Berm and Socks
☐ Mulch Filter Berm and Socks	☒ Mulch Filter Berm and Socks	☐ Compost Filter Berm and Socks
☐ Compost Filter Berm and Socks	☐ Compost Filter Berm and Socks	☒ Vegetation Lined Ditches
	☐ Stone Outlet Sediment Traps	☐ Sand Filter Systems
	☐ Sediment Basins	☐ Grassy Swales

III. CULTURAL RESOURCES

Refer to TxDOT Standard Specifications in the event historical issues or archeological artifacts are found during construction. Upon discovery of archeological artifacts (bones, burnt rock, flint, pottery, etc.) cease work in the immediate area and contact the Engineer immediately.

☒ No Action Required ☐ Required Action

Action No.

1. N/A

2.

3.

4.

IV. VEGETATION RESOURCES

Preserve native vegetation to the extent practical.
Contractor must adhere to Construction Specification Requirements Specs 162, 164, 192, 193, 506, 730, 751, 752 in order to comply with requirements for invasive species, beneficial landscaping, and tree/brush removal commitments.

☐ No Action Required ☒ Required Action

Action No.

1. Minimize the amount proposed for clearing and removal of native vegetation will be avoided to the greatest extent possible.
2. The use of any non-native plant species in revegetation will be discouraged.

V. FEDERAL LISTED, PROPOSED THREATENED, ENDANGERED SPECIES, CRITICAL HABITAT, STATE LISTED SPECIES, CANDIDATE SPECIES AND MIGRATORY BIRDS.

☐ No Action Required ☒ Required Action

Action No.

1. Between October 1 and February 15, the contractor will remove all old migratory nird nests from any structure that would be affected by the proposed project. In addition, the Contractor would be prepared to prevent migratory birds from building nests by using nest prevention methods, such as bird-deterrent netting and bird repelling sprays and/or gels, between February 15 and October 1. In the event that migratory birds are encountered on site during project construction, adverse impacts on protected birds, active nests, eggs, and/or young would be avoided.
2. Avoid harming all wildlife species if encountered and allow them to safety leave the project site. Due diligence should be used to avoid killing or harming any wildlife species in the implementation of the project.

If any of the listed species are observed, cease work in the immediate area, do not disturb species or habitat and contact the Engineer immediately. The work may not remove active nests from bridges and other structures during nesting season of the birds associated with the nests. If caves or sinkholes are discovered, cease work in the immediate area, and contact the Engineer immediately.

LIST OF ABBREVIATIONS

BMP:	Best Management Practice	SPCC:	Spill Prevention Control and Countermeasure
CGP:	Construction General Permit	SW3P:	Storm Water Pollution Prevention Plan
DSHS:	Texas Department of State Health Services	PCN:	Pre-Construction Notification
FHWA:	Federal Highway Administration	PSL:	Project Specific Location
MOA:	Memorandum of Agreement	TCEQ:	Texas Commission on Environmental Quality
MOU:	Memorandum of Understanding	TPDES:	Texas Pollutant Discharge Elimination System
MS4:	Municipal Separate Stormwater Sewer System	TPWD:	Texas Parks and Wildlife Department
MBTA:	Migratory Bird Treaty Act	TxDOT:	Texas Department of Transportation
NOT:	Notice of Termination	T&E:	Threatened and Endangered Species
NWP:	Nationwide Permit	USACE:	U.S. Army Corps of Engineers
NOI:	Notice of Intent	USFWS:	U.S. Fish and Wildlife Service

VI. HAZARDOUS MATERIALS OR CONTAMINATION ISSUES

General (applies to all projects):

Comply with the Hazard Communication Act (the Act) for personnel who will be working with hazardous materials by conducting safety meetings prior to beginning construction and making workers aware of potential hazards in the workplace. Ensure that all workers are provided with personal protective equipment appropriate for any hazardous materials used.

Obtain and keep on-site Material Safety Data Sheets (MSDS) for all hazardous products used on the project, which may include, but are not limited to the following categories: Paints, acids, solvents, asphalt products, chemical additives, fuels and concrete curing compounds or additives. Provide protected storage, off bare ground and covered, for products which may be hazardous. Maintain product labelling as required by the Act.

Maintain an adequate supply of on-site spill response materials, as indicated in the MSDS. In the event of a spill, take actions to mitigate the spill as indicated in the MSDS, in accordance with safe work practices, and contact the District Spill Coordinator immediately. The Contractor shall be responsible for the proper containment and cleanup of all product spills.

Contact the Engineer if any of the following are detected:
* Dead or distressed vegetation (not identified as normal)
* Trash piles, drums, canister, barrels, etc.
* Undesirable smells or odors
* Evidence of leaching or seepage of substances

Does the project involve any bridge class structure rehabilitation or replacements (bridge class structures not including box culverts)?

☐ Yes ☒ No

If "No", then no further action is required.
If "Yes", then TxDOT is responsible for completing asbestos assessment/inspection.

Are the results of the asbestos inspection positive (is asbestos present)?

☐ Yes ☒ No

If "Yes", then TxDOT must retain a DSHS licensed asbestos consultant to assist with the notification, develop abatement/mitigation procedures, and perform management activities as necessary. The notification form to DSHS must be postmarked at least 15 working days prior to scheduled demolition.

If "No", then TxDOT is still required to notify DSHS 15 working days prior to any scheduled demolition.

In either case, the Contractor is responsible for providing the date(s) for abatement activities and/or demolition with careful coordination between the Engineer and asbestos consultant in order to minimize construction delays and subsequent claims.

Any other evidence indicating possible hazardous materials or contamination discovered on site. Hazardous Materials or Contamination Issues Specific to this Project:

☐ No Action Required ☒ Required Action

Action No.

1. If hazardous materials presenting a risk to human health or safety are encountered during, construction, cease work immediately (where the hazardous materials were identified) and contact the Project Manager.

VII. OTHER ENVIRONMENTAL ISSUES

(includes regional issues such as Edwards Aquifer District, etc.)

☐ No Action Required ☒ Required Action

Action No.

1. Comply with WPAP.

Texas Department of Transportation — Design Division Standard

ENVIRONMENTAL PERMITS, ISSUES AND COMMITMENTS

EPIC

FILE: epic.dgn	DN: TxDOT	CK: RG	DW: VP	CK: AR
© TxDOT: February 2015	CONT	SECT	JOB	HIGHWAY
REVISIONS 12-12-2011 (DS) 05-07-14 ADDED NOTE SECTION IV. 01-23-2015 SECTION I (CHANGED ITEM 1122 TO ITEM 506, ADDED GRASSY SWALES.	DIST	COUNTY		SHEET NO. 338

DISCLAIMER:
The use of this standard is governed by the "Texas Engineering Practice Act". No warranty of any kind is made by TxDOT for any purpose whatsoever. TxDOT assumes no responsibility for the conversion of this standard to other formats or for incorrect results or damages resulting from its use.

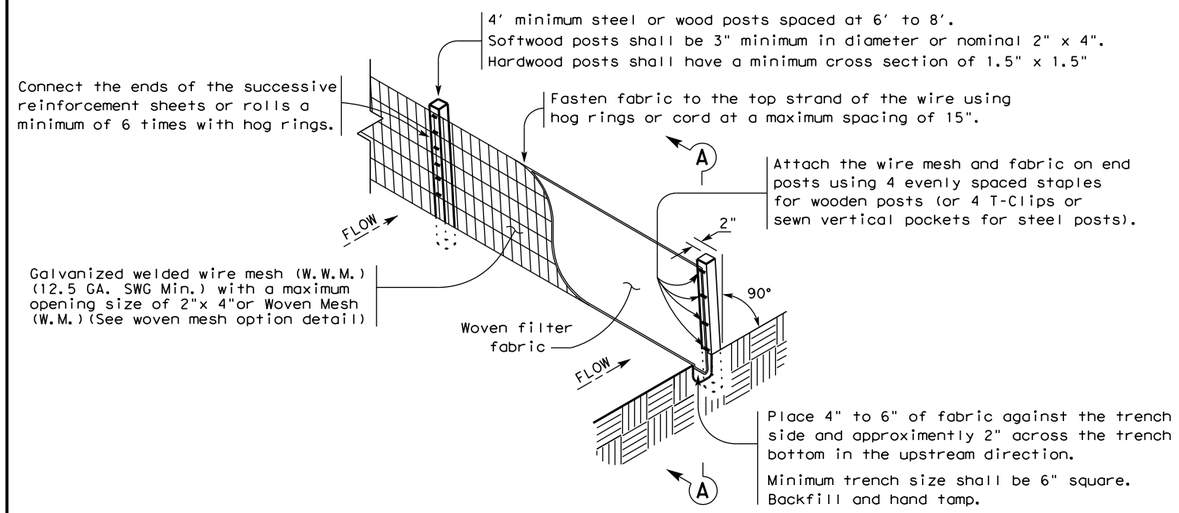

TEMPORARY SEDIMENT CONTROL FENCE

SCF

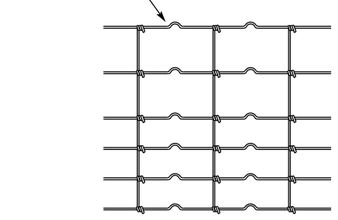

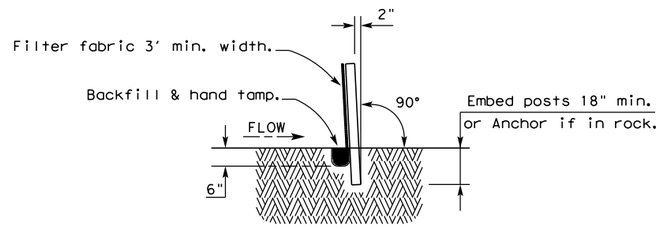

SECTION A-A

HINGE JOINT KNOT WOVEN MESH (OPTION) DETAIL

Galvanized hinge joint knot woven mesh (12.5 GA.SWG Min.) requires a minimum of five horizontal wires spaced at a maximum of 12 inches apart and all vertical wires spaced at a maximum of 12 inches apart.

SEDIMENT CONTROL FENCE USAGE GUIDELINES

A sediment control fence may be constructed near the downstream perimeter of a disturbed area along a contour to intercept sediment from overland runoff. A 2 year storm frequency may be used to calculate the flow rate to be filtered.

Sediment control fence should be sized to filter a maximum flow through rate of 100 GPM/FT^2. Sediment control fence is not recommended to control erosion from a drainage area larger than 2 acres.

LEGEND

Sediment Control Fence

SCF

GENERAL NOTES

1. Vertical tracking is required on projects where soil distributing activities have occurred unless otherwise approved.
2. Perform vertical tracking on slopes to temporarily stabilize soil.
3. Provide equipment with a track undercarriage capable of producing linear soil impressions measuring a minimum of 12" in length by 2" to 4" in width by 1/2" to 2" in depth.
4. Do not exceed 12" between track impressions.
5. Install continous linear track impressions where the minimum 12" length impressions are perpendicular to the slope or direction of water flow.

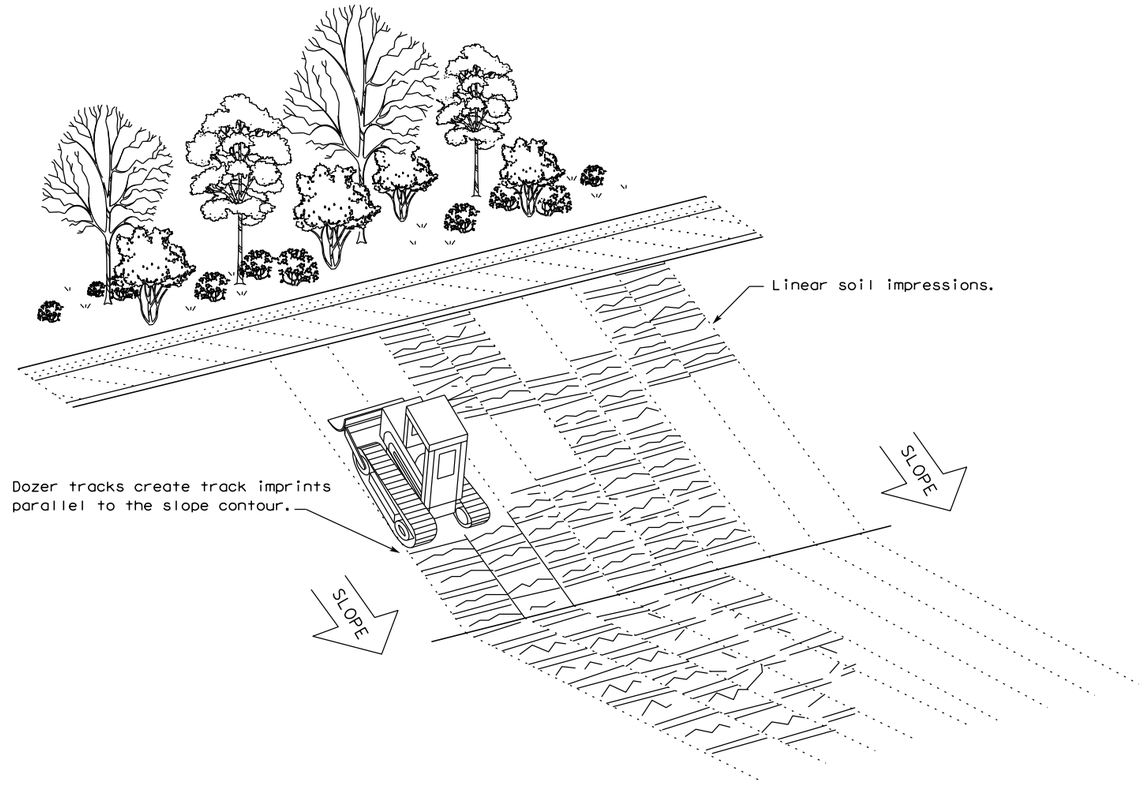

VERTICAL TRACKING

Texas Department of Transportation

Design Division Standard

TEMPORARY EROSION, SEDIMENT AND WATER POLLUTION CONTROL MEASURES

FENCE & VERTICAL TRACKING

EC(1)-16

FILE: ec116	DN: TxDOT	CK: KM	DW: VP	DN/CK: LS
© TxDOT: JULY 2016	CONT	SECT	JOB	HIGHWAY
REVISIONS				
	DIST	COUNTY		SHEET NO.
				339

3DATE2025
GFILE:C:\Projects\City_Georgetown\10767-00 Shell Road\03_CADD\01_Shts\14-ENV\Shts\ec116.dgn

DISCLAIMER:
The use of this standard is governed by the "Texas Engineering Practice Act". No warranty of any kind is made by TxDOT for any purpose whatsoever. TxDOT assumes no responsibility for the conversion of this standard to other formats or for incorrect results or damages resulting from its use.

DATE: 3/12/2025
FILE: G:\TXC\Projects\City_Georgetown\10767-00 Shell Road\03_CADD\01_Shts\14-ENV\Stds\ec216.dgn

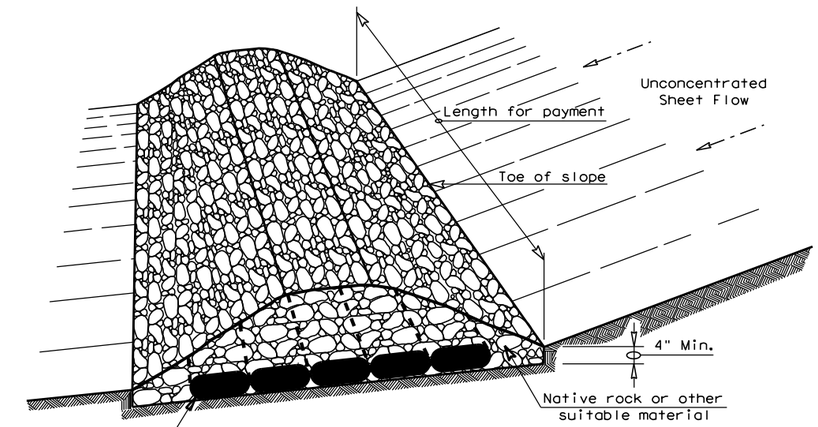

FILTER DAM AT TOE OF SLOPE

RFD1

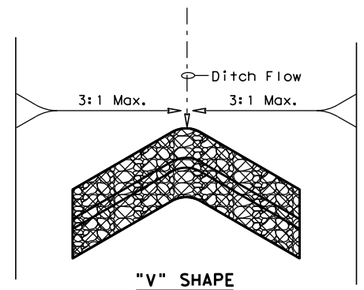

"V" SHAPE
PLAN VIEW

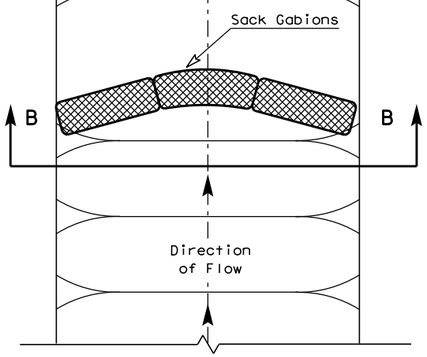

PLAN VIEW

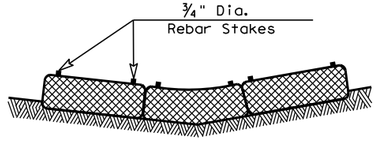

SECTION B-B

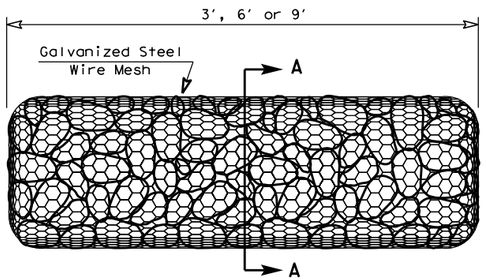

TYPE 4 (SACK GABIONS)

RFD4

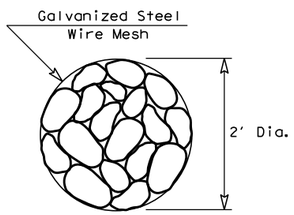

SECTION A-A

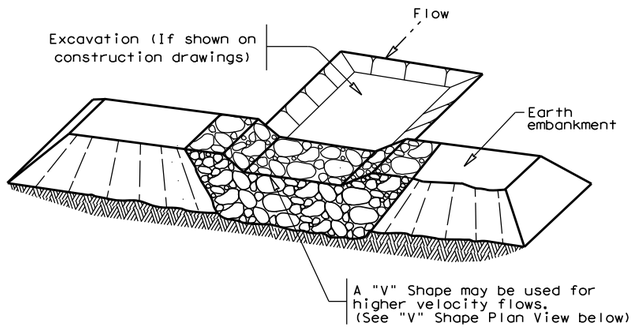

FILTER DAM AT SEDIMENT TRAP

RFD1 — OR — RFD2

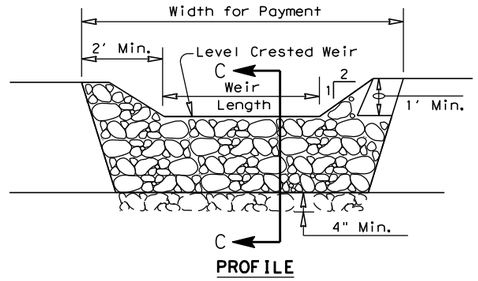

PROFILE

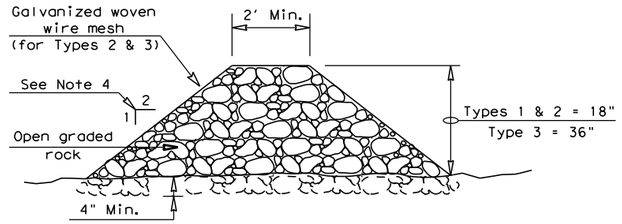

SECTION C-C

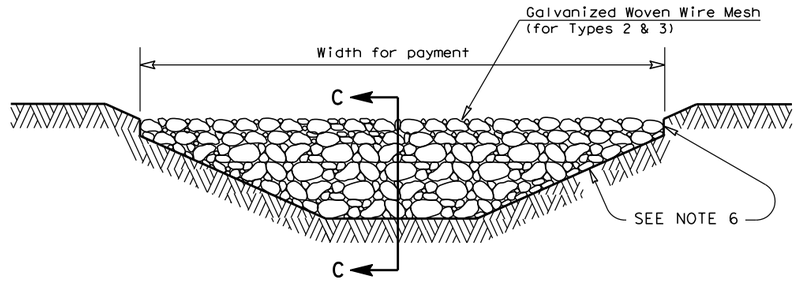

FILTER DAM AT CHANNEL SECTIONS

RFD1 — OR — RFD2 — OR — RFD3

GENERAL NOTES

1. If shown on the plans or directed by the Engineer, filter dams should be placed near the toe of slopes where erosion is anticipated, upstream and/or downstream at drainage structures, and in roadway ditches and channels to collect sediment.
2. Materials (aggregate, wire mesh, sandbags, etc.) shall be as indicated by the specification for "Rock Filter Dams for Erosion and Sedimentation Control".
3. The rock filter dam dimensions shall be as indicated on the SW3P plans.
4. Side slopes should be 2:1 or flatter. Dams within the safety zone shall have sideslopes of 6:1 or flatter.
5. Maintain a minimum of 1' between top of rock filter dam weir and top of embankment for filter dams at sediment traps.
6. Filter dams should be embedded a minimum of 4" into existing ground.
7. The sediment trap for ponding of sediment laden runoff shall be of the dimensions shown on the plans.
8. Rock filter dam types 2 & 3 shall be secured with 20 gauge galvanized woven wire mesh with 1" diameter hexagonal openings. The aggregate shall be placed on the mesh to the height & slopes specified. The mesh shall be folded at the upstream side over the aggregate and tightly secured to itself on the downstream side using wire ties or hog rings. For in stream use, the mesh should be secured or staked to the stream bed prior to aggregate placement.
9. Sack Gabions should be staked down with ¾" dia. rebar stakes, and have a double-twisted hexagonal weave with a nominal mesh opening of 2 ½" x 3 ¼"
10. Flow outlet should be onto a stabilized area (vegetation, rock, etc.).
11. The guidelines shown hereon are suggestions only and may be modified by the Engineer.

ROCK FILTER DAM USAGE GUIDELINES

Rock Filter Dams should be constructed downstream from disturbed areas to intercept sediment from overland runoff and/or concentrated flow. The dams should be sized to filter a maximum flow through rate of 60 GPM/FT^2 of cross sectional area. A 2 year storm frequency may be used to calculate the flow rate.

Type 1 (18" high with no wire mesh) (3" to 6" aggregate): Type 1 may be used at the toe of slopes, around inlets, in small ditches, and at dike or swale outlets. This type of dam is recommended to control erosion from a drainage area of 5 acres or less. Type 1 may not be used in concentrated high velocity flows (approximently 8 Ft/Sec or more) in which aggregate wash out may occur. Sandbags may be used at the embedded foundation (4" deep min.) for better filtering efficiency of low flows if called for on the plans or directed by the Engineer.

Type 2 (18" high with wire mesh) (3" to 6" aggregate): Type 2 may be used in ditches and at dike or swale outlets.

Type 3 (36" high with wire mesh) (4" to 8" aggregate): Type 3 may be used in stream flow and should be secured to the stream bed.

Type 4 (Sack gabions) (3" to 6" aggregate): Type 4 May be used in ditches and smaller channels to form an erosion control dam.

Type 5: Provide rock filter dams as shown on plans.

PLAN SHEET LEGEND

Type 1 Rock Filter Dam	RFD1
Type 2 Rock Filter Dam	RFD2
Type 3 Rock Filter Dam	RFD3
Type 4 Rock Filter Dam	RFD4

Texas Department of Transportation — Design Division Standard

TEMPORARY EROSION, SEDIMENT AND WATER POLLUTION CONTROL MEASURES

ROCK FILTER DAMS

EC(2)-16

FILE: ec216	DN: TxDOT	CK: KM	DW: VP	DN/CK: LS
© TxDOT: JULY 2016	CONT	SECT	JOB	HIGHWAY
REVISIONS				
	DIST	COUNTY		SHEET NO.
				340

DISCLAIMER:
The use of this standard is governed by the "Texas Engineering Practice Act". No warranty of any kind is made by TxDOT for any purpose whatsoever. TxDOT assumes no responsibility for the conversion of this standard to other formats or for incorrect results or damages resulting from its use.

DATE: 3/12/2025
FILE: G:\TXC\Projects\City_Georgetown\10767-00 Shell Road\03_CADD\01_Shts\14-ENV\Stds\ec316.dgn

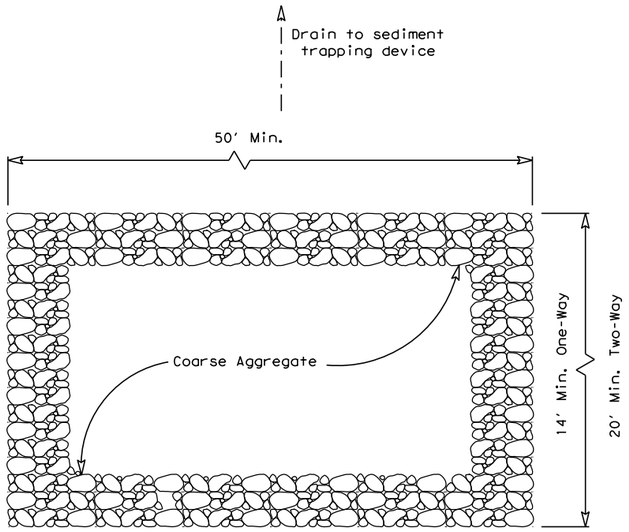

PLAN VIEW

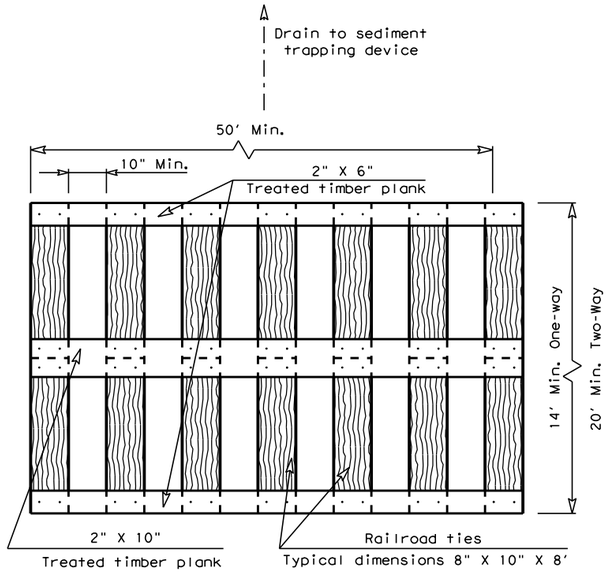

PLAN VIEW

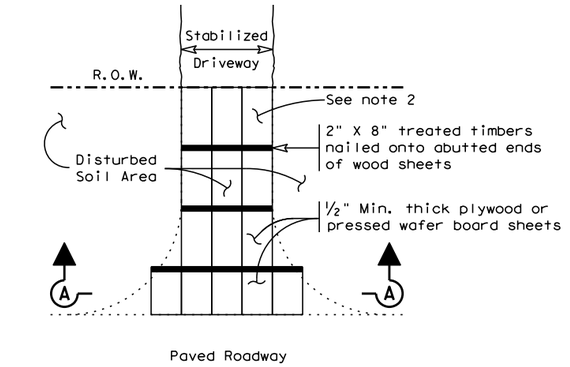

PLAN VIEW

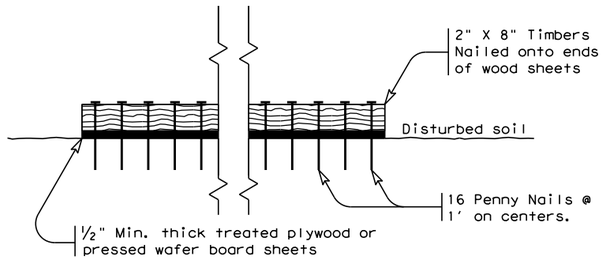

SECTION A-A

CONSTRUCTION EXIT (TYPE 3)

SHORT TERM

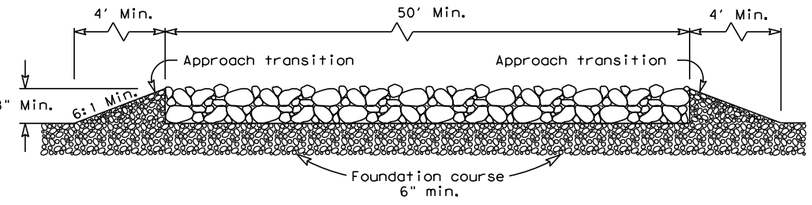

ELEVATION VIEW

CONSTRUCTION EXIT (TYPE 1)

ROCK CONSTRUCTION (LONG TERM)

GENERAL NOTES (TYPE 1)

1. The length of the type 1 construction exit shall be as indicated on the plans, but not less than 50'.
2. The coarse aggregate should be open graded with a size of 4" to 8".
3. The approach transitions should be no steeper than 6:1 and constructed as directed by the Engineer.
4. The construction exit foundation course shall be flexible base, bituminous concrete, portland cement concrete or other materialas approved by the Engineer.
5. The construction exit shall be graded to allow drainage to a sediment trapping device.
6. The guidelines shown hereon are suggestions only and may be modified by the Engineer.
7. Construct exits with a width of at least 14 ft. for one-way and 20 ft. for two-way traffic for the full width of the exit, or as directed by the engineer.

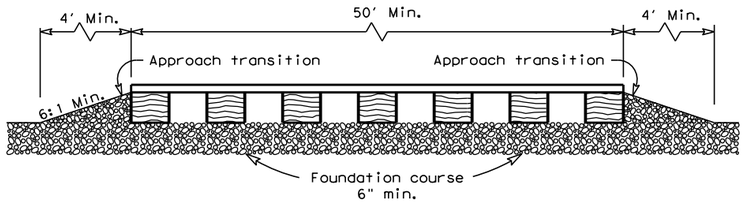

ELEVATION VIEW

CONSTRUCTION EXIT (TYPE 2)

TIMBER CONSTRUCTION (LONG TERM)

GENERAL NOTES (TYPE 2)

1. The length of the type 2 construction exit shall be as indicated on the plans, but not less than 50'.
2. The treated timber planks shall be attached to the railroad ties with ½"x 6" min. lag bolts. Other fasteners may be used as approved by the Engineer.
3. The treated timber planks shall be #2 grade min., and should be free from large and loose knots.
4. The approach transitions shall be no steeper than 6:1 and constructed as directed by the Engineer.
5. The construction exit foundation course shall be flexible base, bituminous concrete, portland cement concrete or other material as approved by the Engineer.
6. The construction exit should be graded to allow drainage to a sediment trapping device.
7. The guidelines shown hereon are suggestions only and may be modified by the Engineer.
8. Construct exits with a width of at least 14 ft. for one-way and 20 ft. for two-way traffic for the full width of the exit, or as directed by the engineer.

GENERAL NOTES (TYPE 3)

1. The length of the type 3 construction exit shall be as shown on the plans, or as directed by the Engineer.
2. The type 3 construction exit may be constructed from open graded crushed stone with a size of two to four inches spread a min. of 4" thick to the limits shown on the plans.
3. The treated timber planks shall be #2 grade min., and should be free from large and loose knots.
4. The guidelines shown hereon are suggestions only and may be modified by the Engineer.

Texas Department of Transportation

Design Division Standard

TEMPORARY EROSION, SEDIMENT AND WATER POLLUTION CONTROL MEASURES

CONSTRUCTION EXITS

EC(3)-16

FILE: ec316	DN: TxDOT	CK: KM	DW: VP	DN/CK: LS
©TxDOT: JULY 2016	CONT	SECT	JOB	HIGHWAY
REVISIONS				
	DIST	COUNTY		SHEET NO.
				341

DISCLAIMER:
The use of this standard is governed by the "Texas Engineering Practice Act". No warranty of any kind is made by TxDOT for any purpose whatsoever. TxDOT assumes no responsibility for the conversion of this standard to other formats or for incorrect results or damages resulting from its use.

DATE: 3/12/2025
FILE: G:\TXCVProjects\City_Georgetown\10767-00 Shell Road\03_CADD\01_Shts\14-ENV\Stds\ec916.dgn

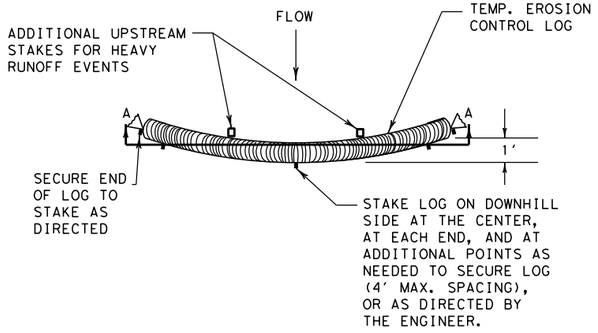

PLAN VIEW

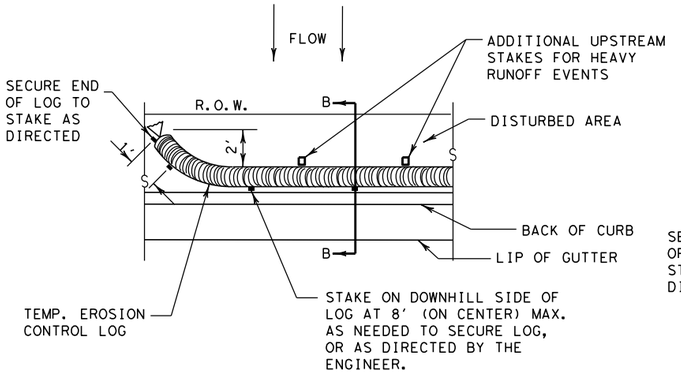

PLAN VIEW

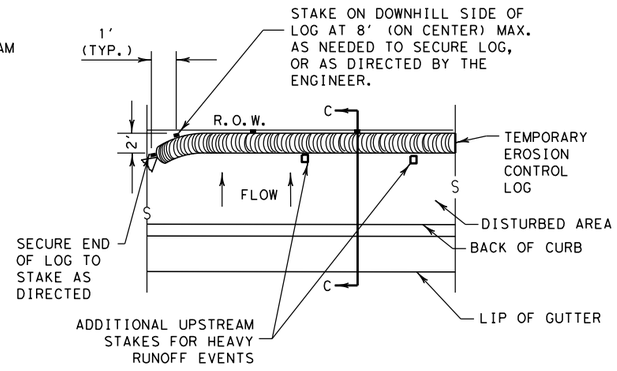

PLAN VIEW

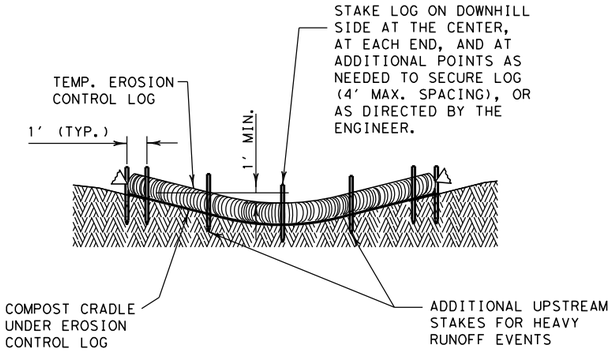

SECTION A-A

EROSION CONTROL LOG DAM

CL-D

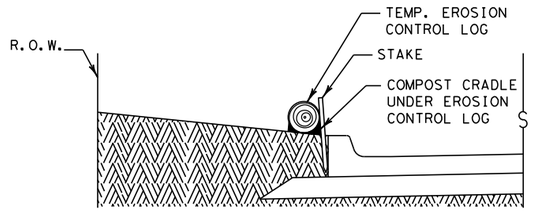

SECTION B-B

EROSION CONTROL LOG AT BACK OF CURB

CL-BOC

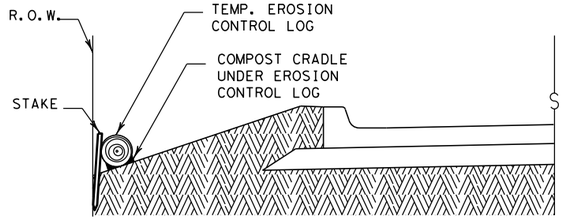

SECTION C-C

EROSION CONTROL LOG AT EDGE OF RIGHT-OF-WAY

CL-ROW

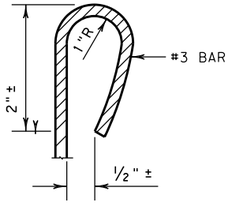

REBAR STAKE DETAIL

LEGEND

- CL-D — EROSION CONTROL LOG DAM
- CL-BOC — EROSION CONTROL LOG AT BACK OF CURB
- CL-ROW — EROSION CONTROL LOG AT EDGE OF RIGHT-OF-WAY
- CL-SST — EROSION CONTROL LOGS ON SLOPES STAKE AND TRENCHING ANCHORING
- CL-SSL — EROSION CONTROL LOGS ON SLOPES STAKE AND LASHING ANCHORING
- CL-DI — EROSION CONTROL LOG AT DROP INLET
- CL-CI — EROSION CONTROL LOG AT CURB INLET
- CL-GI — EROSION CONTROL LOG AT CURB & GRATE INLET

GENERAL NOTES:

1. EROSION CONTROL LOGS SHALL BE INSTALLED IN ACCORDANCE WITH MANFACTURER'S RECOMMENDATIONS, OR AS DIRECTED BY THE ENGINEER.
2. LENGTHS OF EROSION CONTROL LOGS SHALL BE IN ACCORDANCE WITH MANUFACTURER'S RECOMMENDATIONS AND AS REQUIRED FOR THE PURPOSE INTENDED.
3. UNLESS OTHERWISE DIRECTED, USE BIODEGRADABLE OR PHOTODEGRADABLE CONTAINMENT MESH ONLY WHERE LOG WILL REMAIN IN PLACE AS PART OF A VEGETATIVE SYSTEM. FOR TEMPORARY INSTALLATIONS, USE RECYCLABLE CONTAINMENT MESH.
4. FILL LOGS WITH SUFFICIENT FILTER MATERIAL TO ACHIEVE THE MINIMUM COMPACTED DIAMETER SPECIFIED IN THE PLANS WITHOUT EXCESSIVE DEFORMATION.
5. STAKES SHALL BE 2" X 2" WOOD OR #3 REBAR, 2'-4' LONG, EMBEDDED SUCH THAT 2" PROTRUDES ABOVE LOG, OR AS DIRECTED BY THE ENGINEER.
6. DO NOT PLACE STAKES THROUGH CONTAINMENT MESH.
7. COMPOST CRADLE MATERIAL IS INCIDENTAL & WILL NOT BE PAID FOR SEPARATELY.
8. SANDBAGS USED AS ANCHORS SHALL BE PLACED ON TOP OF LOGS & SHALL BE OF SUFFICIENT SIZE TO HOLD LOGS IN PLACE.
9. TURN THE ENDS OF EACH ROW OF LOGS UPSLOPE TO PREVENT RUNOFF FROM FLOWING AROUND THE LOG.
10. FOR HEAVY RUNOFF EVENTS, ADDITIONAL UPSTREAM STAKES MAY BE NECESSARY TO KEEP LOG FROM FOLDING IN ON ITSELF.

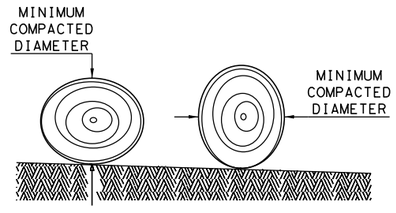

DIAMETER MEASUREMENTS OF EROSION CONTROL LOGS SPECIFIED IN PLANS

SEDIMENT BASIN & TRAP USAGE GUIDELINES

An erosion control log sediment trap may be used to filter sediment out of runoff draining from an unstabilized area.

Log Traps: The drainage area for a sediment trap should not exceed 5 acres. The trap capacity should be 1800 CF/Acre (0.5" over the drainage area).

Control logs should be placed in the following locations:

1. Within drainage ditches spaced as needed or min. 500' on center
2. Immediately preceding ditch inlets or drain inlets
3. Just before the drainage enters a water course
4. Just before the drainage leaves the right of way
5. Just before the drainage leaves the construction limits where drainage flows away from the project.

The logs should be cleaned when the sediment has accumulated to a depth of 1/2 the log diameter.

Cleaning and removal of accumulated sediment deposits is incidental and will not be paid for separately.

Texas Department of Transportation

Design Division Standard

TEMPORARY EROSION, SEDIMENT AND WATER POLLUTION CONTROL MEASURES

EROSION CONTROL LOG

EC(9)-16

FILE: ec916	DN: TxDOT		CK: KM		DW: LS/PT		CK: LS
© TxDOT: JULY 2016	CONT	SECT	JOB		HIGHWAY		
REVISIONS							
	DIST	COUNTY				SHEET NO.	
						342	

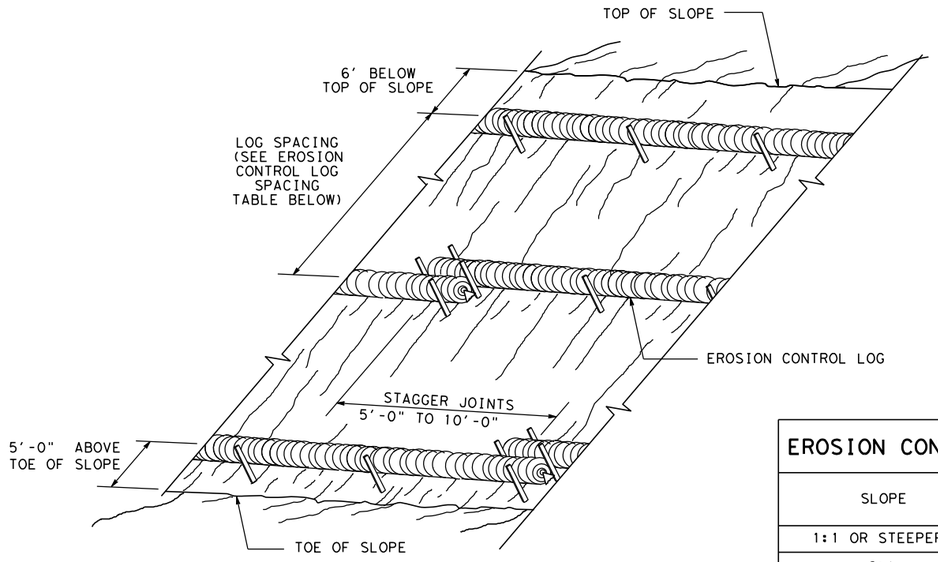

EROSION CONTROL LOGS ON SLOPES
STAKE AND TRENCHING ANCHORING

CL-SST

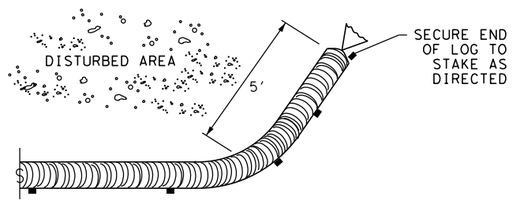

END SECTION RAP DETAIL

EROSION CONTROL LOG SPACING TABLE				
SLOPE	LOG DIAMETER			
	6"	8"	12"	18"
1:1 OR STEEPER	5'	10'	15'	20'
2:1	10'	20'	30'	40'
3:1	15'	30'	45'	60'
4:1 OR FLATTER	20'	40'	60'	80'

* ADJUSTMENTS CAN BE MADE FOR SOIL TYPE:
SOFT, LOAMY SOILS-ADJUST ROWS CLOSER TOGETHER;
HARD, ROCKY SOILS- ADJUST ROWS FARTHER APART

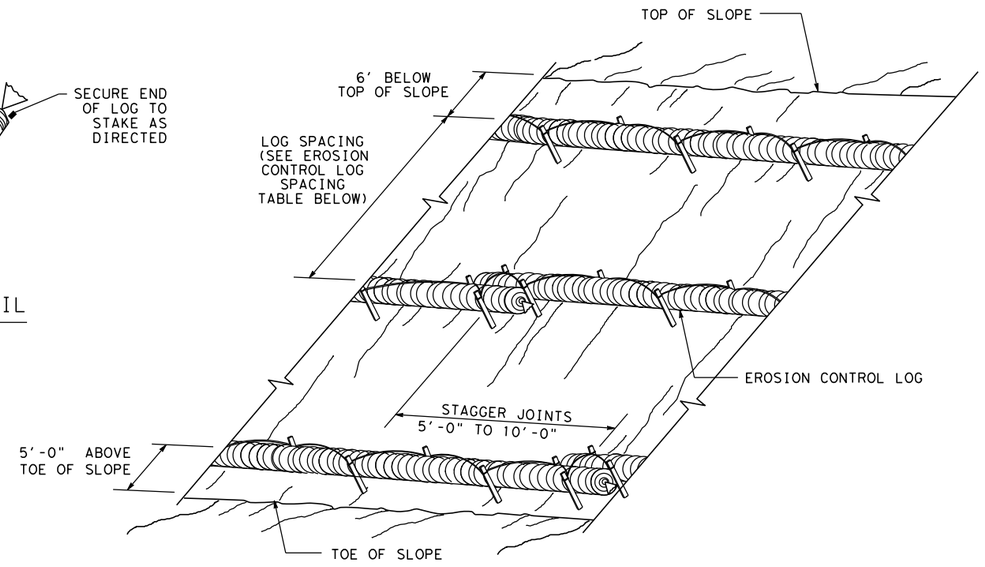

EROSION CONTROL LOGS ON SLOPES
STAKE AND LASHING ANCHORING

CL-SSL

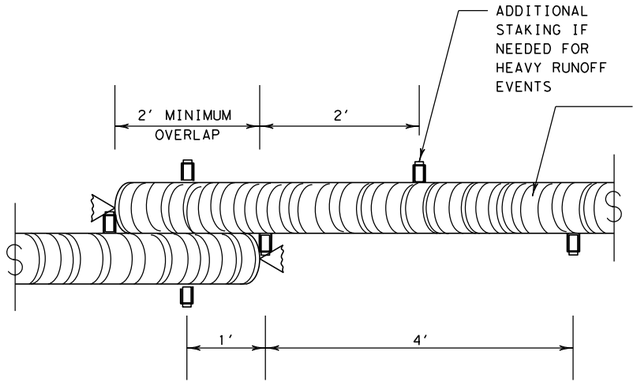

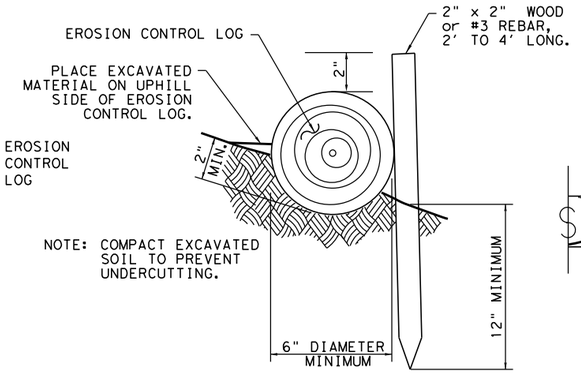

STAKE AND TRENCHING ANCHORING DETAIL

CL-SST

TRENCH DEPTH TABLE	
LOG DIAMETER	DEPTH
6"	2"
8"	3"
12"	4"
18"	5"

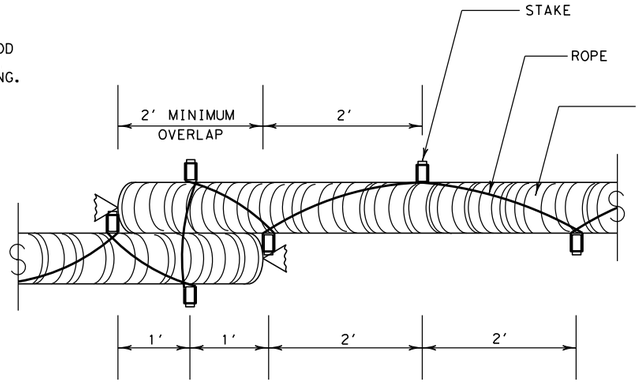

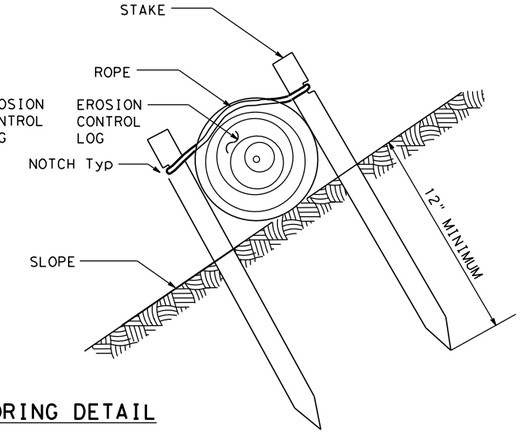

STAKE AND LASHING ANCHORING DETAIL

CL-SSL

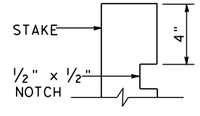

STAKE NOTCH DETAIL

SHEET 2 OF 3

Texas Department of Transportation

Design Division Standard

TEMPORARY EROSION, SEDIMENT AND WATER POLLUTION CONTROL MEASURES
EROSION CONTROL LOG
EC(9)-16

FILE: ec116	DN: TxDOT	CK: KM	DW: LS/PT	CK: LS	
© TxDOT: JULY 2016	CONT	SECT	JOB	HIGHWAY	
REVISIONS					
	DIST	COUNTY		SHEET NO.	
				343	

DISCLAIMER:
The use of this standard is governed by the "Texas Engineering Practice Act". No warranty of any kind is made by TxDOT for any purpose whatsoever. TxDOT assumes no responsibility for the conversion of this standard to other formats or for incorrect results or damages resulting from its use.

DATE: 3/12/2025
FILE: G:\TXC\Projects\City_Georgetown\10767-00 Shell Road\03_CADD\01_Shts\14-ENV\Stds\ec916.dgn

DISCLAIMER:
The use of this standard is governed by the "Texas Engineering Practice Act". No warranty of any kind is made by TxDOT for any purpose whatsoever. TxDOT assumes no responsibility for the conversion of this standard to other formats or for incorrect results or damages resulting from its use.

DATE: 3/12/2025
FILE: G:\TXC\Projects\City_Georgetown\10767-00 Shell Road\03_CADD\01_Shts\14-ENV\Stds\ec916.dgn

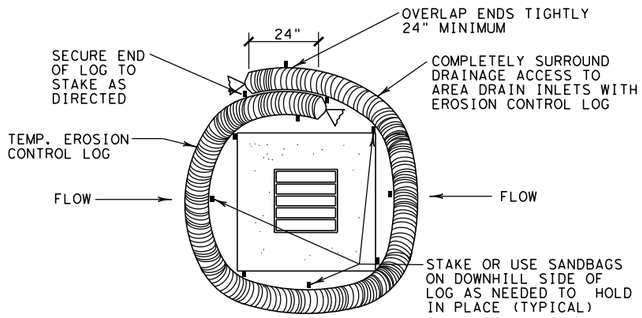

EROSION CONTROL LOG AT DROP INLET

CL-DI

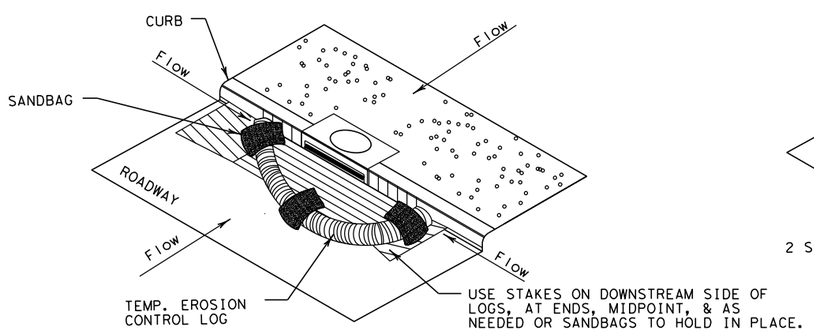

EROSION CONTROL LOG AT CURB INLET

CL-CI

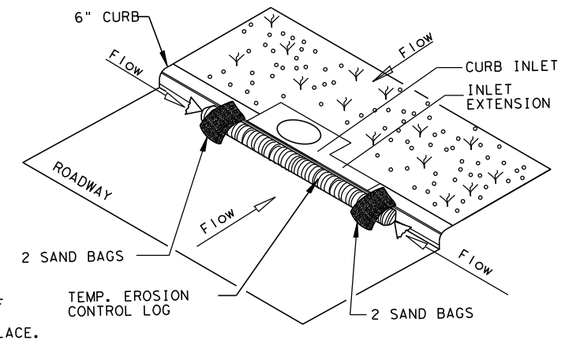

EROSION CONTROL LOG AT CURB INLET

CL-CI

NOTE:
EROSION CONTROL LOGS USED AT CURB INLETS SHOULD ONLY BE USED IF THEY WILL NOT IMPEDE TRAFFIC OR FLOOD THE ROADWAY OR WHEN THE STORM SEWER SYSTEM IS NOT FULLY FUNCTIONAL.

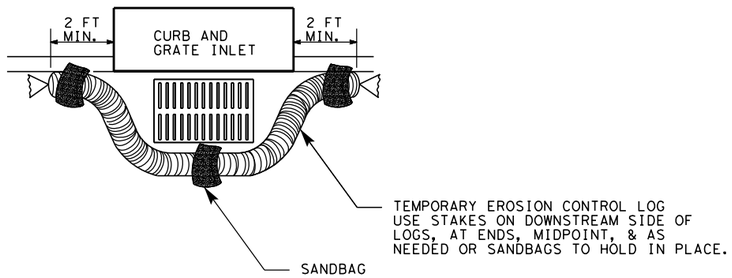

EROSION CONTROL LOG AT CURB & GRADE INLET

CL-GI



SECTION B-B

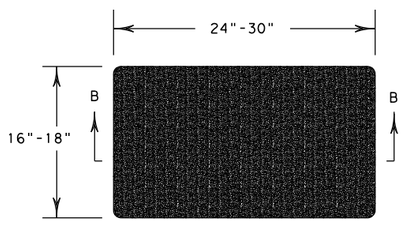

SANDBAG DETAIL

SHEET 3 OF 3

Texas Department of Transportation

Design Division Standard

TEMPORARY EROSION, SEDIMENT AND WATER POLLUTION CONTROL MEASURES

EROSION CONTROL LOG

EC(9)-16

FILE: ec916	DN: TxDOT	CK: KM	DW: LS/PT	CK: LS
© TxDOT: JULY 2016	CONT	SECT	JOB	HIGHWAY
REVISIONS				
	DIST	COUNTY		SHEET NO.
				344

EXISTING FEATURES

	CENTERLINE
	RIGHT OF WAY LINE
	PROPERTY LINE
	EASEMENT LINE
25Y	FLOOD HAZARD ZONE 25 YEAR
100Y	FLOOD HAZARD ZONE 100 YEAR
500Y	FLOOD HAZARD ZONE 500 YEAR
25Y-FEMA	FLOOD HAZARD ZONE 25 YEAR FEMA
100Y-FEMA	FLOOD HAZARD ZONE 100 YEAR FEMA
500Y-FEMA	FLOOD HAZARD ZONE 500 YEAR FEMA
CWQZ	CRITICAL WATER QUALITY ZONE
WQTZ	TRANSITION WATER QUALITY ZONE
DR	DRAINAGE EDGE
	DRAINAGE CENTERLINE
	DITCH EDGE
TC	TIME OF CONCENTRATION
600	MAJOR CONTOURS
599	MINOR CONTOURS
	PAVED ROAD EDGE
	PAVED PARKING / DRIVEWAY EDGE
	GRAVEL EDGE
	CURB LINE
	BUILDING LINE
	GUARDRAIL
	HANDRAIL
	CHAINLINK FENCE
X	BARBWIRE FENCE
//	WOOD FENCE
[]	STEEL FENCE
@	FENCE LINE
	STONE / ROCK WALL
	BRICK WALL
	TREE LINE
C-OH	COMMUNICATION OVERHEAD
C-UG	COMMUNCATION UNDERGROUND
FO-OH	FIBER OPTIC OVERHEAD
FO-UG	FIBER OPTIC UNDERGROUND
TS-OH	TRAFFIC SIGNAL OVERHEAD
TS-UG	TRAFFIC SIGNAL UNDERGROUND
E-OH	ELECTRIC OVERHEAD
E-UG	ELECTRIC UNDERGROUND
C/E-OH	ELECTRIC/ COMMUNICATION OVERHEAD
C/E-UG	ELECTRIC/ COMMUNICATION UNDERGROUND
CW	CHILLED WATER LINE
CW-AB	CHILLED WATER ABANDONED
G	NATURAL GAS LINE
G-AB	NATURAL GAS ABANDONED
R	RECLAIMED WATER LINE
R-AB	RECLAIMED WATER ABANDONED
IR	IRRIGATION LINE
IR-AB	IRRIGATION ABANDONED
SD	STORM DRAIN LINE
SD-AB	STORM DRAIN ABANDONED
W	WATER LINE
W-AB	WATER ABANDONED
WW	WASTEWATER LINE
FM	FORCE MAIN LINE
WW-AB	WASTEWATER ABANDONED
FM-AB	FORCE MAIN ABANDONED

	BRASS DISK FOUND		STORM DRAIN AREA INLET	C	COMMUNICATION PEDESTAL
	BRASS DISK SET		DRAINAGE ARROW	C JB	COMM. JUNCTION BOX
	BOLT FOUND		STORM DRAIN CURB INLET	C	COMMUNICATION MANHOLE
	BOLT SET	SSCO	STORM DRAIN CLEANOUT		COMMUNICATION POLE
BM	BENCHMARK FOUND		STORM DRAIN GRATE INLET	C	COMMUNICATION VAULT
BM	BENCHMARK SET		STORM DRAIN HEADWALL	FO	FIBER OPTIC MANHOLE
	CALCULATED POINT	SS	STORM DRAIN MANHOLE	FO JB	FIBER OPTIC JUNCTION BOX
	CONTROL POINT FOUND		STORM DRAIN WINGWALL	E	ELECTRIC ANCHOR
	CONTROL POINT SET			E JB	ELECTRIC JUNCTION BOX
	COTTON SPINDLE FOUND	WW	WASTEWATER AR VALVE		ELECTRIC LIGHT POLE
	COTTON SPINDLE SET	WW	WWTR BACKFLOW PRVN.	E	ELECTRIC MANHOLE
	DRILL HOLE FOUND	WWCO	WASTEWATER CLEANOUT	E	ELECTRIC METER
	DRILL HOLE SET	WW	WASTEWATER FLOW METER		ELECTRIC POLE
	HUB & TACK FOUND	L	WWTR LIFT STATION	E PB	ELECTRIC PULL BOX
	HUB & TACK SET	WW	WASTEWATER MANHOLE	E	ELECTRIC VAULT
	IRON PIPE FOUND	WW	WASTEWATER METER		ELECTRIC TOWER
	IRON PIPE SET	WWSC	WWTR SRVC. CONNECTION	CW	CHILLED WATER MANHOLE
	IRON ROD FOUND	WW	WASTEWATER VAULT	CW	CHILLED WATER VALVE
	IRON ROD SET	WW	WASTEWATER VALVE	G L	NATURAL GAS LIGHT
	MONUMENT FOUND			G	NATURAL GAS MANHOLE
	MONUMENT SET	AF	WATER AF VALVE	G	NATURAL GAS METER
	MAGNAIL FOUND	AR	WATER AR VALVE AUTO	G	NATURAL GAS VALVE
	MAGNAIL SET	W	WATER AR VALVE COMBO	G V	NATURAL GAS VENT
	PROPERTY PIN FOUND	W	WATER AR VALVE MANUAL	IC	IRRG. CONTROL VALVE
	PROPERTY PIN SET	W	WATER BACKFLOW PREV.	SC	SPRINKLER CONTROL VALVE
TBM	TEMP. BENCHMARK FOUND	W	WATER BOUNDARY VALVE		SPRINKLER HEAD
TBM	TEMP. BENCHMARK SET		WATR / WWTR CAP		IRRIGATION HOSE BIB
	CROSS FOUND	W	WATER CHECK VLV. SINGLE	R	RECLAIMED WATER MANH.
	CROSS SET	W	WATER CHECK VLV. DOUBLE	R	RECLAIMED WATER METER
	BIKE RACK	D	WATER DRAINAGE VALVE	R	RECLAIMED WATER VALVE
	BOLLARD	D	WATER DRAINAGE MANHOLE		TRAFFIC SIGNAL MANHOLE
	BENCH	F	WATER FIRE CONNECTION	TC	TRAF. SIGNAL CONTROL BOX
BUS	BUS STOP	FH	WATER FIRE HYDRANT	TP	TRAFFIC SIGNAL PULL BOX
	GARBAGE CAN	W	WATER FLOW METER		TRAF. SIGNAL / PED SIGNAL
	GUARDRAIL POST	W	WATER HANDHOLE		TRAF. SIGNAL LIGHT & SIGN.
	MAILBOX	F	WATER HYD. PRS. RLS. VLV.		TRAF. SIGNAL SIGN. EXTEND.
PM	PARKING METER		WATER MANHOLE		
	POST		WATR / WWTR MAT. CHANGE		
	SIGN	W	WATER METER		
U	MANHOLE UNKNOWN	M	WATER MONITOR WELL		
TP	TEST PIT		WATR / WWTR PLUG		
BL 201	BORE HOLE		WATR / WWTR PROJ. SEP.		
	RAILROAD SIGNAL	W	WATER PRS. RLS. VALVE		
	SHRUB	W	WATER PRS. SUST. VALVE		
	TREE		WATR / WWTR REDUCER		
		WSC	WATER SRVC. CONNECTION		
		WSO	WATER SHUTOFF VALVE		
		W	WATER VAULT		
		W	WATER VALVE		
		W	WATER VAC. RLS. VALVE		
		W	WATER WELL		

PROPOSED FEATURES

	CENTERLINE
	RIGHT OF WAY LINE
	PROPERTY LINE
	EASEMENT LINE
25Y	FLOOD HAZARD ZONE 25 YEAR
100Y	FLOOD HAZARD ZONE 100 YEAR
CWQZ	CRITICAL WATER QUALITY ZONE
WQTZ	TRANSITION WATER QUALITY ZONE
DR	DRAINAGE EDGE
	DRAINAGE CENTERLINE
	DITCH EDGE
TC	TIME OF CONCENTRATION
600	MAJOR CONTOURS
599	MINOR CONTOURS
	PAVED ROAD EDGE
	PAVED PARKING / DRIVEWAY EDGE
	GRAVEL EDGE
	PAVED ROAD DEMOLITION
	PAVED PARKING DEMOLITION
	CURB LINE
	CURB LINE DEMOLITION
	BUILDING LINE
	GUARDRAIL
	GUARDRAIL DEMOLITION
	HANDRAIL
	HANDRAIL DEMOLITION
	CHAINLINK FENCE
	STEEL FENCE
	FENCE DEMOLITION (GENERIC)
	STONE / ROCK WALL
	BRICK WALL
	TRAFFIC CONE LINE
	TRANSVERSE JOINT
	LONGITUDINAL JOINT
RB	EROSION ROCK BERM
	EROSION DIVERSION DIKE
MS	EROSION MULCH SOCK
SF	EROSION SILT FENCE
TFD	EROSION TRI-FILTER DIKE
TP	EROSION TREE PROTECTION
LOC	LIMITS OF CONSTRUCTION
C-OH	COMMUNICATION OVERHEAD
C-OH-TBA	COMMUNICATION OVERHEAD TO ABANDON
C-OH-TBR	COMMUNICATION OVERHEAD DEMOLITION
C-UG	COMMUNICATION UNDERGROUND
C-UG-TBA	COMMUNICATION UNDERGROUND TO ABANDON
C-UG-TBR	COMMUNICATION UNDERGROUND DEMOLITION
FO-OH	FIBER OPTIC OVERHEAD
FO-OH-TBA	FIBER OPTIC OVERHEAD TO ABANDON
FO-OH-TBR	FIBER OPTIC OVERHEAD DEMOLITION
FO-UG	FIBER OPTIC UNDERGROUND
FO-UG-TBA	FIBER OPTIC UNDERGROUND TO ABANDON
FO-UG-TBR	FIBER OPTIC UNDERGROUND DEMOLITION
TS-OH	TRAFFIC SIGNAL OVERHEAD
TS-OH-TBA	TRAFFIC SIGNAL OVERHEAD TO ABANDON
TS-OH-TBR	TRAFFIC SIGNAL OVERHEAD DEMOLITION
TS-UG	TRAFFIC SIGNAL UNDERGROUND
TS-UG-TBA	TRAFFIC SIGNAL UNDERGROUND TO ABANDON
TS-UG-TBR	TRAFFIC SIGNAL UNDERGROUND DEMOLITION
E-OH	ELECTRIC OVERHEAD
E-OH-TBA	ELECTRIC OVERHEAD TO ABANDON
E-OH-TBR	ELECTRIC OVERHEAD DEMOLITION
E-UG	ELECTRIC UNDERGROUND
E-UG-TBA	ELECTRIC UNDERGROUND TO ABANDON
E-UG-TBR	ELECTRIC UNDERGROUND DEMOLITION
C/E-OH	ELECTRIC/ COMMUNICATION OVERHEAD
C/E-OH-TBA	ELECTRIC/ COMMUNICATION OVERHEAD TO ABANDON
C/E-OH-TBR	ELECTRIC/ COMMUNICATION OVERHEAD DEMOLITION
C/E-UG	ELECTRIC/ COMMUNICATION UNDERGROUND
C/E-UG-TBA	ELECTRIC/ COMMUNICATION UNDERGROUND TO ABANDON
C/E-UG-TBR	ELECTRIC/ COMMUNICATION UNDERGROUND DEMOLITION
CW	CHILLED WATER LINE
CW-TBA	CHILLED WATER TO ABANDON
CW-TBR	CHILLED WATER DEMOLITION

G	NATURAL GAS LINE
G-TBA	NATURAL GAS TO ABANDON
G-TBR	NATURAL GAS DEMOLITION
R	RECLAIMED WATER LINE
R-TBA	RECLAIMED WATER TO ABANDON
R-TBR	RECLAIMED WATER DEMOLITION
IR	IRRIGATION LINE
IR-TBA	IRRIGATION TO ABANDON
IR-TBR	IRRIGATION DEMOLITION
SD	STORM DRAIN LINE
SD-TBA	STORM DRAIN TO BE ABANDONED
SD-TBR	STORM DRAIN TO BE REMOVED
PD	PERFORATED DRAIN
W	WATER LINE
W-TBA	WATER TO BE ABANDONED
W-TBR	WATER TO BE REMOVED
WW	WASTEWATER LINE
FM	FORCE MAIN LINE
WW-TBA	WASTEWATER TO BE ABANDONED
FM-TBA	FORCE MAIN TO BE ABANDONED
WW-TBR	WASTEWATER TO BE REMOVED
FM-TBR	FORCE MAIN TO BE REMOVED

	BIKE RACK	W	WATER AF VALVE	C PD	COMMUNICATION PEDESTAL
	BOLLARD	W	WATER AR VALVE AUTO	C JB	COMM. JUNCTION BOX
	BENCH	W	WATER AR VALVE COMBO	C	COMMUNICATION MANHOLE
BUS	BUS STOP	W	WATER AR VALVE MANUAL	C	COMMUNICATION POLE
	GARBAGE CAN	W	WATER BACKFLOW PREV.	C	COMMUNICATION VAULT
	GUARDRAIL POST	W	WATER BOUNDARY VALVE	FO	FIBER OPTIC MANHOLE
	MAILBOX		WATR / WWTR CAP	FO JB	FIBER OPTIC JUNCTION BOX
PM	PARKING METER	W	WATER CHECK VLV. SINGLE	E	ELECTRIC ANCHOR
	POST	W	WATER CHECK VLV. DOUBLE	E JB	ELECTRIC JUNCTION BOX
	SIGN	D	WATER DRAINAGE VALVE		ELECTRIC LIGHT POLE
	SHRUB	D	WATER DRAINAGE MANHOLE	E	ELECTRIC MANHOLE
	TREE	F	WATER FIRE CONNECTION	E	ELECTRIC METER
		F	WATER FIRE HYDRANT	E	ELECTRIC POLE
		W	WATER FLOW METER	E PB	ELECTRIC PULL BOX
		W	WATER HANDHOLE	E	ELECTRIC VAULT
WW	WASTEWATER AR VALVE	F	WATER HYD. PRS. RLS. VLV.	TP	ELECTRIC TOWER
WW	WWTR BACKFLOW PRVN.	W	WATER MANHOLE	CW	CHILLED WATER MANHOLE
WW CO	WASTEWATER CLEANOUT		WATR / WWTR MAT. CHANGE	CW	CHILLED WATER VALVE
WW F	WASTEWATER FLOW METER	W	WATER METER	G L	NATURAL GAS LIGHT
L	WWTR LIFT STATION	M	WATER MONITOR WELL	G	NATURAL GAS MANHOLE
WW	WASTEWATER MANHOLE		WATR / WWTR PLUG	G	NATURAL GAS METER
WW	WASTEWATER METER		WATR / WWTR PROJ. SEP.	G	NATURAL GAS VALVE
WW SC	WWTR SRVC. CONNECTION		WATER PRS. RLS. VALVE	G V	NATURAL GAS VENT
WW	WASTEWATER VAULT		WATER PRS. SUST. VALVE	IC	IRRG. CONTROL VALVE
WW	WASTEWATER VALVE		WATR / WWTR REDUCER	SC	SPRINKLER CONTROL VALVE
		W SC	WATER SRVC. CONNECTION		SPRINKLER HEAD
	STORM DRAIN AREA INLET	SS	WATER SHUTOFF VALVE		IRRIGATION HOSE BIB
	DRAINAGE ARROW	W	WATER VAULT		
	STORM DRAIN CURB INLET	W	WATER VALVE		
SD CO	STORM DRAIN CLEANOUT	W	WATER VAC. RLS. VALVE		
	STORM DRAIN GRATE INLET	W	WATER WELL		
	STORM DRAIN HEADWALL	TS	TRAFFIC SIGNAL MANHOLE		
SD	STORM DRAIN MANHOLE	TS JB	TRAF. SIGNAL CONTROL BOX		
	STORM DRAIN WINGWALL	TS PB	TRAFFIC SIGNAL PULL BOX		
			TRAF. SIGNAL / PED SIGNAL		
R	RECLAIMED WATER MANH.		TRAF. SIGNAL LIGHT & SIGN.		
R	RECLAIMED WATER METER		TRAF. SIGNAL SIGN. EXTEND.		
R	RECLAIMED WATER VALVE				

811 Know what's below. Call before you dig.

CAUTION: CONTRACTOR NOTE

THE LOCATION OF EXISTING UNDERGROUND AND OVERHEAD UTILITIES ARE APPROXIMATE LOCATIONS ONLY. THE CONTRACTOR SHALL CONTACT UTILITY COMPANIES PRIOR TO CONSTRUCTION. CONTRACTOR SHALL DETERMINE, AND FIELD VERIFY EXISTING UTILITY LOCATIONS AND DEPTHS PRIOR TO BEGINNING CONSTRUCTION AND SHALL BE FULLY RESPONSIBLE FOR ANY AND ALL DAMAGES WHICH MIGHT OCCUR.

CONTRACTOR SHALL CONSIDER PROPOSED UTILITY IMPROVEMENTS AND PROVIDE ADEQUATE HORIZONTAL AND VERTICAL CLEARANCE DURING INSTALLATION OF ALL UTILITY INFRASTRUCTURE.

NO.	REVISION	BY	DATE

BGE JOB NO. XXXX-XX
FILE
DATE 02/21/2025
DESIGNED XXX
DRAWN XXX
REVISED XXX
CHECKED XXX

SHELL ROAD UTILITY RELOCATIONS

LEGEND

CITY OF GEORGETOWN

BGE, INC.
101 WEST LOUIS HENNA BLVD., STE 400
AUSTIN, TX 78728
TBPE Registration No. F-1046
TEL: 512-879-0400 www.bgeinc.com

STATE OF TEXAS
BRITTANY LYNN FAIRBURN
132905
LICENSED
PROFESSIONAL ENGINEER
Brittany Lynn Fairburn
02/21/2025

SHEET
345

100% SUBMITTAL

FILE LOCATION: G:\TXC\PROJECTS\CITY_GEORGETOWN\10767-00 SHELL ROAD\03_CADD\01_SHTS_PW\SHELL_UTIL_RELOCATION_SHEETS.DWG DATE SAVED: 2/14/2025

GENERAL NOTES:

1. THESE CONSTRUCTION PLANS WERE PREPARED, SEALED, SIGNED AND DATED BY A TEXAS LICENSED PROFESSIONAL ENGINEER. THEREFORE BASED ON THE ENGINEER'S CONCURRENCE OF COMPLIANCE, THE CONSTRUCTION PLANS FOR CONSTRUCTION OF THE PROPOSED PROJECT ARE HEREBY APPROVED SUBJECT TO THE STANDARD CONSTRUCTION SPECIFICATIONS AND DETAILS MANUAL AND ALL OTHER APPLICABLE CITY, STATE AND FEDERAL REQUIREMENTS AND CODES.

2. THIS PROJECT IS SUBJECT TO ALL CITY STANDARD SPECIFICATIONS AND DETAILS IN EFFECT AT THE TIME OF SUBMITTAL OF THE PROJECT TO THE CITY.

3. THE SITE CONSTRUCTION PLANS SHALL MEET ALL REQUIREMENTS OF THE APPROVED SITE PLAN.

4. WASTEWATER MAINS AND SERVICE LINES SHALL BE SDR 26 PVC.

5. WASTEWATER MAINS SHALL BE INSTALLED WITHOUT HORIZONTAL OR VERTICAL BENDS.

6. MAXIMUM DISTANCE BETWEEN WASTEWATER MANHOLES IS 500 FEET.

7. WASTEWATER MAINS SHALL BE LOW PRESSURE AIR TESTED AND MANDREL TESTED BY THE CONTRACTOR ACCORDING TO CITY OF GEORGETOWN AND TCEQ REQUIREMENTS.

8. WASTEWATER MANHOLES SHALL BE VACUUM TESTED AND COATED BY THE CONTRACTOR ACCORDING TO CITY OF GEORGETOWN AND TCEQ REQUIREMENTS.

9. WASTEWATER MAINS SHALL BE CAMERA TESTED BY THE CONTRACTOR AND SUBMITTED TO THE CITY ON DVD FORMAT PRIOR TO PAVING THE STREETS.

10. PRIVATE WATER SYSTEM FIRE LINES SHALL BE TESTED BY THE CONTRACTOR TO 200 PSI FOR 2 HOURS.

11. PRIVATE WATER SYSTEM FIRE LINES SHALL BE DUCTILE IRON PIPING FROM THE WATER MAIN TO THE BUILDING SPRINKLER SYSTEM, AND 200 PSI C900 PVC FOR ALL OTHERS.

12. PUBLIC WATER SYSTEM MAINS SHALL BE 150 PSI C900 PVC AND TESTED BY THE CONTRACTOR AT 150 PSI FOR 2 HOURS.

13. ALL BENDS AND CHANGES IN DIRECTION ON WATER MAINS SHALL BE RESTRAINED AND THRUST BLOCKED.

14. LONG FIRE HYDRANT LEADS SHALL BE RESTRAINED.

15. ALL WATER LINES ARE TO BE BACTERIA TESTED BY THE CONTRACTOR ACCORDING TO THE CITY STANDARDS AND SPECIFICATIONS.

16. WATER AND SEWER MAIN CROSSINGS SHALL MEET ALL REQUIREMENTS OF THE TCEQ AND THE CITY.

17. FLEXIBLE BASE MATERIAL FOR PUBLIC STREETS SHALL BE TXDOT TYPE A GRADE 1.

18. HOT MIX ASPHALTIC CONCRETE PAVEMENT SHALL BE TYPE D UNLESS OTHERWISE SPECIFIED AND SHALL BE A MINIMUM OF 2 INCHES THICK ON PUBLIC STREETS AND ROADWAYS.

19. ALL SIDEWALK RAMPS ARE TO BE INSTALLED WITH THE PUBLIC INFRASTRUCTURE.

20. A MAINTENANCE BOND IS REQUIRED TO BE SUBMITTED TO THE CITY PRIOR TO ACCEPTANCE OF THE PUBLIC IMPROVEMENTS. THIS BOND SHALL BE ESTABLISHED FOR 1 YEAR IN THE AMOUNT OF 25% OF THE COST OF THE PUBLIC IMPROVEMENTS AND SHALL FOLLOW THE CITY FORMAT.

21. RECORD DRAWINGS OF THE PUBLIC IMPROVEMENTS SHALL BE SUBMITTED TO THE CITY BY THE DESIGN ENGINEER PRIOR TO ACCEPTANCE OF THE PROJECT. THESE DRAWINGS SHALL BE ON MYLAR OR ON TIFF OR PDF DISL (300DPI). IF A DISK IS SUBMITTED, A BOND SHALL BE INCLUDED WITH THE DISK.

811 Know what's below. Call before you dig.

CAUTION: CONTRACTOR NOTE

THE LOCATION OF EXISTING UNDERGROUND AND OVERHEAD UTILITIES ARE APPROXIMATE LOCATIONS ONLY. THE CONTRACTOR SHALL CONTACT UTILITY COMPANIES PRIOR TO CONSTRUCTION. CONTRACTOR SHALL DETERMINE, AND FIELD VERIFY EXISTING UTILITY LOCATIONS AND DEPTHS PRIOR TO BEGINNING CONSTRUCTION AND SHALL BE FULLY RESPONSIBLE FOR ANY AND ALL DAMAGES WHICH MIGHT OCCUR.

CONTRACTOR SHALL CONSIDER PROPOSED UTILITY IMPROVEMENTS AND PROVIDE ADEQUATE HORIZONTAL AND VERTICAL CLEARANCE DURING INSTALLATION OF ALL UTILITY INFRASTRUCTURE.

NO	REVISION	BY	DATE

BGE JOB NO. XXXX-XX
FILE
DATE 02/21/2025
DESIGNED XXX
DRAWN XXX
REVISED XXX
CHECKED XXX

SHELL ROAD UTILITY RELOCATIONS

GENERAL NOTES

CITY OF GEORGETOWN

BGE
BGE, INC.
101 WEST LOUIS HENNA BLVD., STE 400
AUSTIN, TX 78728
TBPE Registration No. F-1046
TEL: 512-879-0400 www.bgeinc.com

STATE OF TEXAS
BRITTANY LYNN FAIRBURN
132905
LICENSED
PROFESSIONAL ENGINEER

02/21/2025

SHEET
346

100% SUBMITTAL

FILE LOCATION: G:\TX\C\PROJECTS\CITY_GEORGETOWN\110767-00 SHELL ROAD\03_CADD\01_SHTS_PW\SHELL_UTIL_RELOCATION_SHEETS.DWG DATE SAVED: 2/14/2025

Texas Commission on Environmental Quality
Organized Sewage Collection System
General Construction Notes

Edwards Aquifer Protection Program Construction Notes – Legal Disclaimer

The following/listed "construction notes" are intended to be advisory in nature only and do not constitute an approval or conditional approval by the Executive Director, nor do they constitute a comprehensive listing of rules or conditions to be followed during construction. Further actions may be required to achieve compliance with TCEQ regulations found in Title 30, Texas Administrative Code, Chapters 213 and 217, as well as local ordinances and regulations providing for the protection of water quality. Additionally, nothing contained in the following/listed "construction notes" restricts the powers of the Executive Director, the commission or any other governmental entity to prevent, correct, or curtail activities that result or may result in pollution of the Edwards Aquifer or hydrologically connected surface waters. The holder of any Edwards Aquifer Protection Plan containing "construction notes" is still responsible for compliance with Title 30, Texas Administrative Code, Chapters 213 or any other applicable TCEQ regulation, as well as all conditions of an Edwards Aquifer Protection Plan through all phases of plan implementation. Failure to comply with any condition of the Executive Director's approval, whether or not in contradiction of any "construction notes," is a violation of TCEQ regulations and any violation is subject to administrative rules, orders, and penalties as provided under Title 30, Texas Administrative Code § 213.10 (relating to Enforcement). Such violations may also be subject to civil penalties and injunction. The following/listed "construction notes" in no way represent an approved exception by the Executive Director to any part of Title 30 Texas Administrative Code, Chapters 213 and 217, or any other TCEQ applicable regulation.

1. This Organized Sewage Collection System (SCS) must be constructed in accordance with 30 Texas Administrative Code (TAC) §213.5(c), the Texas Commission on Environmental Quality's (TCEQ) Edwards Aquifer Rules and any local government standard specifications.

2. All contractors conducting regulated activities associated with this proposed regulated project must be provided with copies of the SCS plan and the TCEQ letter indicating the specific conditions of its approval. During the course of these regulated activities, the contractors must be required to keep on-site copies of the plan and the approval letter.

3. A written notice of construction must be submitted to the presiding TCEQ regional office at least 48 hours prior to the start of any regulated activities. This notice must include:
   - the name of the approved project;
   - the activity start date; and
   - the contact information of the prime contractor.

4. Any modification to the activities described in the referenced SCS application following the date of approval may require the submittal of an SCS application to modify this approval, including the payment of appropriate fees and all information necessary for its review and approval.

5. Prior to beginning any construction activity, all temporary erosion and sedimentation (E&S) control measures must be properly installed and maintained in accordance with the manufacturers specifications. These controls must remain in place until the disturbed areas have been permanently stabilized.

6. If any sensitive features are discovered during the wastewater line trenching activities, all regulated activities near the sensitive feature must be suspended immediately. The applicant must immediately notify the appropriate regional office of the TCEQ of the feature discovered. A geologist's assessment of the location and extent of the feature discovered must be reported to that regional office in writing and the applicant must submit a plan for ensuring the structural integrity of the sewer line or for modifying the proposed collection system alignment around the feature. The regulated activities near the sensitive feature may not proceed until the

executive director has reviewed and approved the methods proposed to protect the sensitive feature and the Edwards Aquifer from any potentially adverse impacts to water quality while maintaining the structural integrity of the line.

7. Sewer lines located within or crossing the 5-year floodplain of a drainage way will be protected from inundation and stream velocities which could cause erosion and scouring of backfill. The trench must be capped with concrete to prevent scouring of backfill, or the sewer lines must be encased in concrete. All concrete shall have a minimum thickness of 6 inches.

8. Blasting procedures for protection of existing sewer lines and other utilities will be in accordance with the National Fire Protection Association criteria. Sand is not allowed as bedding or backfill in trenches that have been blasted. If any existing sewer lines are damaged, the lines must be repaired and retested.

9. All manholes constructed or rehabilitated on this project must have watertight size on size resilient connectors allowing for differential settlement. If manholes are constructed within the 100-year floodplain, the cover must have a gasket and be bolted to the ring. Where gasketed manhole covers are required for more than three manholes in sequence or for more than 1500 feet, alternate means of venting will be provided. Bricks are not an acceptable construction material for any portion of the manhole.

   The diameter of the manholes must be a minimum of four feet and the manhole for entry must have a minimum clear opening diameter of 30 inches. These dimensions and other details showing compliance with the commission's rules concerning manholes and sewer line/manhole inverts described in 30 TAC §217.55 are included on Plan Sheet *367*

   It is suggested that entrance into manholes in excess of four feet deep be accomplished by means of a portable ladder. The inclusion of steps in a manhole is prohibited.

10. Where water lines and new sewer line are installed with a separation distance closer than nine feet (i.e., water lines crossing wastewater lines, water lines paralleling wastewater lines, or water lines next to manholes) the installation must meet the requirements of 30 TAC §217.53(d) (Pipe Design) and 30 TAC §290.44(e) (Water Distribution).

11. Where sewers lines deviate from straight alignment and uniform grade all curvature of sewer pipe must be achieved by the following procedure which is recommended by the pipe manufacturer: *N/A*.

    If pipe flexure is proposed, the following method of preventing deflection of the joint must be used: *N/A*.

    Specific care must be taken to ensure that the joint is placed in the center of the trench and properly bedded in accordance with 30 TAC §217.54.

12. New sewage collection system lines must be constructed with stub outs for the connection of anticipated extensions. The location of such stub outs must be marked on the ground such that their location can be easily determined at the time of connection of the extensions. Such stub outs must be manufactured wyes or tees that are compatible in size and material with both the sewer line and the extension. At the time of original construction, new stub-outs must be constructed sufficiently to extend beyond the end of the street pavement. All stub-outs must be sealed with a manufactured cap to prevent leakage. Extensions that were not anticipated at the time of original construction or that are to be connected to an existing sewer line not furnished with stub outs must be connected using a manufactured saddle and in accordance with accepted plumbing techniques.

If no stub-out is present an alternate method of joining laterals is shown in the detail on Plan Sheet *367* (For potential future laterals).

The private service lateral stub-outs must be installed as shown on the plan and profile sheets on Plan Sheet *367* and marked after backfilling as shown in the detail on Plan Sheet *367*

13. Trenching, bedding and backfill must conform with 30 TAC §217.54. The bedding and backfill for flexible pipe must comply with the standards of ASTM D-2321, Classes IA, IB, II or III. Rigid pipe bedding must comply with the requirements of ASTM C 12 (ANSI A 106.2) classes A, B or C.

14. Sewer lines must be tested from manhole to manhole. When a new sewer line is connected to an existing stub or clean-out, it must be tested from existing manhole to new manhole. If a stub or clean-out is used at the end of the proposed sewer line, no private service attachments may be connected between the last manhole and the cleanout unless it can be certified as conforming with the provisions of 30 TAC §213.5(c)(3)(E).

15. All sewer lines must be tested in accordance with 30 TAC §217.57. The engineer must retain copies of all test results which must be made available to the executive director upon request. The engineer must certify in writing that all wastewater lines have passed all required testing to the appropriate regional office within 30 days of test completion and prior to use of the new collection system. Testing method will be:
   (a) For a collection system pipe that will transport wastewater by gravity flow, the design must specify an infiltration and exfiltration test or a low-pressure air test. A test must conform to the following requirements:
      (1) *Low Pressure Air Test.*
         (A) A low pressure air test must follow the procedures described in American Society For Testing And Materials (ASTM) C-828, ASTM C-924, or ASTM F-1417 or other procedure approved by the executive director, except as to testing times as required in Table C.3 in subparagraph (C) of this paragraph or Equation C.3 in subparagraph (B)(ii) of this paragraph.
         (B) For sections of collection system pipe less than 36 inch average inside diameter, the following procedure must apply, unless a pipe is to be tested as required by paragraph (2) of this subsection.
            (i) A pipe must be pressurized to 3.5 pounds per square inch (psi) greater than the pressure exerted by groundwater above the pipe.
            (ii) Once the pressure is stabilized, the minimum time allowable for the pressure to drop from 3.5 psi gauge to 2.5 psi gauge is computed from the following equation:

Equation C.3

$$T = \frac{0.085 \times D \times K}{Q}$$

Where:

T = time for pressure to drop 1.0 pound per square inch gauge in seconds
K = 0.000419 X D X L, but not less than 1.0
D = average inside pipe diameter in inches

L = length of line of same size being tested, in feet
Q = rate of loss, 0.0015 cubic feet per minute per square foot internal surface

(C) Since a K value of less than 1.0 may not be used, the minimum testing time for each pipe diameter is shown in the following Table C.3:

Pipe Diameter *(inches)*	**Minimum Time** *(seconds)*	**Maximum Length for Minimum Time** *(feet)*	**Time for Longer Length** *(seconds/foot)*
6	340	398	0.855
8	454	298	1.520
10	567	239	2.374
12	680	199	3.419
15	850	159	5.342
18	1020	133	7.693
21	1190	114	10.471
24	1360	100	13.676
27	1530	88	17.309
30	1700	80	21.369
33	1870	72	25.856

(D) An owner may stop a test if no pressure loss has occurred during the first 25% of the calculated testing time.
(E) If any pressure loss or leakage has occurred during the first 25% of a testing period, then the test must continue for the entire test duration as outlined above or until failure.
(F) Wastewater collection system pipes with a 27 inch or larger average inside diameter may be air tested at each joint instead of following the procedure outlined in this section.
(G) A testing procedure for pipe with an inside diameter greater than 33 inches must be approved by the executive director.

(2) *Infiltration/Exfiltration Test.*
(A) The total exfiltration, as determined by a hydrostatic head test, must not exceed 50 gallons per inch of diameter per mile of pipe per 24 hours at a minimum test head of 2.0 feet above the crown of a pipe at an upstream manhole.
(B) An owner shall use an infiltration test in lieu of an exfiltration test when pipes are installed below the groundwater level.
(C) The total exfiltration, as determined by a hydrostatic head test, must not exceed 50 gallons per inch diameter per mile of pipe per 24 hours at a minimum test head of two feet above the crown of a pipe at an upstream manhole, or at least two feet above existing groundwater level, whichever is greater.
(D) For construction within a 25-year flood plain, the infiltration or exfiltration must not exceed 10 gallons per inch diameter per mile of pipe per 24 hours at the same minimum test head as in subparagraph (C) of this paragraph.
(E) If the quantity of infiltration or exfiltration exceeds the maximum quantity specified, an owner shall undertake remedial action in order to reduce

the infiltration or exfiltration to an amount within the limits specified. An owner shall retest a pipe following a remediation action.

(b) If a gravity collection pipe is composed of flexible pipe, deflection testing is also required. The following procedures must be followed:
(1) For a collection pipe with inside diameter less than 27 inches, deflection measurement requires a rigid mandrel.
(A) *Mandrel Sizing.*
(i) A rigid mandrel must have an outside diameter (OD) not less than 95% of the base inside diameter (ID) or average ID of a pipe, as specified in the appropriate standard by the ASTMs, American Water Works Association, UNI-BELL, or American National Standards Institute, or any related appendix.
(ii) If a mandrel sizing diameter is not specified in the appropriate standard, the mandrel must have an OD equal to 95% of the ID of a pipe. In this case, the ID of the pipe, for the purpose of determining the OD of the mandrel, must equal be the average outside diameter minus two minimum wall thicknesses for OD controlled pipe and the average inside diameter for ID controlled pipe.
(iii) All dimensions must meet the appropriate standard.
(B) *Mandrel Design.*
(i) A rigid mandrel must be constructed of a metal or a rigid plastic material that can withstand 200 psi without being deformed.
(ii) A mandrel must have nine or more odd number of runners or legs.
(iii) A barrel section length must equal at least 75% of the inside diameter of a pipe.
(iv) Each size mandrel must use a separate proving ring.
(C) *Method Options.*
(i) An adjustable or flexible mandrel is prohibited.
(ii) A test may not use television inspection as a substitute for a deflection test.
(iii) If requested, the executive director may approve the use of a deflectometer or a mandrel with removable legs or runners on a case-by-case basis.
(2) For a gravity collection system pipe with an inside diameter 27 inches and greater, other test methods may be used to determine vertical deflection.
(3) A deflection test method must be accurate to within plus or minus 0.2% deflection.
(4) An owner shall not conduct a deflection test until at least 30 days after the final backfill.
(5) Gravity collection system pipe deflection must not exceed five percent (5%).
(6) If a pipe section fails a deflection test, an owner shall correct the problem and conduct a second test after the final backfill has been in place at least 30 days.

16. All manholes must be tested to meet or exceed the requirements of 30 TAC §217.58.
(a) All manholes must pass a leakage test.
(b) An owner shall test each manhole (after assembly and backfilling) for leakage, separate and independent of the collection system pipes, by hydrostatic exfiltration testing, vacuum testing, or other method approved by the executive director.
(1) Hydrostatic Testing.

(A) The maximum leakage for hydrostatic testing or any alternative test methods is 0.025 gallons per foot diameter per foot of manhole depth per hour.
(B) To perform a hydrostatic exfiltration test, an owner shall seal all wastewater pipes coming into a manhole with an internal pipe plug, fill the manhole with water, and maintain the test for at least one hour.
(C) A test for concrete manholes may use a 24-hour wetting period before testing to allow saturation of the concrete.
(2) Vacuum Testing.
(A) To perform a vacuum test, an owner shall plug all lift holes and exterior joints with a non-shrink grout and plug all pipes entering a manhole.
(B) No grout must be placed in horizontal joints before testing.
(C) Stub-outs, manhole boots, and pipe plugs must be secured to prevent movement while a vacuum is drawn.
(D) An owner shall use a minimum 60 inch/lb torque wrench to tighten the external clamps that secure a test cover to the top of a manhole.
(E) A test head must be placed at the inside of the top of a cone section, and the seal inflated in accordance with the manufacturer's recommendations.
(F) There must be a vacuum of 10 inches of mercury inside a manhole to perform a valid test.
(G) A test does not begin until after the vacuum pump is off.
(H) A manhole passes the test if after 2.0 minutes and with all valves closed, the vacuum is at least 9.0 inches of mercury.

17. All private service laterals must be inspected and certified in accordance with 30 TAC §213.5(c)(3)(I). After installation of and, prior to covering and connecting a private service lateral to an existing organized sewage collection system, a Texas Licensed Professional Engineer, Texas Registered Sanitarian, or appropriate city inspector must visually inspect the private service lateral and the connection to the sewage collection system, and certify that it is constructed in conformity with the applicable provisions of this section. The owner of the collection system must maintain such certifications for five years and forward copies to the appropriate regional office upon request. Connections may only be made to an approved sewage collection system.

Austin Regional Office 12100 Park 35 Circle, Building A Austin, Texas 78753-1808 Phone (512) 339-2929 Fax (512) 339-3795	San Antonio Regional Office 14250 Judson Road San Antonio, Texas 78233-4480 Phone (210) 490-3096 Fax (210) 545-4329

THESE GENERAL CONSTRUCTION NOTES MUST BE INCLUDED ON THE CONSTRUCTION PLANS PROVIDED TO THE CONTRACTOR AND ALL SUBCONTRACTORS.

811 Know what's below. Call before you dig.

CAUTION: CONTRACTOR NOTE

THE LOCATION OF EXISTING UNDERGROUND AND OVERHEAD UTILITIES ARE APPROXIMATE LOCATIONS ONLY. THE CONTRACTOR SHALL CONTACT UTILITY COMPANIES PRIOR TO CONSTRUCTION. CONTRACTOR SHALL DETERMINE, AND FIELD VERIFY EXISTING UTILITY LOCATIONS AND DEPTHS PRIOR TO BEGINNING CONSTRUCTION AND SHALL BE FULLY RESPONSIBLE FOR ANY AND ALL DAMAGES WHICH MIGHT OCCUR.

CONTRACTOR SHALL CONSIDER PROPOSED UTILITY IMPROVEMENTS AND PROVIDE ADEQUATE HORIZONTAL AND VERTICAL CLEARANCE DURING INSTALLATION OF ALL UTILITY INFRASTRUCTURE.

BGE JOB NO. XXXX-XX
FILE
DATE 02/21/2025
DESIGNED XXX
DRAWN XXX
REVISED XXX
CHECKED XXX

NO.	REVISION	BY	DATE

SHELL ROAD UTILITY RELOCATIONS

CITY OF GEORGETOWN

GENERAL NOTES

BGE, INC.
101 WEST LOUIS HENNA BLVD., STE 400
AUSTIN, TX 78728
TBPE Registration No. F-1046
TEL: 512-879-0400 www.bgeinc.com

STATE OF TEXAS
BRITTANY LYNN FAIRBURN
132905
LICENSED
PROFESSIONAL ENGINEER

02/21/2025

SHEET
347

FILE LOCATION: G:\TX\C\PROJECTS\CITY_GEORGETOWN\10767-00 SHELL ROAD\03_CADD\01_SHTS_PW\SHELL_UTIL_RELOCATION_SHEETS.DWG DATE SAVED: 2/14/2025

100% SUBMITTAL

811 Know what's below. Call before you dig.

CAUTION: CONTRACTOR NOTE

THE LOCATION OF EXISTING UNDERGROUND AND OVERHEAD UTILITIES ARE APPROXIMATE LOCATIONS ONLY. THE CONTRACTOR SHALL CONTACT UTILITY COMPANIES PRIOR TO CONSTRUCTION. CONTRACTOR SHALL DETERMINE, AND FIELD VERIFY EXISTING UTILITY LOCATIONS AND DEPTHS PRIOR TO BEGINNING CONSTRUCTION AND SHALL BE FULLY RESPONSIBLE FOR ANY AND ALL DAMAGES WHICH MIGHT OCCUR.

CONTRACTOR SHALL CONSIDER PROPOSED UTILITY IMPROVEMENTS AND PROVIDE ADEQUATE HORIZONTAL AND VERTICAL CLEARANCE DURING INSTALLATION OF ALL UTILITY INFRASTRUCTURE.

STA. 1+37.37, SHELL ROAD
OFFSET: 29.97' LT.
EX. 18 " GV
ADJUST TO GRADE, SEE NOTE 1.

STA. 1+41.03, SHELL ROAD
OFFSET: 26.81' LT.
EX. 24 " GV
ADJUST TO GRADE, SEE NOTE 1.

STA. 1+42.40, SHELL ROAD
OFFSET: 27.63' LT.
EX. 18 " GV
ADJUST TO GRADE, SEE NOTE 1.

STA. 2+03.26, SHELL ROAD
OFFSET: 35.48' LT.
EX. 30 " GV
ADJUST TO GRADE, SEE NOTE 1.

STA. 2+09.17, SHELL ROAD
OFFSET: 38.24' LT.
EX. IRRIGATION VALVE
ADJUST TO GRADE, SEE NOTE 1.

STA. 1+35.99, SHELL ROAD
OFFSET: 13.59' LT.
EX. 24 " GV
ADJUST TO GRADE, SEE NOTE 1.

STA. 2+62.46, SHELL ROAD
OFFSET: 29.66' RT.
EX. 18 " GV
ADJUST TO GRADE, SEE NOTE 1.

STA. 2+64.87, SHELL ROAD
OFFSET: 34.81' RT.
EX. 18 " GV
ADJUST TO GRADE, SEE NOTE 1.

STA. 2+67.32, SHELL ROAD
OFFSET: 24.98' RT.
EX. 6 " GV
ADJUST TO GRADE, SEE NOTE 1.

STA. 2+77.22, SHELL ROAD
OFFSET: 41.45' RT.
EX. 30 " GV
ADJUST TO GRADE, SEE NOTE 1.

STA. 2+62.46, SHELL ROAD
OFFSET: 29.66' RT.
EX. 18 " GV
ADJUST TO GRADE, SEE NOTE 1.

STA. 2+59.79, SHELL ROAD
OFFSET: 17.81' RT.
EX. 30 " GV
ADJUST TO GRADE, SEE NOTE 1.

STA. 2+64.87, SHELL ROAD
OFFSET: 34.81' RT.
EX. 18 " GV
ADJUST TO GRADE, SEE NOTE 1.

STA. 14+09.27, SHELL ROAD
OFFSET: 36.06' LT.
EX. 16 " GV
ADJUST TO GRADE, SEE NOTE 1.

STA. 17+46.23, SHELL ROAD
OFFSET: 35.57' LT.
EX. 16 " GV
ADJUST TO GRADE, SEE NOTE 1.

STA. 17+45.64, SHELL ROAD
OFFSET: 30.53' LT.
EX. 6 " GV
ADJUST TO GRADE, SEE NOTE 1.

STA. 17+57.77, SHELL ROAD
OFFSET: 37.99' LT.
EX. 16 " GV
ADJUST TO GRADE, SEE NOTE 1.

STA. 19+83.12, SHELL ROAD
OFFSET: 51.80' RT.
EX. 16 " GV
ADJUST TO GRADE, SEE NOTE 1.

STA. 2+59.79, SHELL ROAD
OFFSET: 17.81' RT.
EX. 30 " GV
ADJUST TO GRADE, SEE NOTE 1.

STA. 2+77.22, SHELL ROAD
OFFSET: 41.45' RT.
EX. 30 " GV
ADJUST TO GRADE, SEE NOTE 1.

STA. 8+57.86, SHELL ROAD
OFFSET: 43.11' LT.
EX. 6 " GV
(2002-134)
ADJUST TO GRADE, SEE NOTE 1.

STA. 17+57.77, SHELL ROAD
OFFSET: 37.99' LT.
EX. 16 " GV
ADJUST TO GRADE, SEE NOTE 1.

STA. 17+46.23, SHELL ROAD
OFFSET: 35.57' LT.
EX. 16 " GV
ADJUST TO GRADE, SEE NOTE 1.

STA. 17+45.64, SHELL ROAD
OFFSET: 30.53' LT.
EX. 6 " GV
ADJUST TO GRADE, SEE NOTE 1.

STA. 19+83.12, SHELL ROAD
OFFSET: 51.80' RT.
EX. 16 " GV
ADJUST TO GRADE, SEE NOTE 1.

STA. 32+19.52, SHELL ROAD
OFFSET: 58.65' LT.
EX. 12 " GV
ADJUST TO GRADE, SEE NOTE 1.

WATER METER & FIRE HYDRANT RELOCATIONS ON SHEET 352

WATER METER & FIRE HYDRANT RELOCATIONS ON SHEET 352

EX. WTR 16" PVC (2002-134)

EX. WTR 30" DI (2048-125) (1998)

WILLIAMS DR

SEQUOIA SPUR W

SHELL ROAD

VERDE VISTA

SONORA TRACE

VILLAGE COMMONS BLVD

SKYFLOWER DR

ROSEDALE BLVD

MADRID DR

5+00

10+00

15+00

20+00

25+00

30+00

35+00

40+00

45+00

MATCHLINE (SEE ABOVE)

MATCHLINE (SEE BELOW)

MATCHLINE (SEE SHEET 349)

MATCHLINE

0 50' 100' 200'

SCALE: 1" = 100'

NOTE: IF SHEET IS LESS THAN (22"x34") IT IS A REDUCED PRINT, SCALE REDUCED ACCORDINGLY

NOTES:

1. CONTRACTOR TO ADJUST ALL WATER VALVE AND METER BOXES (TO REMAIN IN SERVICE) TO FINAL GRADE AND CONFIRM THAT THEY HAVE AN ADA COMPLIANT LID PER GEORGETOWN STANDARD DETAILS. DO NOT LEAVE APPURTENANCES BURIED.
2. EXISTING FIRE HYDRANTS NOTED AS TO BE REMOVED SHALL BE SALVAGED AND RETURNED TO THE CITY.
3. EXISTING METERS AND VALVES NOTED AS TO BE REMOVED SHALL BE DISPOSED OF BY THE CONTRACTOR.
4. CONTRACTOR TO REFERENCE SHEETS 100 - 111 FOR PROPOSED ROADWAY GRADES.

0 50' 100' 200'

SCALE: 1" = 100'

NOTE: IF SHEET IS LESS THAN (22"x34") IT IS A REDUCED PRINT, SCALE REDUCED ACCORDINGLY

NO	REVISION	BY	DATE

BGE JOB NO. XXXX-XX
FILE
DATE 02/21/2025
DESIGNED XXX
DRAWN XXX
REVISED XXX
CHECKED XXX

SHELL ROAD UTILITY RELOCATIONS

OVERALL WATER METER AND VALVE ADJUSTMENTS (1 OF 2)

CITY OF GEORGETOWN

BGE

BGE, INC.
101 WEST LOUIS HENNA BLVD., STE 400
AUSTIN, TX 78728
TBPE Registration No. F-1046
TEL: 512-879-0400 www.bgeinc.com

STATE OF TEXAS
BRITTANY LYNN FAIRBURN
132905
LICENSED
PROFESSIONAL ENGINEER
02/21/2025

SHEET
348

100% SUBMITTAL

FILE LOCATION: G:\TXCI\PROJECTS\CITY_GEORGETOWN\10767-00 SHELL ROAD\03_CADD\01_SHTS_PW\SHELL_OVR_VALVE_ADJUST.DWG DATE SAVED: 2/14/2025



CAUTION: CONTRACTOR NOTE

THE LOCATION OF EXISTING UNDERGROUND AND OVERHEAD UTILITIES ARE APPROXIMATE LOCATIONS ONLY. THE CONTRACTOR SHALL CONTACT UTILITY COMPANIES PRIOR TO CONSTRUCTION. CONTRACTOR SHALL DETERMINE, AND FIELD VERIFY EXISTING UTILITY LOCATIONS AND DEPTHS PRIOR TO BEGINNING CONSTRUCTION AND SHALL BE FULLY RESPONSIBLE FOR ANY AND ALL DAMAGES WHICH MIGHT OCCUR.

CONTRACTOR SHALL CONSIDER PROPOSED UTILITY IMPROVEMENTS AND PROVIDE ADEQUATE HORIZONTAL AND VERTICAL CLEARANCE DURING INSTALLATION OF ALL UTILITY INFRASTRUCTURE.

Know what's below. Call before you dig.

0 50' 100' 200'

SCALE: 1" = 100'

NOTE: IF SHEET IS LESS THAN (22"x34") IT IS A REDUCED PRINT, SCALE REDUCED ACCORDINGLY

NOTES:

1. *CONTRACTOR TO ADJUST ALL WATER VALVE AND METER BOXES (TO REMAIN IN SERVICE) TO FINAL GRADE AND CONFIRM THAT THEY HAVE AN ADA COMPLIANT LID PER GEORGETOWN STANDARD DETAILS. DO NOT LEAVE APPURTENANCES BURIED.*
2. *EXISTING FIRE HYDRANTS NOTED AS TO BE REMOVED SHALL BE SALVAGED AND RETURNED TO THE CITY.*
3. *EXISTING METERS AND VALVES NOTED AS TO BE REMOVED SHALL BE DISPOSED OF BY THE CONTRACTOR.*
4. *CONTRACTOR TO REFERENCE SHEETS 100 - 111 FOR PROPOSED ROADWAY GRADES.*

NO	REVISION	BY	DATE

BGE JOB NO. XXXX-XX
FILE
DATE 02/21/2025
DESIGNED XXX
DRAWN XXX
REVISED XXX
CHECKED XXX

SHELL ROAD UTILITY RELOCATIONS

OVERALL WATER METER AND VALVE ADJUSTMENTS (2 OF 2)

CITY OF GEORGETOWN

BGE, INC.
101 WEST LOUIS HENNA BLVD., STE 400
AUSTIN, TX 78728
TBPE Registration No. F-1046
TEL: 512-879-0400 www.bgeinc.com

STATE OF TEXAS
BRITTANY LYNN FAIRBURN
132905
LICENSED PROFESSIONAL ENGINEER

02/21/2025

SHEET
349

100% SUBMITTAL

FILE LOCATION: G:\TXC\PROJECTS\CITY_GEORGETOWN\10767-00 SHELL ROAD\03_CADD\01_SHTS_PW\SHELL_OVR_VALVE_ADJUST.DWG DATE SAVED: 2/14/2025

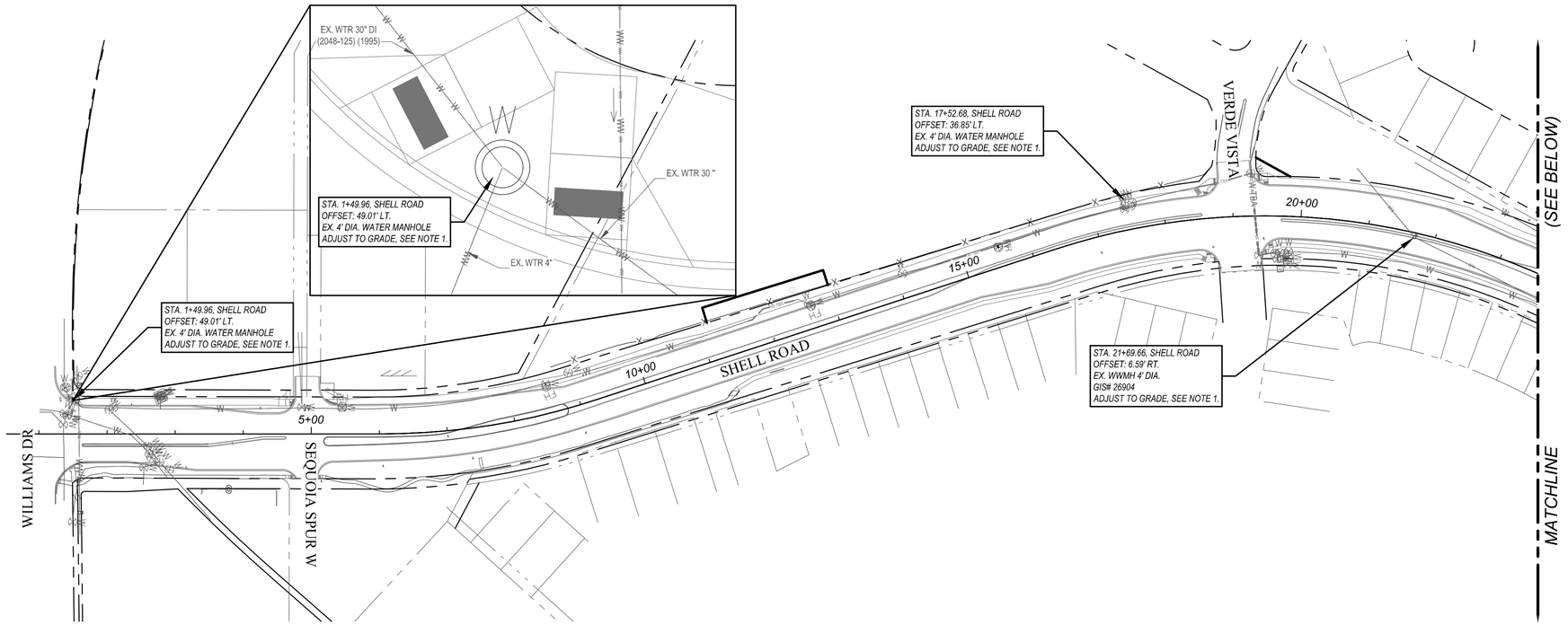

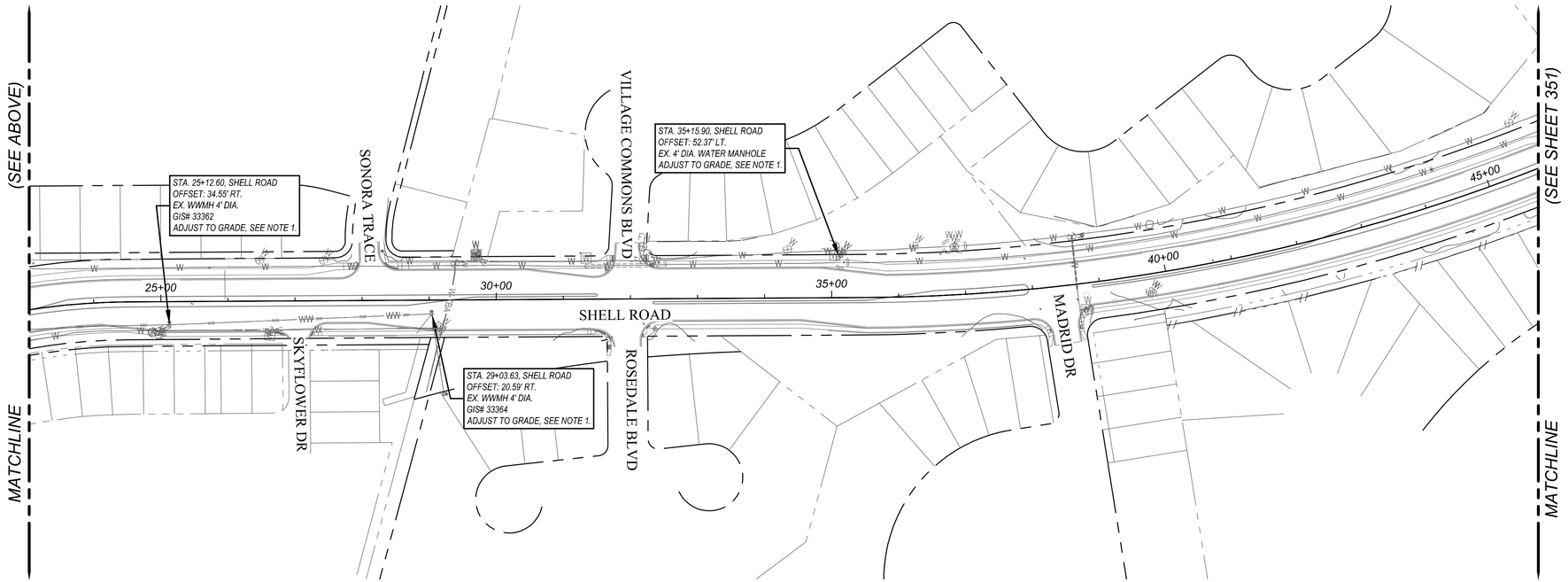

CAUTION: CONTRACTOR NOTE

THE LOCATION OF EXISTING UNDERGROUND AND OVERHEAD UTILITIES ARE APPROXIMATE LOCATIONS ONLY. THE CONTRACTOR SHALL CONTACT UTILITY COMPANIES PRIOR TO CONSTRUCTION. CONTRACTOR SHALL DETERMINE, AND FIELD VERIFY EXISTING UTILITY LOCATIONS AND DEPTHS PRIOR TO BEGINNING CONSTRUCTION AND SHALL BE FULLY RESPONSIBLE FOR ANY AND ALL DAMAGES WHICH MIGHT OCCUR.

CONTRACTOR SHALL CONSIDER PROPOSED UTILITY IMPROVEMENTS AND PROVIDE ADEQUATE HORIZONTAL AND VERTICAL CLEARANCE DURING INSTALLATION OF ALL UTILITY INFRASTRUCTURE.

811 Know what's below. Call before you dig.

0 50' 100' 200'

SCALE: 1" = 100'

NOTE: IF SHEET IS LESS THAN (22"x34") IT IS A REDUCED PRINT, SCALE REDUCED ACCORDINGLY

WATER AND WASTEWATER ADJUSTMENT NOTES:

1. *CONTRACTOR TO ADJUST ALL MANHOLES (TO REMAIN IN SERVICE) TO FINAL GRADE AND CONFIRM THAT THEY HAVE AN ADA COMPLIANT LID PER GEORGETOWN STANDARD DETAILS. DO NOT LEAVE MANHOLE LIDS BURIED.*
2. *CONTRACTOR TO REFERENCE SHEETS 100 - 111 FOR PROPOSED ROADWAY GRADES.*



0 50' 100' 200'

SCALE: 1" = 100'

NOTE: IF SHEET IS LESS THAN (22"x34") IT IS A REDUCED PRINT, SCALE REDUCED ACCORDINGLY

NO	REVISION	BY	DATE

BGE JOB NO. XXXX-XX
FILE
DATE 02/21/2025
DESIGNED XXX
DRAWN XXX
REVISED XXX
CHECKED XXX

SHELL ROAD UTILITY RELOCATIONS

OVERALL W AND WW MANHOLE ADJUSTMENTS (1 OF 2)

CITY OF GEORGETOWN

BGE

BGE, INC.
101 WEST LOUIS HENNA BLVD., STE 400
AUSTIN, TX 78728
TBPE Registration No. F-1046
TEL 512-879-0400 www.bgeinc.com

STATE OF TEXAS
BRITTANY LYNN FAIRBURN
132905
LICENSED
PROFESSIONAL ENGINEER

Brittany Lynn Fairburn

02/21/2025

SHEET
350

FILE LOCATION: G:\TXC\PROJECTS\CITY_GEORGETOWN\10767-00 SHELL ROAD\03_CADD\01_SHTS_PW\SHELL_OVR_MH_ADJUST.DWG DATE SAVED: 2/14/2025

2025 SUBMITTAL

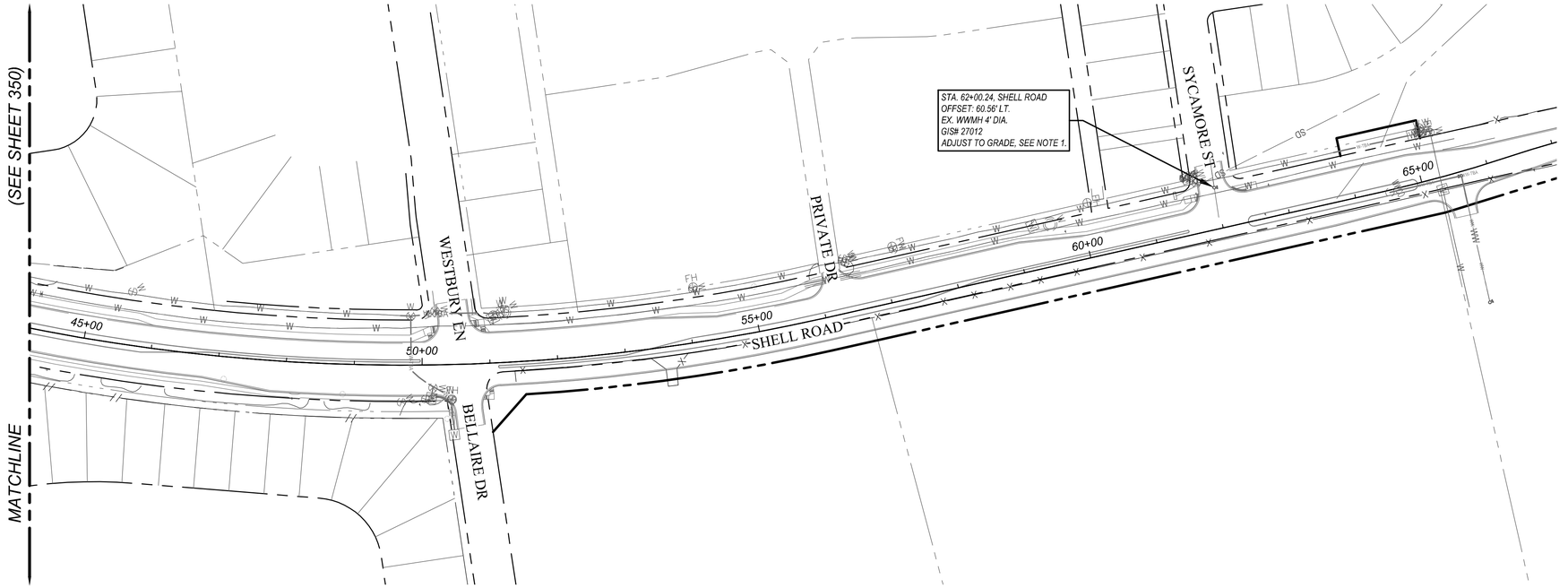

CAUTION: CONTRACTOR NOTE

THE LOCATION OF EXISTING UNDERGROUND AND OVERHEAD UTILITIES ARE APPROXIMATE LOCATIONS ONLY. THE CONTRACTOR SHALL CONTACT UTILITY COMPANIES PRIOR TO CONSTRUCTION. CONTRACTOR SHALL DETERMINE, AND FIELD VERIFY EXISTING UTILITY LOCATIONS AND DEPTHS PRIOR TO BEGINNING CONSTRUCTION AND SHALL BE FULLY RESPONSIBLE FOR ANY AND ALL DAMAGES WHICH MIGHT OCCUR.

CONTRACTOR SHALL CONSIDER PROPOSED UTILITY IMPROVEMENTS AND PROVIDE ADEQUATE HORIZONTAL AND VERTICAL CLEARANCE DURING INSTALLATION OF ALL UTILITY INFRASTRUCTURE.

Know what's below. Call before you dig.

0 50' 100' 200'

SCALE: 1" = 100'

NOTE: IF SHEET IS LESS THAN (22"x34") IT IS A REDUCED PRINT, SCALE REDUCED ACCORDINGLY

WATER AND WASTEWATER ADJUSTMENT NOTES:

1. *CONTRACTOR TO ADJUST ALL MANHOLES (TO REMAIN IN SERVICE) TO FINAL GRADE AND CONFIRM THAT THEY HAVE AN ADA COMPLIANT LID PER GEORGETOWN STANDARD DETAILS. DO NOT LEAVE MANHOLE LIDS BURIED.*
2. *CONTRACTOR TO REFERENCE SHEETS 100 - 111 FOR PROPOSED ROADWAY GRADES.*

NO	REVISION	BY	DATE

BGE JOB NO. XXXX-XX
FILE
DATE 02/21/2025
DESIGNED XXX
DRAWN XXX
REVISED XXX
CHECKED XXX

SHELL ROAD UTILITY RELOCATIONS

OVERALL W AND WW MANHOLE ADJUSTMENTS (2 OF 2)

CITY OF GEORGETOWN

BGE, INC.
101 WEST LOUIS HENNA BLVD., STE 400
AUSTIN, TX 78728
TBPE Registration No. F-1046
TEL 512-879-0400 www.bgeinc.com

STATE OF TEXAS
BRITTANY LYNN FAIRBURN
132905
LICENSED
PROFESSIONAL ENGINEER

Brittany Lynn Fairburn

02/21/2025

SHEET
351

100% SUBMITTAL

FILE LOCATION: G:\TXC\PROJECTS\CITY_GEORGETOWN\10767-00 SHELL ROAD\03_CADD\01_SHTS_PW\SHELL_OVR_MH_ADJUST.DWG DATE SAVED: 2/14/2025

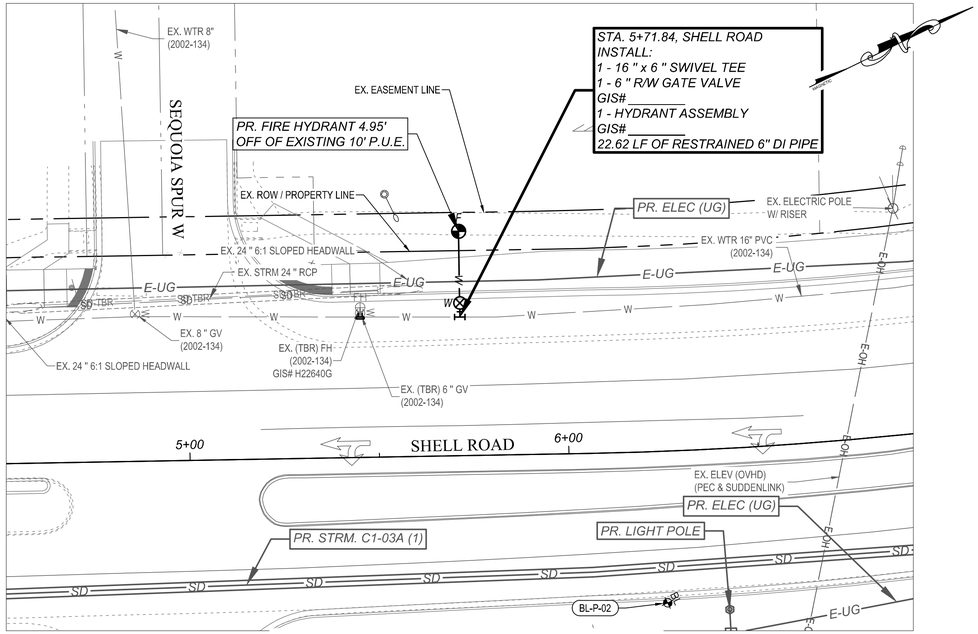

1 / 352

FIRE HYDRANT RELOCATION
STA 5+71.84 OS. 36.58' LT

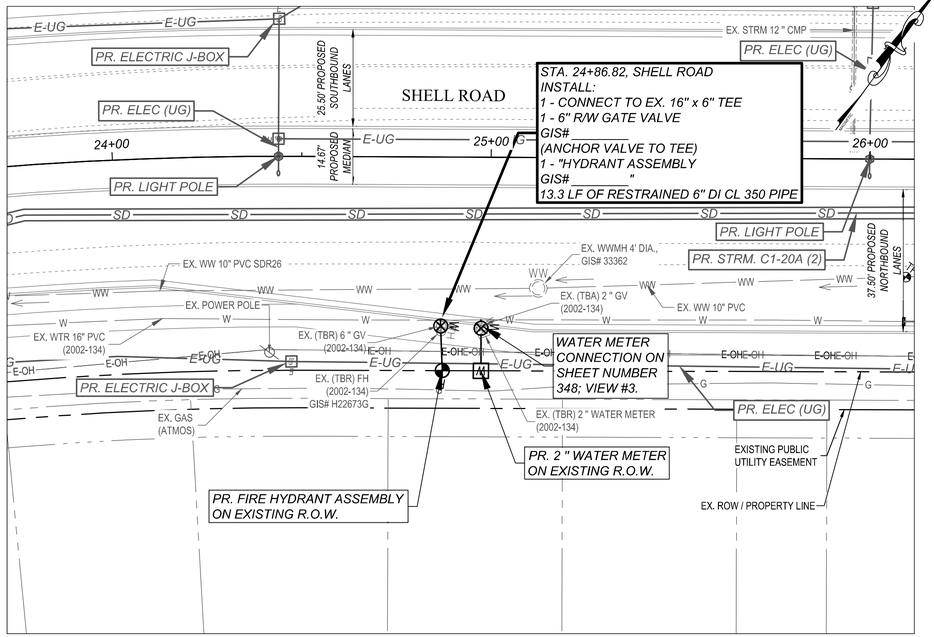

2 / 352

FIRE HYDRANT RELOCATION
STA 24+86.82 OS 43' RT

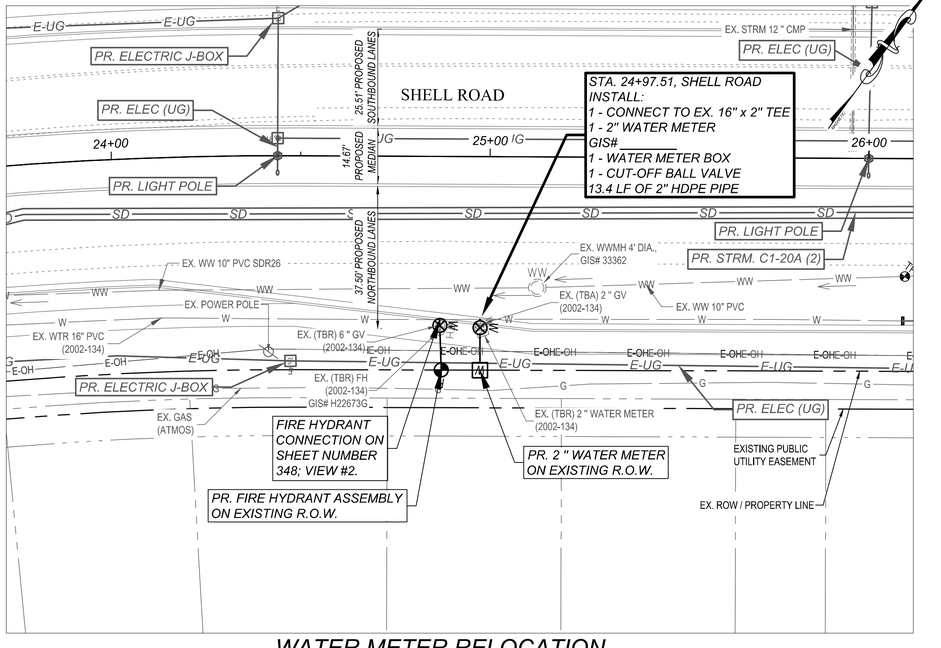

3 / 352

WATER METER RELOCATION
STA 24+97.51 OS 43' RT

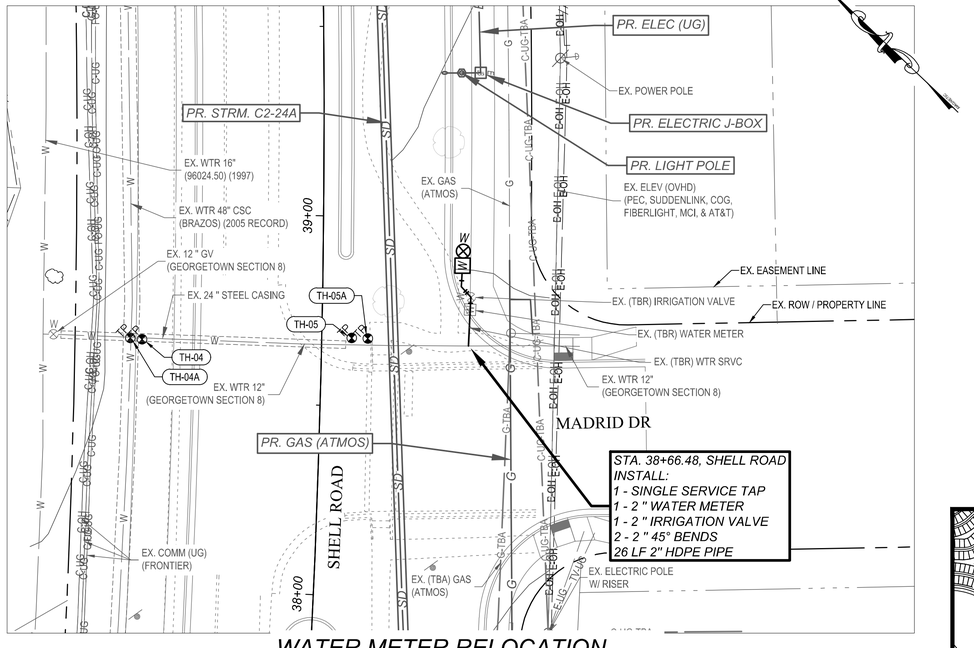

4 / 352

WATER METER RELOCATION
STA 38+66.45 OS. 37' RT

CAUTION: CONTRACTOR NOTE

811 Know what's below. Call before you dig.

THE LOCATION OF EXISTING UNDERGROUND AND OVERHEAD UTILITIES ARE APPROXIMATE LOCATIONS ONLY. THE CONTRACTOR SHALL CONTACT UTILITY COMPANIES PRIOR TO CONSTRUCTION. CONTRACTOR SHALL DETERMINE, AND FIELD VERIFY EXISTING UTILITY LOCATIONS AND DEPTHS PRIOR TO BEGINNING CONSTRUCTION AND SHALL BE FULLY RESPONSIBLE FOR ANY AND ALL DAMAGES WHICH MIGHT OCCUR.

CONTRACTOR SHALL CONSIDER PROPOSED UTILITY IMPROVEMENTS AND PROVIDE ADEQUATE HORIZONTAL AND VERTICAL CLEARANCE DURING INSTALLATION OF ALL UTILITY INFRASTRUCTURE.

0 10' 20' 40'

SCALE: 1" = 20'

NOTE: IF SHEET IS LESS THAN (22"x34") IT IS A REDUCED PRINT, SCALE REDUCED ACCORDINGLY

NOTES:

1. *CONTRACTOR TO SALVAGE EXISTING FIRE HYDRANTS AND RETURN TO CITY. CONTRACTOR RESPONSIBLE FOR REMOVAL AND DISPOSAL OF EXISTING VALVES AND METERS, AS NOTED. CONTRACTOR TO INSTALL RESTRAINED PLUG ON EXISTING FH TEE.*
2. *CONTRACTOR MUST LOCATE EXISTING PRIVATE-SIDE WATER LINE FOR ALL SERVICE RECONNECTIONS.*
3. *PROPOSED ELEC (UG) CONDUIT, LIGHT POLES, JUNCTION BOXES, ETC. SHOWN ON THESE SHEETS FOR REFERENCE ONLY. SEE ILLUMINATION LAYOUT FOR DETAILS.*

KEY MAP

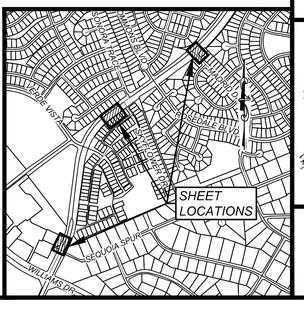

NO	REVISION	BY	DATE

BGE JOB NO. XXXX-XX
FILE
DATE 02/21/2025
DESIGNED XXX
DRAWN XXX
REVISED XXX
CHECKED XXX

SHELL ROAD UTILITY RELOCATIONS

WATER METER & FIRE HYDRANT RELOCATIONS

CITY OF GEORGETOWN

BGE

BGE, INC
101 WEST LOUIS HENNA BLVD., STE 400
AUSTIN, TX 78728
TBPE Registration No. F-1046
TEL: 512-879-0400 www.bgeinc.com

STATE OF TEXAS
BRITTANY LYNN FAIRBURN
132905
LICENSED PROFESSIONAL ENGINEER
02/21/2025

SHEET
352

100% SUBMITTAL

FILE LOCATION: G:\TX\C\PROJECTS\CITY_GEORGETOWN\10767-00 SHELL ROAD\03_CADD\01_SHTS_PW\10767-00-RELO-WM.DWG DATE SAVED: 2/19/2025

811 Know what's below. Call before you dig.

CAUTION: CONTRACTOR NOTE

THE LOCATION OF EXISTING UNDERGROUND AND OVERHEAD UTILITIES ARE APPROXIMATE LOCATIONS ONLY. THE CONTRACTOR SHALL CONTACT UTILITY COMPANIES PRIOR TO CONSTRUCTION. CONTRACTOR SHALL DETERMINE, AND FIELD VERIFY EXISTING UTILITY LOCATIONS AND DEPTHS PRIOR TO BEGINNING CONSTRUCTION AND SHALL BE FULLY RESPONSIBLE FOR ANY AND ALL DAMAGES WHICH MIGHT OCCUR.

CONTRACTOR SHALL CONSIDER PROPOSED UTILITY IMPROVEMENTS AND PROVIDE ADEQUATE HORIZONTAL AND VERTICAL CLEARANCE DURING INSTALLATION OF ALL UTILITY INFRASTRUCTURE.

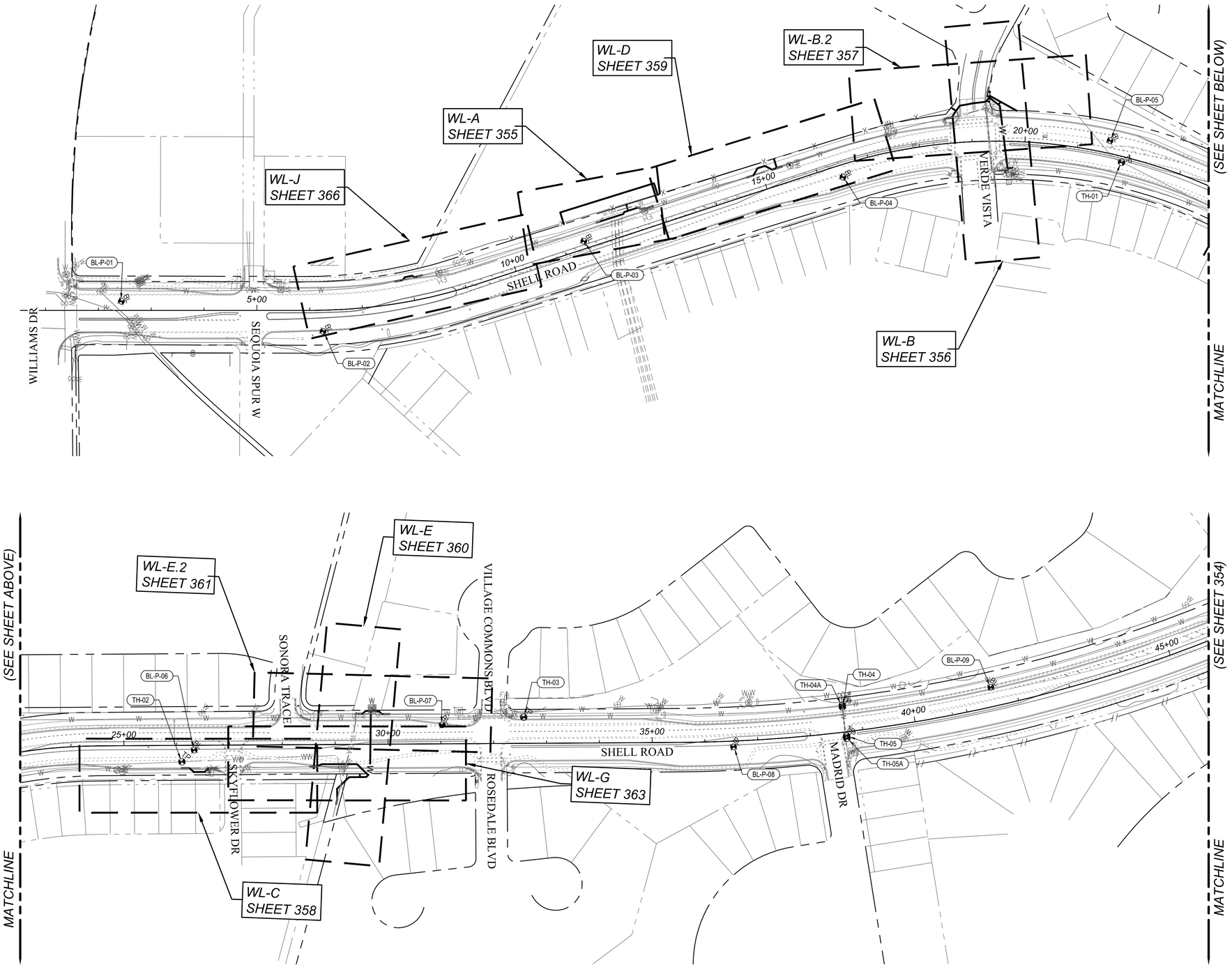

0 50' 100' 200'

SCALE: 1" = 100'

NOTE: IF SHEET IS LESS THAN (22"x34") IT IS A REDUCED PRINT, SCALE REDUCED ACCORDINGLY

NOTES:

1. *FROM STA. 0+00.00 TO STA. 17+57.77, THE PROJECT FALLS UNDER THE 1065 PRESSURE PLANE.*
2. *FROM STA. 17+57.77 TO STA. 112+34.89, THE PROJECT FALLS UNDER THE 1015 PRESSURE PLANE.*
3. *THE L.O.C. OF THE WATER IMPROVEMENTS OF THIS PROJECT IS NOT WITHIN A REGULATED 100-YEAR FLOODPLAIN.*
4. *THE L.O.C. OF THE WATER IMPROVEMENTS OF THIS PROJECT OVERLIE THE EDWARDS AQUIFER RECHARGE ZONE.*

NO	REVISION	BY	DATE

BGE JOB NO. XXXX-XX
FILE
DATE 02/21/2025
DESIGNED XXX
DRAWN XXX
REVISED XXX
CHECKED XXX

SHELL ROAD UTILITY RELOCATIONS

OVERALL RELOCATIONS (1 OF 2)

CITY OF GEORGETOWN

BGE, INC.
101 WEST LOUIS HENNA BLVD., STE 400
AUSTIN, TX 78728
TBPE Registration No. F-1046
TEL. 512-879-0400 www.bgeinc.com

STATE OF TEXAS
BRITTANY LYNN FAIRBURN
132905
LICENSED PROFESSIONAL ENGINEER

Brittany Lynn Fairburn

02/21/2025

SHEET
353

100% SUBMITTAL

FILE LOCATION: G:\TX\C\PROJECTS\CITY_GEORGETOWN\10767-00 SHELL ROAD\03_CADD\01_SHTS_PW\SHELL_OVR_WL_RELO.DWG DATE SAVED: 2/17/2025

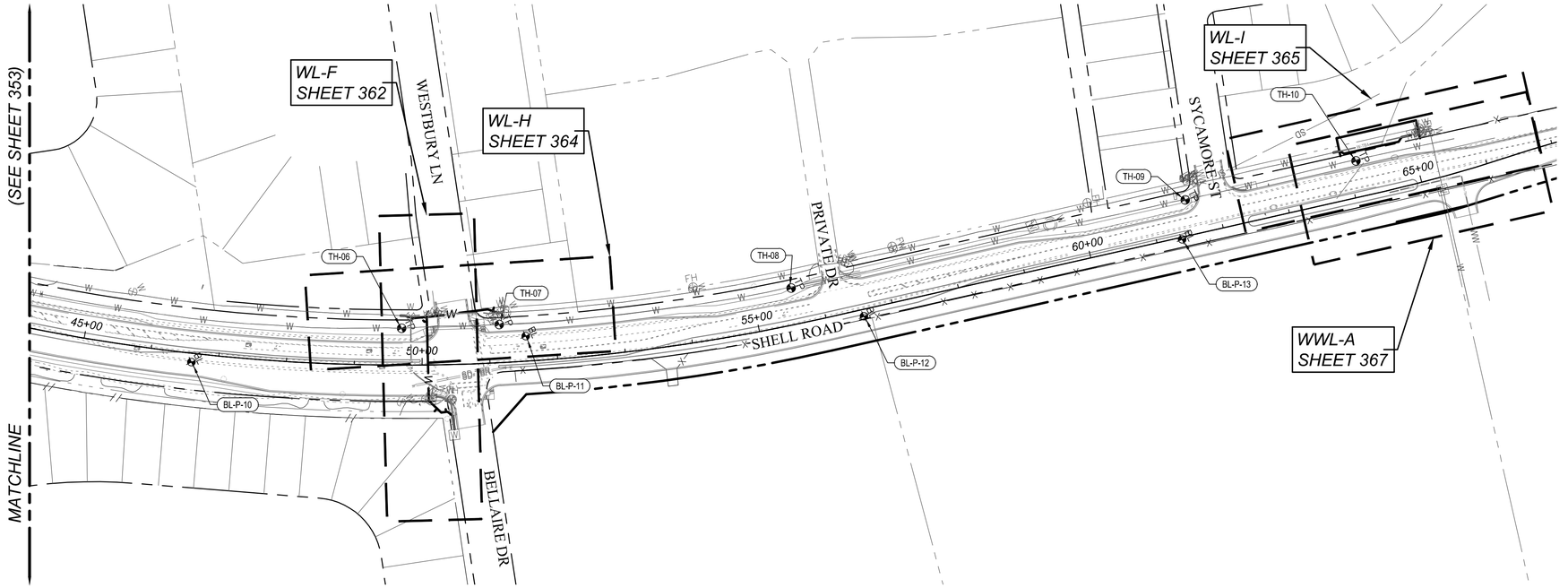

CAUTION: CONTRACTOR NOTE

THE LOCATION OF EXISTING UNDERGROUND AND OVERHEAD UTILITIES ARE APPROXIMATE LOCATIONS ONLY. THE CONTRACTOR SHALL CONTACT UTILITY COMPANIES PRIOR TO CONSTRUCTION. CONTRACTOR SHALL DETERMINE, AND FIELD VERIFY EXISTING UTILITY LOCATIONS AND DEPTHS PRIOR TO BEGINNING CONSTRUCTION AND SHALL BE FULLY RESPONSIBLE FOR ANY AND ALL DAMAGES WHICH MIGHT OCCUR.

CONTRACTOR SHALL CONSIDER PROPOSED UTILITY IMPROVEMENTS AND PROVIDE ADEQUATE HORIZONTAL AND VERTICAL CLEARANCE DURING INSTALLATION OF ALL UTILITY INFRASTRUCTURE.

Know what's below. Call before you dig.

0 50' 100' 200'

SCALE: 1" = 100'

NOTE: IF SHEET IS LESS THAN (22"x34") IT IS A REDUCED PRINT, SCALE REDUCED ACCORDINGLY

NOTES:

1. *FROM STA. 0+00.00 TO STA. 17+57.77, THE PROJECT FALLS UNDER THE 1065 PRESSURE PLANE.*
2. *FROM STA. 17+57.77 TO STA. 112+34.89, THE PROJECT FALLS UNDER THE 1015 PRESSURE PLANE.*
3. *THE L.O.C. OF THE WATER IMPROVEMENTS OF THIS PROJECT IS NOT WITHIN A REGULATED 100-YEAR FLOODPLAIN.*
4. *THE L.O.C. OF THE WATER IMPROVEMENTS OF THIS PROJECT OVERLIE THE EDWARDS AQUIFER RECHARGE ZONE.*

NO	REVISION	BY	DATE

BGE JOB NO. XXXX-XX
FILE
DATE 02/21/2025
DESIGNED XXX
DRAWN XXX
REVISED XXX
CHECKED XXX

SHELL ROAD UTILITY RELOCATIONS

OVERALL RELOCATIONS (2 OF 2)

CITY OF GEORGETOWN

BGE, INC.
101 WEST LOUIS HENNA BLVD., STE 400
AUSTIN, TX 78728
TBPE Registration No. F-1046
TEL: 512-879-0400 www.bgeinc.com

STATE OF TEXAS
BRITTANY LYNN FAIRBURN
132905
LICENSED
PROFESSIONAL ENGINEER

02/21/2025

SHEET
354

100% SUBMITTAL

FILE LOCATION: G:\TX\C\PROJECTS\CITY_GEORGETOWN\10767-00 SHELL ROAD\03_CADD\01_SHTS_PW\SHELL_OVR_WL_RELO.DWG DATE SAVED: 2/17/2025

811 Know what's below. Call before you dig.

CAUTION: CONTRACTOR NOTE

THE LOCATION OF EXISTING UNDERGROUND AND OVERHEAD UTILITIES ARE APPROXIMATE LOCATIONS ONLY. THE CONTRACTOR SHALL CONTACT UTILITY COMPANIES PRIOR TO CONSTRUCTION. CONTRACTOR SHALL DETERMINE, AND FIELD VERIFY EXISTING UTILITY LOCATIONS AND DEPTHS PRIOR TO BEGINNING CONSTRUCTION AND SHALL BE FULLY RESPONSIBLE FOR ANY AND ALL DAMAGES WHICH MIGHT OCCUR.

CONTRACTOR SHALL CONSIDER PROPOSED UTILITY IMPROVEMENTS AND PROVIDE ADEQUATE HORIZONTAL AND VERTICAL CLEARANCE DURING INSTALLATION OF ALL UTILITY INFRASTRUCTURE.

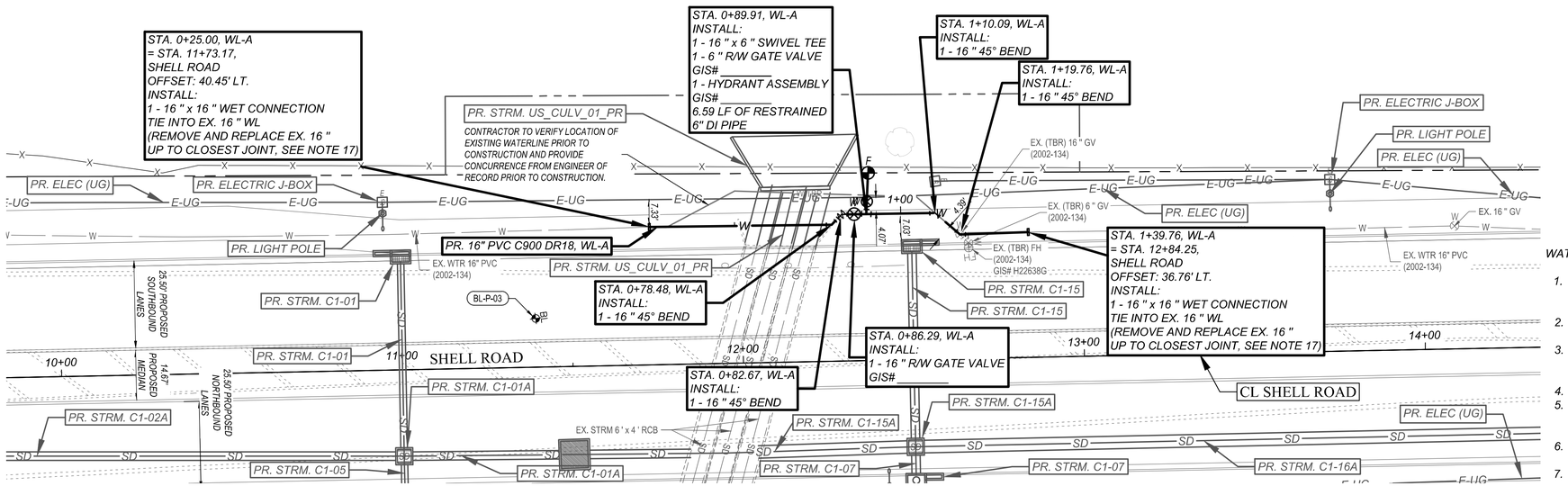

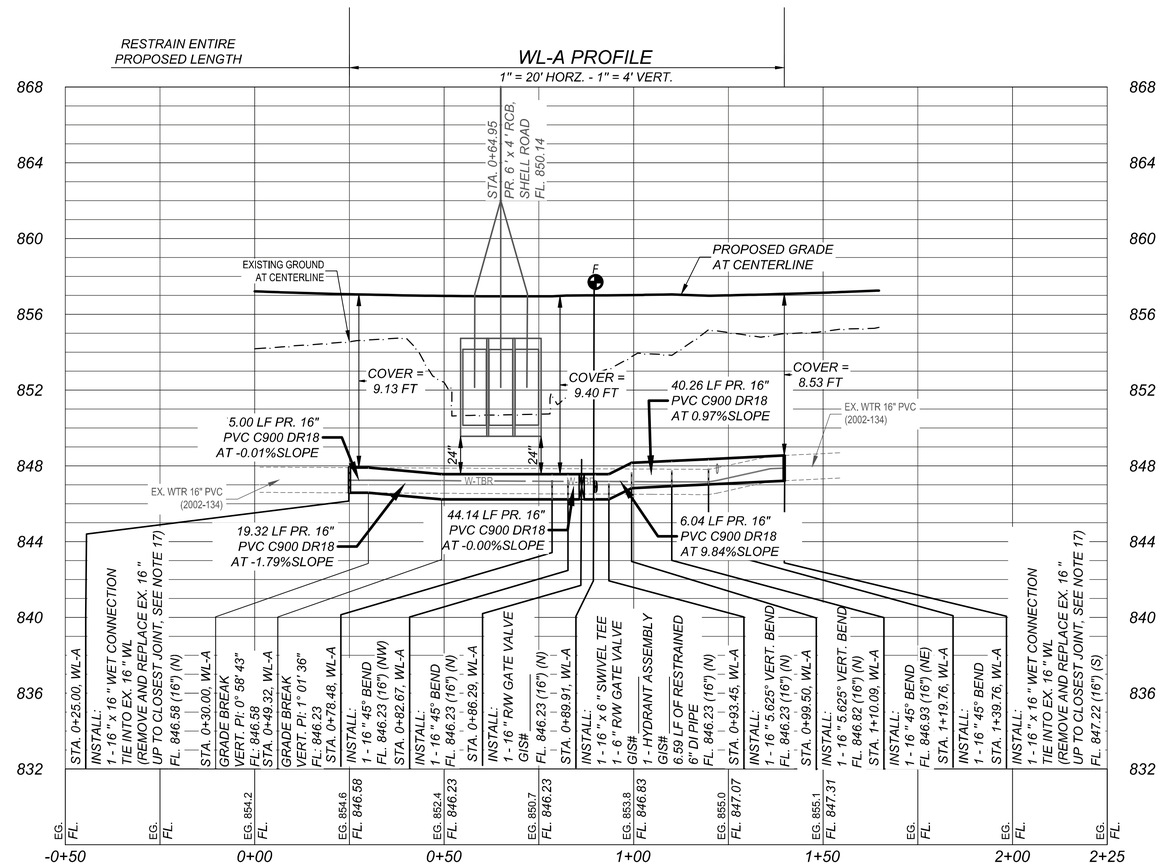

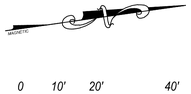

NOTE: IF SHEET IS LESS THAN (22"x34") IT IS A REDUCED PRINT, SCALE REDUCED ACCORDINGLY

WATER LINE RELOCATION NOTES:

1. *EXISTING WATER PIPE TO BE ABANDONED IN PLACE BY CUTTING AND PLUGGING THE EXISTING LINE, AS NOTED, SERVICE MUST BE MAINTAINED AT ALL TIMES.*
2. *CONTRACTOR MUST MAINTAIN SERVICE AND DRIVEWAY ACCESS AT ALL TIMES.*
3. *ALL PIPES, VALVES, AND FITTINGS INSTALLED IN RIGHT-OF-WAY SHALL BE RESTRAINED AND/OR THRUST BLOCKED PER PLANS.*
4. *CONTRACTOR TO FIELD VERIFY TIE-IN ELEVATIONS.*
5. *CONTRACTOR IS RESPONSIBLE FOR ALL TRANSITION FITTINGS TO CONNECT DISSIMILAR PIPE. FITTING REQUIRED FOR TRANSITIONS ARE SUBSIDIARY TO ITEM 510, PIPE.*
6. *CONTRACTOR TO EXPOSE, SUPPORT, AND PROTECT EXISTING UTILITIES PRIOR TO THE PROPOSED TIE-INS.*
7. *CONTRACTOR IS ADVISED OVERHEAD ELECTRIC POLES INCLUDE MULTIPLE COMMUNICATION LINES.*
8. *UTILITIES SHOWN IN THE PROFILE AS APPROXIMATE DEPTH ARE TO BE VERIFIED BY THE CONTRACTOR. THE DEPTH INDICATED IN THE PROFILE REPRESENTS TYPICAL DEPTHS FOR THE TYPE OF UTILITY SHOWN.*
9. *CONTRACTOR TO PROTECT, SUPPORT AND MAINTAIN EXISTING UTILITIES DURING CONSTRUCTION. DAMAGED UTILITIES SHALL BE REPAIRED AND OR REPLACED AT THE CONTRACTOR'S EXPENSE IMMEDIATELY.*
10. *CONTRACTOR TO COORDINATE WITH OVERHEAD ELECTRIC POLE OWNER TO TEMPORARILY SUPPORT EXISTING OVERHEAD ELECTRIC POLE. PAYMENT IS SUBSIDIARY TO INSTALLATION OF THE PROPOSED WATER LINE.*
11. *WATER METER INSTALLATIONS ARE COMPLETE IN PLACE INCLUDING ALL PIPE AND APPURTENANCES REQUIRED PER CITY OF GEORGETOWN DETAILS. METER RELOCATIONS INCLUDE THE REMOVAL AND DISPOSAL OF THE EXISTING METER.*
12. *CONTRACTOR TO RELOCATE AND RECONNECT ALL IRRIGATION LINES.*
13. *ALL ENCASED WATERLINE JOINTS TO BE RESTRAINED.*
14. *CONTRACTOR TO CONTACT CITY OF GEORGETOWN TO GAIN APPROVAL PRIOR TO ALL CONNECTIONS AND VALVE SHUT OFFS PER SPECIFICATION CIP12.*
15. *ALL EXISTING FIRE HYDRANTS NOTED AS TO BE REMOVED SHALL BE SALVAGED AND RETURNED TO THE CITY.*
16. *FITTINGS SHALL BE DUCTILE IRON PER CITY OF GEORGETOWN SPECIFICATIONS. CONTRACTOR TO PROVIDE ANY NECESSARY TRANSITION FITTINGS FOR CONNECTING PVC TO DI PER SPECIFICATIONS.*
17. *IF EXISTING PIPE JOINT AT CONNECTION IS LESS THAN 10 LF FROM CONNECTION POINT, CONTRACTOR TO REPLACE 10 LF MIN.*
18. *CONTRACTOR TO CENTER WATERLINE PIPE SEGMENT AT WASTEWATER CROSSING. IF EXISTING WASTEWATER LINE SHOWS SIGNS OF LEAKING IN FIELD, CONTRACTOR TO REPLACE MINIMUM 18 LF OF 150 PSI WASTEWATER PIPE AT CROSSING.*
19. *PROPOSED ELEC (UG) SHOWN ON THESE SHEETS FOR REFERENCE ONLY. SEE ILLUMINATION LAYOUT FOR DETAILS.*

KEY MAP



NO.	REVISION	BY	DATE

BGE JOB NO. XXXX-XX
FILE
DATE 02/21/2025
DESIGNED XXX
DRAWN XXX
REVISED XXX
CHECKED XXX

SHELL ROAD UTILITY RELOCATIONS

WL-A RELOCATION

CITY OF GEORGETOWN

BGE
BGE, INC
101 WEST LOUIS HENNA BLVD., STE 400
AUSTIN, TX 78728
TBPE Registration No. F-1046
TEL: 512-879-0400 www.bgeinc.com

STATE OF TEXAS
BRITTANY LYNN FAIRBURN
132905
LICENSED PROFESSIONAL ENGINEER
Brittany Lynn Fairburn
02/21/2025

SHEET
355

100% SUBMITTAL

FILE LOCATION: G:\TXC\PROJECTS\CITY_GEORGETOWN\10767-00 SHELL ROAD\03_CADD\01_SHTS_PWWL RELOCATIONS\10767-00-RELO-WL-A.DWG DATE SAVED: 2/17/2025

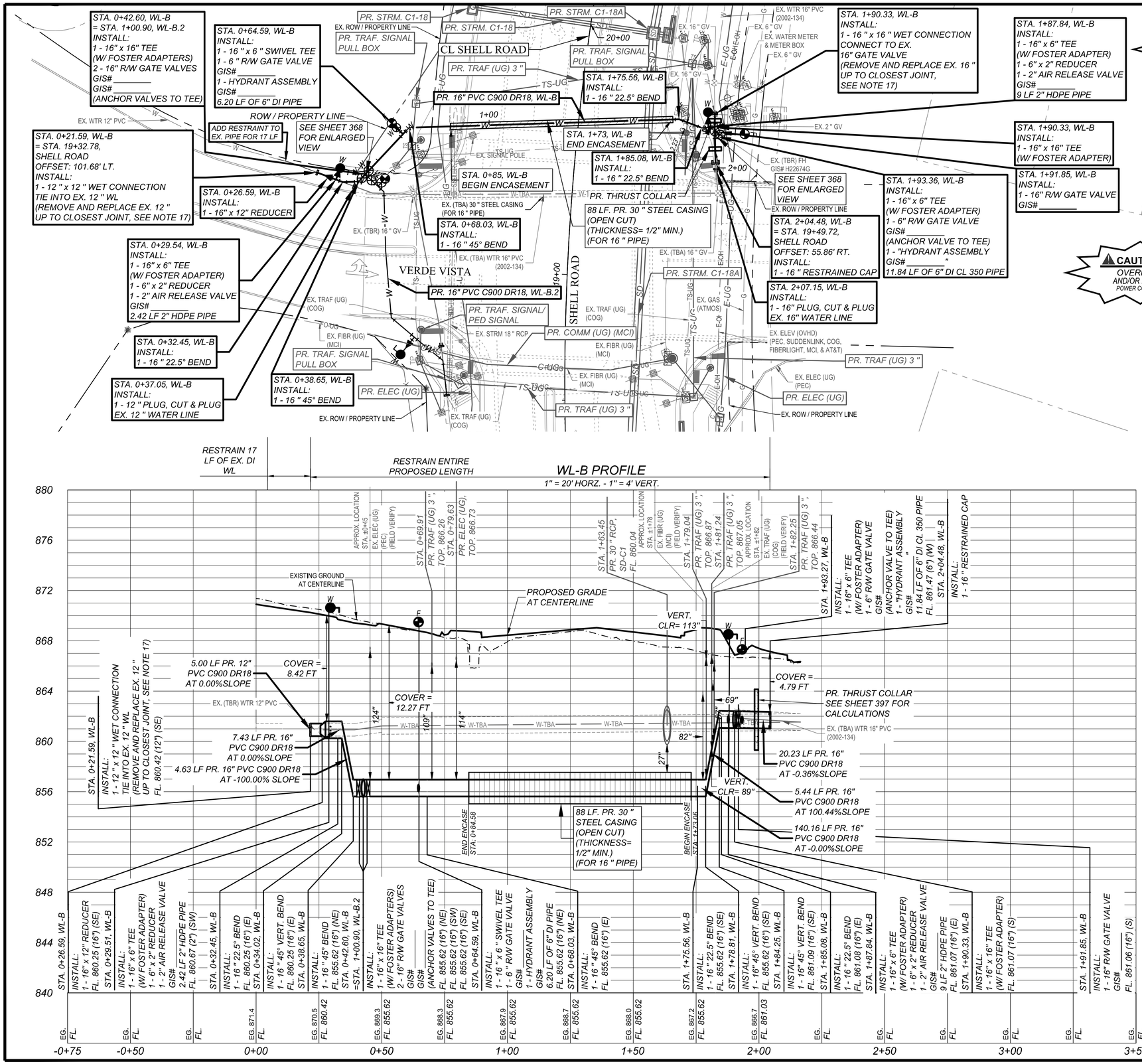

WATER LINE RELOCATION NOTES:

1. EXISTING WATER PIPE TO BE ABANDONED IN PLACE BY CUTTING AND PLUGGING THE EXISTING LINE, AS NOTED, SERVICE MUST BE MAINTAINED AT ALL TIMES.
2. CONTRACTOR MUST MAINTAIN SERVICE AND DRIVEWAY ACCESS AT ALL TIMES.
3. ALL PIPES, VALVES, AND FITTINGS INSTALLED IN RIGHT-OF-WAY SHALL BE RESTRAINED AND/OR THRUST BLOCKED PER PLANS.
4. CONTRACTOR TO FIELD VERIFY TIE-IN ELEVATIONS.
5. CONTRACTOR IS RESPONSIBLE FOR ALL TRANSITION FITTINGS TO CONNECT DISSIMILAR PIPE. FITTING REQUIRED FOR TRANSITIONS ARE SUBSIDIARY TO ITEM 510, PIPE.
6. CONTRACTOR TO EXPOSE, SUPPORT, AND PROTECT EXISTING UTILITIES PRIOR TO THE PROPOSED TIE-INS.
7. CONTRACTOR IS ADVISED OVERHEAD ELECTRIC POLES INCLUDE MULTIPLE COMMUNICATION LINES.
8. UTILITIES SHOWN IN THE PROFILE AS APPROXIMATE DEPTH ARE TO BE VERIFIED BY THE CONTRACTOR. THE DEPTH INDICATED IN THE PROFILE REPRESENTS TYPICAL DEPTHS FOR THE TYPE OF UTILITY SHOWN.
9. CONTRACTOR TO PROTECT, SUPPORT AND MAINTAIN EXISTING UTILITIES DURING CONSTRUCTION. DAMAGED UTILITIES SHALL BE REPAIRED AND OR REPLACED AT THE CONTRACTOR'S EXPENSE IMMEDIATELY.
10. CONTRACTOR TO COORDINATE WITH OVERHEAD ELECTRIC POLE OWNER TO TEMPORARILY SUPPORT EXISTING OVERHEAD ELECTRIC POLE. PAYMENT IS SUBSIDIARY TO INSTALLATION OF THE PROPOSED WATER LINE.
11. WATER METER INSTALLATIONS ARE COMPLETE IN PLACE INCLUDING ALL PIPE AND APPURTENANCES REQUIRED PER CITY OF GEORGETOWN DETAILS. METER RELOCATIONS INCLUDE THE REMOVAL AND DISPOSAL OF THE EXISTING METER.
12. CONTRACTOR TO RELOCATE AND RECONNECT ALL IRRIGATION LINES.
13. ALL ENCASED WATERLINE JOINTS TO BE RESTRAINED.
14. CONTRACTOR TO CONTACT CITY OF GEORGETOWN TO GAIN APPROVAL PRIOR TO ALL CONNECTIONS AND VALVE SHUT OFFS PER SPECIFICATION CIP12.
15. ALL EXISTING FIRE HYDRANTS NOTED AS TO BE REMOVED SHALL BE SALVAGED AND RETURNED TO THE CITY.
16. FITTINGS SHALL BE DUCTILE IRON PER CITY OF GEORGETOWN SPECIFICATIONS. CONTRACTOR TO PROVIDE ANY NECESSARY TRANSITION FITTINGS FOR CONNECTING PVC TO DI PER SPECIFICATIONS.
17. IF EXISTING PIPE JOINT AT CONNECTION IS LESS THAN 10 LF FROM CONNECTION POINT, CONTRACTOR TO REPLACE 10 LF MIN.
18. CONTRACTOR TO CENTER WATERLINE PIPE SEGMENT AT WASTEWATER CROSSING. IF EXISTING WASTEWATER LINE SHOWS SIGNS OF LEAKING IN FIELD, CONTRACTOR TO REPLACE MINIMUM 18 LF OF 150 PSI WASTEWATER PIPE AT CROSSING.
19. PROPOSED ELEC (UG) SHOWN ON THESE SHEETS FOR REFERENCE ONLY. SEE ILLUMINATION LAYOUT FOR DETAILS.

KEY MAP



NO.	REVISION	DATE	BY

BSE JOB NO. XXXX-XX
FILE
DATE 02/21/2025
DESIGNED XXX
DRAWN XXX
REVISED XXX
CHECKED XXX

SHELL ROAD UTILITY RELOCATIONS

WL-B RELOCATION

CITY OF GEORGETOWN

BGE
BGE, INC.
101 WEST LOUIS HENNA BLVD., STE 400
AUSTIN, TX 78728
TBPE Registration No. F-1046
TEL: 512-879-0400 www.bgeinc.com

STATE OF TEXAS
BRITTANY LYNN FAIRBURN
132905
LICENSED PROFESSIONAL ENGINEER
Brittany Lynn Fairburn
02/21/2025

SHEET
356

100% SUBMITTAL

FILE LOCATION: G:\TX\CP\PROJECTS\CITY_GEORGETOWN\10767-00 SHELL ROAD\03_CADD\01_SHTS_PW\WL RELOCATIONS\10767-00-RELO-WL-B.DWG DATE SAVED: 2/19/2025

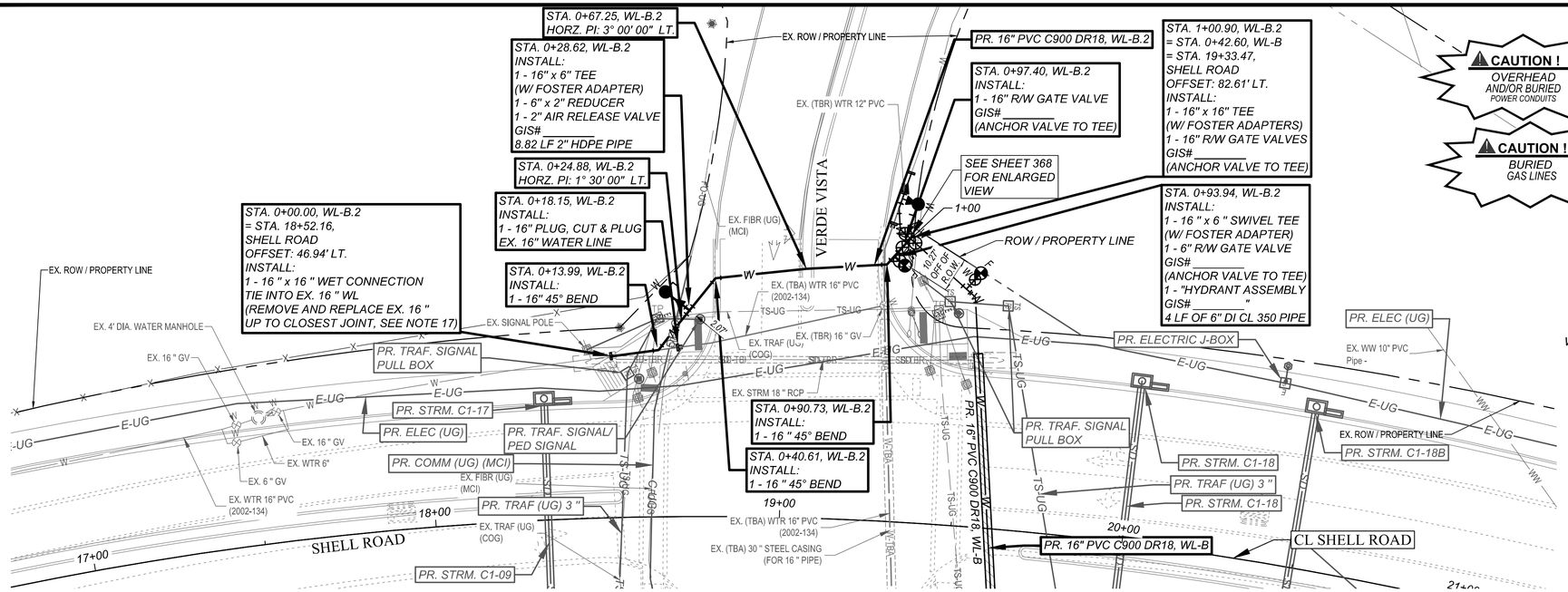

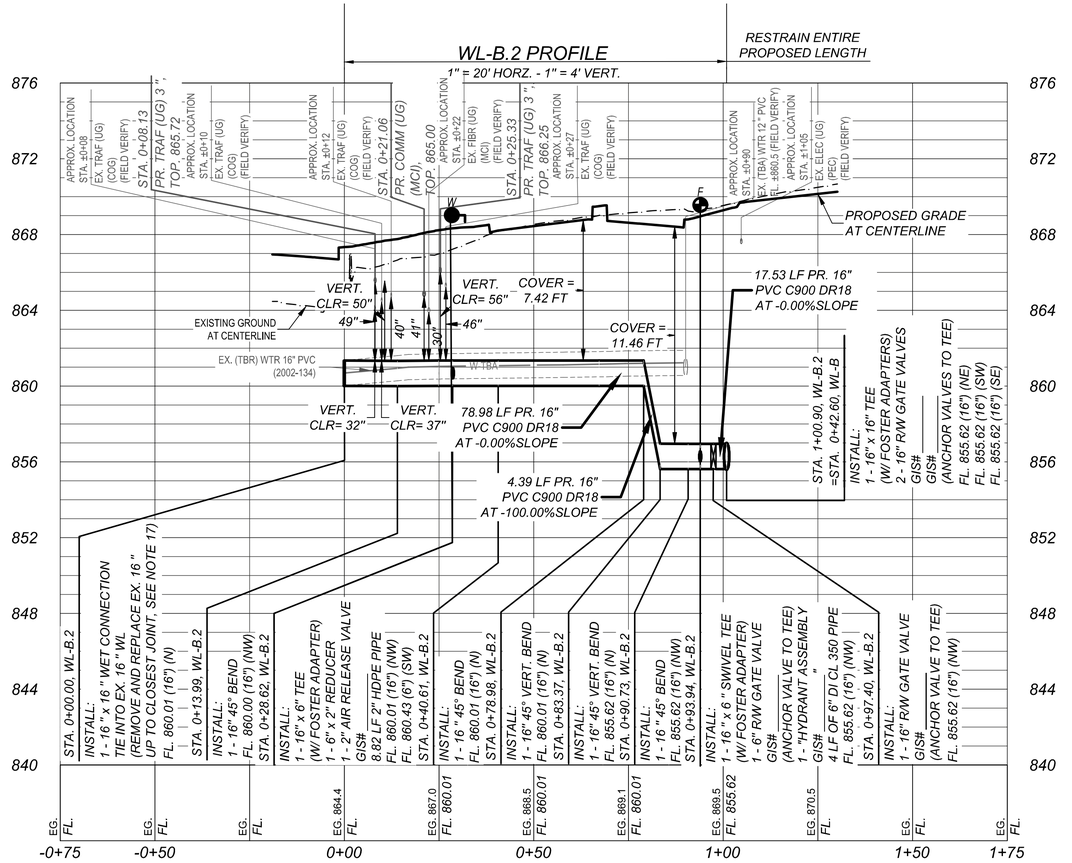

CAUTION: CONTRACTOR NOTE

THE LOCATION OF EXISTING UNDERGROUND AND OVERHEAD UTILITIES ARE APPROXIMATE LOCATIONS ONLY. THE CONTRACTOR SHALL CONTACT UTILITY COMPANIES PRIOR TO CONSTRUCTION. CONTRACTOR SHALL DETERMINE, AND FIELD VERIFY EXISTING UTILITY LOCATIONS AND DEPTHS PRIOR TO BEGINNING CONSTRUCTION AND SHALL BE FULLY RESPONSIBLE FOR ANY AND ALL DAMAGES WHICH MIGHT OCCUR.

CONTRACTOR SHALL CONSIDER PROPOSED UTILITY IMPROVEMENTS AND PROVIDE ADEQUATE HORIZONTAL AND VERTICAL CLEARANCE DURING INSTALLATION OF ALL UTILITY INFRASTRUCTURE.

811 Know what's below. Call before you dig.

NO.	REVISION	BY	DATE

BGE JOB NO. XXXX-XX
FILE
DATE 02/21/2025
DESIGNED XXX
DRAWN XXX
REVISED XXX
CHECKED XXX

WATER LINE RELOCATION NOTES:

1. *EXISTING WATER PIPE TO BE ABANDONED IN PLACE BY CUTTING AND PLUGGING THE EXISTING LINE, AS NOTED, SERVICE MUST BE MAINTAINED AT ALL TIMES.*
2. *CONTRACTOR MUST MAINTAIN SERVICE AND DRIVEWAY ACCESS AT ALL TIMES.*
3. *ALL PIPES, VALVES, AND FITTINGS INSTALLED IN RIGHT-OF-WAY SHALL BE RESTRAINED AND/OR THRUST BLOCKED PER PLANS.*
4. *CONTRACTOR TO FIELD VERIFY TIE-IN ELEVATIONS.*
5. *CONTRACTOR IS RESPONSIBLE FOR ALL TRANSITION FITTINGS TO CONNECT DISSIMILAR PIPE. FITTING REQUIRED FOR TRANSITIONS ARE SUBSIDIARY TO ITEM 510, PIPE.*
6. *CONTRACTOR TO EXPOSE, SUPPORT, AND PROTECT EXISTING UTILITIES PRIOR TO THE PROPOSED TIE-INS.*
7. *CONTRACTOR IS ADVISED OVERHEAD ELECTRIC POLES INCLUDE MULTIPLE COMMUNICATION LINES.*
8. *UTILITIES SHOWN IN THE PROFILE AS APPROXIMATE DEPTH ARE TO BE VERIFIED BY THE CONTRACTOR. THE DEPTH INDICATED IN THE PROFILE REPRESENTS TYPICAL DEPTHS FOR THE TYPE OF UTILITY SHOWN.*
9. *CONTRACTOR TO PROTECT, SUPPORT AND MAINTAIN EXISTING UTILITIES DURING CONSTRUCTION. DAMAGED UTILITIES SHALL BE REPAIRED AND OR REPLACED AT THE CONTRACTOR'S EXPENSE IMMEDIATELY.*
10. *CONTRACTOR TO COORDINATE WITH OVERHEAD ELECTRIC POLE OWNER TO TEMPORARILY SUPPORT EXISTING OVERHEAD ELECTRIC POLE. PAYMENT IS SUBSIDIARY TO INSTALLATION OF THE PROPOSED WATER LINE.*
11. *WATER METER INSTALLATIONS ARE COMPLETE IN PLACE INCLUDING ALL PIPE AND APPURTENANCES REQUIRED PER CITY OF GEORGETOWN DETAILS. METER RELOCATIONS INCLUDE THE REMOVAL AND DISPOSAL OF THE EXISTING METER.*
12. *CONTRACTOR TO RELOCATE AND RECONNECT ALL IRRIGATION LINES.*
13. *ALL ENCASED WATERLINE JOINTS TO BE RESTRAINED.*
14. *CONTRACTOR TO CONTACT CITY OF GEORGETOWN TO GAIN APPROVAL PRIOR TO ALL CONNECTIONS AND VALVE SHUT OFFS PER SPECIFICATION CIP12.*
15. *ALL EXISTING FIRE HYDRANTS NOTED AS TO BE REMOVED SHALL BE SALVAGED AND RETURNED TO THE CITY.*
16. *FITTINGS SHALL BE DUCTILE IRON PER CITY OF GEORGETOWN SPECIFICATIONS. CONTRACTOR TO PROVIDE ANY NECESSARY TRANSITION FITTINGS FOR CONNECTING PVC TO DI PER SPECIFICATIONS.*
17. *IF EXISTING PIPE JOINT AT CONNECTION IS LESS THAN 10 LF FROM CONNECTION POINT, CONTRACTOR TO REPLACE 10 LF MIN.*
18. *CONTRACTOR TO CENTER WATERLINE PIPE SEGMENT AT WASTEWATER CROSSING. IF EXISTING WASTEWATER LINE SHOWS SIGNS OF LEAKING IN FIELD, CONTRACTOR TO REPLACE MINIMUM 18 LF OF 150 PSI WASTEWATER PIPE AT CROSSING.*
19. *PROPOSED ELEC (UG) SHOWN ON THESE SHEETS FOR REFERENCE ONLY. SEE ILLUMINATION LAYOUT FOR DETAILS.*

KEY MAP

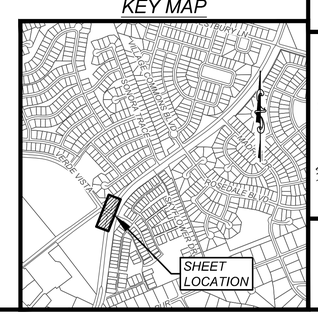

SHELL ROAD UTILITY RELOCATIONS

WL-B.2 RELOCATION

CITY OF GEORGETOWN

BGE

BGE, INC.
101 WEST LOUIS HENNA BLVD., STE 400
AUSTIN, TX 78728
TBPE Registration No. F-1046
TEL: 512-879-0400 www.bgeinc.com

STATE OF TEXAS
BRITTANY LYNN FAIRBURN
132905
LICENSED
PROFESSIONAL ENGINEER
Brittany Lynn Fairburn
02/21/2025

SHEET
357

100% SUBMITTAL

FILE LOCATION: G:\TXC\PROJECTS\CITY_GEORGETOWN\10767-00 SHELL ROAD\00\3_CADD\01_SHTS_PW\WL RELOCATIONS\10767-00-RELO-WL-B.2.DWG DATE SAVED: 2/18/2025

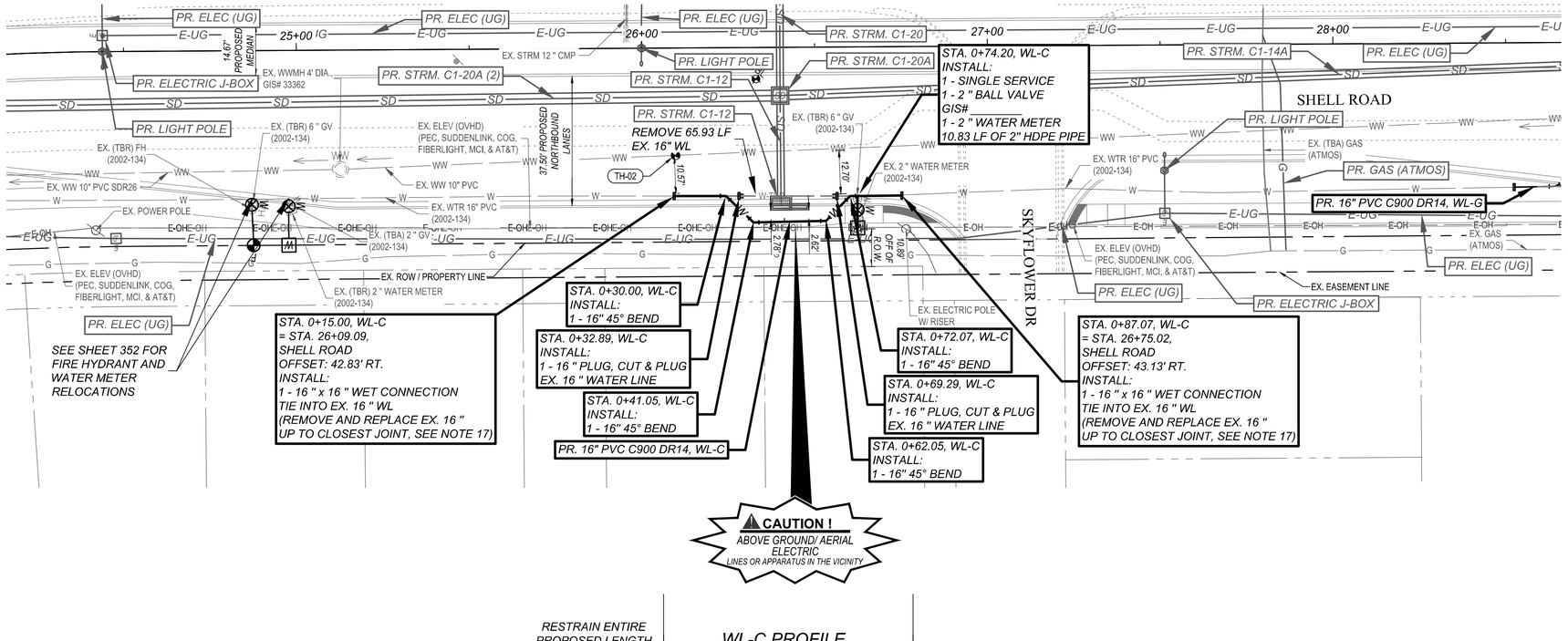

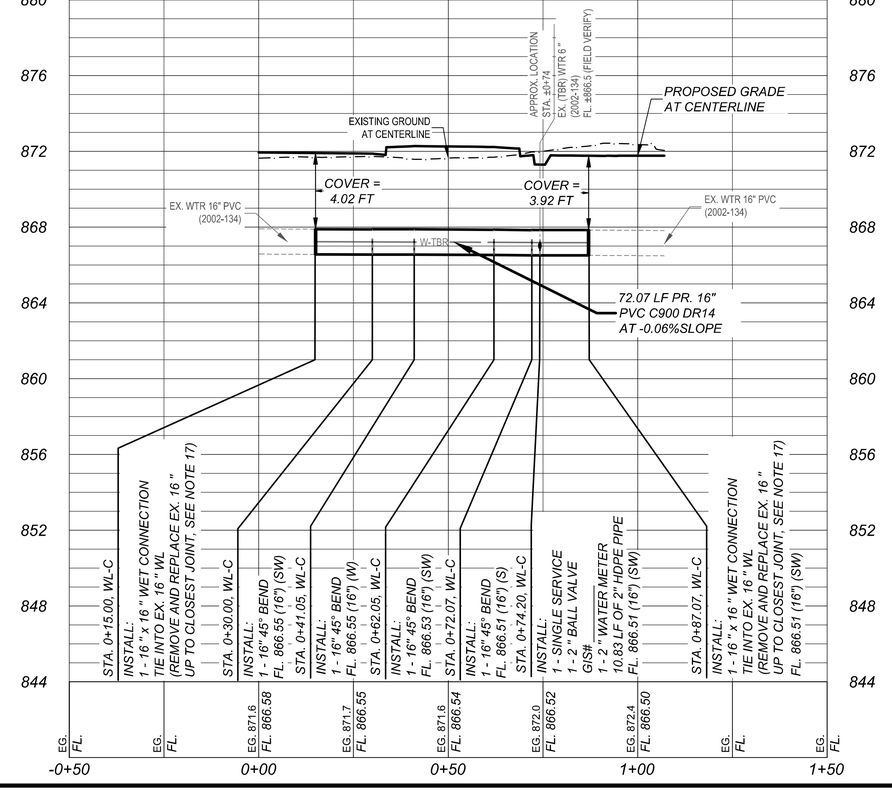

CAUTION: CONTRACTOR NOTE

THE LOCATION OF EXISTING UNDERGROUND AND OVERHEAD UTILITIES ARE APPROXIMATE LOCATIONS ONLY. THE CONTRACTOR SHALL CONTACT UTILITY COMPANIES PRIOR TO CONSTRUCTION. CONTRACTOR SHALL DETERMINE, AND FIELD VERIFY EXISTING UTILITY LOCATIONS AND DEPTHS PRIOR TO BEGINNING CONSTRUCTION AND SHALL BE FULLY RESPONSIBLE FOR ANY AND ALL DAMAGES WHICH MIGHT OCCUR.

CONTRACTOR SHALL CONSIDER PROPOSED UTILITY IMPROVEMENTS AND PROVIDE ADEQUATE HORIZONTAL AND VERTICAL CLEARANCE DURING INSTALLATION OF ALL UTILITY INFRASTRUCTURE.

Know what's below. Call before you dig.

SCALE: 1" = 20'

NOTE: IF SHEET IS LESS THAN (22"x34") IT IS A REDUCED PRINT, SCALE REDUCED ACCORDINGLY

WATER LINE RELOCATION NOTES:

1. *EXISTING WATER PIPE TO BE ABANDONED IN PLACE BY CUTTING AND PLUGGING THE EXISTING LINE, AS NOTED, SERVICE MUST BE MAINTAINED AT ALL TIMES.*
2. *CONTRACTOR MUST MAINTAIN SERVICE AND DRIVEWAY ACCESS AT ALL TIMES.*
3. *ALL PIPES, VALVES, AND FITTINGS INSTALLED IN RIGHT-OF-WAY SHALL BE RESTRAINED AND/OR THRUST BLOCKED PER PLANS.*
4. *CONTRACTOR TO FIELD VERIFY TIE-IN ELEVATIONS.*
5. *CONTRACTOR IS RESPONSIBLE FOR ALL TRANSITION FITTINGS TO CONNECT DISSIMILAR PIPE. FITTING REQUIRED FOR TRANSITIONS ARE SUBSIDIARY TO ITEM 510, PIPE.*
6. *CONTRACTOR TO EXPOSE, SUPPORT, AND PROTECT EXISTING UTILITIES PRIOR TO THE PROPOSED TIE-INS.*
7. *CONTRACTOR IS ADVISED OVERHEAD ELECTRIC POLES INCLUDE MULTIPLE COMMUNICATION LINES.*
8. *UTILITIES SHOWN IN THE PROFILE AS APPROXIMATE DEPTH ARE TO BE VERIFIED BY THE CONTRACTOR. THE DEPTH INDICATED IN THE PROFILE REPRESENTS TYPICAL DEPTHS FOR THE TYPE OF UTILITY SHOWN.*
9. *CONTRACTOR TO PROTECT, SUPPORT AND MAINTAIN EXISTING UTILITIES DURING CONSTRUCTION. DAMAGED UTILITIES SHALL BE REPAIRED AND OR REPLACED AT THE CONTRACTOR'S EXPENSE IMMEDIATELY.*
10. *CONTRACTOR TO COORDINATE WITH OVERHEAD ELECTRIC POLE OWNER TO TEMPORARILY SUPPORT EXISTING OVERHEAD ELECTRIC POLE. PAYMENT IS SUBSIDIARY TO INSTALLATION OF THE PROPOSED WATER LINE.*
11. *WATER METER INSTALLATIONS ARE COMPLETE IN PLACE INCLUDING ALL PIPE AND APPURTENANCES REQUIRED PER CITY OF GEORGETOWN DETAILS. METER RELOCATIONS INCLUDE THE REMOVAL AND DISPOSAL OF THE EXISTING METER.*
12. *CONTRACTOR TO RELOCATE AND RECONNECT ALL IRRIGATION LINES.*
13. *ALL ENCASED WATERLINE JOINTS TO BE RESTRAINED.*
14. *CONTRACTOR TO CONTACT CITY OF GEORGETOWN TO GAIN APPROVAL PRIOR TO ALL CONNECTIONS AND VALVE SHUT OFFS PER SPECIFICATION CIP12.*
15. *ALL EXISTING FIRE HYDRANTS NOTED AS TO BE REMOVED SHALL BE SALVAGED AND RETURNED TO THE CITY.*
16. *FITTINGS SHALL BE DUCTILE IRON PER CITY OF GEORGETOWN SPECIFICATIONS. CONTRACTOR TO PROVIDE ANY NECESSARY TRANSITION FITTINGS FOR CONNECTING PVC TO DI PER SPECIFICATIONS.*
17. *IF EXISTING PIPE JOINT AT CONNECTION IS LESS THAN 10 LF FROM CONNECTION POINT, CONTRACTOR TO REPLACE 10 LF MIN.*
18. *CONTRACTOR TO CENTER WATERLINE PIPE SEGMENT AT WASTEWATER CROSSING. IF EXISTING WASTEWATER LINE SHOWS SIGNS OF LEAKING IN FIELD, CONTRACTOR TO REPLACE MINIMUM 18 LF OF 150 PSI WASTEWATER PIPE AT CROSSING.*
19. *PROPOSED ELEC (UG) SHOWN ON THESE SHEETS FOR REFERENCE ONLY. SEE ILLUMINATION LAYOUT FOR DETAILS.*

KEY MAP



NO.	REVISION	BY	DATE

BGE JOB NO. XXXX-XX
FILE
DATE 02/21/2025
DESIGNED XXX
DRAWN XXX
REVISED XXX
CHECKED XXX

SHELL ROAD UTILITY RELOCATIONS

WL-C RELOCATION

CITY OF GEORGETOWN

BGE
BGE, INC.
101 WEST LOUIS HENNA BLVD., STE 400
AUSTIN, TX 78728
TBPE Registration No. F-1046
TEL: 512-879-0400 www.bgeinc.com

STATE OF TEXAS
BRITTANY LYNN FAIRBURN
132905
LICENSED
PROFESSIONAL ENGINEER
02/21/2025

SHEET
358

FILE LOCATION: G:\TX\PROJECTS\CITY_GEORGETOWN\10767-00 SHELL ROAD\03_CADD\01_SHTS_PW\WL RELOCATIONS\10767-00-RELO-WL-C.DWG DATE SAVED: 2/18/2025

100% SUBMITTAL

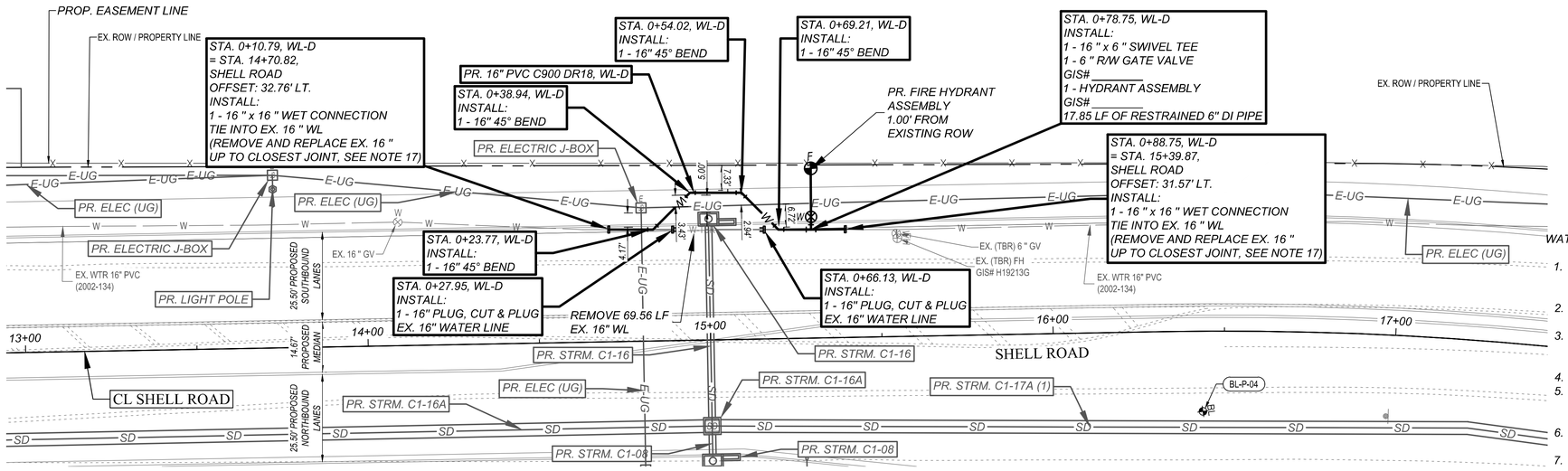



NOTE: IF SHEET IS LESS THAN (22"x34") IT IS A REDUCED PRINT, SCALE REDUCED ACCORDINGLY

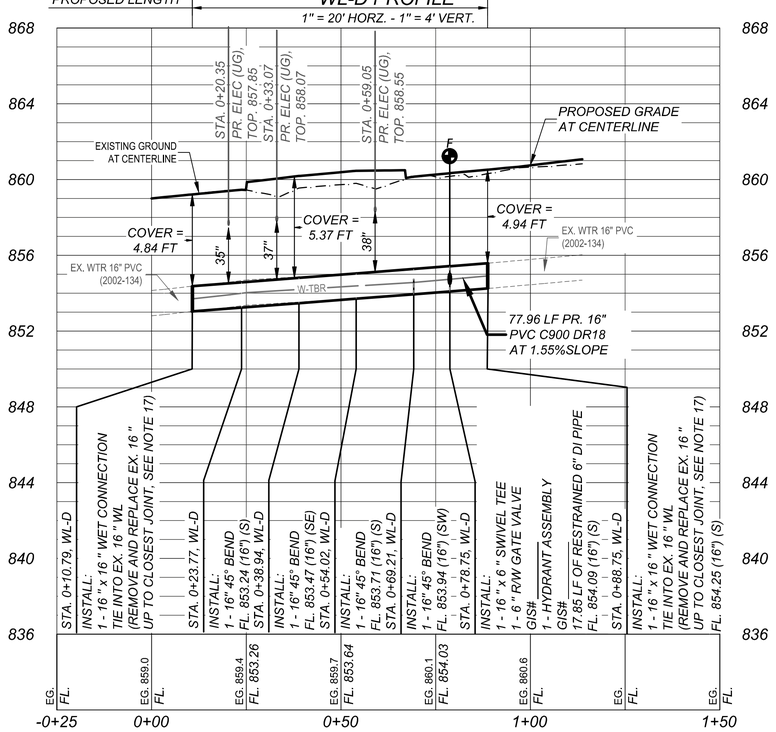

WATER LINE RELOCATION NOTES:

1. EXISTING WATER PIPE TO BE ABANDONED IN PLACE BY CUTTING AND PLUGGING THE EXISTING LINE, AS NOTED, SERVICE MUST BE MAINTAINED AT ALL TIMES.
2. CONTRACTOR MUST MAINTAIN SERVICE AND DRIVEWAY ACCESS AT ALL TIMES.
3. ALL PIPES, VALVES, AND FITTINGS INSTALLED IN RIGHT-OF-WAY SHALL BE RESTRAINED AND/OR THRUST BLOCKED PER PLANS.
4. CONTRACTOR TO FIELD VERIFY TIE-IN ELEVATIONS.
5. CONTRACTOR IS RESPONSIBLE FOR ALL TRANSITION FITTINGS TO CONNECT DISSIMILAR PIPE. FITTING REQUIRED FOR TRANSITIONS ARE SUBSIDIARY TO ITEM 510, PIPE.
6. CONTRACTOR TO EXPOSE, SUPPORT, AND PROTECT EXISTING UTILITIES PRIOR TO THE PROPOSED TIE-INS.
7. CONTRACTOR IS ADVISED OVERHEAD ELECTRIC POLES INCLUDE MULTIPLE COMMUNICATION LINES.
8. UTILITIES SHOWN IN THE PROFILE AS APPROXIMATE DEPTH ARE TO BE VERIFIED BY THE CONTRACTOR. THE DEPTH INDICATED IN THE PROFILE REPRESENTS TYPICAL DEPTHS FOR THE TYPE OF UTILITY SHOWN.
9. CONTRACTOR TO PROTECT, SUPPORT AND MAINTAIN EXISTING UTILITIES DURING CONSTRUCTION. DAMAGED UTILITIES SHALL BE REPAIRED AND OR REPLACED AT THE CONTRACTOR'S EXPENSE IMMEDIATELY.
10. CONTRACTOR TO COORDINATE WITH OVERHEAD ELECTRIC POLE OWNER TO TEMPORARILY SUPPORT EXISTING OVERHEAD ELECTRIC POLE. PAYMENT IS SUBSIDIARY TO INSTALLATION OF THE PROPOSED WATER LINE.
11. WATER METER INSTALLATIONS ARE COMPLETE IN PLACE INCLUDING ALL PIPE AND APPURTENANCES REQUIRED PER CITY OF GEORGETOWN DETAILS. METER RELOCATIONS INCLUDE THE REMOVAL AND DISPOSAL OF THE EXISTING METER.
12. CONTRACTOR TO RELOCATE AND RECONNECT ALL IRRIGATION LINES.
13. ALL ENCASED WATERLINE JOINTS TO BE RESTRAINED.
14. CONTRACTOR TO CONTACT CITY OF GEORGETOWN TO GAIN APPROVAL PRIOR TO ALL CONNECTIONS AND VALVE SHUT OFFS PER SPECIFICATION CIP12.
15. ALL EXISTING FIRE HYDRANTS NOTED AS TO BE REMOVED SHALL BE SALVAGED AND RETURNED TO THE CITY.
16. FITTINGS SHALL BE DUCTILE IRON PER CITY OF GEORGETOWN SPECIFICATIONS. CONTRACTOR TO PROVIDE ANY NECESSARY TRANSITION FITTINGS FOR CONNECTING PVC TO DI PER SPECIFICATIONS.
17. IF EXISTING PIPE JOINT AT CONNECTION IS LESS THAN 10 LF FROM CONNECTION POINT, CONTRACTOR TO REPLACE 10 LF MIN.
18. CONTRACTOR TO CENTER WATERLINE PIPE SEGMENT AT WASTEWATER CROSSING. IF EXISTING WASTEWATER LINE SHOWS SIGNS OF LEAKING IN FIELD, CONTRACTOR TO REPLACE MINIMUM 18 LF OF 150 PSI WASTEWATER PIPE AT CROSSING.
19. PROPOSED ELEC (UG) SHOWN ON THESE SHEETS FOR REFERENCE ONLY. SEE ILLUMINATION LAYOUT FOR DETAILS.

KEY MAP

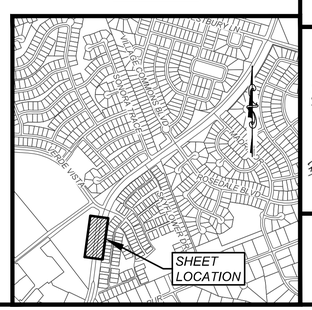

CAUTION: CONTRACTOR NOTE

THE LOCATION OF EXISTING UNDERGROUND AND OVERHEAD UTILITIES ARE APPROXIMATE LOCATIONS ONLY. THE CONTRACTOR SHALL CONTACT UTILITY COMPANIES PRIOR TO CONSTRUCTION. CONTRACTOR SHALL DETERMINE, AND FIELD VERIFY EXISTING UTILITY LOCATIONS AND DEPTHS PRIOR TO BEGINNING CONSTRUCTION AND SHALL BE FULLY RESPONSIBLE FOR ANY AND ALL DAMAGES WHICH MIGHT OCCUR.

CONTRACTOR SHALL CONSIDER PROPOSED UTILITY IMPROVEMENTS AND PROVIDE ADEQUATE HORIZONTAL AND VERTICAL CLEARANCE DURING INSTALLATION OF ALL UTILITY INFRASTRUCTURE.

811 Know what's below. Call before you dig.

NO	REVISION	BY	DATE

BGE JOB NO. XXXX-XX
FILE
DATE 02/21/2025
DESIGNED XXX
DRAWN XXX
REVISED XXX
CHECKED XXX

SHELL ROAD UTILITY RELOCATIONS

WL-D RELOCATION

CITY OF GEORGETOWN

BGE, INC.
101 WEST LOUIS HENNA BLVD., STE 400
AUSTIN, TX 78728
TBPE Registration No. F-1046
TEL. 512-879-0400 www.bgeinc.com

STATE OF TEXAS
BRITTANY LYNN FAIRBURN
132905
LICENSED PROFESSIONAL ENGINEER
Brittany Lynn Fairburn
02/21/2025

SHEET
359

FILE LOCATION: G:\TXC\PROJECTS\CITY_GEORGETOWN\10767-00 SHELL ROAD\03_CADD\01_SHTS_PW\WL RELOCATIONS\10767-00-RELO-WL-D.DWG DATE SAVED: 2/17/2025

DGN SUBMITTAL

811 Know what's below. Call before you dig.

CAUTION: CONTRACTOR NOTE

THE LOCATION OF EXISTING UNDERGROUND AND OVERHEAD UTILITIES ARE APPROXIMATE LOCATIONS ONLY. THE CONTRACTOR SHALL CONTACT UTILITY COMPANIES PRIOR TO CONSTRUCTION. CONTRACTOR SHALL DETERMINE, AND FIELD VERIFY EXISTING UTILITY LOCATIONS AND DEPTHS PRIOR TO BEGINNING CONSTRUCTION AND SHALL BE FULLY RESPONSIBLE FOR ANY AND ALL DAMAGES WHICH MIGHT OCCUR.

CONTRACTOR SHALL CONSIDER PROPOSED UTILITY IMPROVEMENTS AND PROVIDE ADEQUATE HORIZONTAL AND VERTICAL CLEARANCE DURING INSTALLATION OF ALL UTILITY INFRASTRUCTURE.

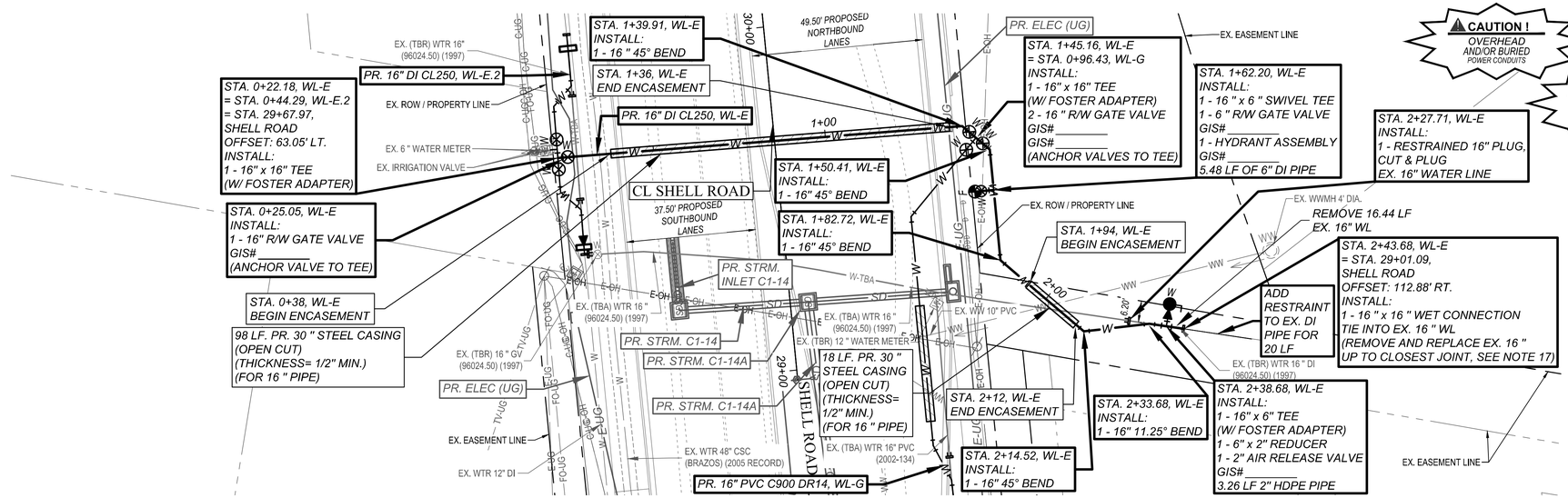

NOTE: IF SHEET IS LESS THAN (22"x34") IT IS A REDUCED PRINT, SCALE REDUCED ACCORDINGLY

WATER LINE RELOCATION NOTES:

1. *EXISTING WATER PIPE TO BE ABANDONED IN PLACE BY CUTTING AND PLUGGING THE EXISTING LINE, AS NOTED, SERVICE MUST BE MAINTAINED AT ALL TIMES.*
2. *CONTRACTOR MUST MAINTAIN SERVICE AND DRIVEWAY ACCESS AT ALL TIMES.*
3. *ALL PIPES, VALVES, AND FITTINGS INSTALLED IN RIGHT-OF-WAY SHALL BE RESTRAINED AND/OR THRUST BLOCKED PER PLANS.*
4. *CONTRACTOR TO FIELD VERIFY TIE-IN ELEVATIONS.*
5. *CONTRACTOR IS RESPONSIBLE FOR ALL TRANSITION FITTINGS TO CONNECT DISSIMILAR PIPE. FITTING REQUIRED FOR TRANSITIONS ARE SUBSIDIARY TO ITEM 510, PIPE.*
6. *CONTRACTOR TO EXPOSE, SUPPORT, AND PROTECT EXISTING UTILITIES PRIOR TO THE PROPOSED TIE-INS.*
7. *CONTRACTOR IS ADVISED OVERHEAD ELECTRIC POLES INCLUDE MULTIPLE COMMUNICATION LINES.*
8. *UTILITIES SHOWN IN THE PROFILE AS APPROXIMATE DEPTH ARE TO BE VERIFIED BY THE CONTRACTOR. THE DEPTH INDICATED IN THE PROFILE REPRESENTS TYPICAL DEPTHS FOR THE TYPE OF UTILITY SHOWN.*
9. *CONTRACTOR TO PROTECT, SUPPORT AND MAINTAIN EXISTING UTILITIES DURING CONSTRUCTION. DAMAGED UTILITIES SHALL BE REPAIRED AND OR REPLACED AT THE CONTRACTOR'S EXPENSE IMMEDIATELY.*
10. *CONTRACTOR TO COORDINATE WITH OVERHEAD ELECTRIC POLE OWNER TO TEMPORARILY SUPPORT EXISTING OVERHEAD ELECTRIC POLE. PAYMENT IS SUBSIDIARY TO INSTALLATION OF THE PROPOSED WATER LINE.*
11. *WATER METER INSTALLATIONS ARE COMPLETE IN PLACE INCLUDING ALL PIPE AND APPURTENANCES REQUIRED PER CITY OF GEORGETOWN DETAILS. METER RELOCATIONS INCLUDE THE REMOVAL AND DISPOSAL OF THE EXISTING METER.*
12. *CONTRACTOR TO RELOCATE AND RECONNECT ALL IRRIGATION LINES.*
13. *ALL ENCASED WATERLINE JOINTS TO BE RESTRAINED.*
14. *CONTRACTOR TO CONTACT CITY OF GEORGETOWN TO GAIN APPROVAL PRIOR TO ALL CONNECTIONS AND VALVE SHUT OFFS PER SPECIFICATION CIP12.*
15. *ALL EXISTING FIRE HYDRANTS NOTED AS TO BE REMOVED SHALL BE SALVAGED AND RETURNED TO THE CITY.*
16. *FITTINGS SHALL BE DUCTILE IRON PER CITY OF GEORGETOWN SPECIFICATIONS. CONTRACTOR TO PROVIDE ANY NECESSARY TRANSITION FITTINGS FOR CONNECTING PVC TO DI PER SPECIFICATIONS.*
17. *IF EXISTING PIPE JOINT AT CONNECTION IS LESS THAN 10 LF FROM CONNECTION POINT, CONTRACTOR TO REPLACE 10 LF MIN.*
18. *CONTRACTOR TO CENTER WATERLINE PIPE SEGMENT AT WASTEWATER CROSSING. IF EXISTING WASTEWATER LINE SHOWS SIGNS OF LEAKING IN FIELD, CONTRACTOR TO REPLACE MINIMUM 18 LF OF 150 PSI WASTEWATER PIPE AT CROSSING.*
19. *PROPOSED ELEC (UG) SHOWN ON THESE SHEETS FOR REFERENCE ONLY. SEE ILLUMINATION LAYOUT FOR DETAILS*

WL-E PROFILE
1" = 20' HORZ. - 1" = 4' VERT.

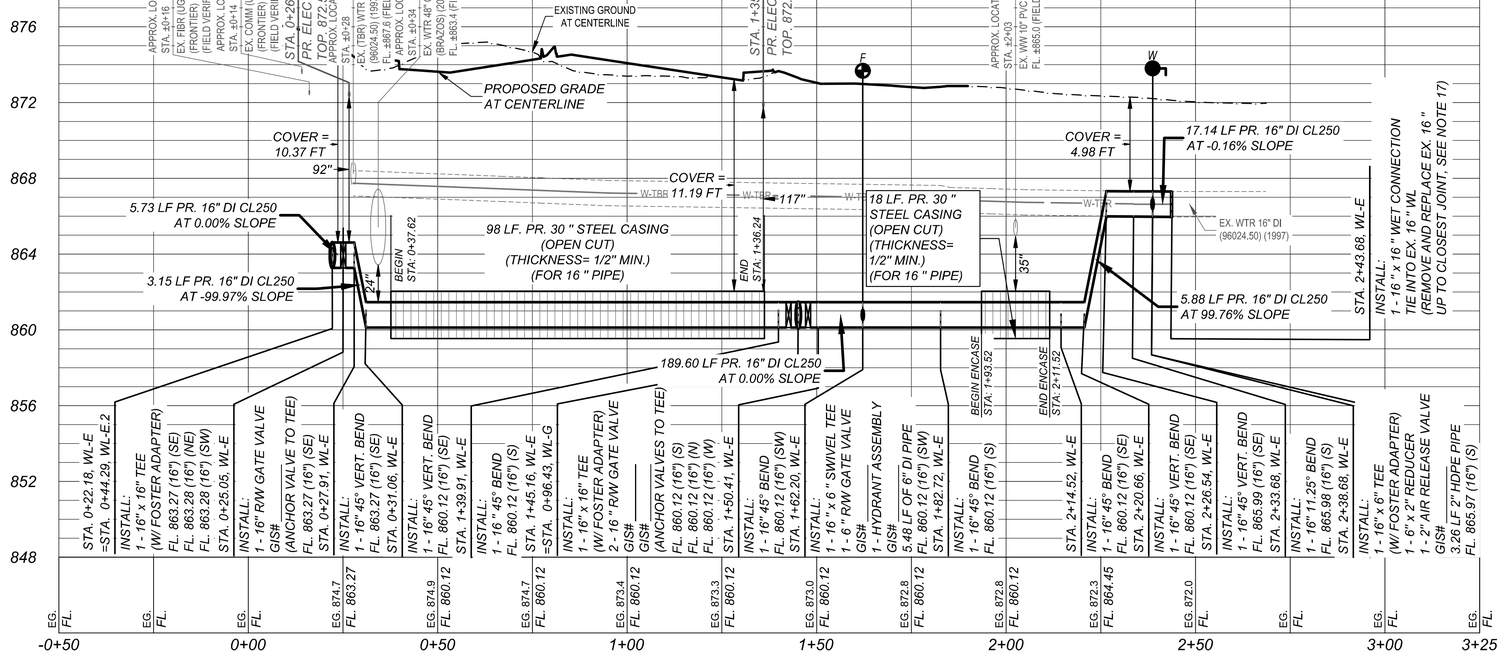



NO.	REVISION	BY	DATE

BGE JOB NO. XXXX-XX
FILE
DATE 02/21/2025
DESIGNED XXX
DRAWN XXX
REVISED XXX
CHECKED XXX

SHELL ROAD UTILITY RELOCATIONS

WL-E RELOCATION

CITY OF GEORGETOWN

BGE
BGE, INC.
101 WEST LOUIS HENNA BLVD., STE 400
AUSTIN, TX 78728
TBPE Registration No. F-1046
TEL: 512-879-0400 www.bgeinc.com

STATE OF TEXAS
BRITTANY LYNN FAIRBURN
132905
LICENSED PROFESSIONAL ENGINEER
02/21/2025

SHEET
360

100% SUBMITTAL

FILE LOCATION: G:\TXC\PROJECTS\CITY_GEORGETOWN\10767-00 SHELL ROAD\03_CADD\01_SHTS_PW\WL RELOCATIONS\10767-00-RELO-WL-E.DWG DATE SAVED: 2/19/2025

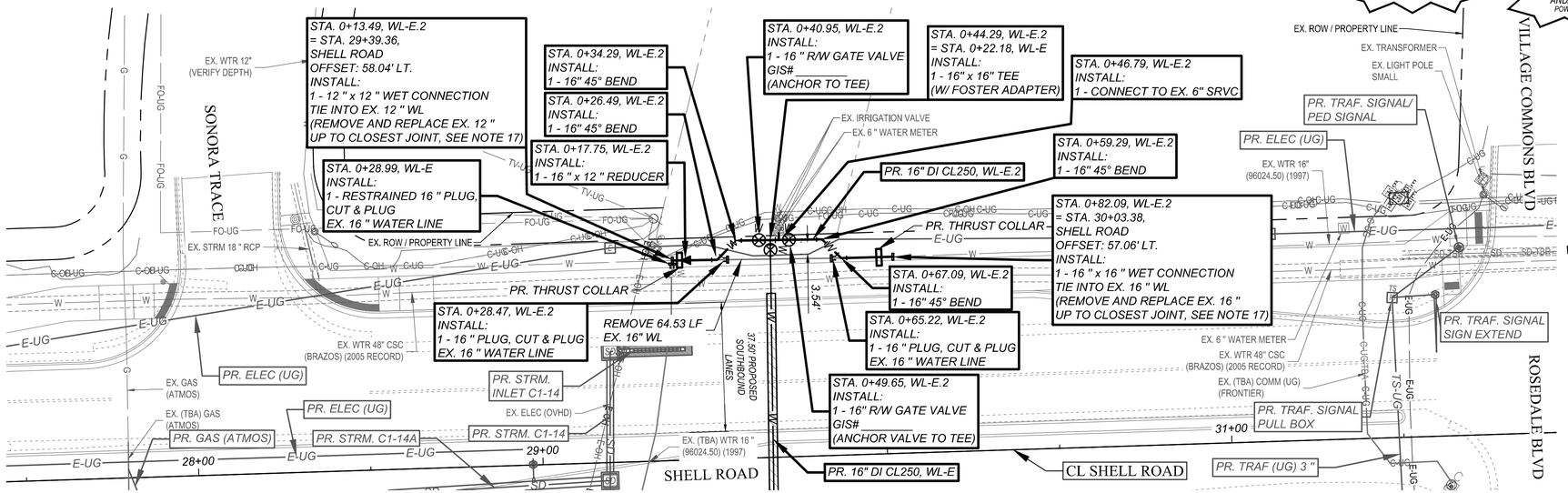

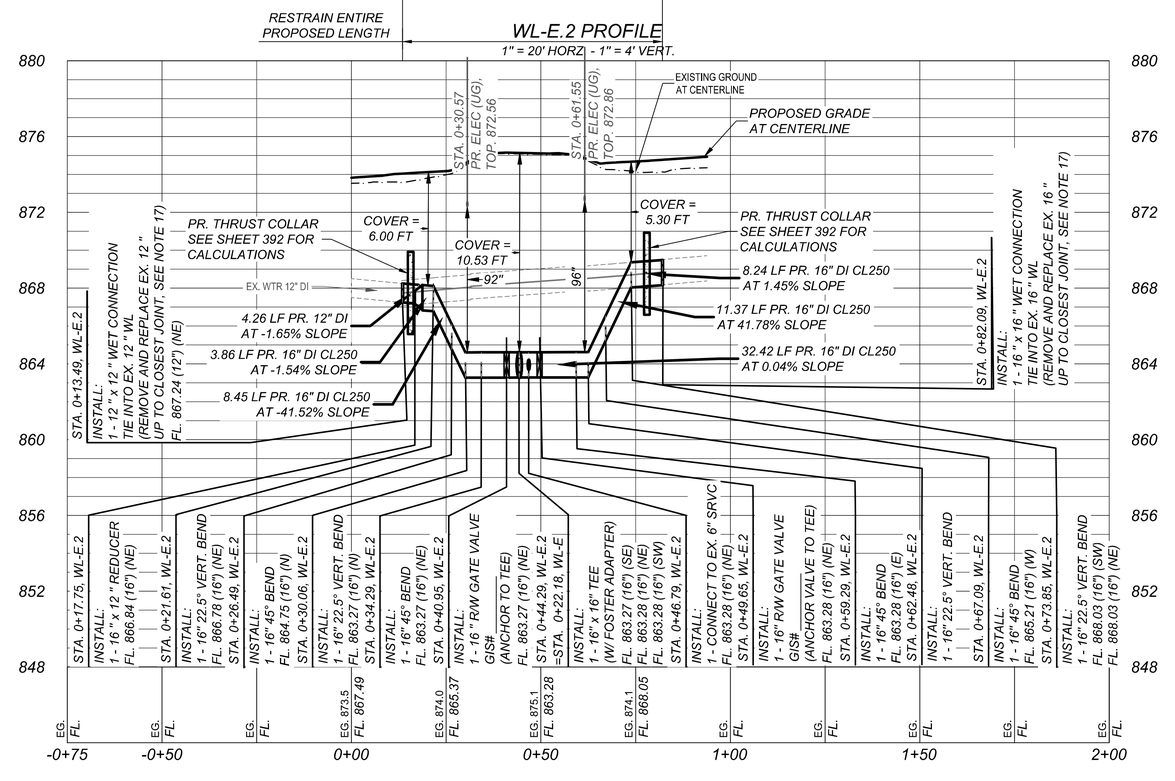

CAUTION ! BURIED GAS LINES

CAUTION ! OVERHEAD AND/OR BURIED POWER CONDUITS

811 Know what's below. Call before you dig.

CAUTION: CONTRACTOR NOTE

THE LOCATION OF EXISTING UNDERGROUND AND OVERHEAD UTILITIES ARE APPROXIMATE LOCATIONS ONLY. THE CONTRACTOR SHALL CONTACT UTILITY COMPANIES PRIOR TO CONSTRUCTION. CONTRACTOR SHALL DETERMINE, AND FIELD VERIFY EXISTING UTILITY LOCATIONS AND DEPTHS PRIOR TO BEGINNING CONSTRUCTION AND SHALL BE FULLY RESPONSIBLE FOR ANY AND ALL DAMAGES WHICH MIGHT OCCUR.

CONTRACTOR SHALL CONSIDER PROPOSED UTILITY IMPROVEMENTS AND PROVIDE ADEQUATE HORIZONTAL AND VERTICAL CLEARANCE DURING INSTALLATION OF ALL UTILITY INFRASTRUCTURE.

0 10' 20' 40'

SCALE: 1" = 20'

NOTE: IF SHEET IS LESS THAN (22"x34") IT IS A REDUCED PRINT, SCALE REDUCED ACCORDINGLY

WATER LINE RELOCATION NOTES:

1. *EXISTING WATER PIPE TO BE ABANDONED IN PLACE BY CUTTING AND PLUGGING THE EXISTING LINE, AS NOTED, SERVICE MUST BE MAINTAINED AT ALL TIMES.*
2. *CONTRACTOR MUST MAINTAIN SERVICE AND DRIVEWAY ACCESS AT ALL TIMES.*
3. *ALL PIPES, VALVES, AND FITTINGS INSTALLED IN RIGHT-OF-WAY SHALL BE RESTRAINED AND/OR THRUST BLOCKED PER PLANS.*
4. *CONTRACTOR TO FIELD VERIFY TIE-IN ELEVATIONS.*
5. *CONTRACTOR IS RESPONSIBLE FOR ALL TRANSITION FITTINGS TO CONNECT DISSIMILAR PIPE. FITTING REQUIRED FOR TRANSITIONS ARE SUBSIDIARY TO ITEM 510, PIPE.*
6. *CONTRACTOR TO EXPOSE, SUPPORT, AND PROTECT EXISTING UTILITIES PRIOR TO THE PROPOSED TIE-INS.*
7. *CONTRACTOR IS ADVISED OVERHEAD ELECTRIC POLES INCLUDE MULTIPLE COMMUNICATION LINES.*
8. *UTILITIES SHOWN IN THE PROFILE AS APPROXIMATE DEPTH ARE TO BE VERIFIED BY THE CONTRACTOR. THE DEPTH INDICATED IN THE PROFILE REPRESENTS TYPICAL DEPTHS FOR THE TYPE OF UTILITY SHOWN.*
9. *CONTRACTOR TO PROTECT, SUPPORT AND MAINTAIN EXISTING UTILITIES DURING CONSTRUCTION. DAMAGED UTILITIES SHALL BE REPAIRED AND OR REPLACED AT THE CONTRACTOR'S EXPENSE IMMEDIATELY.*
10. *CONTRACTOR TO COORDINATE WITH OVERHEAD ELECTRIC POLE OWNER TO TEMPORARILY SUPPORT EXISTING OVERHEAD ELECTRIC POLE. PAYMENT IS SUBSIDIARY TO INSTALLATION OF THE PROPOSED WATER LINE.*
11. *WATER METER INSTALLATIONS ARE COMPLETE IN PLACE INCLUDING ALL PIPE AND APPURTENANCES REQUIRED PER CITY OF GEORGETOWN DETAILS. METER RELOCATIONS INCLUDE THE REMOVAL AND DISPOSAL OF THE EXISTING METER.*
12. *CONTRACTOR TO RELOCATE AND RECONNECT ALL IRRIGATION LINES.*
13. *ALL ENCASED WATERLINE JOINTS TO BE RESTRAINED.*
14. *CONTRACTOR TO CONTACT CITY OF GEORGETOWN TO GAIN APPROVAL PRIOR TO ALL CONNECTIONS AND VALVE SHUT OFFS PER SPECIFICATION CIP12.*
15. *ALL EXISTING FIRE HYDRANTS NOTED AS TO BE REMOVED SHALL BE SALVAGED AND RETURNED TO THE CITY.*
16. *FITTINGS SHALL BE DUCTILE IRON PER CITY OF GEORGETOWN SPECIFICATIONS. CONTRACTOR TO PROVIDE ANY NECESSARY TRANSITION FITTINGS FOR CONNECTING PVC TO DI PER SPECIFICATIONS.*
17. *IF EXISTING PIPE JOINT AT CONNECTION IS LESS THAN 10 LF FROM CONNECTION POINT, CONTRACTOR TO REPLACE 10 LF MIN.*
18. *CONTRACTOR TO CENTER WATERLINE PIPE SEGMENT AT WASTEWATER CROSSING. IF EXISTING WASTEWATER LINE SHOWS SIGNS OF LEAKING IN FIELD, CONTRACTOR TO REPLACE MINIMUM 18 LF OF 150 PSI WASTEWATER PIPE AT CROSSING.*
19. *PROPOSED ELEC (UG) SHOWN ON THESE SHEETS FOR REFERENCE ONLY. SEE ILLUMINATION LAYOUT FOR DETAILS.*

KEY MAP



NO.	REVISION	BY	DATE

BGE JOB NO.	XXXX-XX
FILE	
DATE	02/21/2025
DESIGNED	XXX
DRAWN	XXX
REVISED	XXX
CHECKED	XXX

SHELL ROAD UTILITY RELOCATIONS

WL-E.2 RELOCATION

CITY OF GEORGETOWN

BGE

BGE, INC
101 WEST LOUIS HENNA BLVD., STE 400
AUSTIN, TX 78728
TBPE Registration No. F-1046
TEL: 512-879-0400 www.bgeinc.com

STATE OF TEXAS
BRITTANY LYNN FAIRBURN
132905
LICENSED
PROFESSIONAL ENGINEER
02/21/2025

SHEET
361

100% SUBMITTAL

FILE LOCATION: G:\TXC\PROJECTS\CITY_GEORGETOWN\10767-00 SHELL ROAD\03_CADD\01_SHTS_PWWL RELOCATIONS\10767-00-RELO-WL-E.2.DWG DATE SAVED: 2/18/2025

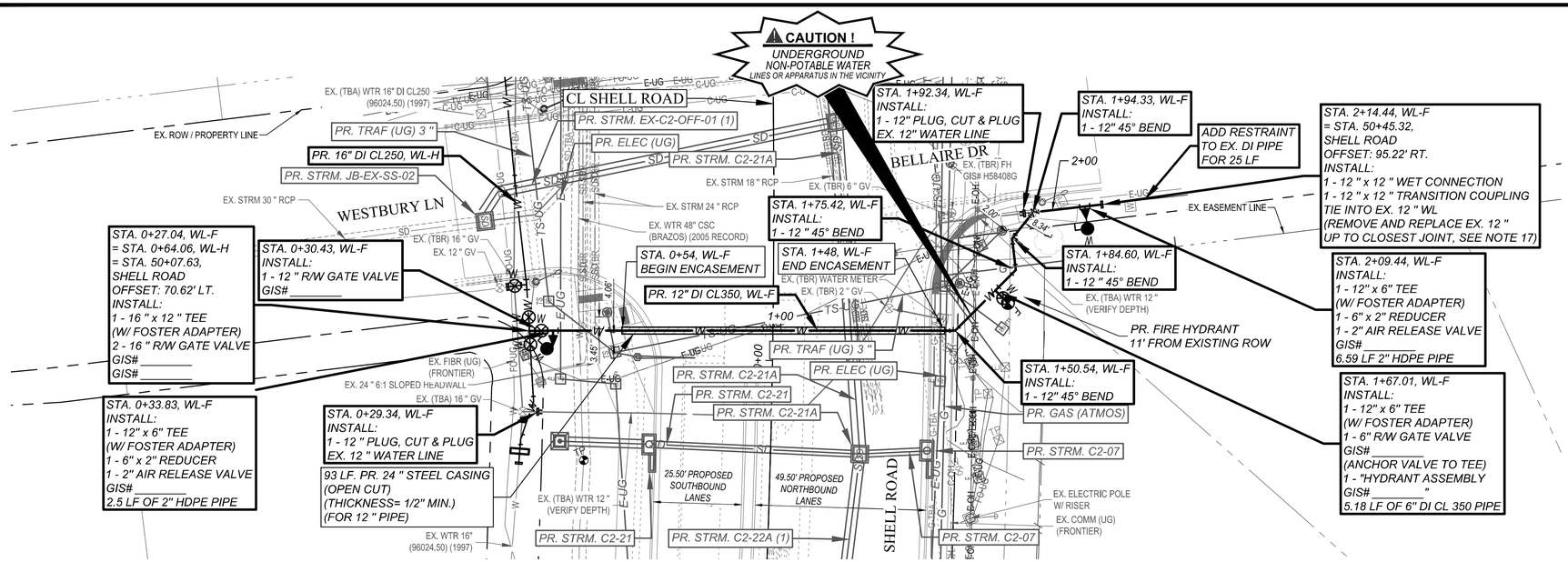

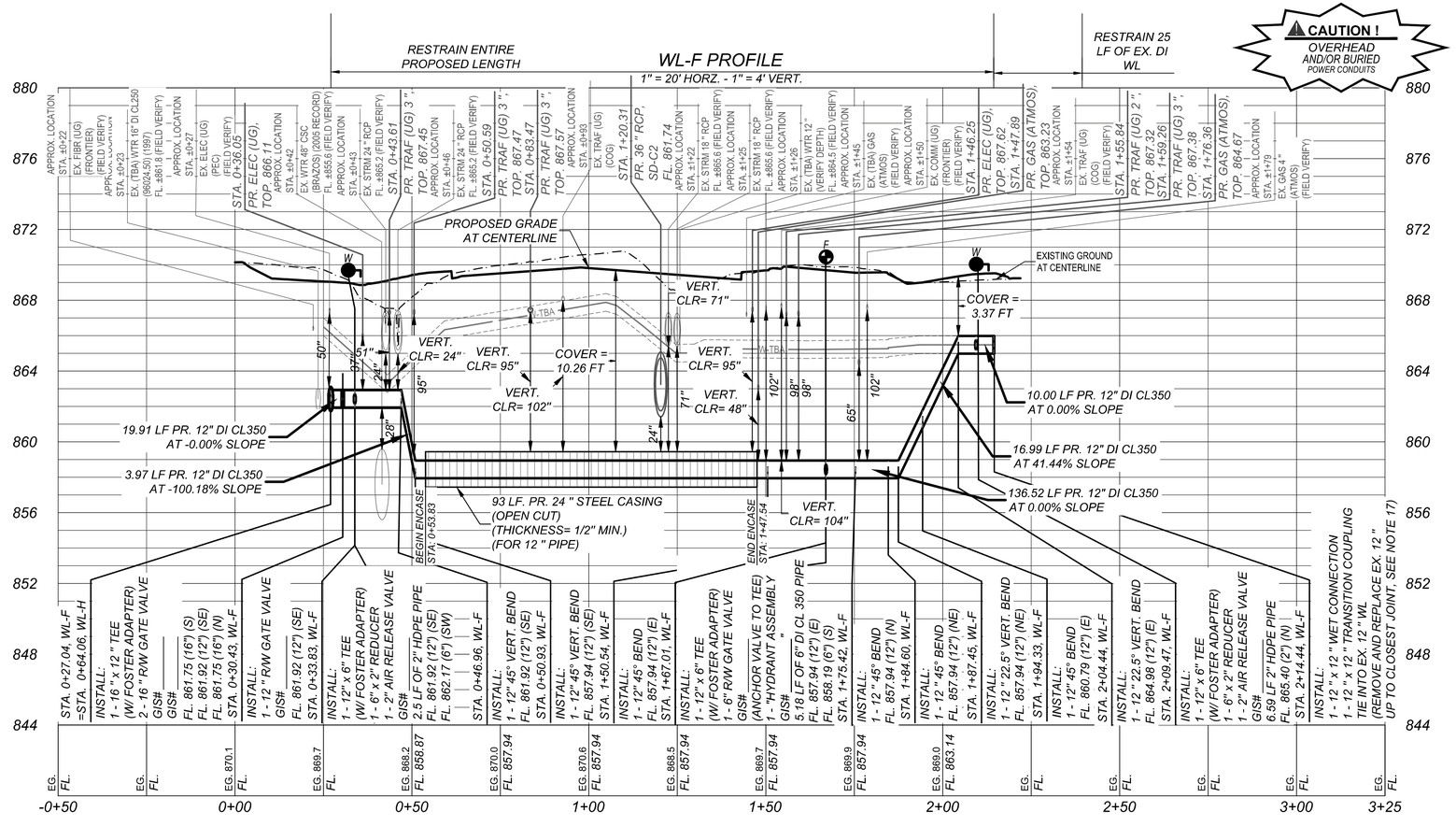

WATER LINE RELOCATION NOTES:

1. EXISTING WATER PIPE TO BE ABANDONED IN PLACE BY CUTTING AND PLUGGING THE EXISTING LINE, AS NOTED, SERVICE MUST BE MAINTAINED AT ALL TIMES.
2. CONTRACTOR MUST MAINTAIN SERVICE AND DRIVEWAY ACCESS AT ALL TIMES.
3. ALL PIPES, VALVES, AND FITTINGS INSTALLED IN RIGHT-OF-WAY SHALL BE RESTRAINED AND/OR THRUST BLOCKED PER PLANS.
4. CONTRACTOR TO FIELD VERIFY TIE-IN ELEVATIONS.
5. CONTRACTOR IS RESPONSIBLE FOR ALL TRANSITION FITTINGS TO CONNECT DISSIMILAR PIPE. FITTING REQUIRED FOR TRANSITIONS ARE SUBSIDIARY TO ITEM 510, PIPE.
6. CONTRACTOR TO EXPOSE, SUPPORT, AND PROTECT EXISTING UTILITIES PRIOR TO THE PROPOSED TIE-INS.
7. CONTRACTOR IS ADVISED OVERHEAD ELECTRIC POLES INCLUDE MULTIPLE COMMUNICATION LINES.
8. UTILITIES SHOWN IN THE PROFILE AS APPROXIMATE DEPTH ARE TO BE VERIFIED BY THE CONTRACTOR. THE DEPTH INDICATED IN THE PROFILE REPRESENTS TYPICAL DEPTHS FOR THE TYPE OF UTILITY SHOWN.
9. CONTRACTOR TO PROTECT, SUPPORT AND MAINTAIN EXISTING UTILITIES DURING CONSTRUCTION. DAMAGED UTILITIES SHALL BE REPAIRED AND OR REPLACED AT THE CONTRACTOR'S EXPENSE IMMEDIATELY.
10. CONTRACTOR TO COORDINATE WITH OVERHEAD ELECTRIC POLE OWNER TO TEMPORARILY SUPPORT EXISTING OVERHEAD ELECTRIC POLE. PAYMENT IS SUBSIDIARY TO INSTALLATION OF THE PROPOSED WATER LINE.
11. WATER METER INSTALLATIONS ARE COMPLETE IN PLACE INCLUDING ALL PIPE AND APPURTENANCES REQUIRED PER CITY OF GEORGETOWN DETAILS. METER RELOCATIONS INCLUDE THE REMOVAL AND DISPOSAL OF THE EXISTING METER.
12. CONTRACTOR TO RELOCATE AND RECONNECT ALL IRRIGATION LINES.
13. ALL ENCASED WATERLINE JOINTS TO BE RESTRAINED.
14. CONTRACTOR TO CONTACT CITY OF GEORGETOWN TO GAIN APPROVAL PRIOR TO ALL CONNECTIONS AND VALVE SHUT OFFS PER SPECIFICATION CIP12.
15. ALL EXISTING FIRE HYDRANTS NOTED AS TO BE REMOVED SHALL BE SALVAGED AND RETURNED TO THE CITY.
16. FITTINGS SHALL BE DUCTILE IRON PER CITY OF GEORGETOWN SPECIFICATIONS. CONTRACTOR TO PROVIDE ANY NECESSARY TRANSITION FITTINGS FOR CONNECTING PVC TO DI PER SPECIFICATIONS.
17. IF EXISTING PIPE JOINT AT CONNECTION IS LESS THAN 10 LF FROM CONNECTION POINT, CONTRACTOR TO REPLACE 10 LF MIN.
18. CONTRACTOR TO CENTER WATERLINE PIPE SEGMENT AT WASTEWATER CROSSING. IF EXISTING WASTEWATER LINE SHOWS SIGNS OF LEAKING IN FIELD, CONTRACTOR TO REPLACE MINIMUM 18 LF OF 150 PSI WASTEWATER PIPE AT CROSSING.
19. PROPOSED ELEC (UG) SHOWN ON THESE SHEETS FOR REFERENCE ONLY. SEE ILLUMINATION LAYOUT FOR DETAILS.

KEY MAP

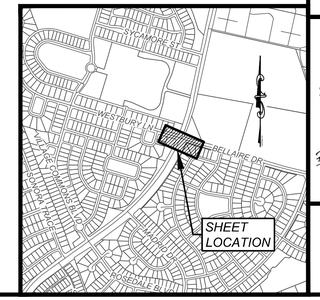

CAUTION: CONTRACTOR NOTE

THE LOCATION OF EXISTING UNDERGROUND AND OVERHEAD UTILITIES ARE APPROXIMATE LOCATIONS ONLY. THE CONTRACTOR SHALL CONTACT UTILITY COMPANIES PRIOR TO CONSTRUCTION. CONTRACTOR SHALL DETERMINE, AND FIELD VERIFY EXISTING UTILITY LOCATIONS AND DEPTHS PRIOR TO BEGINNING CONSTRUCTION AND SHALL BE FULLY RESPONSIBLE FOR ANY AND ALL DAMAGES WHICH MIGHT OCCUR.

CONTRACTOR SHALL CONSIDER PROPOSED UTILITY IMPROVEMENTS AND PROVIDE ADEQUATE HORIZONTAL AND VERTICAL CLEARANCE DURING INSTALLATION OF ALL UTILITY INFRASTRUCTURE.

Know what's below. Call before you dig.

NO.	REVISION	BY	DATE

BGE JOB NO. XXXX-XX
FILE
DATE 02/21/2025
DESIGNED XXX
DRAWN XXX
REVISED XXX
CHECKED XXX

SHELL ROAD UTILITY RELOCATIONS

WL-F RELOCATION

CITY OF GEORGETOWN

BGE, INC.
101 WEST LOUIS HENNA BLVD., STE 400
AUSTIN, TX 78728
TBPE Registration No. F-1046
TEL: 512-879-0400 www.bgeinc.com

STATE OF TEXAS
BRITTANY LYNN FAIRBURN
132905
LICENSED
PROFESSIONAL ENGINEER
Brittany Lynn Fairburn
02/21/2025

SHEET
362

100% SUBMITTAL

FILE LOCATION: G:\TXC\PROJECTS\CITY_GEORGETOWN\10767-00 SHELL ROAD\03_CADD\01_SHTS_PW\WL RELOCATIONS\10767-00-RELO-WL-F.DWG DATE SAVED: 2/20/2025

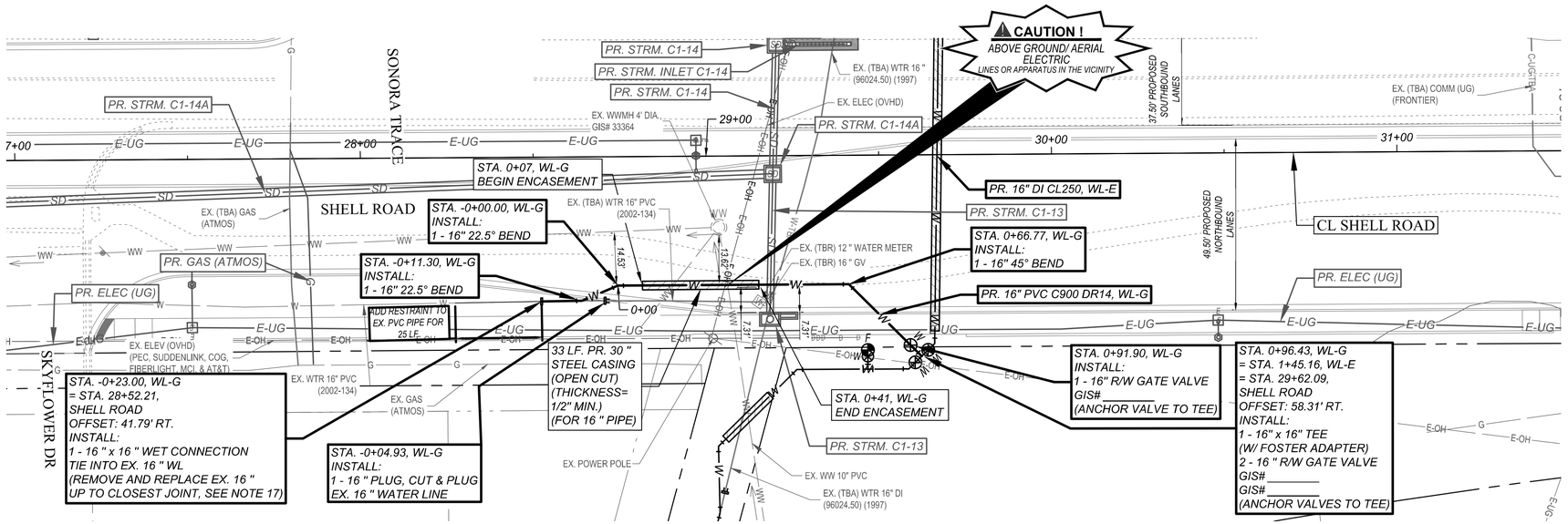

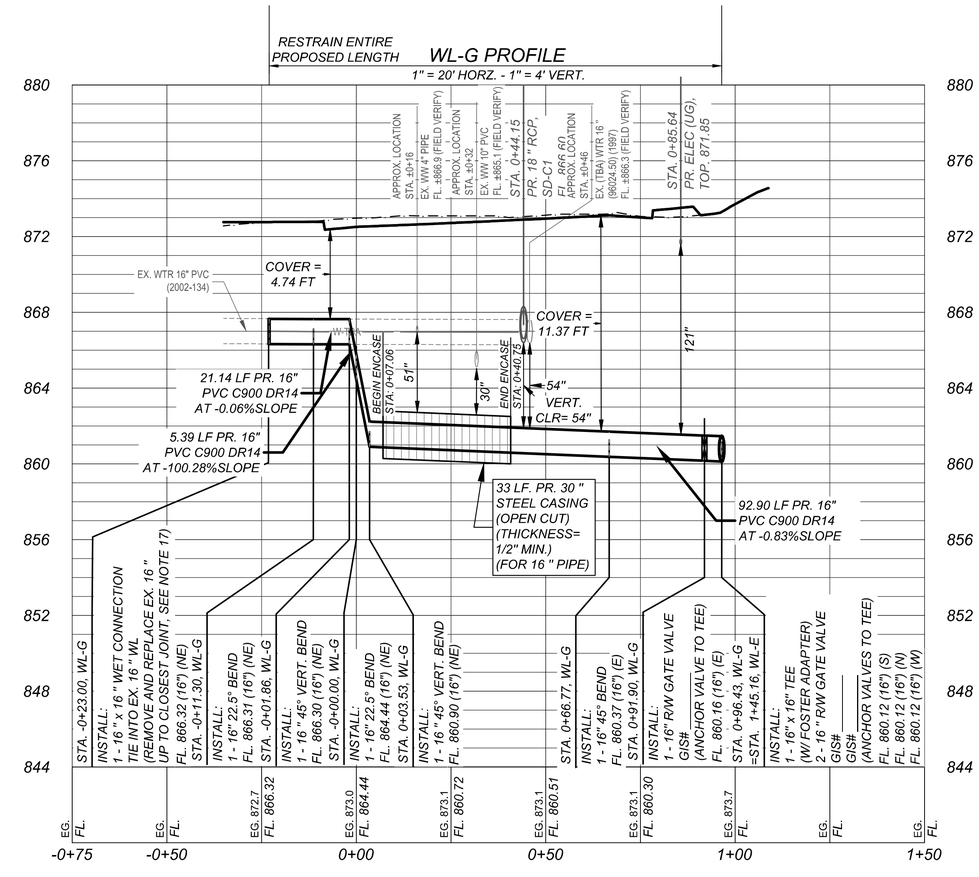

811 Know what's below. Call before you dig.

CAUTION: CONTRACTOR NOTE

THE LOCATION OF EXISTING UNDERGROUND AND OVERHEAD UTILITIES ARE APPROXIMATE LOCATIONS ONLY. THE CONTRACTOR SHALL CONTACT UTILITY COMPANIES PRIOR TO CONSTRUCTION. CONTRACTOR SHALL DETERMINE, AND FIELD VERIFY EXISTING UTILITY LOCATIONS AND DEPTHS PRIOR TO BEGINNING CONSTRUCTION AND SHALL BE FULLY RESPONSIBLE FOR ANY AND ALL DAMAGES WHICH MIGHT OCCUR.

CONTRACTOR SHALL CONSIDER PROPOSED UTILITY IMPROVEMENTS AND PROVIDE ADEQUATE HORIZONTAL AND VERTICAL CLEARANCE DURING INSTALLATION OF ALL UTILITY INFRASTRUCTURE.

0 10' 20' 40'

SCALE: 1" = 20'

NOTE: IF SHEET IS LESS THAN (22"x34") IT IS A REDUCED PRINT, SCALE REDUCED ACCORDINGLY

WATER LINE RELOCATION NOTES:

1. *EXISTING WATER PIPE TO BE ABANDONED IN PLACE BY CUTTING AND PLUGGING THE EXISTING LINE, AS NOTED, SERVICE MUST BE MAINTAINED AT ALL TIMES.*
2. *CONTRACTOR MUST MAINTAIN SERVICE AND DRIVEWAY ACCESS AT ALL TIMES.*
3. *ALL PIPES, VALVES, AND FITTINGS INSTALLED IN RIGHT-OF-WAY SHALL BE RESTRAINED AND/OR THRUST BLOCKED PER PLANS.*
4. *CONTRACTOR TO FIELD VERIFY TIE-IN ELEVATIONS.*
5. *CONTRACTOR IS RESPONSIBLE FOR ALL TRANSITION FITTINGS TO CONNECT DISSIMILAR PIPE. FITTING REQUIRED FOR TRANSITIONS ARE SUBSIDIARY TO ITEM 510, PIPE.*
6. *CONTRACTOR TO EXPOSE, SUPPORT, AND PROTECT EXISTING UTILITIES PRIOR TO THE PROPOSED TIE-INS.*
7. *CONTRACTOR IS ADVISED OVERHEAD ELECTRIC POLES INCLUDE MULTIPLE COMMUNICATION LINES.*
8. *UTILITIES SHOWN IN THE PROFILE AS APPROXIMATE DEPTH ARE TO BE VERIFIED BY THE CONTRACTOR. THE DEPTH INDICATED IN THE PROFILE REPRESENTS TYPICAL DEPTHS FOR THE TYPE OF UTILITY SHOWN.*
9. *CONTRACTOR TO PROTECT, SUPPORT AND MAINTAIN EXISTING UTILITIES DURING CONSTRUCTION. DAMAGED UTILITIES SHALL BE REPAIRED AND OR REPLACED AT THE CONTRACTOR'S EXPENSE IMMEDIATELY.*
10. *CONTRACTOR TO COORDINATE WITH OVERHEAD ELECTRIC POLE OWNER TO TEMPORARILY SUPPORT EXISTING OVERHEAD ELECTRIC POLE. PAYMENT IS SUBSIDIARY TO INSTALLATION OF THE PROPOSED WATER LINE.*
11. *WATER METER INSTALLATIONS ARE COMPLETE IN PLACE INCLUDING ALL PIPE AND APPURTENANCES REQUIRED PER CITY OF GEORGETOWN DETAILS. METER RELOCATIONS INCLUDE THE REMOVAL AND DISPOSAL OF THE EXISTING METER.*
12. *CONTRACTOR TO RELOCATE AND RECONNECT ALL IRRIGATION LINES.*
13. *ALL ENCASED WATERLINE JOINTS TO BE RESTRAINED.*
14. *CONTRACTOR TO CONTACT CITY OF GEORGETOWN TO GAIN APPROVAL PRIOR TO ALL CONNECTIONS AND VALVE SHUT OFFS PER SPECIFICATION CIP12.*
15. *ALL EXISTING FIRE HYDRANTS NOTED AS TO BE REMOVED SHALL BE SALVAGED AND RETURNED TO THE CITY.*
16. *FITTINGS SHALL BE DUCTILE IRON PER CITY OF GEORGETOWN SPECIFICATIONS. CONTRACTOR TO PROVIDE ANY NECESSARY TRANSITION FITTINGS FOR CONNECTING PVC TO DI PER SPECIFICATIONS.*
17. *IF EXISTING PIPE JOINT AT CONNECTION IS LESS THAN 10 LF FROM CONNECTION POINT, CONTRACTOR TO REPLACE 10 LF MIN.*
18. *CONTRACTOR TO CENTER WATERLINE PIPE SEGMENT AT WASTEWATER CROSSING. IF EXISTING WASTEWATER LINE SHOWS SIGNS OF LEAKING IN FIELD, CONTRACTOR TO REPLACE MINIMUM 18 LF OF 150 PSI WASTEWATER PIPE AT CROSSING.*
19. *PROPOSED ELEC (UG) SHOWN ON THESE SHEETS FOR REFERENCE ONLY. SEE ILLUMINATION LAYOUT FOR DETAILS.*

KEY MAP



NO.	REVISION	BY	DATE

BGE JOB NO. XXXX-XX
FILE
DATE 02/21/2025
DESIGNED XXX
DRAWN XXX
REVISED XXX
CHECKED XXX

SHELL ROAD UTILITY RELOCATIONS

WL-G RELOCATION

CITY OF GEORGETOWN

BGE
BGE, INC.
101 WEST LOUIS HENNA BLVD., STE 400
AUSTIN, TX 78728
TBPE Registration No. F-1046
TEL: 512-879-0400 www.bgeinc.com

STATE OF TEXAS
BRITTANY LYNN FAIRBURN
132905
LICENSED PROFESSIONAL ENGINEER
Brittany Lynn Fairburn
02/21/2025

SHEET
363

100% SUBMITTAL

FILE LOCATION: G:\TX\CIP\PROJECTS\CITY_GEORGETOWN\10767-00 SHELL ROAD\03_CADD\01_SHTS_PW\WL RELOCATIONS\10767-00-RELO-WL-G.DWG DATE SAVED: 2/18/2025

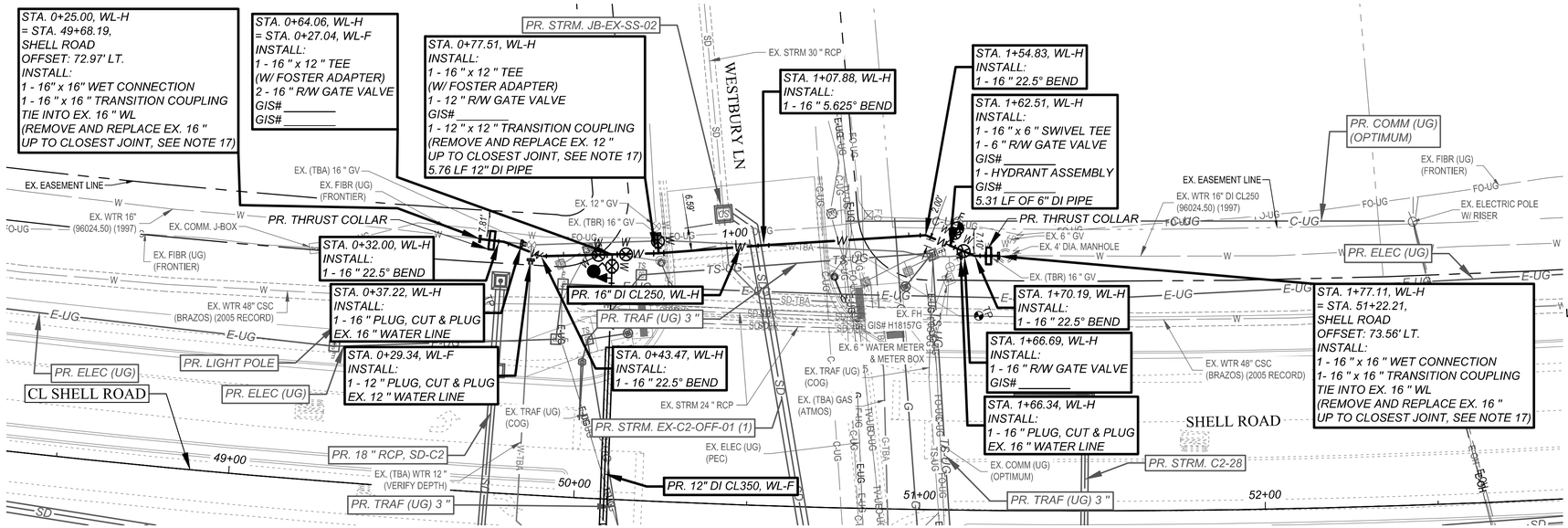

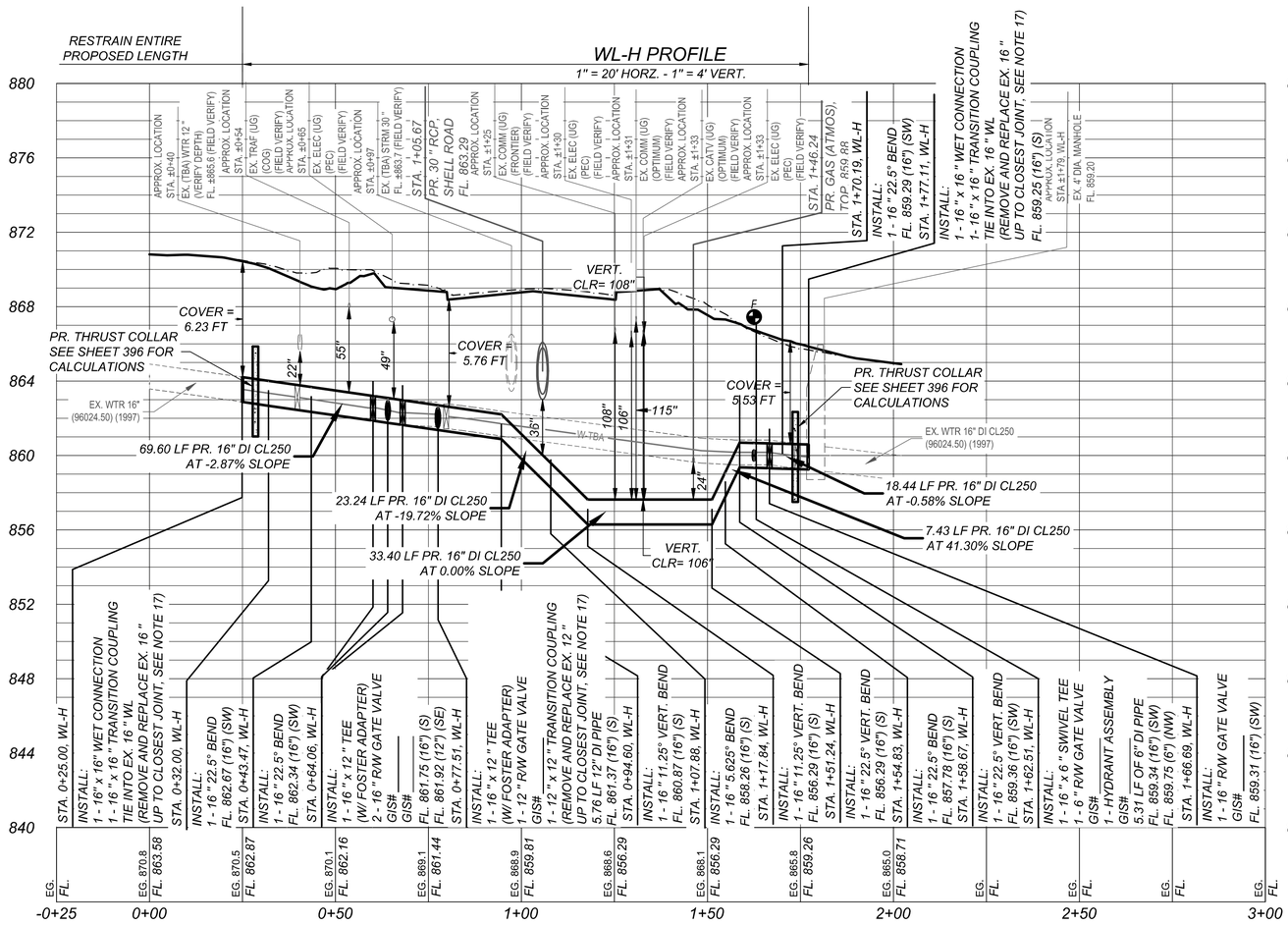

WATER LINE RELOCATION NOTES:

1. EXISTING WATER PIPE TO BE ABANDONED IN PLACE BY CUTTING AND PLUGGING THE EXISTING LINE, AS NOTED, SERVICE MUST BE MAINTAINED AT ALL TIMES.
2. CONTRACTOR MUST MAINTAIN SERVICE AND DRIVEWAY ACCESS AT ALL TIMES.
3. ALL PIPES, VALVES, AND FITTINGS INSTALLED IN RIGHT-OF-WAY SHALL BE RESTRAINED AND/OR THRUST BLOCKED PER PLANS.
4. CONTRACTOR TO FIELD VERIFY TIE-IN ELEVATIONS.
5. CONTRACTOR IS RESPONSIBLE FOR ALL TRANSITION FITTINGS TO CONNECT DISSIMILAR PIPE. FITTING REQUIRED FOR TRANSITIONS ARE SUBSIDIARY TO ITEM 510, PIPE.
6. CONTRACTOR TO EXPOSE, SUPPORT, AND PROTECT EXISTING UTILITIES PRIOR TO THE PROPOSED TIE-INS.
7. CONTRACTOR IS ADVISED OVERHEAD ELECTRIC POLES INCLUDE MULTIPLE COMMUNICATION LINES.
8. UTILITIES SHOWN IN THE PROFILE AS APPROXIMATE DEPTH ARE TO BE VERIFIED BY THE CONTRACTOR. THE DEPTH INDICATED IN THE PROFILE REPRESENTS TYPICAL DEPTHS FOR THE TYPE OF UTILITY SHOWN.
9. CONTRACTOR TO PROTECT, SUPPORT AND MAINTAIN EXISTING UTILITIES DURING CONSTRUCTION. DAMAGED UTILITIES SHALL BE REPAIRED AND OR REPLACED AT THE CONTRACTOR'S EXPENSE IMMEDIATELY.
10. CONTRACTOR TO COORDINATE WITH OVERHEAD ELECTRIC POLE OWNER TO TEMPORARILY SUPPORT EXISTING OVERHEAD ELECTRIC POLE. PAYMENT IS SUBSIDIARY TO INSTALLATION OF THE PROPOSED WATER LINE.
11. WATER METER INSTALLATIONS ARE COMPLETE IN PLACE INCLUDING ALL PIPE AND APPURTENANCES REQUIRED PER CITY OF GEORGETOWN DETAILS. METER RELOCATIONS INCLUDE THE REMOVAL AND DISPOSAL OF THE EXISTING METER.
12. CONTRACTOR TO RELOCATE AND RECONNECT ALL IRRIGATION LINES.
13. ALL ENCASED WATERLINE JOINTS TO BE RESTRAINED.
14. CONTRACTOR TO CONTACT CITY OF GEORGETOWN TO GAIN APPROVAL PRIOR TO ALL CONNECTIONS AND VALVE SHUT OFFS PER SPECIFICATION CIP12.
15. ALL EXISTING FIRE HYDRANTS NOTED AS TO BE REMOVED SHALL BE SALVAGED AND RETURNED TO THE CITY.
16. FITTINGS SHALL BE DUCTILE IRON PER CITY OF GEORGETOWN SPECIFICATIONS. CONTRACTOR TO PROVIDE ANY NECESSARY TRANSITION FITTINGS FOR CONNECTING PVC TO DI PER SPECIFICATIONS.
17. IF EXISTING PIPE JOINT AT CONNECTION IS LESS THAN 10 LF FROM CONNECTION POINT, CONTRACTOR TO REPLACE 10 LF MIN.
18. CONTRACTOR TO CENTER WATERLINE PIPE SEGMENT AT WASTEWATER CROSSING. IF EXISTING WASTEWATER LINE SHOWS SIGNS OF LEAKING IN FIELD, CONTRACTOR TO REPLACE MINIMUM 18 LF OF 150 PSI WASTEWATER PIPE AT CROSSING.
19. PROPOSED ELEC (UG) SHOWN ON THESE SHEETS FOR REFERENCE ONLY. SEE ILLUMINATION LAYOUT FOR DETAILS.

KEY MAP



CAUTION: CONTRACTOR NOTE

THE LOCATION OF EXISTING UNDERGROUND AND OVERHEAD UTILITIES ARE APPROXIMATE LOCATIONS ONLY. THE CONTRACTOR SHALL CONTACT UTILITY COMPANIES PRIOR TO CONSTRUCTION. CONTRACTOR SHALL DETERMINE, AND FIELD VERIFY EXISTING UTILITY LOCATIONS AND DEPTHS PRIOR TO BEGINNING CONSTRUCTION AND SHALL BE FULLY RESPONSIBLE FOR ANY AND ALL DAMAGES WHICH MIGHT OCCUR.

CONTRACTOR SHALL CONSIDER PROPOSED UTILITY IMPROVEMENTS AND PROVIDE ADEQUATE HORIZONTAL AND VERTICAL CLEARANCE DURING INSTALLATION OF ALL UTILITY INFRASTRUCTURE.

Know what's below. Call before you dig.

0 10' 20' 40'

SCALE: 1" = 20'

NOTE: IF SHEET IS LESS THAN (22"x34") IT IS A REDUCED PRINT, SCALE REDUCED ACCORDINGLY

NO.	REVISION	DATE	BY

BGE JOB NO. XXXX-XX
FILE
DATE 02/21/2025
DESIGNED XXX
DRAWN XXX
REVISED XXX
CHECKED XXX

SHELL ROAD UTILITY RELOCATIONS

WL-H RELOCATION

CITY OF GEORGETOWN

BGE
BGE, INC.
101 WEST LOUIS HENNA BLVD., STE 400
AUSTIN, TX 78728
TBPE Registration No. F-1046
TEL: 512-879-0400 www.bgeinc.com

STATE OF TEXAS
BRITTANY LYNN FAIRBURN
132905
LICENSED
PROFESSIONAL ENGINEER
Brittany Lynn Fairburn
02/21/2025

SHEET
364

100% SUBMITTAL

FILE LOCATION: G:\TX\C\PROJECTS\CITY_GEORGETOWN\10767.00 SHELL ROAD\03_CADD\01_SHTS_PWWL RELOCATIONS\10767-00-RELO-WL-H.DWG DATE SAVED: 2/20/2025

CAUTION: CONTRACTOR NOTE
THE LOCATION OF EXISTING UNDERGROUND AND OVERHEAD UTILITIES ARE APPROXIMATE LOCATIONS ONLY. THE CONTRACTOR SHALL CONTACT UTILITY COMPANIES PRIOR TO CONSTRUCTION. CONTRACTOR SHALL DETERMINE, AND FIELD VERIFY EXISTING UTILITY LOCATIONS AND DEPTHS PRIOR TO BEGINNING CONSTRUCTION AND SHALL BE FULLY RESPONSIBLE FOR ANY AND ALL DAMAGES WHICH MIGHT OCCUR.
CONTRACTOR SHALL CONSIDER PROPOSED UTILITY IMPROVEMENTS AND PROVIDE ADEQUATE HORIZONTAL AND VERTICAL CLEARANCE DURING INSTALLATION OF ALL UTILITY INFRASTRUCTURE.
811 Know what's below. Call before you dig.

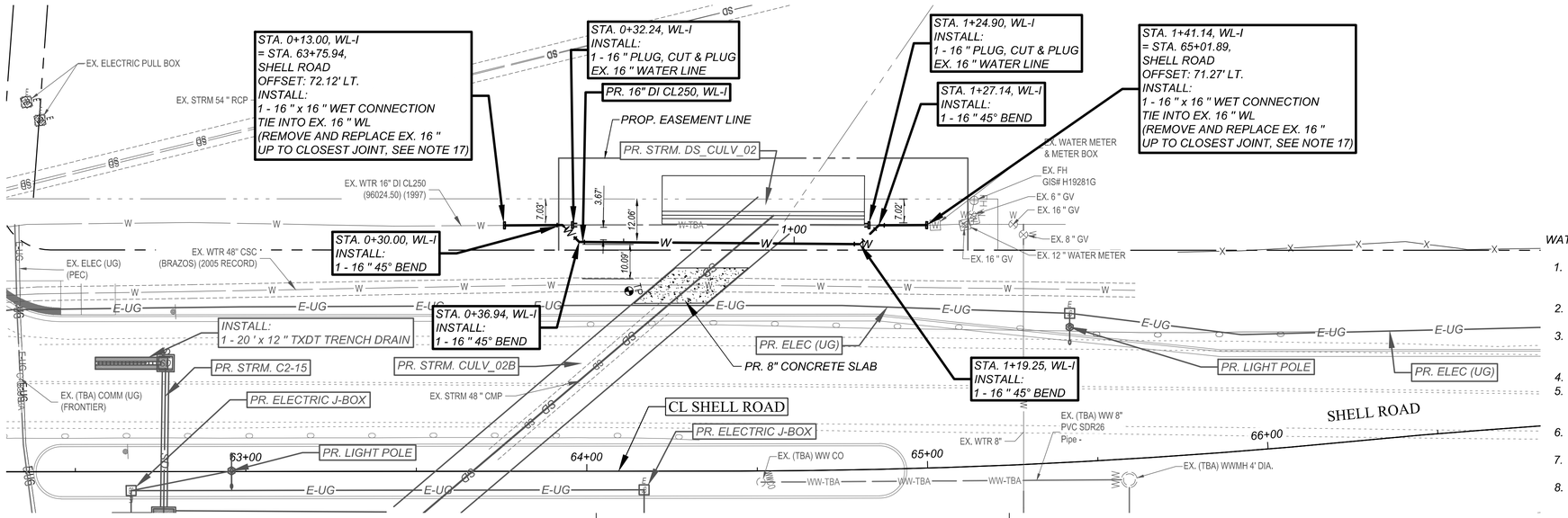

NOTE: IF SHEET IS LESS THAN (22"x34") IT IS A REDUCED PRINT, SCALE REDUCED ACCORDINGLY

WL-I PROFILE

RESTRAIN ENTIRE PROPOSED LENGTH

1" = 20' HORZ. - 1" = 4' VERT.

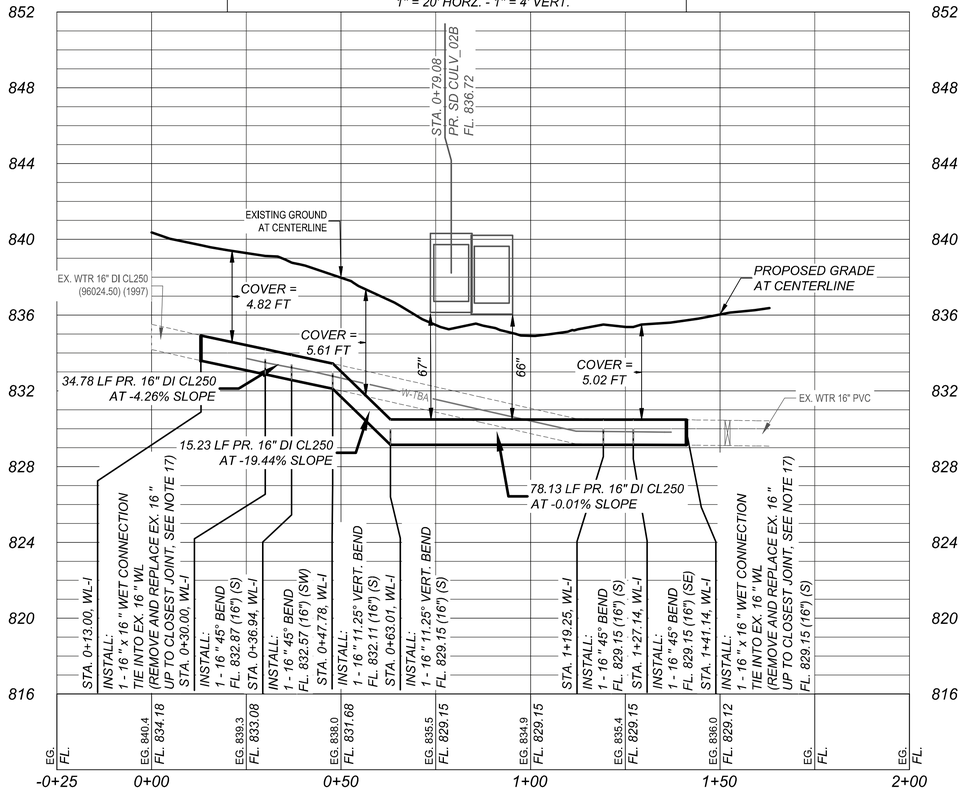

WATER LINE RELOCATION NOTES:

1. EXISTING WATER PIPE TO BE ABANDONED IN PLACE BY CUTTING AND PLUGGING THE EXISTING LINE, AS NOTED, SERVICE MUST BE MAINTAINED AT ALL TIMES.
2. CONTRACTOR MUST MAINTAIN SERVICE AND DRIVEWAY ACCESS AT ALL TIMES.
3. ALL PIPES, VALVES, AND FITTINGS INSTALLED IN RIGHT-OF-WAY SHALL BE RESTRAINED AND/OR THRUST BLOCKED PER PLANS.
4. CONTRACTOR TO FIELD VERIFY TIE-IN ELEVATIONS.
5. CONTRACTOR IS RESPONSIBLE FOR ALL TRANSITION FITTINGS TO CONNECT DISSIMILAR PIPE. FITTING REQUIRED FOR TRANSITIONS ARE SUBSIDIARY TO ITEM 510, PIPE.
6. CONTRACTOR TO EXPOSE, SUPPORT, AND PROTECT EXISTING UTILITIES PRIOR TO THE PROPOSED TIE-INS.
7. CONTRACTOR IS ADVISED OVERHEAD ELECTRIC POLES INCLUDE MULTIPLE COMMUNICATION LINES.
8. UTILITIES SHOWN IN THE PROFILE AS APPROXIMATE DEPTH ARE TO BE VERIFIED BY THE CONTRACTOR. THE DEPTH INDICATED IN THE PROFILE REPRESENTS TYPICAL DEPTHS FOR THE TYPE OF UTILITY SHOWN.
9. CONTRACTOR TO PROTECT, SUPPORT AND MAINTAIN EXISTING UTILITIES DURING CONSTRUCTION. DAMAGED UTILITIES SHALL BE REPAIRED AND OR REPLACED AT THE CONTRACTOR'S EXPENSE IMMEDIATELY.
10. CONTRACTOR TO COORDINATE WITH OVERHEAD ELECTRIC POLE OWNER TO TEMPORARILY SUPPORT EXISTING OVERHEAD ELECTRIC POLE. PAYMENT IS SUBSIDIARY TO INSTALLATION OF THE PROPOSED WATER LINE.
11. WATER METER INSTALLATIONS ARE COMPLETE IN PLACE INCLUDING ALL PIPE AND APPURTENANCES REQUIRED PER CITY OF GEORGETOWN DETAILS. METER RELOCATIONS INCLUDE THE REMOVAL AND DISPOSAL OF THE EXISTING METER.
12. CONTRACTOR TO RELOCATE AND RECONNECT ALL IRRIGATION LINES.
13. ALL ENCASED WATERLINE JOINTS TO BE RESTRAINED.
14. CONTRACTOR TO CONTACT CITY OF GEORGETOWN TO GAIN APPROVAL PRIOR TO ALL CONNECTIONS AND VALVE SHUT OFFS PER SPECIFICATION CIP12.
15. ALL EXISTING FIRE HYDRANTS NOTED AS TO BE REMOVED SHALL BE SALVAGED AND RETURNED TO THE CITY.
16. FITTINGS SHALL BE DUCTILE IRON PER CITY OF GEORGETOWN SPECIFICATIONS. CONTRACTOR TO PROVIDE ANY NECESSARY TRANSITION FITTINGS FOR CONNECTING PVC TO DI PER SPECIFICATIONS.
17. IF EXISTING PIPE JOINT AT CONNECTION IS LESS THAN 10 LF FROM CONNECTION POINT, CONTRACTOR TO REPLACE 10 LF MIN.
18. CONTRACTOR TO CENTER WATERLINE PIPE SEGMENT AT WASTEWATER CROSSING. IF EXISTING WASTEWATER LINE SHOWS SIGNS OF LEAKING IN FIELD, CONTRACTOR TO REPLACE MINIMUM 18 LF OF 150 PSI WASTEWATER PIPE AT CROSSING.
19. PROPOSED ELEC (UG) SHOWN ON THESE SHEETS FOR REFERENCE ONLY. SEE ILLUMINATION LAYOUT FOR DETAILS.

KEY MAP



NO.	REVISION	BY	DATE

BGE JOB NO. XXXX-XX
FILE
DATE 02/21/2025
DESIGNED XXX
DRAWN XXX
REVISED XXX
CHECKED XXX

SHELL ROAD UTILITY RELOCATIONS

WL-I RELOCATION

CITY OF GEORGETOWN

BGE
BGE, INC.
101 WEST LOUIS HENNA BLVD., STE 400
AUSTIN, TX 78728
TBPE Registration No. F-1046
TEL: 512-879-0400 www.bgeinc.com

STATE OF TEXAS
BRITTANY LYNN FAIRBURN
132905
LICENSED
PROFESSIONAL ENGINEER
02/21/2025

SHEET
365

FILE LOCATION: G:\TXC\PROJECTS\CITY_GEORGETOWN\10767-00 SHELL ROAD\03_CADD\01_SHTS_PW\WL RELOCATIONS\10767-00-RELO-WL-I.DWG DATE SAVED: 2/17/2025

100% SUBMITTAL

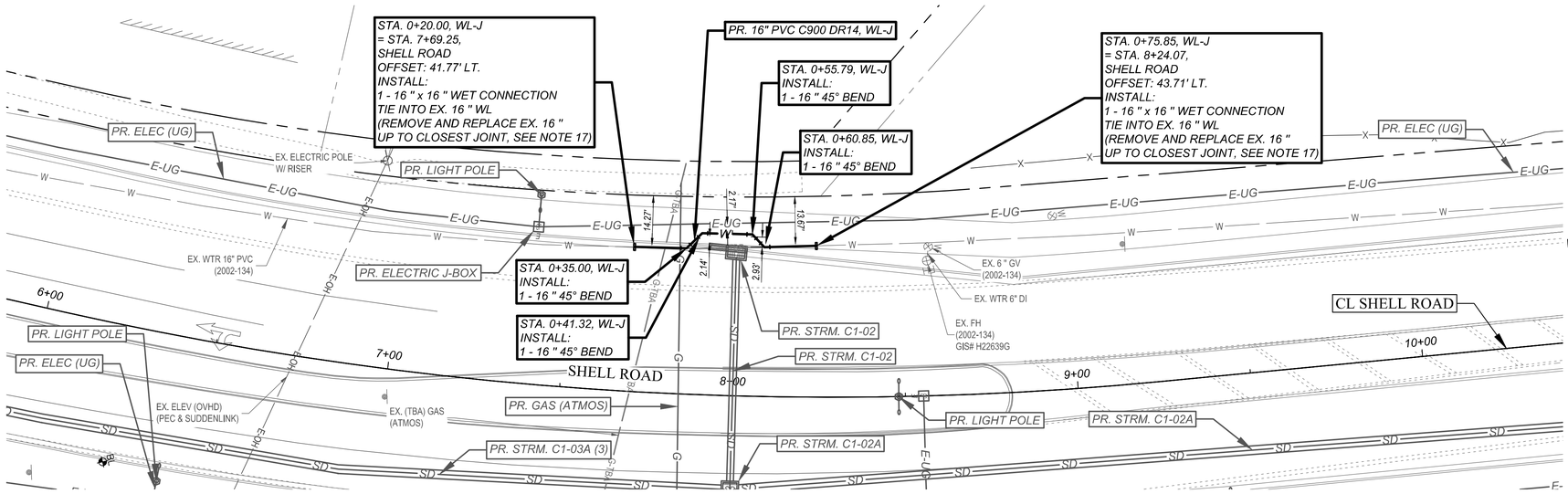

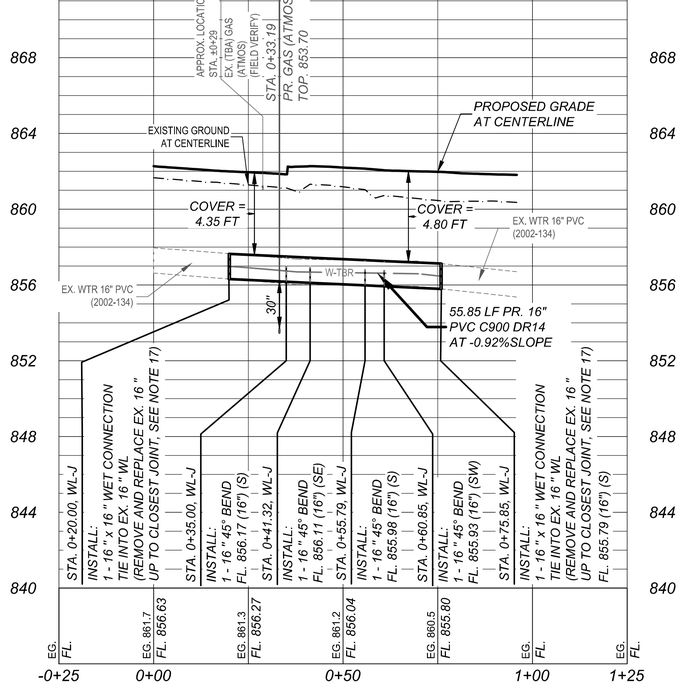

CAUTION: CONTRACTOR NOTE

THE LOCATION OF EXISTING UNDERGROUND AND OVERHEAD UTILITIES ARE APPROXIMATE LOCATIONS ONLY. THE CONTRACTOR SHALL CONTACT UTILITY COMPANIES PRIOR TO CONSTRUCTION. CONTRACTOR SHALL DETERMINE, AND FIELD VERIFY EXISTING UTILITY LOCATIONS AND DEPTHS PRIOR TO BEGINNING CONSTRUCTION AND SHALL BE FULLY RESPONSIBLE FOR ANY AND ALL DAMAGES WHICH MIGHT OCCUR.

CONTRACTOR SHALL CONSIDER PROPOSED UTILITY IMPROVEMENTS AND PROVIDE ADEQUATE HORIZONTAL AND VERTICAL CLEARANCE DURING INSTALLATION OF ALL UTILITY INFRASTRUCTURE.

811 Know what's below. Call before you dig.

NO.	REVISION	BY	DATE

BGE JOB NO.	XXXX-XX
FILE	
DATE	02/21/2025
DESIGNED	XXX
DRAWN	XXX
REVISED	XXX
CHECKED	XXX

0 10' 20' 40'

SCALE: 1" = 20'

NOTE: IF SHEET IS LESS THAN (22"x34") IT IS A REDUCED PRINT, SCALE REDUCED ACCORDINGLY

WATER LINE RELOCATION NOTES:

1. *EXISTING WATER PIPE TO BE ABANDONED IN PLACE BY CUTTING AND PLUGGING THE EXISTING LINE, AS NOTED, SERVICE MUST BE MAINTAINED AT ALL TIMES.*
2. *CONTRACTOR MUST MAINTAIN SERVICE AND DRIVEWAY ACCESS AT ALL TIMES.*
3. *ALL PIPES, VALVES, AND FITTINGS INSTALLED IN RIGHT-OF-WAY SHALL BE RESTRAINED AND/OR THRUST BLOCKED PER PLANS.*
4. *CONTRACTOR TO FIELD VERIFY TIE-IN ELEVATIONS.*
5. *CONTRACTOR IS RESPONSIBLE FOR ALL TRANSITION FITTINGS TO CONNECT DISSIMILAR PIPE. FITTING REQUIRED FOR TRANSITIONS ARE SUBSIDIARY TO ITEM 510, PIPE.*
6. *CONTRACTOR TO EXPOSE, SUPPORT, AND PROTECT EXISTING UTILITIES PRIOR TO THE PROPOSED TIE-INS.*
7. *CONTRACTOR IS ADVISED OVERHEAD ELECTRIC POLES INCLUDE MULTIPLE COMMUNICATION LINES.*
8. *UTILITIES SHOWN IN THE PROFILE AS APPROXIMATE DEPTH ARE TO BE VERIFIED BY THE CONTRACTOR. THE DEPTH INDICATED IN THE PROFILE REPRESENTS TYPICAL DEPTHS FOR THE TYPE OF UTILITY SHOWN.*
9. *CONTRACTOR TO PROTECT, SUPPORT AND MAINTAIN EXISTING UTILITIES DURING CONSTRUCTION. DAMAGED UTILITIES SHALL BE REPAIRED AND OR REPLACED AT THE CONTRACTOR'S EXPENSE IMMEDIATELY.*
10. *CONTRACTOR TO COORDINATE WITH OVERHEAD ELECTRIC POLE OWNER TO TEMPORARILY SUPPORT EXISTING OVERHEAD ELECTRIC POLE. PAYMENT IS SUBSIDIARY TO INSTALLATION OF THE PROPOSED WATER LINE.*
11. *WATER METER INSTALLATIONS ARE COMPLETE IN PLACE INCLUDING ALL PIPE AND APPURTENANCES REQUIRED PER CITY OF GEORGETOWN DETAILS. METER RELOCATIONS INCLUDE THE REMOVAL AND DISPOSAL OF THE EXISTING METER.*
12. *CONTRACTOR TO RELOCATE AND RECONNECT ALL IRRIGATION LINES.*
13. *ALL ENCASED WATERLINE JOINTS TO BE RESTRAINED.*
14. *CONTRACTOR TO CONTACT CITY OF GEORGETOWN TO GAIN APPROVAL PRIOR TO ALL CONNECTIONS AND VALVE SHUT OFFS PER SPECIFICATION CIP12.*
15. *ALL EXISTING FIRE HYDRANTS NOTED AS TO BE REMOVED SHALL BE SALVAGED AND RETURNED TO THE CITY.*
16. *FITTINGS SHALL BE DUCTILE IRON PER CITY OF GEORGETOWN SPECIFICATIONS. CONTRACTOR TO PROVIDE ANY NECESSARY TRANSITION FITTINGS FOR CONNECTING PVC TO DI PER SPECIFICATIONS.*
17. *IF EXISTING PIPE JOINT AT CONNECTION IS LESS THAN 10 LF FROM CONNECTION POINT, CONTRACTOR TO REPLACE 10 LF MIN.*
18. *CONTRACTOR TO CENTER WATERLINE PIPE SEGMENT AT WASTEWATER CROSSING. IF EXISTING WASTEWATER LINE SHOWS SIGNS OF LEAKING IN FIELD, CONTRACTOR TO REPLACE MINIMUM 18 LF OF 150 PSI WASTEWATER PIPE AT CROSSING.*
19. *PROPOSED ELEC (UG) SHOWN ON THESE SHEETS FOR REFERENCE ONLY. SEE ILLUMINATION LAYOUT FOR DETAILS.*

KEY MAP

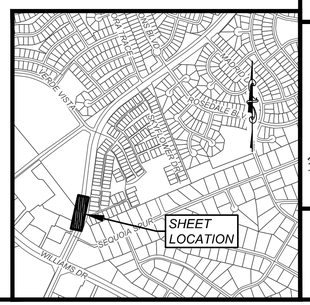

SHELL ROAD UTILITY RELOCATIONS

WL-J RELOCATION

CITY OF GEORGETOWN

BGE

BGE, INC.
101 WEST LOUIS HENNA BLVD., STE 400
AUSTIN, TX 78728
TBPE Registration No. F-1046
TEL. 512-879-0400 www.bgeinc.com

STATE OF TEXAS
BRITTANY LYNN FAIRBURN
132905
LICENSED
PROFESSIONAL ENGINEER
Brittany Lynn Fairburn
02/21/2025

SHEET
366

FILE LOCATION: G:\TXCI\PROJECTS\CITY_GEORGETOWN\10767-00 SHELL ROAD\03_CADD\01_SHTS_PWWL RELOCATIONS\10767-00-RELO-WL-J.DWG DATE SAVED: 2/18/2025

100% SUBMITTAL

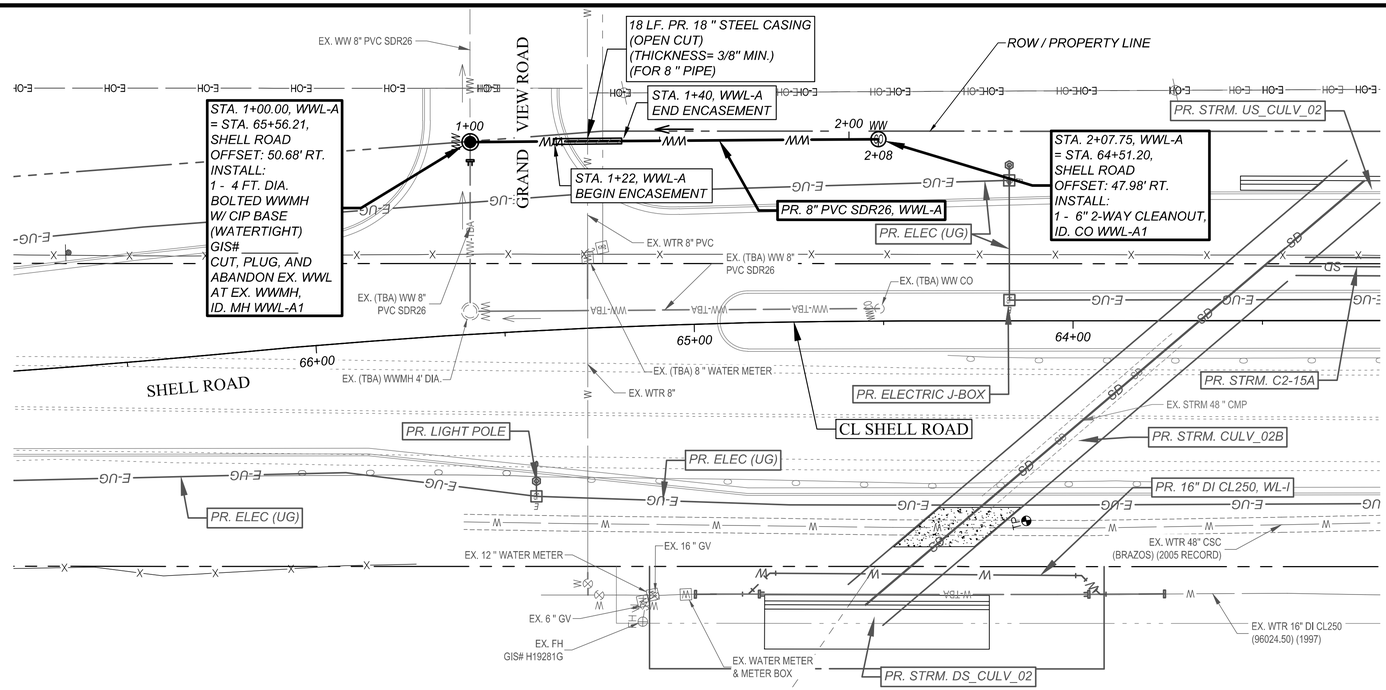

WWL-A PROFILE

1" = 20' HORZ. - 1" = 4' VERT.

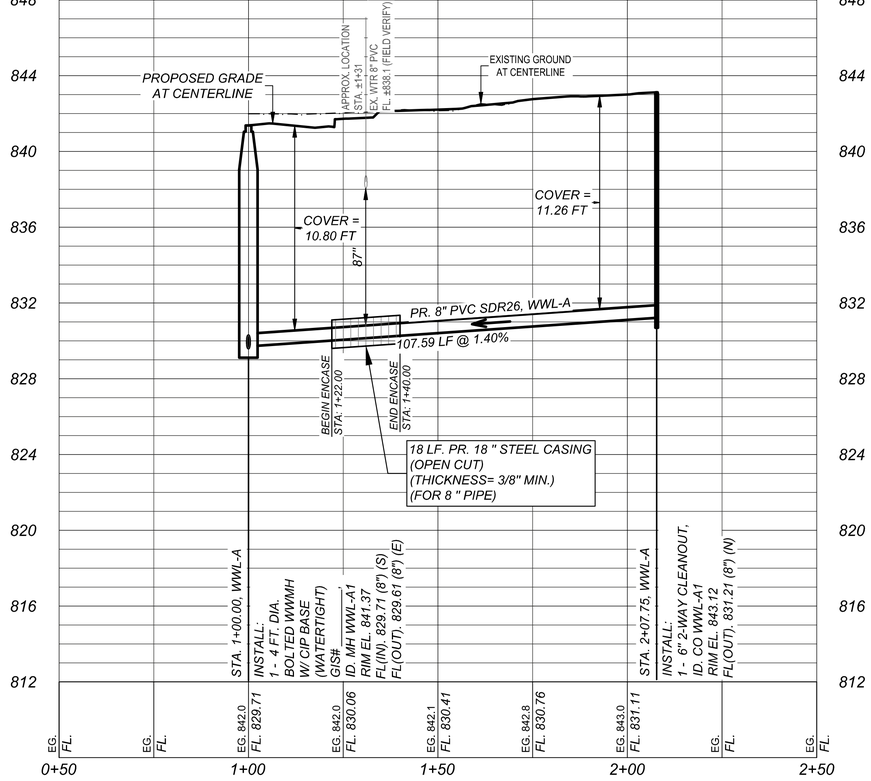

811 Know what's below. Call before you dig.

CAUTION: CONTRACTOR NOTE

THE LOCATION OF EXISTING UNDERGROUND AND OVERHEAD UTILITIES ARE APPROXIMATE LOCATIONS ONLY. THE CONTRACTOR SHALL CONTACT UTILITY COMPANIES PRIOR TO CONSTRUCTION. CONTRACTOR SHALL DETERMINE, AND FIELD VERIFY EXISTING UTILITY LOCATIONS AND DEPTHS PRIOR TO BEGINNING CONSTRUCTION AND SHALL BE FULLY RESPONSIBLE FOR ANY AND ALL DAMAGES WHICH MIGHT OCCUR.

CONTRACTOR SHALL CONSIDER PROPOSED UTILITY IMPROVEMENTS AND PROVIDE ADEQUATE HORIZONTAL AND VERTICAL CLEARANCE DURING INSTALLATION OF ALL UTILITY INFRASTRUCTURE.

NO.	REVISION	BY	DATE

BGE JOB NO. XXXX-XX
FILE
DATE 02/21/2025
DESIGNED XXX
DRAWN XXX
REVISED XXX
CHECKED XXX

0 10' 20' 40'

SCALE: 1" = 20'

NOTE: IF SHEET IS LESS THAN (22"x34") IT IS A REDUCED PRINT, SCALE REDUCED ACCORDINGLY

WASTEWATER LINE RELOCATION NOTES:

1. *EXISTING WASTEWATER PIPE TO BE ABANDONED IN PLACE BY CUTTING AND PLUGGING THE EXISTING LINE, AS NOTED, SERVICE MUST BE MAINTAINED AT ALL TIMES. EXISTING WASTEWATER MANHOLE TO BE ABANDONED PER DETAIL SD-WW23.*
2. *CONTRACTOR MUST MAINTAIN SERVICE AND DRIVEWAY ACCESS AT ALL TIMES*
3. *CONTRACTOR TO FIELD VERIFY TIE-IN ELEVATIONS*
4. *CONTRACTOR IS RESPONSIBLE FOR ALL TRANSITION FITTINGS TO CONNECT DISSIMILAR PIPE. FITTING REQUIRED FOR TRANSITIONS ARE SUBSIDIARY TO ITEM 510, PIPE.*
5. *CONTRACTOR TO EXPOSE, SUPPORT, AND PROTECT EXISTING UTILITIES PRIOR TO THE PROPOSED TIE-INS.*
6. *CONTRACTOR IS ADVISED OVERHEAD ELECTRIC POLES INCLUDE MULTIPLE COMMUNICATION LINES.*
7. *UTILITIES SHOWN IN THE PROFILE AS APPROXIMATE DEPTH ARE TO BE VERIFIED BY THE CONTRACTOR. THE DEPTH INDICATED IN THE PROFILE REPRESENTS TYPICAL DEPTHS FOR THE TYPE OF UTILITY SHOWN.*
8. *CONTRACTOR TO PROTECT, SUPPORT AND MAINTAIN EXISTING UTILITIES DURING CONSTRUCTION. DAMAGED UTILITIES SHALL BE REPAIRED AND OR REPLACED AT THE CONTRACTOR'S EXPENSE IMMEDIATELY.*
9. *CONTRACTOR TO TEMPORARILY SUPPORT EXISTING OVERHEAD ELECTRIC POLE. PAYMENT IS SUBSIDIARY TO INSTALLATION OF THE PROPOSED WASTEWATER LINE.*
10. *CONTRACTOR TO CENTER WATERLINE PIPE SEGMENT AT WASTEWATER CROSSING. IF EXISTING WASTEWATER LINE SHOWS SIGNS OF LEAKING IN FIELD, CONTRACTOR TO REPLACE MINIMUM 18 LF OF 150 PSI WASTEWATER PIPE AT CROSSING.*
11. *PROPOSED ELEC (UG) SHOWN ON THESE SHEETS FOR REFERENCE ONLY. SEE ILLUMINATION LAYOUT FOR DETAILS.*

KEY MAP



SHELL ROAD UTILITY RELOCATIONS

WWL-A RELOCATION

CITY OF GEORGETOWN

BGE, INC.
101 WEST LOUIS HENNA BLVD., STE 400
AUSTIN, TX 78728
TBPE Registration No. F-1046
TEL: 512-879-0400 www.bgeinc.com

STATE OF TEXAS
BRITTANY LYNN FAIRBURN
132905
LICENSED PROFESSIONAL ENGINEER
Brittany Lynn Fairburn
02/21/2025

SHEET
367

100% SUBMITTAL

FILE LOCATION: G:\TX\C\PROJECTS\CITY_GEORGETOWN\10767-00 SHELL ROAD\03_CADD\01_SHTS_PWWL RELOCATIONS\10767-00-RELO-WWL-A.DWG DATE SAVED: 2/19/2025

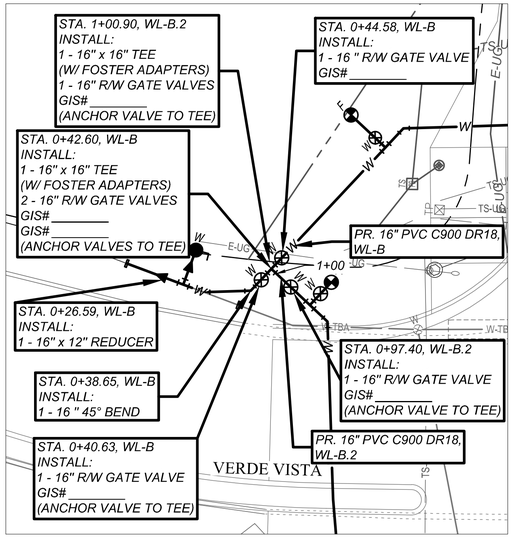

1
368

WL-B STA 0+42.60
WL-B.2 STA 1+00.90

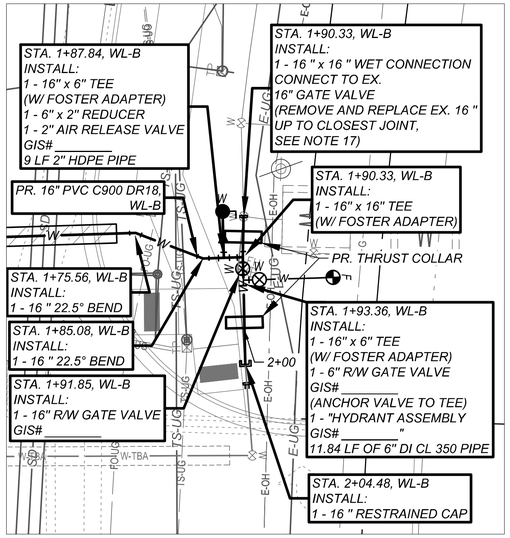

2
368

WL-B STA 1+87.11

CAUTION: CONTRACTOR NOTE

THE LOCATION OF EXISTING UNDERGROUND AND OVERHEAD UTILITIES ARE APPROXIMATE LOCATIONS ONLY. THE CONTRACTOR SHALL CONTACT UTILITY COMPANIES PRIOR TO CONSTRUCTION. CONTRACTOR SHALL DETERMINE, AND FIELD VERIFY EXISTING UTILITY LOCATIONS AND DEPTHS PRIOR TO BEGINNING CONSTRUCTION AND SHALL BE FULLY RESPONSIBLE FOR ANY AND ALL DAMAGES WHICH MIGHT OCCUR.

CONTRACTOR SHALL CONSIDER PROPOSED UTILITY IMPROVEMENTS AND PROVIDE ADEQUATE HORIZONTAL AND VERTICAL CLEARANCE DURING INSTALLATION OF ALL UTILITY INFRASTRUCTURE.

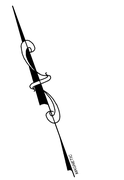

0 5' 10' 20'

SCALE: 1" = 10'

NOTE: IF SHEET IS LESS THAN (22"x34") IT IS A REDUCED PRINT, SCALE REDUCED ACCORDINGLY

NO.	REVISION	BY	DATE

BGE JOB NO. XXXX-XX
FILE
DATE 02/21/2025
DESIGNED XXX
DRAWN XXX
REVISED XXX
CHECKED XXX

SHELL ROAD UTILITY RELOCATIONS

INSET VIEWS

CITY OF GEORGETOWN

BGE

BGE, INC.
101 WEST LOUIS HENNA BLVD., STE 400
AUSTIN, TX 78728
TBPE Registration No. F-1046
TEL: 512-879-0400 www.bgeinc.com

STATE OF TEXAS
BRITTANY LYNN FAIRBURN
132905
LICENSED
PROFESSIONAL ENGINEER

02/21/2025

SHEET
368

KEY MAP

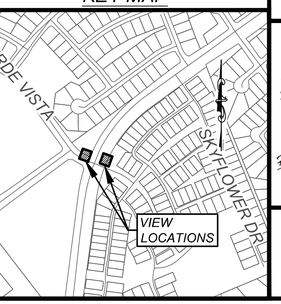

100% SUBMITTAL

FILE LOCATION: G:\TX\C\PROJECTS\CITY_GEORGETOWN\10767-00 SHELL ROAD\03_CADD\01_SHTS_PW\WL RELOCATIONS\10767-00-WL-RELOCATIONS-INSET-VIEWS.DWG DATE SAVED: 2/19/2025

Project Name: Shell Rd

Project Notes:

Built Stronger. Lasts Longer.
EBAA IRON
EBAA IRON SALES, INC.
www.ebaa.com • contact@ebaa.com • 800.433.1716

RESTRAINT LENGTH VALUES

Fitting Type	Pipe Material	Soil Type	Safety Factor	Trench Type	Depth of Bury	Test Pressure	Nominal Size	Bend Angle	Branch Size	Length Along Run	Reduced Size	Lowside Depth	Restraint Length	Restraint Length 2
Horizontal Bend	PVC	GW	1.5	5	9 Ft.	200 PSI	16 In.	45°					7 Ft.	

Site Name: WL-A HB @ 0+78.48

Site Notes:

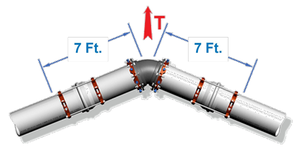

ALL JOINTS WITHIN THE CALCULATED LENGTH MUST BE RESTRAINED
IF YOUR DISTANCE BETWEEN FITTINGS IS LESS THAN OR EQUAL TO THE CALCULATED RESTRAINT LENGTH, RESTRAIN ALL JOINTS BETWEEN THOSE FITTINGS.

Defined Variables

H =	9	Depth of Bury
S_f =	1.5	Safety Factor
P =	200	Internal Pressure
θ =	45	Bend Angle

Pipe Derived Variables

A =	237.79	Cross Sec. Area of Pipe
D =	1.45	Outside Pipe Diameter
W_p =	21.14	Weight of Pipe
W_w =	87.80	Weight of Water in Pipe

Defined Variables

f_c =	0.00	Cohesion Modifier Coefficient
c =	0	Cohesion of Soil
f_Φ =	0.70	Friction Angle Modifier
Φ =	36	Internal Friction Angle of Soil
γ =	110	Soil Density
K_N =	1.00	Trench Compaction Modifier

Calculations for Horizontal Bend

$W_E = \gamma \cdot D \cdot H$ =	1435.500	Normal Force Due to Soil
$W = 2W_E + W_p + W_w$ =	2979.940	Normal Force Acting on Pipeline
$K_p = \tan^2((\pi / 180) \cdot (45 + (\Phi / 2)))$ =	3.852	Rankin Passive Pressure Coeff.
$H_c = H + (D / 2)$ =	9.725	Depth From Surface to Pipe Center
$\sigma_h = \gamma \cdot H_c \cdot K_p + 2c\sqrt{K_p}$ =	4120.677	Horizontal Passive Soil Pressure
$A_p = \pi \cdot (D / 2)$ =	2.278	Area Based on Half of Circumference
$R_S = K_N \cdot \sigma_h \cdot D$ =	5974.982	Bearing Resistance of Pipelines
$F_s = A_p \cdot f_c \cdot c + W \cdot \tan((\pi / 180) \cdot (\theta / 2)) \cdot f_\Phi \cdot \Phi)$ =	1402.253	Frictional Resitance
$L = (S_f \cdot P \cdot A \cdot \tan((\pi / 180) \cdot (\theta / 2))) / (F_s + (R_S / 2))$ =	6.731	Minimum Restrained Length

MEGALUG®

Created by EBAA Iron's Restraint Length Calculator v7.1.3 on February 19, 2025

Project Name: Shell Rd

Project Notes:

Built Stronger. Lasts Longer.
EBAA IRON
EBAA IRON SALES, INC.
www.ebaa.com • contact@ebaa.com • 800.433.1716

RESTRAINT LENGTH VALUES

Fitting Type	Pipe Material	Soil Type	Safety Factor	Trench Type	Depth of Bury	Test Pressure	Nominal Size	Bend Angle	Branch Size	Length Along Run	Reduced Size	Lowside Depth	Restraint Length	Restraint Length 2
Horizontal Bend	PVC	GW	1.5	5	9 Ft.	200 PSI	16 In.	45°					7 Ft.	

Site Name: WL-A HB @ 0+82.67

Site Notes:

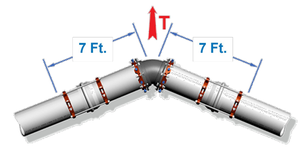

ALL JOINTS WITHIN THE CALCULATED LENGTH MUST BE RESTRAINED
IF YOUR DISTANCE BETWEEN FITTINGS IS LESS THAN OR EQUAL TO THE CALCULATED RESTRAINT LENGTH, RESTRAIN ALL JOINTS BETWEEN THOSE FITTINGS.

Defined Variables

H =	9	Depth of Bury
S_f =	1.5	Safety Factor
P =	200	Internal Pressure
θ =	45	Bend Angle

Pipe Derived Variables

A =	237.79	Cross Sec. Area of Pipe
D =	1.45	Outside Pipe Diameter
W_p =	21.14	Weight of Pipe
W_w =	87.80	Weight of Water in Pipe

Defined Variables

f_c =	0.00	Cohesion Modifier Coefficient
c =	0	Cohesion of Soil
f_Φ =	0.70	Friction Angle Modifier
Φ =	36	Internal Friction Angle of Soil
γ =	110	Soil Density
K_N =	1.00	Trench Compaction Modifier

Calculations for Horizontal Bend

$W_E = \gamma \cdot D \cdot H$ =	1435.500	Normal Force Due to Soil
$W = 2W_E + W_p + W_w$ =	2979.940	Normal Force Acting on Pipeline
$K_p = \tan^2((\pi / 180) \cdot (45 + (\Phi / 2)))$ =	3.852	Rankin Passive Pressure Coeff.
$H_c = H + (D / 2)$ =	9.725	Depth From Surface to Pipe Center
$\sigma_h = \gamma \cdot H_c \cdot K_p + 2c\sqrt{K_p}$ =	4120.677	Horizontal Passive Soil Pressure
$A_p = \pi \cdot (D / 2)$ =	2.278	Area Based on Half of Circumference
$R_S = K_N \cdot \sigma_h \cdot D$ =	5974.982	Bearing Resistance of Pipelines
$F_s = A_p \cdot f_c \cdot c + W \cdot \tan((\pi / 180) \cdot (\theta / 2)) \cdot f_\Phi \cdot \Phi)$ =	1402.253	Frictional Resitance
$L = (S_f \cdot P \cdot A \cdot \tan((\pi / 180) \cdot (\theta / 2))) / (F_s + (R_S / 2))$ =	6.731	Minimum Restrained Length

MEGALUG®

Created by EBAA Iron's Restraint Length Calculator v7.1.3 on February 19, 2025

Project Name: Shell Rd

Project Notes:

Built Stronger. Lasts Longer.
EBAA IRON
EBAA IRON SALES, INC.
www.ebaa.com • contact@ebaa.com • 800.433.1716

RESTRAINT LENGTH VALUES

Fitting Type	Pipe Material	Soil Type	Safety Factor	Trench Type	Depth of Bury	Test Pressure	Nominal Size	Bend Angle	Branch Size	Length Along Run	Reduced Size	Lowside Depth	Restraint Length	Restraint Length 2
Dead End	PVC	GW	1.5	5	9 Ft.	200 PSI	16 In.						51 Ft.	

Site Name: WL-A GV @ 0+86.29

Site Notes:

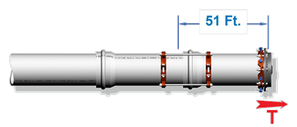

ALL JOINTS WITHIN THE CALCULATED LENGTH MUST BE RESTRAINED
IF YOUR DISTANCE BETWEEN FITTINGS IS LESS THAN OR EQUAL TO THE CALCULATED RESTRAINT LENGTH, RESTRAIN ALL JOINTS BETWEEN THOSE FITTINGS.

Defined Variables

H =	9	Depth of Bury
S_f =	1.5	Safety Factor
P =	200	Internal Pressure

Pipe Derived Variables

A =	237.79	Cross Sec. Area of Pipe
D =	1.45	Outside Pipe Diameter
W_p =	21.14	Weight of Pipe
W_w =	87.80	Weight of Water in Pipe

Defined Variables

f_c =	0.00	Cohesion Modifier Coefficient
c =	0	Cohesion of Soil
f_Φ =	0.70	Friction Angle Modifier
Φ =	36	Internal Friction Angle of Soil
γ =	110	Soil Density

Calculations for Dead End

$W_E = \gamma \cdot D \cdot H$ =	1435.500	Normal Force Due to Soil
$W = 2W_E + W_p + W_w$ =	2979.940	Normal Force Acting on Pipeline
$(A_p)_A = \pi \cdot D$ =	4.555	Area Based on Full Pipe Circumference
$F_{sb} = (A_p)_A \cdot f_c \cdot c + W \cdot \tan((\pi / 180) f_\Phi \cdot \Phi)$ =	1402.253	Frictional Resistance
$L = S_f \cdot P \cdot A / F_{sb}$ =	50.873	Minimum Restrained Length of Dead End

MEGALUG®

Created by EBAA Iron's Restraint Length Calculator v7.1.3 on February 19, 2025

Project Name: Shell Rd

Project Notes:

Built Stronger. Lasts Longer.
EBAA IRON
EBAA IRON SALES, INC.
www.ebaa.com • contact@ebaa.com • 800.433.1716

RESTRAINT LENGTH VALUES

Fitting Type	Pipe Material	Soil Type	Safety Factor	Trench Type	Depth of Bury	Test Pressure	Nominal Size	Bend Angle	Branch Size	Length Along Run	Reduced Size	Lowside Depth	Restraint Length	Restraint Length 2
Tee	PVC	GW	1.5	5	9 Ft.	200 PSI	16 In.		6 In.	4 Ft.			1 Ft.	

Site Name: WL-A Tee @ 0+89.91

Site Notes:

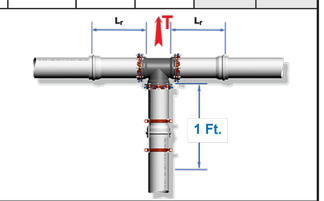

ALL JOINTS WITHIN THE CALCULATED LENGTH MUST BE RESTRAINED
IF YOUR DISTANCE BETWEEN FITTINGS IS LESS THAN OR EQUAL TO THE CALCULATED RESTRAINT LENGTH, RESTRAIN ALL JOINTS BETWEEN THOSE FITTINGS.

Defined Variables

H =	9	Depth of Bury
S_f =	1.5	Safety Factor
P =	200	Internal Pressure

Pipe Derived Variables

A =	237.79	Cross Sec. Area (Main)
A_b =	37.39	Cross Sec. Area (Branch)
D =	1.45	Outside Pipe Diameter
D_b =	0.58	Outside Diameter Branch
W_p =	3.31	Weight of Pipe
W_w =	13.81	Weight of Water in Pipe
L_r =	4	Min. restrained Length either side of Tee

Defined Variables

f_c =	0.00	Cohesion Modifier Coefficient
c =	0	Cohesion of Soil
f_Φ =	0.70	Friction Angle Modifier
Φ =	36	Internal Friction Angle of Soil
γ =	110	Soil Density

Calculations for Tee

$W_E = \gamma \cdot D \cdot H$ =	574.200	Normal Force Due to Soil
$W = 2W_E + W_p + W_w$ =	1165.520	Normal Force Acting on Pipeline
$K_p = \tan^2((\pi / 180) \cdot (45 + (\Phi / 2)))$ =	3.852	Rankin Passive Pressure Coeff.
$H_c = H + (D / 2)$ =	9.725	Depth From Surface to Pipe Center
$\sigma_h = \gamma \cdot H_c \cdot K_p + 2c\sqrt{K_p}$ =	4120.677	Horizontal Passive Soil Pressure
$A_p = \pi \cdot (D / 2)$ =	2.278	Area Based on Half of Circumference
$(A_p)_b = \pi \cdot D_b$ =	1.822	Area Based on Full Branch Circumference
$R_S = K_N \cdot \sigma_h \cdot D$ =	5974.982	Bearing Resistance of Pipelines
$F_{sb} = (A_p)_b \cdot f_c \cdot c + W \cdot \tan((\pi / 180) f_\Phi \cdot \Phi)$ =	548.452	Frictional Resistance
$L_b = S_f(P \cdot A_b - R_s \cdot L_r) / F_{sb}$ =	-44.913	Minimum Restrained Length Branch

MEGALUG®

Created by EBAA Iron's Restraint Length Calculator v7.1.3 on February 19, 2025

CAUTION: CONTRACTOR NOTE

811 Know what's below. Call before you dig.

THE LOCATION OF EXISTING UNDERGROUND AND OVERHEAD UTILITIES ARE APPROXIMATE LOCATIONS ONLY. THE CONTRACTOR SHALL CONTACT UTILITY COMPANIES PRIOR TO CONSTRUCTION. CONTRACTOR SHALL DETERMINE, AND FIELD VERIFY EXISTING UTILITY LOCATIONS AND DEPTHS PRIOR TO BEGINNING CONSTRUCTION AND SHALL BE FULLY RESPONSIBLE FOR ANY AND ALL DAMAGES WHICH MIGHT OCCUR.

CONTRACTOR SHALL CONSIDER PROPOSED UTILITY IMPROVEMENTS AND PROVIDE ADEQUATE HORIZONTAL AND VERTICAL CLEARANCE DURING INSTALLATION OF ALL UTILITY INFRASTRUCTURE.

NO.	REVISION	BY	DATE

BGE JOB NO. XXXX-XX
FILE
DATE 02/21/2025
DESIGNED XXX
DRAWN XXX
REVISED XXX
CHECKED XXX

SHELL ROAD UTILITY RELOCATIONS

JOINT RESTRAINT CALCS (1 OF 27)

CITY OF GEORGETOWN

BGE

BGE, INC
101 WEST LOUIS HENNA BLVD., STE 400
AUSTIN, TX 78728
TBPE Registration No. F-1046
TEL: 512-873-0400 www.bgeinc.com

STATE OF TEXAS
BRITTANY LYNN FAIRBURN
132905
LICENSED
PROFESSIONAL ENGINEER

Brittany Lynn Fairburn

02/21/2025

SHEET

369

100% SUBMITTAL

FILE LOCATION: G:\TXC\PROJECTS\CITY_GEORGETOWN\10767-00 SHELL ROAD\03_CADD\01_SHTS_PW\SHELL_JOINT_RESTRAINTS.DWG DATE SAVED: 2/20/2025

Project Name: Shell Rd

Project Notes:

Built Stronger. Lasts Longer.
EBAA IRON
EBAA IRON SALES, INC.
www.ebaa.com • contact@ebaa.com • 800.433.1716

RESTRAINT LENGTH VALUES

Fitting Type	Pipe Material	Soil Type	Safety Factor	Trench Type	Depth of Bury	Test Pressure	Nominal Size	Bend Angle	Branch Size	Length Along Run	Reduced Size	Lowside Depth	Restraint Length	Restraint Length 2
Dead End	PVC	GW	1.5	5	9 Ft.	200 PSI	6 In.						21 Ft.	

Site Name: WL-A GV @ 0+89.91

Site Notes:

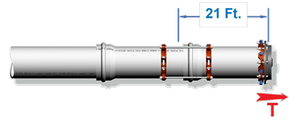

ALL JOINTS WITHIN THE CALCULATED LENGTH MUST BE RESTRAINED
IF YOUR DISTANCE BETWEEN FITTINGS IS LESS THAN OR EQUAL TO THE CALCULATED RESTRAINT LENGTH, RESTRAIN ALL JOINTS BETWEEN THOSE FITTINGS.

Defined Variables

H =	9	Depth of Bury
S_f =	1.5	Safety Factor
P =	200	Internal Pressure

Pipe Derived Variables

A =	37.39	Cross Sec. Area of Pipe
D =	0.58	Outside Pipe Diameter
W_p =	3.31	Weight of Pipe
W_w =	13.81	Weight of Water in Pipe

Defined Variables

f_c =	0.00	Cohesion Modifier Coefficient
c =	0	Cohesion of Soil
f_ϕ =	0.70	Friction Angle Modifier
Φ =	36	Internal Friction Angle of Soil
γ =	110	Soil Density
K_N =	1.00	Trench Compaction Modifier

Calculations for Dead End

$W_E = \gamma \cdot D \cdot H =$	574.200	Normal Force Due to Soil
$W = 2W_E + W_P + W_W =$	1165.520	Normal Force Acting on Pipeline
$(A_p)_A = \pi \cdot D =$	1.822	Area Based on Full Pipe Circumference
$F_{sh} = (A_p)_A \cdot f_c \cdot c + W \cdot \tan((\pi / 180) f_\phi \cdot \Phi) =$	548.452	Frictional Resistance
$L = S_f \cdot P \cdot A / F_{sh} =$	20.452	Minimum Restrained Length of Dead End

MEGALUG®

Created by EBAA Iron's Restraint Length Calculator v7.1.3 on February 19, 2025

Project Name: Shell Rd

Project Notes:

Built Stronger. Lasts Longer.
EBAA IRON
EBAA IRON SALES, INC.
www.ebaa.com • contact@ebaa.com • 800.433.1716

RESTRAINT LENGTH VALUES

Fitting Type	Pipe Material	Soil Type	Safety Factor	Trench Type	Depth of Bury	Test Pressure	Nominal Size	Bend Angle	Branch Size	Length Along Run	Reduced Size	Lowside Depth	Restraint Length	Restraint Length 2
Vertical Offset	PVC	GW	1.5	5	9 Ft.	200 PSI	16 In.	11.25°				9 Ft.	6 Ft.	2 Ft.

Site Name: WL-A VB @ 0+93.45 - 0+99.50

Site Notes:

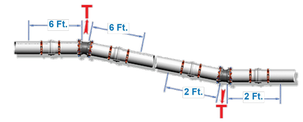

ALL JOINTS WITHIN THE CALCULATED LENGTH MUST BE RESTRAINED
IF YOUR DISTANCE BETWEEN FITTINGS IS LESS THAN OR EQUAL TO THE CALCULATED RESTRAINT LENGTH, RESTRAIN ALL JOINTS BETWEEN THOSE FITTINGS.

Defined Variables

H =	9	Depth of Bury
S_f =	1.5	Safety Factor
P =	200	Internal Pressure
θ =	11.25	Bend Angle

Pipe Derived Variables

A =	237.79	Cross Sec. Area of Pipe
D =	1.45	Outside Pipe Diameter
W_p =	21.14	Weight of Pipe
W_w =	87.80	Weight of Water in Pipe

Defined Variables

f_c =	0.00	Cohesion Modifier Coefficient
c =	0	Cohesion of Soil
f_ϕ =	0.70	Friction Angle Modifier
Φ =	36	Internal Friction Angle of Soil
γ =	110	Soil Density
K_N =	1.00	Trench Compaction Modifier

Calculations for Vertical Offset

	Lower	Upper	
$W_E = \gamma \cdot D \cdot H =$	1435.500	1435.500	Normal Force Due to Soil
$W = 2W_E + W_P + W_W =$	2979.940	2979.940	Normal Force Acting on Pipeline
$K_p = \tan^2((\pi / 180) \cdot (45 + (\Phi / 2))) =$	3.852	3.852	Rankin Passive Pressure Coeff.
$H_c = H + (D / 2) =$	9.725	9.725	Depth From Surface to Pipe Center
$\sigma_h = \gamma \cdot H_c \cdot K_p + 2c\sqrt{K_p} =$	4120.677		Horizontal Passive Soil Pressure
$A_p = \pi \cdot (D / 2) =$	2.278	2.278	Area Based on Half of Circumference
$R_s = K_N \cdot \sigma_h \cdot D =$	5974.982	5974.982	Bearing Resistance of Pipelines
$F_s = A_p \cdot f_c \cdot c + W \cdot \tan((\pi / 180) \cdot f_\phi \cdot \Phi) =$	1402.253	1402.253	Frictional Resitance
$L = (S_f \cdot P \cdot A \cdot \tan((\pi / 180) \cdot (\theta / 2))) / (F_s + (R_s / 2)) =$	1.601		Minimum Restrained Length Lower
$L = (S_f \cdot P \cdot A \cdot \tan((\pi / 180) \cdot (\theta / 2))) / F_s =$		5.011	Minimum Restrained Length Upper

MEGALUG®

Created by EBAA Iron's Restraint Length Calculator v7.1.3 on February 19, 2025

Project Name: Shell Rd

Project Notes:

Built Stronger. Lasts Longer.
EBAA IRON
EBAA IRON SALES, INC.
www.ebaa.com • contact@ebaa.com • 800.433.1716

RESTRAINT LENGTH VALUES

Fitting Type	Pipe Material	Soil Type	Safety Factor	Trench Type	Depth of Bury	Test Pressure	Nominal Size	Bend Angle	Branch Size	Length Along Run	Reduced Size	Lowside Depth	Restraint Length	Restraint Length 2
Horizontal Bend	PVC	GW	1.5	5	9 Ft.	200 PSI	16 In.	45°					7 Ft.	

Site Name: WL-A HB @ 1+10.09

Site Notes:

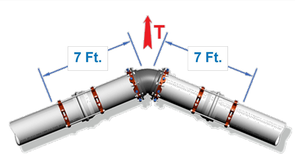

ALL JOINTS WITHIN THE CALCULATED LENGTH MUST BE RESTRAINED
IF YOUR DISTANCE BETWEEN FITTINGS IS LESS THAN OR EQUAL TO THE CALCULATED RESTRAINT LENGTH, RESTRAIN ALL JOINTS BETWEEN THOSE FITTINGS.

Defined Variables

H =	9	Depth of Bury
S_f =	1.5	Safety Factor
P =	200	Internal Pressure
θ =	45	Bend Angle

Pipe Derived Variables

A =	237.79	Cross Sec. Area of Pipe
D =	1.45	Outside Pipe Diameter
W_p =	21.14	Weight of Pipe
W_w =	87.80	Weight of Water in Pipe

Defined Variables

f_c =	0.00	Cohesion Modifier Coefficient
c =	0	Cohesion of Soil
f_ϕ =	0.70	Friction Angle Modifier
Φ =	36	Internal Friction Angle of Soil
γ =	110	Soil Density
K_N =	1.00	Trench Compaction Modifier

Calculations for Horizontal Bend

$W_E = \gamma \cdot D \cdot H =$	1435.500	Normal Force Due to Soil
$W = 2W_E + W_P + W_W =$	2979.940	Normal Force Acting on Pipeline
$K_p = \tan^2((\pi / 180) \cdot (45 + (\Phi / 2))) =$	3.852	Rankin Passive Pressure Coeff.
$H_c = H + (D / 2) =$	9.725	Depth From Surface to Pipe Center
$\sigma_h = \gamma \cdot H_c \cdot K_p + 2c\sqrt{K_p} =$	4120.677	Horizontal Passive Soil Pressure
$A_p = \pi \cdot (D / 2) =$	2.278	Area Based on Half of Circumference
$R_s = K_N \cdot \sigma_h \cdot D =$	5974.982	Bearing Resistance of Pipelines
$F_s = A_p \cdot f_c \cdot c + W \cdot \tan((\pi / 180) \cdot f_\phi \cdot \Phi) =$	1402.253	Frictional Resitance
$L = (S_f \cdot P \cdot A \cdot \tan((\pi / 180) \cdot (\theta / 2))) / (F_s + (R_s / 2)) =$	6.731	Minimum Restrained Length

MEGALUG®

Created by EBAA Iron's Restraint Length Calculator v7.1.3 on February 19, 2025

Project Name: Shell Rd

Project Notes:

Built Stronger. Lasts Longer.
EBAA IRON
EBAA IRON SALES, INC.
www.ebaa.com • contact@ebaa.com • 800.433.1716

RESTRAINT LENGTH VALUES

Fitting Type	Pipe Material	Soil Type	Safety Factor	Trench Type	Depth of Bury	Test Pressure	Nominal Size	Bend Angle	Branch Size	Length Along Run	Reduced Size	Lowside Depth	Restraint Length	Restraint Length 2
Horizontal Bend	PVC	GW	1.5	5	9 Ft.	200 PSI	16 In.	45°					7 Ft.	

Site Name: WL-A HB @ 1+19.76

Site Notes:

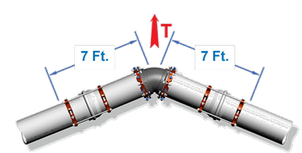

ALL JOINTS WITHIN THE CALCULATED LENGTH MUST BE RESTRAINED
IF YOUR DISTANCE BETWEEN FITTINGS IS LESS THAN OR EQUAL TO THE CALCULATED RESTRAINT LENGTH, RESTRAIN ALL JOINTS BETWEEN THOSE FITTINGS.

Defined Variables

H =	9	Depth of Bury
S_f =	1.5	Safety Factor
P =	200	Internal Pressure
θ =	45	Bend Angle

Pipe Derived Variables

A =	237.79	Cross Sec. Area of Pipe
D =	1.45	Outside Pipe Diameter
W_p =	21.14	Weight of Pipe
W_w =	87.80	Weight of Water in Pipe

Defined Variables

f_c =	0.00	Cohesion Modifier Coefficient
c =	0	Cohesion of Soil
f_ϕ =	0.70	Friction Angle Modifier
Φ =	36	Internal Friction Angle of Soil
γ =	110	Soil Density
K_N =	1.00	Trench Compaction Modifier

Calculations for Horizontal Bend

$W_E = \gamma \cdot D \cdot H =$	1435.500	Normal Force Due to Soil
$W = 2W_E + W_P + W_W =$	2979.940	Normal Force Acting on Pipeline
$K_p = \tan^2((\pi / 180) \cdot (45 + (\Phi / 2))) =$	3.852	Rankin Passive Pressure Coeff.
$H_c = H + (D / 2) =$	9.725	Depth From Surface to Pipe Center
$\sigma_h = \gamma \cdot H_c \cdot K_p + 2c\sqrt{K_p} =$	4120.677	Horizontal Passive Soil Pressure
$A_p = \pi \cdot (D / 2) =$	2.278	Area Based on Half of Circumference
$R_s = K_N \cdot \sigma_h \cdot D =$	5974.982	Bearing Resistance of Pipelines
$F_s = A_p \cdot f_c \cdot c + W \cdot \tan((\pi / 180) \cdot f_\phi \cdot \Phi) =$	1402.253	Frictional Resitance
$L = (S_f \cdot P \cdot A \cdot \tan((\pi / 180) \cdot (\theta / 2))) / (F_s + (R_s / 2)) =$	6.731	Minimum Restrained Length

MEGALUG®

Created by EBAA Iron's Restraint Length Calculator v7.1.3 on February 19, 2025

811 Know what's below. Call before you dig.

CAUTION: CONTRACTOR NOTE

THE LOCATION OF EXISTING UNDERGROUND AND OVERHEAD UTILITIES ARE APPROXIMATE LOCATIONS ONLY. THE CONTRACTOR SHALL CONTACT UTILITY COMPANIES PRIOR TO CONSTRUCTION. CONTRACTOR SHALL DETERMINE, AND FIELD VERIFY EXISTING UTILITY LOCATIONS AND DEPTHS PRIOR TO BEGINNING CONSTRUCTION AND SHALL BE FULLY RESPONSIBLE FOR ANY AND ALL DAMAGES WHICH MIGHT OCCUR.

CONTRACTOR SHALL CONSIDER PROPOSED UTILITY IMPROVEMENTS AND PROVIDE ADEQUATE HORIZONTAL AND VERTICAL CLEARANCE DURING INSTALLATION OF ALL UTILITY INFRASTRUCTURE.

NO.	REVISION	BY	DATE

BGE JOB NO. XXXX-XX
FILE
DATE 02/21/2025
DESIGNED XXX
DRAWN XXX
REVISED XXX
CHECKED XXX

SHELL ROAD UTILITY RELOCATIONS

JOINT RESTRAINT CALCS (2 OF 27)

CITY OF GEORGETOWN

BGE

BGE, INC
101 WEST LOUIS HENNA BLVD., STE 400
AUSTIN, TX 78728
TBPE Registration No. F-1046
TEL: 512-879-0400 www.bgeinc.com

STATE OF TEXAS
BRITTANY LYNN FAIRBURN
132905
LICENSED
PROFESSIONAL ENGINEER

Brittany Lynn Fairburn

02/21/2025

SHEET

370

100% SUBMITTAL

FILE LOCATION: G:\TXC\PROJECTS\CITY_GEORGETOWN\10767-00 SHELL ROAD\03_CADD\01_SHTS_PW\SHELL_JOINT_RESTRAINTS.DWG DATE SAVED: 2/20/2025

Project Name: Shell Rd

Project Notes:

Built Stronger. Lasts Longer.
EBAA IRON
EBAA IRON SALES, INC.
www.ebaa.com • contact@ebaa.com • 800.433.1716

RESTRAINT LENGTH VALUES

Fitting Type	Pipe Material	Soil Type	Safety Factor	Trench Type	Depth of Bury	Test Pressure	Nominal Size	Bend Angle	Branch Size	Length Along Run	Reduced Size	Lowside Depth	Restraint Length	Restraint Length 2
Reducer	PVC	GW	1.5	5	8 Ft.	200 PSI	16 In.				12 In.		25 Ft.	

Site Name: WL-B Reducer @ 0+26.59

Site Notes:

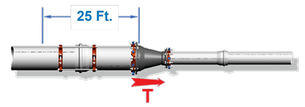

ALL JOINTS WITHIN THE CALCULATED LENGTH MUST BE RESTRAINED
IF YOUR DISTANCE BETWEEN FITTINGS IS LESS THAN OR EQUAL TO THE CALCULATED RESTRAINT LENGTH, RESTRAIN ALL JOINTS BETWEEN THOSE FITTINGS.

Defined Variables

H =	8	Depth of Bury
S_f =	1.5	Safety Factor
P =	200	Internal Pressure

Pipe Derived Variables

A_r =	237.79	Cross Sec. Area (Large)
A_s =	136.85	Cross Sec. Area (Small)
D =	1.45	Outside Pipe Diameter
D_s =	1.10	Outside Small Diameter
W_p =	21.14	Weight of Pipe
W_w =	87.80	Weight of Water in Pipe

Defined Variables

f_c =	0.00	Cohesion Modifier Coefficient
c =	0	Cohesion of Soil
f_ϕ =	0.70	Friction Angle Modifier
Φ =	36	Internal Friction Angle of Soil
γ =	110	Soil Density

Calculations for Reducer

$W_E = \gamma \cdot D \cdot H$ =	1276.000	Normal Force Due to Soil
$W = 2W_E + W_P + W_W$ =	2660.940	Normal Force Acting on Pipeline
$(A_p)_r = \pi \cdot D$ =	4.555	Area Based on Full Pipe Circumference
$(F_{sf})_r = (A_p)_r \cdot f_c \cdot c + W \cdot \tan((\pi / 180) \cdot f_\phi \cdot \Phi)$ =	1252.143	Frictional Resistance
$L_r = S_f \cdot P \cdot (A_r - A_s) / (F_{sf})_r$ =	24.184	Minimum Restrained Length of Reduced Side

MEGALUG®

Created by EBAA Iron's Restraint Length Calculator v7.1.3 on February 19, 2025

Project Name: Shell Rd

Project Notes:

Built Stronger. Lasts Longer.
EBAA IRON
EBAA IRON SALES, INC.
www.ebaa.com • contact@ebaa.com • 800.433.1716

RESTRAINT LENGTH VALUES

Fitting Type	Pipe Material	Soil Type	Safety Factor	Trench Type	Depth of Bury	Test Pressure	Nominal Size	Bend Angle	Branch Size	Length Along Run	Reduced Size	Lowside Depth	Restraint Length	Restraint Length 2
Tee	PVC	GW	1.5	5	8 Ft.	200 PSI	16 In.		6 In.	3 Ft.			1 Ft.	

Site Name: WL-B Tee @ 0+29.51

Site Notes:

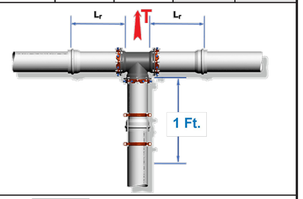

ALL JOINTS WITHIN THE CALCULATED LENGTH MUST BE RESTRAINED
IF YOUR DISTANCE BETWEEN FITTINGS IS LESS THAN OR EQUAL TO THE CALCULATED RESTRAINT LENGTH, RESTRAIN ALL JOINTS BETWEEN THOSE FITTINGS.

Defined Variables

H =	8	Depth of Bury
S_f =	1.5	Safety Factor
P =	200	Internal Pressure

Pipe Derived Variables

A =	237.79	Cross Sec. Area (Main)
A_b =	37.39	Cross Sec. Area (Branch)
D =	1.45	Outside Pipe Diameter
D_b =	0.58	Outside Diameter Branch
W_p =	3.31	Weight of Pipe
W_w =	13.81	Weight of Water in Pipe
L_r =	3	Min. restrained Length either side of Tee

Defined Variables

f_c =	0.00	Cohesion Modifier Coefficient
c =	0	Cohesion of Soil
f_ϕ =	0.70	Friction Angle Modifier
Φ =	36	Internal Friction Angle of Soil
γ =	110	Soil Density

Calculations for Tee

$W_E = \gamma \cdot D \cdot H$ =	510.400	Normal Force Due to Soil
$W = 2W_E + W_P + W_W$ =	1037.920	Normal Force Acting on Pipeline
$K_p = \tan^2((\pi / 180) \cdot (45 + (\Phi / 2)))$ =	3.852	Rankin Passive Pressure Coeff.
$H_c = H + (D / 2)$ =	8.725	Depth From Surface to Pipe Center
$\sigma_h = \gamma \cdot H_c \cdot K_p + 2c\sqrt{K_p}$ =	3696.957	Horizontal Passive Soil Pressure
$A_p = \pi \cdot (D / 2)$ =	2.278	Area Based on Half of Circumference
$(A_p)_b = \pi \cdot D_b$ =	1.822	Area Based on Full Branch Circumference
$R_s = K_{Ni} \cdot \sigma_h \cdot D$ =	5360.588	Bearing Resistance of Pipelines
$F_{sb} = (A_p)_b \cdot f_c \cdot c + W \cdot \tan((\pi / 180) \cdot f_\phi \cdot \Phi)$ =	488.408	Frictional Resistance
$L_b = S_f(P \cdot A_b - R_s \cdot L_r) / F_{sb}$ =	-26.424	Minimum Restrained Length Branch

MEGALUG®

Created by EBAA Iron's Restraint Length Calculator v7.1.3 on February 19, 2025

Project Name: Shell Rd

Project Notes:

Built Stronger. Lasts Longer.
EBAA IRON
EBAA IRON SALES, INC.
www.ebaa.com • contact@ebaa.com • 800.433.1716

RESTRAINT LENGTH VALUES

Fitting Type	Pipe Material	Soil Type	Safety Factor	Trench Type	Depth of Bury	Test Pressure	Nominal Size	Bend Angle	Branch Size	Length Along Run	Reduced Size	Lowside Depth	Restraint Length	Restraint Length 2
Horizontal Bend	PVC	GW	1.5	5	8 Ft.	200 PSI	16 In.	22.5°					4 Ft.	

Site Name: WL-B HB @ 0+32.45

Site Notes:

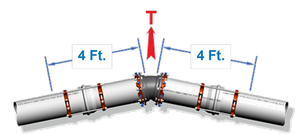

ALL JOINTS WITHIN THE CALCULATED LENGTH MUST BE RESTRAINED
IF YOUR DISTANCE BETWEEN FITTINGS IS LESS THAN OR EQUAL TO THE CALCULATED RESTRAINT LENGTH, RESTRAIN ALL JOINTS BETWEEN THOSE FITTINGS.

Defined Variables

H =	8	Depth of Bury
S_f =	1.5	Safety Factor
P =	200	Internal Pressure
θ =	22.5	Bend Angle

Pipe Derived Variables

A =	237.79	Cross Sec. Area of Pipe
D =	1.45	Outside Pipe Diameter
W_p =	21.14	Weight of Pipe
W_w =	87.80	Weight of Water in Pipe

Defined Variables

f_c =	0.00	Cohesion Modifier Coefficient
c =	0	Cohesion of Soil
f_ϕ =	0.70	Friction Angle Modifier
Φ =	36	Internal Friction Angle of Soil
γ =	110	Soil Density
K_N =	1.00	Trench Compaction Modifier

Calculations for Horizontal Bend

$W_E = \gamma \cdot D \cdot H$ =	1276.000	Normal Force Due to Soil
$W = 2W_E + W_P + W_W$ =	2660.940	Normal Force Acting on Pipeline
$K_p = \tan^2((\pi / 180) \cdot (45 + (\Phi / 2)))$ =	3.852	Rankin Passive Pressure Coeff.
$H_c = H + (D / 2)$ =	8.725	Depth From Surface to Pipe Center
$\sigma_h = \gamma \cdot H_c \cdot K_p + 2c\sqrt{K_p}$ =	3696.957	Horizontal Passive Soil Pressure
$A_p = \pi \cdot (D / 2)$ =	2.278	Area Based on Half of Circumference
$R_s = K_N \cdot \sigma_h \cdot D$ =	5360.588	Bearing Resistance of Pipelines
$F_s = A_p \cdot f_c \cdot c + W \cdot \tan((\pi / 180) \cdot f_\phi \cdot \Phi)$ =	1252.143	Frictional Resistance
$L = (S_f \cdot P \cdot A \cdot \tan((\pi / 180) \cdot (\theta / 2))) / (F_s + (R_s / 2))$ =	3.608	Minimum Restrained Length

MEGALUG®

Created by EBAA Iron's Restraint Length Calculator v7.1.3 on February 19, 2025

Project Name: Shell Rd

Project Notes:

Built Stronger. Lasts Longer.
EBAA IRON
EBAA IRON SALES, INC.
www.ebaa.com • contact@ebaa.com • 800.433.1716

RESTRAINT LENGTH VALUES

Fitting Type	Pipe Material	Soil Type	Safety Factor	Trench Type	Depth of Bury	Test Pressure	Nominal Size	Bend Angle	Branch Size	Length Along Run	Reduced Size	Lowside Depth	Restraint Length	Restraint Length 2
Vertical Offset	PVC	GW	1.5	5	8 Ft.	200 PSI	16 In.	45°				12 Ft.	24 Ft.	6 Ft.

Site Name: WL-B VB @ 0+34.02 - 0+38.65

Site Notes:

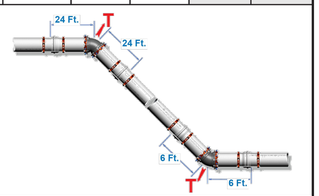

ALL JOINTS WITHIN THE CALCULATED LENGTH MUST BE RESTRAINED
IF YOUR DISTANCE BETWEEN FITTINGS IS LESS THAN OR EQUAL TO THE CALCULATED RESTRAINT LENGTH, RESTRAIN ALL JOINTS BETWEEN THOSE FITTINGS.

Defined Variables

H =	8	Depth of Bury
S_f =	1.5	Safety Factor
P =	200	Internal Pressure
θ =	45	Bend Angle

Pipe Derived Variables

A =	237.79	Cross Sec. Area of Pipe
D =	1.45	Outside Pipe Diameter
W_p =	21.14	Weight of Pipe
W_w =	87.80	Weight of Water in Pipe

Defined Variables

f_c =	0.00	Cohesion Modifier Coefficient
c =	0	Cohesion of Soil
f_ϕ =	0.70	Friction Angle Modifier
Φ =	36	Internal Friction Angle of Soil
γ =	110	Soil Density
K_N =	1.00	Trench Compaction Modifier

Calculations for Vertical Offset

	Lower	Upper	
$W_E = \gamma \cdot D \cdot H$ =	1914.000	1276.000	Normal Force Due to Soil
$W = 2W_E + W_P + W_W$ =	3936.940	2660.940	Normal Force Acting on Pipeline
$K_p = \tan^2((\pi / 180) \cdot (45 + (\Phi / 2)))$ =	3.852	3.852	Rankin Passive Pressure Coeff.
$H_c = H + (D / 2)$ =	12.725	8.725	Depth From Surface to Pipe Center
$\sigma_h = \gamma \cdot H_c \cdot K_p + 2c\sqrt{K_p}$ =	5391.837		Horizontal Passive Soil Pressure
$A_p = \pi \cdot (D / 2)$ =	2.278	2.278	Area Based on Half of Circumference
$R_s = K_N \cdot \sigma_h \cdot D$ =	7818.164	7818.164	Bearing Resistance of Pipelines
$F_s = A_p \cdot f_c \cdot c + W \cdot \tan((\pi / 180) \cdot f_\phi \cdot \Phi)$ =	1852.583	1252.143	Frictional Resistance
$L = (S_f \cdot P \cdot A \cdot \tan((\pi / 180) \cdot (\theta / 2))) / (F_s + (R_s / 2))$ =	5.129		Minimum Restrained Length Lower
$L = (S_f \cdot P \cdot A \cdot \tan((\pi / 180) \cdot (\theta / 2))) / F_s$ =		23.599	Minimum Restrained Length Upper

MEGALUG®

Created by EBAA Iron's Restraint Length Calculator v7.1.3 on February 19, 2025

811 Know what's below. Call before you dig.

CAUTION: CONTRACTOR NOTE
THE LOCATION OF EXISTING UNDERGROUND AND OVERHEAD UTILITIES ARE APPROXIMATE LOCATIONS ONLY. THE CONTRACTOR SHALL CONTACT UTILITY COMPANIES PRIOR TO CONSTRUCTION. CONTRACTOR SHALL DETERMINE, AND FIELD VERIFY EXISTING UTILITY LOCATIONS AND DEPTHS PRIOR TO BEGINNING CONSTRUCTION AND SHALL BE FULLY RESPONSIBLE FOR ANY AND ALL DAMAGES WHICH MIGHT OCCUR.

CONTRACTOR SHALL CONSIDER PROPOSED UTILITY IMPROVEMENTS AND PROVIDE ADEQUATE HORIZONTAL AND VERTICAL CLEARANCE DURING INSTALLATION OF ALL UTILITY INFRASTRUCTURE.

NO.	REVISION	BY	DATE

BGE JOB NO. XXXX-XX
FILE
DATE 02/21/2025
DESIGNED XXX
DRAWN XXX
REVISED XXX
CHECKED XXX

SHELL ROAD UTILITY RELOCATIONS

JOINT RESTRAINT CALCS (3 OF 27)

CITY OF GEORGETOWN

BGE
BGE, INC
101 WEST LOUIS HENNA BLVD., STE 400
AUSTIN, TX 78728
TBPE Registration No. F-1046
TEL: 512-873-0400 www.bgeinc.com

STATE OF TEXAS
BRITTANY LYNN FAIRBURN
132905
LICENSED
PROFESSIONAL ENGINEER
Brittany Lynn Fairburn
02/21/2025

SHEET
371

100% SUBMITTAL

FILE LOCATION: G:\TXC\PROJECTS\CITY_GEORGETOWN\10767-00 SHELL ROAD\03_CADD\01_SHTS_PW\SHELL_JOINT_RESTRAINTS.DWG DATE SAVED: 2/20/2025

Project Name: Shell Rd

Project Notes:

Built Stronger. Lasts Longer.
EBAA IRON
EBAA IRON SALES, INC.
www.ebaa.com • contact@ebaa.com • 800.433.1716

RESTRAINT LENGTH VALUES

Fitting Type	Pipe Material	Soil Type	Safety Factor	Trench Type	Depth of Bury	Test Pressure	Nominal Size	Bend Angle	Branch Size	Length Along Run	Reduced Size	Lowside Depth	Restraint Length	Restraint Length 2
Horizontal Bend	PVC	GW	1.5	5	12 Ft.	200 PSI	16 In.	45°					6 Ft.	

Site Name: WL-B HB @ 0+38.65

Site Notes:

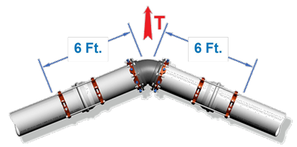

ALL JOINTS WITHIN THE CALCULATED LENGTH MUST BE RESTRAINED
IF YOUR DISTANCE BETWEEN FITTINGS IS LESS THAN OR EQUAL TO THE CALCULATED RESTRAINT LENGTH, RESTRAIN ALL JOINTS BETWEEN THOSE FITTINGS.

Defined Variables

H =	12	Depth of Bury
S_f =	1.5	Safety Factor
P =	200	Internal Pressure
θ =	45	Bend Angle

Pipe Derived Variables

A =	237.79	Cross Sec. Area of Pipe
D =	1.45	Outside Pipe Diameter
W_p =	21.14	Weight of Pipe
W_w =	87.80	Weight of Water in Pipe

Defined Variables

f_c =	0.00	Cohesion Modifier Coefficient
c =	0	Cohesion of Soil
f_ϕ =	0.70	Friction Angle Modifier
Φ =	36	Internal Friction Angle of Soil
γ =	110	Soil Density
K_N =	1.00	Trench Compaction Modifier

Calculations for Horizontal Bend

$W_E = \gamma \cdot D \cdot H =$	1914.000	Normal Force Due to Soil
$W = 2W_E + W_P + W_W =$	3936.940	Normal Force Acting on Pipeline
$K_P = \tan^2((\pi / 180) \cdot (45 + (\Phi / 2))) =$	3.852	Rankin Passive Pressure Coeff.
$H_C = H + (D / 2) =$	12.725	Depth From Surface to Pipe Center
$\sigma_h = \gamma \cdot H_C \cdot K_P + 2c\sqrt{K_P} =$	5391.837	Horizontal Passive Soil Pressure
$A_P = \pi \cdot (D / 2) =$	2.278	Area Based on Half of Circumference
$R_S = K_N \cdot \sigma_h \cdot D =$	7818.164	Bearing Resistance of Pipelines
$F_s = A_P \cdot f_c \cdot c + W \cdot \tan((\pi / 180) \cdot f_\phi \cdot \Phi) =$	1852.583	Frictional Resistance
$L = (S_f \cdot P \cdot A \cdot \tan((\pi / 180) \cdot (\theta / 2))) / (F_s + (R_S / 2)) =$	5.129	Minimum Restrained Length

MEGALUG®

Created by EBAA Iron's Restraint Length Calculator v7.1.3 on February 19, 2025

Project Name: Shell Rd

Project Notes:

Built Stronger. Lasts Longer.
EBAA IRON
EBAA IRON SALES, INC.
www.ebaa.com • contact@ebaa.com • 800.433.1716

RESTRAINT LENGTH VALUES

Fitting Type	Pipe Material	Soil Type	Safety Factor	Trench Type	Depth of Bury	Test Pressure	Nominal Size	Bend Angle	Branch Size	Length Along Run	Reduced Size	Lowside Depth	Restraint Length	Restraint Length 2
Dead End	PVC	GW	1.5	5	12 Ft.	200 PSI	16 In.						39 Ft.	

Site Name: WL-B GV @ 0+40.63

Site Notes:

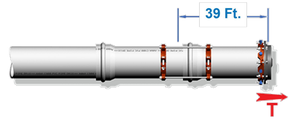

ALL JOINTS WITHIN THE CALCULATED LENGTH MUST BE RESTRAINED
IF YOUR DISTANCE BETWEEN FITTINGS IS LESS THAN OR EQUAL TO THE CALCULATED RESTRAINT LENGTH, RESTRAIN ALL JOINTS BETWEEN THOSE FITTINGS.

Defined Variables

H =	12	Depth of Bury
S_f =	1.5	Safety Factor
P =	200	Internal Pressure

Pipe Derived Variables

A =	237.79	Cross Sec. Area of Pipe
D =	1.45	Outside Pipe Diameter
W_p =	21.14	Weight of Pipe
W_w =	87.80	Weight of Water in Pipe

Defined Variables

f_c =	0.00	Cohesion Modifier Coefficient
c =	0	Cohesion of Soil
f_ϕ =	0.70	Friction Angle Modifier
Φ =	36	Internal Friction Angle of Soil
γ =	110	Soil Density

Calculations for Dead End

$W_E = \gamma \cdot D \cdot H =$	1914.000	Normal Force Due to Soil
$W = 2W_E + W_P + W_W =$	3936.940	Normal Force Acting on Pipeline
$(A_p)_h = \pi \cdot D =$	4.555	Area Based on Full Pipe Circumference
$F_{sh} = (A_p)_h \cdot f_c \cdot c + W \cdot \tan((\pi / 180) \cdot f_\phi \cdot \Phi) =$	1852.583	Frictional Resistance
$L = S_f \cdot P \cdot A / F_{sh} =$	38.507	Minimum Restrained Length of Dead End

MEGALUG®

Created by EBAA Iron's Restraint Length Calculator v7.1.3 on February 19, 2025

Project Name: Shell Rd

Project Notes:

Built Stronger. Lasts Longer.
EBAA IRON
EBAA IRON SALES, INC.
www.ebaa.com • contact@ebaa.com • 800.433.1716

RESTRAINT LENGTH VALUES

Fitting Type	Pipe Material	Soil Type	Safety Factor	Trench Type	Depth of Bury	Test Pressure	Nominal Size	Bend Angle	Branch Size	Length Along Run	Reduced Size	Lowside Depth	Restraint Length	Restraint Length 2
Tee	PVC	GW	1.5	5	12 Ft.	200 PSI	16 In.		16 In.	4 Ft.			14 Ft.	

Site Name: WL-B Tee @ 0+42.60

Site Notes:

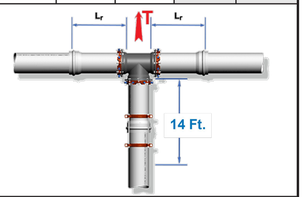

ALL JOINTS WITHIN THE CALCULATED LENGTH MUST BE RESTRAINED
IF YOUR DISTANCE BETWEEN FITTINGS IS LESS THAN OR EQUAL TO THE CALCULATED RESTRAINT LENGTH, RESTRAIN ALL JOINTS BETWEEN THOSE FITTINGS.

Defined Variables

H =	12	Depth of Bury
S_f =	1.5	Safety Factor
P =	200	Internal Pressure

Pipe Derived Variables

A =	237.79	Cross Sec. Area (Main)
A_h =	237.79	Cross Sec. Area (Branch)
D =	1.45	Outside Pipe Diameter
D_h =	1.45	Outside Diameter Branch
W_p =	21.14	Weight of Pipe
W_w =	87.80	Weight of Water in Pipe
L_r =	4	Min. restrained Length either side of Tee

Defined Variables

f_c =	0.00	Cohesion Modifier Coefficient
c =	0	Cohesion of Soil
f_ϕ =	0.70	Friction Angle Modifier
Φ =	36	Internal Friction Angle of Soil
γ =	110	Soil Density

Calculations for Tee

$W_E = \gamma \cdot D \cdot H =$	1914.000	Normal Force Due to Soil
$W = 2W_E + W_P + W_W =$	3936.940	Normal Force Acting on Pipeline
$K_P = \tan^2((\pi / 180) \cdot (45 + (\Phi / 2))) =$	3.852	Rankin Passive Pressure Coeff.
$H_C = H + (D / 2) =$	12.725	Depth From Surface to Pipe Center
$\sigma_h = \gamma \cdot H_C \cdot K_P + 2c\sqrt{K_P} =$	5391.837	Horizontal Passive Soil Pressure
$A_P = \pi \cdot (D / 2) =$	2.278	Area Based on Half of Circumference
$(A_p)_h = \pi \cdot D_h =$	4.555	Area Based on Full Branch Circumference
$R_S = K_N \cdot \sigma_h \cdot D =$	7818.164	Bearing Resistance of Pipelines
$F_{sh} = (A_p)_h \cdot f_c \cdot c + W \cdot \tan((\pi / 180) \cdot f_\phi \cdot \Phi) =$	1852.583	Frictional Resistance
$L_h = S_f(P \cdot A_h - R_S \cdot L_r) / F_{sh} =$	13.186	Minimum Restrained Length Branch

MEGALUG®

Created by EBAA Iron's Restraint Length Calculator v7.1.3 on February 19, 2025

Project Name: Shell Rd

Project Notes:

Built Stronger. Lasts Longer.
EBAA IRON
EBAA IRON SALES, INC.
www.ebaa.com • contact@ebaa.com • 800.433.1716

RESTRAINT LENGTH VALUES

Fitting Type	Pipe Material	Soil Type	Safety Factor	Trench Type	Depth of Bury	Test Pressure	Nominal Size	Bend Angle	Branch Size	Length Along Run	Reduced Size	Lowside Depth	Restraint Length	Restraint Length 2
Dead End	PVC	GW	1.5	5	12 Ft.	200 PSI	16 In.						39 Ft.	

Site Name: WL-B GV @ 0+44.58

Site Notes:

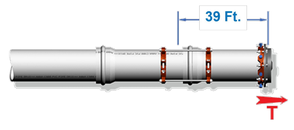

ALL JOINTS WITHIN THE CALCULATED LENGTH MUST BE RESTRAINED
IF YOUR DISTANCE BETWEEN FITTINGS IS LESS THAN OR EQUAL TO THE CALCULATED RESTRAINT LENGTH, RESTRAIN ALL JOINTS BETWEEN THOSE FITTINGS.

Defined Variables

H =	12	Depth of Bury
S_f =	1.5	Safety Factor
P =	200	Internal Pressure

Pipe Derived Variables

A =	237.79	Cross Sec. Area of Pipe
D =	1.45	Outside Pipe Diameter
W_p =	21.14	Weight of Pipe
W_w =	87.80	Weight of Water in Pipe

Defined Variables

f_c =	0.00	Cohesion Modifier Coefficient
c =	0	Cohesion of Soil
f_ϕ =	0.70	Friction Angle Modifier
Φ =	36	Internal Friction Angle of Soil
γ =	110	Soil Density

Calculations for Dead End

$W_E = \gamma \cdot D \cdot H =$	1914.000	Normal Force Due to Soil
$W = 2W_E + W_P + W_W =$	3936.940	Normal Force Acting on Pipeline
$(A_p)_h = \pi \cdot D =$	4.555	Area Based on Full Pipe Circumference
$F_{sh} = (A_p)_h \cdot f_c \cdot c + W \cdot \tan((\pi / 180) \cdot f_\phi \cdot \Phi) =$	1852.583	Frictional Resistance
$L = S_f \cdot P \cdot A / F_{sh} =$	38.507	Minimum Restrained Length of Dead End

MEGALUG®

Created by EBAA Iron's Restraint Length Calculator v7.1.3 on February 19, 2025

811 Know what's below. Call before you dig.

CAUTION: CONTRACTOR NOTE

THE LOCATION OF EXISTING UNDERGROUND AND OVERHEAD UTILITIES ARE APPROXIMATE LOCATIONS ONLY. THE CONTRACTOR SHALL CONTACT UTILITY COMPANIES PRIOR TO CONSTRUCTION. CONTRACTOR SHALL DETERMINE, AND FIELD VERIFY EXISTING UTILITY LOCATIONS AND DEPTHS PRIOR TO BEGINNING CONSTRUCTION AND SHALL BE FULLY RESPONSIBLE FOR ANY AND ALL DAMAGES WHICH MIGHT OCCUR.

CONTRACTOR SHALL CONSIDER PROPOSED UTILITY IMPROVEMENTS AND PROVIDE ADEQUATE HORIZONTAL AND VERTICAL CLEARANCE DURING INSTALLATION OF ALL UTILITY INFRASTRUCTURE.

NO.	REVISION	BY	DATE

BGE JOB NO. XXXX-XX
FILE
DATE 02/21/2025
DESIGNED XXX
DRAWN XXX
REVISED XXX
CHECKED XXX

SHELL ROAD UTILITY RELOCATIONS

JOINT RESTRAINT CALCS (4 OF 27)

CITY OF GEORGETOWN

BGE

BGE, INC
101 WEST LOUIS HENNA BLVD., STE 400
AUSTIN, TX 78728
TBPE Registration No. F-1046
TEL: 512-879-0400 www.bgeinc.com

STATE OF TEXAS
BRITTANY LYNN FAIRBURN
132905
LICENSED
PROFESSIONAL ENGINEER

Brittany Lynn Fairburn

02/21/2025

SHEET

372

100% SUBMITTAL

FILE LOCATION: G:\TXC\PROJECTS\CITY_GEORGETOWN\10767-00 SHELL ROAD\03_CADD\01_SHTS_PW\SHELL_JOINT_RESTRAINTS.DWG DATE SAVED: 2/20/2025

Project Name: Shell Rd

Project Notes:

EBAA IRON — Built Stronger. Lasts Longer.
EBAA IRON SALES, INC.
www.ebaa.com • contact@ebaa.com • 800.433.1716

RESTRAINT LENGTH VALUES

Fitting Type	Pipe Material	Soil Type	Safety Factor	Trench Type	Depth of Bury	Test Pressure	Nominal Size	Bend Angle	Branch Size	Length Along Run	Reduced Size	Lowside Depth	Restraint Length	Restraint Length 2
Tee	PVC	GW	1.5	5	12 Ft.	200 PSI	16 In.		6 In.	3 Ft.			1 Ft.	

Site Name: WL-B Tee @ 0+64.59

Site Notes:

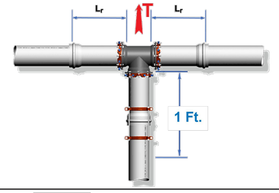

ALL JOINTS WITHIN THE CALCULATED LENGTH MUST BE RESTRAINED
IF YOUR DISTANCE BETWEEN FITTINGS IS LESS THAN OR EQUAL TO THE CALCULATED RESTRAINT LENGTH, RESTRAIN ALL JOINTS BETWEEN THOSE FITTINGS.

Defined Variables

H =	12	Depth of Bury
S_f =	1.5	Safety Factor
P =	200	Internal Pressure

Pipe Derived Variables

A =	237.79	Cross Sec. Area (Main)
A_b =	37.39	Cross Sec. Area (Branch)
D =	1.45	Outside Pipe Diameter
D_b =	0.58	Outside Diameter Branch
W_p =	3.31	Weight of Pipe
W_w =	13.81	Weight of Water in Pipe
L_r =	3	Min. restrained Length either side of Tee

Defined Variables

f_c =	0.00	Cohesion Modifier Coefficient
c =	0	Cohesion of Soil
f_ϕ =	0.70	Friction Angle Modifier
Φ =	36	Internal Friction Angle of Soil
γ =	110	Soil Density
K_N =	1.00	Trench Compaction Modifier

Calculations for Tee

$W_E = \gamma \cdot D \cdot H$ =	765.600	Normal Force Due to Soil
$W = 2W_E + W_p + W_w$ =	1548.320	Normal Force Acting on Pipeline
$K_p = \tan^2((\pi / 180) \cdot (45 + (\Phi / 2)))$ =	3.852	Rankin Passive Pressure Coeff.
$H_c = H + (D / 2)$ =	12.725	Depth From Surface to Pipe Center
$\sigma_h = \gamma \cdot H_c \cdot K_p + 2c\sqrt{K_p}$ =	5391.837	Horizontal Passive Soil Pressure
$A_p = \pi \cdot (D / 2)$ =	2.278	Area Based on Half of Circumference
$(A_p)_b = \pi \cdot D_b$ =	1.822	Area Based on Full Branch Circumference
$R_S = K_N \cdot \sigma_h \cdot D$ =	7818.164	Bearing Resistance of Pipelines
$F_{sb} = (A_p)_b \cdot f_c \cdot c + W \cdot \tan((\pi / 180) f_\phi \cdot \Phi)$ =	728.584	Frictional Resistance
$L_b = S_f(P \cdot A_b - R_S \cdot L_r) / F_{sb}$ =	-32.892	Minimum Restrained Length Branch

MEGALUG®

Created by EBAA Iron's Restraint Length Calculator v7.1.3 on February 19, 2025

Project Name: Shell Rd

Project Notes:

EBAA IRON — Built Stronger. Lasts Longer.
EBAA IRON SALES, INC.
www.ebaa.com • contact@ebaa.com • 800.433.1716

RESTRAINT LENGTH VALUES

Fitting Type	Pipe Material	Soil Type	Safety Factor	Trench Type	Depth of Bury	Test Pressure	Nominal Size	Bend Angle	Branch Size	Length Along Run	Reduced Size	Lowside Depth	Restraint Length	Restraint Length 2
Horizontal Bend	PVC	GW	1.5	5	12 Ft.	200 PSI	16 In.	45°					6 Ft.	

Site Name: WL-B HB @ 0+68.03

Site Notes:

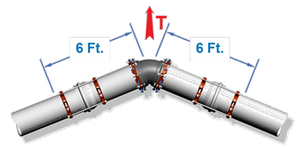

ALL JOINTS WITHIN THE CALCULATED LENGTH MUST BE RESTRAINED
IF YOUR DISTANCE BETWEEN FITTINGS IS LESS THAN OR EQUAL TO THE CALCULATED RESTRAINT LENGTH, RESTRAIN ALL JOINTS BETWEEN THOSE FITTINGS.

Defined Variables

H =	12	Depth of Bury
S_f =	1.5	Safety Factor
P =	200	Internal Pressure
θ =	45	Bend Angle

Pipe Derived Variables

A =	237.79	Cross Sec. Area of Pipe
D =	1.45	Outside Pipe Diameter
W_p =	21.14	Weight of Pipe
W_w =	87.80	Weight of Water in Pipe

Defined Variables

f_c =	0.00	Cohesion Modifier Coefficient
c =	0	Cohesion of Soil
f_ϕ =	0.70	Friction Angle Modifier
Φ =	36	Internal Friction Angle of Soil
γ =	110	Soil Density
K_N =	1.00	Trench Compaction Modifier

Calculations for Horizontal Bend

$W_E = \gamma \cdot D \cdot H$ =	1914.000	Normal Force Due to Soil
$W = 2W_E + W_p + W_w$ =	3936.940	Normal Force Acting on Pipeline
$K_p = \tan^2((\pi / 180) \cdot (45 + (\Phi / 2)))$ =	3.852	Rankin Passive Pressure Coeff.
$H_c = H + (D / 2)$ =	12.725	Depth From Surface to Pipe Center
$\sigma_h = \gamma \cdot H_c \cdot K_p + 2c\sqrt{K_p}$ =	5391.837	Horizontal Passive Soil Pressure
$A_p = \pi \cdot (D / 2)$ =	2.278	Area Based on Half of Circumference
$R_S = K_N \cdot \sigma_h \cdot D$ =	7818.164	Bearing Resistance of Pipelines
$F_s = A_p \cdot f_c \cdot c + W \cdot \tan((\pi / 180) \cdot f_\phi \cdot \Phi)$ =	1852.583	Frictional Resitance
$L = (S_f \cdot P \cdot A \cdot \tan((\pi / 180) \cdot (\theta / 2))) / (F_s + (R_S / 2))$ =	5.129	Minimum Restrained Length

MEGALUG®

Created by EBAA Iron's Restraint Length Calculator v7.1.3 on February 19, 2025

Project Name: Shell Rd

Project Notes:

EBAA IRON — Built Stronger. Lasts Longer.
EBAA IRON SALES, INC.
www.ebaa.com • contact@ebaa.com • 800.433.1716

RESTRAINT LENGTH VALUES

Fitting Type	Pipe Material	Soil Type	Safety Factor	Trench Type	Depth of Bury	Test Pressure	Nominal Size	Bend Angle	Branch Size	Length Along Run	Reduced Size	Lowside Depth	Restraint Length	Restraint Length 2
Horizontal Bend	PVC	GW	1.5	5	12 Ft.	200 PSI	16 In.	22.5°					3 Ft.	

Site Name: WL-B HB @ 1+75.56

Site Notes:

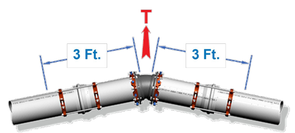

ALL JOINTS WITHIN THE CALCULATED LENGTH MUST BE RESTRAINED
IF YOUR DISTANCE BETWEEN FITTINGS IS LESS THAN OR EQUAL TO THE CALCULATED RESTRAINT LENGTH, RESTRAIN ALL JOINTS BETWEEN THOSE FITTINGS.

Defined Variables

H =	12	Depth of Bury
S_f =	1.5	Safety Factor
P =	200	Internal Pressure
θ =	22.5	Bend Angle

Pipe Derived Variables

A =	237.79	Cross Sec. Area of Pipe
D =	1.45	Outside Pipe Diameter
W_p =	21.14	Weight of Pipe
W_w =	87.80	Weight of Water in Pipe

Defined Variables

f_c =	0.00	Cohesion Modifier Coefficient
c =	0	Cohesion of Soil
f_ϕ =	0.70	Friction Angle Modifier
Φ =	36	Internal Friction Angle of Soil
γ =	110	Soil Density
K_N =	1.00	Trench Compaction Modifier

Calculations for Horizontal Bend

$W_E = \gamma \cdot D \cdot H$ =	1914.000	Normal Force Due to Soil
$W = 2W_E + W_p + W_w$ =	3936.940	Normal Force Acting on Pipeline
$K_p = \tan^2((\pi / 180) \cdot (45 + (\Phi / 2)))$ =	3.852	Rankin Passive Pressure Coeff.
$H_c = H + (D / 2)$ =	12.725	Depth From Surface to Pipe Center
$\sigma_h = \gamma \cdot H_c \cdot K_p + 2c\sqrt{K_p}$ =	5391.837	Horizontal Passive Soil Pressure
$A_p = \pi \cdot (D / 2)$ =	2.278	Area Based on Half of Circumference
$R_S = K_N \cdot \sigma_h \cdot D$ =	7818.164	Bearing Resistance of Pipelines
$F_s = A_p \cdot f_c \cdot c + W \cdot \tan((\pi / 180) \cdot f_\phi \cdot \Phi)$ =	1852.583	Frictional Resitance
$L = (S_f \cdot P \cdot A \cdot \tan((\pi / 180) \cdot (\theta / 2))) / (F_s + (R_S / 2))$ =	2.463	Minimum Restrained Length

MEGALUG®

Created by EBAA Iron's Restraint Length Calculator v7.1.3 on February 19, 2025

Project Name: Shell Rd

Project Notes:

EBAA IRON — Built Stronger. Lasts Longer.
EBAA IRON SALES, INC.
www.ebaa.com • contact@ebaa.com • 800.433.1716

RESTRAINT LENGTH VALUES

Fitting Type	Pipe Material	Soil Type	Safety Factor	Trench Type	Depth of Bury	Test Pressure	Nominal Size	Bend Angle	Branch Size	Length Along Run	Reduced Size	Lowside Depth	Restraint Length	Restraint Length 2
Vertical Offset	PVC	GW	1.5	5	6 Ft.	200 PSI	16 In.	45°				12 Ft.	32 Ft.	6 Ft.

Site Name: WL-B VB @ 1+78.81 - 1+84.25

Site Notes:

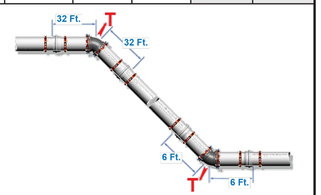

ALL JOINTS WITHIN THE CALCULATED LENGTH MUST BE RESTRAINED
IF YOUR DISTANCE BETWEEN FITTINGS IS LESS THAN OR EQUAL TO THE CALCULATED RESTRAINT LENGTH, RESTRAIN ALL JOINTS BETWEEN THOSE FITTINGS.

Defined Variables

H =	6	Depth of Bury
S_f =	1.5	Safety Factor
P =	200	Internal Pressure
θ =	45	Bend Angle

Pipe Derived Variables

A =	237.79	Cross Sec. Area of Pipe
D =	1.45	Outside Pipe Diameter
W_p =	21.14	Weight of Pipe
W_w =	87.80	Weight of Water in Pipe

Defined Variables

f_c =	0.00	Cohesion Modifier Coefficient
c =	0	Cohesion of Soil
f_ϕ =	0.70	Friction Angle Modifier
Φ =	36	Internal Friction Angle of Soil
γ =	110	Soil Density
K_N =	1.00	Trench Compaction Modifier

Calculations for Vertical Offset

	Lower	Upper	
$W_E = \gamma \cdot D \cdot H$ =	1914.000	957.000	Normal Force Due to Soil
$W = 2W_E + W_p + W_w$ =	3936.940	2022.940	Normal Force Acting on Pipeline
$K_p = \tan^2((\pi / 180) \cdot (45 + (\Phi / 2)))$ =	3.852	3.852	Rankin Passive Pressure Coeff.
$H_c = H + (D / 2)$ =	12.725	6.725	Depth From Surface to Pipe Center
$\sigma_h = \gamma \cdot H_c \cdot K_p + 2c\sqrt{K_p}$ =	5391.837		Horizontal Passive Soil Pressure
$A_p = \pi \cdot (D / 2)$ =	2.278	2.278	Area Based on Half of Circumference
$R_S = K_N \cdot \sigma_h \cdot D$ =	7818.164	7818.164	Bearing Resistance of Pipelines
$F_s = A_p \cdot f_c \cdot c + W \cdot \tan((\pi / 180) \cdot f_\phi \cdot \Phi)$ =	1852.583	951.923	Frictional Resitance
$L = (S_f \cdot P \cdot A \cdot \tan((\pi / 180) \cdot (\theta / 2))) / (F_s + (R_S / 2))$ =	5.129		Minimum Restrained Length Lower
$L = (S_f \cdot P \cdot A \cdot \tan((\pi / 180) \cdot (\theta / 2))) / F_s$ =		31.041	Minimum Restrained Length Upper

MEGALUG®

Created by EBAA Iron's Restraint Length Calculator v7.1.3 on February 19, 2025

811 Know what's below. Call before you dig.

CAUTION: CONTRACTOR NOTE

THE LOCATION OF EXISTING UNDERGROUND AND OVERHEAD UTILITIES ARE APPROXIMATE LOCATIONS ONLY. THE CONTRACTOR SHALL CONTACT UTILITY COMPANIES PRIOR TO CONSTRUCTION. CONTRACTOR SHALL DETERMINE, AND FIELD VERIFY EXISTING UTILITY LOCATIONS AND DEPTHS PRIOR TO BEGINNING CONSTRUCTION AND SHALL BE FULLY RESPONSIBLE FOR ANY AND ALL DAMAGES WHICH MIGHT OCCUR.

CONTRACTOR SHALL CONSIDER PROPOSED UTILITY IMPROVEMENTS AND PROVIDE ADEQUATE HORIZONTAL AND VERTICAL CLEARANCE DURING INSTALLATION OF ALL UTILITY INFRASTRUCTURE.

NO.	REVISION	BY	DATE

BGE JOB NO. XXXX-XX
FILE
DATE 02/21/2025
DESIGNED XXX
DRAWN XXX
REVISED XXX
CHECKED XXX

SHELL ROAD UTILITY RELOCATIONS

JOINT RESTRAINT CALCS (5 OF 27)

CITY OF GEORGETOWN

BGE, INC
101 WEST LOUIS HENNA BLVD., STE 400
AUSTIN, TX 78728
TBPE Registration No. F-1046
TEL: 512-873-0400 www.bgeinc.com

STATE OF TEXAS
BRITTANY LYNN FAIRBURN
132905
LICENSED
PROFESSIONAL ENGINEER
Brittany Lynn Fairburn
02/21/2025

SHEET
373

100% SUBMITTAL

FILE LOCATION: G:\TXC\PROJECTS\CITY_GEORGETOWN\10767-00 SHELL ROAD\03_CADD\01_SHTS_PW\SHELL_JOINT_RESTRAINTS.DWG DATE SAVED: 2/20/2025

Project Name: Shell Rd

Project Notes:

Built Stronger. Lasts Longer.
EBAA IRON
EBAA IRON SALES, INC.
www.ebaa.com • contact@ebaa.com • 800.433.1716

RESTRAINT LENGTH VALUES

Fitting Type	Pipe Material	Soil Type	Safety Factor	Trench Type	Depth of Bury	Test Pressure	Nominal Size	Bend Angle	Branch Size	Length Along Run	Reduced Size	Lowside Depth	Restraint Length	Restraint Length 2
Horizontal Bend	PVC	GW	1.5	5	6 Ft.	200 PSI	16 In.	22.5°					5 Ft.	

Site Name: WL-B HB @ 1+85.08

Site Notes:

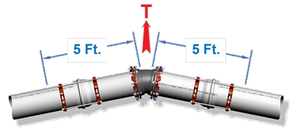

ALL JOINTS WITHIN THE CALCULATED LENGTH MUST BE RESTRAINED
IF YOUR DISTANCE BETWEEN FITTINGS IS LESS THAN OR EQUAL TO THE CALCULATED RESTRAINT LENGTH, RESTRAIN ALL JOINTS BETWEEN THOSE FITTINGS.

Defined Variables

H =	6	Depth of Bury
S_f =	1.5	Safety Factor
P =	200	Internal Pressure
θ =	22.5	Bend Angle

Pipe Derived Variables

A =	237.79	Cross Sec. Area of Pipe
D =	1.45	Outside Pipe Diameter
W_p =	21.14	Weight of Pipe
W_w =	87.80	Weight of Water in Pipe

Defined Variables

f_c =	0.00	Cohesion Modifier Coefficient
c =	0	Cohesion of Soil
f_ϕ =	0.70	Friction Angle Modifier
Φ =	36	Internal Friction Angle of Soil
γ =	110	Soil Density
K_N =	1.00	Trench Compaction Modifier

Calculations for Horizontal Bend

$W_E = \gamma \cdot D \cdot H$ =	957.000	Normal Force Due to Soil
$W = 2W_E + W_p + W_w$ =	2022.940	Normal Force Acting on Pipeline
$K_p = \tan^2((\pi / 180) \cdot (45 + (\Phi / 2)))$ =	3.852	Rankin Passive Pressure Coeff.
$H_C = H + (D / 2)$ =	6.725	Depth From Surface to Pipe Center
$\sigma_h = \gamma \cdot H_C \cdot K_p + 2c\sqrt{K_p}$ =	2849.517	Horizontal Passive Soil Pressure
$A_p = \pi \cdot (D / 2)$ =	2.278	Area Based on Half of Circumference
$R_S = K_N \cdot \sigma_h \cdot D$ =	4131.800	Bearing Resistance of Pipelines
$F_s = A_p \cdot f_c \cdot c + W \cdot \tan((\pi / 180) \cdot f_\phi \cdot \Phi)$ =	951.923	Frictional Resitance
$L = (S_f \cdot P \cdot A \cdot \tan((\pi / 180) \cdot (\theta / 2))) / (F_s + (R_s / 2))$ =	4.702	Minimum Restrained Length

MEGALUG®

Created by EBAA Iron's Restraint Length Calculator v7.1.3 on February 19, 2025

Project Name: Shell Rd

Project Notes:

Built Stronger. Lasts Longer.
EBAA IRON
EBAA IRON SALES, INC.
www.ebaa.com • contact@ebaa.com • 800.433.1716

RESTRAINT LENGTH VALUES

Fitting Type	Pipe Material	Soil Type	Safety Factor	Trench Type	Depth of Bury	Test Pressure	Nominal Size	Bend Angle	Branch Size	Length Along Run	Reduced Size	Lowside Depth	Restraint Length	Restraint Length 2
Tee	PVC	GW	1.5	5	5 Ft.	200 PSI	16 In.		6 In.	2 Ft.			3 Ft.	

Site Name: WL-B Tee @ 1+87.84

Site Notes:

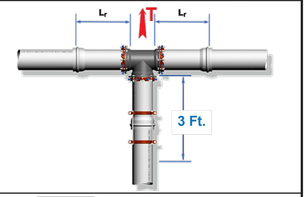

ALL JOINTS WITHIN THE CALCULATED LENGTH MUST BE RESTRAINED
IF YOUR DISTANCE BETWEEN FITTINGS IS LESS THAN OR EQUAL TO THE CALCULATED RESTRAINT LENGTH, RESTRAIN ALL JOINTS BETWEEN THOSE FITTINGS.

Defined Variables

H =	5	Depth of Bury
S_f =	1.5	Safety Factor
P =	200	Internal Pressure

Pipe Derived Variables

A =	237.79	Cross Sec. Area (Main)
A_b =	37.39	Cross Sec. Area (Branch)
D =	1.45	Outside Pipe Diameter
D_b =	0.58	Outside Diameter Branch
W_p =	3.31	Weight of Pipe
W_w =	13.81	Weight of Water in Pipe
L_r =	2	Min. restrained Length either side of Tee

Defined Variables

f_c =	0.00	Cohesion Modifier Coefficient
c =	0	Cohesion of Soil
f_ϕ =	0.70	Friction Angle Modifier
Φ =	36	Internal Friction Angle of Soil
γ =	110	Soil Density

Calculations for Tee

$W_E = \gamma \cdot D \cdot H$ =	319.000	Normal Force Due to Soil
$W = 2W_E + W_p + W_w$ =	655.120	Normal Force Acting on Pipeline
$K_p = \tan^2((\pi / 180) \cdot (45 + (\Phi / 2)))$ =	3.852	Rankin Passive Pressure Coeff.
$H_C = H + (D / 2)$ =	5.725	Depth From Surface to Pipe Center
$\sigma_h = \gamma \cdot H_C \cdot K_p + 2c\sqrt{K_p}$ =	2425.797	Horizontal Passive Soil Pressure
$A_p = \pi \cdot (D / 2)$ =	2.278	Area Based on Half of Circumference
$(A_p)_b = \pi \cdot D_b$ =	1.822	Area Based on Full Branch Circumference
$R_S = K_N \cdot \sigma_h \cdot D$ =	3517.406	Bearing Resistance of Pipelines
$F_{sb} = (A_p)_b \cdot f_c \cdot c + W \cdot \tan((\pi / 180) f_\phi \cdot \Phi)$ =	308.276	Frictional Resistance
$L_b = S_f(P \cdot A_b - R_s \cdot L_r) / F_{sb}$ =	2.156	Minimum Restrained Length Branch

MEGALUG®

Created by EBAA Iron's Restraint Length Calculator v7.1.3 on February 19, 2025

Project Name: Shell Rd

Project Notes:

Built Stronger. Lasts Longer.
EBAA IRON
EBAA IRON SALES, INC.
www.ebaa.com • contact@ebaa.com • 800.433.1716

RESTRAINT LENGTH VALUES

Fitting Type	Pipe Material	Soil Type	Safety Factor	Trench Type	Depth of Bury	Test Pressure	Nominal Size	Bend Angle	Branch Size	Length Along Run	Reduced Size	Lowside Depth	Restraint Length	Restraint Length 2
Tee	PVC	GW	1.5	5	4 Ft.	200 PSI	16 In.		16 In.	3 Ft.			90 Ft.	

Site Name: WL-B Tee @ 1+90.33

Site Notes:

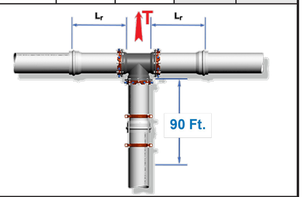

ALL JOINTS WITHIN THE CALCULATED LENGTH MUST BE RESTRAINED
IF YOUR DISTANCE BETWEEN FITTINGS IS LESS THAN OR EQUAL TO THE CALCULATED RESTRAINT LENGTH, RESTRAIN ALL JOINTS BETWEEN THOSE FITTINGS.

Defined Variables

H =	4	Depth of Bury
S_f =	1.5	Safety Factor
P =	200	Internal Pressure

Pipe Derived Variables

A =	237.79	Cross Sec. Area (Main)
A_b =	237.79	Cross Sec. Area (Branch)
D =	1.45	Outside Pipe Diameter
D_b =	1.45	Outside Diameter Branch
W_p =	21.14	Weight of Pipe
W_w =	87.80	Weight of Water in Pipe
L_r =	3	Min. restrained Length either side of Tee

Defined Variables

f_c =	0.00	Cohesion Modifier Coefficient
c =	0	Cohesion of Soil
f_ϕ =	0.70	Friction Angle Modifier
Φ =	36	Internal Friction Angle of Soil
γ =	110	Soil Density

Calculations for Tee

$W_E = \gamma \cdot D \cdot H$ =	638.000	Normal Force Due to Soil
$W = 2W_E + W_p + W_w$ =	1384.940	Normal Force Acting on Pipeline
$K_p = \tan^2((\pi / 180) \cdot (45 + (\Phi / 2)))$ =	3.852	Rankin Passive Pressure Coeff.
$H_C = H + (D / 2)$ =	4.725	Depth From Surface to Pipe Center
$\sigma_h = \gamma \cdot H_C \cdot K_p + 2c\sqrt{K_p}$ =	2002.077	Horizontal Passive Soil Pressure
$A_p = \pi \cdot (D / 2)$ =	2.278	Area Based on Half of Circumference
$(A_p)_b = \pi \cdot D_b$ =	4.555	Area Based on Full Branch Circumference
$R_S = K_N \cdot \sigma_h \cdot D$ =	2903.012	Bearing Resistance of Pipelines
$F_{sb} = (A_p)_b \cdot f_c \cdot c + W \cdot \tan((\pi / 180) f_\phi \cdot \Phi)$ =	651.703	Frictional Resistance
$L_b = S_f(P \cdot A_b - R_s \cdot L_r) / F_{sb}$ =	89.417	Minimum Restrained Length Branch

MEGALUG®

Created by EBAA Iron's Restraint Length Calculator v7.1.3 on February 19, 2025

Project Name: Shell Rd

Project Notes:

Built Stronger. Lasts Longer.
EBAA IRON
EBAA IRON SALES, INC.
www.ebaa.com • contact@ebaa.com • 800.433.1716

RESTRAINT LENGTH VALUES

Fitting Type	Pipe Material	Soil Type	Safety Factor	Trench Type	Depth of Bury	Test Pressure	Nominal Size	Bend Angle	Branch Size	Length Along Run	Reduced Size	Lowside Depth	Restraint Length	Restraint Length 2
Dead End	PVC	GW	1.5	5	5 Ft.	200 PSI	16 In.						89 Ft.	

Site Name: WL-B GV @ 1+91.85

Site Notes:

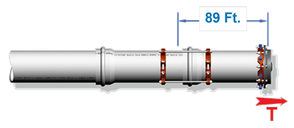

ALL JOINTS WITHIN THE CALCULATED LENGTH MUST BE RESTRAINED
IF YOUR DISTANCE BETWEEN FITTINGS IS LESS THAN OR EQUAL TO THE CALCULATED RESTRAINT LENGTH, RESTRAIN ALL JOINTS BETWEEN THOSE FITTINGS.

Defined Variables

H =	5	Depth of Bury
S_f =	1.5	Safety Factor
P =	200	Internal Pressure

Pipe Derived Variables

A =	237.79	Cross Sec. Area of Pipe
D =	1.45	Outside Pipe Diameter
W_p =	21.14	Weight of Pipe
W_w =	87.80	Weight of Water in Pipe

Defined Variables

f_c =	0.00	Cohesion Modifier Coefficient
c =	0	Cohesion of Soil
f_ϕ =	0.70	Friction Angle Modifier
Φ =	36	Internal Friction Angle of Soil
γ =	110	Soil Density

Calculations for Dead End

$W_E = \gamma \cdot D \cdot H$ =	797.500	Normal Force Due to Soil
$W = 2W_E + W_p + W_w$ =	1703.940	Normal Force Acting on Pipeline
$(A_p)_b = \pi \cdot D$ =	4.555	Area Based on Full Pipe Circumference
$F_{sb} = (A_p)_b \cdot f_c \cdot c + W \cdot \tan((\pi / 180) f_\phi \cdot \Phi)$ =	801.813	Frictional Resistance
$L = S_f \cdot P \cdot A / F_{sb}$ =	88.970	Minimum Restrained Length of Dead End

MEGALUG®

Created by EBAA Iron's Restraint Length Calculator v7.1.3 on February 19, 2025

CAUTION: CONTRACTOR NOTE

811 Know what's below. Call before you dig.

THE LOCATION OF EXISTING UNDERGROUND AND OVERHEAD UTILITIES ARE APPROXIMATE LOCATIONS ONLY. THE CONTRACTOR SHALL CONTACT UTILITY COMPANIES PRIOR TO CONSTRUCTION. CONTRACTOR SHALL DETERMINE, AND FIELD VERIFY EXISTING UTILITY LOCATIONS AND DEPTHS PRIOR TO BEGINNING CONSTRUCTION AND SHALL BE FULLY RESPONSIBLE FOR ANY AND ALL DAMAGES WHICH MIGHT OCCUR.

CONTRACTOR SHALL CONSIDER PROPOSED UTILITY IMPROVEMENTS AND PROVIDE ADEQUATE HORIZONTAL AND VERTICAL CLEARANCE DURING INSTALLATION OF ALL UTILITY INFRASTRUCTURE.

NO.	REVISION	BY	DATE

BGE JOB NO. XXXX-XX
FILE
DATE 02/21/2025
DESIGNED XXX
DRAWN XXX
REVISED XXX
CHECKED XXX

SHELL ROAD UTILITY RELOCATIONS

JOINT RESTRAINT CALCS (6 OF 27)

CITY OF GEORGETOWN

BGE

BGE, INC
101 WEST LOUIS HENNA BLVD., STE 400
AUSTIN, TX 78728
TBPE Registration No. F-1046
TEL: 512-879-0400 www.bgeinc.com

STATE OF TEXAS
BRITTANY LYNN FAIRBURN
132905
LICENSED
PROFESSIONAL ENGINEER

Brittany-Lynn Fairburn

02/21/2025

SHEET

374

100% SUBMITTAL

FILE LOCATION: G:\TXC\PROJECTS\CITY_GEORGETOWN\10767-00 SHELL ROAD\03_CADD\01_SHTS_PW\SHELL_JOINT_RESTRAINTS.DWG DATE SAVED: 2/20/2025

Project Name: Shell Rd

Project Notes:

Built Stronger. Lasts Longer.
EBAA IRON
EBAA IRON SALES, INC.
www.ebaa.com • contact@ebaa.com • 800.433.1716

RESTRAINT LENGTH VALUES

Fitting Type	Pipe Material	Soil Type	Safety Factor	Trench Type	Depth of Bury	Test Pressure	Nominal Size	Bend Angle	Branch Size	Length Along Run	Reduced Size	Lowside Depth	Restraint Length	Restraint Length 2
Tee	PVC	GW	1.5	5	5 Ft.	200 PSI	16 In.		6 In.	1 Ft.			20 Ft.	

Site Name: WL-B Tee @ 1+93.27

Site Notes:

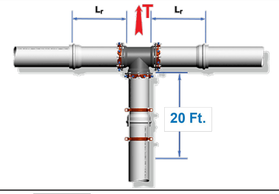

ALL JOINTS WITHIN THE CALCULATED LENGTH MUST BE RESTRAINED
IF YOUR DISTANCE BETWEEN FITTINGS IS LESS THAN OR EQUAL TO THE CALCULATED RESTRAINT LENGTH, RESTRAIN ALL JOINTS BETWEEN THOSE FITTINGS.

Defined Variables

H =	5	Depth of Bury
S_f =	1.5	Safety Factor
P =	200	Internal Pressure

Pipe Derived Variables

A =	237.79	Cross Sec. Area (Main)
A_b =	37.39	Cross Sec. Area (Branch)
D =	1.45	Outside Pipe Diameter
D_b =	0.58	Outside Diameter Branch
W_p =	3.31	Weight of Pipe
W_w =	13.81	Weight of Water in Pipe
L_r =	1	Min. restrained Length either side of Tee

Defined Variables

f_c =	0.00	Cohesion Modifier Coefficient
c =	0	Cohesion of Soil
f_ϕ =	0.70	Friction Angle Modifier
Φ =	36	Internal Friction Angle of Soil
γ =	110	Soil Density

Calculations for Tee

$W_E = \gamma \cdot D \cdot H$ =	319.000	Normal Force Due to Soil
$W = 2W_E + W_p + W_w$ =	655.120	Normal Force Acting on Pipeline
$K_p = \tan^2((\pi / 180) \cdot (45 + (\Phi / 2)))$ =	3.852	Rankin Passive Pressure Coeff.
$H_c = H + (D / 2)$ =	5.725	Depth From Surface to Pipe Center
$\sigma_k = \gamma \cdot H_c \cdot K_p + 2c\sqrt{K_p}$ =	2425.797	Horizontal Passive Soil Pressure
$A_p = \pi \cdot (D / 2)$ =	2.278	Area Based on Half of Circumference
$(A_p)_b = \pi \cdot D_b$ =	1.822	Area Based on Full Branch Circumference
$R_S = K_N \cdot \sigma_k \cdot D$ =	3517.406	Bearing Resistance of Pipelines
$F_{sb} = (A_p)_b \cdot f_c \cdot c + W \cdot \tan((\pi / 180) f_\phi \cdot \Phi)$ =	308.276	Frictional Resistance
$L_b = S_f(P \cdot A_b - R_S \cdot L_r) / F_{sb}$ =	19.271	Minimum Restrained Length Branch

MEGALUG®

Created by EBAA Iron's Restraint Length Calculator v7.1.3 on February 19, 2025

Project Name: Shell Rd

Project Notes:

Built Stronger. Lasts Longer.
EBAA IRON
EBAA IRON SALES, INC.
www.ebaa.com • contact@ebaa.com • 800.433.1716

RESTRAINT LENGTH VALUES

Fitting Type	Pipe Material	Soil Type	Safety Factor	Trench Type	Depth of Bury	Test Pressure	Nominal Size	Bend Angle	Branch Size	Length Along Run	Reduced Size	Lowside Depth	Restraint Length	Restraint Length 2
Dead End	PVC	GW	1.5	5	5 Ft.	200 PSI	6 In.						37 Ft.	

Site Name: WL-B GV @ 193.27

Site Notes:

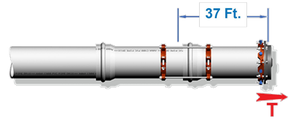

ALL JOINTS WITHIN THE CALCULATED LENGTH MUST BE RESTRAINED
IF YOUR DISTANCE BETWEEN FITTINGS IS LESS THAN OR EQUAL TO THE CALCULATED RESTRAINT LENGTH, RESTRAIN ALL JOINTS BETWEEN THOSE FITTINGS.

Defined Variables

H =	5	Depth of Bury
S_f =	1.5	Safety Factor
P =	200	Internal Pressure

Pipe Derived Variables

A =	37.39	Cross Sec. Area of Pipe
D =	0.58	Outside Pipe Diameter
W_p =	3.31	Weight of Pipe
W_w =	13.81	Weight of Water in Pipe

Defined Variables

f_c =	0.00	Cohesion Modifier Coefficient
c =	0	Cohesion of Soil
f_ϕ =	0.70	Friction Angle Modifier
Φ =	36	Internal Friction Angle of Soil
γ =	110	Soil Density

Calculations for Dead End

$W_E = \gamma \cdot D \cdot H$ =	319.000	Normal Force Due to Soil
$W = 2W_E + W_p + W_w$ =	655.120	Normal Force Acting on Pipeline
$(A_p)_b = \pi \cdot D$ =	1.822	Area Based on Full Pipe Circumference
$F_{sb} = (A_p)_b \cdot f_c \cdot c + W \cdot \tan((\pi / 180) f_\phi \cdot \Phi)$ =	308.276	Frictional Resistance
$L = S_f \cdot P \cdot A / F_{sb}$ =	36.386	Minimum Restrained Length of Dead End

MEGALUG®

Created by EBAA Iron's Restraint Length Calculator v7.1.3 on February 19, 2025

Project Name: Shell Rd

Project Notes:

Built Stronger. Lasts Longer.
EBAA IRON
EBAA IRON SALES, INC.
www.ebaa.com • contact@ebaa.com • 800.433.1716

RESTRAINT LENGTH VALUES

Fitting Type	Pipe Material	Soil Type	Safety Factor	Trench Type	Depth of Bury	Test Pressure	Nominal Size	Bend Angle	Branch Size	Length Along Run	Reduced Size	Lowside Depth	Restraint Length	Restraint Length 2
Dead End	PVC	GW	1.5	5	5 Ft.	200 PSI	16 In.						89 Ft.	

Site Name: WL-B Cap @ 2+04.48

Site Notes:

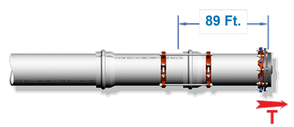

ALL JOINTS WITHIN THE CALCULATED LENGTH MUST BE RESTRAINED
IF YOUR DISTANCE BETWEEN FITTINGS IS LESS THAN OR EQUAL TO THE CALCULATED RESTRAINT LENGTH, RESTRAIN ALL JOINTS BETWEEN THOSE FITTINGS.

Defined Variables

H =	5	Depth of Bury
S_f =	1.5	Safety Factor
P =	200	Internal Pressure

Pipe Derived Variables

A =	237.79	Cross Sec. Area of Pipe
D =	1.45	Outside Pipe Diameter
W_p =	21.14	Weight of Pipe
W_w =	87.80	Weight of Water in Pipe

Defined Variables

f_c =	0.00	Cohesion Modifier Coefficient
c =	0	Cohesion of Soil
f_ϕ =	0.70	Friction Angle Modifier
Φ =	36	Internal Friction Angle of Soil
γ =	110	Soil Density

Calculations for Dead End

$W_E = \gamma \cdot D \cdot H$ =	797.500	Normal Force Due to Soil
$W = 2W_E + W_p + W_w$ =	1703.940	Normal Force Acting on Pipeline
$(A_p)_b = \pi \cdot D$ =	4.555	Area Based on Full Pipe Circumference
$F_{sb} = (A_p)_b \cdot f_c \cdot c + W \cdot \tan((\pi / 180) f_\phi \cdot \Phi)$ =	801.813	Frictional Resistance
$L = S_f \cdot P \cdot A / F_{sb}$ =	88.970	Minimum Restrained Length of Dead End

MEGALUG®

Created by EBAA Iron's Restraint Length Calculator v7.1.3 on February 19, 2025

Project Name: Shell Rd

Project Notes:

Built Stronger. Lasts Longer.
EBAA IRON
EBAA IRON SALES, INC.
www.ebaa.com • contact@ebaa.com • 800.433.1716

RESTRAINT LENGTH VALUES

Fitting Type	Pipe Material	Soil Type	Safety Factor	Trench Type	Depth of Bury	Test Pressure	Nominal Size	Bend Angle	Branch Size	Length Along Run	Reduced Size	Lowside Depth	Restraint Length	Restraint Length 2
Horizontal Bend	PVC	GW	1.5	5	6 Ft.	200 PSI	16 In.	45°					10 Ft.	

Site Name: WL-B.2 HB @ 0+13.99

Site Notes:

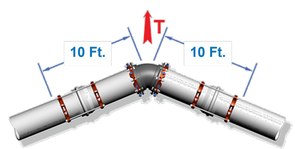

ALL JOINTS WITHIN THE CALCULATED LENGTH MUST BE RESTRAINED
IF YOUR DISTANCE BETWEEN FITTINGS IS LESS THAN OR EQUAL TO THE CALCULATED RESTRAINT LENGTH, RESTRAIN ALL JOINTS BETWEEN THOSE FITTINGS.

Defined Variables

H =	6	Depth of Bury
S_f =	1.5	Safety Factor
P =	200	Internal Pressure
θ =	45	Bend Angle

Pipe Derived Variables

A =	237.79	Cross Sec. Area of Pipe
D =	1.45	Outside Pipe Diameter
W_p =	21.14	Weight of Pipe
W_w =	87.80	Weight of Water in Pipe

Defined Variables

f_c =	0.00	Cohesion Modifier Coefficient
c =	0	Cohesion of Soil
f_ϕ =	0.70	Friction Angle Modifier
Φ =	36	Internal Friction Angle of Soil
γ =	110	Soil Density
K_N =	1.00	Trench Compaction Modifier

Calculations for Horizontal Bend

$W_E = \gamma \cdot D \cdot H$ =	957.000	Normal Force Due to Soil
$W = 2W_E + W_p + W_w$ =	2022.940	Normal Force Acting on Pipeline
$K_p = \tan^2((\pi / 180) \cdot (45 + (\Phi / 2)))$ =	3.852	Rankin Passive Pressure Coeff.
$H_c = H + (D / 2)$ =	6.725	Depth From Surface to Pipe Center
$\sigma_k = \gamma \cdot H_c \cdot K_p + 2c\sqrt{K_p}$ =	2849.517	Horizontal Passive Soil Pressure
$A_p = \pi \cdot (D / 2)$ =	2.278	Area Based on Half of Circumference
$R_S = K_N \cdot \sigma_k \cdot D$ =	4131.800	Bearing Resistance of Pipelines
$F_s = A_p \cdot f_c \cdot c + W \cdot \tan((\pi / 180) \cdot f_\phi \cdot \Phi)$ =	951.923	Frictional Resitance
$L = (S_f \cdot P \cdot A \cdot \tan((\pi / 180) \cdot (\theta / 2))) / (F_s + (R_s / 2))$ =	9.791	Minimum Restrained Length

MEGALUG®

Created by EBAA Iron's Restraint Length Calculator v7.1.3 on February 19, 2025

811 Know what's below. Call before you dig.

CAUTION: CONTRACTOR NOTE

THE LOCATION OF EXISTING UNDERGROUND AND OVERHEAD UTILITIES ARE APPROXIMATE LOCATIONS ONLY. THE CONTRACTOR SHALL CONTACT UTILITY COMPANIES PRIOR TO CONSTRUCTION. CONTRACTOR SHALL DETERMINE, AND FIELD VERIFY EXISTING UTILITY LOCATIONS AND DEPTHS PRIOR TO BEGINNING CONSTRUCTION AND SHALL BE FULLY RESPONSIBLE FOR ANY AND ALL DAMAGES WHICH MIGHT OCCUR.

CONTRACTOR SHALL CONSIDER PROPOSED UTILITY IMPROVEMENTS AND PROVIDE ADEQUATE HORIZONTAL AND VERTICAL CLEARANCE DURING INSTALLATION OF ALL UTILITY INFRASTRUCTURE.

NO.	REVISION	BY	DATE

BGE JOB NO. XXXX-XX
FILE
DATE 02/21/2025
DESIGNED XXX
DRAWN XXX
REVISED XXX
CHECKED XXX

SHELL ROAD UTILITY RELOCATIONS

JOINT RESTRAINT CALCS (7 OF 27)

CITY OF GEORGETOWN

BGE

BGE, INC
101 WEST LOUIS HENNA BLVD., STE 400
AUSTIN, TX 78728
TBPE Registration No. F-1046
TEL: 512-879-0400 www.bgeinc.com

STATE OF TEXAS
BRITTANY LYNN FAIRBURN
132905
LICENSED
PROFESSIONAL ENGINEER

Brittany Lynn Fairburn

02/21/2025

SHEET

375

100% SUBMITTAL

FILE LOCATION: G:\TXC\PROJECTS\CITY_GEORGETOWN\10767-00 SHELL ROAD\03_CADD\01_SHTS_PW\SHELL_JOINT_RESTRAINTS.DWG DATE SAVED: 2/20/2025

Project Name: Shell Rd

Project Notes:

Built Stronger. Lasts Longer.
EBAA IRON
EBAA IRON SALES, INC.
www.ebaa.com • contact@ebaa.com • 800.433.1716

RESTRAINT LENGTH VALUES

Fitting Type	Pipe Material	Soil Type	Safety Factor	Trench Type	Depth of Bury	Test Pressure	Nominal Size	Bend Angle	Branch Size	Length Along Run	Reduced Size	Lowside Depth	Restraint Length	Restraint Length 2
Tee	PVC	GW	1.5	5	7 Ft.	200 PSI	16 In.		6 In.	12 Ft.			1 Ft.	

Site Name: WL-B.2 Tee @ 0+28.62

Site Notes:

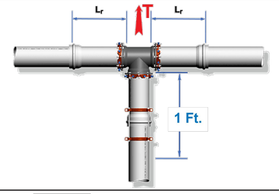

ALL JOINTS WITHIN THE CALCULATED LENGTH MUST BE RESTRAINED
IF YOUR DISTANCE BETWEEN FITTINGS IS LESS THAN OR EQUAL TO THE CALCULATED RESTRAINT LENGTH, RESTRAIN ALL JOINTS BETWEEN THOSE FITTINGS.

Defined Variables

H =	7	Depth of Bury
S_f =	1.5	Safety Factor
P =	200	Internal Pressure

Pipe Derived Variables

A =	237.79	Cross Sec. Area (Main)
A_b =	37.39	Cross Sec. Area (Branch)
D =	1.45	Outside Pipe Diameter
D_b =	0.58	Outside Diameter Branch
W_p =	3.31	Weight of Pipe
W_w =	13.81	Weight of Water in Pipe
L_r =	12	Min. restrained Length either side of Tee

Defined Variables

f_c =	0.00	Cohesion Modifier Coefficient
c =	0	Cohesion of Soil
f_ϕ =	0.70	Friction Angle Modifier
Φ =	36	Internal Friction Angle of Soil
γ =	110	Soil Density
K_N =	1.00	Trench Compaction Modifier

Calculations for Tee

$W_E = \gamma \cdot D \cdot H$ =	446.600	Normal Force Due to Soil
$W = 2W_E + W_P + W_W$ =	910.320	Normal Force Acting on Pipeline
$K_p = \tan^2((\pi / 180) \cdot (45 + (\Phi / 2)))$ =	3.852	Rankin Passive Pressure Coeff.
$H_C = H + (D / 2)$ =	7.725	Depth From Surface to Pipe Center
$\sigma_h = \gamma \cdot H_C \cdot K_p + 2c\sqrt{K_p}$ =	3273.237	Horizontal Passive Soil Pressure
$A_p = \pi \cdot (D / 2)$ =	2.278	Area Based on Half of Circumference
$(A_p)_b = \pi \cdot D_b$ =	1.822	Area Based on Full Branch Circumference
$R_S = K_N \cdot \sigma_h \cdot D$ =	4746.194	Bearing Resistance of Pipelines
$F_{sb} = (A_p)_b \cdot f_c \cdot c + W \cdot \tan((\pi / 180) f_\phi \cdot \Phi)$ =	428.364	Frictional Resistance
$L_b = S_f(P \cdot A_b - R_S \cdot L_r) / F_{sb}$ =	-173.251	Minimum Restrained Length Branch

MEGALUG®

Created by EBAA Iron's Restraint Length Calculator v7.1.3 on February 19, 2025

Project Name: Shell Rd

Project Notes:

Built Stronger. Lasts Longer.
EBAA IRON
EBAA IRON SALES, INC.
www.ebaa.com • contact@ebaa.com • 800.433.1716

RESTRAINT LENGTH VALUES

Fitting Type	Pipe Material	Soil Type	Safety Factor	Trench Type	Depth of Bury	Test Pressure	Nominal Size	Bend Angle	Branch Size	Length Along Run	Reduced Size	Lowside Depth	Restraint Length	Restraint Length 2
Horizontal Bend	PVC	GW	1.5	5	7 Ft.	200 PSI	16 In.	45°					9 Ft.	

Site Name: WL-B.2 HB @ 0+40.61

Site Notes:

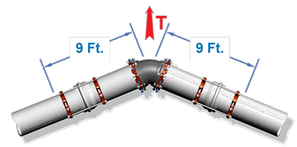

ALL JOINTS WITHIN THE CALCULATED LENGTH MUST BE RESTRAINED
IF YOUR DISTANCE BETWEEN FITTINGS IS LESS THAN OR EQUAL TO THE CALCULATED RESTRAINT LENGTH, RESTRAIN ALL JOINTS BETWEEN THOSE FITTINGS.

Defined Variables

H =	7	Depth of Bury
S_f =	1.5	Safety Factor
P =	200	Internal Pressure
θ =	45	Bend Angle

Pipe Derived Variables

A =	237.79	Cross Sec. Area of Pipe
D =	1.45	Outside Pipe Diameter
W_p =	21.14	Weight of Pipe
W_w =	87.80	Weight of Water in Pipe

Defined Variables

f_c =	0.00	Cohesion Modifier Coefficient
c =	0	Cohesion of Soil
f_ϕ =	0.70	Friction Angle Modifier
Φ =	36	Internal Friction Angle of Soil
γ =	110	Soil Density
K_N =	1.00	Trench Compaction Modifier

Calculations for Horizontal Bend

$W_E = \gamma \cdot D \cdot H$ =	1116.500	Normal Force Due to Soil
$W = 2W_E + W_P + W_W$ =	2341.940	Normal Force Acting on Pipeline
$K_p = \tan^2((\pi / 180) \cdot (45 + (\Phi / 2)))$ =	3.852	Rankin Passive Pressure Coeff.
$H_C = H + (D / 2)$ =	7.725	Depth From Surface to Pipe Center
$\sigma_h = \gamma \cdot H_C \cdot K_p + 2c\sqrt{K_p}$ =	3273.237	Horizontal Passive Soil Pressure
$A_p = \pi \cdot (D / 2)$ =	2.278	Area Based on Half of Circumference
$R_S = K_N \cdot \sigma_h \cdot D$ =	4746.194	Bearing Resistance of Pipelines
$F_s = A_p \cdot f_c \cdot c + W \cdot \tan((\pi / 180) \cdot f_\phi \cdot \Phi)$ =	1102.033	Frictional Resitance
$L = (S_f \cdot P \cdot A \cdot \tan((\pi / 180) \cdot (\theta / 2))) / (F_s + (R_S / 2))$ =	8.503	Minimum Restrained Length

MEGALUG®

Created by EBAA Iron's Restraint Length Calculator v7.1.3 on February 19, 2025

Project Name: Shell Rd

Project Notes:

Built Stronger. Lasts Longer.
EBAA IRON
EBAA IRON SALES, INC.
www.ebaa.com • contact@ebaa.com • 800.433.1716

RESTRAINT LENGTH VALUES

Fitting Type	Pipe Material	Soil Type	Safety Factor	Trench Type	Depth of Bury	Test Pressure	Nominal Size	Bend Angle	Branch Size	Length Along Run	Reduced Size	Lowside Depth	Restraint Length	Restraint Length 2
Vertical Offset	PVC	GW	1.5	5	7 Ft.	200 PSI	16 In.	45°				11 Ft.	27 Ft.	6 Ft.

Site Name: WL-B.2 VB @ 0+78.98 - 0+83.37

Site Notes:

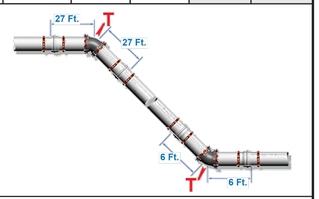

ALL JOINTS WITHIN THE CALCULATED LENGTH MUST BE RESTRAINED
IF YOUR DISTANCE BETWEEN FITTINGS IS LESS THAN OR EQUAL TO THE CALCULATED RESTRAINT LENGTH, RESTRAIN ALL JOINTS BETWEEN THOSE FITTINGS.

Defined Variables

H =	7	Depth of Bury
S_f =	1.5	Safety Factor
P =	200	Internal Pressure
θ =	45	Bend Angle

Pipe Derived Variables

A =	237.79	Cross Sec. Area of Pipe
D =	1.45	Outside Pipe Diameter
W_p =	21.14	Weight of Pipe
W_w =	87.80	Weight of Water in Pipe

Defined Variables

f_c =	0.00	Cohesion Modifier Coefficient
c =	0	Cohesion of Soil
f_ϕ =	0.70	Friction Angle Modifier
Φ =	36	Internal Friction Angle of Soil
γ =	110	Soil Density
K_N =	1.00	Trench Compaction Modifier

Calculations for Vertical Offset

	Lower	Upper	
$W_E = \gamma \cdot D \cdot H$ =	1754.500	1116.500	Normal Force Due to Soil
$W = 2W_E + W_P + W_W$ =	3617.940	2341.940	Normal Force Acting on Pipeline
$K_p = \tan^2((\pi / 180) \cdot (45 + (\Phi / 2)))$ =	3.852	3.852	Rankin Passive Pressure Coeff.
$H_C = H + (D / 2)$ =	11.725	7.725	Depth From Surface to Pipe Center
$\sigma_h = \gamma \cdot H_C \cdot K_p + 2c\sqrt{K_p}$ =	4968.117		Horizontal Passive Soil Pressure
$A_p = \pi \cdot (D / 2)$ =	2.278	2.278	Area Based on Half of Circumference
$R_S = K_N \cdot \sigma_h \cdot D$ =	7203.770	7203.770	Bearing Resistance of Pipelines
$F_s = A_p \cdot f_c \cdot c + W \cdot \tan((\pi / 180) \cdot f_\phi \cdot \Phi)$ =	1702.473	1102.033	Frictional Resitance
$L = (S_f \cdot P \cdot A \cdot \tan((\pi / 180) \cdot (\theta / 2))) / (F_s + (R_S / 2))$ =	5.571		Minimum Restrained Length Lower
$L = (S_f \cdot P \cdot A \cdot \tan((\pi / 180) \cdot (\theta / 2))) / F_s$ =		26.813	Minimum Restrained Length Upper

MEGALUG®

Created by EBAA Iron's Restraint Length Calculator v7.1.3 on February 19, 2025

Project Name: Shell Rd

Project Notes:

Built Stronger. Lasts Longer.
EBAA IRON
EBAA IRON SALES, INC.
www.ebaa.com • contact@ebaa.com • 800.433.1716

RESTRAINT LENGTH VALUES

Fitting Type	Pipe Material	Soil Type	Safety Factor	Trench Type	Depth of Bury	Test Pressure	Nominal Size	Bend Angle	Branch Size	Length Along Run	Reduced Size	Lowside Depth	Restraint Length	Restraint Length 2
Horizontal Bend	PVC	GW	1.5	5	12 Ft.	200 PSI	16 In.	45°					6 Ft.	

Site Name: WL-B.2 HB @ 0+90.73

Site Notes:

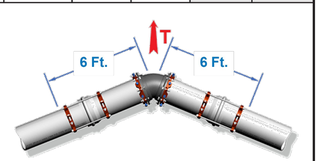

ALL JOINTS WITHIN THE CALCULATED LENGTH MUST BE RESTRAINED
IF YOUR DISTANCE BETWEEN FITTINGS IS LESS THAN OR EQUAL TO THE CALCULATED RESTRAINT LENGTH, RESTRAIN ALL JOINTS BETWEEN THOSE FITTINGS.

Defined Variables

H =	12	Depth of Bury
S_f =	1.5	Safety Factor
P =	200	Internal Pressure
θ =	45	Bend Angle

Pipe Derived Variables

A =	237.79	Cross Sec. Area of Pipe
D =	1.45	Outside Pipe Diameter
W_p =	21.14	Weight of Pipe
W_w =	87.80	Weight of Water in Pipe

Defined Variables

f_c =	0.00	Cohesion Modifier Coefficient
c =	0	Cohesion of Soil
f_ϕ =	0.70	Friction Angle Modifier
Φ =	36	Internal Friction Angle of Soil
γ =	110	Soil Density
K_N =	1.00	Trench Compaction Modifier

Calculations for Horizontal Bend

$W_E = \gamma \cdot D \cdot H$ =	1914.000	Normal Force Due to Soil
$W = 2W_E + W_P + W_W$ =	3936.940	Normal Force Acting on Pipeline
$K_p = \tan^2((\pi / 180) \cdot (45 + (\Phi / 2)))$ =	3.852	Rankin Passive Pressure Coeff.
$H_C = H + (D / 2)$ =	12.725	Depth From Surface to Pipe Center
$\sigma_h = \gamma \cdot H_C \cdot K_p + 2c\sqrt{K_p}$ =	5391.837	Horizontal Passive Soil Pressure
$A_p = \pi \cdot (D / 2)$ =	2.278	Area Based on Half of Circumference
$R_S = K_N \cdot \sigma_h \cdot D$ =	7818.164	Bearing Resistance of Pipelines
$F_s = A_p \cdot f_c \cdot c + W \cdot \tan((\pi / 180) \cdot f_\phi \cdot \Phi)$ =	1852.583	Frictional Resitance
$L = (S_f \cdot P \cdot A \cdot \tan((\pi / 180) \cdot (\theta / 2))) / (F_s + (R_S / 2))$ =	5.129	Minimum Restrained Length

MEGALUG®

Created by EBAA Iron's Restraint Length Calculator v7.1.3 on February 19, 2025

811 Know what's below. Call before you dig.

CAUTION: CONTRACTOR NOTE

THE LOCATION OF EXISTING UNDERGROUND AND OVERHEAD UTILITIES ARE APPROXIMATE LOCATIONS ONLY. THE CONTRACTOR SHALL CONTACT UTILITY COMPANIES PRIOR TO CONSTRUCTION. CONTRACTOR SHALL DETERMINE, AND FIELD VERIFY EXISTING UTILITY LOCATIONS AND DEPTHS PRIOR TO BEGINNING CONSTRUCTION AND SHALL BE FULLY RESPONSIBLE FOR ANY AND ALL DAMAGES WHICH MIGHT OCCUR.

CONTRACTOR SHALL CONSIDER PROPOSED UTILITY IMPROVEMENTS AND PROVIDE ADEQUATE HORIZONTAL AND VERTICAL CLEARANCE DURING INSTALLATION OF ALL UTILITY INFRASTRUCTURE.

NO.	REVISION	BY	DATE

BGE JOB NO. XXXX-XX
FILE
DATE 02/21/2025
DESIGNED XXX
DRAWN XXX
REVISED XXX
CHECKED XXX

SHELL ROAD UTILITY RELOCATIONS

JOINT RESTRAINT CALCS (8 OF 27)

CITY OF GEORGETOWN

BGE

BGE, INC
101 WEST LOUIS HENNA BLVD., STE 400
AUSTIN, TX 78728
TBPE Registration No. F-1046
TEL: 512-879-0400 www.bgeinc.com

STATE OF TEXAS
BRITTANY LYNN FAIRBURN
132905
LICENSED
PROFESSIONAL ENGINEER

Brittany Lynn Fairburn

02/21/2025

SHEET

376

100% SUBMITTAL

FILE LOCATION: G:\TXC\PROJECTS\CITY_GEORGETOWN\10767-00 SHELL ROAD\03_CADD\01_SHTS_PW\SHELL_JOINT_RESTRAINTS.DWG DATE SAVED: 2/20/2025

Project Name: Shell Rd

Project Notes:

Built Stronger. Lasts Longer.
EBAA IRON
EBAA IRON SALES, INC.
www.ebaa.com • contact@ebaa.com • 800.433.1716

RESTRAINT LENGTH VALUES

Fitting Type	Pipe Material	Soil Type	Safety Factor	Trench Type	Depth of Bury	Test Pressure	Nominal Size	Bend Angle	Branch Size	Length Along Run	Reduced Size	Lowside Depth	Restraint Length	Restraint Length 2
Tee	PVC	GW	1.5	5	12 Ft.	200 PSI	16 In.		6 In.	3 Ft.			1 Ft.	

Site Name: WL-B.2 Tee @ 0+93.94

Site Notes:

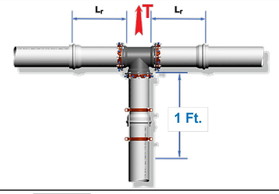

ALL JOINTS WITHIN THE CALCULATED LENGTH MUST BE RESTRAINED
IF YOUR DISTANCE BETWEEN FITTINGS IS LESS THAN OR EQUAL TO THE CALCULATED RESTRAINT LENGTH, RESTRAIN ALL JOINTS BETWEEN THOSE FITTINGS.

Defined Variables

H =	12	Depth of Bury
S_f =	1.5	Safety Factor
P =	200	Internal Pressure

Pipe Derived Variables

A =	237.79	Cross Sec. Area (Main)
A_b =	37.39	Cross Sec. Area (Branch)
D =	1.45	Outside Pipe Diameter
D_b =	0.58	Outside Diameter Branch
W_p =	3.31	Weight of Pipe
W_w =	13.81	Weight of Water in Pipe
L_r =	3	Min. restrained Length either side of Tee

Defined Variables

f_c =	0.00	Cohesion Modifier Coefficient
c =	0	Cohesion of Soil
f_ϕ =	0.70	Friction Angle Modifier
Φ =	36	Internal Friction Angle of Soil
γ =	110	Soil Density

Calculations for Tee

$W_E = \gamma \cdot D \cdot H =$	765.600	Normal Force Due to Soil
$W = 2W_E + W_p + W_w =$	1548.320	Normal Force Acting on Pipeline
$K_p = \tan^2((\pi / 180) \cdot (45 + (\Phi / 2))) =$	3.852	Rankin Passive Pressure Coeff.
$H_c = H + (D / 2) =$	12.725	Depth From Surface to Pipe Center
$\sigma_h = \gamma \cdot H_c \cdot K_p + 2c\sqrt{K_p} =$	5391.837	Horizontal Passive Soil Pressure
$A_p = \pi \cdot (D / 2) =$	2.278	Area Based on Half of Circumference
$(A_p)_b = \pi \cdot D_b =$	1.822	Area Based on Full Branch Circumference
$R_s = K_{Ns} \cdot \sigma_h \cdot D =$	7818.164	Bearing Resistance of Pipelines
$F_{sb} = (A_p)_b \cdot f_c + W \cdot \tan((\pi / 180) f_\phi \cdot \Phi) =$	728.584	Frictional Resistance
$L_b = S_f(P \cdot A_b - R_s \cdot L_r) / F_{sb} =$	-32.892	Minimum Restrained Length Branch

MEGALUG®

Created by EBAA Iron's Restraint Length Calculator v7.1.3 on February 19, 2025

Project Name: Shell Rd

Project Notes:

Built Stronger. Lasts Longer.
EBAA IRON
EBAA IRON SALES, INC.
www.ebaa.com • contact@ebaa.com • 800.433.1716

RESTRAINT LENGTH VALUES

Fitting Type	Pipe Material	Soil Type	Safety Factor	Trench Type	Depth of Bury	Test Pressure	Nominal Size	Bend Angle	Branch Size	Length Along Run	Reduced Size	Lowside Depth	Restraint Length	Restraint Length 2
Dead End	PVC	GW	1.5	5	12 Ft.	200 PSI	6 In.						16 Ft.	

Site Name: WL-B.2 GV @ 0+93.94

Site Notes:

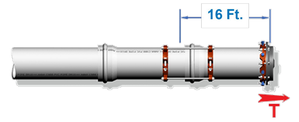

ALL JOINTS WITHIN THE CALCULATED LENGTH MUST BE RESTRAINED
IF YOUR DISTANCE BETWEEN FITTINGS IS LESS THAN OR EQUAL TO THE CALCULATED RESTRAINT LENGTH, RESTRAIN ALL JOINTS BETWEEN THOSE FITTINGS.

Defined Variables

H =	12	Depth of Bury
S_f =	1.5	Safety Factor
P =	200	Internal Pressure

Pipe Derived Variables

A =	37.39	Cross Sec. Area of Pipe
D =	0.58	Outside Pipe Diameter
W_p =	3.31	Weight of Pipe
W_w =	13.81	Weight of Water in Pipe

Defined Variables

f_c =	0.00	Cohesion Modifier Coefficient
c =	0	Cohesion of Soil
f_ϕ =	0.70	Friction Angle Modifier
Φ =	36	Internal Friction Angle of Soil
γ =	110	Soil Density

Calculations for Dead End

$W_E = \gamma \cdot D \cdot H =$	765.600	Normal Force Due to Soil
$W = 2W_E + W_p + W_w =$	1548.320	Normal Force Acting on Pipeline
$(A_p)_b = \pi \cdot D =$	1.822	Area Based on Full Pipe Circumference
$F_{sb} = (A_p)_b \cdot f_c \cdot c + W \cdot \tan((\pi / 180) f_\phi \cdot \Phi) =$	728.584	Frictional Resistance
$L = S_f \cdot P \cdot A / F_{sb} =$	15.396	Minimum Restrained Length of Dead End

MEGALUG®

Created by EBAA Iron's Restraint Length Calculator v7.1.3 on February 19, 2025

Project Name: Shell Rd

Project Notes:

Built Stronger. Lasts Longer.
EBAA IRON
EBAA IRON SALES, INC.
www.ebaa.com • contact@ebaa.com • 800.433.1716

RESTRAINT LENGTH VALUES

Fitting Type	Pipe Material	Soil Type	Safety Factor	Trench Type	Depth of Bury	Test Pressure	Nominal Size	Bend Angle	Branch Size	Length Along Run	Reduced Size	Lowside Depth	Restraint Length	Restraint Length 2
Dead End	PVC	GW	1.5	5	12 Ft.	200 PSI	16 In.						39 Ft.	

Site Name: WL-B.2 GV @ 0+97.40

Site Notes:

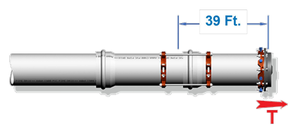

ALL JOINTS WITHIN THE CALCULATED LENGTH MUST BE RESTRAINED
IF YOUR DISTANCE BETWEEN FITTINGS IS LESS THAN OR EQUAL TO THE CALCULATED RESTRAINT LENGTH, RESTRAIN ALL JOINTS BETWEEN THOSE FITTINGS.

Defined Variables

H =	12	Depth of Bury
S_f =	1.5	Safety Factor
P =	200	Internal Pressure

Pipe Derived Variables

A =	237.79	Cross Sec. Area of Pipe
D =	1.45	Outside Pipe Diameter
W_p =	21.14	Weight of Pipe
W_w =	87.80	Weight of Water in Pipe

Defined Variables

f_c =	0.00	Cohesion Modifier Coefficient
c =	0	Cohesion of Soil
f_ϕ =	0.70	Friction Angle Modifier
Φ =	36	Internal Friction Angle of Soil
γ =	110	Soil Density

Calculations for Dead End

$W_E = \gamma \cdot D \cdot H =$	1914.000	Normal Force Due to Soil
$W = 2W_E + W_p + W_w =$	3936.940	Normal Force Acting on Pipeline
$(A_p)_b = \pi \cdot D =$	4.555	Area Based on Full Pipe Circumference
$F_{sb} = (A_p)_b \cdot f_c \cdot c + W \cdot \tan((\pi / 180) f_\phi \cdot \Phi) =$	1852.583	Frictional Resistance
$L = S_f \cdot P \cdot A / F_{sb} =$	38.507	Minimum Restrained Length of Dead End

MEGALUG®

Created by EBAA Iron's Restraint Length Calculator v7.1.3 on February 19, 2025

Project Name: Shell Rd

Project Notes:

Built Stronger. Lasts Longer.
EBAA IRON
EBAA IRON SALES, INC.
www.ebaa.com • contact@ebaa.com • 800.433.1716

RESTRAINT LENGTH VALUES

Fitting Type	Pipe Material	Soil Type	Safety Factor	Trench Type	Depth of Bury	Test Pressure	Nominal Size	Bend Angle	Branch Size	Length Along Run	Reduced Size	Lowside Depth	Restraint Length	Restraint Length 2
Horizontal Bend	PVC	GW	1.5	5	4 Ft.	200 PSI	16 In.	45°					15 Ft.	

Site Name: WL-C HB @ 0+30.00

Site Notes:

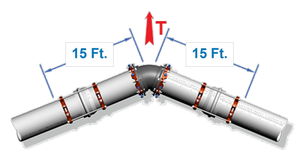

ALL JOINTS WITHIN THE CALCULATED LENGTH MUST BE RESTRAINED
IF YOUR DISTANCE BETWEEN FITTINGS IS LESS THAN OR EQUAL TO THE CALCULATED RESTRAINT LENGTH, RESTRAIN ALL JOINTS BETWEEN THOSE FITTINGS.

Defined Variables

H =	4	Depth of Bury
S_f =	1.5	Safety Factor
P =	200	Internal Pressure
θ =	45	Bend Angle

Pipe Derived Variables

A =	237.79	Cross Sec. Area of Pipe
D =	1.45	Outside Pipe Diameter
W_p =	21.14	Weight of Pipe
W_w =	87.80	Weight of Water in Pipe

Defined Variables

f_c =	0.00	Cohesion Modifier Coefficient
c =	0	Cohesion of Soil
f_ϕ =	0.70	Friction Angle Modifier
Φ =	36	Internal Friction Angle of Soil
γ =	110	Soil Density
K_N =	1.00	Trench Compaction Modifier

Calculations for Horizontal Bend

$W_E = \gamma \cdot D \cdot H =$	638.000	Normal Force Due to Soil
$W = 2W_E + W_p + W_w =$	1384.940	Normal Force Acting on Pipeline
$K_p = \tan^2((\pi / 180) \cdot (45 + (\Phi / 2))) =$	3.852	Rankin Passive Pressure Coeff.
$H_c = H + (D / 2) =$	4.725	Depth From Surface to Pipe Center
$\sigma_h = \gamma \cdot H_c \cdot K_p + 2c\sqrt{K_p} =$	2002.077	Horizontal Passive Soil Pressure
$A_p = \pi \cdot (D / 2) =$	2.278	Area Based on Half of Circumference
$R_s = K_{Ns} \cdot \sigma_h \cdot D =$	2903.012	Bearing Resistance of Pipelines
$F_s = A_p \cdot f_c \cdot c + W \cdot \tan((\pi / 180) \cdot f_\phi \cdot \Phi) =$	651.703	Frictional Resistance
$L = (S_f \cdot P \cdot A \cdot \tan((\pi / 180) \cdot (\theta / 2))) / (F_s + (R_s / 2)) =$	14.049	Minimum Restrained Length

MEGALUG®

Created by EBAA Iron's Restraint Length Calculator v7.1.3 on February 19, 2025

811 Know what's below. Call before you dig.

CAUTION: CONTRACTOR NOTE

THE LOCATION OF EXISTING UNDERGROUND AND OVERHEAD UTILITIES ARE APPROXIMATE LOCATIONS ONLY. THE CONTRACTOR SHALL CONTACT UTILITY COMPANIES PRIOR TO CONSTRUCTION. CONTRACTOR SHALL DETERMINE, AND FIELD VERIFY EXISTING UTILITY LOCATIONS AND DEPTHS PRIOR TO BEGINNING CONSTRUCTION AND SHALL BE FULLY RESPONSIBLE FOR ANY AND ALL DAMAGES WHICH MIGHT OCCUR.

CONTRACTOR SHALL CONSIDER PROPOSED UTILITY IMPROVEMENTS AND PROVIDE ADEQUATE HORIZONTAL AND VERTICAL CLEARANCE DURING INSTALLATION OF ALL UTILITY INFRASTRUCTURE.

NO.	REVISION	BY	DATE

BGE JOB NO. XXXX-XX
FILE
DATE 02/21/2025
DESIGNED XXX
DRAWN XXX
REVISED XXX
CHECKED XXX

SHELL ROAD UTILITY RELOCATIONS

JOINT RESTRAINT CALCS (9 OF 27)

CITY OF GEORGETOWN

BGE

BGE, INC
101 WEST LOUIS HENNA BLVD., STE 400
AUSTIN, TX 78728
TBPE Registration No. F-1046
TEL: 512-873-0400 www.bgeinc.com

STATE OF TEXAS
BRITTANY LYNN FAIRBURN
132905
LICENSED
PROFESSIONAL ENGINEER

Brittany Lynn Fairburn

02/21/2025

SHEET
377

100% SUBMITTAL

FILE LOCATION: G:\TXC\PROJECTS\CITY_GEORGETOWN\10767-00 SHELL ROAD\03_CADD\01_SHTS_PW\SHELL_JOINT_RESTRAINTS.DWG DATE SAVED: 2/20/2025

Project Name: Shell Rd

Project Notes:

www.ebaa.com • contact@ebaa.com • 800.433.1716

RESTRAINT LENGTH VALUES

Fitting Type	Pipe Material	Soil Type	Safety Factor	Trench Type	Depth of Bury	Test Pressure	Nominal Size	Bend Angle	Branch Size	Length Along Run	Reduced Size	Lowside Depth	Restraint Length	Restraint Length 2
Horizontal Bend	PVC	GW	1.5	5	4 Ft.	200 PSI	16 In.	45°					15 Ft.	

Site Name: WL-C HB @ 0+41.05

Site Notes:

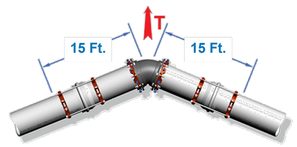

ALL JOINTS WITHIN THE CALCULATED LENGTH MUST BE RESTRAINED
IF YOUR DISTANCE BETWEEN FITTINGS IS LESS THAN OR EQUAL TO THE CALCULATED RESTRAINT LENGTH, RESTRAIN ALL JOINTS BETWEEN THOSE FITTINGS.

Defined Variables

H =	4	Depth of Bury
S_f =	1.5	Safety Factor
P =	200	Internal Pressure
θ =	45	Bend Angle

Pipe Derived Variables

A =	237.79	Cross Sec. Area of Pipe
D =	1.45	Outside Pipe Diameter
W_p =	21.14	Weight of Pipe
W_w =	87.80	Weight of Water in Pipe

Defined Variables

f_c =	0.00	Cohesion Modifier Coefficient
c =	0	Cohesion of Soil
f_ϕ =	0.70	Friction Angle Modifier
Φ =	36	Internal Friction Angle of Soil
γ =	110	Soil Density
K_N =	1.00	Trench Compaction Modifier

Calculations for Horizontal Bend

$W_E = \gamma \cdot D \cdot H =$	638.000	Normal Force Due to Soil
$W = 2W_E + W_p + W_w =$	1384.940	Normal Force Acting on Pipeline
$K_p = \tan^2((\pi / 180) \cdot (45 + (\Phi / 2))) =$	3.852	Rankin Passive Pressure Coeff.
$H_C = H + (D / 2) =$	4.725	Depth From Surface to Pipe Center
$\sigma_h = \gamma \cdot H_C \cdot K_p + 2c\sqrt{K_p} =$	2002.077	Horizontal Passive Soil Pressure
$A_p = \pi \cdot (D / 2) =$	2.278	Area Based on Half of Circumference
$R_S = K_N \cdot \sigma_h \cdot D =$	2903.012	Bearing Resistance of Pipelines
$F_s = A_p \cdot f_c \cdot c + W \cdot \tan((\pi / 180) \cdot f_\phi \cdot \Phi) =$	651.703	Frictional Resitance
$L = (S_f \cdot P \cdot A \cdot \tan((\pi / 180) \cdot (\theta / 2))) / (F_s + (R_s / 2)) =$	14.049	Minimum Restrained Length

MEGALUG®

Created by EBAA Iron's Restraint Length Calculator v7.1.3 on February 19, 2025

Project Name: Shell Rd

Project Notes:

www.ebaa.com • contact@ebaa.com • 800.433.1716

RESTRAINT LENGTH VALUES

Fitting Type	Pipe Material	Soil Type	Safety Factor	Trench Type	Depth of Bury	Test Pressure	Nominal Size	Bend Angle	Branch Size	Length Along Run	Reduced Size	Lowside Depth	Restraint Length	Restraint Length 2
Horizontal Bend	PVC	GW	1.5	5	4 Ft.	200 PSI	16 In.	45°					15 Ft.	

Site Name: WL-C HB @ 0+62.05

Site Notes:

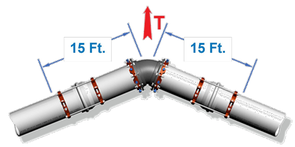

ALL JOINTS WITHIN THE CALCULATED LENGTH MUST BE RESTRAINED
IF YOUR DISTANCE BETWEEN FITTINGS IS LESS THAN OR EQUAL TO THE CALCULATED RESTRAINT LENGTH, RESTRAIN ALL JOINTS BETWEEN THOSE FITTINGS.

Defined Variables

H =	4	Depth of Bury
S_f =	1.5	Safety Factor
P =	200	Internal Pressure
θ =	45	Bend Angle

Pipe Derived Variables

A =	237.79	Cross Sec. Area of Pipe
D =	1.45	Outside Pipe Diameter
W_p =	21.14	Weight of Pipe
W_w =	87.80	Weight of Water in Pipe

Defined Variables

f_c =	0.00	Cohesion Modifier Coefficient
c =	0	Cohesion of Soil
f_ϕ =	0.70	Friction Angle Modifier
Φ =	36	Internal Friction Angle of Soil
γ =	110	Soil Density
K_N =	1.00	Trench Compaction Modifier

Calculations for Horizontal Bend

$W_E = \gamma \cdot D \cdot H =$	638.000	Normal Force Due to Soil
$W = 2W_E + W_p + W_w =$	1384.940	Normal Force Acting on Pipeline
$K_p = \tan^2((\pi / 180) \cdot (45 + (\Phi / 2))) =$	3.852	Rankin Passive Pressure Coeff.
$H_C = H + (D / 2) =$	4.725	Depth From Surface to Pipe Center
$\sigma_h = \gamma \cdot H_C \cdot K_p + 2c\sqrt{K_p} =$	2002.077	Horizontal Passive Soil Pressure
$A_p = \pi \cdot (D / 2) =$	2.278	Area Based on Half of Circumference
$R_S = K_N \cdot \sigma_h \cdot D =$	2903.012	Bearing Resistance of Pipelines
$F_s = A_p \cdot f_c \cdot c + W \cdot \tan((\pi / 180) \cdot f_\phi \cdot \Phi) =$	651.703	Frictional Resitance
$L = (S_f \cdot P \cdot A \cdot \tan((\pi / 180) \cdot (\theta / 2))) / (F_s + (R_s / 2)) =$	14.049	Minimum Restrained Length

MEGALUG®

Created by EBAA Iron's Restraint Length Calculator v7.1.3 on February 19, 2025

Project Name: Shell Rd

Project Notes:

www.ebaa.com • contact@ebaa.com • 800.433.1716

RESTRAINT LENGTH VALUES

Fitting Type	Pipe Material	Soil Type	Safety Factor	Trench Type	Depth of Bury	Test Pressure	Nominal Size	Bend Angle	Branch Size	Length Along Run	Reduced Size	Lowside Depth	Restraint Length	Restraint Length 2
Horizontal Bend	PVC	GW	1.5	5	4 Ft.	200 PSI	16 In.	45°					15 Ft.	

Site Name: WL-C HB @ 0+72.07

Site Notes:

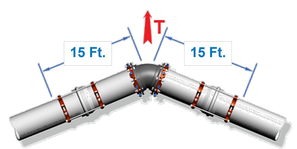

ALL JOINTS WITHIN THE CALCULATED LENGTH MUST BE RESTRAINED
IF YOUR DISTANCE BETWEEN FITTINGS IS LESS THAN OR EQUAL TO THE CALCULATED RESTRAINT LENGTH, RESTRAIN ALL JOINTS BETWEEN THOSE FITTINGS.

Defined Variables

H =	4	Depth of Bury
S_f =	1.5	Safety Factor
P =	200	Internal Pressure
θ =	45	Bend Angle

Pipe Derived Variables

A =	237.79	Cross Sec. Area of Pipe
D =	1.45	Outside Pipe Diameter
W_p =	21.14	Weight of Pipe
W_w =	87.80	Weight of Water in Pipe

Defined Variables

f_c =	0.00	Cohesion Modifier Coefficient
c =	0	Cohesion of Soil
f_ϕ =	0.70	Friction Angle Modifier
Φ =	36	Internal Friction Angle of Soil
γ =	110	Soil Density
K_N =	1.00	Trench Compaction Modifier

Calculations for Horizontal Bend

$W_E = \gamma \cdot D \cdot H =$	638.000	Normal Force Due to Soil
$W = 2W_E + W_p + W_w =$	1384.940	Normal Force Acting on Pipeline
$K_p = \tan^2((\pi / 180) \cdot (45 + (\Phi / 2))) =$	3.852	Rankin Passive Pressure Coeff.
$H_C = H + (D / 2) =$	4.725	Depth From Surface to Pipe Center
$\sigma_h = \gamma \cdot H_C \cdot K_p + 2c\sqrt{K_p} =$	2002.077	Horizontal Passive Soil Pressure
$A_p = \pi \cdot (D / 2) =$	2.278	Area Based on Half of Circumference
$R_S = K_N \cdot \sigma_h \cdot D =$	2903.012	Bearing Resistance of Pipelines
$F_s = A_p \cdot f_c \cdot c + W \cdot \tan((\pi / 180) \cdot f_\phi \cdot \Phi) =$	651.703	Frictional Resitance
$L = (S_f \cdot P \cdot A \cdot \tan((\pi / 180) \cdot (\theta / 2))) / (F_s + (R_s / 2)) =$	14.049	Minimum Restrained Length

MEGALUG®

Created by EBAA Iron's Restraint Length Calculator v7.1.3 on February 19, 2025

Project Name: Shell Rd

Project Notes:

www.ebaa.com • contact@ebaa.com • 800.433.1716

RESTRAINT LENGTH VALUES

Fitting Type	Pipe Material	Soil Type	Safety Factor	Trench Type	Depth of Bury	Test Pressure	Nominal Size	Bend Angle	Branch Size	Length Along Run	Reduced Size	Lowside Depth	Restraint Length	Restraint Length 2
Horizontal Bend	PVC	GW	1.5	5	5 Ft.	200 PSI	16 In.	45°					12 Ft.	

Site Name: WL-D HB @ 0+23.77

Site Notes:

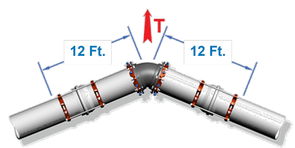

ALL JOINTS WITHIN THE CALCULATED LENGTH MUST BE RESTRAINED
IF YOUR DISTANCE BETWEEN FITTINGS IS LESS THAN OR EQUAL TO THE CALCULATED RESTRAINT LENGTH, RESTRAIN ALL JOINTS BETWEEN THOSE FITTINGS.

Defined Variables

H =	5	Depth of Bury
S_f =	1.5	Safety Factor
P =	200	Internal Pressure
θ =	45	Bend Angle

Pipe Derived Variables

A =	237.79	Cross Sec. Area of Pipe
D =	1.45	Outside Pipe Diameter
W_p =	21.14	Weight of Pipe
W_w =	87.80	Weight of Water in Pipe

Defined Variables

f_c =	0.00	Cohesion Modifier Coefficient
c =	0	Cohesion of Soil
f_ϕ =	0.70	Friction Angle Modifier
Φ =	36	Internal Friction Angle of Soil
γ =	110	Soil Density
K_N =	1.00	Trench Compaction Modifier

Calculations for Horizontal Bend

$W_E = \gamma \cdot D \cdot H =$	797.500	Normal Force Due to Soil
$W = 2W_E + W_p + W_w =$	1703.940	Normal Force Acting on Pipeline
$K_p = \tan^2((\pi / 180) \cdot (45 + (\Phi / 2))) =$	3.852	Rankin Passive Pressure Coeff.
$H_C = H + (D / 2) =$	5.725	Depth From Surface to Pipe Center
$\sigma_h = \gamma \cdot H_C \cdot K_p + 2c\sqrt{K_p} =$	2425.797	Horizontal Passive Soil Pressure
$A_p = \pi \cdot (D / 2) =$	2.278	Area Based on Half of Circumference
$R_S = K_N \cdot \sigma_h \cdot D =$	3517.406	Bearing Resistance of Pipelines
$F_s = A_p \cdot f_c \cdot c + W \cdot \tan((\pi / 180) \cdot f_\phi \cdot \Phi) =$	801.813	Frictional Resitance
$L = (S_f \cdot P \cdot A \cdot \tan((\pi / 180) \cdot (\theta / 2))) / (F_s + (R_s / 2)) =$	11.540	Minimum Restrained Length

MEGALUG®

Created by EBAA Iron's Restraint Length Calculator v7.1.3 on February 19, 2025

CAUTION: CONTRACTOR NOTE

811 Know what's below. Call before you dig.

THE LOCATION OF EXISTING UNDERGROUND AND OVERHEAD UTILITIES ARE APPROXIMATE LOCATIONS ONLY. THE CONTRACTOR SHALL CONTACT UTILITY COMPANIES PRIOR TO CONSTRUCTION. CONTRACTOR SHALL DETERMINE, AND FIELD VERIFY EXISTING UTILITY LOCATIONS AND DEPTHS PRIOR TO BEGINNING CONSTRUCTION AND SHALL BE FULLY RESPONSIBLE FOR ANY AND ALL DAMAGES WHICH MIGHT OCCUR.

CONTRACTOR SHALL CONSIDER PROPOSED UTILITY IMPROVEMENTS AND PROVIDE ADEQUATE HORIZONTAL AND VERTICAL CLEARANCE DURING INSTALLATION OF ALL UTILITY INFRASTRUCTURE.

NO.	REVISION	BY	DATE

BGE JOB NO. XXXX-XX
FILE
DATE 02/21/2025
DESIGNED XXX
DRAWN XXX
REVISED XXX
CHECKED XXX

SHELL ROAD UTILITY RELOCATIONS

JOINT RESTRAINT CALCS (10 OF 27)

CITY OF GEORGETOWN

BGE

BGE, INC.
101 WEST LOUIS HENNA BLVD., STE 400
AUSTIN, TX 78728
TBPE Registration No. F-1046
TEL: 512-879-0400 www.bgeinc.com

STATE OF TEXAS
BRITTANY LYNN FAIRBURN
132905
LICENSED
PROFESSIONAL ENGINEER
Brittany Lynn Fairburn
02/21/2025

SHEET
378

100% SUBMITTAL

FILE LOCATION: G:\TXC\PROJECTS\CITY_GEORGETOWN\10767-00 SHELL ROAD\03_CADD\01_SHTS_PW\SHELL_JOINT_RESTRAINTS.DWG DATE SAVED: 2/20/2025

Project Name: Shell Rd

Project Notes:

Built Stronger. Lasts Longer.
EBAA IRON
EBAA IRON SALES, INC.
www.ebaa.com • contact@ebaa.com • 800.433.1716

RESTRAINT LENGTH VALUES

Fitting Type	Pipe Material	Soil Type	Safety Factor	Trench Type	Depth of Bury	Test Pressure	Nominal Size	Bend Angle	Branch Size	Length Along Run	Reduced Size	Lowside Depth	Restraint Length	Restraint Length 2
Horizontal Bend	PVC	GW	1.5	5	5 Ft.	200 PSI	16 In.	45°					12 Ft.	

Site Name: WL-D HB @ 0+38.94

Site Notes:

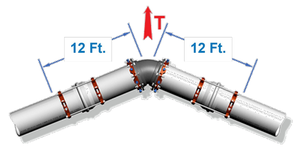

ALL JOINTS WITHIN THE CALCULATED LENGTH MUST BE RESTRAINED
IF YOUR DISTANCE BETWEEN FITTINGS IS LESS THAN OR EQUAL TO THE CALCULATED RESTRAINT LENGTH, RESTRAIN ALL JOINTS BETWEEN THOSE FITTINGS.

Defined Variables

H =	5	Depth of Bury
S_f =	1.5	Safety Factor
P =	200	Internal Pressure
θ =	45	Bend Angle

Pipe Derived Variables

A =	237.79	Cross Sec. Area of Pipe
D =	1.45	Outside Pipe Diameter
W_p =	21.14	Weight of Pipe
W_w =	87.80	Weight of Water in Pipe

Defined Variables

f_c =	0.00	Cohesion Modifier Coefficient
c =	0	Cohesion of Soil
f_ϕ =	0.70	Friction Angle Modifier
Φ =	36	Internal Friction Angle of Soil
γ =	110	Soil Density
K_N =	1.00	Trench Compaction Modifier

Calculations for Horizontal Bend

$W_E = \gamma \cdot D \cdot H =$	797.500	Normal Force Due to Soil
$W = 2W_E + W_p + W_w =$	1703.940	Normal Force Acting on Pipeline
$K_p = \tan^2((\pi / 180) \cdot (45 + (\Phi / 2))) =$	3.852	Rankin Passive Pressure Coeff.
$H_C = H + (D / 2) =$	5.725	Depth From Surface to Pipe Center
$\sigma_h = \gamma \cdot H_C \cdot K_p + 2c\sqrt{K_p} =$	2425.797	Horizontal Passive Soil Pressure
$A_p = \pi \cdot (D / 2) =$	2.278	Area Based on Half of Circumference
$R_S = K_N \cdot \sigma_h \cdot D =$	3517.406	Bearing Resistance of Pipelines
$F_s = A_p \cdot f_c \cdot c + W \cdot \tan((\pi / 180) \cdot (\theta / 2)) \cdot f_\phi \cdot \Phi) =$	801.813	Frictional Resitance
$L = (S_f \cdot P \cdot A \cdot \tan((\pi / 180) \cdot (\theta / 2))) / (F_s + (R_s / 2)) =$	11.540	Minimum Restrained Length

MEGALUG®

Created by EBAA Iron's Restraint Length Calculator v7.1.3 on February 19, 2025

Project Name: Shell Rd

Project Notes:

Built Stronger. Lasts Longer.
EBAA IRON
EBAA IRON SALES, INC.
www.ebaa.com • contact@ebaa.com • 800.433.1716

RESTRAINT LENGTH VALUES

Fitting Type	Pipe Material	Soil Type	Safety Factor	Trench Type	Depth of Bury	Test Pressure	Nominal Size	Bend Angle	Branch Size	Length Along Run	Reduced Size	Lowside Depth	Restraint Length	Restraint Length 2
Horizontal Bend	PVC	GW	1.5	5	5 Ft.	200 PSI	16 In.	45°					12 Ft.	

Site Name: WL-D HB @ 0+54.02

Site Notes:

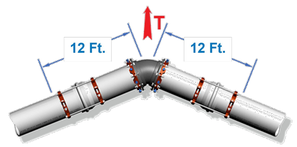

ALL JOINTS WITHIN THE CALCULATED LENGTH MUST BE RESTRAINED
IF YOUR DISTANCE BETWEEN FITTINGS IS LESS THAN OR EQUAL TO THE CALCULATED RESTRAINT LENGTH, RESTRAIN ALL JOINTS BETWEEN THOSE FITTINGS.

Defined Variables

H =	5	Depth of Bury
S_f =	1.5	Safety Factor
P =	200	Internal Pressure
θ =	45	Bend Angle

Pipe Derived Variables

A =	237.79	Cross Sec. Area of Pipe
D =	1.45	Outside Pipe Diameter
W_p =	21.14	Weight of Pipe
W_w =	87.80	Weight of Water in Pipe

Defined Variables

f_c =	0.00	Cohesion Modifier Coefficient
c =	0	Cohesion of Soil
f_ϕ =	0.70	Friction Angle Modifier
Φ =	36	Internal Friction Angle of Soil
γ =	110	Soil Density
K_N =	1.00	Trench Compaction Modifier

Calculations for Horizontal Bend

$W_E = \gamma \cdot D \cdot H =$	797.500	Normal Force Due to Soil
$W = 2W_E + W_p + W_w =$	1703.940	Normal Force Acting on Pipeline
$K_p = \tan^2((\pi / 180) \cdot (45 + (\Phi / 2))) =$	3.852	Rankin Passive Pressure Coeff.
$H_C = H + (D / 2) =$	5.725	Depth From Surface to Pipe Center
$\sigma_h = \gamma \cdot H_C \cdot K_p + 2c\sqrt{K_p} =$	2425.797	Horizontal Passive Soil Pressure
$A_p = \pi \cdot (D / 2) =$	2.278	Area Based on Half of Circumference
$R_S = K_N \cdot \sigma_h \cdot D =$	3517.406	Bearing Resistance of Pipelines
$F_s = A_p \cdot f_c \cdot c + W \cdot \tan((\pi / 180) \cdot (\theta / 2)) \cdot f_\phi \cdot \Phi) =$	801.813	Frictional Resitance
$L = (S_f \cdot P \cdot A \cdot \tan((\pi / 180) \cdot (\theta / 2))) / (F_s + (R_s / 2)) =$	11.540	Minimum Restrained Length

MEGALUG®

Created by EBAA Iron's Restraint Length Calculator v7.1.3 on February 19, 2025

Project Name: Shell Rd

Project Notes:

Built Stronger. Lasts Longer.
EBAA IRON
EBAA IRON SALES, INC.
www.ebaa.com • contact@ebaa.com • 800.433.1716

RESTRAINT LENGTH VALUES

Fitting Type	Pipe Material	Soil Type	Safety Factor	Trench Type	Depth of Bury	Test Pressure	Nominal Size	Bend Angle	Branch Size	Length Along Run	Reduced Size	Lowside Depth	Restraint Length	Restraint Length 2
Horizontal Bend	PVC	GW	1.5	5	5 Ft.	200 PSI	16 In.	45°					12 Ft.	

Site Name: WL-D HB @ 0+69.21

Site Notes:

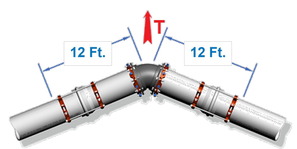

ALL JOINTS WITHIN THE CALCULATED LENGTH MUST BE RESTRAINED
IF YOUR DISTANCE BETWEEN FITTINGS IS LESS THAN OR EQUAL TO THE CALCULATED RESTRAINT LENGTH, RESTRAIN ALL JOINTS BETWEEN THOSE FITTINGS.

Defined Variables

H =	5	Depth of Bury
S_f =	1.5	Safety Factor
P =	200	Internal Pressure
θ =	45	Bend Angle

Pipe Derived Variables

A =	237.79	Cross Sec. Area of Pipe
D =	1.45	Outside Pipe Diameter
W_p =	21.14	Weight of Pipe
W_w =	87.80	Weight of Water in Pipe

Defined Variables

f_c =	0.00	Cohesion Modifier Coefficient
c =	0	Cohesion of Soil
f_ϕ =	0.70	Friction Angle Modifier
Φ =	36	Internal Friction Angle of Soil
γ =	110	Soil Density
K_N =	1.00	Trench Compaction Modifier

Calculations for Horizontal Bend

$W_E = \gamma \cdot D \cdot H =$	797.500	Normal Force Due to Soil
$W = 2W_E + W_p + W_w =$	1703.940	Normal Force Acting on Pipeline
$K_p = \tan^2((\pi / 180) \cdot (45 + (\Phi / 2))) =$	3.852	Rankin Passive Pressure Coeff.
$H_C = H + (D / 2) =$	5.725	Depth From Surface to Pipe Center
$\sigma_h = \gamma \cdot H_C \cdot K_p + 2c\sqrt{K_p} =$	2425.797	Horizontal Passive Soil Pressure
$A_p = \pi \cdot (D / 2) =$	2.278	Area Based on Half of Circumference
$R_S = K_N \cdot \sigma_h \cdot D =$	3517.406	Bearing Resistance of Pipelines
$F_s = A_p \cdot f_c \cdot c + W \cdot \tan((\pi / 180) \cdot (\theta / 2)) \cdot f_\phi \cdot \Phi) =$	801.813	Frictional Resitance
$L = (S_f \cdot P \cdot A \cdot \tan((\pi / 180) \cdot (\theta / 2))) / (F_s + (R_s / 2)) =$	11.540	Minimum Restrained Length

MEGALUG®

Created by EBAA Iron's Restraint Length Calculator v7.1.3 on February 19, 2025

Project Name: Shell Rd

Project Notes:

Built Stronger. Lasts Longer.
EBAA IRON
EBAA IRON SALES, INC.
www.ebaa.com • contact@ebaa.com • 800.433.1716

RESTRAINT LENGTH VALUES

Fitting Type	Pipe Material	Soil Type	Safety Factor	Trench Type	Depth of Bury	Test Pressure	Nominal Size	Bend Angle	Branch Size	Length Along Run	Reduced Size	Lowside Depth	Restraint Length	Restraint Length 2
Tee	PVC	GW	1.5	5	5 Ft.	200 PSI	16 In.		6 In.	10 Ft.			1 Ft.	

Site Name: WL-D Tee @ 0+78.75

Site Notes:

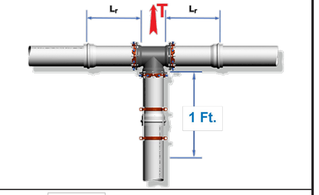

ALL JOINTS WITHIN THE CALCULATED LENGTH MUST BE RESTRAINED
IF YOUR DISTANCE BETWEEN FITTINGS IS LESS THAN OR EQUAL TO THE CALCULATED RESTRAINT LENGTH, RESTRAIN ALL JOINTS BETWEEN THOSE FITTINGS.

Defined Variables

H =	5	Depth of Bury
S_f =	1.5	Safety Factor
P =	200	Internal Pressure

Pipe Derived Variables

A =	237.79	Cross Sec. Area (Main)
A_b =	37.39	Cross Sec. Area (Branch)
D =	1.45	Outside Pipe Diameter
D_b =	0.58	Outside Diameter Branch
W_p =	3.31	Weight of Pipe
W_w =	13.81	Weight of Water in Pipe
L_r =	10	Min. restrained Length either side of Tee

Defined Variables

f_c =	0.00	Cohesion Modifier Coefficient
c =	0	Cohesion of Soil
f_ϕ =	0.70	Friction Angle Modifier
Φ =	36	Internal Friction Angle of Soil
γ =	110	Soil Density

Calculations for Tee

$W_E = \gamma \cdot D \cdot H =$	319.000	Normal Force Due to Soil
$W = 2W_E + W_p + W_w =$	655.120	Normal Force Acting on Pipeline
$K_p = \tan^2((\pi / 180) \cdot (45 + (\Phi / 2))) =$	3.852	Rankin Passive Pressure Coeff.
$H_C = H + (D / 2) =$	5.725	Depth From Surface to Pipe Center
$\sigma_h = \gamma \cdot H_C \cdot K_p + 2c\sqrt{K_p} =$	2425.797	Horizontal Passive Soil Pressure
$A_p = \pi \cdot (D / 2) =$	2.278	Area Based on Half of Circumference
$(A_p)_b = \pi \cdot D_b =$	1.822	Area Based on Full Branch Circumference
$R_S = K_N \cdot \sigma_h \cdot D =$	3517.406	Bearing Resistance of Pipelines
$F_{sb} = (A_p)_b \cdot f_c \cdot c + W \cdot \tan((\pi / 180) f_\phi \cdot \Phi) =$	308.276	Frictional Resistance
$L_b = S_f(P \cdot A_b - R_s \cdot L_r) / F_{sb} =$	-134.763	Minimum Restrained Length Branch

MEGALUG®

Created by EBAA Iron's Restraint Length Calculator v7.1.3 on February 19, 2025

CAUTION: CONTRACTOR NOTE

811 Know what's below. Call before you dig.

THE LOCATION OF EXISTING UNDERGROUND AND OVERHEAD UTILITIES ARE APPROXIMATE LOCATIONS ONLY. THE CONTRACTOR SHALL CONTACT UTILITY COMPANIES PRIOR TO CONSTRUCTION. CONTRACTOR SHALL DETERMINE, AND FIELD VERIFY EXISTING UTILITY LOCATIONS AND DEPTHS PRIOR TO BEGINNING CONSTRUCTION AND SHALL BE FULLY RESPONSIBLE FOR ANY AND ALL DAMAGES WHICH MIGHT OCCUR.

CONTRACTOR SHALL CONSIDER PROPOSED UTILITY IMPROVEMENTS AND PROVIDE ADEQUATE HORIZONTAL AND VERTICAL CLEARANCE DURING INSTALLATION OF ALL UTILITY INFRASTRUCTURE.

NO.	REVISION	BY	DATE

BGE JOB NO. XXXX-XX
FILE
DATE 02/21/2025
DESIGNED XXX
DRAWN XXX
REVISED XXX
CHECKED XXX

SHELL ROAD UTILITY RELOCATIONS

JOINT RESTRAINT CALCS (11 OF 27)

CITY OF GEORGETOWN

BGE

BGE, INC.
101 WEST LOUIS HENNA BLVD., STE 400
AUSTIN, TX 78728
TBPE Registration No. F-1046
TEL: 512-879-0400 www.bgeinc.com

STATE OF TEXAS
BRITTANY LYNN FAIRBURN
132905
LICENSED PROFESSIONAL ENGINEER
Brittany Lynn Fairburn
02/21/2025

SHEET
379

100% SUBMITTAL

FILE LOCATION: G:\TXC\PROJECTS\CITY_GEORGETOWN\10767-00 SHELL ROAD\03_CADD\01_SHTS_PW\SHELL_JOINT_RESTRAINTS.DWG DATE SAVED: 2/20/2025

Project Name: Shell Rd

Project Notes:

www.ebaa.com • contact@ebaa.com • 800.433.1716

RESTRAINT LENGTH VALUES

Fitting Type	Pipe Material	Soil Type	Safety Factor	Trench Type	Depth of Bury	Test Pressure	Nominal Size	Bend Angle	Branch Size	Length Along Run	Reduced Size	Lowside Depth	Restraint Length	Restraint Length 2
Dead End	PVC	GW	1.5	5	5 Ft.	200 PSI	6 In.						37 Ft.	

Site Name: WL-D GV @ 0+78.75

Site Notes:

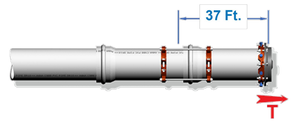

ALL JOINTS WITHIN THE CALCULATED LENGTH MUST BE RESTRAINED
IF YOUR DISTANCE BETWEEN FITTINGS IS LESS THAN OR EQUAL TO THE CALCULATED RESTRAINT LENGTH, RESTRAIN ALL JOINTS BETWEEN THOSE FITTINGS.

Defined Variables

H =	5	Depth of Bury
S_f =	1.5	Safety Factor
P =	200	Internal Pressure

Pipe Derived Variables

A =	37.39	Cross Sec. Area of Pipe
D =	0.58	Outside Pipe Diameter
W_p =	3.31	Weight of Pipe
W_w =	13.81	Weight of Water in Pipe

Defined Variables

f_c =	0.00	Cohesion Modifier Coefficient
c =	0	Cohesion of Soil
f_ϕ =	0.70	Friction Angle Modifier
Φ =	36	Internal Friction Angle of Soil
γ =	110	Soil Density

Calculations for Dead End

$W_E = \gamma \cdot D \cdot H$ =	319.000	Normal Force Due to Soil
$W = 2W_E + W_p + W_w$ =	655.120	Normal Force Acting on Pipeline
$(A_p)_s = \pi \cdot D$ =	1.822	Area Based on Full Pipe Circumference
$F_{sb} = (A_p)_s \cdot f_c \cdot c + W \cdot \tan((\pi / 180) f_\phi \cdot \Phi)$ =	308.276	Frictional Resistance
$L = S_f \cdot P \cdot A / F_{sb}$ =	36.386	Minimum Restrained Length of Dead End

MEGALUG®

Created by EBAA Iron's Restraint Length Calculator v7.1.3 on February 19, 2025

Project Name: Shell Rd

Project Notes:

www.ebaa.com • contact@ebaa.com • 800.433.1716

RESTRAINT LENGTH VALUES

Fitting Type	Pipe Material	Soil Type	Safety Factor	Trench Type	Depth of Bury	Test Pressure	Nominal Size	Bend Angle	Branch Size	Length Along Run	Reduced Size	Lowside Depth	Restraint Length	Restraint Length 2
Tee	Poly Wrapped Ductile	GW	1.5	5	11 Ft.	200 PSI	16 In.		16 In.	3 Ft.			43 Ft.	

Site Name: WL-E Tee @ 0+22.18

Site Notes:

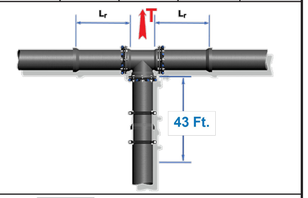

ALL JOINTS WITHIN THE CALCULATED LENGTH MUST BE RESTRAINED
IF YOUR DISTANCE BETWEEN FITTINGS IS LESS THAN OR EQUAL TO THE CALCULATED RESTRAINT LENGTH, RESTRAIN ALL JOINTS BETWEEN THOSE FITTINGS.

Defined Variables

H =	11	Depth of Bury
S_f =	1.5	Safety Factor
P =	200	Internal Pressure

Pipe Derived Variables

A =	237.79	Cross Sec. Area (Main)
A_b =	237.79	Cross Sec. Area (Branch)
D =	1.45	Outside Pipe Diameter
D_b =	1.45	Outside Diameter Branch
W_p =	57	Weight of Pipe
W_w =	94	Weight of Water in Pipe
L_r =	3	Min. restrained Length either side of Tee

Defined Variables

f_c =	0.00	Cohesion Modifier Coefficient
c =	0	Cohesion of Soil
f_ϕ =	1.00	Friction Angle Modifier
Φ =	36	Internal Friction Angle of Soil
γ =	110	Soil Density

Calculations for Tee

$W_E = \gamma \cdot D \cdot H$ =	1754.500	Normal Force Due to Soil
$W = 2W_E + W_p + W_w$ =	3660.000	Normal Force Acting on Pipeline
$K_p = \tan^2((\pi / 180) \cdot (45 + (\Phi / 2)))$ =	3.852	Rankin Passive Pressure Coeff.
$H_C = H + (D / 2)$ =	11.725	Depth From Surface to Pipe Center
$\sigma_h = \gamma \cdot H_C \cdot K_p + 2c\sqrt{K_p}$ =	4968.117	Horizontal Passive Soil Pressure
$A_p = \pi \cdot (D / 2)$ =	2.278	Area Based on Half of Circumference
$(A_p)_b = \pi \cdot D_b$ =	4.555	Area Based on Full Branch Circumference
$R_N = K_N \cdot \sigma_h \cdot D$ =	7203.770	Bearing Resistance of Pipelines
$F_{sb} = (A_p)_b \cdot f_c \cdot c + W \cdot \tan((\pi / 180) f_\phi \cdot \Phi)$ =	912.540	Frictional Resistance
$L_b = S_f(P \cdot A_b - R_s \cdot L_r) / F_{sb}$ =	42.650	Minimum Restrained Length Branch

MEGALUG®

Created by EBAA Iron's Restraint Length Calculator v7.1.3 on February 19, 2025

Project Name: Shell Rd

Project Notes:

www.ebaa.com • contact@ebaa.com • 800.433.1716

RESTRAINT LENGTH VALUES

Fitting Type	Pipe Material	Soil Type	Safety Factor	Trench Type	Depth of Bury	Test Pressure	Nominal Size	Bend Angle	Branch Size	Length Along Run	Reduced Size	Lowside Depth	Restraint Length	Restraint Length 2
Dead End	Poly Wrapped Ductile	GW	1.5	5	10 Ft.	200 PSI	16 In.						86 Ft.	

Site Name: WL-E GV @ 0+25.05

Site Notes:

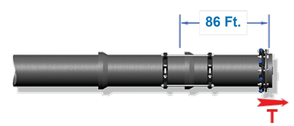

ALL JOINTS WITHIN THE CALCULATED LENGTH MUST BE RESTRAINED
IF YOUR DISTANCE BETWEEN FITTINGS IS LESS THAN OR EQUAL TO THE CALCULATED RESTRAINT LENGTH, RESTRAIN ALL JOINTS BETWEEN THOSE FITTINGS.

Defined Variables

H =	10	Depth of Bury
S_f =	1.5	Safety Factor
P =	200	Internal Pressure

Pipe Derived Variables

A =	237.79	Cross Sec. Area of Pipe
D =	1.45	Outside Pipe Diameter
W_p =	57	Weight of Pipe
W_w =	94	Weight of Water in Pipe

Defined Variables

f_c =	0.00	Cohesion Modifier Coefficient
c =	0	Cohesion of Soil
f_ϕ =	1.00	Friction Angle Modifier
Φ =	36	Internal Friction Angle of Soil
γ =	110	Soil Density

Calculations for Dead End

$W_E = \gamma \cdot D \cdot H$ =	1595.000	Normal Force Due to Soil
$W = 2W_E + W_p + W_w$ =	3341.000	Normal Force Acting on Pipeline
$(A_p)_s = \pi \cdot D$ =	4.555	Area Based on Full Pipe Circumference
$F_{sb} = (A_p)_s \cdot f_c \cdot c + W \cdot \tan((\pi / 180) f_\phi \cdot \Phi)$ =	833.005	Frictional Resistance
$L = S_f \cdot P \cdot A / F_{sb}$ =	85.638	Minimum Restrained Length of Dead End

MEGALUG®

Created by EBAA Iron's Restraint Length Calculator v7.1.3 on February 19, 2025

Project Name: Shell Rd

Project Notes:

www.ebaa.com • contact@ebaa.com • 800.433.1716

RESTRAINT LENGTH VALUES

Fitting Type	Pipe Material	Soil Type	Safety Factor	Trench Type	Depth of Bury	Test Pressure	Nominal Size	Bend Angle	Branch Size	Length Along Run	Reduced Size	Lowside Depth	Restraint Length	Restraint Length 2
Vertical Offset	Poly Wrapped Ductile	GW	1.5	5	10 Ft.	200 PSI	16 In.	45°				13 Ft.	36 Ft.	6 Ft.

Site Name: WL-E VB @ 0+27.91 - 0+31.06

Site Notes:

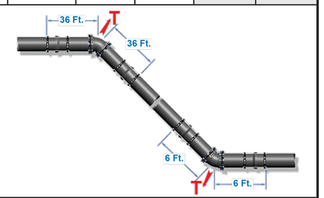

ALL JOINTS WITHIN THE CALCULATED LENGTH MUST BE RESTRAINED
IF YOUR DISTANCE BETWEEN FITTINGS IS LESS THAN OR EQUAL TO THE CALCULATED RESTRAINT LENGTH, RESTRAIN ALL JOINTS BETWEEN THOSE FITTINGS.

Defined Variables

H =	10	Depth of Bury
S_f =	1.5	Safety Factor
P =	200	Internal Pressure
θ =	45	Bend Angle

Pipe Derived Variables

A =	237.79	Cross Sec. Area of Pipe
D =	1.45	Outside Pipe Diameter
W_p =	57	Weight of Pipe
W_w =	94	Weight of Water in Pipe

Defined Variables

f_c =	0.00	Cohesion Modifier Coefficient
c =	0	Cohesion of Soil
f_ϕ =	1.00	Friction Angle Modifier
Φ =	36	Internal Friction Angle of Soil
γ =	110	Soil Density
K_N =	1.00	Trench Compaction Modifier

Calculations for Vertical Offset

	Lower	Upper	
$W_E = \gamma \cdot D \cdot H$ =	2073.500	1595.000	Normal Force Due to Soil
$W = 2W_E + W_p + W_w$ =	4298.000	3341.000	Normal Force Acting on Pipeline
$K_p = \tan^2((\pi / 180) \cdot (45 + (\Phi / 2)))$ =	3.852	3.852	Rankin Passive Pressure Coeff.
$H_C = H + (D / 2)$ =	13.725	10.725	Depth From Surface to Pipe Center
$\sigma_h = \gamma \cdot H_C \cdot K_p + 2c\sqrt{K_p}$ =	5815.557		Horizontal Passive Soil Pressure
$A_p = \pi \cdot (D / 2)$ =	2.278	2.278	Area Based on Half of Circumference
$R_N = K_N \cdot \sigma_h \cdot D$ =	8432.558	8432.558	Bearing Resistance of Pipelines
$F_s = A_p \cdot f_c \cdot c + W \cdot \tan((\pi / 180) \cdot (\theta / 2)) \cdot f_\phi \cdot \Phi)$ =	1071.612	833.005	Frictional Resistance
$L = (S_f \cdot P \cdot A \cdot \tan((\pi / 180) \cdot (\theta / 2))) / (F_s + (R_s / 2))$ =	5.588		Minimum Restrained Length Lower
$L = (S_f \cdot P \cdot A \cdot \tan((\pi / 180) \cdot (\theta / 2))) / F_s$ =		35.472	Minimum Restrained Length Upper

MEGALUG®

Created by EBAA Iron's Restraint Length Calculator v7.1.3 on February 19, 2025

811 Know what's below. Call before you dig.

CAUTION: CONTRACTOR NOTE
THE LOCATION OF EXISTING UNDERGROUND AND OVERHEAD UTILITIES ARE APPROXIMATE LOCATIONS ONLY. THE CONTRACTOR SHALL CONTACT UTILITY COMPANIES PRIOR TO CONSTRUCTION. CONTRACTOR SHALL DETERMINE, AND FIELD VERIFY EXISTING UTILITY LOCATIONS AND DEPTHS PRIOR TO BEGINNING CONSTRUCTION AND SHALL BE FULLY RESPONSIBLE FOR ANY AND ALL DAMAGES WHICH MIGHT OCCUR.
CONTRACTOR SHALL CONSIDER PROPOSED UTILITY IMPROVEMENTS AND PROVIDE ADEQUATE HORIZONTAL AND VERTICAL CLEARANCE DURING INSTALLATION OF ALL UTILITY INFRASTRUCTURE.

NO.	REVISION	BY	DATE

BGE JOB NO. XXXX-XX
FILE
DATE 02/21/2025
DESIGNED XXX
DRAWN XXX
REVISED XXX
CHECKED XXX

SHELL ROAD UTILITY RELOCATIONS

JOINT RESTRAINT CALCS (12 OF 27)

CITY OF GEORGETOWN

BGE, INC.
101 WEST LOUIS HENNA BLVD., STE 400
AUSTIN, TX 78728
TBPE Registration No. F-1046
TEL: 512-879-0400 www.bgeinc.com

STATE OF TEXAS
BRITTANY LYNN FAIRBURN
132905
LICENSED
PROFESSIONAL ENGINEER

02/21/2025

SHEET
380

100% SUBMITTAL

FILE LOCATION: G:\TXC\PROJECTS\CITY_GEORGETOWN\10767-00 SHELL ROAD\03_CADD\01_SHTS_PW\SHELL_JOINT_RESTRAINTS.DWG DATE SAVED: 2/20/2025

Project Name: Shell Rd

Project Notes:

EBAA IRON — Built Stronger. Lasts Longer. — EBAA IRON SALES, INC.

www.ebaa.com • contact@ebaa.com • 800.433.1716

RESTRAINT LENGTH VALUES

Fitting Type	Pipe Material	Soil Type	Safety Factor	Trench Type	Depth of Bury	Test Pressure	Nominal Size	Bend Angle	Branch Size	Length Along Run	Reduced Size	Lowside Depth	Restraint Length	Restraint Length 2
Horizontal Bend	Poly Wrapped Ductile	GW	1.5	5	12 Ft.	200 PSI	16 In.	45°					7 Ft.	

Site Name: WL-E HB @ 1+39.91

Site Notes:

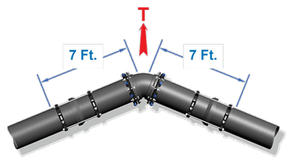

ALL JOINTS WITHIN THE CALCULATED LENGTH MUST BE RESTRAINED
IF YOUR DISTANCE BETWEEN FITTINGS IS LESS THAN OR EQUAL TO THE CALCULATED RESTRAINT LENGTH, RESTRAIN ALL JOINTS BETWEEN THOSE FITTINGS.

Defined Variables

H =	12	Depth of Bury
S_f =	1.5	Safety Factor
P =	200	Internal Pressure
θ =	45	Bend Angle

Pipe Derived Variables

A =	237.79	Cross Sec. Area of Pipe
D =	1.45	Outside Pipe Diameter
W_p =	57	Weight of Pipe
W_w =	94	Weight of Water in Pipe

Defined Variables

f_c =	0.00	Cohesion Modifier Coefficient
c =	0	Cohesion of Soil
f_ϕ =	1.00	Friction Angle Modifier
Φ =	36	Internal Friction Angle of Soil
γ =	110	Soil Density
K_N =	1.00	Trench Compaction Modifier

Calculations for Horizontal Bend

$W_E = \gamma \cdot D \cdot H =$	1914.000	Normal Force Due to Soil
$W = 2W_E + W_P + W_W =$	3979.000	Normal Force Acting on Pipeline
$K_P = \tan^2((\pi / 180) \cdot (45 + (\Phi / 2))) =$	3.852	Rankin Passive Pressure Coeff.
$H_C = H + (D / 2) =$	12.725	Depth From Surface to Pipe Center
$\sigma_h = \gamma \cdot H_C \cdot K_P + 2c\sqrt{K_P} =$	5391.837	Horizontal Passive Soil Pressure
$A_p = \pi \cdot (D / 2) =$	2.278	Area Based on Half of Circumference
$R_S = K_N \cdot \sigma_h \cdot D =$	7818.164	Bearing Resistance of Pipelines
$F_s = A_p \cdot f_c \cdot c + W \cdot \tan((\pi / 180) \cdot f_\phi \cdot \Phi) =$	992.076	Frictional Resistance
$L = (S_f \cdot P \cdot A \cdot \tan((\pi / 180) \cdot (\theta / 2))) / (F_s + (R_S / 2)) =$	6.029	Minimum Restrained Length

MEGALUG®

Created by EBAA Iron's Restraint Length Calculator v7.1.3 on February 19, 2025

Project Name: Shell Rd

Project Notes:

EBAA IRON — Built Stronger. Lasts Longer. — EBAA IRON SALES, INC.

www.ebaa.com • contact@ebaa.com • 800.433.1716

RESTRAINT LENGTH VALUES

Fitting Type	Pipe Material	Soil Type	Safety Factor	Trench Type	Depth of Bury	Test Pressure	Nominal Size	Bend Angle	Branch Size	Length Along Run	Reduced Size	Lowside Depth	Restraint Length	Restraint Length 2
Dead End	Poly Wrapped Ductile	GW	1.5	5	12 Ft.	200 PSI	16 In.						72 Ft.	

Site Name: WL-E GV @ 1+42.59

Site Notes:

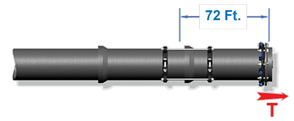

ALL JOINTS WITHIN THE CALCULATED LENGTH MUST BE RESTRAINED
IF YOUR DISTANCE BETWEEN FITTINGS IS LESS THAN OR EQUAL TO THE CALCULATED RESTRAINT LENGTH, RESTRAIN ALL JOINTS BETWEEN THOSE FITTINGS.

Defined Variables

H =	12	Depth of Bury
S_f =	1.5	Safety Factor
P =	200	Internal Pressure

Pipe Derived Variables

A =	237.79	Cross Sec. Area of Pipe
D =	1.45	Outside Pipe Diameter
W_p =	57	Weight of Pipe
W_w =	94	Weight of Water in Pipe

Defined Variables

f_c =	0.00	Cohesion Modifier Coefficient
c =	0	Cohesion of Soil
f_ϕ =	1.00	Friction Angle Modifier
Φ =	36	Internal Friction Angle of Soil
γ =	110	Soil Density

Calculations for Dead End

$W_E = \gamma \cdot D \cdot H =$	1914.000	Normal Force Due to Soil
$W = 2W_E + W_P + W_W =$	3979.000	Normal Force Acting on Pipeline
$(A_p)_b = \pi \cdot D =$	4.555	Area Based on Full Pipe Circumference
$F_{ab} = (A_p)_b \cdot f_c \cdot c + W \cdot \tan((\pi / 180) f_\phi \cdot \Phi) =$	992.076	Frictional Resistance
$L = S_f \cdot P \cdot A / F_{ab} =$	71.907	Minimum Restrained Length of Dead End

MEGALUG®

Created by EBAA Iron's Restraint Length Calculator v7.1.3 on February 19, 2025

Project Name: Shell Rd

Project Notes:

EBAA IRON — Built Stronger. Lasts Longer. — EBAA IRON SALES, INC.

www.ebaa.com • contact@ebaa.com • 800.433.1716

RESTRAINT LENGTH VALUES

Fitting Type	Pipe Material	Soil Type	Safety Factor	Trench Type	Depth of Bury	Test Pressure	Nominal Size	Bend Angle	Branch Size	Length Along Run	Reduced Size	Lowside Depth	Restraint Length	Restraint Length 2
Tee	Poly Wrapped Ductile	GW	1.5	5	12 Ft.	200 PSI	16 In.		16 In.	5 Ft.			13 Ft.	

Site Name: WL-E Tee @ 1+45.16

Site Notes:

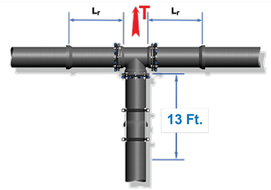

ALL JOINTS WITHIN THE CALCULATED LENGTH MUST BE RESTRAINED
IF YOUR DISTANCE BETWEEN FITTINGS IS LESS THAN OR EQUAL TO THE CALCULATED RESTRAINT LENGTH, RESTRAIN ALL JOINTS BETWEEN THOSE FITTINGS.

Defined Variables

H =	12	Depth of Bury
S_f =	1.5	Safety Factor
P =	200	Internal Pressure

Pipe Derived Variables

A =	237.79	Cross Sec. Area (Main)
A_b =	237.79	Cross Sec. Area (Branch)
D =	1.45	Outside Pipe Diameter
D_b =	1.45	Outside Diameter Branch
W_p =	57	Weight of Pipe
W_w =	94	Weight of Water in Pipe
L_r =	5	Min. restrained Length either side of Tee

Defined Variables

f_c =	0.00	Cohesion Modifier Coefficient
c =	0	Cohesion of Soil
f_ϕ =	1.00	Friction Angle Modifier
Φ =	36	Internal Friction Angle of Soil
γ =	110	Soil Density

Calculations for Tee

$W_E = \gamma \cdot D \cdot H =$	1914.000	Normal Force Due to Soil
$W = 2W_E + W_P + W_W =$	3979.000	Normal Force Acting on Pipeline
$K_P = \tan^2((\pi / 180) \cdot (45 + (\Phi / 2))) =$	3.852	Rankin Passive Pressure Coeff.
$H_C = H + (D / 2) =$	12.725	Depth From Surface to Pipe Center
$\sigma_h = \gamma \cdot H_C \cdot K_P + 2c\sqrt{K_P} =$	5391.837	Horizontal Passive Soil Pressure
$A_p = \pi \cdot (D / 2) =$	2.278	Area Based on Half of Circumference
$(A_p)_b = \pi \cdot D_b =$	4.555	Area Based on Full Branch Circumference
$R_S = K_N \cdot \sigma_h \cdot D =$	7818.164	Bearing Resistance of Pipelines
$F_{ab} = (A_p)_b \cdot f_c \cdot c + W \cdot \tan((\pi / 180) f_\phi \cdot \Phi) =$	992.076	Frictional Resistance
$L_h = S_f(P \cdot A_b - R_S \cdot L_r) / F_{ab} =$	12.802	Minimum Restrained Length Branch

MEGALUG®

Created by EBAA Iron's Restraint Length Calculator v7.1.3 on February 19, 2025

Project Name: Shell Rd

Project Notes:

EBAA IRON — Built Stronger. Lasts Longer. — EBAA IRON SALES, INC.

www.ebaa.com • contact@ebaa.com • 800.433.1716

RESTRAINT LENGTH VALUES

Fitting Type	Pipe Material	Soil Type	Safety Factor	Trench Type	Depth of Bury	Test Pressure	Nominal Size	Bend Angle	Branch Size	Length Along Run	Reduced Size	Lowside Depth	Restraint Length	Restraint Length 2
Dead End	Poly Wrapped Ductile	GW	1.5	5	12 Ft.	200 PSI	16 In.						72 Ft.	

Site Name: WL-E GV @ 1+47.74

Site Notes:

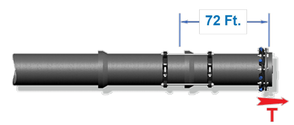

ALL JOINTS WITHIN THE CALCULATED LENGTH MUST BE RESTRAINED
IF YOUR DISTANCE BETWEEN FITTINGS IS LESS THAN OR EQUAL TO THE CALCULATED RESTRAINT LENGTH, RESTRAIN ALL JOINTS BETWEEN THOSE FITTINGS.

Defined Variables

H =	12	Depth of Bury
S_f =	1.5	Safety Factor
P =	200	Internal Pressure

Pipe Derived Variables

A =	237.79	Cross Sec. Area of Pipe
D =	1.45	Outside Pipe Diameter
W_p =	57	Weight of Pipe
W_w =	94	Weight of Water in Pipe

Defined Variables

f_c =	0.00	Cohesion Modifier Coefficient
c =	0	Cohesion of Soil
f_ϕ =	1.00	Friction Angle Modifier
Φ =	36	Internal Friction Angle of Soil
γ =	110	Soil Density

Calculations for Dead End

$W_E = \gamma \cdot D \cdot H =$	1914.000	Normal Force Due to Soil
$W = 2W_E + W_P + W_W =$	3979.000	Normal Force Acting on Pipeline
$(A_p)_b = \pi \cdot D =$	4.555	Area Based on Full Pipe Circumference
$F_{ab} = (A_p)_b \cdot f_c \cdot c + W \cdot \tan((\pi / 180) f_\phi \cdot \Phi) =$	992.076	Frictional Resistance
$L = S_f \cdot P \cdot A / F_{ab} =$	71.907	Minimum Restrained Length of Dead End

MEGALUG®

Created by EBAA Iron's Restraint Length Calculator v7.1.3 on February 19, 2025

811 Know what's below. Call before you dig.

CAUTION: CONTRACTOR NOTE

THE LOCATION OF EXISTING UNDERGROUND AND OVERHEAD UTILITIES ARE APPROXIMATE LOCATIONS ONLY. THE CONTRACTOR SHALL CONTACT UTILITY COMPANIES PRIOR TO CONSTRUCTION. CONTRACTOR SHALL DETERMINE, AND FIELD VERIFY EXISTING UTILITY LOCATIONS AND DEPTHS PRIOR TO BEGINNING CONSTRUCTION AND SHALL BE FULLY RESPONSIBLE FOR ANY AND ALL DAMAGES WHICH MIGHT OCCUR.

CONTRACTOR SHALL CONSIDER PROPOSED UTILITY IMPROVEMENTS AND PROVIDE ADEQUATE HORIZONTAL AND VERTICAL CLEARANCE DURING INSTALLATION OF ALL UTILITY INFRASTRUCTURE.

NO.	REVISION	BY	DATE

BSE JOB NO. XXXX-XX
FILE
DATE 02/21/2025
DESIGNED XXX
DRAWN XXX
REVISED XXX
CHECKED XXX

SHELL ROAD UTILITY RELOCATIONS

JOINT RESTRAINT CALCS (13 OF 27)

CITY OF GEORGETOWN

BGE

BGE, INC.
101 WEST LOUIS HENNA BLVD., STE 400
AUSTIN, TX 78728
TBPE Registration No. F-1046
TEL: 512-879-0400 www.bgeinc.com

STATE OF TEXAS — BRITTANY LYNN FAIRBURN — 132905 — LICENSED PROFESSIONAL ENGINEER

Brittany Lynn Fairburn

02/21/2025

SHEET

381

100% SUBMITTAL

FILE LOCATION: G:\TXC\PROJECTS\CITY_GEORGETOWN\10767-00 SHELL ROAD\03_CADD\01_SHTS_PW\SHELL_JOINT_RESTRAINTS.DWG DATE SAVED: 2/20/2025

Project Name: Shell Rd

Project Notes:

www.ebaa.com • contact@ebaa.com • 800.433.1716

RESTRAINT LENGTH VALUES

Fitting Type	Pipe Material	Soil Type	Safety Factor	Trench Type	Depth of Bury	Test Pressure	Nominal Size	Bend Angle	Branch Size	Length Along Run	Reduced Size	Lowside Depth	Restraint Length	Restraint Length 2
Horizontal Bend	Poly Wrapped Ductile	GW	1.5	5	12 Ft.	200 PSI	16 In.	45°					7 Ft.	

Site Name: WL-E HB @ 1+50.41

Site Notes:

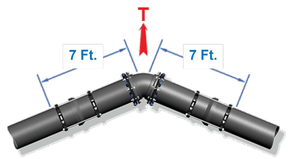

ALL JOINTS WITHIN THE CALCULATED LENGTH MUST BE RESTRAINED
IF YOUR DISTANCE BETWEEN FITTINGS IS LESS THAN OR EQUAL TO THE CALCULATED RESTRAINT LENGTH, RESTRAIN ALL JOINTS BETWEEN THOSE FITTINGS.

Defined Variables

H =	12	Depth of Bury
S_f =	1.5	Safety Factor
P =	200	Internal Pressure
θ =	45	Bend Angle

Pipe Derived Variables

A =	237.79	Cross Sec. Area of Pipe
D =	1.45	Outside Pipe Diameter
W_p =	57	Weight of Pipe
W_w =	94	Weight of Water in Pipe

Defined Variables

f_c =	0.00	Cohesion Modifier Coefficient
c =	0	Cohesion of Soil
f_ϕ =	1.00	Friction Angle Modifier
Φ =	36	Internal Friction Angle of Soil
γ =	110	Soil Density
K_N =	1.00	Trench Compaction Modifier

Calculations for Horizontal Bend

$W_E = \gamma \cdot D \cdot H =$	1914.000	Normal Force Due to Soil
$W = 2W_E + W_P + W_W =$	3979.000	Normal Force Acting on Pipeline
$K_p = \tan^2((\pi / 180) \cdot (45 + (\Phi / 2))) =$	3.852	Rankin Passive Pressure Coeff.
$H_C = H + (D / 2) =$	12.725	Depth From Surface to Pipe Center
$\sigma_h = \gamma \cdot H_C \cdot K_p + 2c\sqrt{K_p} =$	5391.837	Horizontal Passive Soil Pressure
$A_P = \pi \cdot (D / 2) =$	2.278	Area Based on Half of Circumference
$R_S = K_N \cdot \sigma_h \cdot D =$	7818.164	Bearing Resistance of Pipelines
$F_s = A_P \cdot f_c \cdot c + W \cdot \tan((\pi / 180) \cdot f_\phi \cdot \Phi) =$	992.076	Frictional Resitance
$L = (S_f \cdot P \cdot A \cdot \tan((\pi / 180) \cdot (\theta / 2))) / (F_s + (R_S / 2)) =$	6.029	Minimum Restrained Length

MEGALUG®

Created by EBAA Iron's Restraint Length Calculator v7.1.3 on February 19, 2025

Project Name: Shell Rd

Project Notes:

www.ebaa.com • contact@ebaa.com • 800.433.1716

RESTRAINT LENGTH VALUES

Fitting Type	Pipe Material	Soil Type	Safety Factor	Trench Type	Depth of Bury	Test Pressure	Nominal Size	Bend Angle	Branch Size	Length Along Run	Reduced Size	Lowside Depth	Restraint Length	Restraint Length 2
Tee	Poly Wrapped Ductile	GW	1.5	5	12 Ft.	200 PSI	16 In.		6 In.	12 Ft.			1 Ft.	

Site Name: WL-E Tee @ 1+62.20

Site Notes:

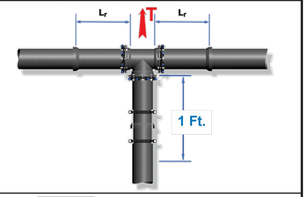

ALL JOINTS WITHIN THE CALCULATED LENGTH MUST BE RESTRAINED
IF YOUR DISTANCE BETWEEN FITTINGS IS LESS THAN OR EQUAL TO THE CALCULATED RESTRAINT LENGTH, RESTRAIN ALL JOINTS BETWEEN THOSE FITTINGS.

Defined Variables

H =	12	Depth of Bury
S_f =	1.5	Safety Factor
P =	200	Internal Pressure

Pipe Derived Variables

A =	237.79	Cross Sec. Area (Main)
A_b =	37.39	Cross Sec. Area (Branch)
D =	1.45	Outside Pipe Diameter
D_b =	0.58	Outside Diameter Branch
W_p =	18	Weight of Pipe
W_w =	13	Weight of Water in Pipe
L_r =	12	Min. restrained Length either side of Tee

Defined Variables

f_c =	0.00	Cohesion Modifier Coefficient
c =	0	Cohesion of Soil
f_ϕ =	1.00	Friction Angle Modifier
Φ =	36	Internal Friction Angle of Soil
γ =	110	Soil Density

Calculations for Tee

$W_E = \gamma \cdot D \cdot H =$	765.600	Normal Force Due to Soil
$W = 2W_E + W_P + W_W =$	1562.200	Normal Force Acting on Pipeline
$K_p = \tan^2((\pi / 180) \cdot (45 + (\Phi / 2))) =$	3.852	Rankin Passive Pressure Coeff.
$H_C = H + (D / 2) =$	12.725	Depth From Surface to Pipe Center
$\sigma_h = \gamma \cdot H_C \cdot K_p + 2c\sqrt{K_p} =$	5391.837	Horizontal Passive Soil Pressure
$A_P = \pi \cdot (D / 2) =$	2.278	Area Based on Half of Circumference
$(A_P)_b = \pi \cdot D_b =$	1.822	Area Based on Full Branch Circumference
$R_S = K_N \cdot \sigma_h \cdot D =$	7818.164	Bearing Resistance of Pipelines
$F_{sb} = (A_P)_b \cdot f_c \cdot c + W \cdot \tan((\pi / 180) \cdot f_\phi \cdot \Phi) =$	389.500	Frictional Resistance
$L_b = S_f(P \cdot A_b - R_s \cdot L_r) / F_{sb} =$	-332.503	Minimum Restrained Length Branch

MEGALUG®

Created by EBAA Iron's Restraint Length Calculator v7.1.3 on February 19, 2025

Project Name: Shell Rd

Project Notes:

www.ebaa.com • contact@ebaa.com • 800.433.1716

RESTRAINT LENGTH VALUES

Fitting Type	Pipe Material	Soil Type	Safety Factor	Trench Type	Depth of Bury	Test Pressure	Nominal Size	Bend Angle	Branch Size	Length Along Run	Reduced Size	Lowside Depth	Restraint Length	Restraint Length 2
Dead End	Poly Wrapped Ductile	GW	1.5	5	12 Ft.	200 PSI	6 In.						29 Ft.	

Site Name: WL-E GV @ 1+62.20

Site Notes:

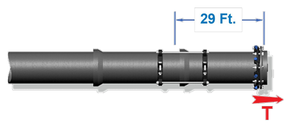

ALL JOINTS WITHIN THE CALCULATED LENGTH MUST BE RESTRAINED
IF YOUR DISTANCE BETWEEN FITTINGS IS LESS THAN OR EQUAL TO THE CALCULATED RESTRAINT LENGTH, RESTRAIN ALL JOINTS BETWEEN THOSE FITTINGS.

Defined Variables

H =	12	Depth of Bury
S_f =	1.5	Safety Factor
P =	200	Internal Pressure

Pipe Derived Variables

A =	37.39	Cross Sec. Area of Pipe
D =	0.58	Outside Pipe Diameter
W_p =	18	Weight of Pipe
W_w =	13	Weight of Water in Pipe

Defined Variables

f_c =	0.00	Cohesion Modifier Coefficient
c =	0	Cohesion of Soil
f_ϕ =	1.00	Friction Angle Modifier
Φ =	36	Internal Friction Angle of Soil
γ =	110	Soil Density

Calculations for Dead End

$W_E = \gamma \cdot D \cdot H =$	765.600	Normal Force Due to Soil
$W = 2W_E + W_P + W_W =$	1562.200	Normal Force Acting on Pipeline
$(A_P)_b = \pi \cdot D =$	1.822	Area Based on Full Pipe Circumference
$F_{sb} = (A_P)_b \cdot f_c \cdot c + W \cdot \tan((\pi / 180) \cdot f_\phi \cdot \Phi) =$	389.500	Frictional Resistance
$L = S_f \cdot P \cdot A / F_{sb} =$	28.798	Minimum Restrained Length of Dead End

MEGALUG®

Created by EBAA Iron's Restraint Length Calculator v7.1.3 on February 19, 2025

Project Name: Shell Rd

Project Notes:

www.ebaa.com • contact@ebaa.com • 800.433.1716

RESTRAINT LENGTH VALUES

Fitting Type	Pipe Material	Soil Type	Safety Factor	Trench Type	Depth of Bury	Test Pressure	Nominal Size	Bend Angle	Branch Size	Length Along Run	Reduced Size	Lowside Depth	Restraint Length	Restraint Length 2
Horizontal Bend	Poly Wrapped Ductile	GW	1.5	5	11 Ft.	200 PSI	16 In.	45°					7 Ft.	

Site Name: WL-E HB @ 1+82.72

Site Notes:

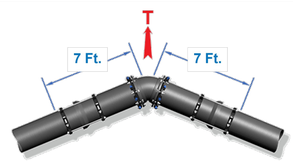

ALL JOINTS WITHIN THE CALCULATED LENGTH MUST BE RESTRAINED
IF YOUR DISTANCE BETWEEN FITTINGS IS LESS THAN OR EQUAL TO THE CALCULATED RESTRAINT LENGTH, RESTRAIN ALL JOINTS BETWEEN THOSE FITTINGS.

Defined Variables

H =	11	Depth of Bury
S_f =	1.5	Safety Factor
P =	200	Internal Pressure
θ =	45	Bend Angle

Pipe Derived Variables

A =	237.79	Cross Sec. Area of Pipe
D =	1.45	Outside Pipe Diameter
W_p =	57	Weight of Pipe
W_w =	94	Weight of Water in Pipe

Defined Variables

f_c =	0.00	Cohesion Modifier Coefficient
c =	0	Cohesion of Soil
f_ϕ =	1.00	Friction Angle Modifier
Φ =	36	Internal Friction Angle of Soil
γ =	110	Soil Density
K_N =	1.00	Trench Compaction Modifier

Calculations for Horizontal Bend

$W_E = \gamma \cdot D \cdot H =$	1754.500	Normal Force Due to Soil
$W = 2W_E + W_P + W_W =$	3660.000	Normal Force Acting on Pipeline
$K_p = \tan^2((\pi / 180) \cdot (45 + (\Phi / 2))) =$	3.852	Rankin Passive Pressure Coeff.
$H_C = H + (D / 2) =$	11.725	Depth From Surface to Pipe Center
$\sigma_h = \gamma \cdot H_C \cdot K_p + 2c\sqrt{K_p} =$	4968.117	Horizontal Passive Soil Pressure
$A_P = \pi \cdot (D / 2) =$	2.278	Area Based on Half of Circumference
$R_S = K_N \cdot \sigma_h \cdot D =$	7203.770	Bearing Resistance of Pipelines
$F_s = A_P \cdot f_c \cdot c + W \cdot \tan((\pi / 180) \cdot f_\phi \cdot \Phi) =$	912.540	Frictional Resitance
$L = (S_f \cdot P \cdot A \cdot \tan((\pi / 180) \cdot (\theta / 2))) / (F_s + (R_S / 2)) =$	6.545	Minimum Restrained Length

MEGALUG®

Created by EBAA Iron's Restraint Length Calculator v7.1.3 on February 19, 2025

---

811 Know what's below. Call before you dig.

CAUTION: CONTRACTOR NOTE

THE LOCATION OF EXISTING UNDERGROUND AND OVERHEAD UTILITIES ARE APPROXIMATE LOCATIONS ONLY. THE CONTRACTOR SHALL CONTACT UTILITY COMPANIES PRIOR TO CONSTRUCTION. CONTRACTOR SHALL DETERMINE, AND FIELD VERIFY EXISTING UTILITY LOCATIONS AND DEPTHS PRIOR TO BEGINNING CONSTRUCTION AND SHALL BE FULLY RESPONSIBLE FOR ANY AND ALL DAMAGES WHICH MIGHT OCCUR.

CONTRACTOR SHALL CONSIDER PROPOSED UTILITY IMPROVEMENTS AND PROVIDE ADEQUATE HORIZONTAL AND VERTICAL CLEARANCE DURING INSTALLATION OF ALL UTILITY INFRASTRUCTURE.

NO.	REVISION	BY	DATE

BGE JOB NO. XXXX-XX
FILE
DATE 02/21/2025
DESIGNED XXX
DRAWN XXX
REVISED XXX
CHECKED XXX

SHELL ROAD UTILITY RELOCATIONS

JOINT RESTRAINT CALCS (14 OF 27)

CITY OF GEORGETOWN

BGE
BGE, INC.
101 WEST LOUIS HENNA BLVD., STE 400
AUSTIN, TX 78728
TBPE Registration No. F-1046
TEL: 512-879-0400 www.bgeinc.com

STATE OF TEXAS
BRITTANY LYNN FAIRBURN
132905
LICENSED
PROFESSIONAL ENGINEER
Brittany Lynn Fairburn
02/21/2025

SHEET
382

100% SUBMITTAL

FILE LOCATION: G:\TXC\PROJECTS\CITY_GEORGETOWN\10767-00 SHELL ROAD\03_CADD\01_SHTS_PW\SHELL_JOINT_RESTRAINTS.DWG DATE SAVED: 2/20/2025

Project Name: Shell Rd

Project Notes:

www.ebaa.com • contact@ebaa.com • 800.433.1716

RESTRAINT LENGTH VALUES

Fitting Type	Pipe Material	Soil Type	Safety Factor	Trench Type	Depth of Bury	Test Pressure	Nominal Size	Bend Angle	Branch Size	Length Along Run	Reduced Size	Lowside Depth	Restraint Length	Restraint Length 2
Horizontal Bend	Poly Wrapped Ductile	GW	1.5	5	11 Ft.	200 PSI	16 In.	45°					7 Ft.	

Site Name: WL-E HB @ 2+14.52

Site Notes:

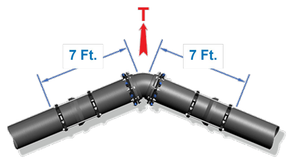

ALL JOINTS WITHIN THE CALCULATED LENGTH MUST BE RESTRAINED
IF YOUR DISTANCE BETWEEN FITTINGS IS LESS THAN OR EQUAL TO THE CALCULATED RESTRAINT LENGTH, RESTRAIN ALL JOINTS BETWEEN THOSE FITTINGS.

Defined Variables

H =	11	Depth of Bury
S_f =	1.5	Safety Factor
P =	200	Internal Pressure
θ =	45	Bend Angle

Pipe Derived Variables

A =	237.79	Cross Sec. Area of Pipe
D =	1.45	Outside Pipe Diameter
W_p =	57	Weight of Pipe
W_w =	94	Weight of Water in Pipe

Defined Variables

f_c =	0.00	Cohesion Modifier Coefficient
c =	0	Cohesion of Soil
f_ϕ =	1.00	Friction Angle Modifier
Φ =	36	Internal Friction Angle of Soil
γ =	110	Soil Density
K_N =	1.00	Trench Compaction Modifier

Calculations for Horizontal Bend

$W_E = \gamma \cdot D \cdot H$ =	1754.500	Normal Force Due to Soil
$W = 2W_E + W_P + W_W$ =	3660.000	Normal Force Acting on Pipeline
$K_P = \tan^2((\pi / 180) \cdot (45 + (\Phi / 2)))$ =	3.852	Rankin Passive Pressure Coeff.
$H_C = H + (D / 2)$ =	11.725	Depth From Surface to Pipe Center
$\sigma_h = \gamma \cdot H_C \cdot K_P + 2c\sqrt{K_P}$ =	4968.117	Horizontal Passive Soil Pressure
$A_P = \pi \cdot (D / 2)$ =	2.278	Area Based on Half of Circumference
$R_S = K_N \cdot \sigma_h \cdot D$ =	7203.770	Bearing Resistance of Pipelines
$F_s = A_P \cdot f_c \cdot c + W \cdot \tan((\pi / 180) \cdot (\theta / 2))) \cdot f_\phi \cdot \Phi)$ =	912.540	Frictional Resitance
$L = (S_f \cdot P \cdot A \cdot \tan((\pi / 180) \cdot (\theta / 2))) / (F_s + (R_s / 2))$ =	6.545	Minimum Restrained Length

MEGALUG®

Created by EBAA Iron's Restraint Length Calculator v7.1.3 on February 19, 2025

Project Name: Shell Rd

Project Notes:

www.ebaa.com • contact@ebaa.com • 800.433.1716

RESTRAINT LENGTH VALUES

Fitting Type	Pipe Material	Soil Type	Safety Factor	Trench Type	Depth of Bury	Test Pressure	Nominal Size	Bend Angle	Branch Size	Length Along Run	Reduced Size	Lowside Depth	Restraint Length	Restraint Length 2
Vertical Offset	Poly Wrapped Ductile	GW	1.5	5	5 Ft.	200 PSI	16 In.	45°				11 Ft.	68 Ft.	7 Ft.

Site Name: WL-E VB @ 2+20.66 - 2+26.54

Site Notes:

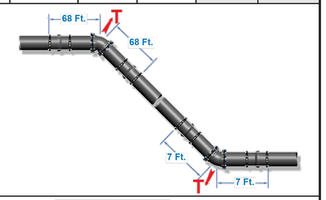

ALL JOINTS WITHIN THE CALCULATED LENGTH MUST BE RESTRAINED
IF YOUR DISTANCE BETWEEN FITTINGS IS LESS THAN OR EQUAL TO THE CALCULATED RESTRAINT LENGTH, RESTRAIN ALL JOINTS BETWEEN THOSE FITTINGS.

Defined Variables

H =	5	Depth of Bury
S_f =	1.5	Safety Factor
P =	200	Internal Pressure
θ =	45	Bend Angle

Pipe Derived Variables

A =	237.79	Cross Sec. Area of Pipe
D =	1.45	Outside Pipe Diameter
W_p =	57	Weight of Pipe
W_w =	94	Weight of Water in Pipe

Defined Variables

f_c =	0.00	Cohesion Modifier Coefficient
c =	0	Cohesion of Soil
f_ϕ =	1.00	Friction Angle Modifier
Φ =	36	Internal Friction Angle of Soil
γ =	110	Soil Density
K_N =	1.00	Trench Compaction Modifier

Calculations for Vertical Offset

	Lower	Upper	
$W_E = \gamma \cdot D \cdot H$ =	1754.500	797.500	Normal Force Due to Soil
$W = 2W_E + W_P + W_W$ =	3660.000	1746.000	Normal Force Acting on Pipeline
$K_P = \tan^2((\pi / 180) \cdot (45 + (\Phi / 2)))$ =	3.852	3.852	Rankin Passive Pressure Coeff.
$H_C = H + (D / 2)$ =	11.725	5.725	Depth From Surface to Pipe Center
$\sigma_h = \gamma \cdot H_C \cdot K_P + 2c\sqrt{K_P}$ =	4968.117		Horizontal Passive Soil Pressure
$A_P = \pi \cdot (D / 2)$ =	2.278	2.278	Area Based on Half of Circumference
$R_S = K_N \cdot \sigma_h \cdot D$ =	7203.770	7203.770	Bearing Resistance of Pipelines
$F_s = A_P \cdot f_c \cdot c + W \cdot \tan((\pi / 180) \cdot f_\phi \cdot \Phi)$ =	912.540	435.327	Frictional Resitance
$L = (S_f \cdot P \cdot A \cdot \tan((\pi / 180) \cdot (\theta / 2))) / (F_s + (R_s / 2))$ =	6.545		Minimum Restrained Length Lower
$L = (S_f \cdot P \cdot A \cdot \tan((\pi / 180) \cdot (\theta / 2))) / F_s$ =		67.877	Minimum Restrained Length Upper

MEGALUG®

Created by EBAA Iron's Restraint Length Calculator v7.1.3 on February 19, 2025

Project Name: Shell Rd

Project Notes:

www.ebaa.com • contact@ebaa.com • 800.433.1716

RESTRAINT LENGTH VALUES

Fitting Type	Pipe Material	Soil Type	Safety Factor	Trench Type	Depth of Bury	Test Pressure	Nominal Size	Bend Angle	Branch Size	Length Along Run	Reduced Size	Lowside Depth	Restraint Length	Restraint Length 2
Horizontal Bend	Poly Wrapped Ductile	GW	1.5	5	5 Ft.	200 PSI	16 In.	11.25°					4 Ft.	

Site Name: WL-E HB @ 2+33.68

Site Notes:

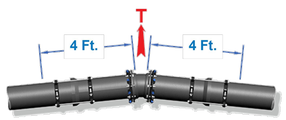

ALL JOINTS WITHIN THE CALCULATED LENGTH MUST BE RESTRAINED
IF YOUR DISTANCE BETWEEN FITTINGS IS LESS THAN OR EQUAL TO THE CALCULATED RESTRAINT LENGTH, RESTRAIN ALL JOINTS BETWEEN THOSE FITTINGS.

Defined Variables

H =	5	Depth of Bury
S_f =	1.5	Safety Factor
P =	200	Internal Pressure
θ =	11.25	Bend Angle

Pipe Derived Variables

A =	237.79	Cross Sec. Area of Pipe
D =	1.45	Outside Pipe Diameter
W_p =	57	Weight of Pipe
W_w =	94	Weight of Water in Pipe

Defined Variables

f_c =	0.00	Cohesion Modifier Coefficient
c =	0	Cohesion of Soil
f_ϕ =	1.00	Friction Angle Modifier
Φ =	36	Internal Friction Angle of Soil
γ =	110	Soil Density
K_N =	1.00	Trench Compaction Modifier

Calculations for Horizontal Bend

$W_E = \gamma \cdot D \cdot H$ =	797.500	Normal Force Due to Soil
$W = 2W_E + W_P + W_W$ =	1746.000	Normal Force Acting on Pipeline
$K_P = \tan^2((\pi / 180) \cdot (45 + (\Phi / 2)))$ =	3.852	Rankin Passive Pressure Coeff.
$H_C = H + (D / 2)$ =	5.725	Depth From Surface to Pipe Center
$\sigma_h = \gamma \cdot H_C \cdot K_P + 2c\sqrt{K_P}$ =	2425.797	Horizontal Passive Soil Pressure
$A_P = \pi \cdot (D / 2)$ =	2.278	Area Based on Half of Circumference
$R_S = K_N \cdot \sigma_h \cdot D$ =	3517.406	Bearing Resistance of Pipelines
$F_s = A_P \cdot f_c \cdot c + W \cdot \tan((\pi / 180) \cdot f_\phi \cdot \Phi)$ =	435.327	Frictional Resitance
$L = (S_f \cdot P \cdot A \cdot \tan((\pi / 180) \cdot (\theta / 2))) / (F_s + (R_s / 2))$ =	3.202	Minimum Restrained Length

MEGALUG®

Created by EBAA Iron's Restraint Length Calculator v7.1.3 on February 19, 2025

Project Name: Shell Rd

Project Notes:

www.ebaa.com • contact@ebaa.com • 800.433.1716

RESTRAINT LENGTH VALUES

Fitting Type	Pipe Material	Soil Type	Safety Factor	Trench Type	Depth of Bury	Test Pressure	Nominal Size	Bend Angle	Branch Size	Length Along Run	Reduced Size	Lowside Depth	Restraint Length	Restraint Length 2
Tee	Poly Wrapped Ductile	GW	1.5	5	5 Ft.	200 PSI	16 In.		6 In.	5 Ft.			1 Ft.	

Site Name: WL-E Tee @ 2+38.68

Site Notes:

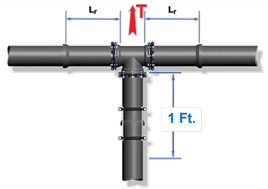

ALL JOINTS WITHIN THE CALCULATED LENGTH MUST BE RESTRAINED
IF YOUR DISTANCE BETWEEN FITTINGS IS LESS THAN OR EQUAL TO THE CALCULATED RESTRAINT LENGTH, RESTRAIN ALL JOINTS BETWEEN THOSE FITTINGS.

Defined Variables

H =	5	Depth of Bury
S_f =	1.5	Safety Factor
P =	200	Internal Pressure

Pipe Derived Variables

A =	237.79	Cross Sec. Area (Main)
A_b =	37.39	Cross Sec. Area (Branch)
D =	1.45	Outside Pipe Diameter
D_b =	0.58	Outside Diameter Branch
W_p =	18	Weight of Pipe
W_w =	13	Weight of Water in Pipe
L_r =	5	Min. restrained Length either side of Tee

Defined Variables

f_c =	0.00	Cohesion Modifier Coefficient
c =	0	Cohesion of Soil
f_ϕ =	1.00	Friction Angle Modifier
Φ =	36	Internal Friction Angle of Soil
γ =	110	Soil Density

Calculations for Tee

$W_E = \gamma \cdot D \cdot H$ =	319.000	Normal Force Due to Soil
$W = 2W_E + W_P + W_W$ =	669.000	Normal Force Acting on Pipeline
$K_P = \tan^2((\pi / 180) \cdot (45 + (\Phi / 2)))$ =	3.852	Rankin Passive Pressure Coeff.
$H_C = H + (D / 2)$ =	5.725	Depth From Surface to Pipe Center
$\sigma_h = \gamma \cdot H_C \cdot K_P + 2c\sqrt{K_P}$ =	2425.797	Horizontal Passive Soil Pressure
$A_P = \pi \cdot (D / 2)$ =	2.278	Area Based on Half of Circumference
$(A_p)_b = \pi \cdot D_b$ =	1.822	Area Based on Full Branch Circumference
$R_S = K_N \cdot \sigma_h \cdot D$ =	3517.406	Bearing Resistance of Pipelines
$F_{sb} = (A_p)_b \cdot f_c \cdot c + W \cdot \tan((\pi / 180) f_\phi \cdot \Phi)$ =	166.800	Frictional Resistance
$L_b = S_f(P \cdot A_b - R_s \cdot L_r) / F_{sb}$ =	-90.909	Minimum Restrained Length Branch

MEGALUG®

Created by EBAA Iron's Restraint Length Calculator v7.1.3 on February 19, 2025

811 Know what's below. Call before you dig.

CAUTION: CONTRACTOR NOTE

THE LOCATION OF EXISTING UNDERGROUND AND OVERHEAD UTILITIES ARE APPROXIMATE LOCATIONS ONLY. THE CONTRACTOR SHALL CONTACT UTILITY COMPANIES PRIOR TO CONSTRUCTION. CONTRACTOR SHALL DETERMINE, AND FIELD VERIFY EXISTING UTILITY LOCATIONS AND DEPTHS PRIOR TO BEGINNING CONSTRUCTION AND SHALL BE FULLY RESPONSIBLE FOR ANY AND ALL DAMAGES WHICH MIGHT OCCUR.

CONTRACTOR SHALL CONSIDER PROPOSED UTILITY IMPROVEMENTS AND PROVIDE ADEQUATE HORIZONTAL AND VERTICAL CLEARANCE DURING INSTALLATION OF ALL UTILITY INFRASTRUCTURE.

NO.	REVISION	BY	DATE

BGE JOB NO. XXXX-XX
FILE
DATE 02/21/2025
DESIGNED XXX
DRAWN XXX
REVISED XXX
CHECKED XXX

SHELL ROAD UTILITY RELOCATIONS

JOINT RESTRAINT CALCS (15 OF 27)

CITY OF GEORGETOWN

BGE, INC.
101 WEST LOUIS HENNA BLVD., STE 400
AUSTIN, TX 78728
TBPE Registration No. F-1046
TEL: 512-879-0400 www.bgeinc.com

STATE OF TEXAS
BRITTANY LYNN FAIRBURN
132905
LICENSED PROFESSIONAL ENGINEER
02/21/2025

SHEET
383

100% SUBMITTAL

FILE LOCATION: G:\TXC\PROJECTS\CITY_GEORGETOWN\10767-00 SHELL ROAD\03_CADD\01_SHTS_PW\SHELL_JOINT_RESTRAINTS.DWG DATE SAVED: 2/20/2025

Project Name: Shell Rd

Project Notes:

Built Stronger. Lasts Longer.
EBAA IRON
EBAA IRON SALES, INC.
www.ebaa.com • contact@ebaa.com • 800.433.1716

RESTRAINT LENGTH VALUES

Fitting Type	Pipe Material	Soil Type	Safety Factor	Trench Type	Depth of Bury	Test Pressure	Nominal Size	Bend Angle	Branch Size	Length Along Run	Reduced Size	Lowside Depth	Restraint Length	Restraint Length 2
Reducer	Poly Wrapped Ductile	GW	1.5	5	6 Ft.	200 PSI	16 In.				12 In.		59 Ft.	

Site Name: WL-E.2 Reducer @ 0+17.75

Site Notes:

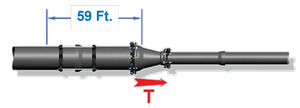

ALL JOINTS WITHIN THE CALCULATED LENGTH MUST BE RESTRAINED
IF YOUR DISTANCE BETWEEN FITTINGS IS LESS THAN OR EQUAL TO THE CALCULATED RESTRAINT LENGTH, RESTRAIN ALL JOINTS BETWEEN THOSE FITTINGS.

Defined Variables

H =	6	Depth of Bury
S_f =	1.5	Safety Factor
P =	200	Internal Pressure

Pipe Derived Variables

A_1 =	237.79	Cross Sec. Area (Large)
A_s =	136.85	Cross Sec. Area (Small)
D =	1.45	Outside Pipe Diameter
D_s =	1.10	Outside Small Diameter
W_p =	57	Weight of Pipe
W_w =	94	Weight of Water in Pipe

Defined Variables

f_c =	0.00	Cohesion Modifier Coefficient
c =	0	Cohesion of Soil
f_ϕ =	1.00	Friction Angle Modifier
Φ =	36	Internal Friction Angle of Soil
γ =	110	Soil Density

Calculations for Reducer

$W_E = \gamma \cdot D \cdot H$ =	957.000	Normal Force Due to Soil
$W = 2W_E + W_P + W_W$ =	2065.000	Normal Force Acting on Pipeline
$(A_p)_1 = \pi \cdot D$ =	4.555	Area Based on Full Pipe Circumference
$(F_{sf})_1 = (A_p)_s \cdot f_c \cdot c + W \cdot \tan((\pi / 180) f_\phi \cdot \Phi)$ =	514.862	Frictional Resistance
$L_1 = S_f \cdot P (A_1 - A_s) / (F_{sf})_1$ =	58.816	Minimum Restrained Length of Reduced Side

MEGALUG®

Created by EBAA Iron's Restraint Length Calculator v7.1.3 on February 19, 2025

Project Name: Shell Rd

Project Notes:

Built Stronger. Lasts Longer.
EBAA IRON
EBAA IRON SALES, INC.
www.ebaa.com • contact@ebaa.com • 800.433.1716

RESTRAINT LENGTH VALUES

Fitting Type	Pipe Material	Soil Type	Safety Factor	Trench Type	Depth of Bury	Test Pressure	Nominal Size	Bend Angle	Branch Size	Length Along Run	Reduced Size	Lowside Depth	Restraint Length	Restraint Length 2
Vertical Offset	Poly Wrapped Ductile	GW	1.5	5	6 Ft.	200 PSI	16 In.	22.5°				10 Ft.	28 Ft.	4 Ft.

Site Name: WL-E.2 VB @ 0+21.61 - 0+30.06

Site Notes:

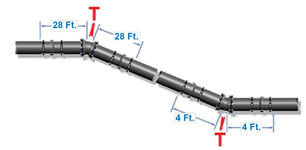

ALL JOINTS WITHIN THE CALCULATED LENGTH MUST BE RESTRAINED
IF YOUR DISTANCE BETWEEN FITTINGS IS LESS THAN OR EQUAL TO THE CALCULATED RESTRAINT LENGTH, RESTRAIN ALL JOINTS BETWEEN THOSE FITTINGS.

Defined Variables

H =	6	Depth of Bury
S_f =	1.5	Safety Factor
P =	200	Internal Pressure
θ =	22.5	Bend Angle

Pipe Derived Variables

A =	237.79	Cross Sec. Area of Pipe
D =	1.45	Outside Pipe Diameter
W_p =	57	Weight of Pipe
W_w =	94	Weight of Water in Pipe

Defined Variables

f_c =	0.00	Cohesion Modifier Coefficient
c =	0	Cohesion of Soil
f_ϕ =	1.00	Friction Angle Modifier
Φ =	36	Internal Friction Angle of Soil
γ =	110	Soil Density
K_N =	1.00	Trench Compaction Modifier

Calculations for Vertical Offset

	Lower	Upper	
$W_E = \gamma \cdot D \cdot H$ =	1595.000	957.000	Normal Force Due to Soil
$W = 2W_E + W_P + W_W$ =	3341.000	2065.000	Normal Force Acting on Pipeline
$K_p = \tan^2((\pi / 180) \cdot (45 + (\Phi / 2)))$ =	3.852	3.852	Rankin Passive Pressure Coeff.
$H_C = H + (D / 2)$ =	10.725	6.725	Depth From Surface to Pipe Center
$\sigma_h = \gamma \cdot H_c \cdot K_p + 2c\sqrt{K_p}$ =	4544.397		Horizontal Passive Soil Pressure
$A_p = \pi \cdot (D / 2)$ =	2.278	2.278	Area Based on Half of Circumference
$R_S = K_N \cdot \sigma_h \cdot D$ =	6589.376	6589.376	Bearing Resistance of Pipelines
$F_s = A_p \cdot f_c \cdot c + W \cdot \tan((\pi / 180) \cdot f_\phi \cdot \Phi)$ =	833.005	514.862	Frictional Resitance
$L = (S_f \cdot P \cdot A \cdot \tan((\pi / 180) \cdot (\theta / 2))) / (F_s + (R_S / 2))$ =	3.438		Minimum Restrained Length Lower
$L = (S_f \cdot P \cdot A \cdot \tan((\pi / 180) \cdot (\theta / 2))) / F_s$ =		27.560	Minimum Restrained Length Upper

MEGALUG®

Created by EBAA Iron's Restraint Length Calculator v7.1.3 on February 19, 2025

Project Name: Shell Rd

Project Notes:

Built Stronger. Lasts Longer.
EBAA IRON
EBAA IRON SALES, INC.
www.ebaa.com • contact@ebaa.com • 800.433.1716

RESTRAINT LENGTH VALUES

Fitting Type	Pipe Material	Soil Type	Safety Factor	Trench Type	Depth of Bury	Test Pressure	Nominal Size	Bend Angle	Branch Size	Length Along Run	Reduced Size	Lowside Depth	Restraint Length	Restraint Length 2
Horizontal Bend	Poly Wrapped Ductile	GW	1.5	5	8 Ft.	200 PSI	16 In.	45°					9 Ft.	

Site Name: WL-E.2 HB @ 0+26.49

Site Notes:

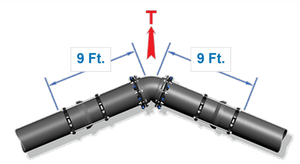

ALL JOINTS WITHIN THE CALCULATED LENGTH MUST BE RESTRAINED
IF YOUR DISTANCE BETWEEN FITTINGS IS LESS THAN OR EQUAL TO THE CALCULATED RESTRAINT LENGTH, RESTRAIN ALL JOINTS BETWEEN THOSE FITTINGS.

Defined Variables

H =	8	Depth of Bury
S_f =	1.5	Safety Factor
P =	200	Internal Pressure
θ =	45	Bend Angle

Pipe Derived Variables

A =	237.79	Cross Sec. Area of Pipe
D =	1.45	Outside Pipe Diameter
W_p =	57	Weight of Pipe
W_w =	94	Weight of Water in Pipe

Defined Variables

f_c =	0.00	Cohesion Modifier Coefficient
c =	0	Cohesion of Soil
f_ϕ =	1.00	Friction Angle Modifier
Φ =	36	Internal Friction Angle of Soil
γ =	110	Soil Density
K_N =	1.00	Trench Compaction Modifier

Calculations for Horizontal Bend

$W_E = \gamma \cdot D \cdot H$ =	1276.000	Normal Force Due to Soil
$W = 2W_E + W_P + W_W$ =	2703.000	Normal Force Acting on Pipeline
$K_p = \tan^2((\pi / 180) \cdot (45 + (\Phi / 2)))$ =	3.852	Rankin Passive Pressure Coeff.
$H_C = H + (D / 2)$ =	8.725	Depth From Surface to Pipe Center
$\sigma_h = \gamma \cdot H_c \cdot K_p + 2c\sqrt{K_p}$ =	3696.957	Horizontal Passive Soil Pressure
$A_p = \pi \cdot (D / 2)$ =	2.278	Area Based on Half of Circumference
$R_S = K_N \cdot \sigma_h \cdot D$ =	5360.588	Bearing Resistance of Pipelines
$F_s = A_p \cdot f_c \cdot c + W \cdot \tan((\pi / 180) \cdot f_\phi \cdot \Phi)$ =	673.934	Frictional Resitance
$L = (S_f \cdot P \cdot A \cdot \tan((\pi / 180) \cdot (\theta / 2))) / (F_s + (R_S / 2))$ =	8.809	Minimum Restrained Length

MEGALUG®

Created by EBAA Iron's Restraint Length Calculator v7.1.3 on February 19, 2025

Project Name: Shell Rd

Project Notes:

Built Stronger. Lasts Longer.
EBAA IRON
EBAA IRON SALES, INC.
www.ebaa.com • contact@ebaa.com • 800.433.1716

RESTRAINT LENGTH VALUES

Fitting Type	Pipe Material	Soil Type	Safety Factor	Trench Type	Depth of Bury	Test Pressure	Nominal Size	Bend Angle	Branch Size	Length Along Run	Reduced Size	Lowside Depth	Restraint Length	Restraint Length 2
Horizontal Bend	Poly Wrapped Ductile	GW	1.5	5	10 Ft.	200 PSI	16 In.	45°					8 Ft.	

Site Name: WL-E.2 HB @ 0+34.29

Site Notes:

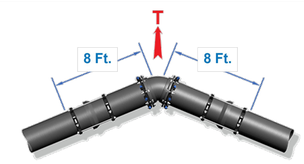

ALL JOINTS WITHIN THE CALCULATED LENGTH MUST BE RESTRAINED
IF YOUR DISTANCE BETWEEN FITTINGS IS LESS THAN OR EQUAL TO THE CALCULATED RESTRAINT LENGTH, RESTRAIN ALL JOINTS BETWEEN THOSE FITTINGS.

Defined Variables

H =	10	Depth of Bury
S_f =	1.5	Safety Factor
P =	200	Internal Pressure
θ =	45	Bend Angle

Pipe Derived Variables

A =	237.79	Cross Sec. Area of Pipe
D =	1.45	Outside Pipe Diameter
W_p =	57	Weight of Pipe
W_w =	94	Weight of Water in Pipe

Defined Variables

f_c =	0.00	Cohesion Modifier Coefficient
c =	0	Cohesion of Soil
f_ϕ =	1.00	Friction Angle Modifier
Φ =	36	Internal Friction Angle of Soil
γ =	110	Soil Density
K_N =	1.00	Trench Compaction Modifier

Calculations for Horizontal Bend

$W_E = \gamma \cdot D \cdot H$ =	1595.000	Normal Force Due to Soil
$W = 2W_E + W_P + W_W$ =	3341.000	Normal Force Acting on Pipeline
$K_p = \tan^2((\pi / 180) \cdot (45 + (\Phi / 2)))$ =	3.852	Rankin Passive Pressure Coeff.
$H_C = H + (D / 2)$ =	10.725	Depth From Surface to Pipe Center
$\sigma_h = \gamma \cdot H_c \cdot K_p + 2c\sqrt{K_p}$ =	4544.397	Horizontal Passive Soil Pressure
$A_p = \pi \cdot (D / 2)$ =	2.278	Area Based on Half of Circumference
$R_S = K_N \cdot \sigma_h \cdot D$ =	6589.376	Bearing Resistance of Pipelines
$F_s = A_p \cdot f_c \cdot c + W \cdot \tan((\pi / 180) \cdot f_\phi \cdot \Phi)$ =	833.005	Frictional Resitance
$L = (S_f \cdot P \cdot A \cdot \tan((\pi / 180) \cdot (\theta / 2))) / (F_s + (R_S / 2))$ =	7.159	Minimum Restrained Length

MEGALUG®

Created by EBAA Iron's Restraint Length Calculator v7.1.3 on February 19, 2025

811 Know what's below. Call before you dig.

CAUTION: CONTRACTOR NOTE
THE LOCATION OF EXISTING UNDERGROUND AND OVERHEAD UTILITIES ARE APPROXIMATE LOCATIONS ONLY. THE CONTRACTOR SHALL CONTACT UTILITY COMPANIES PRIOR TO CONSTRUCTION. CONTRACTOR SHALL DETERMINE, AND FIELD VERIFY EXISTING UTILITY LOCATIONS AND DEPTHS PRIOR TO BEGINNING CONSTRUCTION AND SHALL BE FULLY RESPONSIBLE FOR ANY AND ALL DAMAGES WHICH MIGHT OCCUR.

CONTRACTOR SHALL CONSIDER PROPOSED UTILITY IMPROVEMENTS AND PROVIDE ADEQUATE HORIZONTAL AND VERTICAL CLEARANCE DURING INSTALLATION OF ALL UTILITY INFRASTRUCTURE.

NO.	REVISION	BY	DATE

BGE JOB NO. XXXX-XX
FILE
DATE 02/21/2025
DESIGNED XXX
DRAWN XXX
REVISED XXX
CHECKED XXX

SHELL ROAD UTILITY RELOCATIONS

JOINT RESTRAINT CALCS (16 OF 27)

CITY OF GEORGETOWN

BGE
BGE, INC.
101 WEST LOUIS HENNA BLVD., STE 400
AUSTIN, TX 78728
TBPE Registration No. F-1046
TEL: 512-879-0400 www.bgeinc.com

STATE OF TEXAS
BRITTANY LYNN FAIRBURN
132905
LICENSED
PROFESSIONAL ENGINEER
Brittany Lynn Fairburn
02/21/2025

SHEET
384

100% SUBMITTAL

FILE LOCATION: G:\TXC\PROJECTS\CITY_GEORGETOWN\10767-00 SHELL ROAD\03_CADD\01_SHTS_PW\SHELL_JOINT_RESTRAINTS.DWG DATE SAVED: 2/20/2025

Project Name: Shell Rd

Project Notes:

EBAA IRON — Built Stronger. Lasts Longer.
EBAA IRON SALES, INC.
www.ebaa.com • contact@ebaa.com • 800.433.1716

RESTRAINT LENGTH VALUES

Fitting Type	Pipe Material	Soil Type	Safety Factor	Trench Type	Depth of Bury	Test Pressure	Nominal Size	Bend Angle	Branch Size	Length Along Run	Reduced Size	Lowside Depth	Restraint Length	Restraint Length 2
Dead End	Poly Wrapped Ductile	GW	1.5	5	11 Ft.	200 PSI	16 In.						79 Ft.	

Site Name: WL-E.2 GV @ 0+40.95

Site Notes:

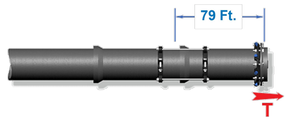

ALL JOINTS WITHIN THE CALCULATED LENGTH MUST BE RESTRAINED
IF YOUR DISTANCE BETWEEN FITTINGS IS LESS THAN OR EQUAL TO THE CALCULATED RESTRAINT LENGTH, RESTRAIN ALL JOINTS BETWEEN THOSE FITTINGS.

Defined Variables

H =	11	Depth of Bury
S_f =	1.5	Safety Factor
P =	200	Internal Pressure

Pipe Derived Variables

A =	237.79	Cross Sec. Area of Pipe
D =	1.45	Outside Pipe Diameter
W_p =	57	Weight of Pipe
W_w =	94	Weight of Water in Pipe

Defined Variables

f_c =	0.00	Cohesion Modifier Coefficient
c =	0	Cohesion of Soil
f_ϕ =	1.00	Friction Angle Modifier
Φ =	36	Internal Friction Angle of Soil
γ =	110	Soil Density

Calculations for Dead End

$W_E = \gamma \cdot D \cdot H$ =	1754.500	Normal Force Due to Soil
$W = 2W_E + W_P + W_W$ =	3660.000	Normal Force Acting on Pipeline
$(A_p)_h = \pi \cdot D$ =	4.555	Area Based on Full Pipe Circumference
$F_{sh} = (A_p)_h \cdot f_c \cdot c + W \cdot \tan((\pi / 180) f_\phi \cdot \Phi)$ =	912.540	Frictional Resistance
$L = S_f \cdot P \cdot A / F_{sh}$ =	78.174	Minimum Restrained Length of Dead End

MEGALUG®

Created by EBAA Iron's Restraint Length Calculator v7.1.3 on February 19, 2025

Project Name: Shell Rd

Project Notes:

EBAA IRON — Built Stronger. Lasts Longer.
EBAA IRON SALES, INC.
www.ebaa.com • contact@ebaa.com • 800.433.1716

RESTRAINT LENGTH VALUES

Fitting Type	Pipe Material	Soil Type	Safety Factor	Trench Type	Depth of Bury	Test Pressure	Nominal Size	Bend Angle	Branch Size	Length Along Run	Reduced Size	Lowside Depth	Restraint Length	Restraint Length 2
Dead End	Poly Wrapped Ductile	GW	1.5	5	11 Ft.	200 PSI	16 In.						79 Ft.	

Site Name: WL-E.2 GV @ 0+49.65

Site Notes:

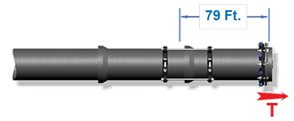

ALL JOINTS WITHIN THE CALCULATED LENGTH MUST BE RESTRAINED
IF YOUR DISTANCE BETWEEN FITTINGS IS LESS THAN OR EQUAL TO THE CALCULATED RESTRAINT LENGTH, RESTRAIN ALL JOINTS BETWEEN THOSE FITTINGS.

Defined Variables

H =	11	Depth of Bury
S_f =	1.5	Safety Factor
P =	200	Internal Pressure

Pipe Derived Variables

A =	237.79	Cross Sec. Area of Pipe
D =	1.45	Outside Pipe Diameter
W_p =	57	Weight of Pipe
W_w =	94	Weight of Water in Pipe

Defined Variables

f_c =	0.00	Cohesion Modifier Coefficient
c =	0	Cohesion of Soil
f_ϕ =	1.00	Friction Angle Modifier
Φ =	36	Internal Friction Angle of Soil
γ =	110	Soil Density

Calculations for Dead End

$W_E = \gamma \cdot D \cdot H$ =	1754.500	Normal Force Due to Soil
$W = 2W_E + W_P + W_W$ =	3660.000	Normal Force Acting on Pipeline
$(A_p)_h = \pi \cdot D$ =	4.555	Area Based on Full Pipe Circumference
$F_{sh} = (A_p)_h \cdot f_c \cdot c + W \cdot \tan((\pi / 180) f_\phi \cdot \Phi)$ =	912.540	Frictional Resistance
$L = S_f \cdot P \cdot A / F_{sh}$ =	78.174	Minimum Restrained Length of Dead End

MEGALUG®

Created by EBAA Iron's Restraint Length Calculator v7.1.3 on February 19, 2025

Project Name: Shell Rd

Project Notes:

EBAA IRON — Built Stronger. Lasts Longer.
EBAA IRON SALES, INC.
www.ebaa.com • contact@ebaa.com • 800.433.1716

RESTRAINT LENGTH VALUES

Fitting Type	Pipe Material	Soil Type	Safety Factor	Trench Type	Depth of Bury	Test Pressure	Nominal Size	Bend Angle	Branch Size	Length Along Run	Reduced Size	Lowside Depth	Restraint Length	Restraint Length 2
Horizontal Bend	Poly Wrapped Ductile	GW	1.5	5	10 Ft.	200 PSI	16 In.	45°					8 Ft.	

Site Name: WL-E.2 HB @ 0+59.29

Site Notes:

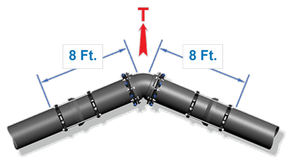

ALL JOINTS WITHIN THE CALCULATED LENGTH MUST BE RESTRAINED
IF YOUR DISTANCE BETWEEN FITTINGS IS LESS THAN OR EQUAL TO THE CALCULATED RESTRAINT LENGTH, RESTRAIN ALL JOINTS BETWEEN THOSE FITTINGS.

Defined Variables

H =	10	Depth of Bury
S_f =	1.5	Safety Factor
P =	200	Internal Pressure
θ =	45	Bend Angle

Pipe Derived Variables

A =	237.79	Cross Sec. Area of Pipe
D =	1.45	Outside Pipe Diameter
W_p =	57	Weight of Pipe
W_w =	94	Weight of Water in Pipe

Defined Variables

f_c =	0.00	Cohesion Modifier Coefficient
c =	0	Cohesion of Soil
f_ϕ =	1.00	Friction Angle Modifier
Φ =	36	Internal Friction Angle of Soil
γ =	110	Soil Density
K_N =	1.00	Trench Compaction Modifier

Calculations for Horizontal Bend

$W_E = \gamma \cdot D \cdot H$ =	1595.000	Normal Force Due to Soil
$W = 2W_E + W_P + W_W$ =	3341.000	Normal Force Acting on Pipeline
$K_p = \tan^2((\pi / 180) \cdot (45 + (\Phi / 2)))$ =	3.852	Rankin Passive Pressure Coeff.
$H_C = H + (D / 2)$ =	10.725	Depth From Surface to Pipe Center
$\sigma_h = \gamma \cdot H_C \cdot K_p + 2c\sqrt{K_p}$ =	4544.397	Horizontal Passive Soil Pressure
$A_p = \pi \cdot (D / 2)$ =	2.278	Area Based on Half of Circumference
$R_S = K_N \cdot \sigma_h \cdot D$ =	6589.376	Bearing Resistance of Pipelines
$F_s = A_p \cdot f_c \cdot c + W \cdot \tan((\pi / 180) \cdot f_\phi \cdot \Phi)$ =	833.005	Frictional Resitance
$L = (S_f \cdot P \cdot A \cdot \tan((\pi / 180) \cdot (\theta / 2))) / (F_s + (R_s / 2))$ =	7.159	Minimum Restrained Length

MEGALUG®

Created by EBAA Iron's Restraint Length Calculator v7.1.3 on February 19, 2025

Project Name: Shell Rd

Project Notes:

EBAA IRON — Built Stronger. Lasts Longer.
EBAA IRON SALES, INC.
www.ebaa.com • contact@ebaa.com • 800.433.1716

RESTRAINT LENGTH VALUES

Fitting Type	Pipe Material	Soil Type	Safety Factor	Trench Type	Depth of Bury	Test Pressure	Nominal Size	Bend Angle	Branch Size	Length Along Run	Reduced Size	Lowside Depth	Restraint Length	Restraint Length 2
Vertical Offset	Poly Wrapped Ductile	GW	1.5	5	10 Ft.	200 PSI	16 In.	22.5°				10 Ft.	18 Ft.	4 Ft.

Site Name: WL-E.2 VB @ 0+62.48 - 0+73.85

Site Notes:

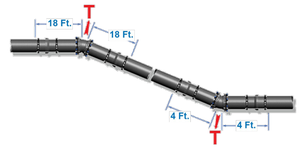

ALL JOINTS WITHIN THE CALCULATED LENGTH MUST BE RESTRAINED
IF YOUR DISTANCE BETWEEN FITTINGS IS LESS THAN OR EQUAL TO THE CALCULATED RESTRAINT LENGTH, RESTRAIN ALL JOINTS BETWEEN THOSE FITTINGS.

Defined Variables

H =	10	Depth of Bury
S_f =	1.5	Safety Factor
P =	200	Internal Pressure
θ =	22.5	Bend Angle

Pipe Derived Variables

A =	237.79	Cross Sec. Area of Pipe
D =	1.45	Outside Pipe Diameter
W_p =	57	Weight of Pipe
W_w =	94	Weight of Water in Pipe

Defined Variables

f_c =	0.00	Cohesion Modifier Coefficient
c =	0	Cohesion of Soil
f_ϕ =	1.00	Friction Angle Modifier
Φ =	36	Internal Friction Angle of Soil
γ =	110	Soil Density
K_N =	1.00	Trench Compaction Modifier

Calculations for Vertical Offset

	Lower	Upper	
$W_E = \gamma \cdot D \cdot H$ =	1595.000	1595.000	Normal Force Due to Soil
$W = 2W_E + W_P + W_W$ =	3341.000	3341.000	Normal Force Acting on Pipeline
$K_p = \tan^2((\pi / 180) \cdot (45 + (\Phi / 2)))$ =	3.852	3.852	Rankin Passive Pressure Coeff.
$H_C = H + (D / 2)$ =	10.725	10.725	Depth From Surface to Pipe Center
$\sigma_h = \gamma \cdot H_C \cdot K_p + 2c\sqrt{K_p}$ =	4544.397		Horizontal Passive Soil Pressure
$A_p = \pi \cdot (D / 2)$ =	2.278	2.278	Area Based on Half of Circumference
$R_S = K_N \cdot \sigma_h \cdot D$ =	6589.376	6589.376	Bearing Resistance of Pipelines
$F_s = A_p \cdot f_c \cdot c + W \cdot \tan((\pi / 180) \cdot f_\phi \cdot \Phi)$ =	833.005	833.005	Frictional Resitance
$L = (S_f \cdot P \cdot A \cdot \tan((\pi / 180) \cdot (\theta / 2))) / (F_s + (R_s / 2))$ =	3.438		Minimum Restrained Length Lower
$L = (S_f \cdot P \cdot A \cdot \tan((\pi / 180) \cdot (\theta / 2))) / F_s$ =		17.034	Minimum Restrained Length Upper

MEGALUG®

Created by EBAA Iron's Restraint Length Calculator v7.1.3 on February 19, 2025

811 Know what's below. Call before you dig.

CAUTION: CONTRACTOR NOTE

THE LOCATION OF EXISTING UNDERGROUND AND OVERHEAD UTILITIES ARE APPROXIMATE LOCATIONS ONLY. THE CONTRACTOR SHALL CONTACT UTILITY COMPANIES PRIOR TO CONSTRUCTION. CONTRACTOR SHALL DETERMINE, AND FIELD VERIFY EXISTING UTILITY LOCATIONS AND DEPTHS PRIOR TO BEGINNING CONSTRUCTION AND SHALL BE FULLY RESPONSIBLE FOR ANY AND ALL DAMAGES WHICH MIGHT OCCUR.

CONTRACTOR SHALL CONSIDER PROPOSED UTILITY IMPROVEMENTS AND PROVIDE ADEQUATE HORIZONTAL AND VERTICAL CLEARANCE DURING INSTALLATION OF ALL UTILITY INFRASTRUCTURE.

NO.	REVISION	BY	DATE

BGE JOB NO. XXXX-XX
FILE
DATE 02/21/2025
DESIGNED XXX
DRAWN XXX
REVISED XXX
CHECKED XXX

SHELL ROAD UTILITY RELOCATIONS

JOINT RESTRAINT CALCS (17 OF 27)

CITY OF GEORGETOWN

BGE

BGE, INC.
101 WEST LOUIS HENNA BLVD., STE 400
AUSTIN, TX 78728
TBPE Registration No. F-1046
TEL: 512-879-0400 www.bgeinc.com

STATE OF TEXAS — BRITTANY LYNN FAIRBURN — 132905 — LICENSED PROFESSIONAL ENGINEER

Brittany Lynn Fairburn

02/21/2025

SHEET

385

100% SUBMITTAL

FILE LOCATION: G:\TXC\PROJECTS\CITY_GEORGETOWN\10767-00 SHELL ROAD\03_CADD\01_SHTS_PW\SHELL_JOINT_RESTRAINTS.DWG DATE SAVED: 2/20/2025

Project Name: Shell Rd

Project Notes:

EBAA IRON — Built Stronger. Lasts Longer. — EBAA IRON SALES, INC.

www.ebaa.com • contact@ebaa.com • 800.433.1716

RESTRAINT LENGTH VALUES

Fitting Type	Pipe Material	Soil Type	Safety Factor	Trench Type	Depth of Bury	Test Pressure	Nominal Size	Bend Angle	Branch Size	Length Along Run	Reduced Size	Lowside Depth	Restraint Length	Restraint Length 2
Horizontal Bend	Poly Wrapped Ductile	GW	1.5	5	10 Ft.	200 PSI	16 In.	45°					8 Ft.	

Site Name: WL-E.2 HB @ 0+67.09

Site Notes:

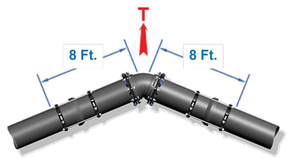

ALL JOINTS WITHIN THE CALCULATED LENGTH MUST BE RESTRAINED
IF YOUR DISTANCE BETWEEN FITTINGS IS LESS THAN OR EQUAL TO THE CALCULATED RESTRAINT LENGTH, RESTRAIN ALL JOINTS BETWEEN THOSE FITTINGS.

Defined Variables

H =	10	Depth of Bury
S_f =	1.5	Safety Factor
P =	200	Internal Pressure
θ =	45	Bend Angle

Pipe Derived Variables

A =	237.79	Cross Sec. Area of Pipe
D =	1.45	Outside Pipe Diameter
W_p =	57	Weight of Pipe
W_w =	94	Weight of Water in Pipe

Defined Variables

f_c =	0.00	Cohesion Modifier Coefficient
c =	0	Cohesion of Soil
f_ϕ =	1.00	Friction Angle Modifier
Φ =	36	Internal Friction Angle of Soil
γ =	110	Soil Density
K_N =	1.00	Trench Compaction Modifier

Calculations for Horizontal Bend

$W_E = \gamma \cdot D \cdot H =$	1595.000	Normal Force Due to Soil
$W = 2W_E + W_P + W_W =$	3341.000	Normal Force Acting on Pipeline
$K_p = \tan^2((\pi / 180) \cdot (45 + (\Phi / 2))) =$	3.852	Rankin Passive Pressure Coeff.
$H_C = H + (D / 2) =$	10.725	Depth From Surface to Pipe Center
$\sigma_h = \gamma \cdot H_C \cdot K_p + 2c\sqrt{K_p} =$	4544.397	Horizontal Passive Soil Pressure
$A_p = \pi \cdot (D / 2) =$	2.278	Area Based on Half of Circumference
$R_s = K_N \cdot \sigma_h \cdot D =$	6589.376	Bearing Resistance of Pipelines
$F_s = A_p \cdot f_c \cdot c + W \cdot \tan((\pi / 180) \cdot f_\phi \cdot \Phi) =$	833.005	Frictional Resistance
$L = (S_f \cdot P \cdot A \cdot \tan((\pi / 180) \cdot (\theta / 2))) / (F_s + (R_s / 2)) =$	7.159	Minimum Restrained Length

MEGALUG®

Created by EBAA Iron's Restraint Length Calculator v7.1.3 on February 19, 2025

Project Name: Shell Rd

Project Notes:

EBAA IRON — Built Stronger. Lasts Longer. — EBAA IRON SALES, INC.

www.ebaa.com • contact@ebaa.com • 800.433.1716

RESTRAINT LENGTH VALUES

Fitting Type	Pipe Material	Soil Type	Safety Factor	Trench Type	Depth of Bury	Test Pressure	Nominal Size	Bend Angle	Branch Size	Length Along Run	Reduced Size	Lowside Depth	Restraint Length	Restraint Length 2
Tee	Poly Wrapped Ductile	GW	1.5	5	6 Ft.	200 PSI	12 In.		16 In.	4 Ft.			103 Ft.	

Site Name: WL-F Tee @ 0+27.04

Site Notes:

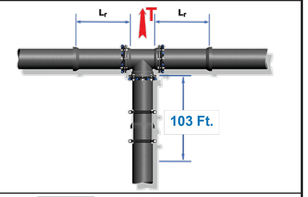

ALL JOINTS WITHIN THE CALCULATED LENGTH MUST BE RESTRAINED
IF YOUR DISTANCE BETWEEN FITTINGS IS LESS THAN OR EQUAL TO THE CALCULATED RESTRAINT LENGTH, RESTRAIN ALL JOINTS BETWEEN THOSE FITTINGS.

Defined Variables

H =	6	Depth of Bury
S_f =	1.5	Safety Factor
P =	200	Internal Pressure

Pipe Derived Variables

A =	136.85	Cross Sec. Area (Main)
A_b =	237.79	Cross Sec. Area (Branch)
D =	1.10	Outside Pipe Diameter
D_b =	1.45	Outside Diameter Branch
W_p =	57	Weight of Pipe
W_w =	94	Weight of Water in Pipe
L_r =	4	Min. restrained Length either side of Tee

Defined Variables

f_c =	0.00	Cohesion Modifier Coefficient
c =	0	Cohesion of Soil
f_ϕ =	1.00	Friction Angle Modifier
Φ =	36	Internal Friction Angle of Soil
γ =	110	Soil Density

Calculations for Tee

$W_E = \gamma \cdot D \cdot H =$	957.000	Normal Force Due to Soil
$W = 2W_E + W_P + W_W =$	2065.000	Normal Force Acting on Pipeline
$K_p = \tan^2((\pi / 180) \cdot (45 + (\Phi / 2))) =$	3.852	Rankin Passive Pressure Coeff.
$H_C = H + (D / 2) =$	6.550	Depth From Surface to Pipe Center
$\sigma_h = \gamma \cdot H_C \cdot K_p + 2c\sqrt{K_p} =$	2775.366	Horizontal Passive Soil Pressure
$A_p = \pi \cdot (D / 2) =$	1.728	Area Based on Half of Circumference
$(A_p)_b = \pi \cdot D_b =$	4.555	Area Based on Full Branch Circumference
$R_s = K_N \cdot \sigma_h \cdot D =$	3052.903	Bearing Resistance of Pipelines
$F_{sb} = (A_p)_b \cdot f_c \cdot c + W \cdot \tan((\pi / 180) f_\phi \cdot \Phi) =$	514.862	Frictional Resistance
$L_b = S_f(P \cdot A_b - R_s \cdot L_r) / F_{sb} =$	102.978	Minimum Restrained Length Branch

MEGALUG®

Created by EBAA Iron's Restraint Length Calculator v7.1.3 on February 19, 2025

Project Name: Shell Rd

Project Notes:

EBAA IRON — Built Stronger. Lasts Longer. — EBAA IRON SALES, INC.

www.ebaa.com • contact@ebaa.com • 800.433.1716

RESTRAINT LENGTH VALUES

Fitting Type	Pipe Material	Soil Type	Safety Factor	Trench Type	Depth of Bury	Test Pressure	Nominal Size	Bend Angle	Branch Size	Length Along Run	Reduced Size	Lowside Depth	Restraint Length	Restraint Length 2
Dead End	Poly Wrapped Ductile	GW	1.5	5	6 Ft.	200 PSI	12 In.						107 Ft.	

Site Name: WL-F GV @ 0+30.43

Site Notes:

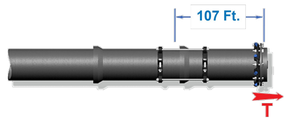

ALL JOINTS WITHIN THE CALCULATED LENGTH MUST BE RESTRAINED
IF YOUR DISTANCE BETWEEN FITTINGS IS LESS THAN OR EQUAL TO THE CALCULATED RESTRAINT LENGTH, RESTRAIN ALL JOINTS BETWEEN THOSE FITTINGS.

Defined Variables

H =	6	Depth of Bury
S_f =	1.5	Safety Factor
P =	200	Internal Pressure

Pipe Derived Variables

A =	136.85	Cross Sec. Area of Pipe
D =	1.10	Outside Pipe Diameter
W_p =	39	Weight of Pipe
W_w =	53	Weight of Water in Pipe

Defined Variables

f_c =	0.00	Cohesion Modifier Coefficient
c =	0	Cohesion of Soil
f_ϕ =	1.00	Friction Angle Modifier
Φ =	36	Internal Friction Angle of Soil
γ =	110	Soil Density

Calculations for Dead End

$W_E = \gamma \cdot D \cdot H =$	726.000	Normal Force Due to Soil
$W = 2W_E + W_P + W_W =$	1544.000	Normal Force Acting on Pipeline
$(A_p)_b = \pi \cdot D =$	3.456	Area Based on Full Pipe Circumference
$F_{sb} = (A_p)_b \cdot f_c \cdot c + W \cdot \tan((\pi / 180) f_\phi \cdot \Phi) =$	384.962	Frictional Resistance
$L = S_f \cdot P \cdot A / F_{sb} =$	106.647	Minimum Restrained Length of Dead End

MEGALUG®

Created by EBAA Iron's Restraint Length Calculator v7.1.3 on February 19, 2025

Project Name: Shell Rd

Project Notes:

EBAA IRON — Built Stronger. Lasts Longer. — EBAA IRON SALES, INC.

www.ebaa.com • contact@ebaa.com • 800.433.1716

RESTRAINT LENGTH VALUES

Fitting Type	Pipe Material	Soil Type	Safety Factor	Trench Type	Depth of Bury	Test Pressure	Nominal Size	Bend Angle	Branch Size	Length Along Run	Reduced Size	Lowside Depth	Restraint Length	Restraint Length 2
Tee	Poly Wrapped Ductile	GW	1.5	5	6 Ft.	200 PSI	12 In.		6 In.	3 Ft.			1 Ft.	

Site Name: WL-F Tee @ 0+33.83

Site Notes:

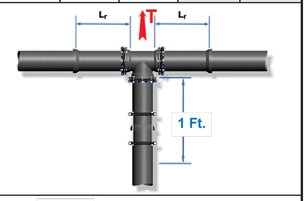

ALL JOINTS WITHIN THE CALCULATED LENGTH MUST BE RESTRAINED
IF YOUR DISTANCE BETWEEN FITTINGS IS LESS THAN OR EQUAL TO THE CALCULATED RESTRAINT LENGTH, RESTRAIN ALL JOINTS BETWEEN THOSE FITTINGS.

Defined Variables

H =	6	Depth of Bury
S_f =	1.5	Safety Factor
P =	200	Internal Pressure

Pipe Derived Variables

A =	136.85	Cross Sec. Area (Main)
A_b =	37.39	Cross Sec. Area (Branch)
D =	1.10	Outside Pipe Diameter
D_b =	0.58	Outside Diameter Branch
W_p =	18	Weight of Pipe
W_w =	13	Weight of Water in Pipe
L_r =	3	Min. restrained Length either side of Tee

Defined Variables

f_c =	0.00	Cohesion Modifier Coefficient
c =	0	Cohesion of Soil
f_ϕ =	1.00	Friction Angle Modifier
Φ =	36	Internal Friction Angle of Soil
γ =	110	Soil Density

Calculations for Tee

$W_E = \gamma \cdot D \cdot H =$	382.800	Normal Force Due to Soil
$W = 2W_E + W_P + W_W =$	796.600	Normal Force Acting on Pipeline
$K_p = \tan^2((\pi / 180) \cdot (45 + (\Phi / 2))) =$	3.852	Rankin Passive Pressure Coeff.
$H_C = H + (D / 2) =$	6.550	Depth From Surface to Pipe Center
$\sigma_h = \gamma \cdot H_C \cdot K_p + 2c\sqrt{K_p} =$	2775.366	Horizontal Passive Soil Pressure
$A_p = \pi \cdot (D / 2) =$	1.728	Area Based on Half of Circumference
$(A_p)_b = \pi \cdot D_b =$	1.822	Area Based on Full Branch Circumference
$R_s = K_N \cdot \sigma_h \cdot D =$	3052.903	Bearing Resistance of Pipelines
$F_{sb} = (A_p)_b \cdot f_c \cdot c + W \cdot \tan((\pi / 180) f_\phi \cdot \Phi) =$	198.615	Frictional Resistance
$L_b = S_f(P \cdot A_b - R_s \cdot L_r) / F_{sb} =$	-12.693	Minimum Restrained Length Branch

MEGALUG®

Created by EBAA Iron's Restraint Length Calculator v7.1.3 on February 19, 2025

CAUTION: CONTRACTOR NOTE

811 Know what's below. Call before you dig.

THE LOCATION OF EXISTING UNDERGROUND AND OVERHEAD UTILITIES ARE APPROXIMATE LOCATIONS ONLY. THE CONTRACTOR SHALL CONTACT UTILITY COMPANIES PRIOR TO CONSTRUCTION. CONTRACTOR SHALL DETERMINE, AND FIELD VERIFY EXISTING UTILITY LOCATIONS AND DEPTHS PRIOR TO BEGINNING CONSTRUCTION AND SHALL BE FULLY RESPONSIBLE FOR ANY AND ALL DAMAGES WHICH MIGHT OCCUR.

CONTRACTOR SHALL CONSIDER PROPOSED UTILITY IMPROVEMENTS AND PROVIDE ADEQUATE HORIZONTAL AND VERTICAL CLEARANCE DURING INSTALLATION OF ALL UTILITY INFRASTRUCTURE.

NO.	REVISION	BY	DATE

BGE JOB NO. XXXX-XX
FILE
DATE 02/21/2025
DESIGNED XXX
DRAWN XXX
REVISED XXX
CHECKED XXX

SHELL ROAD UTILITY RELOCATIONS

JOINT RESTRAINT CALCS (18 OF 27)

CITY OF GEORGETOWN

BGE, INC.
101 WEST LOUIS HENNA BLVD., STE 400
AUSTIN, TX 78728
TBPE Registration No. F-1046
TEL: 512-879-0400 www.bgeinc.com

STATE OF TEXAS — BRITTANY LYNN FAIRBURN — 132905 — LICENSED PROFESSIONAL ENGINEER

Brittany Lynn Fairburn

02/21/2025

SHEET

386

100% SUBMITTAL

FILE LOCATION: G:\TXC\PROJECTS\CITY_GEORGETOWN\10767-00 SHELL ROAD\03_CADD\01_SHTS_PW\SHELL_JOINT_RESTRAINTS.DWG DATE SAVED: 2/20/2025

Project Name: Shell Rd

Project Notes:

Built Stronger. Lasts Longer.
EBAA IRON
EBAA IRON SALES, INC.
www.ebaa.com • contact@ebaa.com • 800.433.1716

RESTRAINT LENGTH VALUES

Fitting Type	Pipe Material	Soil Type	Safety Factor	Trench Type	Depth of Bury	Test Pressure	Nominal Size	Bend Angle	Branch Size	Length Along Run	Reduced Size	Lowside Depth	Restraint Length	Restraint Length 2
Vertical Offset	Poly Wrapped Ductile	GW	1.5	5	6 Ft.	200 PSI	12 In.	45°				11 Ft.	45 Ft.	6 Ft.

Site Name: WL-F VB @ 0+46.96 - 0+50.93

Site Notes:

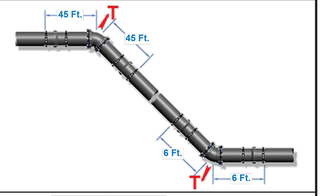

ALL JOINTS WITHIN THE CALCULATED LENGTH MUST BE RESTRAINED
IF YOUR DISTANCE BETWEEN FITTINGS IS LESS THAN OR EQUAL TO THE CALCULATED RESTRAINT LENGTH, RESTRAIN ALL JOINTS BETWEEN THOSE FITTINGS.

Defined Variables

H =	6	Depth of Bury
S_f =	1.5	Safety Factor
P =	200	Internal Pressure
θ =	45	Bend Angle

Pipe Derived Variables

A =	136.85	Cross Sec. Area of Pipe
D =	1.10	Outside Pipe Diameter
W_p =	39	Weight of Pipe
W_w =	53	Weight of Water in Pipe

Defined Variables

f_c =	0.00	Cohesion Modifier Coefficient
c =	0	Cohesion of Soil
f_ϕ =	1.00	Friction Angle Modifier
Φ =	36	Internal Friction Angle of Soil
γ =	110	Soil Density
K_N =	1.00	Trench Compaction Modifier

Calculations for Vertical Offset	Lower	Upper	
$W_E = \gamma \cdot D \cdot H =$	1331.000	726.000	Normal Force Due to Soil
$W = 2W_E + W_P + W_W =$	2754.000	1544.000	Normal Force Acting on Pipeline
$K_P = \tan^2((\pi / 180) \cdot (45 + (\Phi / 2))) =$	3.852	3.852	Rankin Passive Pressure Coeff.
$H_C = H + (D / 2) =$	11.550	6.550	Depth From Surface to Pipe Center
$\sigma_h = \gamma \cdot H_C \cdot K_P + 2c\sqrt{K_P} =$	4893.966		Horizontal Passive Soil Pressure
$A_P = \pi \cdot (D / 2) =$	1.728	1.728	Area Based on Half of Circumference
$R_S = K_N \cdot \sigma_h \cdot D =$	5383.363	5383.363	Bearing Resistance of Pipelines
$F_s = A_P \cdot f_c \cdot c + W \cdot \tan((\pi / 180) \cdot f_\phi \cdot \Phi) =$	686.649	384.962	Frictional Resitance
$L = (S_f \cdot P \cdot A \cdot \tan((\pi / 180) \cdot (\theta / 2))) / (F_s + (R_S / 2)) =$	5.034		Minimum Restrained Length Lower
$L = (S_f \cdot P \cdot A \cdot \tan((\pi / 180) \cdot (\theta / 2))) / F_s =$		44.175	Minimum Restrained Length Upper

MEGALUG®

Created by EBAA Iron's Restraint Length Calculator v7.1.3 on February 19, 2025

Project Name: Shell Rd

Project Notes:

Built Stronger. Lasts Longer.
EBAA IRON
EBAA IRON SALES, INC.
www.ebaa.com • contact@ebaa.com • 800.433.1716

RESTRAINT LENGTH VALUES

Fitting Type	Pipe Material	Soil Type	Safety Factor	Trench Type	Depth of Bury	Test Pressure	Nominal Size	Bend Angle	Branch Size	Length Along Run	Reduced Size	Lowside Depth	Restraint Length	Restraint Length 2
Horizontal Bend	Poly Wrapped Ductile	GW	1.5	5	11 Ft.	200 PSI	12 In.	45°					6 Ft.	

Site Name: WL-F HB @ 1+50.54

Site Notes:

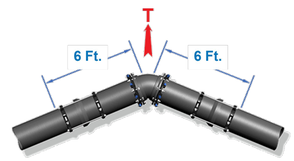

ALL JOINTS WITHIN THE CALCULATED LENGTH MUST BE RESTRAINED
IF YOUR DISTANCE BETWEEN FITTINGS IS LESS THAN OR EQUAL TO THE CALCULATED RESTRAINT LENGTH, RESTRAIN ALL JOINTS BETWEEN THOSE FITTINGS.

Defined Variables

H =	11	Depth of Bury
S_f =	1.5	Safety Factor
P =	200	Internal Pressure
θ =	45	Bend Angle

Pipe Derived Variables

A =	136.85	Cross Sec. Area of Pipe
D =	1.10	Outside Pipe Diameter
W_p =	39	Weight of Pipe
W_w =	53	Weight of Water in Pipe

Defined Variables

f_c =	0.00	Cohesion Modifier Coefficient
c =	0	Cohesion of Soil
f_ϕ =	1.00	Friction Angle Modifier
Φ =	36	Internal Friction Angle of Soil
γ =	110	Soil Density
K_N =	1.00	Trench Compaction Modifier

Calculations for Horizontal Bend		
$W_E = \gamma \cdot D \cdot H =$	1331.000	Normal Force Due to Soil
$W = 2W_E + W_P + W_W =$	2754.000	Normal Force Acting on Pipeline
$K_P = \tan^2((\pi / 180) \cdot (45 + (\Phi / 2))) =$	3.852	Rankin Passive Pressure Coeff.
$H_C = H + (D / 2) =$	11.550	Depth From Surface to Pipe Center
$\sigma_h = \gamma \cdot H_C \cdot K_P + 2c\sqrt{K_P} =$	4893.966	Horizontal Passive Soil Pressure
$A_P = \pi \cdot (D / 2) =$	1.728	Area Based on Half of Circumference
$R_S = K_N \cdot \sigma_h \cdot D =$	5383.363	Bearing Resistance of Pipelines
$F_s = A_P \cdot f_c \cdot c + W \cdot \tan((\pi / 180) \cdot f_\phi \cdot \Phi) =$	686.649	Frictional Resitance
$L = (S_f \cdot P \cdot A \cdot \tan((\pi / 180) \cdot (\theta / 2))) / (F_s + (R_S / 2)) =$	5.034	Minimum Restrained Length

MEGALUG®

Created by EBAA Iron's Restraint Length Calculator v7.1.3 on February 19, 2025

Project Name: Shell Rd

Project Notes:

Built Stronger. Lasts Longer.
EBAA IRON
EBAA IRON SALES, INC.
www.ebaa.com • contact@ebaa.com • 800.433.1716

RESTRAINT LENGTH VALUES

Fitting Type	Pipe Material	Soil Type	Safety Factor	Trench Type	Depth of Bury	Test Pressure	Nominal Size	Bend Angle	Branch Size	Length Along Run	Reduced Size	Lowside Depth	Restraint Length	Restraint Length 2
Vertical Offset	Poly Wrapped Ductile	GW	1.5	5	4 Ft.	200 PSI	12 In.	22.5°				11 Ft.	31 Ft.	3 Ft.

Site Name: WL-F VB @ 1+55.54 - 1+72.48

Site Notes:

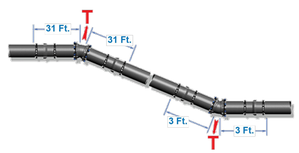

ALL JOINTS WITHIN THE CALCULATED LENGTH MUST BE RESTRAINED
IF YOUR DISTANCE BETWEEN FITTINGS IS LESS THAN OR EQUAL TO THE CALCULATED RESTRAINT LENGTH, RESTRAIN ALL JOINTS BETWEEN THOSE FITTINGS.

Defined Variables

H =	4	Depth of Bury
S_f =	1.5	Safety Factor
P =	200	Internal Pressure
θ =	22.5	Bend Angle

Pipe Derived Variables

A =	136.85	Cross Sec. Area of Pipe
D =	1.10	Outside Pipe Diameter
W_p =	39	Weight of Pipe
W_w =	53	Weight of Water in Pipe

Defined Variables

f_c =	0.00	Cohesion Modifier Coefficient
c =	0	Cohesion of Soil
f_ϕ =	1.00	Friction Angle Modifier
Φ =	36	Internal Friction Angle of Soil
γ =	110	Soil Density
K_N =	1.00	Trench Compaction Modifier

Calculations for Vertical Offset	Lower	Upper	
$W_E = \gamma \cdot D \cdot H =$	1331.000	484.000	Normal Force Due to Soil
$W = 2W_E + W_P + W_W =$	2754.000	1060.000	Normal Force Acting on Pipeline
$K_P = \tan^2((\pi / 180) \cdot (45 + (\Phi / 2))) =$	3.852	3.852	Rankin Passive Pressure Coeff.
$H_C = H + (D / 2) =$	11.550	4.550	Depth From Surface to Pipe Center
$\sigma_h = \gamma \cdot H_C \cdot K_P + 2c\sqrt{K_P} =$	4893.966		Horizontal Passive Soil Pressure
$A_P = \pi \cdot (D / 2) =$	1.728	1.728	Area Based on Half of Circumference
$R_S = K_N \cdot \sigma_h \cdot D =$	5383.363	5383.363	Bearing Resistance of Pipelines
$F_s = A_P \cdot f_c \cdot c + W \cdot \tan((\pi / 180) \cdot f_\phi \cdot \Phi) =$	686.649	264.288	Frictional Resitance
$L = (S_f \cdot P \cdot A \cdot \tan((\pi / 180) \cdot (\theta / 2))) / (F_s + (R_S / 2)) =$	2.417		Minimum Restrained Length Lower
$L = (S_f \cdot P \cdot A \cdot \tan((\pi / 180) \cdot (\theta / 2))) / F_s =$		30.899	Minimum Restrained Length Upper

MEGALUG®

Created by EBAA Iron's Restraint Length Calculator v7.1.3 on February 19, 2025

Project Name: Shell Rd

Project Notes:

Built Stronger. Lasts Longer.
EBAA IRON
EBAA IRON SALES, INC.
www.ebaa.com • contact@ebaa.com • 800.433.1716

RESTRAINT LENGTH VALUES

Fitting Type	Pipe Material	Soil Type	Safety Factor	Trench Type	Depth of Bury	Test Pressure	Nominal Size	Bend Angle	Branch Size	Length Along Run	Reduced Size	Lowside Depth	Restraint Length	Restraint Length 2
Tee	Poly Wrapped Ductile	GW	1.5	5	6 Ft.	200 PSI	12 In.		6 In.	5 Ft.			1 Ft.	

Site Name: WL-F Tee @ 1+67.01

Site Notes:

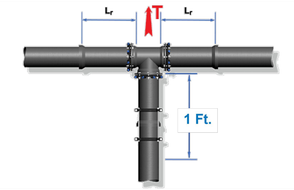

ALL JOINTS WITHIN THE CALCULATED LENGTH MUST BE RESTRAINED
IF YOUR DISTANCE BETWEEN FITTINGS IS LESS THAN OR EQUAL TO THE CALCULATED RESTRAINT LENGTH, RESTRAIN ALL JOINTS BETWEEN THOSE FITTINGS.

Defined Variables

H =	6	Depth of Bury
S_f =	1.5	Safety Factor
P =	200	Internal Pressure

Pipe Derived Variables

A =	136.85	Cross Sec. Area (Main)
A_b =	37.39	Cross Sec. Area (Branch)
D =	1.10	Outside Pipe Diameter
D_b =	0.58	Outside Diameter Branch
W_p =	18	Weight of Pipe
W_w =	13	Weight of Water in Pipe
L_r =	5	Min. restrained Length either side of Tee

Defined Variables

f_c =	0.00	Cohesion Modifier Coefficient
c =	0	Cohesion of Soil
f_ϕ =	1.00	Friction Angle Modifier
Φ =	36	Internal Friction Angle of Soil
γ =	110	Soil Density

Calculations for Tee		
$W_E = \gamma \cdot D \cdot H =$	382.800	Normal Force Due to Soil
$W = 2W_E + W_P + W_W =$	796.600	Normal Force Acting on Pipeline
$K_P = \tan^2((\pi / 180) \cdot (45 + (\Phi / 2))) =$	3.852	Rankin Passive Pressure Coeff.
$H_C = H + (D / 2) =$	6.550	Depth From Surface to Pipe Center
$\sigma_h = \gamma \cdot H_C \cdot K_P + 2c\sqrt{K_P} =$	2775.366	Horizontal Passive Soil Pressure
$A_P = \pi \cdot (D / 2) =$	1.728	Area Based on Half of Circumference
$(A_p)_b = \pi \cdot D_b =$	1.822	Area Based on Full Branch Circumference
$R_S = K_N \cdot \sigma_h \cdot D =$	3052.903	Bearing Resistance of Pipelines
$F_{sb} = (A_p)_b \cdot f_c \cdot c + W \cdot \tan((\pi / 180) f_\phi \cdot \Phi) =$	198.615	Frictional Resistance
$L_b = S_f(P \cdot A_b - R_s \cdot L_r) / F_{sb} =$	-58.806	Minimum Restrained Length Branch

MEGALUG®

Created by EBAA Iron's Restraint Length Calculator v7.1.3 on February 19, 2025

811 Know what's below. Call before you dig.

CAUTION: CONTRACTOR NOTE

THE LOCATION OF EXISTING UNDERGROUND AND OVERHEAD UTILITIES ARE APPROXIMATE LOCATIONS ONLY. THE CONTRACTOR SHALL CONTACT UTILITY COMPANIES PRIOR TO CONSTRUCTION. CONTRACTOR SHALL DETERMINE, AND FIELD VERIFY EXISTING UTILITY LOCATIONS AND DEPTHS PRIOR TO BEGINNING CONSTRUCTION AND SHALL BE FULLY RESPONSIBLE FOR ANY AND ALL DAMAGES WHICH MIGHT OCCUR.

CONTRACTOR SHALL CONSIDER PROPOSED UTILITY IMPROVEMENTS AND PROVIDE ADEQUATE HORIZONTAL AND VERTICAL CLEARANCE DURING INSTALLATION OF ALL UTILITY INFRASTRUCTURE.

NO.	REVISION	BY	DATE

BGE JOB NO. XXXX-XX
FILE
DATE 02/21/2025
DESIGNED XXX
DRAWN XXX
REVISED XXX
CHECKED XXX

SHELL ROAD UTILITY RELOCATIONS

JOINT RESTRAINT CALCS (19 OF 27)

CITY OF GEORGETOWN

BGE
BGE, INC.
101 WEST LOUIS HENNA BLVD., STE 400
AUSTIN, TX 78728
TBPE Registration No. F-1046
TEL: 512-879-0400 www.bgeinc.com

STATE OF TEXAS
BRITTANY LYNN FAIRBURN
132905
LICENSED
PROFESSIONAL ENGINEER
Brittany Lynn Fairburn
02/21/2025

SHEET
387

100% SUBMITTAL

FILE LOCATION: G:\TXC\PROJECTS\CITY_GEORGETOWN\10767-00 SHELL ROAD\03_CADD\01_SHTS_PW\SHELL_JOINT_RESTRAINTS.DWG DATE SAVED: 2/20/2025

Project Name: Shell Rd

Project Notes:

www.ebaa.com • contact@ebaa.com • 800.433.1716

RESTRAINT LENGTH VALUES

Fitting Type	Pipe Material	Soil Type	Safety Factor	Trench Type	Depth of Bury	Test Pressure	Nominal Size	Bend Angle	Branch Size	Length Along Run	Reduced Size	Lowside Depth	Restraint Length	Restraint Length 2
Dead End	Poly Wrapped Ductile	GW	1.5	5	6 Ft.	200 PSI	6 In.						57 Ft.	

Site Name: WL-F GV @ 1+67.01

Site Notes:

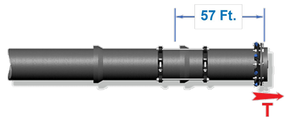

ALL JOINTS WITHIN THE CALCULATED LENGTH MUST BE RESTRAINED
IF YOUR DISTANCE BETWEEN FITTINGS IS LESS THAN OR EQUAL TO THE CALCULATED RESTRAINT LENGTH, RESTRAIN ALL JOINTS BETWEEN THOSE FITTINGS.

Defined Variables

H =	6	Depth of Bury
S_f =	1.5	Safety Factor
P =	200	Internal Pressure

Pipe Derived Variables

A =	37.39	Cross Sec. Area of Pipe
D =	0.58	Outside Pipe Diameter
W_p =	18	Weight of Pipe
W_w =	13	Weight of Water in Pipe

Defined Variables

f_c =	0.00	Cohesion Modifier Coefficient
c =	0	Cohesion of Soil
f_ϕ =	1.00	Friction Angle Modifier
Φ =	36	Internal Friction Angle of Soil
γ =	110	Soil Density
K_N =	1.00	Trench Compaction Modifier

Calculations for Dead End

$W_E = \gamma \cdot D \cdot H$ =	382.800	Normal Force Due to Soil
$W = 2W_E + W_P + W_W$ =	796.600	Normal Force Acting on Pipeline
$(A_p)_A = \pi \cdot D$ =	1.822	Area Based on Full Pipe Circumference
$F_{sh} = (A_p)_A \cdot f_c \cdot c + W \cdot \tan((\pi / 180) f_\phi \cdot \Phi)$ =	198.615	Frictional Resistance
$L = S_f \cdot P \cdot A / F_{sh}$ =	56.476	Minimum Restrained Length of Dead End

MEGALUG®

Created by EBAA Iron's Restraint Length Calculator v7.1.3 on February 19, 2025

Project Name: Shell Rd

Project Notes:

www.ebaa.com • contact@ebaa.com • 800.433.1716

RESTRAINT LENGTH VALUES

Fitting Type	Pipe Material	Soil Type	Safety Factor	Trench Type	Depth of Bury	Test Pressure	Nominal Size	Bend Angle	Branch Size	Length Along Run	Reduced Size	Lowside Depth	Restraint Length	Restraint Length 2
Horizontal Bend	Poly Wrapped Ductile	GW	1.5	5	4 Ft.	200 PSI	12 In.	45°					13 Ft.	

Site Name: WL-F HB @ 1+75.42

Site Notes:

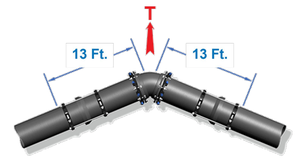

ALL JOINTS WITHIN THE CALCULATED LENGTH MUST BE RESTRAINED
IF YOUR DISTANCE BETWEEN FITTINGS IS LESS THAN OR EQUAL TO THE CALCULATED RESTRAINT LENGTH, RESTRAIN ALL JOINTS BETWEEN THOSE FITTINGS.

Defined Variables

H =	4	Depth of Bury
S_f =	1.5	Safety Factor
P =	200	Internal Pressure
θ =	45	Bend Angle

Pipe Derived Variables

A =	136.85	Cross Sec. Area of Pipe
D =	1.10	Outside Pipe Diameter
W_p =	39	Weight of Pipe
W_w =	53	Weight of Water in Pipe

Defined Variables

f_c =	0.00	Cohesion Modifier Coefficient
c =	0	Cohesion of Soil
f_ϕ =	1.00	Friction Angle Modifier
Φ =	36	Internal Friction Angle of Soil
γ =	110	Soil Density
K_N =	1.00	Trench Compaction Modifier

Calculations for Horizontal Bend

$W_E = \gamma \cdot D \cdot H$ =	484.000	Normal Force Due to Soil
$W = 2W_E + W_P + W_W$ =	1060.000	Normal Force Acting on Pipeline
$K_p = \tan^2((\pi / 180) \cdot (45 + (\Phi / 2)))$ =	3.852	Rankin Passive Pressure Coeff.
$H_C = H + (D / 2)$ =	4.550	Depth From Surface to Pipe Center
$\sigma_h = \gamma \cdot H_C \cdot K_p + 2c\sqrt{K_p}$ =	1927.926	Horizontal Passive Soil Pressure
$A_p = \pi \cdot (D / 2)$ =	1.728	Area Based on Half of Circumference
$R_S = K_N \cdot \sigma_h \cdot D$ =	2120.719	Bearing Resistance of Pipelines
$F_s = A_p \cdot f_c \cdot c + W \cdot \tan((\pi / 180) \cdot f_\phi \cdot \Phi)$ =	264.288	Frictional Resitance
$L = (S_f \cdot P \cdot A \cdot \tan((\pi / 180) \cdot (\theta / 2))) / (F_s + (R_S / 2))$ =	12.838	Minimum Restrained Length

MEGALUG®

Created by EBAA Iron's Restraint Length Calculator v7.1.3 on February 19, 2025

Project Name: Shell Rd

Project Notes:

www.ebaa.com • contact@ebaa.com • 800.433.1716

RESTRAINT LENGTH VALUES

Fitting Type	Pipe Material	Soil Type	Safety Factor	Trench Type	Depth of Bury	Test Pressure	Nominal Size	Bend Angle	Branch Size	Length Along Run	Reduced Size	Lowside Depth	Restraint Length	Restraint Length 2
Horizontal Bend	Poly Wrapped Ductile	GW	1.5	5	11 Ft.	200 PSI	12 In.	45°					6 Ft.	

Site Name: WL-F HB @ 1+84.60

Site Notes:

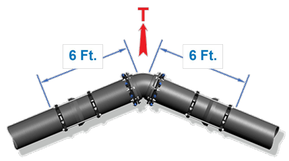

ALL JOINTS WITHIN THE CALCULATED LENGTH MUST BE RESTRAINED
IF YOUR DISTANCE BETWEEN FITTINGS IS LESS THAN OR EQUAL TO THE CALCULATED RESTRAINT LENGTH, RESTRAIN ALL JOINTS BETWEEN THOSE FITTINGS.

Defined Variables

H =	11	Depth of Bury
S_f =	1.5	Safety Factor
P =	200	Internal Pressure
θ =	45	Bend Angle

Pipe Derived Variables

A =	136.85	Cross Sec. Area of Pipe
D =	1.10	Outside Pipe Diameter
W_p =	39	Weight of Pipe
W_w =	53	Weight of Water in Pipe

Defined Variables

f_c =	0.00	Cohesion Modifier Coefficient
c =	0	Cohesion of Soil
f_ϕ =	1.00	Friction Angle Modifier
Φ =	36	Internal Friction Angle of Soil
γ =	110	Soil Density
K_N =	1.00	Trench Compaction Modifier

Calculations for Horizontal Bend

$W_E = \gamma \cdot D \cdot H$ =	1331.000	Normal Force Due to Soil
$W = 2W_E + W_P + W_W$ =	2754.000	Normal Force Acting on Pipeline
$K_p = \tan^2((\pi / 180) \cdot (45 + (\Phi / 2)))$ =	3.852	Rankin Passive Pressure Coeff.
$H_C = H + (D / 2)$ =	11.550	Depth From Surface to Pipe Center
$\sigma_h = \gamma \cdot H_C \cdot K_p + 2c\sqrt{K_p}$ =	4893.966	Horizontal Passive Soil Pressure
$A_p = \pi \cdot (D / 2)$ =	1.728	Area Based on Half of Circumference
$R_S = K_N \cdot \sigma_h \cdot D$ =	5383.363	Bearing Resistance of Pipelines
$F_s = A_p \cdot f_c \cdot c + W \cdot \tan((\pi / 180) \cdot f_\phi \cdot \Phi)$ =	686.649	Frictional Resitance
$L = (S_f \cdot P \cdot A \cdot \tan((\pi / 180) \cdot (\theta / 2))) / (F_s + (R_S / 2))$ =	5.034	Minimum Restrained Length

MEGALUG®

Created by EBAA Iron's Restraint Length Calculator v7.1.3 on February 20, 2025

Project Name: Shell Rd

Project Notes:

www.ebaa.com • contact@ebaa.com • 800.433.1716

RESTRAINT LENGTH VALUES

Fitting Type	Pipe Material	Soil Type	Safety Factor	Trench Type	Depth of Bury	Test Pressure	Nominal Size	Bend Angle	Branch Size	Length Along Run	Reduced Size	Lowside Depth	Restraint Length	Restraint Length 2
Vertical Offset	Poly Wrapped Ductile	GW	1.5	5	3.5 Ft.	200 PSI	12 In.	22.5°				10 Ft.	35 Ft.	3 Ft.

Site Name: WL-F VB @ 1+87.45 - 2+04.44

Site Notes:

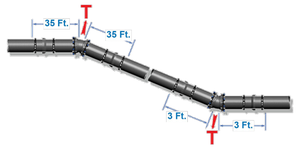

ALL JOINTS WITHIN THE CALCULATED LENGTH MUST BE RESTRAINED
IF YOUR DISTANCE BETWEEN FITTINGS IS LESS THAN OR EQUAL TO THE CALCULATED RESTRAINT LENGTH, RESTRAIN ALL JOINTS BETWEEN THOSE FITTINGS.

Defined Variables

H =	3.5	Depth of Bury
S_f =	1.5	Safety Factor
P =	200	Internal Pressure
θ =	22.5	Bend Angle

Pipe Derived Variables

A =	136.85	Cross Sec. Area of Pipe
D =	1.10	Outside Pipe Diameter
W_p =	39	Weight of Pipe
W_w =	53	Weight of Water in Pipe

Defined Variables

f_c =	0.00	Cohesion Modifier Coefficient
c =	0	Cohesion of Soil
f_ϕ =	1.00	Friction Angle Modifier
Φ =	36	Internal Friction Angle of Soil
γ =	110	Soil Density
K_N =	1.00	Trench Compaction Modifier

Calculations for Vertical Offset

	Lower	Upper	
$W_E = \gamma \cdot D \cdot H$ =	1210.000	423.500	Normal Force Due to Soil
$W = 2W_E + W_P + W_W$ =	2512.000	939.000	Normal Force Acting on Pipeline
$K_p = \tan^2((\pi / 180) \cdot (45 + (\Phi / 2)))$ =	3.852	3.852	Rankin Passive Pressure Coeff.
$H_C = H + (D / 2)$ =	10.550	4.050	Depth From Surface to Pipe Center
$\sigma_h = \gamma \cdot H_C \cdot K_p + 2c\sqrt{K_p}$ =	4470.246		Horizontal Passive Soil Pressure
$A_p = \pi \cdot (D / 2)$ =	1.728	1.728	Area Based on Half of Circumference
$R_S = K_N \cdot \sigma_h \cdot D$ =	4917.271	4917.271	Bearing Resistance of Pipelines
$F_s = A_p \cdot f_c \cdot c + W \cdot \tan((\pi / 180) \cdot f_\phi \cdot \Phi)$ =	626.312	234.119	Frictional Resitance
$L = (S_f \cdot P \cdot A \cdot \tan((\pi / 180) \cdot (\theta / 2))) / (F_s + (R_S / 2))$ =	2.647		Minimum Restrained Length Lower
$L = (S_f \cdot P \cdot A \cdot \tan((\pi / 180) \cdot (\theta / 2))) / F_s$ =		34.881	Minimum Restrained Length Upper

MEGALUG®

Created by EBAA Iron's Restraint Length Calculator v7.1.3 on February 20, 2025

811 Know what's below. Call before you dig.

CAUTION: CONTRACTOR NOTE

THE LOCATION OF EXISTING UNDERGROUND AND OVERHEAD UTILITIES ARE APPROXIMATE LOCATIONS ONLY. THE CONTRACTOR SHALL CONTACT UTILITY COMPANIES PRIOR TO CONSTRUCTION. CONTRACTOR SHALL DETERMINE, AND FIELD VERIFY EXISTING UTILITY LOCATIONS AND DEPTHS PRIOR TO BEGINNING CONSTRUCTION AND SHALL BE FULLY RESPONSIBLE FOR ANY AND ALL DAMAGES WHICH MIGHT OCCUR.

CONTRACTOR SHALL CONSIDER PROPOSED UTILITY IMPROVEMENTS AND PROVIDE ADEQUATE HORIZONTAL AND VERTICAL CLEARANCE DURING INSTALLATION OF ALL UTILITY INFRASTRUCTURE.

NO.	REVISION	BY	DATE

BGE JOB NO. XXXX-XX
FILE
DATE 02/21/2025
DESIGNED XXX
DRAWN XXX
REVISED XXX
CHECKED XXX

SHELL ROAD UTILITY RELOCATIONS

JOINT RESTRAINT CALCS (20 OF 27)

CITY OF GEORGETOWN

BGE, INC.
101 WEST LOUIS HENNA BLVD., STE 400
AUSTIN, TX 78728
TBPE Registration No. F-1046
TEL: 512-879-0400 www.bgeinc.com

STATE OF TEXAS
BRITTANY LYNN FAIRBURN
132905
LICENSED
PROFESSIONAL ENGINEER
Brittany Lynn Fairburn
02/21/2025

SHEET
388

100% SUBMITTAL

FILE LOCATION: G:\TXC\PROJECTS\CITY_GEORGETOWN\10767-00 SHELL ROAD\03_CADD\01_SHTS_PW\SHELL_JOINT_RESTRAINTS.DWG DATE SAVED: 2/20/2025

Project Name: Shell Rd

Project Notes:

EBAA IRON — Built Stronger. Lasts Longer. — EBAA IRON SALES, INC.

www.ebaa.com • contact@ebaa.com • 800.433.1716

RESTRAINT LENGTH VALUES

Fitting Type	Pipe Material	Soil Type	Safety Factor	Trench Type	Depth of Bury	Test Pressure	Nominal Size	Bend Angle	Branch Size	Length Along Run	Reduced Size	Lowside Depth	Restraint Length	Restraint Length 2
Horizontal Bend	Poly Wrapped Ductile	GW	1.5	5	7 Ft.	200 PSI	12 In.	45°					8 Ft.	

Site Name: WL-F HB @ 1+94.33

Site Notes:

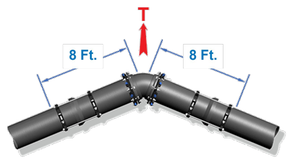

ALL JOINTS WITHIN THE CALCULATED LENGTH MUST BE RESTRAINED
IF YOUR DISTANCE BETWEEN FITTINGS IS LESS THAN OR EQUAL TO THE CALCULATED RESTRAINT LENGTH, RESTRAIN ALL JOINTS BETWEEN THOSE FITTINGS.

Defined Variables

H =	7	Depth of Bury
S_f =	1.5	Safety Factor
P =	200	Internal Pressure
θ =	45	Bend Angle

Pipe Derived Variables

A =	136.85	Cross Sec. Area of Pipe
D =	1.10	Outside Pipe Diameter
W_p =	39	Weight of Pipe
W_w =	53	Weight of Water in Pipe

Defined Variables

f_c =	0.00	Cohesion Modifier Coefficient
c =	0	Cohesion of Soil
f_ϕ =	1.00	Friction Angle Modifier
Φ =	36	Internal Friction Angle of Soil
γ =	110	Soil Density
K_N =	1.00	Trench Compaction Modifier

Calculations for Horizontal Bend

$W_E = \gamma \cdot D \cdot H =$	847.000	Normal Force Due to Soil
$W = 2W_E + W_P + W_W =$	1786.000	Normal Force Acting on Pipeline
$K_p = \tan^2((\pi / 180) \cdot (45 + (\Phi / 2))) =$	3.852	Rankin Passive Pressure Coeff.
$H_C = H + (D / 2) =$	7.550	Depth From Surface to Pipe Center
$\sigma_h = \gamma \cdot H_C \cdot K_p + 2c\sqrt{K_p} =$	3199.086	Horizontal Passive Soil Pressure
$A_p = \pi \cdot (D / 2) =$	1.728	Area Based on Half of Circumference
$R_S = K_N \cdot \sigma_h \cdot D =$	3518.995	Bearing Resistance of Pipelines
$F_s = A_p \cdot f_c \cdot c + W \cdot \tan((\pi / 180) \cdot f_\phi \cdot \Phi) =$	445.300	Frictional Resitance
$L = (S_f \cdot P \cdot A \cdot \tan((\pi / 180) \cdot (\theta / 2))) / (F_s + (R_S / 2)) =$	7.713	Minimum Restrained Length

MEGALUG®

Created by EBAA Iron's Restraint Length Calculator v7.1.3 on February 20, 2025

Project Name: Shell Rd

Project Notes:

EBAA IRON — Built Stronger. Lasts Longer. — EBAA IRON SALES, INC.

www.ebaa.com • contact@ebaa.com • 800.433.1716

RESTRAINT LENGTH VALUES

Fitting Type	Pipe Material	Soil Type	Safety Factor	Trench Type	Depth of Bury	Test Pressure	Nominal Size	Bend Angle	Branch Size	Length Along Run	Reduced Size	Lowside Depth	Restraint Length	Restraint Length 2
Horizontal Bend	PVC	GW	1.5	5	5 Ft.	200 PSI	16 In.	22.5°					6 Ft.	

Site Name: WL-G HB @ -0+11.30

Site Notes:

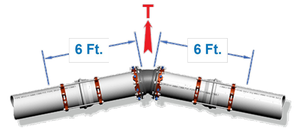

ALL JOINTS WITHIN THE CALCULATED LENGTH MUST BE RESTRAINED
IF YOUR DISTANCE BETWEEN FITTINGS IS LESS THAN OR EQUAL TO THE CALCULATED RESTRAINT LENGTH, RESTRAIN ALL JOINTS BETWEEN THOSE FITTINGS.

Defined Variables

H =	5	Depth of Bury
S_f =	1.5	Safety Factor
P =	200	Internal Pressure
θ =	22.5	Bend Angle

Pipe Derived Variables

A =	237.79	Cross Sec. Area of Pipe
D =	1.45	Outside Pipe Diameter
W_p =	21.14	Weight of Pipe
W_w =	87.80	Weight of Water in Pipe

Defined Variables

f_c =	0.00	Cohesion Modifier Coefficient
c =	0	Cohesion of Soil
f_ϕ =	0.70	Friction Angle Modifier
Φ =	36	Internal Friction Angle of Soil
γ =	110	Soil Density
K_N =	1.00	Trench Compaction Modifier

Calculations for Horizontal Bend

$W_E = \gamma \cdot D \cdot H =$	797.500	Normal Force Due to Soil
$W = 2W_E + W_P + W_W =$	1703.940	Normal Force Acting on Pipeline
$K_p = \tan^2((\pi / 180) \cdot (45 + (\Phi / 2))) =$	3.852	Rankin Passive Pressure Coeff.
$H_C = H + (D / 2) =$	5.725	Depth From Surface to Pipe Center
$\sigma_h = \gamma \cdot H_C \cdot K_p + 2c\sqrt{K_p} =$	2425.797	Horizontal Passive Soil Pressure
$A_p = \pi \cdot (D / 2) =$	2.278	Area Based on Half of Circumference
$R_S = K_N \cdot \sigma_h \cdot D =$	3517.406	Bearing Resistance of Pipelines
$F_s = A_p \cdot f_c \cdot c + W \cdot \tan((\pi / 180) \cdot f_\phi \cdot \Phi) =$	801.813	Frictional Resitance
$L = (S_f \cdot P \cdot A \cdot \tan((\pi / 180) \cdot (\theta / 2))) / (F_s + (R_S / 2)) =$	5.542	Minimum Restrained Length

MEGALUG®

Created by EBAA Iron's Restraint Length Calculator v7.1.3 on February 19, 2025

Project Name: Shell Rd

Project Notes:

EBAA IRON — Built Stronger. Lasts Longer. — EBAA IRON SALES, INC.

www.ebaa.com • contact@ebaa.com • 800.433.1716

RESTRAINT LENGTH VALUES

Fitting Type	Pipe Material	Soil Type	Safety Factor	Trench Type	Depth of Bury	Test Pressure	Nominal Size	Bend Angle	Branch Size	Length Along Run	Reduced Size	Lowside Depth	Restraint Length	Restraint Length 2
Vertical Offset	PVC	GW	1.5	5	5 Ft.	200 PSI	16 In.	45°				10 Ft.	37 Ft.	7 Ft.

Site Name: WL-G VB @ -0+01.86 - 0+03.53

Site Notes:

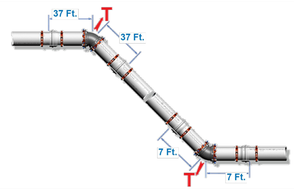

ALL JOINTS WITHIN THE CALCULATED LENGTH MUST BE RESTRAINED
IF YOUR DISTANCE BETWEEN FITTINGS IS LESS THAN OR EQUAL TO THE CALCULATED RESTRAINT LENGTH, RESTRAIN ALL JOINTS BETWEEN THOSE FITTINGS.

Defined Variables

H =	5	Depth of Bury
S_f =	1.5	Safety Factor
P =	200	Internal Pressure
θ =	45	Bend Angle

Pipe Derived Variables

A =	237.79	Cross Sec. Area of Pipe
D =	1.45	Outside Pipe Diameter
W_p =	21.14	Weight of Pipe
W_w =	87.80	Weight of Water in Pipe

Defined Variables

f_c =	0.00	Cohesion Modifier Coefficient
c =	0	Cohesion of Soil
f_ϕ =	0.70	Friction Angle Modifier
Φ =	36	Internal Friction Angle of Soil
γ =	110	Soil Density
K_N =	1.00	Trench Compaction Modifier

Calculations for Vertical Offset

	Lower	Upper	
$W_E = \gamma \cdot D \cdot H =$	1595.000	797.500	Normal Force Due to Soil
$W = 2W_E + W_P + W_W =$	3298.940	1703.940	Normal Force Acting on Pipeline
$K_p = \tan^2((\pi / 180) \cdot (45 + (\Phi / 2))) =$	3.852	3.852	Rankin Passive Pressure Coeff.
$H_C = H + (D / 2) =$	10.725	5.725	Depth From Surface to Pipe Center
$\sigma_h = \gamma \cdot H_C \cdot K_p + 2c\sqrt{K_p} =$	4544.397		Horizontal Passive Soil Pressure
$A_p = \pi \cdot (D / 2) =$	2.278	2.278	Area Based on Half of Circumference
$R_S = K_N \cdot \sigma_h \cdot D =$	6589.376	6589.376	Bearing Resistance of Pipelines
$F_s = A_p \cdot f_c \cdot c + W \cdot \tan((\pi / 180) \cdot f_\phi \cdot \Phi) =$	1552.363	801.813	Frictional Resitance
$L = (S_f \cdot P \cdot A \cdot \tan((\pi / 180) \cdot (\theta / 2))) / (F_s + (R_S / 2)) =$	6.096		Minimum Restrained Length Lower
$L = (S_f \cdot P \cdot A \cdot \tan((\pi / 180) \cdot (\theta / 2))) / F_s =$		36.852	Minimum Restrained Length Upper

MEGALUG®

Created by EBAA Iron's Restraint Length Calculator v7.1.3 on February 19, 2025

Project Name: Shell Rd

Project Notes:

EBAA IRON — Built Stronger. Lasts Longer. — EBAA IRON SALES, INC.

www.ebaa.com • contact@ebaa.com • 800.433.1716

RESTRAINT LENGTH VALUES

Fitting Type	Pipe Material	Soil Type	Safety Factor	Trench Type	Depth of Bury	Test Pressure	Nominal Size	Bend Angle	Branch Size	Length Along Run	Reduced Size	Lowside Depth	Restraint Length	Restraint Length 2
Horizontal Bend	PVC	GW	1.5	5	7 Ft.	200 PSI	16 In.	22.5°					5 Ft.	

Site Name: WL-G HB @ 0+00.00

Site Notes:

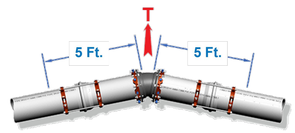

ALL JOINTS WITHIN THE CALCULATED LENGTH MUST BE RESTRAINED
IF YOUR DISTANCE BETWEEN FITTINGS IS LESS THAN OR EQUAL TO THE CALCULATED RESTRAINT LENGTH, RESTRAIN ALL JOINTS BETWEEN THOSE FITTINGS.

Defined Variables

H =	7	Depth of Bury
S_f =	1.5	Safety Factor
P =	200	Internal Pressure
θ =	22.5	Bend Angle

Pipe Derived Variables

A =	237.79	Cross Sec. Area of Pipe
D =	1.45	Outside Pipe Diameter
W_p =	21.14	Weight of Pipe
W_w =	87.80	Weight of Water in Pipe

Defined Variables

f_c =	0.00	Cohesion Modifier Coefficient
c =	0	Cohesion of Soil
f_ϕ =	0.70	Friction Angle Modifier
Φ =	36	Internal Friction Angle of Soil
γ =	110	Soil Density
K_N =	1.00	Trench Compaction Modifier

Calculations for Horizontal Bend

$W_E = \gamma \cdot D \cdot H =$	1116.500	Normal Force Due to Soil
$W = 2W_E + W_P + W_W =$	2341.940	Normal Force Acting on Pipeline
$K_p = \tan^2((\pi / 180) \cdot (45 + (\Phi / 2))) =$	3.852	Rankin Passive Pressure Coeff.
$H_C = H + (D / 2) =$	7.725	Depth From Surface to Pipe Center
$\sigma_h = \gamma \cdot H_C \cdot K_p + 2c\sqrt{K_p} =$	3273.237	Horizontal Passive Soil Pressure
$A_p = \pi \cdot (D / 2) =$	2.278	Area Based on Half of Circumference
$R_S = K_N \cdot \sigma_h \cdot D =$	4746.194	Bearing Resistance of Pipelines
$F_s = A_p \cdot f_c \cdot c + W \cdot \tan((\pi / 180) \cdot f_\phi \cdot \Phi) =$	1102.033	Frictional Resitance
$L = (S_f \cdot P \cdot A \cdot \tan((\pi / 180) \cdot (\theta / 2))) / (F_s + (R_S / 2)) =$	4.083	Minimum Restrained Length

MEGALUG®

Created by EBAA Iron's Restraint Length Calculator v7.1.3 on February 19, 2025

---

811 Know what's below. Call before you dig.

CAUTION: CONTRACTOR NOTE

THE LOCATION OF EXISTING UNDERGROUND AND OVERHEAD UTILITIES ARE APPROXIMATE LOCATIONS ONLY. THE CONTRACTOR SHALL CONTACT UTILITY COMPANIES PRIOR TO CONSTRUCTION. CONTRACTOR SHALL DETERMINE, AND FIELD VERIFY EXISTING UTILITY LOCATIONS AND DEPTHS PRIOR TO BEGINNING CONSTRUCTION AND SHALL BE FULLY RESPONSIBLE FOR ANY AND ALL DAMAGES WHICH MIGHT OCCUR.

CONTRACTOR SHALL CONSIDER PROPOSED UTILITY IMPROVEMENTS AND PROVIDE ADEQUATE HORIZONTAL AND VERTICAL CLEARANCE DURING INSTALLATION OF ALL UTILITY INFRASTRUCTURE.

NO.	REVISION	BY	DATE

BGE JOB NO. XXXX-XX
FILE
DATE 02/21/2025
DESIGNED XXX
DRAWN XXX
REVISED XXX
CHECKED XXX

SHELL ROAD UTILITY RELOCATIONS

JOINT RESTRAINT CALCS (21 OF 27)

CITY OF GEORGETOWN

BGE

BGE, INC.
101 WEST LOUIS HENNA BLVD., STE 400
AUSTIN, TX 78728
TBPE Registration No. F-1046
TEL: 512-879-0400 www.bgeinc.com

STATE OF TEXAS — BRITTANY LYNN FAIRBURN — 132905 — LICENSED PROFESSIONAL ENGINEER

Brittany Lynn Fairburn

02/21/2025

SHEET

389

100% SUBMITTAL

FILE LOCATION: G:\TX\C\PROJECTS\CITY_GEORGETOWN\10767-00 SHELL ROAD\03_CADD\01_SHTS_PW\SHELL_JOINT_RESTRAINTS.DWG DATE SAVED: 2/20/2025

Project Name: Shell Rd

Project Notes:

Built Stronger. Lasts Longer.
EBAA IRON
EBAA IRON SALES, INC.
www.ebaa.com • contact@ebaa.com • 800.433.1716

RESTRAINT LENGTH VALUES

Fitting Type	Pipe Material	Soil Type	Safety Factor	Trench Type	Depth of Bury	Test Pressure	Nominal Size	Bend Angle	Branch Size	Length Along Run	Reduced Size	Lowside Depth	Restraint Length	Restraint Length 2
Horizontal Bend	PVC	GW	1.5	5	11 Ft.	200 PSI	16 In.	45°					6 Ft.	

Site Name: WL-G HB @ 0+66.77

Site Notes:

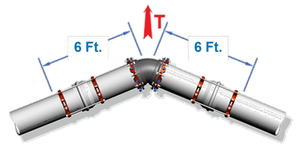

ALL JOINTS WITHIN THE CALCULATED LENGTH MUST BE RESTRAINED
IF YOUR DISTANCE BETWEEN FITTINGS IS LESS THAN OR EQUAL TO THE CALCULATED RESTRAINT LENGTH, RESTRAIN ALL JOINTS BETWEEN THOSE FITTINGS.

Defined Variables

H =	11	Depth of Bury
S_f =	1.5	Safety Factor
P =	200	Internal Pressure
θ =	45	Bend Angle

Pipe Derived Variables

A =	237.79	Cross Sec. Area of Pipe
D =	1.45	Outside Pipe Diameter
W_p =	21.14	Weight of Pipe
W_w =	87.80	Weight of Water in Pipe

Defined Variables

f_c =	0.00	Cohesion Modifier Coefficient
c =	0	Cohesion of Soil
f_ϕ =	0.70	Friction Angle Modifier
Φ =	36	Internal Friction Angle of Soil
γ =	110	Soil Density
K_N =	1.00	Trench Compaction Modifier

Calculations for Horizontal Bend

$W_E = \gamma \cdot D \cdot H =$	1754.500	Normal Force Due to Soil
$W = 2W_E + W_P + W_W =$	3617.940	Normal Force Acting on Pipeline
$K_p = \tan^2((\pi / 180) \cdot (45 + (\Phi / 2))) =$	3.852	Rankin Passive Pressure Coeff.
$H_C = H + (D / 2) =$	11.725	Depth From Surface to Pipe Center
$\sigma_h = \gamma \cdot H_C \cdot K_p + 2c\sqrt{K_p} =$	4968.117	Horizontal Passive Soil Pressure
$A_p = \pi \cdot (D / 2) =$	2.278	Area Based on Half of Circumference
$R_S = K_N \cdot \sigma_h \cdot D =$	7203.770	Bearing Resistance of Pipelines
$F_s = A_p \cdot f_c \cdot c + W \cdot \tan((\pi / 180) \cdot f_\phi \cdot \Phi) =$	1702.473	Frictional Resitance
$L = (S_f \cdot P \cdot A \cdot \tan((\pi / 180) \cdot (\theta / 2))) / (F_s + (R_S / 2)) =$	5.571	Minimum Restrained Length

MEGALUG®

Created by EBAA Iron's Restraint Length Calculator v7.1.3 on February 19, 2025

Project Name: Shell Rd

Project Notes:

Built Stronger. Lasts Longer.
EBAA IRON
EBAA IRON SALES, INC.
www.ebaa.com • contact@ebaa.com • 800.433.1716

RESTRAINT LENGTH VALUES

Fitting Type	Pipe Material	Soil Type	Safety Factor	Trench Type	Depth of Bury	Test Pressure	Nominal Size	Bend Angle	Branch Size	Length Along Run	Reduced Size	Lowside Depth	Restraint Length	Restraint Length 2
Dead End	PVC	GW	1.5	5	11 Ft.	200 PSI	16 In.						42 Ft.	

Site Name: WL-G GV @ 0+91.90

Site Notes:

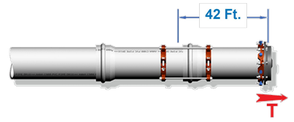

ALL JOINTS WITHIN THE CALCULATED LENGTH MUST BE RESTRAINED
IF YOUR DISTANCE BETWEEN FITTINGS IS LESS THAN OR EQUAL TO THE CALCULATED RESTRAINT LENGTH, RESTRAIN ALL JOINTS BETWEEN THOSE FITTINGS.

Defined Variables

H =	11	Depth of Bury
S_f =	1.5	Safety Factor
P =	200	Internal Pressure

Pipe Derived Variables

A =	237.79	Cross Sec. Area of Pipe
D =	1.45	Outside Pipe Diameter
W_p =	21.14	Weight of Pipe
W_w =	87.80	Weight of Water in Pipe

Defined Variables

f_c =	0.00	Cohesion Modifier Coefficient
c =	0	Cohesion of Soil
f_ϕ =	0.70	Friction Angle Modifier
Φ =	36	Internal Friction Angle of Soil
γ =	110	Soil Density

Calculations for Dead End

$W_E = \gamma \cdot D \cdot H =$	1754.500	Normal Force Due to Soil
$W = 2W_E + W_P + W_W =$	3617.940	Normal Force Acting on Pipeline
$(A_p)_b = \pi \cdot D =$	4.555	Area Based on Full Pipe Circumference
$F_{sb} = (A_p)_b \cdot f_c \cdot c + W \cdot \tan((\pi / 180) f_\phi \cdot \Phi) =$	1702.473	Frictional Resistance
$L = S_f \cdot P \cdot A / F_{sb} =$	41.902	Minimum Restrained Length of Dead End

MEGALUG®

Created by EBAA Iron's Restraint Length Calculator v7.1.3 on February 19, 2025

Project Name: Shell Rd

Project Notes:

Built Stronger. Lasts Longer.
EBAA IRON
EBAA IRON SALES, INC.
www.ebaa.com • contact@ebaa.com • 800.433.1716

RESTRAINT LENGTH VALUES

Fitting Type	Pipe Material	Soil Type	Safety Factor	Trench Type	Depth of Bury	Test Pressure	Nominal Size	Bend Angle	Branch Size	Length Along Run	Reduced Size	Lowside Depth	Restraint Length	Restraint Length 2
Horizontal Bend	Poly Wrapped Ductile	GW	1.5	5	6 Ft.	200 PSI	16 In.	22.5°					6 Ft.	

Site Name: WL-H HB @ 0+32.00

Site Notes:

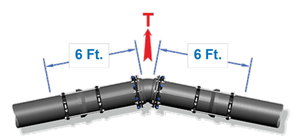

ALL JOINTS WITHIN THE CALCULATED LENGTH MUST BE RESTRAINED
IF YOUR DISTANCE BETWEEN FITTINGS IS LESS THAN OR EQUAL TO THE CALCULATED RESTRAINT LENGTH, RESTRAIN ALL JOINTS BETWEEN THOSE FITTINGS.

Defined Variables

H =	6	Depth of Bury
S_f =	1.5	Safety Factor
P =	200	Internal Pressure
θ =	22.5	Bend Angle

Pipe Derived Variables

A =	237.79	Cross Sec. Area of Pipe
D =	1.45	Outside Pipe Diameter
W_p =	57	Weight of Pipe
W_w =	94	Weight of Water in Pipe

Defined Variables

f_c =	0.00	Cohesion Modifier Coefficient
c =	0	Cohesion of Soil
f_ϕ =	1.00	Friction Angle Modifier
Φ =	36	Internal Friction Angle of Soil
γ =	110	Soil Density
K_N =	1.00	Trench Compaction Modifier

Calculations for Horizontal Bend

$W_E = \gamma \cdot D \cdot H =$	957.000	Normal Force Due to Soil
$W = 2W_E + W_P + W_W =$	2065.000	Normal Force Acting on Pipeline
$K_p = \tan^2((\pi / 180) \cdot (45 + (\Phi / 2))) =$	3.852	Rankin Passive Pressure Coeff.
$H_C = H + (D / 2) =$	6.725	Depth From Surface to Pipe Center
$\sigma_h = \gamma \cdot H_C \cdot K_p + 2c\sqrt{K_p} =$	2849.517	Horizontal Passive Soil Pressure
$A_p = \pi \cdot (D / 2) =$	2.278	Area Based on Half of Circumference
$R_S = K_N \cdot \sigma_h \cdot D =$	4131.800	Bearing Resistance of Pipelines
$F_s = A_p \cdot f_c \cdot c + W \cdot \tan((\pi / 180) \cdot f_\phi \cdot \Phi) =$	514.862	Frictional Resitance
$L = (S_f \cdot P \cdot A \cdot \tan((\pi / 180) \cdot (\theta / 2))) / (F_s + (R_S / 2)) =$	5.498	Minimum Restrained Length

MEGALUG®

Created by EBAA Iron's Restraint Length Calculator v7.1.3 on February 19, 2025

Project Name: Shell Rd

Project Notes:

Built Stronger. Lasts Longer.
EBAA IRON
EBAA IRON SALES, INC.
www.ebaa.com • contact@ebaa.com • 800.433.1716

RESTRAINT LENGTH VALUES

Fitting Type	Pipe Material	Soil Type	Safety Factor	Trench Type	Depth of Bury	Test Pressure	Nominal Size	Bend Angle	Branch Size	Length Along Run	Reduced Size	Lowside Depth	Restraint Length	Restraint Length 2
Horizontal Bend	Poly Wrapped Ductile	GW	1.5	5	5 Ft.	200 PSI	16 In.	22.5°					7 Ft.	

Site Name: WL-H HB @ 0+43.47

Site Notes:

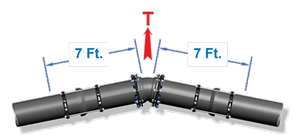

ALL JOINTS WITHIN THE CALCULATED LENGTH MUST BE RESTRAINED
IF YOUR DISTANCE BETWEEN FITTINGS IS LESS THAN OR EQUAL TO THE CALCULATED RESTRAINT LENGTH, RESTRAIN ALL JOINTS BETWEEN THOSE FITTINGS.

Defined Variables

H =	5	Depth of Bury
S_f =	1.5	Safety Factor
P =	200	Internal Pressure
θ =	22.5	Bend Angle

Pipe Derived Variables

A =	237.79	Cross Sec. Area of Pipe
D =	1.45	Outside Pipe Diameter
W_p =	57	Weight of Pipe
W_w =	94	Weight of Water in Pipe

Defined Variables

f_c =	0.00	Cohesion Modifier Coefficient
c =	0	Cohesion of Soil
f_ϕ =	1.00	Friction Angle Modifier
Φ =	36	Internal Friction Angle of Soil
γ =	110	Soil Density
K_N =	1.00	Trench Compaction Modifier

Calculations for Horizontal Bend

$W_E = \gamma \cdot D \cdot H =$	797.500	Normal Force Due to Soil
$W = 2W_E + W_P + W_W =$	1746.000	Normal Force Acting on Pipeline
$K_p = \tan^2((\pi / 180) \cdot (45 + (\Phi / 2))) =$	3.852	Rankin Passive Pressure Coeff.
$H_C = H + (D / 2) =$	5.725	Depth From Surface to Pipe Center
$\sigma_h = \gamma \cdot H_C \cdot K_p + 2c\sqrt{K_p} =$	2425.797	Horizontal Passive Soil Pressure
$A_p = \pi \cdot (D / 2) =$	2.278	Area Based on Half of Circumference
$R_S = K_N \cdot \sigma_h \cdot D =$	3517.406	Bearing Resistance of Pipelines
$F_s = A_p \cdot f_c \cdot c + W \cdot \tan((\pi / 180) \cdot f_\phi \cdot \Phi) =$	435.327	Frictional Resitance
$L = (S_f \cdot P \cdot A \cdot \tan((\pi / 180) \cdot (\theta / 2))) / (F_s + (R_S / 2)) =$	6.467	Minimum Restrained Length

MEGALUG®

Created by EBAA Iron's Restraint Length Calculator v7.1.3 on February 19, 2025

---

811 Know what's below. Call before you dig.

CAUTION: CONTRACTOR NOTE

THE LOCATION OF EXISTING UNDERGROUND AND OVERHEAD UTILITIES ARE APPROXIMATE LOCATIONS ONLY. THE CONTRACTOR SHALL CONTACT UTILITY COMPANIES PRIOR TO CONSTRUCTION. CONTRACTOR SHALL DETERMINE, AND FIELD VERIFY EXISTING UTILITY LOCATIONS AND DEPTHS PRIOR TO BEGINNING CONSTRUCTION AND SHALL BE FULLY RESPONSIBLE FOR ANY AND ALL DAMAGES WHICH MIGHT OCCUR.

CONTRACTOR SHALL CONSIDER PROPOSED UTILITY IMPROVEMENTS AND PROVIDE ADEQUATE HORIZONTAL AND VERTICAL CLEARANCE DURING INSTALLATION OF ALL UTILITY INFRASTRUCTURE.

NO.	REVISION	BY	DATE

BGE JOB NO. XXXX-XX
FILE
DATE 02/21/2025
DESIGNED XXX
DRAWN XXX
REVISED XXX
CHECKED XXX

SHELL ROAD UTILITY RELOCATIONS

JOINT RESTRAINT CALCS (22 OF 27)

CITY OF GEORGETOWN

BGE, INC.
101 WEST LOUIS HENNA BLVD., STE 400
AUSTIN, TX 78728
TBPE Registration No. F-1046
TEL: 512-879-0400 www.bgeinc.com

STATE OF TEXAS
BRITTANY LYNN FAIRBURN
132905
LICENSED
PROFESSIONAL ENGINEER
Brittany Lynn Fairburn
02/21/2025

SHEET
390

100% SUBMITTAL

FILE LOCATION: G:\TXC\PROJECTS\CITY_GEORGETOWN\10767-00 SHELL ROAD\03_CADD\01_SHTS_PW\SHELL_JOINT_RESTRAINTS.DWG DATE SAVED: 2/20/2025

Project Name: Shell Rd

Project Notes:

EBAA IRON — Built Stronger. Lasts Longer. — EBAA IRON SALES, INC.
www.ebaa.com • contact@ebaa.com • 800.433.1716

RESTRAINT LENGTH VALUES

Fitting Type	Pipe Material	Soil Type	Safety Factor	Trench Type	Depth of Bury	Test Pressure	Nominal Size	Bend Angle	Branch Size	Length Along Run	Reduced Size	Lowside Depth	Restraint Length	Restraint Length 2
Dead End	Poly Wrapped Ductile	GW	1.5	5	7 Ft.	200 PSI	16 In.						121 Ft.	

Site Name: WL-H GV @ 0+60.08

Site Notes:

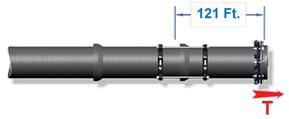

ALL JOINTS WITHIN THE CALCULATED LENGTH MUST BE RESTRAINED
IF YOUR DISTANCE BETWEEN FITTINGS IS LESS THAN OR EQUAL TO THE CALCULATED RESTRAINT LENGTH, RESTRAIN ALL JOINTS BETWEEN THOSE FITTINGS.

Defined Variables

H =	7	Depth of Bury
S_f =	1.5	Safety Factor
P =	200	Internal Pressure

Pipe Derived Variables

A =	237.79	Cross Sec. Area of Pipe
D =	1.45	Outside Pipe Diameter
W_p =	57	Weight of Pipe
W_w =	94	Weight of Water in Pipe

Defined Variables

f_c =	0.00	Cohesion Modifier Coefficient
c =	0	Cohesion of Soil
f_ϕ =	1.00	Friction Angle Modifier
Φ =	36	Internal Friction Angle of Soil
γ =	110	Soil Density

Calculations for Dead End

$W_E = \gamma \cdot D \cdot H$ =	1116.500	Normal Force Due to Soil
$W = 2W_E + W_P + W_W$ =	2384.000	Normal Force Acting on Pipeline
$(A_p)_h = \pi \cdot D$ =	4.555	Area Based on Full Pipe Circumference
$F_{sh} = (A_p)_h \cdot f_c \cdot c + W \cdot \tan((\pi / 180) f_\phi \cdot \Phi)$ =	594.398	Frictional Resistance
$L = S_f \cdot P \cdot A / F_{sh}$ =	120.016	Minimum Restrained Length of Dead End

MEGALUG®

Created by EBAA Iron's Restraint Length Calculator v7.1.3 on February 19, 2025

Project Name: Shell Rd

Project Notes:

EBAA IRON — Built Stronger. Lasts Longer. — EBAA IRON SALES, INC.
www.ebaa.com • contact@ebaa.com • 800.433.1716

RESTRAINT LENGTH VALUES

Fitting Type	Pipe Material	Soil Type	Safety Factor	Trench Type	Depth of Bury	Test Pressure	Nominal Size	Bend Angle	Branch Size	Length Along Run	Reduced Size	Lowside Depth	Restraint Length	Restraint Length 2
Dead End	Poly Wrapped Ductile	GW	1.5	5	6 Ft.	200 PSI	16 In.						139 Ft.	

Site Name: WL-H GV @ 0+68.05

Site Notes:

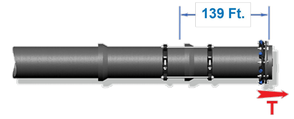

ALL JOINTS WITHIN THE CALCULATED LENGTH MUST BE RESTRAINED
IF YOUR DISTANCE BETWEEN FITTINGS IS LESS THAN OR EQUAL TO THE CALCULATED RESTRAINT LENGTH, RESTRAIN ALL JOINTS BETWEEN THOSE FITTINGS.

Defined Variables

H =	6	Depth of Bury
S_f =	1.5	Safety Factor
P =	200	Internal Pressure

Pipe Derived Variables

A =	237.79	Cross Sec. Area of Pipe
D =	1.45	Outside Pipe Diameter
W_p =	57	Weight of Pipe
W_w =	94	Weight of Water in Pipe

Defined Variables

f_c =	0.00	Cohesion Modifier Coefficient
c =	0	Cohesion of Soil
f_ϕ =	1.00	Friction Angle Modifier
Φ =	36	Internal Friction Angle of Soil
γ =	110	Soil Density

Calculations for Dead End

$W_E = \gamma \cdot D \cdot H$ =	957.000	Normal Force Due to Soil
$W = 2W_E + W_P + W_W$ =	2065.000	Normal Force Acting on Pipeline
$(A_p)_h = \pi \cdot D$ =	4.555	Area Based on Full Pipe Circumference
$F_{sh} = (A_p)_h \cdot f_c \cdot c + W \cdot \tan((\pi / 180) f_\phi \cdot \Phi)$ =	514.862	Frictional Resistance
$L = S_f \cdot P \cdot A / F_{sh}$ =	138.556	Minimum Restrained Length of Dead End

MEGALUG®

Created by EBAA Iron's Restraint Length Calculator v7.1.3 on February 19, 2025

Project Name: Shell Rd

Project Notes:

EBAA IRON — Built Stronger. Lasts Longer. — EBAA IRON SALES, INC.
www.ebaa.com • contact@ebaa.com • 800.433.1716

RESTRAINT LENGTH VALUES

Fitting Type	Pipe Material	Soil Type	Safety Factor	Trench Type	Depth of Bury	Test Pressure	Nominal Size	Bend Angle	Branch Size	Length Along Run	Reduced Size	Lowside Depth	Restraint Length	Restraint Length 2
Tee	Poly Wrapped Ductile	GW	1.5	5	6 Ft.	200 PSI	16 In.		12 In.	13 Ft.			1 Ft.	

Site Name: WL-H Tee @ 0+77.51

Site Notes:

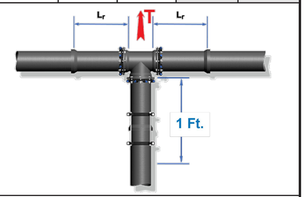

ALL JOINTS WITHIN THE CALCULATED LENGTH MUST BE RESTRAINED
IF YOUR DISTANCE BETWEEN FITTINGS IS LESS THAN OR EQUAL TO THE CALCULATED RESTRAINT LENGTH, RESTRAIN ALL JOINTS BETWEEN THOSE FITTINGS.

Defined Variables

H =	6	Depth of Bury
S_f =	1.5	Safety Factor
P =	200	Internal Pressure

Pipe Derived Variables

A =	237.79	Cross Sec. Area (Main)
A_b =	136.85	Cross Sec. Area (Branch)
D =	1.45	Outside Pipe Diameter
D_b =	1.10	Outside Diameter Branch
W_p =	39	Weight of Pipe
W_w =	53	Weight of Water in Pipe
L_r =	13	Min. restrained Length either side of Tee

Defined Variables

f_c =	0.00	Cohesion Modifier Coefficient
c =	0	Cohesion of Soil
f_ϕ =	1.00	Friction Angle Modifier
Φ =	36	Internal Friction Angle of Soil
γ =	110	Soil Density

Calculations for Tee

$W_E = \gamma \cdot D \cdot H$ =	726.000	Normal Force Due to Soil
$W = 2W_E + W_P + W_W$ =	1544.000	Normal Force Acting on Pipeline
$K_p = \tan^2((\pi / 180) \cdot (45 + (\Phi / 2)))$ =	3.852	Rankin Passive Pressure Coeff.
$H_C = H + (D / 2)$ =	6.725	Depth From Surface to Pipe Center
$\sigma_h = \gamma \cdot H_C \cdot K_p + 2c\sqrt{K_p}$ =	2849.517	Horizontal Passive Soil Pressure
$A_p = \pi \cdot (D / 2)$ =	2.278	Area Based on Half of Circumference
$(A_p)_h = \pi \cdot D_b$ =	3.456	Area Based on Full Branch Circumference
$R_b = K_N \cdot \sigma_h \cdot D$ =	4131.800	Bearing Resistance of Pipelines
$F_{sh} = (A_p)_h \cdot f_c \cdot c + W \cdot \tan((\pi / 180) f_\phi \cdot \Phi)$ =	384.962	Frictional Resistance
$L_h = S_f(P \cdot A_b - R_b \cdot L_r) / F_{sh}$ =	-102.647	Minimum Restrained Length Branch

MEGALUG®

Created by EBAA Iron's Restraint Length Calculator v7.1.3 on February 19, 2025

Project Name: Shell Rd

Project Notes:

EBAA IRON — Built Stronger. Lasts Longer. — EBAA IRON SALES, INC.
www.ebaa.com • contact@ebaa.com • 800.433.1716

RESTRAINT LENGTH VALUES

Fitting Type	Pipe Material	Soil Type	Safety Factor	Trench Type	Depth of Bury	Test Pressure	Nominal Size	Bend Angle	Branch Size	Length Along Run	Reduced Size	Lowside Depth	Restraint Length	Restraint Length 2
Vertical Offset	Poly Wrapped Ductile	GW	1.5	5	6 Ft.	200 PSI	16 In.	11.25°				11 Ft.	14 Ft.	2 Ft.

Site Name: WL-H VB @ 0+94.60 - 1+17.84

Site Notes:

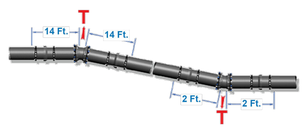

ALL JOINTS WITHIN THE CALCULATED LENGTH MUST BE RESTRAINED
IF YOUR DISTANCE BETWEEN FITTINGS IS LESS THAN OR EQUAL TO THE CALCULATED RESTRAINT LENGTH, RESTRAIN ALL JOINTS BETWEEN THOSE FITTINGS.

Defined Variables

H =	6	Depth of Bury
S_f =	1.5	Safety Factor
P =	200	Internal Pressure
θ =	11.25	Bend Angle

Pipe Derived Variables

A =	237.79	Cross Sec. Area of Pipe
D =	1.45	Outside Pipe Diameter
W_p =	57	Weight of Pipe
W_w =	94	Weight of Water in Pipe

Defined Variables

f_c =	0.00	Cohesion Modifier Coefficient
c =	0	Cohesion of Soil
f_ϕ =	1.00	Friction Angle Modifier
Φ =	36	Internal Friction Angle of Soil
γ =	110	Soil Density
K_N =	1.00	Trench Compaction Modifier

Calculations for Vertical Offset

	Lower	Upper	
$W_E = \gamma \cdot D \cdot H$ =	1754.500	957.000	Normal Force Due to Soil
$W = 2W_E + W_P + W_W$ =	3660.000	2065.000	Normal Force Acting on Pipeline
$K_p = \tan^2((\pi / 180) \cdot (45 + (\Phi / 2)))$ =	3.852	3.852	Rankin Passive Pressure Coeff.
$H_C = H + (D / 2)$ =	11.725	6.725	Depth From Surface to Pipe Center
$\sigma_h = \gamma \cdot H_C \cdot K_p + 2c\sqrt{K_p}$ =	4968.117		Horizontal Passive Soil Pressure
$A_p = \pi \cdot (D / 2)$ =	2.278	2.278	Area Based on Half of Circumference
$R_b = K_N \cdot \sigma_h \cdot D$ =	7203.770	7203.770	Bearing Resistance of Pipelines
$F_s = A_p \cdot f_c \cdot c + W \cdot \tan((\pi / 180) \cdot \Phi) \cdot f_\phi$ =	912.540	514.862	Frictional Resitance
$L = (S_f \cdot P \cdot A \cdot \tan((\pi / 180) \cdot (\theta / 2))) / (F_s + (R_b / 2))$ =	1.556		Minimum Restrained Length Lower
$L = (S_f \cdot P \cdot A \cdot \tan((\pi / 180) \cdot (\theta / 2))) / F_s$ =		13.647	Minimum Restrained Length Upper

MEGALUG®

Created by EBAA Iron's Restraint Length Calculator v7.1.3 on February 20, 2025

811 Know what's below. Call before you dig.

CAUTION: CONTRACTOR NOTE

THE LOCATION OF EXISTING UNDERGROUND AND OVERHEAD UTILITIES ARE APPROXIMATE LOCATIONS ONLY. THE CONTRACTOR SHALL CONTACT UTILITY COMPANIES PRIOR TO CONSTRUCTION. CONTRACTOR SHALL DETERMINE, AND FIELD VERIFY EXISTING UTILITY LOCATIONS AND DEPTHS PRIOR TO BEGINNING CONSTRUCTION AND SHALL BE FULLY RESPONSIBLE FOR ANY AND ALL DAMAGES WHICH MIGHT OCCUR.

CONTRACTOR SHALL CONSIDER PROPOSED UTILITY IMPROVEMENTS AND PROVIDE ADEQUATE HORIZONTAL AND VERTICAL CLEARANCE DURING INSTALLATION OF ALL UTILITY INFRASTRUCTURE.

NO.	REVISION	BY	DATE

BGE JOB NO. XXXX-XX
FILE
DATE 02/21/2025
DESIGNED XXX
DRAWN XXX
REVISED XXX
CHECKED XXX

SHELL ROAD UTILITY RELOCATIONS

JOINT RESTRAINT CALCS (23 OF 27)

CITY OF GEORGETOWN

BGE
BGE, INC.
101 WEST LOUIS HENNA BLVD., STE 400
AUSTIN, TX 78728
TBPE Registration No. F-1046
TEL: 512-879-0400 www.bgeinc.com

STATE OF TEXAS — BRITTANY LYNN FAIRBURN — 132905 — LICENSED PROFESSIONAL ENGINEER
Brittany Lynn Fairburn
02/21/2025

SHEET
391

100% SUBMITTAL

FILE LOCATION: G:\TXC\PROJECTS\CITY_GEORGETOWN\10767-00 SHELL ROAD\03_CADD\01_SHTS_PW\SHELL_JOINT_RESTRAINTS.DWG DATE SAVED: 2/20/2025

Project Name: Shell Rd

Project Notes:

www.ebaa.com • contact@ebaa.com • 800.433.1716

RESTRAINT LENGTH VALUES

Fitting Type	Pipe Material	Soil Type	Safety Factor	Trench Type	Depth of Bury	Test Pressure	Nominal Size	Bend Angle	Branch Size	Length Along Run	Reduced Size	Lowside Depth	Restraint Length	Restraint Length 2
Horizontal Bend	Poly Wrapped Ductile	GW	1.5	5	9 Ft.	200 PSI	16 In.	11.25°					2 Ft.	

Site Name: WL-H HB @ 1+07.88

Site Notes:

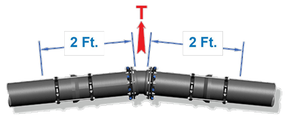

ALL JOINTS WITHIN THE CALCULATED LENGTH MUST BE RESTRAINED
IF YOUR DISTANCE BETWEEN FITTINGS IS LESS THAN OR EQUAL TO THE CALCULATED RESTRAINT LENGTH, RESTRAIN ALL JOINTS BETWEEN THOSE FITTINGS.

Defined Variables

H =	9	Depth of Bury
S_f =	1.5	Safety Factor
P =	200	Internal Pressure
θ =	11.25	Bend Angle

Pipe Derived Variables

A =	237.79	Cross Sec. Area of Pipe
D =	1.45	Outside Pipe Diameter
W_p =	57	Weight of Pipe
W_w =	94	Weight of Water in Pipe

Defined Variables

f_c =	0.00	Cohesion Modifier Coefficient
c =	0	Cohesion of Soil
f_ϕ =	1.00	Friction Angle Modifier
Φ =	36	Internal Friction Angle of Soil
γ =	110	Soil Density
K_N =	1.00	Trench Compaction Modifier

Calculations for Horizontal Bend

$W_E = \gamma \cdot D \cdot H =$	1435.500	Normal Force Due to Soil
$W = 2W_E + W_P + W_W =$	3022.000	Normal Force Acting on Pipeline
$K_P = \tan^2((\pi / 180) \cdot (45 + (\Phi / 2))) =$	3.852	Rankin Passive Pressure Coeff.
$H_C = H + (D / 2) =$	9.725	Depth From Surface to Pipe Center
$\sigma_h = \gamma \cdot H_C \cdot K_P + 2c\sqrt{K_P} =$	4120.677	Horizontal Passive Soil Pressure
$A_P = \pi \cdot (D / 2) =$	2.278	Area Based on Half of Circumference
$R_S = K_N \cdot \sigma_h \cdot D =$	5974.982	Bearing Resistance of Pipelines
$F_s = A_P \cdot f_c \cdot c + W \cdot \tan((\pi / 180) \cdot f_\phi \cdot \Phi) =$	753.469	Frictional Resitance
$L = (S_f \cdot P \cdot A \cdot \tan((\pi / 180) \cdot (\theta / 2))) / (F_s + (R_S / 2)) =$	1.878	Minimum Restrained Length

MEGALUG®

Created by EBAA Iron's Restraint Length Calculator v7.1.3 on February 20, 2025

Project Name: Shell Rd

Project Notes:

www.ebaa.com • contact@ebaa.com • 800.433.1716

RESTRAINT LENGTH VALUES

Fitting Type	Pipe Material	Soil Type	Safety Factor	Trench Type	Depth of Bury	Test Pressure	Nominal Size	Bend Angle	Branch Size	Length Along Run	Reduced Size	Lowside Depth	Restraint Length	Restraint Length 2
Vertical Offset	Poly Wrapped Ductile	GW	1.5	5	6 Ft.	200 PSI	16 In.	22.5°				10 Ft.	28 Ft.	4 Ft.

Site Name: WL-H VB @ 1+51.24 - 1+58.67

Site Notes:

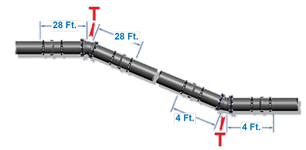

ALL JOINTS WITHIN THE CALCULATED LENGTH MUST BE RESTRAINED
IF YOUR DISTANCE BETWEEN FITTINGS IS LESS THAN OR EQUAL TO THE CALCULATED RESTRAINT LENGTH, RESTRAIN ALL JOINTS BETWEEN THOSE FITTINGS.

Defined Variables

H =	6	Depth of Bury
S_f =	1.5	Safety Factor
P =	200	Internal Pressure
θ =	22.5	Bend Angle

Pipe Derived Variables

A =	237.79	Cross Sec. Area of Pipe
D =	1.45	Outside Pipe Diameter
W_p =	57	Weight of Pipe
W_w =	94	Weight of Water in Pipe

Defined Variables

f_c =	0.00	Cohesion Modifier Coefficient
c =	0	Cohesion of Soil
f_ϕ =	1.00	Friction Angle Modifier
Φ =	36	Internal Friction Angle of Soil
γ =	110	Soil Density
K_N =	1.00	Trench Compaction Modifier

Calculations for Vertical Offset

	Lower	Upper	
$W_E = \gamma \cdot D \cdot H =$	1595.000	957.000	Normal Force Due to Soil
$W = 2W_E + W_P + W_W =$	3341.000	2065.000	Normal Force Acting on Pipeline
$K_P = \tan^2((\pi / 180) \cdot (45 + (\Phi / 2))) =$	3.852	3.852	Rankin Passive Pressure Coeff.
$H_C = H + (D / 2) =$	10.725	6.725	Depth From Surface to Pipe Center
$\sigma_h = \gamma \cdot H_C \cdot K_P + 2c\sqrt{K_P} =$	4544.397		Horizontal Passive Soil Pressure
$A_P = \pi \cdot (D / 2) =$	2.278	2.278	Area Based on Half of Circumference
$R_S = K_N \cdot \sigma_h \cdot D =$	6589.376	6589.376	Bearing Resistance of Pipelines
$F_s = A_P \cdot f_c \cdot c + W \cdot \tan((\pi / 180) \cdot f_\phi \cdot \Phi) =$	833.005	514.862	Frictional Resitance
$L = (S_f \cdot P \cdot A \cdot \tan((\pi / 180) \cdot (\theta / 2))) / (F_s + (R_S / 2)) =$	3.438		Minimum Restrained Length Lower
$L = (S_f \cdot P \cdot A \cdot \tan((\pi / 180) \cdot (\theta / 2))) / F_s =$		27.560	Minimum Restrained Length Upper

MEGALUG®

Created by EBAA Iron's Restraint Length Calculator v7.1.3 on February 20, 2025

Project Name: Shell Rd

Project Notes:

www.ebaa.com • contact@ebaa.com • 800.433.1716

RESTRAINT LENGTH VALUES

Fitting Type	Pipe Material	Soil Type	Safety Factor	Trench Type	Depth of Bury	Test Pressure	Nominal Size	Bend Angle	Branch Size	Length Along Run	Reduced Size	Lowside Depth	Restraint Length	Restraint Length 2
Horizontal Bend	Poly Wrapped Ductile	GW	1.5	5	8 Ft.	200 PSI	16 In.	22.5°					5 Ft.	

Site Name: WL-H HB @ 1+54.83

Site Notes:

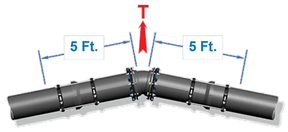

ALL JOINTS WITHIN THE CALCULATED LENGTH MUST BE RESTRAINED
IF YOUR DISTANCE BETWEEN FITTINGS IS LESS THAN OR EQUAL TO THE CALCULATED RESTRAINT LENGTH, RESTRAIN ALL JOINTS BETWEEN THOSE FITTINGS.

Defined Variables

H =	8	Depth of Bury
S_f =	1.5	Safety Factor
P =	200	Internal Pressure
θ =	22.5	Bend Angle

Pipe Derived Variables

A =	237.79	Cross Sec. Area of Pipe
D =	1.45	Outside Pipe Diameter
W_p =	57	Weight of Pipe
W_w =	94	Weight of Water in Pipe

Defined Variables

f_c =	0.00	Cohesion Modifier Coefficient
c =	0	Cohesion of Soil
f_ϕ =	1.00	Friction Angle Modifier
Φ =	36	Internal Friction Angle of Soil
γ =	110	Soil Density
K_N =	1.00	Trench Compaction Modifier

Calculations for Horizontal Bend

$W_E = \gamma \cdot D \cdot H =$	1276.000	Normal Force Due to Soil
$W = 2W_E + W_P + W_W =$	2703.000	Normal Force Acting on Pipeline
$K_P = \tan^2((\pi / 180) \cdot (45 + (\Phi / 2))) =$	3.852	Rankin Passive Pressure Coeff.
$H_C = H + (D / 2) =$	8.725	Depth From Surface to Pipe Center
$\sigma_h = \gamma \cdot H_C \cdot K_P + 2c\sqrt{K_P} =$	3696.957	Horizontal Passive Soil Pressure
$A_P = \pi \cdot (D / 2) =$	2.278	Area Based on Half of Circumference
$R_S = K_N \cdot \sigma_h \cdot D =$	5360.588	Bearing Resistance of Pipelines
$F_s = A_P \cdot f_c \cdot c + W \cdot \tan((\pi / 180) \cdot f_\phi \cdot \Phi) =$	673.934	Frictional Resitance
$L = (S_f \cdot P \cdot A \cdot \tan((\pi / 180) \cdot (\theta / 2))) / (F_s + (R_S / 2)) =$	4.230	Minimum Restrained Length

MEGALUG®

Created by EBAA Iron's Restraint Length Calculator v7.1.3 on February 20, 2025

Project Name: Shell Rd

Project Notes:

www.ebaa.com • contact@ebaa.com • 800.433.1716

RESTRAINT LENGTH VALUES

Fitting Type	Pipe Material	Soil Type	Safety Factor	Trench Type	Depth of Bury	Test Pressure	Nominal Size	Bend Angle	Branch Size	Length Along Run	Reduced Size	Lowside Depth	Restraint Length	Restraint Length 2
Dead End	Poly Wrapped Ductile	GW	1.5	5	6 Ft.	200 PSI	16 In.						139 Ft.	

Site Name: WL-H GV @ 1+66.69

Site Notes:

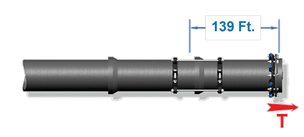

ALL JOINTS WITHIN THE CALCULATED LENGTH MUST BE RESTRAINED
IF YOUR DISTANCE BETWEEN FITTINGS IS LESS THAN OR EQUAL TO THE CALCULATED RESTRAINT LENGTH, RESTRAIN ALL JOINTS BETWEEN THOSE FITTINGS.

Defined Variables

H =	6	Depth of Bury
S_f =	1.5	Safety Factor
P =	200	Internal Pressure

Pipe Derived Variables

A =	237.79	Cross Sec. Area of Pipe
D =	1.45	Outside Pipe Diameter
W_p =	57	Weight of Pipe
W_w =	94	Weight of Water in Pipe

Defined Variables

f_c =	0.00	Cohesion Modifier Coefficient
c =	0	Cohesion of Soil
f_ϕ =	1.00	Friction Angle Modifier
Φ =	36	Internal Friction Angle of Soil
γ =	110	Soil Density

Calculations for Dead End

$W_E = \gamma \cdot D \cdot H =$	957.000	Normal Force Due to Soil
$W = 2W_E + W_P + W_W =$	2065.000	Normal Force Acting on Pipeline
$(A_p)_b = \pi \cdot D =$	4.555	Area Based on Full Pipe Circumference
$F_{ab} = (A_p)_b \cdot f_c \cdot c + W \cdot \tan((\pi / 180) f_\phi \cdot \Phi) =$	514.862	Frictional Resistance
$L = S_f \cdot P \cdot A / F_{ab} =$	138.556	Minimum Restrained Length of Dead End

MEGALUG®

Created by EBAA Iron's Restraint Length Calculator v7.1.3 on February 20, 2025

811 Know what's below. Call before you dig.

CAUTION: CONTRACTOR NOTE

THE LOCATION OF EXISTING UNDERGROUND AND OVERHEAD UTILITIES ARE APPROXIMATE LOCATIONS ONLY. THE CONTRACTOR SHALL CONTACT UTILITY COMPANIES PRIOR TO CONSTRUCTION. CONTRACTOR SHALL DETERMINE, AND FIELD VERIFY EXISTING UTILITY LOCATIONS AND DEPTHS PRIOR TO BEGINNING CONSTRUCTION AND SHALL BE FULLY RESPONSIBLE FOR ANY AND ALL DAMAGES WHICH MIGHT OCCUR.

CONTRACTOR SHALL CONSIDER PROPOSED UTILITY IMPROVEMENTS AND PROVIDE ADEQUATE HORIZONTAL AND VERTICAL CLEARANCE DURING INSTALLATION OF ALL UTILITY INFRASTRUCTURE.

NO.	REVISION	BY	DATE

BGE JOB NO. XXXX-XX
FILE
DATE 02/21/2025
DESIGNED XXX
DRAWN XXX
REVISED XXX
CHECKED XXX

SHELL ROAD UTILITY RELOCATIONS

JOINT RESTRAINT CALCS (24 OF 27)

CITY OF GEORGETOWN

BGE
BGE, INC.
101 WEST LOUIS HENNA BLVD., STE 400
AUSTIN, TX 78728
TBPE Registration No. F-1046
TEL: 512-879-0400 www.bgeinc.com

STATE OF TEXAS
BRITTANY LYNN FAIRBURN
132905
LICENSED PROFESSIONAL ENGINEER

Brittany Lynn Fairburn

02/21/2025

SHEET
392

100% SUBMITTAL

FILE LOCATION: G:\TXC\PROJECTS\CITY_GEORGETOWN\10767-00 SHELL ROAD\03_CADD\01_SHTS_PW\SHELL_JOINT_RESTRAINTS.DWG DATE SAVED: 2/20/2025

Project Name: Shell Rd

Project Notes:

Built Stronger. Lasts Longer.
EBAA IRON
EBAA IRON SALES, INC.
www.ebaa.com • contact@ebaa.com • 800.433.1716

RESTRAINT LENGTH VALUES

Fitting Type	Pipe Material	Soil Type	Safety Factor	Trench Type	Depth of Bury	Test Pressure	Nominal Size	Bend Angle	Branch Size	Length Along Run	Reduced Size	Lowside Depth	Restraint Length	Restraint Length 2
Horizontal Bend	Poly Wrapped Ductile	GW	1.5	5	6 Ft.	200 PSI	16 In.	22.5°					6 Ft.	

Site Name: WL-H HB @ 1+70.19

Site Notes:

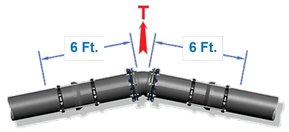

ALL JOINTS WITHIN THE CALCULATED LENGTH MUST BE RESTRAINED
IF YOUR DISTANCE BETWEEN FITTINGS IS LESS THAN OR EQUAL TO THE CALCULATED RESTRAINT LENGTH, RESTRAIN ALL JOINTS BETWEEN THOSE FITTINGS.

Defined Variables

H =	6	Depth of Bury
S_f =	1.5	Safety Factor
P =	200	Internal Pressure
θ =	22.5	Bend Angle

Pipe Derived Variables

A =	237.79	Cross Sec. Area of Pipe
D =	1.45	Outside Pipe Diameter
W_p =	57	Weight of Pipe
W_w =	94	Weight of Water in Pipe

Defined Variables

f_c =	0.00	Cohesion Modifier Coefficient
c =	0	Cohesion of Soil
f_ϕ =	1.00	Friction Angle Modifier
Φ =	36	Internal Friction Angle of Soil
γ =	110	Soil Density
K_N =	1.00	Trench Compaction Modifier

Calculations for Horizontal Bend

$W_E = \gamma \cdot D \cdot H =$	957.000	Normal Force Due to Soil
$W = 2W_E + W_P + W_W =$	2065.000	Normal Force Acting on Pipeline
$K_p = \tan^2((\pi / 180) \cdot (45 + (\Phi / 2))) =$	3.852	Rankin Passive Pressure Coeff.
$H_C = H + (D / 2) =$	6.725	Depth From Surface to Pipe Center
$\sigma_h = \gamma \cdot H_C \cdot K_p + 2c\sqrt{K_p} =$	2849.517	Horizontal Passive Soil Pressure
$A_p = \pi \cdot (D / 2) =$	2.278	Area Based on Half of Circumference
$R_S = K_N \cdot \sigma_h \cdot D =$	4131.800	Bearing Resistance of Pipelines
$F_s = A_p \cdot f_c \cdot c + W \cdot \tan((\pi / 180) \cdot f_\phi \cdot \Phi) =$	514.862	Frictional Resitance
$L = (S_f \cdot P \cdot A \cdot \tan((\pi / 180) \cdot (\theta / 2))) / (F_s + (R_s / 2)) =$	5.498	Minimum Restrained Length

MEGALUG®

Created by EBAA Iron's Restraint Length Calculator v7.1.3 on February 20, 2025

Project Name: Shell Rd

Project Notes:

Built Stronger. Lasts Longer.
EBAA IRON
EBAA IRON SALES, INC.
www.ebaa.com • contact@ebaa.com • 800.433.1716

RESTRAINT LENGTH VALUES

Fitting Type	Pipe Material	Soil Type	Safety Factor	Trench Type	Depth of Bury	Test Pressure	Nominal Size	Bend Angle	Branch Size	Length Along Run	Reduced Size	Lowside Depth	Restraint Length	Restraint Length 2
Horizontal Bend	Poly Wrapped Ductile	GW	1.5	5	5 Ft.	200 PSI	16 In.	45°					14 Ft.	

Site Name: WL-I HB @ 0+30.00

Site Notes:

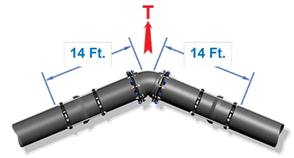

ALL JOINTS WITHIN THE CALCULATED LENGTH MUST BE RESTRAINED
IF YOUR DISTANCE BETWEEN FITTINGS IS LESS THAN OR EQUAL TO THE CALCULATED RESTRAINT LENGTH, RESTRAIN ALL JOINTS BETWEEN THOSE FITTINGS.

Defined Variables

H =	5	Depth of Bury
S_f =	1.5	Safety Factor
P =	200	Internal Pressure
θ =	45	Bend Angle

Pipe Derived Variables

A =	237.79	Cross Sec. Area of Pipe
D =	1.45	Outside Pipe Diameter
W_p =	57	Weight of Pipe
W_w =	94	Weight of Water in Pipe

Defined Variables

f_c =	0.00	Cohesion Modifier Coefficient
c =	0	Cohesion of Soil
f_ϕ =	1.00	Friction Angle Modifier
Φ =	36	Internal Friction Angle of Soil
γ =	110	Soil Density
K_N =	1.00	Trench Compaction Modifier

Calculations for Horizontal Bend

$W_E = \gamma \cdot D \cdot H =$	797.500	Normal Force Due to Soil
$W = 2W_E + W_P + W_W =$	1746.000	Normal Force Acting on Pipeline
$K_p = \tan^2((\pi / 180) \cdot (45 + (\Phi / 2))) =$	3.852	Rankin Passive Pressure Coeff.
$H_C = H + (D / 2) =$	5.725	Depth From Surface to Pipe Center
$\sigma_h = \gamma \cdot H_C \cdot K_p + 2c\sqrt{K_p} =$	2425.797	Horizontal Passive Soil Pressure
$A_p = \pi \cdot (D / 2) =$	2.278	Area Based on Half of Circumference
$R_S = K_N \cdot \sigma_h \cdot D =$	3517.406	Bearing Resistance of Pipelines
$F_s = A_p \cdot f_c \cdot c + W \cdot \tan((\pi / 180) \cdot f_\phi \cdot \Phi) =$	435.327	Frictional Resitance
$L = (S_f \cdot P \cdot A \cdot \tan((\pi / 180) \cdot (\theta / 2))) / (F_s + (R_s / 2)) =$	13.468	Minimum Restrained Length

MEGALUG®

Created by EBAA Iron's Restraint Length Calculator v7.1.3 on February 19, 2025

Project Name: Shell Rd

Project Notes:

Built Stronger. Lasts Longer.
EBAA IRON
EBAA IRON SALES, INC.
www.ebaa.com • contact@ebaa.com • 800.433.1716

RESTRAINT LENGTH VALUES

Fitting Type	Pipe Material	Soil Type	Safety Factor	Trench Type	Depth of Bury	Test Pressure	Nominal Size	Bend Angle	Branch Size	Length Along Run	Reduced Size	Lowside Depth	Restraint Length	Restraint Length 2
Horizontal Bend	Poly Wrapped Ductile	GW	1.5	5	5 Ft.	200 PSI	16 In.	45°					14 Ft.	

Site Name: WL-I HB @ 0+36.94

Site Notes:

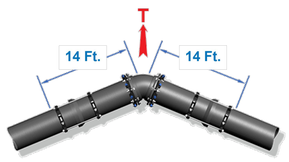

ALL JOINTS WITHIN THE CALCULATED LENGTH MUST BE RESTRAINED
IF YOUR DISTANCE BETWEEN FITTINGS IS LESS THAN OR EQUAL TO THE CALCULATED RESTRAINT LENGTH, RESTRAIN ALL JOINTS BETWEEN THOSE FITTINGS.

Defined Variables

H =	5	Depth of Bury
S_f =	1.5	Safety Factor
P =	200	Internal Pressure
θ =	45	Bend Angle

Pipe Derived Variables

A =	237.79	Cross Sec. Area of Pipe
D =	1.45	Outside Pipe Diameter
W_p =	57	Weight of Pipe
W_w =	94	Weight of Water in Pipe

Defined Variables

f_c =	0.00	Cohesion Modifier Coefficient
c =	0	Cohesion of Soil
f_ϕ =	1.00	Friction Angle Modifier
Φ =	36	Internal Friction Angle of Soil
γ =	110	Soil Density
K_N =	1.00	Trench Compaction Modifier

Calculations for Horizontal Bend

$W_E = \gamma \cdot D \cdot H =$	797.500	Normal Force Due to Soil
$W = 2W_E + W_P + W_W =$	1746.000	Normal Force Acting on Pipeline
$K_p = \tan^2((\pi / 180) \cdot (45 + (\Phi / 2))) =$	3.852	Rankin Passive Pressure Coeff.
$H_C = H + (D / 2) =$	5.725	Depth From Surface to Pipe Center
$\sigma_h = \gamma \cdot H_C \cdot K_p + 2c\sqrt{K_p} =$	2425.797	Horizontal Passive Soil Pressure
$A_p = \pi \cdot (D / 2) =$	2.278	Area Based on Half of Circumference
$R_S = K_N \cdot \sigma_h \cdot D =$	4131.800	Bearing Resistance of Pipelines
$F_s = A_p \cdot f_c \cdot c + W \cdot \tan((\pi / 180) \cdot f_\phi \cdot \Phi) =$	514.862	Frictional Resitance
$L = (S_f \cdot P \cdot A \cdot \tan((\pi / 180) \cdot (\theta / 2))) / (F_s + (R_s / 2)) =$	5.498	Minimum Restrained Length

MEGALUG®

Created by EBAA Iron's Restraint Length Calculator v7.1.3 on February 19, 2025

Project Name: Shell Rd

Project Notes:

Built Stronger. Lasts Longer.
EBAA IRON
EBAA IRON SALES, INC.
www.ebaa.com • contact@ebaa.com • 800.433.1716

RESTRAINT LENGTH VALUES

Fitting Type	Pipe Material	Soil Type	Safety Factor	Trench Type	Depth of Bury	Test Pressure	Nominal Size	Bend Angle	Branch Size	Length Along Run	Reduced Size	Lowside Depth	Restraint Length	Restraint Length 2
Vertical Offset	Poly Wrapped Ductile	GW	1.5	5	5 Ft.	200 PSI	16 In.	11.25°				6 Ft.	17 Ft.	3 Ft.

Site Name: WL-I VB @ 0+47.78 - 0+63.01

Site Notes:

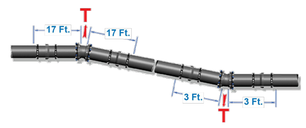

ALL JOINTS WITHIN THE CALCULATED LENGTH MUST BE RESTRAINED
IF YOUR DISTANCE BETWEEN FITTINGS IS LESS THAN OR EQUAL TO THE CALCULATED RESTRAINT LENGTH, RESTRAIN ALL JOINTS BETWEEN THOSE FITTINGS.

Defined Variables

H =	5	Depth of Bury
S_f =	1.5	Safety Factor
P =	200	Internal Pressure
θ =	11.25	Bend Angle

Pipe Derived Variables

A =	237.79	Cross Sec. Area of Pipe
D =	1.45	Outside Pipe Diameter
W_p =	57	Weight of Pipe
W_w =	94	Weight of Water in Pipe

Defined Variables

f_c =	0.00	Cohesion Modifier Coefficient
c =	0	Cohesion of Soil
f_ϕ =	1.00	Friction Angle Modifier
Φ =	36	Internal Friction Angle of Soil
γ =	110	Soil Density
K_N =	1.00	Trench Compaction Modifier

Calculations for Vertical Offset

	Lower	Upper	
$W_E = \gamma \cdot D \cdot H =$	957.000	797.500	Normal Force Due to Soil
$W = 2W_E + W_P + W_W =$	2065.000	1746.000	Normal Force Acting on Pipeline
$K_p = \tan^2((\pi / 180) \cdot (45 + (\Phi / 2))) =$	3.852	3.852	Rankin Passive Pressure Coeff.
$H_C = H + (D / 2) =$	6.725	5.725	Depth From Surface to Pipe Center
$\sigma_h = \gamma \cdot H_C \cdot K_p + 2c\sqrt{K_p} =$	2849.517		Horizontal Passive Soil Pressure
$A_p = \pi \cdot (D / 2) =$	2.278	2.278	Area Based on Half of Circumference
$R_S = K_N \cdot \sigma_h \cdot D =$	4131.800	4131.800	Bearing Resistance of Pipelines
$F_s = A_p \cdot f_c \cdot c + W \cdot \tan((\pi / 180) \cdot f_\phi \cdot \Phi) =$	514.862	435.327	Frictional Resitance
$L = (S_f \cdot P \cdot A \cdot \tan((\pi / 180) \cdot (\theta / 2))) / (F_s + (R_s / 2)) =$	2.722		Minimum Restrained Length Lower
$L = (S_f \cdot P \cdot A \cdot \tan((\pi / 180) \cdot (\theta / 2))) / F_s =$		16.140	Minimum Restrained Length Upper

MEGALUG®

Created by EBAA Iron's Restraint Length Calculator v7.1.3 on February 19, 2025

811 Know what's below. Call before you dig.

CAUTION: CONTRACTOR NOTE

THE LOCATION OF EXISTING UNDERGROUND AND OVERHEAD UTILITIES ARE APPROXIMATE LOCATIONS ONLY. THE CONTRACTOR SHALL CONTACT UTILITY COMPANIES PRIOR TO CONSTRUCTION. CONTRACTOR SHALL DETERMINE, AND FIELD VERIFY EXISTING UTILITY LOCATIONS AND DEPTHS PRIOR TO BEGINNING CONSTRUCTION AND SHALL BE FULLY RESPONSIBLE FOR ANY AND ALL DAMAGES WHICH MIGHT OCCUR.

CONTRACTOR SHALL CONSIDER PROPOSED UTILITY IMPROVEMENTS AND PROVIDE ADEQUATE HORIZONTAL AND VERTICAL CLEARANCE DURING INSTALLATION OF ALL UTILITY INFRASTRUCTURE.

NO.	REVISION	BY	DATE

BGE JOB NO. XXXX-XX
FILE
DATE 02/21/2025
DESIGNED XXX
DRAWN XXX
REVISED XXX
CHECKED XXX

SHELL ROAD UTILITY RELOCATIONS

JOINT RESTRAINT CALCS (25 OF 27)

CITY OF GEORGETOWN

BGE
BGE, INC.
101 WEST LOUIS HENNA BLVD., STE 400
AUSTIN, TX 78728
TBPE Registration No. F-1046
TEL: 512-879-0400 www.bgeinc.com

STATE OF TEXAS
BRITTANY LYNN FAIRBURN
132905
LICENSED
PROFESSIONAL ENGINEER
Brittany Lynn Fairburn
02/21/2025

SHEET
393

100% SUBMITTAL

FILE LOCATION: G:\TXC\PROJECTS\CITY_GEORGETOWN\10767-00 SHELL ROAD\03_CADD\01_SHTS_PW\SHELL_JOINT_RESTRAINTS.DWG DATE SAVED: 2/20/2025

Project Name: Shell Rd

Project Notes:

Built Stronger. Lasts Longer.
EBAA IRON
EBAA IRON SALES, INC.
www.ebaa.com • contact@ebaa.com • 800.433.1716

RESTRAINT LENGTH VALUES

Fitting Type	Pipe Material	Soil Type	Safety Factor	Trench Type	Depth of Bury	Test Pressure	Nominal Size	Bend Angle	Branch Size	Length Along Run	Reduced Size	Lowside Depth	Restraint Length	Restraint Length 2
Horizontal Bend	Poly Wrapped Ductile	GW	1.5	5	5 Ft.	200 PSI	16 In.	45°					14 Ft.	

Site Name: WL-I HB @ 1+19.25

Site Notes:

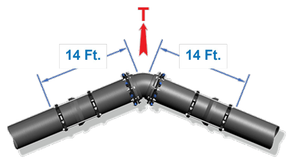

ALL JOINTS WITHIN THE CALCULATED LENGTH MUST BE RESTRAINED
IF YOUR DISTANCE BETWEEN FITTINGS IS LESS THAN OR EQUAL TO THE CALCULATED RESTRAINT LENGTH, RESTRAIN ALL JOINTS BETWEEN THOSE FITTINGS.

Defined Variables

H =	5	Depth of Bury
S_f =	1.5	Safety Factor
P =	200	Internal Pressure
θ =	45	Bend Angle

Pipe Derived Variables

A =	237.79	Cross Sec. Area of Pipe
D =	1.45	Outside Pipe Diameter
W_p =	57	Weight of Pipe
W_w =	94	Weight of Water in Pipe

Defined Variables

f_c =	0.00	Cohesion Modifier Coefficient
c =	0	Cohesion of Soil
f_ϕ =	1.00	Friction Angle Modifier
Φ =	36	Internal Friction Angle of Soil
γ =	110	Soil Density
K_N =	1.00	Trench Compaction Modifier

Calculations for Horizontal Bend

$W_E = \gamma \cdot D \cdot H =$	797.500	Normal Force Due to Soil
$W = 2W_E + W_p + W_w =$	1746.000	Normal Force Acting on Pipeline
$K_p = \tan^2((\pi / 180) \cdot (45 + (\Phi / 2))) =$	3.852	Rankin Passive Pressure Coeff.
$H_C = H + (D / 2) =$	5.725	Depth From Surface to Pipe Center
$\sigma_h = \gamma \cdot H_C \cdot K_p + 2c\sqrt{K_p} =$	2425.797	Horizontal Passive Soil Pressure
$A_p = \pi \cdot (D / 2) =$	2.278	Area Based on Half of Circumference
$R_S = K_N \cdot \sigma_h \cdot D =$	3517.406	Bearing Resistance of Pipelines
$F_s = A_p \cdot f_c \cdot c + W \cdot \tan((\pi / 180) \cdot f_\phi \cdot \Phi) =$	435.327	Frictional Resitance
$L = (S_f \cdot P \cdot A \cdot \tan((\pi / 180) \cdot (\theta / 2))) / (F_s + (R_s / 2)) =$	13.468	Minimum Restrained Length

MEGALUG®

Created by EBAA Iron's Restraint Length Calculator v7.1.3 on February 19, 2025

Project Name: Shell Rd

Project Notes:

Built Stronger. Lasts Longer.
EBAA IRON
EBAA IRON SALES, INC.
www.ebaa.com • contact@ebaa.com • 800.433.1716

RESTRAINT LENGTH VALUES

Fitting Type	Pipe Material	Soil Type	Safety Factor	Trench Type	Depth of Bury	Test Pressure	Nominal Size	Bend Angle	Branch Size	Length Along Run	Reduced Size	Lowside Depth	Restraint Length	Restraint Length 2
Horizontal Bend	Poly Wrapped Ductile	GW	1.5	5	5 Ft.	200 PSI	16 In.	45°					14 Ft.	

Site Name: WL-I HB @ 1+27.14

Site Notes:

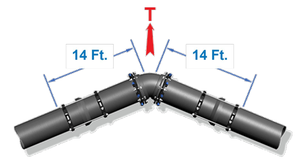

ALL JOINTS WITHIN THE CALCULATED LENGTH MUST BE RESTRAINED
IF YOUR DISTANCE BETWEEN FITTINGS IS LESS THAN OR EQUAL TO THE CALCULATED RESTRAINT LENGTH, RESTRAIN ALL JOINTS BETWEEN THOSE FITTINGS.

Defined Variables

H =	5	Depth of Bury
S_f =	1.5	Safety Factor
P =	200	Internal Pressure
θ =	45	Bend Angle

Pipe Derived Variables

A =	237.79	Cross Sec. Area of Pipe
D =	1.45	Outside Pipe Diameter
W_p =	57	Weight of Pipe
W_w =	94	Weight of Water in Pipe

Defined Variables

f_c =	0.00	Cohesion Modifier Coefficient
c =	0	Cohesion of Soil
f_ϕ =	1.00	Friction Angle Modifier
Φ =	36	Internal Friction Angle of Soil
γ =	110	Soil Density
K_N =	1.00	Trench Compaction Modifier

Calculations for Horizontal Bend

$W_E = \gamma \cdot D \cdot H =$	797.500	Normal Force Due to Soil
$W = 2W_E + W_p + W_w =$	1746.000	Normal Force Acting on Pipeline
$K_p = \tan^2((\pi / 180) \cdot (45 + (\Phi / 2))) =$	3.852	Rankin Passive Pressure Coeff.
$H_C = H + (D / 2) =$	5.725	Depth From Surface to Pipe Center
$\sigma_h = \gamma \cdot H_C \cdot K_p + 2c\sqrt{K_p} =$	2425.797	Horizontal Passive Soil Pressure
$A_p = \pi \cdot (D / 2) =$	2.278	Area Based on Half of Circumference
$R_S = K_N \cdot \sigma_h \cdot D =$	3517.406	Bearing Resistance of Pipelines
$F_s = A_p \cdot f_c \cdot c + W \cdot \tan((\pi / 180) \cdot f_\phi \cdot \Phi) =$	435.327	Frictional Resitance
$L = (S_f \cdot P \cdot A \cdot \tan((\pi / 180) \cdot (\theta / 2))) / (F_s + (R_s / 2)) =$	13.468	Minimum Restrained Length

MEGALUG®

Created by EBAA Iron's Restraint Length Calculator v7.1.3 on February 19, 2025

Project Name: Shell Rd

Project Notes:

Built Stronger. Lasts Longer.
EBAA IRON
EBAA IRON SALES, INC.
www.ebaa.com • contact@ebaa.com • 800.433.1716

RESTRAINT LENGTH VALUES

Fitting Type	Pipe Material	Soil Type	Safety Factor	Trench Type	Depth of Bury	Test Pressure	Nominal Size	Bend Angle	Branch Size	Length Along Run	Reduced Size	Lowside Depth	Restraint Length	Restraint Length 2
Horizontal Bend	PVC	GW	1.5	5	4 Ft.	200 PSI	16 In.	45°					15 Ft.	

Site Name: WL-J HB @ 0+35.00

Site Notes:

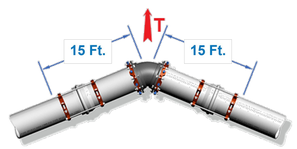

ALL JOINTS WITHIN THE CALCULATED LENGTH MUST BE RESTRAINED
IF YOUR DISTANCE BETWEEN FITTINGS IS LESS THAN OR EQUAL TO THE CALCULATED RESTRAINT LENGTH, RESTRAIN ALL JOINTS BETWEEN THOSE FITTINGS.

Defined Variables

H =	4	Depth of Bury
S_f =	1.5	Safety Factor
P =	200	Internal Pressure
θ =	45	Bend Angle

Pipe Derived Variables

A =	237.79	Cross Sec. Area of Pipe
D =	1.45	Outside Pipe Diameter
W_p =	21.14	Weight of Pipe
W_w =	87.80	Weight of Water in Pipe

Defined Variables

f_c =	0.00	Cohesion Modifier Coefficient
c =	0	Cohesion of Soil
f_ϕ =	0.70	Friction Angle Modifier
Φ =	36	Internal Friction Angle of Soil
γ =	110	Soil Density
K_N =	1.00	Trench Compaction Modifier

Calculations for Horizontal Bend

$W_E = \gamma \cdot D \cdot H =$	638.000	Normal Force Due to Soil
$W = 2W_E + W_p + W_w =$	1384.940	Normal Force Acting on Pipeline
$K_p = \tan^2((\pi / 180) \cdot (45 + (\Phi / 2))) =$	3.852	Rankin Passive Pressure Coeff.
$H_C = H + (D / 2) =$	4.725	Depth From Surface to Pipe Center
$\sigma_h = \gamma \cdot H_C \cdot K_p + 2c\sqrt{K_p} =$	2002.077	Horizontal Passive Soil Pressure
$A_p = \pi \cdot (D / 2) =$	2.278	Area Based on Half of Circumference
$R_S = K_N \cdot \sigma_h \cdot D =$	2903.012	Bearing Resistance of Pipelines
$F_s = A_p \cdot f_c \cdot c + W \cdot \tan((\pi / 180) \cdot f_\phi \cdot \Phi) =$	651.703	Frictional Resitance
$L = (S_f \cdot P \cdot A \cdot \tan((\pi / 180) \cdot (\theta / 2))) / (F_s + (R_s / 2)) =$	14.049	Minimum Restrained Length

MEGALUG®

Created by EBAA Iron's Restraint Length Calculator v7.1.3 on February 19, 2025

Project Name: Shell Rd

Project Notes:

Built Stronger. Lasts Longer.
EBAA IRON
EBAA IRON SALES, INC.
www.ebaa.com • contact@ebaa.com • 800.433.1716

RESTRAINT LENGTH VALUES

Fitting Type	Pipe Material	Soil Type	Safety Factor	Trench Type	Depth of Bury	Test Pressure	Nominal Size	Bend Angle	Branch Size	Length Along Run	Reduced Size	Lowside Depth	Restraint Length	Restraint Length 2
Horizontal Bend	PVC	GW	1.5	5	5 Ft.	200 PSI	16 In.	45°					12 Ft.	

Site Name: WL-J HB @ 0+41.32

Site Notes:

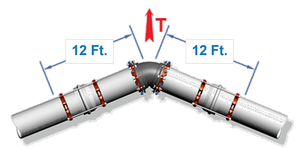

ALL JOINTS WITHIN THE CALCULATED LENGTH MUST BE RESTRAINED
IF YOUR DISTANCE BETWEEN FITTINGS IS LESS THAN OR EQUAL TO THE CALCULATED RESTRAINT LENGTH, RESTRAIN ALL JOINTS BETWEEN THOSE FITTINGS.

Defined Variables

H =	5	Depth of Bury
S_f =	1.5	Safety Factor
P =	200	Internal Pressure
θ =	45	Bend Angle

Pipe Derived Variables

A =	237.79	Cross Sec. Area of Pipe
D =	1.45	Outside Pipe Diameter
W_p =	21.14	Weight of Pipe
W_w =	87.80	Weight of Water in Pipe

Defined Variables

f_c =	0.00	Cohesion Modifier Coefficient
c =	0	Cohesion of Soil
f_ϕ =	0.70	Friction Angle Modifier
Φ =	36	Internal Friction Angle of Soil
γ =	110	Soil Density
K_N =	1.00	Trench Compaction Modifier

Calculations for Horizontal Bend

$W_E = \gamma \cdot D \cdot H =$	797.500	Normal Force Due to Soil
$W = 2W_E + W_p + W_w =$	1703.940	Normal Force Acting on Pipeline
$K_p = \tan^2((\pi / 180) \cdot (45 + (\Phi / 2))) =$	3.852	Rankin Passive Pressure Coeff.
$H_C = H + (D / 2) =$	5.725	Depth From Surface to Pipe Center
$\sigma_h = \gamma \cdot H_C \cdot K_p + 2c\sqrt{K_p} =$	2425.797	Horizontal Passive Soil Pressure
$A_p = \pi \cdot (D / 2) =$	2.278	Area Based on Half of Circumference
$R_S = K_N \cdot \sigma_h \cdot D =$	3517.406	Bearing Resistance of Pipelines
$F_s = A_p \cdot f_c \cdot c + W \cdot \tan((\pi / 180) \cdot f_\phi \cdot \Phi) =$	801.813	Frictional Resitance
$L = (S_f \cdot P \cdot A \cdot \tan((\pi / 180) \cdot (\theta / 2))) / (F_s + (R_s / 2)) =$	11.540	Minimum Restrained Length

MEGALUG®

Created by EBAA Iron's Restraint Length Calculator v7.1.3 on February 19, 2025

811 Know what's below. Call before you dig.

CAUTION: CONTRACTOR NOTE

THE LOCATION OF EXISTING UNDERGROUND AND OVERHEAD UTILITIES ARE APPROXIMATE LOCATIONS ONLY. THE CONTRACTOR SHALL CONTACT UTILITY COMPANIES PRIOR TO CONSTRUCTION. CONTRACTOR SHALL DETERMINE, AND FIELD VERIFY EXISTING UTILITY LOCATIONS AND DEPTHS PRIOR TO BEGINNING CONSTRUCTION AND SHALL BE FULLY RESPONSIBLE FOR ANY AND ALL DAMAGES WHICH MIGHT OCCUR.

CONTRACTOR SHALL CONSIDER PROPOSED UTILITY IMPROVEMENTS AND PROVIDE ADEQUATE HORIZONTAL AND VERTICAL CLEARANCE DURING INSTALLATION OF ALL UTILITY INFRASTRUCTURE.

NO.	REVISION	BY	DATE

BGE JOB NO. XXXX-XX
FILE
DATE 02/21/2025
DESIGNED XXX
DRAWN XXX
REVISED XXX
CHECKED XXX

SHELL ROAD UTILITY RELOCATIONS

JOINT RESTRAINT CALCS (26 OF 27)

CITY OF GEORGETOWN

BGE

BGE, INC.
101 WEST LOUIS HENNA BLVD., STE 400
AUSTIN, TX 78728
TBPE Registration No. F-1046
TEL: 512-879-0400 www.bgeinc.com

STATE OF TEXAS
BRITTANY LYNN FAIRBURN
132905
LICENSED
PROFESSIONAL ENGINEER

Brittany Lynn Fairburn

02/21/2025

SHEET
394

100% SUBMITTAL

FILE LOCATION: G:\TXC\PROJECTS\CITY_GEORGETOWN\10767-00 SHELL ROAD\03_CADD\01_SHTS_PW\SHELL_JOINT_RESTRAINTS.DWG DATE SAVED: 2/20/2025

Project Name: Shell Rd

Project Notes:

Built Stronger. Lasts Longer.
EBAA IRON
EBAA IRON SALES, INC.
www.ebaa.com • contact@ebaa.com • 800.433.1716

RESTRAINT LENGTH VALUES

Fitting Type	Pipe Material	Soil Type	Safety Factor	Trench Type	Depth of Bury	Test Pressure	Nominal Size	Bend Angle	Branch Size	Length Along Run	Reduced Size	Lowside Depth	Restraint Length	Restraint Length 2
Horizontal Bend	PVC	GW	1.5	5	5 Ft.	200 PSI	16 In.	45°					12 Ft.	

Site Name: WL-J HB @ 0+55.79

Site Notes:

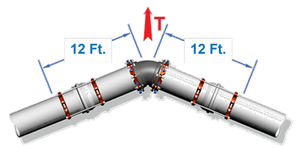

ALL JOINTS WITHIN THE CALCULATED LENGTH MUST BE RESTRAINED
IF YOUR DISTANCE BETWEEN FITTINGS IS LESS THAN OR EQUAL TO THE CALCULATED RESTRAINT LENGTH, RESTRAIN ALL JOINTS BETWEEN THOSE FITTINGS.

Defined Variables

H =	5	Depth of Bury
S_f =	1.5	Safety Factor
P =	200	Internal Pressure
θ =	45	Bend Angle

Pipe Derived Variables

A =	237.79	Cross Sec. Area of Pipe
D =	1.45	Outside Pipe Diameter
W_p =	21.14	Weight of Pipe
W_w =	87.80	Weight of Water in Pipe

Defined Variables

f_c =	0.00	Cohesion Modifier Coefficient
c =	0	Cohesion of Soil
f_Φ =	0.70	Friction Angle Modifier
Φ =	36	Internal Friction Angle of Soil
γ =	110	Soil Density
K_N =	1.00	Trench Compaction Modifier

Calculations for Horizontal Bend

$W_E = \gamma \cdot D \cdot H =$	797.500	Normal Force Due to Soil
$W = 2W_E + W_p + W_w =$	1703.940	Normal Force Acting on Pipeline
$K_p = \tan^2((\pi / 180) \cdot (45 + (\Phi / 2))) =$	3.852	Rankin Passive Pressure Coeff.
$H_C = H + (D / 2) =$	5.725	Depth From Surface to Pipe Center
$\sigma_h = \gamma \cdot H_C \cdot K_p + 2c\sqrt{K_p} =$	2425.797	Horizontal Passive Soil Pressure
$A_p = \pi \cdot (D / 2) =$	2.278	Area Based on Half of Circumference
$R_S = K_N \cdot \sigma_h \cdot D =$	3517.406	Bearing Resistance of Pipelines
$F_s = A_p \cdot f_c \cdot c + W \cdot \tan((\pi / 180) \cdot (\theta / 2))) \cdot f_\Phi \cdot \Phi) =$	801.813	Frictional Resitance
$L = (S_f \cdot P \cdot A \cdot \tan((\pi / 180) \cdot (\theta / 2))) / (F_s + (R_S / 2)) =$	11.540	Minimum Restrained Length

MEGALUG®

Created by EBAA Iron's Restraint Length Calculator v7.1.3 on February 19, 2025

Project Name: Shell Rd

Project Notes:

Built Stronger. Lasts Longer.
EBAA IRON
EBAA IRON SALES, INC.
www.ebaa.com • contact@ebaa.com • 800.433.1716

RESTRAINT LENGTH VALUES

Fitting Type	Pipe Material	Soil Type	Safety Factor	Trench Type	Depth of Bury	Test Pressure	Nominal Size	Bend Angle	Branch Size	Length Along Run	Reduced Size	Lowside Depth	Restraint Length	Restraint Length 2
Horizontal Bend	PVC	GW	1.5	5	5 Ft.	200 PSI	16 In.	22.5°					6 Ft.	

Site Name: WL-J HB @ 0+60.85

Site Notes:

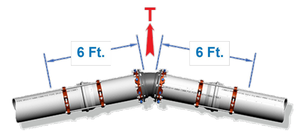

ALL JOINTS WITHIN THE CALCULATED LENGTH MUST BE RESTRAINED
IF YOUR DISTANCE BETWEEN FITTINGS IS LESS THAN OR EQUAL TO THE CALCULATED RESTRAINT LENGTH, RESTRAIN ALL JOINTS BETWEEN THOSE FITTINGS.

Defined Variables

H =	5	Depth of Bury
S_f =	1.5	Safety Factor
P =	200	Internal Pressure
θ =	22.5	Bend Angle

Pipe Derived Variables

A =	237.79	Cross Sec. Area of Pipe
D =	1.45	Outside Pipe Diameter
W_p =	21.14	Weight of Pipe
W_w =	87.80	Weight of Water in Pipe

Defined Variables

f_c =	0.00	Cohesion Modifier Coefficient
c =	0	Cohesion of Soil
f_Φ =	0.70	Friction Angle Modifier
Φ =	36	Internal Friction Angle of Soil
γ =	110	Soil Density
K_N =	1.00	Trench Compaction Modifier

Calculations for Horizontal Bend

$W_E = \gamma \cdot D \cdot H =$	797.500	Normal Force Due to Soil
$W = 2W_E + W_p + W_w =$	1703.940	Normal Force Acting on Pipeline
$K_p = \tan^2((\pi / 180) \cdot (45 + (\Phi / 2))) =$	3.852	Rankin Passive Pressure Coeff.
$H_C = H + (D / 2) =$	5.725	Depth From Surface to Pipe Center
$\sigma_h = \gamma \cdot H_C \cdot K_p + 2c\sqrt{K_p} =$	2425.797	Horizontal Passive Soil Pressure
$A_p = \pi \cdot (D / 2) =$	2.278	Area Based on Half of Circumference
$R_S = K_N \cdot \sigma_h \cdot D =$	3517.406	Bearing Resistance of Pipelines
$F_s = A_p \cdot f_c \cdot c + W \cdot \tan((\pi / 180) \cdot (\theta / 2))) \cdot f_\Phi \cdot \Phi) =$	801.813	Frictional Resitance
$L = (S_f \cdot P \cdot A \cdot \tan((\pi / 180) \cdot (\theta / 2))) / (F_s + (R_S / 2)) =$	5.542	Minimum Restrained Length

MEGALUG®

Created by EBAA Iron's Restraint Length Calculator v7.1.3 on February 19, 2025

811 Know what's below. Call before you dig.

CAUTION: CONTRACTOR NOTE

THE LOCATION OF EXISTING UNDERGROUND AND OVERHEAD UTILITIES ARE APPROXIMATE LOCATIONS ONLY. THE CONTRACTOR SHALL CONTACT UTILITY COMPANIES PRIOR TO CONSTRUCTION. CONTRACTOR SHALL DETERMINE, AND FIELD VERIFY EXISTING UTILITY LOCATIONS AND DEPTHS PRIOR TO BEGINNING CONSTRUCTION AND SHALL BE FULLY RESPONSIBLE FOR ANY AND ALL DAMAGES WHICH MIGHT OCCUR.

CONTRACTOR SHALL CONSIDER PROPOSED UTILITY IMPROVEMENTS AND PROVIDE ADEQUATE HORIZONTAL AND VERTICAL CLEARANCE DURING INSTALLATION OF ALL UTILITY INFRASTRUCTURE.

NO.	REVISION	BY	DATE

BGE JOB NO. XXXX-XX
FILE
DATE 02/21/2025
DESIGNED XXX
DRAWN XXX
REVISED XXX
CHECKED XXX

SHELL ROAD UTILITY RELOCATIONS

JOINT RESTRAINT CALCS (27 OF 27)

CITY OF GEORGETOWN

BGE, INC.
101 WEST LOUIS HENNA BLVD., STE 400
AUSTIN, TX 78728
TBPE Registration No. F-1046
TEL 512-879-0400 www.bgeinc.com

STATE OF TEXAS
BRITTANY LYNN FAIRBURN
132905
LICENSED
PROFESSIONAL ENGINEER

02/21/2025

SHEET
395

100% SUBMITTAL

FILE LOCATION: G:\TXG\PROJECTS\CITY_GEORGETOWN\10767-00 SHELL ROAD\03_CADD\01_SHTS_PW\SHELL_JOINT_RESTRAINTS.DWG DATE SAVED: 2/20/2025

16" DIAMETER WATER LINE B 1+90			
CONCRTE THRUST COLLAR RESTRAINT CALCULATIONS			
Pipe Area			
PIPE AREA (A) = (pi*D^2)/4			
	DI O.D (IN) =	16	IN
	A (IN^2)=	201.0619298	IN^2
PER COA CONCRETE THRUST BLOCKING DETAIL - 210-6 NOTE A. PRESSURE OF 200 PSI + 50% FOR SURGE			
	P=	200	PSI
	P(DESIGN)=	300	PSI
THRUST FORCE = PRESSURE * AREA			
	F=	**60,318.58**	LB
CONCRETE THRUST COLLAR RESTRAINT AREA			
A (DESIGN) = LENGTH X HEIGHT - PIPE AREA			
	LENGTH =	58	IN
	HEIGHT =	58	IN
	LENGTH IN TRENCH =	40	IN
	LENGTH IN ROCK=	18	IN
	A(BACKFILL)=	2118.93807	IN^2
	A(ROCK)=	1044	IN^2
FORCE ON COLLAR			
FORCE = PRESSURE * AREA			
	F FROM BACKFILL =	29,429.70	LB (PRESSURE = 2000 LB/SF)
	F FROM ROCK =	29,000.00	LB (PRESSURE = 4000 LB/SF)
	TOTAL F =	58,429.70	LB
FORCE ON RESTRAIN JOINTS			
THRUST FORCE*(RESTRAINED LENGTH/REQUIRED RESTRAINED LENGTH)			
	LENGTH RESTRAINED	6.89	FT
	REQ RESTRAIN LENGTH	164	FT
	FORCE ON RESTRAIN JOINTS	2,534.12	LB
	THRUST RESISTED	**60,963.81**	LB
	THRUST MITIGATED?	**YES**	THRUST RESISTED > THRUST FORCE

16" DIAMETER WATER LINE B 1+92			
CONCRTE THRUST COLLAR RESTRAINT CALCULATIONS			
Pipe Area			
PIPE AREA (A) = (pi*D^2)/4			
	DI O.D (IN) =	16	IN
	A (IN^2)=	201.0619298	IN^2
PER COA CONCRETE THRUST BLOCKING DETAIL - 210-6 NOTE A. PRESSURE OF 200 PSI + 50% FOR SURGE			
	P=	200	PSI
	P(DESIGN)=	300	PSI
THRUST FORCE = PRESSURE * AREA			
	F=	**60,318.58**	LB
CONCRETE THRUST COLLAR RESTRAINT AREA			
A (DESIGN) = LENGTH X HEIGHT - PIPE AREA			
	LENGTH =	58	IN
	HEIGHT =	58	IN
	LENGTH IN TRENCH =	40	IN
	LENGTH IN ROCK=	18	IN
	A(BACKFILL)=	2118.93807	IN^2
	A(ROCK)=	1044	IN^2
FORCE ON COLLAR			
FORCE = PRESSURE * AREA			
	F FROM BACKFILL =	29,429.70	LB (PRESSURE = 2000 LB/SF)
	F FROM ROCK =	29,000.00	LB (PRESSURE = 4000 LB/SF)
	TOTAL F =	58,429.70	LB
FORCE ON RESTRAIN JOINTS			
THRUST FORCE*(RESTRAINED LENGTH/REQUIRED RESTRAINED LENGTH)			
	LENGTH RESTRAINED	13	FT
	REQ RESTRAIN LENGTH	164	FT
	FORCE ON RESTRAIN JOINTS	4,781.35	LB
	THRUST RESISTED	**63,211.05**	LB
	THRUST MITIGATED?	**YES**	THRUST RESISTED > THRUST FORCE

52			
CONCRTE THRUST COLLAR RESTRAINT CALCULATIONS			
Pipe Area			
PIPE AREA (A) = (pi*D^2)/4			
	DI O.D (IN) =	16	IN
	A (IN^2)=	201.0619298	IN^2
PER COA CONCRETE THRUST BLOCKING DETAIL - 210-6 NOTE A. PRESSURE OF 200 PSI + 50% FOR SURGE			
	P=	200	PSI
	P(DESIGN)=	300	PSI
THRUST FORCE = PRESSURE * AREA			
	F=	**60,318.58**	LB
CONCRETE THRUST COLLAR RESTRAINT AREA			
A (DESIGN) = LENGTH X HEIGHT - PIPE AREA			
	LENGTH =	52	IN
	HEIGHT =	52	IN
	LENGTH IN TRENCH =	40	IN
	LENGTH IN ROCK=	12	IN
	A(BACKFILL)=	1878.93807	IN^2
	A(ROCK)=	624	IN^2
FORCE ON COLLAR			
FORCE = PRESSURE * AREA			
	F FROM BACKFILL =	26,096.36	LB (PRESSURE = 2000 LB/SF)
	F FROM ROCK =	17,333.33	LB (PRESSURE = 4000 LB/SF)
	TOTAL F =	43,429.70	LB
FORCE ON RESTRAIN JOINTS			
THRUST FORCE*(RESTRAINED LENGTH/REQUIRED RESTRAINED LENGTH)			
	LENGTH RESTRAINED	27.5	FT
	REQ RESTRAIN LENGTH	79	FT
	FORCE ON RESTRAIN JOINTS	20,996.97	LB
	THRUST RESISTED	**64,426.67**	LB
	THRUST MITIGATED?	**YES**	THRUST RESISTED > THRUST FORCE

16" DIAMETER WATER LINE E.2 STA 0+50			
CONCRTE THRUST COLLAR RESTRAINT CALCULATIONS			
Pipe Area			
PIPE AREA (A) = (pi*D^2)/4			
	DI O.D (IN) =	16	IN
	A (IN^2)=	201.0619298	IN^2
PER COA CONCRETE THRUST BLOCKING DETAIL - 210-6 NOTE A. PRESSURE OF 200 PSI + 50% FOR SURGE			
	P=	200	PSI
	P(DESIGN)=	300	PSI
THRUST FORCE = PRESSURE * AREA			
	F=	**60,318.58**	LB
CONCRETE THRUST COLLAR RESTRAINT AREA			
A (DESIGN) = LENGTH X HEIGHT - PIPE AREA			
	LENGTH =	58	IN
	HEIGHT =	52	IN
	LENGTH IN TRENCH =	40	IN
	LENGTH IN ROCK=	18	IN
	A(BACKFILL)=	1878.93807	IN^2
	A(ROCK)=	936	IN^2
FORCE ON COLLAR			
FORCE = PRESSURE * AREA			
	F FROM BACKFILL =	26,096.36	LB (PRESSURE = 2000 LB/SF)
	F FROM ROCK =	26,000.00	LB (PRESSURE = 4000 LB/SF)
	TOTAL F =	52,096.36	LB
FORCE ON RESTRAIN JOINTS			
THRUST FORCE*(RESTRAINED LENGTH/REQUIRED RESTRAINED LENGTH)			
	LENGTH RESTRAINED	8	FT
	REQ RESTRAIN LENGTH	33	FT
	FORCE ON RESTRAIN JOINTS	14,622.69	LB
	THRUST RESISTED	**66,719.05**	LB
	THRUST MITIGATED?	**YES**	THRUST RESISTED > THRUST FORCE

16" DIAMETER WATER LINE H 0+64			
CONCRTE THRUST COLLAR RESTRAINT CALCULATIONS			
Pipe Area			
PIPE AREA (A) = (pi*D^2)/4			
	DI O.D (IN) =	16	IN
	A (IN^2)=	201.0619298	IN^2
PER COA CONCRETE THRUST BLOCKING DETAIL - 210-6 NOTE A. PRESSURE OF 200 PSI + 50% FOR SURGE			
	P=	200	PSI
	P(DESIGN)=	300	PSI
THRUST FORCE = PRESSURE * AREA			
	F=	**60,318.58**	LB
CONCRETE THRUST COLLAR RESTRAINT AREA			
A (DESIGN) = LENGTH X HEIGHT - PIPE AREA			
	LENGTH =	64	IN
	HEIGHT =	58	IN
	LENGTH IN TRENCH =	40	IN
	LENGTH IN ROCK=	24	IN
	A(BACKFILL)=	2118.93807	IN^2
	A(ROCK)=	1392	IN^2
FORCE ON COLLAR			
FORCE = PRESSURE * AREA			
	F FROM BACKFILL =	29,429.70	LB (PRESSURE = 2000 LB/SF)
	F FROM ROCK =	38,666.67	LB (PRESSURE = 4000 LB/SF)
	TOTAL F =	68,096.36	LB
FORCE ON RESTRAIN JOINTS			
THRUST FORCE*(RESTRAINED LENGTH/REQUIRED RESTRAINED LENGTH)			
	LENGTH RESTRAINED	3.5	FT
	REQ RESTRAIN LENGTH	139	FT
	FORCE ON RESTRAIN JOINTS	1,518.81	LB
	THRUST RESISTED	**69,615.18**	LB
	THRUST MITIGATED?	**YES**	THRUST RESISTED > THRUST FORCE

16" DIAMETER WATER LINE H 1+67			
CONCRTE THRUST COLLAR RESTRAINT CALCULATIONS			
Pipe Area			
PIPE AREA (A) = (pi*D^2)/4			
	DI O.D (IN) =	16	IN
	A (IN^2)=	201.0619298	IN^2
PER COA CONCRETE THRUST BLOCKING DETAIL - 210-6 NOTE A. PRESSURE OF 200 PSI + 50% FOR SURGE			
	P=	200	PSI
	P(DESIGN)=	300	PSI
THRUST FORCE = PRESSURE * AREA			
	F=	**60,318.58**	LB
CONCRETE THRUST COLLAR RESTRAINT AREA			
A (DESIGN) = LENGTH X HEIGHT - PIPE AREA			
	LENGTH =	58	IN
	HEIGHT =	58	IN
	LENGTH IN TRENCH =	40	IN
	LENGTH IN ROCK=	18	IN
	A(BACKFILL)=	2118.93807	IN^2
	A(ROCK)=	1044	IN^2
FORCE ON COLLAR			
FORCE = PRESSURE * AREA			
	F FROM BACKFILL =	29,429.70	LB (PRESSURE = 2000 LB/SF)
	F FROM ROCK =	29,000.00	LB (PRESSURE = 4000 LB/SF)
	TOTAL F =	58,429.70	LB
FORCE ON RESTRAIN JOINTS			
THRUST FORCE*(RESTRAINED LENGTH/REQUIRED RESTRAINED LENGTH)			
	LENGTH RESTRAINED	4.7	FT
	REQ RESTRAIN LENGTH	139	FT
	FORCE ON RESTRAIN JOINTS	2,039.55	LB
	THRUST RESISTED	**60,469.24**	LB
	THRUST MITIGATED?	**YES**	THRUST RESISTED > THRUST FORCE

CAUTION: CONTRACTOR NOTE

811 Know what's below. Call before you dig.

THE LOCATION OF EXISTING UNDERGROUND AND OVERHEAD UTILITIES ARE APPROXIMATE LOCATIONS ONLY. THE CONTRACTOR SHALL CONTACT UTILITY COMPANIES PRIOR TO CONSTRUCTION. CONTRACTOR SHALL DETERMINE, AND FIELD VERIFY EXISTING UTILITY LOCATIONS AND DEPTHS PRIOR TO BEGINNING CONSTRUCTION AND SHALL BE FULLY RESPONSIBLE FOR ANY AND ALL DAMAGES WHICH MIGHT OCCUR.

CONTRACTOR SHALL CONSIDER PROPOSED UTILITY IMPROVEMENTS AND PROVIDE ADEQUATE HORIZONTAL AND VERTICAL CLEARANCE DURING INSTALLATION OF ALL UTILITY INFRASTRUCTURE.

NO.	REVISION	BY	DATE

BGE JOB NO. XXXX-XX
FILE
DATE 02/21/2025
DESIGNED XXX
DRAWN XXX
REVISED XXX
CHECKED XXX

SHELL ROAD UTILITY RELOCATIONS

THRUST BLOCK CALCULATIONS (1 OF 2)

CITY OF GEORGETOWN

BGE, INC.
101 WEST LOUIS HENNA BLVD., STE 400
AUSTIN, TX 78728
TBPE Registration No. F-1046
TEL: 512-879-0400 www.bgeinc.com

STATE OF TEXAS
BRITTANY LYNN FAIRBURN
132905
LICENSED
PROFESSIONAL ENGINEER

Brittany Lynn Fairburn

02/21/2025

SHEET
396

100% SUBMITTAL

FILE LOCATION: G:\TXC\PROJECTS\CITY_GEORGETOWN\10767-00 SHELL ROAD\03_CADD\01_SHTS_PW\10767-00-G-THRUST-BLOCKS.DWG DATE SAVED: 2/19/2025

CONCRETE THRUST COLLAR REBAR SIZING			
LOCATION	SIZE	A	B
WL B STA 1+90	58"X58"	6 #6 BARS @ 8.667"	6 #6 BARS @ 8.667"
WL B STA 1+91	58"X58"	6 #6 BARS @ 8.667"	6 #6 BARS @ 8.667"
WL E.2 STA 0+41	52"X52"	6 #6 BARS @ 8.667"	6 #6 BARS @ 8.667"
WL E.2 STA 0+50	58"X52"	6 #6 BARS @ 8.667"	6 #6 BARS @ 8.667"
WL H STA 0+64	64"X58"	7 #6 BARS @ 8.286"	9 #5 BARS @ 6.444"
WL H STA 1+67	58"X58"	7 #6 BARS @ 8.286"	9 #5 BARS @ 6.444"

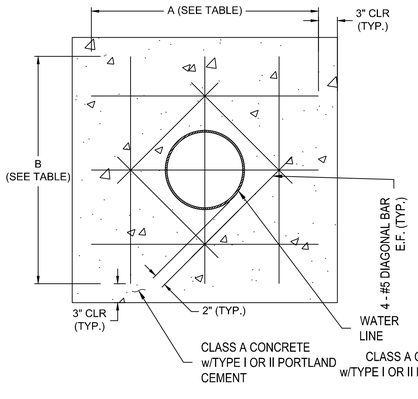

SECTION VIEW

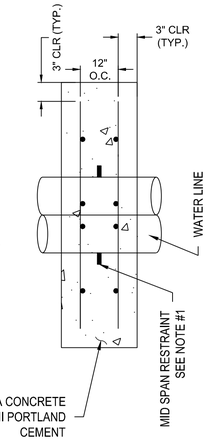

SIDE VIEW

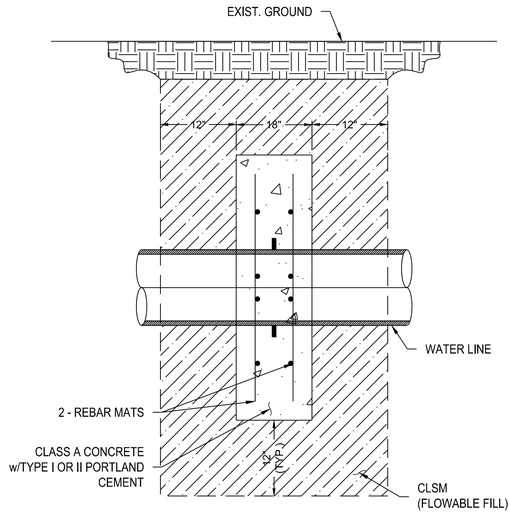

SIDE VIEW WITH CLSM

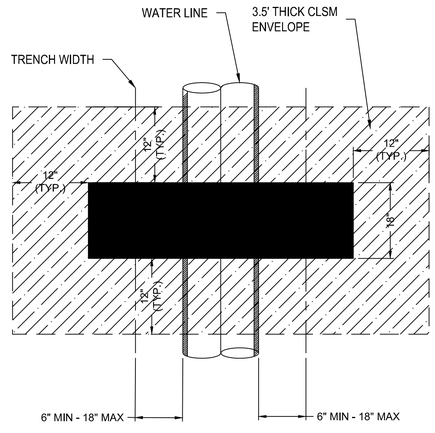

TOP VIEW WITH CLSM

NOTES:

1. *MID-SPAN RESTRAINT SHALL BE:*
   - 1.1. *DI PIPE: SERIES 1100SDB MEGALUG WEDGE-ACTION RESTRAINT FOR MID-SPAN APPLICATIONS WITH POLYETHYLENE WRAP TO PREVENT CONCRETE INTRUSION INTO THE WEDGE POCKET FROM EBAA IRON INC. OR APPROVED EQUAL.*
   - 1.2. *PVC PIPE: SERIES 2000PVC MEGALUG WEDGE-ACTION RESTRAINT WITH POLYETHYLENE WRAP TO PREVENT CONCRETE INTRUSION INTO THE WEDGE POCKET FROM EBAA IRON INC. OR APPROVED EQUAL.*

CAUTION: CONTRACTOR NOTE

THE LOCATION OF EXISTING UNDERGROUND AND OVERHEAD UTILITIES ARE APPROXIMATE LOCATIONS ONLY. THE CONTRACTOR SHALL CONTACT UTILITY COMPANIES PRIOR TO CONSTRUCTION. CONTRACTOR SHALL DETERMINE, AND FIELD VERIFY EXISTING UTILITY LOCATIONS AND DEPTHS PRIOR TO BEGINNING CONSTRUCTION AND SHALL BE FULLY RESPONSIBLE FOR ANY AND ALL DAMAGES WHICH MIGHT OCCUR.

CONTRACTOR SHALL CONSIDER PROPOSED UTILITY IMPROVEMENTS AND PROVIDE ADEQUATE HORIZONTAL AND VERTICAL CLEARANCE DURING INSTALLATION OF ALL UTILITY INFRASTRUCTURE.

Know what's below. Call before you dig.

NO.	REVISION	BY	DATE

BGE JOB NO. XXXX-XX
FILE
DATE 02/21/2025
DESIGNED XXX
DRAWN XXX
REVISED XXX
CHECKED XXX

SHELL ROAD UTILITY RELOCATIONS

THRUST BLOCK CALCULATIONS (2 OF 2)

CITY OF GEORGETOWN

BGE
BGE, INC.
101 WEST LOUIS HENNA BLVD., STE 400
AUSTIN, TX 78728
TBPE Registration No. F-1046
TEL: 512-879-0400 www.bgeinc.com

STATE OF TEXAS
BRITTANY LYNN FAIRBURN
132905
LICENSED
PROFESSIONAL ENGINEER
Brittany Lynn Fairburn
02/21/2025

SHEET
397

100% SUBMITTAL

FILE LOCATION: G:\TX\CIP\PROJECTS\CITY_GEORGETOWN\10767-00 SHELL ROAD\03_CADD\01_SHTS_PW\10767-00-G-THRUST-BLOCKS.DWG DATE SAVED: 2/19/2025

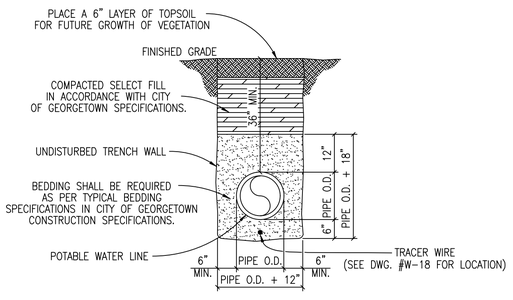

TRENCH WIDTHS
*PIPE LESS THAN 20" DIAMETER
1'-0" + PIPE O.D.
*20" DIAMETER PIPE AND LARGER
2'-0" + PIPE O.D.

The Architect/Engineer assumes responsibility for appropriate use of this standard.

REVISION NOTE: ADOPTED 6/21/2006

CITY OF GEORGETOWN
CONSTRUCTION STANDARDS AND DETAILS
TRENCH AND EMBEDMENT DETAIL UNDER NON-PAVED AREAS

DRAWING NAME: W02
SCALE: NTS | DATE: 1/2003
DRAWN BY: MRS | APPROVED BY: TRB

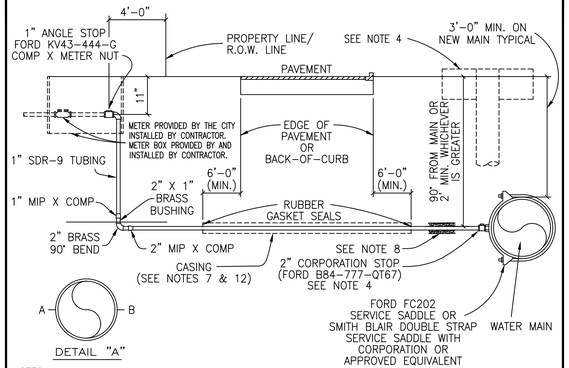

NOTES:
1. SUCCESSIVE TAPS INTO THE WATER MAIN SHALL BE SPACED A MINIMUM OF 18" OFFSET AND AT THE CENTERLINE AS SHOWN ON DETAIL "A".
2. WHERE NO SIDEWALK EXISTS, METER BOXES SHALL BE SET TO CONFORM TO FINISHED GRADE.
3. AUTHORIZED SERVICE LINE MATERIAL: POLYETHYLENE TUBING SHALL BE SDR-9. CLASS 200, SDR TUBING SHALL HAVE STAINLESS STEEL STIFFENERS.
4. ROTATE THE CORPORATION STOP SO THAT THE OPERATING NUT IS ACTUATED FROM THE VERTICAL POSITION RATHER THAN THE HORIZONTAL. SEE STD. RISER FOR CORP. STOP DETAIL, (DWG # W08).
5. SERVICE LINES SHALL BE CONTINUOUS FROM CORPORATION STOP TO CORPORATION STOP WITH NO FITTINGS IN BETWEEN.
6. SERVICE CASING SHALL NOT BE INSTALLED BY WATER JETTING UNDER ROADWAY.
7. CASING REQUIRED FOR ALL PAVEMENT CROSSINGS. 4" SDR-26 REQUIRED FOR OPEN-CUT. STEEL CASING PIPE REQUIRED FOR JACK AND BORE. LIMITS OF CASING SHOULD EXTEND SIX FEET BEYOND THE EDGE OF PAVEMENT OR BACK-OF-CURB.
8. BEDDING MATERIAL AS PER CITY OF GEORGETOWN CONSTRUCTION SPECIFICATIONS.
9. ANY VARIATIONS ON FITTINGS MUST BE APPROVED BY THE CITY ENGINEER.
10. METER BOX TO BE CAPABLE OF HOUSING ITRON AUTOMATIC METER READING DEVICE. USE DFW-PLASTICS, INC. PART NO. 1200.SBAMR OR APPROVED EQUAL.
11. ALL SERVICE LINES SHALL BE PLACED 90° PERPENDICULAR TO THE ROADWAY. SEE DETAIL W23.
12. CASING SHALL EXTEND OUT TO WITHIN 4' INSIDE OF THE R.O.W. LINE, ON BOTH SIDES.

The Architect/Engineer assumes responsibility for appropriate use of this standard.

REVISION NOTE: ADOPTED 01/23/2013

CITY OF GEORGETOWN
CONSTRUCTION STANDARDS AND DETAILS
TYPICAL WATER SERVICE-ELEVATION

DRAWING NAME: W03
SCALE: NTS | DATE: 1/2013
DRAWN BY: – | APPROVED BY: MH

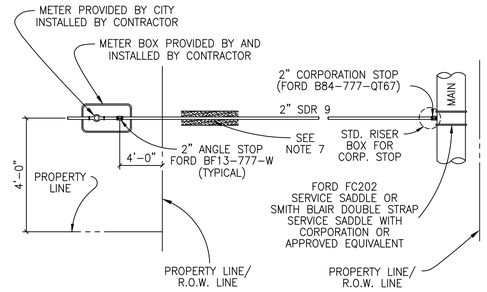

NOTES:
1. AUTHORIZED SERVICE LINE MATERIAL: POLYETHYLENE TUBING SHALL BE SDR-9. CLASS 200, SDR TUBING SHALL HAVE STAINLESS STEEL STIFFENERS.
2. ANGLE STOP SHALL BE 1" MINIMUM.
3. 1" ANGLE STOPS WITH 3/4" VALVES SHALL NOT BE PERMITTED.
4. MULTIPLE SERVICE/METER INSTALLATIONS OF MORE THAN 4 METERS PER SERVICE AND SERVICE LINES LARGER THAN 2" IN DIAMETER SHALL BE HANDLED ON AN INDIVIDUAL BASIS.
5. ANGLE STOPS 1 1/2" AND 2" IN SIZE SHALL BE PROVIDED WITH BOTH A LOCKING CAP AND METER FLANGE.
6. ANGLE STOPS SHALL BE INSTALLED 8" BELOW FINISHED GRADE AND MARKED WITH A 2" X 2" X 48" TREATED WOOD STAKE, PAINTED BLUE.
7. BEDDING MATERIAL AS PER CITY OF GEORGETOWN CONSTRUCTION SPECIFICATIONS.
8. CASING REQUIREMENTS FOR SERVICE LINES CROSSING ROADWAYS SEE DETAIL W-03 NOTE #7.
9. ANY VARIATIONS ON FITTINGS MUST BE APPROVED BY THE CITY ENGINEER.
10. ALL SERVICE LINES SHALL BE PLACED 90° PERPENDICULAR TO THE ROADWAY.

The Architect/Engineer assumes responsibility for appropriate use of this standard.

REVISION NOTE: ADOPTED 01/23/2013

CITY OF GEORGETOWN
CONSTRUCTION STANDARDS AND DETAILS
SINGLE WATER SERVICE PLAN

DRAWING NAME: W04
SCALE: NTS | DATE: 1/2013
DRAWN BY: – | APPROVED BY: MH

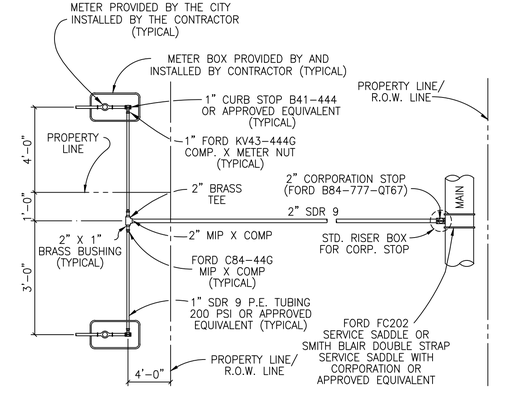

NOTES:
1. AUTHORIZED SERVICE LINE MATERIAL: POLYETHYLENE TUBING SHALL BE SDR-9. CLASS 200, SDR TUBING SHALL HAVE STAINLESS STEEL STIFFENERS.
2. ANGLE STOP SHALL BE 1" MINIMUM.
3. 1" ANGLE STOPS WITH 3/4" VALVES SHALL NOT BE PERMITTED.
4. MULTIPLE SERVICE/METER INSTALLATIONS OF MORE THAN 4 METERS PER SERVICE AND SERVICE LINES LARGER THAN 2" IN DIAMETER SHALL BE HANDLED ON AN INDIVIDUAL BASIS.
5. ANGLE STOPS 1 1/2" AND 2" IN SIZE SHALL BE PROVIDED WITH BOTH A LOCKING CAP AND METER FLANGE.
6. ANGLE STOPS SHALL BE INSTALLED 8" BELOW FINISHED GRADE AND MARKED WITH A 2" X 2" X 48" TREATED WOOD STAKE, PAINTED BLUE.
7. BEDDING MATERIAL AS PER CITY OF GEORGETOWN CONSTRUCTION SPECIFICATIONS.
8. CASING REQUIREMENTS FOR SERVICE LINES CROSSING ROADWAYS SEE DETAIL W-03 NOTE #7.
9. ANY VARIATIONS ON FITTINGS MUST BE APPROVED BY THE CITY ENGINEER.
10. ALL SERVICE LINES SHALL BE PLACED 90° PERPENDICULAR TO THE ROADWAY.

The Architect/Engineer assumes responsibility for appropriate use of this standard.

REVISION NOTE: ADOPTED 01/23/2013

CITY OF GEORGETOWN
CONSTRUCTION STANDARDS AND DETAILS
DOUBLE WATER SERVICE PLAN

DRAWING NAME: W05
SCALE: NTS | DATE: 1/2013
DRAWN BY: – | APPROVED BY: MH

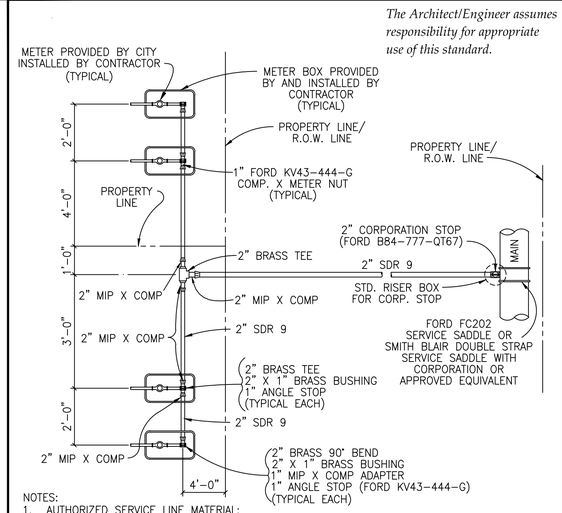

NOTES:
1. AUTHORIZED SERVICE LINE MATERIAL: POLYETHYLENE TUBING SHALL BE SDR-9. CLASS 200, SDR TUBING SHALL HAVE STAINLESS STEEL STIFFENERS.
2. ANGLE STOP SHALL BE 1" MINIMUM.
3. 1" ANGLE STOPS WITH 3/4" VALVES SHALL NOT BE PERMITTED.
4. MULTIPLE SERVICE/METER INSTALLATIONS OF MORE THAN 4 METERS PER SERVICE AND SERVICE LINES LARGER THAN 2" IN DIAMETER SHALL BE HANDLED ON AN INDIVIDUAL BASIS.
5. ANGLE STOPS 1 1/2" AND 2" IN SIZE SHALL BE PROVIDED WITH BOTH A LOCKING CAP AND METER FLANGE.
6. ANGLE STOPS SHALL BE INSTALLED 8" BELOW FINISHED GRADE AND MARKED WITH A 2" X 2" X 48" TREATED WOOD STAKE, PAINTED BLUE.
7. BEDDING MATERIAL AS PER CITY OF GEORGETOWN CONSTRUCTION SPECIFICATIONS.
8. CASING REQUIREMENTS FOR SERVICE LINES CROSSING ROADWAYS SEE DETAIL W-03 NOTE #7.
9. ANY VARIATIONS ON FITTINGS MUST BE APPROVED BY THE CITY ENGINEER.
10. ALL SERVICE LINES SHALL BE PLACED 90° PERPENDICULAR TO THE ROADWAY.

The Architect/Engineer assumes responsibility for appropriate use of this standard.

REVISION NOTE: ADOPTED 01/23/2013

CITY OF GEORGETOWN
CONSTRUCTION STANDARDS AND DETAILS
QUADRUPLE WATER SERVICE PLAN

DRAWING NAME: W06
SCALE: NTS | DATE: 1/2013
DRAWN BY: – | APPROVED BY: MH

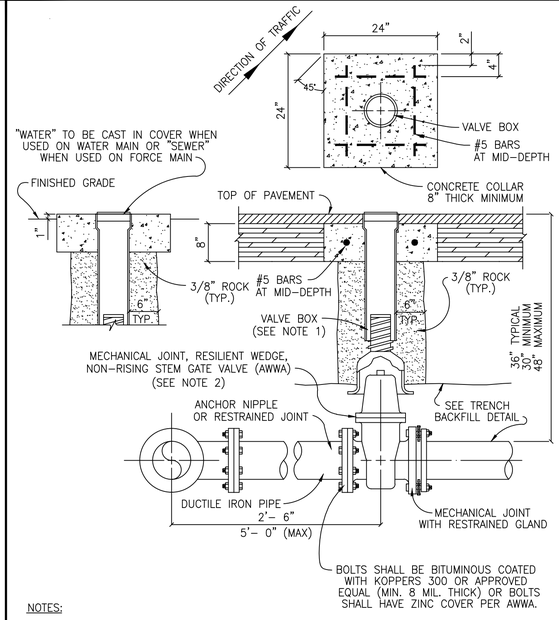

NOTES:
1. VALVE BOX SHALL BE 5 1/4" CAST IRON ADJUSTABLE HAVING AN ADJUSTABLE RANGE OF + OR – 6 INCHES FROM INSTALLED FINISH GRADE.
2. ACCEPTABLE GATE VALVES ARE:
   A. AMERICAN FLOW CONTROL – SERIES 2500
   B. MUELLER – 2360 SERIES
   C. CLOW

The Architect/Engineer assumes responsibility for appropriate use of this standard.

REVISION NOTE: ADOPTED 6/21/2006

CITY OF GEORGETOWN
CONSTRUCTION STANDARDS AND DETAILS
TYPICAL VALVE SETTING

DRAWING NAME: W07
SCALE: NTS | DATE: 1/2003
DRAWN BY: MRS | APPROVED BY: TRB

811 Know what's below. Call before you dig.

CAUTION: CONTRACTOR NOTE

THE LOCATION OF EXISTING UNDERGROUND AND OVERHEAD UTILITIES ARE APPROXIMATE LOCATIONS ONLY. THE CONTRACTOR SHALL CONTACT UTILITY COMPANIES PRIOR TO CONSTRUCTION. CONTRACTOR SHALL DETERMINE, AND FIELD VERIFY EXISTING UTILITY LOCATIONS AND DEPTHS PRIOR TO BEGINNING CONSTRUCTION AND SHALL BE FULLY RESPONSIBLE FOR ANY AND ALL DAMAGES WHICH MIGHT OCCUR.

CONTRACTOR SHALL CONSIDER PROPOSED UTILITY IMPROVEMENTS AND PROVIDE ADEQUATE HORIZONTAL AND VERTICAL CLEARANCE DURING INSTALLATION OF ALL UTILITY INFRASTRUCTURE.

NO.	REVISION	BY	DATE

BGE JOB NO. XXXX-XX
FILE
DATE 02/21/2025
DESIGNED XXX
DRAWN XXX
REVISED XXX
CHECKED XXX

SHELL ROAD UTILITY RELOCATIONS

STANDARD DETAILS (1 OF 8)

CITY OF GEORGETOWN

BGE, INC.
101 WEST LOUIS HENNA BLVD., STE 400
AUSTIN, TX 78728
TBPE Registration No. F-1046
TEL. 512-879-0400 www.bgeinc.com

STATE OF TEXAS
BRITTANY LYNN FAIRBURN
132905
LICENSED PROFESSIONAL ENGINEER
Brittany Lynn Fairburn
02/21/2025

SHEET
398

FILE LOCATION: G:\TX\CP\PROJECTS\CITY_GEORGETOWN\10767-00 SHELL ROAD\03_CADD\01_SHTS_PW\STANDARD DETAILS.DWG DATE SAVED: 2/19/2025

DO NOT SUBMIT FIL

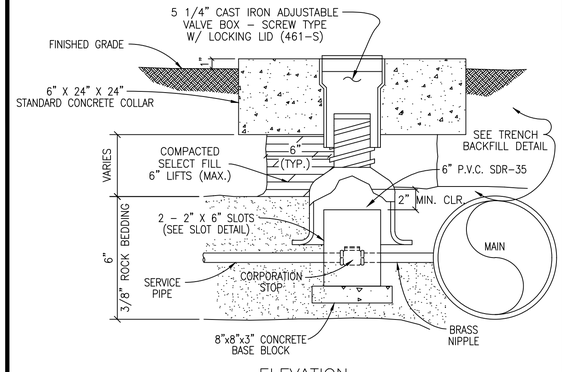

ELEVATION

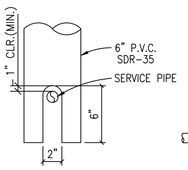

SLOT DETAIL

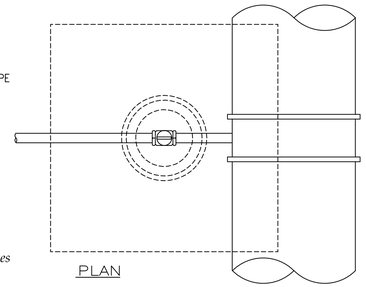

PLAN

The Architect/Engineer assumes responsibility for appropriate use of this standard.

REVISION NOTE: ADOPTED 6/21/2006		
CITY OF GEORGETOWN CONSTRUCTION STANDARDS AND DETAILS	DRAWING NAME: W08	
STANDARD RISER BOX FOR CORPORATION STOP	SCALE: NTS	DATE: 1/2003
	DRAWN BY: MRS	APPROVED BY: TRB

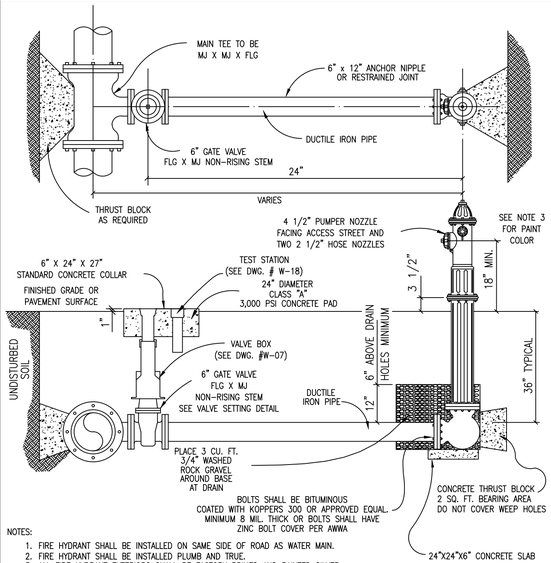

NOTES:

1. FIRE HYDRANT SHALL BE INSTALLED ON SAME SIDE OF ROAD AS WATER MAIN.
2. FIRE HYDRANT SHALL BE INSTALLED PLUMB AND TRUE.
3. ALL FIRE HYDRANT EXTERIORS SHALL BE FACTORY PRIMED AND PAINTED SILVER USING A HIGH GRADE ENAMEL.
4. HEEL AND THRUST BLOCKS TO REST IN UNDISTURBED SOIL.
5. THE ONLY FIRE HYDRANTS ACCEPTABLE ARE:
   A. KENNEDY – K81
   B. AMERICAN DARLING – B84B
   C. CLOW MEDALLION
6. DOUBLE BLUE REFLECTOR "HYE–LITES" BRAND, MANUFACTURED BY PAVEMENT MARKERS INC. TO BE INSTALLED AT CENTERLINE OF STREET PERPENDICULAR TO HYDRANT.
7. ALL METALLIC PIPES AND FITTINGS SHALL BE WRAPPED WITH 8 MIL. POLYETHELENE FILM.

The Architect/Engineer assumes responsibility for appropriate use of this standard.

REVISION NOTE: ADOPTED 6/21/2006		
CITY OF GEORGETOWN CONSTRUCTION STANDARDS AND DETAILS	DRAWING NAME: W10	
TYPICAL FIRE HYDRANT INSTALLATION	SCALE: NTS	DATE: 1/2003
	DRAWN BY: MRS	APPROVED BY: TRB

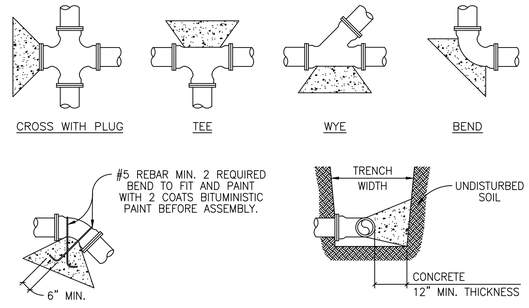

*DEADMAN

TYPICAL SECTION

ALL THRUST BLOCKS SHALL BE FORMED. LAID FORMS SHALL BE INSPECTED BY THE CITY OF GEORGETOWN PRIOR TO THE POURING OF CONCRETE AND SHALL ALSO BE INSPECTED BY THE CITY OF GEORGETOWN PRIOR TO COVERING. TYPICAL LOCATIONS WHICH REQUIRE CONCRETE REACTION (THRUST) BLOCKS, FOR PRESSURE MAINS FOUR INCHES (4") AND GREATER. CONCRETE SHALL HAVE 2,500 P.S.I. MINIMUM STRENGTH AT TWENTY EIGHT (28) DAYS AND BEAR AGAINST UNDISTURBED STABLE SOILS, AREA OF CONTACT SHALL BE GOVERNED BY PIPE SIZE, MAXIMUM PRESSURE IN PIPE, AND BEARING CAPACITY OF SOIL. PROTECT FITTINGS, BOLTS, ETC. BY COVERING WITH VISQUEEN OR OTHER ACCEPTABLE MATERIAL. CONCRETE SHALL BE A MINIMUM OF TWELVE INCHES (12") THICK.

PIPE SIZE	THRUST BLOCK AREA REQUIRED	PIPE SIZE	THRUST BLOCK AREA REQUIRED	REMARKS
4"	2.0 SQ. FT.	18"	30.0 SQ. FT.	VALUES ARE FOR 90° BENDS, BASED ON 2000 P.S.F. SAFE BEARING LOAD AND PIPE PRESSURE OF 150 P.S.I. PLUS 33% SAFETY FACTOR FOR OTHER SOILS AND PRESSURES, THE AREA REQUIRED IS IN DIRECT PROPORTION.
6"	4.0 SQ. FT.	20"	37.0 SQ. FT.	
8"	6.6 SQ. FT.	24"	53.0 SQ. FT.	
10"	10.0 SQ. FT.	27"	80.0 SQ. FT.	
12"	14.0 SQ. FT.	30"	98.0 SQ. FT.	
14"	18.0 SQ. FT.	36"	127.0 SQ. FT.	
16"	24.0 SQ. FT.			

* THE ENGINEER OF RECORD SHALL CALCULATE THE SIZE OF THE DEADMAN REQUIRED AS WELL AS ANY INSTALLATION WHICH IS NOT COVERED BY THE ABOVE.

The Architect/Engineer assumes responsibility for appropriate use of this standard.

REVISION NOTE: ADOPTED 6/21/2006		
CITY OF GEORGETOWN CONSTRUCTION STANDARDS AND DETAILS	DRAWING NAME: W11	
TYPICAL THRUST BLOCKS FOR WATER AND FORCE MAIN	SCALE: NTS	DATE: 1/2003
	DRAWN BY: MRS	APPROVED BY: TRB

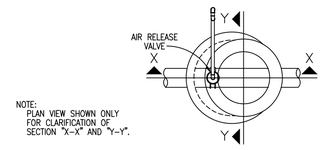

PLAN

The Architect/Engineer assumes responsibility for appropriate use of this standard.

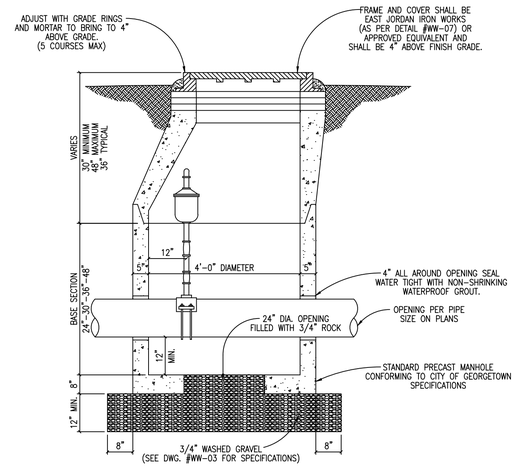

SECTION "X–X"

REVISION NOTE: ADOPTED 6/21/2006		
CITY OF GEORGETOWN CONSTRUCTION STANDARDS AND DETAILS	DRAWING NAME: W12	
STANDARD AIR RELEASE VALVE FOR WATER MAIN	SCALE: NTS	DATE: 1/2003
	DRAWN BY: MRS	APPROVED BY: TRB

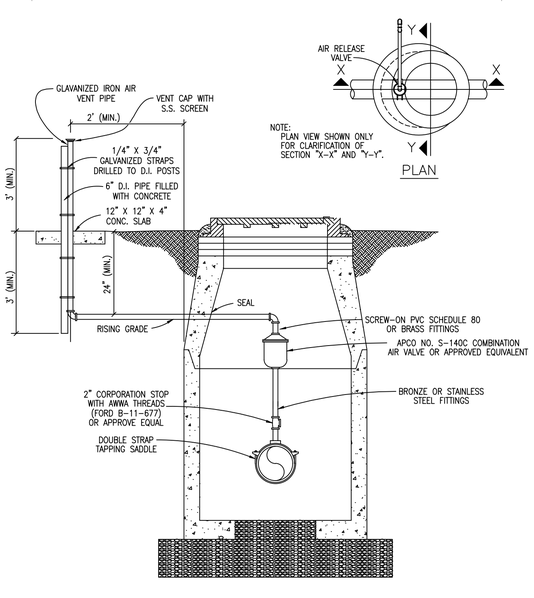

PLAN

SECTION "Y–Y"

The Architect/Engineer assumes responsibility for appropriate use of this standard.

REVISION NOTE: ADOPTED 6/21/2006		
CITY OF GEORGETOWN CONSTRUCTION STANDARDS AND DETAILS	DRAWING NAME: W13	
STANDARD AIR RELEASE VALVE FOR WATER MAIN	SCALE: NTS	DATE: 1/2003
	DRAWN BY: MRS	APPROVED BY: TRB

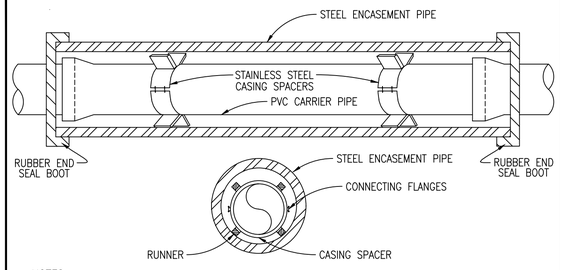

NOTES:

1. CASING SPACERS SHALL BE BOLT ON STYLE WITH A SHELL MADE IN TWO SECTIONS OF HEAVY T–304 STAINLESS STEEL. CONNECTING FLANGES SHALL BE RIBBED FOR EXTRA STRENGTH. CASING SPACERS SHALL BE MADE BY CASCADE WATERWORKS MFG. CO. OR APPROVED EQUAL.
2. CASING SPACERS SHALL HAVE RUNNERS MADE OF ULTRA HIGH MOLECULAR WEIGHT POLYMER, WITH A MINIMUM HEIGHT OF 2 INCHES.
3. DO NOT USE WEDGES BETWEEN TOP OF PVC CARRIER PIPE AND INSIDE OF CASING TO KEEP PVC FROM MOVING.
4. PRIOR TO INSERTING PVC CARRIER PIPE, ANY WATER SHOULD BE PUMPED OUT OF THE CASING PIPE SO THAT NO MORE THAN A FEW INCHES OF WATER REMAINS.
5. SPACERS WILL BE REQUIRED WITHIN AT LEAST 3 FEET FROM BOTH OPENINGS OF THE ENCASE–MENT PIPE AND SPACED NO GREATER THAN 6 FEET THROUGHOUT THE ENCASEMENT PIPE.
6. ENCASEMENT PIPE SHALL BE SMOOTH STEEL 35,000 PSI YIELD STRENGTH WITH THICKNESS ACCORDING TO THE FOLLOWING TABLE:
7. WHEN CASING IS REQUIRED UNDER PAVEMENT WITHIN THE R.O.W., THE CASING SHALL EXTEND OUT TO WITHIN 4' INSIDE OF THE R.O.W. LINE, ON BOTH SIDES.
8. ALL JOINTS SHALL BE RESTRAINED ON PVC CARRIER PIPE.

PIPE SIZE–CARRIER (DIAMETER)	PIPE SIZE–CASING (DIAMETER)(MIN.)	MINIMUM PIPE THICKNESS (INCHES)	
6"	16"		
8"	18"	1/4	0.2500
10"	20"	5/16	0.3125
12" – 14"	24"	3/8	0.3750
16" – 18"	30"	7/16	0.4375
20"	36"	1/2	0.5000
24"	42"	1/2	0.5000
30"	48"	1/2	0.5000

The Architect/Engineer assumes responsibility for appropriate use of this standard.

REVISION NOTE: ADOPTED 6/21/2006		
CITY OF GEORGETOWN CONSTRUCTION STANDARDS AND DETAILS	DRAWING NAME: W14	
INSTALLATION OF P.V.C. PIPE THROUGH CASING	SCALE: NTS	DATE: 1/2003
	DRAWN BY: MRS	APPROVED BY: TRB

811 Know what's below. Call before you dig.

CAUTION: CONTRACTOR NOTE

THE LOCATION OF EXISTING UNDERGROUND AND OVERHEAD UTILITIES ARE APPROXIMATE LOCATIONS ONLY. THE CONTRACTOR SHALL CONTACT UTILITY COMPANIES PRIOR TO CONSTRUCTION. CONTRACTOR SHALL DETERMINE, AND FIELD VERIFY EXISTING UTILITY LOCATIONS AND DEPTHS PRIOR TO BEGINNING CONSTRUCTION AND SHALL BE FULLY RESPONSIBLE FOR ANY AND ALL DAMAGES WHICH MIGHT OCCUR.

CONTRACTOR SHALL CONSIDER PROPOSED UTILITY IMPROVEMENTS AND PROVIDE ADEQUATE HORIZONTAL AND VERTICAL CLEARANCE DURING INSTALLATION OF ALL UTILITY INFRASTRUCTURE.

NOTE:

1. PER CITY OF GEORGETOWN DETAIL, W14 ALSO TO BE USED FOR INSTALLATION OF DI PIPE THROUGH CASING.

NO	REVISION	BY	DATE

BGE JOB NO. XXXX-XX
FILE
DATE 02/21/2025
DESIGNED XXX
DRAWN XXX
REVISED XXX
CHECKED XXX

SHELL ROAD UTILITY RELOCATIONS

STANDARD DETAILS (2 OF 8)

CITY OF GEORGETOWN

BGE, INC.
101 WEST LOUIS HENNA BLVD., STE 400
AUSTIN, TX 78728
TBPE Registration No. F-1046
TEL: 512-879-0400 www.bgeinc.com

STATE OF TEXAS
BRITTANY LYNN FAIRBURN
132905
LICENSED PROFESSIONAL ENGINEER

02/21/2025

SHEET
399

100% SUBMITTAL

FILE LOCATION: G:\TX\CP\PROJECTS\CITY_GEORGETOWN\10767-00 SHELL ROAD\03_CADD\01_SHTS_PW\STANDARD DETAILS.DWG DATE SAVED: 2/19/2025

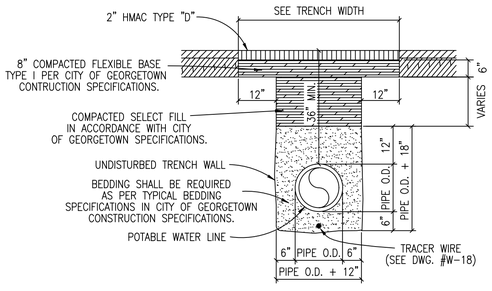

TRENCH WIDTHS
*PIPE LESS THAN 20" DIAMETER
1'–0" + PIPE O.D.
*20" DIAMETER PIPE AND LARGER
2'–0" + PIPE O.D.

NOTES:
1. REPLACED BASE MATERIAL OVER DITCH SHALL BE TWICE THE THICKNESS OF THE ORIGINAL BASE.
2. BASE MATERIAL SHALL BE IN LIFTS NOT TO EXCEED 6" AND EACH LIFT THOROUGHLY ROLLED OR TAMPED TO SPECIFIED MAXIMUM DENSITY.
3. ASPHALT CONCRETE PAVEMENT JOINTS SHALL BE MECHANICALLY SAWED.
4. SURFACE MATERIAL WILL BE CONSISTENT WITH THE EXISTING SURFACE.
5. DENSITY TESTS SHALL BE TAKEN IN ACCORDANCE WITH THE CITY OF GEORGETOWN CONSTRUCTION SPECIFICATIONS AND STANDARDS.
6. CONTRACTOR OR ENGINEER MAY USE FLOWABLE BACKFILL AS AN ALTERNATE BACKFILL MATERIAL (SEE C9 FLOWABLE BACKFILL FOR THE SPECIFICATION).

The Architect/Engineer assumes responsibility for appropriate use of this standard.

REVISION NOTE: ADOPTED 6/21/2006

CITY OF GEORGETOWN CONSTRUCTION STANDARDS AND DETAILS
TRENCH AND EMBEDMENT AND PAVEMENT REPLACEMENT DETAIL UNDER EXISTING ROADWAY

DRAWING NAME: W17 | SCALE: NTS | DATE: 1/2003 | DRAWN BY: MRS | APPROVED BY: TRB

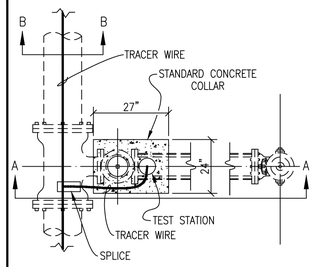

PLAN

NOTES:
1. TEST STATION SHALL BE HANDLEY INDUSTRIES INC. – 2 INCH CATHODIC TEST STATIONS OR APPROVED EQUAL.
2. THE 15" ABS PLASTIC BOX SHALL BE A FLANGED TOP FOR INSTALLATION AT GROUND LEVEL.
3. ALL TERMINALS ARE TO BE MADE OF SOLID BRASS.
4. PLASTIC LIDS SHALL BE COLOR BLUE AND MARKED "WATER".
5. TEST TERMINALS ARE TO BE INCORPORATED WITH HANDLEY VALVE BOXES.
6. BURY SPLICE SHALL BE 3M DIRECT BURY SPLICE (DBR) OR APPROVED EQUAL.
7. TEST STATIONS SHALL BE INSTALLED AT EACH FIRE HYDRANT LOCATION.

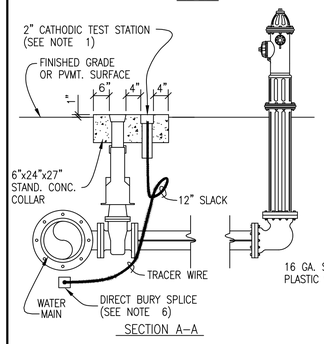

SECTION A–A

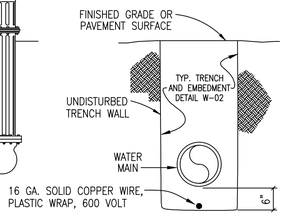

SECTION B–B

The Architect/Engineer assumes responsibility for appropriate use of this standard.

REVISION NOTE: ADOPTED 6/21/2006

CITY OF GEORGETOWN CONSTRUCTION STANDARDS AND DETAILS
TRACER WIRE INSTALLATION AND TEST STATION LOCATION

DRAWING NAME: W18 | SCALE: NTS | DATE: 1/2003 | DRAWN BY: MRS | APPROVED BY: TRB

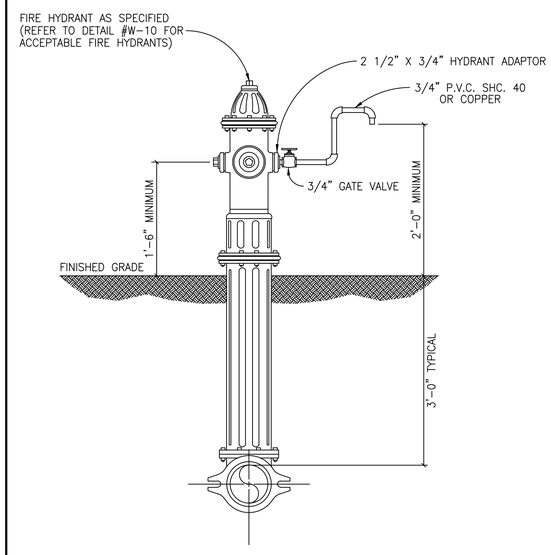

The Architect/Engineer assumes responsibility for appropriate use of this standard.

REVISION NOTE: ADOPTED 6/21/2006

CITY OF GEORGETOWN CONSTRUCTION STANDARDS AND DETAILS
FIRE HYDRANT SAMPLING POINT

DRAWING NAME: W19 | SCALE: NTS | DATE: 1/2003 | DRAWN BY: MRS | APPROVED BY: TRB

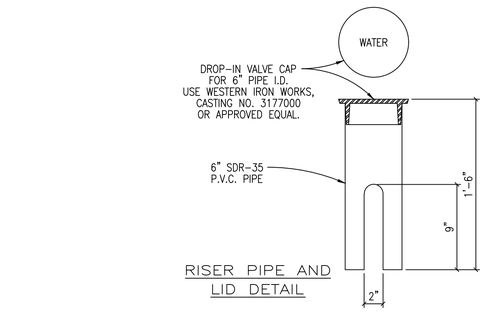

RISER PIPE AND LID DETAIL

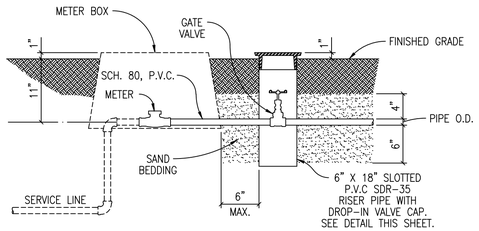

NOTES:
1. GATE VALVE SHALL BE A HAMMOND IB645, CLASS 125, BRONZE GATE, SCREWED BONNET, NON–RISING STEM, SOLID WEDGE DISC WITH THREADED ENDS OR APPROVED EQUAL.
2. DROP–IN VALVE CAP SHALL BE CAST WITH THE WORD "WATER" ON TOP.
3. USE SCHEDULE 80, M.I.P. ADAPTER AS REQUIRED.

The Architect/Engineer assumes responsibility for appropriate use of this standard.

REVISION NOTE: ADOPTED 6/21/2006

CITY OF GEORGETOWN CONSTRUCTION STANDARDS AND DETAILS
CUSTOMER'S CUT–OFF

DRAWING NAME: W20 | SCALE: NTS | DATE: 1/2003 | DRAWN BY: MRS | APPROVED BY: TRB

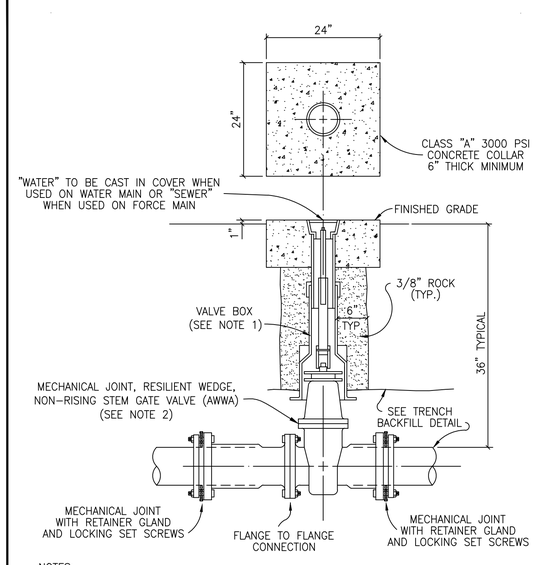

NOTES:
1. SEE VALVE SETTING DETAIL, DWG. #W–07.
2. ACCEPTABLE GATE VALVES ARE:
   A. MUELLER – 2360 SERIES
   B. CLOW

The Architect/Engineer assumes responsibility for appropriate use of this standard.

REVISION NOTE: ADOPTED 6/21/2006

CITY OF GEORGETOWN CONSTRUCTION STANDARDS AND DETAILS
INLINE VALVE INSTALLATION

DRAWING NAME: W21 | SCALE: NTS | DATE: 1/2003 | DRAWN BY: MRS | APPROVED BY: TRB

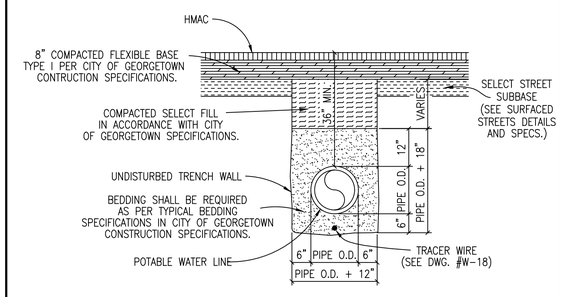

TRENCH WIDTHS
*PIPE LESS THAN 20" DIAMETER
1'–0" + PIPE O.D.
*20" DIAMETER PIPE AND LARGER
2'–0" + PIPE O.D.

NOTES:
1. DENSITY TESTS SHALL BE TAKEN IN ACCORDANCE WITH THE CITY OF GEORGETOWN CONSTRUCTION SPECIFICATIONS AND STANDARDS.
2. CONTRACTOR OR ENGINEER MAY USE FLOWABLE BACKFILL AS AN ALTERNATE BACKFILL MATERIAL (SEE C9 FLOWABLE BACKFILL FOR THE SPECIFICATION).

The Architect/Engineer assumes responsibility for appropriate use of this standard.

REVISION NOTE: ADOPTED 6/21/2006

CITY OF GEORGETOWN CONSTRUCTION STANDARDS AND DETAILS
TRENCH AND EMBEDMENT DETAIL UNDER PROPOSED ROADWAY

DRAWING NAME: W22 | SCALE: NTS | DATE: 1/2003 | DRAWN BY: MRS | APPROVED BY: TRB

811 Know what's below. Call before you dig.

CAUTION: CONTRACTOR NOTE

THE LOCATION OF EXISTING UNDERGROUND AND OVERHEAD UTILITIES ARE APPROXIMATE LOCATIONS ONLY. THE CONTRACTOR SHALL CONTACT UTILITY COMPANIES PRIOR TO CONSTRUCTION. CONTRACTOR SHALL DETERMINE, AND FIELD VERIFY EXISTING UTILITY LOCATIONS AND DEPTHS PRIOR TO BEGINNING CONSTRUCTION AND SHALL BE FULLY RESPONSIBLE FOR ANY AND ALL DAMAGES WHICH MIGHT OCCUR.

CONTRACTOR SHALL CONSIDER PROPOSED UTILITY IMPROVEMENTS AND PROVIDE ADEQUATE HORIZONTAL AND VERTICAL CLEARANCE DURING INSTALLATION OF ALL UTILITY INFRASTRUCTURE.

NO.	REVISION	BY	DATE

BGE JOB NO. XXXX-XX
FILE
DATE 02/21/2025
DESIGNED XXX
DRAWN XXX
REVISED XXX
CHECKED XXX

SHELL ROAD UTILITY RELOCATIONS

STANDARD DETAILS (3 OF 8)

CITY OF GEORGETOWN

BGE, INC.
101 WEST LOUIS HENNA BLVD., STE 400
AUSTIN, TX 78728
TBPE Registration No. F-1046
TEL: 512-879-0400 www.bgeinc.com

STATE OF TEXAS
BRITTANY LYNN FAIRBURN
132905
LICENSED PROFESSIONAL ENGINEER
Brittany Lynn Fairburn
02/21/2025

SHEET
400

100% SUBMITTAL

FILE LOCATION: G:\TX\CPROJECTS\CITY_GEORGETOWN\10767-00 SHELL ROAD\03_CADD\01_SHTS_PW\STANDARD DETAILS.DWG DATE SAVED: 2/19/2025

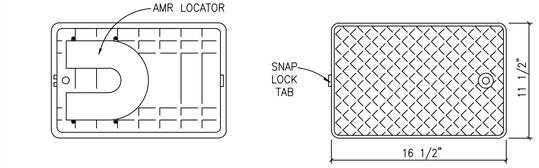

DFW PLASTINCS, INC. PART NO. 1200.SBAMR, BLACK BOX, BLACK COVER AND 2 1/2" PIPE SLOT OR APPROVED EQUAL.

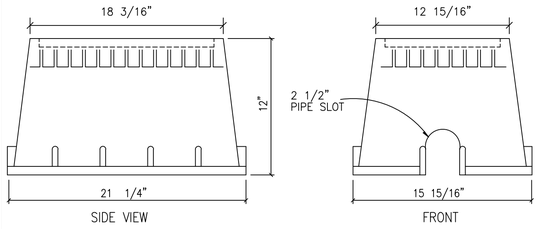

The Architect/Engineer assumes responsibility for appropriate use of this standard.

REVISION NOTE: ADOPTED 6/21/2006

CITY OF GEORGETOWN CONSTRUCTION STANDARDS AND DETAILS
METER BOX (NON-TRAFFIC AREAS)
DRAWING NAME: W23
SCALE: NTS | DATE: 1/2003
DRAWN BY: MRS | APPROVED BY: TRB

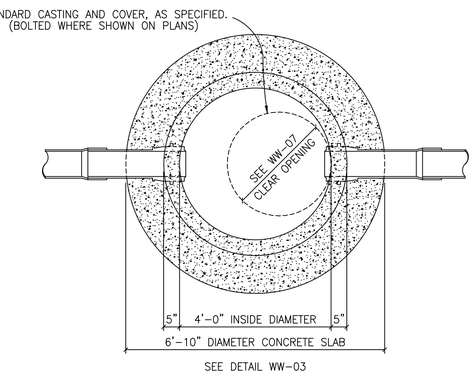

SEE DETAIL WW-03

MANHOLE PLAN

CITY OF GEORGETOWN NOTES:

MANHOLE DETAILS SHALL REFLECT THE CITY'S MINIMUM SPECIFICATIONS, AS STATED BELOW:

A. ALL MANHOLES SHALL BE 48" I.D., R.C.P., CLASS III, WITH RUBBER PROFILE GASKET – SINGLE OFF-SET JOINT CONFORMING TO ASTM C478, C433 AND C76.
B. ALL MANHOLES SHALL HAVE FRAME AND COVER, AS MANUFACTURED BY EAST JORDAN IRON WORKS (AS PER DETAIL # WW-07) OR APPROVED EQUIVALENT.
C. ALL MANHOLES SHALL BE CONCRETE WITH CAST IRON FRAME AND COVER.
D. ALL MANHOLES SHALL HAVE AN ECCENTRIC CONE.
E. MANHOLES MAY HAVE A FLAT LID, IF APPROVED BY CITY OF GEORGETOWN, BEING 12" THICK WITH A MINIMUM 30" OPENING, AS MANUFACTURED BY HANSEN PIPE AND PRECAST OR APPROVED EQUAL M.F.G. CONFORMING TO ASTM C478, 5000 P.S.I. CONCRETE, TRAFFIC BEARING AND WITH PROFILE GASKET – SINGLE OFF-SET JOINT CONFORMING TO ASTM C443.
F. INVERTS AND FLEXIBLE SEAL BOOTS, PER ASTM C-923, SHALL BE CAST INTO BASE SECTION.
G. MINIMUM DROP BETWEEN INVERTS SHALL BE ONE-TENTH OF A FOOT (0.1').
H. GRADE RINGS WITH AN I.D. TO MATCH FRAMES CLEAR OPENING WITH A MAXIMUM ADJUSTMENT OF 12" ARE ALLOWED.

The Architect/Engineer assumes responsibility for appropriate use of this standard.

REVISION NOTE: ADOPTED 6/21/2006

CITY OF GEORGETOWN CONSTRUCTION STANDARDS AND DETAILS
STANDARD MANHOLE – PLAN
DRAWING NAME: WW02
SCALE: NTS | DATE: 1/2003
DRAWN BY: MRS | APPROVED BY: TRB

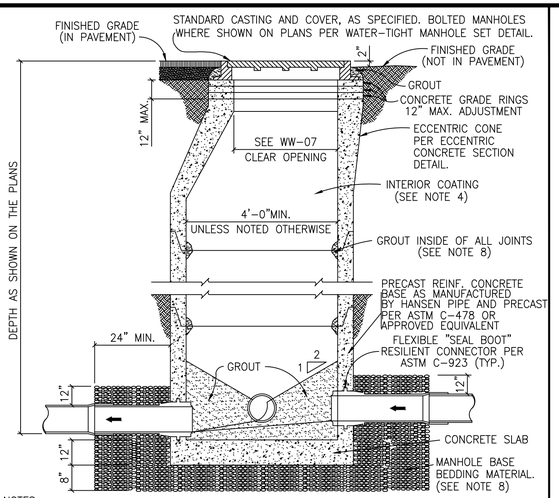

NOTES:

1. MANHOLES SHALL BE PRECAST ASTM C-478 BELL AND SPIGOT WITH PROFILE GASKET – SINGLE OFF-SET JOINTS.
2. SEE PLANS AND MANHOLE SCHEDULE, FOR MANHOLE SIZE, LOCATION, CONFIGURATION, TYPE OF TOP SECTION, VENTING REQUIREMENTS, PIPE SIZE AND TYPES.
3. SEE SPECIFICATIONS ON MATERIALS AND CONSTRUCTION.
4. AN 80 MIL. COAT OF RAVEN LINING SYSTEMS, RAVEN 405 ULTRA HIGH BUILD EPOXY COATING, OR SPRAY WALL EPOXY COATING, OR APPROVED EQUAL, TO BE APPLIED TO ENTIRE INTERIOR OF EACH WASTEWATER MANHOLE AND UNDERSIDE OF FLAT TOPS.
5. ALL MANHOLE COVERS SHALL BE BOLTED AND GASKETTED WHEN MANHOLES ARE LOCATED OUT FROM PAVEMENT.
6. MANHOLES TO BE VENTED ARE IDENTIFIED ON MANHOLE SCHEDULE. REFERENCE MANHOLE VENT DETAIL.
7. MANHOLES ARE TO BE DESIGNED TO RESIST LATERAL AND VERTICAL SOIL FORCES RESULTING FROM MANHOLE DEPTH. ADDITIONALLY, MANHOLES LOCATED IN PAVEMENT TO BE DESIGNED FOR HS-20 TRAFFIC LOADS.
8. GROUT SHALL MEET THE REQUIREMENTS AS STATED BY THE COATING MANUFACTURER.
9. MANHOLE BASE BEDDING MATERIAL SPECS. FOR 3/4" WASHED GRAVEL:
   SIEVE SIZE 2", PERCENT (%) RETAINED 0
   SIEVE SIZE 1 1/2", % RETAINED 0-10
   SIEVE SIZE 1", % RETAINED 45-80
   SIEVE SIZE 3/4", % RETAINED 85-100
   SIEVE SIZE 3/8", % RETAINED 95-100

The Architect/Engineer assumes responsibility for appropriate use of this standard.

REVISION NOTE: ADOPTED 6/21/2006

CITY OF GEORGETOWN CONSTRUCTION STANDARDS AND DETAILS
STANDARD MANHOLE – SECTION
DRAWING NAME: WW03
SCALE: NTS | DATE: 1/2003
DRAWN BY: MRS | APPROVED BY: TRB

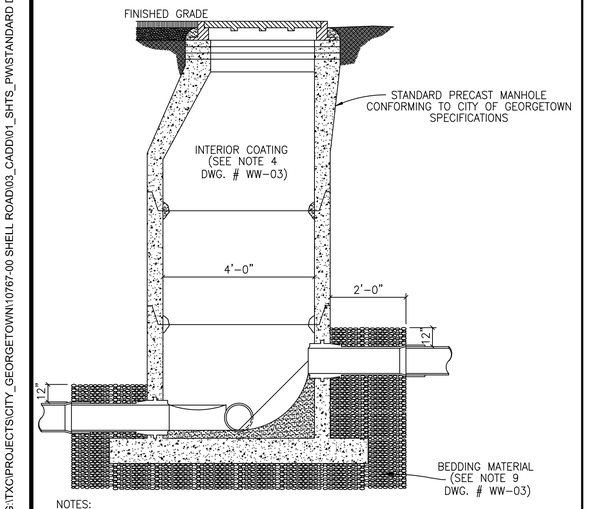

NOTES:

1. TO BE USED WHERE DROP IS SIX INCHES (6") TO TWO FEET (2'-0").
2. A FLOW CHANNEL SHALL BE CONSTRUCTED INSIDE MANHOLE TO DIRECT INFLUENT INTO FLOW STREAM.
3. CONSTRUCTION OF DROP SHALL PROVIDE AN OVERSIZED SLAB TO EXTEND UNDER THE DROP CONNECTION.
4. MINIMUM PIPE SIZE FOR DROP IS EIGHT INCHES (8").
5. SEE STANDARD MANHOLE DETAIL (DWG. # WW-03) FOR ADDITIONAL REQUIREMENTS.

The Architect/Engineer assumes responsibility for appropriate use of this standard.

REVISION NOTE: ADOPTED 6/21/2006

CITY OF GEORGETOWN CONSTRUCTION STANDARDS AND DETAILS
DROP CONNECTION-PRECAST MANHOLE TYPE "B"
DRAWING NAME: WW05
SCALE: NTS | DATE: 1/2003
DRAWN BY: MRS | APPROVED BY: TRB

FLOW PATTERNS FOR INVERT CHANNELS

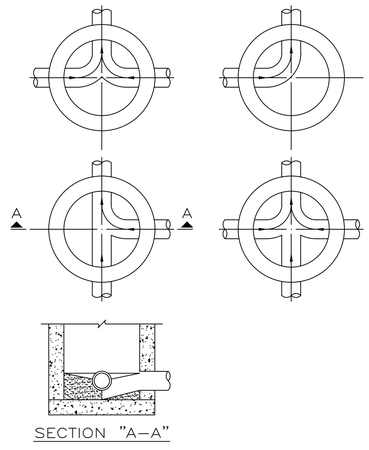

SECTION "A-A"

NOTES:

1. INVERT CHANNELS TO BE CONSTRUCTED FOR SMOOTH FLOW WITH NO OBSTRUCTIONS.
2. SPILLWAYS SHALL BE CONSTRUCTED BETWEEN PIPES WITH DIFFERENT INVERT ELEVATIONS PROVIDING FOR SMOOTH FLOW.
3. CHANNELS FOR FUTURE CONSTRUCTIONS (STUBS) SHALL BE CONSTRUCTED, FILLED WITH SAND, AND COVERED WITH 1" OF MORTAR.
4. SLOPE MANHOLE ITSELF WITH A 1:2 SLOPE FROM MANHOLE WALL TO CHANNEL.
5. INVERT SHALL BE A MINIMUM OF 1/2 THE DIAMETER OF THE LARGEST PIPE OR 4" DEEP.

The Architect/Engineer assumes responsibility for appropriate use of this standard.

REVISION NOTE: ADOPTED 6/21/2006

CITY OF GEORGETOWN CONSTRUCTION STANDARDS AND DETAILS
FLOW PATTERNS FOR INVERT CHANNELS
DRAWING NAME: WW06
SCALE: NTS | DATE: 1/2003
DRAWN BY: MRS | APPROVED BY: TRB

The Architect/Engineer assumes responsibility for appropriate use of this standard.

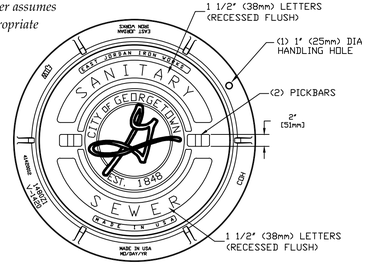

COVER SECTION

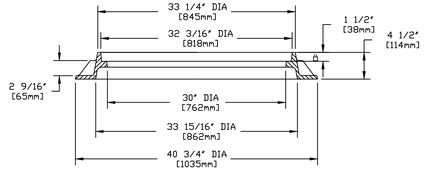

FRAME SECTION

NOTES:

1. STANDARD WASTEWATER MANHOLE SET TO BE EAST JORDAN IRON WORKS, INC. CATALOG NO. 1480A V-1420/1480Z1, COVER TO BE STAMPED WITH "SANITARY SEWER".
2. STANDARD WASTEWATER MANHOLE SET TO BE HEAVY DUTY LOAD RATED.
3. FOR MORE DETAILED SPECIFICATIONS REFER TO EAST JORDAN IRON WORKS, INC. REFERENCE PRODUCT DRAWING 41420012 00148390.
4. FOR BOLTED WASTEWATER MANHOLE SET REFER TO DETAIL WW07A.

REVISION NOTE: ADOPTED 6/21/2006

CITY OF GEORGETOWN CONSTRUCTION STANDARDS AND DETAILS
STANDARD WASTEWATER MANHOLE SET
DRAWING NAME: WW07
SCALE: NTS | DATE: 1/2003
DRAWN BY: MRS | APPROVED BY: TRB

811 Know what's below. Call before you dig.

CAUTION: CONTRACTOR NOTE

THE LOCATION OF EXISTING UNDERGROUND AND OVERHEAD UTILITIES ARE APPROXIMATE LOCATIONS ONLY. THE CONTRACTOR SHALL CONTACT UTILITY COMPANIES PRIOR TO CONSTRUCTION. CONTRACTOR SHALL DETERMINE, AND FIELD VERIFY EXISTING UTILITY LOCATIONS AND DEPTHS PRIOR TO BEGINNING CONSTRUCTION AND SHALL BE FULLY RESPONSIBLE FOR ANY AND ALL DAMAGES WHICH MIGHT OCCUR.

CONTRACTOR SHALL CONSIDER PROPOSED UTILITY IMPROVEMENTS AND PROVIDE ADEQUATE HORIZONTAL AND VERTICAL CLEARANCE DURING INSTALLATION OF ALL UTILITY INFRASTRUCTURE.

NO.	REVISION	BY	DATE

BGE JOB NO. XXXX-XX
FILE
DATE 02/21/2025
DESIGNED XXX
DRAWN XXX
REVISED XXX
CHECKED XXX

SHELL ROAD UTILITY RELOCATIONS

STANDARD DETAILS (4 OF 8)

CITY OF GEORGETOWN

BGE, INC.
101 WEST LOUIS HENNA BLVD., STE 400
AUSTIN, TX 78728
TBPE Registration No. F-1046
TEL: 512-879-0400 www.bgeinc.com

STATE OF TEXAS
BRITTANY LYNN FAIRBURN
132905
LICENSED
PROFESSIONAL ENGINEER

02/21/2025

SHEET
401

100% SUBMITTAL

FILE LOCATION: G:\TXC\PROJECTS\CITY_GEORGETOWN\10767-00 SHELL ROAD\03_CADD\01_SHTS_PW\STANDARD DETAILS.DWG DATE SAVED: 2/19/2025

The Architect/Engineer assumes responsibility for appropriate use of this standard.

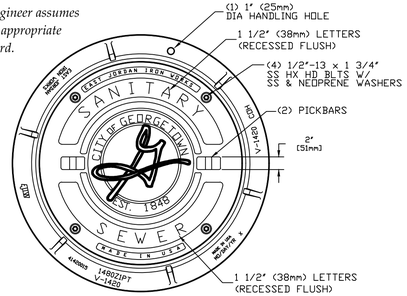

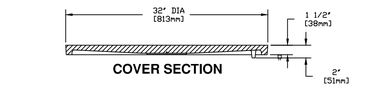

COVER SECTION

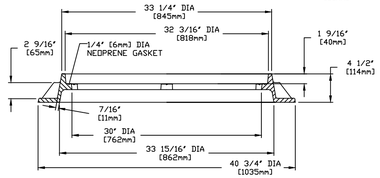

FRAME SECTION

NOTES:

1. BOLTED WASTEWATER MANHOLE SET TO BE EAST JORDAN IRON WORKS, INC. CATALOG NO. 1480APT V-1420/1480Z1PT, COVER TO BE STAMPED WITH "SANITARY SEWER".
2. BOLTED WASTEWATER MANHOLE SET TO BE HEAVY DUTY LOAD RATED.
3. FOR MORE DETAILED SPECIFICATIONS REFER TO EAST JORDAN IRON WORKS, INC. REFERENCE PRODUCT DRAWING 00148392 41420015.
4. FOR STANDARD WASTEWATER MANHOLE SET REFER TO DETAIL WW07.

CITY OF GEORGETOWN CONSTRUCTION STANDARDS AND DETAILS	BOLTED WASTEWATER MANHOLE SET	REVISION NOTE: ADOPTED 6/21/2006	
		DRAWING NAME: WW07A	
		SCALE: NTS	DATE: 1/2006
		DRAWN BY: MRS	APPROVED BY: TRB

The Architect/Engineer assumes responsibility for appropriate use of this standard.

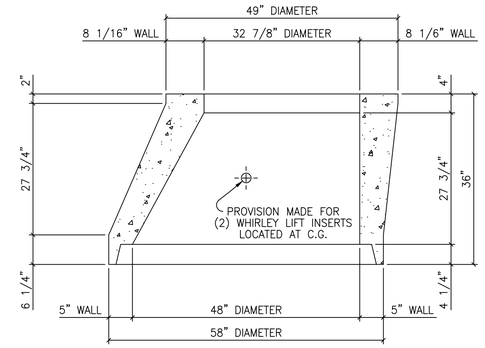

The Architect/Engineer assumes responsibility for appropriate use of this standard.

CITY OF GEORGETOWN CONSTRUCTION STANDARDS AND DETAILS	48"X5" TO 33"X8"X36" TALL ECCENTRIC CONCRETE SECTION	REVISION NOTE: ADOPTED 6/21/2006	
		DRAWING NAME: WW08	
		SCALE: NTS	DATE: 1/2003
		DRAWN BY: MRS	APPROVED BY: TRB

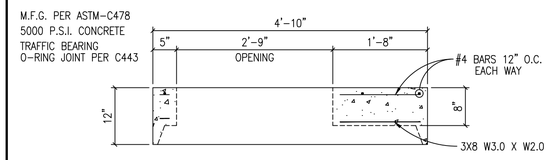

NOTES:

1. AVAILABLE WITH CAST IRON RING AND COVER CAST IN PLACE.
2. PERMITTED ONLY WITH WRITTEN APPROVAL FROM GEORGETOWN UTILITY SYSTEMS, CITY OF GEORGETOWN

The Architect/Engineer assumes responsibility for appropriate use of this standard.

CITY OF GEORGETOWN CONSTRUCTION STANDARDS AND DETAILS	48" MANHOLE FLAT LID	REVISION NOTE: ADOPTED 6/21/2006	
		DRAWING NAME: WW09	
		SCALE: NTS	DATE: 1/2003
		DRAWN BY: MRS	APPROVED BY: TRB

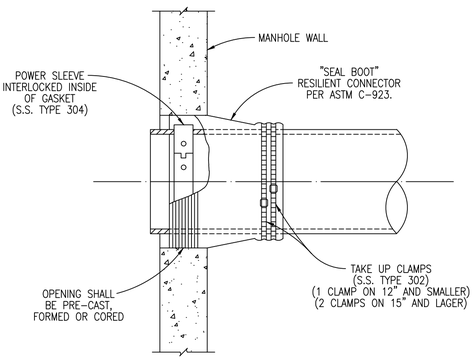

The Architect/Engineer assumes responsibility for appropriate use of this standard.

CITY OF GEORGETOWN CONSTRUCTION STANDARDS AND DETAILS	FLEXIBLE "SEAL BOOT" CONNECTOR	REVISION NOTE: ADOPTED 6/21/2006	
		DRAWING NAME: WW10	
		SCALE: NTS	DATE: 1/2003
		DRAWN BY: MRS	APPROVED BY: TRB

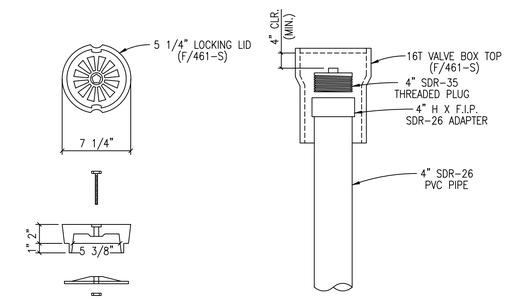

5 1/4" LOCKING LID
(F/461-S)

SEWER CLEAN-OUT
CITY OF GEORGETOWN
(RESIDENTIAL SERVICE)

The Architect/Engineer assumes responsibility for appropriate use of this standard.

CITY OF GEORGETOWN CONSTRUCTION STANDARDS AND DETAILS	SEWER CLEAN-OUT DETAIL	REVISION NOTE: ADOPTED 6/21/2006	
		DRAWING NAME: WW12	
		SCALE: NTS	DATE: 1/2003
		DRAWN BY: MRS	APPROVED BY: TRB

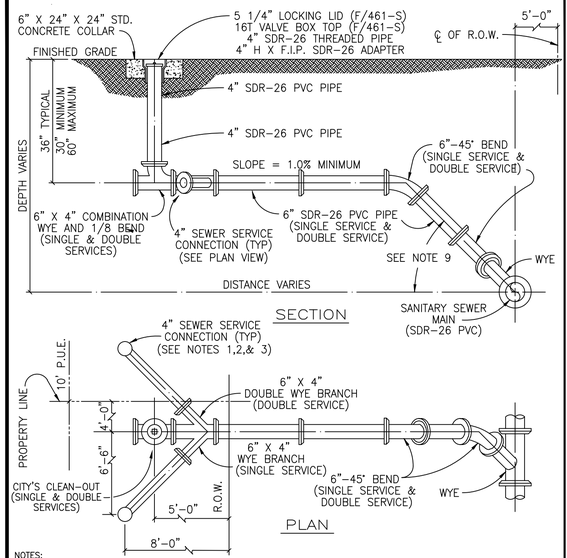

NOTES:

1. SERVICE CONNECTION RISERS SHALL TERMINATE 8' INSIDE THE PROPETY LINE.
2. THE END OF EACH SERVICE CONNECTION RISER SHALL BE EXTENDED 12" ABOVE FINISH GRADE.
3. EACH SERVICE CONNECTION SHALL BE PLUGGED WATER-TIGHT WITH AN APPROVED CAP OR PLUG.
4. FOR P.V.C. INSTALLATIONS, CONNECT TO EXISTING "BELL END" AND CONNECT OPPSITE END WITH P.V.C. TO P.V.C. KNOCK ON SLEEVE.
5. SOLIDLY TAMP BACKFILL AT LEAST ONE FOOT (1'-0") ABOVE TOP OF PIPE. SERVICES UNDER PAVED AREAS SHALL BE BACKFILLED TO THE SAME SPECIFICATIONS AS SHOWN ON PAVEMENT REPLACEMENT DETAIL.
6. CONTRACTOR SHALL MARK ON A CLEAN SET OF PLANS THE FINAL STATIONING OR DISTANCE AND DIRECTION FROM MANHOLE TO EACH SERVICE LATERAL AND GIVE TO ENGINEER FOR RECORD DRAWING PURPOSES.
7. ANY DEVIATION FROM THESE METHODS MUST BE APPROVED BY THE CITY OF GEORGETOWN ENGINEERING DEPARTMENT.
8. SERVICE LINE MATERIAL SHALL BE P.V.C., SDR-26.
9. SEWER SERVICE SLOPE TO BE 45° OFF CENTERLINE OF MAIN.

The Architect/Engineer assumes responsibility for appropriate use of this standard.

CITY OF GEORGETOWN CONSTRUCTION STANDARDS AND DETAILS	SEWER SERVICE CONNECTIONS	REVISION NOTE: ADOPTED 6/21/2006	
		DRAWING NAME: WW13	
		SCALE: NTS	DATE: 1/2003
		DRAWN BY: MRS	APPROVED BY: TRB

CAUTION: CONTRACTOR NOTE

811 Know what's below. Call before you dig.

THE LOCATION OF EXISTING UNDERGROUND AND OVERHEAD UTILITIES ARE APPROXIMATE LOCATIONS ONLY. THE CONTRACTOR SHALL CONTACT UTILITY COMPANIES PRIOR TO CONSTRUCTION. CONTRACTOR SHALL DETERMINE, AND FIELD VERIFY EXISTING UTILITY LOCATIONS AND DEPTHS PRIOR TO BEGINNING CONSTRUCTION AND SHALL BE FULLY RESPONSIBLE FOR ANY AND ALL DAMAGES WHICH MIGHT OCCUR.

CONTRACTOR SHALL CONSIDER PROPOSED UTILITY IMPROVEMENTS AND PROVIDE ADEQUATE HORIZONTAL AND VERTICAL CLEARANCE DURING INSTALLATION OF ALL UTILITY INFRASTRUCTURE.

NO.	REVISION	BY	DATE

BGE JOB NO. XXXX-XX
FILE
DATE 02/21/2025
DESIGNED XXX
DRAWN XXX
REVISED XXX
CHECKED XXX

SHELL ROAD UTILITY RELOCATIONS

STANDARD DETAILS (5 OF 8)

CITY OF GEORGETOWN

BGE, INC.
101 WEST LOUIS HENNA BLVD., STE 400
AUSTIN, TX 78728
TBPE Registration No. F-1046
TEL 512-879-0400 www.bgeinc.com

STATE OF TEXAS
BRITTANY LYNN FAIRBURN
132905
LICENSED
PROFESSIONAL ENGINEER

Brittany Lynn Fairburn

02/21/2025

SHEET
402

FILE LOCATION: G:\TXC\PROJECTS\CITY_GEORGETOWN\10767-00 SHELL ROAD\03_CADD\01_SHTS_PW\STANDARD DETAILS.DWG DATE SAVED: 2/19/2025

XXX SUBMITTAL

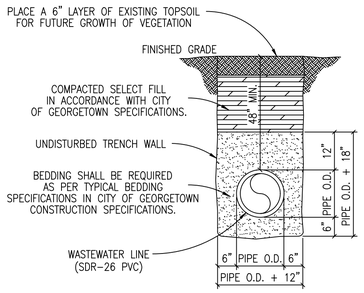

TRENCH WIDTHS
*PIPE LESS THAN 20" DIAMETER
1'-0" + PIPE O.D.
*20" DIAMETER PIPE AND LARGER
2'-0" + PIPE O.D.

The Architect/Engineer assumes responsibility for appropriate use of this standard.

REVISION NOTE:	ADOPTED 6/21/2006
CITY OF GEORGETOWN CONSTRUCTION STANDARDS AND DETAILS	DRAWING NAME: WW16
TRENCH AND EMBEDMENT DETAIL UNDER NON-PAVED AREAS	SCALE: NTS; DATE: 1/2003; DRAWN BY: MRS; APPROVED BY: TRB

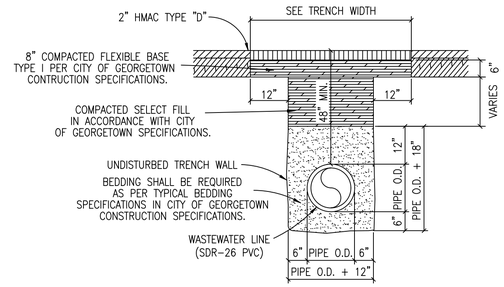

TRENCH WIDTHS
*PIPE LESS THAN 20" DIAMETER
1'-0" + PIPE O.D.
*20" DIAMETER PIPE AND LARGER
2'-0" + PIPE O.D.

NOTES:
1. REPLACED BASE MATERIAL OVER DITCH SHALL BE TWICE THE THICKNESS OF THE ORIGINAL BASE.
2. BASE MATERIAL SHALL BE PLACED IN MULTIPLE LIFTS NOT TO EXCEED 6". EACH LAYER SHALL BE THOROUGHLY ROLLED OR TAMPED TO SPECIFIED MAXIMUM DENSITY.
3. ASPHALT CONCRETE PAVEMENT JOINTS SHALL BE MECHANICALLY SAWED.
4. SURFACE MATERIAL WILL BE CONSISTENT WITH THE EXISTING SURFACE.
5. DENSITY TESTS SHALL BE TAKEN IN ACCORDANCE WITH THE CITY OF GEORGETOWN CONSTRUCTION SPECIFICATIONS AND STANDARDS.
6. CONTRACTOR OR ENGINEER MAY USE FLOWABLE BACKFILL AS AN ALTERNATE BACKFILL MATERIAL (SEE C9 FLOWABLE BACKFILL FOR THE SPECIFICATION).

The Architect/Engineer assumes responsibility for appropriate use of this standard.

REVISION NOTE:	ADOPTED 6/21/2006
CITY OF GEORGETOWN CONSTRUCTION STANDARDS AND DETAILS	DRAWING NAME: WW17
TRENCH AND EMBEDMENT AND PAVEMENT REPLACEMENT DETAIL UNDER EXISTING ROADWAY	SCALE: NTS; DATE: 1/2003; DRAWN BY: MRS; APPROVED BY: TRB

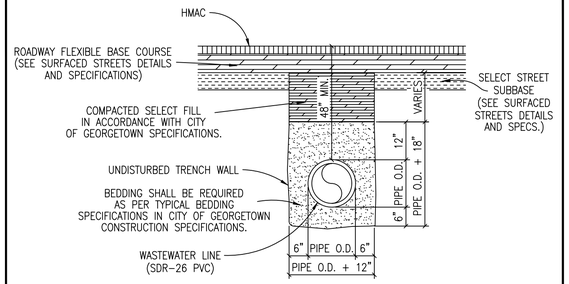

TRENCH WIDTHS
*PIPE LESS THAN 20" DIAMETER
1'-0" + PIPE O.D.
*20" DIAMETER PIPE AND LARGER
2'-0" + PIPE O.D.

NOTES:
1. DENSITY TESTS SHALL BE TAKEN IN ACCORDANCE WITH THE CITY OF GEORGETOWN CONSTRUCTION SPECIFICATIONS AND STANDARDS.
2. CONTRACTOR OR ENGINEER MAY USE FLOWABLE BACKFILL AS AN ALTERNATE BACKFILL MATERIAL (SEE C9 FLOWABLE BACKFILL FOR THE SPECIFICATION).

The Architect/Engineer assumes responsibility for appropriate use of this standard.

REVISION NOTE:	ADOPTED 6/21/2006
CITY OF GEORGETOWN CONSTRUCTION STANDARDS AND DETAILS	DRAWING NAME: WW18
TRENCH AND EMBEDMENT DETAIL UNDER PROPOSED ROADWAY	SCALE: NTS; DATE: 1/2003; DRAWN BY: MRS; APPROVED BY: TRB

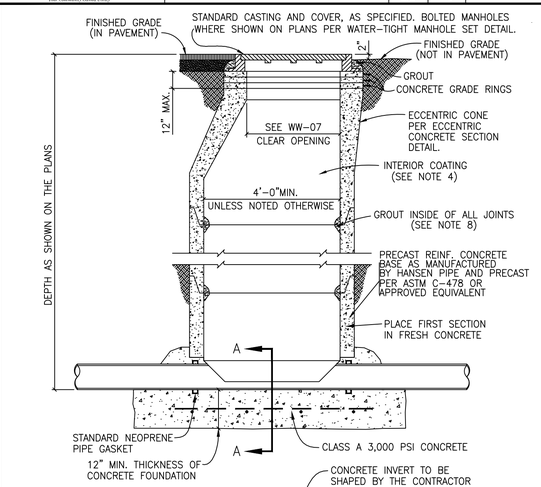

NOTES:
1. MANHOLES SHALL BE PRECAST ASTM C-478 BELL AND SPIGOT WITH PROFILE GASKET – SINGLE OFF-SET JOINTS.
2. SEE PLANS AND MANHOLE SCHEDULE, FOR MANHOLE SIZE, LOCATION, CONFIGURATION, TYPE OF TOP SECTION, VENTING REQUIREMENTS, PIPE SIZE AND TYPES.
3. SEE SPECIFICATIONS ON MATERIALS AND CONSTRUCTION.
4. AN 80 MIL COAT OF RAVEN LINING SYSTEMS, RAVEN 405 ULTRA HIGH BUILD EPOXY COATING, OR SPRAY WALL EPOXY COATING, OR APPROVED EQUAL, TO BE APPLIED TO ENTIRE INTERIOR OF EACH WASTEWATER MANHOLE AND UNDERSIDE OF FLAT TOPS.
5. ALL MANHOLE COVERS SHALL BE BOLTED AND GASKETTED WHEN MANHOLES ARE LOCATED OUT FROM PAVEMENT.
6. MANHOLES TO BE VENTED ARE IDENTIFIED ON MANHOLE SCHEDULE. REFERENCE MANHOLE VENT DETAIL.
7. MANHOLES ARE TO BE DESIGNED TO RESIST LATERAL AND VERTICAL SOIL FORCES RESULTING FROM MANHOLE DEPTH. ADDITIONALLY, MANHOLES LOCATED IN PAVEMENT TO BE DESIGNED FOR HS-20 TRAFFIC LOADS.
8. GROUT SHALL MEET THE REQUIREMENTS AS STATED BY THE COATING MANUFACTURER.
9. MANHOLE BASE BEDDING MATERIAL SPECS. FOR 3/4" WASHED GRAVEL:
   SIEVE SIZE 2", PERCENT (%) RETAINED 0 — SIEVE SIZE 1 1/2", % RETAINED 0-10
   SIEVE SIZE 1", % RETAINED 45-80 — SIEVE SIZE 3/4", % RETAINED 85-100
   SIEVE SIZE 3/8", % RETAINED 95-100
10. ALL PVC PIPE SHALL BE REMOVED FROM INVERT.

The Architect/Engineer assumes responsibility for appropriate use of this standard.

REVISION NOTE:	ADOPTED 6/21/2006
CITY OF GEORGETOWN CONSTRUCTION STANDARDS AND DETAILS	DRAWING NAME: WW20
PRECAST MANHOLE ON CAST-IN-PLACE FOUNDATION	SCALE: NTS; DATE: 1/2006; DRAWN BY: MRS; APPROVED BY: TRB

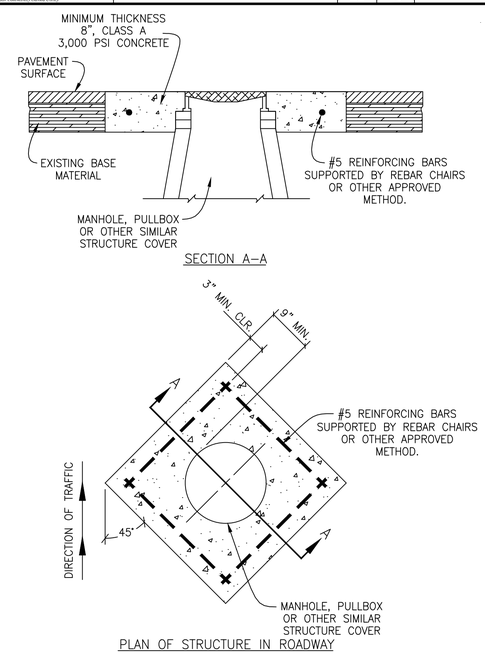

PLAN OF STRUCTURE IN ROADWAY

NOTE:
INSTALLATION OF THE CONCRETE CASTING IS REQUIRED FOR AND APPLIES TO ALL TYPES OF MANHOLES TO BE LOCATED IN THE ROADWAY.

The Architect/Engineer assumes responsibility for appropriate use of this standard.

REVISION NOTE:	APPROVED 6/21/2006
CITY OF GEORGETOWN CONSTRUCTION STANDARDS AND DETAILS	DRAWING NAME: WW21
CONCRETE CASTING MANHOLE DETAIL	SCALE: NTS; DATE: 1/2006; DRAWN BY: MRS; APPROVED BY: TRB

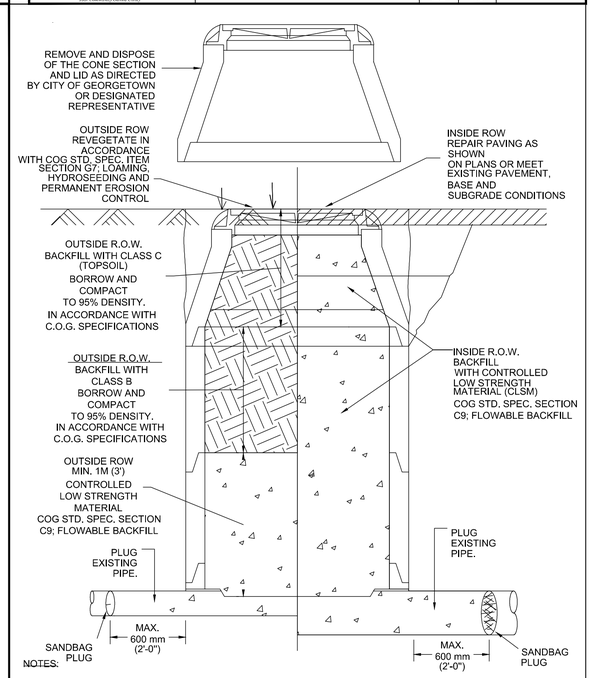

NOTES:
1. THE PLUG SHOULD BE COMPOSED OF A SANDBAG OR SIMILAR TYPE PLUG TO HOLD CLSM UNTIL SET. CLSM IS CONTROLLED LOW STRENGTH MATERIAL, COG STD. SPEC. SECTION C9; FLOWABLE BACKFILL
2. CLSM SHALL COMPLETELY FILL VOID TO SANDBAG OR SIMILAR TYPE PLUG.

	MANHOLE ABANDONMENT
	STANDARD NO. SD-WW23 1 OF 1

811 Know what's below. Call before you dig.

CAUTION: CONTRACTOR NOTE

THE LOCATION OF EXISTING UNDERGROUND AND OVERHEAD UTILITIES ARE APPROXIMATE LOCATIONS ONLY. THE CONTRACTOR SHALL CONTACT UTILITY COMPANIES PRIOR TO CONSTRUCTION. CONTRACTOR SHALL DETERMINE, AND FIELD VERIFY EXISTING UTILITY LOCATIONS AND DEPTHS PRIOR TO BEGINNING CONSTRUCTION AND SHALL BE FULLY RESPONSIBLE FOR ANY AND ALL DAMAGES WHICH MIGHT OCCUR.

CONTRACTOR SHALL CONSIDER PROPOSED UTILITY IMPROVEMENTS AND PROVIDE ADEQUATE HORIZONTAL AND VERTICAL CLEARANCE DURING INSTALLATION OF ALL UTILITY INFRASTRUCTURE.

NO.	REVISION	BY	DATE

BGE JOB NO.	XXXX-XX
FILE	
DATE	02/21/2025
DESIGNED	XXX
DRAWN	XXX
REVISED	XXX
CHECKED	XXX

SHELL ROAD UTILITY RELOCATIONS

STANDARD DETAILS (6 OF 8)

CITY OF GEORGETOWN

BGE, INC.
101 WEST LOUIS HENNA BLVD., STE 400
AUSTIN, TX 78728
TBPE Registration No. F-1046
TEL: 512-879-0400 www.bgeinc.com

STATE OF TEXAS
BRITTANY LYNN FAIRBURN
132905
LICENSED PROFESSIONAL ENGINEER
02/21/2025

SHEET
403

100% SUBMITTAL

FILE LOCATION: G:\TXC\PROJECTS\CITY_GEORGETOWN\10767-00 SHELL ROAD\03_CADD\01_SHTS_PW\STANDARD DETAILS.DWG DATE SAVED: 2/19/2025

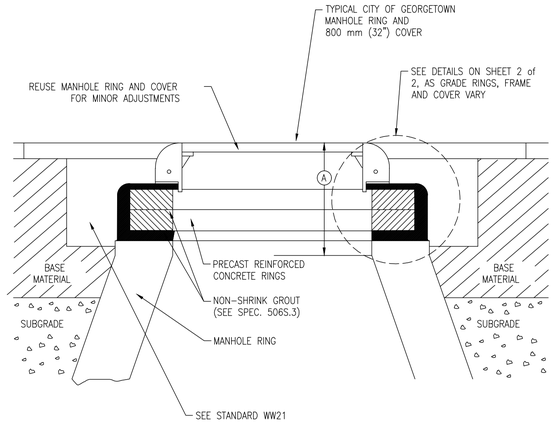

(A) VERTICAL FACE = ALLOWABLE THROAT OR CHIMNEY HEIGHT
= NEW CONSTRUCTION = 525mm = (21") Max.
= EXISTING CONSTRUCTION = 675mm (27") Max.

NOTES:

1. NON-SHRINK GROUT SHALL NOT EXCEED 25 mm (1") IN ANY DIMENSION.
2. SUB-GRADE AND BASE MATERIALS SHALL BE COMPACTED ACCORDING TO THE CITY OF GEORGETOWN STANDARD SPECIFICATIONS.
3. REFER TO STANDARD WW21 FOR REPAIRS AROUND MANHOLES.
4. SEE STANDARD SD 506S-4A FOR HDPE RING INSTALLATION (FOR USE IN PAVED AREAS ONLY).

	MINOR MANHOLE ADJUSTMENT & NEW MANHOLE CONSTRUCTION	STANDARD NO. SD 506S-4 1 OF 2

INSIDE PAVEMENT DETAIL

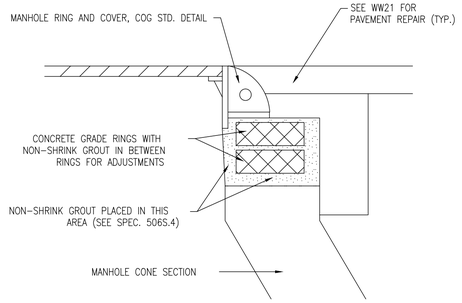

OUTSIDE PAVEMENT DETAIL

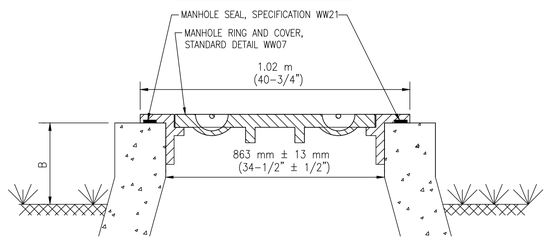

NOTES:

1. FOR USE IN UNPAVED AREAS ONLY.
2. WHEN USED WITHIN 100-YEAR FLOODPLAIN, SEE DTL. SD 506S-6 FOR ADDITIONAL M.H. REQUIREMENTS.
3. DIMENSION B=150-300 mm (6"-12") FOR M.H. LOCATED IN 100-YR FLOOD PLAIN; B=50-300 mm (2"-12") FOR M.H. OUTSIDE 100-YR FLOOD PLAIN.

	MINOR MANHOLE ADJUSTMENT & NEW MANHOLE CONSTRUCTION	STANDARD NO. SD 506S-4 2 OF 2

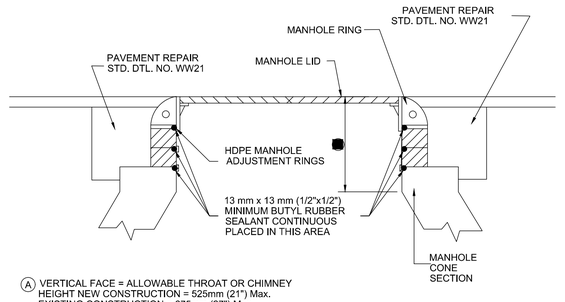

(A) VERTICAL FACE = ALLOWABLE THROAT OR CHIMNEY HEIGHT NEW CONSTRUCTION = 525mm (21") Max.
EXISTING CONSTRUCTION = 675mm (27") Max.

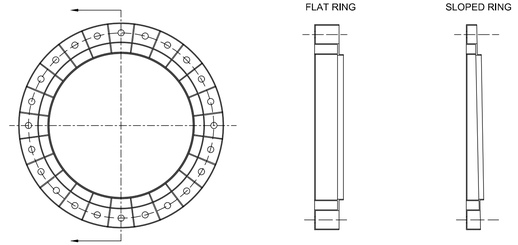

NOTE:

1. HDPE RINGS ONLY IN PAVED AREAS

	MINOR MANHOLE HEIGHT ADJUSTMENT (HDPE RINGS)	STANDARD NO. SD 506S-4A 1 OF 3

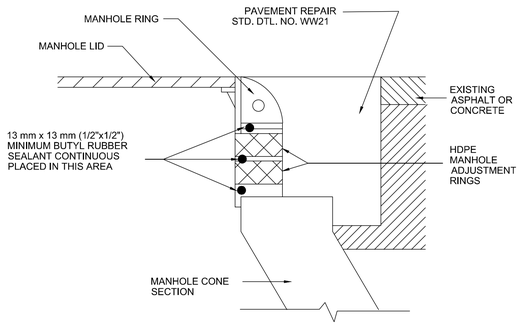

INSTALLATION INSTRUCTIONS
HDPE MANHOLE ADJUSTMENT RINGS
(FOR NEW CONSTRUCTION AND REHABILITATION)

1. REMOVE EXISTING CASTING AND RINGS OR COVER PLATE TO EXPOSE CONCRETE. MANHOLE SURFACE MUST BE CLEAN AND LEVEL ±6 mm (1/4"). NOTE: IF TOP OF CONCRETE STRUCTURE IS IN VERY POOR CONDITION OR IRREGULAR, THE FIRST RING CAN BE PRESSED FULLY INTO A HEAVY BED OF MORTAR ALLOWING IT AND SUBSEQUENT RINGS TO BE POSITIONED WITHOUT WOBBLE OR POINT-LOADING.
2. POSITION STRAIGHT AND LEVEL TO DETERMINE HEIGHT ADJUSTMENT REQUIRED. CONFIRM BEFORE PLACING RINGS.
3. COMBINE VARIOUS RING HEIGHTS, IN BOTH FLAT AND SLOPE, TO REACH DESIRED ADJUSTMENT. PLACE RINGS WITH INNER POCKET OPENING UP (OUTER POCKET OPENING WITH HOLES DOWN). THE INTERLOCKING LIP (MALE TONGUE) EXTENDS DOWN INTO THE STRUCTURE OF LOWER RING. MULTIPLE SLOPE RINGS CAN BE ADDED AND ROTATED TO ACHIEVE DESIRED GRADE MATCH WITHIN 6 mm (1/4"). NOTE: SLOPE RINGS ARE TAPERED TO PROVIDE 2% GRADE COMPENSATION. IF REQUIRED, HDPE SHIMS (MAX. 6 mm (1/2") PER RING MAY BE USED TO MATCH GRADE EXACTLY.
4. DRY STACK RINGS WITHOUT SEALANT TO ACHIEVE DESIRED VERTICAL AND SLOPE ADJUSTMENT. IF SLOPE RINGS ARE USED, MARK INNER FACE OF STOCK WITH PAINT OR MARKER TO MAINTAIN ALIGNMENT WHEN RE-STACKING.
5. REMOVE THE RINGS AND PLACE NEARBY IN UPSIDE-DOWN ORDER (THIS ALLOWS FOR EASY RE-ASSEMBLY IN THE CORRECT ORDER), APPLY A CONTINUOUS BEAD OF APPROVED RUBBER BUTYL SEALANT TO THE FLAT SURFACE OF THE FIRST RING ON THE SIDE OF THE MALE TONGUE THAT WILL REST AGAINST THE CONE OPENING (MALE TONGUE DOWN). APPLY SEALANT TO AFFECT A SEAL BETWEEN THE INTERLOCKING LIP AND THE CONCRETE SURFACE IT RESTS ON.
6. APPLY 13 mm (1/2") CONTINUOUS BEAD OF APPROVED BUTYL RUBBER SEALANT (SPL WW-703) TO THE NEXT RING. THE SEALANT MUST BE APPLIED DIRECTLY INTO THE INTERLOCKING LIP (MALE TONGUE) AND THE BOTTOM OF THE RING, FAVORING THE SIDE OF THE LIP TO ASSURE A SEAL. PLACE THIS RING WITH THE INTERLOCKING LIP (MALE TONGUE) FACING DOWN ON TOP OF THE LOWER RING PREVIOUSLY INSTALLED. PRESS THE RING IN PLACE TO SET AND DISPERSE SEALANT. REMEMBER TO RE-ASSEMBLE THE RINGS USING ALIGNMENT MARKS TO POSITION SLOPE RING(S) CORRECTLY.
7. REPEAT #6 ON ALL PRE-ASSEMBLED RINGS TO REACH DESIRED HEIGHT AND SLOPE ADJUSTMENT.
8. APPLY 13 mm (1/2") CONTINUOUS BEAD OF APPROVED BUTYL RUBBER SEALANT, TO THE TOP OF THE UPPER RING.
9. POSITION CASTING ON RING(S). PRESS THE CASTING FRAME IN PLACE TO SET AND DISPERSE SEALANT.
10. BACKFILL TO RESTORE TO STD. DETAIL WW21.
11. RING MANUFACTURER MUST MEET C.O.G. SPECIFICATION WW21.
12. FOR USE IN PAVED AREAS ONLY.

	MINOR MANHOLE HEIGHT ADJUSTMENT (HDPE RINGS)	STANDARD NO. SD 506S-4A 2 OF 3

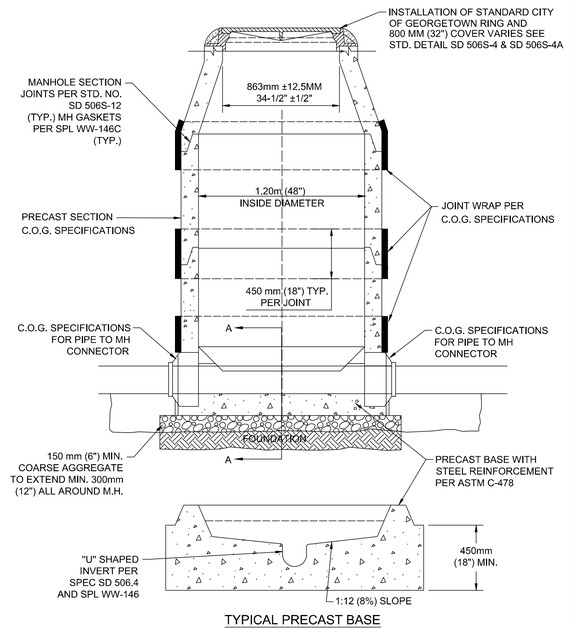

TYPICAL PRECAST BASE

NOTE:
1. THE MANHOLE BASE SHALL BE BEDDED ON 150 mm (6") COARSE AGGREGATE. THE CONTRACTOR SHALL LEVEL AND PLUMB THE BASE PRIOR TO SETTING THE PRECAST MANHOLE RISER SECTIONS ON THE PRECAST CONCRETE BASE.2. MANHOLE FOUNDATION SHALL MEET OR EXCEED SPEC. SD 506.5B.

	MINOR MANHOLE HEIGHT ADJUSTMENT (HDPE RINGS)	STANDARD NO. SD 506S-4A 3 OF 3

	WATER TIGHT WASTEWATER MANHOLE ON PRECAST BASE	STANDARD NO. SD 506S-6 1 OF 1

811 Know what's below. Call before you dig.

CAUTION: CONTRACTOR NOTE

THE LOCATION OF EXISTING UNDERGROUND AND OVERHEAD UTILITIES ARE APPROXIMATE LOCATIONS ONLY. THE CONTRACTOR SHALL CONTACT UTILITY COMPANIES PRIOR TO CONSTRUCTION. CONTRACTOR SHALL DETERMINE, AND FIELD VERIFY EXISTING UTILITY LOCATIONS AND DEPTHS PRIOR TO BEGINNING CONSTRUCTION AND SHALL BE FULLY RESPONSIBLE FOR ANY AND ALL DAMAGES WHICH MIGHT OCCUR.

CONTRACTOR SHALL CONSIDER PROPOSED UTILITY IMPROVEMENTS AND PROVIDE ADEQUATE HORIZONTAL AND VERTICAL CLEARANCE DURING INSTALLATION OF ALL UTILITY INFRASTRUCTURE.

NO.	REVISION	BY	DATE

BGE JOB NO. XXXX-XX
FILE
DATE 02/21/2025
DESIGNED XXX
DRAWN XXX
REVISED XXX
CHECKED XXX

SHELL ROAD UTILITY RELOCATIONS

STANDARD DETAILS (7 OF 8)

CITY OF GEORGETOWN

BGE
BGE, INC.
101 WEST LOUIS HENNA BLVD., STE 400
AUSTIN, TX 78728
TBPE Registration No. F-1046
TEL: 512-879-0400 www.bgeinc.com

STATE OF TEXAS
BRITTANY LYNN FAIRBURN
132905
LICENSED PROFESSIONAL ENGINEER
02/21/2025

SHEET
404

100% SUBMITTAL

FILE LOCATION: G:\TX\CPROJECTS\CITY_GEORGETOWN\10767-00 SHELL ROAD\03_CADD\01_SHTS_PW\STANDARD DETAILS.DWG DATE SAVED: 2/19/2025

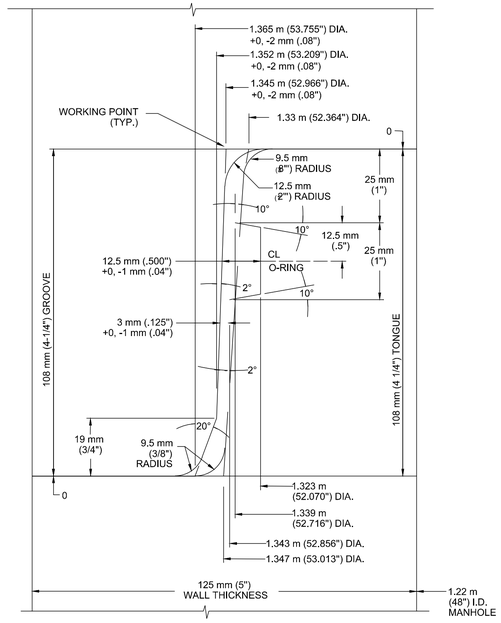

NOTES:

1. O-RING DIMENSION 20 mm (25/32") DIA., 1013 cc VOLUME.
2. DRAWING NOT TO SCALE FOR CLARIFICATION OF DIMENSIONS.
3. FOR EX. MANHOLES ONLY

	O-RING JOINT DETAIL PRECAST MANHOLE SECTION	
		STANDARD NO. SD 506S-12 1 OF 1

811 Know what's below. Call before you dig.

CAUTION: CONTRACTOR NOTE

THE LOCATION OF EXISTING UNDERGROUND AND OVERHEAD UTILITIES ARE APPROXIMATE LOCATIONS ONLY. THE CONTRACTOR SHALL CONTACT UTILITY COMPANIES PRIOR TO CONSTRUCTION. CONTRACTOR SHALL DETERMINE, AND FIELD VERIFY EXISTING UTILITY LOCATIONS AND DEPTHS PRIOR TO BEGINNING CONSTRUCTION AND SHALL BE FULLY RESPONSIBLE FOR ANY AND ALL DAMAGES WHICH MIGHT OCCUR.

CONTRACTOR SHALL CONSIDER PROPOSED UTILITY IMPROVEMENTS AND PROVIDE ADEQUATE HORIZONTAL AND VERTICAL CLEARANCE DURING INSTALLATION OF ALL UTILITY INFRASTRUCTURE.

NO.	REVISION	BY	DATE

BGE JOB NO. XXXX-XX
FILE
DATE 02/21/2025
DESIGNED XXX
DRAWN XXX
REVISED XXX
CHECKED XXX

SHELL ROAD UTILITY RELOCATIONS

STANDARD DETAILS (8 OF 8)

CITY OF GEORGETOWN

BGE, INC.
101 WEST LOUIS HENNA BLVD., STE 400
AUSTIN, TX 78728
TBPE Registration No. F-1046
TEL 512-879-0400 www.bgeinc.com

STATE OF TEXAS
BRITTANY LYNN FAIRBURN
132905
LICENSED
PROFESSIONAL ENGINEER

02/21/2025

SHEET
405

100% SUBMITTAL

FILE LOCATION: G:\TXCI\PROJECTS\CITY_GEORGETOWN\10767-00 SHELL ROAD\03_CADD\01_SHTS_PW\STANDARD DETAILS.DWG DATE SAVED: 2/19/2025

GENERAL NOTES:

1. CONTRACTOR TO VERIFY SITE INFORMATION, INCLUDING EXISTING CONDITIONS, TOPOGRAPHY, EXISTING UTILITIES, BOUNDARY INFORMATION, PROPERTY LINES, EASEMENTS, BUILDING LOCATIONS, ROADWAY CURBS AND GUTTERS, AND OTHER INFORMATION AFFECTING THE SCOPE OF WORK INCLUDED ON THESE DRAWINGS PRIOR TO COMMENCING WITH ANY PORTION OF THE WORK. MORE SPECIFIC UTILITY INFORMATION IS INDICATED ON THE OTHER CONSULTANTS DRAWINGS, THE ENGINEERING DRAWINGS, AND SITE RECORD DRAWINGS AVAILABLE FROM THE OWNER. THE CONTRACTOR SHALL CONTACT THE OWNER AND THE LANDSCAPE ARCHITECT (L.A.) FOR DIRECTION ON HOW TO PROCEED IF ACTUAL SITE CONDITIONS VARY FROM WHAT IS SHOWN ON THE ENGINEER'S OR LANDSCAPE ARCHITECT'S PLANS.
2. WRITTEN DIMENSIONS PREVAIL OVER SCALED DIMENSIONS. NOTIFY THE OWNER, ENGINEER OR L.A. OF ANY DISCREPANCIES PRIOR TO COMMENCING WITH ANY PORTION OF THE WORK.
3. CONTRACTOR IS RESPONSIBLE FOR VERIFYING ALL UNDERGROUND UTILITIES, PIPES, STRUCTURES, AND LINE RUNS IN THE FIELD PRIOR TO CONSTRUCTION. THE CONTRACTOR SHALL NOTIFY AND CONFIRM WITH LOCAL AUTHORITIES AND THE GENERAL CONTRACTOR THE LOCATION OF ALL EXISTING UNDERGROUND UTILITIES. EXCAVATE AS NECESSARY TO CONFIRM LOCATION PRIOR TO EXCITATION. EXCAVATION IN THEY VICINITY OF UTILITES SHALL BE UNDERTAKEN WITH CARE. ANY DAMAGE TO NEW AND EXISTING UTILITIES BY ANY PERSON, VEHICLE, EQUIPMENT, OR TOOL RELATED TO THE EXECUTION OF THE CONTRACT, ARE TO BE REPAIRED IMMEDIATELY AT NO ADDITIONAL EXPENSE TO THE OWNER. BGE ASSUMES NO RESPONSIBILITY FOR ANY UTILITIES NOT SHOWN ON PLANS.
4. ALL PROPOSED FINISHED GRADES ARE BASED ON INFORMATION PROVIDED BY THE OWNER'S SURVEY AND OR CIVIL ENGINEER. ANY DISCREPANCIES IN ACTUAL FIELD MEASUREMENTS ARE TO BE REPORTED TO THE CLIENT IMMEDIATELY.
5. CONTRACTOR IS RESPONSIBLE TO PROVIDE AND INSTALL ALL ITEMS PER DRAWINGS AND SPECIFICATION. NOTIFY THE CLIENT OF ANY MAJOR DISCREPANCIES BETWEEN CONTRACTOR'S VERIFIED QUANTITIES, BID BOOK, AND INTENT OF DRAWING. ANY QUANTITIES PROVIDED ARE FOR CONVENIENCE ONLY AND SHALL NOT BE CONSIDERED ABSOLUTE. THE CLIENT SHOULD BE NOTIFIED OF ANY DISCREPANCIES PRIOR TO BIDDING AND DURING THE WORK.
6. CONTRACTOR SHALL EXAMINE AND BECOME FAMILIAR WITH ALL CONTRACT DOCUMENTS IN THEIR ENTIRETY. SURVEY THE PROJECT AND BECOME FAMILIAR WITH THE EXISTING CONDITIONS AND SCOPE OF WORK. ALL COSTS SUBMITTED SHALL BE BASED ON THOROUGH KNOWLEDGE OF ALL WORK AND MATERIALS REQUIRED ANY DISCREPANCY AND/ OR UNCERTAINTY AS TO WHAT MATERIAL OR PRODUCT IS TO BE USED, SHALL BE VERIFIED WITH THE CLIENT PRIOR TO BIDDING.
7. CONTRACTOR SHALL BE SOLELY RESPONSIBLE FOR CONSTRUCTION MEANS, METHODS, TECHNIQUES, SEQUENCES AND PROCEDURES REQUIRED FOR SAFE EXECUTION AND COMPLETION OF WORK, AND FOR INITIATING, MAINTAINING AND SUPERVISING ALL SAFETY PRECAUTIONS AND PROGRAMS IN CONNECTION WITH THE WORK.
8. IN THE EVENT A DISCREPANCY IS FOUND IN THE CONTRACT DOCUMENTS, THE CLIENT SHALL BE NOTIFIED IMMEDIATELY.
9. CONTRACTOR SHALL VERIFY ALL DIMENSIONS AND MEASUREMENTS AND BE RESPONSIBLE FOR ACCURACY IN THE FIELD AND NOTIFY THE CLIENT OF ANY DISCREPANCIES PRIOR TO CONSTRUCTION.
10. CONTRACTOR SHALL COORDINATE WORK WITH ALL OTHER TRADES AND NOTIFY THE CLIENT OF ANY DISCREPANCIES PRIOR TO CONSTRUCTION.
11. THE CONTRACTOR SHALL EMPLOY, AS REQUIRED BY GOVERNING AUTHORITIES, AN APPROVED TESTING LABORATORY TO MAKE ALL TESTS FROM CONCRETE, SOIL COMPACTION AND WELDING TO INSURE COMPLIANCE WITH PLANS, STANDARDS AND CODES. COST SHALL BE INCLUDED AS INCIDENTAL TO THE CONTRACT.
12. ALL EXISTING WORK OR LANDSCAPING NOT SHOWN TO BE ALTERED OR REMOVED SHALL BE PROTECTED FROM DAMAGE DURING CONSTRUCTION. THE CONTRACTOR(S) SHALL BEAR THE TOTAL EXPENSE FOR, AND SHALL REPAIR ANY DAMAGE TO EXISTING CONDITIONS, OR IMPROVEMENTS NOT INDICATED IN THE DRAWINGS OR SPECIFICATIONS TO RECEIVE ALTERATION, ADDITIONS OR REMOVAL.
13. CONTRACTOR TO INSURE CONSTRUCTION COMPLIANCE WITH ADA ACT OF 1990, AS AMENDED, THE ADAAG GUIDELINES OF 2004, AS AMENDED, AND ANY LOCAL OR STATE ACCESSIBILITY STANDARDS, AS AMENDED. CONTRACTOR TO NOTIFY LANDSCAPE ARCHITECT OF ANY DISCREPANCIES.
14. CONTRACTOR TO PROVIDE ANY AND ALL NECESSARY EROSION CONTROL MEASURES.
15. ALL CONSTRUCTION WILL CONFORM TO THESE PLANS AND SPECIFICATIONS AS WELL AS ALL RELEVANT LOCAL CITY STANDARDS AND SPECIFICATIONS
16. IN THE EVENT OF CONFLICTS BETWEEN PLANS, DETAILS AND SPECIFICATIONS, THE GREATER REQUREMENT OR QUALITY SHALL PREVAIL AS APPROVED BY THE LANDSCAPE ARCHITECT OR OWNER.



March 12, 2025

EST.1848
GEORGETOWN
TEXAS

BGE, Inc.
101 West Louis Henna Blvd, Suite 400, Austin, TX 78728
Tel: 512-879-0400 ● www.bgeinc.com
TBPE Registration No. F-1046

GENERAL NOTES

L0.01

SHEET 1 OF 2

SHEET NO.
406

CK
DW
CK
DW

LAYOUT NOTES:

1. **CONTRACTOR SHALL REFER TO THE SITE CIVIL, MEP, AND IRRIGATION PLANS FOR CONDUIT TO BE INSTALLED UNDER PAVEMENT PRIOR TO COMMENCING PAVEMENT SUBGRADE PREPARATION**.
2. ALL MATERIALS AND CONSTRUCTION WITHIN RIGHT OF WAYS SHALL BE IN ACCORDANCE WITH THE CITY OF GEORGETOWN STANDARD SPECIFICATIONS AND CONSTRUCTION STANDARDS, AND STANDARD SPECIFICATIONS FOR PUBLIC WORKS CONSTRUCTION PREPARED BY THE CITY OF GEORGETOWN.
3. EXISTING UTILITIES ARE SHOWN SCHEMATICALLY AND ARE FOR THE CONTRACTOR'S GUIDANCE ONLY. THE LOCATION AND/OR ELEVATION OF EXISTING UTILITIES AS SHOWN ON THESE PLANS ARE BASED ON RECORDS OF THE VARIOUS UTILITY COMPANIES, AND, WHERE POSSIBLE, MEASUREMENTS TAKEN IN THE FIELD. THE CONTRACTOR MUST CALL THE APPROPRIATE UTILITY COMPANY AT LEAST 48 HOURS PRIOR TO ANY EXCAVATION TO REQUEST EXACT FIELD LOCATION OF UTILITIES.
4. CONTRACTOR SHALL BE RESPONSIBLE FOR PROTECTING ALL EXISTING IMPROVEMENTS IN THE CONSTRUCTION OF THIS PROJECT. THE CONTRACTOR IS RESPONSIBLE FOR REPAIRS OF DAMAGE TO ANY EXISTING IMPROVEMENTS DURING CONSTRUCTION. REPAIRS SHALL BE EQUAL TO OR BETTER THAN CONDITION PRIOR TO CONSTRUCTION.
5. ALL DIMENSIONS MUST BE VERIFIED ON-SITE AND THE CONTRACTOR IS RESPONSIBLE FOR NOTIFYING THE LANDSCAPE ARCHITECT OF ANY DISCREPANCIES BEFORE PROCEEDING WITH THE WORK.
6. ALL DIMENSIONS ARE TAKEN PERPENDICULAR TO WALL, CURB, P.O.B., CENTERLINE OR STATIONING UNLESS OTHERWISE NOTED.
7. ALL PAVING AND EARTHWORK OPERATIONS SHALL CONFORM TO THE PROJECT GEOTECHNICAL REPORT.
8. BOUNDARY SURVEY: REFER TO THE BOUNDARY SURVEY AND PLAT TO VERIFY PROPERTY LINES AND EASEMENT LOCATIONS.
9. CONTRACTOR TO PROVIDE EXPANSION JOINTS IN ALL CASES WHERE CONCRETE FLATWORK MEETS VERTICAL STRUCTURES SUCH AS WALLS, CURBS, STEPS AND BUILDING OR WHERE CONCRETE ABUTS UTILITY VAULTS OR BOXES.
10. CONTRACTOR TO VERIFY LOCATIONS OF ALL SITE IMPROVEMENTS INSTALLED UNDER OTHER SECTIONS. IF ANY PART OF THIS PLAN CAN NOT BE FOLLOWED DUE TO SITE CONDITIONS CONTACT LANDSCAPE ARCHITECT FOR INSTRUCTION PRIOR TO COMMENCING WORK.
11. ALL TESTING SHALL BE PERFORMED BY A QUALIFIED TESTING LABORATORY, EMPLOYED AND PAID DIRECTLY BY THE OWNER. TESTING SHALL BE PERFORMED, AT A MINIMUM, IN ACCORDANCE WITH THE RECOMMENDATIONS IN THE GEOTECHNICAL REPORT. IN THE EVENT THE RESULTS OF THE INITIAL TESTING DO NOT COMPLY WITH THE PLANS AND THE SPECIFICATIONS, SUBSEQUENT TEST NECESSARY TO DETERMINE THE ACCEPTABILITY OF CONSTRUCTION SHALL BE AT THE CONTRACTOR'S EXPENSE. PAVEMENT FOUND TO BE DEFICIENT IN STRENGTH OR THICKNESS SHALL BE REMOVED AND REPLACED SOLELY AT THE EXPENSE OF THE CONTRACTOR.

GRADING NOTES:

1. ANY EXISTING AND/OR ON-SITE CONDITIONS WHICH VARY FROM THOSE SHOWN ON DRAWINGS SHALL BE IMMEDIATELY BROUGHT TO THE ATTENTION OF THE LANDSCAPE ARCHITECT.
2. ALL GRADING SHALL PROVIDE FOR POSITIVE RUNOFF OF WATER WITHOUT LOW SPOTS OR POCKETS. FLOW LINES SHALL BE ACCURATELY SET AND SHALL NOT BE LESS THAN 0.5% GRADIENT UNLESS OTHERWISE NOTED. CONTRACTOR SHALL BE RESPONSIBLE FOR POSITIVE DRAINAGE IN ALL PLANTING AREAS.
3. GRADING FOR THE FLATWORK IMPROVEMENTS SHALL HAVE A MAXIMUM CROSS SLOPE OF 2% IN THE DIRECTION OF THE DOWNHILL SLOPE. THE LONGITUDINAL SLOPE OF THE WALKS SHALL BE NO GREATER THAN 5%, U.N.O. ALL GRADES SHALL BE FINISHED TO A SMOOTH, FLOWING CONTOUR, MAINTAINING EXISTING FLOW PATTERNS UNLESS DIRECTED OTHERWISE.
4. REFER TO GEOTECHNICAL ENGINEER AND GEOTECH REPORT FOR INFORMATION ON SUBSURFACE MATERIALS, TOPSOIL, STRUCTURAL MATERIAL, DEEP FILLS, EXCAVATION, AND FOUNDATIONS.
5. CONTRACTOR IS RESPONSIBLE FOR REMOVAL OF ALL CLEARED BRUSH, DEBRIS, ETC. FROM WITHIN THE LIMITS OF CONSTRUCTION. DISPOSE OF OFF SITE.



March 12, 2025

EST. 1848 GEORGETOWN TEXAS

BGE, Inc.
101 West Louis Henna Blvd, Suite 400, Austin, TX 78728
Tel: 512-879-0400 • www.bgeinc.com
TBPE Registration No. F-1046

GENERAL NOTES

L0.02

SHEET 2 OF 2

SHEET NO.
407

GENERAL LANDSCAPE SPECIFICATIONS:

1. SCOPE OF WORK:

1.1. THE WORK CONSISTS OF FURNISHING ALL LABOR, MATERIALS, EQUIPMENT, TOOLS, TRANSPORTATION, AND ANY OTHER APPURTENANCES NECESSARY FOR THE COMPLETION OF THIS PROJECT AS SHOWN ON THE DRAWINGS, AS INCLUDED IN THE PLANT LIST, AND AS HEREIN SPECIFIED.

1.2. WORK SHALL INCLUDE MAINTENANCE AND WATERING OF ALL PLANTING AREAS OF THIS CONTRACT UNTIL CERTIFICATION OF ACCEPTABILITY BY THE OWNER.

2. PROTECTION OF EXISTING STRUCTURES

2.1. ALL EXISTING BUILDINGS, WALKS, WALLS, PAVING, PIPING, AND OTHER ITEMS OF CONSTRUCTION AND PLANTING ALREADY COMPLETED OR ESTABLISHED SHALL BE PROTECTED FROM DAMAGE BY THIS CONTRACTOR UNLESS OTHERWISE SPECIFIED. ALL DAMAGE RESULTING FROM NEGLIGENCE SHALL BE REPAIRED OR REPLACED TO THE SATISFACTION OF THE OWNER.

3. PROTECTION OF EXISTING PLANT MATERIALS OUTSIDE LIMIT OF WORK

3.1. THE CONTRACTOR SHALL BE RESPONSIBLE FOR ALL UNAUTHORIZED CUTTING OR DAMAGE OF TREES AND SHRUBS EXISTING OR OTHERWISE, CAUSED BY CARELESS OPERATION OF EQUIPMENT, STOCKPILING OF MATERIALS, ETC. THIS SHALL INCLUDE COMPACTION BY DRIVING OR PARKING INSIDE THE DRIP-LINE OR THE SPILLING OF OIL, GASOLINE, OR OTHER DELETERIOUS MATERIALS WITHIN THE DRIP-LINE. NO MATERIALS SHALL BE BURNED WHERE THE HEAT WILL DAMAGE ANY PLANT. TREES KILLED OR DAMAGED SO THAT THEY ARE MISSHAPEN AND/ OR UNSIGHTLY SHALL BE REPLACED AT THE COST TO THE CONTRACTOR OF TWO HUNDRED DOLLARS ($200) PER CALIPER INCH ON AN ESCALATING SCALE WHICH ADDS AN ADDITIONAL TWENTY (20) PERCENT PER INCH OVER FOUR (4) INCHES CALIPER AS FIXED AND AGREED LIQUIDATED DAMAGES. CALIPER SHALL BE MEASURED AT SIX (6) INCHES ABOVE GROUND LEVEL FOR TREES UP TO AND INCLUDING FOUR (4) INCHES IN CALIPER AND AT TWELVE (12) INCHES ABOVE GROUND LEVEL FOR TREES OVER FOUR (4) INCHES IN CALIPER.

4. MATERIALS:

4.1. SAMPLES OF MATERIALS AS LISTED BELOW SHALL BE SUBMITTED FOR APPROVAL, ON THE SITE OR AS OTHERWISE DETERMINED BY THE OWNER. UPON APPROVAL OF SAMPLES, DELIVERY OF MATERIALS MAY BEGIN.

- MATERIALS: SAMPLES
- MULCH: ONE (1) CUBIC FOOT
- TOPSOIL: ONE (1) CUBIC YARD
- PLANTS: ONE (1) OF EACH VARIETY

5. PLANT MATERIALS:

5.1. PLANT SPECIES AND SIZE SHALL CONFORM TO THOSE INDICATED ON THE DRAWINGS. NOMENCLATURE SHALL CONFORM TO "STANDARDIZED PLANT NAMES", 1942 EDITION. ALL NURSERY STOCK SHALL BE IN ACCORDANCE WITH GRADES AND STANDARDS AS STATED IN THE LATEST EDITION OF "AMERICAN STANDARD FOR NURSERY STOCK" BY THE AMERICAN ASSOCIATION OF NURSERYMEN. ALL PLANTS SHALL BE FRESHLY DUG, SOUND, HEALTHY, VIGOROUS, WELL-BRANCHED AND FREE OF DISEASE AND INSECTS, INSECT EGGS AND LARVAE AND SHALL HAVE ADEQUATE ROOT SYSTEMS. TREES FOR PLANTING IN ROWS SHALL BE UNIFORM IN SIZE AND SHAPE. ALL MATERIALS SHALL BE SUBJECT TO APPROVAL BY THE OWNER. WHERE ANY REQUIREMENTS ARE OMITTED FROM THE PLANT LIST, THE PLANTS FURNISHED SHALL BE NORMAL FOR THE VARIETY. PLANTS SHALL BE PRUNED PRIOR TO DELIVERY ONLY UPON THE APPROVAL OF THE OWNER.

5.2. MEASUREMENTS: THE HEIGHT AND/OR WIDTH OF TREES SHALL BE MEASURED FROM THE GROUND OR ACROSS THE NORMAL SPREAD OF BRANCHES WITH THE PLANTS IN THEIR NORMAL POSITION. THIS MEASUREMENT SHALL NOT INCLUDE THE IMMEDIATE TERMINAL GROWTH. PLANTS LARGER IN SIZE THAN THOSE SPECIFIED IN THE PLANT LIST MAY BE USED IF APPROVED BY THE OWNER. IF THE USE OF LARGER PLANTS IS APPROVED, THE BALL OF EARTH OR SPREAD OF ROOTS SHALL BE INCREASED IN PROPORTION TO THE SIZE OF THE PLANT.

5.3. INSPECTION: PLANTS SHALL BE SUBJECT TO INSPECTION AND APPROVAL AT THE PLACE OF GROWTH, OR UPON DELIVERY TO THE SITE, AS DETERMINED BY THE OWNER, FOR QUALITY, SIZE, AND VARIETY; SUCH APPROVAL SHALL NOT IMPAIR THE RIGHT OF INSPECTION AND REJECTION AT THE SITE DURING PROGRESS OF THE WORK OR AFTER COMPLETION FOR SIZE AND CONDITION OF BALLS OR ROOTS, LATENT DEFECTS OR INJURIES. REJECTED PLANTS SHALL BE REMOVED IMMEDIATELY FROM THE SITE. NOTICE REQUESTING INSPECTION SHALL BE SUBMITTED IN WRITING BY THE CONTRACTOR AT LEAST ONE (1) WEEK PRIOR TO ANTICIPATED DATE.

6. TOPSOIL:

6.1. ASTM D5268, NATURAL, FRIABLE, FERTILE, FINE LOAMY SOIL POSSESSING CHARACTERISTICS OF REPRESENTATIVE TOPSOIL IN THE VICINITY THAT PRODUCES HEAVY GROWTH. TOPSOIL SHALL HAVE A PH RANGE OF 5.5 TO 8.5 PERCENT, FREE FROM SUBSOIL, OBJECTIONABLE WEEDS, LITTER, SODS, STIFF CLAY, STONES LARGER THAN 1-INCH IN DIAMETER, STUMPS, ROOTS, TRASH, HERBICIDES, TOXIC SUBSTANCES, OR ANY OTHER MATERIAL WHICH MAY BE HARMFUL TO PLANT GROWTH OR HINDER PLANTING OPERATIONS. TOP SOIL SHALL CONTAIN A MINIMUM OF THREE PERCENT ORGANIC MATERIAL.

6.2. SALVAGED OR EXISTING TOPSOIL: REUSE SUITABLE TOPSOIL STOCKPILED ON-SITE OR EXISTING TOPSOIL UNDISTURBED BY GRADING OR EXCAVATION OPERATIONS. CLEAN TOPSOIL OF ROOTS, PLANTS, SOD, STONES, CLAY LUMPS, AND OTHER EXTRANEOUS MATERIALS HARMFUL TO PLANT GROWTH.

6.3. EXISTING SOIL WHERE SHOWN ON LANDSCAPE PLANTING DETAIL SHALL BE TOPSOIL AS SPECIFIED AND DEFINED HEREIN.

6.4. IMPORTED TOPSOIL: SUPPLEMENT SALVAGED TOPSOIL WITH IMPORTED TOPSOIL FROM OFF-SITE SOURCES WHEN EXISTING QUANTITIES ARE INSUFFICIENT.

6.5. OBTAIN TOPSOIL DISPLACED FROM NATURALLY WELL-DRAINED SITES WHERE TOPSOIL OCCURS AT LEAST 6 INCHES DEEP; DO NOT OBTAIN FROM AGRICULTURAL LAND, BOGS, OR MARSHES.

6.6. VERIFY BORROW AND DISPOSAL SITES ARE PERMITTED AS REQUIRED BY STATE AND LOCAL REGULATIONS. OBTAIN WRITTEN CONFIRMATION THAT PERMITS ARE CURRENT AND ACTIVE.

6.7. OBTAIN PERMITS REQUIRED BY STATE AND LOCAL REGULATIONS FOR TRANSPORTING TOPSOIL. PERMITS SHALL BE CURRENT AND ACTIVE.

6.8. PROVIDE REPRESENTATIVE TOPSOIL TESTS FOR COMPLIANCE OF ACTUAL MATERIAL USED TO SPECIFIED REQUIREMENTS. SUBMIT FOR OWNER APPROVAL.

REGISTERED LANDSCAPE ARCHITECT
MICHAEL L. STOFFLE
3743
STATE OF TEXAS

March 12, 2025

EST.1848 GEORGETOWN TEXAS

BGE, Inc.
101 West Louis Henna Blvd, Suite 400, Austin, TX 78728
Tel: 512-879-0400 • www.bgeinc.com
TBPE Registration No. F-1046

LANDSCAPE SPECIFICATIONS

L0.03

SHEET NO.
408

GENERAL LANDSCAPE SPECIFICATIONS CONTINUED:

6.8.C. PLANTING SOIL MIX

6.8.C.A. PLANTING MIX MAY BE PROVIDED BY LIVING EARTH OR MINICK MATERIALS OR APPROVED EQUAL.

6.8.C.B. PLANTING MEDIUM CONTAINING 34 PERCENT SPECIFIED TOPSOIL MIXED WITH 33 PERCENT COMPOST 33 PERCENT SHARP WASHED SAND.
FINISHED GRADES OF PLANTING BEDS TO BE 3" BELOW FINISHED GRADE OF ADJACENT PAVING OR AS SHOWN ON PLAN.

6.8.D. LANDSCAPE SOIL MIX

6.8.D.A. LANDSCAPE MEDIUM CONTAINING 40 PERCENT TOPSOIL MIXED WITH 40 PERCENT SAND AND 20 PERCENT COMPOST.

7. WATER:

7.1. WATER NECESSARY FOR PLANTING AND MAINTENANCE SHALL BE OF SATISFACTORY QUALITY TO SUSTAIN AN ADEQUATE GROWTH OF PLANTS AND SHALL NOT CONTAIN HARMFUL, NATURAL OR MAN-MADE ELEMENTS DETRIMENTAL TO PLANTS. WATER MEETING THE ABOVE STANDARD SHALL BE OBTAINED ON THE SITE FROM THE OWNER, IF AVAILABLE, AND THE CONTRACTOR SHALL BE RESPONSIBLE TO MAKE ARRANGEMENTS FOR ITS USE BY TANKS, HOSES, SPRINKLERS, ETC. IF SUCH WATER IS NOT AVAILABLE AT THE SITE, THE CONTRACTOR SHALL PROVIDE SUCH SATISFACTORY WATER FROM SOURCES OFF THE SITE AT NO ADDITIONAL COST TO THE OWNER.

8. COMMERCIAL FERTILIZER:

8.1. COMMERCIAL FERTILIZER SHALL BE A COMPLETE FORMULA; IT SHALL BE UNIFORM IN COMPOSITION, DRY AND FREE FLOWING. THIS FERTILIZER SHALL BE DELIVERED TO THE SITE IN THE ORIGINAL UNOPENED CONTAINERS, EACH BEARING THE MANUFACTURER'S GUARANTEED STATEMENT OF ANALYSIS.

8.2. FIFTY PERCENT (50%) OF THE NITROGEN SHALL BE DERIVED FROM NATURAL ORGANIC SOURCES. THE FOLLOWING FERTILIZERS SHALL BE USED AND APPLIED AT RATES AS SUGGESTED BY MANUFACTURER'S SPECIFICATIONS:

8.2.A. SHRUBS AND TREES: MILORGRANITE OR APPROVED EQUAL

8.3. IN ADDITION TO SURFACE APPLIED FERTILIZERS, ALL CONTAINER GROWN AND FIELD GROWN PLANT MATERIAL SHALL RECEIVE "AGRIFORM" PLANTING TABLETS 24-10-5 FORMULA, 21 GRAM OR EQUAL. THESE TABLETS SHALL BE PLACED AT A DEPTH OF ROOT BALL AT THE RATE AS SPECIFIED BY MANUFACTURER.

8.4. MULCH MATERIAL SHALL BE MOISTENED AT THE TIME OF APPLICATION TO PREVENT WIND DISPLACEMENT, AND APPLIED AT A DEPTH OF 3 INCHES. SEE PLANT LIST FOR TYPE OF MATERIAL AND GRADE.

9. DIGGING & HANDLING:

9.1. PROTECT ROOTS OR BALLS OF PLANTS AT ALL TIMES FROM SUN AND DRYING WINDS, WATER AND FREEZING, AS NECESSARY UNTIL PLANTING. PLANT MATERIALS SHALL BE ADEQUATELY PACKED TO PREVENT BREAKAGE AND DRYING OUT DURING TRANSIT. TREES TRANSPORTED MORE THAN TEN (10) MILES OR WHICH ARE NOT PLANTED WITHIN THREE (3) DAYS OF DELIVERY TO SITE SHALL BE SPRAYED WITH AN ANTI-TRANSPLANT PRODUCT ("WILTPRUF" OR EQUAL) TO MINIMIZE TRANSPIRATIONAL WATER LOSS.

9.2. BALLED AND BURLAP PLANTS (B&B) SHALL BE DUG WITH FIRM, NATURAL BALLS OF SOIL OF SUFFICIENT SIZE TO ENCOMPASS THE FIBROUS AND FEEDING ROOTS OF THE PLANTS. NO PLANTS MOVED WITH A BALL SHALL BE PLANTED IF THE BALL IS CRACKED OR BROKEN. PLANTS BALLED AND BURLAP OR CONTAINER GROWN SHALL NOT BE HANDLED BY STEMS.

9.3. PLANTS MARKED "BR" IN THE PLANT LIST SHALL BE DUG WITH BARE ROOTS. THE ROOTS SHALL NOT BE CUT WITHIN THE MINIMUM SPREAD SPECIFIED IN THE PLANT LIST. CARE SHALL BE EXERCISED THAT THE ROOTS DO NOT DRY OUT IN MOVING AND PRIOR TO PLANTING.

9.4. PROTECTION OF PALMS (IF APPLICABLE): ONLY A MINIMUM OF FRONDS SHALL BE REMOVED FROM THE CROWN OF THE PALM TREES TO FACILITATE MOVING AND HANDLING. CLEAR TRUNK (CT) SHALL BE AS SPECIFIED AFTER THE MINIMUM OF FRONDS HAVE BEEN REMOVED. ALL PALMS SHALL BE BRACED PER DETAIL.

9.5. EXCAVATION OF TREE PITS SHALL BE DONE USING EXTREME CARE TO AVOID DAMAGE TO SURFACE AND SUBSURFACE ELEMENTS SUCH AS UTILITIES OR HARDSCAPE ELEMENTS, FOOTERS AND PREPARED SUB- BASES.

10. CONTAINER GROWN STOCK:

10.1. ALL CONTAINER GROWN MATERIAL SHALL BE HEALTHY, VIGOROUS, WELL-ROOTED PLANTS AND ESTABLISHED IN THE CONTAINER IN WHICH THEY ARE SOLD. THE PLANTS SHALL HAVE TOPS WHICH ARE OF GOOD QUALITY AND ARE IN A HEALTHY GROWING CONDITION.

10.2. AN ESTABLISHED CONTAINER GROWN PLANT SHALL BE TRANSPLANTED INTO A CONTAINER AND GROWN IN THAT CONTAINER SUFFICIENTLY LONG FOR THE NEW FIBROUS ROOTS TO HAVE DEVELOPED SO THAT THE ROOT MASS WILL RETAIN ITS SHAPE AND HOLD TOGETHER WHEN REMOVED FROM THE CONTAINER. CONTAINER GROWN STOCK SHALL NOT BE HANDLED BY THEIR STEMS.

10.3. PLANT ROOTS BOUND IN CONTAINERS SHALL NOT BE ACCEPTABLE.

10.4. SUBSTITUTION OF NON-CONTAINER GROWN MATERIAL FOR MATERIAL EXPLICITLY SPECIFIED TO BE CONTAINER GROWN WILL NOT BE PERMITTED UNLESS WRITTEN APPROVAL IS OBTAINED FROM THE OWNER AND LANDSCAPE ARCHITECT.

11. COLLECTED STOCK:

11.1. WHEN THE USE OF COLLECTED STOCK IS PERMITTED AS INDICATED ON THE PLANT LIST SCHEDULE, THE MINIMUM SIZES OF ROOTBALLS SHALL BE EQUAL TO THAT SPECIFIED FOR THE NEXT LARGER SIZE OF NURSERY GROWN STOCK OF THE SAME VARIETY.

12. NATIVE STOCK:

12.1. PLANTS COLLECTED FROM WILD OR NATIVE STANDS SHALL BE CONSIDERED NURSERY GROWN WHEN THEY HAVE BEEN SUCCESSFULLY REESTABLISHED IN A NURSERY ROW AND GROWN UNDER REGULAR NURSERY CULTURAL PRACTICES FOR A MINIMUM OF TWO (2) GROWING SEASONS AND HAVE ATTAINED ADEQUATE ROOT AND TOP GROWTH TO INDICATE FULL RECOVERY FROM TRANSPLANTING INTO THE NURSERY ROW.

13. TREES

13.1 CANOPY TREES SHALL BE HEALTHY, VIGOROUS, FULL-BRANCHED ON ALL SIDES, WELL-SHAPED, SPECIMEN QUALITY, SYMMETRICAL, AND SHALL MEET THE TRUNK DIAMETER, HEIGHT AND SPREAD REQUIREMENTS AS SPECIFIED. SINGLE TRUNK TREES SHALL HAVE A STRAIGHT TRUNK. TREES WHICH HAVE A DAMAGED OR CROOKED LEADER OR TRUNK OR ARE ONE-SIDED OR DO NOT HAVE A SYMMETRICAL BRANCH STRUCTURE AND CROWN WILL BE REJECTED. BALL SHALL BE FIRM, NEAT, SLIGHTLY TAPERED AND WELL BURLAPPED. TREES WITH ABRASIONS ON THE BARK, DISFIGURING KNOTS, OR WOUNDS OVER TWO INCHES WHICH HAVE NOT HEALED WILL BE REJECTED. TREE BALL SIZES SHALL BE OUTLINED IN ANSI Z60.1 - 1980.

13.2 ORNAMENTAL TREES SHALL BE HEALTHY, VIGOROUS, FULL-BRANCHED ON ALL SIDES, WELL-SHAPED, SPECIMEN QUALITY, SYMMETRICAL, AND SHALL MEET THE TRUNK DIAMETER, HEIGHT AND SPREAD REQUIREMENTS AS SPECIFIED.

SINGLE TRUNK ORNAMENTAL TREES SHALL HAVE STRAIGHT TRUNKS WITH BRANCHING BEGINNING A MINIMUM OF FORTY-TWO INCHES ABOVE THE TOP OF THE BALL.

MULTI-TRUNK ORNAMENTAL TREES SHALL BE PRUNED SO ALL SUCKER TYPE BRNACHIN IS REMOVED FROM AROUND TRUNK CANES AS WELL AS EXTRANEOUS BRANCHING ON TRUNK CANES BELOW CROWN ON TREE. ALL MULTI-TRUNK TREES WILL CONFORM TO THE NUMBER OF CANES/AND OR THE CALIPER SPECIFIED.

14. PLANT MATERIALS LIST

14.1. QUANTITIES NECESSARY TO COMPLETE THE WORK ON THE DRAWINGS SHALL BE FURNISHED BY THE CONTRACTOR. QUANTITY ESTIMATES HAVE BEEN MADE CAREFULLY, BUT THE LANDSCAPE ARCHITECT OR OWNER ASSUMES NO LIABILITY FOR OMISSIONS OR ERRORS. SHOULD A DISCREPANCY OCCUR BETWEEN THE BIDDERS TAKE OFF AND THE PLANT LIST QUANTITY, THE LANDSCAPE ARCHITECT SHALL BE NOTIFIED FOR CLARIFICATION PRIOR TO THE SUBMISSIONS OF BIDS. ALL DIMENSIONS AND/OR SIZES SPECIFIED SHALL BE THE MINIMUM ACCEPTABLE SIZE.

REGISTERED LANDSCAPE ARCHITECT
MICHAEL L. STOFFLE
3743
STATE OF TEXAS

March 12, 2025

EST.1848 GEORGETOWN TEXAS

BGE, Inc.
101 West Louis Henna Blvd, Suite 400, Austin, TX 78728
Tel: 512-879-0400 • www.bgeinc.com
TBPE Registration No. F-1046

LANDSCAPE SPECIFICATIONS

L0.04

SHEET NO.
409

GENERAL LANDSCAPE SPECIFICATIONS CONTINUED:

14. FINE GRADING

14.1. FINE GRADING UNDER THIS CONTRACT SHALL CONSIST OF FINAL FINISHED GRADING OF LAWN AND PLANTING AREAS THAT HAVE BEEN ROUGH GRADED BY OTHERS. BERMING AS SHOWN ON THE DRAWINGS SHALL BE THE RESPONSIBILITY OF THE LANDSCAPE CONTRACTOR, UNLESS OTHERWISE NOTED.

14.2. THE LANDSCAPE CONTRACTOR SHALL FINE GRADE THE LAWN AND PLANTING AREAS TO BRING THE ROUGH GRADE UP TO FINAL FINISHED GRADE ALLOWING FOR THICKNESS OF SOD AND/OR MULCH DEPTH. THIS CONTRACTOR SHALL FINE GRADE BY HAND AND/OR WITH ALL EQUIPMENT NECESSARY INCLUDING A GRADING TRACTOR WITH FRONT-END LOADER FOR TRANSPORTING SOIL WITHIN THE SITE.

14.3. ALL PLANTING AREAS SHALL BE GRADED AND MAINTAINED TO ALLOW FREE FLOW OF SURFACE WATER. AREAS ADJACENT TO BUILDINGS SHALL SLOPE AWAY FROM THE BUILDINGS.

15. PLANTING PROCEDURES

15.1. CLEANING UP BEFORE COMMENCING WORK: THE CONTRACTOR SHALL CLEAN UP JOB SITE AND SURROUNDING AREAS OF ALL RUBBISH OR OBJECTIONABLE MATTER. ALL MORTAR, CEMENT, AND TOXIC MATERIAL SHALL BE REMOVED FROM THE SURFACE OF ALL PLANT BEDS. THESE MATERIALS SHALL NOT BE MIXED WITH THE SOIL. SHOULD THE CONTRACTOR FIND SUCH CONDITIONS DURING EXCAVATION WHICH WILL IN ANY WAY ADVERSELY AFFECT THE PLANT GROWTH, HE SHALL IMMEDIATELY CALL IT TO THE ATTENTION OF THE LANDSCAPE ARCHITECT OR OWNER. FAILURE TO DO SO BEFORE PLANTING SHALL MAKE THE CORRECTIVE MEASURES THE RESPONSIBILITY OF THE CONTRACTOR.

15.2. VERIFY LOCATIONS OF ALL UTILITIES, CONDUITS, SUPPLY LINES AND CABLES, INCLUDING BUT NOT LIMITED TO: ELECTRIC, GAS (LINES AND TANKS), WATER, SANITARY SEWER, STORMWATER LINES, CABLE AND `TELEPHONE. PROPERLY MAINTAIN AND PROTECT EXISTING UTILITIES.

15.3. SUBGRADE EXCAVATION: SITE CONTRACTOR IS RESPONSIBLE TO REMOVE ALL EXISTING AND IMPORTED LIMEROCK AND LIMEROCK SUB-BASE FROM ALL LANDSCAPE PLANTING AREAS TO A MINIMUM DEPTH OF 36". SITE CONTRACTOR IS RESPONSIBLE TO BACKFILL THESE PLANTING AREAS TO ROUGH FINISHED GRADE WITH CLEAN TOPSOIL FROM AN ON-SITE SOURCE OR AN IMPORTED SOURCE. IF LIMEROCK OR OTHER ADVERSE CONDITIONS OCCUR IN PLANTED AREAS AFTER 36" DEEP EXCAVATION BY SITE CONTRACTOR, AND POSITIVE DRAINAGE CAN NOT BE ACHIEVED, LANDSCAPE CONTRACTOR SHALL CONTACT LANDSCAPE ARCHITECT OR OWNER.

15.4. FURNISH NURSERY'S CERTIFICATE OF COMPLIANCE WITH ALL REQUIREMENTS AS HEREIN SPECIFIED AND REQUIRED. INSPECT AND SELECT PLANT MATERIALS BEFORE PLANTS ARE DUG AT NURSERY OR GROWING SITE.

15.5. COMPLY WITH APPLICABLE FEDERAL, STATE, COUNTY, AND LOCAL REGULATIONS GOVERNING LANDSCAPE MATERIALS AND WORK. CONFORM TO ACCEPTED HORTICULTURAL PRACTICES AS USED IN THE TRADE. PLANTS SHALL BE PROTECTED UPON ARRIVAL AT THE SITE BY BEING THOROUGHLY WATERED AND PROPERLY MAINTAINED UNTIL PLANTED. PLANTS SHALL NOT REMAIN UNPROTECTED FOR A PERIOD EXCEEDING TWENTY-FOUR (24) HOURS. AT ALL TIMES WORKMANLIKE METHODS CUSTOMARY IN GOOD HORTICULTURAL PRACTICES SHALL BE EXERCISED.

15.6. THE WORK SHALL BE COORDINATED WITH OTHER TRADES TO PREVENT CONFLICTS. COORDINATE THE PLANTING WITH THE IRRIGATION WORK TO ASSURE AVAILABILITY OF WATER AND PROPER LOCATION OF IRRIGATION ITEMS AND PLANTS.

15.7. ALL PLANTING PITS SHALL BE EXCAVATED TO SIZE AND DEPTH IN ACCORDANCE WITH THE USA STANDARD FOR NURSERY STOCK 260.1, UNLESS SHOWN OTHERWISE ON THE DRAWINGS, AND BACKFILLED WITH THE PREPARED PLANTING SOIL AS SPECIFIED HEREIN BEFORE (SECTION H). TEST ALL TREE PITS WITH WATER BEFORE PLANTING TO ASSURE PROPER PERCOLATION IS AVAILABLE. NO ALLOWANCE WILL BE MADE FOR LOST PLANTS DUE TO IMPROPER DRAINAGE. IF POOR DRAINAGE EXISTS,UTILIZE PLANTING DETAIL THAT ADDRESSES THIS CONDITION. TREES SHALL BE SET PLUMB AND HELD IN POSITION UNTIL THE PLANTING MIXTURE HAS BEEN FLUSHED INTO PLACE WITH A SLOW, FULL HOSE STREAM. ALL PLANTING SHALL BE PERFORMED BY PERSONNEL FAMILIAR WITH PLANTING PROCEDURE AND UNDER THE SUPERVISION OF A QUALIFIED PLANTING FOREMAN. PROPER "JETTING IN" SHALL BE ASSURED TO ELIMINATE AIR POCKETS AROUND THE ROOTS. "JET STICK" OR EQUAL IS RECOMMENDED.

15.8. TAKE ALL NECESSARY PRECAUTIONS TO AVOID DAMAGE TO BUILDINGS AND BUILDING STRUCTURES WHILE INSTALLING TREES.

15.9. SOIL MIXTURE SHALL BE AS SPECIFIED IN SECTION H OF THESE SPECIFICATIONS. IN ADDITION, EACH PLANTING PIT SHALL RECEIVE 21-GRAM "AGRIFORM" PLANTING TABLETS PER MANUFACTURER'S SPECIFICATIONS OR AS FOLLOWS:

15.9.A. TWO (2) TABLETS PER 1 GAL. PLANT

15.9.B. THREE (3) TABLETS PER 3 GAL. PLANT

15.9.C. FOUR (4) TABLETS PER 10 GAL. PLANT

15.9.D. TWO (2) TABLETS PER 1/2" OF TRUNK CALIPER

15.10. TREES AND SHRUBS SHALL BE SET STRAIGHT AND AT SUCH A LEVEL THAT AFTER SETTLEMENT, THE PLANT CROWN WILL STAND TWO (2) TO THREE (3) INCHES ABOVE GRADE. EACH PLANT SHALL BE SET IN THE CENTER OF THE PIT. PLANTING SOIL MIXTURE SHALL BE BACKFILLED AND THOROUGHLY TAMPED AROUND THE BALL AND SHALL BE SETTLED BY WATER AFTER TAMPING.

15.11. FILL HOLE WITH SOIL MIXTURE, MAKING CERTAIN ALL SOIL IS SATURATED. TO DO THIS, FILL HOLE WITH WATER AND ALLOW TO SOAK MINIMUM TWENTY (20) MINUTES, STIRRING IF NECESSARY TO GET SOIL THOROUGHLY WET. PACK LIGHTLY WITH FEET. ADD MORE WET SOIL MIXTURE. DO NOT COVER TOP OF BALL WITH SOIL MIXTURE, ONLY WITH MULCH. ALL BURLAP, ROPE, WIRES, ETC., SHALL BE REMOVED FROM THE SIDES AND TOPS OF BALLS, BUT NO BURLAP SHALL BE PULLED FROM UNDERNEATH.

15.12. PRUNING: EACH TREE SHALL BE PRUNED TO PRESERVE THE NATURAL CHARACTER OF THE PLANT AS SHOWN ON THE DRAWINGS. ALL SOFT WOOD OR SUCKER GROWTH AND ALL BROKEN OR BADLY DAMAGED BRANCHES SHALL BE REMOVED WITH A CLEAN CUT.

15.13. TREE GUYING AND BRACING SHALL BE INSTALLED BY THE LANDSCAPE CONTRACTOR IN ACCORDANCE WITH THE PLANS TO INSURE STABILITY AND MAINTAIN TREES IN AN UPRIGHT POSITION. IF THE LANDSCAPE CONTRACTOR AND OWNER DECIDE TO WAIVE THE TREE GUYING AND BRACING, THE OWNER SHALL NOTIFY THE LANDSCAPE ARCHITECT IN WRITING OF THEIR INTENTIONS AND AGREE TO HOLD HARMLESS THE LANDSCAPE ARCHITECT IN THE EVENT ANY TREES FALL DOWN AND DAMAGE PERSON OR PROPERTY.

15.14. MULCHING: PROVIDE A THREE (3) INCH MINIMUM LAYER OF SPECIFIED MULCH OVER THE ENTIRE AREA OF EACH TREE PLANTING BED.

15.15. HERBICIDE WEED CONTROL: ALL PLANT BEDS SHALL BE KEPT FREE OF NOXIOUS WEEDS UNTIL FINAL ACCEPTANCE OF WORK. IF DIRECTED BY THE OWNER, AN APPROVED CHEMICAL HERBICIDE SHALL BE APPLIED FOR WEED CONTROL BY QUALIFIED PERSONNEL TO ALL PLANTING AREAS IN SPOT APPLICATIONS PER MANUFACTURER'S PRECAUTIONS AND SPECIFICATIONS. PRIOR TO FINAL INSPECTION, TREAT ALL PLANTING BEDS WITH AN APPROVED PRE-EMERGENT HERBICIDE AT AN APPLICATION RATE RECOMMENDED BY THE MANUFACTURER.

16. CLEANUP:

16.1. UPON COMPLETION OF ALL PLANTING WORK AND BEFORE FINAL ACCEPTANCE, THE CONTRACTOR SHALL REMOVE ALL MATERIAL, EQUIPMENT, AND DEBRIS RESULTING FROM HIS WORK. ALL PAVED AREAS SHALL BE BROOM CLEANED AND THE SITE LEFT IN A NEAT AND ACCEPTABLE CONDITION AS APPROVED BY THE OWNER'S AUTHORIZED REPRESENTATIVE.

REGISTERED LANDSCAPE ARCHITECT
MICHAEL L. STOFFLE
3743
STATE OF TEXAS

March 12, 2025

EST.1848 GEORGETOWN TEXAS

BGE, Inc.
101 West Louis Henna Blvd, Suite 400, Austin, TX 78728
Tel: 512-879-0400 • www.bgeinc.com
TBPE Registration No. F-1046

LANDSCAPE SPECIFICATIONS

L0.05

CK
DW
CK
DW

GENERAL LANDSCAPE SPECIFICATIONS CONTINUED:

17. GUARANTEE:

17.1. THE LIFE AND SATISFACTORY CONDITION OF ALL PLANT MATERIAL INSTALLED BY THE LANDSCAPE CONTRACTOR SHALL BE GUARANTEED BY THE CONTRACTOR FOR A MINIMUM OF ONE (1) CALENDAR YEAR COMMENCING AT THE TIME OF CERTIFICATION OF ACCEPTABILITY BY THE LANDSCAPE ARCHITECT OR OWNER.

17.2. THE LIFE AND SATISFACTORY CONDITION OF ALL OTHER PLANT MATERIAL (INCLUDING SOD) INSTALLED BY THE LANDSCAPE CONTRACTOR SHALL BE GUARANTEED BY THE CONTRACTOR FOR A MINIMUM OF 90 CALENDAR DAYS, COMMENCING AT THE TIME OF CERTIFICATION OF ACCEPTABILITY BY THE LANDSCAPE ARCHITECT OR OWNER.

17.3. REPLACEMENT: ANY PLANT NOT FOUND IN A HEALTHY GROWING CONDITION AT THE END OF THE GUARANTEE PERIOD SHALL BE REMOVED FROM THE SITE AND REPLACED AS SOON AS WEATHER CONDITIONS PERMIT. ALL REPLACEMENTS SHALL BE PLANTS OF THE SAME KIND AND SIZE AS SPECIFIED IN THE PLANT LIST. THEY SHALL BE FURNISHED PLANTED AND MULCHED AS SPECIFIED UNDER "PLANTING", AT NO ADDITIONAL COST TO THE OWNER.

17.4. IN THE EVENT THE OWNER DOES NOT ENGAGE THE CONTRACTOR FOR LANDSCAPE (AND IRRIGATION) MAINTENANCE, THE CONTRACTOR IS ENCOURAGED TO VISIT THE PROJECT SITE PERIODICALLY DURING THE ONE YEAR WARRANTY PERIOD TO EVALUATE MAINTENANCE PROCEDURES BEING PERFORMED BY THE OWNER. CONTRACTOR SHALL NOTIFY THE OWNER IN WRITING OF MAINTENANCE PROCEDURES OR CONDITIONS WHICH THREATEN VIGOROUS AND HEALTHY PLANT GROWTH. IT IS SUGGESTED SUCH SITE VISITS SHALL BE CONDUCTED A MINIMUM OF ONCE PER MONTH FOR A PERIOD OF TWELVE (12) MONTHS FROM THE DATE OF ACCEPTANCE.

18. FINAL INSPECTION AND ACCEPTANCE OF WORK

18.1. FINAL INSPECTION AT THE END OF THE GUARANTEE PERIOD SHALL BE ON PLANTING, CONSTRUCTION AND ALL OTHER INCIDENTAL WORK PERTAINING TO THIS CONTRACT. ANY REPLACEMENT AT THIS TIME SHALL BE SUBJECT TO THE SAME ONE (1) YEAR GUARANTEE (OR AS SPECIFIED BY THE LANDSCAPE ARCHITECT OR OWNER IN WRITING) BEGINNING WITH THE TIME OF REPLACEMENT AND ENDING WITH THE SAME INSPECTION AND ACCEPTANCE HEREIN DESCRIBED.

LANDSCAPE PAY ITEM CLARIFICATIONS:

ITEM 110 - EXCAVATION WITHIN MEDIAN LANDSCAPE LIMITS INDICATED ON PLANS SHALL BE QUANTIFIED AND TABULATED SEPARATELY FROM THE REST OF THE PROJECT, BUT EXCLUDES MASS GRADING EARTHWORK AND UTILITY EXCAVATION.

ITEM 170 - IRRIGATION SYSTEM SHALL INCLUDE ALL IRRIGATION SYSTEM COMPONENTS FROM POINTS OF CONNECTION TO WATER AND POWER SERVICES, INCLUDING BUT NOT LIMITED TO RELATED TRENCHING, EXCAVATION, SLEEVING, BORING, AND BACKFILL.

ITEM 192 - CANOPY AND ORNAMENTAL TREE BID ITEMS SHALL INCLUDE, BUT ARE NOT LIMITED TO ALL RELATED STAKING, ESTABLISHMENT, REPLACEMENTS, MAINTENANCE AND WARRANTEE. ANY COST OF WATER PRIOR TO FINAL ACCEPTANCE SHALL BE BORNE BY CONTRACTOR SUBSIDIARY TO ITEM 192 ITEMS.

ITEM 402 - TEMPORARY SPECIAL SHORING COSTS ASSOCIATED WITH TRENCHING AND EXCAVATION, IF REQUIRED, SHALL BE SUBSIDIARY TO ITEM 402, TRENCH EXCAVATION PROTECTION.

ITEM 528 - COLORED TEXTURED CONCRETE WITHIN MEDIAN LANDSCAPE LIMITS INDICATED ON PLANS SHALL BE QUANTIFIED AND TABULATED SEPARATELY FROM THE REST OF THE PROJECT AND SHALL INCLUDE BEDDING, BASE COURSE AND RELATED FILTER FABRIC, WHERE APPLICABLE ADJACENT TO TREE SOIL CELLS.

ITEM 556 - THE COST OF ALL FITTINGS, LATERALS, CAPS, PIPE CONNECTORS, FILTER MATERIAL AND FILTER FABRIC SHALL BE SUBSIDIARY TO ITEM 556, PIPE UNDERDRAINS. TRENCH EXCAVATION PROTECTION AND ANY TEMPORARY SPECIAL SHORING ASSOCIATED WITH THE PIPE UNDERDRAINS SHALL BE SUBSIDIARY TO ITEM 556 PIPE UNDERDRAINS.

ITEM 751 - LANDSCAPE MAINTENANCE PERIOD SHALL BE ONE YEAR FROM THE DATE OF DOCUMENTED FINAL ACCEPTANCE BY LANDSCAPE ARCHITECT OR OWNER AND SHALL BE PAID ON A MONTHLY BASIS OF COMPLETION OF THE MAINTENANCE PERIOD TIMEFRAME. LANDSCAPE MAINTENANCE SHALL INCLUDE ONE YEAR REPLACEMENT WARRANTY.

ITEM 329451 - TREE SOIL CELLS SHALL BE PAID ON A PERCENTAGE COMPLETION FOR A LUMP SUM COST AND SHALL INCLUDE, BUT NOT BE LIMITED TO ALL RELATED SUBMITTALS, SHOP DRAWINGS, MOCK-UP(S), INSTALLED SYSTEM COMPONENTS, SOIL BACKFILLS, SUB-GRADE PREPARATIONS, BASES, FILTER FABRICS/GEOTEXTILES, GEOGRIDS, AND WARRANTEE PAID ON A PERCENTAGE OF APPROVED COMPLETION OF THE WORK.

REGISTERED LANDSCAPE ARCHITECT
MICHAEL L. STOFFLE
3744
STATE OF TEXAS

March 12, 2025

EST. 1848
GEORGETOWN
TEXAS

BGE, Inc.
101 West Louis Henna Blvd, Suite 400, Austin, TX 78728
Tel: 512-879-0400 • www.bgeinc.com
TBPE Registration No. F-1046

LANDSCAPE SPECIFICATIONS

L0.06

SHEET 4 OF 4

SHEET NO.
411

CK
DW
CK
DW

PLANTING NOTES

1. ALL PLANT MATERIAL SHALL BE INSTALLED ACCORDING TO SOUND NURSERY PRACTICES AND SHALL MEET ALL STANDARDS AS STATED IN THE LATEST EDITION OF ANSI Z-60.1 "AMERICAN STANDARD FOR NURSERY STOCK" BY THE AMERICAN ASSOCIATION OF NURSERYMEN.

2. NO SUBSTITUTIONS IN PLANT MATERIALS SHALL BE MADE WITHOUT WRITTEN AUTHORIZATION FROM OWNER OR LANDSCAPE ARCHITECT. IN THE EVENT OF DISCREPANCIES BETWEEN THE DRAWING AND THE PLANT LIST, THE DRAWINGS SHALL PREVAIL.

3. LOCATE ALL UTILITIES PRIOR TO ANY DIGGING OPERATIONS. CONTRACTOR SHALL BE RESPONSIBLE FOR ALL DAMAGES AND REPAIRS TO EXISTING UTILITIES INCURRED BY HIS WORK.

4. REFERENCE IRRIGATION PLAN FOR BED IRRIGATION INFORMATION. REFERENCE IRRIGATION AND ENGINEERING CONTRACT DOCUMENTS FOR ADDITIONAL INFORMATION.

5. STAKING AND GUYING METHODS INDICATED IN DRAWING DETAILS ARE PREFERRED. CONTRACTOR MAY SUGGEST ALTERNATE METHODS, ASSUMING FULL RESPONSIBILITY FOR THEIR IMPLEMENTATION, IF APPROVED BY OWNER OR LANDSCAPE ARCHITECT IN ADVANCE OF TREE INSTALLATION. CONTRACTOR SHALL REPLACE, PLANT, OR UPRIGHT ANY TREES BLOWN OVER OR DAMAGED DUE TO INADEQUATE STAKING AT NO ADDITIONAL COST TO THE OWNER.

6. ALL PLANTING BEDS TO BE TOP DRESSED WITH A MINIMUM OF 3" SHREDDED HARDWOOD MULCH, UNLESS OTHERWISE SPECIFIED.

7. THE CONTRACTOR SHALL BE RESPONSIBLE FOR THE MAINTENANCE OF ALL LANDSCAPING UNTIL FINAL ACCEPTANCE. ALL REQUIRED LANDSCAPING SHALL BE MAINTAINED IN A NEAT AND ORDERLY MANNER AT ALL TIMES. THE WORK SHALL INCLUDE, BUT NOT TO BE LIMITED TO, MOWING, EDGING, PRUNING, FERTILIZING, WATERING, WEEDING, AND OTHER SUCH ACTIVITIES COMMON TO THE MAINTENANCE OF LANDSCAPING. ALL PLANT MATERIALS SHALL BE MAINTAINED IN A HEALTHY AND GROWING CONDITION AS IS APPROPRIATE FOR THE SEASON OF THE YEAR. PLANT MATERIAL THAT DIES SHALL BE REPLACED WITH THE PLANT MATERIAL OF SAME OR LARGER SIZE AND VARIETY PRIOR TO FINAL ACCEPTANCE..

8. CONTRACTOR SHALL WARRANTY PLANT MATERIAL TO REMAIN ALIVE AND HEALTHY FOR A PERIOD OF ONE YEAR AFTER FINAL ACCEPTANCE. WARRANTY SHALL NOT INCLUDE DAMAGE FOR LOSS OF PLANT MATERIAL DUE TO NATURAL CAUSES, ACTS OF VANDALISM OR NEGLIGENCE ON THE PART OF THE OWNER. REPLACE ALL DEAD OR DAMAGED MATERIAL WITHIN FIFTEEN (15) WORKING DAYS OF NOTIFICATION BY OWNER OR LANDSCAPE ARCHITECT. THERE SHALL BE NO LIMIT TO THE NUMBER OF PLANTER MATERIAL REPLACEMENTS WITHIN THE WARRANTEE PERIOD.

9. ALL LANDSCAPE BEDS TO HAVE PLANTING MIX THAT MEETS THE LANDSCAPE SPECIFICATIONS, PER PLANTING DETAILS AND NOTES. INSTALL TO DEPTHS PER PLANTING DETAIL. FINISHED GRADES OF PLANTING BED SOILS TO BE 3" BELOW FINISHED GRADE OF ADJACENT PAVING OR AS SHOWN ON PLAN.

10. ALL TREES TO BE PLACED A MINIMUM OF 4' FROM ANY UTILITY CENTERLINE. IRRIGATION LINES AND UNDERDRAIN ARE NOT DEEMED UTILITIES..

PLANT SCHEDULE

SYMBOL	CODE	QTY	BOTANICAL NAME	COMMON NAME	SIZE	COND	HT	SPR	REMARKS
CANOPY TREES									
▲	QL	22	Quercus laceyi	Lacey Oak	3" cal	B&B	12` ht	4` spr	Full, Straight, Single Trunk, 6' Clear Trunk
ORNAMENTAL TREES									
⁂	CL	22	Chilopsis linearis 'Bubba'	Desert Willow	---	B&B	8` ht	4` spr	Full, Multi-Trunk, 3-5 Canes, Matching Forms
+	CB	20	Cordia boissieri	Mexican Olive	3" cal	B&B	8` ht	4` spr	Full, Straight, Single Trunk, 4' Clear Trunk
•	DT	27	Diospyros texana	Texas Persimmon	4" cal	B&B	10` ht	5` spr	Full, Strong Central Leader, Matching Forms
⁂	SS	25	Sophora secundiflora	Texas Mountain Laurel	---	B&B	6` ht	4` spr	Full, Multi-Trunk, 3-5 Canes, Matching Forms

NOTE: PLANT QUANTITIES ARE PROVIDED FOR CONVENIENCE ONLY. IN THE CASE OF A DISCREPANCY, THE DRAWING SHALL TAKE PRECEDENCE.

REGISTERED LANDSCAPE ARCHITECT
MICHAEL L. STOTTLEMYER
3743
STATE OF TEXAS

March 12, 2025

EST.1848 GEORGETOWN TEXAS

BGE, Inc.
101 West Louis Henna Blvd, Suite 400, Austin, TX 78728
Tel: 512-879-0400 • www.bgeinc.com
TBPE Registration No. F-1046

PLANTING NOTES

L5.00

SHEET 1 OF 1

SHEET NO.
412

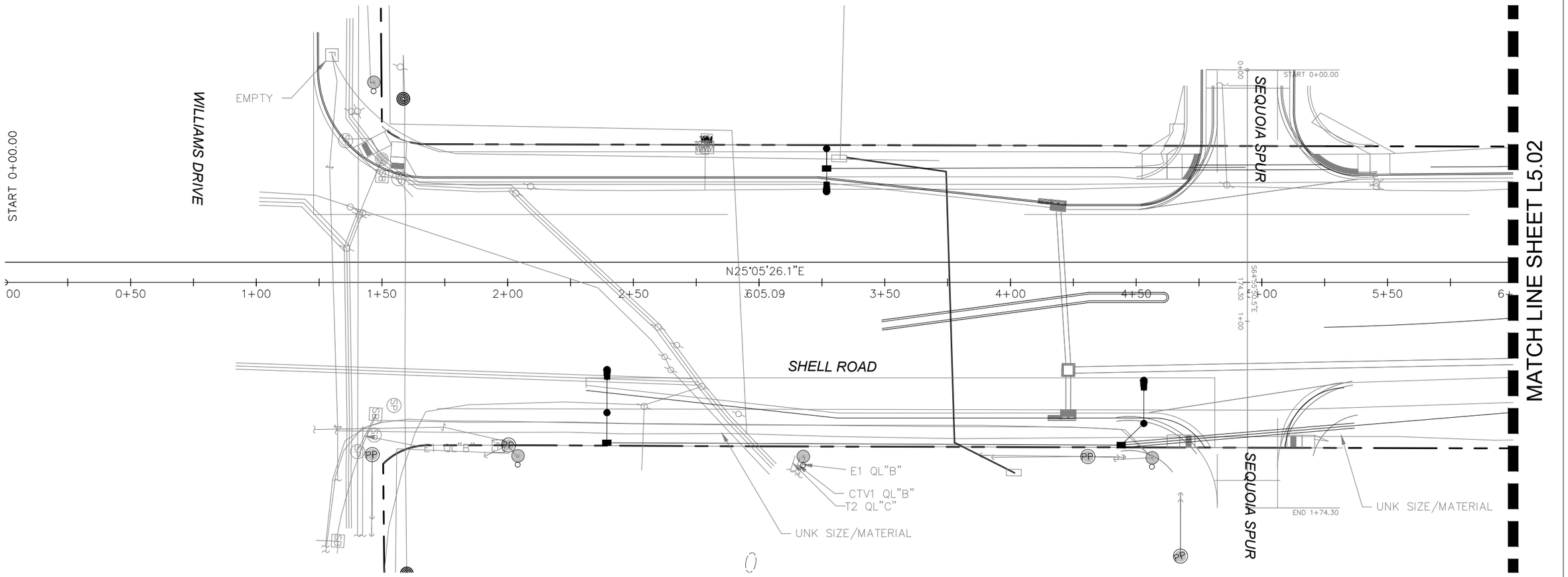

NO PLANTING THIS SHEET

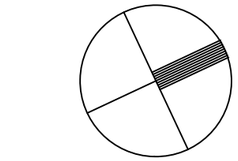

1"=40'

0 20' 40' 80'

REGISTERED LANDSCAPE ARCHITECT
MICHAEL L. STOFFLER
3743
STATE OF TEXAS

March 12, 2025

EST.1848
GEORGETOWN
TEXAS

BGE, Inc.
101 West Louis Henna Blvd, Suite 400, Austin, TX 78728
Tel: 512-879-0400 • www.bgeinc.com
TBPE Registration No. F-1046

PLANTING PLAN

L5.01

SHEET 1 OF 12

SHEET NO.
413

MATCH LINE SHEET L5.01

MATCH LINE SHEET L5.03

T2 QL"D" PER SKETCH

E1 QL"D"

R.O.W.

REF. ILLUMINATION PLANS

STA 8+90 LANDSCAPE CURB

STA 9+60 LANDSCAPE CURB

STA 10+00 LANDSCAPE CURB

STA 10+70 LANDSCAPE CURB

STA 11+10 LANDSCAPE CURB

STA 11+80 LANDSCAPE CURB

PIPE UNDERDRAIN REF. L5.00E/04

(4) CB

(3) QL

(4) DT

(3) CB

(3) CL

(4) SS

MEDIAN LANDSCAPE START

MEDIAN LANDSCAPE PLANTER TYP. REF. L5.00C/01

TREE SOIL CELLS TYP. REF. L5.00D/01-02

REF. DRAINAGE PLANS

COLORED TEXTURED CONCRETE TYP. REF. ROADWAY MEDIAN PATTERN DETAIL

PIPE UNDERDRAIN CONNECTION REF. L5.00E/05

PIPE UNDERDRAIN CONNECTION TO EXISTING CULVERT REF. L5.00E/05

UNK SIZE/MATERIAL

SHELL ROAD

UNK SIZE/MATERIAL

6+50

7+00

7+50

8+00

8+50

PP

PLANT SCHEDULE

SYMBOL	CODE	BOTANICAL NAME	COMMON NAME	SIZE	COND	HT	SPR	REMARKS
CANOPY TREES								
▲	QL	Quercus laceyi	Lacey Oak	3" cal	B&B	12` ht	4` spr	Full, Straight, Single Trunk, 6' Clear Trunk
ORNAMENTAL TREES								
⁂	CL	Chilopsis linearis 'Bubba'	Desert Willow	---	B&B	8` ht	4` spr	Full, Multi-Trunk, 3-5 Canes, Matching Forms
+	CB	Cordia boissieri	Mexican Olive	3" cal	B&B	8` ht	4` spr	Full, Straight, Single Trunk, 4' Clear Trunk
•	DT	Diospyros texana	Texas Persimmon	4" cal	B&B	10` ht	5` spr	Full, Strong Central Leader, Matching Forms
⁂	SS	Sophora secundiflora	Texas Mountain Laurel	---	B&B	6` ht	4` spr	Full, Multi-Trunk, 3-5 Canes, Matching Forms

1"=40'

0 20' 40' 80'

REGISTERED LANDSCAPE ARCHITECT MICHAEL L. STOFFLE 3743 STATE OF TEXAS

March 12, 2025

EST.1848 GEORGETOWN TEXAS

BGE, Inc.
101 West Louis Henna Blvd, Suite 400, Austin, TX 78728
Tel: 512-879-0400 • www.bgeinc.com
TBPE Registration No. F-1046

PLANTING PLAN

L5.02

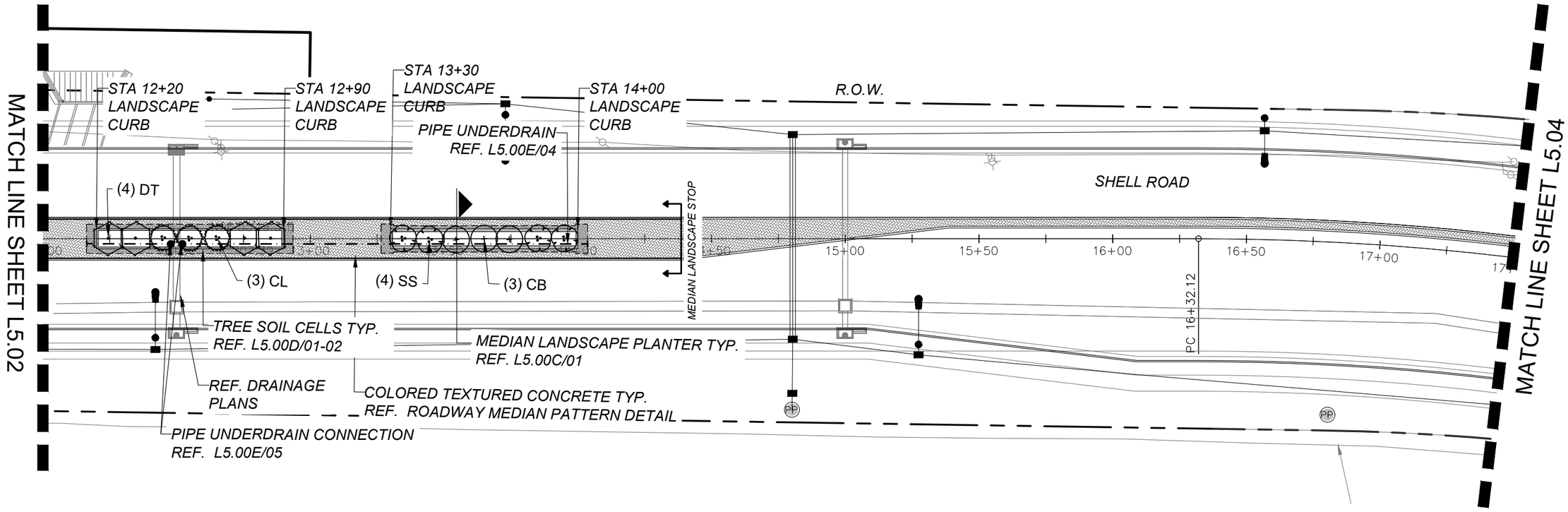

PLANT SCHEDULE

SYMBOL	CODE	BOTANICAL NAME	COMMON NAME	SIZE	COND	HT	SPR	REMARKS
CANOPY TREES								
▲	QL	Quercus laceyi	Lacey Oak	3" cal	B&B	12` ht	4` spr	Full, Straight, Single Trunk, 6' Clear Trunk
ORNAMENTAL TREES								
⁂	CL	Chilopsis linearis 'Bubba'	Desert Willow	---	B&B	8` ht	4` spr	Full, Multi-Trunk, 3-5 Canes, Matching Forms
+	CB	Cordia boissieri	Mexican Olive	3" cal	B&B	8` ht	4` spr	Full, Straight, Single Trunk, 4' Clear Trunk
•	DT	Diospyros texana	Texas Persimmon	4" cal	B&B	10` ht	5` spr	Full, Strong Central Leader, Matching Forms
⁂	SS	Sophora secundiflora	Texas Mountain Laurel	---	B&B	6` ht	4` spr	Full, Multi-Trunk, 3-5 Canes, Matching Forms

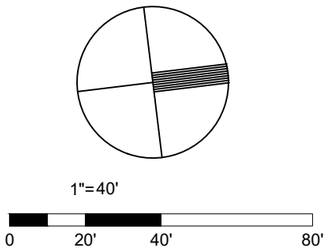



March 12, 2025

EST. 1848
GEORGETOWN
TEXAS

BGE, Inc.
101 West Louis Henna Blvd, Suite 400, Austin, TX 78728
Tel: 512-879-0400 • www.bgeinc.com
TBPE Registration No. F-1046

PLANTING PLAN

L5.03

SHEET 3 OF 12

SHEET NO.
415

CK
DW
CK
DN

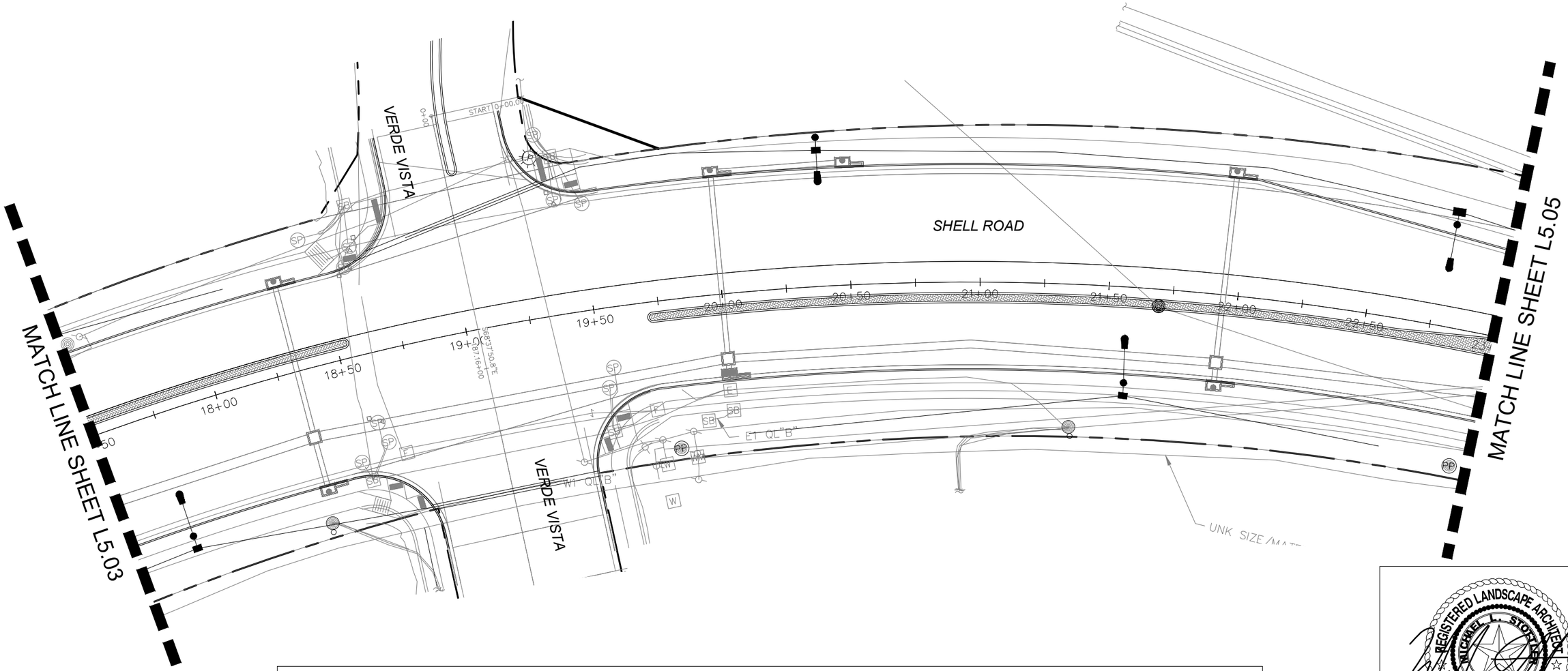

NO PLANTING THIS SHEET

1"=40'

0 20' 40' 80'

REGISTERED LANDSCAPE ARCHITECT
MICHAEL L. STOFFLET
3743
STATE OF TEXAS

March 12, 2025

EST.1848
GEORGETOWN
TEXAS

BGE, Inc.
101 West Louis Henna Blvd, Suite 400, Austin, TX 78728
Tel: 512-879-0400 • www.bgeinc.com
TBPE Registration No. F-1046

PLANTING PLAN

L5.04

SHEET 4 OF 12

SHEET NO.
416

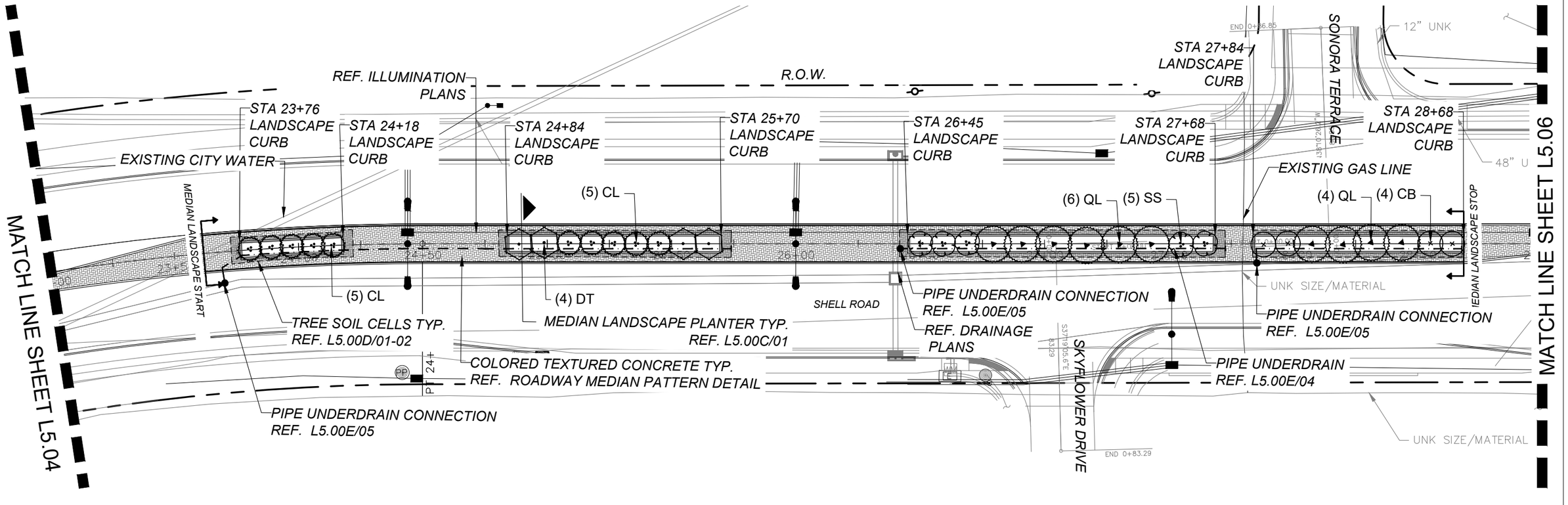

PLANT SCHEDULE

SYMBOL	CODE	BOTANICAL NAME	COMMON NAME	SIZE	COND	HT	SPR	REMARKS
CANOPY TREES								
▲	QL	Quercus laceyi	Lacey Oak	3" cal	B&B	12` ht	4` spr	Full, Straight, Single Trunk, 6' Clear Trunk
ORNAMENTAL TREES								
⁂	CL	Chilopsis linearis 'Bubba'	Desert Willow	---	B&B	8` ht	4` spr	Full, Multi-Trunk, 3-5 Canes, Matching Forms
+	CB	Cordia boissieri	Mexican Olive	3" cal	B&B	8` ht	4` spr	Full, Straight, Single Trunk, 4' Clear Trunk
•	DT	Diospyros texana	Texas Persimmon	4" cal	B&B	10` ht	5` spr	Full, Strong Central Leader, Matching Forms
⁂	SS	Sophora secundiflora	Texas Mountain Laurel	---	B&B	6` ht	4` spr	Full, Multi-Trunk, 3-5 Canes, Matching Forms

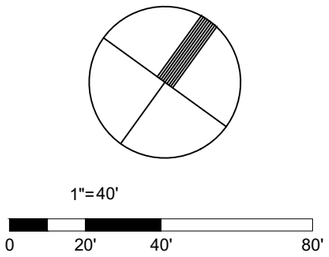



March 12, 2025

EST. 1848 GEORGETOWN TEXAS

BGE, Inc.
101 West Louis Henna Blvd, Suite 400, Austin, TX 78728
Tel: 512-879-0400 • www.bgeinc.com
TBPE Registration No. F-1046

PLANTING PLAN

L5.05

SHEET 5 OF 12

SHEET NO. 417

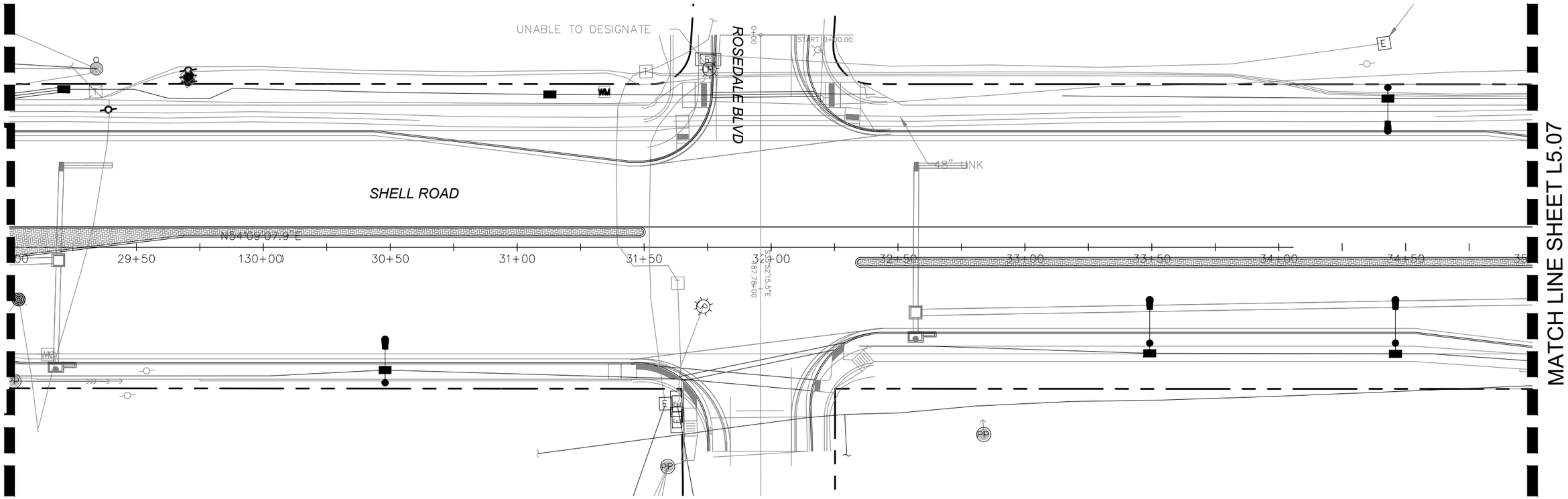

NO PLANTING THIS SHEET

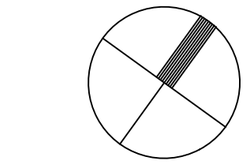

1"=40'

0 20' 40' 80'

REGISTERED LANDSCAPE ARCHITECT
MICHAEL L. STOFFLE
3743
STATE OF TEXAS

March 12, 2025

EST.1848
GEORGETOWN
TEXAS

BGE, Inc.
101 West Louis Henna Blvd, Suite 400, Austin, TX 78728
Tel: 512-879-0400 • www.bgeinc.com
TBPE Registration No. F-1046

PLANTING PLAN

L5.06

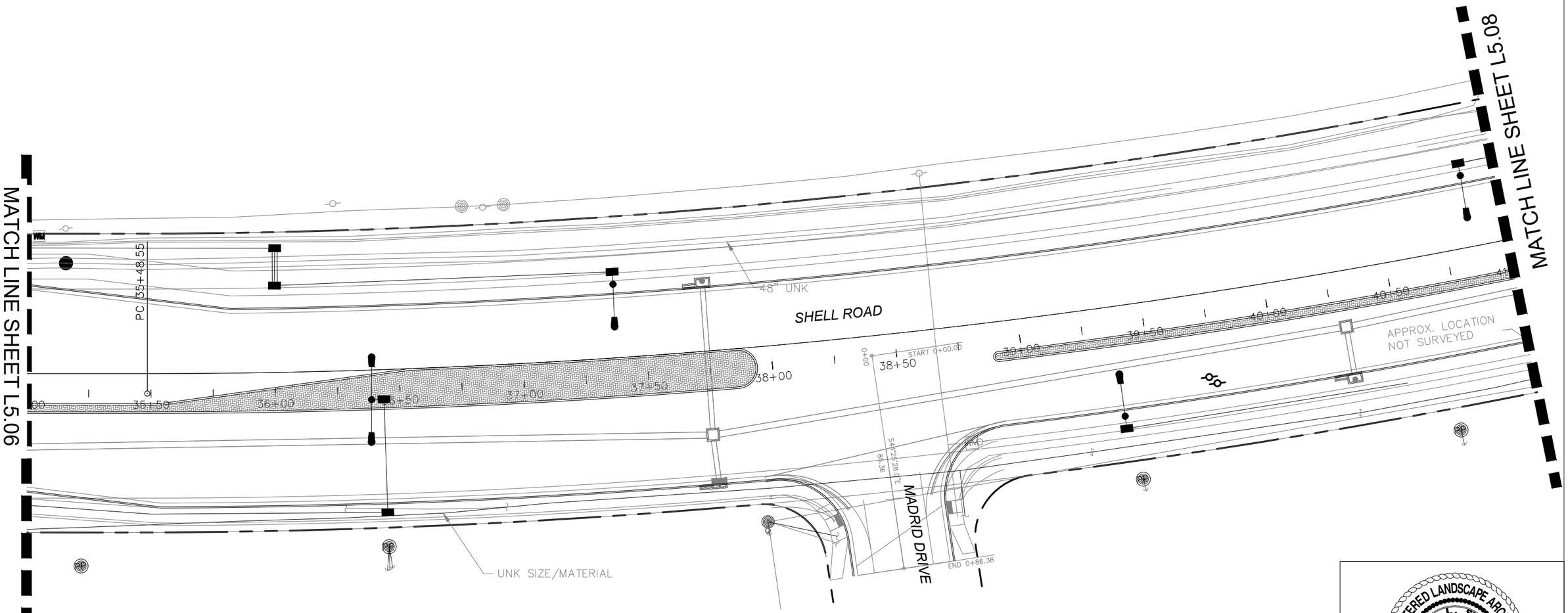

NO PLANTING THIS SHEET

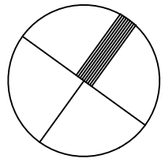

1"=40'

0 20' 40' 80'



March 12, 2025

EST. 1848
GEORGETOWN
TEXAS

BGE, Inc.
101 West Louis Henna Blvd, Suite 400, Austin, TX 78728
Tel: 512-879-0400 • www.bgeinc.com
TBPE Registration No. F-1046

PLANTING PLAN

L5.07

SHEET 7 OF 12

SHEET NO.
419

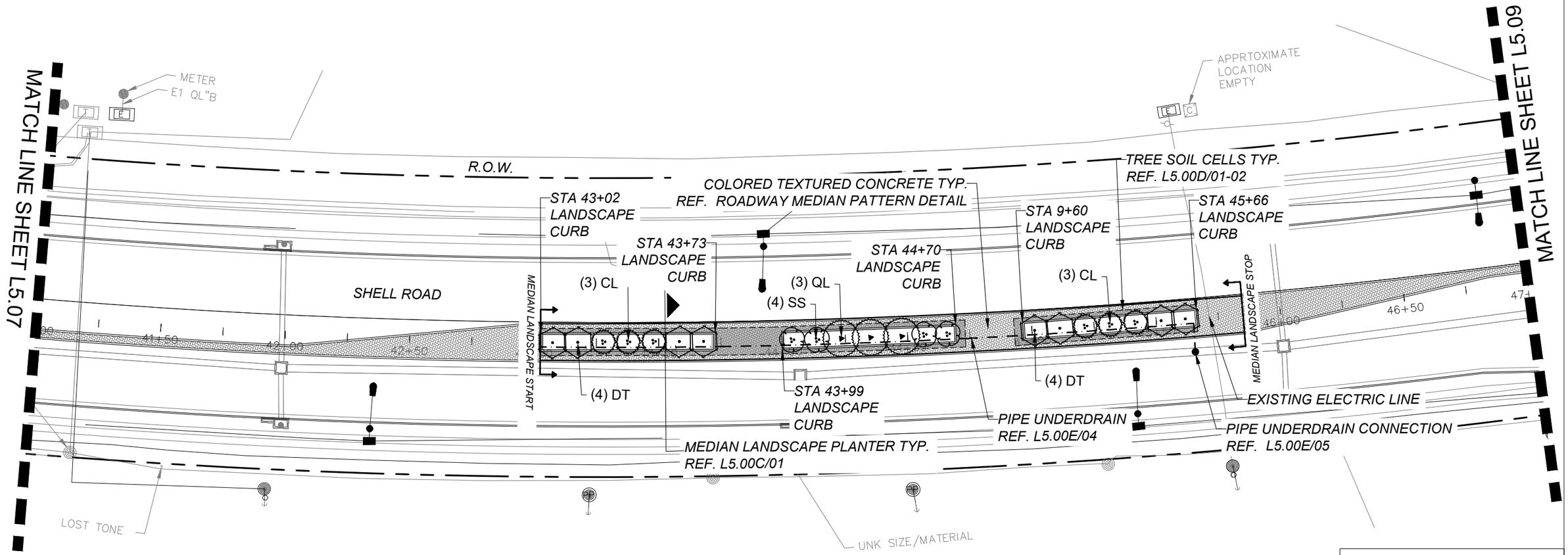

PLANT SCHEDULE

SYMBOL	CODE	BOTANICAL NAME	COMMON NAME	SIZE	COND	HT	SPR	REMARKS
CANOPY TREES								
▲	QL	Quercus laceyi	Lacey Oak	3" cal	B&B	12` ht	4` spr	Full, Straight, Single Trunk, 6' Clear Trunk
ORNAMENTAL TREES								
⁂	CL	Chilopsis linearis 'Bubba'	Desert Willow	---	B&B	8` ht	4` spr	Full, Multi-Trunk, 3-5 Canes, Matching Forms
+	CB	Cordia boissieri	Mexican Olive	3" cal	B&B	8` ht	4` spr	Full, Straight, Single Trunk, 4' Clear Trunk
•	DT	Diospyros texana	Texas Persimmon	4" cal	B&B	10` ht	5` spr	Full, Strong Central Leader, Matching Forms
⁂	SS	Sophora secundiflora	Texas Mountain Laurel	---	B&B	6` ht	4` spr	Full, Multi-Trunk, 3-5 Canes, Matching Forms

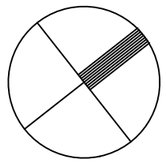

1"=40'

0 20' 40' 80'

REGISTERED LANDSCAPE ARCHITECT
MICHAEL L. STOFFLET
3743
STATE OF TEXAS

March 12, 2025

EST.1848
GEORGETOWN
TEXAS

BGE, Inc.
101 West Louis Henna Blvd, Suite 400, Austin, TX 78728
Tel: 512-879-0400 • www.bgeinc.com
TBPE Registration No. F-1046

PLANTING PLAN

L5.08

SHEET 8 OF 12

SHEET NO.
420

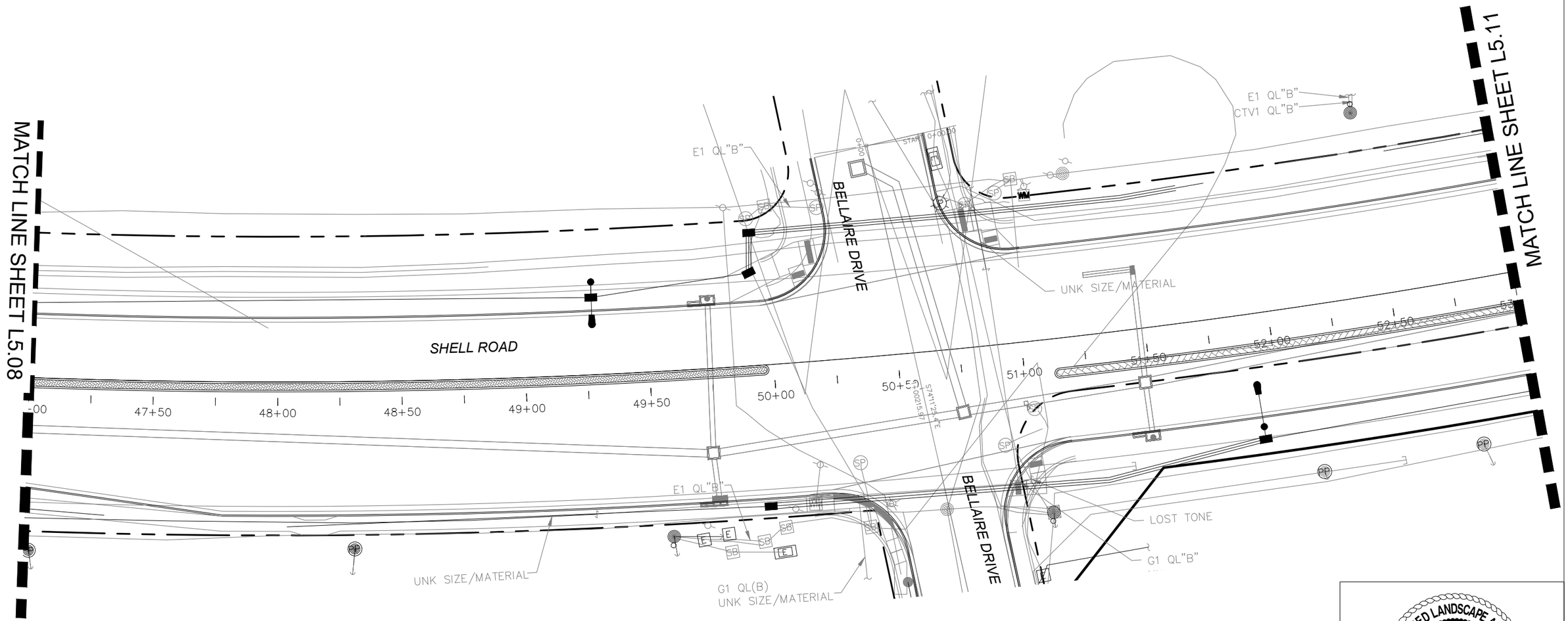

NO PLANTING THIS SHEET

1"=40'

0 20' 40' 80'

REGISTERED LANDSCAPE ARCHITECT
MICHAEL L. STOFFEL
3743
STATE OF TEXAS

March 12, 2025

EST. 1848
GEORGETOWN
TEXAS

BGE, Inc.
101 West Louis Henna Blvd, Suite 400, Austin, TX 78728
Tel: 512-879-0400 • www.bgeinc.com
TBPE Registration No. F-1046

PLANTING PLAN

L5.09

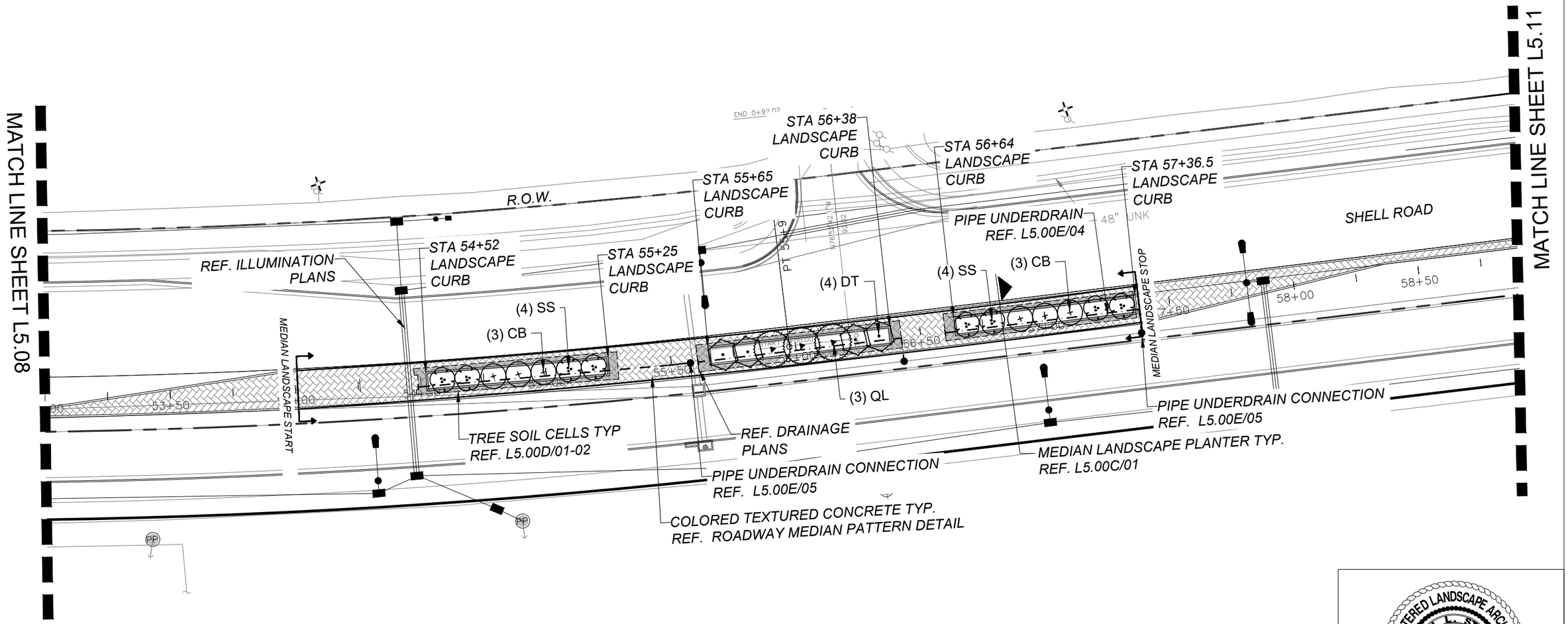

PLANT SCHEDULE

SYMBOL	CODE	BOTANICAL NAME	COMMON NAME	SIZE	COND	HT	SPR	REMARKS
CANOPY TREES								
▲	QL	Quercus laceyi	Lacey Oak	3" cal	B&B	12` ht	4` spr	Full, Straight, Single Trunk, 6' Clear Trunk
ORNAMENTAL TREES								
⁂	CL	Chilopsis linearis 'Bubba'	Desert Willow	---	B&B	8` ht	4` spr	Full, Multi-Trunk, 3-5 Canes, Matching Forms
+	CB	Cordia boissieri	Mexican Olive	3" cal	B&B	8` ht	4` spr	Full, Straight, Single Trunk, 4' Clear Trunk
•	DT	Diospyros texana	Texas Persimmon	4" cal	B&B	10` ht	5` spr	Full, Strong Central Leader, Matching Forms
⁂	SS	Sophora secundiflora	Texas Mountain Laurel	---	B&B	6` ht	4` spr	Full, Multi-Trunk, 3-5 Canes, Matching Forms

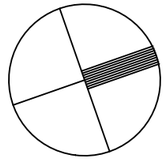

1"=40'

0 20' 40' 80'



March 12, 2025

EST. 1848 GEORGETOWN TEXAS

BGE, Inc.
101 West Louis Henna Blvd, Suite 400, Austin, TX 78728
Tel: 512-879-0400 • www.bgeinc.com
TBPE Registration No. F-1046

PLANTING PLAN

L5.10

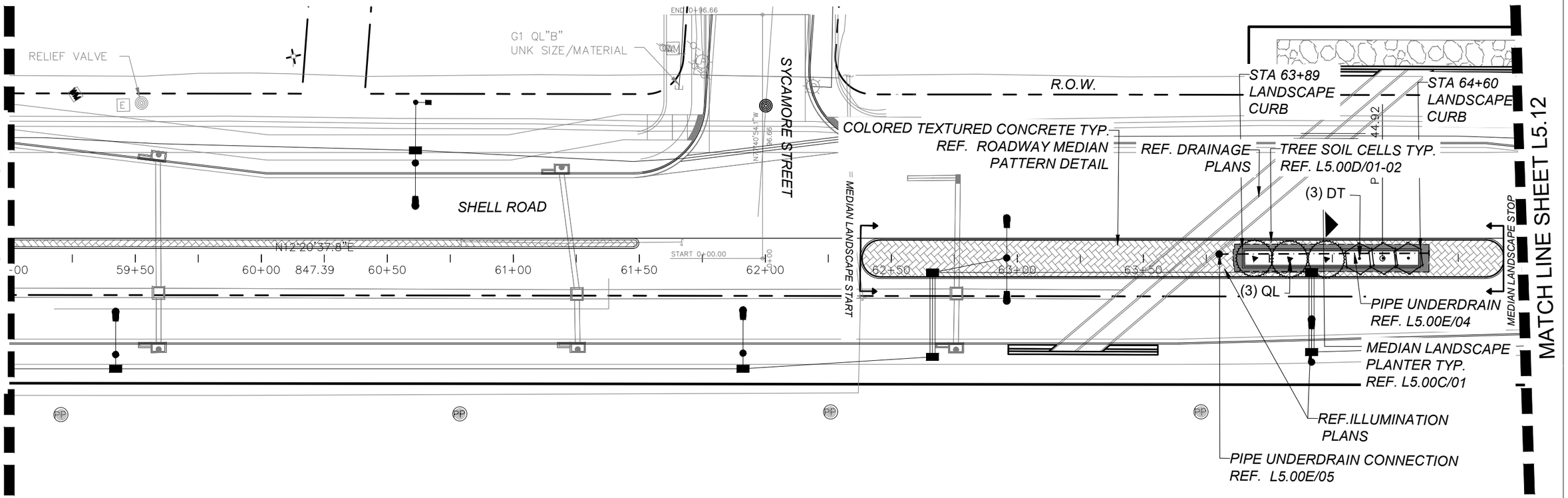

PLANT SCHEDULE

SYMBOL	CODE	BOTANICAL NAME	COMMON NAME	SIZE	COND	HT	SPR	REMARKS
CANOPY TREES								
▲	QL	Quercus laceyi	Lacey Oak	3" cal	B&B	12` ht	4` spr	Full, Straight, Single Trunk, 6' Clear Trunk
ORNAMENTAL TREES								
⁂	CL	Chilopsis linearis 'Bubba'	Desert Willow	---	B&B	8` ht	4` spr	Full, Multi-Trunk, 3-5 Canes, Matching Forms
+	CB	Cordia boissieri	Mexican Olive	3" cal	B&B	8` ht	4` spr	Full, Straight, Single Trunk, 4' Clear Trunk
•	DT	Diospyros texana	Texas Persimmon	4" cal	B&B	10` ht	5` spr	Full, Strong Central Leader, Matching Forms
⁂	SS	Sophora secundiflora	Texas Mountain Laurel	---	B&B	6` ht	4` spr	Full, Multi-Trunk, 3-5 Canes, Matching Forms

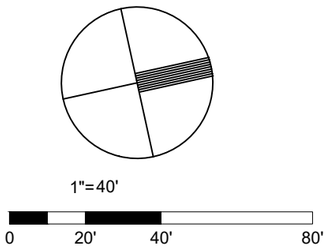

REGISTERED LANDSCAPE ARCHITECT
MICHAEL L. STOFFLE
3743
STATE OF TEXAS
March 12, 2025

EST.1848 GEORGETOWN TEXAS

BGE, Inc.
101 West Louis Henna Blvd, Suite 400, Austin, TX 78728
Tel: 512-879-0400 • www.bgeinc.com
TBPE Registration No. F-1046

PLANTING PLAN

L5.11

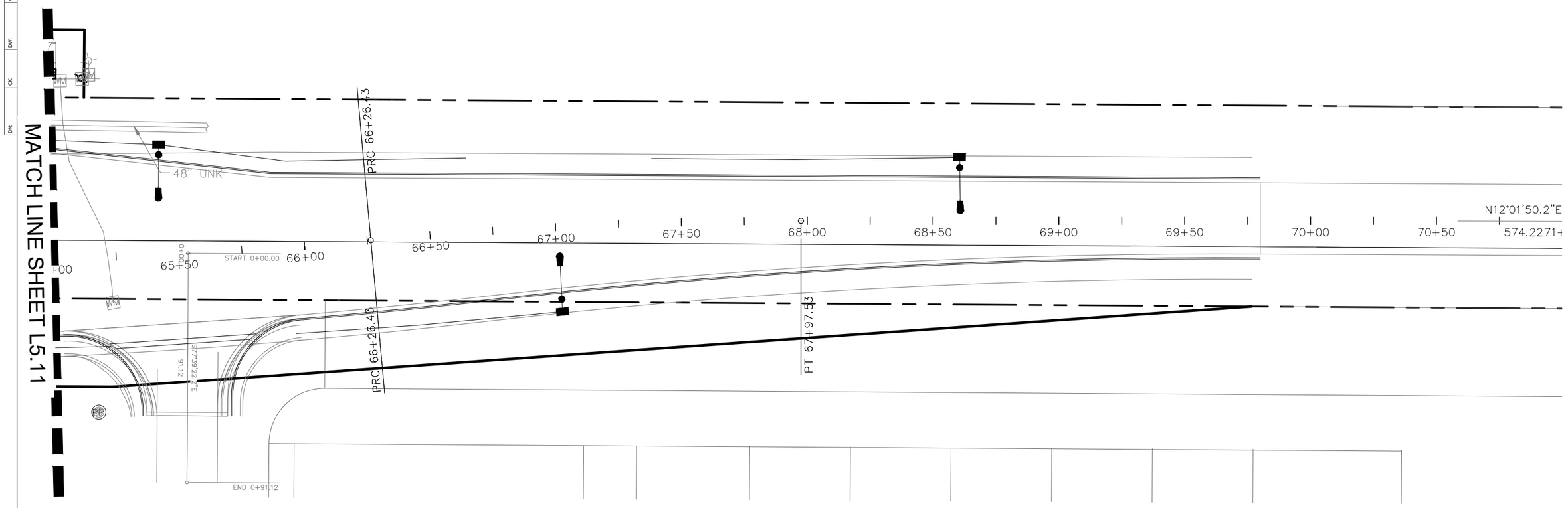

NO PLANTING THIS SHEET

1"=40'

0 20' 40' 80'

REGISTERED LANDSCAPE ARCHITECT
MICHAEL L. STOFFLET
3743
STATE OF TEXAS

March 12, 2025

EST. 1848
GEORGETOWN
TEXAS

BGE, Inc.
101 West Louis Henna Blvd, Suite 400, Austin, TX 78728
Tel: 512-879-0400 • www.bgeinc.com
TBPE Registration No. F-1046

PLANTING PLAN

L5.12

SHEET 12 OF 12

SHEET NO.
424

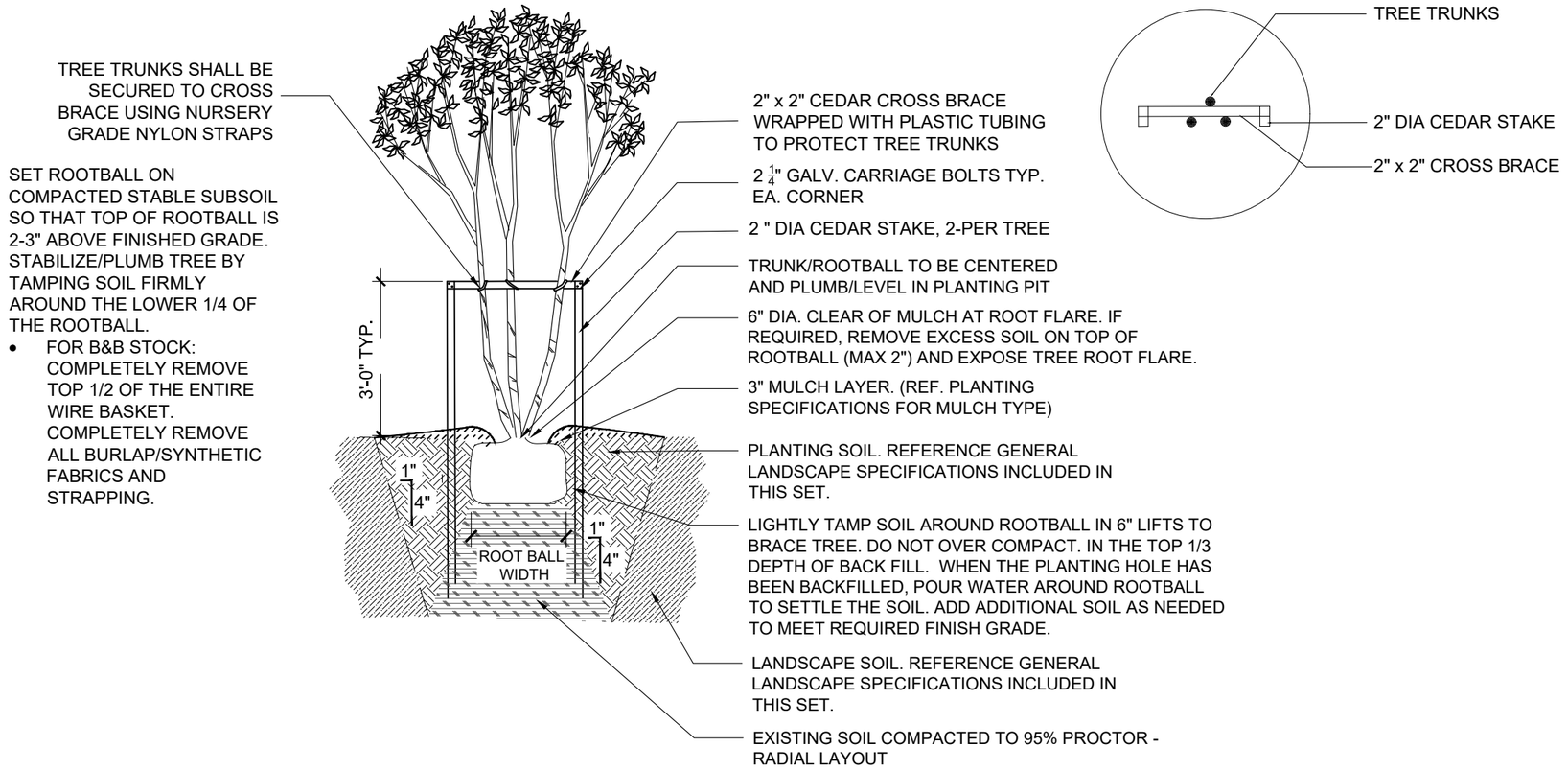

NOTES:

* STAKES AND CROSS BRACE TO BE REMOVED AFTER ONE FULL GROWING SEASON

* APPROXIMATELY 1/3 OF THE BRANCH STRUCTURE SHALL BE REMOVED BY THINNING BUT THE NATURAL CHARACTER AND GENERAL SHAPE OF THE TREE SHALL BE PRESERVED

01 ORNAMENTAL/MULTI-TRUNK TREE PLANTING AND STAKING

SECTION

NOT TO SCALE

REGISTERED LANDSCAPE ARCHITECT
MICHAEL L. STOTTLEMYER
3743
STATE OF TEXAS

March 12, 2025

EST. 1848 GEORGETOWN TEXAS

BGE, Inc.
101 West Louis Henna Blvd, Suite 400, Austin, TX 78728
Tel: 512-879-0400 • www.bgeinc.com
TBPE Registration No. F-1046

LANDSCAPE DETAILS

L5.00A

SHEET 1 OF 5

SHEET NO.
425

CK
DW
CK
DN

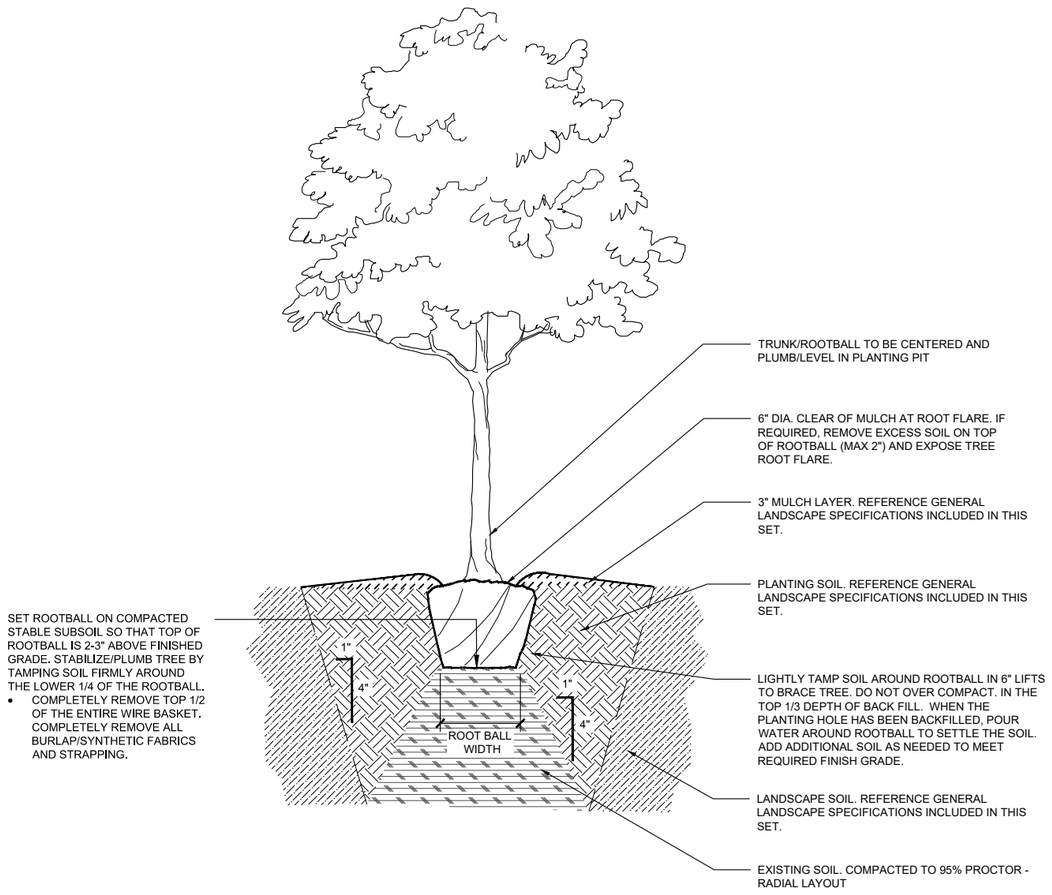

01 CANOPY TREE PLANTING

SECTION — NOT TO SCALE

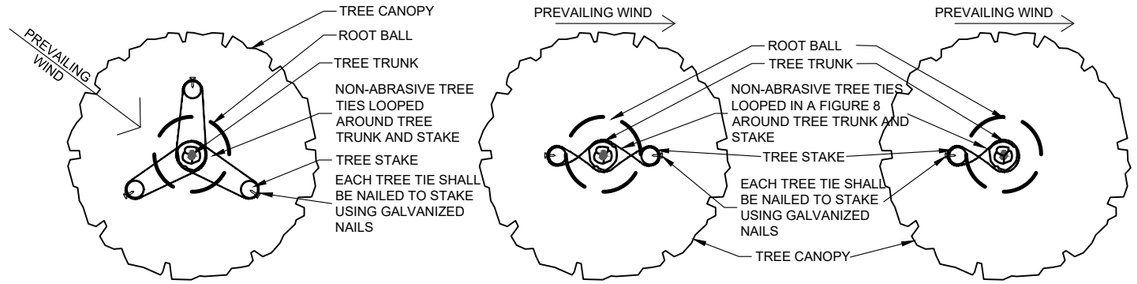

TRIPLE STAKE PLAN
3" CALIPER AND GREATER

DOUBLE STAKE PLAN
1-1/2" UP TO 3" CALIPER

SINGLE STAKE PLAN
LESS THAN 1-1/2" CALIPER

NOTES:
1. THIS DETAIL IS FOR ABOVE GRADE TREE STAKING ONLY. REF. OTHER DETAILS FOR TYPICAL TREE PLANTING.

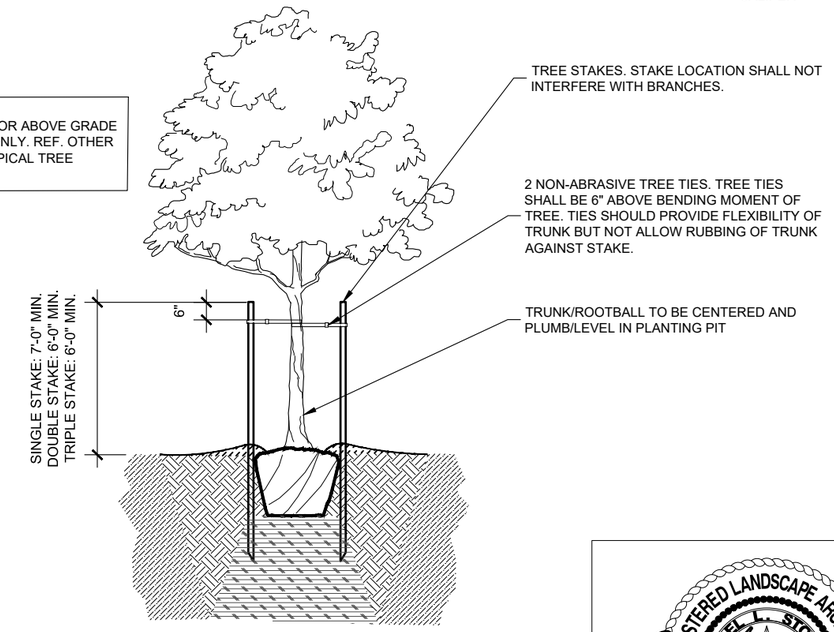

02 SINGLE TRUNK TREE STAKING

SECTION — NOT TO SCALE



March 12, 2025

EST. 1848 GEORGETOWN TEXAS

BGE, Inc.
101 West Louis Henna Blvd, Suite 400, Austin, TX 78728
Tel: 512-879-0400 • www.bgeinc.com
TBPE Registration No. F-1046

LANDSCAPE DETAILS

L5.00B

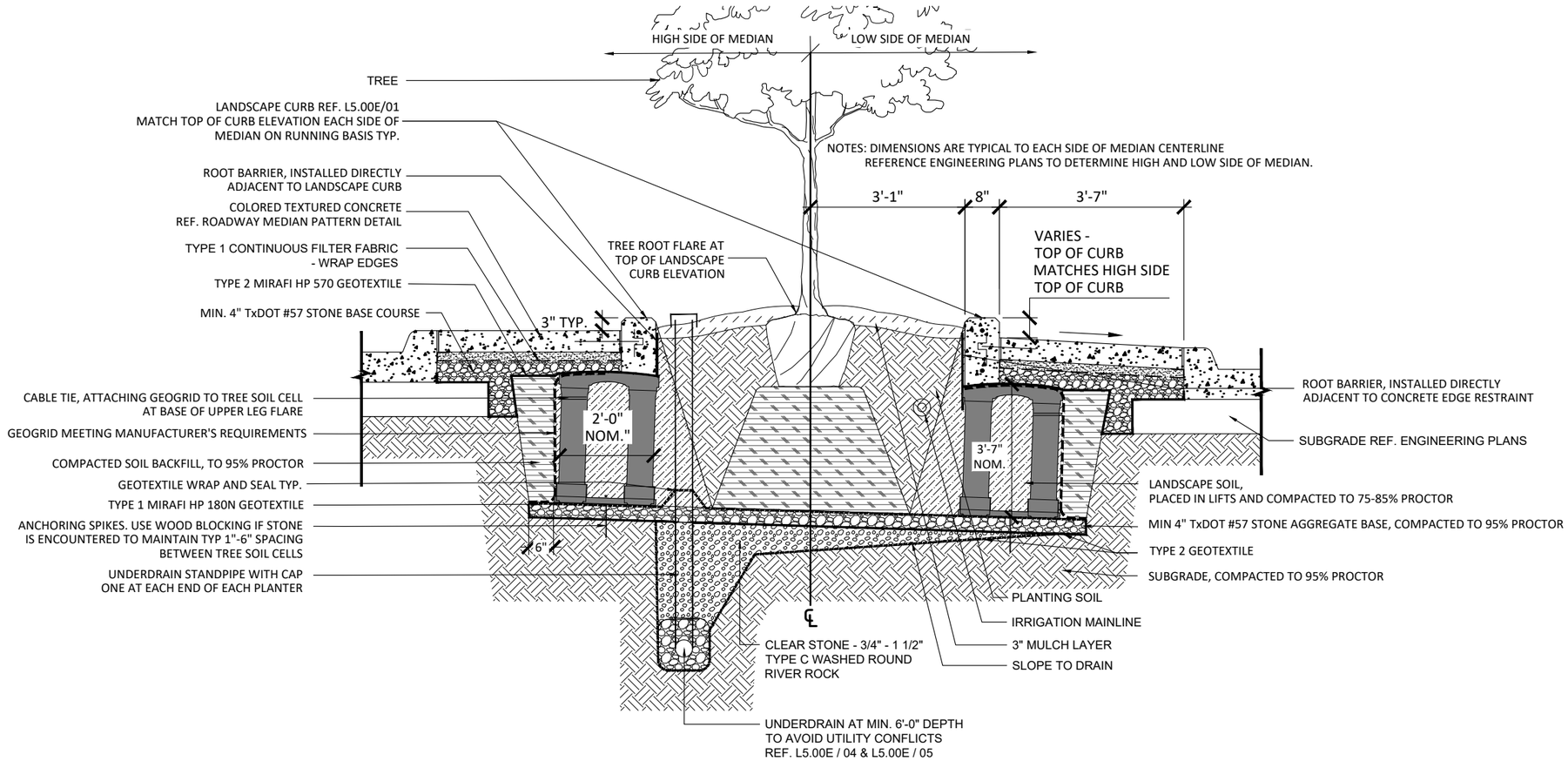

01 MEDIAN PLANTER SECTION WITH TREE SOIL CELLS

CROSS SECTION

NOT TO SCALE

REGISTERED LANDSCAPE ARCHITECT
MICHAEL L. STOFFLE
3743
STATE OF TEXAS

March 12, 2025

EST. 1848
GEORGETOWN
TEXAS

BGE, Inc.
101 West Louis Henna Blvd, Suite 400, Austin, TX 78728
Tel: 512-879-0400 • www.bgeinc.com
TBPE Registration No. F-1046

LANDSCAPE DETAILS

L5.00C

CK.
DW.
CK.
DN.

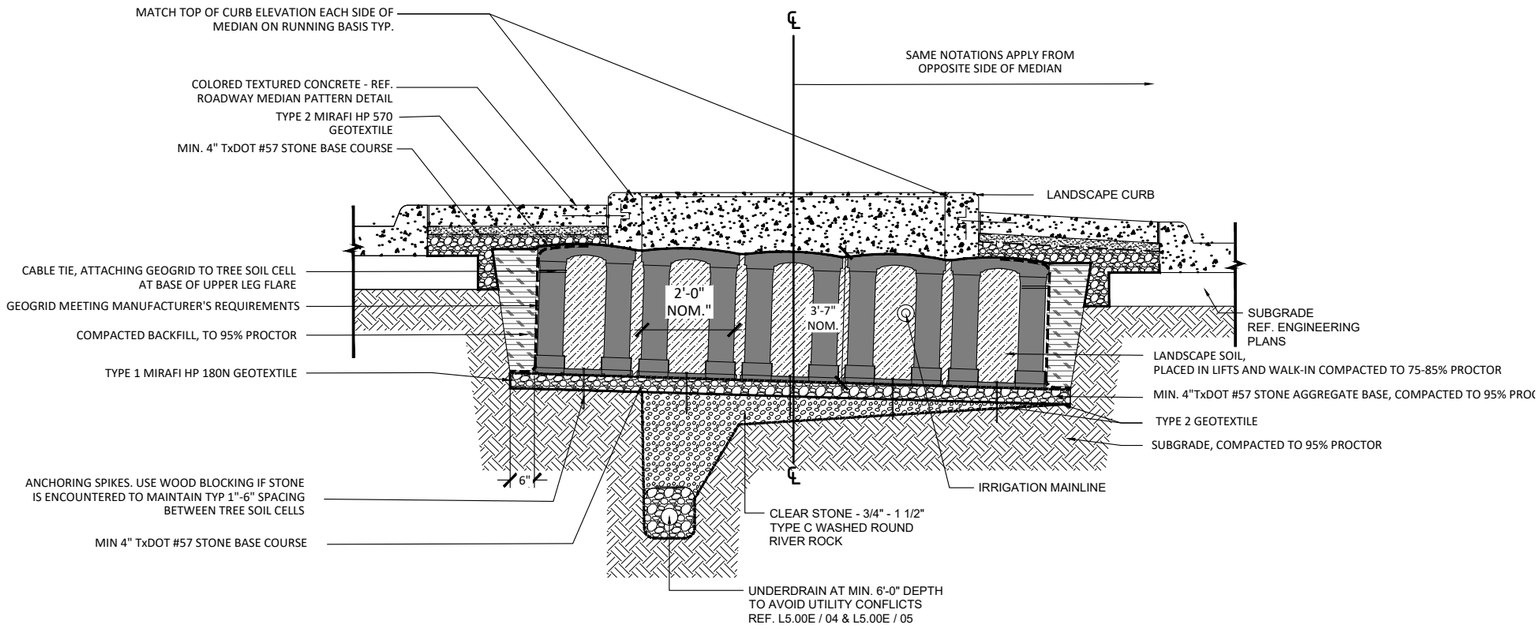

01 MEDIAN PLANTER WITH TREE SOIL CELLS

END SECTION

NOT TO SCALE

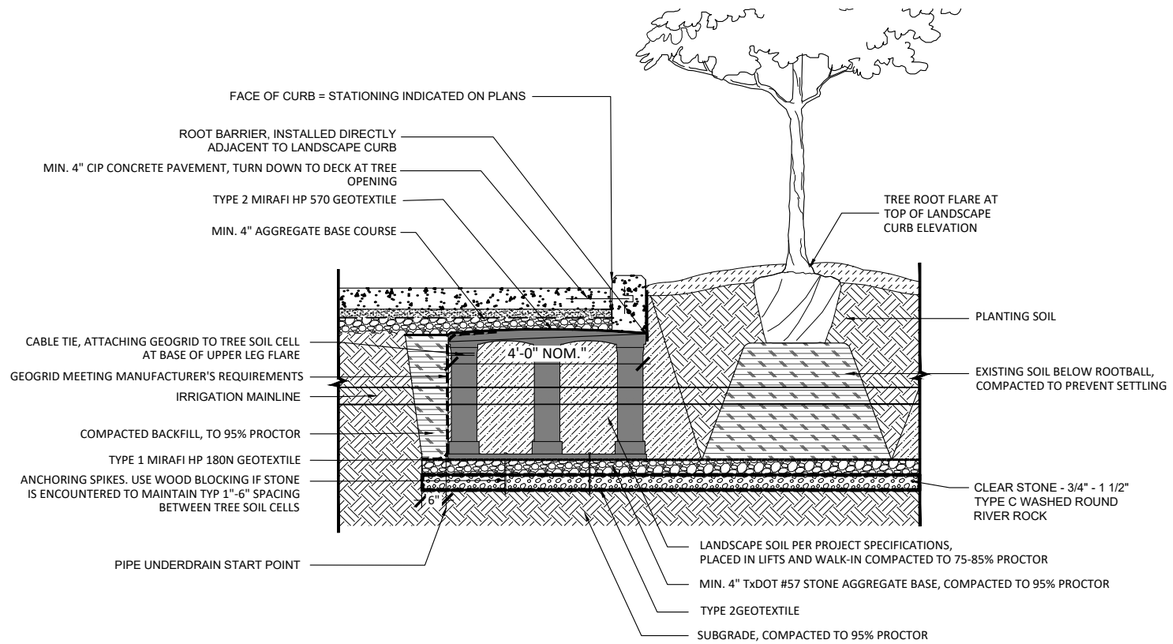

02 MEDIAN PLANTER WITH TREE SOIL CELLS

LONGITUDINAL END SECTION

NOT TO SCALE

REGISTERED LANDSCAPE ARCHITECT
MICHAEL L. STOFFLE
3743
STATE OF TEXAS

March 12, 2025

EST.1848 GEORGETOWN TEXAS

BGE, Inc.
101 West Louis Henna Blvd, Suite 400, Austin, TX 78728
Tel: 512-879-0400 • www.bgeinc.com
TBPE Registration No. F-1046

LANDSCAPE DETAILS

L5.00D

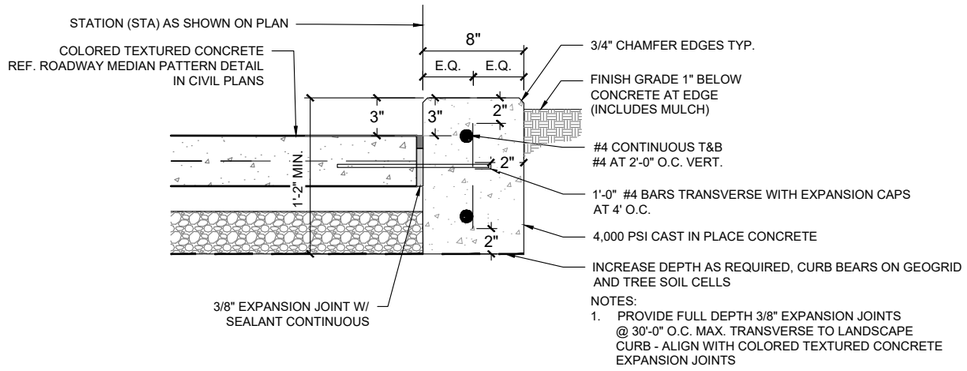

01 LANDSCAPE CURB

SECTION — NOT TO SCALE

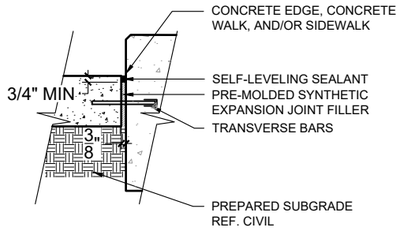

03 EXPANSION JOINT

SECTION — NOT TO SCALE

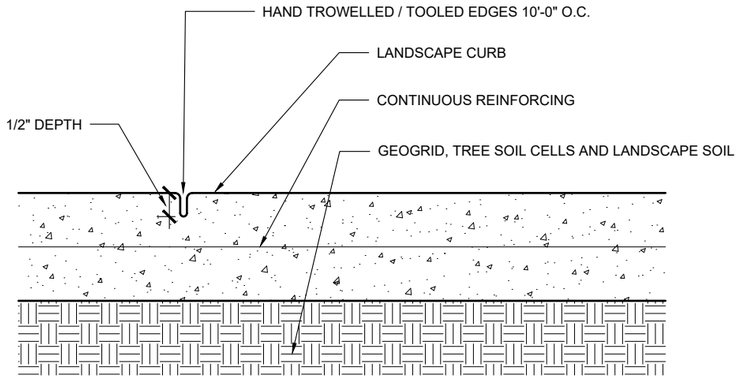

02 CONTROL JOINT

SECTION — NOT TO SCALE

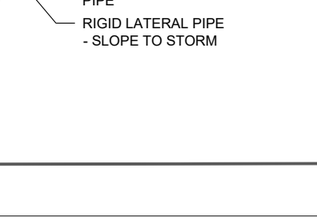

04 PIPE UNDERDRAIN

SECTION — NOT TO SCALE

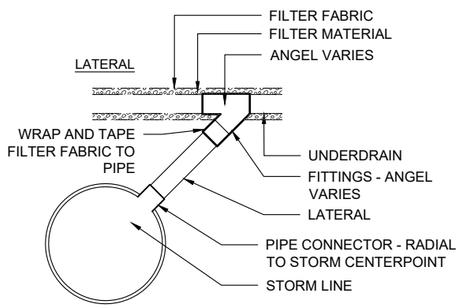

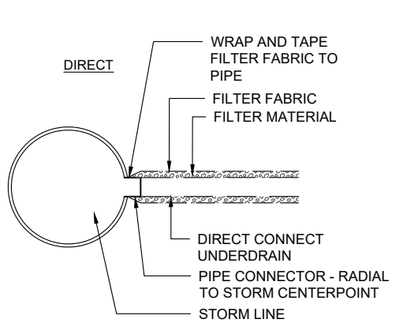

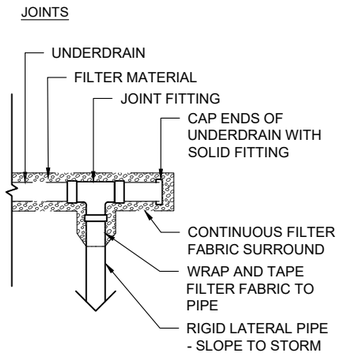

NOTES:
- PROVIDE A FAMILY OF COMPATIBLY SIZED PIPE UNDERDRAIN COMPONENTS FROM A SINGLE MANUFACTURER, ADS INC.OR APPROVED EQUAL. INSTALLED PER MANUFACTURER RECOMMENDATIONS.
- UNDERDRAIN SHALL BE 'PERFORATED TYPE 6', SINGLE WALL HIGHWAY PIPE
- FITTINGS SHALL BE INJECTION MOLDED, DUAL WALL POLYETHYLENE
- STANDPIPES AND LATERALS SHALL BE 6" DUAL WALL POLYETHYLENE 'N-12 WB 1B PIPE'
- CAPS SHALL BE 'SPLIT END CAPS' INJECTION MOLDED POLYETHYLENE
- PIPE CONNECTORS SHALL BE 'INSERTA TEE ONEFIT' WATERTIGHT LATERAL SERVICE CONNECTIONS

05 PIPE UNDERDRAIN CONNECTIONS

SECTION — NOT TO SCALE

REGISTERED LANDSCAPE ARCHITECT
MICHAEL L. STOFFLE
3743
STATE OF TEXAS

March 12, 2025

EST. 1848 GEORGETOWN TEXAS

BGE, Inc.
101 West Louis Henna Blvd, Suite 400, Austin, TX 78728
Tel: 512-879-0400 • www.bgeinc.com
TBPE Registration No. F-1046

LANDSCAPE DETAILS

L5.00E

CK
DW
CK
DW

INSTALLATION NOTES

1. CONFIRM MINIMUM STATIC WATER PRESSURE OF 65 PSI AT THE HIGHEST ELEVATION OF THE SYSTEM LIMITS, AND MAXIMUM STATIC WATER PRESSURE OF 90 P.S.I. AT THE LOWEST ELEVATION OF THE SYSTEM LIMITS AT LEAST 7 DAYS BEFORE BEGINNING WORK. IF STATIC WATER PRESSURE IS OUTSIDE THE RANGE STATED ABOVE, DO NOT PROCEED. CONTACT IRRIGATION DESIGNER IMMEDIATELY. IF STATIC WATER PRESSURE IS BELOW 65 PSI THE OWNER MAY NEED TO PURCHASE A BOOSTER PUMP TO BOOST PRESSURE TO AT LEAST 65 PSI IN WHICH THE HYDRAULIC CALCULATIONS WERE BASED ON.

2. ELECTRIC POWER SHALL BE PROVIDED WITHIN FIVE FEET OF CONTROLLER LOCATION BY GENERAL CONTRACTOR. L.I.C. TO PROVIDE FINAL HARD-WIRE TO CONTROLLER.

3. 24v ICV WIRE SHALL BE A MINIMUM OF #14 GAUGE, U.F. APPROVED FOR DIRECT BURIAL, SINGLE CONDUCTOR "IRRIGATION WIRE". WIRE SPLICES SHALL INCLUDE DBY CONNECTORS AS MANUFACTURED BY 3M COMPANY. ALL FIELD SPLICES SHALL BE LOCATED IN A ROUND VALVE BOX OF SUFFICIENT SIZE TO ALLOW INSPECTION.

4. UNSLEEVED PIPES MAY BE SHOWN UNDER PAVEMENT FOR GRAPHIC CLARITY ONLY. INSTALL THESE PIPES IN ADJACENT LANDSCAPED AREAS.

5. VALVE BOXES SHALL BE INSTALLED FLUSH WITH GRADE, SUPPORTED BY BRICKS IF NEEDED, WITH 3 INCHES OF CLEAN PEA GRAVEL LOCATED BELOW THE VALVE. USE RAINBIRD 12" X 19" JUMBO VALVE BOXES WITH PURPLE LID #VBJMBPL FOR QUICK COUPLING VALVES, AND RAINBIRD #VBJMBB FOR ALL ELECTRIC VALVES UNLESS NOTED OTHERWISE. D.C.A., WITH UPSTREAM BALL VALVE AND WYE FILTER SHALL BE BOXED AND LOCATED ACCORDING TO LOCAL CODE.

6. USE RAINBIRD #TSJ12 PVC SWING JOINT ASSEMBLIES TO CONNECT ALL ROTARY HEADS AND QUICK COUPLERS.

7. ALL SPRAY HEADS SHALL BE CONNECTED WITH A 12" MINIMUM LENGTH OF 1/2" FLEX PVC. THE FLEX PVC SHALL BE SOLVENT WELDED TO SCHEDULE 40 PVC FITTINGS WITH WELD-ON #795 SOLVENT AND #P-70 PRIMER.

8. LATERAL PIPE TO TREE STREAM BUBBLER HEADS IS OMITTED FOR GRAPHIC CLARITY. CONNECT TREE BUBBLER HEADS TO VALVES AS SHOWN WITH CLASS 200 PVC PIPE SIZED TO ALLOW A MAXIMUM FLOW VELOCITY OF 5 FEET PER SECOND

9. NO MACHINE TRENCHING SHALL BE PERMITTED WITHIN THE ROOT ZONE OF EXISTING TREES. HAND-DIG ONLY, WITHIN THE ROOT ZONES OF EXISTING TREES. NO ROOTS OVER 1" DIAMETER SHALL BE CUT. STAKE ALL PROPOSED TRENCH ROUTES NEAR EXISTING TREES FOR APPROVAL BY THE LANDSCAPE ARCHITECT BEFORE DIGGING BEGINS. DO NOT PROCEED UNTIL DIRECTED BY THE LANDSCAPE ARCHITECT.

10. LATERAL PIPE SHALL BE INSTALLED AT A MINIMUM DEPTH OF 12 INCHES. MAINLINE PIPE AND WIRES SHALL BE INSTALLED AT A MINIMUM DEPTH OF 18 INCHES. NO MACHINE TRENCHING SHALL BE PERMITTED WITHIN EXISTING TREE ROOT ZONES. WHEN HAND - TRENCHING WITHIN EXISTING TREE ROOT ZONES, NO ROOTS LARGER THAN 1" DIAMETER SHALL BE CUT.

11. PROVIDE ONE QUICK COUPLER KEY WITH SWIVEL HOSE ELL FOR EVERY SIX Q.C. VALVES. (MINIMUM ONE SET).

12. CONTRACTOR IS TO CONTACT APPROPRIATE AUTHORITIES AND LOCATE ALL UTILITIES PRIOR TO CONSTRUCTION.

13. ALL HEADS SHALL BE INSTALLED A MINIMUM OF 4" FROM PAVEMENT EDGES. (6" OR GREATER WHERE REQUIRED BY LOCAL CODE) FINAL HEAD ADJUSTMENTS BY THE CONTRACTOR SHALL INCLUDE THE ADDITION OF CHECK VALVES WHERE NEEDED TO PREVENT EXCESSIVE LOW HEAD DRAINAGE. THE CONTRACTOR SHALL BUDGET FOR, AND INSTALL CHECK VALVES FOR UP 10 % OF THE TOTAL NUMBER OF HEADS WHEN NEEDED, WITH NO ADDITIONAL COST TO THE OWNER.

14. THE PROPOSED LOCATIONS OF ALL ABOVE- GROUND EQUIPMENT INCLUDING BACKFLOW PREVENTORS, CONTROLLERS AND WEATHER SENSORS SHALL BE STAKED BY THE CONTRACTOR FOR APPROVAL BY THE LANDSCAPE ARCHITECT OR OWNER'S REPRESENTATIVE BEFORE THESE ITEMS ARE INSTALLED.

15. COORDINATE IRRIGATION INSTALLATION WITH PLANTING PLAN AND SITE CONDITIONS TO PROVIDE COMPLETE COVERAGE WITH MINIMUM OVERSPRAY. THE IRRIGATION CONTRACTOR SHALL MAKE MINOR ADJUSTMENTS TO ENSURE PROPER COVERAGE AT NO ADDITIONAL COST TO THE OWNER. THE IRRIGATION CONTRACTOR SHALL COMPLY WITH ALL LOCAL AND STATE MANDATED IRRIGATION ORDINANCES AND CODES, AND WILL SECURE ALL REQUIRED PERMITS. L.I.C. SHALL PAY ANY ASSOCIATED FEES UNLESS OTHERWISE NOTED. ALL LOCAL CODES SHALL PREVAIL OVER ANY DISCREPANCIES HEREIN AND SHALL BE ADDRESSED BEFORE ANY CONSTRUCTION BEGINS.

16. IN AREAS WHERE PAVING IS NOT BEING REPLACED OR DISTURBED THE SLEEVING SHALL BE A BORE OR SAW CUT.



EST. 1848 GEORGETOWN TEXAS

BGE, Inc.
101 West Louis Henna Blvd, Suite 400, Austin, TX 78728
Tel: 512-879-0400 ● www.bgeinc.com
TBPE Registration No. F-1046

NORTH TEXAS DESIGN & CONSULTING, LLC
10540 BERNARD RD
SANGER, TX 76266
CONTACT: RAY SEBASTIAN

IRRIGATION NOTES

L6.00

SHEET 1 OF 1

Texas 811 Know what's below. Call before you dig.

"THIS IRRIGATION SYSTEM HAS BEEN DESIGNED IN ACCORDANCE WITH ALL APPLICABLE STATE AND LOCAL LAWS, ORDINANCES, RULES, REGULATIONS OR ORDERS."

SHEET NO.
430

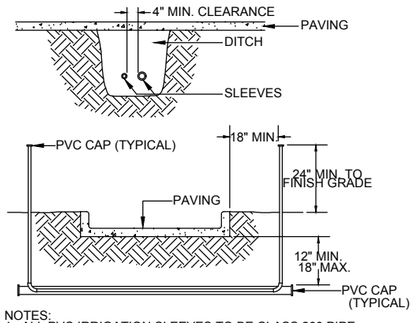

NOTES:
1. ALL PVC IRRIGATION SLEEVES TO BE CLASS 200 PIPE.
2. ALL JOINTS TO BE SOLVENT WELDED AND WATERTIGHT.
3. WHERE THERE IS MORE THAN ONE SLEEVE, EXTEND THE SMALLER SLEEVE TO 24-INCHES MINIMUM ABOVE FINISH GRADE.
4. MECHANICALLY TAMP TO 95% PROCTOR.

SLEEVING

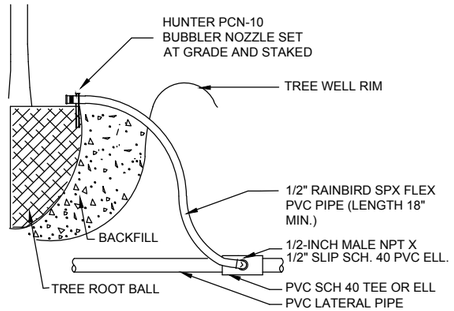

TREE BUBBLER

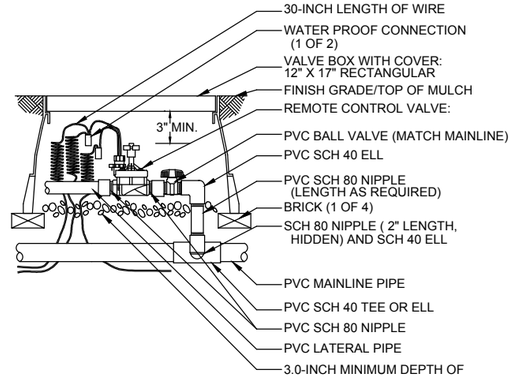

REMOTE CONTROL VALVE

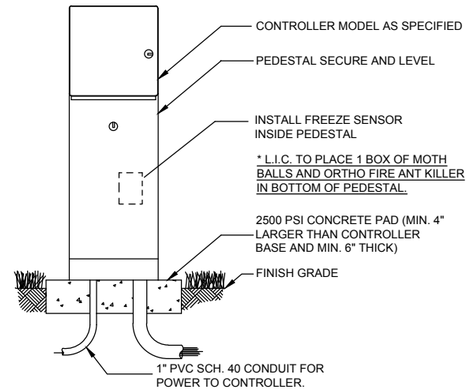

PEDESTAL MOUNT CONTROLLER

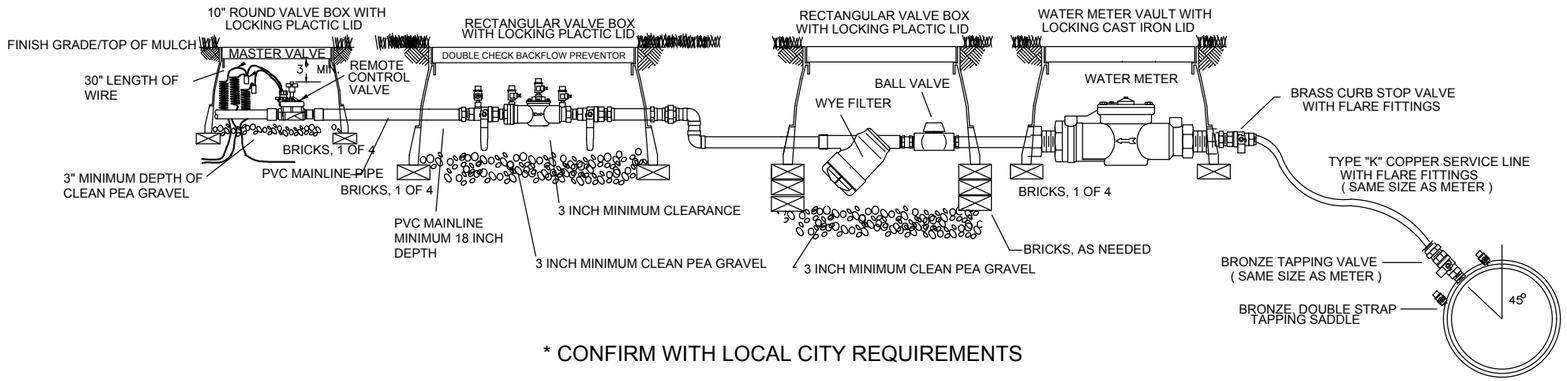

* CONFIRM WITH LOCAL CITY REQUIREMENTS

WATER TAP WITH METER, BALL VALVE, WYE FILTER, BACKFLOW ASSEMBLY, AND MASTER VALVE

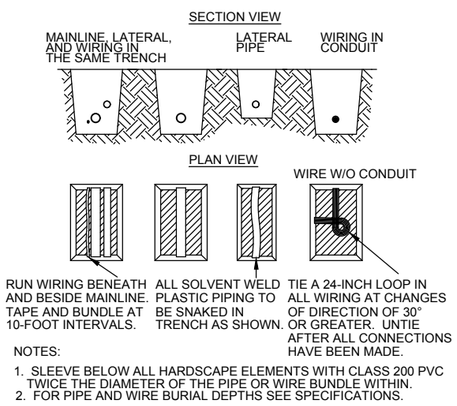

NOTES:
1. SLEEVE BELOW ALL HARDSCAPE ELEMENTS WITH CLASS 200 PVC TWICE THE DIAMETER OF THE PIPE OR WIRE BUNDLE WITHIN.
2. FOR PIPE AND WIRE BURIAL DEPTHS SEE SPECIFICATIONS.

TRENCH DETAIL

Texas 811
Know what's below. Call before you dig.

"THIS IRRIGATION SYSTEM HAS BEEN DESIGNED IN ACCORDANCE WITH ALL APPLICABLE STATE AND LOCAL LAWS, ORDINANCES, RULES, REGULATIONS OR ORDERS."

NORTH TEXAS DESIGN & CONSULTING, LLC
10540 BERNARD RD
SANGER, TX 76266
CONTACT: RAY SEBASTIAN

STATE OF TEXAS
RAYMOND L. SEBASTIAN
16050
REGISTERED LICENSED IRRIGATOR
1/24/25

EST. 1848 GEORGETOWN TEXAS

BGE, Inc.
101 West Louis Henna Blvd, Suite 400, Austin, TX 78728
Tel: 512-879-0400 • www.bgeinc.com
TBPE Registration No. F-1046

IRRIGATION DETAILS

L6.01

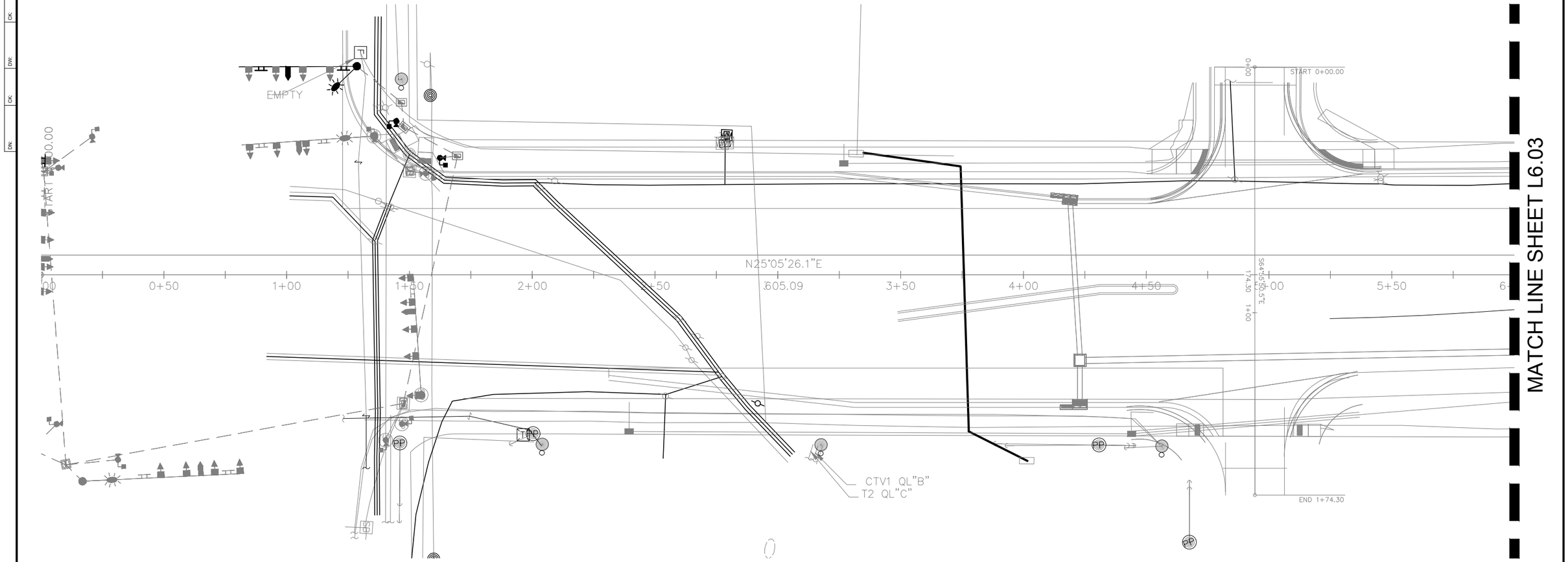

NO IRRIGATION THIS SHEET

1"=40'

0 20' 40' 80'

"THIS IRRIGATION SYSTEM HAS BEEN DESIGNED IN ACCORDANCE WITH ALL APPLICABLE STATE AND LOCAL LAWS, ORDINANCES, RULES, REGULATIONS OR ORDERS."

NORTH TEXAS DESIGN & CONSULTING, LLC
10540 BERNARD RD
SANGER, TX 76266
CONTACT: RAY SEBASTIAN

STATE OF TEXAS
RAYMOND L. SEBASTIAN
16050
REGISTERED LICENSED IRRIGATOR
1/24/25

EST.1848 GEORGETOWN TEXAS

BGE, Inc.
101 West Louis Henna Blvd, Suite 400, Austin, TX 78728
Tel: 512-879-0400 ● www.bgeinc.com
TBPE Registration No. F-1046

IRRIGATION PLAN

L6.02

SHEET 1 OF 12

SHEET NO.
432

*BACKFLOW, VALVES AND LATERALS ARE SHOWN IN PAVEMENT FOR CLARITY PURPOSES.

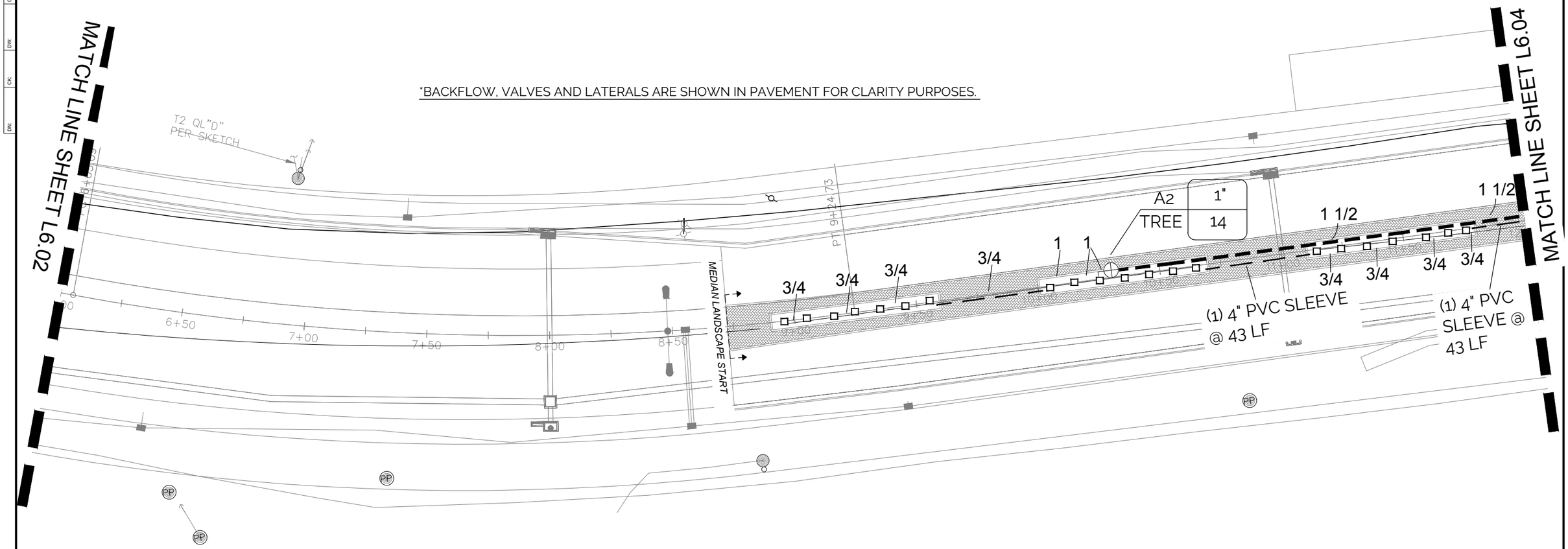

IRRIGATION LEGEND

- HUNTER MSBN-10F STREAM BUBBLER NOZZLE INSTALLED ON FLEX PIPE (18" MIN. LENGTH)
  SEE INSTALLATION NOTE #8 REGARDING TREE BUBBLER LATERAL PIPE
- HUNTER ICV SERIES ELECTRIC REMOTE CONTROL, "TREE BUBBLER ZONE" VALVE
  SEE INSTALLATION NOTE #8 REGARDING TREE BUBBLER LATERAL PIPE
- WILKINS 350 SERIES D.C.A. INSTALLED PER CITY CODE, WITH SAME SIZE WILKINS 850 SERIES BRONZE BALL VALVE AND WILKINS YB SERIES BRONZE WYE FILTER WITH 20 MESH STAINLESS STEEL SCREEN
- LASCO "V101N" SERIES SCH. 80 PVC TRUE UNION BALL VALVE, MAINLINE SIZE
- IRRIGATION WATER METER AND TAP, SIZE AS NOTED ON THE PLAN
- HUNTER ACC2 SERIES AUTOMATIC CONTROLLER MODEL A2C-1200-M WITH WIRELESS SOLAR SYNC SENSOR
  LOCATE SENSOR AS FIELD DIRECTED BY THE LANDSCAPE ARCHITECT
- MASTER ELECTRIC VALVE; (HUNTER ICV)
- CLASS 200 PVC MAINLINE PIPE
- CLASS 200 (EXCEPT 1/2 INCH #315) PVC LATERAL PIPE
- ONE 4" CLASS 200 SLEEVE PIPE
- TWO 4" CLASS 200 SLEEVE PIPES
- 1 1/2" PVC CONDUIT WITH LONG RADIUS SWEEP FITTINGS

L.I.C. SHALL SELECT SPRAY NOZZLES FOR "HEAD-TO-HEAD" COVERAGE, ADJUSTED FOR NO OVERSPRAY ONTO WALLS AND WALKS. NO OVERSPRAY INTO STREETS IS PERMITTED.

1"=40'

0 20' 40' 80'

NORTH TEXAS DESIGN & CONSULTING, LLC
10540 BERNARD RD
SANGER, TX 76266
CONTACT: RAY SEBASTIAN

"THIS IRRIGATION SYSTEM HAS BEEN DESIGNED IN ACCORDANCE WITH ALL APPLICABLE STATE AND LOCAL LAWS, ORDINANCES, RULES, REGULATIONS OR ORDERS."

STATE OF TEXAS
RAYMOND L. SEBASTIAN
16050
REGISTERED
LICENSED IRRIGATOR
1/24/25

EST. 1848 GEORGETOWN TEXAS

BGE, Inc.
101 West Louis Henna Blvd, Suite 400, Austin, TX 78728
Tel: 512-879-0400 • www.bgeinc.com
TBPE Registration No. F-1046

IRRIGATION PLAN

L6.03

*BACKFLOW, VALVES AND LATERALS ARE SHOWN IN PAVEMENT FOR CLARITY PURPOSES.

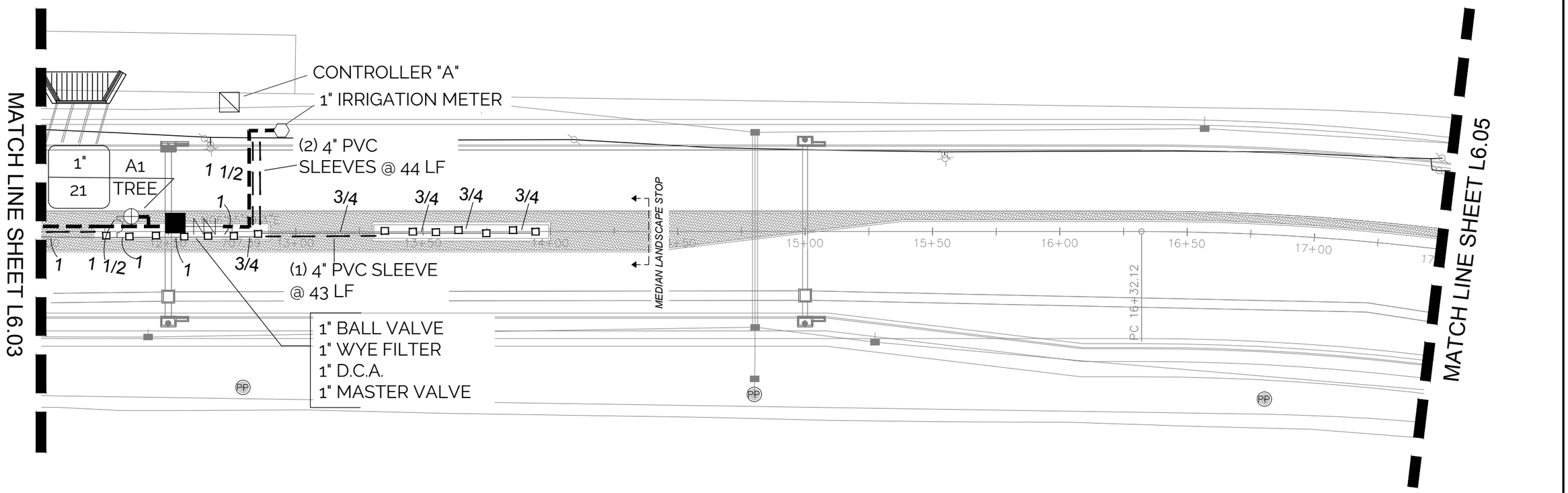

IRRIGATION LEGEND

- HUNTER MSBN-10F STREAM BUBBLER NOZZLE INSTALLED ON FLEX PIPE (18" MIN. LENGTH)
  SEE INSTALLATION NOTE #8 REGARDING TREE BUBBLER LATERAL PIPE
- HUNTER ICV SERIES ELECTRIC REMOTE CONTROL, "TREE BUBBLER ZONE" VALVE
  SEE INSTALLATION NOTE #8 REGARDING TREE BUBBLER LATERAL PIPE
- WILKINS 350 SERIES D.C.A. INSTALLED PER CITY CODE, WITH SAME SIZE WILKINS 850 SERIES BRONZE BALL VALVE AND WILKINS YB SERIES BRONZE WYE FILTER WITH 20 MESH STAINLESS STEEL SCREEN
- LASCO "V101N" SERIES SCH. 80 PVC TRUE UNION BALL VALVE, MAINLINE SIZE
- IRRIGATION WATER METER AND TAP, SIZE AS NOTED ON THE PLAN
- HUNTER ACC2 SERIES AUTOMATIC CONTROLLER MODEL A2C-1200-M WITH WIRELESS SOLAR SYNC SENSOR
  LOCATE SENSOR AS FIELD DIRECTED BY THE LANDSCAPE ARCHITECT
- MASTER ELECTRIC VALVE; (HUNTER ICV)
- CLASS 200 PVC MAINLINE PIPE
- CLASS 200 (EXCEPT 1/2 INCH #315) PVC LATERAL PIPE
- ONE 4" CLASS 200 SLEEVE PIPE
- TWO 4" CLASS 200 SLEEVE PIPES
- 1 1/2" PVC CONDUIT WITH LONG RADIUS SWEEP FITTINGS

L.I.C. SHALL SELECT SPRAY NOZZLES FOR "HEAD-TO-HEAD" COVERAGE, ADJUSTED FOR NO OVERSPRAY ONTO WALLS AND WALKS. NO OVERSPRAY INTO STREETS IS PERMITTED.

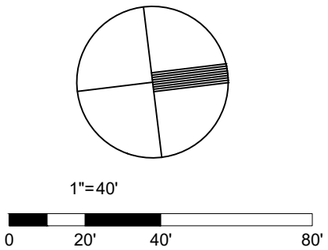

NORTH TEXAS DESIGN & CONSULTING, LLC
10540 BERNARD RD
SANGER, TX 76266
CONTACT: RAY SEBASTIAN

"THIS IRRIGATION SYSTEM HAS BEEN DESIGNED IN ACCORDANCE WITH ALL APPLICABLE STATE AND LOCAL LAWS, ORDINANCES, RULES, REGULATIONS OR ORDERS."



EST.1848 GEORGETOWN TEXAS

BGE, Inc.
101 West Louis Henna Blvd, Suite 400, Austin, TX 78728
Tel: 512-879-0400 • www.bgeinc.com
TBPE Registration No. F-1046

IRRIGATION PLAN

L6.04

SHEET 3 OF 12

SHEET NO. 434

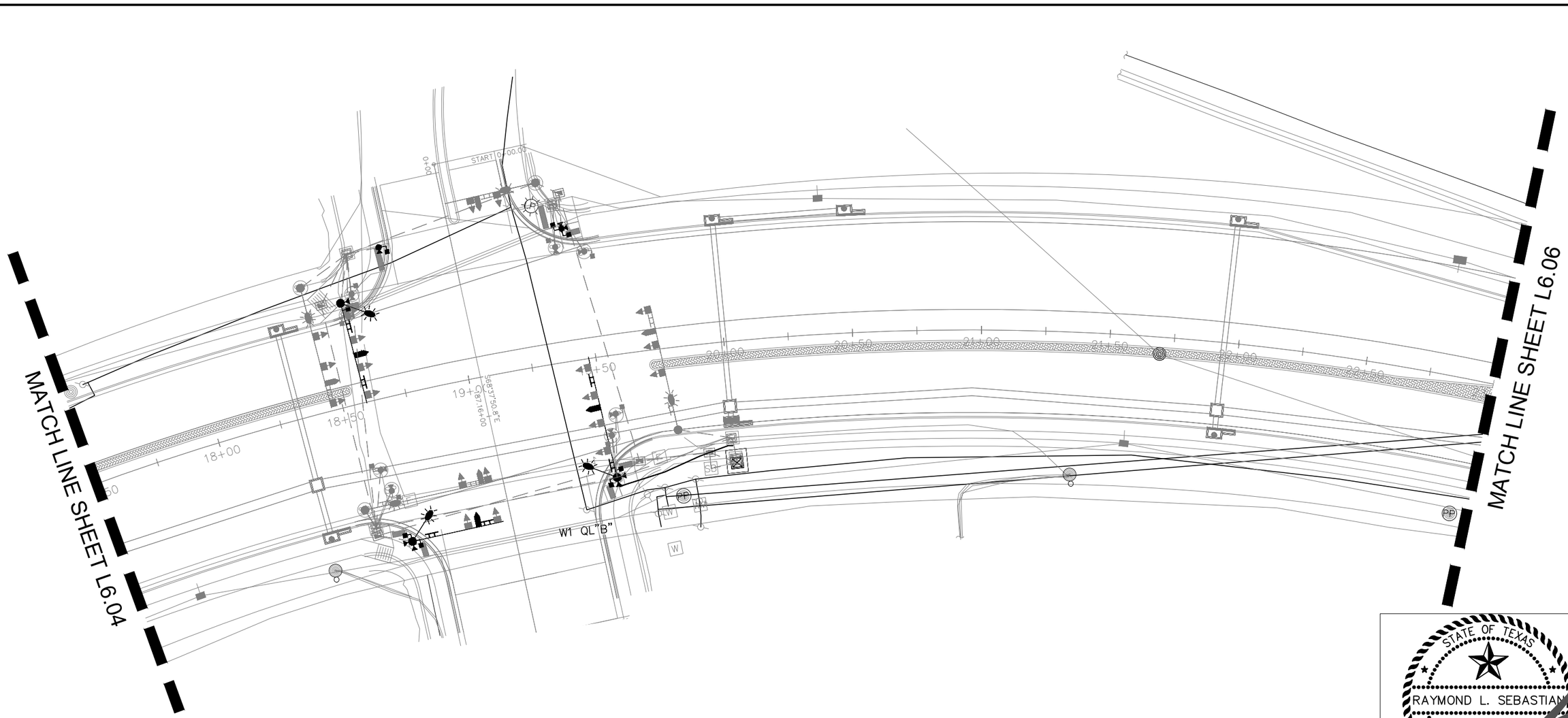

NO IRRIGATION THIS SHEET

1"=40'

0 20' 40' 80'

NORTH TEXAS DESIGN & CONSULTING, LLC
10540 BERNARD RD
SANGER, TX 76266
CONTACT: RAY SEBASTIAN

"THIS IRRIGATION SYSTEM HAS BEEN DESIGNED IN ACCORDANCE WITH ALL APPLICABLE STATE AND LOCAL LAWS, ORDINANCES, RULES, REGULATIONS OR ORDERS."

STATE OF TEXAS
RAYMOND L. SEBASTIAN
16050
REGISTERED LICENSED IRRIGATOR
1/24/25

EST.1848 GEORGETOWN TEXAS

BGE, Inc.
101 West Louis Henna Blvd, Suite 400, Austin, TX 78728
Tel: 512-879-0400 • www.bgeinc.com
TBPE Registration No. F-1046

IRRIGATION PLAN

L6.05

SHEET 4 OF 12

SHEET NO.
435

*BACKFLOW, VALVES AND LATERALS ARE SHOWN IN PAVEMENT FOR CLARITY PURPOSES.

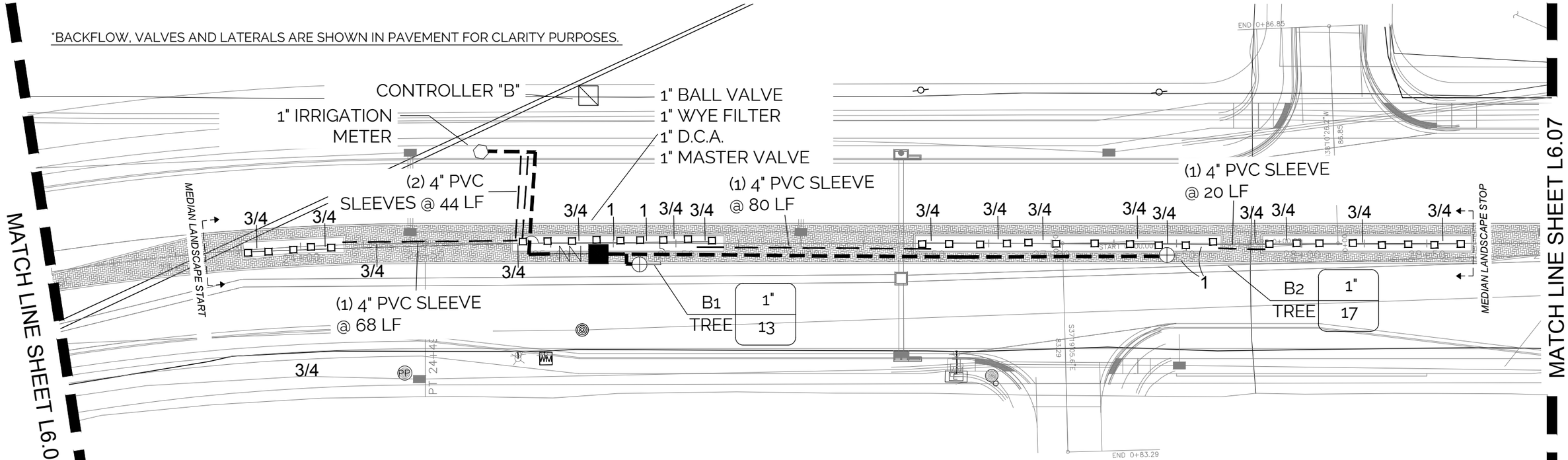

IRRIGATION LEGEND

- HUNTER MSBN-10F STREAM BUBBLER NOZZLE INSTALLED ON FLEX PIPE (18" MIN. LENGTH)
  SEE INSTALLATION NOTE #8 REGARDING TREE BUBBLER LATERAL PIPE
- HUNTER ICV SERIES ELECTRIC REMOTE CONTROL, "TREE BUBBLER ZONE" VALVE
  SEE INSTALLATION NOTE #8 REGARDING TREE BUBBLER LATERAL PIPE
- WILKINS 350 SERIES D.C.A. INSTALLED PER CITY CODE, WITH SAME SIZE WILKINS 850 SERIES BRONZE BALL VALVE AND WILKINS YB SERIES BRONZE WYE FILTER WITH 20 MESH STAINLESS STEEL SCREEN
- LASCO "V101N" SERIES SCH. 80 PVC TRUE UNION BALL VALVE, MAINLINE SIZE
- IRRIGATION WATER METER AND TAP, SIZE AS NOTED ON THE PLAN
- HUNTER ACC2 SERIES AUTOMATIC CONTROLLER MODEL A2C-1200-M WITH WIRELESS SOLAR SYNC SENSOR
  LOCATE SENSOR AS FIELD DIRECTED BY THE LANDSCAPE ARCHITECT
- MASTER ELECTRIC VALVE; (HUNTER ICV)
- CLASS 200 PVC MAINLINE PIPE
- CLASS 200 (EXCEPT 1/2 INCH #315) PVC LATERAL PIPE
- ONE 4" CLASS 200 SLEEVE PIPE
- TWO 4" CLASS 200 SLEEVE PIPES
- 1 1/2" PVC CONDUIT WITH LONG RADIUS SWEEP FITTINGS

L.I.C. SHALL SELECT SPRAY NOZZLES FOR "HEAD-TO-HEAD" COVERAGE, ADJUSTED FOR NO OVERSPRAY ONTO WALLS AND WALKS. NO OVERSPRAY INTO STREETS IS PERMITTED.

1"=40'
0 20' 40' 80'

NORTH TEXAS DESIGN & CONSULTING, LLC
10540 BERNARD RD
SANGER, TX 76266
CONTACT: RAY SEBASTIAN

"THIS IRRIGATION SYSTEM HAS BEEN DESIGNED IN ACCORDANCE WITH ALL APPLICABLE STATE AND LOCAL LAWS, ORDINANCES, RULES, REGULATIONS OR ORDERS."

STATE OF TEXAS
RAYMOND L. SEBASTIAN
16050
REGISTERED LICENSED IRRIGATOR
1/24/25

EST. 1848 GEORGETOWN TEXAS

BGE, Inc.
101 West Louis Henna Blvd, Suite 400, Austin, TX 78728
Tel: 512-879-0400 ● www.bgeinc.com
TBPE Registration No. F-1046

IRRIGATION PLAN

L6.06

SHEET 5 OF 12

SHEET NO. 436

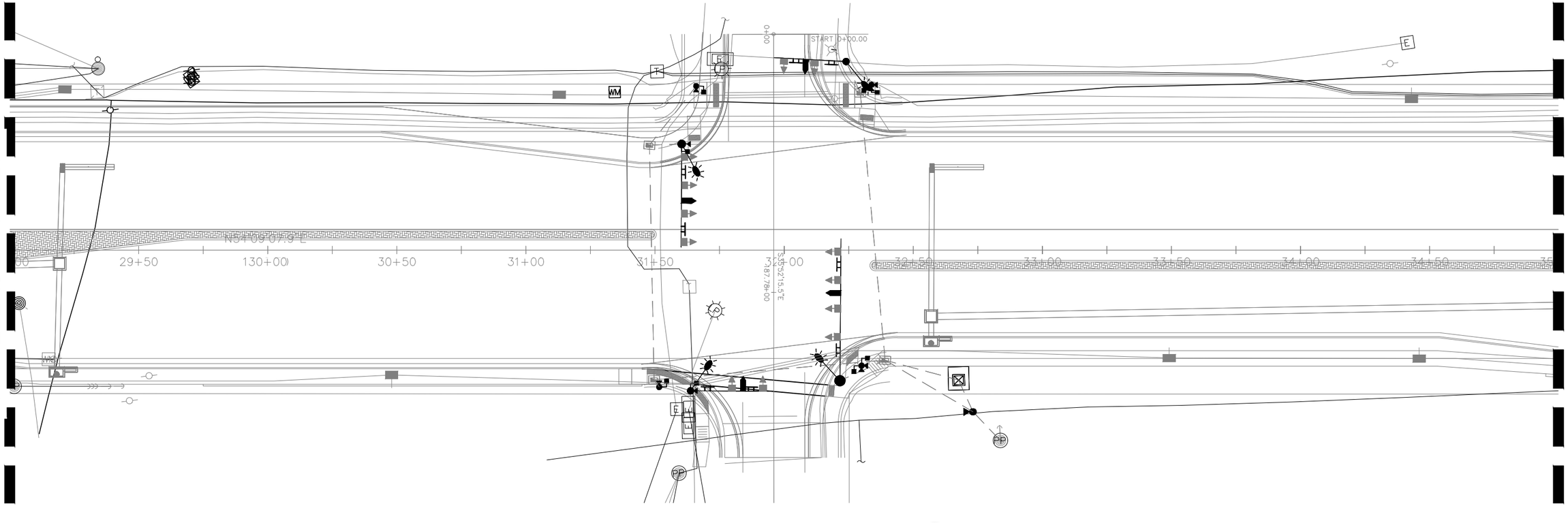

NO IRRIGATION THIS SHEET

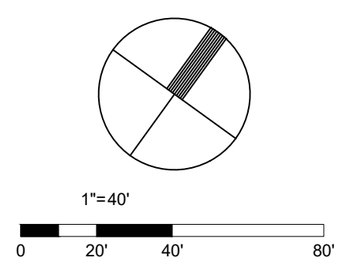

NORTH TEXAS DESIGN & CONSULTING, LLC
10540 BERNARD RD
SANGER, TX 76266
CONTACT: RAY SEBASTIAN

"THIS IRRIGATION SYSTEM HAS BEEN DESIGNED IN ACCORDANCE WITH ALL APPLICABLE STATE AND LOCAL LAWS, ORDINANCES, RULES, REGULATIONS OR ORDERS."

STATE OF TEXAS
RAYMOND L. SEBASTIAN
16050
REGISTERED LICENSED IRRIGATOR
1/24/25

GEORGETOWN TEXAS EST. 1848

BGE, Inc.
101 West Louis Henna Blvd, Suite 400, Austin, TX 78728
Tel: 512-879-0400 • www.bgeinc.com
TBPE Registration No. F-1046

IRRIGATION PLAN

L6.07

SHEET 6 OF 12

SHEET NO.
437

CK
DW
CK
DN

MATCH LINE SHEET L6.07

MATCH LINE SHEET L6.09

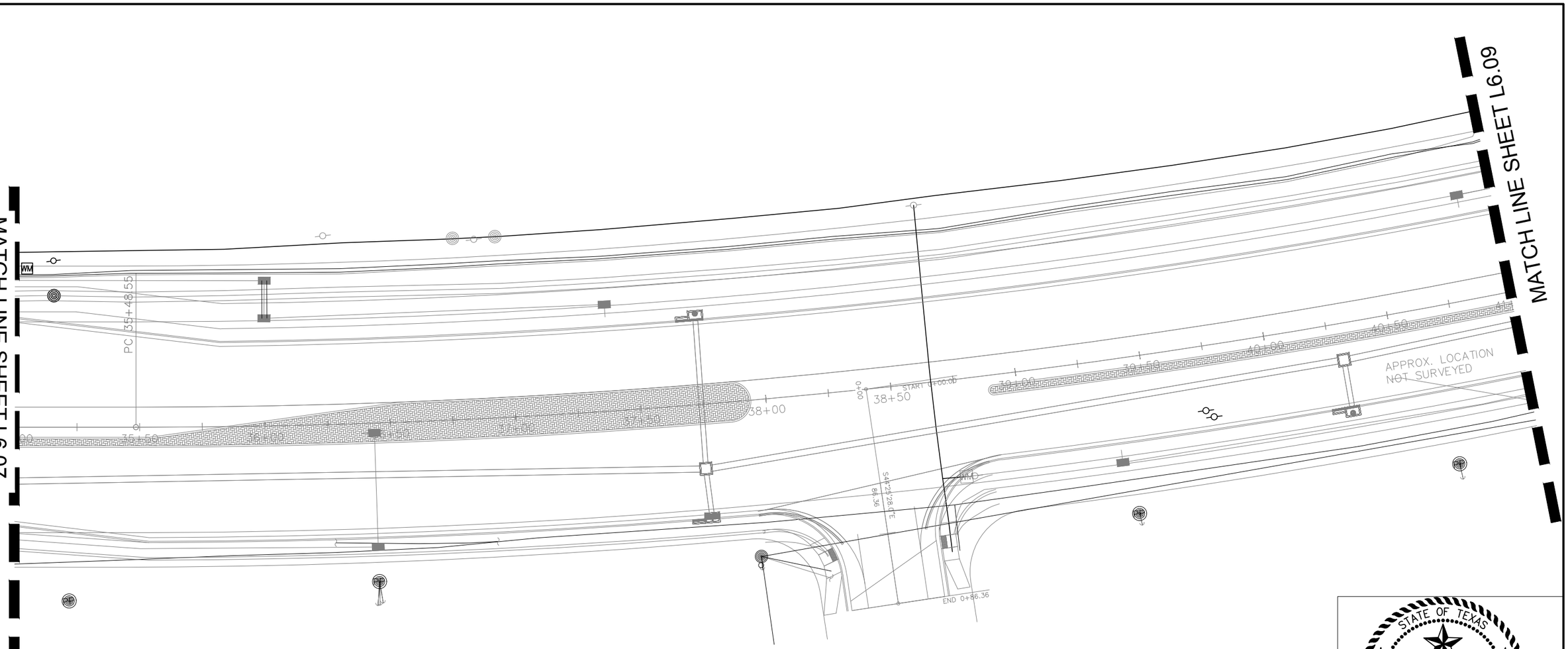

NO IRRIGATION THIS SHEET

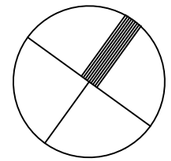

1"=40'

0 20' 40' 80'

NORTH TEXAS DESIGN & CONSULTING, LLC
10540 BERNARD RD
SANGER, TX 76266
CONTACT: RAY SEBASTIAN

"THIS IRRIGATION SYSTEM HAS BEEN DESIGNED IN ACCORDANCE WITH ALL APPLICABLE STATE AND LOCAL LAWS, ORDINANCES, RULES, REGULATIONS OR ORDERS."



EST.1848 GEORGETOWN TEXAS

BGE, Inc.
101 West Louis Henna Blvd, Suite 400, Austin, TX 78728
Tel: 512-879-0400 • www.bgeinc.com
TBPE Registration No. F-1046

IRRIGATION PLAN

L6.08

SHEET 7 OF 12

SHEET NO.
438

*BACKFLOW, VALVES AND LATERALS ARE SHOWN IN PAVEMENT FOR CLARITY PURPOSES.

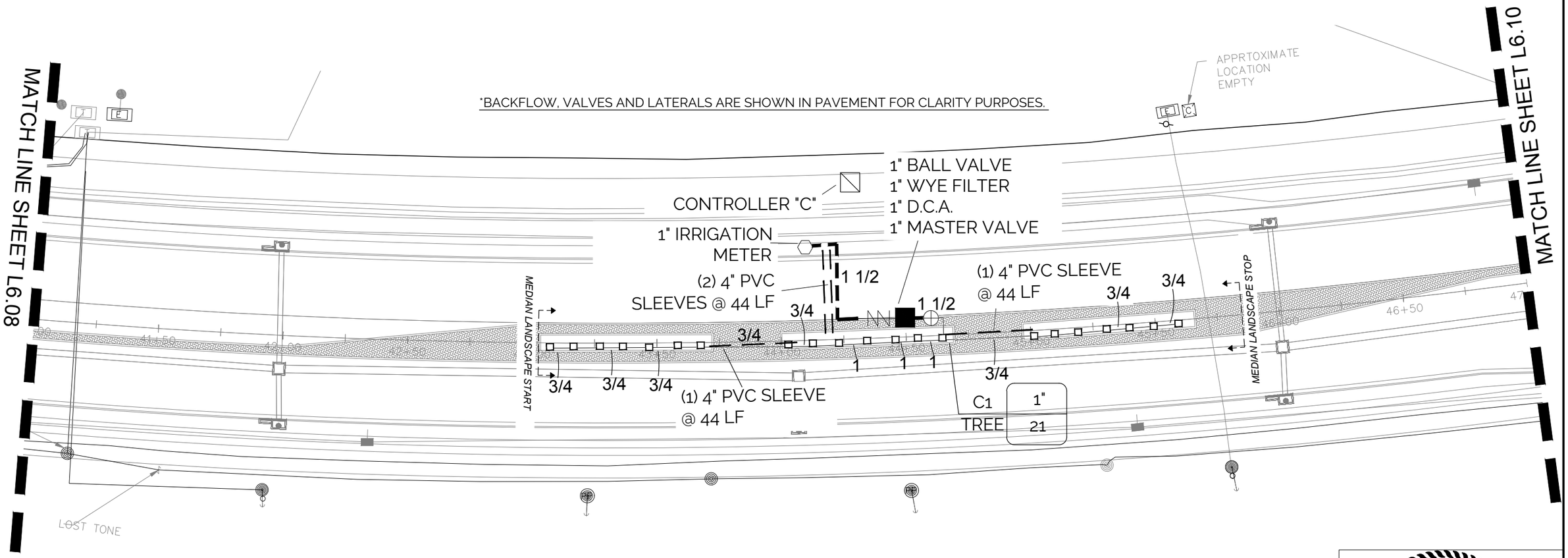

IRRIGATION LEGEND

- HUNTER MSBN-10F STREAM BUBBLER NOZZLE INSTALLED ON FLEX PIPE (18" MIN. LENGTH)
  SEE INSTALLATION NOTE #8 REGARDING TREE BUBBLER LATERAL PIPE
- HUNTER ICV SERIES ELECTRIC REMOTE CONTROL, "TREE BUBBLER ZONE" VALVE
  SEE INSTALLATION NOTE #8 REGARDING TREE BUBBLER LATERAL PIPE
- WILKINS 350 SERIES D.C.A. INSTALLED PER CITY CODE, WITH SAME SIZE WILKINS 850 SERIES BRONZE BALL VALVE AND WILKINS YB SERIES BRONZE WYE FILTER WITH 20 MESH STAINLESS STEEL SCREEN
- LASCO "V101N" SERIES SCH. 80 PVC TRUE UNION BALL VALVE, MAINLINE SIZE
- IRRIGATION WATER METER AND TAP, SIZE AS NOTED ON THE PLAN
- HUNTER ACC2 SERIES AUTOMATIC CONTROLLER MODEL A2C-1200-M WITH WIRELESS SOLAR SYNC SENSOR
  LOCATE SENSOR AS FIELD DIRECTED BY THE LANDSCAPE ARCHITECT
- MASTER ELECTRIC VALVE; (HUNTER ICV)
- CLASS 200 PVC MAINLINE PIPE
- CLASS 200 (EXCEPT 1/2 INCH #315) PVC LATERAL PIPE
- ONE 4" CLASS 200 SLEEVE PIPE
- TWO 4" CLASS 200 SLEEVE PIPES
- 1 1/2" PVC CONDUIT WITH LONG RADIUS SWEEP FITTINGS

L.I.C. SHALL SELECT SPRAY NOZZLES FOR "HEAD-TO-HEAD" COVERAGE, ADJUSTED FOR NO OVERSPRAY ONTO WALLS AND WALKS. NO OVERSPRAY INTO STREETS IS PERMITTED.

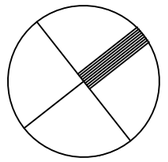

1"=40'

0 20' 40' 80'

NORTH TEXAS DESIGN & CONSULTING, LLC
10540 BERNARD RD
SANGER, TX 76266
CONTACT: RAY SEBASTIAN

"THIS IRRIGATION SYSTEM HAS BEEN DESIGNED IN ACCORDANCE WITH ALL APPLICABLE STATE AND LOCAL LAWS, ORDINANCES, RULES, REGULATIONS OR ORDERS."

STATE OF TEXAS
RAYMOND L. SEBASTIAN
16050
REGISTERED LICENSED IRRIGATOR
1/24/25

GEORGETOWN TEXAS EST.1848

BGE, Inc.
101 West Louis Henna Blvd, Suite 400, Austin, TX 78728
Tel: 512-879-0400 • www.bgeinc.com
TBPE Registration No. F-1046

IRRIGATION PLAN

L6.09

SHEET 8 OF 12

SHEET NO. 439

MATCH LINE SHEET L6.09

MATCH LINE SHEET L6.10

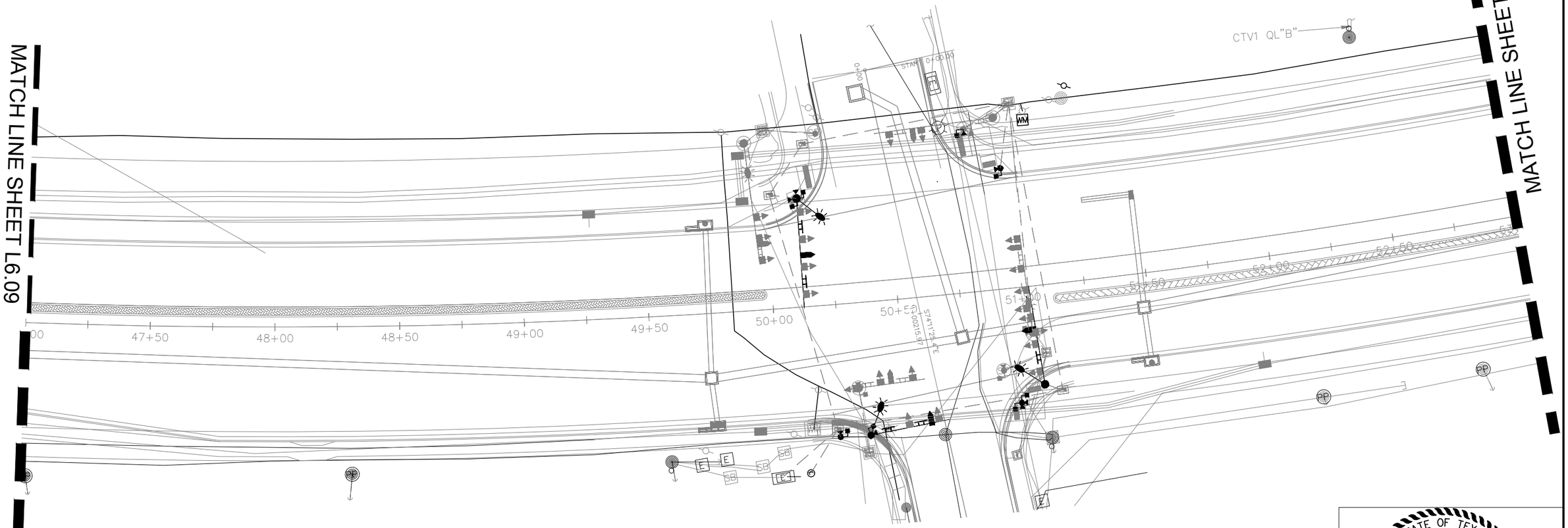

NO IRRIGATION THIS SHEET

1"=40'

0 20' 40' 80'

NORTH TEXAS DESIGN & CONSULTING, LLC
10540 BERNARD RD
SANGER, TX 76266
CONTACT: RAY SEBASTIAN

"THIS IRRIGATION SYSTEM HAS BEEN DESIGNED IN ACCORDANCE WITH ALL APPLICABLE STATE AND LOCAL LAWS, ORDINANCES, RULES, REGULATIONS OR ORDERS."

STATE OF TEXAS
RAYMOND L. SEBASTIAN
16050
REGISTERED LICENSED IRRIGATOR
1/24/25

EST. 1848 GEORGETOWN TEXAS

BGE, Inc.
101 West Louis Henna Blvd, Suite 400, Austin, TX 78728
Tel: 512-879-0400 • www.bgeinc.com
TBPE Registration No. F-1046

IRRIGATION PLAN

L6.10

SHEET 9 OF 12

SHEET NO.
440

*BACKFLOW, VALVES AND LATERALS ARE SHOWN IN PAVEMENT FOR CLARITY PURPOSES.

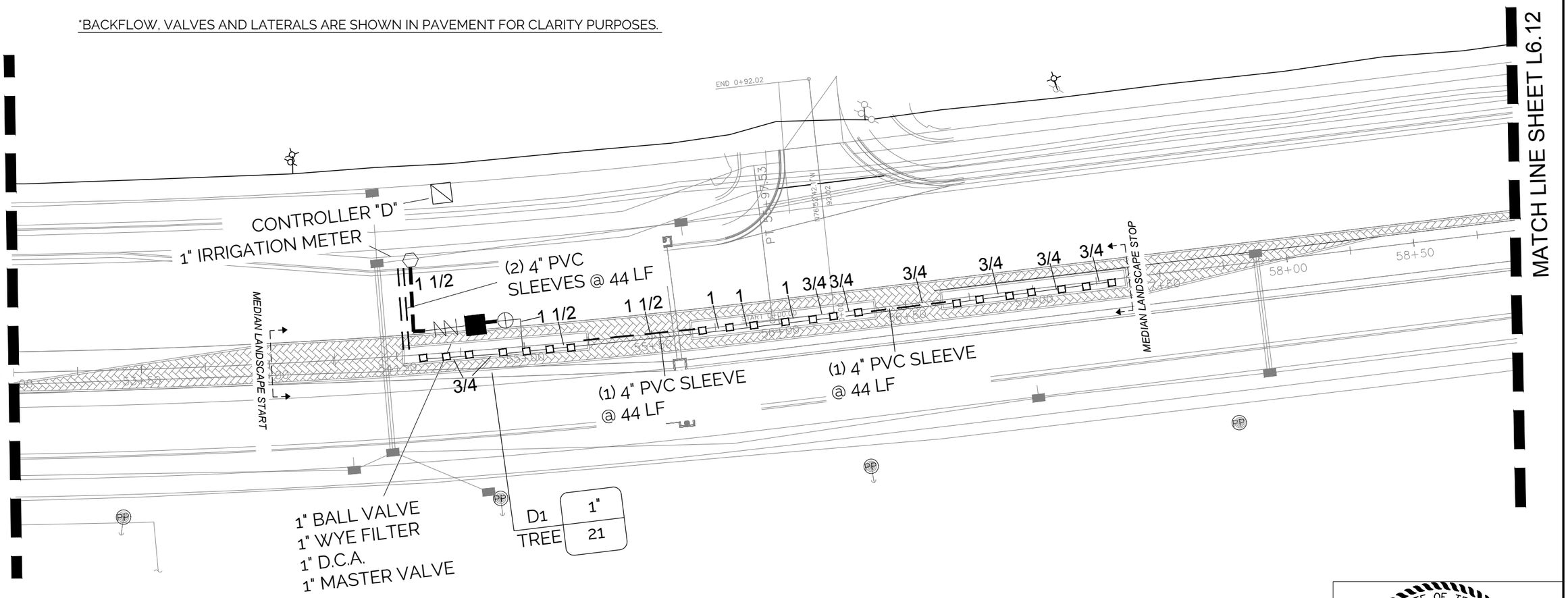

IRRIGATION LEGEND

- HUNTER MSBN-10F STREAM BUBBLER NOZZLE INSTALLED ON FLEX PIPE (18" MIN. LENGTH)
  SEE INSTALLATION NOTE #8 REGARDING TREE BUBBLER LATERAL PIPE
- HUNTER ICV SERIES ELECTRIC REMOTE CONTROL, "TREE BUBBLER ZONE" VALVE
  SEE INSTALLATION NOTE #8 REGARDING TREE BUBBLER LATERAL PIPE
- WILKINS 350 SERIES D.C.A. INSTALLED PER CITY CODE, WITH SAME SIZE WILKINS 850 SERIES BRONZE BALL VALVE AND WILKINS YB SERIES BRONZE WYE FILTER WITH 20 MESH STAINLESS STEEL SCREEN
- LASCO "V101N" SERIES SCH. 80 PVC TRUE UNION BALL VALVE, MAINLINE SIZE
- IRRIGATION WATER METER AND TAP, SIZE AS NOTED ON THE PLAN
- HUNTER ACC2 SERIES AUTOMATIC CONTROLLER MODEL A2C-1200-M WITH WIRELESS SOLAR SYNC SENSOR
  LOCATE SENSOR AS FIELD DIRECTED BY THE LANDSCAPE ARCHITECT
- MASTER ELECTRIC VALVE; (HUNTER ICV)
- CLASS 200 PVC MAINLINE PIPE
- CLASS 200 (EXCEPT 1/2 INCH #315) PVC LATERAL PIPE
- ONE 4" CLASS 200 SLEEVE PIPE
- TWO 4" CLASS 200 SLEEVE PIPES
- 1 1/2" PVC CONDUIT WITH LONG RADIUS SWEEP FITTINGS

L.I.C. SHALL SELECT SPRAY NOZZLES FOR "HEAD-TO-HEAD" COVERAGE, ADJUSTED FOR NO OVERSPRAY ONTO WALLS AND WALKS. NO OVERSPRAY INTO STREETS IS PERMITTED.

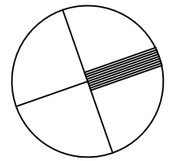

1"=40'

0 20' 40' 80'

NORTH TEXAS DESIGN & CONSULTING, LLC
10540 BERNARD RD
SANGER, TX 76266
CONTACT: RAY SEBASTIAN

"THIS IRRIGATION SYSTEM HAS BEEN DESIGNED IN ACCORDANCE WITH ALL APPLICABLE STATE AND LOCAL LAWS, ORDINANCES, RULES, REGULATIONS OR ORDERS."

STATE OF TEXAS
RAYMOND L. SEBASTIAN
16050
REGISTERED LICENSED IRRIGATOR
1/24/25

EST. 1848 GEORGETOWN TEXAS

BGE, Inc.
101 West Louis Henna Blvd, Suite 400, Austin, TX 78728
Tel: 512-879-0400 • www.bgeinc.com
TBPE Registration No. F-1046

IRRIGATION PLAN

L6.11

SHEET 10 OF 12

SHEET NO.
441

*BACKFLOW, VALVES AND LATERALS ARE SHOWN IN PAVEMENT FOR CLARITY PURPOSES.

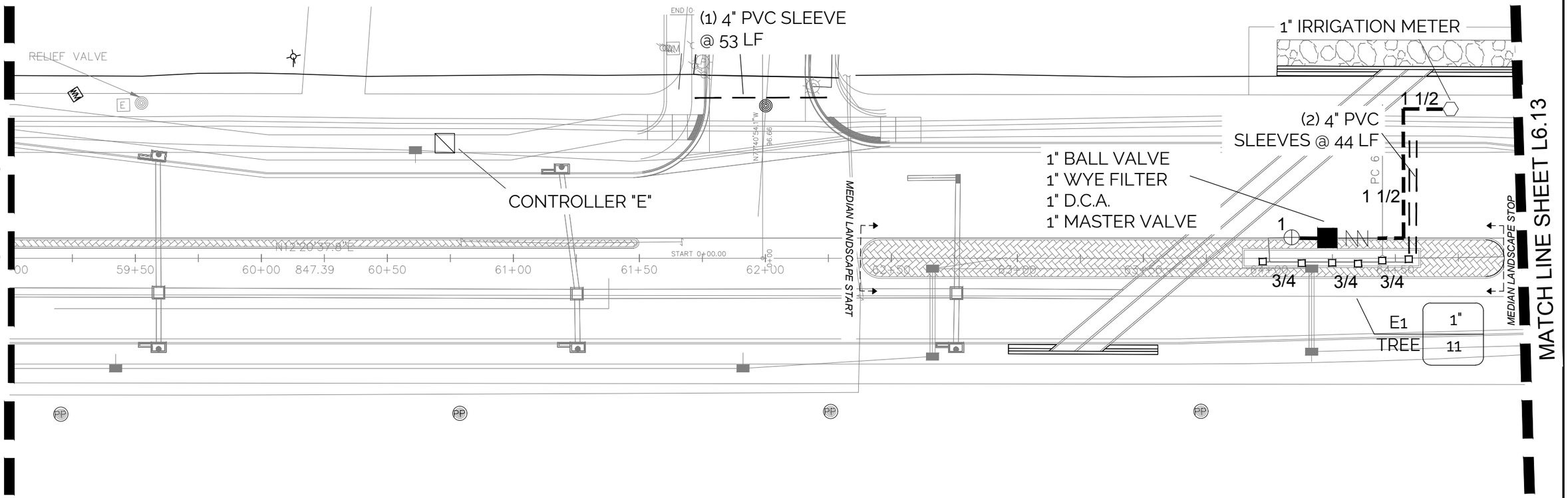

IRRIGATION LEGEND

- HUNTER MSBN-10F STREAM BUBBLER NOZZLE INSTALLED ON FLEX PIPE (18" MIN. LENGTH)
  SEE INSTALLATION NOTE #8 REGARDING TREE BUBBLER LATERAL PIPE
- HUNTER ICV SERIES ELECTRIC REMOTE CONTROL, "TREE BUBBLER ZONE" VALVE
  SEE INSTALLATION NOTE #8 REGARDING TREE BUBBLER LATERAL PIPE
- WILKINS 350 SERIES D.C.A. INSTALLED PER CITY CODE, WITH SAME SIZE WILKINS 850 SERIES BRONZE BALL VALVE AND WILKINS YB SERIES BRONZE WYE FILTER WITH 20 MESH STAINLESS STEEL SCREEN
- LASCO "V101N" SERIES SCH. 80 PVC TRUE UNION BALL VALVE, MAINLINE SIZE
- IRRIGATION WATER METER AND TAP, SIZE AS NOTED ON THE PLAN
- HUNTER ACC2 SERIES AUTOMATIC CONTROLLER MODEL A2C-1200-M WITH WIRELESS SOLAR SYNC SENSOR
  LOCATE SENSOR AS FIELD DIRECTED BY THE LANDSCAPE ARCHITECT
- MASTER ELECTRIC VALVE; (HUNTER ICV)
- CLASS 200 PVC MAINLINE PIPE
- CLASS 200 (EXCEPT 1/2 INCH #315) PVC LATERAL PIPE
- ONE 4" CLASS 200 SLEEVE PIPE (BORE OR SAW CUT)
- TWO 4" CLASS 200 SLEEVE PIPES (BORE OR SAW CUT)
- 1 1/2" PVC CONDUIT WITH LONG RADIUS SWEEP FITTINGS

L.I.C. SHALL SELECT SPRAY NOZZLES FOR "HEAD-TO-HEAD" COVERAGE, ADJUSTED FOR NO OVERSPRAY ONTO WALLS AND WALKS. NO OVERSPRAY INTO STREETS IS PERMITTED.

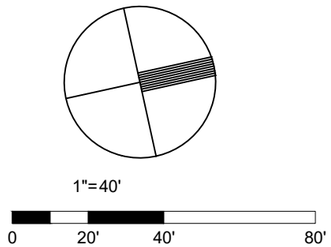

NORTH TEXAS DESIGN & CONSULTING, LLC
10540 BERNARD RD
SANGER, TX 76266
CONTACT: RAY SEBASTIAN

"THIS IRRIGATION SYSTEM HAS BEEN DESIGNED IN ACCORDANCE WITH ALL APPLICABLE STATE AND LOCAL LAWS, ORDINANCES, RULES, REGULATIONS OR ORDERS."

STATE OF TEXAS
RAYMOND L. SEBASTIAN
16050
REGISTERED LICENSED IRRIGATOR
1/24/25

EST.1848 GEORGETOWN TEXAS

BGE, Inc.
101 West Louis Henna Blvd, Suite 400, Austin, TX 78728
Tel: 512-879-0400 • www.bgeinc.com
TBPE Registration No. F-1046

IRRIGATION PLAN

L6.12

SHEET 11 OF 12

SHEET NO.
442

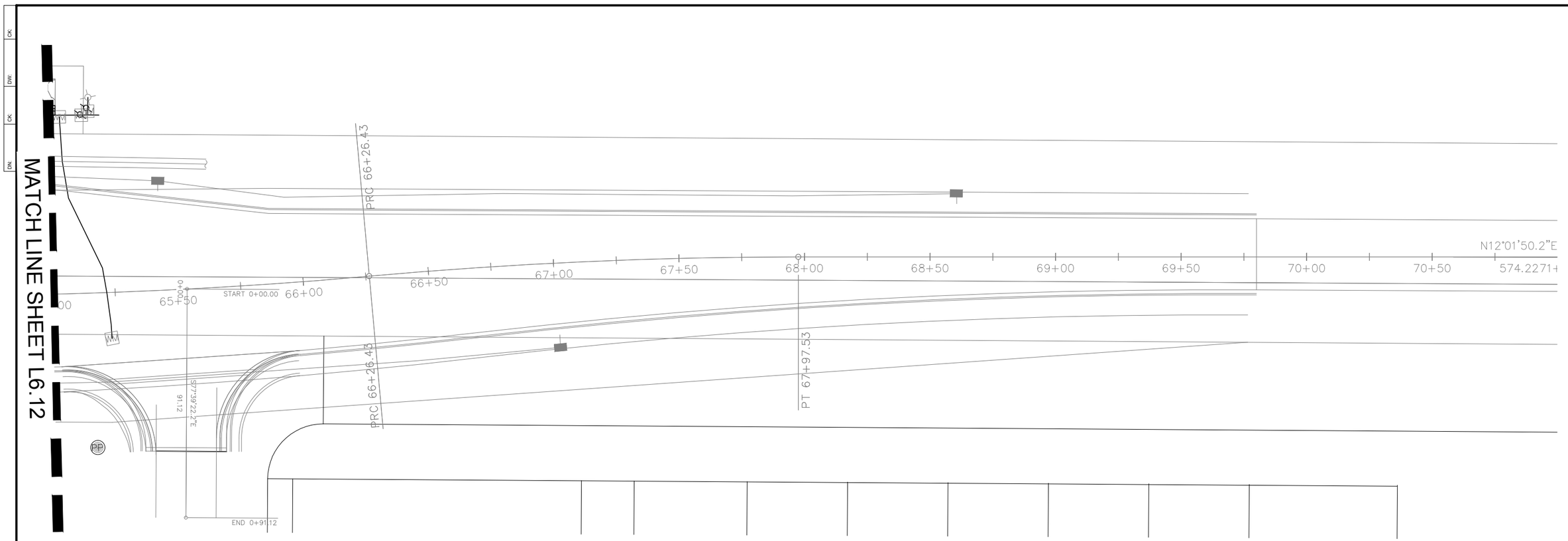

NO IRRIGATION THIS SHEET

1"=40'

0 20' 40' 80'

NORTH TEXAS DESIGN & CONSULTING, LLC
10540 BERNARD RD
SANGER, TX 76266
CONTACT: RAY SEBASTIAN

"THIS IRRIGATION SYSTEM HAS BEEN DESIGNED IN ACCORDANCE WITH ALL APPLICABLE STATE AND LOCAL LAWS, ORDINANCES, RULES, REGULATIONS OR ORDERS."

STATE OF TEXAS
RAYMOND L. SEBASTIAN
16050
REGISTERED LICENSED IRRIGATOR
1/24/25

EST. 1848 GEORGETOWN TEXAS

BGE, Inc.
101 West Louis Henna Blvd, Suite 400, Austin, TX 78728
Tel: 512-879-0400 • www.bgeinc.com
TBPE Registration No. F-1046

IRRIGATION PLAN

L6.13

SHEET 12 OF 12

SHEET NO.
443