Water Pollution Abatement Plan (WPAP)

Parkside on the River
Sections 11, 12A & 15A

CITY OF GEORGETOWN
WILLIAMSON COUNTY, TEXAS

July 18, 2025

HR Green Project No: 2403522

Prepared For:
HM Parkside Development, Inc.
P.O. Box 5397
Austin, Texas 78763

Prepared By:
HR Green Development TX, LLC
5508 Highway 290 West, Suite 150
Austin, Texas 78735
TBPE Firm No. F-16384

07/18/2025

TABLE OF CONTENTS

Edwards Aquifer Application Cover Page (TCEQ-20705)……1

General Information Form (TCEQ-0587)…… ……....2

Attachment A - Road Map
Attachment B - USGS Quadrangle Map
Attachment C - Project Narrative

Geologic Assessment Form (TCEQ-0585)…… ……3

Attachment A – Project Figures: Stratigraphic Column (Figure 5)
Attachment B – Site Geologic Map
Attachment C – Geologic Assessment Table (TCEQ-0585-Table)
Attachment D – Site Photographs

Water Pollution Abatement Plan Application Form (TCEQ-0584)……4

Attachment A – Factors Affecting Water Quality
Attachment B – Volume and Character of Stormwater

Temporary Stormwater Section (TCEQ-0602)……5

Attachment A – Spill Response Actions
Attachment B – Potential Sources of Contamination
Attachment C – Sequence of Major Activities
Attachment D – Temporary Best Management Practices and Measures
Attachment F – Structural Practices
Attachment G – Drainage Area Map
Attachment H – Temporary Sediment Pond(s) Plans and Calculations
Attachment I – Inspection and Maintenance for BMPs
Attachment J – Schedule of Interim and Permanent Soil Stabilization Practices

Permanent Stormwater Section (TCEQ-0600)……6

Attachment B – BMPs for Upgradient Stormwater
Attachment C – BMPs for On-site Stormwater
Attachment D – BMPs for Surface Streams
Attachment F – Construction Plans
Attachment I – Measures for Minimizing Surface Stream Contamination

Agent Authorization Form (TCEQ-0599) – Authorizing HR Green Development TX, LLC……..7

Owner Authorization Form(TCEQ-21019)……8

Application Fee Form (TCEQ-0574)……9

Core Data Form (TCEQ-10400)……..10

Texas Commission on Environmental Quality

Edwards Aquifer Application Cover Page

Our Review of Your Application

The Edwards Aquifer Program staff conducts an administrative and technical review of all applications. The turnaround time for administrative review can be up to 30 days as outlined in 30 TAC 213.4(e). Generally administrative completeness is determined during the intake meeting or within a few days of receipt. The turnaround time for technical review of an administratively complete Edwards Aquifer application is 90 days as outlined in 30 TAC 213.4(e). Please know that the review and approval time is directly impacted by the quality and completeness of the initial application that is received. In order to conduct a timely review, it is imperative that the information provided in an Edwards Aquifer application include final plans, be accurate, complete, and in compliance with 30 TAC 213.

Administrative Review

1. Edwards Aquifer applications must be deemed administratively complete before a technical review can begin. To be considered administratively complete, the application must contain completed forms and attachments, provide the requested information, and meet all the site plan requirements. The submitted application and plan sheets should be final plans. Please submit one full-size set of plan sheets with the original application, and half-size sets with the additional copies.

   To ensure that all applicable documents are included in the application, the program has developed tools to guide you and web pages to provide all forms, checklists, and guidance. Please visit the below website for assistance: http://www.tceq.texas.gov/field/eapp.

2. This Edwards Aquifer Application Cover Page form (certified by the applicant or agent) must be included in the application and brought to the administrative review meeting.

3. Administrative reviews are scheduled with program staff who will conduct the review. Applicants or their authorized agent should call the appropriate regional office, according to the county in which the project is located, to schedule a review. The average meeting time is one hour.

4. In the meeting, the application is examined for administrative completeness. Deficiencies will be noted by staff and emailed or faxed to the applicant and authorized agent at the end of the meeting, or shortly after. Administrative deficiencies will cause the application to be deemed incomplete and returned.

   An appointment should be made to resubmit the application. The application is re-examined to ensure all deficiencies are resolved. The application will only be deemed administratively complete when all administrative deficiencies are addressed.

5. If an application is received by mail, courier service, or otherwise submitted without a review meeting, the administrative review will be conducted within 30 days. The applicant and agent will be contacted with the results of the administrative review. If the application is found to be administratively incomplete, it can be retrieved from the regional office or returned by regular mail. If returned by mail, the regional office may require arrangements for return shipping.

6. If the geologic assessment was completed before October 1, 2004 and the site contains "possibly sensitive" features, the assessment must be updated in accordance with the *Instructions to Geologists* (TCEQ-0585 Instructions).

Technical Review

1. When an application is deemed administratively complete, the technical review period begins. The regional office will distribute copies of the application to the identified affected city, county, and groundwater conservation district whose jurisdiction includes the subject site. These entities and the public have 30 days to provide comments on the application to the regional office. All comments received are reviewed by TCEQ.

2. A site assessment is usually conducted as part of the technical review, to evaluate the geologic assessment and observe existing site conditions. The site must be accessible to our staff. The site boundaries should be

clearly marked, features identified in the geologic assessment should be flagged, roadways marked and the alignment of the Sewage Collection System and manholes should be staked at the time the application is submitted. If the site is not marked the application may be returned.

3. We evaluate the application for technical completeness and contact the applicant and agent via Notice of Deficiency (NOD) to request additional information and identify technical deficiencies. There are two deficiency response periods available to the applicant. There are 14 days to resolve deficiencies noted in the first NOD. If a second NOD is issued, there is an additional 14 days to resolve deficiencies. If the response to the second notice is not received, is incomplete or inadequate, or provides new information that is incomplete or inadequate, the application must be withdrawn or will be denied. Please note that because the technical review is underway, whether the application is withdrawn or denied **the application fee will be forfeited**.

4. The program has 90 calendar days to complete the technical review of the application. If the application is technically adequate, such that it complies with the Edwards Aquifer rules, and is protective of the Edwards Aquifer during and after construction, an approval letter will be issued. Construction or other regulated activity may not begin until an approval is issued.

Mid-Review Modifications

It is important to have final site plans prior to beginning the permitting process with TCEQ to avoid delays.

Occasionally, circumstances arise where you may have significant design and/or site plan changes after your Edwards Aquifer application has been deemed administratively complete by TCEQ. This is considered a "Mid-Review Modification". Mid-Review Modifications may require redistribution of an application that includes the proposed modifications for public comment.

If you are proposing a Mid-Review Modification, two options are available:

- If the technical review has begun your application can be denied/withdrawn, your fees will be forfeited, and the plan will have to be resubmitted.
- TCEQ can continue the technical review of the application as it was submitted, and a modification application can be submitted at a later time.

If the application is denied/withdrawn, the resubmitted application will be subject to the administrative and technical review processes and will be treated as a new application. The application will be redistributed to the affected jurisdictions.

Please contact the regional office if you have questions. If your project is located in Williamson, Travis, or Hays County, contact TCEQ's Austin Regional Office at 512-339-2929. If your project is in Comal, Bexar, Medina, Uvalde, or Kinney County, contact TCEQ's San Antonio Regional Office at 210-490-3096

Please fill out all required fields below and submit with your application.

1. Regulated Entity Name: Parkside on the River Sections 11, 12A & 15A						**2. Regulated Entity No.:**			
3. Customer Name: HM Parkside Development, Inc.						**4. Customer No.: CN605674258**			
5. Project Type: (Please circle/check one)	New **X**		Modification			Extension		Exception	
6. Plan Type: (Please circle/check one)	WPAP **X**	CZP	SCS	UST	AST	EXP	EXT	Technical Clarification	Optional Enhanced Measures
7. Land Use: (Please circle/check one)	Residential **X**		Non-residential			**8. Site (acres):**		55.16 Legal Boundary = 289.78	
9. Application Fee:	$8,000		**10. Permanent BMP(s):**			Batch Detention Ponds, Jellyfish, Vegetative Filter Strips			
11. SCS (Linear Ft.):	N/A		**12. AST/UST (No. Tanks):**			N/A			
13. County:	Williamson County		**14. Watershed:**			South Fork San Gabriel River			

Application Distribution

Instructions: Use the table below to determine the number of applications required. One original and one copy of the application, plus additional copies (as needed) for each affected incorporated city, county, and groundwater conservation district are required. Linear projects or large projects, which cross into multiple jurisdictions, can require additional copies. Refer to the "Texas Groundwater Conservation Districts within the EAPP Boundaries" map found at:

http://www.tceq.texas.gov/assets/public/compliance/field_ops/eapp/EAPP%20GWCD%20map.pdf

For more detailed boundaries, please contact the conservation district directly.

Austin Region			
County:	**Hays**	**Travis**	**Williamson**
Original (1 req.)	___	___	_X
Region (1 req.)	___	___	_X
County(ies)	___	___	_X
Groundwater Conservation District(s)	___Edwards Aquifer Authority ___Barton Springs/ Edwards Aquifer ___Hays Trinity ___Plum Creek	___Barton Springs/ Edwards Aquifer	NA
City(ies) Jurisdiction	___Austin ___Buda ___Dripping Springs ___Kyle ___Mountain City ___San Marcos ___Wimberley ___Woodcreek	___Austin ___Bee Cave ___Pflugerville ___Rollingwood ___Round Rock ___Sunset Valley ___West Lake Hills	___Austin ___Cedar Park ___Florence X_Georgetown ___Jerrell ___Leander ___Liberty Hill ___Pflugerville ___Round Rock

San Antonio Region					
County:	**Bexar**	**Comal**	**Kinney**	**Medina**	**Uvalde**
Original (1 req.)	___	___	___	___	___
Region (1 req.)	___	___	___	___	___
County(ies)	___	___	___	___	___
Groundwater Conservation District(s)	___ Edwards Aquifer Authority ___Trinity-Glen Rose	___Edwards Aquifer Authority	___Kinney	___EAA ___Medina	___EAA ___Uvalde
City(ies) Jurisdiction	___Castle Hills ___Fair Oaks Ranch ___Helotes ___Hill Country Village ___Hollywood Park ___San Antonio (SAWS) ___Shavano Park	___Bulverde ___Fair Oaks Ranch ___Garden Ridge ___New Braunfels ___Schertz	NA	___San Antonio ETJ (SAWS)	NA

I certify that to the best of my knowledge, that the application is complete and accurate. This application is hereby submitted to TCEQ for administrative review and technical review. Christine Campbell
Print Name of Customer/Authorized Agent Christine Campbell 07/18/2025
Signature of Customer/Authorized Agent Date

FOR TCEQ INTERNAL USE ONLY				
Date(s)Reviewed:		Date Administratively Complete:		
Received From:		Correct Number of Copies:		
Received By:		Distribution Date:		
EAPP File Number:		Complex:		
Admin. Review(s) (No.):		No. AR Rounds:		
Delinquent Fees (Y/N):		Review Time Spent:		
Lat./Long. Verified:		SOS Customer Verification:		
Agent Authorization Complete/Notarized (Y/N):		Fee Check:	Payable to TCEQ (Y/N):	
Core Data Form Complete (Y/N):			Signed (Y/N):	
Core Data Form Incomplete Nos.:			Less than 90 days old (Y/N):	

General Information Form

Texas Commission on Environmental Quality

For Regulated Activities on the Edwards Aquifer Recharge and Transition Zones and Relating to 30 TAC §213.4(b) & §213.5(b)(2)(A), (B) Effective June 1, 1999

To ensure that the application is administratively complete, confirm that all fields in the form are complete, verify that all requested information is provided, consistently reference the same site and contact person in all forms in the application, and ensure forms are signed by the appropriate party.

Note: Including all the information requested in the form and attachments contributes to more streamlined technical reviews.

Signature

To the best of my knowledge, the responses to this form accurately reflect all information requested concerning the proposed regulated activities and methods to protect the Edwards Aquifer. This **General Information Form** is hereby submitted for TCEQ review. The application was prepared by:

Print Name of Customer/Agent: Christine Campbell, P.E.

Date: 07/18/2025

Signature of Customer/Agent:

Project Information

1. Regulated Entity Name: Parkside on the River Sections 11, 12A & 15A
2. County: Williamson
3. Stream Basin: Brazos River Basin
4. Groundwater Conservation District (If applicable): N/A
5. Edwards Aquifer Zone:

   ☒ Recharge Zone
   ☐ Transition Zone

6. Plan Type:

   ☒ WPAP
   ☐ SCS
   ☐ Modification
   ☐ AST
   ☐ UST
   ☐ Exception Request

7. Customer (Applicant):

   Contact Person: Blake Magee
   Entity: HM Parkside Development, Inc.
   Mailing Address: P.O. Box 5397
   City, State: Austin, TX Zip: 78763
   Telephone: 512-481-0303 FAX: _____
   Email Address: Blake@blakemageeco.com

8. Agent/Representative (If any):

   Contact Person: Christine Campbell
   Entity: HR Green Development TX, LLC
   Mailing Address: 5508 US Highway 290 West, Suite #150
   City, State: Austin, TX Zip: 78735
   Telephone: 512-872-6696 FAX: _____
   Email Address: christine.campbell@hrgreen.com

9. Project Location:

   ☐ The project site is located inside the city limits of _____.
   ☒ The project site is located outside the city limits but inside the ETJ (extra-territorial jurisdiction) of Georgetown.
   ☐ The project site is not located within any city's limits or ETJ.

10. ☒ The location of the project site is described below. The description provides sufficient detail and clarity so that the TCEQ's Regional staff can easily locate the project and site boundaries for a field investigation.

    Located west of Parkside Parkway, northeast of Parkside on the River GTII - Phase 1, and north of Parkside on the River Sections 9B & 10B.

11. ☒ **Attachment A – Road Map**. A road map showing directions to and the location of the project site is attached. The project location and site boundaries are clearly shown on the map.

12. ☒ **Attachment B - USGS / Edwards Recharge Zone Map**. A copy of the official 7 ½ minute USGS Quadrangle Map (Scale: 1" = 2000') of the Edwards Recharge Zone is attached. The map(s) clearly show:

    ☒ Project site boundaries.
    ☒ USGS Quadrangle Name(s).
    ☒ Boundaries of the Recharge Zone (and Transition Zone, if applicable).
    ☒ Drainage path from the project site to the boundary of the Recharge Zone.

13. ☒ **The TCEQ must be able to inspect the project site or the application will be returned**. Sufficient survey staking is provided on the project to allow TCEQ regional staff to locate the boundaries and alignment of the regulated activities and the geologic or manmade features noted in the Geologic Assessment.

☒ Survey staking will be completed by this date: July 16, 2025

14. ☒ **Attachment C – Project Description**. Attached at the end of this form is a detailed narrative description of the proposed project. The project description is consistent throughout the application and contains, at a minimum, the following details:

☒ Area of the site
☒ Offsite areas
☒ Impervious cover
☒ Permanent BMP(s)
☒ Proposed site use
☒ Site history
☒ Previous development
☒ Area(s) to be demolished

15. Existing project site conditions are noted below:

☐ Existing commercial site
☐ Existing industrial site
☐ Existing residential site
☐ Existing paved and/or unpaved roads
☒ Undeveloped (Cleared)
☒ Undeveloped (Undisturbed/Uncleared)
☐ Other: _____

Prohibited Activities

16. ☒ I am aware that the following activities are prohibited on the Recharge Zone and are not proposed for this project:

(1) Waste disposal wells regulated under 30 TAC Chapter 331 of this title (relating to Underground Injection Control);

(2) New feedlot/concentrated animal feeding operations, as defined in 30 TAC §213.3;

(3) Land disposal of Class I wastes, as defined in 30 TAC §335.1;

(4) The use of sewage holding tanks as parts of organized collection systems; and

(5) New municipal solid waste landfill facilities required to meet and comply with Type I standards which are defined in §330.41(b), (c), and (d) of this title (relating to Types of Municipal Solid Waste Facilities).

(6) New municipal and industrial wastewater discharges into or adjacent to water in the state that would create additional pollutant loading.

17. ☒ I am aware that the following activities are prohibited on the Transition Zone and are not proposed for this project:

(1) Waste disposal wells regulated under 30 TAC Chapter 331 (relating to Underground Injection Control);

(2) Land disposal of Class I wastes, as defined in 30 TAC §335.1; and

(3) New municipal solid waste landfill facilities required to meet and comply with Type I standards which are defined in §330.41 (b), (c), and (d) of this title.

Administrative Information

18. The fee for the plan(s) is based on:

☒ For a Water Pollution Abatement Plan or Modification, the total acreage of the site where regulated activities will occur.
☐ For an Organized Sewage Collection System Plan or Modification, the total linear footage of all collection system lines.
☐ For a UST Facility Plan or Modification or an AST Facility Plan or Modification, the total number of tanks or piping systems.
☐ A request for an exception to any substantive portion of the regulations related to the protection of water quality.
☐ A request for an extension to a previously approved plan.

19. ☒ Application fees are due and payable at the time the application is filed. If the correct fee is not submitted, the TCEQ is not required to consider the application until the correct fee is submitted. Both the fee and the Edwards Aquifer Fee Form have been sent to the Commission's:

☒ TCEQ cashier
☐ Austin Regional Office (for projects in Hays, Travis, and Williamson Counties)
☐ San Antonio Regional Office (for projects in Bexar, Comal, Kinney, Medina, and Uvalde Counties)

20. ☒ Submit one (1) original and one (1) copy of the application, plus additional copies as needed for each affected incorporated city, groundwater conservation district, and county in which the project will be located. The TCEQ will distribute the additional copies to these jurisdictions. The copies must be submitted to the appropriate regional office.

21. ☒ No person shall commence any regulated activity until the Edwards Aquifer Protection Plan(s) for the activity has been filed with and approved by the Executive Director.

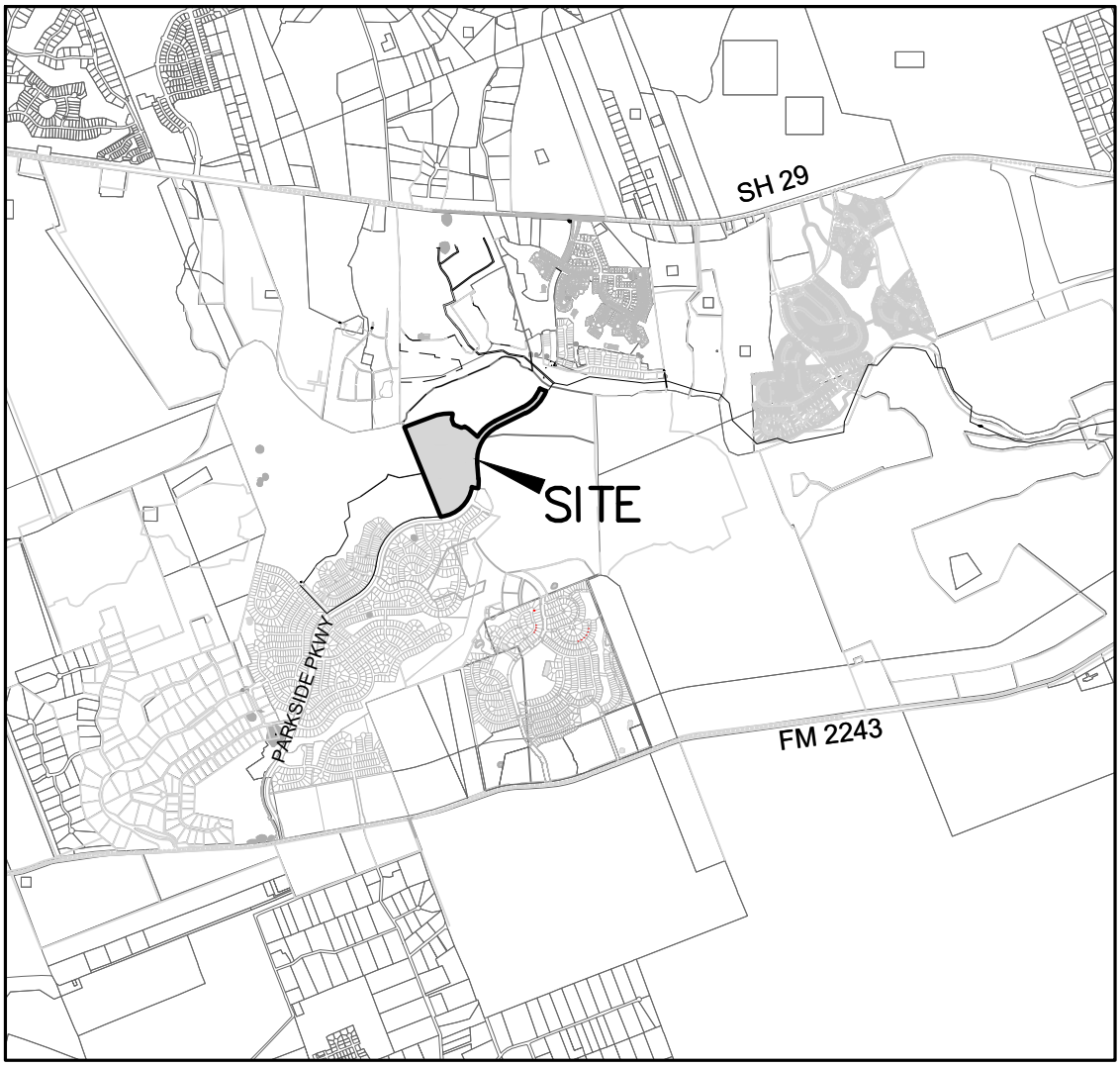

VICINITY MAP

SCALE: 1"=4000'

HRGreen®
DEVELOPMENT TX

5508 HIGHWAY 290 WEST
SUITE 150
AUSTIN, TX 78735
512.872.6696
HRGREEN.COM

TBPE NO: 16384
TBPLS NO: 10194101

PARKSIDE ON THE RIVER
SECTIONS 11, 12A & 15A
LOCATION MAP

P:\blake magee\parkside sections 11-15 & won 5\section 11, 12a & 15a\03_ACAD\Plans\sh2403522 COVR.dwg, July 14, 2025, 3:18 PM, ccampbell

UNITED STATES
DEPARTMENT OF THE INTERIOR
GEOLOGICAL SURVEY

LEANDER QUADRANGLE
TEXAS
7.5 MINUTE SERIES (TOPOGRAPHIC)

Edwards Aquifer Recharge Zone

SUBJECT SITE

Edwards Aquifer Recharge Zone

Edwards Aquifer Contributing Zone

Edwards Aquifer Recharge Zone

Mapped, edited, and published by the Geological Survey

Control by USGS and NOS/NOAA

Topography by photogrammetric methods from aerial photographs taken 1962. Field checked 1963. Revised from aerial photographs taken 1985. Field checked 1986. Map edited 1987

Projection and 10,000-foot grid ticks: Texas coordinate system, central zone (Lambert conformal conic)
1000-meter Universal Transverse Mercator grid, zone 14
1927 North American Datum
To place on the predicted North American Datum 1983 move the projection lines 17 meters south and 28 meters east as shown by dashed corner ticks

Fine red dashed lines indicate selected fence line

UTM GRID AND 1987 MAGNETIC NORTH DECLINATION AT CENTER OF MAP DIAGRAM IS APPROXIMATE

Red tint indicates areas in which only landmark buildings are shown

Areas covered by dashed light-blue pattern are subject to controlled inundation

SCALE 1:24 000

CONTOUR INTERVAL 10 FEET
NATIONAL GEODETIC VERTICAL DATUM OF 1929

THIS MAP COMPLIES WITH NATIONAL MAP ACCURACY STANDARDS
FOR SALE BY U. S. GEOLOGICAL SURVEY, DENVER, COLORADO 80225, OR RESTON, VIRGINIA 22092
A FOLDER DESCRIBING TOPOGRAPHIC MAPS AND SYMBOLS IS AVAILABLE ON REQUEST

QUADRANGLE LOCATION

3097–321

ROAD CLASSIFICATION

Primary highway, hard surface
Secondary highway, hard surface
Light-duty road, hard or improved surface
Unimproved road
Interstate Route U. S. Route State Route

LEANDER, TEX.
30097–E7–TF–024

1987

DMA 6445 III SE–SERIES V882

ISBN 0-607-51609-7

Texas Commission on Environmental Quality
Edwards Aquifer Protection Program

Regulatory Zones

30 TAC Chapter 213- Edwards Aquifer
Effective May 1985

This map was produced by the Groundwater Planning and Assessment Team of the Texas Commission on Environmental Quality to detail the boundaries of the regulatory zones of the Edwards Aquifer Protection Program, as described in Texas Administrative Code Title 30, Part 1, §213.3. No other claims are made to the accuracy or completeness of the data or to its suitability for a particular use. For more information about the Edwards Aquifer Protection Program, please contact the TCEQ Regional Offices in San Antonio or Austin. Printed June 2006.

ATTACHMENT C – PROJECT NARRATIVE

The Parkside on the River Sections 11, 12A & 15A development is a proposed single-family residential development tract, including associated right-of-way, drainage, and utilities located in the City of Georgetown and Williamson County. The project site is located within the Edwards Aquifer Recharge Zone, the Edwards Aquifer Contributing Zone, and within the San Gabriel River watershed. The overall project site encompasses a 55.16-acre tract of land located west of Parkside Parkway, northeast of Parkside on the River GTII – Phase 1, and north of Parkside on the River Sections 9B & 10B. There will be roughly 51.42-acres of disturbed land and a 289.78-acre legal boundary for application fee purposes.

The project site is primarily undeveloped wooded land with grass. Runoff flows northeast towards the South Fork San Gabriel River. Portions of the project site are located within the 100-year floodplain as defined by FEMA FIRM Panel No. 48491C0460F, dated December 20, 2019. Portions of this subdivision are also affected by the approved CLOMR #15-06-2071R and the approved LOMR #21-06-0115P.

The proposed site's SCS system will be composed of a total of 6,763 LF of wastewater line. There is 5,236 LF of 8-inch (8") 115 psi (ASTM D3034) gravity wastewater pipe, 160 LF of 8-inch (8") pressure rated (ASTM D2241) wastewater pipe, and 1,367 LF of 6-inch (6") gravity wastewater pipe. The proposed improvements will tie into the existing 18" Barton Tributary Wastewater Line. This line connects to the existing San Gabriel River Interceptor, and ultimately flows to the Dove Springs WWTP for treatment. The Dove Springs Wastewater Treatment Plant has the capacity to adequately treat the proposed peak flow.

The proposed development results in an impervious cover of approximately 37.7% and will have the associated runoff treated by three batch detention ponds – one approved with Parkside on the River Sections 9B & 10B and the other two are in this proposed set of plans. Of the 55.16 acres of the proposed Parkside on the River Sections 11, 12A & 15A property, there is approximately 20.82 acres of impervious cover. There is also 0.76 acres of impervious cover proposed with the future Parkside on the River Section 15B project. Based on the 80% TSS removal requirement by TCEQ, we need to provide 18,783 lbs. of TSS removal for the total 21.58 acres of impervious cover proposed in Parkside on the River Sections 11, 12A & 15A and Parkside on the River Section 15B. As shown in the calculations, the BMPs satisfy the TSS removal requirement. The 85% TSS removal requirement by the City of Georgetown is also satisfied by the batch detention ponds.

The fully-developed conditions for the overall area propose approximately 22.70 acres of post-development impervious cover, of which approximately 0.87 acres are existing from Parkside on the River Sections 9B & 10B, 20.82 acres are from proposed Parkside on the River Sections 11, 12A & 15A, 0.76 acres are from proposed Parkside on the River Section 15B, and an estimated 0.25 acres of future impervious cover from future Parkside on the River developments. Based on the 80% TSS removal requirement by TCEQ we need to provide 19,012 lbs. of TSS removal in the fully-developed case. As shown in the calculations, the existing Parkside on the River Sections 9B & 10B batch detention pond (EX-BDP), the proposed Parkside on the River Sections 11, 12A & 15A batch detention ponds (BDP-01 & BDP-02), Jellyfish (JF-01, JF-02 & JF-03), and vegetative filter strips (VFS-01, VFS-02, VFS-03, VFS-04 & VFS-05) satisfy this requirement. The 85% TSS removal requirement by the City of Georgetown is also satisfied with the batch detention ponds.

In the fully-developed condition, the proposed batch detention pond (BDP-01) will treat a total of approximately 2.47 acres of impervious cover from Parkside on the River Sections 11, 12A & 15A and provide 2,475 lbs. of TSS removal. The proposed batch detention pond (BDP-02) will treat a total of approximately 8.25 acres of impervious cover (8.00 acres from Parkside on the River Sections 11, 12A & 15A and 0.25 acres from future Parkside on the River development) and provide 7,850 lbs. of TSS removal. The existing Parkside on the River Section 9B & 10B batch detention pond (EX-BDP) will treat a total of approximately 0.17 acres of impervious cover from Parkside on the River Sections 11, 12A & 15A and has capacity to provide 157 lbs. of TSS removal for the proposed Parkside Sections 11, 12A & 15A impervious cover. The proposed Jellyfish (JF-01) will treat a total of approximately 1.82 acres of impervious cover (0.87 acres of impervious cover from the existing Parkside on the River Sections 9B & 10B and 0.95 acres of impervious cover from the proposed Parkside on the River Sections 11, 12A & 15A) and

provide 1,582 lbs. of TSS removal. The proposed Jellyfish (JF-02) will treat 1.20 acres of impervious cover from the proposed Parkside on the River Sections 11, 12A & 15A and provide 1,101 lbs. of TSS removal. The proposed Jellyfish (JF-03) will treat 3.32 acres of impervious cover from the proposed Parkside on the River Sections 11, 12A & 15A and provide 3,089 lbs. of TSS removal. Approximately 1.81 acres of impervious cover proposed with Parkside on the River Sections 11, 12A & 15A and Section 15B are bypassing treatment. The BMPs are overtreating to account for the bypassed impervious cover.

Refer to the construction plans for water quality calculations. Refer to the attached Parkside on the River Sections 9B & 10B for the existing batch detention pond designs. Refer to the table below for the proposed sedimentation treatment breakdown provided.

A tree demolition schedule is included in the construction plans.

The associated combination of roadways, drainage, water quality, water, and wastewater improvements will be designed and built to serve this residential development.

PARKSIDE ON THE RIVER SECTIONS 11, 12A, 15A AND SECTION 15B - TSS REMOVAL SUMMARY - FULLY-DEVELOPED

DRAINAGE AREA	BMP TYPE	MAX TSS REMOVAL EFFICIENCY	BASIN AREA	PRE-DEVELOPMENT I.C.	PROPOSED I.C.				POST-DEVELOPMENT I.C.		TCEQ REQUIRED 80% TSS LOAD REMOVAL	CITY OF GEORGETOWN REQUIRED 85% TSS LOAD REMOVAL	PROVIDED TSS LOAD REMOVAL	VOLUME REQUIRED	VOLUME PROVIDED
					SECTIONS 9B & 10B	SECTIONS 11, 12A, 15A	SECTION 15B	FUTURE							
			AC	AC		AC	AC	AC	AC	%	LB	LB	LB	CF	CF
BDP-01	BATCH DETENTION POND	91%	5.51	0.00		2.47			2.47	45%	2,150	2,284	2,475	26,411	35,491
BDP-02	BATCH DETENTION POND	91%	15.58	0.00		8.00		0.25	8.25	53%	7,181	7,630	7,850	55,888	66,371
EX-BDP	EXISTING BATCH DETENTION POND	91%	0.46	0.00		0.17			0.17	37%	148	157	157		
VFS-01	VEGETATIVE FILTER STRIP	85%	1.31	0.00		0.40			0.40	31%	348		390		
VFS-02	VEGETATIVE FILTER STRIP	85%	3.57	0.00		1.67			1.67	47%	1,454		1,600		
VFS-03	VEGETATIVE FILTER STRIP	85%	1.86	0.00		0.96			0.96	52%	836		917		
VFS-04	VEGETATIVE FILTER STRIP	85%	0.66	0.00		0.36			0.36	55%	313		343		
VFS-05	VEGETATIVE FILTER STRIP	85%	0.48	0.00		0.28			0.28	58%	244		266		
JF-01	JELLYFISH	86%	3.52	0.00	0.87	0.95			1.82	52%	830	882	1,582		
JF-02	JELLYFISH	86%	2.21	0.00		1.20			1.20	54%	1,044	1,110	1,101		
JF-03	JELLYFISH	86%	5.95	0.00		3.32			3.32	56%	2,890	3,070	3,089		
BP-01	BY-PASS	0%	2.25	0.00		1.01			1.01	45%	879		0		
BP-02	BY-PASS	0%	1.89	0.00		0.04	0.76		0.80	42%	696		0		
TOTAL:			**45.25**	**0.00**	**0.87**	**20.83**	**0.76**	**0.25**	**22.71**	**50%**	**19,012**		**19,770**		

1 - FOR THE GEORGETOWN TSS REMOVAL REQUIREMENT, WE CONSIDER 85% OF TSS REMOVAL FOR THE DRAINAGE AREA THAT DRAINS TOWARD THE JELLYFISH AND BATCH DETENTION PONDS.

Narrative Description of Site-Specific Geology for the 417-acre Parcel of the Parkside on the River Property Located in Georgetown, Williamson County, Texas

Prepared for:

HM PARKSIDE DEVELOPMENT, INC

Prepared by:

CAMBRIAN ENVIRONMENTAL

April 4th, 2025

NARRATIVE DESCRIPTION OF SITE-SPECIFIC GEOLOGY FOR THE 417-ACRE PARCEL OF THE PARKSIDE ON THE RIVER PROPERTY LOCATED IN GEORGETOWN, WILLIAMSON COUNTY, TEXAS

Prepared for:

HM Parkside Development, Inc.
Blake Magee Co.
1011 North Lamar Blvd.
Austin, Texas 78703

Prepared by:

Craig Crawford, P.G.
TX Geoscience License #10791

Cambrian Environmental
4422 Pack Saddle Pass
Suite 204
Austin, Texas 78745

TX Geoscience Firm Registration #50484

As a licensed professional geoscientist I attest that the contents of this report are complete and accurate to the best of my knowledge.

Geologic Assessment

Texas Commission on Environmental Quality

For Regulated Activities on The Edwards Aquifer Recharge/transition Zones and Relating to 30 TAC §213.5(b)(3), Effective June 1, 1999

To ensure that the application is administratively complete, confirm that all fields in the form are complete, verify that all requested information is provided, consistently reference the same site and contact person in all forms in the application, and ensure forms are signed by the appropriate party.

Note: Including all the information requested in the form and attachments contributes to more streamlined technical reviews.

Signature

To the best of my knowledge, the responses to this form accurately reflect all information requested concerning the proposed regulated activities and methods to protect the Edwards Aquifer. My signature certifies that I am qualified as a geologist as defined by 30 TAC Chapter 213.

Print Name of Geologist: Craig Crawford, PG Telephone: 512.705.5541

Date: 4 April 2025 Fax: _____

Representing: Cambrian Environmental (TBPG Firm # 50484) (Name of Company and TBPG or TBPE registration number)

Signature of Geologist:

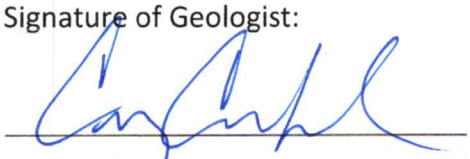

Regulated Entity Name: HM Parkside Development, Inc.(Parkside on the River 417-acre tract)

Project Information

1. Date(s) Geologic Assessment was performed: March 24th through April 1st, 2025
2. Type of Project:
   - ☒ WPAP
   - ☐ SCS
   - ☐ AST
   - ☐ UST
3. Location of Project:
   - ☒ Recharge Zone
   - ☐ Transition Zone
   - ☐ Contributing Zone within the Transition Zone

4. ☒ **Attachment A - Geologic Assessment Table**. Completed Geologic Assessment Table (Form TCEQ-0585-Table) is attached.

5. ☒ Soil cover on the project site is summarized in the table below and uses the SCS Hydrologic Soil Groups* (Urban Hydrology for Small Watersheds, Technical Release No. 55, Appendix A, Soil Conservation Service, 1986). If there is more than one soil type on the project site, show each soil type on the site Geologic Map or a separate soils map.

Table 1 - Soil Units, Infiltration Characteristics and Thickness

Soil Name	Group*	Thickness(feet)
Brackett (BkG)	C	< 2
Denton (DnB)	D	< 3.5
Eckrant (ErE,ErG)	D	< 2
Oakalla (Oa)	B	> 5
Sunev (SuB)	B	> 5

** Soil Group Definitions (Abbreviated)*

A. Soils having a high infiltration rate when thoroughly wetted.

B. Soils having a moderate infiltration rate when thoroughly wetted.

C. Soils having a slow infiltration rate when thoroughly wetted.

D. Soils having a very slow infiltration rate when thoroughly wetted.

6. ☒ **Attachment B – Stratigraphic Column**. A stratigraphic column showing formations, members, and thicknesses is attached. The outcropping unit, if present, should be at the top of the stratigraphic column. Otherwise, the uppermost unit should be at the top of the stratigraphic column.

7. ☒ **Attachment C – Site Geology**. A narrative description of the site specific geology including any features identified in the Geologic Assessment Table, a discussion of the potential for fluid movement to the Edwards Aquifer, stratigraphy, structure(s), and karst characteristics is attached.

8. ☒ **Attachment D – Site Geologic Map(s)**. The Site Geologic Map must be the same scale as the applicant's Site Plan. The minimum scale is 1": 400'

   Applicant's Site Plan Scale: 1" = 200'
   Site Geologic Map Scale: 1" = 200'
   Site Soils Map Scale (if more than 1 soil type): 1" = 2000'

9. Method of collecting positional data:

   ☒ Global Positioning System (GPS) technology.
   ☐ Other method(s). Please describe method of data collection: _____

10. ☒ The project site and boundaries are clearly shown and labeled on the Site Geologic Map.

11. ☒ Surface geologic units are shown and labeled on the Site Geologic Map.

12. ☒ Geologic or manmade features were discovered on the project site during the field investigation. They are shown and labeled on the Site Geologic Map and are described in the attached Geologic Assessment Table.

    ☐ Geologic or manmade features were not discovered on the project site during the field investigation.

13. ☒ The Recharge Zone boundary is shown and labeled, if appropriate.

14. All known wells (test holes, water, oil, unplugged, capped and/or abandoned, etc.): If applicable, the information must agree with Item No. 20 of the WPAP Application Section.

    ☐ There are _____ (#) wells present on the project site and the locations are shown and labeled. (Check all of the following that apply.)
    - ☐ The wells are not in use and have been properly abandoned.
    - ☐ The wells are not in use and will be properly abandoned.
    - ☐ The wells are in use and comply with 16 TAC Chapter 76.

    ☒ There are no wells or test holes of any kind known to exist on the project site.

Administrative Information

15. ☒ Submit one (1) original and one (1) copy of the application, plus additional copies as needed for each affected incorporated city, groundwater conservation district, and county in which the project will be located. The TCEQ will distribute the additional copies to these jurisdictions. The copies must be submitted to the appropriate regional office.

NARRATIVE DESCRIPTION OF SITE-SPECIFIC GEOLOGY FOR THE 417-ACRE PARCEL OF THE PARKSIDE ON THE RIVER PROPERTY LOCATED IN GEORGETOWN, WILLIAMSON COUNTY, TEXAS

INTRODUCTION

This narrative Geologic Assessment accompanies the Texas Commission on Environmental Quality (TCEQ) Geologic Assessment Form TCEQ-0585 completed for a 417-acre parcel located on the Parkside on the River property in Georgetown, Williamson County, Texas (see Site Location Map). The project area is located on the north side of Leander Road (FM 2243), approximately 5 miles west of the intersection with Interstate Highway (IH) 35. The northern limits of the 417-acre parcel are located adjacent to the South Fork of the San Gabriel River.

METHODOLOGY

A Cambrian Environmental Registered Professional Geoscientist (Texas License #10791) and several karst technicians conducted a field survey for a TCEQ Geologic Assessment on various dates between March 24th and April 1st 2025. The pedestrian survey was completed by walking parallel transects spaced approximately 50 feet apart as directed by the TCEQ in the Instructions to Geologists for Geologic Assessments on the Edwards Aquifer Recharge/Transition Zones (Rev. 10-01-04). Closer spacing was used where vegetation inhibited clear observation. The project site was thoroughly examined for the presence of potential karst features, including depressions, holes, and animal burrows. A number of techniques can be used for this effort, including probing with a digging implement to determine the thickness and consistency of fill material and feeling for the presence of air flow, which may indicate the presence of a sub-surface void space. Other techniques include making observations of any notable characteristics of the feature site such as the presence of various types of vegetation or a semi-circular burrow mound produced by the activities of small mammals. As part of this evaluation and assessment, a number of features were further investigated by way of hand excavation in order to better determine feature type and sensitivity.

RESULTS

Soils

Soils mapped within the project area consist of the Brackett-Rock outcrop-Real complex (BkG), Denton silty clay (DnB), Eckrant-Rock outcrop (ErE, ErG), Oakalla (Oa), and Sunev silty clay (SuB) series soils[1] (see Site Soils Map). The Oakalla and Sunev series soils are within the "B" classification of the hydrologic soil groups. Type "B" soils have a moderate rate of infiltration rate (moderate runoff potential) when thoroughly wet. The Brackett-Rock outcrop-Real complex is within the "C" classification of the hydrologic soil groups. Type "C" have a slow infiltration rate (high runoff potential) when thoroughly wet. The Denton and Eckrant series soils are within the "D" classification of the hydrologic soil groups. Type "D" soils have a very slow infiltration rate (very high runoff potential) when thoroughly wet.

[1] United States Department of Agriculture, Natural Resource Conservation Service. Online Web Soil Survey, Williamson County, Texas. http://websoilsurvey.sc.egov.usda.gov/

Geology

The mapped bedrock lithology underlying the project area consists of the Edwards Limestone (Ked), with the Comanche Peak Limestone (Kc) present in the lower elevation areas. The Comanche Peak Limestone serves as the lower confining unit of the Edwards Aquifer. Quaternary alluvial and terrace deposits (Qal, Qt, and Qt+Kc) are present on the lower elevation portions of the property adjacent to the South Fork of the San Gabriel River. The tract is located partially within the Edwards Aquifer Recharge Zone, but a large portion of this tract is within the Contributing Zone (see Site Geologic Map). Based on topographic and geologic maps, the Edwards outcrop present on this property is likely no more than 40 to 50 feet thick in the areas of highest elevation. The geology of the property has been mapped most recently at a useful scale by Collins (2005) and we find his interpretation of the geology to be generally accurate.[2] Bedrock outcrops were common in some areas, while other areas seemed to have relatively thick soil cover. No faults are mapped within the project limits, and none were observed during the pedestrian survey.

Recharge into the aquifer primarily occurs in areas where the Edwards Group and upper confining units are exposed at the surface. Most recharge is from direct infiltration via precipitation and streamflow loss. Recharge occurs predominantly along secondary porosity features such as faults, fractures, and karst features (caves, solution cavities, sinkholes, etc.); and these types of karst features are commonly formed along joints, fractures, and bedding plane surfaces formed within the Edwards Group Limestone.

Site Hydrogeologic Assessment

No sensitive features were identified during the pedestrian survey. In the absence of discrete recharge features, the potential for rapid recharge to occur is thought to be low on this tract. Additionally, should any karst features be discovered during the construction phase of the project, they should be reported to TCEQ to determine the appropriate mitigation measures.

Feature Descriptions

F-1 The feature consists of a previously disturbed and quarried area of the property. The area is approximately 800 feet by 1100 feet. In one area, an excavated quarry pit is now holding water as a pond and is about 40 feet deep below the ground surface elevation. Portions of this large disturbed area appear to have been excavated and then subsequently backfilled.

F-2 The feature consists of a test boring that is likely related to the quarry activities that occurred on this tract in the past. The boring appears to have been backfilled when it was abandoned, as it is only about 1 foot deep. The boring is approximately 4 inches in diameter.

City of Georgetown Salamander Ordinance

No springs were identified within the interior of the property during the pedestrian survey, and therefore no occupied site protection, or spring buffer protection measures will be required for the property. A number of drainages are present on the property, but they appear to only flow during heavy rain when there is high

[2] E.W. Collins, 2005, Geologic Map of the West Half of the Taylor Texas 30x60 Quadrangle: Central Texas Urban Corridor Encompassing Round Rock, Georgetown, Salado, Briggs, Liberty Hill, and Leander, Bureau of Economic Geology, University of Texas at Austin. Scale 1:100,000

runoff potential. None of these drainages had any water present during the course of the field work, even after a couple of precipitation events. Portions of the tract are directly adjacent to the South Fork of the San Gabriel River and within the Edwards Aquifer Contributing Zone. The 100-year floodplain is present in these lower elevation areas. A stream buffer will be required in these areas in accordance with the Ordinance.

Additionally, all regulated activities within the Recharge Zone must follow water quality best management practices, and development of the property will need to comply with the water quality protection measures as outlined in Section 8 of the Ordinance.

Stratigraphic Column

*Area shaded gray represents the lithology directly underlying the project site

Period	Group	Stratigraphic Unit	Hydrologic Unit	Maximum Thickness (Feet)
Quaternary to Tertiary		Stream and river alluvium (Qal)	Overlying Units	70
		Terrace alluvium (Qt)		
		Older alluvium (QTa)		
Upper Cretaceous (Gulf Series)	Taylor	Taylor Clay (Ktl)	Confining Units	300
	Austin	Austin Chalk (Kau)		400
	Eagle Ford	Eagle Ford Shale (Kef)		60
	Washita	Buda Limestone (Kbu)		20
		Del Rio Clay (Kdr)		60
Lower Cretaceous (Comanche Series)	Fredericksburg	Georgetown Limestone (Kgt)	Edwards Aquifer	100
		Edwards Limestone (Ked)		120
		Comanche Peak Formation (Kc)		50
	Trinity	Walnut Formation (Kw)	Confining Unit	140
		Upper Glen Rose Limestone (Kgru)	Upper Trinity Aquifer	200

GEOLOGIC ASSESSMENT TABLE

PROJECT NAME: Parkside on the River 417-acre Tracts

LOCATION			FEATURE CHARACTERISTICS												EVALUATION			PHYSICAL SETTING		
1A	1B *	1C*	2A	2B	3	4			5	5A	6	7	8A	8B	9	10		11		12
FEATURE ID	LATITUDE	LONGITUDE	FEATURE TYPE	POINTS	FORMATION	DIMENSIONS (FEET)			TREND (DEGREES)	DOM	DENSITY (NO/FT)	APERTURE (FEET)	INFILL	RELATIVE INFILTRATION RATE	TOTAL	SENSITIVITY		CATCHMENT AREA (ACRES)		TOPOGRAPHY
						X	Y	Z		10						<40	>40	<1.6	>1.6	
F-1	30.61328	-97.752672	O	5	Ked	800	1100	40					C,F,O,V	20	25	X		X		Hilltop
F-2	30.616117	-97.751753	MB	30	Ked	0.25	0.25	1					C,F	5	35	X		X		Hilltop

* DATUM: WGS84

2A TYPE	TYPE	2B POINTS
C	Cave	30
SC	Solution cavity	20
SF	Solution-enlarged fracture(s)	20
F	Fault	20
O	Other natural bedrock features	5
MB	Manmade feature in bedrock	30
SW	Swallow hole	30
SH	Sinkhole	20
CD	Non-karst closed depression	5
Z	Zone, clustered or aligned features	30

8A INFILLING	
N	None, exposed bedrock
C	Coarse - cobbles, breakdown, sand, gravel
O	Loose or soft mud or soil, organics, leaves, sticks, dark colors
F	Fines, compacted clay-rich sediment, soil profile, gray or red colors
V	Vegetation. Give details in narrative description
FS	Flowstone, cements, cave deposits
X	Other materials

12 TOPOGRAPHY
Cliff, Hilltop, Hillside, Drainage, Floodplain, Streambed

I have read, I understood, and I have followed the Texas Commission on Environmental Quality's Instructions to Geologists. The information presented here complies with that document and is a true representation of the conditions observed in the field.
My signature certifies that I am qualified as a geologist as defined by 30 TAC Chapter 213.

Date 4 April 2025

Sheet 1 of 1

STATE OF TEXAS
CRAIG CRAWFORD
GEOLOGY
NO. 10791
LICENSED
PROFESSIONAL GEOSCIENTIST

TCEQ-0585-Table (Rev. 10-01-04)

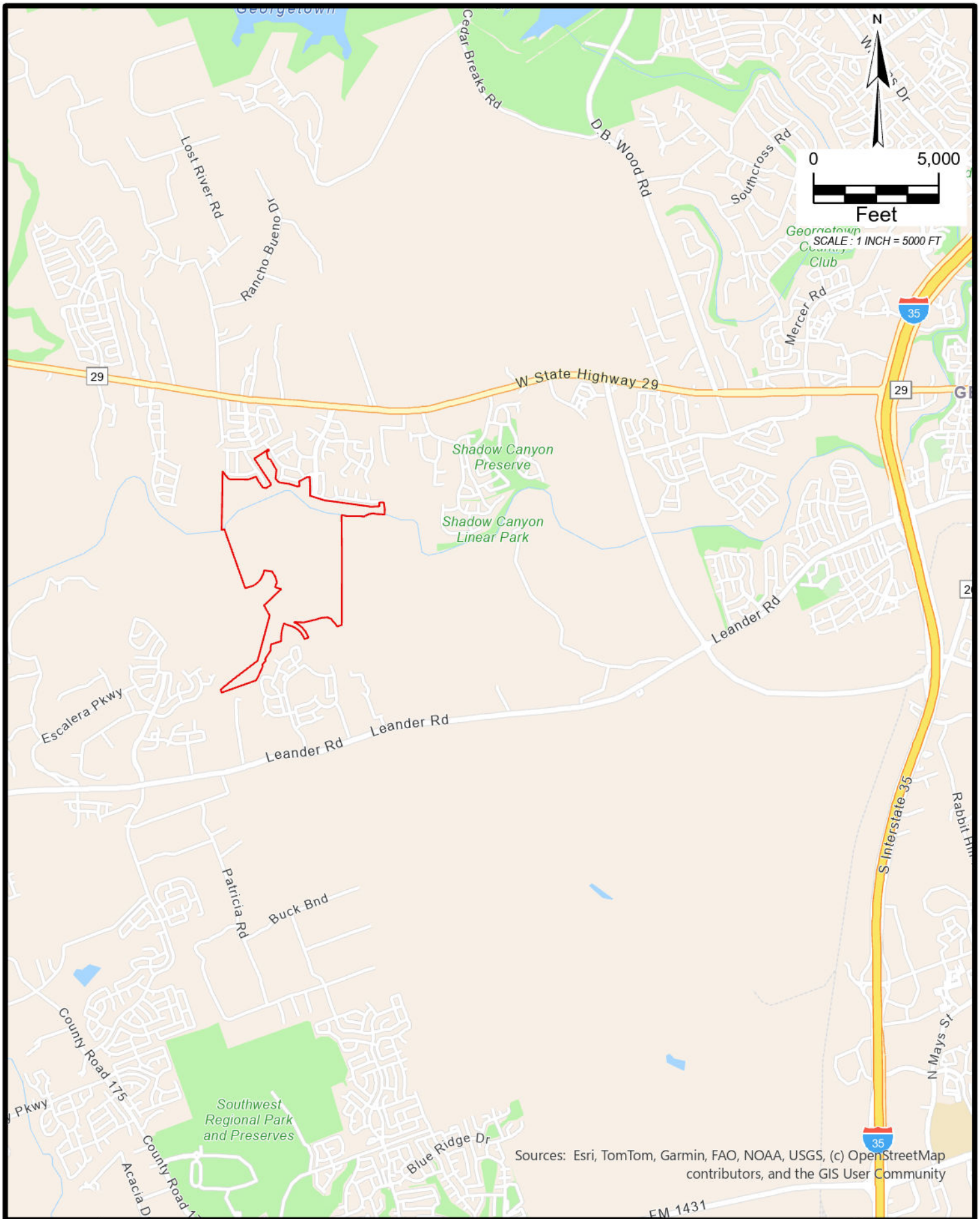

Cambrian

PARKSIDE ON THE RIVER SECTIONS 11-15 & WON 5
GEORGETOWN ETJ, WILLIAMSON COUNTY, TEXAS
GEOLOGIC ASSESSMENT
SITE LOCATION MAP

REVISIONS:	ISSUE DATE:
PROJECT NO.	
DATE: March 2025	DESIGNER:
DRAWN: RCP	CHECKED: CC

THIS DOCUMENT HAS BEEN PRODUCED FROM MATERIAL THAT WAS STORED AND/OR TRANSMITTED ELECTRONICALLY AND MAY HAVE BEEN INADVERTENTLY ALTERED. RELY ONLY ON FINAL HARDCOPY MATERIALS BEARING THE CONSULTANT'S ORIGINAL SIGNATURE AND SEAL.

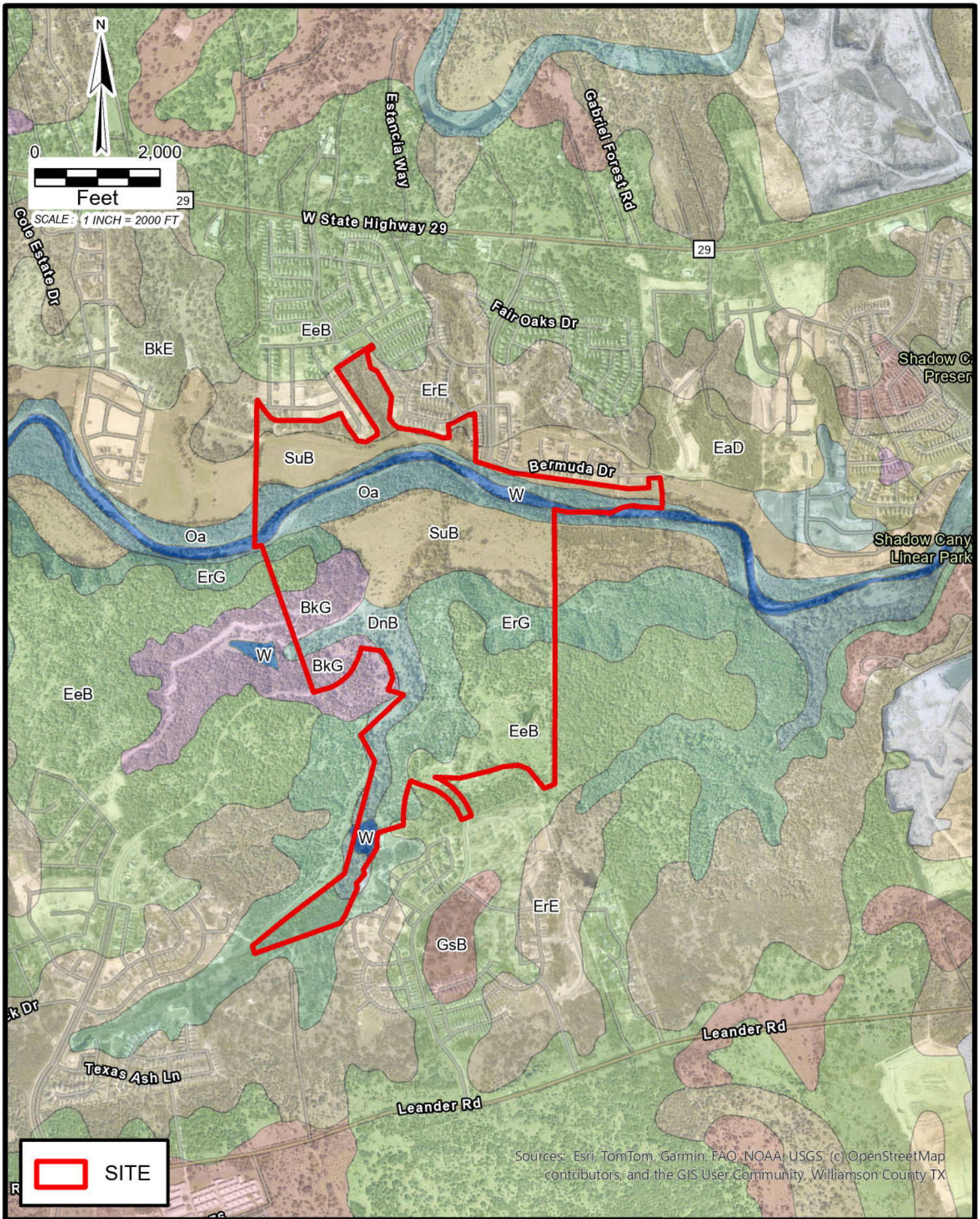

Cambrian

PARKSIDE ON THE RIVER SECTIONS 11-15 & WON 5
GEORGETOWN ETJ, WILLIAMSON COUNTY, TEXAS
GEOLOGIC ASSESSMENT
SITE SOILS MAP

REVISIONS:	ISSUE DATE:
PROJECT NO.	
DATE: April 2025	DESIGNER: RCP
DRAWN: RCP	CHECKED: CC

THIS DOCUMENT HAS BEEN PRODUCED FROM MATERIAL THAT WAS STORED AND/OR TRANSMITTED ELECTRONICALLY AND MAY HAVE BEEN INADVERTENTLY ALTERED. RELY ONLY ON FINAL HARDCOPY MATERIALS BEARING THE CONSULTANT'S ORIGINAL SIGNATURE AND SEAL.

EDWARDS AQUIFER RECHARGE ZONE

EDWARDS AQUIFER CONTRIBUTING ZONE

EDWARDS AQUIFER CONTRIBUTING ZONE

EDWARDS AQUIFER RECHARGE ZONE

EDWARDS AQUIFER CONTRIBUTING ZONE

EDWARDS AQUIFER RECHARGE ZONE

Ked

Kc

Qt

Qal

Qt+Kc

F-2

F-1

N

0 200 400 800

Feet

SCALE 1" = 200'

LEGEND

- Site Boundary
- Edwards Aquifer Recharge Zone Boundary
- FEMA 100-Yr Floodplain
- F-# Feature
- Qal — Quaternary stream and river alluvium
- Qt — Quaternary Terrace alluvium
- Qt+Kc — Undivided terrace deposits (Quaternary) and Comanche Peak Formation
- Ked — Edwards Formation
- Kc — Comanche Peak Formation

Cambrian

PARKSIDE ON THE RIVER SECTIONS 11-15 & WON 5
GEORGETOWN ETJ, WILLIAMSON COUNTY, TEXAS
GEOLOGIC ASSESSMENT - SITE GEOLOGIC MAP

FIGURE
3

Water Pollution Abatement Plan Application

Texas Commission on Environmental Quality

for Regulated Activities on the Edwards Aquifer Recharge Zone and Relating to 30 TAC §213.5(b), Effective June 1, 1999

To ensure that the application is administratively complete, confirm that all fields in the form are complete, verify that all requested information is provided, consistently reference the same site and contact person in all forms in the application, and ensure forms are signed by the appropriate party.

Note: Including all the information requested in the form and attachments contributes to more streamlined technical reviews.

Signature

To the best of my knowledge, the responses to this form accurately reflect all information requested concerning the proposed regulated activities and methods to protect the Edwards Aquifer. This **Water Pollution Abatement Plan Application Form** is hereby submitted for TCEQ review and Executive Director approval. The form was prepared by:

Print Name of Customer/Agent: Christine Campbell, P.E.

Date: 07/18/2025

Signature of Customer/Agent:

Regulated Entity Name: Parkside on the River Sections 11, 12A & 15A

Regulated Entity Information

1. The type of project is:

   ☒ Residential: Number of Lots:99
   ☐ Residential: Number of Living Unit Equivalents:_____
   ☐ Commercial
   ☐ Industrial
   ☐ Other:_____

2. Total site acreage (size of property):55.16 (Legal boundary = 289.78)

3. Estimated projected population:99 units * 3.5 people / unit = 347 people

4. The amount and type of impervious cover expected after construction are shown below:

Table 1 - Impervious Cover Table

Impervious Cover of Proposed Project	Sq. Ft.	Sq. Ft./Acre	Acres
Structures/Rooftops	483,600	÷ 43,560 =	11.10
Parking	-	÷ 43,560 =	-
Other paved surfaces	423,199	÷ 43,560 =	9.72
Total Impervious Cover	906,799	÷ 43,560 =	20.82

Total Impervious Cover 20.82 **÷ Total Acreage** 55.16 **X 100 =** 37.7**% Impervious Cover**

5. ☒ **Attachment A - Factors Affecting Surface Water Quality**. A detailed description of all factors that could affect surface water and groundwater quality that addresses ultimate land use is attached.

6. ☒ Only inert materials as defined by 30 TAC §330.2 will be used as fill material.

For Road Projects Only

Complete questions 7 - 12 if this application is exclusively for a road project.

7. Type of project:

   ☐ TXDOT road project.
   ☐ County road or roads built to county specifications.
   ☐ City thoroughfare or roads to be dedicated to a municipality.
   ☐ Street or road providing access to private driveways.

8. Type of pavement or road surface to be used:

   ☐ Concrete
   ☐ Asphaltic concrete pavement
   ☐ Other: _____

9. Length of Right of Way (R.O.W.): _____ feet.

   Width of R.O.W.: _____ feet.
   L x W = _____ Ft^2 ÷ 43,560 Ft^2/Acre = _____ acres.

10. Length of pavement area: _____ feet.

    Width of pavement area: _____ feet.
    L x W = _____ Ft^2 ÷ 43,560 Ft^2/Acre = _____ acres.
    Pavement area _____ acres ÷ R.O.W. area _____ acres x 100 = _____% impervious cover.

11. ☐ A rest stop will be included in this project.

    ☐ A rest stop will not be included in this project.

12. ☐ Maintenance and repair of existing roadways that do not require approval from the TCEQ Executive Director. Modifications to existing roadways such as widening roads/adding shoulders totaling more than one-half (1/2) the width of one (1) existing lane require prior approval from the TCEQ.

Stormwater to be generated by the Proposed Project

13. ☒ **Attachment B - Volume and Character of Stormwater**. A detailed description of the volume (quantity) and character (quality) of the stormwater runoff which is expected to occur from the proposed project is attached. The estimates of stormwater runoff quality and quantity are based on the area and type of impervious cover. Include the runoff coefficient of the site for both pre-construction and post-construction conditions.

Wastewater to be generated by the Proposed Project

14. The character and volume of wastewater is shown below:

100% Domestic	24,750 Gallons/day
_____% Industrial	_____Gallons/day
_____% Commingled	_____Gallons/day
TOTAL gallons/day 24,750	

15. Wastewater will be disposed of by:

☐ On-Site Sewage Facility (OSSF/Septic Tank):

- ☐ **Attachment C - Suitability Letter from Authorized Agent**. An on-site sewage facility will be used to treat and dispose of the wastewater from this site. The appropriate licensing authority's (authorized agent) written approval is attached. It states that the land is suitable for the use of private sewage facilities and will meet or exceed the requirements for on-site sewage facilities as specified under 30 TAC Chapter 285 relating to On-site Sewage Facilities.
- ☐ Each lot in this project/development is at least one (1) acre (43,560 square feet) in size. The system will be designed by a licensed professional engineer or registered sanitarian and installed by a licensed installer in compliance with 30 TAC Chapter 285.

☒ Sewage Collection System (Sewer Lines):

- ☐ Private service laterals from the wastewater generating facilities will be connected to an existing SCS.
- ☐ Private service laterals from the wastewater generating facilities will be connected to a proposed SCS.

- ☐ The SCS was previously submitted on_____.
- ☒ The SCS was submitted with this application.
- ☐ The SCS will be submitted at a later date. The owner is aware that the SCS may not be installed prior to Executive Director approval.

☒ The sewage collection system will convey the wastewater to the Dove Springs (name) Treatment Plant. The treatment facility is:

☒ Existing.
☐ Proposed.

16. ☒ All private service laterals will be inspected as required in 30 TAC §213.5.

Site Plan Requirements

Items 17 – 28 must be included on the Site Plan.

17. ☒ The Site Plan must have a minimum scale of 1" = 400'.

Site Plan Scale: 1" = 40'.

18. 100-year floodplain boundaries:

☒ Some part(s) of the project site is located within the 100-year floodplain. The floodplain is shown and labeled.
☐ No part of the project site is located within the 100-year floodplain.
The 100-year floodplain boundaries are based on the following specific (including date of material) sources(s): FEMA FIRM Panel No. 48491C0460F, 12/20/2019

19. ☒ The layout of the development is shown with existing and finished contours at appropriate, but not greater than ten-foot contour intervals. Lots, recreation centers, buildings, roads, open space, etc. are shown on the plan.

☐ The layout of the development is shown with existing contours at appropriate, but not greater than ten-foot intervals. Finished topographic contours will not differ from the existing topographic configuration and are not shown. Lots, recreation centers, buildings, roads, open space, etc. are shown on the site plan.

20. All known wells (oil, water, unplugged, capped and/or abandoned, test holes, etc.):

☐ There are _____ (#) wells present on the project site and the locations are shown and labeled. (Check all of the following that apply)

☐ The wells are not in use and have been properly abandoned.
☐ The wells are not in use and will be properly abandoned.
☐ The wells are in use and comply with 16 TAC §76.

☒ There are no wells or test holes of any kind known to exist on the project site.

21. Geologic or manmade features which are on the site:

☐ All sensitive geologic or manmade features identified in the Geologic Assessment are shown and labeled.
☒ No sensitive geologic or manmade features were identified in the Geologic Assessment.
☐ **Attachment D - Exception to the Required Geologic Assessment**. A request and justification for an exception to a portion of the Geologic Assessment is attached.

22. ☒ The drainage patterns and approximate slopes anticipated after major grading activities.

23. ☒ Areas of soil disturbance and areas which will not be disturbed.

24. ☒ Locations of major structural and nonstructural controls. These are the temporary and permanent best management practices.

25. ☒ Locations where soil stabilization practices are expected to occur.

26. ☐ Surface waters (including wetlands).

    ☒ N/A

27. ☐ Locations where stormwater discharges to surface water or sensitive features are to occur.

    ☒ There will be no discharges to surface water or sensitive features.

28. ☒ Legal boundaries of the site are shown.

Administrative Information

29. ☒ Submit one (1) original and one (1) copy of the application, plus additional copies as needed for each affected incorporated city, groundwater conservation district, and county in which the project will be located. The TCEQ will distribute the additional copies to these jurisdictions. The copies must be submitted to the appropriate regional office.

30. ☒ Any modification of this WPAP will require Executive Director approval, prior to construction, and may require submission of a revised application, with appropriate fees.

ATTACHMENT A – FACTORS AFFECTING WATER QUALITY

Potential sources of pollution that may be expected to affect the quality of the storm water discharges from the construction site include the following:

- Soil erosion due to the clearing of the site for wastewater improvements.
- Oil, grease, fuel and hydraulic fluid contamination from construction equipment and vehicle drippings.
- Hydrocarbons from asphalt paving operations.
- Miscellaneous trash and litter from construction.

Potential sources of pollution that may be expected to affect the quality of the storm water discharges from the site after construction is completed include the following:

- Oil, grease, fuel and hydraulic fluid contamination from vehicle drippings.
- Dirt and dust from vehicles.
- Trash and litter.

ATTACHMENT B – VOLUME AND CHARACTER OF STORMWATER

The project site is primarily undeveloped wooded land with grass. Runoff flows northeast towards the South Fork San Gabriel River. Portions of the project site are located within the 100-year floodplain as defined by FEMA FIRM Panel No. 48491C0460F, dated December 20, 2019. Portions of this subdivision are also affected by the approved CLOMR #15-06-2071R and the approved LOMR #21-06-0115P.

The proposed development results in an impervious cover of approximately 37.7% and will have the associated runoff treated by three batch detention ponds – one approved with Parkside on the River Sections 9B & 10B and the other two are in this proposed set of plans. Of the 55.16 acres of the proposed Parkside on the River Sections 11, 12A & 15A property, there is approximately 20.82 acres of impervious cover. There is also 0.76 acres of impervious cover proposed with the future Parkside on the River Section 15B project. Based on the 80% TSS removal requirement by TCEQ, we need to provide 18,783 lbs. of TSS removal for the total 21.58 acres of impervious cover proposed in Parkside on the River Sections 11, 12A & 15A and Parkside on the River Section 15B. As shown in the calculations, the BMPs satisfy the TSS removal requirement. The 85% TSS removal requirement by the City of Georgetown is also satisfied by the batch detention ponds.

The fully-developed conditions for the overall area propose approximately 22.70 acres of post-development impervious cover, of which approximately 0.87 acres are existing from Parkside on the River Sections 9B & 10B, 20.82 acres are from proposed Parkside on the River Sections 11, 12A & 15A, 0.76 acres are from proposed Parkside on the River Section 15B, and an estimated 0.25 acres of future impervious cover from future Parkside on the River developments. Based on the 80% TSS removal requirement by TCEQ we need to provide 19,012 lbs. of TSS removal in the fully-developed case. As shown in the calculations, the existing Parkside on the River Sections 9B & 10B batch detention pond (EX-BDP), the proposed Parkside on the River Sections 11, 12A & 15A batch detention ponds (BDP-01 & BDP-02), Jellyfish (JF-01, JF-02 & JF-03), and vegetative filter strips (VFS-01, VFS-02, VFS-03, VFS-04 & VFS-05) satisfy this requirement. The 85% TSS removal requirement by the City of Georgetown is also satisfied with the batch detention ponds.

In the fully-developed condition, the proposed batch detention pond (BDP-01) will treat a total of approximately 2.47 acres of impervious cover from Parkside on the River Sections 11, 12A & 15A and provide 2,475 lbs. of TSS removal. The proposed batch detention pond (BDP-02) will treat a total of approximately 8.25 acres of impervious cover (8.00 acres from Parkside on the River Sections 11, 12A & 15A and 0.25 acres from future Parkside on the River development) and provide 7,850 lbs. of TSS removal. The existing Parkside on the River Section 9B & 10B batch detention pond (EX-BDP) will treat a total of approximately 0.17 acres of impervious cover from Parkside on the River Sections 11, 12A & 15A and has capacity to provide 157 lbs. of TSS removal for the proposed Parkside Sections 11, 12A & 15A impervious cover. The proposed Jellyfish (JF-01) will treat a total of approximately 1.82 acres of impervious cover (0.87 acres of impervious cover from the existing Parkside on the River Sections 9B & 10B and 0.95 acres of impervious cover from the proposed Parkside on the River Sections 11, 12A & 15A) and provide 1,582 lbs. of TSS removal. The proposed Jellyfish (JF-02) will treat 1.20 acres of impervious cover from

the proposed Parkside on the River Sections 11, 12A & 15A and provide 1,101 lbs. of TSS removal. The proposed Jellyfish (JF-03) will treat 3.32 acres of impervious cover from the proposed Parkside on the River Sections 11, 12A & 15A and provide 3,089 lbs. of TSS removal. Approximately 1.81 acres of impervious cover proposed with Parkside on the River Sections 11, 12A & 15A and Section 15B are bypassing treatment. The BMPs are overtreating to account for the bypassed impervious cover.

Refer to the construction plans for water quality calculations. Refer to the attached Parkside on the River Sections 9B & 10B for the existing batch detention pond designs. Refer to the table below for the proposed sedimentation treatment breakdown provided.

A tree demolition schedule is included in the construction plans.

The associated combination of roadways, drainage, water quality, water, and wastewater improvements will be designed and built to serve this residential development.

PARKSIDE ON THE RIVER SECTIONS 11, 12A, 15A AND SECTION 15B - TSS REMOVAL SUMMARY - FULLY-DEVELOPED

DRAINAGE AREA	BMP TYPE	MAX TSS REMOVAL EFFICIENCY	BASIN AREA	PRE-DEVELOPMENT I.C.	PROPOSED I.C.				POST-DEVELOPMENT I.C.		TCEQ REQUIRED 80% TSS LOAD REMOVAL	CITY OF GEORGETOWN REQUIRED 85% TSS LOAD REMOVAL	PROVIDED TSS LOAD REMOVAL	VOLUME REQUIRED	VOLUME PROVIDED
					SECTIONS 9B & 10B	SECTIONS 11, 12A, 15A	SECTION 15B	FUTURE							
			AC	AC		AC	AC	AC	AC	%	LB	LB	LB	CF	CF
BDP-01	BATCH DETENTION POND	91%	5.51	0.00		2.47			2.47	45%	2,150	2,284	2,475	26,411	35,491
BDP-02	BATCH DETENTION POND	91%	15.58	0.00		8.00		0.25	8.25	53%	7,181	7,630	7,850	55,888	66,371
EX-BDP	EXISTING BATCH DETENTION POND	91%	0.46	0.00		0.17			0.17	37%	148	157	157		
VFS-01	VEGETATIVE FILTER STRIP	85%	1.31	0.00		0.40			0.40	31%	348		390		
VFS-02	VEGETATIVE FILTER STRIP	85%	3.57	0.00		1.67			1.67	47%	1,454		1,600		
VFS-03	VEGETATIVE FILTER STRIP	85%	1.86	0.00		0.96			0.96	52%	836		917		
VFS-04	VEGETATIVE FILTER STRIP	85%	0.66	0.00		0.36			0.36	55%	313		343		
VFS-05	VEGETATIVE FILTER STRIP	85%	0.48	0.00		0.28			0.28	58%	244		266		
JF-01	JELLYFISH	86%	3.52	0.00	0.87	0.95			1.82	52%	830	882	1,582		
JF-02	JELLYFISH	86%	2.21	0.00		1.20			1.20	54%	1,044	1,110	1,101		
JF-03	JELLYFISH	86%	5.95	0.00		3.32			3.32	56%	2,890	3,070	3,089		
BP-01	BY-PASS	0%	2.25	0.00		1.01			1.01	45%	879		0		
BP-02	BY-PASS	0%	1.89	0.00		0.04	0.76		0.80	42%	696		0		
TOTAL:			**45.25**	**0.00**	**0.87**	**20.83**	**0.76**	**0.25**	**22.71**	**50%**	**19,012**		**19,770**		

1 - FOR THE GEORGETOWN TSS REMOVAL REQUIREMENT, WE CONSIDER 85% OF TSS REMOVAL FOR THE DRAINAGE AREA THAT DRAINS TOWARD THE JELLYFISH AND BATCH DETENTION PONDS.

Temporary Stormwater Section

Texas Commission on Environmental Quality

for Regulated Activities on the Edwards Aquifer Recharge Zone and Relating to 30 TAC §213.5(b)(4)(A), (B), (D)(I) and (G); Effective June 1, 1999

To ensure that the application is administratively complete, confirm that all fields in the form are complete, verify that all requested information is provided, consistently reference the same site and contact person in all forms in the application, and ensure forms are signed by the appropriate party.

Note: Including all the information requested in the form and attachments contributes to more streamlined technical reviews.

Signature

To the best of my knowledge, the responses to this form accurately reflect all information requested concerning the proposed regulated activities and methods to protect the Edwards Aquifer. This **Temporary Stormwater Section** is hereby submitted for TCEQ review and executive director approval. The application was prepared by:

Print Name of Customer/Agent: Christine Campbell, P.E.

Date: 07/18/2025

Signature of Customer/Agent:

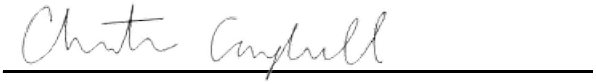

Regulated Entity Name: Parkside on the River Sections 11, 12A & 15A

Project Information

Potential Sources of Contamination

Examples: Fuel storage and use, chemical storage and use, use of asphaltic products, construction vehicles tracking onto public roads, and existing solid waste.

1. Fuels for construction equipment and hazardous substances which will be used during construction:

   ☐ The following fuels and/or hazardous substances will be stored on the site: _____

   These fuels and/or hazardous substances will be stored in:

   ☐ Aboveground storage tanks with a cumulative storage capacity of less than 250 gallons will be stored on the site for less than one (1) year.

☐ Aboveground storage tanks with a cumulative storage capacity between 250 gallons and 499 gallons will be stored on the site for less than one (1) year.

☐ Aboveground storage tanks with a cumulative storage capacity of 500 gallons or more will be stored on the site. An Aboveground Storage Tank Facility Plan application must be submitted to the appropriate regional office of the TCEQ prior to moving the tanks onto the project.

☒ Fuels and hazardous substances will not be stored on the site.

2. ☒ **Attachment A - Spill Response Actions**. A site specific description of the measures to be taken to contain any spill of hydrocarbons or hazardous substances is attached.

3. ☒ Temporary aboveground storage tank systems of 250 gallons or more cumulative storage capacity must be located a minimum horizontal distance of 150 feet from any domestic, industrial, irrigation, or public water supply well, or other sensitive feature.

4. ☒ **Attachment B - Potential Sources of Contamination**. A description of any activities or processes which may be a potential source of contamination affecting surface water quality is attached.

Sequence of Construction

5. ☒ **Attachment C - Sequence of Major Activities**. A description of the sequence of major activities which will disturb soils for major portions of the site (grubbing, excavation, grading, utilities, and infrastructure installation) is attached.

   ☒ For each activity described, an estimate (in acres) of the total area of the site to be disturbed by each activity is given.

   ☐ For each activity described, include a description of appropriate temporary control measures and the general timing (or sequence) during the construction process that the measures will be implemented.

6. ☒ Name the receiving water(s) at or near the site which will be disturbed or which will receive discharges from disturbed areas of the project: San Gabriel River

Temporary Best Management Practices (TBMPs)

Erosion control examples: tree protection, interceptor swales, level spreaders, outlet stabilization, blankets or matting, mulch, and sod. Sediment control examples: stabilized construction exit, silt fence, filter dikes, rock berms, buffer strips, sediment traps, and sediment basins. Please refer to the Technical Guidance Manual for guidelines and specifications. All structural BMPs must be shown on the site plan.

7. ☒ **Attachment D – Temporary Best Management Practices and Measures**. TBMPs and measures will prevent pollution of surface water, groundwater, and stormwater. The construction-phase BMPs for erosion and sediment controls have been designed to retain sediment on site to the extent practicable. The following information is attached:

☒ A description of how BMPs and measures will prevent pollution of surface water, groundwater or stormwater that originates upgradient from the site and flows across the site.

☒ A description of how BMPs and measures will prevent pollution of surface water or groundwater that originates on-site or flows off site, including pollution caused by contaminated stormwater runoff from the site.

☒ A description of how BMPs and measures will prevent pollutants from entering surface streams, sensitive features, or the aquifer.

☒ A description of how, to the maximum extent practicable, BMPs and measures will maintain flow to naturally-occurring sensitive features identified in either the geologic assessment, TCEQ inspections, or during excavation, blasting, or construction.

8. ☒ The temporary sealing of a naturally-occurring sensitive feature which accepts recharge to the Edwards Aquifer as a temporary pollution abatement measure during active construction should be avoided.

☐ **Attachment E - Request to Temporarily Seal a Feature**. A request to temporarily seal a feature is attached. The request includes justification as to why no reasonable and practicable alternative exists for each feature.

☒ There will be no temporary sealing of naturally-occurring sensitive features on the site.

9. ☒ **Attachment F - Structural Practices**. A description of the structural practices that will be used to divert flows away from exposed soils, to store flows, or to otherwise limit runoff discharge of pollutants from exposed areas of the site is attached. Placement of structural practices in floodplains has been avoided.

10. ☒ **Attachment G - Drainage Area Map**. A drainage area map supporting the following requirements is attached:

☒ For areas that will have more than 10 acres within a common drainage area disturbed at one time, a sediment basin will be provided.

☐ For areas that will have more than 10 acres within a common drainage area disturbed at one time, a smaller sediment basin and/or sediment trap(s) will be used.

☐ For areas that will have more than 10 acres within a common drainage area disturbed at one time, a sediment basin or other equivalent controls are not attainable, but other TBMPs and measures will be used in combination to protect down slope and side slope boundaries of the construction area.

☐ There are no areas greater than 10 acres within a common drainage area that will be disturbed at one time. A smaller sediment basin and/or sediment trap(s) will be used in combination with other erosion and sediment controls within each disturbed drainage area.

☐ There are no areas greater than 10 acres within a common drainage area that will be disturbed at one time. Erosion and sediment controls other than sediment basins or sediment traps within each disturbed drainage area will be used.

11. ☒ **Attachment H - Temporary Sediment Pond(s) Plans and Calculations**. Temporary sediment pond or basin construction plans and design calculations for a proposed temporary BMP or measure have been prepared by or under the direct supervision of a Texas Licensed Professional Engineer. All construction plans and design information must be signed, sealed, and dated by the Texas Licensed Professional Engineer. Construction plans for the proposed temporary BMPs and measures are attached.

☐ N/A

12. ☒ **Attachment I - Inspection and Maintenance for BMPs.** A plan for the inspection of each temporary BMP(s) and measure(s) and for their timely maintenance, repairs, and, if necessary, retrofit is attached. A description of the documentation procedures, recordkeeping practices, and inspection frequency are included in the plan and are specific to the site and/or BMP.

13. ☒ All control measures must be properly selected, installed, and maintained in accordance with the manufacturer's specifications and good engineering practices. If periodic inspections by the applicant or the executive director, or other information indicate a control has been used inappropriately, or incorrectly, the applicant must replace or modify the control for site situations.

14. ☒ If sediment escapes the construction site, off-site accumulations of sediment must be removed at a frequency sufficient to minimize offsite impacts to water quality (e.g., fugitive sediment in street being washed into surface streams or sensitive features by the next rain).

15. ☒ Sediment must be removed from sediment traps or sedimentation ponds not later than when design capacity has been reduced by 50%. A permanent stake will be provided that can indicate when the sediment occupies 50% of the basin volume.

16. ☒ Litter, construction debris, and construction chemicals exposed to stormwater shall be prevented from becoming a pollutant source for stormwater discharges (e.g., screening outfalls, picked up daily).

Soil Stabilization Practices

Examples: establishment of temporary vegetation, establishment of permanent vegetation, mulching, geotextiles, sod stabilization, vegetative buffer strips, protection of trees, or preservation of mature vegetation.

17. ☒ **Attachment J - Schedule of Interim and Permanent Soil Stabilization Practices**. A schedule of the interim and permanent soil stabilization practices for the site is attached.

18. ☒ Records must be kept at the site of the dates when major grading activities occur, the dates when construction activities temporarily or permanently cease on a portion of the site, and the dates when stabilization measures are initiated.

19. ☒ Stabilization practices must be initiated as soon as practicable where construction activities have temporarily or permanently ceased.

Administrative Information

20. ☒ All structural controls will be inspected and maintained according to the submitted and approved operation and maintenance plan for the project.

21. ☒ If any geologic or manmade features, such as caves, faults, sinkholes, etc., are discovered, all regulated activities near the feature will be immediately suspended. The appropriate TCEQ Regional Office shall be immediately notified. Regulated activities must cease and not continue until the TCEQ has reviewed and approved the methods proposed to protect the aquifer from any adverse impacts.

22. ☒ Silt fences, diversion berms, and other temporary erosion and sediment controls will be constructed and maintained as appropriate to prevent pollutants from entering sensitive features discovered during construction.

ATTACHMENT A – SPILL RESPONSE ACTIONS

The objective of this section is to describe measures to prevent or reduce the discharge of pollutants to drainage systems or water courses. Measures include reducing the chance for spills, stopping the source of spills, containing and cleaning up spills, properly disposing of spill materials, and training employees.

The following practices will be followed for spill prevention and cleanup:

- Manufacturers' recommended methods for spill cleanup will be clearly posted and site personnel will be made aware of the procedures and the location of the information and cleanup supplies.
- Materials and equipment necessary for spill cleanup will be kept in the material storage area onsite. Equipment and materials will include but not be limited to brooms, dustpans, mops, rags, gloves, goggles, kitty litter, sand, sawdust, and plastic and metal trash containers specifically for this purpose.
- All spills will be cleaned up immediately after discovery.
- The spill area will be kept well-ventilated, and personnel will wear appropriate protective clothing to prevent injury from contact with a hazardous substance.
- Spills of toxic or hazardous material will be reported to the Owner and to the appropriate State or local government agency, regardless of the size.
- The spill prevention plan will be adjusted to include measures to prevent this type of spill from reoccurring and how to clean up the spill if there is another one. A description of the spill, what caused it, and the cleanup measures will also be included.
- The site superintendent responsible for the day-to-day site operations will be the spill prevention and cleanup coordinator. He will designate at least three other site personnel who will receive spill prevention and cleanup training. These individuals will each become responsible for a particular phase of prevention and cleanup. The names of responsible spill personnel will be posted in the material storage area and in the office trailer onsite.
- Any reportable quantity hydrocarbon or hazardous material spill should be reported to the TCEQ at the following 24-hour toll free number 1-800-832-8224.

For a spill of Reportable Quantity:

- Initial notification. Upon the determination that a reportable discharge or spill has occurred, the responsible person shall notify the National Response Center at (800) 424-8802 as soon as possible but not later than 24 hours after the discovery of the spill or discharge.
- Method of notification. The person responsible shall notify the agency in any reasonable manner, including by telephone, in person, or by any other method approved by the agency. In all cases, the initial notification shall provide, to the extent known, the information listed in subsection (d) of Title 30, Part I, Chapter 327, Rule §327.3. Notice provided under this section satisfies the federal requirement to notify the State Emergency Response Commission in the State of Texas.
- Notification of local government authorities. If the discharge or spill creates an imminent health threat, the person responsible shall immediately notify and cooperate with local emergency authorities. The party responsible will cooperate with the local emergency authority in providing support to implement appropriate notification and response actions. The local emergency authority, as necessary, will implement its emergency management plan, which may include notifying and evacuating affected persons. In the absence of a local emergency authority, the person responsible shall take reasonable measures to notify potentially affected people of the imminent health threat.
- As soon as possible, but no later than two (2) weeks after discovery of the spill or discharge, the Contractor shall reasonably attempt to notify the Owner (if identifiable) or Occupant of the property upon which the discharge or spill occurred as well as the occupants of any property that the Contractor believes is adversely affected.

More information on spill rules and appropriate responses is available on the TCEQ website at:
http://www.tceq.texas.gov /response/

Vehicle and Equipment Maintenance:

- If maintenance must occur onsite, use a designated area and a secondary containment, located away from drainage courses, to prevent the runoff of stormwater and the runoff of spills.
- Regularly inspect onsite vehicles and equipment for leaks and repair immediately.
- Check incoming vehicles and equipment (including delivery trucks, and employee and subcontractor vehicles) for leaking oil and fluids. Do not allow leaking vehicles or equipment onsite.
- Always use secondary containment, such as drain pan or drop cloth, to catch spills or leaks when removing or changing fluids.
  - Place drip pans or absorbent materials under paving equipment when not in use.
  - Use absorbent materials on small spills rather than hosing down or burying the spill. Remove the absorbent materials promptly and dispose of properly.
  - Promptly transfer used fluids to the proper waste or recycling drums. Do not leave full drip pans or other containers lying around.
  - Oil filters disposed of in trashcans or dumpsters can leak oil and pollute stormwater. Place the oil filter in a funnel over the waste oil-recycling drum to drain excess oil before disposal. Oil filters can also be recycled. Ask the oil supplier or recycler about recycling oil filters.
  - Store cracked batteries in a non-leaking secondary container. Do this with all cracked batteries even if you think all of the acid has drained out. If you drop a battery, treat it as if it is cracked. Put it into the containment area until you are sure it is not leaking.

ATTACHMENT B – POTENTIAL SOURCES OF CONTAMINATION

Once grading activities begin, erosion of bare soil during rainfall events is the most common source of contamination. Silt fences will be installed at the beginning of the grading operation to minimize the potential for transport of the soil offsite.

Asphalt products will be used on this project. After placement of asphalt, emulsion, or coatings, the applicant will be responsible for immediate cleanup should an unexpected rain occur. For the duration of the asphalt curing time, the applicant should maintain standby personnel and equipment to contain any asphalt wash-off should an unexpected rain occur.

During construction activities, potential sources of contamination would include petroleum products leaking from construction equipment. The contractor will be advised to keep the equipment in working order and report any spills per the spill response plan.

Other potential sources of contamination include hydraulic fluid and diesel fuel from mechanical equipment and vehicles, as well as paints and chemicals used on site. Any spills shall be handled according to the Spill Response Actions in Attachment A.

ATTACHMENT C – SEQUENCE OF MAJOR ACTIVITIES

The first activity of construction will be to install erosion control measures, consisting of silt fences, tree protection, storm drains, inlet protection, rock berms, and stabilized construction entrances. Temporary erosion control measures will remain in place throughout the duration of construction and will be required to be maintained by the contractor to ensure proper functionality, especially after storm events. All disturbed areas to remain pervious will be vegetated using the procedures detailed in the construction plans and all temporary erosion control measures will be removed upon revegetation. Construction activities associated with this application are expected to disturb approximately 51.42 acres of the site.

Major Construction Activities and Sequencing:

The major construction activities for this project will include and be sequenced as follows:

1. Established Best Management Practices shall consist of the following: silt fencing, rock berms, temporary spoils areas, concrete truck washout pits, and temporary construction entrances (Estimated area to be disturbed = 0.44 Acres). These items are to remain and be maintained throughout all construction activities.

2. Initial site mass grading operation including right-of-way and first grading. (Estimated area to be disturbed = 15.31 Acres)
3. Installation of utilities including storm, water, and wastewater (Estimated area to be disturbed = 1.88 Acres)
4. Construction of street/driveway pavement including backfill behind curbs (estimated area to be disturbed = 8.71 Acres)
5. Total Construction (estimated area to be disturbed = 51.42 Acres)
6. Final soil stabilization for the site and removal of temporary BMPs once the soil has been stabilized.

The contractor is responsible for implementing and maintaining the storm water pollution prevention plan which includes maintaining all the necessary erosion controls throughout construction.

ATTACHMENT D – TEMPORARY BEST MANAGEMENT PRACTICES AND MEASURES

As shown on the Construction Erosion Control Plans, temporary BMP practices and measures will include installing silt fences, inlet protection, rock berms, stabilized construction entrances, a concrete truck washout, and a temporary spoils area prior to beginning grading operations on the site. Temporary measures are intended to provide a method of slowing the upgradient flow, onsite flow or runoff from the construction site in order to allow sediment and suspended solids to settle out of the water. By containing the sediment and solids within the site, they will not enter surface streams and/or sensitive features. As a temporary BMP, silt fences will be installed to reduce pollutants. BMP measures utilized in this plan are intended to allow storm water to continue downstream after passing through for treatment.

Site Preparation:
The methodology for pollution prevention of all on-site stormwater will include a) the erection of silt fences along the downgradient boundary of the construction activities, b) installation of inlet protection at all inlets, c) installation of stabilized construction entrances to reduce the dispersion of sediment from the site, and d) installation of a construction staging area.

Construction:
All installed erosion control measures will be inspected, and if necessary, repaired before any additional construction begins, as well as periodically throughout the construction process. The contractor will be responsible for all maintenance of erosion control measures, as well as the installation of all remaining on-site control measures, including the concrete truck washout, as necessary.

ATTACHMENT E – REQUEST TO TEMPORARILY SEAL A FEATURE

There are no sensitive features on-site within Parkside on the River Sections 11, 12A & 15A as shown in the geologic assessment and construction plans. There will be no sealing of sensitive features on the site.

ATTACHMENT F – STRUCTURAL PRACTICES

The site flows and the upgradient run off will encounter batch detention ponds and Jellyfish.

ATTACHMENT G – DRAINAGE AREA MAPS

Refer to the construction plans attached.

ATTACHMENT H – TEMPORARY SEDIMENT POND(S) PLANS AND CALCULATIONS

The batch detention ponds will act as temporary and permanent sedimentation ponds. The proposed batch detention pond (BDP-01) provides 35,491 CF of water quality volume. The proposed batch detention pond (BDP-02) provides 66,371 CF of water quality volume.

The calculated temporary sedimentation pond volume required for BDP-01 is calculated below.
Calculation: Required Volume = (Rainfall Depth*Runoff Coefficient*Drainage Area*120%)
= 3.33 in. * 0.33 * 5.51 acres * 120%
= 26,375 CF

The calculated temporary sedimentation pond volume required for BDP-02 is calculated below.
Calculation: Required Volume = (Rainfall Depth*Runoff Coefficient*Drainage Area*120%)
= 2.20 in. * 0.37 * 15.58 acres * 120%
= 55,243 CF

ATTACHMENT I – INSPECTION AND MAINTENANCE FOR BMPS

See construction plans included with this application submittal.

Temporary Best Management Practices (BMPs) and measures will be used during construction to prevent pollution of groundwater, surface water and naturally occurring environmental features. Silt fences, inlet protection, rock berms, stabilized construction entrances, tree protection, concrete washout area, and a temporary spoils area will be installed prior to beginning construction and prior to commencement of any of the activities defined in the sequence of construction as Attachment C. Inspection and maintenance of the on-site controls shall be performed during the site clearing and rough grading process. Weekly inspections will be documented in an inspection report. The inspection reports will document maintenance activities, sediment removal, and any modifications to the erosion and sedimentation controls. The perimeter fence shall be regularly monitored to ensure that the buffers remain no-construction zones until the site work has been completed and authorization has been granted by the engineer. Refer to the construction plans attached for specific controls and details.

BMPs and measures will prevent pollution of surface water or groundwater that originates on site or flows off-site, including pollution caused by contaminated stormwater run-off from the site, and through the use of silt fences placed immediately downstream of disturbed areas and inlet protection at all inlets. To minimize destruction to any portion of the Recharge Zone, on-site perimeter silt fences will also be implemented for pertinent areas throughout the entirety of construction. The Contractor is expected to inspect the controls weekly and after significant rainfalls to ensure proper function. When silt accumulates six (6) inches in depth the Contractor shall promptly remove the silt from the controls.

BMPs and measures will prevent pollutants from entering surface streams or the aquifer by intercepting stormwater potentially carrying sediment and other pollutants. BMPs and measures will implement stabilized construction entrances, a construction stockpiling/staging area, and a concrete washout area to help minimize pollutant run-off and erosion generated during construction. Paved streets and driveways adjacent to these sites will be cleaned regularly to remove excess mud, dirt or rock tracked from the site. Sedimentation will be concentrated only in these areas for efficient maintenance. Water trucks will be on-site as necessary to aid be cleaned regularly to remove excess mud, dirt or rock tracked from the site. Sedimentation will be concentrated only in these areas for efficient maintenance. Water trucks will be on-site as necessary to aid in controlling dust. BMPs will be implemented to limit/prevent contaminated inflow from entering surface streams or the aquifer. These practices are to include the following measures: the use of silt fence and inlet protection. The fabricated silt fence barricade will provide help to reduce the likelihood of contaminated runoff from entering the aquifer. If any sensitive features are identified by TCEQ inspections, or during excavation or construction, measures appropriate to the sensitivity of the discovered feature will be enacted. No blasting is proposed.

Temporary Erosion and Sedimentation Notes:

1. The Contractor shall maintain, install erosion/sedimentation controls and tree/natural protective fencing prior to any site preparation work (clearing, grubbing or excavation).

2. The placement of erosion/sedimentation controls and tree/natural area protective fencing shall be in accordance with the TCEQ Technical Guidance Manual and the approved Erosion and Sedimentation Control Plan. No erosion controls shall be placed beyond the property lines of the site unless written permission has been obtained from adjacent property owners.
3. A pre-construction conference shall be held on-site with the Contractor, design engineer/permit applicant and Environmental Inspector after installation of the erosion/sedimentation and tree/natural area protection measures and prior to beginning any site preparation work. The Contractor shall notify the Environmental Inspector at least three (3) days prior to the meeting date.
4. Any major variation in materials or locations of controls or fences from those shown on the approved plans will require a revision and must be approved by the reviewing engineer, environmental specialist or city arborist as appropriate. Minor changes to be made as field revisions to the Erosion and Sedimentation Control Plan may be required by the Environmental Inspector during the course of construction to correct control inadequacies.
5. The Contractor is required to inspect the controls at weekly intervals and after significant rainfall events to ensure that they are functioning properly. The person(s) responsible for maintenance of controls shall immediately make any necessary repairs to damaged areas. Silt accumulation at controls must be removed when the depth reaches six (6) inches.
6. Prior to final acceptance by the City, haul roads and waterway crossing constructed for temporary Contractor access must be removed, accumulated sediment removed from the waterway and the area restored to the original grade and revegetated. All land clearing debris shall be disposed of in approved soil disposal sites.
7. All work must stop if a void in the rock substrate is discovered, which is one (1) square foot in total area, blows air from within the substrate, and/or consistently received water during any rain event. At this time it is the responsibility of the project manager to immediately contact an Environmental Inspector for further investigation.
8. All slopes shall be sodded or seeded with approved grass, grass mixtures or ground cover suitable to the area and season in which they are applied.
9. Silt fences, rock berms, sedimentation basins and similarly recognized techniques and materials shall be employed during construction to prevent point source sedimentation loading of downstream facilities. Such installation shall be regularly inspected for effectiveness. Additional measures may be required if, in the opinion of the City Engineer, they are warranted.
10. All temporary erosion control measures shall not be removed until final inspection and approval of the project by the engineer. It shall be the responsibility of the Contractor to maintain all temporary erosion control structures and to remove each structure as approved by the engineer.
11. Any dirt, mud, rocks, debris, etc., that is spilled, tracked, or otherwise deposited on any existing paved street shall be cleaned up immediately.

<u>Dewatering Operations</u>

1. Inspect and verify that activity-based BMPs are in place prior to the commencement of associated activities. While activities associated with the BMP area under way, inspect weekly to verify continued BMP implementation.
2. Inspect BMPs subject to non-stormwater discharges daily while non-stormwater discharges occur.
3. Unit-specific maintenance requirements are included with the description of each technology.
4. Sediment removed during the maintenance of a dewatering device may be either spread onsite and stabilized, or disposed of at a disposal site.
5. Sediment that is commingled with other pollutants must be disposed of in accordance with all applicable laws and regulations.

ATTACHMENT J – SCHEDULE OF INTERIM AND PERMANENT SOIL STABILIZATION PRACTICES

Contractors will ensure that existing vegetation is preserved where attainable and that disturbed portions of the site will be stabilized. Stabilization practices may include but are not limited to temporary seeding, permanent seeding, mulching, geotextiles, sodding, tree protection, preservation of natural vegetation and other appropriate measures. All slopes shall be sodded or seeded with approved grass, grass mixtures or ground cover suitable to the area and season in which they are applied. Except as noted below, stabilization shall be initiated as soon as practicable in portions of the site where construction activities have temporarily or permanently ceased, but in no case more than 14 days after the activity has temporarily or permanently ceased. Refer to the construction plans attached for the TCEQ Notes, the Existing Conditions & Tree Survey, and the Erosion & Sedimentation Control Plan.

Permanent Stormwater Section

Texas Commission on Environmental Quality

for Regulated Activities on the Edwards Aquifer Recharge Zone and Relating to 30 TAC §213.5(b)(4)(C), (D)(Ii), (E), and (5), Effective June 1, 1999

To ensure that the application is administratively complete, confirm that all fields in the form are complete, verify that all requested information is provided, consistently reference the same site and contact person in all forms in the application, and ensure forms are signed by the appropriate party.

Note: Including all the information requested in the form and attachments contributes to more streamlined technical reviews.

Signature

To the best of my knowledge, the responses to this form accurately reflect all information requested concerning the proposed regulated activities and methods to protect the Edwards Aquifer. This **Permanent Stormwater Section** is hereby submitted for TCEQ review and executive director approval. The application was prepared by:

Print Name of Customer/Agent: Christine Campbell, P.E.

Date: 07/18/2025

Signature of Customer/Agent

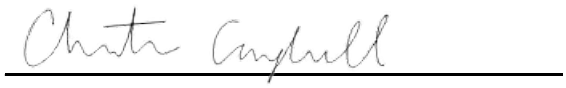

Regulated Entity Name: Parkside on the River Sections 11, 12A & 15A

Permanent Best Management Practices (BMPs)

Permanent best management practices and measures that will be used during and after construction is completed.

1. ☒ Permanent BMPs and measures must be implemented to control the discharge of pollution from regulated activities after the completion of construction.

   ☐ N/A

2. ☒ These practices and measures have been designed, and will be constructed, operated, and maintained to insure that 80% of the incremental increase in the annual mass loading of total suspended solids (TSS) from the site caused by the regulated activity is removed. These quantities have been calculated in accordance with technical guidance prepared or accepted by the executive director.

   ☒ The TCEQ Technical Guidance Manual (TGM) was used to design permanent BMPs and measures for this site.

☐ A technical guidance other than the TCEQ TGM was used to design permanent BMPs and measures for this site. The complete citation for the technical guidance that was used is: _____

☐ N/A

3. ☒ Owners must insure that permanent BMPs and measures are constructed and function as designed. A Texas Licensed Professional Engineer must certify in writing that the permanent BMPs or measures were constructed as designed. The certification letter must be submitted to the appropriate regional office within 30 days of site completion.

   ☐ N/A

4. Where a site is used for low density single-family residential development and has 20 % or less impervious cover, other permanent BMPs are not required. This exemption from permanent BMPs must be recorded in the county deed records, with a notice that if the percent impervious cover increases above 20% or land use changes, the exemption for the whole site as described in the property boundaries required by 30 TAC §213.4(g) (relating to Application Processing and Approval), may no longer apply and the property owner must notify the appropriate regional office of these changes.

   ☐ The site will be used for low density single-family residential development and has 20% or less impervious cover.
   ☐ The site will be used for low density single-family residential development but has more than 20% impervious cover.
   ☒ The site will not be used for low density single-family residential development.

5. The executive director may waive the requirement for other permanent BMPs for multi-family residential developments, schools, or small business sites where 20% or less impervious cover is used at the site. This exemption from permanent BMPs must be recorded in the county deed records, with a notice that if the percent impervious cover increases above 20% or land use changes, the exemption for the whole site as described in the property boundaries required by 30 TAC §213.4(g) (relating to Application Processing and Approval), may no longer apply and the property owner must notify the appropriate regional office of these changes.

   ☐ **Attachment A - 20% or Less Impervious Cover Waiver**. The site will be used for multi-family residential developments, schools, or small business sites and has 20% or less impervious cover. A request to waive the requirements for other permanent BMPs and measures is attached.
   ☐ The site will be used for multi-family residential developments, schools, or small business sites but has more than 20% impervious cover.
   ☒ The site will not be used for multi-family residential developments, schools, or small business sites.

6. ☒ **Attachment B - BMPs for Upgradient Stormwater**.

☒ A description of the BMPs and measures that will be used to prevent pollution of surface water, groundwater, or stormwater that originates upgradient from the site and flows across the site is attached.

☐ No surface water, groundwater or stormwater originates upgradient from the site and flows across the site, and an explanation is attached.

☐ Permanent BMPs or measures are not required to prevent pollution of surface water, groundwater, or stormwater that originates upgradient from the site and flows across the site, and an explanation is attached.

7. ☒ **Attachment C - BMPs for On-site Stormwater**.

☒ A description of the BMPs and measures that will be used to prevent pollution of surface water or groundwater that originates on-site or flows off the site, including pollution caused by contaminated stormwater runoff from the site is attached.

☐ Permanent BMPs or measures are not required to prevent pollution of surface water or groundwater that originates on-site or flows off the site, including pollution caused by contaminated stormwater runoff, and an explanation is attached.

8. ☒ **Attachment D - BMPs for Surface Streams**. A description of the BMPs and measures that prevent pollutants from entering surface streams, sensitive features, or the aquifer is attached. Each feature identified in the Geologic Assessment as sensitive has been addressed.

☐ N/A

9. ☒ The applicant understands that to the extent practicable, BMPs and measures must maintain flow to naturally occurring sensitive features identified in either the geologic assessment, executive director review, or during excavation, blasting, or construction.

☒ The permanent sealing of or diversion of flow from a naturally-occurring sensitive feature that accepts recharge to the Edwards Aquifer as a permanent pollution abatement measure has not been proposed.

☐ **Attachment E - Request to Seal Features**. A request to seal a naturally-occurring sensitive feature, that includes, for each feature, a justification as to why no reasonable and practicable alternative exists, is attached.

10. ☒ **Attachment F - Construction Plans**. All construction plans and design calculations for the proposed permanent BMP(s) and measures have been prepared by or under the direct supervision of a Texas Licensed Professional Engineer, and are signed, sealed, and dated. The plans are attached and, if applicable include:

☒ Design calculations (TSS removal calculations)
☒ TCEQ construction notes
☒ All geologic features
☒ All proposed structural BMP(s) plans and specifications

☐ N/A

11. ☒ **Attachment G - Inspection, Maintenance, Repair and Retrofit Plan**. A plan for the inspection, maintenance, repairs, and, if necessary, retrofit of the permanent BMPs and measures is attached. The plan includes all of the following:

    ☒ Prepared and certified by the engineer designing the permanent BMPs and measures
    ☒ Signed by the owner or responsible party
    ☒ Procedures for documenting inspections, maintenance, repairs, and, if necessary retrofit
    ☒ A discussion of record keeping procedures

    ☐ N/A

12. ☐ **Attachment H - Pilot-Scale Field Testing Plan**. Pilot studies for BMPs that are not recognized by the Executive Director require prior approval from the TCEQ. A plan for pilot-scale field testing is attached.

    ☒ N/A

13. ☒ **Attachment I -Measures for Minimizing Surface Stream Contamination**. A description of the measures that will be used to avoid or minimize surface stream contamination and changes in the way in which water enters a stream as a result of the construction and development is attached. The measures address increased stream flashing, the creation of stronger flows and in-stream velocities, and other in-stream effects caused by the regulated activity, which increase erosion that results in water quality degradation.

    ☐ N/A

Responsibility for Maintenance of Permanent BMP(s)

Responsibility for maintenance of best management practices and measures after construction is complete.

14. ☒ The applicant is responsible for maintaining the permanent BMPs after construction until such time as the maintenance obligation is either assumed in writing by another entity having ownership or control of the property (such as without limitation, an owner's association, a new property owner or lessee, a district, or municipality) or the ownership of the property is transferred to the entity. Such entity shall then be responsible for maintenance until another entity assumes such obligations in writing or ownership is transferred.

    ☐ N/A

15. ☒ A copy of the transfer of responsibility must be filed with the executive director at the appropriate regional office within 30 days of the transfer if the site is for use as a multiple single-family residential development, a multi-family residential development, or a non-residential development such as commercial, industrial, institutional, schools, and other sites where regulated activities occur.

    ☐ N/A

ATTACHMENT B – BMP'S FOR UPGRADIENT STORMWATER

There is no upgradient, offsite flow that will be captured in the proposed storm infrastructure and routed to the BMPs.

ATTACHMENT C – BMP'S FOR ON-SITE STORMWATER

Onsite areas considered in this description are all part of the overall Parkside on the River development. The project site is primarily undeveloped wooded land with grass. Runoff flows northeast towards the South Fork San Gabriel River. Portions of the project site are located within the 100-year floodplain as defined by FEMA FIRM Panel No. 48491C0460F, dated December 20, 2019. Portions of this subdivision are also affected by the approved CLOMR #15-06-2071R and the approved LOMR #21-06-0115P.

The proposed infrastructure is sized to treat a minimum 80% of the TSS as defined by the TCEQ and 85% of the batch detention pond TSS as defined by the City of Georgetown.

The proposed development results in an impervious cover of approximately 37.7% and will have the associated runoff treated by three batch detention ponds – one approved with Parkside on the River Sections 9B & 10B and the other two are in this proposed set of plans. Of the 55.16 acres of the proposed Parkside on the River Sections 11, 12A & 15A property, there is approximately 20.82 acres of impervious cover. There is also 0.76 acres of impervious cover proposed with the future Parkside on the River Section 15B project. Based on the 80% TSS removal requirement by TCEQ, we need to provide 18,783 lbs. of TSS removal for the total 21.58 acres of impervious cover proposed in Parkside on the River Sections 11, 12A & 15A and Parkside on the River Section 15B. As shown in the calculations, the BMPs satisfy the TSS removal requirement. The 85% TSS removal requirement by the City of Georgetown is also satisfied by the batch detention ponds.

The fully-developed conditions for the overall area propose approximately 22.70 acres of post-development impervious cover, of which approximately 0.87 acres are existing from Parkside on the River Sections 9B & 10B, 20.82 acres are from proposed Parkside on the River Sections 11, 12A & 15A, 0.76 acres are from proposed Parkside on the River Section 15B, and an estimated 0.25 acres of future impervious cover from future Parkside on the River developments. Based on the 80% TSS removal requirement by TCEQ we need to provide 19,012 lbs. of TSS removal in the fully-developed case. As shown in the calculations, the existing Parkside on the River Sections 9B & 10B batch detention pond (EX-BDP), the proposed Parkside on the River Sections 11, 12A & 15A batch detention ponds (BDP-01 & BDP-02), Jellyfish (JF-01, JF-02 & JF-03), and vegetative filter strips (VFS-01, VFS-02, VFS-03, VFS-04 & VFS-05) satisfy this requirement. The 85% TSS removal requirement by the City of Georgetown is also satisfied with the batch detention ponds.

In the fully-developed condition, the proposed batch detention pond (BDP-01) will treat a total of approximately 2.47 acres of impervious cover from Parkside on the River Sections 11, 12A & 15A and provide 2,475 lbs. of TSS removal. The proposed batch detention pond (BDP-02) will treat a total of approximately 8.25 acres of impervious cover (8.00 acres from Parkside on the River Sections 11, 12A & 15A and 0.25 acres from future Parkside on the River development) and provide 7,850 lbs. of TSS removal. The existing Parkside on the River Section 9B & 10B batch detention pond (EX-BDP) will treat a total of approximately 0.17 acres of impervious cover from Parkside on the River Sections 11, 12A & 15A and has capacity to provide 157 lbs. of TSS removal for the proposed Parkside Sections 11, 12A & 15A impervious cover. The proposed Jellyfish (JF-01) will treat a total of approximately 1.82 acres of impervious cover (0.87 acres of impervious cover from the existing Parkside on the River Sections 9B & 10B and 0.95 acres of impervious cover from the proposed Parkside on the River Sections 11, 12A & 15A) and provide 1,582 lbs. of TSS removal. The proposed Jellyfish (JF-02) will treat 1.20 acres of impervious cover from the proposed Parkside on the River Sections 11, 12A & 15A and provide 1,101 lbs. of TSS removal. The proposed Jellyfish (JF-03) will treat 3.32 acres of impervious cover from the proposed Parkside on the River Sections 11, 12A & 15A and provide 3,089 lbs. of TSS removal. Approximately 1.81 acres of impervious cover proposed with Parkside on the River Sections 11, 12A & 15A and Section 15B are bypassing treatment. The BMPs are overtreating to account for the bypassed impervious cover.

Refer to the Construction Plans for the sediment treatment details.

ATTACHMENT D – BMP'S FOR SURFACE STREAMS

There are no surface streams on the proposed site. Portions of the project site are located within the 100-year floodplain as defined by FEMA FIRM Panel No. 48491C0460F, dated December 20, 2019. Portions of this subdivision are also affected by the approved CLOMR #15-06-2071R and the approved LOMR #21-06-0115P.

ATTACHMENT F – CONSTRUCTION PLANS

Construction plans are attached.

ATTACHMENT I – MEASURES OF MINIMIZING SURFACE STREAM CONTAMINATION

There are no surface streams located on the proposed site.

ATTACHMENT G – INSPECTION, MAINTENANCE, REPAIR, AND RETROFIT PLAN

Batch Detention Pond

1. Inspections should take place a minimum of twice a year and be documented in inspection reports. Inspection reports should include a field logbook documenting date, location, and action items. One inspection should take place during wet weather to determine if the basin is meeting the target detention time of 12 hours and a drawdown time of no more than 48 hours. The remaining inspections should occur between storm events so that manual operation of the valve and controller can be verified. The level sensor in the basin should be inspected and any debris or sediment in the area should be removed. The outlet structure and the trash screen should be inspected for signs of clogging. Debris and sediment should be removed from the orifice and outlet(s) as described in previous sections. Debris obstructing the valve should be removed. During each inspection, erosion areas inside and downstream of this BMP should be identified and repaired/revegetated immediately.
2. The basin, basin side-slopes, and embankment of the basin must be mowed to prevent woody growth and control weeds. A mulching mower should be used, or the grass clippings should be caught and removed. Mowing should take place at least twice a year, or more frequently if vegetation exceeds 18 inches in height. More frequent mowing to maintain aesthetic appeal may be necessary in landscaped areas.
3. Litter and debris removal should take place at least twice a year, as part of the periodic mowing operations and inspections. Debris and litter should be removed from the surface of the basin. Particular attention should be paid to floatable debris around the outlet structure. The outlet should be checked for possible clogging or obstructions and any debris removed.
4. The basin side slopes and embankment all may periodically suffer from slumping and erosion. To correct these problems, corrective action, such as regrading and revegetation, may be necessary. Correction of erosion control should take place whenever required based on the periodic inspections.
5. Standing water or soggy conditions may occur in the basin. Some standing water may occur after a storm event since the valve may close with 2 to 3 inches of water in the basin. Some flow into the basin may also occur between storms due to spring flow and residential water use that enters the storm sewer system. Twice a year, the facility should be evaluated in terms of nuisance control (insects, weeds, odors, algae, etc.).
6. With each inspection, any damage to structural elements of the basin (pipes, concrete drainage structures, retaining walls, etc.) should be identified and repaired immediately. An example of this type of repair can include patching of cracked concrete, sealing of voids, removal of vegetation from cracks and joints. The various inlet/outlet structures in a basin will eventually deteriorate and must be replaced.
7. A properly designed batch detention basin will accumulate quantities of sediment over time. The accumulated sediment can detract from the appearance of the facility and reduce the pollutant removal performance of the facility. The sediment also tends to accumulate near the outlet structure and can interfere with the level sensor operation. Sediment shall be removed from the basin at least every 5 years, when sediment depth exceeds 6 inches, when the sediment interferes with the level sensor or when the basin does not drain within 48 hours. Care should be taken not to compromise the basin lining during maintenance.
8. The Logic Controller should be inspected as part of the twice-yearly investigations. Verify that the external indicators (active, cycle in progress) are operating properly by turning the controller off and on, and by initiating a cycle by triggering the level sensor in the basin. The valve should be manually opened and closed using the open/close switch to verify valve operation and to assist in inspecting the valve for debris. The solar panel should be inspected and any dust or debris on the panel should be carefully removed. The controller and all other circuitry and wiring should be inspected for signs of corrosion, damage from insects, water leaks, or other damage. At the end of the inspection, the controller should be reset.

Vegetative Filter Strip

1. Seasonal Mowing and Lawn Care. If the filter strip is made up of turf grass, it should be mowed as needed to limit vegetation height to 18 inches, using a mulching mower (or removal of clippings). If native grasses are used, the filter may require less frequent mowing, but a minimum of twice annually. Grass clippings and brush debris should not be deposited on vegetative filter strip areas.
2. Inspection. Inspect filter strips at least twice annually for erosion or damage to vegetation; however, additional inspection after periods of heavy runoff is most desirable. Inspections should be documented in inspection reports. Inspection reports should include a field logbook documenting date, location, and action items. The strip should be checked for uniformity of grass cover, debris and litter, and areas of sediment accumulation. More frequent inspections of the grass cover during the first few years after establishment will help to determine if any problems are developing, and to plan for long-term restorative maintenance needs. Bare spots and areas of erosion identified during semi-annual inspections.
3. Debris and Litter Removal. Trash tends to accumulate in vegetated areas, particularly along highways. Any filter strip structures (i.e. level spreaders) should be kept free of obstructions to reduce floatables being flushed downstream, and for aesthetic reasons. The need for this practice is determined through periodic inspection, but should be performed no less than 4 times per year.
4. Sediment Removal. Sediment may accumulate along the upstream boundary of the strip preventing uniform overland flow. Excess sediment should be removed by hand or with flatbottomed shovels.
5. Grass Reseeding and Mulching. A healthy dense grass should be maintained on the filter strip. If areas are eroded, they should be filled, compacted, and reseeded so that the final grade is level. Grass damaged during the sediment removal process should be promptly replaced using the same seed mix used during filter strip establishment. If possible, flow should be diverted from the damaged areas until the grass is firmly established. Bare spots and areas of erosion identified during semi-annual inspections must be replanted and restored to meet specifications. Corrective maintenance, such as weeding or replanting should be done more frequently in the first two to three years after installation to ensure stabilization. Dense vegetation may require irrigation immediately after planting, and during particularly dry periods, particularly as the vegetation is initially established.

ATTACHMENT G – INSPECTION, MAINTENANCE, REPAIR, AND RETROFIT PLAN

CONTECH®
ENGINEERED SOLUTIONS

Jellyfish® Filter Maintenance Guide

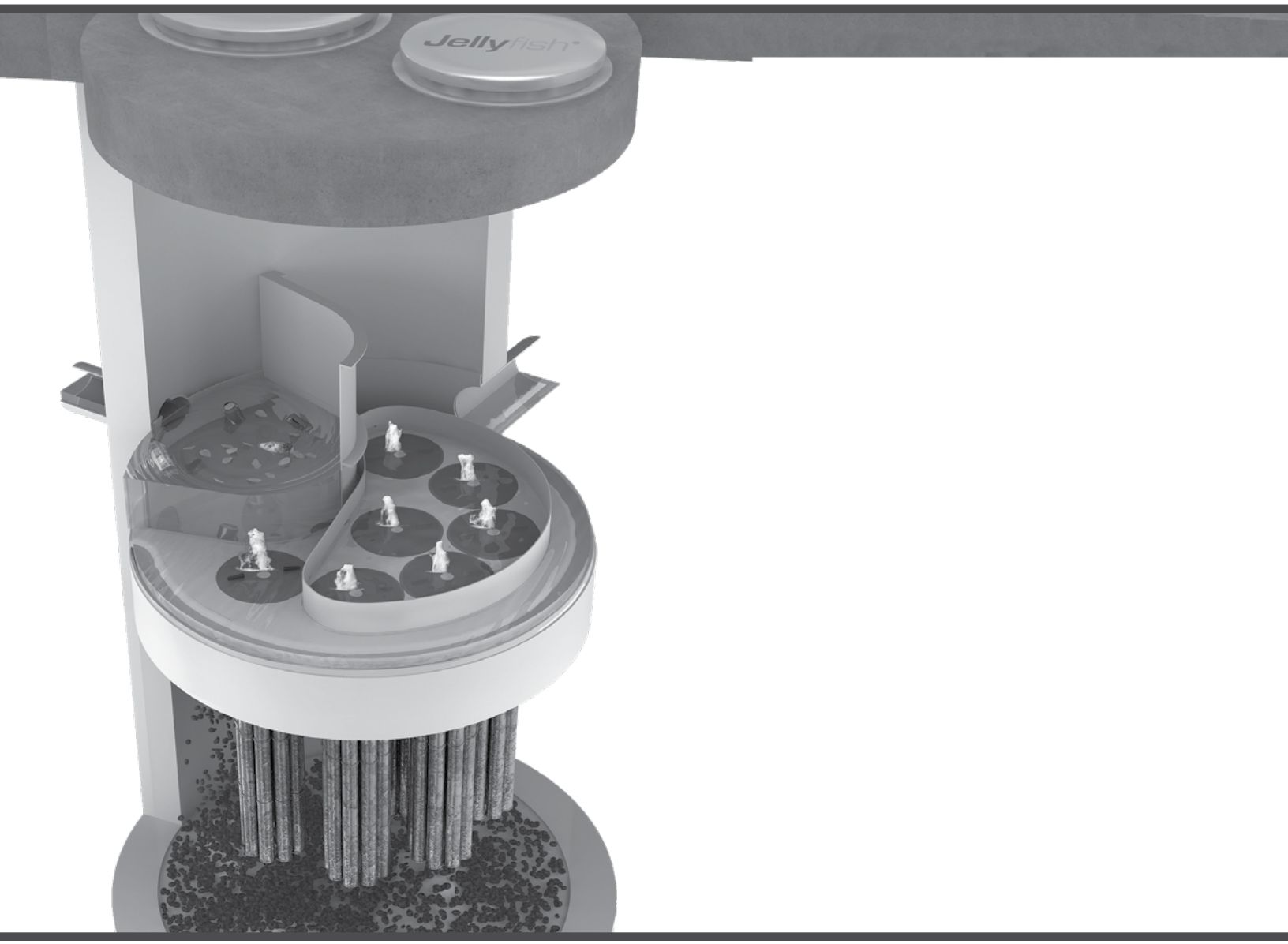

Jellyfish®

JELLYFISH® FILTER
INSPECTION & MAINTENANCE GUIDE

Jellyfish units are often just one of many structures in a more comprehensive stormwater drainage and treatment system.

In order for maintenance of the Jellyfish filter to be successful, it is imperative that all other components be properly maintained. The maintenance and repair of upstream facilities should be carried out prior to Jellyfish maintenance activities.

In addition to considering upstream facilities, it is also important to correct any problems identified in the drainage area. Drainage area concerns may include: erosion problems, heavy oil loading, and discharges of inappropriate materials.

TABLE OF CONTENTS

Inspection and Maintenance Overview 3

Inspection Procedure.....3

Maintenance Procedure.....4

Cartridge Assembly & Cleaning.....5

Inspection Process 7

1.0 Inspection and Maintenance Overview

The primary purpose of the Jellyfish® Filter is to capture and remove pollutants from stormwater runoff. As with any filtration system, these pollutants must be removed to maintain the filter's maximum treatment performance. Regular inspection and maintenance are required to insure proper functioning of the system.

Maintenance frequencies and requirements are site specific and vary depending on pollutant loading. Additional maintenance activities may be required in the event of non-storm event runoff, such as base-flow or seasonal flow, an upstream chemical spill or due to excessive sediment loading from site erosion or extreme runoff events. It is a good practice to inspect the system after major storm events.

Inspection activities are typically conducted from surface observations and include:

- Observe if standing water is present
- Observe if there is any physical damage to the deck or cartridge lids
- Observe the amount of debris in the Maintenance Access Wall (MAW) or inlet bay for vault systems

Maintenance activities include:

- Removal of oil, floatable trash and debris
- Removal of collected sediments
- Rinsing and re-installing the filter cartridges
- Replace filter cartridge tentacles, as needed

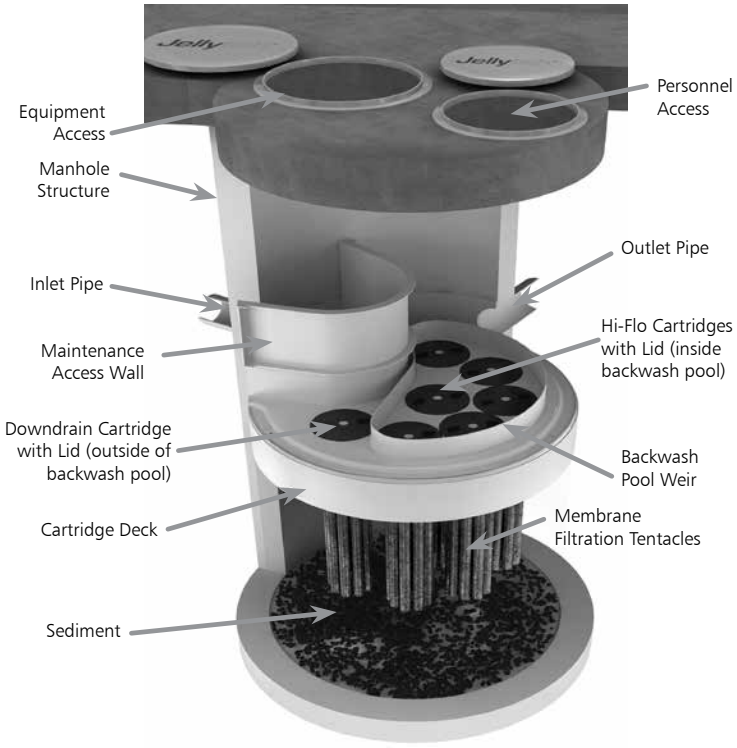

Note: Separator Skirt not shown

2.0 Inspection Timing

Inspection of the Jellyfish Filter is key in determining the maintenance requirements for, and to develop a history of, the site's pollutant loading characteristics. In general, inspections should be performed at the times indicated below; *or per the approved project stormwater quality documents (if applicable), whichever is more frequent*.

1. A minimum of quarterly inspections during the first year of operation to assess the sediment and floatable pollutant accumulation, and to ensure proper functioning of the system.
2. Inspection frequency in subsequent years is based on the inspection and maintenance plan developed in the first year of operation. Minimum frequency should be once per year.
3. Inspection is recommended after each major storm event.
4. Inspection is required immediately after an upstream oil, fuel or other chemical spill.

3.0 Inspection Procedure

The following procedure is recommended when performing inspections:

1. Provide traffic control measures as necessary.
2. Inspect the MAW or inlet bay for floatable pollutants such as trash, debris, and oil sheen.
3. Measure oil and sediment depth in several locations, by lowering a sediment probe until contact is made with the floor of the structure. Record sediment depth, and presences of any oil layers.
4. Inspect cartridge lids. Missing or damaged cartridge lids to be replaced.
5. Inspect the MAW (where appropriate), cartridge deck and receptacles, and backwash pool weir, for damaged or broken components.

3.1 Dry weather inspections

- Inspect the cartridge deck for standing water, and/or sediment on the deck.
- No standing water under normal operating conditions.
- Standing water inside the backwash pool, but not outside the backwash pool indicates, that the filter cartridges need to be rinsed.

Inspection Utilizing Sediment Probe

- Standing water outside the backwash pool is not anticipated and may indicate a backwater condition caused by high water elevation in the receiving water body, or possibly a blockage in downstream infrastructure.
- Any appreciable sediment (≥1/16") accumulated on the deck surface should be removed.

3.2 Wet weather inspections

- Observe the rate and movement of water in the unit. Note the depth of water above deck elevation within the MAW or inlet bay.
- Less than 6 inches, flow should be exiting the cartridge lids of each of the draindown cartridges (i.e. cartridges located outside the backwash pool).
- Greater than 6 inches, flow should be exiting the cartridge lids of each of the draindown cartridges and each of the hi-flo cartridges (i.e. cartridges located inside the backwash pool), and water should be overflowing the backwash pool weir.
- 18 inches or greater and relatively little flow is exiting the cartridge lids and outlet pipe, this condition indicates that the filter cartridges need to be rinsed.

4.0 Maintenance Requirements

Required maintenance for the Jellyfish Filter is based upon results of the most recent inspection, historical maintenance records, or the site specific water quality management plan; whichever is more frequent. In general, maintenance requires some combination of the following:

1. Sediment removal for depths reaching 12 inches or greater, or within 3 years of the most recent sediment cleaning, whichever occurs sooner.
2. Floatable trash, debris, and oil removal.
3. Deck cleaned and free from sediment.
4. Filter cartridges rinsed and re-installed as required by the most recent inspection results, or within 12 months of the most recent filter rinsing, whichever occurs sooner.
5. Replace tentacles if rinsing does not restore adequate hydraulic capacity, remove accumulated sediment, or if damaged or missing. It is recommended that tentacles should remain in service no longer than 5 years before replacement.
6. Damaged or missing cartridge deck components must be repaired or replaced as indicated by results of the most recent inspection.
7. The unit must be cleaned out and filter cartridges inspected immediately after an upstream oil, fuel, or chemical spill. Filter cartridge tentacles should be replaced if damaged or compromised by the spill.

5.0 Maintenance Procedure

The following procedures are recommended when maintaining the Jellyfish Filter:

1. Provide traffic control measures as necessary.
2. Open all covers and hatches. Use ventilation equipment as required, according to confined space entry procedures. *Caution: Dropping objects onto the cartridge deck may cause damage*.
3. Perform Inspection Procedure prior to maintenance activity.
4. To access the cartridge deck for filter cartridge service, descend into the structure and step directly onto the deck. Caution: Do not step onto the maintenance access wall (MAW) or backwash pool weir, as damage may result. Note that the cartridge deck may be slippery.
5. Maximum weight of maintenance crew and equipment on the cartridge deck not to exceed 450 lbs.

5.1 Filter Cartridge Removal

1. Remove a cartridge lid.
2. Remove cartridges from the deck using the lifting loops in the cartridge head plate. Rope or a lifting device (available from Contech) should be used. *Caution: Should a snag occur, do not force the cartridge upward as damage to the tentacles may result. Wet cartridges typically weigh between 100 and 125 lbs*.
3. Replace and secure the cartridge lid on the exposed empty receptacle as a safety precaution. Contech does not recommend exposing more than one empty cartridge receptacle at a time.

5.2 Filter Cartridge Rinsing

1. Remove all 11 tentacles from the cartridge head plate. Take care not to lose or damage the O-ring seal as well as the plastic threaded nut and connector.

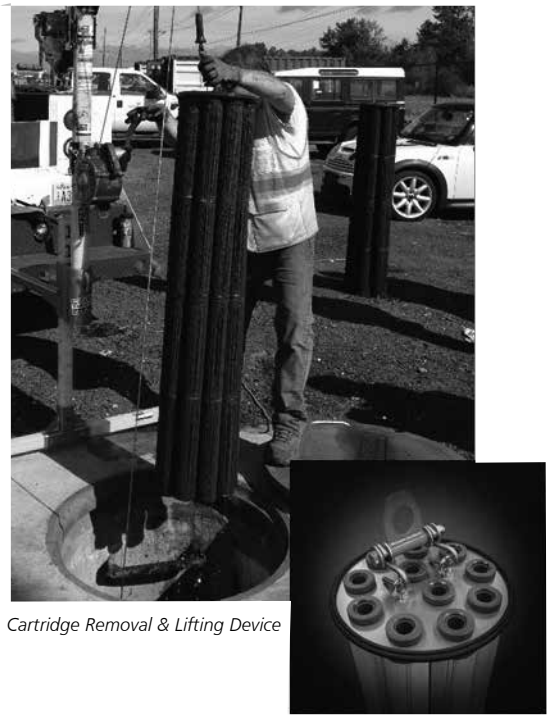

Cartridge Removal & Lifting Device

2. Position tentacles in a container (or over the MAW), with the threaded connector (open end) facing down, so rinse water is flushed through the membrane and captured in the container.
3. Using the Jellyfish rinse tool (available from Contech) or a low-pressure garden hose sprayer, direct water spray onto the tentacle membrane, sweeping from top to bottom along the length of the tentacle. Rinse until all sediment is removed from the membrane. *Caution: Do not use a high pressure sprayer or focused stream of water on the membrane. Excessive water pressure may damage the membrane*.

4. Collected rinse water is typically removed by vacuum hose.
5. Reassemble cartridges as detailed later in this document. Reuse O-rings and nuts, ensuring proper placement on each tentacle.

5.3 Sediment and Flotables Extraction

1. Perform vacuum cleaning of the Jellyfish Filter only after filter cartridges have been removed from the system. Access the lower chamber for vacuum cleaning only through the maintenance access wall (MAW) opening. Be careful not to damage the flexible plastic separator skirt that is attached to the underside of the deck on manhole systems. Do not lower the vacuum wand through a cartridge receptacle, as damage to the receptacle will result.
2. Vacuum floatable trash, debris, and oil, from the MAW opening or inlet bay. Alternatively, floatable solids may be removed by a net or skimmer.

Vacuuming Sump Through MAW

3. Pressure wash cartridge deck and receptacles to remove all sediment and debris. Sediment should be rinsed into the sump area. Take care not to flush rinse water into the outlet pipe.
4. Remove water from the sump area. Vacuum or pump equipment should only be introduced through the MAW or inlet bay.
5. Remove the sediment from the bottom of the unit through the MAW or inlet bay opening.

Vacuuming Sump Through MAW

6. For larger diameter Jellyfish Filter manholes (≥8-ft) and some vaults complete sediment removal may be facilitated by removing a cartridge lid from an empty receptacle and inserting a jetting wand (not a vacuum wand) through the receptacle. Use the sprayer to rinse loosened sediment toward the vacuum hose in the MAW opening, being careful not to damage the receptacle.

5.4 Filter Cartridge Reinstallation and Replacement

1. Cartridges should be installed after the deck has been cleaned. It is important that the receptacle surfaces be free from grit and debris.
2. Remove cartridge lid from deck and carefully lower the filter cartridge into the receptacle until head plate gasket is seated squarely in receptacle. ***Caution: Do not force the cartridge downward; damage may occur.***
3. Replace the cartridge lid and check to see that both male threads are properly seated before rotating approximately 1/3 of a full rotation until firmly seated. Use of an approved rim gasket lubricant may facilitate installation. See next page for additional details.
4. If rinsing is ineffective in removing sediment from the tentacles, or if tentacles are damaged, provisions must be made to replace the spent or damaged tentacles with new tentacles. Contact Contech to order replacement tentacles.

5.5 Chemical Spills

Caution: If a chemical spill has been captured, do not attempt maintenance. Immediately contact the local hazard response agency and contact Contech.

5.6 Material Disposal

The accumulated sediment found in stormwater treatment and conveyance systems must be handled and disposed of in accordance with regulatory protocols. It is possible for sediments to contain measurable concentrations of heavy metals and organic chemicals (such as pesticides and petroleum products). Areas with the greatest potential for high pollutant loading include industrial areas and heavily traveled roads. Sediments and water must be disposed of in accordance with all applicable waste disposal regulations. When scheduling maintenance, consideration must be made for the disposal of solid and liquid wastes. This typically requires coordination with a local landfill for solid waste disposal. For liquid waste disposal a number of options are available including a municipal vacuum truck decant facility, local waste water treatment plant or on-site treatment and discharge.

Jellyfish Filter Components & Filter Cartridge Assembly and Installation

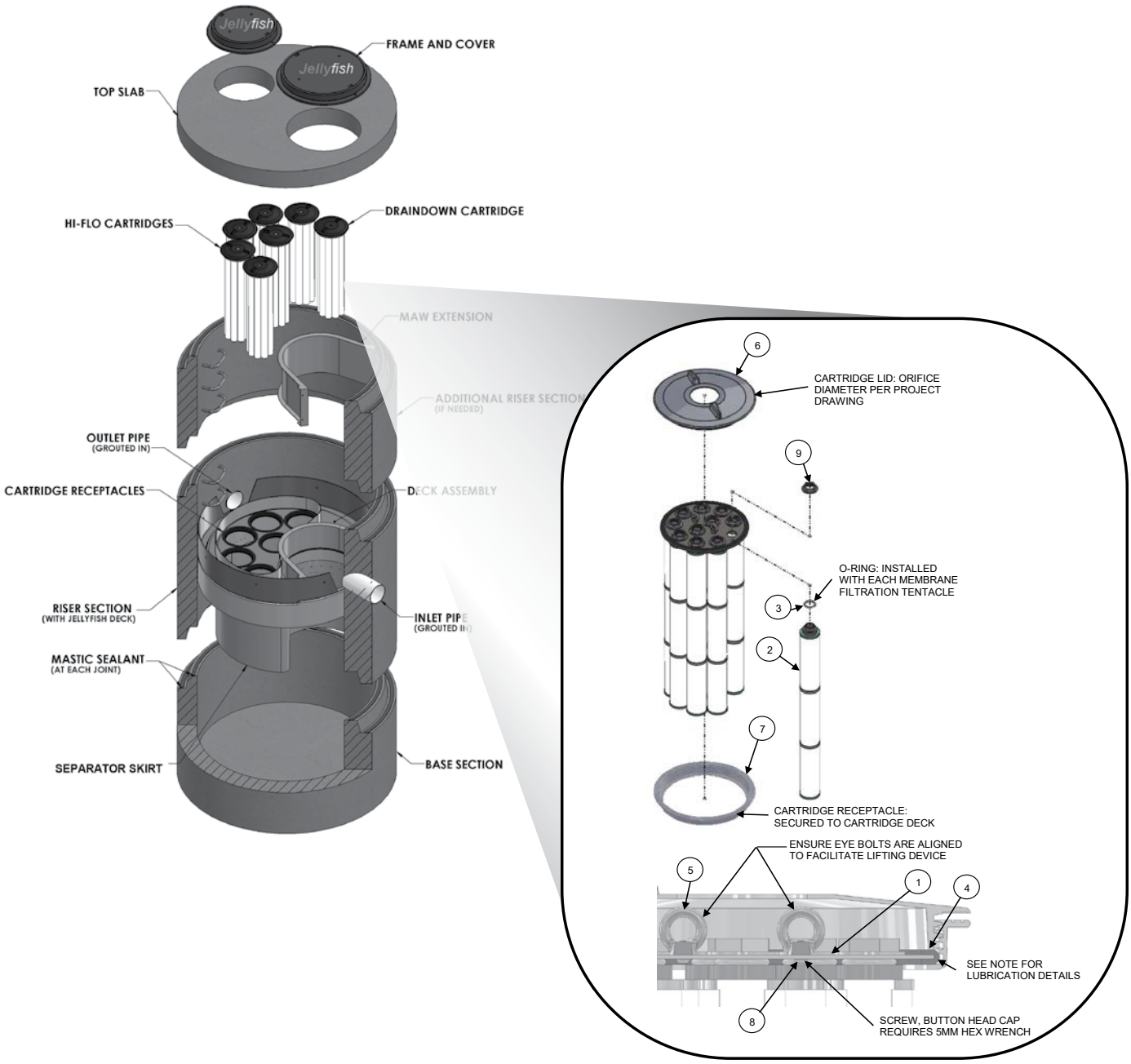

TABLE 1: BOM

ITEM NO.	DESCRIPTION
1	JF HEAD PLATE
2	JF TENTACLE
3	JF O-RING
4	JF HEAD PLATE GASKET
5	JF CARTRIDGE EYELET
6	JF 14IN COVER
7	JF RECEPTACLE
8	BUTTON HEAD CAP SCREW M6X14MM SS
9	JF CARTRIDGE NUT

TABLE 2: APPROVED GASKET LUBRICANTS

PART NO.	MFR	DESCRIPTION
78713	LA-CO	LUBRI-JOINT
40501	HERCULES	DUCK BUTTER
30600	OATEY	PIPE LUBRICANT
PSLUBXL1Q	PROSELECT	PIPE JOINT LUBRICANT

NOTES:

Head Plate Gasket Installation:
Install Head Plate Gasket (Item 4) onto the Head Plate (Item 1) and liberally apply a lubricant from Table 2: Approved Gasket Lubricants onto the gasket where it contacts the Receptacle (Item 7) and Cartridge Lide (ITem 6). Follow Lubricant manufacturer's instructions.

Lid Assembly:
Rotate Cartridge Lid counter-clockwise until both male threads drop down and properly seat. Then rotate Cartridge Lid clock-wise approximately one-third of a full rotation until Cartridge Lid is firmly secured, creating a watertight seal.

Jellyfish Filter Inspection and Maintenance Log

Owner:				Jellyfish Model No:		
Location:				GPS Coordinates:		
Land Use:	Commercial:		Industrial:		Service Station:	
	Roadway/Highway:		Airport:		Residential:	

Date/Time:						
Inspector:						
Maintenance Contractor:						
Visible Oil Present: (Y/N)						
Oil Quantity Removed:						
Floatable Debris Present: (Y/N)						
Floatable Debris Removed: (Y/N)						
Water Depth in Backwash Pool						
Draindown Cartridges externally rinsed and recommissioned: (Y/N)						
New tentacles put on Draindown Cartridges: (Y/N)						
Hi-Flo Cartridges externally rinsed and recommissioned: (Y/N)						
New tentacles put on Hi-Flo Cartridges: (Y/N)						
Sediment Depth Measured: (Y/N)						
Sediment Depth (inches or mm):						
Sediment Removed: (Y/N)						
Cartridge Lids intact: (Y/N)						
Observed Damage:						
Comments:						

Jellyfish®

CONTECH ENGINEERED SOLUTIONS

Support

- Drawings and specifications are available at www.conteches.com/jellyfish.
- Site-specific design support is available from Contech Engineered Solutions.
- Find a Certified Maintenance Provider at www.conteches.com/ccmp

800.338.1122
www.ContechES.com

© 2021 Contech Engineered Solutions LLC, a QUIKRETE Company

Contech Engineered Solutions LLC provides site solutions for the civil engineering industry. Contech's portfolio includes bridges, drainage, sanitary sewer, stormwater, wastewater treatment and earth stabilization products. For information on other Contech segment offerings, visit ContechES.com or call 800.338.1122

NOTHING IN THIS CATALOG SHOULD BE CONSTRUED AS A WARRANTY. APPLICATIONS SUGGESTED HEREIN ARE DESCRIBED ONLY TO HELP READERS MAKE THEIR OWN EVALUATIONS AND DECISIONS, AND ARE NEITHER GUARANTEES NOR WARRANTIES OF SUITABILITY FOR ANY APPLICATION. CONTECH MAKES NO WARRANTY WHATSOEVER, EXPRESS OR IMPLIED, RELATED TO THE APPLICATIONS, MATERIALS, COATINGS, OR PRODUCTS DISCUSSED HEREIN. ALL IMPLIED WARRANTIES OF MERCHANTABILITY AND ALL IMPLIED WARRANTIES OF FITNESS FOR ANY PARTICULAR PURPOSE ARE DISCLAIMED BY CONTECH. SEE CONTECH'S CONDITIONS OF SALE (AVAILABLE AT WWW.CONTECHES.COM/COS) FOR MORE INFORMATION.

Docusign Envelope ID: A62A21AF-7AF7-4858-BDF9-E9EC7327F50F

An amended copy of this document will be provided to the TCEQ within thirty days of any changes in the following information.

Responsible Party for Maintenance:	HM Parkside Development, Inc.
Address:	P.O. BOX 5397
City, State, Zip:	Austin, TX 78763
Telephone Number:	(512) 481-0303

Signature of Responsible Party

DocuSigned by:
Blake Magee
5EA2F31945EE4B7...

07/18/2025

Agent Authorization Form
For Required Signature
Edwards Aquifer Protection Program
Relating to 30 TAC Chapter 213
Effective June 1, 1999

I Blake Magee,
Print Name

President,
Title - Owner/President/Other

of HM Parkside Development, Inc.,
Corporation/Partnership/Entity Name

have authorized Christine Campbell, P.E.
Print Name of Agent/Engineer

of HR Green Development TX, LLC
Print Name of Firm

to represent and act on the behalf of the above named Corporation, Partnership, or Entity for the purpose of preparing and submitting this plan application to the Texas Commission on Environmental Quality (TCEQ) for the review and approval consideration of regulated activities.

I also understand that:

1. The applicant is responsible for compliance with 30 Texas Administrative Code Chapter 213 and any condition of the TCEQ's approval letter. The TCEQ is authorized to assess administrative penalties of up to $10,000 per day per violation.

2. For those submitting an application who are not the property owner, but who have the right to control and possess the property, additional authorization is required from the owner.

3. Application fees are due and payable at the time the application is submitted. The application fee must be sent to the TCEQ cashier or to the appropriate regional office. The application will not be considered until the correct fee is received by the commission.

4. A notarized copy of the Agent Authorization Form must be provided for the person preparing the application, and this form must accompany the completed application.

5. No person shall commence any regulated activity on the Edwards Aquifer Recharge Zone, Contributing Zone or Transition Zone until the appropriate application for the activity has been filed with and approved by the Executive Director.

SIGNATURE PAGE:

DocuSigned by:
Blake Magee
Applicant's Signature

6/5/2025
Date

THE STATE OF Texas §

County of Travis §

BEFORE ME, the undersigned authority, on this day personally appeared Blake Magee known to me to be the person whose name is subscribed to the foregoing instrument, and acknowledged to me that (s)he executed same for the purpose and consideration therein expressed.

GIVEN under my hand and seal of office on this 5th day of June 2025.

Amy Lynn Payne
NOTARY PUBLIC

AMY LYNN PAYNE
Notary ID #124190357
My Commission Expires
August 18, 2027

Amy Lynn Payne
Typed or Printed Name of Notary

MY COMMISSION EXPIRES: 8/18/27

Owner Authorization Form

Edwards Aquifer Protection Program

Instructions

Complete the following form by adding the requested information in the fields below. The form must be notarized for it to be considered complete. Attach it to other programmatic submittals required by 30 Texas Administrative Code (30 TAC), Chapter 213, and provide it to TCEQ's Edwards Aquifer Protection Program (EAPP) as part of your application.

If you have questions on how to fill out this form or about EAPP, please contact us by phone at 512-339-2929 or by e-mail at eapp@tceq.texas.gov.

Landowner Authorization

I, Blake Magee of HM Parkside, LP

am the owner of the property located at:

Parkside on the River Sections 11A, 12A, 15A & 15B, 56.78 acres in the Isaac Donagan Survey, Abs No. 178, the Joseph Thompson Survey, Abs No. 608, the W.E. Pate Survey, Abs No. 836, and the Daniel Medlock Survey, Abs No. 839 Williamson County, Texas

and am duly authorized in accordance with 30 TAC 213.4(c)(2) and 213.4(d)(1), or 30 TAC 213.23(c)(2) and 213.23(d), relating to the right to submit an application, signatory authority, and proof of authorized signatory.

I do hereby authorize HM Parkside Development, Inc.
To conduct TCEQ permitting for Parkside on the River Sections 11A, 12A, 15A & 15B
At Parkside on the River Sections 11A, 12A, 15A & 15B, 56.78 acres in the Isaac Donagan Survey, Abs No. 178, the Joseph Thompson Survey, Abs No. 608, the W.E. Pate Survey, Abs No. 836, and the Daniel Medlock Survey, Abs No. 839 Williamson County, Texas

Landowner Acknowledgement

I understand that HM Parkside, LP

Is ultimately responsible for the compliance with the approved or conditionally approved Edwards Aquifer protection plan and any special conditions of the approved plan through all phases of plan implementation even if the responsibility for compliance and the right to possess and control the property referenced in the application has been contractually assumed by another legal entity. I further understand that any failure to comply with any condition of the executive director's approval is a violation and subject to administrative rule or orders and penalties as provided under 30 TAC 213.10, relating to enforcement. Such violations may also be subject to civil penalties.

Landowner Signature

Blake J. Magee

Landowner Signature

7/9/25

Date

THE STATE § OF Texas

County § of Travis

BEFORE ME, the undersigned authority, on this day personally appeared

Blake Magee

known to me to be the person whose name is subscribed to the foregoing instrument and acknowledged to me that (s)he executed same for the purpose and consideration therein expressed.

GIVEN under my hand and seal of office on this 9th day of July 2025.

Amy Lynn Payne

NOTARY PUBLIC

AMY LYNN PAYNE
Notary ID #124190357
My Commission Expires
August 18, 2027

Amy Lynn Payne

MY COMMISSION EXPIRES: 8/18/27

Optional Attachments

Select All that apply:

☐ Lease Agreement

☐ Signed Contract

☐ Deed Restricted Easement

☐ Other legally binding documents

Application Fee Form

Texas Commission on Environmental Quality

Name of Proposed Regulated Entity: Parkside on the River Sections 11, 12A & 15A

Regulated Entity Location: Located west of Parkside Parkway, northeast of GTII Phase 1, and north of Parkside on the River Sections 9B & 10B

Name of Customer: HM Parkside Development, Inc.

Contact Person: Blake Magee Phone: 512-481-0303

Customer Reference Number (if issued):CN 605674258

Regulated Entity Reference Number (if issued):RN _____

Austin Regional Office (3373)

☐ Hays ☐ Travis ☒ Williamson

San Antonio Regional Office (3362)

☐ Bexar ☐ Medina ☐ Uvalde

☐ Comal ☐ Kinney

Application fees must be paid by check, certified check, or money order, payable to the **Texas Commission on Environmental Quality**. Your canceled check will serve as your receipt. **This form must be submitted with your fee payment**. This payment is being submitted to:

☐ Austin Regional Office

☒ Mailed to: TCEQ - Cashier
Revenues Section
Mail Code 214
P.O. Box 13088
Austin, TX 78711-3088

☐ San Antonio Regional Office

☐ Overnight Delivery to: TCEQ - Cashier
12100 Park 35 Circle
Building A, 3rd Floor
Austin, TX 78753
(512)239-0357

Site Location (Check All That Apply):

☒ Recharge Zone ☒ Contributing Zone ☐ Transition Zone

Type of Plan	***Size***	***Fee Due***
Water Pollution Abatement Plan, Contributing Zone Plan: One Single Family Residential Dwelling	Acres	$
Water Pollution Abatement Plan, Contributing Zone Plan: Multiple Single Family Residential and Parks	Legal boundary = 289.78 Acres	$ 8,000
Water Pollution Abatement Plan, Contributing Zone Plan: Non-residential	Acres	$
Sewage Collection System	L.F.	$
Lift Stations without sewer lines	Acres	$
Underground or Aboveground Storage Tank Facility	Tanks	$
Piping System(s)(only)	Each	$
Exception	Each	$
Extension of Time	Each	$

Signature: Christie Campbell Date: 07/18/2025

Application Fee Schedule

Texas Commission on Environmental Quality
Edwards Aquifer Protection Program 30 TAC Chapter 213 (effective 05/01/2008)

Water Pollution Abatement Plans and Modifications

Contributing Zone Plans and Modifications

Project	*Project Area in Acres*	*Fee*
One Single Family Residential Dwelling	< 5	$650
Multiple Single Family Residential and Parks	< 5 5 < 10 10 < 40 40 < 100 100 < 500 ≥ 500	$1,500 $3,000 $4,000 $6,500 $8,000 $10,000
Non-residential (Commercial, industrial, institutional, multi-family residential, schools, and other sites where regulated activities will occur)	< 1 1 < 5 5 < 10 10 < 40 40 < 100 ≥ 100	$3,000 $4,000 $5,000 $6,500 $8,000 $10,000

Organized Sewage Collection Systems and Modifications

Project	*Cost per Linear Foot*	*Minimum Fee-Maximum Fee*
Sewage Collection Systems	$0.50	$650 - $6,500

Underground and Aboveground Storage Tank System Facility Plans and Modifications

Project	*Cost per Tank or Piping System*	*Minimum Fee-Maximum Fee*
Underground and Aboveground Storage Tank Facility	$650	$650 - $6,500

Exception Requests

Project	*Fee*
Exception Request	$500

Extension of Time Requests

Project	***Fee***
Extension of Time Request	$150

TCEQ Core Data Form

TCEQ Use Only

For detailed instructions regarding completion of this form, please read the Core Data Form Instructions or call 512-239-5175.

SECTION I: General Information

1. Reason for Submission *(If other is checked please describe in space provided.)*

☒ New Permit, Registration or Authorization (*Core Data Form should be submitted with the program application.)*

☐ Renewal *(Core Data Form should be submitted with the renewal form)* ☐ Other

2. Customer Reference Number *(if issued)*	Follow this link to search for CN or RN numbers in Central Registry**	3. Regulated Entity Reference Number *(if issued)*
CN 605674258		RN

SECTION II: Customer Information

4. General Customer Information | **5. Effective Date for Customer Information Updates** (mm/dd/yyyy)

☐ New Customer ☐ Update to Customer Information ☐ Change in Regulated Entity Ownership

☐ Change in Legal Name (Verifiable with the Texas Secretary of State or Texas Comptroller of Public Accounts)

The Customer Name submitted here may be updated automatically based on what is current and active with the Texas Secretary of State (SOS) or Texas Comptroller of Public Accounts (CPA).

6. Customer Legal Name *(If an individual, print last name first: eg: Doe, John)* *If new Customer, enter previous Customer below:*

HM Parkside Development, Inc.

7. TX SOS/CPA Filing Number	8. TX State Tax ID (11 digits)	9. Federal Tax ID (9 digits)	10. DUNS Number *(if applicable)*
0803161900	32068900318		

11. Type of Customer: ☒ Corporation ☐ Individual Partnership: ☐ General ☐ Limited

Government: ☐ City ☐ County ☐ Federal ☐ State ☐ Other ☐ Sole Proprietorship ☐ Other:

12. Number of Employees
☒ 0-20 ☐ 21-100 ☐ 101-250 ☐ 251-500 ☐ 501 and higher

13. Independently Owned and Operated?
☒ Yes ☐ No

14. Customer Role (Proposed or Actual) – *as it relates to the Regulated Entity listed on this form. Please check one of the following:*

☒ Owner ☐ Operator ☐ Owner & Operator

☐ Occupational Licensee ☐ Responsible Party ☐ Voluntary Cleanup Applicant ☐ Other:

15. Mailing Address:

P.O. Box 5397

City	State	ZIP	ZIP + 4
Austin	TX	78763	

16. Country Mailing Information *(if outside USA)*

17. E-Mail Address *(if applicable)*

Blake@blakemageeco.com

18. Telephone Number	19. Extension or Code	20. Fax Number *(if applicable)*
(512) 481-0303		( ) -

SECTION III: Regulated Entity Information

21. General Regulated Entity Information *(If 'New Regulated Entity" is selected below this form should be accompanied by a permit application)*

☒ New Regulated Entity ☐ Update to Regulated Entity Name ☐ Update to Regulated Entity Information

The Regulated Entity Name submitted may be updated in order to meet TCEQ Agency Data Standards (removal of organizational endings such as Inc, LP, or LLC.)

22. Regulated Entity Name *(Enter name of the site where the regulated action is taking place.)*

Parkside on the River Sections 11, 12A & 15A

23. Street Address of the Regulated Entity: *(No PO Boxes)*	Located west of Parkside Parkway, northeast of Parkside on the River GTII - Phase 1, and north of Parkside on the River Sections 9B & 10B.							
	City	Georgetown	**State**	TX	**ZIP**	78628	**ZIP + 4**	
24. County	Williamson County							

Enter Physical Location Description if no street address is provided.

25. Description to Physical Location:	Located west of Parkside Parkway, northeast of Parkside on the River GTII - Phase 1, and north of Parkside on the River Sections 9B & 10B.

26. Nearest City	**State**	**Nearest ZIP Code**
Georgetown	TX	78628

27. Latitude (N) In Decimal:	30.619349	**28. Longitude (W) In Decimal:**	-97.760147

Degrees	Minutes	Seconds	Degrees	Minutes	Seconds
30	37	10N	97	45	37W

29. Primary SIC Code (4 digits)	**30. Secondary SIC Code** (4 digits)	**31. Primary NAICS Code** (5 or 6 digits)	**32. Secondary NAICS Code** (5 or 6 digits)
1521		236115	

33. What is the Primary Business of this entity? *(Do not repeat the SIC or NAICS description.)*

Land Development - Single Family Residential

34. Mailing Address:	**P.O. Box 5397**							
	City	**Austin**	**State**	**TX**	**ZIP**	**78763**	**ZIP + 4**	
35. E-Mail Address:	**blake@blakemageeco.com**							

36. Telephone Number	**37. Extension or Code**	**38. Fax Number** *(if applicable)*
(512) 481-0303		**( ) -**

39. TCEQ Programs and ID Numbers Check all Programs and write in the permits/registration numbers that will be affected by the updates submitted on this form. See the Core Data Form instructions for additional guidance.

☐ Dam Safety	☐ Districts	☒ Edwards Aquifer	☐ Emissions Inventory Air	☐ Industrial Hazardous Waste
☐ Municipal Solid Waste	☐ New Source Review Air	☐ OSSF	☐ Petroleum Storage Tank	☐ PWS
☐ Sludge	☐ Storm Water	☐ Title V Air	☐ Tires	☐ Used Oil
☐ Voluntary Cleanup	☐ Waste Water	☐ Wastewater Agriculture	☐ Water Rights	☐ Other:

SECTION IV: Preparer Information

40. Name:	Christine Campbell	**41. Title:**	Project Manager

42. Telephone Number	**43. Ext./Code**	**44. Fax Number**	**45. E-Mail Address**
(512 **)** 872-6696		**( ) -**	christine.campbell@hrgreen.com

SECTION V: Authorized Signature

46. By my signature below, I certify, to the best of my knowledge, that the information provided in this form is true and complete, and that I have signature authority to submit this form on behalf of the entity specified in Section II, Field 6 and/or as required for the updates to the ID numbers identified in field 39.

Company:	HR Green Development TX, LLC	**Job Title:**	Project Manager
Name*(In Print)* **:**	Christine Campbell	**Phone:**	**(** 512 **)** 872-6696
Signature:	Christine Campbell	**Date:**	7/18/2025

ELECTRONICALLY RECORDED 2018114043
Williamson County, Texas Total Pages: 24

NOTICE OF CONFIDENTIALITY RIGHTS: IF YOU ARE A NATURAL PERSON, YOU MAY REMOVE OR STRIKE ANY OR ALL OF THE FOLLOWING INFORMATION FROM ANY INSTRUMENT THAT TRANSFERS AN INTEREST IN REAL PROPERTY BEFORE IT IS FILED FOR RECORD IN THE PUBLIC RECORDS: YOUR SOCIAL SECURITY NUMBER OR YOUR DRIVER'S LICENSE NUMBER.

SPECIAL WARRANTY DEED

This Special Warranty Deed (this **Deed**) is made as of December 20, 2018, by **HCB LAREDO TEXAS, LLC**, a Colorado limited liability company (**Grantor**), to **HM PARKSIDE, LP**, a Texas limited partnership (**Grantee**).

For other valuable consideration to Grantor paid by the Grantee, the receipt of which is acknowledged, Grantor and Grantee agree as follows:

1. Conveyance and Warranty of Title.

Grantor GRANTS, SELLS, and CONVEYS to Grantee, subject to the Permitted Exceptions (defined below), all of the real property (the **Real Property**) more particularly described on **Exhibit A** attached to this Deed, together with all interest of Grantor in:

- any easements, rights-of-way, and rights of ingress or egress that benefit the Real Property;
- any dedicated highway, avenue, street, or alley, in, on, across, in front of, abutting, or adjoining the Real Property or any land lying in or under the bed of any of the foregoing; and
- any strips or gores of land adjoining the Real Property and abutting properties, whether owned or claimed by deed, limitations, or otherwise, and whether or not located inside or outside of the Real Property;

(collectively, the **Property**).

TO HAVE AND TO HOLD the Property, subject to the Permitted Exceptions, together with all and singular the rights and appurtenances thereto in anywise belonging, to Grantee, its successors and assigns, forever; and Grantor binds itself, its successors and assigns, to WARRANT AND FOREVER DEFEND all and singular the Property to Grantee, its successors and assigns, against every person whomsoever lawfully claiming or to claim the same or any part thereof, by, through, or under Grantor, but not otherwise.

2. Permitted Exceptions.

This Deed is made, and is accepted by Grantee, subject to the restrictions, easements, covenants, encumbrances, and liens described on **Exhibit B** attached to this Deed, but only to the extent that same are in existence and affect the Property (the **Permitted Exceptions**).

EXECUTED as of the date first above written.

GRANTOR:

HCB LAREDO TEXAS, LLC,
a Colorado limited liability company

By: _____
Name: Michael D. Balsbaugh
Title: Executive Vice President

Address of Grantee:

HM Parkside LP
1011 N. Lamar Blvd.
Austin, Texas 78703

THE STATE OF KANSAS §
§
COUNTY OF JOHNSON §

This instrument was acknowledged before me on December 21, 2018, by Michael D. Balsbaugh, Executive Vice President of HCB LAREDO TEXAS, LLC, a Colorado limited liability company, on behalf of said limited liability company.

[NOTARIAL SEAL]

NOTARY PUBLIC - State of Kansas
LINDSAY JAMES
My Appt. Expires 7/8/2022

_____
Notary Public in and for The State of Kansas
Print Name: LINDSAY JAMES
My Commission Expires: 7/8/2022

Exhibit A

Real Property

Tract 1:

1,143.511 acres of land in Williamson County, Texas, being more particularly described as 1,156.001 acres described on Exhibit A-1 attached hereto and incorporated herein, SAVE AND EXCEPT 9.410 acres described on Exhibit A-2 attached hereto and incorporated herein and SAVE AND EXCEPT 3.080 acres described on Exhibit A-3 attached hereto and incorporated herein and

Tract 2:

Lot 2, Block G, Water Oak North Section 1, a subdivision in Williamson County, Texas, according to the map or plat thereof recorded under Document No. 2013033404, Official Public Records of Williamson County, Texas.

EXHIBIT A-1

County: Williamson
Project: Water Oak South
Job No.: A180801
MBS No.: 18-005

FIELD NOTES FOR 1156.001 ACRES

Being a tract containing 1,156.001 acres of land located in the I. Donagan Survey, Abstract Number 178, the J. Thompson Survey, Abstract Number 608, the Key West Irrigation Survey, Abstract Number 711, the I.&G.N. R.R. Survey, Abstract number 744, the J.D. Johns Survey, Abstract Number 365, the W.E. Pate Survey, Abstract Number 836, the D. Medlock Survey, Abstract Number 839, in Williamson County, Texas; Said 1,156.001 acre tract being a call 195.193 acre tract of land recorded in the name of Laredo Wo, Ltd. in Williamson County Clerk's File (W.C.C.F.) Number 2007014280, a call 71.001 acre tract of land recorded in the name of Laredo Wo, Ltd. in W.C.C.F. Number 2007014281, call 77.399 acre, 44.314 acre, and 203.137 acre tracts of land recorded in the name of Laredo Wo, Ltd. in W.C.C.F. Number 2007014282, call 330.24 acre and 15.56 acre tracts of land recorded in the name of Laredo Wo, Ltd. in W.C.C.F. Number 2007014285, a call 0.368 acre tract of land recorded in the name of Laredo Wo, Ltd. in W.C.C.F. Number 2008039394, and a call 6.190 acre tract of land recorded in the name of Laredo Wo, Ltd. in W.C.C.F. Number 2009022803, and a portion of a call 192.314 acre tract of land recorded in the name of Laredo Wo, Ltd. in W.C.C.F. Number 2007014289, a call 3.080 acre tract of land recorded in the name of Austin WO, LLC in W.C.C.F. Number 2014011207 and a call 324.00 acre tract of land recorded in the name of Laredo Wo, Ltd. in W.C.C.F. Number 2007014278; Said 1,156.001 acres being more particularly described by metes and bounds descriptions as follows (bearings are referenced to the Texas Coordinate System, NAD 1983, Central Zone):

Beginning at a 1/2-inch iron rod found at the southwesterly corner of said 6.190 acre tract, the southeasterly corner of a call 47.420 acre tract of land recorded in the name of Georgetown Properties II, LLC in W.C.C.F. Number 2012043969 and the northerly Right-of-Way (R.O.W.) line of F.M. 2243 (80-feet width);

Thence, with the easterly line of said 47.420 acre tract, the following sixteen (16) courses:

1. North 28 degrees 25 minutes 04 seconds East, a distance of 160.70 feet to a 1/2-inch iron rod found;

2. 155.33 feet along the arc of a curve to the left, said curve having a central angle of 16 degrees 06 minutes 30 seconds, a radius of 552.50 feet and a chord which bears North 18 degrees 24 minutes 54 seconds West, a distance of 154.82 feet to a 1/2-inch iron rod found;

3. North 26 degrees 28 minutes 10 seconds West, a distance of 157.44 feet to a 1/2-inch iron rod found;

4. 38.91 feet along the arc of a curve to the left, said curve having a central angle of 89 degrees 10 minutes 31 seconds, a radius of 25.00 feet and a chord which bears North 71 degrees 03 minutes 54 seconds West, a distance of 35.10 feet to a 1/2-inch iron rod set;

5. North 27 degrees 14 minutes 19 second West, a distance of 65.03 feet to a 1/2-iron rod set;

6. 39.79 feet along the arc of a curve to the left, said curve having a central angle of 91 degrees 11 minutes 17 seconds, a radius of 25.00 feet and a chord which bears North 19 degrees 07 minutes 36 seconds East, a distance of 35.72 feet to a 1/2-inch iron rod set;

7. North 26 degrees 28 minutes 10 seconds West, a distance of 150.25 feet to a 1/2-inch iron rod set;

8. 674.40 feet along the arc of a curve to the right, said curve having a central angle of 45 degrees 58 minutes 22 seconds, a radius of 840.50 feet and a chord which bears North 03 degrees 28 minutes 59 seconds West, a distance of 656.45 feet to a 1/2-inch iron rod set;

9. 203.98 feet along the arc of a curve to the left, said curve having a central angle of 22 degrees 04 minutes 18 seconds, a radius of 529.52 feet and a chord which bears South 77 degrees 26 minutes 54 seconds West, a distance of 202.72 feet to a 1/2-inch iron rod set;

10. North 32 degrees 58 minutes 10 seconds West, a distance of 44.22 feet to a 1/2-iron rod set;

11. North 34 degrees 39 minutes 43 seconds West, a distance of 239.78 feet to a 1/2-inch iron rod found;

12. North 55 degrees 20 minutes 17 seconds East, a distance of 450.00 feet, from which a 1/2-inch iron rod found, bears South 61 degrees East a distance of 0.49 feet;

13. North 34 degrees 39 minutes 43 seconds West, a distance of 97.07 feet to a 1/2-inch iron rod set;

14. 124.70 feet along the arc of a curve to the left, said curve having a central angle of 119 degrees 05 minutes 02 seconds, a radius of 60.00 feet and a chord which bears North 24 degrees 52 minutes 55 seconds East, a distance of 103.44 feet, from which a 1/2-inch iron rod found, bears South 68 degrees East, a distance of 0.55 feet;

15. North 55 degrees 20 minutes 17 seconds East, a distance of 120.00 feet to a 1/2-inch iron rod found;

16. North 34 degrees 39 minutes 43 seconds West, a distance of 126.11 feet to an easterly line of The Preserve Phase 1, a subdivision recorded in Cabinet EE, Slide Number 310-316 of the Williamson County Plat Records (W.C.P.R.), from which a 1/2-inch iron rod found, bears South 67 degrees East, a distance of 0.66 feet;

Thence, with the easterly line of said The Preserve Phase 1, the following twelve (12) courses:

1. North 80 degrees 20 minutes 05 seconds East, a distance of 307.48 feet to a 1/2-inch iron rod set;

2. North 23 degrees 41 minutes 11 seconds West, a distance of 279.38 feet to a 1/2-inch iron rod set;

3. 31.65 feet along the arc of a curve to the left, said curve having a central angle of 72 degrees 13 minutes 47 seconds, a radius of 25.11 feet and a chord which bears North 63 degrees 28 minutes 50 seconds West, a distance of 29.60 feet to a 1/2-inch iron rod set;

4. North 09 degrees 39 minutes 51 seconds West, a distance of 50.00 feet to a 1/2-inch iron rod set;

5. North 80 degrees 20 minutes 05 seconds East, a distance of 155.74 feet to a 1/2-inch iron rod found;

6. North 21 degrees 06 minutes 30 seconds West, a distance of 186.45 feet to a 1/2-inch iron rod set;

7. North 30 degrees 29 minutes 37 seconds West, a distance of 233.35 feet to a 1/2-inch iron rod found;

8. North 23 degrees 41 minutes 11 seconds West, a distance of 528.84 feet to a cotton spindle found;

9. South 66 degrees 44 minutes 24 seconds West, a distance of 125.00 feet to a 1/2-inch iron rod set;

10. North 23 degrees 41 minutes 11 seconds West, a distance of 409.01 feet to a 1/2-inch iron rod found;

11. North 68 degrees 45 minutes 39 seconds East, a distance of 108.54 feet to a 1/2-inch iron rod found;

12. North 21 degrees 14 minutes 21 seconds West, a distance of 714.47 feet to the easterly line of a call 60.5184 acre tract of land recorded in the name of AVP Ranch, Ltd. in W.C.C.F. Number 2011081794, from which a 1/2-inch iron rod found, bears North 27 degrees West, a distance of 0.68 feet;

Thence, with said easterly line, North 14 degrees 11 minutes 42 seconds East, a distance of 1,508.94 feet to a 1/2-inch iron rod set at the southwesterly corner of a call 314.00 acre tract of land recorded in the name of Georgetown Properties II in W.C.C.F. Number 2012043969;

Thence, with the southerly line of said 314.00 acre tract, the following ten (10) courses:

1. South 75 degrees 48 minutes 18 seconds East, a distance of 431.73 feet to a 1/2-inch iron rod found;

2. 326.94 feet along the arc of a curve to the right, said curve having a central angle of 32 degrees 24 minutes 32 seconds, a radius of 578.00 feet and a chord which bears South 59 degrees 36 minutes 01 seconds East, a distance of 322.60 feet to a 1/2-inch iron rod found;

3. South 43 degrees 23 minutes 44 seconds East, a distance of 1,170.13 feet to a 1/2-iron rod found;

4. 175.01 feet along the arc of a curve to the right, said curve having a central angle of 09 degrees 18 minutes 07 seconds, a radius of 1078.00 feet and a chord which bears North 55 degrees 24 minutes 17 seconds East, a distance of 174.82 feet to a 1/2-inch iron rod found;

5. North 60 degrees 03 minutes 21 seconds East, a distance of 538.21 feet, from which a 1/2-inch iron rod found, bears South 23 degrees West, a distance of 0.50 feet;

6. 839.65 feet along the arc of a curve to the left, said curve having a central angle of 52 degrees 10 minutes 41 seconds, a radius of 922.00 feet and a chord which bears North 33 degrees 58 minutes 00 seconds East, a distance of 810.93 feet to a 1/2-inch iron rod found;

7. North 07 degrees 52 minutes 40 seconds East, a distance of 108.32 feet to a 1/2-inch iron rod set;

8. 1,349.11 feet along the arc of a curve to the right, said curve having a central angle of 79 degrees 02 minutes 14 seconds, a radius of 978.00 feet and a chord which bears North 47 degrees 23 minutes 47 seconds East, a distance of 1,244.66 feet to a 1/2-inch iron rod found;

9. North 86 degrees 54 minutes 53 seconds East, a distance of 321.28 feet to a 1/2-inch iron rod found;

10. 75.21 feet along the arc of a curve to the right, said curve having a central angle of 03 degrees 59 minutes 50 seconds, a radius of 1078.00 feet and a chord which bears North 88 degrees 54 minutes 08 seconds East, a distance of 75.19 feet to a 1/2-inch iron rod set at the southeasterly corner of said 314.00 acre tract and the westerly line of aforesaid 203.137 acre tract;

Thence, with the easterly line of said 314.00 acre tract, the following two (2) courses:

1. North 22 degrees 05 minutes 52 seconds West, a distance of 1596.68 feet to a 1-inch iron pipe found;

2. North 22 degrees 18 minutes 08 seconds West, a distance of 624.71 feet to the northeasterly corner of said 314.00 acre tract, the northwesterly corner of aforesaid 324.00 acre tract, a southerly corner of aforesaid 192.314 acre tract, and the centerline of South San Gabriel River;

Thence, with a northerly line of said 314.00 acre tract and the meanders of said centerline, South 68 degrees 48 minutes 05 seconds West, a distance of 57.92 feet to the southeasterly corner of a call 168.62 acre tract of land recorded in the name of Zamin, L.P. in W.C.C.F. Number 201403274 and the most southerly corner of said 192.314 acre tract;

Thence, with the easterly line of said 168.62 acre tract, the following ten (10) courses:

1. North 00 degrees 10 minutes 15 seconds West, a distance of 94.12 feet to a 1/2-inch iron rod set;

2. North 00 degrees 06 minutes 25 seconds East, a distance of 765.27 feet to a 1/2-inch iron rod (1847 cap) found;

3. North 00 degrees 15 minutes 54 seconds West, a distance of 374.43 feet to a nail in fence post found;

4. North 04 degrees 32 minutes 45 seconds East, a distance of 49.08 feet to a 1/2-inch iron rod set;

5. North 02 degrees 05 minutes 56 seconds East, a distance of 31.02 feet to a 1/2-inch iron rod set;

6. North 00 degrees 04 minutes 52 seconds East, a distance of 74.51 feet to a 1/2-inch iron rod set;

7. North 02 degrees 25 minutes 02 seconds West, a distance of 79.29 feet to a 1/2-inch iron rod (1847 cap) found;

8. North 00 degrees 29 minutes 19 seconds West, a distance of 311.09 feet to a 26-inch pine tree;

9. North 01 degrees 10 minutes 38 seconds West, a distance of 96.13 feet to a nail in a 30-inch cedar tree found;

10. North 02 degrees 08 minutes 59 seconds East, a distance of 140.61 feet to a nail in a 28-inch oak tree found at the southwesterly corner of a call 106.00 acre tract of land recorded in the name of Zamin, L.P. in W.C.C.F. Number 2010065268;

Thence, with the southerly line of said 106.00 acre tract, the following thirteen (13) courses:

1. South 36 degrees 25 minutes 52 seconds East, a distance of 145.97 feet to a 1/2-inch iron rod found;

2. South 40 degrees 04 minutes 40 seconds East, a distance of 159.64 feet to a 1/2-inch iron rod found;

3. South 65 degrees 38 minutes 47 seconds East, a distance of 83.14 feet to a 1/2-inch iron rod found;

4. North 88 degrees 53 minutes 22 seconds East, a distance of 622.87 feet to a cotton spindle found;

5. North 69 degrees 06 minutes 39 seconds East, a distance of 153.64 feet to a cotton spindle found;

6. North 67 degrees 02 minutes 44 seconds East, a distance of 133.64 feet to a 1/2-inch iron rod found;

7. South 27 degrees 21 minutes 25 seconds East, a distance of 172.95 feet to a 1/2-inch iron rod found;

8. South 36 degrees 36 minutes 32 seconds East, a distance of 272.53 feet to a 1/2-inch iron rod found;

9. South 82 degrees 53 minutes 15 seconds East, a distance of 115.61 feet to a 1/2-inch iron rod set;

10. North 56 degrees 07 minutes 11 seconds East a distance of 186.34 feet to a 1/2-inch iron rod found;

11. North 07 degrees 51 minutes 19 seconds West, a distance of 67.58 feet to a to a 1/2-inch iron rod found;

12. North 34 degrees 57 minutes 21 seconds West, a distance of 1007.97 feet to a 1/2-inch iron rod found;

13. North 55 degrees 43 minutes 32 seconds East, a distance of 579.96 feet to a 1/2-inch iron rod found at a westerly corner of a call 26.673 acre tract of land recorded in the name of Chesmar Homes Austin LLC in W.C.C.F. Number 2013095985;

Thence, with the southerly line of said 26.673 acre tract and the southerly line of a call 21.255 acre tract of land recorded in the name of Chesmar Homes Austin LLC. in W.C.C.F. Number 2018039081, the following nineteen (19) courses:

1. South 32 degrees 47 minutes 04 seconds East, a distance of 44.07 feet to a 1/2-inch iron rod set;

2. South 57 degrees 12 minutes 56 seconds West, a distance of 102.66 feet to a 1/2-inch iron rod set;

3. South 14 degrees 17 minutes 30 seconds East, a distance of 224.58 feet to a 1/2-inch iron rod set;

4. South 65 degrees 02 minutes 43 seconds East, a distance of 102.90 feet to a 1/2-inch iron rod set;

5. South 31 degrees 01 minutes 16 seconds East, a distance of 404.11 feet to a 1/2-inch iron rod set;

6. South 04 degrees 15 minutes 14 seconds West, a distance of 202.68 feet to a 1/2-inch iron rod set;

7. South 04 degrees 50 minutes 11 seconds West, a distance of 99.31 feet to a 1/2-inch iron rod set;

8. South 41 degrees 38 minutes 10 seconds East, a distance of 114.53 feet to a 1/2-inch iron rod set;

9. South 55 degrees 58 minutes 17 seconds East, a distance of 65.00 feet to a 1/2-inch iron rod set;

10. 49.41 feet along the arc of a curve to the right, said curve having a central angle of 14 degrees 31 minutes 09 seconds, a radius of 194.99 feet and a chord which bears South 84 degrees 07 minutes 03 seconds East, a distance of 49.28 feet to a 1/2-inch iron rod set;

11. South 80 degrees 23 minutes 52 seconds East, a distance of 35.39 feet to a 1/2-inch iron rod set;

12. South 83 degrees 07 minutes 59 seconds East, a distance of 260.77 feet to a 1/2-inch iron rod set;

13. South 73 degrees 37 minutes 51 seconds East, a distance of 287.96 feet to a 1/2-inch iron rod set;

14. North 83 degrees 40 minutes 45 seconds East, a distance of 84.78 feet to a 1/2-inch iron rod set;

15. North 06 degrees 19 minutes 15 seconds West, a distance of 176.09 feet to a 1/2-inch iron rod set;

16. 60.98 feet along the arc of a curve to the left, said curve having a central angle of 15 degrees 01 minutes 43 seconds, a radius of 232.50 feet and a chord which bears North 68 degrees 07 minutes 46 seconds East, a distance of 60.81 feet to a 1/2-inch iron rod set;

17. North 60 degrees 36 minutes 55 seconds East, a distance of 246.19 feet to a 1/2-inch iron rod set;

18. 39.28 feet along the arc of a curve to the right, said curve having a central angle of 90 degrees 01 minutes 54 seconds, a radius of 25.00 feet and a chord which bears South 74 degrees 23 minutes 05 seconds East, a distance of 35.36 feet to a 1/2-inch iron rod set;

19. North 60 degrees 36 minutes 55 seconds East, a distance of 55.00 feet to a 1/2-inch iron rod set at a westerly corner of a call 24.958 acre tract of land recroded in the name of ABG Water Oak Partners, Ltd. in W.C.C.F. Number 2014071868;

Thence, with the southerly line of said 24.958 acre tract, the following ten (10) courses:

1. South 03 degrees 29 minutes 46 seconds East, a distance of 31.45 feet to a 1/2-inch iron rod set;

2. South 03 degrees 43 minutes 00 seconds East, a distance of 299.26 feet to a 1/2-inch iron rod set;

3. 90.18 feet along the arc of a curve to the right, said curve having a central angle of 05 degrees 53 minutes 18 seconds, a radius of 877.50 feet and a chord which bears South 00 degrees 46 minutes 21 seconds East, a distance of 90.14 feet to a 1/2-inch iron rod set;

4. South 01 degrees 24 minutes 06 seconds East, a distance of 233.95 feet to a 1/2-inch iron rod set;

5. South 73 degrees 49 minutes 36 seconds East, a distance of 545.48 feet to a 1/2-inch iron rod set;

6. South 89 degrees 06 minutes 15 seconds East, a distance of 70.34 feet to a 1/2-inch iron rod set;

7. South 83 degrees 26 minutes 51 seconds East, a distance of 1532.87 feet to a 1/2-inch iron rod set;

8. North 85 degrees 29 minutes 19 seconds East, a distance of 278.11 feet to a 1/2-inch iron rod set;

9. North 04 degrees 30 minutes 41 seconds West, a distance of 130.00 feet to a 1/2-inch iron rod set;

10. North 85 degrees 29 minutes 19 seconds East, a distance of 160.52 feet to a 1/2-inch iron rod set on the westerly line of a call 32.61 acre tract of land recorded in the name of William Charles Bagwell, Et Ux in Volume 2438, Page 0499 of the Williamson County Deed Records (W.C.D.R.);

Thence, with the westerly line of said 32.61 acre tract, the following two (2) courses:

1. South 09 degrees 08 minutes 19 seconds East, a distance of 233.24 feet to a 1/2-inch iron rod found;

2. South 00 degrees 25 minutes 18 seconds East, a distance of 188.62 feet to the northerly line of a call 190.40 acre tract of land recorded in the name of Texas Crushed Stone Company in Volume 743, Page 47 of the W.C.D.R. and the said centerline of the South San Gabriel River;

Thence, with the meanders of said centerline, the following seven (7) courses:

1. South 87 degrees 44 minutes 31 seconds West, a distance of 362.99 feet;

2. North 78 degrees 02 minutes 28 seconds West, a distance of 85.59 feet;

3. South 80 degrees 19 minutes 11 seconds West, a distance of 148.88 feet;

4. South 65 degrees 08 minutes 13 seconds West, a distance of 207.18 feet;

5. North 66 degrees 16 minutes 04 seconds West, a distance of 40.94 feet;

6. North 89 degrees 30 minutes 57 seconds West, a distance of 541.24 feet;

7. North 79 degrees 08 minutes 16 seconds West, a distance of 180.05 feet to a 5/8-inch iron rod set for the northwesterly corner of said 190.40 acre tract;

Thence, leaving said centerline, with the westerly line of said 190.40 acre tract, the following seven (7) courses:

1. South 01 degrees 52 minutes 12 seconds East, a distance of 1026.81 feet to a 1/2-inch iron rod (1847 cap) found;

2. South 01 degrees 10 minutes 35 seconds East, a distance of 167.70 feet to a 1/2-inch iron rod found;

3. South 00 degrees 03 minutes 35 seconds West, a distance of 341.80 feet to a 1-inch iron pipe found;

4. South 06 degrees 25 minutes 15 seconds East, a distance of 359.37 feet to a 5/8-inch iron rod set;

5. South 01 degrees 45 minutes 07 seconds East, a distance of 480.85 feet to a 1/2-inch iron rod found;

6. South 02 degrees 48 minutes 39 seconds East, a distance of 258.38 feet to a nail found;

7. South 02 degrees 30 minutes 15 seconds East, a distance of 1139.73 feet to a 1/2-inch iron rod found at a northerly corner of a call 77.902 acre tract of land recorded in the name of Edwin H. Vale, Jr in W.C.C.F. Number 2017014736;

Thence, with the northerly and westerly line of said 77.902 acre tract, the following seven (7) courses:

1. South 68 degrees 13 minutes 42 seconds West, a distance of 128.79 feet to a cotton spindle found;

2. North 36 degrees 37 minutes 28 seconds West, a distance of 381.75 feet to a 1/2-inch iron rod found;

3. North 68 degrees 46 minutes 05 seconds West, a distance of 137.51 feet to a 1/2-inch iron rod found;

4. South 84 degrees 17 minutes 41 seconds West, a distance of 214.68 feet to a 1/2-inch iron rod found;

5. South 71 degrees 34 minutes 53 seconds West, a distance of 180.12 feet to a 1/2-inch iron rod found;

6. South 75 degrees 44 minutes 55 seconds West, a distance of 433.46 feet to a cotton spindle found;

7. South 80 degrees 42 minutes 01 seconds West, a distance of 377.54 feet to a 1/2-inch iron rod found, said iron rod being the most northerly northeast corner of a called 3.080 acre tract of land called Road Easement in W.C.C.F. No. 2014011208;

Thence, through and across aforesaid 77.902 acre tract and with the easterly line of said road easement, 764.64 feet along the arc of a curve to the right, said curve having a central angle of 49 degrees 52 minutes 11 seconds, a radius of 878.50 feet and a chord which bears South 46 degrees 35 minutes 20 seconds East, a distance of 740.73 feet to a 5/8-inch iron rod set on the southerly line of said 77.902 acre tract, also being on the northerly line of aforesaid 195.193 acre tract;

Thence, with a southerly of said 77.902 acre tract, North 68 degrees 08 minutes 38 seconds East, a distance of 901.90 feet to a nail found at a northwesterly corner of said 77.902 acre tract;

Thence with the westerly line of said 77.902 acre tract, South 20 degrees 54 minutes 54 seconds East, a distance of 3,791.46 feet to the northerly R.O.W. line of aforesaid F.M. 2243, from which a 1/2-inch iron rod found bears North 22 degrees East, a distance of 0.50 feet;

Thence, with said northerly R.O.W. line, the following five (5) courses:

1. South 69 degrees 01 minutes 48 seconds West, a distance of 1,585.42 feet to a concrete monument found;

2. 849.64 feet along the arc of a curve to the right, said curve having a central angle of 17 degrees 14 minutes 00 seconds, a radius of 2,824.79 feet and a chord which bears South 77 degrees 38 minutes 50 seconds West, a distance of 846.44 feet, from which a concrete monument found, bears North 28 degrees East, a distance of 0.50 feet;

3. South 86 degrees 15 minutes 50 seconds West, a distance of 563.49 feet to a 1/2-inch iron rod set;

4. 562.37 feet along the arc of a curve to the left, said curve having a central angle of 16 degrees 31 minutes 30 seconds, a radius of 1,949.86 feet and a chord which bears South 78 degrees 00 minutes 05 seconds West, a distance of 560.42 feet, from which a concrete monument found, bears North 82 degrees East, a distance of 0.90 feet;

5. South 69 degrees 44 minutes 20 seconds West, a distance of 71.58 feet to a 1/2-inch iron rod (1847 cap) found at the southwesterly corner of aforesaid 71.001 acre tract, also being the southeasterly corner of a call 22.60 acre tract of land recorded in the name of Dufner, Elizabeth Anne in W.C.C.F. Number 2014063697.

Thence, leaving said R.O.W. line, with the westerly line of said 71.001 acre tract, North 10 degrees 42 minutes 53 seconds West, a distance of 2,663.31 feet to the northwesterly corner of the said 71.001 acre tract, and the northeasterly corner of said 22.60 Acre tract, from which a cotton spindle found bears North 16 degrees 21 minutes 55 seconds East, a distance of 0.50 feet;

Thence, with said northerly line of a said 22.60 acre tract, and a call 17.60 acre tract of land recorded in the name of Elizabeth Anne Dufner in W.C.C.F. Number 2014063597, and a call 93.60 acre tract of land recorded in the name of Arthur and Gordon Faubion in W.C.C.F. Number 2005043418, styled tract A. the following five (5) courses:

1. South 69 degrees 14 minutes 42 seconds West, a distance of 375.66 feet to a 1/2-inch iron rod set;

2. South 69 degrees 12 minutes 50 seconds West, a distance of 185.31 feet to a 1/2-inch iron rod set;

3. South 69 degrees 16 minutes 08 seconds West, a distance of 386.65 feet to 1/2-inch iron rod found;

4. South 69 degrees 43 minutes 16 seconds West, a distance of 277.23 feet to a 1/2-inch iron rod (1847 cap) found;

5. South 69 degrees 32 minutes 42 seconds West, a distance of 957.57 feet to a 1/2-iron rod (1847 cap) found at the northwesterly corner of said 93.60 acre tract;

Thence, with the westerly line of said 93.60 acre tract, the following three (3) courses:

1. South 21 degrees 20 minutes 43 seconds East, a distance of 854.12 feet to a 1/2-iron rod (1847 cap) found;

2. South 20 degrees 57 minutes 06 seconds East, a distance of 930.97 feet to a 1/2-inch iron rod found;

3. South 20 degrees 43 minutes 36 seconds East, a distance of 754.25 feet to the aforesaid northerly R.O.W. line of F.M. 2243, from which a 1/2-inch iron rod found, bears South 01 degree East, a distance of 0.39 feet;

Thence, with said northerly R.O.W. line, the following three (3) courses:

1. 63.33 feet along the arc of a curve to the right, said curve having a central angle of 00 degree 38 minutes 16 seconds, a radius of 5,689.53 feet and a chord which bears South 78 degrees 04 minutes 28 seconds West, a distance of 63.33 feet to a 1/2-inch iron rod set;

2. South 79 degrees 37 minutes 29 seconds West, a distance of 2,643.52 feet to a 1/2-inch iron rod found;

3. South 79 degrees 44 minutes 55 seconds West, a distance of 201.05 feet to the **Point of Beginning** and containing 1,156.001 acres of land.

GBI Partners, L.P.
Ph: 512-296-2675
December 20, 2018

EXHIBIT A-2

County: Williamson
Project: Water Oak South
Job No.: A180801
MBS No.: 15-128

FIELD NOTES FOR 9.410 ACRES

Being a 9.410 acre tract of land located in the J. Thompson Survey, Abstract Number 608 and being a portion of a called 77.902 acre tract of land recorded in the name of Edwin H. Hale, Jr. in W.C.C.F. No. 2017014736, said 9.410 acres being more particularly described by metes and bounds descriptions as follows (bearings are referenced to the Texas Coordinate System, NAD 1983, Central Zone);

Beginning at a 1/2-inch iron rod found at the most westerly corner of said 9.410 acre tract, the northerly line of aforesaid 195.193 acre tract, and an easterly line of aforesaid 77.399 acre tract;

Thence, with the westerly line of said 9.410 acre tract, 837.65 feet along the arc of a curve to the right, said curve having a central angle of 34 degrees 46 minutes 41 seconds, a radius of 1380.00 feet and a chord which bears North 03 degrees 17 minutes 54 seconds East, a distance of 824.85 feet to a 1/2-inch iron rod found at the southerly corner of aforesaid 203.137 acre tract;

Thence, through and across said 77.902 acre tract, the following two (2) courses:

1. 231.13 feet along the arc of a curve to the left, said curve having a central angle of 12 degrees 16 minutes 44 seconds, a radius of 1078.50 feet and a chord which bears South 70 degrees 45 minutes 37 seconds East, a distance of 230.69 feet to a 1/2-inch iron rod set;

2. 696.23 feet along the arc of a curve to the right, said curve having a central angle of 55 degrees 17 minutes 21 seconds, a radius of 721.50 feet and a chord which bears South 49 degrees 15 minutes 19 seconds East, a distance of 669.53 feet to a 1/2-inch iron rod found on the northerly line of aforesaid 195.193 acre tract;

Thence, with said northerly line, the following two courses:

1. South 68 degrees 09 minutes 20 seconds West, a distance of 590.44 feet to a 1/2-inch iron rod (1847 cap) found;

2. South 67 degrees 58 minutes 56 seconds West, a distance of 242.14 feet to the Point of Beginning and containing 9.410 acres of land.

GBI Partners, L.P.
Ph: 512-296-2675
October 17, 2018

DESCRIPTION OF 3.080 ACRES OF LAND OUT OF THE J. THOMPSON SURVEY, ABSTRACT NO. 608, SITUATED IN WILLIAMSON COUNTY, TEXAS; BEING A PORTION OF THAT CERTAIN 168.32 ACRE TRACT DESCRIBED IN A DEED TO CHARLIE A. BARTON AND WIFE, OLLIE A. BARTON OF RECORD IN VOLUME 470, PAGE 303 OF THE DEED RECORDS OF WILLIAMSON COUNTY, TEXAS, SAID 3.080 ACRES BEING MORE PARTICULARLY DESCRIBED BY METES AND BOUNDS AS FOLLOWS:

COMMENCING, at a 1/2 inch iron rod with cap found for the northwesterly corner of that certain 195.2 acre tract described as "Tract C", in a deed to Donald C. Faubion, an undivided 47%; Debra Ann Faubion, an undivided 26.5%; and Cynthia Jo Barba, an undivided 26.5% by the Partition and Exchange Deed of record in Document No. 2005043418 of the Official Public Records of Williamson County, Texas, the same being an angle point in the southerly line of said 168.32 acre tract and an angle point in the occupied easterly line of that certain 100 acre tract conveyed to Charles Grady Barton, of record in Volume 899, Page 791 of said Deed Records, also being the Point of Beginning of a Boundary Line Agreement recorded in Document No. 2005007159 of said Official Public Records;

THENCE, along the northerly line of said 195.2 acre tract and southerly line of said 168.32 acre tract, the following three courses and distances:

1) N67°59'04"E, a distance of 312.47 feet to a /2 inch iron rod with cap found;

2) N67°58'56"E, a distance of 378.76 feet to a 1/2 inch iron rod with cap found;

3) N68°09'20"E, a distance of 590.44 feet to a 1/2 inch iron rod with cap set for the **POINT OF BEGINNING** and the southwesterly corner hereof;

THENCE, leaving the northerly line of said 195.2 acre tract, over and across said 168.32 acre tract, along the westerly, northerly and easterly lines hereof, the following four (4) courses and distances:

1) Along a curve to the left having a radius of 721.50 feet, a central angle of 55°17'21", an arc length of 696.23 feet, a chord which bears N49°15'19"W, a distance of 669.53 feet to a 1/2 inch iron rod with cap set for a point of reverse curvature to the right;

2) Along said reveres curve to the right having a radius of 1078.50 feet, a central angle of 12°16'44", an arc length of 231.13 feet, a chord which bears N70°45'37"W, a distance of 230.69 feet to a 1/2 inch iron rod with cap set for the northwesterly corner hereof;

3) N80°42'01"E, a distance of 337.11 feet to a 1/2 inch iron rod with cap set for the point of curvature of a curve to the right;

4) Along said curve to the right having a radius of 878.50 feet, a central angle of 49°52'11", an arc length of 764.64 feet, a chord which bears S46°35'20"E, a distance of 740.73 feet to a 1/2 inch iron rod with cap set in the southerly line of said 168.32 acre tract for the southeasterly corner hereof, from which a 60-D nail found in concrete at the base of a metal fence post, for the common northerly corner of said 195.2 acre tract and that certain 51.56 acre tract described in the deed to Charles Grady Barton, of record in Volume 1976, Page 703, of the Official Records of Williamson County, Texas bears N68°08'39"E, a distance of 1031.81 feet;

THENCE, along the northerly line of said 195.2 acre tract and the southerly line of said 168.32 acre tract, the following two (2) courses and distances:

1) S68°08'39"W, a distance of 129.91 feet to a 2 inch pipe fence post found;

2) S68°09'20"W, a distance of 27.09 feet to the **POINT OF BEGINNING**, containing an area of 3.080 acres (134,164 square feet) of land, more or less, within these metes and bounds.

BEARING BASIS: THE BASIS OF BEARINGS FOR THIS SURVEY IS THE TEXAS COORDINATE SYSTEM, NAD83(96) CENTRAL ZONE, ESTABLISHED BY NGS OPUS SOLUTION USING CORS STATIONS DF5370, AF9638, DF4062, & DE5999.

Exhibit B

Permitted Exceptions

1. Restrictions contained in plat recorded under Document No. 2013033404, Official Public Records of Williamson County, Texas (Tract 2 only).

2. Environmental setback as shown on the plat recorded in Cabinet EE, Slide 310 of the Plat Records of Williamson County, Texas, as shown on the Survey dated December 20, 2018, prepared by Alan Jay Horton, Registered Professional Land Surveyor No. 5768 (the "Survey"). (TRACT 1)

3. Pipeline easement granted to Seminole Pipeline Company, by instrument dated July 1, 1981, recorded in Volume 844, Page 624 of the Deed Records of Williamson County, Texas and as amended in Volume 2171, Page 554 of the Official Records of Williamson County, Texas, as shown on the Survey. (TRACT 1)

4. Petroleum pipeline easement granted to Seminole Pipeline Company as recorded in Volume 851, Page 698 of the Official Public Records and as amended in Volume 2244, Page 297 of the Official Public Records and under Document No. 2018066453 of the Official Public Records, all of Williamson County, Texas. (TRACT 1)

5. 15 foot public utility easement dated August 9, 1999, granted by Norma Nell Faubion et al to City of Georgetown, recorded under Document No. 199955406 of the Official Public Records of Williamson County, Texas. (TRACT 1)

6. 15 foot utility easement executed by Anne V. Patience to City of Georgetown, dated April 29, 1999, recorded under Document No. 199968547 of the Real Property Records of Williamson County, Texas, as shown on the Survey. (TRACT 1)

7. Notice of Voluntary Inclusion into the Extraterritorial Jurisdiction of the City of Georgetown dated 10/12/1999 and recorded under Document No. 199971384 of the Official Public Records of Williamson County, Texas. (TRACT 1)

8. Water line easement executed by Thomas E. Dreiss, Trustee, to Brushy Creek Municipal Utility District, dated March 1, 2004. recorded under Document No. 2004018609 of the Real Property Records of Williamson County, Texas, as shown on the Survey. (TRACT 1)

9. Water line easement dated April 15, 2004, granted by Grady Barton and Carrie Ann Barton-Smith to Brushy Creek Municipal Utility District, recorded under Document No. 2004029224 of the Official Public Records of Williamson County, Texas, as shown on the Survey. (TRACT 1)

10. Water line easement granted to Brushy Creek Municipal Utility District, by instrument dated June 22, 2004, recorded under Document No. 2004049691 of the Official Public Records of Williamson County, Texas, as shown on the Survey. (TRACT 1)

11. Water line easement dated June 1, 2005, granted by Debra Ann Faubion et al to Brushy Creek Municipal Utility District, recorded under Document No. 2005040893 of the Official Public Records of Williamson County, Texas, as shown on the Survey. (TRACT 1)

12. All interests in water, together with all rights relating thereto, express or implied, reserved in instrument recorded under Document No. 2007014282 of the Official Records of Williamson County, Texas. (TRACT 1)

13. All oil, gas and other minerals, together with all rights relating thereto, express or implied, reserved in instrument recorded under Document No. 2007014282 of the Official Records of Williamson County, Texas. (TRACT 1)

14. Road Easement created in that certain Road and Sewer Line Easement Agreement dated February 22, 2007, recorded under Document No. 2007014284 of the Official Public Records of Williamson County, Texas, as shown on the Survey. (TRACT 1)

15. Terms, conditions and stipulations of Road Improvements and Sewer Line Development and Conditional Easement Agreement by and between Thomas E. Dreiss, Trustee, and Laredo WO, Ltd., a Texas limited partnership, dated February 22, 2007, and recorded under Document No. 2007014288 of the Official Public Records of Williamson County, Texas, and as further affected by Document No. 2009022806 of the Official Public Records of Williamson County, Texas, as shown on the Survey. (TRACT 1)

16. Amended and Restated Development Agreement filed of record under Document No. 2012027844, and as further affected under Document Nos. 2016008515, 2012006198 and 2018036246 of the Official Public Records of Williamson County, Texas.

17. Wastewater easement as recorded under Document Number 2007064713 of the Official Public Records of Williamson County, Texas, as shown on the Survey. (TRACT 1)

18. Utility access easement as recorded under Document No. 2008085853 of the Official Public Records of Williamson County, Texas, as shown on the Survey. (TRACT 1)

19. The terms, conditions and stipulations of that certain Sanitary Sewer Easement Agreement dated September 27, 2010, recorded under Document No. 2010065269 of the Official Public Records of Williamson County, Texas, as shown on the Survey. (TRACT 1)

20. The terms, conditions and stipulations of that certain Drainage Easement Agreement dated September 27, 2010, recorded under Document No. 2010065270; and as amended under Document No. 2017104825 of the Official Public Records of Williamson County, Texas, as shown on the Survey. (TRACT 1)

21. All terms, conditions, and provisions of that certain Agreement regarding Williamson County Municipal Utility District 25 dated January 11, 2012, recorded under Document No. 2012006198 of the Official Public Records of Williamson County, Texas.

22. Williamson County Regional Habitat Conservation Plan Memorandum of Participation Agreement Relative to U.S. Fish and Wildlife Service Permit dated May 15, 2012, recorded under Document No. 2012043627 of the Official Public Records of Williamson County, Texas.

23. Sanitary Sewer Easement Agreement dated August 1, 2013, recorded under Document No. 2013080603 of the Official Public Records of Williamson County, Texas, as shown on the Survey. (TRACT 1)

24. Drainage Easement Agreement as recorded under Document No. 2013095986 of the Official Public Records of Williamson County, Texas, as shown on the Survey. (TRACT 1)

25. Sanitary Sewer Easement Agreement as recorded under Document No. 2013095987 of the Official Public Records of Williamson County, Texas, as shown on the Survey. (TRACT 1)

26. The terms, conditions and stipulations of that certain Access Easement and Right of Way dated January 31, 2014, recorded under Document No. 2014011208 of the Official Public Records of Williamson County, Texas. (TRACT 1)

27. Drainage Easement Agreement as recorded under Document No. 2014026475 of the Official Public Records of Williamson County, Texas, as shown on the Survey. (TRACT 1)

28. Sanitary Sewer Easement Agreement as recorded under Document No. 2014026476 of the Official Public Records of Williamson County, Texas, as shown on the Survey. (TRACT 1)

29. The terms, conditions and stipulations of that certain Drainage Easement Agreement dated August 25, 2014, recorded under Document No. 2014071869 of the Official Public Records of Williamson County, Texas, as shown on the Survey. (TRACT 1)

30. The terms, conditions and stipulations of that certain Sanitary Sewer Easement Agreement dated August 25, 2014, recorded under Document No. 2014071870 of the Official Public Records of Williamson County, Texas, as shown on the Survey. (TRACT 1)

31. Waiver of Special Appraisal dated May 31, 2012, as recorded under Document No. 2014076279 of the Official Public Records of Williamson County, Texas.

32. Waiver of Special Appraisal dated August 19, 2014, as recorded under Document No. 2014076284 of the Official Public Records of Williamson County, Texas.

33. The terms, conditions and stipulations of that certain Permanent Easement Agreement dated January 21, 2016, recorded under Document No. 2016010600 of the Official Public Records of Williamson County, Texas, as shown on the Survey. (TRACT 1)

34. Sanitary sewer easement granted to City of Georgetown, by instrument dated August 18, 2016, recorded under Document No. 2016077685 of the Official Public Records of Williamson County, Texas, as shown on the Survey. (TRACT 1)

35. The terms, conditions and stipulations of that certain Wastewater Easement dated June 23, 2017, recorded under Document No. 2017098157 of the Official Public Records of Williamson County, Texas, as shown on the Survey. (TRACT 1)

36. The terms, conditions and stipulations of that certain Utility Access Easement dated June 23, 2017, recorded under Document No. 2017098158 of the Official Public Records of Williamson County, Texas, as shown on the Survey. (TRACT 1)

37. The terms, conditions and stipulations of that certain Roadway, Utility and Drainage Easement Agreement dated October 20, 2017, recorded under Document No. 2017098160 of the Official Public Records of Williamson County, Texas, as shown on the Survey. (TRACT 1)

38. The terms, conditions and stipulations of that certain Access Easement dated October 20, 2017, recorded under Document No. 2017098161 of the Official Public Records of Williamson County, Texas. (TRACT 1)

39. Guying utility easement granted to Pedernales Electric Cooperative, Inc., by instrument dated December 16, 2016, recorded under Document No. 2018062791 of the Official Public Records of Williamson County, Texas, as shown on the Survey. (TRACT 1)

40. Any and all easements and building setbacks shown on Plat(s) recorded under Document No(s). 2013033404 of the Official Public Records of Williamson County, Texas, as shown on the Survey. (TRACT 2)

41. Lot 2, Block G, to be reserved for use by the City of Georgetown Fire Department, as stated on the plat recorded under Document No. 2013033404 of the Official Public Records of Williamson County, Texas. (TRACT 2)

42. The terms, conditions and stipulations of that certain Water Line Easement and Right-of-Way dated March 24, 2006, recorded under Document No. 2006027343 of the Official Public Records of Williamson County, Texas, as shown on the Survey. (TRACT 2)

43. The terms, conditions and stipulations of that certain Memorandum of Development Agreement dated July 9, 2012, recorded under Document No. 2012056684 of the Official Public Records of Williamson County, Texas. (TRACT 2)

44. Wastewater easement granted to City of Georgetown, by instrument dated July 18, 2018, recorded under Document No. 2018075352 of the Official Public Records of Williamson County, Texas, as shown on the Survey. (TRACT 2)

45. Water Line Easements granted to Chisholm Trail Special Utility District as recorded under Document Nos. 2013044607, 2013044608, 2013044609, 2013044610, 2013044611, 2013044612, 2013044613, 2013044616, 2013044617, 2013048344, 2013062167, 2013064547, 2013062168, 2013091201, 2013100385, 2014019467, 2014025124, 2014025144, 2014033910, 2014038543, 2014038544, 2014047251, 2014047260, 2014058853, 2014058854 and 2014058871, all of the Official Public Records of Williamson County, Texas. (TRACT 2)

46. The rights of Williamson County Municipal Utility District No. 25 to levy taxes and issue bonds.

11-GF#2018102592 JPB
RETURN TO: HERITAGE TITLE
401 CONGRESS, SUITE 1500
AUSTIN, TEXAS 78701

ELECTRONICALLY RECORDED
OFFICIAL PUBLIC RECORDS

2018114043

Pages: 24 Fee: $113.00
12/31/2018 11:38 AM

Nancy E. Rister, County Clerk
Williamson County, Texas

Approved by COG on 6/30/2025

PRELIMINARY PLAT
FOR
PARKSIDE ON THE RIVER
SECTIONS 11-15 & WON 5

GEORGETOWN, WILLIAMSON COUNTY, TEXAS
2024-15-PP

INITIAL SUBMITTAL DATE: 9/16/2024

OWNER/DEVELOPER:

HM PARKSIDE, LP
P.O. BOX 5397
AUSTIN, TX 78763
(512) 481-0303
BLAKE@BLAKEMAGEECO.COM

ENGINEER/SURVEYOR:

HR GREEN DEVELOPMENT TX, LLC
5508 HIGHWAY 290 WEST, SUITE 150
AUSTIN, TEXAS 78735
512.872.6696
CHRISTINE.CAMPBELL@HRGREEN.COM

WATERSHED STATUS:

THIS SITE IS LOCATED IN THE SOUTH FORK OF THE SAN GABRIEL WATERSHED. THIS SITE IS LOCATED OVER THE EDWARDS AQUIFER RECHARGE ZONE AND CONTRIBUTING ZONE.

FLOODPLAIN INFORMATION:

PORTIONS OF THIS SUBDIVISION ARE WITHIN SPECIAL FLOOD HAZARD AREAS INUNDATED BY THE 100 YEAR FLOOD AS IDENTIFIED BY THE U.S. FEDERAL EMERGENCY MANAGEMENT AGENCY FLOOD INSURANCE RATE MAP NUMBERS 48491C0460F, EFFECTIVE DATE DECEMBER 20, 2019 AND 48491C0480F, EFFECTIVE DATE DECEMBER 20, 2019. PORTIONS OF THIS SUBDIVISION ARE ALSO AFFECTED BY THE APPROVED CLOMR #15-06-2071R AND THE APPROVED LOMR #21-06-0115P. NO PORTION OF THIS SUBDIVISION IS WITHIN SPECIAL FLOOD HAZARD AREAS INUNDATED BY THE 100 YEAR FLOOD AS IDENTIFIED BY THE U.S. FEDERAL EMERGENCY MANAGEMENT AGENCY FLOOD INSURANCE RATE MAP NUMBER 48491C0275E, EFFECTIVE DATE SEPTEMBER 26, 2008.

LEGAL DESCRIPTION:

DESCRIPTION OF 417.0 ACRES OF LAND IN THE JOSEPH THOMPSON SURVEY, ABSTRACT NO. 608, AND THE ISAAC DONAGAN SURVEY, ABSTRACT NO. 178, WILLIAMSON COUNTY, TEXAS; BEING A PORTION OF A CERTAIN CALLED 1,143.511 ACRE TRACT OF LAND, DESIGNATED AS TRACT 1, AND DESCRIBED IN THE SPECIAL WARRANTY DEED TO HM PARKSIDE, LP OF RECORD IN DOCUMENT NO. 2018114043, OFFICIAL PUBLIC RECORDS OF WILLIAMSON COUNTY, TEXAS, AND BEING ALL OF A CERTAIN CALLED 3.080 ACRE TRACT DESCRIBED IN THE QUITCLAIM DEED TO HM PARKSIDE LP OF RECORD IN DOCUMENT NO. 2020031564, OFFICIAL PUBLIC RECORDS OF WILLIAMSON COUNTY, TEXAS

BENCHMARK NOTE:

NAVD88 - GEOID12B

HORIZONTAL DATUM:
TEXAS COORDINATE SYSTEM, CENTRAL ZONE, NAD83, GRID.
VERTICAL DATUM:
NAVD88 - GEOID 12B

BM(1380)-322
COTTON GIN SPINDLE SET AT THE BASE OF A 28.5-INCH LIVE OAK
(TREE TAG NO. 6776)
GRID NORTHING = 10,197,947.90'
GRID EASTING = 3,105,969.20'
ELEVATION = 802.52'

BM(1380)-321
BOX SET ON CONCRETE WATER MAIN VENT PIPE
GRID NORTHING = 10,197,276.85'
GRID EASTING = 3,105,999.79'
ELEVATION = 806.86'

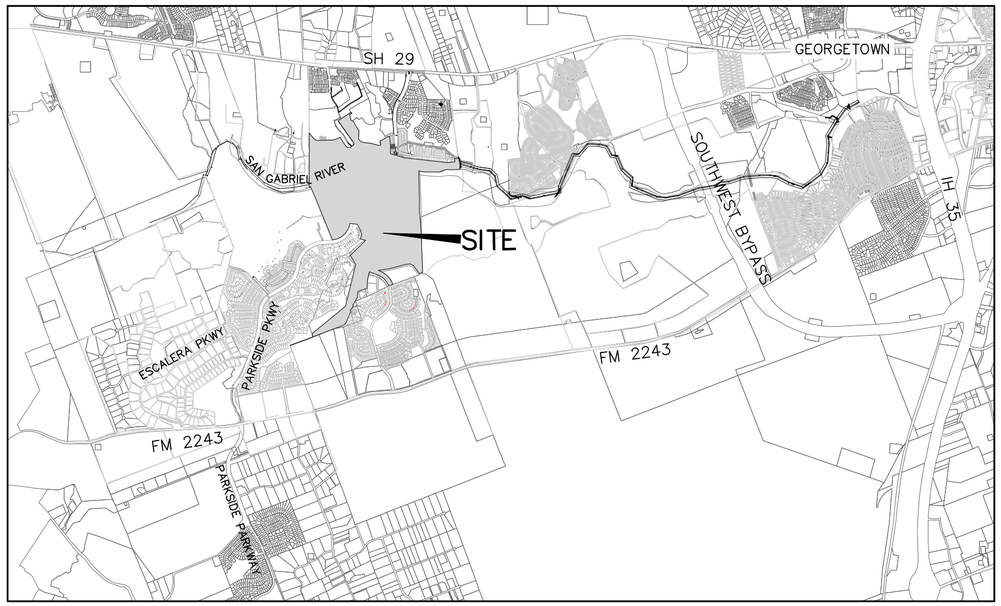

VICINITY MAP
SCALE: 1"=4000'

STREETS

NAME	CLASSIFICATION	ROW WIDTH	MIN. PVMT WIDTH (F-F)	CURB TYPE	DESIGN SPEED	LENGTH (LF)	CUL-DE-SAC	MAINTENANCE AUTHORITY
PARKSIDE PARKWAY	MINOR ARTERIAL	135'	48'	SPILL CURB & RIBBON CURB	40 MPH	3,106	NONE	PUBLIC
GREENVIEW PARKWAY	NEIGHBORHOOD COLLECTOR	70'	40'	24" CURB & GUTTER	30 MPH	2,718	NONE	PUBLIC
RUACH ROAD	LOCAL RESIDENTIAL	50'	28'	24" CURB & GUTTER	25 MPH	473	60' RADIUS	PUBLIC
GAMALIEL LOOP	LOCAL RESIDENTIAL	50'	28'	24" CURB & GUTTER	25 MPH	928	NONE	PUBLIC
TREASURE HOUSE WAY	LOCAL RESIDENTIAL	VARIES	35'	24" CURB & GUTTER	25 MPH	1,474	NONE	PUBLIC
MORNING SUNRISE CIRCLE	LOCAL RESIDENTIAL	50'	28'	24" CURB & GUTTER	25 MPH	1,631	NONE	PUBLIC
ELIEL WAY	LOCAL RESIDENTIAL	50'	28'	24" CURB & GUTTER	25 MPH	812	NONE	PUBLIC
KAVOD COVE	LOCAL RESIDENTIAL	50'	28'	24" CURB & GUTTER	25 MPH	134	60' RADIUS	PUBLIC
KADOSH WAY	LOCAL RESIDENTIAL	50'	28'	24" CURB & GUTTER	25 MPH	505	NONE	PUBLIC
CHARIS DRIVE	LOCAL RESIDENTIAL	50'	28'	24" CURB & GUTTER	25 MPH	1,576	60' RADIUS	PUBLIC
ADONIRAM COVE	LOCAL RESIDENTIAL	50'	28'	24" CURB & GUTTER	25 MPH	160	60' RADIUS	PUBLIC
JEHOVAH JIREH COURT	LOCAL RESIDENTIAL	50'	28'	24" CURB & GUTTER	25 MPH	270	60' RADIUS	PUBLIC
ABDIEL WAY	LOCAL RESIDENTIAL	50'	28'	24" CURB & GUTTER	25 MPH	1,468	(2) 60' RADIUS	PUBLIC
TERRI JO COVE	LOCAL RESIDENTIAL	50'	28'	24" CURB & GUTTER	25 MPH	301	60' RADIUS	PUBLIC
GLOWING SUNSET STREET	LOCAL RESIDENTIAL	50'	28'	24" CURB & GUTTER	25 MPH	1,591	60' RADIUS	PUBLIC
GENTLE BREEZE PASS	LOCAL RESIDENTIAL	50'	28'	24" CURB & GUTTER	25 MPH	681	NONE	PUBLIC
BILLOWING OAK WAY	LOCAL RESIDENTIAL	50'	28'	24" CURB & GUTTER	25 MPH	1,111	NONE	PUBLIC
FLOWING RAIN ROAD	LOCAL RESIDENTIAL	50'	28'	24" CURB & GUTTER	25 MPH	465	60' RADIUS	PUBLIC
TRANQUIL SERENITY WAY	LOCAL RESIDENTIAL	VARIES	28'	24" CURB & GUTTER	25 MPH	1,238	60' RADIUS	PUBLIC
TREE BEND DRIVE	LOCAL RESIDENTIAL	50'	28'	24" CURB & GUTTER	25 MPH	845	60' RADIUS	PUBLIC
BERAKAH COVE	LOCAL RESIDENTIAL	50'	28'	24" CURB & GUTTER	25 MPH	122	60' RADIUS	PUBLIC
RED SEA COURT	LOCAL RESIDENTIAL	50'	28'	24" CURB & GUTTER	25 MPH	71	60' RADIUS	PUBLIC

SHEET LIST TABLE

SHEET NUMBER	SHEET TITLE
1	COVER SHEET
2	OVERALL PHASING PLAN
3	PHASING PLAN VIEW A
4	PHASING PLAN VIEW B
5	PHASING PLAN VIEW C
6	PHASING PLAN VIEW D
7	PHASING PLAN VIEW E
8	OVERALL PRELIMINARY PLAN
9	PRELIMINARY PLAT VIEW A
10	PRELIMINARY PLAT VIEW B
11	PRELIMINARY PLAT VIEW C
12	PRELIMINARY PLAT VIEW D
13	PRELIMINARY PLAT VIEW E
14	PRELIMINARY PLAT VIEW F
15	PRELIMINARY PLAT VIEW G
16	PRELIMINARY PLAT VIEW H
17	PRELIMINARY PLAT VIEW I
18	PRELIMINARY PLAT VIEW J
19	PRELIMINARY PLAT VIEW K
20	PRELIMINARY PLAT VIEW L
21	TREE LIST & ROADWAY CURVE TABLES
22	BLOCK CURVE TABLES
23	LOT AREAS
24	METES AND BOUNDS SHEET
25	PRELIMINARY PLAT NOTES

PROJECT SUMMARY

TOTAL SITE AREA: 417.00 ACRES

RESIDENTIAL LOTS..... - 326 (101.33 ACRES)

OPEN SPACE LOTS..... - 15 (3.75 ACRES)

OPEN SPACE /DRAINAGE LOTS..... - 7 (175.67 ACRES)

OPEN SPACE /WATER QUALITY LOTS..... - 12 (3.73 ACRES)

OPEN SPACE /PARKLAND LOTS..... - 2 (75.00 ACRES)

OPEN SPACE /DRAINAGE /WATER QUALITY LOTS..... - 6 (10.02 ACRES)

MULTI-FAMILY LOT..... - 1 (9.29 ACRES)

AMENITY/RIVER TRAIL PARKING LOT..... - 1 (3.02 ACRES)

TOTAL LOTS..... - 370 (381.81 ACRES)

NUMBER OF BLOCKS..... - 15

STREETS (ROW AREA): 35.19 ACRES

SUBMITTAL DATE : MAY 16, 2025

STATE OF TEXAS
CHRISTINE N CAMPBELL
142536
LICENSED
PROFESSIONAL ENGINEER

SUBMITTED BY : Christine Campbell 05/16/2025
CHRISTINE CAMPBELL, P.E. DATE
HR GREEN DEVELOPMENT TX, LLC
5508 HIGHWAY 290 WEST, SUITE 150
AUSTIN, TEXAS 78735
512.872.6696

Amendment approved by the City of Georgetown on:

June 30, 2025

This Preliminary Plat **will expire 24 months** from the **original** date of approval, if the applicable conditions of UDC sections 3.08.070 are not met.

*Alterations to this plan set may require amendment, review, and additional fee. **UDC 3.08.070**

NO.	REVISION	BY	DATE

811 Know what's below. Call before you dig.

5508 HIGHWAY 290 WEST
SUITE 150
AUSTIN, TEXAS 78735
512. 872. 6696
HRGREEN. COM
TBPE NO: 16384
TBPLS NO: 10194101
HRGreen®
DEVELOPMENT TX

COVER SHEET

PARKSIDE ON THE RIVER
SECTIONS 11-15 & WON 5
PRELIMINARY PLAT
GEORGETOWN, WILLIAMSON, TEXAS

DESIGNED BY: CC
DRAWN BY: MM/TG
CHECKED BY: CC
APPROVED BY: SN
SHEET 1 OF 25

2024 -15 - PP

Sheet Location: P:\blake magee\parkside sections 11-15 & won 5\preliminary plat\03_ACAD\Plans\sh2402671 PP COVR.dwg, COVER SHEET, June 23, 2025, 2:29 PM, mmuhammad
Data Shortcut Folder Location:

Approved by COG on 6/30/2025

SECTION 11

AREA: ±9.64 ACRES
12 RESIDENTIAL LOTS, 50'
15 RESIDENTIAL LOTS, 60'
2 OPEN SPACE
1 WQ/OS
1 WQ/DE/OS
2 BLOCKS

SECTION 12A

AREA: ±36.87 ACRES
72 RESIDENTIAL LOTS, 70'
1 OPEN SPACE
2 DE/OS
1 WQ/OS
1 WQ/DE/OS
4 BLOCKS

SECTION 12B

AREA: ±18.27 ACRES
59 RESIDENTIAL LOTS, 60'
2 OPEN SPACE
1 WQ/OS
1 WQ/DE/OS
2 BLOCKS

SECTION 13

AREA: ±194.48 ACRES
107 RESIDENTIAL LOTS, 80'
6 OPEN SPACES
3 DE/OS
6 WQ/OS
1 WQ/DE/OS
4 BLOCKS

SECTION 14A

AREA: ±10.31 ACRES
25 RESIDENTIAL LOTS, 70'
4 OPEN SPACE
2 WQ/OS
1 WQ/DE/OS
2 BLOCKS

SECTION 14B

AREA: ±9.29 ACRES
1 MULTI-FAMILY LOT
1 BLOCKS

SECTION 15A

AREA: ±8.61 ACRES
ROADWAY RIGHT-OF-WAY

SECTION 15B

AREA: ±1.62 ACRES
ROADWAY RIGHT-OF-WAY

SECTION 15C

AREA: ±3.02 ACRES
1 AMENITY/RIVER TRAIL PARKING
1 BLOCKS

SECTION 15D

AREA: ±75.00 ACRES
2 OS/PARKLAND
2 BLOCKS

WON 5

AREA: ±49.89 ACRES
36 RESIDENTIAL LOTS, 50'
2 DE/OS
1 WQ/OS
1 WQ/DE/OS
1 BLOCKS

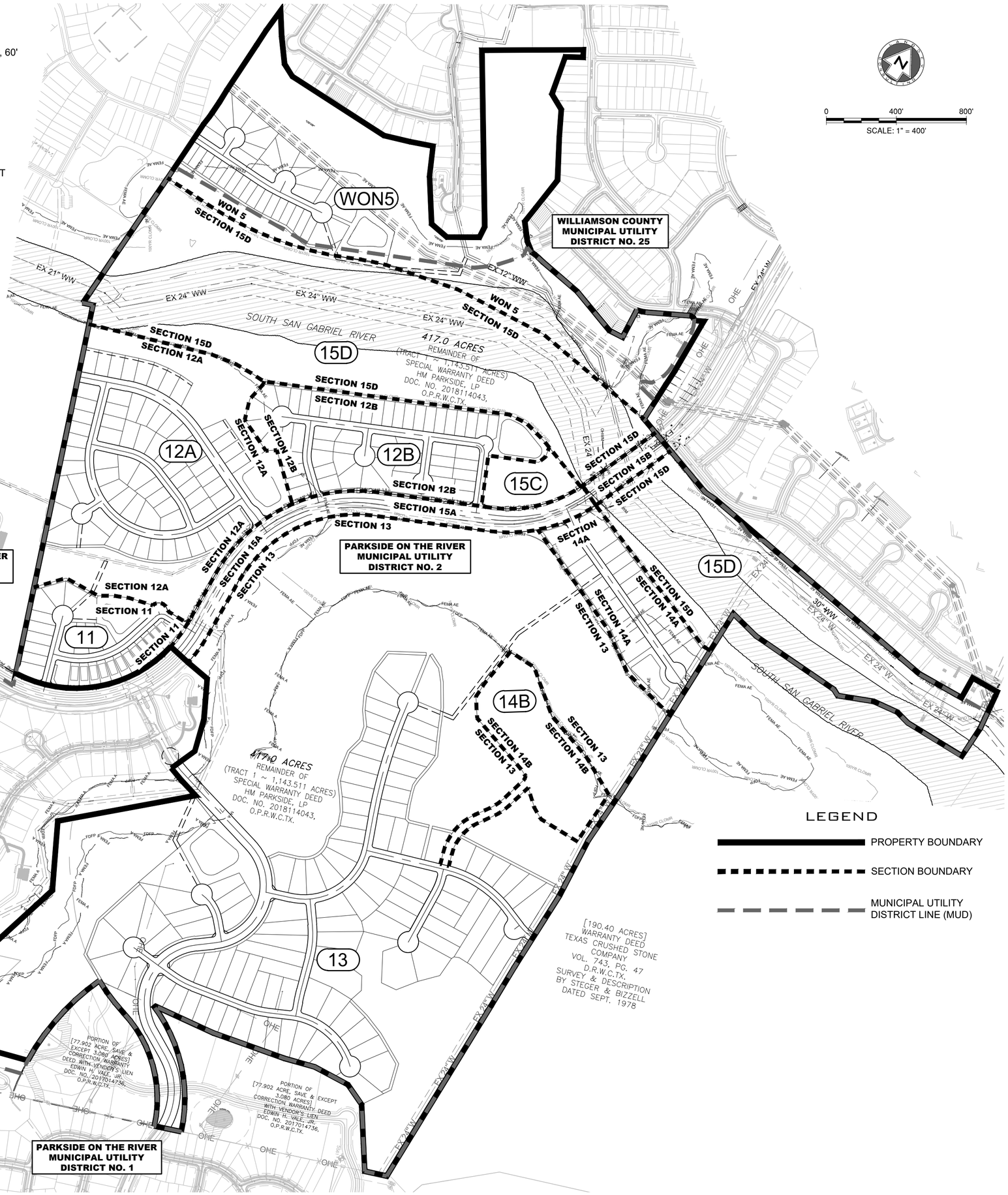

LEGEND

PROPERTY BOUNDARY

SECTION BOUNDARY

MUNICIPAL UTILITY DISTRICT LINE (MUD)

NO.	REVISION	BY	DATE

811 Know what's below. Call before you dig.

HRGreen
5508 HIGHWAY 290 WEST
SUITE 150
AUSTIN, TEXAS 78735
512. 872. 6696
HRGREEN. COM
TBPE NO: 16384
TBPLS NO: 10194101
DEVELOPMENT TX

STATE OF TEXAS
CHRISTINE N. CAMPBELL
142536
LICENSED PROFESSIONAL ENGINEER
05/16/2025

OVERALL PHASING PLAN

PARKSIDE ON THE RIVER
SECTIONS 11-15 & WON 5
PRELIMINARY PLAT
GEORGETOWN, WILLIAMSON, TEXAS

DESIGNED BY: CC
DRAWN BY: MM/TG
CHECKED BY: CC
APPROVED BY: SN
SHEET 2 OF 25

2024-15-PP

Sheet Location: P:\blake magee\parkside sections 11-15 & won 5\preliminary plat\03_ACAD\Plans\sh24026?1 PHAS_OV.dwg, OVERALL PHASING PLAN, June 23, 2025, 2:30 PM, mnuhammad
Data Shortcut Folder Location:

Approved by COG on 6/30/2025

SECTION 11

AREA: ±9.64 ACRES
12 RESIDENTIAL LOTS, 50'
15 RESIDENTIAL LOTS, 60'
2 OPEN SPACE
1 WQ/OS
1 WQ/DE/OS
2 BLOCKS

SECTION 12A

AREA: ±36.87 ACRES
72 RESIDENTIAL LOTS, 70'
1 OPEN SPACE
2 DE/OS
1 WQ/OS
1 WQ/DE/OS
4 BLOCKS

SECTION 12B

AREA: ±18.27 ACRES
59 RESIDENTIAL LOTS, 60'
2 OPEN SPACE
1 WQ/OS
1 WQ/DE/OS
2 BLOCKS

SECTION 13

AREA: ±194.48 ACRES
107 RESIDENTIAL LOTS, 80'
6 OPEN SPACES
3 DE/OS
6 WQ/OS
1 WQ/DE/OS
4 BLOCKS

SECTION 14A

AREA: ±10.31 ACRES
25 RESIDENTIAL LOTS, 70'
4 OPEN SPACE
2 WQ/OS
1 WQ/DE/OS
2 BLOCKS

SECTION 14B

AREA: ±9.29 ACRES
1 MULTI-FAMILY LOT
1 BLOCKS

SECTION 15A

AREA: ±8.61 ACRES
ROADWAY RIGHT-OF-WAY

SECTION 15B

AREA: ±1.62 ACRES
ROADWAY RIGHT-OF-WAY

SECTION 15C

AREA: ±3.02 ACRES
1 AMENITY/RIVER TRAIL PARKING
1 BLOCKS

SECTION 15D

AREA: ±75.00 ACRES
2 OS/PARKLAND
2 BLOCKS

WON 5

AREA: ±49.89 ACRES
36 RESIDENTIAL LOTS, 50'
2 DE/OS
1 WQ/OS
1 WQ/DE/OS
1 BLOCKS

LEGEND

- PROPERTY BOUNDARY
- OLD PARCEL LINE
- EXISTING LOT LINE
- PROPOSED LOT LINE
- SECTION BOUNDARY
- MUNICIPAL UTILITY DISTRICT LINE (MUD)
- FEMA FLOODWAY PER FIRM# 48491C0460F, 48491C0480F & LOMR# 21-06-0115P
- FEMA AE — FEMA AE: 100YR ATLAS-14 FEMA ZONE AE FLOODPLAIN PER FIRM# 48491C0460F, 48491C0480F, 48491C0275E & LOMR# 21-06-0115P
- FEMA A — FEMA A: 100YR FEMA ZONE FLOODPLAIN PER FIRM# 48491C0460F
- 100YR CLOMR — 100YR CLOMR: 100YR CLOMR FLOODPLAIN CASE# 15-06-2071R
- FDFP — FDFP: 100YR ATLAS-14 FULLY DEVELOPED FLOODPLAIN (STANTEC DRAINAGE STUDY, SHERVIN NOOSHIN, 3/25/19) APPROVED WITH PP# 2019-5-PP

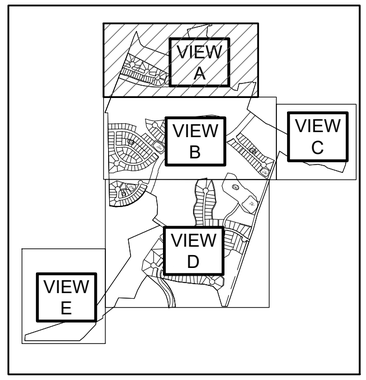

0 200' 400'
SCALE: 1" = 200'

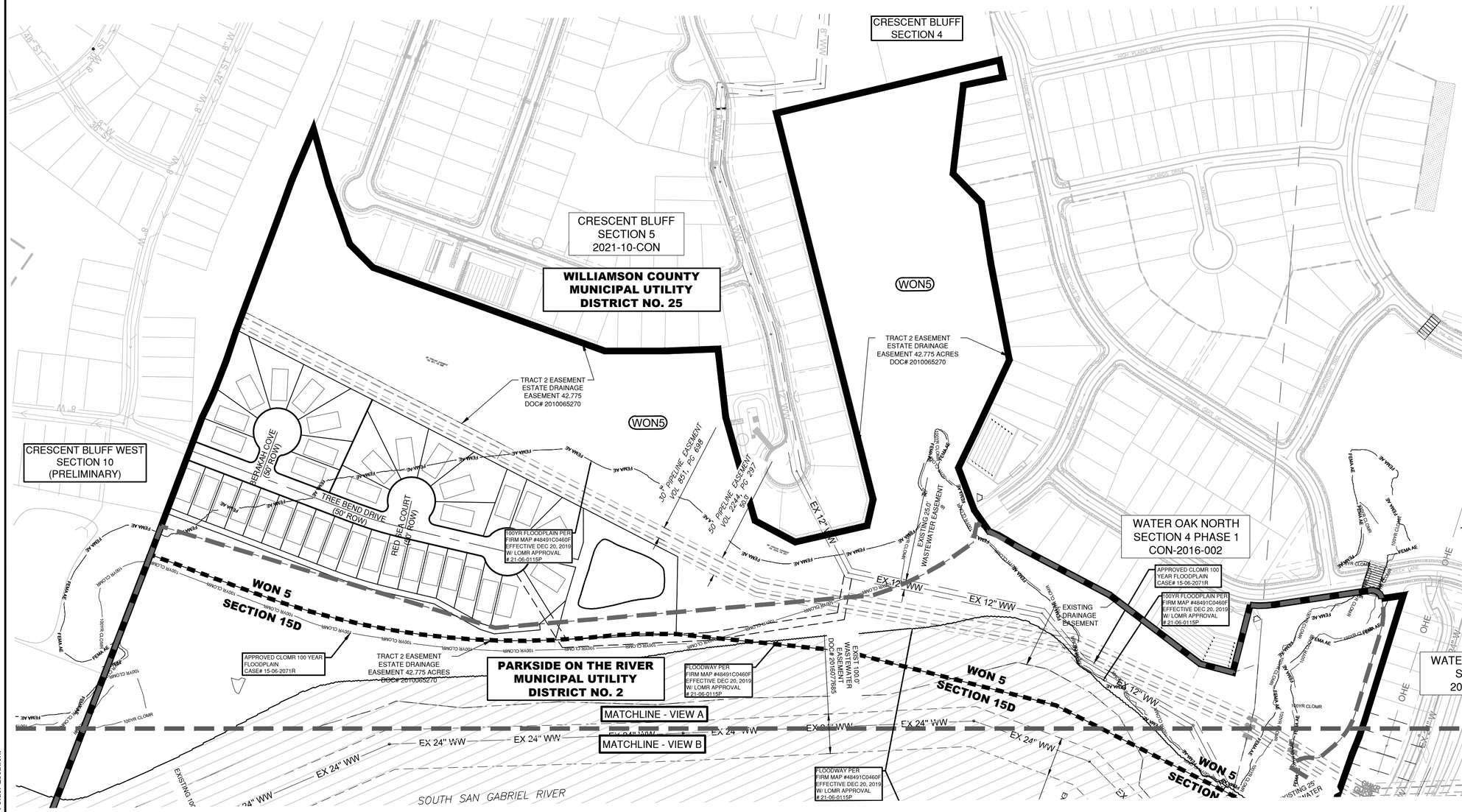

Sheet Location: P:\blake magee\parkside sections 11-15 & won 5\preliminary plat\03_ACAD\Plans\sht2402671 PHAS.dwg, PHASING PLAN VIEW A, June 23, 2025, 2:30 PM, mmuhammad
Data Shortcut Folder Location:

NO.	REVISION	BY	DATE

811 Know what's below. Call before you dig.

5508 HIGHWAY 290 WEST
SUITE 150
AUSTIN, TEXAS 78735
512.872.6696
HRGREEN.COM
TBPE NO: 16384
TBPLS NO: 10194101

HRGreen® DEVELOPMENT TX

STATE OF TEXAS
CHRISTINE N. CAMPBELL
142536
LICENSED PROFESSIONAL ENGINEER
05/16/2025

PHASING PLAN VIEW A

PARKSIDE ON THE RIVER
SECTIONS 11-15 & WON 5
PRELIMINARY PLAT
GEORGETOWN, WILLIAMSON, TEXAS

DESIGNED BY: CC
DRAWN BY: MM/TG
CHECKED BY: CC
APPROVED BY: SN
SHEET 3 OF 25

2024-15-PP

Approved by COG on 6/30/2025

SECTION 11

AREA: ±9.64 ACRES
12 RESIDENTIAL LOTS, 50'
15 RESIDENTIAL LOTS, 60'
2 OPEN SPACE
1 WQ/OS
1 WQ/DE/OS
2 BLOCKS

SECTION 12A

AREA: ±36.87 ACRES
72 RESIDENTIAL LOTS, 70'
1 OPEN SPACE
2 DE/OS
1 WQ/OS
1 WQ/DE/OS
4 BLOCKS

SECTION 12B

AREA: ±18.27 ACRES
59 RESIDENTIAL LOTS, 60'
2 OPEN SPACE
1 WQ/OS
1 WQ/DE/OS
2 BLOCKS

SECTION 13

AREA: ±194.48 ACRES
107 RESIDENTIAL LOTS, 80'
6 OPEN SPACES
3 DE/OS
6 WQ/OS
1 WQ/DE/OS
4 BLOCKS

SECTION 14A

AREA: ±10.31 ACRES
25 RESIDENTIAL LOTS, 70'
4 OPEN SPACE
2 WQ/OS
1 WQ/DE/OS
2 BLOCKS

SECTION 14B

AREA: ±9.29 ACRES
1 MULTI-FAMILY LOT
1 BLOCKS

SECTION 15A

AREA: ±8.61 ACRES
ROADWAY RIGHT-OF-WAY

SECTION 15B

AREA: ±1.62 ACRES
ROADWAY RIGHT-OF-WAY

SECTION 15C

AREA: ±3.02 ACRES
1 AMENITY/RIVER TRAIL PARKING
1 BLOCKS

SECTION 15D

AREA: ±75.00 ACRES
2 OS/PARKLAND
2 BLOCKS

WON 5

AREA: ±49.89 ACRES
36 RESIDENTIAL LOTS, 50'
2 DE/OS
1 WQ/OS
1 WQ/DE/OS
1 BLOCKS

LEGEND

- PROPERTY BOUNDARY
- OLD PARCEL LINE
- EXISTING LOT LINE
- PROPOSED LOT LINE
- SECTION BOUNDARY
- MUNICIPAL UTILITY DISTRICT LINE (MUD)
- FEMA FLOODWAY PER FIRM# 48491C0460F, 48491C0480F & LOMR# 21-06-0115P
- 100YR ATLAS-14 FEMA ZONE AE FLOODPLAIN PER FIRM# 48491C0460F, 48491C0480F, 48491C0275E & LOMR# 21-06-0115P
- 100YR FEMA ZONE FLOODPLAIN PER FIRM# 48491C0460F
- 100YR CLOMR FLOODPLAIN CASE# 15-06-2071R
- 100YR ATLAS-14 FULLY DEVELOPED FLOODPLAIN (STANTEC DRAINAGE STUDY, SHERVIN NOOSHIN, 3/25/19) APPROVED WITH PP# 2019-5-PP

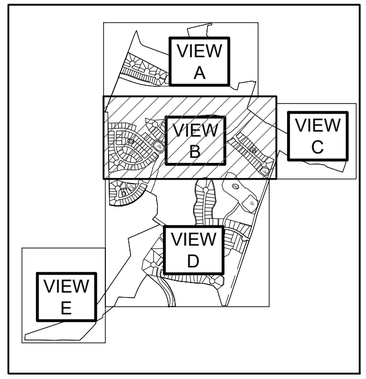

0 200' 400'
SCALE: 1" = 200'

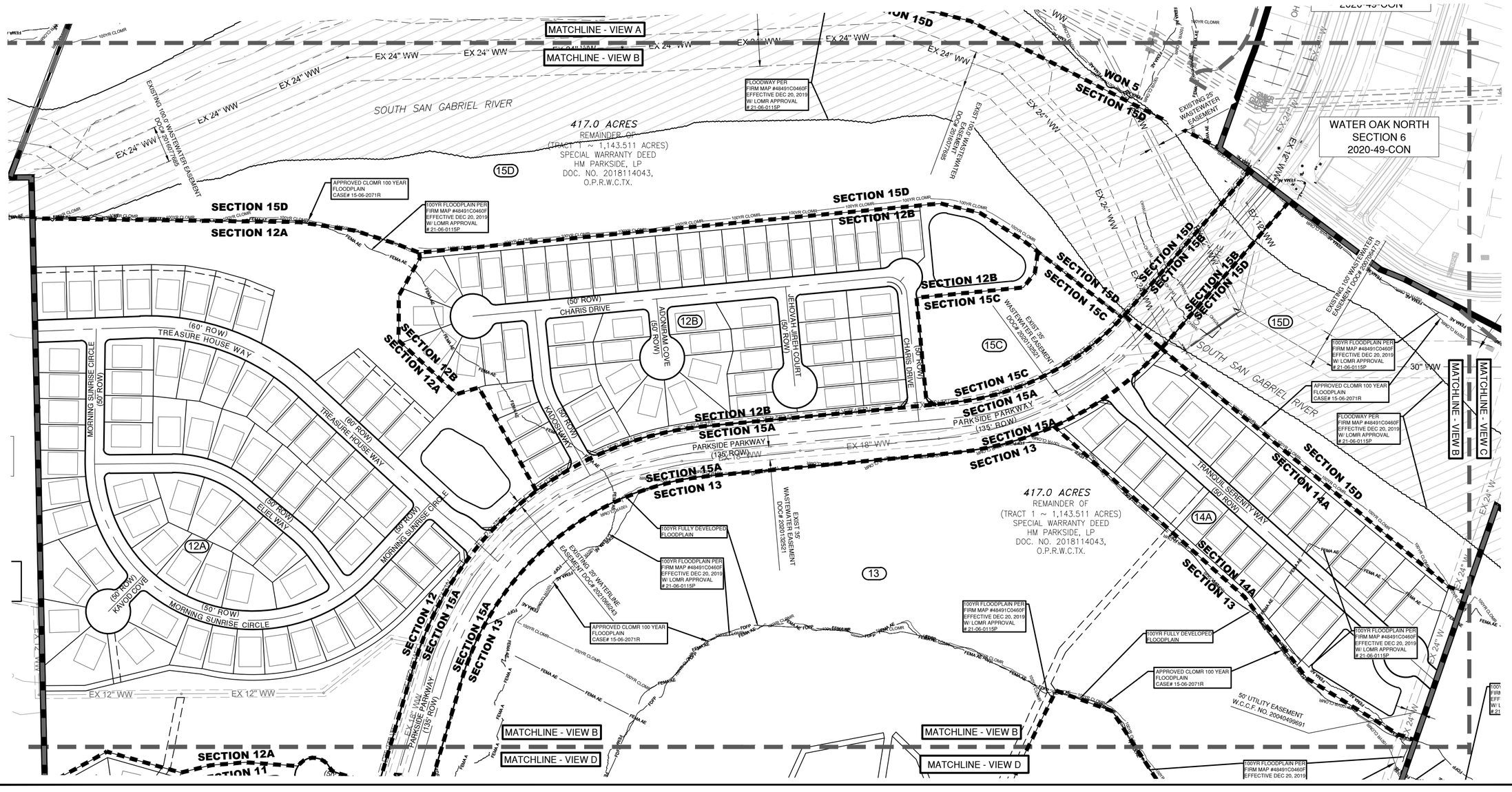

811 Know what's below. Call before you dig.

5508 HIGHWAY 290 WEST
SUITE 150
AUSTIN, TEXAS 78735
512.872.6696
HRGREEN.COM
TBPE NO: 16384
TBPLS NO: 10194101

HRGreen® DEVELOPMENT TX

STATE OF TEXAS
CHRISTINE N. CAMPBELL
142536
LICENSED PROFESSIONAL ENGINEER
05/16/2025

PHASING PLAN VIEW B

PARKSIDE ON THE RIVER
SECTIONS 11-15 & WON 5
PRELIMINARY PLAT
GEORGETOWN, WILLIAMSON, TEXAS

DESIGNED BY: CC
DRAWN BY: MM/TG
CHECKED BY: CC
APPROVED BY: SN
SHEET 4 OF 25

2024-15-PP

NO.	REVISION	BY	DATE

Sheet Location: P:\blake magee\parkside sections 11-15 & won 5\preliminary plat\03_ACAD\Plans\sh2402671 PHAS.dwg, PHASING PLAN VIEW B, June 23, 2025, 2:30 PM, mmuhammad
Data Shortcut Folder Location:

Approved by COG on 6/30/2025

SECTION 11

AREA: ±9.64 ACRES
12 RESIDENTIAL LOTS, 50'
15 RESIDENTIAL LOTS, 60'
2 OPEN SPACE
1 WQ/OS
1 WQ/DE/OS
2 BLOCKS

SECTION 12A

AREA: ±36.87 ACRES
72 RESIDENTIAL LOTS, 70'
1 OPEN SPACE
2 DE/OS
1 WQ/OS
1 WQ/DE/OS
4 BLOCKS

SECTION 12B

AREA: ±18.27 ACRES
59 RESIDENTIAL LOTS, 60'
2 OPEN SPACE
1 WQ/OS
1 WQ/DE/OS
2 BLOCKS

SECTION 13

AREA: ±194.48 ACRES
107 RESIDENTIAL LOTS, 80'
6 OPEN SPACES
3 DE/OS
6 WQ/OS
1 WQ/DE/OS
4 BLOCKS

SECTION 14A

AREA: ±10.31 ACRES
25 RESIDENTIAL LOTS, 70'
4 OPEN SPACE
2 WQ/OS
1 WQ/DE/OS
2 BLOCKS

SECTION 14B

AREA: ±9.29 ACRES
1 MULTI-FAMILY LOT
1 BLOCKS

SECTION 15A

AREA: ±8.61 ACRES
ROADWAY RIGHT-OF-WAY

SECTION 15B

AREA: ±1.62 ACRES
ROADWAY RIGHT-OF-WAY

SECTION 15C

AREA: ±3.02 ACRES
1 AMENITY/RIVER TRAIL PARKING
1 BLOCKS

SECTION 15D

AREA: ±75.00 ACRES
2 OS/PARKLAND
2 BLOCKS

WON 5

AREA: ±49.89 ACRES
36 RESIDENTIAL LOTS, 50'
2 DE/OS
1 WQ/OS
1 WQ/DE/OS
1 BLOCKS

LEGEND

- PROPERTY BOUNDARY
- OLD PARCEL LINE
- EXISTING LOT LINE
- PROPOSED LOT LINE
- SECTION BOUNDARY
- MUNICIPAL UTILITY DISTRICT LINE (MUD)
- FEMA FLOODWAY PER FIRM# 48491C0460F, 48491C0480F & LOMR# 21-06-0115P
- FEMA AE — FEMA AE — 100YR ATLAS-14 FEMA ZONE AE FLOODPLAIN PER FIRM# 48491C0460F, 48491C0480F, 48491C0275E & LOMR# 21-06-0115P
- FEMA A — FEMA A — 100YR FEMA ZONE FLOODPLAIN PER FIRM# 48491C0460F
- 100YR CLOMR — 100YR CLOMR — 100YR CLOMR FLOODPLAIN CASE# 15-06-2071R
- FDFP — FDFP — 100YR ATLAS-14 FULLY DEVELOPED FLOODPLAIN (STANTEC DRAINAGE STUDY, SHERVIN NOOSHIN, 3/25/19) APPROVED WITH PP# 2019-5-PP

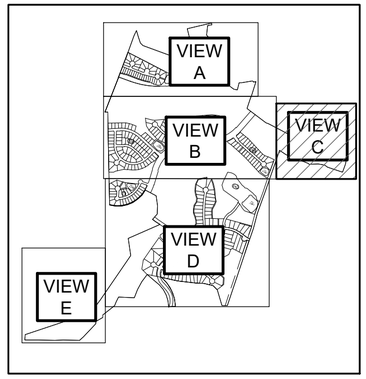

0 200' 400'
SCALE: 1" = 200'

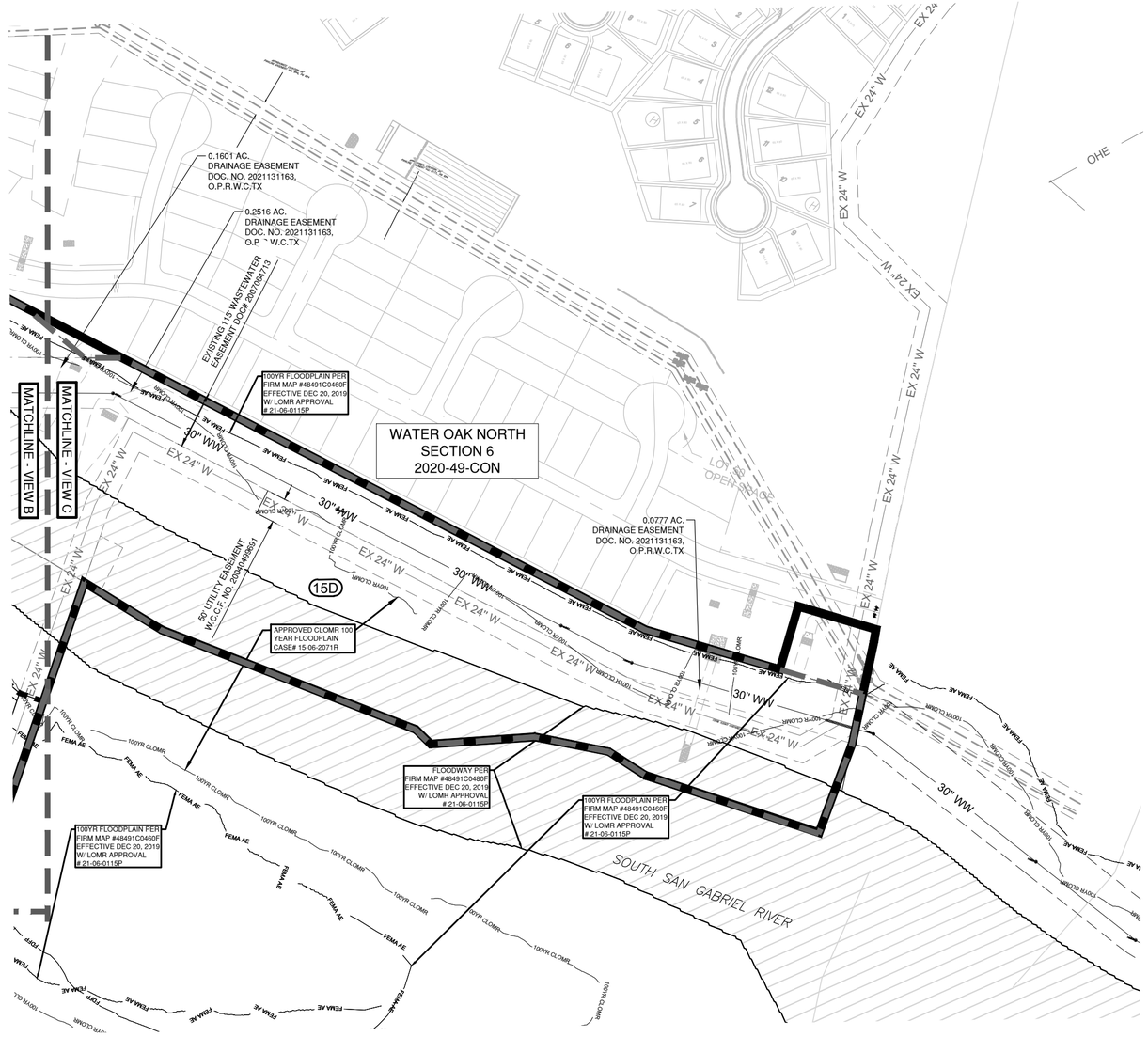

Know what's below.
Call before you dig.

5508 HIGHWAY 290 WEST
SUITE 150
AUSTIN, TEXAS 78735
512.872.6696
HRGREEN.COM
TBPE NO: 16384
TBPLS NO: 10194101

HRGreen®
DEVELOPMENT TX

STATE OF TEXAS
CHRISTINE N. CAMPBELL
142536
LICENSED PROFESSIONAL ENGINEER
05/16/2025

PHASING PLAN VIEW C

PARKSIDE ON THE RIVER
SECTIONS 11-15 & WON 5
PRELIMINARY PLAT
GEORGETOWN, WILLIAMSON, TEXAS

DESIGNED BY: CC
DRAWN BY: MM/TG
CHECKED BY: CC
APPROVED BY: SN
SHEET 5 OF 25

2024-15-PP

NO.	REVISION	BY	DATE

Sheet Location: P:\blake.magee\parkside sections 11-15 & won 5\preliminary plat\03_ACAD\Plans\sh2402671 PHAS.dwg, PHASING PLAN VIEW C, June 23, 2025, 2:30 PM, mmuhammad
Data Shortcut Folder Location:

Approved by COG on 6/30/2025

SECTION 11

AREA: ±9.64 ACRES
12 RESIDENTIAL LOTS, 50'
15 RESIDENTIAL LOTS, 60'
2 OPEN SPACE
1 WQ/OS
1 WQ/DE/OS
2 BLOCKS

SECTION 12A

AREA: ±36.87 ACRES
72 RESIDENTIAL LOTS, 70'
1 OPEN SPACE
2 DE/OS
1 WQ/OS
1 WQ/DE/OS
4 BLOCKS

SECTION 12B

AREA: ±18.27 ACRES
59 RESIDENTIAL LOTS, 60'
2 OPEN SPACE
1 WQ/OS
1 WQ/DE/OS
2 BLOCKS

SECTION 13

AREA: ±194.48 ACRES
107 RESIDENTIAL LOTS, 80'
6 OPEN SPACES
3 DE/OS
6 WQ/OS
1 WQ/DE/OS
4 BLOCKS

SECTION 14A

AREA: ±10.31 ACRES
25 RESIDENTIAL LOTS, 70'
4 OPEN SPACE
2 WQ/OS
1 WQ/DE/OS
2 BLOCKS

SECTION 14B

AREA: ±9.29 ACRES
1 MULTI-FAMILY LOT
1 BLOCKS

SECTION 15A

AREA: ±8.61 ACRES
ROADWAY RIGHT-OF-WAY

SECTION 15B

AREA: ±1.62 ACRES
ROADWAY RIGHT-OF-WAY

SECTION 15C

AREA: ±3.02 ACRES
1 AMENITY/RIVER TRAIL PARKING
1 BLOCKS

SECTION 15D

AREA: ±75.00 ACRES
2 OS/PARKLAND
2 BLOCKS

WON 5

AREA: ±49.89 ACRES
36 RESIDENTIAL LOTS, 50'
2 DE/OS
1 WQ/OS
1 WQ/DE/OS
1 BLOCKS

MATCHLINE - VIEW B
MATCHLINE - VIEW D
MATCHLINE - VIEW E

SECTION 12A
SECTION 11
SECTION 15A
SECTION 13
SECTION 14B

(50' ROW) GAMALIEL LOOP
RUACH ROAD (60' ROW)
PARKSIDE ON THE RIVER SECTIONS 9B & 10B

417.0 ACRES
REMAINDER OF
(TRACT 1 ~ 1,143.511 ACRES)
SPECIAL WARRANTY DEED
HM PARKSIDE, LP
DOC. NO. 2018114043,
O.P.R.W.C.TX.

EXIST 35' WASTEWATER EASEMENT DOC# 2020132521
EXISTING 20' WATERLINE EASEMENT DOC# 2021095243
100YR FULLY DEVELOPED FLOODPLAIN
100YR FLOODPLAIN PER FIRM MAP #48491C0460F EFFECTIVE DEC 20, 2019
APPROVED CLOMR 100 YEAR FLOODPLAIN CASE# 15-06-2071R

GLOWING SUNSET STREET (50' ROW)
BILLOWING OAK WAY (50' ROW)
FLOWING RAIN ROAD (50' ROW)
TERRI JO COVE (50' ROW)
GREENVIEW PARKWAY (70' ROW)
GENTLE BREEZE PASS (50' ROW)
ABDIEL WAY (50' ROW)

EX 15" WW
EX 24" W
50' WATER LINE EASEMENT W.C.C.F. NO. 2004029224

[190.40 ACRES]
WARRANTY DEED
TEXAS CRUSHED STONE COMPANY
VOL. 743, PG. 47
D.R.W.C.TX.
SURVEY & DESCRIPTION
BY STEGER & BIZZELL
DATED SEPT. 1978

PORTION OF
[77.902 ACRE, SAVE & EXCEPT
3.080 ACRES]
CORRECTION WARRANTY DEED
WITH VENDOR'S LIEN
EDWIN H. VALE, JR.
DOC. NO. 2017014736,
O.P.R.W.C.TX.

0 200' 400'
SCALE: 1" = 200'

LEGEND

- PROPERTY BOUNDARY
- OLD PARCEL LINE
- EXISTING LOT LINE
- PROPOSED LOT LINE
- SECTION BOUNDARY
- MUNICIPAL UTILITY DISTRICT LINE (MUD)
- FEMA FLOODWAY PER FIRM# 48491C0460F, 48491C0480F & LOMR# 21-06-0115P
- 100YR ATLAS-14 FEMA ZONE AE FLOODPLAIN PER FIRM# 48491C0460F, 48491C0480F, 48491C0275E & LOMR# 21-06-0115P
- 100YR FEMA ZONE FLOODPLAIN PER FIRM# 48491C0460F
- 100YR CLOMR FLOODPLAIN CASE# 15-06-2071R
- 100YR ATLAS-14 FULLY DEVELOPED FLOODPLAIN (STANTEC DRAINAGE STUDY, SHERVIN NOOSHIN, 3/25/19) APPROVED WITH PP# 2019-5-PP

VIEW A
VIEW B
VIEW C
VIEW D
VIEW E

NO.	REVISION	BY	DATE

811 Know what's below. Call before you dig.

HRGreen®
5508 HIGHWAY 290 WEST
SUITE 150
AUSTIN, TEXAS 78735
512.872.6696
HRGREEN.COM
TBPE NO: 16384
TBPLS NO: 10194101
DEVELOPMENT TX

STATE OF TEXAS
CHRISTINE N. CAMPBELL
142536
LICENSED PROFESSIONAL ENGINEER
05/16/2025

PHASING PLAN VIEW D

PARKSIDE ON THE RIVER
SECTIONS 11-15 & WON 5
PRELIMINARY PLAT
GEORGETOWN, WILLIAMSON, TEXAS

DESIGNED BY: CC
DRAWN BY: MM/TG
CHECKED BY: CC
APPROVED BY: SN
SHEET 6 OF 25

2024 -15 - PP

Sheet Location: P:\blake magee\parkside sections 11-15 & won 5\preliminary plat\03_ACAD\Plans\sh2402671 PHAS.dwg, PHASING PLAN VIEW D, June 23, 2025, 2:30 PM, mmuhammad
Data Shortcut Folder Location:

Approved by COG on 6/30/2025

SECTION 11

AREA: ±9.64 ACRES
12 RESIDENTIAL LOTS, 50'
15 RESIDENTIAL LOTS, 60'
2 OPEN SPACE
1 WQ/OS
1 WQ/DE/OS
2 BLOCKS

SECTION 12A

AREA: ±36.87 ACRES
72 RESIDENTIAL LOTS, 70'
1 OPEN SPACE
2 DE/OS
1 WQ/OS
1 WQ/DE/OS
4 BLOCKS

SECTION 12B

AREA: ±18.27 ACRES
59 RESIDENTIAL LOTS, 60'
2 OPEN SPACE
1 WQ/OS
1 WQ/DE/OS
2 BLOCKS

SECTION 13

AREA: ±194.48 ACRES
107 RESIDENTIAL LOTS, 80'
6 OPEN SPACES
3 DE/OS
6 WQ/OS
1 WQ/DE/OS
4 BLOCKS

SECTION 14A

AREA: ±10.31 ACRES
25 RESIDENTIAL LOTS, 70'
4 OPEN SPACE
2 WQ/OS
1 WQ/DE/OS
2 BLOCKS

SECTION 14B

AREA: ±9.29 ACRES
1 MULTI-FAMILY LOT
1 BLOCKS

SECTION 15A

AREA: ±8.61 ACRES
ROADWAY RIGHT-OF-WAY

SECTION 15B

AREA: ±1.62 ACRES
ROADWAY RIGHT-OF-WAY

SECTION 15C

AREA: ±3.02 ACRES
1 AMENITY/RIVER TRAIL PARKING
1 BLOCKS

SECTION 15D

AREA: ±75.00 ACRES
2 OS/PARKLAND
2 BLOCKS

WON 5

AREA: ±49.89 ACRES
36 RESIDENTIAL LOTS, 50'
2 DE/OS
1 WQ/OS
1 WQ/DE/OS
1 BLOCKS

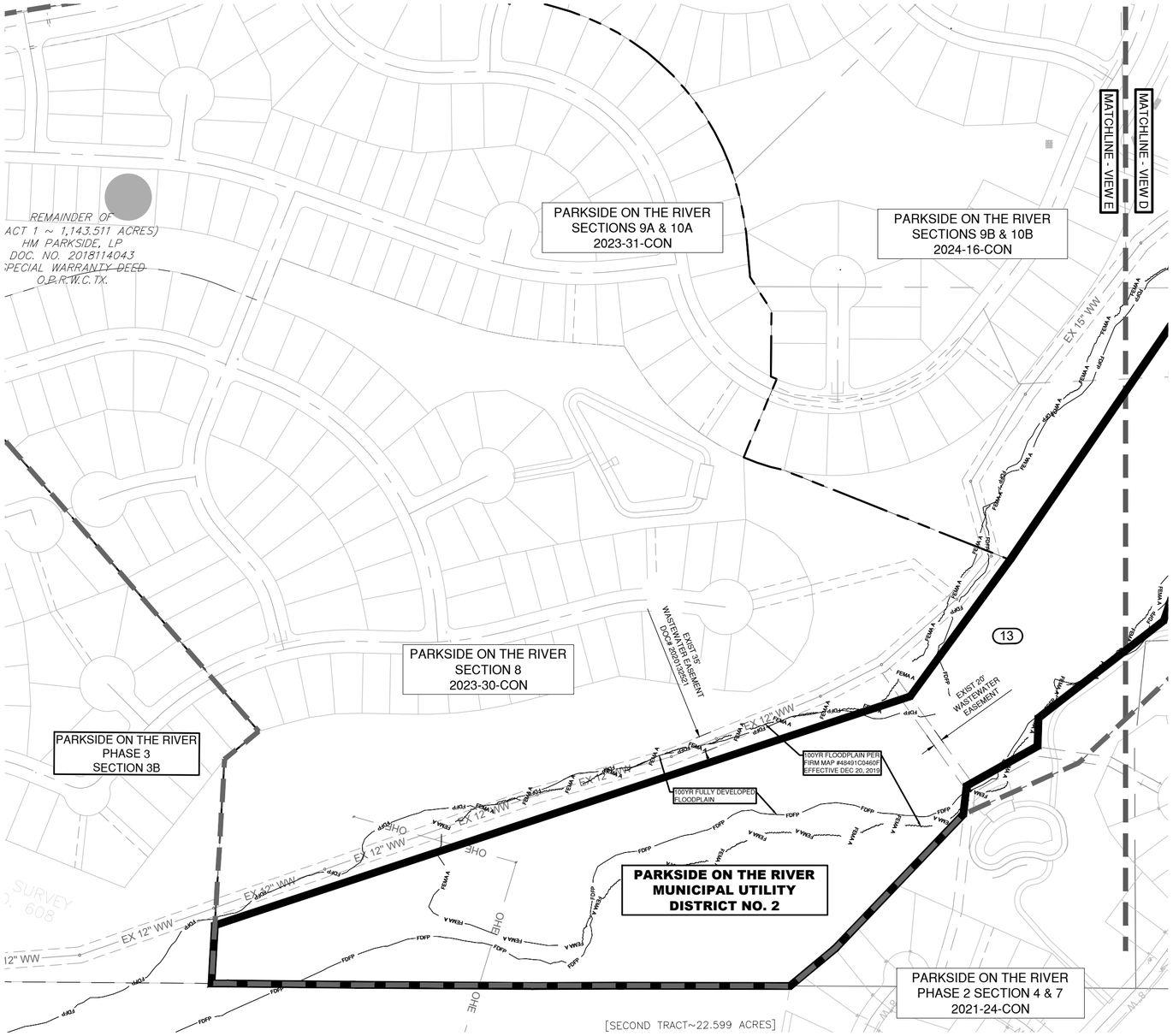

0 200' 400'
SCALE: 1" = 200'

LEGEND

- PROPERTY BOUNDARY
- OLD PARCEL LINE
- EXISTING LOT LINE
- PROPOSED LOT LINE
- SECTION BOUNDARY
- MUNICIPAL UTILITY DISTRICT LINE (MUD)
- FEMA FLOODWAY PER FIRM# 48491C0460F, 48491C0480F & LOMR# 21-06-0115P
- 100YR ATLAS-14 FEMA ZONE AE FLOODPLAIN PER FIRM# 48491C0460F, 48491C0480F, 48491C0275E & LOMR# 21-06-0115P
- 100YR FEMA ZONE FLOODPLAIN PER FIRM# 48491C0460F
- 100YR CLOMR FLOODPLAIN CASE# 15-06-2071R
- 100YR ATLAS-14 FULLY DEVELOPED FLOODPLAIN (STANTEC DRAINAGE STUDY, SHERVIN NOOSHIN, 3/25/19) APPROVED WITH PP# 2019-5-PP

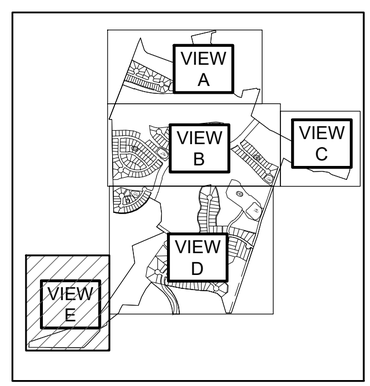

NO.	REVISION	BY	DATE

Know what's below.
Call before you dig.

5508 HIGHWAY 290 WEST
SUITE 150
AUSTIN, TEXAS 78735
512.872.6696
HRGREEN.COM
TBPE NO: 16384
TBPLS NO: 10194101

HRGreen®
DEVELOPMENT TX

STATE OF TEXAS
CHRISTINE N. CAMPBELL
142536
LICENSED PROFESSIONAL ENGINEER
05/16/2025

PHASING PLAN VIEW E

PARKSIDE ON THE RIVER
SECTIONS 11-15 & WON 5
PRELIMINARY PLAT
GEORGETOWN, WILLIAMSON, TEXAS

DESIGNED BY: CC
DRAWN BY: MM/TG
CHECKED BY: CC
APPROVED BY: SN
SHEET 7 OF 25

2024-15-PP

Sheet Location: P:\blake magee\parkside sections 11-15 & won 5\preliminary plat\03_ACAD\Plans\sh2402671 PHAS.dwg, PHASING PLAN VIEW E, June 23, 2025, 2:30 PM, mmuhammad
Data Shortcut Folder Location:

Approved by COG on 6/30/2025

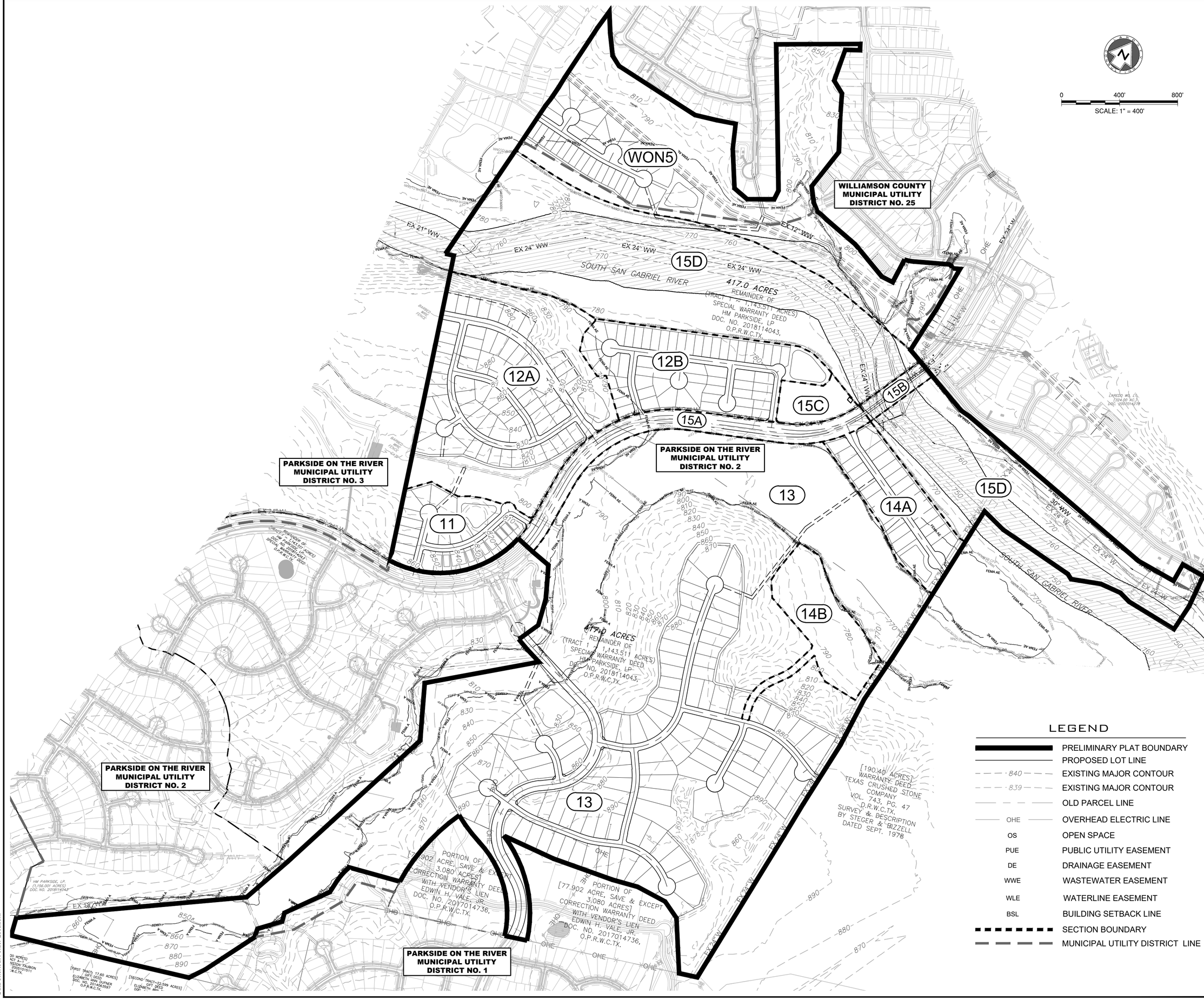

LEGEND

- PRELIMINARY PLAT BOUNDARY
- PROPOSED LOT LINE
- 840 — EXISTING MAJOR CONTOUR
- 839 — EXISTING MAJOR CONTOUR
- OLD PARCEL LINE
- OHE — OVERHEAD ELECTRIC LINE
- OS — OPEN SPACE
- PUE — PUBLIC UTILITY EASEMENT
- DE — DRAINAGE EASEMENT
- WWE — WASTEWATER EASEMENT
- WLE — WATERLINE EASEMENT
- BSL — BUILDING SETBACK LINE
- SECTION BOUNDARY
- MUNICIPAL UTILITY DISTRICT LINE

NO.	REVISION	BY	DATE

811 Know what's below. Call before you dig.

HRGreen®
DEVELOPMENT TX
5508 HIGHWAY 290 WEST
SUITE 150
AUSTIN, TEXAS 78735
512. 872. 6696
HRGREEN. COM
TBPE NO: 16384
TBPLS NO: 10194101

STATE OF TEXAS
CHRISTINE N. CAMPBELL
142536
LICENSED PROFESSIONAL ENGINEER
05/16/2025

OVERALL PRELIMINARY PLAN

PARKSIDE ON THE RIVER
SECTIONS 11-15 & WON 5
PRELIMINARY PLAT
GEORGETOWN, WILLIAMSON, TEXAS

DESIGNED BY: CC
DRAWN BY: MM/TG
CHECKED BY: CC
APPROVED BY: SN
SHEET 8 OF 25

2024-15-PP

Sheet Location: P:\blake magee\parkside sections 11-15 & won 5\preliminary plat\03_ACAD\Plans\sh2402671 PRPL_OV.dwg, OVERALL PRELIMINARY PLAN, June 23, 2025, 2:31 PM, mmuhammad
Data Shortcut Folder Location:

Approved by COG on 6/30/2025

TREE LEGEND

HERITAGE TREE TO REMAIN

HERITAGE TREE TO BE REMOVED

FLOODPLAIN LEGEND

FEMA FLOODWAY PER FIRM# 48491C0460F, 48491C0480F & LOMR# 21-06-0115P

100YR ATLAS-14 FEMA ZONE AE FLOODPLAIN PER FIRM# 48491C0460F, 48491C0480F, 48491C0275E & LOMR# 21-06-0115P

100YR FEMA ZONE A FLOODPLAIN PER FIRM# 48491C0460F

100YR CLOMR FLOODPLAIN CASE# 15-06-2071R

100YR ATLAS-14 FULLY DEVELOPED FLOODPLAIN (STANTEC DRAINAGE STUDY, SHERVIN NOOSHIN, 3/25/19) APPROVED WITH PP# 2019-5-PP

VIEW A
VIEW B
VIEW C
VIEW D
VIEW E
VIEW F
VIEW G
VIEW H
VIEW I
VIEW J
VIEW K
VIEW L

0 100' 200'
SCALE: 1" = 100'

LEGEND

- PRELIMINARY PLAT BOUNDARY
- PROPOSED LOT LINE
- 840 EXISTING MAJOR CONTOUR
- 839 EXISTING MAJOR CONTOUR
- OLD PARCEL LINE
- OHE OVERHEAD ELECTRIC LINE
- OS OPEN SPACE
- PUE PUBLIC UTILITY EASEMENT
- DE DRAINAGE EASEMENT
- WWE WASTEWATER EASEMENT
- WLE WATERLINE EASEMENT
- BSL BUILDING SETBACK LINE
- SECTION BOUNDARY
- MUNICIPAL UTILITY DISTRICT LINE

WILLIAMSON COUNTY MUNICIPAL UTILITY DISTRICT NO. 25

CRESCENT BLUFF SECTION 5 2021-10-CON

CRESCENT BLUFF WEST SECTION 10 (PRELIMINARY)

WON 5 SECTION 15D

BERAKAH COVE (50' ROW)

TREE BEND DRIVE (50' ROW)

RED SEA COURT (50' ROW)

BLOCK O

BLOCK L

LOT 1 OS/PARKLAND 2.148,207 SF BLOCK L

LOT 37 WQ/OS 15,002 SF BLOCK O

LOT 38 DE/OS 87,878 SF BLOCK O

LOT 39 WQ/DE/OS 72,856 SF BLOCK O

LOT 40 DE/OS 1,581,566 SF BLOCK O

TRACT 2 EASEMENT ESTATE DRAINAGE EASEMENT 42.775 DOC# 2010065270

TRACT 2 EASEMENT ESTATE DRAINAGE EASEMENT 42.775 ACRES DOC# 2010065270

APPROVED CLOMR 100 YEAR FLOODPLAIN CASE# 15-06-2071R

100YR FLOODPLAIN PER FIRM MAP #48491C0460F EFFECTIVE DEC 20, 2019 W/ LOMR APPROVAL # 21-06-0115P

FLOODWAY PER FIRM MAP #48491C0460F EFFECTIVE DEC 20, 2019 W/ LOMR APPROVAL # 21-06-0115P

30' PIPELINE EASEMENT VOL 851, PG 698

50' PIPELINE EASEMENT VOL 2244, PG 297

PROPOSED 20' WASTEWATER EASEMENT

MATCHLINE - VIEW A

MATCHLINE - VIEW B

MATCHLINE - VIEW C

Sheet Location: P:\blake magee\parkside sections 11-15 & won 5\preliminary plat\03_ACAD\Plans\sh2402671 PRPL.dwg, PRELIMINARY PLAT VIEW A, June 23, 2025, 2:32 PM, mmuhammad
Data Shortcut Folder Location:

NO.	REVISION	BY	DATE

811 Know what's below. Call before you dig.

5508 HIGHWAY 290 WEST
SUITE 150
AUSTIN, TEXAS 78735
512.872.6696
HRGREEN.COM

TBPE NO: 16384
TBPLS NO: 10194101

HRGreen®
DEVELOPMENT TX

STATE OF TEXAS
CHRISTINE N. CAMPBELL
142536
LICENSED PROFESSIONAL ENGINEER
05/16/2025

PRELIMINARY PLAT VIEW A

PARKSIDE ON THE RIVER
SECTIONS 11-15 & WON 5
PRELIMINARY PLAT
GEORGETOWN, WILLIAMSON, TEXAS

DESIGNED BY: CC
DRAWN BY: MM/TG
CHECKED BY: CC
APPROVED BY: SN

SHEET 9 OF 25

2024-15-PP

Approved by COG on 6/30/2025

TREE LEGEND

HERITAGE TREE TO REMAIN

HERITAGE TREE TO BE REMOVED

0 100' 200'

SCALE: 1" = 100'

LEGEND

	PRELIMINARY PLAT BOUNDARY
	PROPOSED LOT LINE
840	EXISTING MAJOR CONTOUR
839	EXISTING MAJOR CONTOUR
	OLD PARCEL LINE
OHE	OVERHEAD ELECTRIC LINE
OS	OPEN SPACE
PUE	PUBLIC UTILITY EASEMENT
DE	DRAINAGE EASEMENT
WWE	WASTEWATER EASEMENT
WLE	WATERLINE EASEMENT
BSL	BUILDING SETBACK LINE
	SECTION BOUNDARY
	MUNICIPAL UTILITY DISTRICT LINE

FLOODPLAIN LEGEND

	FEMA FLOODWAY PER FIRM# 48491C0460F, 48491C0480F & LOMR# 21-06-0115P
FEMA AE	100YR ATLAS-14 FEMA ZONE AE FLOODPLAIN PER FIRM# 48491C0460F, 48491C0480F, 48491C0275E & LOMR# 21-06-0115P
FEMA A	100YR FEMA ZONE A FLOODPLAIN PER FIRM# 48491C0460F
100YR CLOMR	100YR CLOMR FLOODPLAIN CASE# 15-06-2071R
FDFP	100YR ATLAS-14 FULLY DEVELOPED FLOODPLAIN (STANTEC DRAINAGE STUDY, SHERVIN NOOSHIN, 3/25/19) APPROVED WITH PP# 2019-5-PP

CRESCENT BLUFF SECTION 4

N55° 43' 32"E 579.96'

S32° 41' 56"E 44.01'

S57° 27' 04"W 102.52'

S14° 16' 57"E 224.94'

S65° 02' 11"E 102.90'

S29° 44' 33"E 154.29'

S31° 47' 54"E 249.91'

S04° 19' 55"W 202.88'

S04° 48' 52"W 69.26'

S41° 30' 51"E 44.47'

S58° 55' 03"E C39 35.34'

S80° 23' 24"E

S83° 07' 55"E 260.81'

N34° 57' 21"W 1038.03'

S82° 52' 54"E 115.59'

N07° 41' 57"W 67.60'

N56° 07' 39"E 186.38'

LOT 40
DE/OS
1,581,566 SF
BLOCK O

WATER OAK NORTH
SECTION 4 PHASE 1
CON-2016-002

TRACT 2 EASEMENT ESTATE
DRAINAGE EASEMENT 42,775
DOC# 2010065270

100YR FLOODPLAIN PER
FIRM MAP #48491C0460F
EFFECTIVE DEC 20, 2019
W/ LOMR APPROVAL
21-06-0115P

APPROVED CLOMR
100 YEAR
FLOODPLAIN
CASE# 15-06-2071R

EXISTING 25.0
WASTEWATER
EASEMENT

EX 12" WW

EX 12" WW

EX 12" WW

WATER OAK NORTH
SECTION 4 PHASE 1
CON-2016-002

WILLIAMSON COUNTY
MUNICIPAL UTILITY
DISTRICT NO. 25

MATCHLINE - VIEW A

MATCHLINE - VIEW B

MATCHLINE - VIEW B

MATCHLINE - VIEW D

HIGH PLAINS DRIVE

PRAIRIE OAKS DR

UPLANDS DRIVE

KARST COVE

CREEK

VIEW A
VIEW B
VIEW C
VIEW D
VIEW E
VIEW F
VIEW G
VIEW H
VIEW I
VIEW J
VIEW K
VIEW L

NO.	REVISION	BY	DATE

811 Know what's below. Call before you dig.

5508 HIGHWAY 290 WEST
SUITE 150
AUSTIN, TEXAS 78735
512.872.6696
HRGREEN.COM

TBPE NO: 16384
TBPLS NO: 10194101

HRGreen®
DEVELOPMENT TX

STATE OF TEXAS
CHRISTINE N. CAMPBELL
142536
LICENSED PROFESSIONAL ENGINEER
05/16/2025

PRELIMINARY PLAT VIEW B

PARKSIDE ON THE RIVER
SECTIONS 11-15 & WON 5
PRELIMINARY PLAT
GEORGETOWN, WILLIAMSON, TEXAS

DESIGNED BY: CC
DRAWN BY: MM/TG
CHECKED BY: CC
APPROVED BY: SN
SHEET 10 OF 25

2024-15-PP

Sheet Location: P:\blake magee\parkside sections 11-15 & won 5\preliminary plat\03_ACAD\Plans\sh2402671 PRPL.dwg, PRELIMINARY PLAT VIEW B, June 23, 2025, 2:32 PM, mmuhammad
Data Shortcut Folder Location:

Approved by COG on 6/30/2025

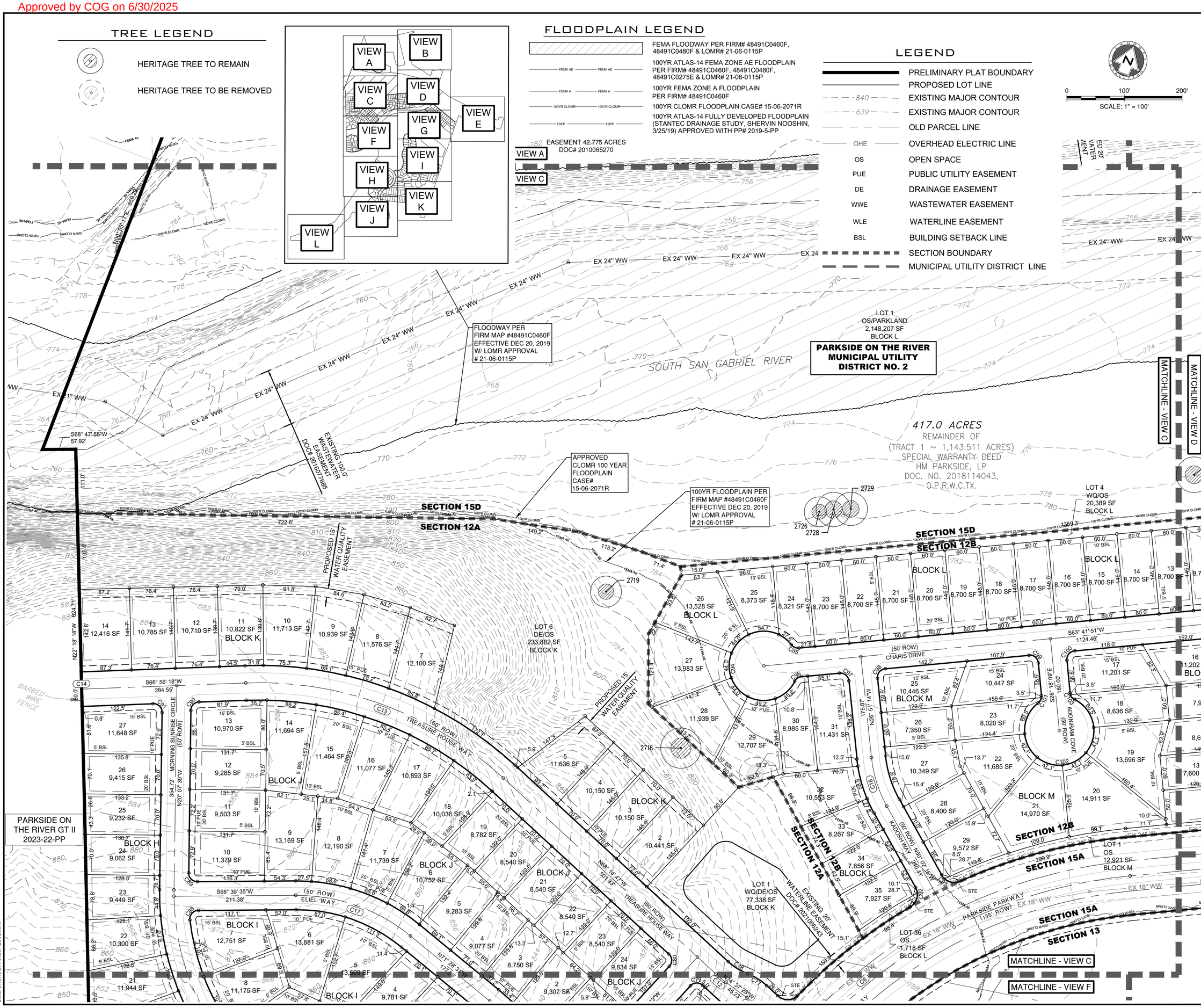

Sheet Location: P:\blake magee\parkside sections 11-15 & won 5\preliminary plat\03_ACAD\Plans\sh2402671 PRPL.dwg, PRELIMINARY PLAT VIEW C, June 23, 2025, 2:32 PM, mmuhammad
Data Shortcut Folder Location:

NO.	REVISION	BY	DATE

811 Know what's below. Call before you dig.

5508 HIGHWAY 290 WEST
SUITE 150
AUSTIN, TEXAS 78735
512.872.6696
HRGREEN.COM
TBPE NO: 16384
TBPLS NO: 10194101
HRGreen® DEVELOPMENT TX

STATE OF TEXAS
CHRISTINE N. CAMPBELL
142536
LICENSED PROFESSIONAL ENGINEER
05/16/2025

PRELIMINARY PLAT VIEW C

PARKSIDE ON THE RIVER
SECTIONS 11-15 & WON 5
PRELIMINARY PLAT
GEORGETOWN, WILLIAMSON, TEXAS

DESIGNED BY: CC
DRAWN BY: MM/TG
CHECKED BY: CC
APPROVED BY: SN
SHEET 11 OF 25

2024-15-PP

Approved by COG on 6/30/2025

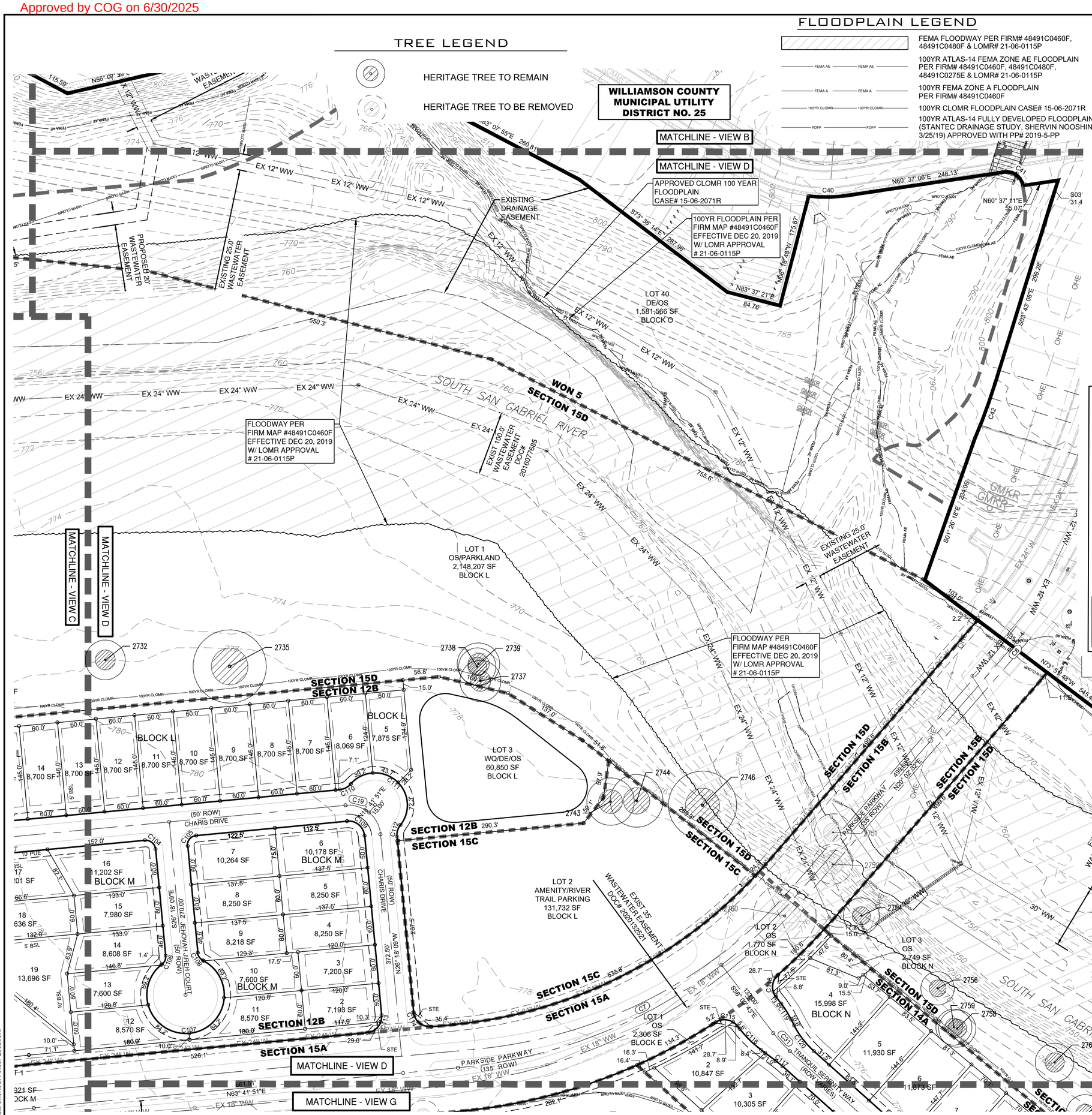

FLOODPLAIN LEGEND

- FEMA FLOODWAY PER FIRM# 48491C0460F, 48491C0480F & LOMR# 21-06-0115P
- 100YR ATLAS-14 FEMA ZONE AE FLOODPLAIN PER FIRM# 48491C0460F, 48491C0480F, 48491C0275E & LOMR# 21-06-0115P
- 100YR FEMA ZONE A FLOODPLAIN PER FIRM# 48491C0460F
- 100YR CLOMR FLOODPLAIN CASE# 15-06-2071R
- 100YR ATLAS-14 FULLY DEVELOPED FLOODPLAIN (STANTEC DRAINAGE STUDY, SHERVIN NOOSHIN, 3/25/19) APPROVED WITH PP# 2019-5-PP

0 100' 200'
SCALE: 1" = 100'

LEGEND

- PRELIMINARY PLAT BOUNDARY
- PROPOSED LOT LINE
- 840 EXISTING MAJOR CONTOUR
- 839 EXISTING MAJOR CONTOUR
- OLD PARCEL LINE
- OHE OVERHEAD ELECTRIC LINE
- OS OPEN SPACE
- PUE PUBLIC UTILITY EASEMENT
- DE DRAINAGE EASEMENT
- WWE WASTEWATER EASEMENT
- WLE WATERLINE EASEMENT
- BSL BUILDING SETBACK LINE
- SECTION BOUNDARY
- MUNICIPAL UTILITY DISTRICT LINE

NO.	REVISION	BY	DATE

811 Know what's below. Call before you dig.

HRGreen DEVELOPMENT TX
5508 HIGHWAY 290 WEST
SUITE 150
AUSTIN, TEXAS 78735
512.872.6696
HRGREEN.COM
TBPE NO: 16384
TBPLS NO: 10194101

STATE OF TEXAS
CHRISTINE N. CAMPBELL
142536
LICENSED PROFESSIONAL ENGINEER
05/16/2025

PRELIMINARY PLAT VIEW D

PARKSIDE ON THE RIVER
SECTIONS 11-15 & WON 5
PRELIMINARY PLAT
GEORGETOWN, WILLIAMSON, TEXAS

DESIGNED BY: CC
DRAWN BY: MM/TG
CHECKED BY: CC
APPROVED BY: SN
SHEET 12 OF 25

2024-15-PP

Sheet Location: P:\blake magee\parkside sections 11-15 & won 5\preliminary plat\03_ACAD\Plans\sh2402671 PRPL.dwg, PRELIMINARY PLAT VIEW D, June 23, 2025, 2:32 PM, mmuhammad
Data Shortcut Folder Location:

Approved by COG on 6/30/2025

TREE LEGEND

HERITAGE TREE TO REMAIN

HERITAGE TREE TO BE REMOVED

FLOODPLAIN LEGEND

FEMA FLOODWAY PER FIRM# 48491C0460F, 48491C0480F & LOMR# 21-06-0115P

100YR ATLAS-14 FEMA ZONE AE FLOODPLAIN PER FIRM# 48491C0460F, 48491C0480F, 48491C0275E & LOMR# 21-06-0115P

100YR FEMA ZONE A FLOODPLAIN PER FIRM# 48491C0460F

100YR CLOMR FLOODPLAIN CASE# 15-06-2071R

100YR ATLAS-14 FULLY DEVELOPED FLOODPLAIN (STANTEC DRAINAGE STUDY, SHERVIN NOOSHIN, 3/25/19) APPROVED WITH PP# 2019-5-PP

0 100' 200'

SCALE: 1" = 100'

LEGEND

- PRELIMINARY PLAT BOUNDARY
- PROPOSED LOT LINE
- 840 EXISTING MAJOR CONTOUR
- 839 EXISTING MAJOR CONTOUR
- OLD PARCEL LINE
- OHE OVERHEAD ELECTRIC LINE
- OS OPEN SPACE
- PUE PUBLIC UTILITY EASEMENT
- DE DRAINAGE EASEMENT
- WWE WASTEWATER EASEMENT
- WLE WATERLINE EASEMENT
- BSL BUILDING SETBACK LINE
- SECTION BOUNDARY
- MUNICIPAL UTILITY DISTRICT LINE

WATER OAK NORTH SECTION 6 2020-49-CON

MATCHLINE - VIEW D

MATCHLINE - VIEW E

MATCHLINE - VIEW G

SECTION 15D

SECTION 14A

EXISTING 115.3' WASTEWATER EASEMENT DOC# 2007084713

0.1601 AC. DRAINAGE EASEMENT DOC. NO. 2021131163, O.P.R.W.C.TX

0.2516 AC. DRAINAGE EASEMENT DOC. NO. 2021131163, O.P.R.W.C.TX

100YR FLOODPLAIN PER FIRM MAP #48491C0460F EFFECTIVE DEC 20, 2019 W/ LOMR APPROVAL # 21-06-0115P

FLOODWAY PER FIRM MAP #48491C0460F EFFECTIVE DEC 20, 2019 W/ LOMR APPROVAL # 21-06-0115P

50.0' UTILITY EASEMENT W.C.C.F. NO. 2004049691

APPROVED CLOMR 100 YEAR FLOODPLAIN CASE# 15-06-2071R

WATER OAK NORTH SECTION 6 2020-49-CON

LOT 1 OS/PARKLAND 1,118,640 SF BLOCK N

LOT 18 OS 10,587 SF BLOCK N

LOT 50 OPEN SPACE

16 16,862 SF

15 11,943 SF

4 34 SF

TRANQUIL SERENITY WAY (50' ROW)

SOUTH SAN GABRIEL RIVER

0.0777 AC. DRAINAGE EASEMENT DOC. NO. 2021131163, O.P.R.W.C.TX

100YR FLOODPLAIN PER FIRM MAP #48491C0480F EFFECTIVE DEC 20, 2019 W/ LOMR APPROVAL # 21-06-0115P

100YR FULLY DEVELOPED FLOODPLAIN

[190.40 ACRES]

VIEW A
VIEW B
VIEW C
VIEW D
VIEW E
VIEW F
VIEW G
VIEW H
VIEW I
VIEW J
VIEW K
VIEW L

NO.	REVISION	BY	DATE

Know what's below. Call before you dig.

HRGreen®
5508 HIGHWAY 290 WEST
SUITE 150
AUSTIN, TEXAS 78735
512. 872. 6696
HRGREEN. COM
TBPE NO: 16384
TBPLS NO: 10194101
DEVELOPMENT TX

STATE OF TEXAS
CHRISTINE N. CAMPBELL
142536
LICENSED PROFESSIONAL ENGINEER
05/16/2025

PRELIMINARY PLAT VIEW E

PARKSIDE ON THE RIVER
SECTIONS 11-15 & WON 5
PRELIMINARY PLAT
GEORGETOWN, WILLIAMSON, TEXAS

DESIGNED BY: CC
DRAWN BY: MM/TG
CHECKED BY: CC
APPROVED BY: SN
SHEET 13 OF 25

2024 -15 - PP

Sheet Location: P:\blake mage\parkside sections 11-15 & won 5\preliminary plat\03_ACAD\Plans\sh2402671 PRPL.dwg, PRELIMINARY PLAT VIEW E, June 23, 2025, 2:32 PM, mmuhammad
Data Shortcut Folder Location:

Approved by COG on 6/30/2025

TREE LEGEND

HERITAGE TREE TO REMAIN

HERITAGE TREE TO BE REMOVED

FLOODPLAIN LEGEND

FEMA FLOODWAY PER FIRM# 48491C0460F, 48491C0480F & LOMR# 21-06-0115P

100YR ATLAS-14 FEMA ZONE AE FLOODPLAIN PER FIRM# 48491C0460F, 48491C0480F, 48491C0275E & LOMR# 21-06-0115P

100YR FEMA ZONE A FLOODPLAIN PER FIRM# 48491C0460F

100YR CLOMR FLOODPLAIN CASE# 15-06-2071R

100YR ATLAS-14 FULLY DEVELOPED FLOODPLAIN (STANTEC DRAINAGE STUDY, SHERVIN NOOSHIN, 3/25/19) APPROVED WITH PP# 2019-5-PP

0 100' 200'

SCALE: 1" = 100'

MATCHLINE - VIEW C

MATCHLINE - VIEW F

APPROVED CLOMR 100 YEAR FLOODPLAIN CASE# 15-06-2071R

100YR FULLY DEVELOPED FLOODPLAIN

100YR FLOODPLAIN PER FIRM MAP #48491C0460F EFFECTIVE DEC 20, 2019 W/ LOMR APPROVAL # 21-06-0115P

MATCHLINE - VIEW F

MATCHLINE - VIEW G

BLOCK H

BLOCK I

BLOCK J

BLOCK G

BLOCK F

MORNING SUNRISE CIRCLE (50' ROW)

KAVOD COVE (50' ROW)

BLUEWAY (50' ROW)

PARKSIDE PARKWAY (135' ROW)

GAMALIEL LOOP (50' ROW)

RUACH ROAD (50' ROW)

GAMALIEL LOOP (50' ROW)

PROPOSED 20' DRAINAGE EASEMENT

EXISTING 20' WASTEWATER EASEMENT

PROPOSED 20' WASTEWATER EASEMENT

PROPOSED 20' DRAINAGE EASEMENT

EXISTING 20' WATERLINE EASEMENT DOC# 2021066243

EXIST 35' WASTEWATER EASEMENT DOC# 2020132521

SECTION 12A

SECTION 11

SECTION 15A

SECTION 13

LOT 1 OS 2,176 SF BLOCK H

LOT 2 WQ/OS 18,739 SF BLOCK H

LOT 1 DE/OS 257,363 SF BLOCK H

LOT 17 WQ/OS 5,966 SF BLOCK G

LOT 16 WQ/DE/OS 56,156 SF BLOCK G

LOT 1 OS 2,203 SF BLOCK G

LOT 1 OS 16,441 SF BLOCK F

LOT 43 DE/OS 3,297,260 SF BLOCK D

PARKSIDE ON THE RIVER SECTIONS 9B & 10B

417.0 REMAIN (TRACT 1 (~ 1 SPECIAL WA HM PAR DOC. NO. O.P.R

100YR FULLY DEVELOPED FLOODPLAIN

100YR FLOODPLAIN PER FIRM MAP #48491C0460F EFFECTIVE DEC 20, 2019

MATCHLINE - VIEW F

MATCHLINE - VIEW H

VIEW A
VIEW B
VIEW C
VIEW D
VIEW E
VIEW F
VIEW G
VIEW H
VIEW I
VIEW J
VIEW K
VIEW L

LEGEND

- PRELIMINARY PLAT BOUNDARY
- PROPOSED LOT LINE
- 840 EXISTING MAJOR CONTOUR
- 839 EXISTING MAJOR CONTOUR
- OLD PARCEL LINE
- OHE OVERHEAD ELECTRIC LINE
- OS OPEN SPACE
- PUE PUBLIC UTILITY EASEMENT
- DE DRAINAGE EASEMENT
- WWE WASTEWATER EASEMENT
- WLE WATERLINE EASEMENT
- BSL BUILDING SETBACK LINE
- SECTION BOUNDARY
- MUNICIPAL UTILITY DISTRICT LINE

NO.	REVISION	BY	DATE

811 Know what's below. Call before you dig.

HRGreen®
DEVELOPMENT TX
5508 HIGHWAY 290 WEST
SUITE 150
AUSTIN, TEXAS 78735
512. 872. 6696
HRGREEN. COM
TBPE NO: 16384
TBPLS NO: 10194101

STATE OF TEXAS
CHRISTINE N. CAMPBELL
142536
LICENSED PROFESSIONAL ENGINEER
05/16/2025

PRELIMINARY PLAT VIEW F

PARKSIDE ON THE RIVER
SECTIONS 11-15 & WON 5
PRELIMINARY PLAT
GEORGETOWN, WILLIAMSON, TEXAS

DESIGNED BY: CC
DRAWN BY: MM/TG
CHECKED BY: CC
APPROVED BY: SN
SHEET 14 OF 25

2024-15-PP

Sheet Location: P:\blake magee\parkside sections 11-15 & won 5\preliminary plat\03_ACAD\Plans\sh2402671 PRPL.dwg, PRELIMINARY PLAT VIEW F, June 23, 2025, 2:32 PM, mmuhammad
Data Shortcut Folder Location:

Approved by COG on 6/30/2025

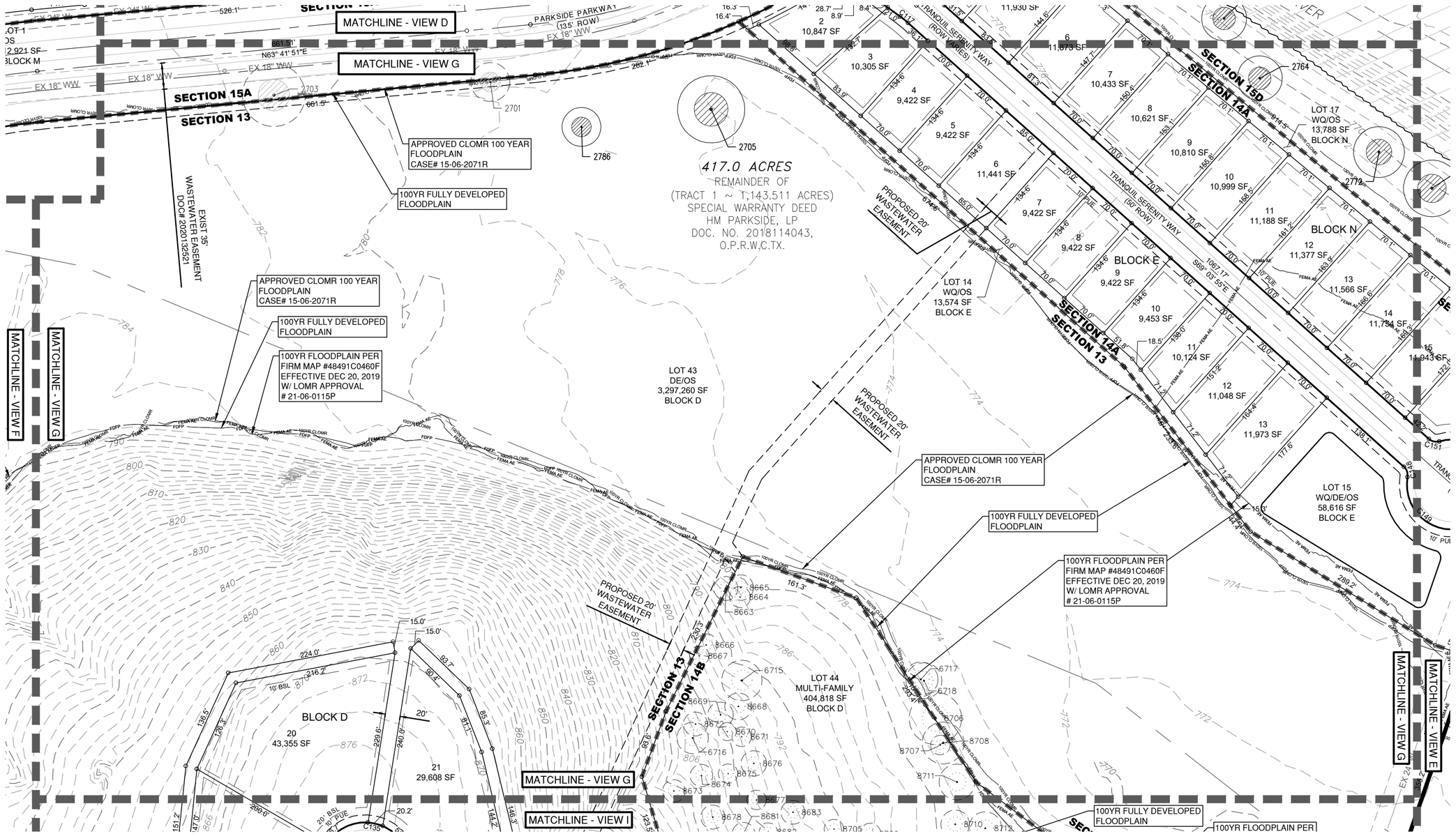

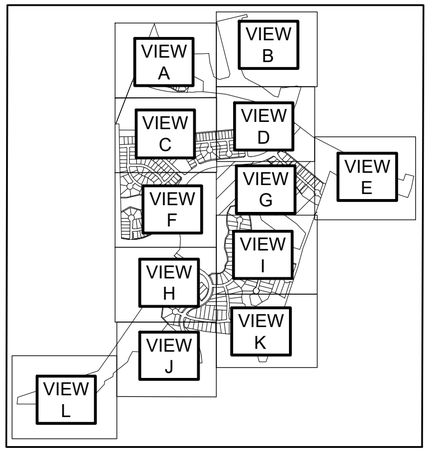

FLOODPLAIN LEGEND

- FEMA FLOODWAY PER FIRM# 48491C0460F, 48491C0480F & LOMR# 21-06-0115P
- FEMA AE — 100YR ATLAS-14 FEMA ZONE AE FLOODPLAIN PER FIRM# 48491C0460F, 48491C0480F, 48491C0275E & LOMR# 21-06-0115P
- FEMA A — 100YR FEMA ZONE A FLOODPLAIN PER FIRM# 48491C0460F
- 100YR CLOMR — 100YR CLOMR FLOODPLAIN CASE# 15-06-2071R
- FDFP — 100YR ATLAS-14 FULLY DEVELOPED FLOODPLAIN (STANTEC DRAINAGE STUDY, SHERVIN NOOSHIN, 3/25/19) APPROVED WITH PP# 2019-5-PP

TREE LEGEND

- HERITAGE TREE TO REMAIN
- HERITAGE TREE TO BE REMOVED
- PROTECTED TREE TO REMAIN
- PROTECTED TREE TO BE REMOVED

LEGEND

- PRELIMINARY PLAT BOUNDARY
- PROPOSED LOT LINE
- 840 — EXISTING MAJOR CONTOUR
- 839 — EXISTING MINOR CONTOUR
- OLD PARCEL LINE
- OHE — OVERHEAD ELECTRIC LINE
- OS — OPEN SPACE
- PUE — PUBLIC UTILITY EASEMENT
- DE — DRAINAGE EASEMENT
- WWE — WASTEWATER EASEMENT
- WLE — WATERLINE EASEMENT
- BSL — BUILDING SETBACK LINE
- SECTION BOUNDARY
- MUNICIPAL UTILITY DISTRICT LINE

NO.	REVISION	BY	DATE

811 Know what's below. Call before you dig.

HRGreen®
DEVELOPMENT TX
5508 HIGHWAY 290 WEST
SUITE 150
AUSTIN, TEXAS 78735
512.872.6696
HRGREEN.COM
TBPE NO: 16384
TBPLS NO: 10194101

STATE OF TEXAS
CHRISTINE N. CAMPBELL
142536
LICENSED PROFESSIONAL ENGINEER
05/16/2025

PRELIMINARY PLAT VIEW G

PARKSIDE ON THE RIVER
SECTIONS 11-15 & WON 5
PRELIMINARY PLAT
GEORGETOWN, WILLIAMSON, TEXAS

DESIGNED BY: CC
DRAWN BY: MM/TG
CHECKED BY: CC
APPROVED BY: SN
SHEET 15 OF 25

2024-15-PP

Sheet Location: P:\blake magee\parkside sections 11-15 & won 5\preliminary plat\03_ACAD\Plans\sht2402671 PRPL.dwg, PRELIMINARY PLAT VIEW G, June 23, 2025, 2:33 PM, mmuhammad
Data Shortcut Folder Location:

Approved by COG on 6/30/2025

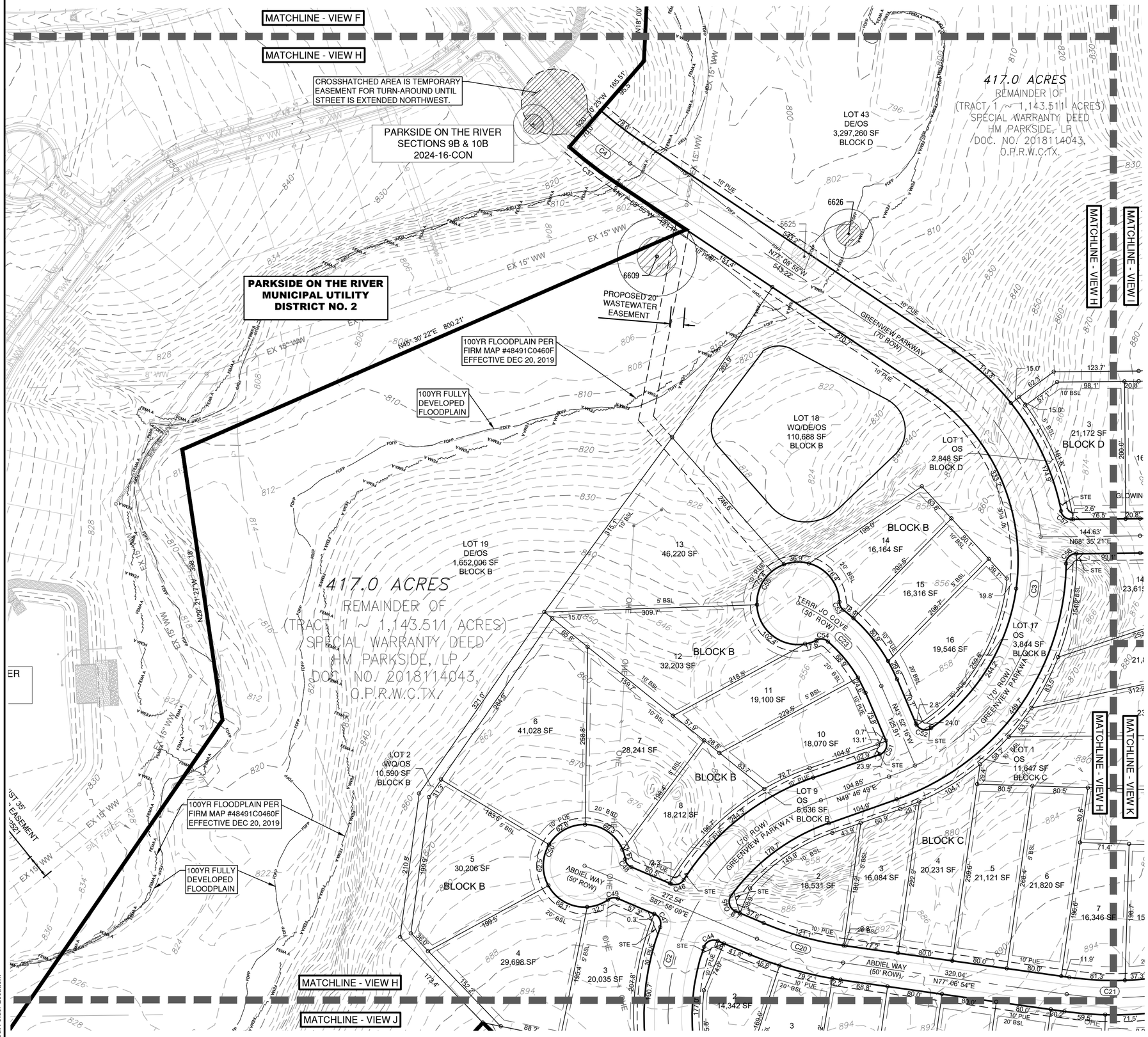

0 100' 200'
SCALE: 1" = 100'

LEGEND

- PRELIMINARY PLAT BOUNDARY
- PROPOSED LOT LINE
- 840 EXISTING MAJOR CONTOUR
- 839 EXISTING MAJOR CONTOUR
- OLD PARCEL LINE
- OHE OVERHEAD ELECTRIC LINE
- OS OPEN SPACE
- PUE PUBLIC UTILITY EASEMENT
- DE DRAINAGE EASEMENT
- WWE WASTEWATER EASEMENT
- WLE WATERLINE EASEMENT
- BSL BUILDING SETBACK LINE
- SECTION BOUNDARY
- MUNICIPAL UTILITY DISTRICT LINE

FLOODPLAIN LEGEND

- FEMA FLOODWAY PER FIRM# 48491C0460F, 48491C0480F & LOMR# 21-06-0115P
- FEMA AE / FEMA AE — 100YR ATLAS-14 FEMA ZONE AE FLOODPLAIN PER FIRM# 48491C0460F, 48491C0480F, 48491C0275E & LOMR# 21-06-0115P
- FEMA A / FEMA A — 100YR FEMA ZONE A FLOODPLAIN PER FIRM# 48491C0460F
- 100YR CLOMR / 100YR CLOMR — 100YR CLOMR FLOODPLAIN CASE# 15-06-2071R
- FDFP / FDFP — 100YR ATLAS-14 FULLY DEVELOPED FLOODPLAIN (STANTEC DRAINAGE STUDY, SHERVIN NOOSHIN, 3/25/19) APPROVED WITH PP# 2019-5-PP

TREE LEGEND

- HERITAGE TREE TO REMAIN
- HERITAGE TREE TO BE REMOVED

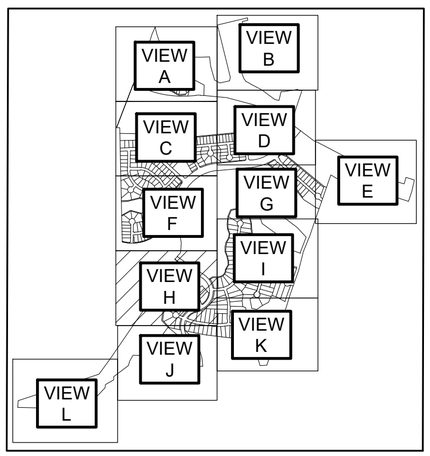

NO.	REVISION	BY	DATE

811 Know what's below. Call before you dig.

HRGreen®
5508 HIGHWAY 290 WEST
SUITE 150
AUSTIN, TEXAS 78735
512.872.6696
HRGREEN.COM
TBPE NO: 16384
TBPLS NO: 10194101
DEVELOPMENT TX

STATE OF TEXAS
CHRISTINE N. CAMPBELL
142536
LICENSED PROFESSIONAL ENGINEER
05/16/2025

PRELIMINARY PLAT VIEW H

PARKSIDE ON THE RIVER
SECTIONS 11-15 & WON 5
PRELIMINARY PLAT
GEORGETOWN, WILLIAMSON, TEXAS

DESIGNED BY: CC
DRAWN BY: MM/TG
CHECKED BY: CC
APPROVED BY: SN
SHEET 16 OF 25

2024 -15 - PP

Sheet Location: P:\blake magee\parkside sections 11-15 & won 5\preliminary plat\03_ACAD\Plans\sh2402671 PRPL.dwg, PRELIMINARY PLAT VIEW H, June 23, 2025, 2:33 PM, mmuhammad
Data Shortcut Folder Location:

Approved by COG on 6/30/2025

MATCHLINE - VIEW G

MATCHLINE - VIEW I

MATCHLINE - VIEW H

MATCHLINE - VIEW K

PROPOSED 20' WASTEWATER EASEMENT

100YR FULLY DEVELOPED FLOODPLAIN

100YR FLOODPLAIN PER FIRM MAP #48491C0460F EFFECTIVE DEC 20, 2019 W/ LOMR APPROVAL # 21-06-0115P

APPROVED CLOMR 100 YEAR FLOODPLAIN CASE# 15-06-2071R

SECTION 13

SECTION 14B

417.0 ACRES
REMAINDER OF
(TRACT 1 ~ 1,143,511 ACRES)
SPECIAL WARRANTY DEED
HM PARKSIDE, LP
DOC. NO. 2018114043,
O.P.R.W.C.TX.

50' WATER LINE EASEMENT W.C.C.F. NO. 2004029224

GLOWING SUNSET STREET (50' ROW)

BLOCK D

BLOCK A

BLOCK C

GLOWING SUNSET STREET (50' ROW)

FLOWING RAIN ROAD (50' ROW)

GENTLE BREEZE PASS (50' ROW)

467.44' BILLOWING OAK WAY N69° 40' 56"E (50' ROW)

BILLOWING OAK WAY (50' ROW)

LOT 43 DE/OS 3,297,260 SF BLOCK D

LOT 34 WQ/OS 17,138 SF BLOCK D

LOT 44 MULTI-FAMILY 404,818 SF BLOCK D

LOT 2 WQ/OS 26,824 SF BLOCK D

LOT 35 WQ/OS 1,818 SF BLOCK D

LOT 42 WQ/OS 9,092 SF BLOCK D

0 100' 200'

SCALE: 1" = 100'

FLOODPLAIN LEGEND

- FEMA FLOODWAY PER FIRM# 48491C0460F, 48491C0480F & LOMR# 21-06-0115P
- FEMA AE — FEMA AE — 100YR ATLAS-14 FEMA ZONE AE FLOODPLAIN PER FIRM# 48491C0460F, 48491C0480F, 48491C0275E & LOMR# 21-06-0115P
- FEMA A — FEMA A — 100YR FEMA ZONE A FLOODPLAIN PER FIRM# 48491C0460F
- 100YR CLOMR — 100YR CLOMR — 100YR CLOMR FLOODPLAIN CASE# 15-06-2071R
- FDFP — FDFP — 100YR ATLAS-14 FULLY DEVELOPED FLOODPLAIN (STANTEC DRAINAGE STUDY, SHERVIN NOOSHIN, 3/25/19) APPROVED WITH PP# 2019-5-PP

LEGEND

- PRELIMINARY PLAT BOUNDARY
- PROPOSED LOT LINE
- 840 EXISTING MAJOR CONTOUR
- 839 EXISTING MAJOR CONTOUR
- OLD PARCEL LINE
- OHE OVERHEAD ELECTRIC LINE
- OS OPEN SPACE
- PUE PUBLIC UTILITY EASEMENT
- DE DRAINAGE EASEMENT
- WWE WASTEWATER EASEMENT
- WLE WATERLINE EASEMENT
- BSL BUILDING SETBACK LINE
- SECTION BOUNDARY
- MUNICIPAL UTILITY DISTRICT LINE

TREE LEGEND

- HERITAGE TREE TO REMAIN
- HERITAGE TREE TO BE REMOVED
- PROTECTED TREE TO REMAIN
- PROTECTED TREE TO BE REMOVED

VIEW A · VIEW B · VIEW C · VIEW D · VIEW E · VIEW F · VIEW G · VIEW H · VIEW I · VIEW J · VIEW K · VIEW L

NO.	REVISION	BY	DATE

811 Know what's below. Call before you dig.

5508 HIGHWAY 290 WEST
SUITE 150
AUSTIN, TEXAS 78735
512. 872. 6696
HRGREEN. COM

TBPE NO: 16384
TBPLS NO: 10194101

HRGreen® DEVELOPMENT TX

STATE OF TEXAS
CHRISTINE N. CAMPBELL
142536
LICENSED PROFESSIONAL ENGINEER
05/16/2025

PRELIMINARY PLAT VIEW I

PARKSIDE ON THE RIVER
SECTIONS 11-15 & WON 5
PRELIMINARY PLAT
GEORGETOWN, WILLIAMSON, TEXAS

DESIGNED BY: CC
DRAWN BY: MM/TG
CHECKED BY: CC
APPROVED BY: SN
SHEET 17 OF 25

2024 -15 - PP

Sheet Location: P:\blake magee\parkside sections 11-15 & won 5\preliminary plat\03_ACAD\Plans\sh2402671 PRPL.dwg, PRELIMINARY PLAT VIEW I, June 23, 2025, 2:33 PM, mmuhammad
Data Shortcut Folder Location:

Approved by COG on 6/30/2025

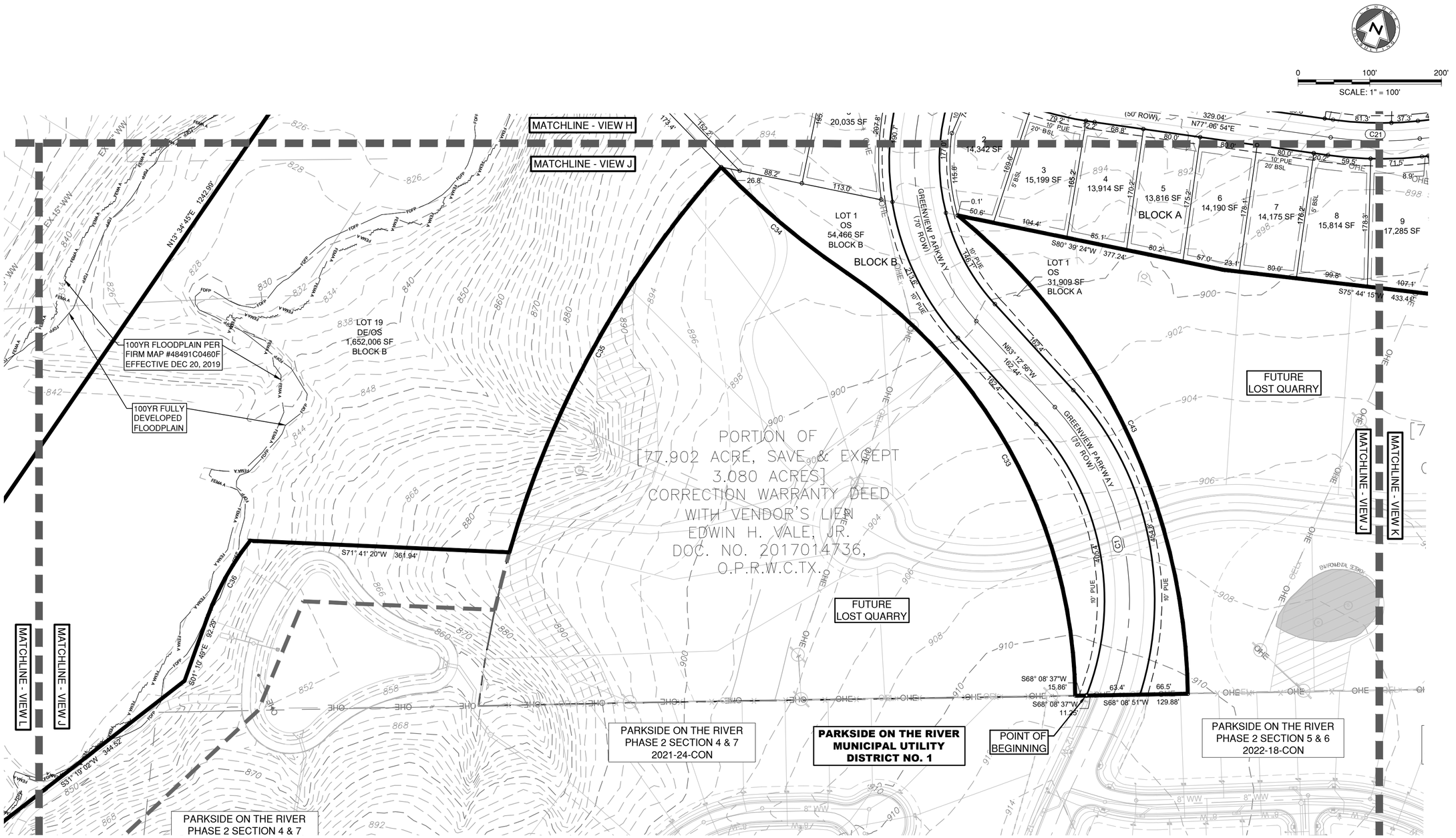

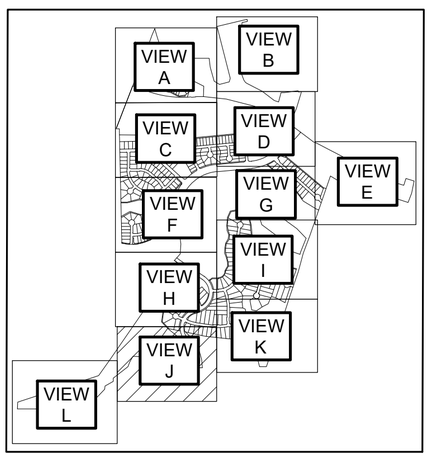

FLOODPLAIN LEGEND

- FEMA FLOODWAY PER FIRM# 48491C0460F, 48491C0480F & LOMR# 21-06-0115P
- FEMA AE / FEMA AE — 100YR ATLAS-14 FEMA ZONE AE FLOODPLAIN PER FIRM# 48491C0460F, 48491C0480F, 48491C0275E & LOMR# 21-06-0115P
- FEMA A / FEMA A — 100YR FEMA ZONE A FLOODPLAIN PER FIRM# 48491C0460F
- 100YR CLOMR / 100YR CLOMR — 100YR CLOMR FLOODPLAIN CASE# 15-06-2071R
- FDFP / FDFP — 100YR ATLAS-14 FULLY DEVELOPED FLOODPLAIN (STANTEC DRAINAGE STUDY, SHERVIN NOOSHIN, 3/25/19) APPROVED WITH PP# 2019-5-PP

TREE LEGEND

- HERITAGE TREE TO REMAIN
- HERITAGE TREE TO BE REMOVED

LEGEND

- PRELIMINARY PLAT BOUNDARY
- PROPOSED LOT LINE
- 840 — EXISTING MAJOR CONTOUR
- 839 — EXISTING MAJOR CONTOUR
- OLD PARCEL LINE
- OHE — OVERHEAD ELECTRIC LINE
- OS — OPEN SPACE
- PUE — PUBLIC UTILITY EASEMENT
- DE — DRAINAGE EASEMENT
- WWE — WASTEWATER EASEMENT
- WLE — WATERLINE EASEMENT
- BSL — BUILDING SETBACK LINE
- SECTION BOUNDARY
- MUNICIPAL UTILITY DISTRICT LINE

NO.	REVISION	BY	DATE

811 Know what's below. Call before you dig.

HRGreen
5508 HIGHWAY 290 WEST
SUITE 150
AUSTIN, TEXAS 78735
512.872.6696
HRGREEN.COM
TBPE NO: 16384
TBPLS NO: 10194101
DEVELOPMENT TX

STATE OF TEXAS
CHRISTINE N. CAMPBELL
142536
LICENSED PROFESSIONAL ENGINEER
05/16/2025

PRELIMINARY PLAT VIEW J

PARKSIDE ON THE RIVER
SECTIONS 11-15 & WON 5
PRELIMINARY PLAT
GEORGETOWN, WILLIAMSON, TEXAS

DESIGNED BY: CC
DRAWN BY: MM/TG
CHECKED BY: CC
APPROVED BY: SN
SHEET 18 OF 25

2024-15-PP

Sheet Location: P:\blake magee\parkside sections 11-15 & won 5\preliminary plat\03_ACAD\Plans\sh2402671 PRPL.dwg, PRELIMINARY PLAT VIEW J, June 23, 2025, 2:33 PM, mmuhammad
Data Shortcut Folder Location:

Approved by COG on 6/30/2025

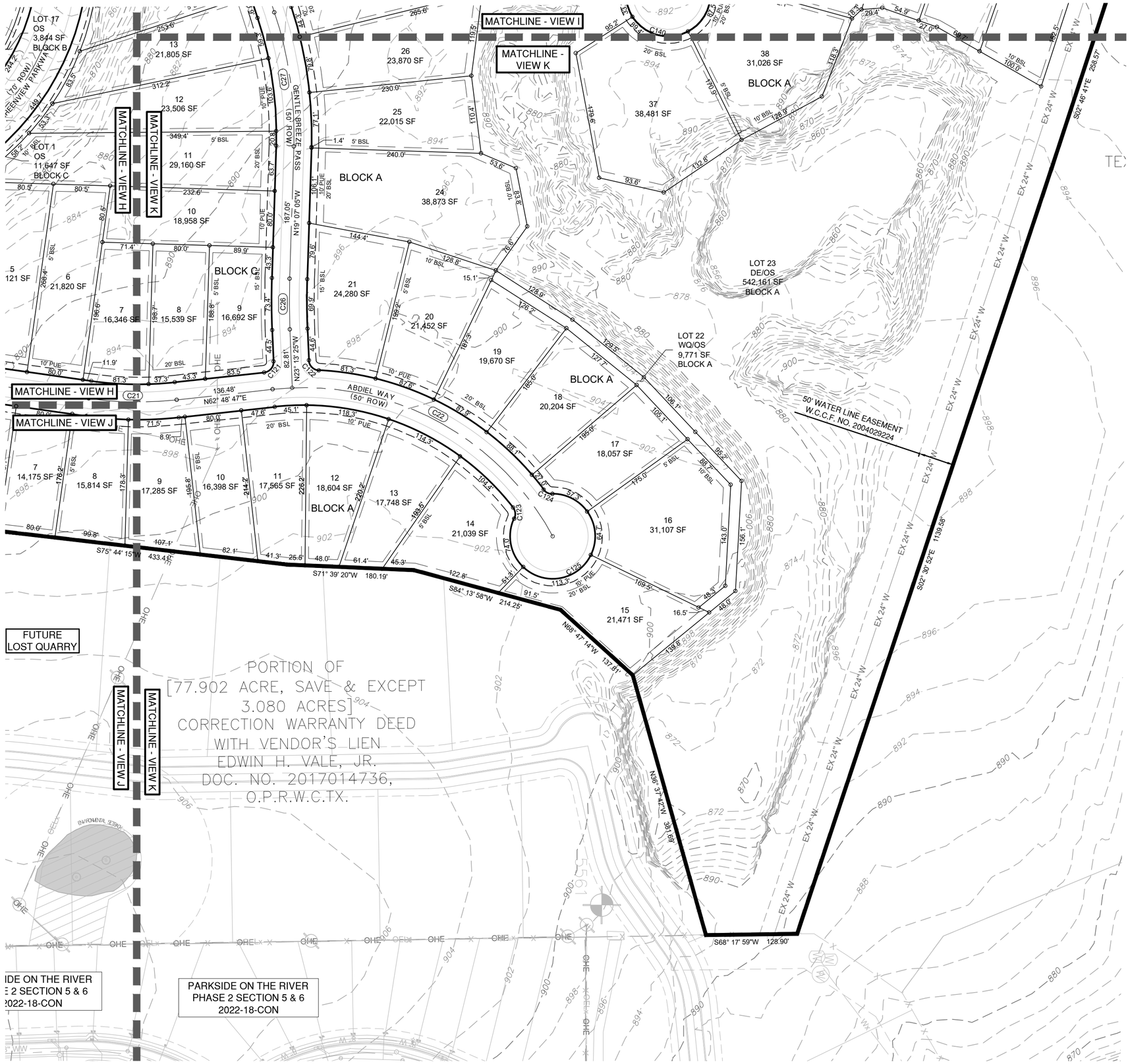

0 100' 200'

SCALE: 1" = 100'

LEGEND

- PRELIMINARY PLAT BOUNDARY
- PROPOSED LOT LINE
- EXISTING MAJOR CONTOUR (840)
- EXISTING MAJOR CONTOUR (839)
- OLD PARCEL LINE
- OHE — OVERHEAD ELECTRIC LINE
- OS — OPEN SPACE
- PUE — PUBLIC UTILITY EASEMENT
- DE — DRAINAGE EASEMENT
- WWE — WASTEWATER EASEMENT
- WLE — WATERLINE EASEMENT
- BSL — BUILDING SETBACK LINE
- SECTION BOUNDARY
- MUNICIPAL UTILITY DISTRICT LINE

TREE LEGEND

- HERITAGE TREE TO REMAIN
- HERITAGE TREE TO BE REMOVED

NOTE:

SINGLE-FAMILY LOTS AROUND BLOCK A, LOT 23 WILL REQUIRE GRADING, ON A CASE-BY-CASE BASIS, IN ORDER TO DEVELOP THESE LOTS AROUND THE OPEN SPACE/DRAINAGE EASEMENT LOT DUE TO EXISTING TOPOGRAPHY.

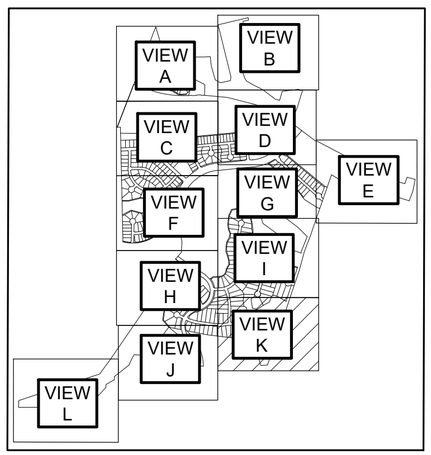

NO.	REVISION	BY	DATE

Know what's below. Call before you dig.

5508 HIGHWAY 290 WEST
SUITE 150
AUSTIN, TEXAS 78735
512.872.6696
HRGREEN.COM

TBPE NO: 16384
TBPLS NO: 10194101

HRGreen®
DEVELOPMENT TX

STATE OF TEXAS
CHRISTINE N. CAMPBELL
142536
LICENSED PROFESSIONAL ENGINEER
05/16/2025

PRELIMINARY PLAT VIEW K

PARKSIDE ON THE RIVER
SECTIONS 11-15 & WON 5
PRELIMINARY PLAT
GEORGETOWN, WILLIAMSON, TEXAS

DESIGNED BY: CC
DRAWN BY: MM/TG
CHECKED BY: CC
APPROVED BY: SN
SHEET 19 OF 25

2024-15-PP

Sheet Location: P:\blake magee\parkside sections 11-15 & won 5\preliminary plat\03_ACAD\Plans\sh2402671 PRPL.dwg, PRELIMINARY PLAT VIEW K, June 23, 2025, 2:33 PM, mmuhammad
Data Shortcut Folder Location:

Approved by COG on 6/30/2025

FLOODPLAIN LEGEND

	FEMA FLOODWAY PER FIRM# 48491C0460F, 48491C0480F & LOMR# 21-06-0115P
FEMA AE — FEMA AE	100YR ATLAS-14 FEMA ZONE AE FLOODPLAIN PER FIRM# 48491C0460F, 48491C0480F, 48491C0275E & LOMR# 21-06-0115P
FEMA A — FEMA A	100YR FEMA ZONE A FLOODPLAIN PER FIRM# 48491C0460F
100YR CLOMR — 100YR CLOMR	100YR CLOMR FLOODPLAIN CASE# 15-06-2071R
FDFP — FDFP	100YR ATLAS-14 FULLY DEVELOPED FLOODPLAIN (STANTEC DRAINAGE STUDY, SHERVIN NOOSHIN, 3/25/19) APPROVED WITH PP# 2019-5-PP

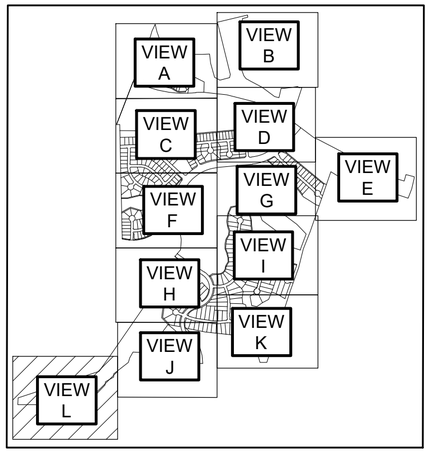

LEGEND

	PRELIMINARY PLAT BOUNDARY
	PROPOSED LOT LINE
840	EXISTING MAJOR CONTOUR
839	EXISTING MAJOR CONTOUR
	OLD PARCEL LINE
OHE	OVERHEAD ELECTRIC LINE
OS	OPEN SPACE
PUE	PUBLIC UTILITY EASEMENT
DE	DRAINAGE EASEMENT
WWE	WASTEWATER EASEMENT
WLE	WATERLINE EASEMENT
BSL	BUILDING SETBACK LINE
	SECTION BOUNDARY
	MUNICIPAL UTILITY DISTRICT LINE

0 100' 200'
SCALE: 1" = 100'

TREE LEGEND

	HERITAGE TREE TO REMAIN
	HERITAGE TREE TO BE REMOVED

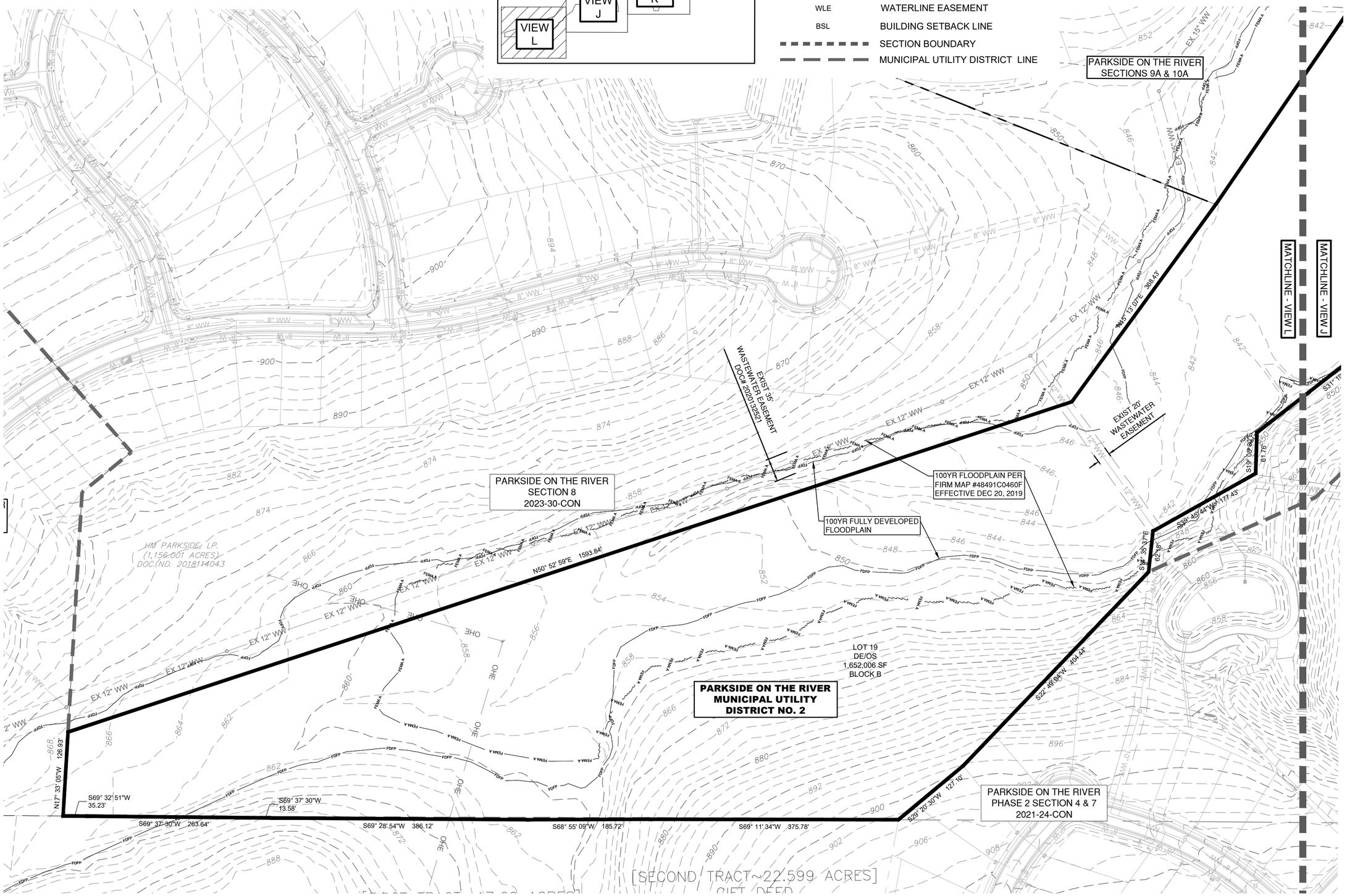

NO.	REVISION	BY	DATE

811 Know what's below. Call before you dig.

HRGreen® DEVELOPMENT TX
5508 HIGHWAY 290 WEST
SUITE 150
AUSTIN, TEXAS 78735
512.872.6696
HRGREEN.COM
TBPE NO: 16384
TBPLS NO: 10194101

STATE OF TEXAS
CHRISTINE N. CAMPBELL
142536
LICENSED PROFESSIONAL ENGINEER
05/16/2025

PRELIMINARY PLAT VIEW L

PARKSIDE ON THE RIVER
SECTIONS 11-15 & WON 5
PRELIMINARY PLAT
GEORGETOWN, WILLIAMSON, TEXAS

DESIGNED BY: CC
DRAWN BY: MM/TG
CHECKED BY: CC
APPROVED BY: SN
SHEET 20 OF 25

2024-15-PP

Sheet Location: P:\blake magee\parkside sections 11-15 & won 5\preliminary plat\03_ACAD\Plans\sh2402671 PRPL.dwg, PRELIMINARY PLAT VIEW L, June 23, 2025, 2:33 PM, mmuhammad
Data Shortcut Folder Location:

Approved by COG on 6/30/2025

TREE SCHEDULE					
Key	Tree #	Size (IN)	Half CRZ (FT)	Specie	Removed
H	2701	26	13	PECAN	X
H	2703	42	21	CEDAR ELM	X
H	2705	45	22.5	PECAN	
H	2716	35	17.5	LIVE OAK	
H	2719	27	13.5	CEDAR ELM	
H	2723	28	14	CEDAR ELM	X
H	2726	26	13	LIVE OAK	
H	2728	30	15	CEDAR ELM 27.5 5 MT	
H	2729	29	14.5	LIVE OAK	
H	2732	31	15.5	LIVE OAK	
H	2735	57	28.5	LIVE OAK 34 25 20.5 MT	
H	2737	32	16	LIVE OAK	
H	2738	29	14.5	LIVE OAK	
H	2739	33	16.5	LIVE OAK	
H	2743	37	18.5	LIVE OAK	
H	2744	41	20.5	LIVE OAK	
H	2746	53	26.5	POST OAK	
H	2751	29	14.5	AMERICAN ELM	X
H	2752	31	15.5	PECAN	X
H	2754	28	14	PECAN	
H	2756	26	13	LIVE OAK	
H	2758	29	14.5	LIVE OAK	
H	2759	28	14	LIVE OAK	
H	2760	49	24.5	LIVE OAK	X
H	2762	30	15	LIVE OAK	
H	2764	30	15	LIVE OAK	
H	2772	34	17	LIVE OAK	
H	2774	38	19	LIVE OAK	
H	2776	42	21	PECAN 38 7 MT	
H	2777	30	15	PECAN	
H	2778	26	13	PECAN	
H	2779	32	16	PECAN	
H	2780	35	17.5	PECAN	
H	2786	26	13	AMERICAN ELM	
H	6609	58	29	PECAN 31 27.5 25.5 MS	
H	6625	37	18.5	LIVE OAK 26 22 MS	X
H	6626	36	18	LIVE OAK	
	6714	23	11.5	CEDAR ELM 12 11 11 MS	X
	6715	27	13.5	CEDAR ELM 23 8 MT	X
	6716	21	10.5	CEDAR ELM 17 7 MS	X
	6717	23	11.5	LIVE OAK 20 6.5 MT	X
	6718	24	12	LIVE OAK 16 15.5 MS	X
	6719	20	10	CEDAR ELM 16 8.5 MS	X
H	6720	29	14.5	CEDAR ELM	X
H	6721	30	15	CEDAR ELM	X
	6722	25	12.5	CEDAR ELM	X
H	6745	31	15.5	LIVE OAK	X
H	6776	29	14.5	LIVE OAK	
H	6810	50	25	LIVE OAK 34 31.5 MT	
H	6812	27	13.5	LIVE OAK	
H	6818	51	25.5	PECAN 30 22 20 MS	
H	6824	39	19.5	LIVE OAK 30 17 MT	
	8601	18	9	CEDAR ELM	X
	8602	14	7	PECAN	X
	8603	29	14.5	CEDAR ELM MT 16 14.5 12	X
	8604	25	12.5	CEDAR ELM MS 17.5 15.5	X
	8605	38	19	PECAN MT 16 15.5 15 13.5	X
	8606	18	9	CEDAR ELM	X
	8607	13	6.5	CEDAR ELM	X
	8608	18	9	LIVE OAK MS 13 9.5	X
	8609	34	17	LIVE OAK MS 22.5 22	X
	8610	15	7.5	CEDAR ELM	X
	8611	15	7.5	CEDAR ELM	X
	8612	15	7.5	CEDAR ELM	X
	8613	13	6.5	CEDAR ELM	X
	8614	22	11	CEDAR ELM	X
	8615	22	11	CEDAR ELM	X
	8616	20	10	CEDAR ELM	X
	8617	14	7	CEDAR ELM	X
	8618	20	10	CEDAR ELM MS 16.5 6	X
	8619	25	12.5	CEDAR ELM MS 14.5 11.5 8	X
	8620	13	6.5	CEDAR ELM	X
	8621	14	7	CEDAR ELM	X
	8622	12	6	CEDAR ELM MT 8.5 7	X
	8623	17	8.5	POST OAK	X
	8624	19	9.5	LIVE OAK	X
	8625	13	6.5	LIVE OAK	X
	8626	16	8	LIVE OAK	X
	8627	14	7	LIVE OAK	X
	8628	14	7	LIVE OAK	X
	8629	17	8.5	LIVE OAK	X
	8630	13	6.5	LIVE OAK	X
	8631	14	7	PECAN MT 11 5	X
	8632	13	6.5	CEDAR ELM	X
	8633	12	6	CEDAR ELM	X
	8634	15	7.5	CEDAR ELM	X
	8635	19	9.5	CEDAR ELM	X
	8636	19	9.5	CEDAR ELM MS 14.5 8.5	X
	8637	15	7.5	CEDAR ELM	X
	8638	14	7	CEDAR ELM	X
	8639	15	7.5	CEDAR ELM MS 11.5 6	X
	8640	14	7	CEDAR ELM	X
	8641	14	7	LIVE OAK	X
	8642	19	9.5	CEDAR ELM	X
	8643	14	7	CEDAR ELM	X
	8644	15	7.5	POST OAK	X
	8645	13	6.5	CEDAR ELM	X
	8646	13	6.5	CEDAR ELM	X
	8647	22	11	CEDAR ELM	X
	8648	26	13	CEDAR ELM MT 16 8 6 6	X
	8649	14	7	CEDAR ELM	X
	8650	15	7.5	CEDAR ELM	X
	8651	16	8	CEDAR ELM	X
	8652	16	8	CEDAR ELM MT 12 8 5	X
	8653	12	6	SHIN OAK	X
	8654	15	7.5	SPANISH OAK	X
	8655	20	10	SPANISH OAK	X
	8656	13	6.5	CEDAR ELM MT 8.5 8	X
	8657	17	8.5	CEDAR ELM	X
	8658	14	7	SHIN OAK	X
	8659	19	9.5	CEDAR ELM MT 13 11.5	X

TREE SCHEDULE					
Key	Tree #	Size (IN)	Half CRZ (FT)	Specie	Removed
	8660	13	6.5	CEDAR ELM MT 8.5 8	X
	8661	17	8.5	CEDAR ELM	X
	8662	18	9	CEDAR	X
	8663	16	8	CEDAR ELM	X
	8664	14	7	CEDAR ELM	X
	8665	17	8.5	CEDAR ELM MS 13.5 6	X
	8666	15	7.5	CEDAR ELM MT 10.5 8	X
	8667	13	6.5	CEDAR ELM	X
	8668	18	9	CEDAR ELM	X
	8669	17	8.5	CEDAR ELM	X
	8670	12	6	CEDAR ELM	X
	8671	13	6.5	CEDAR ELM	X
	8672	16	8	CEDAR ELM MS 12 7	X
	8673	15	7.5	CEDAR ELM	X
	8674	15	7.5	LIVE OAK	X
	8675	13	6.5	LIVE OAK	X
	8676	17	8.5	CEDAR ELM MS 12.5 9.5 LAYING DOWN	X
	8677	13	6.5	CEDAR ELM	X
	8678	16	8	CEDAR ELM	X
	8679	12	6	CEDAR ELM	X
	8680	16	8	CEDAR ELM MS 11 10	X
	8681	15	7.5	SPANISH OAK	X
	8682	12	6	CEDAR ELM	X
	8683	16	8	CEDAR ELM	X
	8684	13	6.5	CEDAR ELM	X
	8685	17	8.5	LIVE OAK	X
	8686	14	7	CEDAR ELM	X
	8687	16	8	CEDAR ELM MS 11.5 8.5	X
	8688	13	6.5	CEDAR ELM MS 9 8.5	X
	8689	14	7	CEDAR ELM	X
	8690	13	6.5	CEDAR ELM MT 9.5 7	X
	8691	15	7.5	CEDAR ELM	X
	8692	18	9	CEDAR ELM MS 13 10	X
	8693	14	7	SPANISH OAK	X
	8694	13	6.5	CEDAR ELM	X
	8695	13	6.5	CEDAR ELM	X
	8696	14	7	SHN OAK MT 7 7 6.5	X
	8697	12	6	CEDAR ELM	X
	8698	13	6.5	CEDAR ELM	X
	8699	14	7	CEDAR ELM MS 11 6	X
	8700	18	9	CEDAR ELM MT 14 7.5	X
	8701	13	6.5	CEDAR ELM MT 9 8	X
	8702	14	7	CEDAR ELM MT 7.5 7 6.5	X
	8703	15	7.5	CEDAR ELM MT 9.5 6 5.5	X
	8704	19	9.5	CEDAR ELM MS 14 9	X
	8705	13	6.5	SPANISH OAK	X
	8706	35	17.5	PECAN MT 19 16.5 15	X
	8707	13	6.5	PECAN	X
	8708	28	14	PECAN MT 16.5 13 9.5	X
	8709	14	7	LIVE OAK MS 9.5 8.5	X
	8710	19	9.5	CEDAR	X
	8711	24	12	PECAN MS 16 15	X
	8712	22	11	PECAN MT 15 14	X
	8713	21	10.5	PECAN MT 17 8.5	X
	8714	18	9	LIVE OAK MT 13 9	X
	8715	13	6.5	LIVE OAK	X
	8716	14	7	LIVE OAK	X
	8717	15	7.5	CEDAR ELM MS 11 7	X
	8718	14	7	CEDAR ELM	X
	8719	12	6	CEDAR ELM	X
	8720	17	8.5	CEDAR ELM	X
	8721	23	11.5	CEDAR ELM MS 12.5 10.5 7 3.5	X
	8722	18	9	LIVE OAK	X
	8723	15	7.5	CEDAR ELM	X
	8724	15	7.5	CEDAR ELM	X
	8725	14	7	CEDAR ELM	X
	8726	17	8.5	CEDAR ELM MS 13 7	X
	8727	12	6	CEDAR ELM MT 8.5 7	X
	8728	14	7	CEDAR ELM	X
	8729	14	7	CEDAR ELM MT 6 5 4 4 3	X
	8730	15	7.5	CEDAR ELM MS 11 7.5	X
	8731	16	8	CEDAR ELM MS 9.5 7 5	X
	8732	15	7.5	CEDAR ELM MS 12 5.5	X
	8733	25	12.5	CEDAR ELM MS 12.5 12.5 11.5	X
	8734	17	8.5	LIVE OAK MS 12 10.5	X
	8735	19	9.5	CEDAR ELM MT 11.5 11 4	X
	8736	13	6.5	CEDAR ELM MS 9.5 6	X
	8737	14	7	CEDAR ELM MS 9 3 3 3	X
	8738	15	7.5	CEDAR ELM	X
	8739	13	6.5	CEDAR ELM	X
	8740	14	7	CEDAR ELM	X
	8741	14	7	BLACK WALNUT	X
	8742	14	7	CEDAR ELM	X
	8743	15	7.5	CEDAR ELM	X
	8744	16	8	SPANISH OAK	X
	8745	13	6.5	CEDAR ELM	X
	8746	14	7	CEDAR ELM MS 10 8	X
	8747	17	8.5	CEDAR ELM MS 12 9.5	X
	8749	12	6	CEDAR ELM	X
	8750	15	7.5	CEDAR ELM	X
	8751	17	8.5	CEDAR ELM	X
	8752	13	6.5	CEDAR ELM MS 9.5 6.5	X
	8753	13	6.5	CEDAR ELM	X
	8754	13	6.5	CEDAR ELM	X
	8755	16	8	CEDAR ELM	X
	8756	12	6	CEDAR ELM	X
	8757	13	6.5	CEDAR ELM	X
	8758	21	10.5	CEDAR ELM	X
	8759	18	9	CEDAR ELM	X
	8760	14	7	CEDAR ELM MS 11 6.5	X
	8761	13	6.5	CEDAR ELM	X
	8762	19	9.5	CEDAR ELM	X
	8763	16	8	SPANISH OAK MT 11 10.5 DISTRESSED	X
	13435	17	8.5	CEDAR ELM	X
	13441	20	10	SPANISH OAK DISTRESSED	X
	13454	16	8	SPANISH OAK	X

	HERITAGE	PROTECTED (SECTION 14B)	TOTAL
TOTAL INCHES	1561	2825	4386
TOTAL INCHES TO BE REMOVED	332	2825	3157
TOTAL INCHES TO BE SAVED	1229	0	1229

GREENVIEW PARKWAY CENTERLINE CURVES					
NUMBER	LENGTH	RADIUS	DELTA	CHORD BEARING	CHORD LENGTH
C1	430.05'	400.00'	61.601°	N32° 24' 55"W	409.64
C2	656.73'	333.00'	112.996°	N6° 43' 04"W	555.35
C3	737.70'	333.00'	126.929°	N13° 41' 03"W	595.84
C4	83.07'	650.00'	7.322°	N73° 29' 15"W	83.01

PARKSIDE PARKWAY CENTERLINE CURVES					
NUMBER	LENGTH	RADIUS	DELTA	CHORD BEARING	CHORD LENGTH
C5	181.07'	801.25'	12.948°	N2° 00' 12"E	180.68
C6	1005.05'	844.75'	68.168°	N29° 36' 49"E	946.81
C7	609.54'	800.00'	43.655°	N41° 52' 12"E	594.91
C8	6.85'	1000.00'	0.393°	N19° 50' 46"E	6.85

GAMALIEL LOOP CENTERLINE CURVES					
NUMBER	LENGTH	RADIUS	DELTA	CHORD BEARING	CHORD LENGTH
C9	419.84'	425.00'	56.600°	N42° 00' 51"E	402.97
C10	64.39'	50.00'	73.782°	N50° 36' 18"E	60.03

TREASURE HOUSE WAY CENTERLINE CURVES					
NUMBER	LENGTH	RADIUS	DELTA	CHORD BEARING	CHORD LENGTH
C11	22.26'	200.00'	6.378°	N71° 26' 08"W	22.25
C12	22.26'	200.00'	6.378°	N71° 26' 08"W	22.25
C13	488.86'	625.00'	44.815°	S89° 20' 45"W	476.49
C14	0.40'	300.00'	0.076°	S66° 58' 34"W	0.40

MORNING SUNRISE CIRCLE CENTERLINE CURVES					
NUMBER	LENGTH	RADIUS	DELTA	CHORD BEARING	CHORD LENGTH
C15	1031.75'	428.00'	138.119°	N89° 11' 13"W	799.46

ELIEL WAY CENTERLINE CURVES					
NUMBER	LENGTH	RADIUS	DELTA	CHORD BEARING	CHORD LENGTH
C16	84.15'	320.00'	15.066°	N63° 56' 32"W	83.90
C17	215.69'	310.00'	39.865°	S88° 35' 32"W	211.37

KADOSH WAY CENTERLINE CURVES					
NUMBER	LENGTH	RADIUS	DELTA	CHORD BEARING	CHORD LENGTH
C18	89.02'	220.00'	23.184°	N38° 26' 45"W	88.41

CHARIS DRIVE CENTERLINE CURVES					
NUMBER	LENGTH	RADIUS	DELTA	CHORD BEARING	CHORD LENGTH
C19	78.54'	50.00'	90.000°	N71° 18' 09"W	70.71

PROTECTED TREE DENSITY (TREES PER ACRE)	18.51
MIN. % OF PROTECTED TREES REQUIRED TO BE PRESERVED	20%
MIN. INCHES OF PROTECTED TREES REQUIRED TO BE PRESERVED	565
1:1 MITIGATION FOR 40% OF 80% PROTECTED TREES TO BE REMOVED*	904
1:5 MITIGATION FOR 40% OF 20% PROTECTED TREES TO BE REMOVED*	339
*PROTECTED TREE REMOVALS AND APPLICABLE MITIGATION TO BE DETERMINED WITH SITE PLAN.	

1. HR GREEN DEVELOPMENT TX, LLC PERFORMED A TREE SURVEY IN THE MONTHS OF OCTOBER 2023, AND MAY AND JUNE 2024, LOCATING QUALIFYING TREES 18-INCHES IN DIAMETER AND LARGER WITHIN THE RESIDENTIAL LOT BOUNDARIES OF THE PROPOSED PARKSIDE ON THE RIVER SECTION 11-15 & WON 5 PROJECT, AND A TREE SURVEY IN THE MONTH OF JANUARY 2025, LOCATING QUALIFYING TREES 12-INCHES IN DIAMETER AND LARGER WITHIN SECTION 14B.

ABDIEL WAY CENTERLINE CURVES					
NUMBER	LENGTH	RADIUS	DELTA	CHORD BEARING	CHORD LENGTH
C20	130.46'	500.00'	14.949°	N84° 35' 23"E	130.09
C21	124.81'	500.00'	14.302°	N69° 57' 50"E	124.49
C22	474.59'	400.00'	67.980°	S83° 11' 50"E	447.24

TERRI JO COVE CENTERLINE CURVES					
NUMBER	LENGTH	RADIUS	DELTA	CHORD BEARING	CHORD LENGTH
C23	175.22'	226.53'	44.318°	N66° 02' 14"W	170.89

GLOWING SUNSET STREET CENTERLINE CURVES					
NUMBER	LENGTH	RADIUS	DELTA	CHORD BEARING	CHORD LENGTH
C24	587.67'	365.00'	92.249°	N22° 27' 53"E	526.22
C25	691.55'	2965.00'	13.363°	N16° 58' 41"W	689.98

GENTLE BREEZE PASS CENTERLINE CURVES					
NUMBER	LENGTH	RADIUS	DELTA	CHORD BEARING	CHORD LENGTH
C26	71.66'	1000.00'	4.106°	N21° 10' 15"W	71.64
C27	192.49'	550.00'	20.053°	N29° 08' 40"W	191.51

BILLOWING OAK WAY CENTERLINE CURVES					
NUMBER	LENGTH	RADIUS	DELTA	CHORD BEARING	CHORD LENGTH
C28	421.88'	625.00'	38.675°	N89° 01' 11"E	413.92
C29	100.77'	300.00'	19.246°	S81° 15' 56"E	100.30

FLOWING RAIN ROAD CENTERLINE CURVES					
NUMBER	LENGTH	RADIUS	DELTA	CHORD BEARING	CHORD LENGTH
C30	78.38'	300.00'	14.969°	S12° 50' 01"E	78.15

TRANQUIL SERENITY WAY CENTERLINE CURVES					
NUMBER	LENGTH	RADIUS	DELTA	CHORD BEARING	CHORD LENGTH
C31	38.06'	200.00'	10.903°	S63° 36' 49"E	38.00

TREE BEND DRIVE CENTERLINE CURVES					
NUMBER	LENGTH	RADIUS	DELTA	CHORD BEARING	CHORD LENGTH
C32	120.86'	900.00'	7.694°	N86° 05' 05"E	120.77

NO.	REVISION	BY	DATE

Know what's below.
Call before you dig.

5508 HIGHWAY 290 WEST
SUITE 150
AUSTIN, TEXAS 78735
512.872.6696
HRGREEN.COM

TBPE NO: 16384
TBPLS NO: 10194101

HRGreen®
DEVELOPMENT TX

STATE OF TEXAS
CHRISTINE N. CAMPBELL
142536
LICENSED PROFESSIONAL ENGINEER
05/16/2025

TREE LIST & ROADWAY CURVE TABLES

PARKSIDE ON THE RIVER
SECTIONS 11-15 & WON 5
PRELIMINARY PLAT
GEORGETOWN, WILLIAMSON, TEXAS

DESIGNED BY: CC
DRAWN BY: MM/TG
CHECKED BY: CC
APPROVED BY: SN
SHEET 21 OF 25

2024-15-PP

Sheet Location: P:\blake magee\parkside sections 11-15 & won 5\preliminary plat\03_ACAD\Plans\sh2402671 PRPL.dwg, TREE LIST & ROADWAY CURVE TABLES, June 23, 2025, 2:34 PM, mmuhammad
Data Shortcut Folder Location:

Approved by COG on 6/30/2025

BLOCK CURVES					
NUMBER	LENGTH	RADIUS	DELTA	CHORD BEARING	CHORD DISTANCE
C33	696.01'	721.50'	55.272°	N49° 14' 58"W	669.34
C34	230.65'	1078.50'	12.253°	N70° 49' 58"W	230.21
C35	618.43'	1380.00'	25.676°	S7° 52' 44"W	613.27
C36	124.92'	385.27'	18.578°	S8° 06' 31"W	124.38
C37	87.54'	685.00'	7.322°	N73° 29' 15"W	87.48
C38	966.13'	733.75'	75.442°	N46° 11' 53"E	897.84
C39	49.46'	194.99'	14.532°	S84° 21' 25"E	49.32
C40	61.16'	232.50'	15.073°	N68° 03' 15"E	60.99
C41	39.21'	25.00'	89.873°	S74° 19' 42"E	35.32
C43	764.04'	878.50'	49.831°	S46° 34' 35"E	740.19
C44	24.39'	15.00'	93.155°	S45° 29' 11"W	21.79
C45	26.99'	15.00'	103.088°	S36° 23' 28"E	23.49
C46	21.03'	15.00'	80.317°	N51° 54' 21"E	19.35
C47	22.95'	15.00'	87.669°	N44° 06' 05"W	20.78
C48	15.12'	15.00'	57.769°	S59° 03' 05"E	14.49
C49	15.12'	15.00'	57.769°	S63° 10' 47"W	14.49
C50	309.49'	60.00'	295.538°	S2° 03' 51"W	64.00
C51	24.52'	15.00'	93.651°	N2° 57' 16"E	21.88
C52	26.77'	15.00'	102.255°	N85° 00' 05"E	23.36
C53	13.26'	15.00'	50.653°	S48° 02' 05"E	12.83
C54	17.56'	15.00'	67.078°	S76° 01' 09"W	16.58
C55	308.73'	60.00'	294.812°	N9° 53' 10"E	64.64
C56	23.26'	15.00'	88.831°	S24° 10' 25"W	21.00
C57	20.72'	15.00'	79.136°	S71° 50' 34"E	19.11
C58	154.04'	718.75'	12.279°	N78° 07' 21"E	153.74
C59	40.80'	25.00'	93.508°	N27° 04' 06"E	36.42
C60	41.27'	25.00'	94.587°	S66° 58' 32"E	36.74
C61	23.56'	15.00'	90.000°	S25° 18' 50"W	21.21
C62	23.56'	15.00'	90.000°	S64° 41' 10"E	21.21
C63	15.12'	15.00'	57.769°	S9° 11' 55"W	14.49
C64	15.12'	15.00'	57.769°	N48° 34' 14"W	14.49
C65	309.49'	60.00'	295.538°	N70° 18' 50"E	64.00
C66	783.01'	718.75'	62.418°	S33° 41' 28"W	744.86
C67	41.07'	25.00'	94.122°	N45° 26' 35"W	36.60
C68	40.13'	25.00'	91.967°	N41° 30' 46"E	35.96
C69	32.19'	25.00'	73.771°	S50° 35' 58"W	30.01
C70	19.14'	25.00'	43.861°	S70° 34' 25"E	18.67
C71	151.35'	50.00'	173.432°	S44° 38' 28"W	99.84
C72	24.34'	25.00'	55.789°	N14° 10' 49"W	23.39
C73	617.75'	590.00'	59.991°	N52° 48' 18"E	589.92
C74	602.93'	575.00'	60.078°	N52° 51' 16"E	575.68
C75	36.53'	25.00'	83.715°	N26° 23' 21"W	33.36
C76	38.67'	25.00'	88.631°	N67° 26' 17"E	34.93
C77	39.51'	102.81'	22.020°	N79° 15' 23"W	39.27
C78	39.51'	102.81'	22.020°	S79° 15' 23"E	39.27
C79	23.56'	15.00'	90.000°	S66° 45' 13"W	21.21
C80	23.56'	15.00'	90.000°	N23° 14' 47"W	21.21
C81	25.11'	15.00'	95.917°	N75° 37' 57"E	22.28
C82	25.11'	15.00'	95.917°	N8° 27' 01"W	22.28
C83	22.28'	15.00'	85.097°	S65° 38' 52"W	20.29

BLOCK CURVES					
NUMBER	LENGTH	RADIUS	DELTA	CHORD BEARING	CHORD DISTANCE
C84	22.28'	15.00'	85.097°	N19° 26' 57"W	20.29
C85	15.12'	15.00'	57.769°	N51° 59' 01"E	14.49
C86	15.12'	15.00'	57.769°	S5° 47' 07"E	14.49
C87	309.49'	60.00'	295.538°	N66° 54' 03"W	64.00
C88	25.18'	15.00'	96.179°	S20° 34' 12"W	22.33
C89	23.88'	15.00'	91.213°	S65° 44' 02"E	21.44
C90	22.79'	15.00'	87.066°	S23° 24' 19"W	20.66
C91	24.33'	15.00'	92.934°	N66° 35' 41"W	21.75
C92	38.74'	25.00'	88.777°	S5° 38' 58"E	34.98
C93	37.13'	25.00'	85.103°	S87° 24' 38"W	33.81
C94	309.49'	60.00'	295.538°	N26° 18' 09"W	64.00
C95	15.12'	15.00'	57.769°	S87° 25' 04"E	14.49
C96	15.12'	15.00'	57.769°	S34° 48' 47"W	14.49
C97	23.42'	15.00'	89.449°	N71° 34' 41"W	21.11
C98	23.71'	15.00'	90.551°	S18° 25' 19"W	21.32
C99	23.56'	15.00'	90.000°	S71° 18' 09"E	21.21
C100	23.56'	15.00'	90.000°	N18° 41' 51"E	21.21
C101	15.12'	15.00'	57.769°	S2° 34' 56"W	14.49
C102	309.49'	60.00'	295.538°	N63° 41' 51"E	64.00
C103	15.12'	15.00'	57.769°	N55° 11' 13"W	14.49
C104	23.56'	15.00'	90.000°	S71° 18' 09"E	21.21
C105	23.56'	15.00'	90.000°	N18° 41' 51"E	21.21
C106	15.12'	15.00'	57.769°	S2° 34' 56"W	14.49
C108	15.12'	15.00'	57.769°	N55° 11' 13"W	14.49
C109	39.27'	25.00'	90.000°	N71° 18' 09"W	35.36
C110	19.16'	25.00'	43.904°	N41° 44' 45"E	18.69
C111	155.17'	50.00'	177.807°	S71° 18' 09"E	99.98
C112	19.16'	25.00'	43.904°	S4° 21' 02"E	18.69
C113	39.27'	25.00'	90.000°	N18° 41' 51"E	35.36
C114	39.27'	25.00'	89.999°	S71° 18' 07"E	35.36
C115	37.52'	25.00'	85.984°	N78° 50' 45"E	34.09
C116	46.36'	162.50'	16.346°	S66° 20' 07"E	46.20
C117	13.06'	137.50'	5.443°	S71° 47' 13"E	13.06
C118	37.52'	25.00'	85.984°	S15° 10' 11"E	34.09
C119	28.76'	162.50'	10.140°	S53° 05' 32"E	28.72
C120	50.50'	137.50'	21.043°	S58° 32' 38"E	50.22
C121	22.52'	15.00'	86.037°	N19° 47' 41"E	20.47
C122	22.20'	15.00'	84.784°	S65° 36' 57"E	20.23
C123	16.41'	15.00'	62.691°	N27° 27' 08"W	15.61
C124	14.02'	15.00'	53.536°	S84° 38' 54"E	13.51
C125	309.25'	60.00'	295.309°	S36° 14' 18"W	64.20
C126	201.26'	125.00'	92.249°	N22° 27' 53"E	180.21
C127	225.41'	140.00'	92.249°	N22° 27' 53"E	201.84
C128	22.02'	15.00'	84.123°	N81° 13' 56"W	20.10
C129	22.13'	15.00'	84.541°	S3° 05' 58"W	20.18
C130	415.66'	590.00'	40.366°	N2° 17' 37"E	407.12
C131	22.08'	15.00'	84.332°	N27° 30' 58"E	20.14
C132	22.69'	15.00'	86.658°	S66° 59' 20"E	20.59
C133	14.97'	15.00'	57.162°	N40° 05' 42"W	14.35
C134	15.29'	15.00'	58.388°	S17° 39' 49"W	14.63

BLOCK CURVES					
NUMBER	LENGTH	RADIUS	DELTA	CHORD BEARING	CHORD DISTANCE
C135	309.48'	60.00'	295.534°	N79° 05' 27"E	64.00
C136	23.56'	15.00'	90.000°	S65° 19' 04"E	21.21
C137	24.20'	15.00'	92.449°	N25° 54' 24"E	21.66
C138	15.12'	15.00'	57.769°	S23° 32' 07"W	14.49
C139	15.12'	15.00'	57.769°	N34° 14' 02"W	14.49
C140	309.49'	60.00'	295.538°	N84° 39' 03"E	64.00
C141	34.83'	25.00'	79.836°	S31° 43' 29"E	32.08
C142	173.76'	60.00'	165.930°	S74° 46' 19"E	119.10
C143	31.82'	25.00'	72.921°	N58° 43' 25"E	29.71
C144	298.14'	325.00'	52.560°	N5° 57' 43"E	287.79
C145	252.27'	275.00'	52.560°	N5° 57' 43"E	243.52
C146	92.27'	275.00'	19.225°	N22° 37' 47"E	91.84
C147	109.05'	325.00'	19.225°	S22° 37' 47"W	108.54
C148	15.12'	15.00'	57.769°	S40° 10' 51"E	14.49
C149	120.99'	60.00'	115.538°	S69° 03' 55"E	101.51
C150	15.12'	15.00'	57.769°	N82° 03' 00"E	14.49
C151	15.12'	15.00'	57.769°	N82° 03' 00"E	14.49
C152	120.99'	60.00'	115.538°	S69° 03' 55"E	101.51
C153	15.12'	15.00'	57.769°	S40° 10' 51"E	14.49
C154	23.56'	15.00'	90.000°	N44° 55' 55"E	21.21
C155	23.56'	15.00'	90.000°	S45° 04' 05"E	21.21
C156	15.12'	15.00'	57.769°	N28° 57' 09"W	14.49
C157	15.12'	15.00'	57.769°	S28° 48' 59"W	14.49
C158	309.49'	60.00'	295.538°	N89° 55' 55"E	64.00
C159	30.44'	15.00'	116.265°	N28° 03' 53"E	25.48
C160	237.00'	60.00'	226.316°	N83° 05' 26"E	110.33
C161	29.85'	15.00'	114.011°	S40° 45' 25"E	25.16
C162	15.12'	15.00'	57.769°	N53° 21' 11"E	14.49
C163	15.12'	15.00'	57.769°	N68° 52' 41"W	14.49
C164	309.49'	60.00'	295.538°	S7° 45' 45"E	64.00
C165	141.68'	1055.00'	7.694°	N86° 05' 05"E	141.57
C166	143.69'	1070.00'	7.694°	S86° 05' 05"W	143.59
C167	844.27'	1912.50'	25.293°	N76° 44' 10"E	837.43
C168	89.83'	837.50'	6.146°	S67° 09' 44"W	89.79

NO.	REVISION	BY	DATE

811 Know what's below. Call before you dig.

5508 HIGHWAY 290 WEST
SUITE 150
AUSTIN, TEXAS 78735
512.872.6696
HRGREEN.COM

TBPE NO: 16384
TBPLS NO: 10194101

HRGreen®
DEVELOPMENT TX

STATE OF TEXAS
CHRISTINE N. CAMPBELL
142536
LICENSED PROFESSIONAL ENGINEER
05/16/2025

BLOCK CURVE TABLES

PARKSIDE ON THE RIVER
SECTIONS 11-15 & WON 5
PRELIMINARY PLAT
GEORGETOWN, WILLIAMSON, TEXAS

DESIGNED BY: CC
DRAWN BY: MM/TG
CHECKED BY: CC
APPROVED BY: SN
SHEET 22 OF 25

2024 -15 - PP

Sheet Location: P:\blake magee\parkside sections 11-15 & won 5\preliminary plat\03_ACAD\Plans\sh2402671 PRPL.dwg, BLOCK CURVE TABLES, June 23, 2025, 2:34 PM, mmuhammad
Data Shortcut Folder Location:

Approved by COG on 6/30/2025

BLOCK A - SECTION 13

LOT #	ACRES	SQUARE FEET	DESCRIPTION
1	0.7325	31,909	OS
2	0.3292	14,342	R
3	0.3489	15,199	R
4	0.3194	13,914	R
5	0.3172	13,816	R
6	0.3257	14,190	R
7	0.3254	14,175	R
8	0.3630	15,814	R
9	0.3968	17,285	R
10	0.3764	16,398	R
11	0.4032	17,565	R
12	0.4271	18,604	R
13	0.4074	17,748	R
14	0.4830	21,039	R
15	0.4929	21,471	R
16	0.7141	31,107	R
17	0.4145	18,057	R
18	0.4638	20,204	R
19	0.4516	19,670	R
20	0.4925	21,452	R
21	0.5574	24,280	R
22	0.2243	9,771	WQ/OS
23	12.4463	542,161	DE/OS
24	0.8924	38,873	R
25	0.5054	22,015	R
26	0.5480	23,870	R
27	0.5156	22,458	R
28	0.5009	21,818	R
29	0.5105	22,237	R
30	0.5140	22,389	R
31	0.5401	23,529	R
32	0.4359	18,987	R
33	0.3652	15,910	R
34	0.3697	16,105	R
35	0.3946	17,187	R
36	0.5989	26,090	R
37	0.8834	38,481	R
38	0.7123	31,026	R
39	0.4435	19,321	R
40	0.4585	19,972	R
41	0.3053	13,297	R
42	0.3304	14,391	R
43	0.4115	17,924	R
44	0.5199	22,645	R
45	0.7257	31,613	R
46	0.7224	31,466	R
47	0.6165	26,856	R

BLOCK B - SECTION 13

LOT #	ACRES	SQUARE FEET	DESCRIPTION
1	1.2504	54,466	OS
2	0.2431	10,590	WQ/OS
3	0.4599	20,035	R
4	0.6818	29,698	R
5	0.6934	30,206	R
6	0.9419	41,028	R
7	0.6483	28,241	R
8	0.4181	18,212	R
9	0.1294	5,636	OS
10	0.4148	18,070	R
11	0.4385	19,100	R
12	0.7393	32,203	R
13	1.0611	46,220	R
14	0.3711	16,164	R
15	0.3746	16,316	R
16	0.4487	19,546	R
17	0.0882	3,844	OS
18	2.5410	110,688	WQ/DE/OS
19	37.9248	1,652,006	DE/OS

BLOCK C - SECTION 13

LOT #	ACRES	SQUARE FEET	DESCRIPTION
1	0.2674	11,647	OS
2	0.4254	18,531	R
3	0.3692	16,084	R
4	0.4644	20,231	R
5	0.4849	21,121	R
6	0.5009	21,820	R
7	0.3753	16,346	R
8	0.3567	15,539	R
9	0.3832	16,692	R
10	0.4352	18,958	R
11	0.6694	29,160	R
12	0.5396	23,506	R
13	0.5006	21,805	R
14	0.5421	23,615	R

BLOCK D - SECTION 13

LOT #	ACRES	SQUARE FEET	DESCRIPTION
1	0.0654	2,848	OS
2	0.6158	26,824	WQ/OS
3	0.4860	21,172	R
4	0.3763	16,390	R
5	0.3877	16,887	R
6	0.3877	16,887	R
7	0.3877	16,887	R
8	0.3808	16,588	R
9	0.3214	14,000	R
10	0.2755	12,000	R
11	0.3034	13,215	R
12	0.3519	15,327	R
13	0.3814	16,615	R
14	0.3716	16,185	R
15	0.3175	13,832	R
16	0.2729	11,886	R
17	0.3116	13,573	R
18	0.3600	15,681	R
19	0.4562	19,872	R
20	0.9953	43,355	R
21	0.6797	29,608	R
22	0.3336	14,533	R
23	0.3710	16,162	R
24	0.4066	17,713	R
25	0.4022	17,521	R
26	0.3487	15,189	R
27	0.2972	12,946	R
28	0.2899	12,627	R
29	0.3046	13,267	R
30	0.4363	19,005	R
31	0.3634	15,829	R
32	0.5011	21,830	R
33	0.4225	18,405	R
34	0.3934	17,138	WQ/OS
35	0.0417	1,818	WQ/OS
36	0.4128	17,984	R
37	0.3642	15,865	R
38	0.3813	16,609	R
39	0.4407	19,197	R
40	0.4744	20,666	R
41	0.5802	25,275	R
42	0.2087	9,092	WQ/OS
43	75.6947	3,297,260	DE/OS

BLOCK D - SECTION 14B

LOT #	ACRES	SQUARE FEET	DESCRIPTION
44	9.2934	404,818	MULTI-FAMILY

BLOCK E - SECTION 14A

LOT #	ACRES	SQUARE FEET	DESCRIPTION
1	0.0529	2,306	OS
2	0.2490	10,847	R
3	0.2366	10,305	R
4	0.2163	9,422	R
5	0.2163	9,422	R
6	0.2626	11,441	R
7	0.2163	9,422	R
8	0.2163	9,422	R
9	0.2163	9,422	R
10	0.2170	9,453	R
11	0.2324	10,124	R
12	0.2536	11,048	R
13	0.2749	11,973	R
14	0.3116	13,574	WQ/OS
15	1.3456	58,616	WQ/DE/OS

BLOCK F - SECTION 11

LOT #	ACRES	SQUARE FEET	DESCRIPTION
1	0.3774	16,441	OS
2	0.2493	10,861	R
3	0.1680	7,319	R
4	0.1645	7,166	R
5	0.1629	7,098	R
6	0.1633	7,113	R
7	0.1655	7,211	R
8	0.1697	7,394	R
9	0.1758	7,660	R
10	0.1828	7,961	R
11	0.1686	7,346	R
12	0.1703	7,419	R
13	0.1680	7,319	R
14	0.2056	8,956	R

BLOCK G - SECTION 11

LOT #	ACRES	SQUARE FEET	DESCRIPTION
1	0.0506	2,203	OS
2	0.2648	11,534	R
3	0.2186	9,520	R
4	0.2220	9,672	R
5	0.2286	9,960	R
6	0.2294	9,993	R
7	0.2063	8,985	R
8	0.3216	14,008	R
9	0.2845	12,391	R
10	0.2708	11,795	R
11	0.4376	19,064	R
12	0.2938	12,798	R
13	0.2812	12,250	R
14	0.2659	11,582	R
15	0.2327	10,134	R
16	1.2892	56,156	WQ/DE/OS
17	0.1370	5,966	WQ/OS

BLOCK I - SECTION 12A

LOT #	ACRES	SQUARE FEET	DESCRIPTION
1	0.3028	13,191	R
2	0.2232	9,724	R
3	0.2041	8,890	R
4	0.2245	9,781	R
5	0.3101	13,509	R
6	0.3187	13,881	R
7	0.2927	12,751	R
8	0.2565	11,175	R
9	0.2603	11,339	R
10	0.2885	12,567	R
11	0.2905	12,656	R
12	0.3561	15,513	R

BLOCK H - SECTION 12A

LOT #	ACRES	SQUARE FEET	DESCRIPTION
1	5.9083	257,363	DE/OS
2	0.4302	18,739	WQ/OS
3	0.0500	2,176	OS
4	0.2047	8,919	R
5	0.1977	8,614	R
6	0.1965	8,560	R
7	0.2171	9,456	R
8	0.2145	9,343	R
9	0.2144	9,339	R
10	0.2144	9,339	R
11	0.2143	9,334	R
12	0.2157	9,398	R
13	0.2159	9,407	R
14	0.2316	10,088	R
15	0.3098	13,493	R
16	0.4147	18,064	R
17	0.4764	20,751	R
18	0.3498	15,238	R
19	0.4254	18,532	R
20	0.3895	16,968	R
21	0.2742	11,944	R
22	0.2365	10,300	R
23	0.2169	9,449	R
24	0.2080	9,062	R
25	0.2119	9,232	R
26	0.2161	9,415	R
27	0.2674	11,648	R

BLOCK J - SECTION 12A

LOT #	ACRES	SQUARE FEET	DESCRIPTION
1	0.2802	12,205	R
2	0.2137	9,307	R
3	0.2009	8,750	R
4	0.2084	9,077	R
5	0.2131	9,283	R
6	0.2468	10,752	R
7	0.2695	11,739	R
8	0.2798	12,190	R
9	0.3023	13,169	R
10	0.2612	11,379	R
11	0.2182	9,503	R
12	0.2132	9,285	R
13	0.2518	10,970	R
14	0.2685	11,694	R
15	0.2632	11,464	R
16	0.2543	11,077	R
17	0.2501	10,893	R
18	0.2304	10,036	R
19	0.2016	8,782	R
20	0.1961	8,540	R
21	0.1961	8,540	R
22	0.1961	8,540	R
23	0.1961	8,540	R
24	0.2258	9,834	R

BLOCK K - SECTION 12A

LOT #	ACRES	SQUARE FEET	DESCRIPTION
1	1.7754	77,338	WQ/DE/OS
2	0.2397	10,441	R
3	0.2330	10,150	R
4	0.2330	10,150	R
5	0.2671	11,636	R
6	5.3692	233,882	DE/OS
7	0.2778	12,100	R
8	0.2658	11,576	R
9	0.2511	10,939	R
10	0.2689	11,713	R
11	0.2484	10,822	R
12	0.2459	10,710	R
13	0.2476	10,785	R
14	0.2850	12,416	R

BLOCK L - SECTION 15D

LOT #	ACRES	SQUARE FEET	DESCRIPTION
1	49.3160	2,148,207	OS/PARKLAND

BLOCK L - SECTION 15C

LOT #	ACRES	SQUARE FEET	DESCRIPTION
2	3.0242	131,732	AMENITY/RIVER TRAIL PARKING

BLOCK L - SECTION 12B

LOT #	ACRES	SQUARE FEET	DESCRIPTION
3	1.3969	60,850	WQ/DE/OS
4	0.4681	20,389	WQ/OS
5	0.1808	7,875	R
6	0.1852	8,069	R
7	0.1997	8,700	R
8	0.1997	8,700	R
9	0.1997	8,700	R
10	0.1997	8,700	R
11	0.1997	8,700	R
12	0.1997	8,700	R
13	0.1997	8,700	R
14	0.1997	8,700	R
15	0.1997	8,700	R
16	0.1997	8,700	R
17	0.1997	8,700	R
18	0.1997	8,700	R
19	0.1997	8,700	R
20	0.1997	8,700	R
21	0.1997	8,700	R
22	0.1997	8,700	R
23	0.1997	8,700	R
24	0.1910	8,321	R
25	0.1922	8,373	R
26	0.3106	13,528	R
27	0.3210	13,983	R
28	0.2741	11,939	R
29	0.2917	12,707	R
30	0.2063	8,985	R
31	0.2624	11,431	R
32	0.2423	10,553	R
33	0.1898	8,267	R
34	0.1758	7,656	R
35	0.1820	7,927	R
36	0.0395	1,718	OS

BLOCK M - SECTION 12B

LOT #	ACRES	SQUARE FEET	DESCRIPTION
1	0.2966	12,921	OS
2	0.1651	7,193	R
3	0.1653	7,200	R
4	0.1894	8,250	R
5	0.1894	8,250	R
6	0.2337	10,178	R
7	0.2356	10,264	R
8	0.1894	8,250	R
9	0.1887	8,218	R
10	0.1745	7,600	R
11	0.1967	8,570	R
12	0.1967	8,570	R
13	0.1745	7,600	R
14	0.1976	8,608	R
15	0.1832	7,980	R
16	0.2572	11,202	R
17	0.2571	11,201	R
18	0.1983	8,636	R
19	0.3144	13,696	R
20	0.3423	14,911	R
21	0.3437	14,970	R
22	0.2682	11,685	R
23	0.1841	8,020	R
24	0.2398	10,447	R
25	0.2398	10,446	R
26	0.1687	7,350	R
27	0.2376	10,349	R
28	0.1928	8,400	R
29	0.2197	9,572	R

BLOCK N - SECTION 15D

LOT #	ACRES	SQUARE FEET	DESCRIPTION
1	25.6804	1,118,640	OS/PARKLAND

BLOCK N - SECTION 14A

LOT #	ACRES	SQUARE FEET	DESCRIPTION
2	0.0406	1,770	OS
3	0.0631	2,749	OS
4	0.3673	15,998	R
5	0.2739	11,930	R
6	0.2726	11,873	R
7	0.2395	10,433	R
8	0.2438	10,621	R
9	0.2482	10,810	R
10	0.2525	10,999	R
11	0.2568	11,188	R
12	0.2612	11,377	R
13	0.2655	11,566	R
14	0.2698	11,754	R
15	0.2742	11,943	R
16	0.3871	16,862	R
17	0.3165	13,788	WQ/OS
18	0.2431	10,587	OS

BLOCK O - WON5

LOT #	ACRES	SQUARE FEET	DESCRIPTION
1	0.2312	10,072	R
2	0.1963	8,552	R
3	0.3753	16,348	R
4	0.3009	13,106	R
5	0.2521	10,981	R
6	0.3484	15,174	R
7	0.1840	8,014	R
8	0.2152	9,374	R
9	0.2264	9,863	R
10	0.3187	13,884	R
11	0.3763	16,392	R
12	0.2435	10,605	R
13	0.3769	16,417	R
14	0.2419	10,539	R
15	0.1986	8,650	R
16	0.2097	9,134	R
17	0.3574	15,570	R
18	0.2482	10,812	R
19	0.3283	14,301	R
20	0.1574	6,858	R
21	0.1729	7,531	R
22	0.1574	6,857	R
23	0.1492	6,500	R
24	0.1492	6,500	R
25	0.1526	6,647	R
26	0.1563	6,810	R
27	0.1563	6,810	R
28	0.1497	6,520	R
29	0.1492	6,500	R
30	0.1492	6,500	R
31	0.1492	6,500	R
32	0.1492	6,500	R
33	0.1492	6,500	R
34	0.1495	6,513	R
35	0.1489	6,487	R
36	0.1548	6,745	R
37	0.3444	15,002	WQ/OS
38	2.0174	87,878	DE/OS
39	1.6725	72,856	WQ/DE/OS
40	36.3078	1,581,566	DE/OS

DESCRIPTION KEY
- R - RESIDENTIAL LOT
- OS - OPEN SPACE
- DE/OS - DRAINAGE EASEMENT / OPEN SPACE
- WQ/OS - WATER QUALITY / OPEN SPACE
- WQ/DE/OS - WATER QUALITY / DRAINAGE EASEMENT / OPEN SPACE

MINIMUM LOT SIZE

AREA OF SMALLEST RESIDENTIAL LOT:
BLOCK O, LOT 35, 0.149 ACRES

AREA OF LARGEST RESIDENTIAL LOT:
BLOCK B, LOT 13, 1.061 ACRES

NO.	REVISION	BY	DATE

811 Know what's below. Call before you dig.

HRGreen®
DEVELOPMENT TX
5508 HIGHWAY 290 WEST
SUITE 150
AUSTIN, TEXAS 78735
512.872.6696
HRGREEN.COM
TBPE NO: 16384
TBPLS NO: 10194101

STATE OF TEXAS
CHRISTINE N. CAMPBELL
142536
LICENSED PROFESSIONAL ENGINEER
05/16/2025

LOT AREAS

PARKSIDE ON THE RIVER
SECTIONS 11-15 & WON 5
PRELIMINARY PLAT
GEORGETOWN, WILLIAMSON, TEXAS

DESIGNED BY: CC
DRAWN BY: MM/TG
CHECKED BY: CC
APPROVED BY: SN
SHEET 23 OF 25

2024-15-PP

Sheet Location: P:\blake magee\parkside sections 11-15 & won 5\preliminary plat\03_ACAD\Plans\sht2402671 PRPL.dwg, LOT AREAS, June 23, 2025, 2:34 PM, mmuhammad
Data Shortcut Folder Location:

Approved by COG on 6/30/2025

METES AND BOUNDS

DESCRIPTION OF 417.0 ACRES OF LAND IN THE JOSEPH THOMPSON SURVEY, ABSTRACT NO. 608, AND THE ISAAC DONAGAN SURVEY, ABSTRACT NO. 178, WILLIAMSON COUNTY, TEXAS; BEING A PORTION OF A CERTAIN CALLED 1,143.511 ACRE TRACT OF LAND, DESIGNATED AS TRACT 1, AND DESCRIBED IN THE SPECIAL WARRANTY DEED TO HM PARKSIDE, LP OF RECORD IN DOCUMENT NO. 2018114043, OFFICIAL PUBLIC RECORDS OF WILLIAMSON COUNTY, TEXAS, AND BEING ALL OF A CERTAIN CALLED 3.080 ACRE TRACT DESCRIBED IN THE QUITCLAIM DEED TO HM PARKSIDE LP OF RECORD IN DOCUMENT NO. 2020031564, OFFICIAL PUBLIC RECORDS OF WILLIAMSON COUNTY, TEXAS; SAID 417.0 ACRES OF LAND, AS SURVEYED BY HR GREEN DEVELOPMENT TX, LLC, BEING MORE PARTICULARLY DESCRIBED BY METES AND BOUNDS AS FOLLOWS:

BEGINNING AT A ½-INCH IRON ROD WITH A PLASTIC CAP STAMPED "HR GREEN" SET IN THE SOUTH LINE OF THE SAID 3.080 ACRE TRACT, AT THE TERMINUS OF THE WEST RIGHT-OF-WAY LINE OF GREENVIEW PARKWAY, A 70-FOOT RIGHT-OF-WAY, AS SHOWN ON THE PARKSIDE ON THE RIVER PHASE 2, SECTIONS 5 AND 6 FINAL PLAT OF RECORD IN DOCUMENT NO. 2023064594, OFFICIAL PUBLIC RECORDS OF WILLIAMSON COUNTY, TEXAS, FOR THE NORTHEAST CORNER OF LOT 1, BLOCK L, AMENDING PLAT OF PARKSIDE ON THE RIVER PHASE 2, SECTIONS 4 AND 7, A SUBDIVISION ACCORDING TO THE PLAT OR MAP OF RECORD IN DOCUMENT NO. 2023015638, OFFICIAL PUBLIC RECORDS OF WILLIAMSON COUNTY, TEXAS, FOR A POINT-ON-LINE IN A SOUTH LINE AND THE POINT OF BEGINNING OF THE TRACT DESCRIBED HEREIN;

THENCE S 68°08'37" W, LEAVING THE WEST RIGHT-OF-WAY LINE OF SAID GREENVIEW PARKWAY, WITH THE NORTH LINE OF SAID LOT 1, BLOCK L, AMENDING PLAT OF PARKSIDE ON THE RIVER PHASE 2, SECTIONS 4 AND 7, WITH THE SOUTH LINE OF THE SAID 3.080 ACRE TRACT, WITH THE SOUTH LINE OF THE TRACT DESCRIBED HEREIN, A DISTANCE OF 15.87 FEET TO A CALCULATED POINT IN A FENCE POST FOUND AT THE SOUTHWEST CORNER OF THE SAID 3.080 ACRE TRACT, SAME BEING THE SOUTHEAST CORNER OF THE WESTERN RESIDUAL PARCEL OF A CERTAIN CALLED 77.902 ACRE TRACT, SAVE AND EXCEPT 3.080 ACRES AS DESCRIBED IN THE CORRECTION WARRANTY DEED WITH VENDOR'S LIEN TO EDWIN H. VALE, JR. OF RECORD IN DOCUMENT NO. 2017014736, OFFICIAL PUBLIC RECORDS OF WILLIAMSON COUNTY, TEXAS, FOR A SOUTHWEST CORNER OF THE TRACT DESCRIBED HEREIN;

THENCE LEAVING THE NORTH LINE OF SAID LOT 1, BLOCK L, AMENDING PLAT OF PARKSIDE ON THE RIVER PHASE 2, SECTIONS 4 AND 7, CROSSING THE SAID 77.902 ACRE TRACT, WITH THE WEST LINE OF THE SAID 3.080 ACRE TRACT, WITH AN INTERIOR WEST LINE OF THE TRACT DESCRIBED HEREIN, THE FOLLOWING TWO (2) COURSES AND DISTANCES:

1. WITH THE ARC OF A CURVE TO THE LEFT, HAVING A RADIUS OF 721.50 FEET, AN ARC DISTANCE OF 696.01 FEET, AND A CHORD WHICH BEARS N 49°14'58" W, A DISTANCE OF 669.34 FEET TO A ½-INCH IRON ROD WITH A PLASTIC CAP STAMPED "BURY & PARTNERS" FOUND AT A POINT OF REVERSE-CURVATURE, FROM WHICH A ½-INCH IRON ROD WITH A PLASTIC CAP STAMPED "MATKIN HOOVER" FOUND BEARS S 53°16 E, A DISTANCE OF 0.15 FEET, AND

2. WITH THE ARC OF A CURVE TO THE RIGHT, HAVING A RADIUS OF 1,078.50 FEET, AN ARC DISTANCE OF 230.65 FEET, AND A CHORD WHICH BEARS N 70°49'58" W, A DISTANCE OF 230.21 FEET TO A ½-INCH IRON ROD WITH A PLASTIC CAP STAMPED "BURY & PARTNERS" FOUND AT THE NORTHWEST CORNER OF THE SAID 77.902 ACRE TRACT, AND THE NORTHWEST CORNER OF THE SAID 3.080 ACRE TRACT, FOR A RE-ENTRANT CORNER IN THE SOUTH LINE OF THE TRACT DESCRIBED HEREIN;

THENCE WITH THE WEST LINE OF THE WESTERN RESIDUAL PARCEL OF THE SAID 77.902 ACRE TRACT, WITH AN INTERIOR EAST LINE OF THE SAID 1,143.511 ACRE TRACT, WITH AN INTERIOR EAST LINE OF THE TRACT DESCRIBED HEREIN, WITH THE ARC OF A CURVE TO THE LEFT, HAVING A RADIUS OF 1,380.00 FEET, AN ARC DISTANCE OF 618.43 FEET, AND A CHORD WHICH BEARS S 07°52'44" W, A DISTANCE OF 613.27 FEET TO A ½-INCH IRON ROD WITH A PLASTIC CAP STAMPED "HR GREEN" SET FOR THE NORTHERLY NORTHEAST CORNER OF LOT 39, BLOCK L, SAID AMENDING PLAT OF PARKSIDE ON THE RIVER PHASE 2, SECTIONS 4 AND 7, FOR A SOUTHEAST CORNER OF THE TRACT DESCRIBED HEREIN, FROM WHICH A ½-INCH IRON ROD WITH A PLASTIC CAP STAMPED "BURY & PARTNERS" FOUND AT THE WESTERLY SOUTHWEST CORNER OF THE SAID 77.902 ACRE TRACT, SAME BEING A RE-ENTRANT CORNER OF THE SAID 1,143.511 ACRE TRACT AND OF SAID LOT 39, BLOCK L, AMENDING PLAT OF PARKSIDE ON THE RIVER PHASE 2, SECTIONS 4 AND 7, BEARS WITH THE ARC OF A CURVE TO THE LEFT, HAVING A RADIUS OF 1,380.00 FEET, AN ARC DISTANCE OF 218.96 FEET, AND A CHORD WHICH BEARS S 09°32'24" E, A DISTANCE OF 218.73 FEET;

THENCE LEAVING THE WEST LINE OF THE SAID 77.902 ACRE TRACT, CROSSING THE SAID 1,143.511 ACRE TRACT, WITH THE NORTH AND WEST LINES OF SAID LOT 39, BLOCK L, AMENDING PLAT OF PARKSIDE ON THE RIVER PHASE 2, SECTIONS 4 AND 7, AND WITH THE WEST LINES OF LOTS 46 THROUGH 49, BLOCK L, SAID AMENDING PLAT OF PARKSIDE ON THE RIVER PHASE 2, SECTIONS 4 AND 7, WITH AN EAST LINE OF THE TRACT DESCRIBED HEREIN, THE FOLLOWING NINE (9) COURSES AND DISTANCES:

1. S 71°41'20" W, A DISTANCE OF 361.94 FEET TO A ½-INCH IRON ROD WITH A PLASTIC CAP STAMPED "HR GREEN" SET FOR THE NORTHERLY NORTHWEST CORNER OF SAID LOT 39, BLOCK L, AMENDING PLAT OF PARKSIDE ON THE RIVER PHASE 2, SECTIONS 4 AND 7, FOR A RE-ENTRANT CORNER AND NON-TANGENT POINT-OF-CURVATURE IN AN EAST LINE OF THE TRACT DESCRIBED HEREIN,

2. WITH THE ARC OF A CURVE TO THE LEFT, HAVING A RADIUS OF 385.27 FEET, AN ARC DISTANCE OF 124.92 FEET, AND A CHORD WHICH BEARS S 08°06'31" W, A DISTANCE OF 124.38 FEET TO A ½-INCH IRON ROD WITH A PLASTIC CAP STAMPED "HR GREEN" SET FOR A POINT-OF-TANGENCY,

3. S 01°10'49" E, A DISTANCE OF 92.29 FEET TO A ½-INCH IRON ROD WITH A PLASTIC CAP STAMPED "HR GREEN" SET FOR AN ANGLE POINT,

4. S 31°19'02" W, A DISTANCE OF 344.52 FEET TO A ½-INCH IRON ROD WITH A PLASTIC CAP STAMPED "HR GREEN" SET FOR AN ANGLE POINT,

5. S 19°08'30" E, A DISTANCE OF 61.76 FEET TO A ½-INCH IRON ROD WITH A PLASTIC CAP STAMPED "HR GREEN" SET FOR AN ANGLE POINT,

6. S 39°45'44" W, A DISTANCE OF 177.43 FEET TO A ½-INCH IRON ROD WITH A PLASTIC CAP STAMPED "HR GREEN" SET FOR AN ANGLE POINT,

7. S 14°35'37" E, A DISTANCE OF 62.18 FEET TO A ½-INCH IRON ROD WITH A PLASTIC CAP STAMPED "HR GREEN" SET FOR AN ANGLE POINT,

8. S 22°49'04" W, A DISTANCE OF 404.44 FEET TO A ½-INCH IRON ROD WITH A PLASTIC CAP STAMPED "HR GREEN" SET FOR THE COMMON WEST CORNER OF SAID LOT 47 AND SAID LOT 48, BLOCK L, AMENDING PLAT OF PARKSIDE ON THE RIVER PHASE 2, SECTIONS 4 AND 7, FOR AN ANGLE POINT IN AN EAST LINE OF THE TRACT DESCRIBED HEREIN, AND

9. S 29°20'30" W, A DISTANCE OF 127.10 FEET TO A CALCULATED POINT IN A CEDAR FENCE CORNER AT AN ANGLE POINT IN THE WEST LINE OF SAID LOT 49, BLOCK L, AMENDING PLAT OF PARKSIDE ON THE RIVER PHASE 2, SECTIONS 4 AND 7, AT A RE-ENTRANT CORNER OF THE SAID 1,143.511 ACRE TRACT, SAME BEING THE NORTHEAST CORNER OF A CERTAIN CALLED 22.599 ACRE TRACT DESIGNATED AS SECOND TRACT AND DESCRIBED IN THE GIFT DEED TO ELIZABETH ANN DUFNER OF RECORD IN DOCUMENT NO. 2014063597, OFFICIAL PUBLIC RECORDS OF WILLIAMSON COUNTY, TEXAS, FOR AN ANGLE POINT IN THE SOUTH LINE OF THE TRACT DESCRIBED HEREIN, FROM WHICH A COTTON-GIN SPINDLE FOUND BEARS S 17°20' E, A DISTANCE OF 0.21 FEET;

THENCE S 69°11'34" W, WITH A SOUTH LINE OF THE SAID 1,143.511 ACRE TRACT AND THE NORTH LINE OF THE SAID 22.599 ACRE TRACT, WITH THE SOUTH LINE OF THE TRACT DESCRIBED HEREIN, A DISTANCE OF 375.78 FEET TO A ½-INCH IRON ROD FOUND AT THE NORTHWEST CORNER OF THE SAID 22.599 ACRE TRACT, SAME BEING THE NORTHEAST CORNER OF A CERTAIN CALLED 17.60 ACRE TRACT DESIGNATED AS FIRST TRACT AND DESCRIBED IN THE SAID GIFT DEED TO ELIZABETH ANN DUFNER OF RECORD IN DOCUMENT NO. 2014063597, OFFICIAL PUBLIC RECORDS OF WILLIAMSON COUNTY, TEXAS, FOR AN ANGLE POINT IN THE SOUTH LINE OF THE TRACT DESCRIBED HEREIN;

THENCE WITH A SOUTH LINE OF THE SAID 1,143.511 ACRE TRACT AND THE NORTH LINE OF THE SAID 17.60 ACRE TRACT, WITH THE SOUTH LINE OF THE TRACT DESCRIBED HEREIN, THE FOLLOWING THREE (3) COURSES AND DISTANCES:

1. S 68°55'09" W, A DISTANCE OF 185.72 FEET TO A 5/8-INCH IRON ROD FOUND AT AN ANGLE POINT,

2. S 69°28'54" W, A DISTANCE OF 386.12 FEET TO A ½-INCH IRON ROD FOUND AT AN ANGLE POINT, AND

3. S 69°37'30" W, A DISTANCE OF 13.58 FEET TO A ½-INCH IRON ROD WITH A PLASTIC CAP STAMPED "FOREST 1847" FOUND AT THE NORTHWEST CORNER OF THE SAID 17.60 ACRE TRACT AND THE NORTHEAST CORNER OF A CERTAIN CALLED 76.00 ACRE TRACT DESIGNATED AS TRACT A-1 AND DESCRIBED IN THE PARTITION AND EXCHANGE DEED TO GORDON WINSTON FAUBION OF RECORD IN DOCUMENT NO. 2005101511, OFFICIAL PUBLIC RECORDS OF WILLIAMSON COUNTY, TEXAS, FOR A POINT-ON-LINE IN THE SOUTH LINE OF THE TRACT DESCRIBED HEREIN;

THENCE WITH A SOUTH LINE OF THE SAID 1,143.511 ACRE TRACT AND THE NORTH LINE OF THE SAID 76.00 ACRE TRACT, WITH THE SOUTH LINE OF THE TRACT DESCRIBED HEREIN, THE FOLLOWING TWO (2) COURSES AND DISTANCES:

1. S 69°37'30" W, A DISTANCE OF 263.64 FEET TO A ½-INCH IRON ROD WITH A PLASTIC CAP STAMPED "FOREST 1847" FOUND AT AN ANGLE POINT, AND

2. S 69°32'51" W, A DISTANCE OF 35.23 FEET TO A ½-INCH IRON ROD WITH A PLASTIC CAP STAMPED "HR GREEN" SET FOR THE EASTLY SOUTHEAST CORNER OF LOT 1, BLOCK H, VACATION AND RESUBDIVISION OF PARKSIDE ON THE RIVER, PHASE 3, SECTION 2, A SUBDIVISION ACCORDING TO THE PLAT OR MAP OF RECORD IN DOCUMENT NO. 2023040311, OFFICIAL PUBLIC RECORDS OF WILLIAMSON COUNTY, TEXAS, FOR THE SOUTHERLY SOUTHWEST CORNER OF THE TRACT DESCRIBED HEREIN;

THENCE N 17°33'05" W, LEAVING THE NORTH LINE OF THE SAID 76.00 ACRE TRACT, CROSSING THE SAID 1,143.511 ACRE TRACT, WITH THE EAST LINE OF SAID LOT 1, BLOCK H, VACATION AND RESUBDIVISION OF PARKSIDE ON THE RIVER, PHASE 3, SECTION 2, WITH THE WEST LINE OF THE TRACT DESCRIBED HEREIN, A DISTANCE OF 126.93 FEET TO A ½-INCH IRON ROD WITH A PLASTIC CAP STAMPED "HR GREEN" SET FOR THE SOUTHERLY SOUTHWEST CORNER OF A CERTAIN CALLED 156.94 ACRE TRACT DESCRIBED IN THE SPECIAL WARRANTY DEED TO HM PARKSIDE DEVELOPMENT, INC. OF RECORD IN DOCUMENT NO. 2024015941, OFFICIAL PUBLIC RECORDS OF WILLIAMSON COUNTY, TEXAS, FOR AN ANGLE POINT IN THE WEST LINE OF THE TRACT DESCRIBED HEREIN;

THENCE LEAVING THE EAST LINE OF SAID LOT 1, BLOCK H, VACATION AND RESUBDIVISION OF PARKSIDE ON THE RIVER, PHASE 3, SECTION 2, CONTINUING ACROSS THE SAID 1,143.511 ACRE TRACT, WITH THE EAST AND NORTH LINES OF THE SAID 156.94 ACRE TRACT, WITH THE WEST LINES OF THE TRACT DESCRIBED HEREIN, THE FOLLOWING THIRTEEN (13) COURSES AND DISTANCES:

1. N 50°52'59" E, A DISTANCE OF 1,593.84 FEET TO A ½-INCH IRON ROD WITH A PLASTIC CAP STAMPED "HR GREEN" SET FOR AN ANGLE POINT,

2. N 15°13'07" E, A DISTANCE OF 368.43 FEET TO A ½-INCH IRON ROD WITH A PLASTIC CAP STAMPED "HR GREEN" SET FOR AN ANGLE POINT,

3. N 13°34'45" E, A DISTANCE OF 1,242.99 FEET TO A ½-INCH IRON ROD WITH A PLASTIC CAP STAMPED "HR GREEN" SET FOR AN ANGLE POINT,

4. N 29°21'27" W, A DISTANCE OF 398.18 FEET TO A ½-INCH IRON ROD WITH A PLASTIC CAP STAMPED "HR GREEN" SET FOR AN ANGLE POINT,

5. N 45°30'22" E, A DISTANCE OF 800.21 FEET TO A ½-INCH IRON ROD WITH A PLASTIC CAP STAMPED "HR GREEN" SET FOR A NORTHEAST CORNER OF THE SAID 156.94 ACRE TRACT, FOR A RE-ENTRANT CORNER OF THE TRACT DESCRIBED HEREIN,

6. N 77°08'55" W, A DISTANCE OF 121.10 FEET TO A ½-INCH IRON ROD WITH A PLASTIC CAP STAMPED "HR GREEN" SET FOR A POINT-OF-CURVATURE,

7. WITH THE ARC OF A CURVE TO THE RIGHT, HAVING A RADIUS OF 685.00 FEET, AN ARC DISTANCE OF 87.54 FEET, AND A CHORD WHICH BEARS N 73°29'15" W, A DISTANCE OF 87.48 FEET TO A ½-INCH IRON ROD WITH A PLASTIC CAP STAMPED "HR GREEN" SET FOR A NON-TANGENT END OF CURVE,

8. N 20°10'25" E, A DISTANCE OF 165.51 FEET TO A ½-INCH IRON ROD WITH A PLASTIC CAP STAMPED "HR GREEN" SET FOR AN ANGLE POINT,

9. N 18°00'58" W, A DISTANCE OF 187.61 FEET TO A ½-INCH IRON ROD WITH A PLASTIC CAP STAMPED "HR GREEN" SET FOR AN ANGLE POINT,

10. N 29°29'49" W, A DISTANCE OF 234.74 FEET TO A ½-INCH IRON ROD WITH A PLASTIC CAP STAMPED "HR GREEN" SET FOR AN ANGLE POINT,

11. N 83°45'48" W, A DISTANCE OF 142.26 FEET TO A ½-INCH IRON ROD WITH A PLASTIC CAP STAMPED "HR GREEN" SET FOR AN ANGLE POINT,

12. N 81°31'22" W, A DISTANCE OF 135.00 FEET TO A ½-INCH IRON ROD WITH A PLASTIC CAP STAMPED "HR GREEN" SET FOR A NON-TANGENT POINT-OF-CURVATURE, AND

13. WITH THE ARC OF A CURVE TO THE RIGHT, HAVING A RADIUS OF 733.75 FEET, AN ARC DISTANCE OF 966.13 FEET, AND A CHORD WHICH BEARS S 46°11'53" W, A DISTANCE OF 897.84 FEET TO A ½-INCH IRON ROD WITH A PLASTIC CAP STAMPED "HR GREEN" SET IN A WEST LINE OF THE SAID 1,143.511 ACRE TRACT AND THE EAST LINE OF A CERTAIN CALLED 314.00 ACRE TRACT DESIGNATED AS TRACT 1 AND DESCRIBED IN THE SPECIAL WARRANTY DEED WITH VENDOR'S LIEN TO HM GPII, LP OF RECORD IN DOCUMENT NO. 2021027159, OFFICIAL PUBLIC RECORDS OF WILLIAMSON COUNTY, TEXAS, FOR A NORTHWEST CORNER OF THE SAID 156.94 ACRE TRACT, FOR A SOUTHWEST CORNER OF THE TRACT DESCRIBED HEREIN, FROM WHICH A ½-INCH IRON ROD WITH A PLASTIC CAP STAMPED "CS, LTD" FOUND AT A RE-ENTRANT CORNER OF THE SAID 1,143.511 ACRE TRACT AND THE SOUTHEAST CORNER OF THE SAID 314.00 ACRE TRACT, SAME BEING A RE-ENTRANT CORNER OF THE SAID 156.94 ACRE TRACT BEARS S 22°06'22" E, A DISTANCE OF 72.87 FEET;

THENCE LEAVING A NORTHWEST CORNER OF THE SAID 156.94 ACRE TRACT, WITH A WEST LINE OF THE SAID 1,143.511 ACRE TRACT, WITH THE EAST LINE OF THE SAID 314.00 ACRE TRACT, WITH THE WEST LINE OF THE TRACT DESCRIBED HEREIN, THE FOLLOWING TWO (2) COURSES AND DISTANCES:

1. N 22°06'02" W, A DISTANCE OF 1,524.24 FEET TO A ¾-INCH IRON PIPE FOUND AT AN ANGLE POINT, AND

2. N 22°18'18" W, AT A DISTANCE OF 439.38 FEET, PASSING A ½-INCH IRON ROD FOUND AT A POINT-ON-LINE, AND CONTINUING FOR A TOTAL DISTANCE OF 624.71 FEET TO A CALCULATED POINT NEAR THE CENTER OF THE SOUTH SAN GABRIEL RIVER, FOR A RE-ENTRANT CORNER OF THE SAID 1,143.511 ACRE TRACT AND THE NORTHEAST CORNER OF THE SAID 314.00 ACRE TRACT, FOR A RE-ENTRANT CORNER OF THE TRACT DESCRIBED HEREIN;

THENCE S 68°47'55" W, UPSTREAM, WITH THE APPROXIMATE CENTER OF THE SOUTH SAN GABRIEL RIVER, WITH A SOUTH LINE OF THE SAID 1,143.511 ACRE TRACT, WITH THE NORTH LINE OF THE SAID 314.00 ACRE TRACT, WITH A SOUTH LINE OF THE TRACT DESCRIBED HEREIN, A DISTANCE OF 57.92 FEET TO A CALCULATED POINT FOR A SOUTHWEST CORNER OF THE SAID 1,143.511 ACRE TRACT, SAME BEING THE SOUTHEAST CORNER OF A CERTAIN CALLED 168.62 ACRE TRACT DESCRIBED IN THE SPECIAL WARRANTY DEED WITH VENDOR'S LIEN TO ZAMIN, L.P. OF RECORD IN DOCUMENT NO. 2014103274, OFFICIAL PUBLIC RECORDS OF WILLIAMSON COUNTY, TEXAS, FOR A SOUTHWEST CORNER OF THE TRACT DESCRIBED HEREIN;

THENCE LEAVING THE APPROXIMATE CENTER OF THE SOUTH SAN GABRIEL RIVER AND THE NORTH LINE OF THE SAID 314.00 ACRE TRACT, WITH A WEST LINE OF THE SAID 1,143.511 ACRE TRACT, AND WITH THE EAST LINE OF THE SAID 168.62 ACRE TRACT, WITH THE WEST LINE OF THE TRACT DESCRIBED HEREIN, THE FOLLOWING NINE (9) COURSES AND DISTANCES:

1. N 00°05'17" E, A DISTANCE OF 859.29 FEET TO A ½-INCH IRON ROD FOUND AT AN ANGLE POINT,

2. N 00°15'19" W, A DISTANCE OF 374.35 FEET TO A 60-D NAIL FOUND AT A FENCE POST, AT AN ANGLE POINT,

3. N 04°37'30" E, A DISTANCE OF 49.09 FEET TO A 60-D NAIL FOUND AT THE BASE OF A 36-INCH PECAN AT AN ANGLE POINT,

4. N 01°52'42" E, A DISTANCE OF 31.06 FEET TO A ½-INCH IRON ROD WITH A PLASTIC CAP STAMPED "GBI PARTNERS" FOUND AT AN ANGLE POINT,

5. N 00°08'03" E, A DISTANCE OF 74.53 FEET TO A MAG-NAIL WITH A WASHER STAMPED "HR GREEN" SET AT AN ANGLE POINT,

6. N 02°26'04" W, A DISTANCE OF 79.10 FEET TO A BENT ½-INCH IRON ROD FOUND AT AN ANGLE POINT,

7. N 00°29'45" W, A DISTANCE OF 311.11 FEET TO A ½-INCH IRON ROD WITH A PLASTIC CAP STAMPED "HR GREEN" SET AT AN ANGLE POINT,

8. N 01°04'24" W, A DISTANCE OF 96.13 FEET TO A 60-D NAIL FOUND AT THE BASE OF A 23-INCH CEDAR, AT AN ANGLE POINT, AND

9. N 02°02'51" E, A DISTANCE OF 140.69 FEET TO A 60-D NAIL FOUND AT A 21-INCH ELM, AT A NORTHWEST CORNER OF THE SAID 1,143.511 ACRE TRACT, SAME BEING AN ANGLE POINT IN THE SOUTHWEST LINE OF LOT 45, BLOCK S, CRESCENT BLUFF SECTION 5, A SUBDIVISION ACCORDING TO THE PLAT OR MAP OF RECORD IN DOCUMENT NO. 2022092818, OFFICIAL PUBLIC RECORDS OF WILLIAMSON COUNTY, TEXAS, FOR THE WESTERLY NORTHWEST CORNER OF THE TRACT DESCRIBED HEREIN;

THENCE LEAVING THE EAST LINE OF THE SAID 168.62 ACRE TRACT, WITH THE NORTH LINE OF THE SAID 1,143.511 ACRE TRACT, WITH THE SOUTH, WEST, AND EAST LINES OF SAID CRECENT BLUFF SECTION 5, WITH THE NORTH, EAST, AND WEST LINES OF THE TRACT DESCRIBED HEREIN, THE FOLLOWING TWELVE (12) COURSES AND DISTANCES:

1. S 36°26'53" E, A DISTANCE OF 146.12 FEET TO A ½-INCH IRON ROD WITH A PLASTIC CAP STAMPED "BURY & PARTNERS" FOUND AT AN ANGLE POINT IN THE SOUTHWEST LINE OF SAID LOT 45, BLOCK S, CRESCENT BLUFF SECTION 5, FOR AN ANGLE POINT IN THE NORTH LINE OF THE TRACT DESCRIBED HEREIN,

2. S 40°05'36" E, A DISTANCE OF 159.74 FEET TO A ½-INCH IRON ROD WITH A PLASTIC CAP STAMPED "HR GREEN" SET FOR AN ANGLE POINT IN THE SOUTH LINE OF LOT 44, BLOCK S, SAID CRESCENT BLUFF SECTION 5, FOR AN ANGLE POINT IN THE NORTH LINE OF THE TRACT DESCRIBED HEREIN,

3. S 65°40'19" E, A DISTANCE OF 83.14 FEET TO A ½-INCH IRON ROD WITH A PLASTIC CAP STAMPED "HR GREEN" SET FOR AN ANGLE POINT IN THE SOUTH LINE OF SAID LOT 44, BLOCK S, CRESCENT BLUFF SECTION 5, FOR AN ANGLE POINT IN THE NORTH LINE OF THE TRACT DESCRIBED HEREIN,

4. N 88°53'23" E, A DISTANCE OF 623.00 FEET TO A ½-INCH IRON ROD WITH A PLASTIC CAP STAMPED "HR GREEN" SET FOR AN ANGLE POINT IN THE SOUTH LINE OF LOT 36, BLOCK S, SAID CRESCENT BLUFF SECTION 5, FOR AN ANGLE POINT IN THE NORTH LINE OF THE TRACT DESCRIBED HEREIN,

5. N 69°04'45" E, A DISTANCE OF 153.48 FEET TO A COTTON-GIN SPINDLE FOUND AT AN ANGLE POINT IN THE SOUTHEAST LINE OF LOT 33, BLOCK S, SAID CRESCENT BLUFF SECTION 5, FOR AN ANGLE POINT IN THE NORTH LINE OF THE TRACT DESCRIBED HEREIN,

6. N 67°03'39" E, A DISTANCE OF 133.50 FEET TO A MAG-NAIL FOUND AT AN ANGLE POINT IN THE SOUTH LINE OF LOT 32, BLOCK S, SAID CRESCENT BLUFF SECTION 5, AND THE NORTHWEST CORNER OF LOT 30, BLOCK S, SAID CRESCENT BLUFF SECTION 5, FOR A NORTHEAST CORNER OF THE TRACT DESCRIBED HEREIN,

7. S 27°22'39" E, A DISTANCE OF 172.91 FEET TO A ½-INCH IRON ROD WITH A PLASTIC CAP STAMPED "BURY & PARTNERS" FOUND AT AN ANGLE POINT IN THE WEST LINE OF LOT 28, BLOCK S, SAID CRESCENT BLUFF SECTION 5, FOR AN ANGLE POINT IN AN EAST LINE OF THE TRACT DESCRIBED HEREIN,

8. S 36°36'40" E, A DISTANCE OF 272.58 FEET TO A MAG-NAIL WITH A WASHER STAMPED "HR GREEN" SET FOR AN ANGLE POINT IN THE SOUTH LINE OF LOT 27, BLOCK S, SAID CRESCENT BLUFF SECTION 5, FOR AN ANGLE POINT IN THE EAST LINE OF THE TRACT DESCRIBED HEREIN,

9. S 82°52'54" E, A DISTANCE OF 115.59 FEET TO A COTTON-GIN SPINDLE FOUND AT AN ANGLE POINT IN THE SOUTH LINE OF LOT 12, BLOCK S, SAID CRESCENT BLUFF SECTION 5, FOR AN ANGLE POINT IN THE NORTH LINE OF THE TRACT DESCRIBED HEREIN,

10. N 56°07'39" E, A DISTANCE OF 186.38 FEET TO A ½-INCH IRON ROD WITH A PLASTIC CAP STAMPED "BURY & PARTNERS" FOUND AT AN ANGLE POINT IN THE EAST LINE OF SAID LOT 12, BLOCK S, CRESCENT BLUFF SECTION 5, FOR AN ANGLE POINT IN AN EAST LINE OF THE TRACT DESCRIBED HEREIN,

11. N 07°47'57" W, A DISTANCE OF 67.60 FEET TO A ½-INCH IRON ROD WITH A PLASTIC CAP STAMPED "BURY & PARTNERS" FOUND AT AN ANGLE POINT IN THE EAST LINE OF SAID LOT 12, BLOCK S, CRESCENT BLUFF SECTION 5, FOR AN ANGLE POINT IN A WEST LINE OF THE TRACT DESCRIBED HEREIN, AND

12. N 34°57'21" W, A DISTANCE OF 1,008.03 FEET TO A ½-INCH IRON ROD WITH A PLASTIC CAP STAMPED "HR GREEN" SET FOR AN ANGLE POINT IN THE EAST LINE OF LOT 10, BLOCK S, SAID CRESCENT BLUFF SECTION 5, FOR THE SOUTHWEST CORNER OF LOT 2, BLOCK S, CRESCENT BLUFF SECTION 4A, A SUBDIVISION ACCORDING TO THE PLAT OR MAP OF RECORD IN DOCUMENT NO. 2021163845, OFFICIAL PUBLIC RECORDS OF WILLIAMSON COUNTY, TEXAS, FOR A NORTHWEST CORNER OF THE TRACT DESCRIBED HEREIN;

THENCE N 55°43'32" E, CONTINUING WITH THE NORTH LINE OF THE SAID 1,143.511 ACRE TRACT, WITH THE SOUTH LINE OF SAID LOT 2, BLOCK 2, CRESCENT BLUFF SECTION 4A, AND WITH THE SOUTH LINE OF LOT 1, BLOCK S, CRESCENT BLUFF SECTION 4B, A SUBDIVISION ACCORDING TO THE PLAT OR MAP OF RECORD IN DOCUMENT NO. 2022037083, OFFICIAL PUBLIC RECORDS OF WILLIAMSON COUNTY, TEXAS, WITH A NORTH LINE OF THE TRACT DESCRIBED HEREIN, A DISTANCE OF 579.98 FEET TO A ½-INCH IRON ROD WITH A PLASTIC CAP STAMPED "BURY & PARTNERS" FOUND AT A NORTHEAST CORNER OF THE SAID 1,143.511 ACRE TRACT AND THE SOUTHEAST CORNER OF SAID LOT 1, BLOCK S, CRESCENT BLUFF SECTION 4B, IN THE WEST LINE OF LOT 17, BLOCK W, WATER OAK NORTH, SECTION 4, PHASE 2, A SUBDIVISION ACCORDING TO THE PLAT OR MAP OF RECORD IN DOCUMENT NO. 2020001025, OFFICIAL PUBLIC RECORDS OF WILLIAMSON COUNTY, TEXAS, FOR A NORTHEAST CORNER OF THE TRACT DESCRIBED HEREIN;

THENCE S 32°41'56" E, WITH AN EAST LINE OF THE SAID 1,143.511 ACRE TRACT, WITH THE WEST LINE OF SAID LOT 17, BLOCK W, WATER OAK NORTH, SECTION 4, PHASE 2, WITH AN EAST LINE OF THE TRACT DESCRIBED HEREIN, A DISTANCE OF 44.01 FEET TO A ½-INCH IRON ROD WITH A PLASTIC CAP STAMPED "HR GREEN" SET IN THE NORTH LINE OF LOT 16, BLOCK W, SAID WATER OAK NORTH, SECTION 4, PHASE 2, FOR A SOUTHEAST CORNER OF THE SAID 1,143.511 ACRE TRACT AND OF THE TRACT DESCRIBED HEREIN;

THENCE S 57°27'04" W, WITH A SOUTH LINE OF THE SAID 1,143.511 ACRE TRACT, WITH THE NORTH LINE OF SAID LOT 16, BLOCK W, WATER OAK NORTH, SECTION 4, PHASE 2, WITH THE SOUTH LINE OF THE TRACT DESCRIBED HEREIN, A DISTANCE OF 102.52 FEET TO A ½-INCH IRON ROD FOUND AT THE NORTHWEST CORNER OF SAID LOT 16, BLOCK W, WATER OAK NORTH, SECTION 4, PHASE 2, AT A RE-ENTRANT CORNER OF THE SAID 1,143 ACRE TRACT, FOR A RE-ENTRANT CORNER OF THE TRACT DESCRIBED HEREIN;

THENCE CONTINUING WITH AN EAST AND NORTH LINE OF THE SAID 1,143.511 ACRE TRACT, WITH THE WEST LINE OF SAID WATER OAK NORTH, SECTION 4, PHASE 2, AND WITH THE WEST AND SOUTH LINES OF WATER OAK NORTH, SECTION 4, PHASE 1B, A SUBDIVISION ACCORDING TO THE PLAT OR MAP OF RECORD IN DOCUMENT NO. 2020000306, OFFICIAL PUBLIC RECORDS OF WILLIAMSON COUNTY, TEXAS, WITH THE NORTH LINES OF THE TRACT DESCRIBED HEREIN, THE FOLLOWING FOURTEEN (14) COURSES AND DISTANCES:

1. S 14°16'57" E, AT A DISTANCE OF 211.39 FEET, PASSING A ½-INCH IRON ROD WITH A PLASTIC CAP STAMPED "STANTEC" FOUND AT THE COMMON WEST CORNER OF LOT 13 AND LOT 12, BLOCK W, SAID WATER OAK NORTH, SECTION 4, PHASE 2, AND CONTINUING FOR A TOTAL DISTANCE OF 224.94 FEET TO A CALCULATED POINT IN A FENCE POST, FOR AN ANGLE POINT IN THE WEST LINE OF SAID LOT 12, BLOCK W, WATER OAK NORTH, SECTION 4, PHASE 2, FOR AN ANGLE POINT OF THE TRACT DESCRIBED HEREIN,

2. S 65°02'11" E, AT A DISTANCE OF 43.78 FEET, PASSING THE COMMON WEST CORNER OF SAID LOT 12, BLOCK W, WATER OAK NORTH, SECTION 4, PHASE 2, AND LOT 12, BLOCK W, SAID WATER OAK NORTH, SECTION 4, PHASE 1B, AND CONTINUING FOR A TOTAL DISTANCE OF 102.90 FEET TO A ½-INCH IRON ROD WITH A PLASTIC CAP STAMPED "STANTEC" FOUND AT AN ANGLE POINT IN THE WEST LINE OF SAID LOT 12, BLOCK W, WATER OAK NORTH, SECTION 4, PHASE 1B AND AN EAST LINE OF THE SAID 1,143.511 ACRE TRACT, FOR AN ANGLE POINT IN THE EAST LINE OF THE TRACT DESCRIBED HEREIN,

3. S 29°44'33" E, A DISTANCE OF 154.23 FEET TO A ½-INCH IRON ROD WITH A PLASTIC CAP STAMPED "STANTEC" FOUND AT AN ANGLE POINT IN THE WEST LINE OF SAID LOT 12, BLOCK W, WATER OAK NORTH, SECTION 4, PHASE 1B AND AN EAST LINE OF THE SAID 1,143.511 ACRE TRACT, FOR AN ANGLE POINT IN THE EAST LINE OF THE TRACT DESCRIBED HEREIN,

4. S 31°47'34" E, A DISTANCE OF 249.91 FEET TO A ½-INCH IRON ROD WITH A PLASTIC CAP STAMPED "STANTEC" FOUND AT AN ANGLE POINT IN THE WEST LINE OF LOT 3, BLOCK W, WATER OAK NORTH, SECTION 4, PHASE 1B AND AN EAST LINE OF THE SAID 1,143.511 ACRE TRACT, FOR AN ANGLE POINT IN THE EAST LINE OF THE TRACT DESCRIBED HEREIN,

5. S 04°13'55" W, A DISTANCE OF 202.68 FEET TO A CALCULATED POINT FOR AN ANGLE POINT IN THE WEST LINE OF LOT 1, BLOCK W, SAID WATER OAK NORTH, SECTION 4, PHASE 1B, AND THE EAST LINE OF THE SAID 1,143.511 ACRE TRACT, FOR AN ANGLE POINT IN THE EAST LINE OF THE TRACT DESCRIBED HEREIN, FROM WHICH A DISTURBED ½-INCH IRON ROD WITH AN ILLEGIBLE PLASTIC CAP FOUND BEARS S 57°10' W, A DISTANCE OF 0.45 FEET,

6. S 04°48'52" W, A DISTANCE OF 99.26 FEET TO A ½-INCH IRON ROD WITH A PLASTIC CAP STAMPED "STANTEC" FOUND AT AN ANGLE POINT IN THE WEST LINE OF SAID LOT 1, BLOCK W, WATER OAK NORTH, SECTION 4, PHASE 1B AND AN EAST LINE OF THE SAID 1,143.511 ACRE TRACT, FOR AN ANGLE POINT IN THE EAST LINE OF THE TRACT DESCRIBED HEREIN,

7. S 41°30'31" E, A DISTANCE OF 114.47 FEET TO A ½-INCH IRON ROD WITH A PLASTIC CAP STAMPED "GBI PARTNERS" FOUND AT THE SOUTH CORNER OF SAID LOT 1, BLOCK W, WATER OAK NORTH, SECTION 4, PHASE 1B AND THE WEST TERMINUS OF LORENA LANE, A 55-FOOT RIGHT-OF-WAY, AS SHOWN ON SAID WATER OAK NORTH, SECTION 4, PHASE 1B, AT AN ANGLE POINT IN A NORTH LINE OF THE SAID 1,143.511 ACRE TRACT, FOR AN ANGLE POINT IN THE NORTH LINE OF THE TRACT DESCRIBED HEREIN,

8. S 55°55'03" E, A DISTANCE OF 65.06 FEET TO A ½-INCH IRON ROD WITH A PLASTIC CAP STAMPED "GBI PARTNERS" FOUND AT THE EAST TERMINUS OF SAID LORENA LANE AND THE SOUTHWEST CORNER OF LOT 8, BLOCK V, SAID WATER OAK NORTH, SECTION 4, PHASE 1B, FOR A NON-TANGENT POINT-OF-CURVATURE IN THE NORTH LINE OF THE SAID 1,143.511 ACRE TRACT AND OF THE TRACT DESCRIBED HEREIN,

9. WITH THE ARC OF A CURVE TO THE RIGHT, HAVING A RADIUS OF 194.99 FEET, AN ARC DISTANCE OF 49.46 FEET, AND A CHORD WHICH BEARS S 84°21'25" E, A DISTANCE OF 49.32 FEET TO A ½-INCH IRON ROD WITH A PLASTIC CAP STAMPED "GBI PARTNERS" FOUND AT A POINT-OF-TANGENCY IN THE SOUTH LINE OF SAID LOT 8, BLOCK V, WATER OAK NORTH, SECTION 4, PHASE 1B, AND A NORTH LINE OF THE SAID 1,143.511 ACRE TRACT AND OF THE TRACT DESCRIBED HEREIN,

10. S 80°23'24" E, A DISTANCE OF 35.34 FEET TO A ½-INCH IRON ROD WITH A PLASTIC CAP STAMPED "GBI PARTNERS" FOUND AT AN ANGLE POINT IN THE SOUTH LINE OF SAID LOT 8, BLOCK V, WATER OAK NORTH, SECTION 4, PHASE 1B, AND A NORTH LINE OF THE SAID 1,143.511 ACRE TRACT AND OF THE TRACT DESCRIBED HEREIN

11. S 83°07'55" E, AT A DISTANCE OF 163.06 FEET, PASSING A ½-INCH IRON ROD WITH A PLASTIC CAP STAMPED "STANTEC" FOUND AT THE COMMON SOUTH CORNER OF LOT 6 AND LOT 5, BLOCK V, SAID WATER OAK NORTH, SECTION 4, PHASE 1B, AT A DISTANCE OF 218.34 FEET, PASSING A ½-INCH IRON ROD WITH A PLASTIC CAP STAMPED "STANTEC" FOUND AT THE COMMON SOUTH CORNER OF LOT 5 AND LOT 4, BLOCK V, SAID WATER OAK NORTH, SECTION 4, PHASE 1B, AND CONTINUING FOR A TOTAL DISTANCE OF 260.81 FEET TO A CALCULATED ANGLE POINT IN THE SOUTH LINE OF SAID LOT 4, BLOCK V, WATER OAK NORTH, SECTION 4, PHASE 1B, AND THE NORTH LINE OF THE SAID 1,143.511 ACRE TRACT, FOR AN ANGLE POINT IN A NORTH LINE OF THE TRACT DESCRIBED HEREIN, FROM WHICH A ½-INCH IRON ROD FOUND IN A STONE PATIO BEARS N 72°30' W, A DISTANCE OF 0.46 FEET,

12. S 73°38'14" E, AT A DISTANCE OF 12.70 FEET, PASSING A ½-INCH IRON ROD WITH A PLASTIC CAP STAMPED "STANTEC" FOUND AT THE COMMON SOUTH CORNER OF LOT 4 AND LOT 3, BLOCK V, SAID WATER OAK NORTH, SECTION 4, PHASE 1B, AND CONTINUING FOR A TOTAL DISTANCE OF 287.96 FEET TO A ½-INCH IRON ROD WITH A PLASTIC CAP STAMPED "STANTEC" FOUND AT AN ANGLE POINT IN THE SOUTH LINE OF LOT 1, BLOCK V, SAID WATER OAK NORTH, SECTION 4, PHASE 1B, AND A NORTH LINE OF THE SAID 1,143.511 ACRE TRACT, FOR AN ANGLE POINT IN THE NORTH LINE OF THE TRACT DESCRIBED HEREIN,

13. N 83°37'21" E, A DISTANCE OF 84.76 FEET TO A ½-INCH IRON ROD WITH A PLASTIC CAP STAMPED "STANTEC" FOUND AT THE SOUTHEAST CORNER OF SAID LOT 1, BLOCK V, WATER OAK NORTH, SECTION 4, PHASE 1B, SAME BEING A RE-ENTRANT CORNER OF THE SAID 1,143.511 ACRE TRACT, FOR A RE-ENTRANT CORNER OF THE TRACT DESCRIBED HEREIN, AND

14. N 06°18'48" W, A DISTANCE OF 175.87 FEET TO A ½-INCH IRON ROD WITH A PLASTIC CAP STAMPED "STANTEC" FOUND IN THE CURVING SOUTH RIGHT-OF-WAY LINE OF LEANING OAK LANE, A 65-FOOT RIGHT-OF-WAY, AS SHOWN ON SAID WATER OAK NORTH, SECTION 4, PHASE 1B, AT THE NORTHEAST CORNER OF SAID LOT 1, BLOCK V, WATER OAK NORTH, SECTION 4, PHASE 1B, FOR A NORTHWEST CORNER AND A NON-TANGENT POINT-OF-CURVATURE OF THE SAID 1,143.511 ACRE TRACT AND OF THE TRACT DESCRIBED HEREIN;

THENCE WITH THE SOUTH RIGHT-OF-WAY LINE OF SAID LEANING OAK LANE, WITH A NORTH LINE OF THE SAID 1,143.511 ACRE TRACT, WITH THE NORTH LINE OF THE TRACT DESCRIBED HEREIN, THE FOLLOWING FOUR (4) COURSES AND DISTANCES:

1. WITH THE ARC OF A CURVE TO THE LEFT, HAVING A RADIUS OF 232.50 FEET, AN ARC DISTANCE OF 61.16 FEET, AND A CHORD WHICH BEARS N 68°03'15" E, A DISTANCE OF 60.99 FEET TO A ½-INCH IRON ROD WITH A PLASTIC CAP STAMPED "STANTEC" FOUND AT A POINT-OF-TANGENCY,

2. N 60°37'06" E, A DISTANCE OF 246.13 FEET TO A ½-INCH IRON ROD WITH A PLASTIC CAP STAMPED "STANTEC" FOUND AT A POINT-OF-CURVATURE,

3. WITH THE ARC OF A CURVE TO THE RIGHT, HAVING A RADIUS OF 25.00 FEET, AN ARC DISTANCE OF 39.21 FEET, AND A CHORD WHICH BEARS S 74°19'42" E, A DISTANCE OF 35.32 FEET TO A ½-INCH IRON ROD WITH A PLASTIC CAP STAMPED "STANTEC" FOUND AT A NON-TANGENT END OF CURVE, AND

4. N 60°37'11" E, A DISTANCE OF 55.07 FEET TO A ½-INCH IRON ROD WITH A PLASTIC CAP STAMPED "STANTEC" FOUND IN THE WEST LINE OF LOT 1, BLOCK D, WATER OAK NORTH SECTION 6, A SUBDIVISION ACCORDING TO THE PLAT OR MAP OF RECORD IN DOCUMENT NO. 2022049731, OFFICIAL PUBLIC RECORDS OF WILLIAMSON COUNTY, TEXAS, AT A NORTHEAST CORNER OF THE SAID 1,143.511 ACRE TRACT, FOR A NORTHEAST CORNER OF THE TRACT DESCRIBED HEREIN;

THENCE CONTINUING WITH THE NORTH LINE OF THE SAID 1,143.511 ACRE TRACT, WITH THE WEST AND SOUTH LINE OF SAID WATER OAK NORTH SECTION 6, WITH THE NORTH LINES OF THE TRACT DESCRIBED HEREIN, THE FOLLOWING TEN (10) COURSES AND DISTANCES:

1. S 03°30'36" E, A DISTANCE OF 31.45 FEET TO A ½-INCH IRON ROD WITH A PLASTIC CAP STAMPED "HR GREEN" SET IN THE WEST LINE OF LOT 1, BLOCK D, SAID WATER OAK NORTH SECTION 6, AT AN ANGLE POINT IN AN EAST LINE OF THE SAID 1,143.511 ACRE TRACT, FOR AN ANGLE POINT OF THE TRACT DESCRIBED HEREIN,

2. S 03°43'08" E, A DISTANCE OF 299.28 FEET TO A ½-INCH IRON ROD WITH A PLASTIC CAP STAMPED "HR GREEN" SET IN THE WEST LINE OF LOT 8, BLOCK D, SAID WATER OAK NORTH SECTION 6, AT A POINT-OF-CURVATURE IN AN EAST LINE OF THE SAID 1,143.511 ACRE TRACT, FOR A POINT-OF-CURVATURE OF THE TRACT DESCRIBED HEREIN,

3. WITH THE ARC OF A CURVE TO THE RIGHT, HAVING A RADIUS OF 877.50 FEET, AN ARC DISTANCE OF 90.07 FEET, AND A CHORD WHICH BEARS S 00°43'44" E, A DISTANCE OF 90.03 FEET TO A ½-INCH IRON ROD WITH A PLASTIC CAP STAMPED "HR GREEN" SET IN THE WEST LINE OF LOT 10, BLOCK D, SAID WATER OAK NORTH SECTION 6, AT A NON-TANGENT END OF CURVE IN AN EAST LINE OF THE SAID 1,143.511 ACRE TRACT AND OF THE TRACT DESCRIBED HEREIN,

4. S 01°26'18" E, A DISTANCE OF 234.09 FEET TO A ½-INCH IRON ROD WITH A PLASTIC CAP STAMPED "GBI PARTNERS" FOUND AT THE SOUTHWEST CORNER OF LOT 11, BLOCK D, SAID WATER OAK NORTH SECTION 6, FOR A RE-ENTRANT CORNER OF THE SAID 1,143.511 ACRE TRACT AND OF THE TRACT DESCRIBED HEREIN,

5. S 73°51'48" E, A DISTANCE OF 545.48 FEET TO A ½-INCH IRON ROD WITH A PLASTIC CAP STAMPED "LANDDEV" PREVIOUSLY SET FOR AN ANGLE POINT IN THE SOUTH LINE OF LOT 1, BLOCK E, SAID WATER OAK NORTH SECTION 6, AT AN ANGLE POINT IN A NORTH LINE OF THE SAID 1,143.511 ACRE TRACT AND OF THE TRACT DESCRIBED HEREIN,

6. S 89°08'27" E, A DISTANCE OF 70.34 FEET TO A ½-INCH IRON ROD WITH A PLASTIC CAP STAMPED "LANDDEV" PREVIOUSLY SET FOR AN ANGLE POINT IN THE SOUTH LINE OF SAID LOT 1, BLOCK E, WATER OAK NORTH SECTION 6, AT AN ANGLE POINT IN A NORTH LINE OF THE SAID 1,143.511 ACRE TRACT AND OF THE TRACT DESCRIBED HEREIN,

7. S 83°26'44" E, A DISTANCE OF 1,532.60 FEET TO A MAG-NAIL SET FOR AN ANGLE POINT IN THE SOUTH LINE OF SAID LOT 1, BLOCK E, WATER OAK NORTH SECTION 6, AT AN ANGLE POINT IN A NORTH LINE OF THE SAID 1,143.511 ACRE TRACT AND OF THE TRACT DESCRIBED HEREIN,

8. N 85°31'26" E, A DISTANCE OF 278.11 FEET TO A ½-INCH IRON ROD WITH A PLASTIC CAP STAMPED "HR GREEN" SET FOR THE SOUTHERLY SOUTHEAST CORNER OF SAID LOT 1, BLOCK E, WATER OAK NORTH SECTION 6, AT A RE-ENTRANT CORNER OF THE SAID 1,143.511 ACRE TRACT AND OF THE TRACT DESCRIBED HEREIN,

9. N 04°28'34" W, A DISTANCE OF 130.00 FEET TO A ½-INCH IRON ROD WITH A PLASTIC CAP STAMPED "HR GREEN" SET FOR A RE-ENTRANT CORNER IN THE EAST LINE OF SAID LOT 1, BLOCK E, WATER OAK NORTH SECTION 6, AT A NORTHWEST CORNER OF THE SAID 1,143.511 ACRE TRACT, AND OF THE TRACT DESCRIBED HEREIN, AND

10. N 85°31'26" E, A DISTANCE OF 160.70 FEET TO A ½-INCH IRON ROD WITH A PLASTIC CAP STAMPED "HR GREEN" SET (REPLACING A ½-INCH IRON ROD WITH A PLASTIC CAP STAMPED "GBI PARTNERS" PREVIOUSLY FOUND, NOW DESTROYED) IN THE WEST LINE OF LOT 1, BLOCK E, RIVERSTONE PHASE A, A SUBDIVISION ACCORDING TO THE PLAT OR MAP OF RECORD IN DOCUMENT NO. 2023015175, OFFICIAL PUBLIC RECORDS OF WILLIAMSON COUNTY, TEXAS, FOR THE EASTERLY SOUTHEAST CORNER OF SAID LOT 1, BLOCK E, WATER OAK NORTH SECTION 6, AND THE EASTERLY NORTHEAST CORNER OF THE SAID 1,143.511 ACRE TRACT, FOR THE EASTERLY NORTHEAST CORNER OF THE TRACT DESCRIBED HEREIN, FROM WHICH A ½-INCH IRON ROD WITH A PLASTIC CAP STAMPED "BURY & PARTNERS" FOUND IN THE WEST LINE OF LOT 42, BLOCK A, SAID RIVERSTONE PHASE A, AT THE NORTHEAST CORNER OF LOT 53, BLOCK A, SAID WATER OAK NORTH SECTION 6, AND THE SOUTHEAST CORNER OF LOT 3A, BLOCK C, REPLAT OF LOT 1, BLOCK G AND LOT 3, BLOCK C, WATER OAK NORTH, SECTION 1, A SUBDIVISION ACCORDING TO THE PLAT OR MAP OF RECORD IN DOCUMENT NO. 2015074069, OFFICIAL PUBLIC RECORDS OF WILLIAMSON COUNTY, TEXAS, BEARS N 09°21'58" W, A DISTANCE OF 65.31 FEET;

THENCE LEAVING THE EASTERLY SOUTHEAST CORNER OF SAID LOT 1, BLOCK E, WATER OAK NORTH SECTION 6, WITH THE EAST LINE OF THE SAID 1,143.511 ACRE TRACT AND THE WEST LINE OF SAID LOT 1, BLOCK E, RIVERSTONE PHASE A, WITH THE EAST LINE OF THE TRACT DESCRIBED HEREIN, THE FOLLOWING THREE (3) COURSES AND DISTANCES:

1. S 11°20'53" E, A DISTANCE OF 24.19 FEET TO A ½-INCH IRON ROD FOUND AT AN ANGLE POINT,

2. S 08°50'58" E, A DISTANCE OF 206.57 FEET TO A ½-INCH IRON ROD WITH A PLASTIC CAP STAMPED "BURY & PARTNERS" FOUND AT AN ANGLE POINT, FROM WHICH A ½-INCH IRON ROD FOUND BEARS S 09°20' E, A DISTANCE OF 2.45 FEET, AND

3. S 00°27'00" E, A DISTANCE OF 188.80 FEET TO A CALCULATED POINT NEAR THE CENTER OF THE SOUTH SAN GABRIEL RIVER, IN THE NORTH LINE OF A CERTAIN CALLED 190.40 ACRE TRACT DESCRIBED IN THE WARRANTY DEED TO TEXAS CRUSHED STONE COMPANY OF RECORD IN VOLUME 743, PAGE 47, DEED RECORDS OF WILLIAMSON COUNTY, TEXAS, AT THE EASTERLY SOUTHEAST CORNER OF THE SAID 1,143.511 ACRE TRACT, AND THE SOUTHWEST CORNER OF SAID LOT 1, BLOCK E, RIVERSTONE PHASE A, FOR THE EASTERLY SOUTHEAST CORNER OF THE TRACT DESCRIBED HEREIN;

THENCE UPSTREAM, WITH THE APPROXIMATE CENTER OF THE SOUTH SAN GABRIEL RIVER, WITH A SOUTH LINE OF THE SAID 1,143.511 ACRE TRACT, WITH THE NORTH LINE OF THE SAID 190.40 ACRE TRACT, WITH A SOUTH LINE OF THE TRACT DESCRIBED HEREIN, THE FOLLOWING SEVEN (7) COURSES AND DISTANCES:

1. S 87°24'44" W, A DISTANCE OF 362.86 FEET TO A CALCULATED ANGLE POINT,

2. N 78°00'58" W, A DISTANCE OF 85.59 FEET TO A CALCULATED ANGLE POINT,

3. S 80°20'41" W, A DISTANCE OF 148.88 FEET TO A CALCULATED ANGLE POINT,

4. S 65°09'43" W, A DISTANCE OF 207.18 FEET TO A CALCULATED ANGLE POINT,

5. N 66°14'34" W, A DISTANCE OF 40.94 FEET TO A CALCULATED ANGLE POINT,

6. N 89°29'27" W, A DISTANCE OF 541.24 FEET TO A CALCULATED ANGLE POINT, AND

7. N 79°22'43" W, A DISTANCE OF 179.86 FEET TO A CALCULATED POINT FOR THE NORTHWEST CORNER OF THE SAID 190.40 ACRE TRACT AND A RE-ENTRANT CORNER OF THE SAID 1,143.511 ACRE TRACT AND OF THE TRACT DESCRIBED HEREIN;

THENCE LEAVING THE APPROXIMATE CENTER OF THE SOUTH SAN GABRIEL RIVER, WITH THE EAST LINE OF THE SAID 1,143.511 ACRE TRACT, WITH THE WEST LINE OF THE SAID 190.40 ACRE TRACT, WITH THE EAST LINE OF THE TRACT DESCRIBED HEREIN, THE FOLLOWING SEVEN (7) COURSES AND DISTANCES:

1. S 01°52'29" E, A DISTANCE OF 1,026.81 FEET TO A ½-INCH IRON ROD WITH A PLASTIC CAP STAMPED "FOREST 1847" FOUND AT AN ANGLE POINT,

2. S 01°10'40" E, A DISTANCE OF 167.70 FEET TO A CALCULATED ANGLE POINT,

3. S 00°03'43" W, A DISTANCE OF 341.88 FEET TO A ½-INCH IRON PIPE FOUND AT AN ANGLE POINT,

4. S 06°25'34" E, A DISTANCE OF 359.41 FEET TO A 60-D NAIL FOUND AT AN ANGLE POINT,

5. S 01°44'52" E, A DISTANCE OF 480.74 FEET TO A ½-INCH IRON ROD WITH A PLASTIC CAP STAMPED "BURY & PARTNERS" FOUND AT AN ANGLE POINT,

6. S 02°46'41" E, A DISTANCE OF 258.57 FEET TO A 3/8-INCH IRON ROD FOUND AT AN ANGLE POINT, AND

7. S 02°30'52" E, A DISTANCE OF 1,139.58 FEET TO A ½-INCH IRON ROD WITH A PLASTIC CAP STAMPED "BURY & PARTNERS" FOUND IN A NORTH LINE OF THE SAID 77.902 ACRE TRACT, AT THE SOUTHWEST CORNER OF THE SAID 190.40 ACRE TRACT AND A SOUTHEAST CORNER OF THE SAID 1,143.511 ACRE TRACT, FOR A SOUTHEAST CORNER OF THE TRACT DESCRIBED HEREIN;

THENCE LEAVING THE SOUTHWEST CORNER OF THE SAID 190.40 ACRE TRACT, WITH THE NORTH LINE OF THE SAID 77.902 ACRE TRACT, WITH AN INTERIOR SOUTH LINE OF THE SAID 1,143.511 ACRE TRACT, WITH THE SOUTH LINE OF THE TRACT DESCRIBED HEREIN, THE FOLLOWING SEVEN (7) COURSES AND DISTANCES:

1. S 68°17'59" W, A DISTANCE OF 128.90 FEET TO A COTTON-GIN SPINDLE FOUND AT A SOUTHWEST CORNER OF THE SAID 1,143.511 ACRE TRACT SAME BEING AN ANGLE POINT IN THE NORTH LINE OF THE SAID 77.902 ACRE TRACT,

2. N 36°37'42" W, A DISTANCE OF 381.69 FEET TO A ½-INCH IRON ROD WITH A PLASTIC CAP STAMPED "BURY & PARTNERS" FOUND AT AN ANGLE POINT,

3. N 68°47'14" W, A DISTANCE OF 137.81 FEET TO A ½-INCH IRON ROD WITH A PLASTIC CAP STAMPED "BURY & PARTNERS" FOUND AT AN ANGLE POINT,

4. S 84°13'58" W, A DISTANCE OF 214.25 FEET TO A ½-INCH IRON ROD WITH A PLASTIC CAP STAMPED "BURY & PARTNERS" FOUND AT AN ANGLE POINT,

5. S 71°39'20" W, A DISTANCE OF 180.19 FEET TO A COTTON-GIN SPINDLE FOUND AT AN ANGLE POINT,

6. S 75°44'15" W, A DISTANCE OF 433.41 FEET TO A COTTON-GIN SPINDLE FOUND AT AN ANGLE POINT, AND

7. S 80°39'24" W, A DISTANCE OF 377.24 FEET TO A CALCULATED POINT AT A RE-ENTRANT CORNER OF THE SAID 1,143.511 ACRE TRACT, AND THE NORTHWEST CORNER OF THE EASTERN RESIDUAL PARCEL OF THE SAID 77.902 ACRE TRACT, SAME BEING THE NORTHEAST CORNER OF THE SAID 3.080 ACRE TRACT, FOR A RE-ENTRANT CORNER OF THE TRACT DESCRIBED HEREIN, FROM WHICH A 60-D NAIL FOUND BEARS N 61°20' W, A DISTANCE OF 0.38 FEET;

THENCE LEAVING A SOUTH LINE OF THE SAID 1,143.511 ACRE TRACT, WITH THE WEST LINE OF THE EASTERN RESIDUAL PARCEL OF THE SAID 77.902 ACRE TRACT, WITH THE EAST LINE OF THE SAID 3.080 ACRE TRACT, WITH AN EAST LINE OF THE TRACT DESCRIBED HEREIN, WITH THE ARC OF A CURVE TO THE RIGHT, HAVING A RADIUS OF 878.50 FEET, AN ARC DISTANCE OF 764.04 FEET, AND A CHORD WHICH BEARS S 46°34'35" E, A DISTANCE OF 740.19 FEET TO A MAG-NAIL FOUND IN THE NORTH LINE OF LOT 3, BLOCK K, SAID PARKSIDE ON THE RIVER PHASE 2, SECTIONS 5 AND 6, AT THE SOUTHEAST CORNER OF THE SAID 3.080 ACRE TRACT SAME BEING THE WESTERLY SOUTHWEST CORNER OF THE EASTERN RESIDUAL PARCEL OF THE SAID 77.902 ACRE TRACT AND A RE-ENTRANT CORNER OF THE SAID 1,143.511 ACRE TRACT, FOR A SOUTHEAST CORNER OF THE TRACT DESCRIBED HEREIN;

THENCE WITH THE NORTH LINE OF SAID PARKSIDE ON THE RIVER PHASE 2, SECTIONS 5 AND 6, WITH THE SOUTH LINE OF THE SAID 3.080 ACRE TRACT, WITH A SOUTH LINE OF THE TRACT DESCRIBED HEREIN, THE FOLLOWING TWO (2) COURSES AND DISTANCES:

1. S 68°08'51" W, AT A DISTANCE OF 66.49 FEET, PASSING A ½-INCH IRON ROD WITH A PLASTIC CAP STAMPED "HR GREEN" SET FOR THE TERMINUS OF THE EAST RIGHT-OF-WAY LINE OF SAID GREENVIEW PARKWAY AND THE NORTHWEST CORNER OF LOT 1, BLOCK K, SAID PARKSIDE ON THE RIVER PHASE 2, SECTIONS 5 AND 6, AND CONTINUING FOR A TOTAL DISTANCE OF 129.88 FEET TO A CALCULATED ANGLE POINT IN A FENCE POST, AND

2. S 68°08'37" W, A DISTANCE OF 11.25 FEET TO THE POINT OF BEGINNING AND CONTAINING 417.0 ACRES OF LAND, MORE OR LESS.

BEARING BASIS: TEXAS COORDINATE SYSTEM, CENTRAL ZONE, NAD83, GRID.

NO.	REVISION	BY	DATE

Know what's below.
Call before you dig.

HRGreen®
DEVELOPMENT TX
5508 HIGHWAY 290 WEST
SUITE 150
AUSTIN, TEXAS 78735
512.872.6696
HRGREEN.COM
TBPE NO: 16384
TBPLS NO: 10194101

STATE OF TEXAS
CHRISTINE N. CAMPBELL
142536
LICENSED
PROFESSIONAL ENGINEER
05/16/2025

METES AND BOUNDS SHEET

PARKSIDE ON THE RIVER
SECTIONS 11-15 & WON 5
PRELIMINARY PLAT
GEORGETOWN, WILLIAMSON, TEXAS

DESIGNED BY: CC
DRAWN BY: MM/TG
CHECKED BY: CC
APPROVED BY: SN
SHEET 24 OF 25

2024-15-PP

Sheet Location: P:\blake magee\parkside sections 11-15 & won 5\preliminary plat\03_ACAD\Plans\sh2402671 PP NOTE.dwg, PRELIMINARY PLAT NOTES SHEET 2, June 23, 2025, 2:34 PM, mmuhammad
Data Shortcut Folder Location:

Approved by COG on 6/30/2025

ENGINEER'S CERTIFICATION

I, CHRISTINE CAMPBELL, REGISTERED PROFESSIONAL ENGINEER IN THE STATE OF TEXAS, DO HEREBY CERTIFY THAT THIS SUBDIVISION IS WITHIN THE EDWARDS AQUIFER RECHARGE ZONE AND CONTRIBUTING ZONE. THAT PORTIONS OF THIS SUBDIVISION ARE WITHIN THE ZONE A FLOOD AREA AND THE ZONE AE FLOOD AREA, AS DENOTED HEREIN, AS DEFINED BY FEDERAL EMERGENCY MANAGEMENT ADMINISTRATION FLOOD HAZARD FLOOD INSURANCE RATE MAP, COMMUNITY PANEL NUMBERS 48491C0460F, EFFECTIVE DATE DECEMBER 20, 2019, 48491C0480F, EFFECTIVE DATE DECEMBER 20, 2019, AND 48491C0275E, EFFECTIVE DATE SEPTEMBER 26, 2008. THAT PORTIONS OF THIS SUBDIVISION ARE ALSO AFFECTED BY THE APPROVED CLOMR #15-06-2071R AND THE APPROVED LOMR #21-06-0115P. THAT EACH LOT WITHIN THIS SUBDIVISION CONFORMS TO THE CITY OF GEORGETOWN REGULATIONS AS MODIFIED BY THE DEVELOPMENT AGREEMENT ORDINANCE #2019-69 AND AMENDMENTS.

THE FULLY DEVELOPED, CONCENTRATED STORMWATER RUNOFF RESULTING FROM THE ONE HUNDRED (100) YEAR FREQUENCY STORM IS CONTAINED WITHIN THE DRAINAGE EASEMENTS SHOWN AND/ OR PUBLIC RIGHTS-OF-WAY DEDICATED BY THIS PLAT.

TO CERTIFY WHICH, WITNESS MY HAND AND SEAL AT AUSTIN, TRAVIS COUNTY, TEXAS, THIS 23rd DAY OF June, 2025.

CHRISTINE CAMPBELL, P.E.
REGISTERED PROFESSIONAL ENGINEER
NO. 142536 STATE OF TEXAS
HR GREEN DEVELOPMENT TX, LLC
5508 HIGHWAY 290 WEST, SUITE 150
AUSTIN, TEXAS 78735

STATE OF TEXAS · CHRISTINE N. CAMPBELL · 142536 · LICENSED PROFESSIONAL ENGINEER

SURVEYOR'S CERTIFICATION

I, ERNESTO NAVARRETE, REGISTERED PROFESSIONAL LAND SURVEYOR IN THE STATE OF TEXAS, DO HEREBY CERTIFY THAT THIS PLAT IS TRUE AND CORRECTLY MADE FROM AN ACTUAL SURVEY MADE ON THE GROUND OF THE PROPERTY LEGALLY DESCRIBED HEREON, AND THAT THERE ARE NO APPARENT DISCREPANCIES, CONFLICTS, OVERLAPPING OF IMPROVEMENTS, VISIBLE UTILITY LINES OR ROADS IN PLACE, EXCEPT AS SHOWN ON THE ACCOMPANYING PLAT, AND THAT THE CORNER MONUMENTS SHOWN THEREON WERE PROPERLY PLACED UNDER MY SUPERVISION IN ACCORDANCE WITH THE SUBDIVISION REGULATIONS OF THE CITY OF GEORGETOWN, TEXAS.

TO CERTIFY WHICH, WITNESS MY HAND AND SEAL AT AUSTIN, TRAVIS COUNTY, TEXAS,

20 DAY OF JUNE, 2025.

ERNESTO NAVARRETE
REGISTERED PROFESSIONAL LAND SURVEYOR NO. 6642
HR GREEN DEVELOPMENT TX, LLC
5508 HIGHWAY 290 WEST, SUITE 150
AUSTIN, TEXAS 78735

STATE OF TEXAS · REGISTERED · ERNESTO NAVARRETE · 6642 · PROFESSIONAL LAND SURVEYOR

PLAT NOTES:

1. CURRENT UTILITY PROVIDERS FOR THIS DEVELOPMENT ARE WATER: CITY OF GEORGETOWN, WASTEWATER: CITY OF GEORGETOWN, AND ELECTRIC: PEDERNALES ELECTRIC COOPERATIVE, INC.
2. ALL STRUCTURES/OBSTRUCTIONS ARE PROHIBITED IN OPEN CHANNEL AND FLOODPLAIN DRAINAGE EASEMENTS.
3. THERE ARE AREAS WITHIN THE BOUNDARIES OF THIS SUBDIVISION IN THE 100-YEAR FLOODPLAIN AS DEFINED BY FIRM MAP NUMBERS 48491C0460F, EFFECTIVE DATE OF DECEMBER 20, 2019 AND 48491C0480F, EFFECTIVE DATE DECEMBER 20, 2019. PORTIONS OF THIS SUBDIVISION ARE ALSO AFFECTED BY THE APPROVED CLOMR #15-06-2071R AND THE APPROVED LOMR #21-06-0115P. NO PORTION OF THIS SUBDIVISION IS WITHIN SPECIAL FLOOD HAZARD AREAS INUNDATED BY THE 100 YEAR FLOOD AS IDENTIFIED BY THE U.S. FEDERAL EMERGENCY MANAGEMENT AGENCY FLOOD INSURANCE RATE MAP NUMBER 48491C0275E, EFFECTIVE DATE SEPTEMBER 26, 2008.
4. IN ORDER TO PROMOTE DRAINAGE AWAY FROM A STRUCTURE, THE SLAB ELEVATION SHOULD BE BUILT AT LEAST ONE FOOT ABOVE THE SURROUNDING GROUND, AND THE GROUND SHOULD BE GRADED AWAY FROM THE STRUCTURE AT A SLOPE OF 1/2" PER FOOT FOR A DISTANCE OF AT LEAST 10 FEET.
5. ALL WATER QUALITY, SEDIMENTATION, FILTRATION, DETENTION, AND/OR RETENTION BASINS AND RELATED APPURTENANCES SHOWN SHALL BE SITUATED WITHIN A DRAINAGE EASEMENT OR DRAINAGE LOT. THE M.U.D., HOA, OR ASSIGNEES OF THE TRACTS UPON WHICH ARE LOCATED SUCH EASEMENTS, APPURTENANCES, DETENTION, AND WATER QUALITY FACILITIES SHALL MAINTAIN SAME AND BE RESPONSIBLE FOR THEIR MAINTENANCE, ROUTINE INSPECTION AND UPKEEP.
6. PARKLAND WILL BE DEDICATED PER THE DEVELOPMENT AGREEMENT AND IT IS NOT PROVIDED IN THIS PRELIMINARY PLAT. THE PARKLAND LOTS ARE SHOWN ON THIS PRELIMINARY PLAT FOR REFERENCE ONLY, TO DEMONSTRATE THAT THE REQUIRED 75 ACRES (AS STIPULATED IN THE DEVELOPMENT AGREEMENT, ORDINANCE #2019-69 AND ITS AMENDMENTS) HAVE BEEN RESERVED FOR THIS USE. THE PARKLAND AREA WILL BE DEDICATED TO THE CITY OF GEORGETOWN USING SEPARATE INSTRUMENT.
7. ANY HERITAGE TREE AS NOTED ON THIS PLAT IS SUBJECT, IN PERPETUITY, TO THE MAINTENANCE, CARE, PRUNING AND REMOVAL REQUIREMENTS OF THE CITY OF GEORGETOWN. APPROVED REMOVAL DOES NOT REQUIRE MODIFICATION OF THE PLAT.
8. ALL INDIVIDUAL LOTS CONTAINING HERITAGE TREES ARE CONFIGURED AND DESIGNED SO THAT THE LOT IS DEVELOPABLE FOR THE INTENDED PURPOSE WITHOUT REQUIRING REMOVAL OF THE HERITAGE TREES OR EXCEEDING THE PERCENTAGE OF ALLOWABLE DISTURBANCE WITHIN THE HERITAGE TREES CRZ.
9. WATER QUALITY WILL BE PROVIDED PER TCEQ STANDARDS.
10. A 10-FOOT PUBLIC UTILITY EASEMENT IS RESERVED ALONG ALL STREET FRONTAGES WITHIN THIS PLAT, EXCEPT PARKSIDE PARKWAY, WHICH HAS A 10-FOOT PUBLIC UTILITY EASEMENT RESERVED ONLY ALONG ITS EAST RIGHT-OF-WAY LINE.
11. THE MONUMENTS OF THIS PLAT HAVE BEEN ROTATED TO THE NAD 83/93 HARN - TEXAS CENTRAL ZONE AND NAVD 88.
12. THE MAXIMUM IMPERVIOUS COVERAGE PER RESIDENTIAL LOT SHALL BE IN ACCORDANCE WITH THE PARKSIDE ON THE RIVER DEVELOPMENT AGREEMENT (ORD 2019-69 AND AMENDMENTS, DOCUMENT NO. 2019117041) EXHIBIT M-1. 45' WIDE LOTS = 65%, 50' AND 60' WIDE LOTS = 60%, AND 70'+ WIDE LOTS = 50%.
13. THE MAXIMUM IMPERVIOUS COVER FOR SINGLE FAMILY AND MULTIFAMILY LOTS SHALL BE PER EXHIBIT M-1 OF THE PARKSIDE ON THE RIVER DEVELOPMENT AGREEMENT (ORD 2019-69 AND AMENDMENTS) BASED ON LOT SIZE.
14. THE LANDOWNER ASSUMES ALL RISKS ASSOCIATED WITH IMPROVEMENTS LOCATED IN THE RIGHT-OF-WAY, OR ROAD WIDENING EASEMENTS. BY PLACING ANYTHING IN THE RIGHT-OF-WAY OR ROAD WIDENING EASEMENTS THE LANDOWNER INDEMNIFIES AND HOLDS THE CITY OF GEORGETOWN, WILLIAMSON COUNTY, THEIR OFFICERS, AGENTS AND EMPLOYEES HARMLESS FROM ANY LIABILITY OWING TO PROPERTY DEFECTS OR NEGLIGENCE NOT ATTRIBUTABLE TO THEM AND ACKNOWLEDGES THAT THE IMPROVEMENTS MAY BE REMOVED BY THE CITY AND/OR COUNTY AND THAT THE OWNER OF THE IMPROVEMENTS WILL BE RESPONSIBLE FOR THE RELOCATION AND/OR REPLACEMENT OF THE IMPROVEMENTS.
15. THE BUILDING OF ALL STREETS, ROADS AND OTHER PUBLIC THOROUGHFARES AND ANY BRIDGES OR CULVERTS NECESSARY TO BE CONSTRUCTED OR PLACED, IS THE RESPONSIBILITY OF THE OWNERS OF THIS TRACT OF LAND COVERED BY THIS PLAT IN ACCORDANCE WITH PLANS AND SPECIFICATIONS PRESCRIBED BY THE CITY OF GEORGETOWN AND/OR WILLIAMSON COUNTY, TEXAS. NEITHER THE CITY OF GEORGETOWN NOR WILLIAMSON COUNTY ASSUME ANY RESPONSIBILITY FOR DRAINAGE WAYS OR EASEMENTS IN THE SUBDIVISION, OTHER THAN THOSE DRAINING OR PROTECTING THE ROAD SYSTEM AND STREETS IN THEIR RESPECTIVE JURISDICTIONS.
16. NEITHER THE CITY OF GEORGETOWN NOR WILLIAMSON COUNTY ASSUMES ANY RESPONSIBILITY FOR THE ACCURACY OF REPRESENTATIONS BY OTHER PARTIES IN THIS PLAT. FLOOD PLAIN DATA IN PARTICULAR, MAY CHANGE DEPENDING ON SUBSEQUENT DEVELOPMENT. IT IS FURTHER UNDERSTOOD THAT THE OWNERS OF THE TRACT OF LAND COVERED BY THIS PLAT MUST INSTALL AT THEIR OWN EXPENSE ALL TRAFFIC CONTROL DEVICES AND SIGNAGE THAT MAY BE REQUIRED BEFORE THE STREETS IN THE SUBDIVISION HAVE FINALLY BEEN ACCEPTED FOR MAINTENANCE BY THE CITY AND/OR COUNTY.
17. RIGHT-OF-WAY EASEMENTS FOR WIDENING ROADWAYS OR IMPROVING DRAINAGE SHALL BE MAINTAINED BY THE LANDOWNER UNTIL ROAD OR DRAINAGE IMPROVEMENTS ARE ACTUALLY CONSTRUCTED ON THE PROPERTY. THE CITY AND/OR COUNTY HAS THE RIGHT AT ANY TIME TO TAKE POSSESSION OF ANY ROAD WIDENING EASEMENT FOR CONSTRUCTION, IMPROVEMENT, OR MAINTENANCE OF THE ADJACENT ROAD.
18. UNLESS OTHERWISE NOTED HEREIN, ALL EASEMENTS DEDICATED TO THE CITY OF GEORGETOWN BY THIS PLAT SHALL BE EXCLUSIVE TO THE CITY OF GEORGETOWN, AND GRANTOR COVENANTS THAT GRANTOR AND GRANTOR'S HEIRS, SUCCESSORS, AND ASSIGNS SHALL NOT CONVEY ANY OTHER EASEMENT, LICENSE, OR CONFLICTING RIGHT TO USE IN ANY MANNER, THE AREA (OR ANY PORTION THEREOF) COVERED BY THIS GRANT.
19. ALL EASEMENTS DEDICATED TO THE CITY OF GEORGETOWN BY THIS PLAT ADDITIONALLY INCLUDE THE FOLLOWING RIGHTS: (1) THE RIGHT OF THE CITY TO CHANGE THE SIZE OF ANY FACILITIES INSTALLED, MAINTAINED OR OPERATED WITHIN THE EASEMENT AREA; (2) THE RIGHT OF THE CITY TO RELOCATE ANY FACILITIES WITHIN THE EASEMENT AREA; AND (3) THE RIGHT OF THE CITY TO REMOVE FROM THE EASEMENT AREA ALL TREES AND PARTS THEREOF, OR OTHER OBSTRUCTIONS, WHICH ENDANGER OR MAY INTERFERE WITH THE EFFICIENCY AND MAINTENANCE OF ANY FACILITIES WITHIN THE EASEMENT AREA.
20. THIS PLAT IS SUBJECT TO THE PROVISIONS OF THE CITY OF GEORGETOWN WATER CONSERVATION ORDINANCE.
21. THE SUBDIVISION SUBJECT TO THIS APPLICATION IS SUBJECT TO THE WATER QUALITY REGULATIONS OF THE CITY OF GEORGETOWN.
22. A GEOLOGIC ASSESSMENT, IN ACCORDANCE WITH THE CITY OF GEORGETOWN WATER QUALITY REGULATIONS, WAS COMPLETED ON APRIL 2025. ANY SPRINGS AND STREAMS AS IDENTIFIED IN THE GEOLOGIC ASSESSMENT ARE SHOWN HEREIN.
23. STATE-OWNED RIVERBEDS AND BEDS OF NAVIGABLE STREAMS IN THE PUBLIC DOMAIN ARE HELD IN TRUST FOR THE PUBLIC. THERE IS HEREBY GRANTED FOR THE USE AND BENEFIT OF THE PUBLIC A CONTINUING ACCESS EASEMENT FOR THE FREE AND UNOBSTRUCTED USE OF THE NAVIGABLE RIVER AND THE RIGHT OF PORTAGE ALONG ITS BANKS, ACROSS ANY PORTION OF THE PROPERTY BETWEEN THE MEAN HIGH-WATER MARKS OF THE RIVER IN ITS NATURAL STATE.
24. THE DEVELOPMENT SHOWN HEREON IS SUBJECT TO THE AGREEMENT WITH THE CITY OF GEORGETOWN, TEXAS RECORDED AS DOCUMENT NOS. 2019117041, 2020162167, 2021082512, 2024031828 OF THE OFFICIAL PUBLIC RECORDS OF WILLIAMSON COUNTY, TEXAS. (PARKSIDE ON THE RIVER DEVELOPMENT AGREEMENT AND AMENDMENTS, ORDINANCE NOS. 2019-69, 2020-84, 2021-40, 2024-18, AND THE ASSOCIATED UNIFIED DEVELOPMENT CODE.) UNLESS OTHERWISE REQUIRED, AMENDMENT, REVISION, OR CANCELLATION OF THAT AGREEMENT SHALL NOT REQUIRE MODIFICATION OF THIS PLAT.
25. MAINTENANCE RESPONSIBILITY FOR DRAINAGE WILL NOT BE ACCEPTED BY THE COUNTY OTHER THAN THAT ACCEPTED IN CONNECTION WITH DRAINING OR PROTECTING THE ROAD SYSTEM. MAINTENANCE RESPONSIBILITY FOR STORM WATER MANAGEMENT CONTROLS WILL REMAIN WITH THE OWNER.
26. ALL SIDEWALKS SHALL BE MAINTAINED BY THE HOMEOWNERS ASSOCIATION, EXCEPT THE 10' SIDEWALK ALONG PARKSIDE PARKWAY, WHICH WILL BE MAINTAINED BY THE M.U.D.
27. NO STRUCTURE OR LAND IN THIS PLAT SHALL HEREAFTER BE LOCATED OR ALTERED WITHOUT FIRST OBTAINING A CERTIFICATE OF COMPLIANCE FROM THE WILLIAMSON COUNTY FLOODPLAIN ADMINISTRATOR.
28. ALL LOTS WITH 5' SETBACKS SHALL REQUIRE 1,500 GPM FIRE FLOWS. REQUIRED FIRE FLOWS SHALL BE PROVIDED BY DEVELOPER THROUGH ELEVATED STORAGE, GROUND STORAGE AND PUMPS, OR OTHER APPROVED INFRASTRUCTURE.
29. ALL LOTS SHALL HAVE A 5-FOOT PUBLIC UTILITY EASEMENT ON EACH SIDE OF THE SIDE LOT LINE.
30. ALL PUBLIC ROADWAYS AND EASEMENTS AS SHOWN ON THIS PLAT ARE FREE OF LIENS.
31. IMPROVEMENTS WITHIN THE COUNTY ROAD RIGHT-OF-WAY INCLUDING, BUT NOT LIMITED TO, LANDSCAPING, IRRIGATION, LIGHTING, CUSTOM SIGNS, IS PROHIBITED WITHOUT FIRST OBTAINING AN EXECUTED LICENSE AGREEMENT WITH WILLIAMSON COUNTY.

NO.	REVISION	BY	DATE

811 Know what's below. Call before you dig.

HRGreen®
5508 HIGHWAY 290 WEST
SUITE 150
AUSTIN, TEXAS 78735
512.872.6696
HRGREEN.COM
TBPE NO: 16384
TBPLS NO: 10194101
DEVELOPMENT TX

STATE OF TEXAS · CHRISTINE N. CAMPBELL · 142536 · LICENSED PROFESSIONAL ENGINEER
05/16/2025

PRELIMINARY PLAT NOTES

PARKSIDE ON THE RIVER
SECTIONS 11-15 & WON 5
PRELIMINARY PLAT
GEORGETOWN, WILLIAMSON, TEXAS

DESIGNED BY: CC
DRAWN BY: MM/TG
CHECKED BY: CC
APPROVED BY: SN
SHEET 25 OF 25

2024-15-PP

Sheet Location: P:\blake.magee\parkside sections 11-15 & won 5\preliminary plat\03_ACAD\Plans\sh2402671 PP NOTE.dwg, PRELIMINARY PLAT NOTES SHEET 1, June 23, 2025, 2:34 PM, mmuhammad
Data Shortcut Folder Location:

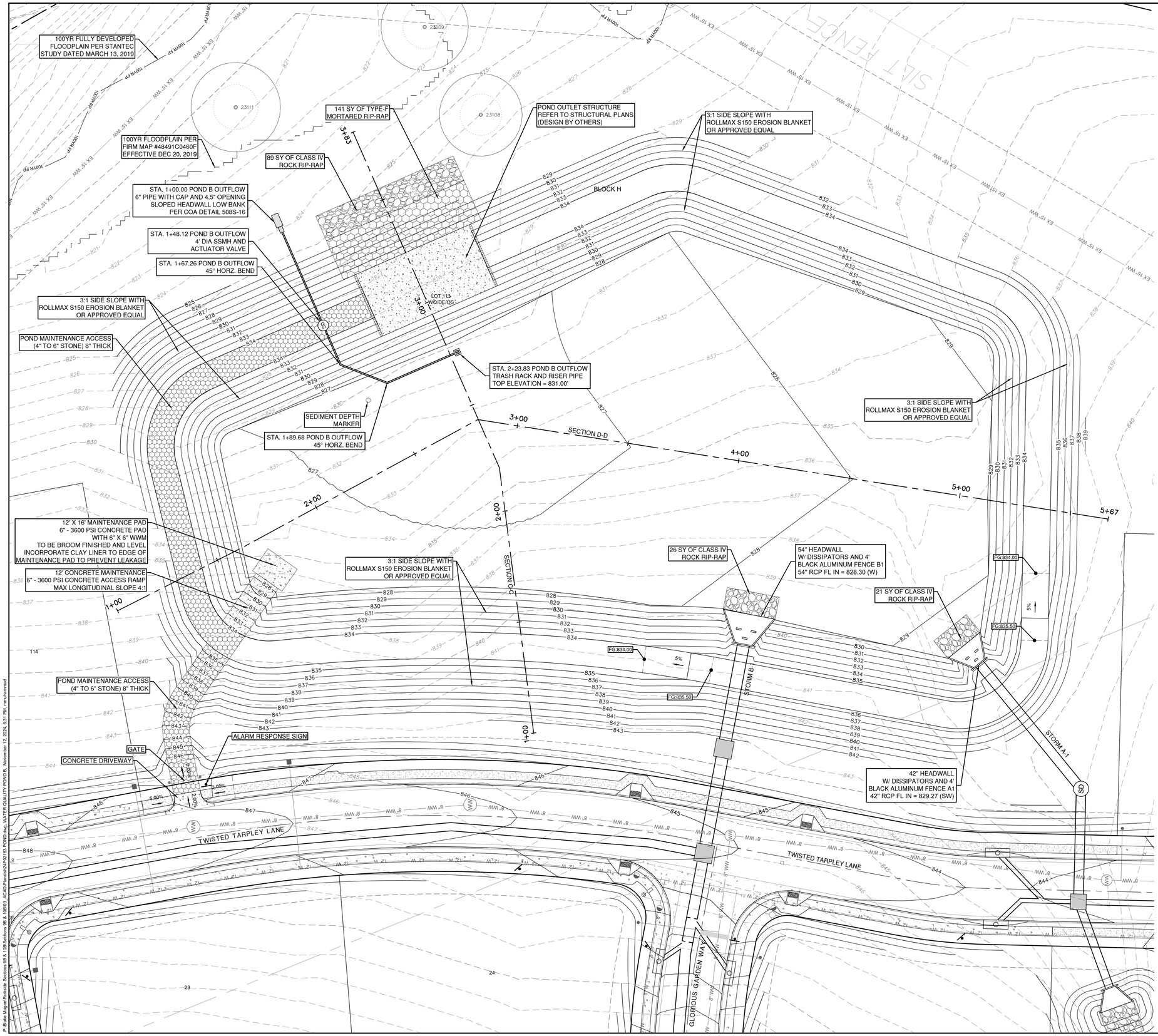

0 20' 40'

SCALE: 1" = 20'

LEGEND

- 834 — EXISTING MINOR CONTOUR
- 835 — EXISTING MAJOR CONTOUR
- 834 — PROPOSED MINOR CONTOUR
- 835 — PROPOSED MAJOR CONTOUR
- BOUNDARY
- EASEMENT
- 100YR — 100 YR PROPOSED CONDITION FLOODPLAIN
- 100 YR FEMA ZONE A FLOODPLAIN
- CREEK CENTERLINE
- 36 — PROPOSED STORM LINE
- FIRE HYDRANT
- WATER VALVE
- SD — STORM SEWER MAHNOLE
- WW — WASTEWATER MANHOLE
- CURB INLET
- TREES TO REMAIN HERITAGE
- TREES TO REMAIN NON HERITAGE

GENERAL NOTES:

1. CONTRACTOR TO UTILIZE A TEMPORARY CONSTRUCTION PUMP TO DISCHARGE WATER FROM THE POND AFTER A RAINFALL EVENT, DURING CONSTRUCTION. PUMP IS TO DISCHARGE UPSTREAM OF PROPOSED ROCK BERM LOCATED BEFORE THE CREEK BED. AT NO TIME SHALL THE PUMP BE DISCHARGED DIRECTLY INTO STORMSEWER SYSTEM BEFORE CROSSING A ROCK BERM.
2. ALL MUD, DIRT, ROCKS, DEBRIS, ETC., SPILLED, TRACKED OR OTHERWISE DEPOSITED ON EXISTING PAVED STREETS, DRIVES, AND AREAS USED BY THE PUBLIC SHALL BE CLEANED UP IMMEDIATELY. CONTRACTOR WILL CLEAN UP SPOILS THAT MIGRATE ONTO ROADS A MINIMUM OF ONCE DAILY.
3. ALL DISTURBED AREAS TO BE REVEGETATED PRIOR TO ACCEPTANCE.
4. IF DISTURBED AREA IS NOT TO BE WORKED ON FOR MORE THAN 14 DAYS, DISTURBED AREA NEEDS TO BE STABILIZED BY REVEGETATION, MULCH, TARP OR REVEGETATION MATTING.
5. THE STABILIZED CONSTRUCTION ENTRANCE SHALL BE MAINTAINED IN A CONDITION THAT WILL PREVENT TRACKING OR FLOWING OF SEDIMENT INTO PUBLIC ROADWAY.
6. THE ENVIRONMENTAL INSPECTOR HAS THE AUTHORITY TO ADD AND/OR MODIFY EROSION/SEDIMENTATION CONTROLS ON SITE TO KEEP PROJECT IN COMPLIANCE WITH THE CITY OF GEORGETOWN RULES AND REGULATIONS. HOWEVER, MODIFICATIONS TO THE ENGINEERING DESIGN AND FUNCTIONS OF THE EROSION AND SEDIMENTATION CONTROLS SYSTEMS CONTAINED HERE IN IS STRICTLY FORBIDDEN WITHOUT THE EXPRESSED WRITTEN CONSENT OF THE SIGNING PROJECT PROFESSIONAL ENGINEER (TAC22 §137.3 AND §137.37).
7. CONTRACTOR SHALL UTILIZE DUST CONTROL MEASURES DURING SITE CONSTRUCTION SUCH AS IRRIGATION TRUCKS AND MULCHING AS PER 1.4.5(A) OR AS DIRECTED BY THE ENVIRONMENTAL INSPECTOR.
8. ALL POND BOTTOMS, SIDE SLOPES, AND EARTHEN EMBANKMENTS SHALL BE COMPACTED TO 95% MAXIMUM DENSITY, IN ACCORDANCE WITH THE CITY OF GEORGETOWN STANDARD SPECIFICATIONS AND PER GEOTECHNICAL ENGINEER'S RECOMMENDATION. ALLOW ADEQUATE VOLUME FOR TOPSOIL TO SUPPORT VEGETATION.
9. GRADING WITHIN THE 1/2 CRITICAL ROOT ZONE OF PROTECTED TREES, IDENTIFIED BY A HATCH PATTERN ON THESE PLANS, SHALL BE LIMITED TO LESS THAN 12 INCHES OF DISTURBANCE. NO GRADING ACTIVITY WITH DISTURBANCE OF MORE THAN 6 INCHES IS ALLOWED IN THE 1/4 CRITICAL ROOT ZONE.
10. GRADING WORK WITHIN THE 1/2 CRITICAL ROOT ZONE OF ALL PROTECTED TREES SHALL BE DONE BY HAND OR WITH RUBBER TIRED EQUIPMENT.
11. ALL RETAINING WALLS GREATER THAN FOUR FEET IN HEIGHT MEASURED FROM THE BOTTOM OF THE FOOTING TO THE TOP OF THE WALL SHALL BE DESIGNED BY A PROFESSIONAL ENGINEER.

DEWATERING PLAN NOTES:

1. CONTRACTOR SHALL MAINTAIN THE DEWATERING SYSTEM TO ENSURE PERFORMANCE. IF THE DEWATERING SYSTEM IS NOT PERFORMING, THE CONTRACTOR MUST IMMEDIATELY MAKE THE NECESSARY MODIFICATIONS, FOLLOWING THE ENVIRONMENTAL INSPECTOR'S DIRECTION TO ENSURE ADEQUATE SYSTEM PERFORMANCE. CONTRACTOR SHALL PROVIDE THE DEWATERING PLAN AT THE PRECONSTRUCTION MEETING.
2. THE SKIMMER IS TO BE USED DURING CONSTRUCTION AND SHALL BE REMOVED AFTER COMPLETING CONSTRUCTION OF THE BATCH DETENTION POND.

NO	REVISION	BY	DATE

811 Know what's below. Call before you dig.

5508 HIGHWAY 290 WEST
SUITE 150
AUSTIN, TX 78735
512.872.6696
HRGREEN.COM

TBPE NO: 16384
TBPLS NO: 10194101

HRGreen® DEVELOPMENT TX

STATE OF TEXAS
SHERVIN NOOSHIN
96807
LICENSED PROFESSIONAL ENGINEER
11/13/2024

WATER QUALITY POND B

PARKSIDE ON THE RIVER SECTIONS 9B & 10B CONSTRUCTION PLANS

GEORGETOWN, WILLIAMSON, TEXAS

DESIGNED BY: CC
DRAWN BY: MM/MKM
CHECKED BY: SN
APPROVED BY:

SHEET 68 OF 136

2024-16-CON

P:\Data Mgmt\Parkside Sections 9B & 10B\03_ACAD\Planset\ACAD\SEQ POND.dwg, WATER QUALITY POND B, November 12, 2024, 6:31 PM, mmuhammad

SECTION C-C

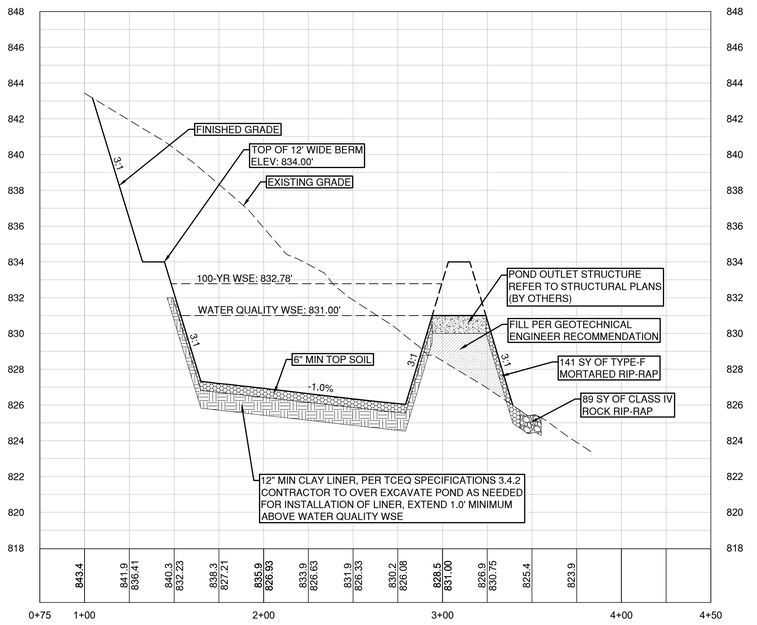

POND B OUTFLOW

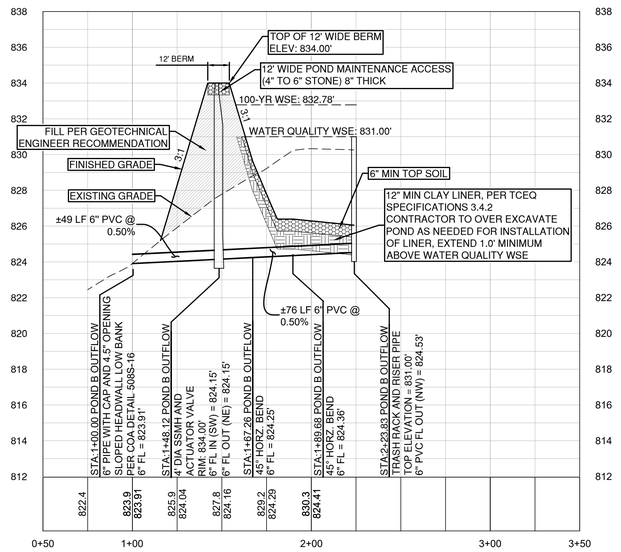

VERT. SCALE: 1" = 4'
HORZ. SCALE: 1" = 40'

4' 2' 0 VERT. SCALE

EXISTING GRADE - CENTERLINE
FINISHED GRADE - CENTERLINE

EXISTING GROUND → 1000.1 997.10 ← PROPOSED FLOWLINE

SECTION D-D

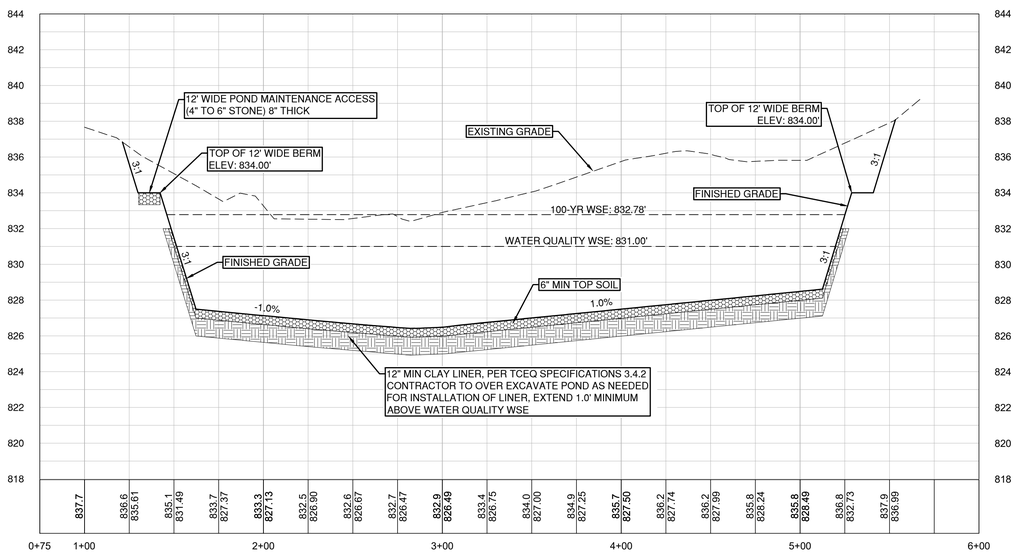

Pond Volume

Elevation	Area		Volume		Cumulative Volume		Comments
	SF	ac	cf	ac*ft	cf	ac*ft	
826	0	0.00					
827	9977	0.23	4,989	0.11	4,989	0.11	
828	30279	0.70	20,128	0.46	25,117	0.58	Water Quality Volume
829	46264	1.06	38,272	0.88	63,388	1.46	
830	50131	1.15	48,198	1.11	111,586	2.56	
831	52990	1.22	51,561	1.18	163,146	3.75	
832	55905	1.28	54,448	1.25	217,594	5.00	Routing
833	58879	1.35	57,392	1.32	274,986	6.31	
834	61907	1.42	60,393	1.39	335,379	7.70	Freeboard

OUTFLOW STRUCTURE	
Elevation	Flow
ft	cfs
831.00	0
831.50	51
832.00	143
832.50	263
833.00	404
833.50	565
834.00	743

$$Q = C_w L H^{1.5}$$

Q - *weir flow rate (cfs)*

C_w - *Weir Coefficient* BROAD: 2.60

L - *horizontal length of weir crest (ft)* BROAD: 35 FT

H - *head above weir crest elevation (ft)*

DRAWDOWN CALCUATIONS FOR A ROUND ORIFICE

PROJECT NAME: PARKSIDE ON THE RIVER SECTIONS 9B & 10B

Pipe Diameter =	6.00	IN	W.Q.V. =	163,146	CF
Orifice Diameter =	4.50	IN	WQ Elev =	831.00	MSL
Outflow Orifice Elev =	823.91	MSL	Pond Bottom Elev =	826.00	MSL
Draining time	42.00	HR	Initial Head =	7.09	FT

TIME	HEAD	OUTFLOW	VOL.	dV	Total dV	H	dH	W.E.
HRS	FT	CFS	CF	CF	CF	FT	FT	MSL
0.00	7.09	1.42	163,146	5,098	5,098	0.16	6.93	831.00
1.00	6.93	1.40	158,048	5,041	10,139	0.15	6.78	830.84
2.00	6.78	1.38	153,007	4,985	15,124	0.15	6.63	830.69
3.00	6.63	1.37	148,022	4,928	20,052	0.15	6.48	830.54
4.00	6.48	1.35	143,094	4,872	24,924	0.15	6.33	830.39
5.00	6.33	1.34	138,222	4,815	29,739	0.15	6.18	830.24
6.00	6.18	1.32	133,407	4,759	34,498	0.15	6.03	830.09
7.00	6.03	1.31	128,648	4,702	39,200	0.14	5.89	829.94
8.00	5.89	1.29	123,946	4,646	43,846	0.14	5.75	829.80
9.00	5.75	1.27	119,300	4,589	48,435	0.14	5.61	829.66
10.00	5.61	1.26	114,711	4,533	52,968	0.14	5.47	829.52
11.00	5.47	1.24	110,178	4,476	57,444	0.14	5.33	829.38
12.00	5.33	1.23	105,702	4,420	61,863	0.14	5.19	829.24
13.00	5.19	1.21	101,283	4,363	66,227	0.13	5.06	829.10
14.00	5.06	1.20	96,919	4,307	70,533	0.13	4.93	828.97
15.00	4.93	1.18	92,613	4,250	74,783	0.13	4.80	828.84
16.00	4.80	1.16	88,363	4,194	78,977	0.13	4.67	828.71
17.00	4.67	1.15	84,169	4,137	83,114	0.13	4.54	828.58
18.00	4.54	1.13	80,032	4,080	87,194	0.13	4.42	828.45
19.00	4.42	1.12	75,952	4,024	91,218	0.12	4.29	828.33
20.00	4.29	1.10	71,928	3,967	95,186	0.12	4.17	828.20
21.00	4.17	1.09	67,960	3,911	99,096	0.12	4.05	828.08
22.00	4.05	1.07	64,050	3,854	102,951	0.12	3.93	827.96
23.00	3.93	1.05	60,195	3,798	106,748	0.12	3.82	827.84
24.00	3.82	1.04	56,398	3,741	110,489	0.11	3.70	827.73
25.00	3.70	1.02	52,657	3,684	114,174	0.11	3.59	827.61
26.00	3.59	1.01	48,972	3,628	117,802	0.11	3.48	827.50
27.00	3.48	0.99	45,344	3,571	121,373	0.11	3.37	827.39
28.00	3.37	0.98	41,773	3,515	124,887	0.11	3.26	827.28
29.00	3.26	0.96	38,259	3,458	128,346	0.11	3.16	827.17
30.00	3.16	0.94	34,800	3,401	131,747	0.10	3.05	827.07
31.00	3.05	0.93	31,399	3,345	135,092	0.10	2.95	826.96
32.00	2.95	0.91	28,054	3,288	138,380	0.10	2.85	826.86
33.00	2.85	0.90	24,766	3,231	141,611	0.10	2.75	826.76
34.00	2.75	0.88	21,535	3,175	144,786	0.10	2.65	826.66
35.00	2.65	0.87	18,360	3,118	147,904	0.10	2.56	826.56
36.00	2.56	0.85	15,242	3,061	150,966	0.09	2.46	826.47
37.00	2.46	0.83	12,180	3,005	153,970	0.09	2.37	826.37
38.00	2.37	0.82	9,176	2,948	156,918	0.09	2.28	826.28
39.00	2.28	0.80	6,228	2,891	159,810	0.09	2.19	826.19
40.00	2.19	0.79	3,336	2,835	162,644	0.09	2.11	826.10
41.00	2.11	0.77	502	2,778	163,146	0.09	2.09	826.02
42.00	2.09	0.00	0	0	163,146	0.00	2.09	826.00
43.00	2.09	0.00	0	0	163,146	0.00	2.09	826.00
44.00	2.09	0.00	0	0	163,146	0.00	2.09	826.00
45.00	2.09	0.00	0	0	163,146	0.00	2.09	826.00
46.00	2.09	0.00	0	0	163,146	0.00	2.09	826.00
47.00	2.09	0.00	0	0	163,146	0.00	2.09	826.00
48.00	2.09	0.00	0	0	163,146	0.00	2.09	826.00

NO. | REVISION | BY | DATE

811 Know what's below. Call before you dig.

HRGreen
DEVELOPMENT TX
5508 HIGHWAY 290 WEST
SUITE 150
AUSTIN, TX 78735
512.872.6696
HRGREEN.COM
TBPE NO: 16384
TBPLS NO: 10194101

SHERVIN NOOSHIN 96807 LICENSED PROFESSIONAL ENGINEER STATE OF TEXAS
11/5/2024

POND B SECTIONS

PARKSIDE ON THE RIVER SECTIONS 9B & 10B CONSTRUCTION PLANS

GEORGETOWN, WILLIAMSON, TEXAS

DESIGNED BY: CC
DRAWN BY: MM/MKM
CHECKED BY: SN
APPROVED BY:

SHEET 69 OF 136

2024-16-CON

P:\Blue Mound\Parkside Sections 9B & 10B\Sections 9B & 10B\03_ACAD\Parkside\SHEETS\POND\dwg POND B SECTIONS, November 12, 2024, 6:31 PM, mmuhammad

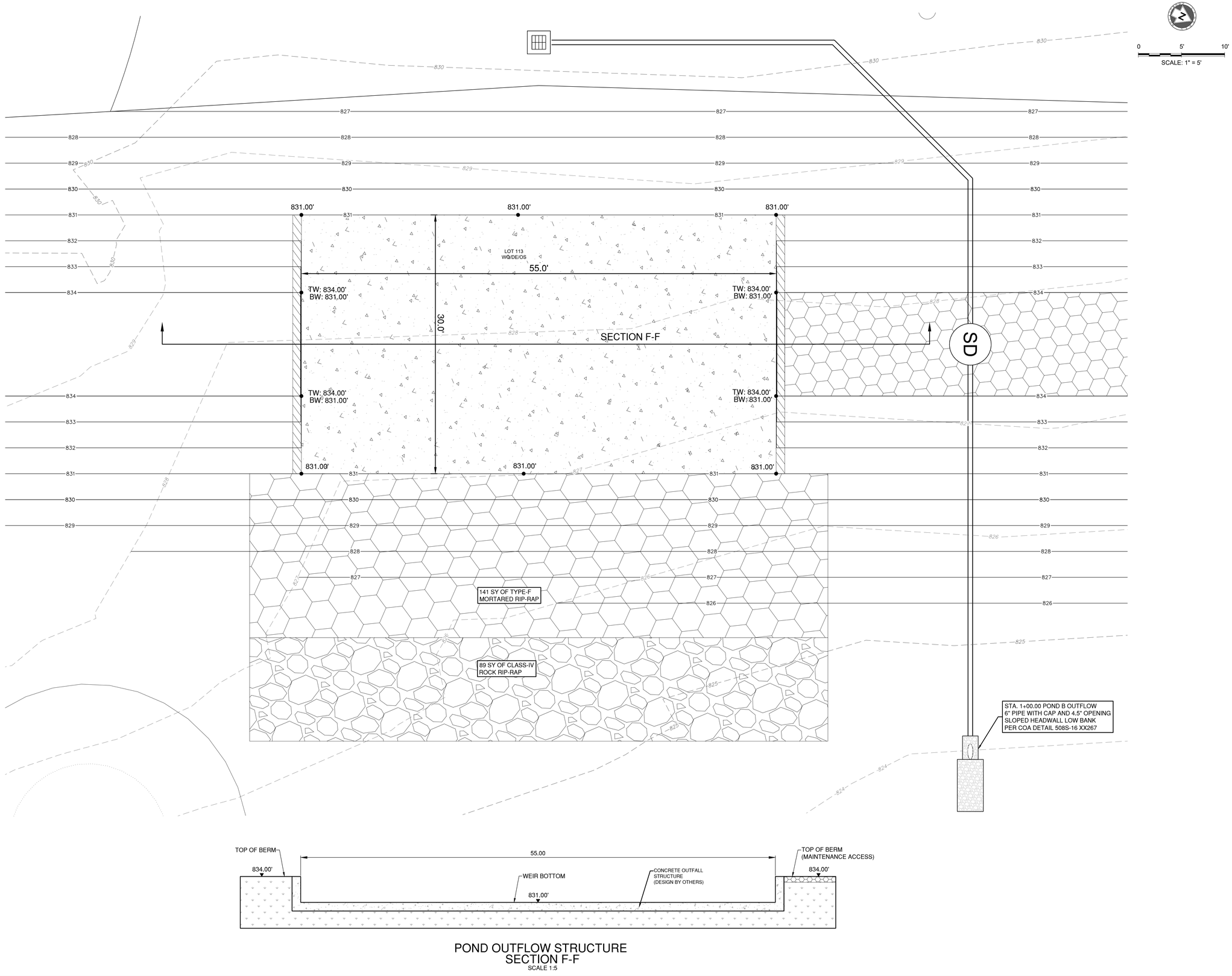

POND OUTFLOW STRUCTURE
SECTION F-F
SCALE 1:5

P:\Blake Magee\Parkside Sections 9B & 10B\Sections 9B & 10B\03_ACAD\Planset\SAP00183 POND.dwg, POND OUTLET B STRUCTURE DETAILS, November 12, 2024, 6:33 PM, mmuhammed

NO.	REVISION	BY	DATE

811 Know what's below. Call before you dig.

HRGreen
DEVELOPMENT TX
5508 HIGHWAY 290 WEST
SUITE 150
AUSTIN, TX 78735
512.872.6696
HRGREEN.COM
TBPE NO: 16384
TBPLS NO: 10194101

STATE OF TEXAS
SHERVIN NOOSHIN
96807
LICENSED
PROFESSIONAL ENGINEER
11/13/2024

POND OUTLET B STRUCTURE DETAILS

PARKSIDE ON THE RIVER SECTIONS 9B & 10B CONSTRUCTION PLANS

GEORGETOWN, WILLIAMSON, TEXAS

DESIGNED BY: CC
DRAWN BY: MM/MKM
CHECKED BY: SN
APPROVED BY:

SHEET 70 OF 136

2024-16-CON

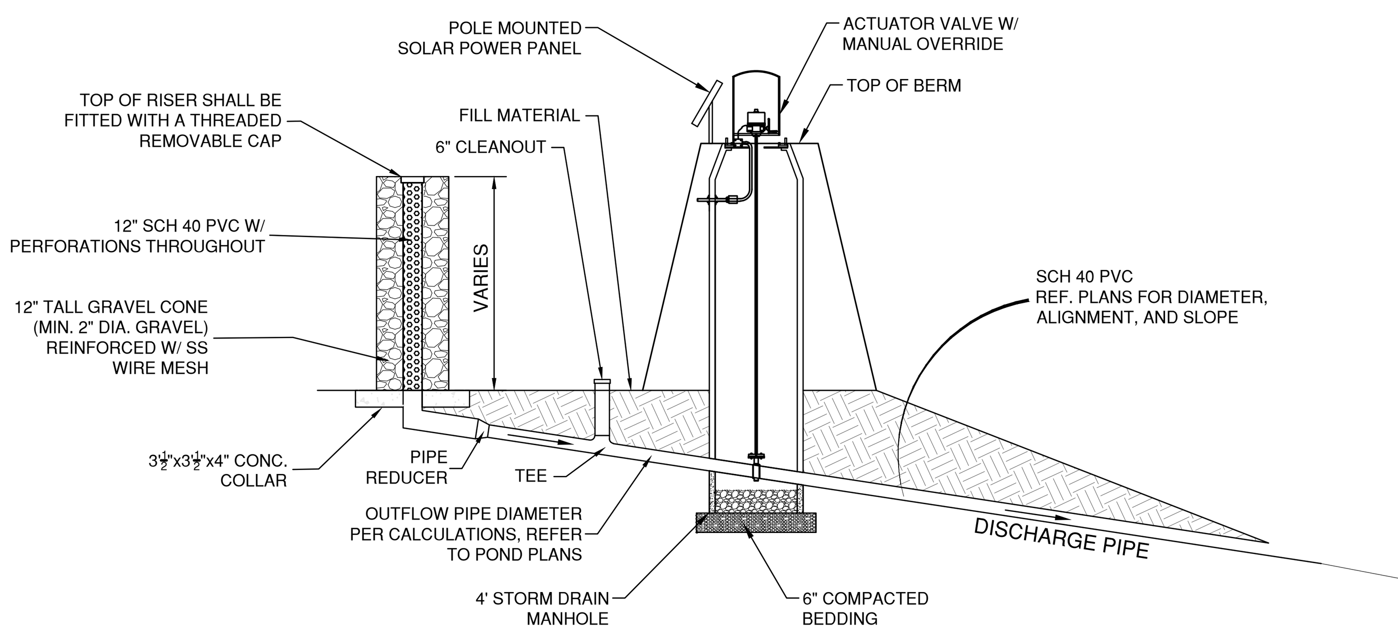

TRASH RACK AND ACTUATOR VALVE
N.T.S.

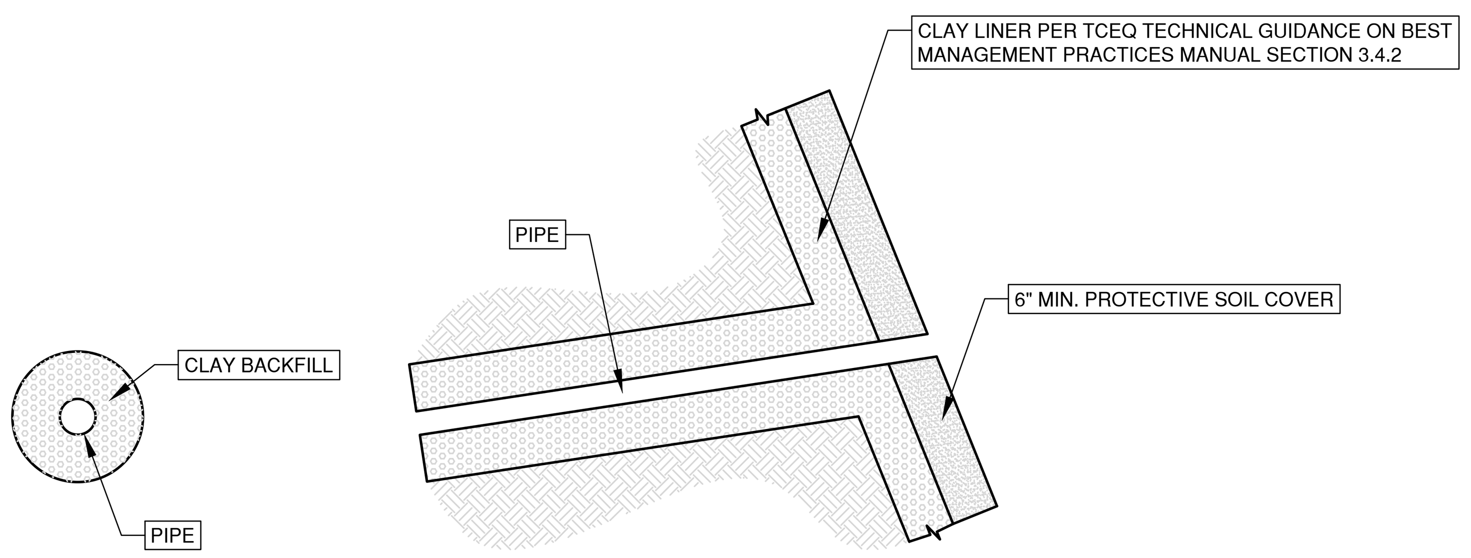

INTERBASIN PIPES DETAIL
N.T.S.

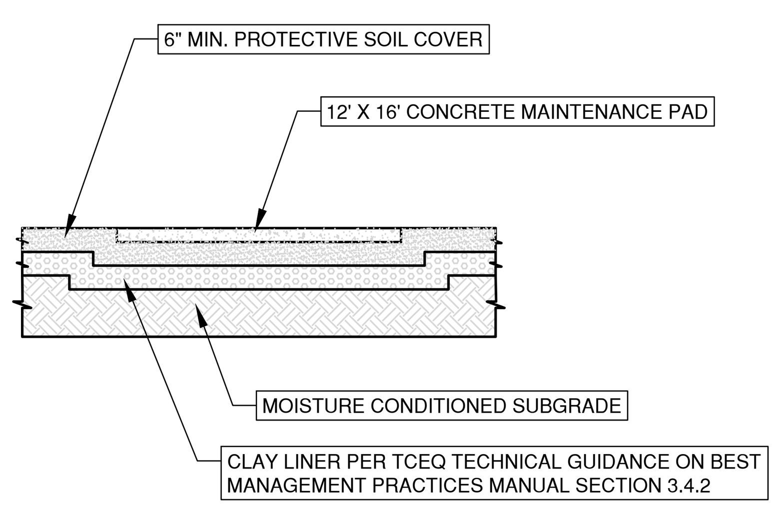

MAINTENANCE PAD INSTALLATION
N.T.S.

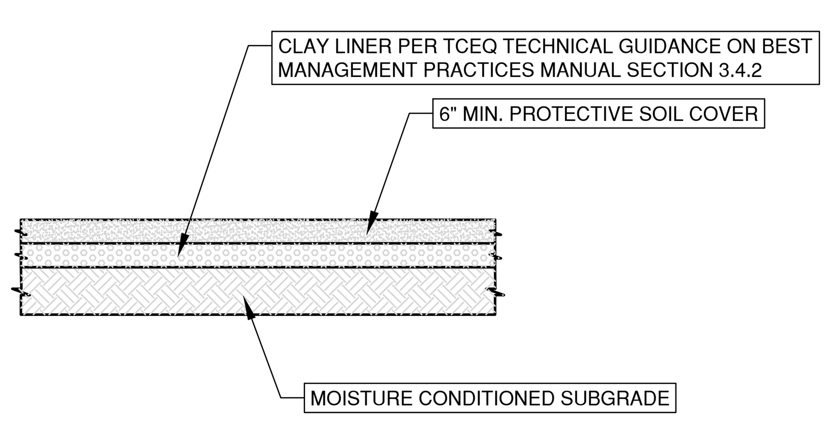

CLAY LINER INSTALLATION
N.T.S.

Table 3-6 Clay Liner Specifications (COA, 2004)

Property	Test Method	Unit	Specification
Permeability	ASTM D-2434	cm/sec	1×10^{-6}
Plasticity Index of Clay	ASTM D-423 & D-424	%	Not less than 15
Liquid Limit of Clay	ASTM D-2216	%	Not less than 30
Clay Particles Passing	ASTM D-422	%	Not less than 30
Clay Compaction	ASTM D-2216	%	95% of Standard Proctor Density

CLAY LINER SPECIFICATIONS PER TCEQ SPECIFICATIONS 3.4.2

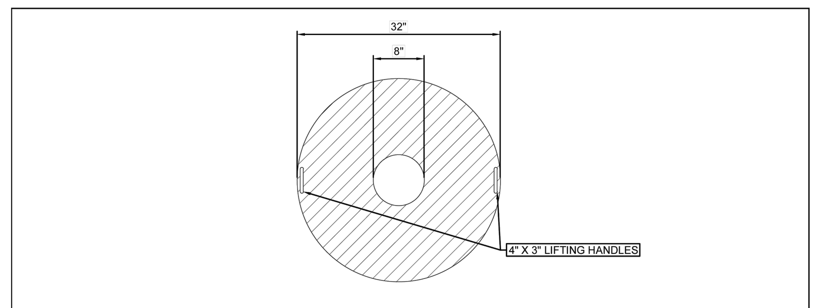

LID DETAIL
1" = 1'

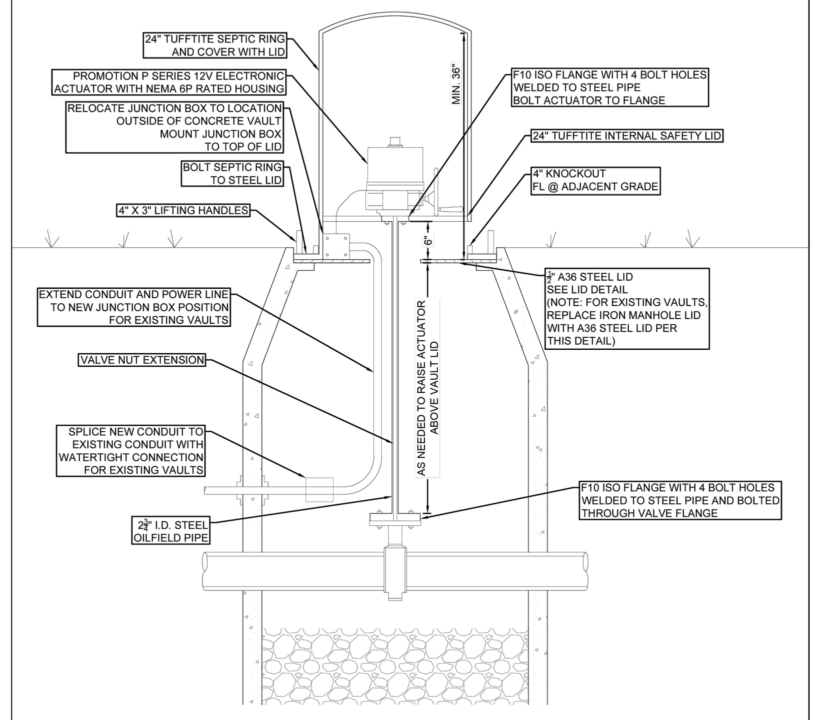

BATCH DETENTION ACTUATOR & VALVE DETAIL
1" = 1'

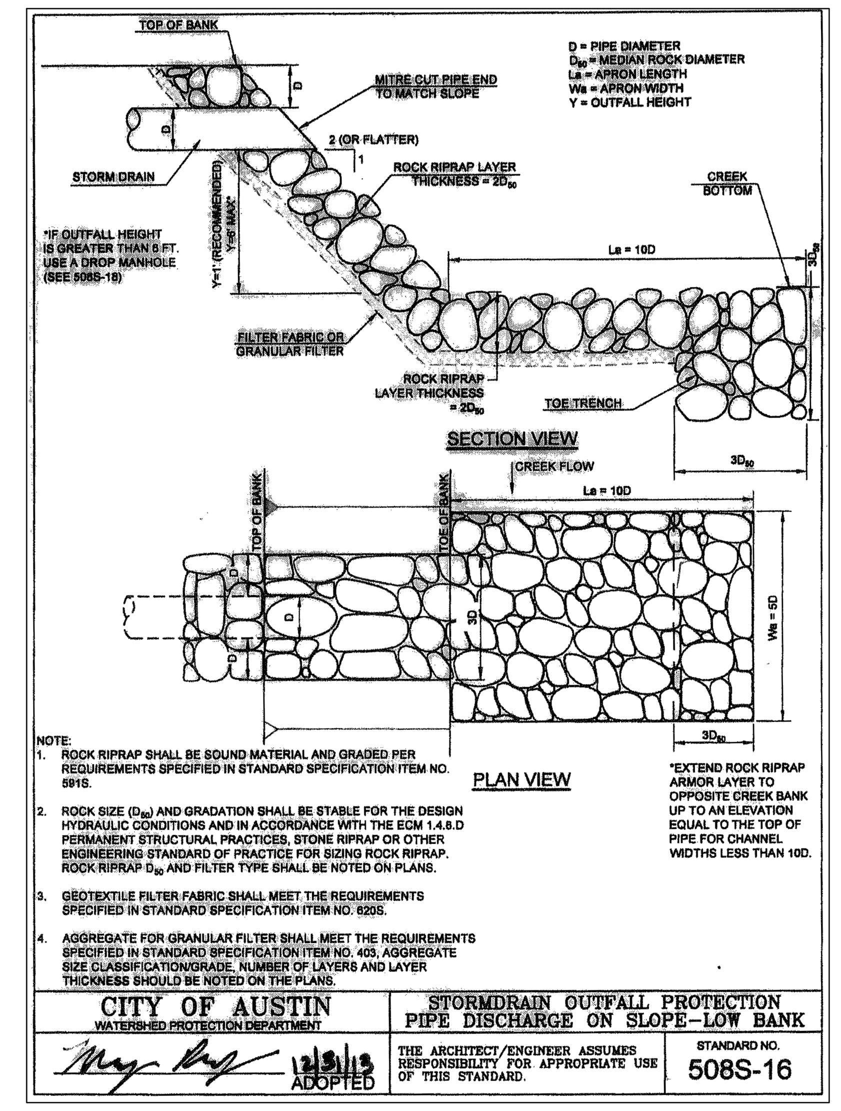

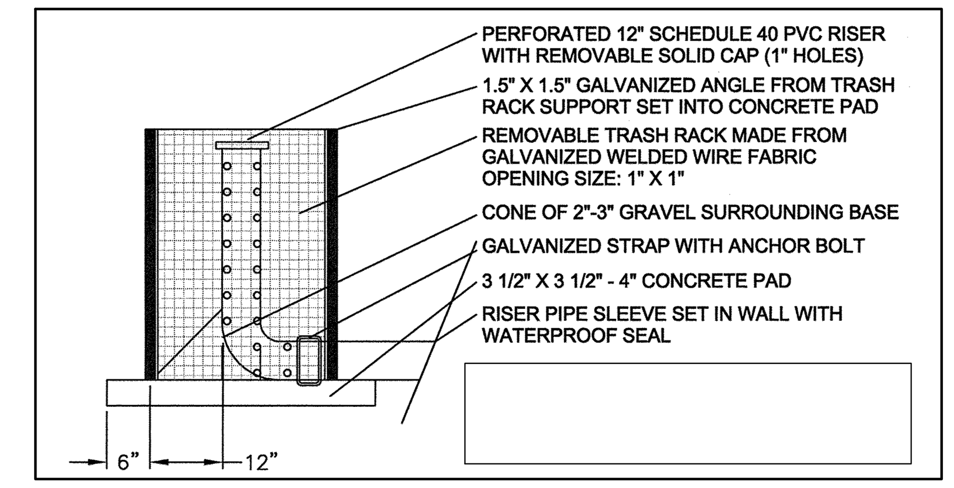

TRASH RACK / RISER PIPE DETAIL
N.T.S.

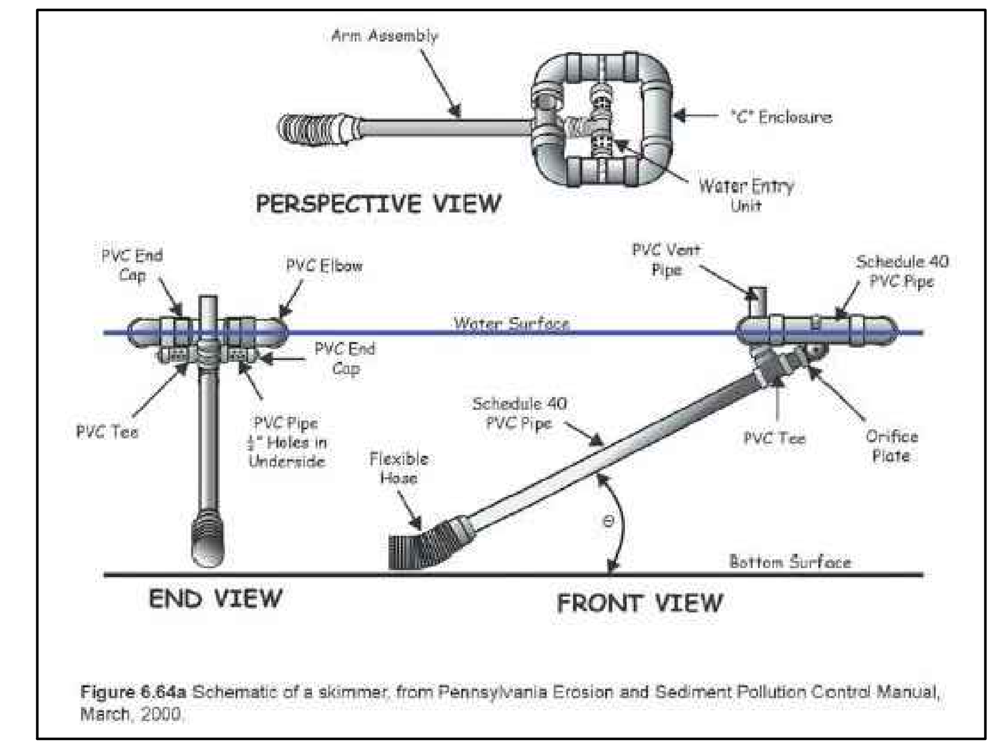

Figure 6.64a Schematic of a skimmer, from Pennsylvania Erosion and Sediment Pollution Control Manual, March, 2000.

DEWATERING SKIMMER
N.T.S.

NOTE: DISCHARGE WATER MUST BE FILTERED USING FILTER BAG OR SOCK. DISCHARGE SHALL ALSO BE DIRECTED TOWARD SILT FENCE FOR ADDITIONAL FILTERING PRIOR TO LEAVING THE SITE.

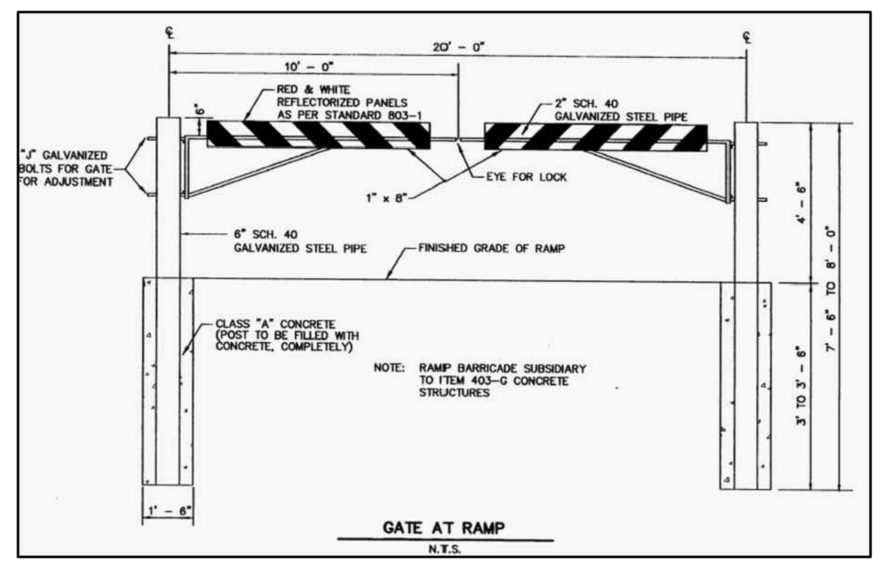

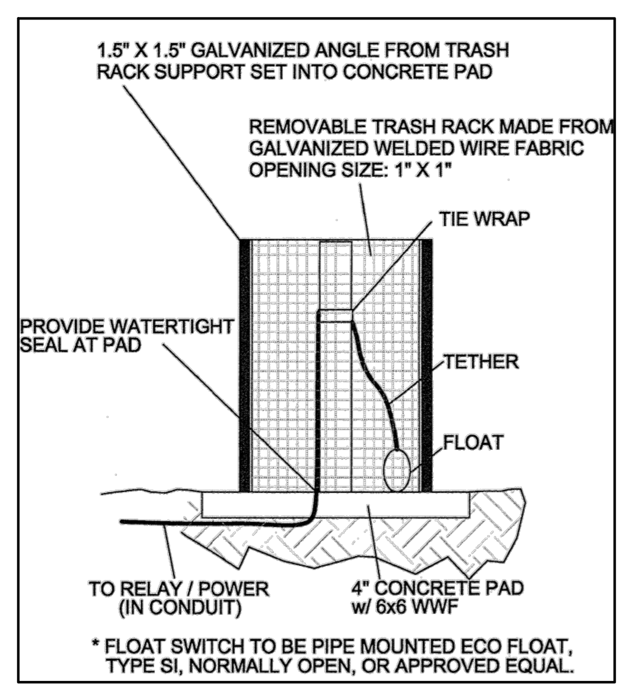

FLOAT SWITCH DETAIL

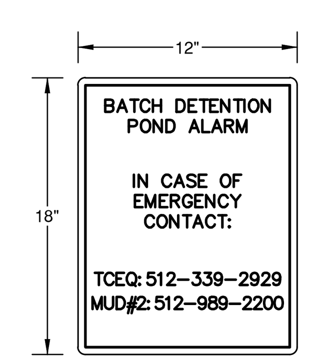

ALARM RESPONSE SIGN
N.T.S.

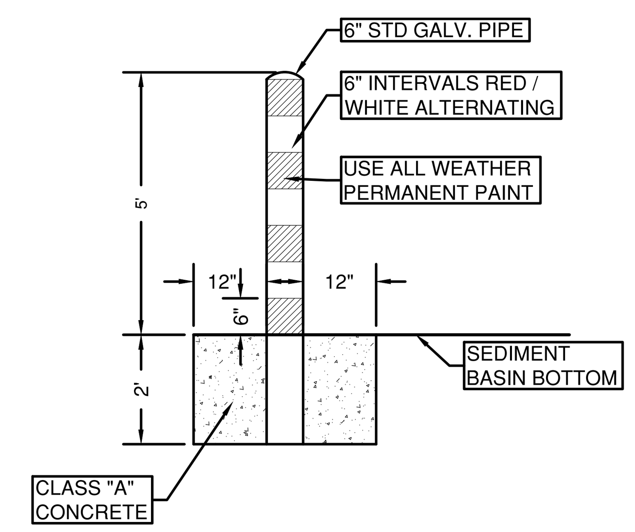

CONCRETE FILLED FIXED SEDIMENT MARKER FOR BATCH DETENTION POND
N.T.S.

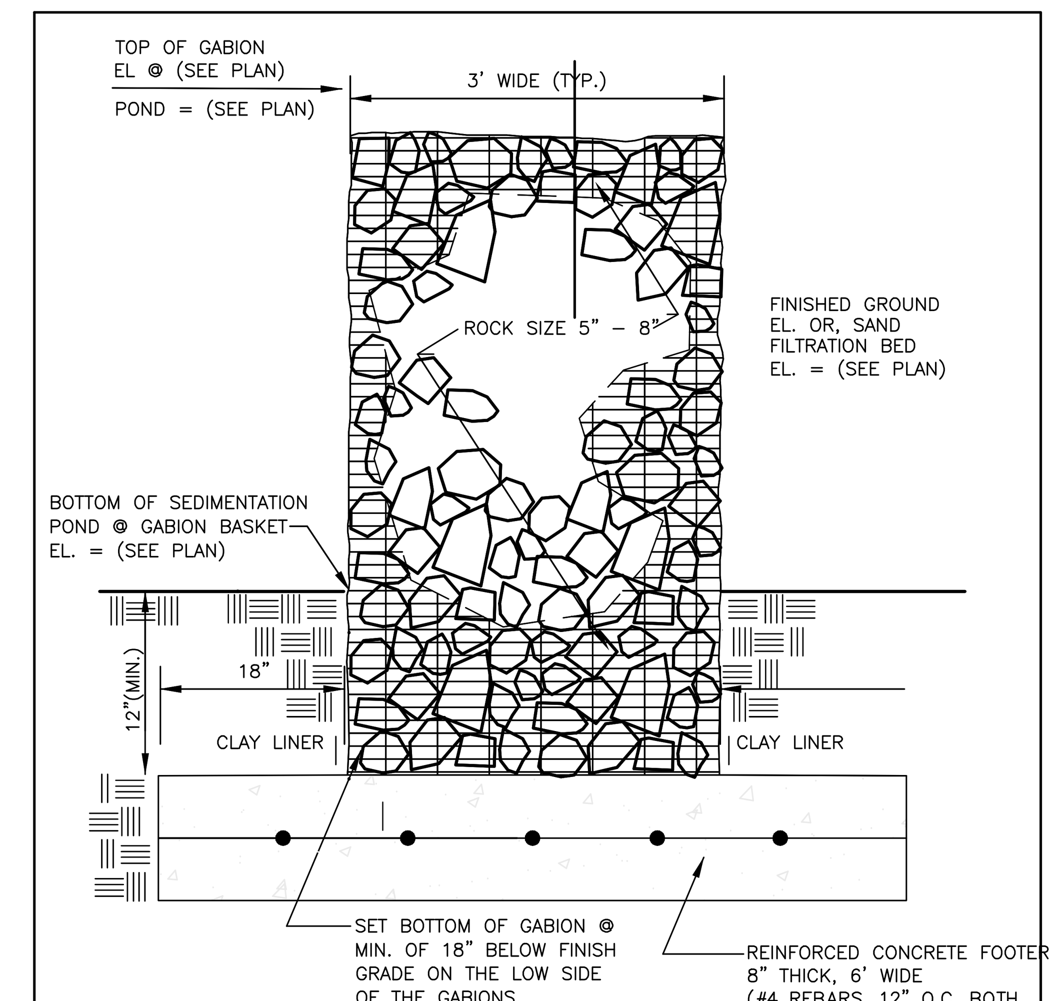

GABION DETAIL
N.T.S.

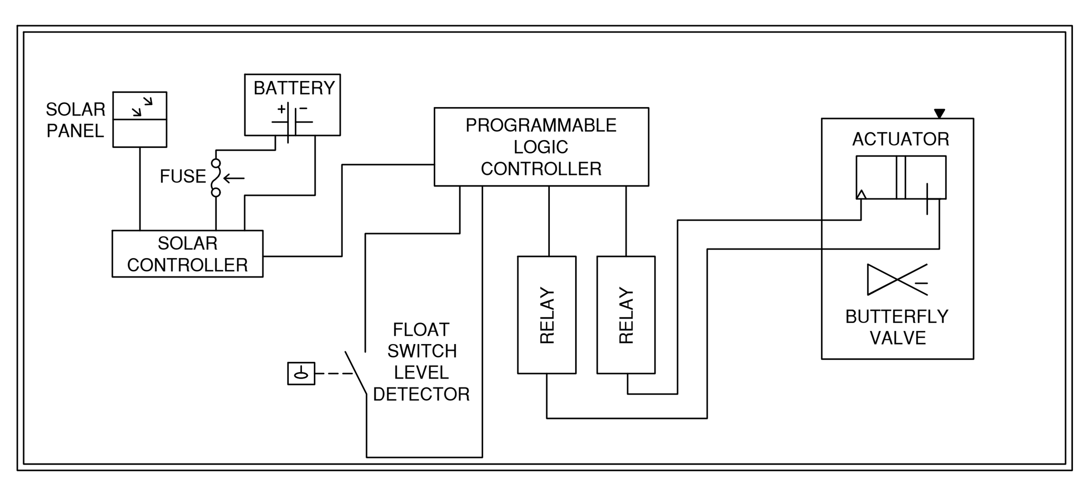

ACTUATOR VALVE POWER & CONTROLLER CIRCUIT BLOCK DIAGRAM

NOTE:

1. BATCH DETENTION POND SHALL BE IN ACCORDANCE WITH THE TEXAS COMMISSION ON ENVIRONMENTAL QUALITY (TCEQ) RG-348 MANUAL (ADDENDUM)
2. THE BATCH DETENTION POND AND RISER PIPE / TRASH RACK WILL FUNCTION AS THE DEWATERING OUTLET AND SHALL BE BE INSTALLED AND FUNCTIONAL PRIOR TO ANY GENERAL GRADING AND UTILITY WORK.
3. SYSTEM SHALL BE 12 VDC WITH SOLAR CHARGED 12 VDC BATTERY. ALTERNATE ELECTRICAL DESIGN MAY ALSO BE UTILIZED IN LIEU OF SOLAR POWER WITH ENGINEERS APPROVAL.
4. ACTUATOR SHALL BE ELECTRONIC QUARTER-TURN WITH MANUAL OVERRIDE AND POSITION INDICATOR.
5. ACTUATOR SHALL BE "AVID 12V ACTUATOR, EPI-6" OR EQUIVALENT.
6. ACTUATOR VALVE TO BE SET AT "NORMALLY CLOSED" POSITION.
7. CONTROLLER SHALL BE SET TO OPEN VALVE 12 HOURS AFTER INITIAL RAINFALL DETECTION. VALVE TO REMAIN OPEN UNTIL 2 HRS FOLLOWING BASIN EMPTY SIGNAL.
8. LOGIC CONTROLLER SYSTEM SHALL HAVE TEST SEQUENCE TO DEAL WITH LOW BATTERY/POWER OUTAGES, ON/OFF/RESET SWITCH AND THE PROGRAMMING SHALL BE FIELD UPLOADABLE.
9. CONTROLLER SHALL BE "MORNINGSTAR SOLAR CONTROLLER, 12V, 20 AMP" OR EQUIVALENT.
10. ALL WIRING SHALL BE INSTALLED IN CONDUIT AND BURIED. CONTACT ENGINEER FOR ADDITIONAL CONTROLLER SCHEMATICS.
11. CONTRACTOR TO INSTALL LIBERTY ALARM MODEL ALM-2W OR EQUIVALENT AT A CONTROLLER PANEL.
12. ATTACH ALARM RESPONSE SIGN TO CONTROLLER POLE. REFERENCE ALARM RESPONSE SIGN TO RIGHT.
13. HAZARDOUS MATERIAL THREAT (HMT) OPERATION - THE BASIN'S OUTLET VALVE IS NORMALLY CLOSED AND WILL DETAIN A HAZARDOUS MATERIAL SPILL. HOWEVER, AFTER A SPILL OCCURS, THE MANUAL CONTROLS ON THE CONTROLLER OR THE ACTUATOR/VALVE ARE USED TO PREVENT THE VALVE FROM AUTOMATICALLY OPENING PRIOR TO REMOVAL OF THE HAZARDOUS MATERIAL. ALTHOUGH NOT REQUIRED BY THE EDWARDS RULES, THE HMT OPERATION CAN BE USED TO COMPLY WITH APPENDIX A OF RG-348. IF A SPILL DOES OCCUR IN THE BASIN, ALL COMPONENTS OF THE CONTROLLER MUST BE INSPECTED AND CHECKED FOR PROPER OPERATION WITHIN 7 DAYS.
14. POWER - THE POND CONTROL SYSTEM CONTROLLER AND ACTUATOR SHALL BE 12 VOLT POWERED OR 12 VOLT SOLAR POWERED WITH BACKUP BATTERY POWER TO RESPOND TO A LOSS OF POWER IN THE MIDDLE OF A CYCLE.
15. PARTS ENCLOSURE & ALARM SYSTEM - THE PARTS ENCLOSURE SHALL BE LOCKABLE. AN ALARM SYSTEM CLEARLY VISIBLE TO INDICATE SYSTEM MALFUNCTION.
16. TEMPERATURE/WEATHER - THE SYSTEM SHALL BE CAPABLE OF OPERATION FROM 0 TO 130 DEGREES FAHRENHEIT AND FROM 10 TO 90% HUMIDITY.
17. RELIABILITY - THE SYSTEM SHALL HAVE A MINIMUM RELIABILITY OF 40,000 HOURS (4.6 YEARS).

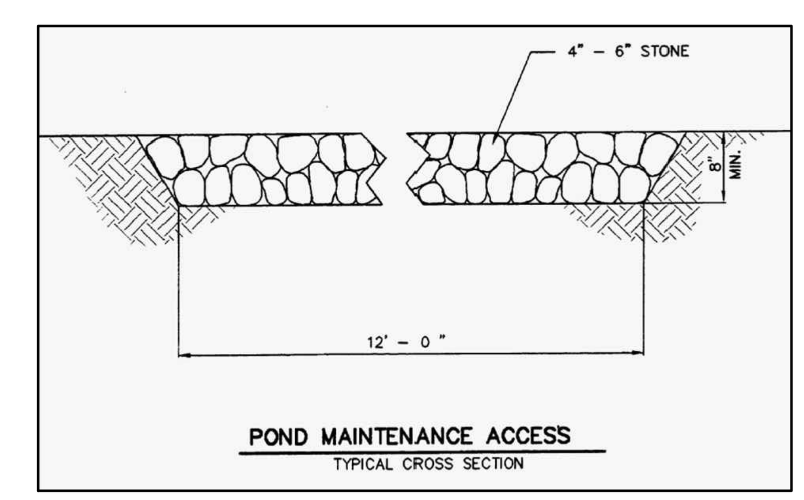

NO.	REVISION	BY	DATE

Know what's below. Call before you dig. 811

5508 HIGHWAY 290 WEST
SUITE 150
AUSTIN, TX 78735
512.872.6696
HRGREEN.COM
TBPE NO: 16384
TBPLS NO: 10194101
HRGreen DEVELOPMENT TX

STATE OF TEXAS SHERVIN NOOSHIN 96807 LICENSED PROFESSIONAL ENGINEER 11/13/2024

POND DETAILS

PARKSIDE ON THE RIVER SECTIONS 9B & 10B CONSTRUCTION PLANS GEORGETOWN, WILLIAMSON, TEXAS

DESIGNED BY: CC
DRAWN BY: MM/MKM
CHECKED BY: SN
APPROVED BY:

SHEET 71 OF 136
2024-16-CON

P:\Blake Magee\Parkside Sections 9B & 10B\Sections 9B & 10B\03_ACAD\Plans\sh24P02183 POND.dwg, POND DETAILS, November 12, 2024, 6:32 PM, mmuhammad

CIVIL CONSTRUCTION PLANS

PARKSIDE ON THE RIVER MUNICIPAL UTILITY DISTRICT NO. 2

PARKSIDE ON THE RIVER
SECTIONS 11, 12A & 15A

GEORGETOWN, WILLIAMSON COUNTY, TEXAS

2025-XX-CON

INITIAL SUBMITTAL DATE: 07/07/2025

OWNER/DEVELOPER:

HM PARKSIDE, LP
P.O. BOX 5397
AUSTIN, TX 78763
(512) 481-0303
BLAKE@BLAKEMAGEECO.COM

ENGINEER/SURVEYOR:

HR GREEN DEVELOPMENT TX, LLC
5508 HIGHWAY 290 WEST, SUITE 150
AUSTIN, TEXAS 78735
512.872.6696
CHRISTINE.CAMPBELL@HRGREEN.COM

WATERSHED STATUS:

THIS SITE IS LOCATED IN THE SOUTH FORK OF THE SAN GABRIEL WATERSHED. THIS SITE IS LOCATED OVER THE EDWARDS AQUIFER RECHARGE ZONE AND CONTRIBUTING ZONE.

FLOODPLAIN INFORMATION:

PORTIONS OF THIS SUBDIVISION ARE WITHIN SPECIAL FLOOD HAZARD AREAS INUNDATED BY THE 100 YEAR FLOOD AS IDENTIFIED BY THE U.S. FEDERAL EMERGENCY MANAGEMENT AGENCY FLOOD INSURANCE RATE MAP NUMBER 48491C0460F, EFFECTIVE DATE DECEMBER 20, 2019. PORTIONS OF THIS SUBDIVISION ARE ALSO AFFECTED BY THE APPROVED CLOMR #15-06-2071R AND THE APPROVED LOMR #21-06-0115P.

LEGAL DESCRIPTION:

55.16 ACRES OF LAND IN THE JOSEPH THOMPSON SURVEY, ABSTRACT NO. 608, AND THE ISAAC DONAGAN SURVEY, ABSTRACT NO. 178, WILLIAMSON COUNTY, TEXAS; BEING A PORTION OF A CERTAIN CALLED 1,143.511 ACRE TRACT OF LAND, DESIGNATED AS TRACT 1, AND DESCRIBED IN THE SPECIAL WARRANTY DEED TO HM PARKSIDE, LP OF RECORD IN DOCUMENT NO. 2018114043, OFFICIAL PUBLIC RECORDS OF WILLIAMSON COUNTY, TEXAS, AND BEING ALL OF A CERTAIN CALLED 3.080 ACRE TRACT DESCRIBED IN THE QUITCLAIM DEED TO HM PARKSIDE LP OF RECORD IN DOCUMENT NO. 2020031564, OFFICIAL PUBLIC RECORDS OF WILLIAMSON COUNTY, TEXAS

BENCHMARK NOTE:

NAVD88 - GEOID12B

BM(1380)-321:
"SQUARE" CUT ON A CONCRETE BASE CORNER OF A WATER MAIN VENT PIPE.
ELEVATION = 806.86 FEET.

BM(1380)-322:
COTTON GIN SPINDLE SET IN A ROOT/BASE OF A 28-INCH LIVE OAK TREE (TREE TAG # 6776).
ELEVATION = 940.16 FEET.

BM(1380)-323:
MAG-NAIL WITH A WASHER STAMPED "HR GREEN" SET ON A CONCRETE ENCASEMENT OF A WASTEWATER MANHOLE.
ELEVATION = 797.76 FEET.

BM(1380)-335:
MAG-NAIL WITH A WASHER STAMPED "HR GREEN" SET ON THE CORNER A OF CONCRETE WATER VALVE ENCASEMENT.
ELEVATION = 779.15 FEET.

BM(1380)-337:
MAG-NAIL WITH A WASHER STAMPED "HR GREEN" SET ON THE NORTHEAST CORNER A OF CONCRETE WATER VAULT, NEAR INTERSECTING SOUTHEAST CORNER OF PARKSIDE PARKWAY AND BERMUDA DRIVE.
ELEVATION = 786.95 FEET.

BM(1380)-338:
MAG-NAIL WITH A WASHER STAMPED "HR GREEN" SET ON THE SOUTHWEST CORNER A OF CONCRETE ELECTRIC VAULT, NEAR INTERSECTING NORTHEAST CORNER OF PARKSIDE PARKWAY AND BERMUDA DRIVE.
ELEVATION = 790.85 FEET.

UTILITY PROVIDERS:

WATER & WASTEWATER: GEORGETOWN UTILITY SYSTEMS
300-1 INDUSTRIAL AVENUE, GEORGETOWN TX 78626
(512) 930-3555
GUS@GEORGETOWN.ORG

ELECTRIC: PEDERNALES ELECTRIC COOPERATIVE
(877) 372-0391

NO LIABILITY NOTE:

LIMITATION OF LIABILITY – HR GREEN DEVELOPMENT TX, LLC ASSUMES NO LIABILITY FOR ANY DESIGN OR DRAWINGS IN THESE PLANS, THAT ARE NOT SIGNED AND SEALED BY A PROFESSIONAL ENGINEER REGISTERED WITH THE TEXAS BOARD OF PROFESSIONAL ENGINEERS AS A MEMBER OF THIS FIRM (#F-16384). OTHER CONSULTANTS WORK SHOWN IN THESE PLANS IS THE RESPONSIBILITY OF THE CONSULTANT WHO PREPARED SUCH WORK, AND IS INCLUDED IN THIS PLAN SET FOR REVIEW REQUIREMENTS ONLY.

SITE PLAN COMPONENTS – ALL BUILDING AND STRUCTURAL IMPROVEMENTS SHOWN HEREON ARE SHOWN FOR CONCEPTUAL PURPOSES ONLY. HR GREEN DEVELOPMENT TX, LLC IS NOT RESPONSIBLE OR LIABLE FOR THE DESIGN OF BUILDING OR STRUCTURAL IMPROVEMENTS BY OTHERS.

STRUCTURAL COMPONENTS - ALL STRUCTURAL DESIGN IS THE RESPONSIBILITY OF THE OWNER'S STRUCTURAL ENGINEER. STRUCTURAL DESIGN SHOWN HEREON IS THE DESIGN OF THE OWNER'S STRUCTURAL ENGINEER.

PAVEMENT DESIGN – PAVEMENT DESIGN SHOWN HEREON IS THE DESIGN OF THE OWNER'S GEOTECHNICAL CONSULTANT. HR GREEN DEVELOPMENT TX, LLC MAKES NO WARRANTY OR GUARANTEE AS TO ITS SUITABILITY, AND ASSUMES NO LIABILITY THEREFOR.

NOTES:

1. THESE PLANS WERE PREPARED, SEALED, SIGNED AND DATED BY A TEXAS LICENSED PROFESSIONAL ENGINEER. THEREFORE BASED ON THE ENGINEER'S CONCURRENCE OF COMPLIANCE, THE PLANS FOR CONSTRUCTION OF THE PROPOSED PROJECT ARE HEREBY APPROVED SUBJECT TO THE STANDARD CONSTRUCTION SPECIFICATIONS AND DETAILS MANUAL AND ALL OTHER APPLICABLE CITY, STATE AND FEDERAL REQUIREMENTS AND CODES.
2. THIS PROJECT IS SUBJECT TO ALL CITY STANDARD SPECIFICATIONS AND DETAILS IN EFFECT AT THE TIME OF SUBMITTAL OF THE PROJECT TO THE CITY.
3. THE PROPERTY SUBJECT TO THIS APPLICATION IS SUBJECT TO THE WATER QUALITY REGULATIONS OF THE CITY OF GEORGETOWN.
4. A GEOLOGIC ASSESSMENT, IN ACCORDANCE WITH THE CITY OF GEORGETOWN WATER QUALITY REGULATIONS, WAS COMPLETED ON APRIL 2025. ANY SPRINGS AND STREAMS AS IDENTIFIED IN THE GEOLOGIC ASSESSMENT ARE SHOWN HEREIN.
5. THIS PROJECT IS SUBJECT TO THE 2011 UDC AND THE PARKSIDE ON THE RIVER DEVELOPMENT AGREEMENT (ORDINANCE NOS. 2019-69, 2020-84, 2021-40, 2024-18 AND RESPECTIVE DOCUMENT NOS. 2019117041, 2020162167, 2021082512, 2024031828).
6. ALL ELECTRIC DISTRIBUTION LINES AND INDIVIDUAL SERVICE LINES SHALL BE INSTALLED UNDERGROUND. IF OVERHEAD LINES EXISTED PRIOR TO UNDERGROUND INSTALLATION, SUCH POLES, GUY WIRES, AND RELATED STRUCTURES SHALL BE REMOVED FOLLOWING CONSTRUCTION OF THE UNDERGROUND INFRASTRUCTURE.

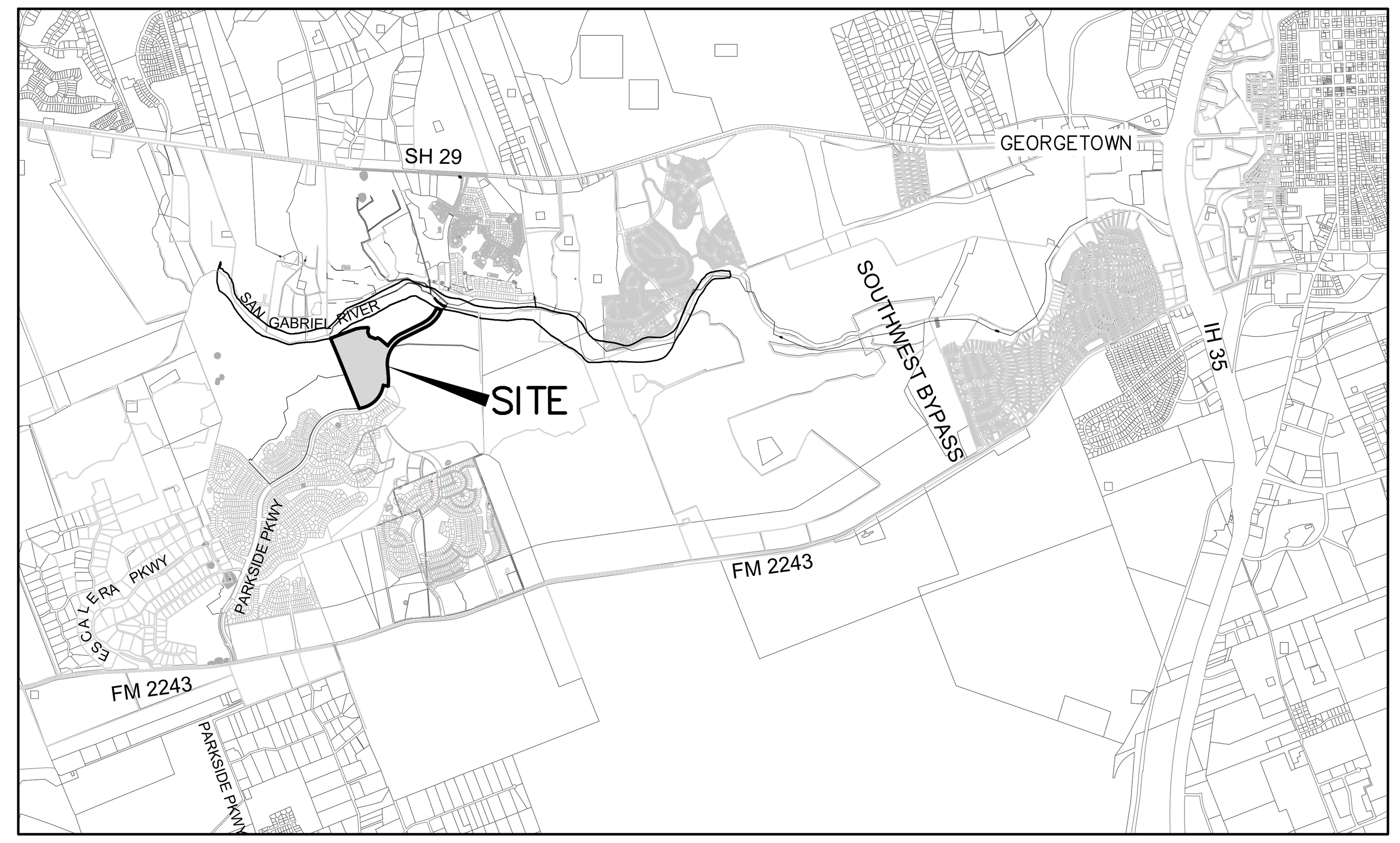

VICINITY MAP
SCALE: 1"=4000'

I, CHRISTINE CAMPBELL, P.E., CERTIFY THAT THESE ENGINEERING DOCUMENTS ARE COMPLETE, ACCURATE AND ADEQUATE FOR THE INTENDED PURPOSES, INCLUDING CONSTRUCTION, BUT ARE NOT AUTHORIZED FOR CONSTRUCTION PRIOR TO FORMAL CITY APPROVAL.

SUBMITTED BY : [signature] 07/03/2025
CHRISTINE CAMPBELL, P.E. DATE
HR GREEN DEVELOPMENT TX, LLC
5508 HIGHWAY 290 WEST, SUITE 150
AUSTIN, TEXAS 78735
512.872.6696

STATE OF TEXAS
CHRISTINE N CAMPBELL
142536
LICENSED
PROFESSIONAL ENGINEER

REVIEWED FOR COMPLIANCE WITH

PARKSIDE ON THE RIVER M.U.D. NO. 2 DATE

REVIEW OF THE PLANS BY THE DISTRICT IS LIMITED TO DISTRICT OWNED FACILITIES AND DOES NOT INDICATE A REVIEW OF THE ADEQUACY OF THE DESIGN FOR THE FACILITIES. IN APPROVING THESE PLANS, THE DISTRICT MUST RELY ON THE ADEQUACY OF THE WORK OF THE DESIGN ENGINEER.

REVISIONS

Number	Date	Description

SHEET INDEX

SHEET NUMBER	SHEET TITLE	SHEET NUMBER	SHEET TITLE
1	COVER SHEET	72	PAVING DETAILS
2	GENERAL NOTES	73	EXISTING DRAINAGE AREA MAP
3	TCEQ NOTES	74	PROPOSED DRAINAGE AREA MAP
4	PRELIMINARY PLAT (1 OF 25)	75	INLET DRAINAGE AREA MAP
5	PRELIMINARY PLAT (2 OF 25)	76	INLET DRAINAGE CALCULATIONS
6	PRELIMINARY PLAT (3 OF 25)	77	WATER QUALITY DRAINAGE AREA MAP
7	PRELIMINARY PLAT (4 OF 25)	78	WATER QUALITY CALCULATIONS
8	PRELIMINARY PLAT (5 OF 25)	79	WATER QUALITY CALCULATIONS 2
9	PRELIMINARY PLAT (6 OF 25)	80	WATER QUALITY POND A
10	PRELIMINARY PLAT (7 OF 25)	81	POND A SECTIONS
11	PRELIMINARY PLAT (8 OF 25)	82	POND OUTLET A STRUCTURE DETAILS
12	PRELIMINARY PLAT (9 OF 25)	83	WATER QUALITY POND B
13	PRELIMINARY PLAT (10 OF 25)	84	POND B SECTIONS
14	PRELIMINARY PLAT (11 OF 25)	85	POND DETAILS
15	PRELIMINARY PLAT (12 OF 25)	86	JELLYFISH-01
16	PRELIMINARY PLAT (13 OF 25)	87	JELLYFISH-02
17	PRELIMINARY PLAT (14 OF 15)	88	JELLYFISH-03
18	PRELIMINARY PLAT (15 OF 25)	89	OVERALL STORM SEWER PLAN A
19	PRELIMINARY PLAT (16 OF 25)	90	OVERALL STORM SEWER PLAN B
20	PRELIMINARY PLAT (17 OF 25)	91	OVERALL STORM SEWER PLAN C
21	PRELIMINARY PLAT (18 OF 25)	92	OVERALL STORM SEWER PLAN D
22	PRELIMINARY PLAT (19 OF 25)	93	OVERALL STORM SEWER PLAN E
23	PRELIMINARY PLAT (20 OF 25)	94	OVERALL STORM SEWER PLAN F
24	PRELIMINARY PLAT (21 OF 25)	95	STORM A-1 & LATERALS PLAN & PROFILE
25	PRELIMINARY PLAT (22 OF 25)	96	STORM B-1 & LATERALS PLAN & PROFILE
26	PRELIMINARY PLAT (23 OF 25)	97	STORM C-1 PLAN & PROFILE
27	PRELIMINARY PLAT (24 OF 25)	98	STORM D-1 PLAN & PROFILE 1+00 - 8+00
28	PRELIMINARY PLAT (25 OF 25)	99	STORM D-1 PLAN & PROFILE 8+00 - END
29	EXISTING CONDITIONS & DEMOLITION PLAN A	100	STORM D-1 LATERALS D-1A - D-1D
30	EXISTING CONDITIONS & DEMOLITION PLAN B	101	STORM D-1 LATERALS D-1E - D-1J
31	PROPOSED CONDITIONS PLAN A	102	STORM D-2 PLAN & PROFILE
32	PROPOSED CONDITIONS PLAN B	103	STORM D-2 LATERALS D-2A - D-2E
33	TREE LIST	104	STORM D-3 & LATERALS PLAN & PROFILE
34	EROSION & SEDIMENTATION CONTROL PLAN A	105	STORM E-1 PLAN & PROFILE
35	EROSION & SEDIMENTATION CONTROL PLAN B	106	STORM F-1 PLAN & PROFILE
36	EROSION & SEDIMENTATION CONTROL PLAN C	107	STORM G-1 PLAN & PROFILE 1+00 - 8+00
37	EROSION & SEDIMENTATION CONTROL PLAN D	108	STORM G-1 PLAN & PROFILE 8+00 - END
38	EROSION & SEDIMENTATION CONTROL PLAN E	109	STORM G-1 LATERALS G-1A - G-1D
39	EROSION & SEDIMENTATION CONTROL PLAN F	110	STORM H-1 & STORM J-1 PLAN & PROFILE
40	EROSION & SEDIMENTATION CONTROL DETAILS	111	STORM I-1 PLAN & PROFILE
41	SIGNAGE, STRIPING & LIGHTING PLAN A	112	DRAINAGE DETAILS
42	SIGNAGE, STRIPING & LIGHTING PLAN B	113	DRAINAGE DETAILS
43	SIGNAGE, STRIPING & LIGHTING PLAN C	114	OVERALL WASTEWATER PLAN A
44	SIGNAGE, STRIPING & LIGHTING PLAN D	115	OVERALL WASTEWATER PLAN B
45	SIGNAGE, STRIPING & LIGHTING PLAN E	116	OVERALL WASTEWATER PLAN C
46	SIGNAGE, STRIPING & LIGHTING PLAN F	117	OVERALL WASTEWATER PLAN D
47	PARKSIDE PARKWAY INBOUND PLAN & PROFILE 1+00 - 9+75	118	OVERALL WASTEWATER PLAN E
48	PARKSIDE PARKWAY INBOUND PLAN & PROFILE 9+75 - 19+75	119	OVERALL WASTEWATER PLAN F
49	PARKSIDE PARKWAY INBOUND PLAN & PROFILE 19+75 - END	120	WWL A PLAN & PROFILE
50	PARKSIDE PARKWAY OUTBOUND PLAN & PROFILE 1+00 - 9+75	121	WWL B PLAN & PROFILE
51	PARKSIDE PARKWAY OUTBOUND PLAN & PROFILE 9+75 - 19+75	122	WWL C PLAN & PROFILE 1+00 - 8+75
52	PARKSIDE PARKWAY OUTBOUND PLAN & PROFILE 19+75 - END	123	WWL C PLAN & PROFILE 8+75 - END
53	RUACH ROAD PLAN & PROFILE	124	WWL D PLAN & PROFILE 1+00 - 8+25
54	GAMALIEL LOOP PLAN & PROFILE 1+00 - 5+00	125	WWL D PLAN & PROFILE 8+25 - END
55	GAMALIEL LOOP PLAN & PROFILE 5+00 - END	126	WWL E PLAN & PROFILE
56	TREASURE HOUSE WAY PLAN & PROFILE 1+00 - 8+50	127	WWL F PLAN & PROFILE
57	TREASURE HOUSE WAY PLAN & PROFILE 8+50 - END	128	WWL G & H PLAN & PROFILE
58	MORNING SUNRISE CIRCLE PLAN & PROFILE 1+00 - 9+50	129	WASTEWATER DETAILS
59	MORNING SUNRISE CIRCLE PLAN & PROFILE 9+50 - END	130	WASTEWATER DETAILS
60	ELIEL WAY PLAN & PROFILE	131	OVERALL WATER PLAN A
61	KAVOD COVE PLAN & PROFILE	132	OVERALL WATER PLAN B
62	PAVING & GRADING PLAN A	133	OVERALL WATER PLAN C
63	PAVING & GRADING PLAN B	134	OVERALL WATER PLAN D
64	PAVING & GRADING PLAN C	135	WL C PLAN & PROFILE 1+00 - 7+50
65	PAVING & GRADING PLAN D	136	WL C PLAN & PROFILE 7+50 - END
66	PAVING & GRADING PLAN E	137	WATER DETAILS
67	PAVING & GRADING PLAN F	138	WATER DETAILS
68	INTERSECTION SHEETS 1 OF 3	139	S-1 STRUCTURAL GEENRAL NOTES & SPECIFICATIONS
69	INTERSECTION SHEETS 2 OF 3	140	S-2 POND A OUTLET STRUCTURE PLAN & SECTIONS
70	INTERSECTION SHEETS 3 OF 3	141	S-3 POND B OUTLET STRUCTURE PLAN & SECTIONS
71	PAVING DETAILS		

NO.	REVISION	BY	DATE

Know what's below. Call before you dig.

5508 HIGHWAY 290 WEST
SUITE 150
AUSTIN, TX 78735
512.872.6696
HRGREEN.COM

TBPE NO: 16384
TBPLS NO: 10194101

HRGreen® DEVELOPMENT TX

COVER SHEET

PARKSIDE ON THE RIVER
SECTIONS 11, 12A & 15A
CONSTRUCTION PLANS
GEORGETOWN, WILLIAMSON, TEXAS

DESIGNED BY: CC
DRAWN BY: MM
CHECKED BY: SN
APPROVED BY:

P:\Blake Magee\Parkside Sections 11-15 & WON 5\Section 11, 12A & 15A\03_ACAD\Plans\sh2403522 COVR.dwg, COVER SHEET, July 18, 2025, 11:20 AM, makai.muhammad

GENERAL CONSTRUCTION NOTES

1. ALL RESPONSIBILITY FOR THE ADEQUACY OF THESE PLANS REMAINS WITH THE ENGINEER WHO PREPARED THEM. IN REVIEWING THESE PLANS, THE CITY OF GEORGETOWN MUST RELY ON THE ADEQUACY OF THE WORK OF THE DESIGN ENGINEER.
2. CONTRACTOR SHALL NOTIFY GEORGETOWN UTILITIES AT 512-930-3555 AT LEAST 24 HOURS PRIOR TO THE INSTALLATION OF ANY DRAINAGE FACILITY WITHIN A DRAINAGE EASEMENT OR STREET R.O.W. THE METHOD OF PLACEMENT AND COMPACTION OF BACKFILL IN THE CITY'S R.O.W. MUST BE APPROVED PRIOR TO THE START OF BACKFILL OPERATIONS.
3. FOR SLOPES OR TRENCHES GREATER THAN FIVE (5) FEET IN DEPTH, A NOTE MUST BE ADDED STATING THAT CONSTRUCTION OPERATIONS SHALL BE ACCOMPLISHED IN ACCORDANCE WITH APPLICABLE REGULATIONS OF THE U.S. OCCUPATIONAL SAFETY AND HEALTH ADMINISTRATION. COPIES OF OSHA STANDARDS MAY BE PURCHASED FROM THE U.S. GOVERNMENT PRINTING OFFICE; INFORMATION AND RELATED REFERENCE MATERIALS MAY BE PURCHASED FROM OSHA, 611 E. 6TH STREET, AUSTIN, TEXAS.
4. ALL SITE WORK MUST ALSO COMPLY WITH ENVIRONMENTAL REQUIREMENTS.
5. CONTRACTOR INFORMATION

   CONTRACTOR: UNKNOWN AT TIME OF SUBMITTAL

   CONTRACTOR ADDRESS:: N/A PHONE # N/A

   DEVELOPER'S REPRESENTATIVE RESPONSIBLE FOR PLAN ALTERATIONS:

   HR GREEN DEVELOPMENT TX, LLC. PHONE# (512) 872-6696

   PERSON OR FIRM RESPONSIBLE FOR EROSION/SEDMENTATION CONTROL MAINTENANCE:

   HM PARKSIDE LP. PHONE# 512-481-0303

   PERSON OF FIRM RESPONSIBLE FOR TREE/NATURAL AREA PROTECTION MAINTENANCE:

   HM PARKSIDE LP. PHONE# 512-481-0303
6. TOPOGRAPHIC DATA SHOWN HEREON BASED ON GROUND TOPO SURVEY BY HR GREEN ON DURING THE MONTHS OF MAY, JUNE, AUGUST, AND SEPTEMBER 2024.
7. IF CONTRACTOR FINDS A DISCREPANCY WITH THE TOPOGRAPHIC INFORMATION ON THESE PLANS, HE/SHE SHOULD CONTACT THE ENGINEER/SURVEYOR IMMEDIATELY.
8. ALL AREAS DISTURBED BY CONSTRUCTION SHALL BE RESTORED AND GRADED TO DRAIN.
9. ANY TEMPORARY SPOILS STOCKPILE MUST BE LOCATED OUTSIDE OF ANY TREE DRIPLINES AND IN THE TEMPORARY SPOILS AREA DESIGNATED ON THE APPROVED PLANS. ALL SURPLUS MATERIAL WILL BE DISPOSED OF OFFSITE.
10. ALL DEBRIS AND EXCESS MATERIAL SHALL BE REMOVED FROM THE SITE IN A MANNER NOT TO DAMAGE THE OWNER'S PROPERTY PRIOR TO ACCEPTANCE OF THE PROJECT.
11. IF CONTRACTOR ENCOUNTERS A VOID ON THE PROJECT, CONTRACTOR IS TO CONTACT ENGINEER AT (512) 872-6696 OR CRAIG CRAWFORD AT CAMBRIAN ENVIRONMENTAL AT (512) 705-5541 FOR EVALUATION OF THE FEATURE. ONCE CAMBRIAN ENVIRONMENTAL HAS VERIFIED THAT THE FEATURE IS NOT AN ENDANGERED SPECIES HABITAT, CONTRACTOR MAY PROCEED AS DIRECTED BY THE DETAILS ON THESE PLANS.
12. ALL WATER CONSTRUCTION SHALL BE IN ACCORDANCE WITH THE CITY OF GEORGETOWN CONSTRUCTION SPECIFICATION (MOST CURRENT EDITION).

TRENCH SAFETY NOTES:

1. IN ACCORDANCE WITH THE LAWS OF THE STATE OF TEXAS AND THE U. S. OCCUPATIONAL SAFETY AND HEALTH ADMINISTRATION REGULATIONS, ALL TRENCHES OVER 5 FEET IN DEPTH IN EITHER HARD AND COMPACT OR SOFT AND UNSTABLE SOIL SHALL BE SLOPED, SHORED, SHEETED, BRACED OR OTHERWISE SUPPORTED. FURTHERMORE, ALL TRENCHES LESS THAN 5 FEET IN DEPTH SHALL ALSO BE EFFECTIVELY PROTECTED WHEN HAZARDOUS GROUND MOVEMENT MAY BE EXPECTED. TRENCH SAFETY SYSTEMS TO BE UTILIZED FOR THIS PROJECT WILL BE PROVIDED BY THE CONTRACTOR.
2. IN ACCORDANCE WITH THE U. S. OCCUPATIONAL SAFETY AND HEALTH ADMINISTRATION REGULATIONS, WHEN PERSONS ARE IN TRENCHES 4-FEET DEEP OR MORE, ADEQUATE MEANS OF EXIT, SUCH AS A LADDER OR STEPS, MUST BE PROVIDED AND LOCATED SO AS TO REQUIRE NO MORE THAN 25 FEET OF LATERAL TRAVEL.
3. CONSTRUCTION SHALL NOT PROCEED UNTIL APPROPRIATE TRENCH SAFETY SYSTEM DETAILS, AS DESIGNED BY A PROFESSIONAL ENGINEER, ARE RETAINED AND COPIES SUBMITTED TO THE CITY OF GEORGETOWN.

SEQUENCE OF CONSTRUCTION

1. INSTALL TREE PROTECTION AND INITIATE TREE MITIGATION MEASURES.
2. INSTALL EROSION CONTROLS AND OFF-SITE EROSION CONTROLS AS INDICATED ON APPROVED PLANS.
3. CONTACT CITY OF GEORGETOWN AND WILLIAMSON COUNTY TO SCHEDULE PRE-CONSTRUCTION COORDINATION MEETING
4. EVALUATE TEMPORARY EROSION CONTROL INSTALLATION. REVIEW CONSTRUCTION SCHEDULE WITH THE EROSION CONTROL PLAN.
5. BEGIN SITE CLEARING AND GRADING. INSPECT AND MAINTAIN ALL CONTROLS AS PER GENERAL NOTES.
6. CONSTRUCT UTILITY LINES I.E. WATER, WASTEWATER, STORM DRAINAGE & PONDS.
7. CONSTRUCT SIDEWALK RAMPS.
8. CONSTRUCT PAVING/STREETS.
9. REVEGETATE DISTURBED AREAS OR COMPLETE A DEVELOPERS CONTRACT FOR THE REVEGETATION ALONG WITH THE ENGINEERS CONCURRENCE LETTER.
10. PROJECT ENGINEER INSPECTS JOB AND WRITES CONCURRENCE LETTER TO THE CITY. FINAL INSPECTION IS SCHEDULED UPON RECEIPT OF LETTER.
11. REMOVE TEMPORARY EROSION/SEDIMENTATION CONTROLS AT GRASS GROWTH.

CITY OF GEORGETOWN NOTES:

1. THESE CONSTRUCTION PLANS WERE PREPARED, SEALED, SIGNED, AND DATED BY A TEXAS LICENSED PROFESSIONAL ENGINEER. THEREFORE BASED ON THE ENGINEER'S CONCURRENCE OF COMPLIANCE, THE CONSTRUCTION PLANS FOR CONSTRUCTION OF THE PROPOSED PROJECT ARE HEREBY APPROVED SUBJECT TO THE STANDARD CONSTRUCTION SPECIFICATIONS AND DETAILS MANUAL AND ALL OTHER APPLICABLE CITY, STATE, AND FEDERAL REQUIREMENTS AND CODES.
2. THIS PROJECT IS SUBJECT TO ALL CITY STANDARD SPECIFICATIONS AND DETAILS IN EFFECT AT THE TIME OF SUBMITTAL OF THE PROJECT TO THE CITY.
3. THE SITE CONSTRUCTION PLANS SHALL MEET ALL REQUIREMENTS OF THE APPROVED SITE PLAN.
4. WASTEWATER MAINS AND SERVICE LINES SHALL BE SDR 26 PVC.
5. WASTEWATER MAINS SHALL BE INSTALLED WITHOUT HORIZONTAL OR VERTICAL BENDS.
6. MAXIMUM DISTANCE BETWEEN WASTEWATER MANHOLES IS 500 FEET.
7. WASTEWATER MAINS SHALL BE LOW PRESSURE AIR TESTED AND MANDREL TESTED BY THE CONTRACTOR ACCORDING TO CITY OF GEORGETOWN AND TCEQ REQUIREMENTS.
8. WASTEWATER MANHOLES SHALL BE VACUUM TESTED AND COATED BY THE CONTRACTOR ACCORDING TO CITY OF GEORGETOWN AND TCEQ REQUIREMENTS.
9. WASTEWATER MAINS SHALL BE CAMERA TESTED BY THE CONTRACTOR AND SUBMITTED TO THE CITY ON DVD FORMAT PRIOR TO PAVING THE STREETS.
10. PRIVATE WATER SYSTEM FIRE LINES SHALL BE TESTED BY THE CONTRACTOR TO 200 PSI FOR 2 HOURS.
11. PRIVATE WATER SYSTEM FIRE LINES SHALL BE DUCTILE IRON PIPING FROM THE WATER MAIN TO THE BUILDING SPRINKLER SYSTEM, AND 200 PSI C900 FOR ALL OTHERS.
12. PUBLIC WATER SYSTEM MAINS SHALL BE 150 PSI C900 PVC AND TESTED BY THE CONTRACTOR AT 200 PSI FOR 15 MINUTES AND 150 FOR 2 HOURS.
13. ALL BEND AND CHANGES IN DIRECTION ON WATER MAINS SHALL BE RESTRAINED AND THRUST BLOCKED.
14. LONG FIRE HYDRANT LEADS SHALL BE RESTRAINED.
15. ALL WATER LINES ARE TO BE BACTERIA TESTED BY THE CONTRACTOR ACCORDING TO THE CITY STANDARDS AND SPECIFICATIONS.
16. WATER AND SEWER MAIN CROSSINGS SHALL MEET ALL REQUIREMENTS OF THE TCEQ AND THE CITY.
17. FLEXIBLE BASE MATERIAL FOR PUBLIC STREETS SHALL BE TXDOT TYPE A GRADE 1.
18. HOT MIX ASPHALT CONCRETE PAVEMENT SHALL BE TYPE D UNLESS OTHERWISE SPECIFIED AND SHALL BE A MINIMUM OF 2 INCHES THICK ON PUBLIC STREETS AND ROADWAYS.
19. ALL SIDEWALK RAMPS ARE TO BE INSTALLED WITH THE PUBLIC INFRASTRUCTURE.
20. A MAINTENANCE BOND IS REQUIRED TO BE SUBMITTED TO THE CITY PRIOR TO ACCEPTANCE OF HTE PUBLIC IMPROVEMENTS. THIS BOND SHALL BE ESTABLISHED FOR 2 YEAR IN THE AMOUNT OF 10% OF THE COST OF THE PUBLIC IMPROVEMENTS AND SHALL FOLLOW THE CITY FORMAT.
21. RECORD DRAWINGS OF PUBLIC IMPROVEMENTS SHALL BE SUBMITTED TO THE CITY BY THE DESIGN ENGINEER PRIOR TO ACCEPTANCE OF THE PROJECT. THESE DRAWINGS SHALL BE A PDF EMAILED TO THE CITY DEVELOPMENT ENGINEER.

WATER AND WASTEWATER NOTES:

1. PIPE MATERIAL FOR WATER MAINS SHALL BE PVC (AWWA C-900, MIN. CLASS 200), OR DUCTILE IRON (C-115, MIN. CLASS 200) UNLESS SPECIFIED OTHERWISE.
2. PIPE MATERIAL FOR GRAVITY WASTEWATER MAINS SHALL BE PVC (ASTM D3034, SDR-26) UNLESS SPECIFIED OTHERWISE.
3. THE CONTRACTOR SHALL CONTACT THE CITY INSPECTOR TO COORDINATE UTILITY TIE-INS AND NOTIFY HIM AT LEAST 48 HOURS PRIOR TO CONNECTING TO EXISTING LINES.
4. ALL MANHOLES SHALL HAVE ECCENTRIC CONES AND SHALL BE CONCRETE WITH CAST IRON RING AND COVER. ALL MANHOLES LOCATED OUTSIDE OF THE PAVEMENT SHALL HAVE BOLTED COVERS. TAPPING OF FIBERGLASS MANHOLES SHALL NOT BE ALLOWED.
5. THE CONTRACTOR MUST OBTAIN A BULK WATER PERMIT OR PURCHASE AND INSTALL A WATER METER FOR ALL WATER USED DURING CONSTRUCTION. A COPY OF THIS PERMIT MUST BE CARRIED AT ALL TIMES BY ALL WHO USE WATER. CONTRACTOR TO INSTALL ABOVE GROUND WATER TANK WITH SUPPLY LINE AS INDICATD ON PLANS.
6. LINE FLUSHING OR ANY ACTIVITY USING A LARGE QUANTITY OF WATER MUST BE SCHEDULED WITH THE CITY INSPECTOR.
7. THE CONTRACTOR, AT HIS EXPENSE, SHALL PERFORM QUALITY TESTING FOR ALL WASTEWATER PIPE INSTALLED AND SHALL PROVIDE ALL EQUIPMENT (INCLUDING PUMPS AND GAUGES), SUPPLIES AND LABOR NECESSARY TO PERFORM THE TESTS. QUALITY AND PRESSURE TESTING SHALL BE MONITORED BY CITY OF GEORGETOWN PERSONNEL.
8. THE CONTRACTOR SHALL COORDINATE TESTING WITH THE CITY OF INSPECTOR AND PROVIDE NO LESS THAN 24 HOURS NOTICE PRIOR TO PERFORMING STERILIZATION, QUALITY TESTING OR PRESSURE TESTING.
9. THE CONTRACTOR SHALL NOT OPEN OR CLOSE ANY VALVES UNLESS AUTHORIZED BY THE CITY OF GEORGETOWN.
10. ALL VALVE BOXES AND COVERS SHALL BE CAST IRON.
11. TOOLS FOR MARKING THE CURB SHALL BE PROVIDED BY THE CONTRACTOR. OTHER APPROPRIATE MEANS OF MARKING SERVICE AND VALVE LOCATIONS SHALL BE PROVIDED IN AREAS WITHOUT CURBS. SUCH MEANS OF MARKING SHALL BE AS SPECIFIED BY THE ENGINEER AND ACCEPTED BY THE CITY OF GEORGETOWN.
12. CONTACT CITY OF GEORGETOWN INSPECTION DEPARTMENT FOR ASSISTANCE IN OBTAINING EXISTING WATER AND WASTEWATER LOCATIONS.
13. SAND, AS DESCRIBED IN SPECIFICATION ITEM 510 PIPE, SHALL NOT BE USED AS BEDDING FOR WATER AND WASTEWATER LINES. ACCEPTABLE BEDDING MATERIALS ARE PIPE BEDDING STONE, PEA GRAVEL AND IN LIEU OF SAND, A NATURALLY OCCURRING OR MANUFACTURED STONE MATERIAL CONFORMING TO ASTM C33 FOR STONE QUALITY AND MEETING THE FOLLOWING GRADATION SPECIFICATION:

SIEVE SIZE	PERCENT RETAINED BY WEIGHT
1/2"	0
3/8"	0-2
#4	40-85
#10	95-100

15. THE CONTRACTOR IS HEREBY NOTIFIED THAT CONNECTING TO, SHUTTING DOWN, OR TERMINATING EXISTING UTILITY LINES MAY HAVE TO OCCUR AT OFF-PEAK HOURS. SUCH HOURS ARE USUALLY OUTSIDE NORMAL WORKING HOURS AND POSSIBLY BETWEEN 12 A.M. AND 6 A.M.
16. ALL WASTEWATER CONSTRUCTION SHALL BE IN ACCORDANCE WITH THE TEXAS COMMISSION ON ENVIRONMENTAL QUALITY (TCEQ) REGULATIONS, 30 TAC CHAPTER 313 AND 317, AS APPLICABLE. WHENEVER TCEQ AND CITY OF GEORGETOWN SPECIFICATIONS CONFLICT, THE MORE STRINGENT SHALL APPLY.
17. THE CONTRACTOR SHALL CONTACT THE "DIG TESS" SYSTEM AT 1-800-344-8377 FOR EXISTING UTILITY LOCATIONS PRIOR TO ANY EXCAVATION IN ADVANCE OF CONSTRUCTION. THE CONTRACTOR SHALL VERIFY THE LOCATIONS OF ALL UTILITIES TO BE EXTENDED, TIED TO, OR ALTERED, OR SUBJECT TO DAMAGE/INCONVENIENCE BY THE CONSTRUCTION OPERATIONS. THE CITY OF GEORGETOWN WATER AND WASTEWATER MAINTENANCE RESPONSIBILITY ENDS AT R.O.W./EASEMENT LINES.
18. ALL MANHOLES IN UNPAVED AREAS PROVIDING DIRECT ACCESS TO A WASTEWATER LINE SHALL BE WATERTIGHT AND BEAR THE WORDING AND INSIGNIA FOR THE CITY OF GEORGETOWN.
19. THE OWNER IS RESPONSIBLE FOR ALL COST OF RELOCATION OR DAMAGE TO UTILITIES.
20. THE CONTRACTOR IS RESPONSIBLE FOR ANY AND ALL DAMAGES WHICH OCCUR DUE TO HIS/HER FAILURE TO LOCATE AND PRESERVE ANY AND ALL UTILITIES.
21. THE ENGINEER, IN PREPARING THESE PLANS HAS ATTEMPTED TO LOCATE ALL EXISTING UTILITIES IN THE AREAS OF EXPANSION OR NEW CONSTRUCTION. HOWEVER, THERE MAY BE UTILITIES THAT COULD NOT BE OR WERE NOT LOCATED. UNDERGROUND UTILITIES SHOWN ON THE PLANS ARE SHOWN IN APPROXIMATE LOCATIONS ONLY. CONTRACTOR SHALL DETERMINE THE EXACT LOCATIONS AND ELEVATIONS OF ALL EXISTING UTILITIES BEFORE COMMENCING WORK. THE CONTRACTOR SHALL CALL APPROPRIATE UTILITY COMPANIES FOR LOCATIONS OF THEIR UTILITIES AT LEAST 48 HOURS BEFORE COMMENCING EXCAVATION. IN THE EVENT THAT A UTILITY IS SITUATED SUCH THAT CONSTRUCTION CANNOT PROCEED AS SHOWN ON THE PLANS, THE CONSTRUCTION MANAGER/SUPERVISOR SHALL BE NOTIFIED IMMEDIATELY.
22. CONTRACTOR TO COORDINATE WITH APPROPRIATE UTILITY COMPANIES PRIOR TO CONSTRUCTION, ADJUSTMENT, OR RELOCATION OF EXISTING UTILITIES AS DESIGNATED ON PLANS.
23. THE MINIMUM HORIZONTAL SEPARATION BETWEEN WATER AND ASSOCIATED VALVING AND SEWER LINES AND ASSOCIATED MANHOLES, IS NINE (9) FEET OUTSIDE DIAMETER TO OUTSIDE DIAMETER. THE MINIMUM VERTICAL SEPARATION BETWEEN WATER AND SEWER LINES IS EIGHTEEN (18) INCHES.
24. THE TOP ELEVATION OF MANHOLES IN PAVED AREAS SHALL MATCH FINISH GRADE. THE TOP ELEVATION OF MANHOLES IN UNPAVED AREAS SHALL BE 3" (MIN.) ABOVE FINISH GRADE, UNLESS OTHERWISE NOTED ON PLANS.
25. CONTRACTOR SHALL COORDINATE INSPECTION OF UTILITY LINES WITH APPROPRIATE AUTHORITIES PRIOR TO BACKFILLING TRENCHES.
26. ALL WATER AND WASTEWATER LINES IN CITY R.O.W. AND EASEMENTS WILL MEET THE CITY OF GEORGETOWN WATER AND WASTEWATER DEPARTMENT DESIGN CRITERIA, AT A MINIMUM.
27. CITY MAINTENANCE OF UTILITIES ENDS AT THE PROPERTY LINE UNLESS IN AN EASEMENT.
28. EXTEND ALL EXISTING UTILITY MANHOLES, BOXES, COVERS, ETC. TO PROPOSED FINISH GRADE, UNLESS APPROVED OTHERWISE.
29. ALL UNDERGROUND UTILITY CONSTRUCTION WITHIN CITY R.O.W. OR PUBLIC EASEMENTS MUST BE ACCOMPLISHED IN ACCORDANCE WITH THE CITY OF GEORGETOWN STANDARD SPECIFICATIONS.
30. AN 80 MIL COAT OF RAVEN LINING SYSTEMS, RAVEN 405 ULTRA HIGH BUILD EPOXY COATING, OR APPROVED EQUAL, TO BE APPLIED TO ENTIRE INTERIOR OF EACH WASTEWATER MANHOLE AND UNDERSIDE OF FLAT TOPS.
31. ALL WATER SERVICE, WASTEWATER SERVICE AND VALVE LOCATIONS SHALL BE APPROPRIATELY MARKED AS FOLLOWS:

WATER SERVICE	"W" ON TOP OF CURB
WASTEWATER SERVICE	"S" ON TOP OF CURB
VALVE	"V" ON FACE OF CURB
DRY UTILITIES	"DU" ON FACE OF CURB

32. CENTER ONE 20-FOOT 150 PSI PRESSURE RATED WASTEWATER PIPE SECTION AT ALL WATERLINE CROSSINGS.
33. WHERE WATER LINES AND NEW SEWER LINE ARE INSTALLED WITH A SEPARATION DISTANCE CLOSER THAN NINE FEET (I.E., WATER LINES CROSSING WASTEWATER LINES, WATER LINES PARALLELING WASTEWATER LINES, OR WATER LINES NEXT TO MANHOLES) THE INSTALLATION MUST MEET THE REQUIREMENTS OF 30 TAC CHAPTER 217 (DESIGN CRITERIA FOR DOMESTIC WASTEWATER SYSTEMS) OR 30 TAC CHAPTER 290 (PUBLIC DRINKING WATER).

EROSION AND SEDIMENTATION CONTROL NOTES

1. THE CONTRACTOR SHALL INSTALL EROSION/SEDIMENTATION CONTROLS AND TREE/NATURAL AREA PROTECTIVE FENCING PRIOR TO ANY SITE PREPARATION WORK (CLEARING, GRUBBING OR EXCAVATION).
2. THE PLACEMENT OF EROSION/SEDIMENTATION CONTROLS SHALL BE IN ACCORDANCE WITH THE THE APPROVED EROSION AND SEDIMENTATION CONTROL PLAN.
3. THE PLACEMENT OF TREE/NATURAL AREA PROTECTIVE FENCING SHALL BE IN ACCORDANCE WITH THE CITY OF GEORGETOWN STANDARD NOTES FOR TREE AND NATURAL AREA PROTECTION AND THE APPROVED GRADING/TREE AND NATURAL AREA PLAN.
4. A PRE-CONSTRUCTION CONFERENCE SHALL BE HELD WITH THE CONTRACTOR, DESIGN ENGINEER/PERMIT APPLICANT AND CITY INSPECTOR AFTER INSTALLATION OF THE EROSION/SEDIMENTATION CONTROLS AND TREE/NATURAL AREA PROTECTION MEASURES AND PRIOR TO BEGINNING ANY SITE PREPARATION WORK. THE CONTRACTOR SHALL NOTIFY THE CITY OF GEORGETOWN, AT LEAST THREE DAYS PRIOR TO THE MEETING DATE.
5. THE CONTRACTOR IS REQUIRED TO INSPECT THE CONTROLS AND FENCES AT WEEKLY INTERVALS AND AFTER SIGNIFICANT RAINFALL EVENTS TO INSURE THAT THEY ARE FUNCTIONING PROPERLY. THE PERSON(S) RESPONSIBLE FOR MAINTENANCE OF CONTROLS AND FENCES SHALL IMMEDIATELY MAKE ANY NECESSARY REPAIRS TO DAMAGED AREAS. SILT ACCUMULATION AT CONTROLS MUST BE REMOVED WHEN THE DEPTH REACHES SIX (6) INCHES.
6. PRIOR TO FINAL ACCEPTANCE BY THE CITY, HAUL ROADS AND WATERWAY CROSSINGS CONSTRUCTED FOR TEMPORARY CONTRACTOR ACCESS MUST BE REMOVED, ACCUMULATED SEDIMENT REMOVED FROM THE WATERWAY AND THE AREA RESTORED TO THE ORIGINAL GRADE AND REVEGETATED. ALL LAND CLEARING DEBRIS SHALL BE DISPOSED OF IN APPROVED SPOIL DISPOSAL SITES.

GENERAL NOTES:

1. ALL CONSTRUCTION SHALL BE IN ACCORDANCE WITH THE CITY OF GEORGETOWN STANDARD CONSTRUCTION SPECIFICATIONS AS ADOPTED AND AMENDED UNLESS OTHERWISE SPECIFIED.
2. ANY EXISTING UTILITIES, PAVEMENT, CURBS, SIDEWALKS, STRUCTURES, TREES, ETC., THAT ARE DAMAGED OR REMOVED SHALL BE REPAIRED OR REPLACED BY THE CONTRACTOR AT NO COST TO THE OWNER.
3. THE CONTRACTOR SHALL VERIFY ALL DEPTHS AND LOCATIONS OF EXISTING UTILITIES PRIOR TO ANY CONSTRUCTION. ANY DISCREPANCIES WITH THE CONSTRUCTION PLANS FOUND IN THE FIELD SHALL BE BROUGHT IMMEDIATELY TO THE ATTENTION OF THE ENGINEER.
4. THE CONTRACTOR SHALL GIVE THE CITY OF GEORGETOWN 48 HOURS NOTICE BEFORE BEGINNING EACH PHASE OF CONSTRUCTION.
5. ALL AREAS DISTURBED OR EXPOSED DURING CONSTRUCTION SHALL BE REVEGETATED IN ACCORDANCE WITH THE PLANS AND CITY OF GEORGETOWN STANDARD SPECIFICATIONS. REVEGETATION OF ALL DISTURBED OR EXPOSED AREAS SHALL CONSIST OF SODDING OR SEEDING, AT THE CONTRACTOR'S OPTION. HOWEVER, THE TYPE OF REVEGETATION MUST EQUAL OR EXCEED THE TYPE OF VEGETATION PRESENT BEFORE CONSTRUCTION UNLESS OTHERWISE REQUESTED BY THE OWNER.
6. PRIOR TO ANY CONSTRUCTION, THE CONTRACTOR SHALL CONVENE A PRECONSTRUCTION CONFERENCE BETWEEN THE CITY OF GEORGETOWN, HIMSELF, THE ENGINEER, THE OWNER, THE ENVIRONMENTAL ENGINEER, GEOTECHNICAL ENGINEER, UTILITY COMPANIES, ANY AFFECTED PARTIES AND ANY OTHER ENTITY THE COUNTY OR ENGINEER MAY REQUIRE.
7. WHEN CONSTRUCTION IS BEING CARRIED OUT WITHIN EASEMENTS, THE CONTRACTOR SHALL CONFINE HIS WORK TO WITHIN THE PERMANENT AND ANY TEMPORARY EASEMENTS. PRIOR TO FINAL ACCEPTANCE, THE CONTRACTOR SHALL BE RESPONSIBLE FOR REMOVING ALL TRASH AND DEBRIS WITHIN THE PERMANENT AND TEMPORARY EASEMENTS. CLEANUP SHALL BE TO THE SATISFACTION OF THE ENGINEER.
8. PRIOR TO ANY CONSTRUCTION, THE CONTRACTOR SHALL APPLY FOR AND SECURE ALL PROPER PERMITS FROM THE APPROPRIATE AUTHORITIES.
9. AVAILABLE BENCHMARK(S) THAT MAY BE UTILIZED FOR THE CONSTRUCTION OF THIS PROJECT ARE DESCRIBED AS FOLLOWS:

   NAVD88 - GEOID12B

   BM(1380)-321:
   "SQUARE" CUT ON A CONCRETE BASE CORNER OF A WATER MAIN VENT PIPE.
   ELEVATION = 806.86 FEET.

   BM(1380)-322:
   COTTON GIN SPINDLE SET IN A ROOT/BASE OF A 28-INCH LIVE OAK TREE (TREE TAG # 6776).
   ELEVATION = 940.16 FEET.

   BM(1380)-323:
   MAG-NAIL WITH A WASHER STAMPED "HR GREEN" SET ON A CONCRETE ENCASEMENT OF A WASTEWATER MANHOLE.
   ELEVATION = 797.76 FEET.

   BM(1380)-335:
   MAG-NAIL WITH A WASHER STAMPED "HR GREEN" SET ON THE CORNER A OF CONCRETE WATER VALVE ENCASEMENT.
   ELEVATION = 779.15 FEET.

   BM(1380)-337:
   MAG-NAIL WITH A WASHER STAMPED "HR GREEN" SET ON THE NORTHEAST CORNER A OF CONCRETE WATER VAULT, NEAR INTERSECTING SOUTHEAST CORNER OF PARKSIDE PARKWAY AND BERMUDA DRIVE.
   ELEVATION = 786.95 FEET.

   BM(1380)-338:
   MAG-NAIL WITH A WASHER STAMPED "HR GREEN" SET ON THE SOUTHWEST CORNER A OF CONCRETE ELECTRIC VAULT, NEAR INTERSECTING NORTHEAST CORNER OF PARKSIDE PARKWAY AND BERMUDA DRIVE.
   ELEVATION = 790.85 FEET.
10. SIDEWALK RAMPS AND SIDEWALKS LOCATED IN FRONT OF COMMON AREAS TO BE INSTALLED WITH INFRASTRUCTURE CONSTRUCTION
11. CONTRACTOR IS RESPONSIBLE FOR DAMAGE TO ANY EXISTING UTILITY OR IMPROVEMENTS.
12. CONTRACTOR SHALL REFER TO THE GEOTECHNICAL REPORT TITLED "GEOTECHNICAL INVESTIGATION PAVEMENT THICKNESS RECOMMENDATIONS - PARKSIDE ON THE RIVER SECTIONS 11, 12A, & 15A GEORGETOWN, TEXAS", DATED JANUARY 2025 BY MLA GEOTECHNICAL, ENGINEER'S JOB# 24101123.005 FOR PAVEMENT DESIGN RECOMMENDATIONS. ANY CONFLICT BETWEEN THESE CONSTRUCTION PLANS AND THE GEOTECHNICAL REPORT SHALL BE RESOLVED IN FAVOR OF THE GEOTECHNICAL REPORT.
13. THE DISTRICT ENGINEER, JONES-HEROY & ASSOCIATES, INC. (SHANE POTTER OR CHRIS ULMAN, PH:512-989-2200) SHALL BE CONTACTED 48 HOURS PRIOR TO THE FOLLOWING:
    1) PRE-CONSTRUCTION MEETINGS
    2) BEGINNING EACH PHASE OF CONSTRUCTION
    3) TESTING OF WATER AND/OR WASTEWATER LINES
    4) FINAL WALK-THROUGH OF FACILITIES
14. WHEN REQUIRED, CONTRACTOR SHALL REMOVE PAVEMENT IN ACCORDANCE WITH THE TEXAS DEPARTMENT OF HIGHWAY AND PUBLIC TRANSPORTATION STANDARD SPECIFICATIONS, LATEST EDITION.
15. ALL PAVEMENT REMOVED SHALL BE DONE SUCH THAT THE REMAINING PAVEMENT IS LEFT WITH A CLEAN STRAIGHT EDGE.
16. WHEN REQUIRED, CONTRACTOR SHALL REMOVE EXISTING PAVEMENT STRIPING BY SAND BLASTING FROM EXISTING PAVEMENT IN ACCORDANCE WITH ITEM 678 OF THE TxDOT LATEST EDITION.
17. ALL WORK IN STATE R.O.W. AND EASEMENTS SHALL BE IN ACCORDANCE WITH THE TxDOT LATEST EDITION.
18. EARTHWORK FOR ALL BUILDING FOUNDATIONS AND SLABS SHALL BE IN ACCORDANCE WITH ARCHITECTURAL BUILDING PLANS AND SPECIFICATIONS AND THE GEOTECHNICAL STUDY.
19. IF THE CONTRACTOR FINDS A DISCREPANCY WITH THE TOPOGRAPHIC INFORMATION ON THESE PLANS HE/SHE SHOULD CONTACT THE ENGINEER OR OWNER IMMEDIATELY.
20. CONTRACTOR SHALL PROTECT ALL BENCHMARKS AND PROPERTY MONUMENTATION DISTURBED DURING CONSTRUCTION.
21. DESIGN OF MAJOR DRAINAGE WAYS THROUGH A SUBDIVISION AND MAJOR STRUCTURES SUCH AS BOX CULVERTS OR BRIDGES ACROSS A MAJOR DRAINAGE CHANNEL SHALL BE COORDINATED WITH THE REQUIREMENTS OF THE WILLIAMSON COUNTY HEALTH DISTRICT WHEN ANY PORTION OF THE SUBDIVISION LIES OUTSIDE THE CITY LIMITS, AND WHEN APPLICABLE, A LETTER REQUESTING A LOCAL FLOOD PLAIN MAP AMENDMENT FROM THE FEDERAL EMERGENCY MANAGEMENT AGENCY (FEMA) SHALL BE PROVIDED PRIOR TO FINAL CONSTRUCTION PLAN APPROVAL.

TRAFFIC MARKING NOTE

1. ANY METHODS, STREET MARKINGS AND SIGNAGE NECESSARY FOR WARNING MOTORISTS, WARNING PEDESTRIANS OR DIVERTING TRAFFIC DURING CONSTRUCTION SHALL CONFORM TO THE TEXAS MANUAL OF UNIFORM TRAFFIC CONTROL DEVICES FOR STREETS AND HIGHWAYS, LATEST EDITION.

2. ALL PAVEMENT MARKINGS, MARKERS, PAINT, TRAFFIC BUTTONS, TRAFFIC CONTROLS AND SIGNS SHALL BE INSTALLED IN ACCORDANCE WITH THE TEXAS DEPARTMENT OF TRANSPORTATION STANDARD SPECIFICATIONS FOR CONSTRUCTION OF HIGHWAYS, STREETS AND BRIDGES AND, THE TEXAS MANUAL OF UNIFORM TRAFFIC CONTROL DEVICES FOR STREETS AND HIGHWAYS, LATEST EDITION.

ADDITIONAL NOTES

1. THE CONTRACTOR SHALL BE RESPONSIBLE FOR MOWING AND THE REMOVAL OF ALL LITTER WITHIN THE PROJECT LIMITS SO AS TO KEEP THE SITE OF THE WORK IN A NEAT AND PRESENTABLE CONDITION AT ALL TIMES. THIS WORK WILL BE CONSIDERED SUBSIDIARY TO THE VARIOUS BID ITEMS.

2. THE CONTRACTOR SHALL PROTECT ALL AREAS WHICH ARE NOT INCLUDED IN THE ACTUAL LIMITS OF THE PROPOSED CONSTRUCTION AREAS FROM DESTRUCTION. CARE SHALL BE EXERCISED TO PREVENT DAMAGE TO TREES, VEGETATION, FENCES, POWER POLES, AND OTHER NATURAL SURROUNDINGS. THE AREAS NOT TO BE DISTURBED INCLUDE ALL GOLF COURSE AREAS, UNLESS SPECIFIED OTHERWISE. THE CONTRACTOR SHALL, AT HIS EXPENSE, RESTORE ANY AREA DISTURBED AS A RESULT OF HIS OPERATIONS TO A CONDITION AS GOOD AS, OR BETTER THAN, THAT PRESENT PRIOR TO CONSTRUCTION.

3. THE CONTRACTOR SHALL BE RESPONSIBLE FOR MARKING EVERY 100 FOOT ROAD STATION, AND SHALL MAINTAIN THE MARKINGS FOR THE DURATION OF THE PROJECT. THIS WORK SHALL BE CONSIDERED SUBSIDIARY TO THE ITEMIZED CONSTRUCTION CONTRACT.

4. THE SUPERINTENDENT SHALL BE AVAILABLE ON THE PROJECT AT ALL TIMES WHEN WORK IS BEING PERFORMED.

5. NO BLASTING IS ALLOWED ON THIS PROJECT.

6. NO STORAGE OF HYDROCARBON OR HAZARDOUS MATERIAL IS ALLOWED ON SITE.

PARKSIDE ON THE RIVER M.U.D. No. 2 NOTES

A) THE DISTRICT ENGINEER, JONES-HEROY & ASSOCIATES, INC. (SHANE POTTER OR CHRIS ULMAN, PH:512-989-2200) SHALL BE CONTACTED 48 HOURS PRIOR TO:
   i) PRE-CONSTRUCTION MEETINGS;
   ii) BEGINNING EACH PHASE OF CONSTRUCTION
   iii) TESTING OF WATER AND/OR WASTEWATER LINES; AND,
   iv) FINAL WALK-THROUGH OF FACILITIES.
B) REVIEW OF THE PLANS BY THE DISTRICT IS LIMITED TO DISTRICT OWNED FACILITIES AND DOES NOT INDICATE A REVIEW OF THE ADEQUACY OF THE DESIGN FOR THE FACILITIES. IN APPROVING THESE PLANS, THE DISTRICT MUST RELY ON THE ADEQUACY OF THE WORK OF THE DESIGN ENGINEER.

GEORGETOWN FIRE DEPARTMENT NOTES

1. 1,500 GPM FIRE FLOW SHALL BE PROVIDED FOR THIS PROJECT.
2. AT THE CONCLUSION OF CONSTRUCTION AND AS PART OF THE PROCESS FOR THE CITY TO ACCEPT THIS PHASE:
   - THE FIRE HYDRANTS SHALL BE FLOWED AND TESTED
   - A COPY OF THE REPORT SHALL BE EMAILED INTO THE FIRE DEPARTMENT
   - THE HYDRANTS SHALL BE PAINTED AND COLOR CODED.

*** CAUTION :IF PRESSURE REDUCING VALVES WERE INSTALLED IN THIS PHASING THEY MUST BE SET PRIOR TO FIRE HYDRANT FLOW TESTING.

3. PER CITY ORDINANCE SEC. 13.15.120, HYDRANT FLOW CODING STANDARDS. PUBLIC HYDRANTS WILL HAVE THE BARRELS PAINTED SILVER, THE HYDRANTS WILL BE FLOW TESTED, AND THE BONNET PAINTED USING THE HYDRANT FLOW STANDARD IN PARAGRAPH C.
   FLOW COLOR:
   - GREATER THAN 1500 GPM BLUE
   - 1000 TO 1500 GPM GREEN
   - 500 - 999 GPM ORANGE
   - LESS THAN 500 GPM RED
   - NOT WORKING BLACK OR BAGGED

NO.	REVISION	BY	DATE

Know what's below. Call before you dig.

HRGreen® DEVELOPMENT TX
5508 HIGHWAY 290 WEST
SUITE 150
AUSTIN, TX 78735
512.872.6696
HRGREEN.COM
TBPE NO: 16384
TBPLS NO: 10194101

STATE OF TEXAS
CHRISTINE N. CAMPBELL
142536
LICENSED PROFESSIONAL ENGINEER
07/03/2025

GENERAL NOTES

PARKSIDE ON THE RIVER SECTIONS 11, 12A & 15A CONSTRUCTION PLANS GEORGETOWN, WILLIAMSON, TEXAS

DESIGNED BY: CC
DRAWN BY: MM
CHECKED BY: SN
APPROVED BY:

P:\Blake Magee\Parkside Sections 11-15 & WON 5\Section 11, 12A & 15A\03_ACAD\Plans\sh2403522 GNTS.dwg, GENERAL NOTES, July 18, 2025, 11:20 AM, makai.muhammad

P:\Blake Magee\Parkside Sections 11-15 & WON 5\Section 11, 12A & 15A\03_ACAD\Plans\sh2403522 GNTS.dwg, TCEQ NOTES, July 18, 2025, 11:20 AM, makai.muhammad

TEXAS COMMISSION ON ENVIRONMENTAL QUALITY
ORGANIZED SEWAGE COLLECTION SYSTEM (SCS)
GENERAL CONSTRUCTION NOTES

1. THIS ORGANIZED SEWAGE COLLECTION SYSTEM MUST BE DESIGNED AND CONSTRUCTED IN ACCORDANCE WITH THE TEXAS COMMISSION ON ENVIRONMENTAL QUALITY'S (TCEQ) EDWARDS AQUIFER RULES 30 TEXAS ADMINISTRATIVE CODE (TAC) §§213.5(C) AND 217.51 – 217.70 AND 30 TAC CHAPTER 217, SUBCHAPTER D, AND THE CITY OF ROUND ROCK STANDARD SPECIFICATIONS.

2. ALL CONTRACTORS CONDUCTING REGULATED ACTIVITIES ASSOCIATED WITH THIS PROPOSED REGULATED PROJECT MUST BE PROVIDED WITH COPIES OF THE SEWAGE COLLECTION SYSTEM PLAN AND THE TCEQ LETTER INDICATING THE SPECIFIC CONDITIONS OF ITS APPROVAL. DURING THE COURSE OF THESE REGULATED ACTIVITIES, THE CONTRACTORS MUST BE REQUIRED TO KEEP ON-SITE COPIES OF THE PLAN AND THE APPROVAL LETTER.

3. NO LATER THAN 48 HOURS PRIOR TO COMMENCING ANY REGULATED ACTIVITY, THE APPLICANT OR HIS AGENT MUST NOTIFY THE TCEQ AUSTIN REGIONAL OFFICE, IN WRITING, OF THE DATE ON WHICH THE REGULATED ACTIVITY WILL BEGIN.

4. ANY MODIFICATION TO THE ACTIVITIES DESCRIBED IN THE REFERENCED SCS APPLICATION FOLLOWING THE DATE OF APPROVAL MAY REQUIRE THE SUBMITTAL OF AN SCS APPLICATION TO MODIFY THIS APPROVAL, INCLUDING THE PAYMENT OF APPROPRIATE FEES AND ALL INFORMATION NECESSARY FOR ITS REVIEW AND APPROVAL.

5. ALL TEMPORARY EROSION AND SEDIMENTATION CONTROLS MUST BE INSTALLED PRIOR TO CONSTRUCTION, MUST BE MAINTAINED DURING CONSTRUCTION, AND MUST BE REMOVED WHEN SUFFICIENT VEGETATION IS ESTABLISHED TO CONTROL THE EROSION AND SEDIMENTATION AND THE CONSTRUCTION AREA IS STABILIZED.

6. THE SEWER LINE TRENCH DETAILS SHOWING THE CROSS SECTION WITH THE DIMENSIONS, PIPE PLACEMENT, AND BACKFILL INSTRUCTIONS ARE INCLUDED ON PLAN SHEET 129 AND 130 OF 141 OF THESE PLANS. ALL SEWER PIPES JOINTS MUST MEET THE REQUIREMENTS IN 30 TAC §§217.53(C) AN 217.65.

   GRAVITY LINES MUST HAVE A SDR 35 OR LESS. PRESSURIZED SEWER SYSTEMS MUST HAVE PIPE WITH A MINIMUM WORKING PRESSURE RATING OF 150 PSI.

   THE ASTM, ANSI, OR AWWA SPECIFICATION NUMBERS FOR THE PIPE(S) AND JOINTS ARE ASTM-D3034.

   THE PIPE MATERIAL, THE PRESSURE CLASSES, AND THE SDR AND/OR DR DESIGNATIONS ARE SDR-26.

7. IF ANY SENSITIVE FEATURES ARE DISCOVERED DURING THE WASTEWATER LINE TRENCHING ACTIVITIES, ALL REGULATED ACTIVITIES NEAR THE SENSITIVE FEATURE MUST BE SUSPENDED IMMEDIATELY. THE APPLICANT MUST IMMEDIATELY NOTIFY THE APPROPRIATE REGIONAL OFFICE OF THE TEXAS COMMISSION ON ENVIRONMENTAL QUALITY OF THE FEATURE DISCOVERED. A GEOLOGIST'S ASSESSMENT OF THE LOCATION AND EXTENT OF THE FEATURE DISCOVERED MUST BE REPORTED TO THAT REGIONAL OFFICE IN WRITING WITHIN TWO WORKING DAYS. THE APPLICANT MUST SUBMIT A PLAN FOR ENSURING THE STRUCTURAL INTEGRITY OF THE SEWER LINE OR FOR MODIFYING THE PROPOSED COLLECTION SYSTEM ALIGNMENT AROUND THE FEATURE. THE REGULATED ACTIVITIES NEAR THE SENSITIVE FEATURE MAY NOT PROCEED UNTIL THE EXECUTIVE DIRECTOR HAS REVIEWED AND APPROVED THE METHODS PROPOSED TO PROTECT THE SENSITIVE FEATURE AND THE EDWARDS AQUIFER FROM ANY POTENTIALLY ADVERSE IMPACTS TO WATER QUALITY WHILE MAINTAINING THE STRUCTURAL INTEGRITY OF THE LINE.

8. SEWER LINES LOCATED WITHIN OR CROSSING THE 5-YEAR FLOODPLAIN OF A DRAINAGE WAY WILL BE PROTECTED FROM INUNDATION AND STREAM VELOCITIES WHICH COULD CAUSE EROSION AND SCOURING OF BACKFILL. THE TRENCH MUST BE CAPPED WITH CONCRETE TO PREVENT SCOURING OF BACKFILL, OR THE SEWER LINES MUST BE ENCASED IN CONCRETE. ALL CONCRETE SHALL HAVE A MINIMUM THICKNESS OF SIX (6) INCHES.

9. BLASTING PROCEDURES FOR PROTECTION OF EXISTING SEWER LINES AND OTHER UTILITIES WILL BE IN ACCORDANCE WITH THE NATIONAL FIRE PROTECTION ASSOCIATION CRITERIA. SAND IS NOT ALLOWED AS BEDDING OR BACKFILL IN TRENCHES THAT HAVE BEEN BLASTED. IF ANY EXISTING SEWER LINES ARE DAMAGED, THE LINES MUST BE REPAIRED AND RETESTED.

10. ALL MANHOLES CONSTRUCTED OR REHABILITATED ON THIS PROJECT MUST HAVE WATERTIGHT SIZE ON SIZE RESILIENT CONNECTORS ALLOWING FOR DIFFERENTIAL SETTLEMENT. IF MANHOLES ARE CONSTRUCTED WITHIN THE 100-YEAR FLOODPLAIN, THE COVER MUST HAVE A GASKET AND BE BOLTED TO THE RING. WHERE GASKETED MANHOLE COVERS ARE REQUIRED FOR MORE THAN THREE MANHOLES IN SEQUENCE OR FOR MORE THAN 1500 FEET, ALTERNATE MEANS OF VENTING WILL BE PROVIDED. BRICKS ARE NOT AN ACCEPTABLE CONSTRUCTION MATERIAL FOR ANY PORTION OF THE MANHOLE.

    THE DIAMETER OF THE MANHOLES MUST BE A MINIMUM OF FOUR FEET AND THE MANHOLE FOR ENTRY MUST HAVE A MINIMUM CLEAR OPENING DIAMETER OF 30 INCHES. THESE DIMENSIONS AND OTHER DETAILS SHOWING COMPLIANCE WITH THE COMMISSION'S RULES CONCERNING MANHOLES AND SEWER LINE/MANHOLE INVERTS DESCRIBED IN 30 TAC §217.55 ARE INCLUDED ON PLAN SHEET 129 AND 130 OF 141.

    IT IS SUGGESTED THAT ENTRANCE INTO MANHOLES IN EXCESS OF FOUR FEET DEEP BE ACCOMPLISHED BY MEANS OF A PORTABLE LADDER. THE INCLUSION OF STEPS IN A MANHOLE IS PROHIBITED.

11. WHERE WATER LINES AND NEW SEWER LINE ARE INSTALLED WITH A SEPARATION DISTANCE CLOSER THAN NINE FEET (I.E., WATER LINES CROSSING WASTEWATER LINES, WATER LINES PARALLELING WASTEWATER LINES, OR WATER LINES NEXT TO MANHOLES) THE INSTALLATION MUST MEET THE REQUIREMENTS OF 30 TAC §217.53(D) (PIPE DESIGN) AND 30 TAC §290.44(E) (WATER DISTRIBUTION).

12. WHERE SEWERS LINES DEVIATE FROM STRAIGHT ALIGNMENT AND UNIFORM GRADE ALL CURVATURE OF SEWER PIPE MUST BE ACHIEVED BY THE FOLLOWING PROCEDURE WHICH IS RECOMMENDED BY THE PIPE MANUFACTURER: N/A.

    IF PIPE FLEXURE IS PROPOSED, THE FOLLOWING METHOD OF PREVENTING DEFLECTION OF THE JOINT MUST BE USED: N/A.

    SPECIFIC CARE MUST BE TAKEN TO ENSURE THAT THE JOINT IS PLACED IN THE CENTER OF THE TRENCH AND PROPERLY BEDDED IN ACCORDANCE WITH 30 TAC §217.54.

13. NEW SEWAGE COLLECTION SYSTEM LINES MUST BE CONSTRUCTED WITH STUB OUTS FOR THE CONNECTION OF ANTICIPATED EXTENSIONS. THE LOCATION OF SUCH STUB OUTS MUST BE MARKED ON THE GROUND SUCH THAT THEIR LOCATION CAN BE EASILY DETERMINED AT THE TIME OF CONNECTION OF THE EXTENSIONS. SUCH STUB OUTS MUST BE MANUFACTURED WYES OR TEES THAT ARE COMPATIBLE IN SIZE AND MATERIAL WITH BOTH THE SEWER LINE AND THE EXTENSION. AT THE TIME OF ORIGINAL CONSTRUCTION, NEW STUB-OUTS MUST BE CONSTRUCTED SUFFICIENTLY TO EXTEND BEYOND THE END OF THE STREET PAVEMENT. ALL STUB-OUTS MUST BE SEALED WITH A MANUFACTURED CAP TO PREVENT LEAKAGE. EXTENSIONS THAT WERE NOT ANTICIPATED AT THE TIME OF ORIGINAL CONSTRUCTION OR THAT ARE TO BE CONNECTED TO AN EXISTING SEWER LINE NOT FURNISHED WITH STUB OUTS MUST BE CONNECTED USING A MANUFACTURED SADDLE AND IN ACCORDANCE WITH ACCEPTED PLUMBING TECHNIQUES.

14. TRENCHING, BEDDING AND BACKFILL MUST CONFORM WITH 30 TAC §217.54. THE BEDDING AND BACKFILL FOR FLEXIBLE PIPE MUST COMPLY WITH THE STANDARDS OF ASTM D-2321, CLASSES IA, IB, II OR III. RIGID PIPE BEDDING MUST COMPLY WITH THE REQUIREMENTS OF ASTM C 12 (ANSI A 106.2) CLASSES A, B OR C.

15. SEWER LINES MUST BE TESTED FROM MANHOLE TO MANHOLE. WHEN A NEW SEWER LINE IS CONNECTED TO AN EXISTING STUB OR CLEAN-OUT, IT MUST BE TESTED FROM EXISTING MANHOLE TO NEW MANHOLE. IF A STUB OR CLEAN-OUT IS USED AT THE END OF THE PROPOSED SEWER LINE, NO PRIVATE SERVICE ATTACHMENTS MAY BE CONNECTED BETWEEN THE LAST MANHOLE AND THE CLEANOUT UNLESS IT CAN BE CERTIFIED AS CONFORMING WITH THE PROVISIONS OF 30 TAC §213.5(C)(3)(E).

16. ALL SEWER LINES MUST BE TESTED IN ACCORDANCE WITH 30 TAC §217.57. THE ENGINEER MUST RETAIN COPIES OF ALL TEST RESULTS WHICH MUST BE MADE AVAILABLE TO THE EXECUTIVE DIRECTOR UPON REQUEST. THE ENGINEER MUST CERTIFY IN WRITING THAT ALL WASTEWATER LINES HAVE PASSED ALL REQUIRED TESTING TO THE APPROPRIATE REGIONAL OFFICE WITHIN 30 DAYS OF TEST COMPLETION AND PRIOR TO USE OF THE NEW COLLECTION SYSTEM. TESTING METHOD WILL BE:
    (A) OR A COLLECTION SYSTEM PIPE THAT WILL TRANSPORT WASTEWATER BY GRAVITY FLOW, THE DESIGN MUST SPECIFY AN INFILTRATION AND EXFILTRATION TEST OR A LOW-PRESSURE AIR TEST. A TEST MUST CONFORM TO THE FOLLOWING REQUIREMENTS:
    (1) LOW PRESSURE AIR TEST.
        (A) A LOW PRESSURE AIR TEST MUST FOLLOW THE PROCEDURES DESCRIBED IN AMERICAN SOCIETY FOR TESTING AND MATERIALS (ASTM) C-828, ASTM C-924, OR ASTM F-1417 OR OTHER PROCEDURE APPROVED BY THE EXECUTIVE DIRECTOR, EXCEPT AS TO TESTING TIMES AS REQUIRED IN TABLE C.3 IN SUBPARAGRAPH (C) OF THIS PARAGRAPH OR EQUATION C.3 IN SUBPARAGRAPH (B)(II) OF THIS PARAGRAPH.
        (B) FOR SECTIONS OF COLLECTION SYSTEM PIPE LESS THAN 36 INCH AVERAGE INSIDE DIAMETER, THE FOLLOWING PROCEDURE MUST APPLY, UNLESS A PIPE IS TO BE TESTED AS REQUIRED BY PARAGRAPH (2) OF THIS SUBSECTION.
        (I) A PIPE MUST BE PRESSURIZED TO 3.5 POUNDS PER SQUARE INCH (PSI) GREATER THAN THE PRESSURE EXERTED BY GROUNDWATER ABOVE THE PIPE.
        (II) ONCE THE PRESSURE IS STABILIZED, THE MINIMUM TIME ALLOWABLE FOR THE PRESSURE TO DROP FROM 3.5 PSI GAUGE TO 2.5 PSI GAUGE IS COMPUTED FROM THE FOLLOWING EQUATION:

EQUATION C.3
$$T = \frac{0.085 \times D \times K}{Q}$$

WHERE:

T = TIME FOR PRESSURE TO DROP 1.0 POUND PER SQUARE INCH GAUGE IN SECONDS
K = 0.000419 X D X L, BUT NOT LESS THAN 1.0
D = AVERAGE INSIDE PIPE DIAMETER IN INCHES
L = LENGTH OF LINE OF SAME SIZE BEING TESTED, IN FEET
Q = RATE OF LOSS, 0.0015 CUBIC FEET PER MINUTE PER SQUARE FOOT INTERNAL SURFACE

(C) SINCE A K VALUE OF LESS THAN 1.0 MAY NOT BE USED, THE MINIMUM TESTING TIME FOR EACH PIPE DIAMETER IS SHOWN IN THE FOLLOWING

TABLE C.3:

PIPE DIAMETER (INCHES)	MINIMUM TIME (SECONDS)	MAXIMUM LENGTH FOR MINIMUM TIME (FEET)	TIME FOR LONGER LENGTH (SECONDS/FOOT)
6	340	398	0.855
8	454	298	1.520
10	567	239	2.374
12	680	199	3.419
15	850	159	5.342
18	1020	133	7.693
21	1190	114	10.471
24	1360	100	13.676
27	1530	88	17.309
30	1700	80	21.369
33	1870	72	25.856

(D) AN OWNER MAY STOP A TEST IF NO PRESSURE LOSS HAS OCCURRED DURING THE FIRST 25% OF THE CALCULATED TESTING TIME.
(E) IF ANY PRESSURE LOSS OR LEAKAGE HAS OCCURRED DURING THE FIRST 25% OF A TESTING PERIOD, THEN THE TEST MUST CONTINUE FOR THE ENTIRE TEST DURATION AS OUTLINED ABOVE OR UNTIL FAILURE.
(F) WASTEWATER COLLECTION SYSTEM PIPES WITH A 27 INCH OR LARGER AVERAGE INSIDE DIAMETER MAY BE AIR TESTED AT EACH JOINT INSTEAD OF FOLLOWING THE PROCEDURE OUTLINED IN THIS SECTION.
(G) A TESTING PROCEDURE FOR PIPE WITH AN INSIDE DIAMETER GREATER THAN 33 INCHES MUST BE APPROVED BY THE EXECUTIVE DIRECTOR.

(2) INFILTRATION/EXFILTRATION TEST.

(A) THE TOTAL EXFILTRATION, AS DETERMINED BY A HYDROSTATIC HEAD TEST, MUST NOT EXCEED 50 GALLONS PER INCH OF DIAMETER PER MILE OF PIPE PER 24 HOURS AT A MINIMUM TEST HEAD OF 2.0 FEET ABOVE THE CROWN OF A PIPE AT AN UPSTREAM MANHOLE.
(B) AN OWNER SHALL USE AN INFILTRATION TEST IN LIEU OF AN EXFILTRATION TEST WHEN PIPES ARE INSTALLED BELOW THE GROUNDWATER LEVEL.
(C) THE TOTAL EXFILTRATION, AS DETERMINED BY A HYDROSTATIC HEAD TEST, MUST NOT EXCEED 50 GALLONS PER INCH DIAMETER PER MILE OF PIPE PER 24 HOURS AT A MINIMUM TEST HEAD OF TWO FEET ABOVE THE CROWN OF A PIPE AT AN UPSTREAM MANHOLE, OR AT LEAST TWO FEET ABOVE EXISTING GROUNDWATER LEVEL, WHICHEVER IS GREATER.
(D) FOR CONSTRUCTION WITHIN A 25-YEAR FLOOD PLAIN, THE INFILTRATION OR EXFILTRATION MUST NOT EXCEED 10 GALLONS PER INCH DIAMETER PER MILE OF PIPE PER 24 HOURS AT THE SAME MINIMUM TEST HEAD AS IN SUBPARGRAPH (C) OF THIS PARAGRAPH.
(E) IF THE QUANTITY OF INFILTRATION OR EXFILTRATION EXCEEDS THE MAXIMUM QUANTITY SPECIFIED, AN OWNER SHALL UNDERTAKE REMEDIAL ACTION IN ORDER TO REDUCE THE INFILTRATION OR EXFILTRATION TO AN AMOUNT WITHIN THE LIMITS SPECIFIED. AN OWNER SHALL RETEST A PIPE FOLLOWING A REMEDIATION ACTION.
(F) IF A GRAVITY COLLECTION PIPE IS COMPOSED OF FLEXIBLE PIPE, DEFLECTION TESTING IS ALSO REQUIRED. THE FOLLOWING PROCEDURES MUST BE FOLLOWED:

(1) FOR A COLLECTION PIPE WITH INSIDE DIAMETER LESS THAN 27 INCHES, DEFLECTION MEASUREMENT REQUIRES A RIGID MANDREL.
  (A) MANDREL SIZING.
    (I) A RIGID MANDREL MUST HAVE AN OUTSIDE DIAMETER (OD) NOT LESS THAN 95% OF THE BASE INSIDE DIAMETER (ID) OR AVERAGE ID OF A PIPE, AS SPECIFIED IN THE APPROPRIATE STANDARD BY THE ASTMS, AMERICAN WATER WORKS ASSOCIATION, UNI-BELL, OR AMERICAN NATIONAL STANDARDS INSTITUTE, OR ANY RELATED APPENDIX.
    (II) IF A MANDREL SIZING DIAMETER IS NOT SPECIFIED IN THE APPROPRIATE STANDARD, THE MANDREL MUST HAVE AN OD EQUAL TO 95% OF THE ID OF A PIPE. IN THIS CASE, THE ID OF THE PIPE, FOR THE PURPOSE OF DETERMINING THE OD OF THE MANDREL, MUST EQUAL BE THE AVERAGE OUTSIDE DIAMETER MINUS TWO MINIMUM WALL THICKNESSES FOR OD CONTROLLED PIPE AND THE AVERAGE INSIDE DIAMETER FOR ID CONTROLLED PIPE.
    (III) ALL DIMENSIONS MUST MEET THE APPROPRIATE STANDARD.
  (B) MANDREL DESIGN.
    (I) A RIGID MANDREL MUST BE CONSTRUCTED OF A METAL OR A RIGID PLASTIC MATERIAL THAT CAN WITHSTAND 200 PSI WITHOUT BEING DEFORMED.
    (II) A MANDREL MUST HAVE NINE OR MORE ODD NUMBER OF RUNNERS OR LEGS.
    (III) A BARREL SECTION LENGTH MUST EQUAL AT LEAST 75% OF THE INSIDE DIAMETER OF A PIPE.
    (IV) EACH SIZE MANDREL MUST USE A SEPARATE PROVING RING.
  (C) METHOD OPTIONS.
    (I) AN ADJUSTABLE OR FLEXIBLE MANDREL IS PROHIBITED.
    (II) A TEST MAY NOT USE TELEVISION INSPECTION AS A SUBSTITUTE FOR A DEFLECTION TEST.
    (III) IF REQUESTED, THE EXECUTIVE DIRECTOR MAY APPROVE THE USE OF A DEFLECTOMETER OR A MANDREL WITH REMOVABLE LEGS OR RUNNERS ON A CASE-BY-CASE BASIS.
(2) FOR A GRAVITY COLLECTION SYSTEM PIPE WITH AN INSIDE DIAMETER 27 INCHES AND GREATER, OTHER TEST METHODS MAY BE USED TO DETERMINE VERTICAL DEFLECTION.
(3) A DEFLECTION TEST METHOD MUST BE ACCURATE TO WITHIN PLUS OR MINUS 0.2% DEFLECTION.
(4) AN OWNER SHALL NOT CONDUCT A DEFLECTION TEST UNTIL AT LEAST 30 DAYS AFTER THE FINAL BACKFILL.
(5) GRAVITY COLLECTION SYSTEM PIPE DEFLECTION MUST NOT EXCEED FIVE PERCENT (5%).
(6) IF A PIPE SECTION FAILS A DEFLECTION TEST, AN OWNER SHALL CORRECT THE PROBLEM AND CONDUCT A SECOND TEST AFTER THE FINAL BACKFILL HAS BEEN IN PLACE AT LEAST 30 DAYS.

17. ALL MANHOLES MUST BE TESTED TO MEET OR EXCEED THE REQUIREMENTS OF 30 TAC §217.58.

18. ALL PRIVATE SERVICE LATERALS MUST BE INSPECTED AND CERTIFIED IN ACCORDANCE WITH 30 TAC §213.5(C)(3)(I). AFTER INSTALLATION OF AND, PRIOR TO COVERING AND CONNECTING A PRIVATE SERVICE LATERAL TO AN EXISTING ORGANIZED SEWAGE COLLECTION SYSTEM, A TEXAS LICENSED PROFESSIONAL ENGINEER, TEXAS REGISTERED SANITARIAN, OR APPROPRIATE CITY INSPECTOR MUST VISUALLY INSPECT THE PRIVATE SERVICE LATERAL AND THE CONNECTION TO THE SEWAGE COLLECTION SYSTEM, AND CERTIFY THAT IT IS CONSTRUCTED IN CONFORMITY WITH THE APPLICABLE PROVISIONS OF THIS SECTION. THE OWNER OF THE COLLECTION SYSTEM MUST MAINTAIN SUCH CERTIFICATIONS FOR FIVE YEARS AND FORWARD COPIES TO THE APPROPRIATE REGIONAL OFFICE UPON REQUEST. CONNECTIONS MAY ONLY BE MADE TO AN APPROVED SEWAGE COLLECTION SYSTEM.

SUPPLEMENTAL TCEQ NOTES:

1. WATERTIGHT, SIZE ON SIZE RESILIENT CONNECTORS CONFORMING TO ASTM C-923 ARE REQUIRED FOR CONNECTING PIPE TO MANHOLES.
2. IF FAULTS, CAVERNS, OR SUBSIDENCE ARE DISCOVERED DURING CONSTRUCTION, CONSTRUCTION SHOULD BE HALTED TO ALLOW THE FEATURES TO BE INSPECTED BY THE DESIGN ENGINEER OR GEOLOGICAL OR GEOTECHNICAL PROFESSIONAL.
3. TRENCH WALLS MUST BE VERTICAL TO AT LEAST ONE FOOT ABOVE THE PIPE. TRENCH BACKFILL MUST BE FREE OF STONES GREATER THAN 6-INCHES AND FREE OF ORGANIC OR ANY OTHER UNSTABLE MATERIAL.
4. ALL WASTEWATER PIPE MATERIAL PVC SDR26-ASTM-3034 USED MUST HAVE A MINIMUM ALLOWABLE TENSILE.

TCEQ WATER DISTRIBUTION SYSTEM GENERAL CONSTRUCTION NOTES

1. This water distribution system must be constructed in accordance with the current Texas Commission on Environmental Quality (TCEQ) Rules and Regulations for Public Water Systems 30 Texas Administrative Code (TAC) Chapter 290 Subchapter D. When conflicts are noted with local standards, the more stringent requirement shall be applied. At a minimum, construction for public water systems must always meet TCEQ's "Rules and Regulations for Public Water Systems."

2. All newly installed pipes and related products must conform to American National Standards Institute (ANSI)/NSF International Standard 61 and must be certified by an organization accredited by ANSI [§290.44(a)(1)].

3. Plastic pipe for use in public water systems must bear the NSF International Seal of Approval (NSF-pw) and have an ASTM design pressure rating of at least 150 psi or a standard dimension ratio of 26 or less [§290.44(a)(2)].

4. No pipe which has been used for any purpose other than the conveyance of drinking water shall be accepted or relocated for use in any public drinking water supply [§290.44(a)(3)].

5. All water line crossings of wastewater mains shall be perpendicular [§290.44(e)(4)(B)].

6. Water transmission and distribution lines shall be installed in accordance with the manufacturer's instructions. However, the top of the water line must be located below the frost line and in no case shall the top of the water line be less than 24 inches below ground surface [§290.44(a)(4)].

7. The maximum allowable lead content of pipes, pipe fittings, plumbing fittings, and fixtures is 0.25 percent [§290.44(b)].

8. The contractor shall install appropriate air release devices with vent openings to the atmosphere covered with 16-mesh or finer, corrosion resistant screening material or an acceptable equivalent [§290.44(d)(1)].

9. The contractor shall not place the pipe in water or where it can be flooded with water or sewage during its storage or installation [§290.44(f)(1)].

10. When waterlines are laid under any flowing or intermittent stream or semi-permanent body of water the waterline shall be installed in a separate watertight pipe encasement. Valves must be provided on each side of the crossing with facilities to allow the underwater portion of the system to be isolated and tested [§290.44(f)(2)].

11. Pursuant to 30 TAC §290.44(a)(5), the hydrostatic leakage rate shall not exceed the amount allowed or recommended by the most current AWWA formulas for PVC pipe, cast iron and ductile iron pipe. Include the formulas in the notes on the plans.

    - The hydrostatic leakage rate for polyvinyl chloride (PVC) pipe and appurtenances shall not exceed the amount allowed or recommended by formulas in America Water Works Association (AWWA) C-605 as required in 30 TAC §290.44(a)(5). Please ensure that the formula for this calculation is correct and most current formula is in use;

$$Q = \frac{LD\sqrt{P}}{148,000}$$

      Where:
      - Q = the quantity of makeup water in gallons per hour,
      - L = the length of the pipe section being tested, in feet,
      - D = the nominal diameter of the pipe in inches, and
      - P = the average test pressure during the hydrostatic test in pounds per square inch (psi).

    - The hydrostatic leakage rate for ductile iron (DI) pipe and appurtenances shall not exceed the amount allowed or recommended by formulas in America Water Works Association (AWWA) C-600 as required in 30 TAC §290.44(a)(5). Please ensure that the formula for this calculation is correct and most current formula is in use;

$$L = \frac{SD\sqrt{P}}{148,000}$$

      Where:
      - L = the quantity of makeup water in gallons per hour,
      - S = the length of the pipe section being tested, in feet,
      - D = the nominal diameter of the pipe in inches, and
      - P = the average test pressure during the hydrostatic test in pounds per square inch (psi).

12. The contractor shall maintain a minimum separation distance in all directions of nine feet between the proposed waterline and wastewater collection facilities including manholes. If this distance cannot be maintained, the contractor must immediately notify the project engineer for further direction. Separation distances, installation methods, and materials utilized must meet §290.44(e)(1)-(4).

13. The separation distance from a potable waterline to a wastewater main or lateral manhole or cleanout shall be a minimum of nine feet. Where the nine-foot separation distance cannot be achieved, the potable waterline shall be encased in a joint of at least 150 psi pressure class pipe at least 18 feet long and two nominal sizes larger than the new conveyance. The space around the carrier pipe shall be supported at five-foot intervals with spacers or be filled to the springline with washed sand. The encasement pipe shall be centered on the crossing and both ends sealed with cement grout or manufactured sealant [§290.44(e)(5)].

14. Fire hydrants shall not be installed within nine feet vertically or horizontally of any wastewater line, wastewater lateral, or wastewater service line regardless of construction [§290.44(e)(6)].

15. Suction mains to pumping equipment shall not cross wastewater mains, wastewater laterals, or wastewater service lines. Raw water supply lines shall not be installed within five feet of any tile or concrete wastewater main, wastewater lateral, or wastewater service line [§290.44(e)(7)].

16. Waterlines shall not be installed closer than ten feet to septic tank drainfields [§290.44(e)(8)].

17. The contractor shall disinfect the new waterlines in accordance with AWWA Standard C-651-14 or most recent, then flush and sample the lines before being placed into service. Samples shall be collected for microbiological analysis to check the effectiveness of the disinfection procedure which shall be repeated if contamination persists. A minimum of one sample for each 1,000 feet of completed waterline will be required or at the next available sampling point beyond 1,000 feet as designated by the design engineer [§290.44(f)(3)].

18. Dechlorination of disinfecting water shall be in strict accordance with current AWWA Standard C655-09 or most recent.

[redacted] Environmental Quality
[redacted] Abatement Plan
[redacted] ruction Notes

[redacted] Construction Notes – Legal Disclaimer

[redacted] nature only and do not constitute an approval or conditional approval [redacted] listing of rules or conditions to be followed during construction. [redacted] ulations found in Title 30, Texas Administrative Code (TAC), Chapters [redacted] the protection of water quality. Additionally, nothing contained in the [redacted] commission or any other governmental entity to prevent, correct, or [redacted] uifer or hydrologically connected surface waters. The holder of any [redacted] responsible for compliance with Title 30, TAC, Chapters 213 or any [redacted] rds Aquifer Protection Plan through all phases of plan implementation. [redacted] ot in contradiction of any "construction notes," is a violation of TCEQ [redacted] and penalties as provided under Title 30, TAC § 213.10 (relating to [redacted] d injunction. The following/listed "construction notes" in no way [redacted], Chapters 213 and 217, or any other TCEQ applicable regulation

[redacted] ubmitted to the TCEQ regional office at least 48 [redacted] ities. This notice must include: [redacted] contractor.

[redacted] ies associated with this project must be provided [redacted] r Pollution Abatement Plan (WPAP) and the TCEQ [redacted] s approval. During the course of these regulated [redacted] keep on-site copies of the approved plan and [redacted]

[redacted] n cavity, sink hole, etc.) is discovered during [redacted] ar the sensitive feature must be suspended [redacted] onal office must be immediately notified of any [redacted] onstruction. Construction activities may not be [redacted] approved the appropriate protective measures in [redacted] d the Edwards Aquifer from potentially adverse [redacted]

[redacted] bstance storage tank shall be installed within 150 [redacted] stem, well, or sensitive feature.

[redacted], all temporary erosion and sedimentation (E&S) [redacted] and maintained in accordance with the approved [redacted] If inspections indicate a control has been used [redacted] ant must replace or modify the control for site [redacted] in place until the disturbed areas have been [redacted]

[redacted] n site must be collected and properly disposed of [redacted] t washed into surface streams, sensitive features, [redacted]

[redacted] ment traps or sedimentation basins not later than when it occupies 50% of the basin's design capacity.

8. Litter, construction debris, and construction chemicals exposed to stormwater shall be prevented from being discharged offsite.

9. All spoils (excavated material) generated from the project site must be stored on-site with proper E&S controls. For storage or disposal of spoils at another site on the Edwards Aquifer Recharge Zone, the owner of the site must receive approval of a water pollution abatement plan for the placement of fill material or mass grading prior to the placement of spoils at the other site.

10. If portions of the site will have a temporary or permanent cease in construction activity lasting longer than 14 days, soil stabilization in those areas shall be initiated as soon as possible prior to the 14th day of inactivity. If activity will resume prior to the 21st day, stabilization measures are not required. If drought conditions or inclement weather prevent action by the 14th day, stabilization measures shall be initiated as soon as possible.

11. The following records shall be maintained and made available to the TCEQ upon request:
    - the dates when major grading activities occur;
    - the dates when construction activities temporarily or permanently cease on a portion of the site; and
    - the dates when stabilization measures are initiated.

12. The holder of any approved Edward Aquifer protection plan must notify the appropriate regional office in writing and obtain approval from the executive director prior to initiating any of the following:

    A. any physical or operational modification of any water pollution abatement structure(s), including but not limited to ponds, dams, berms, sewage treatment plants, and diversionary structures;

    B. any change in the nature or character of the regulated activity from that which was originally approved or a change which would significantly impact the ability of the plan to prevent pollution of the Edwards Aquifer;

    C. any development of land previously identified as undeveloped in the original water pollution abatement plan.

Austin Regional Office	San Antonio Regional Office
12100 Park 35 Circle, Building A	14250 Judson Road
Austin, Texas 78753-1808	San Antonio, Texas 78233-4480
Phone (512) 339-2929	Phone (210) 490-3096
Fax (512) 339-3795	Fax (210) 545-4329

THESE GENERAL CONSTRUCTION NOTES MUST BE INCLUDED ON THE CONSTRUCTION PLANS PROVIDED TO THE CONTRACTOR AND ALL SUBCONTRACTORS.

NO.	REVISION	BY	DATE

Know what's below. Call before you dig.

HRGreen
DEVELOPMENT TX
5508 HIGHWAY 290 WEST
SUITE 150
AUSTIN, TX 78735
512.872.6696
HRGREEN.COM
TBPE NO: 16384
TBPLS NO: 10194101

STATE OF TEXAS
CHRISTINE N. CAMPBELL
142536
LICENSED PROFESSIONAL ENGINEER
07/03/2025

TCEQ NOTES

PARKSIDE ON THE RIVER
SECTIONS 11, 12A & 15A
CONSTRUCTION PLANS
GEORGETOWN, WILLIAMSON, TEXAS

DESIGNED BY: CC
DRAWN BY: MM
CHECKED BY: SN
APPROVED BY:

SHEET 3 OF 141

2025-XX-CON

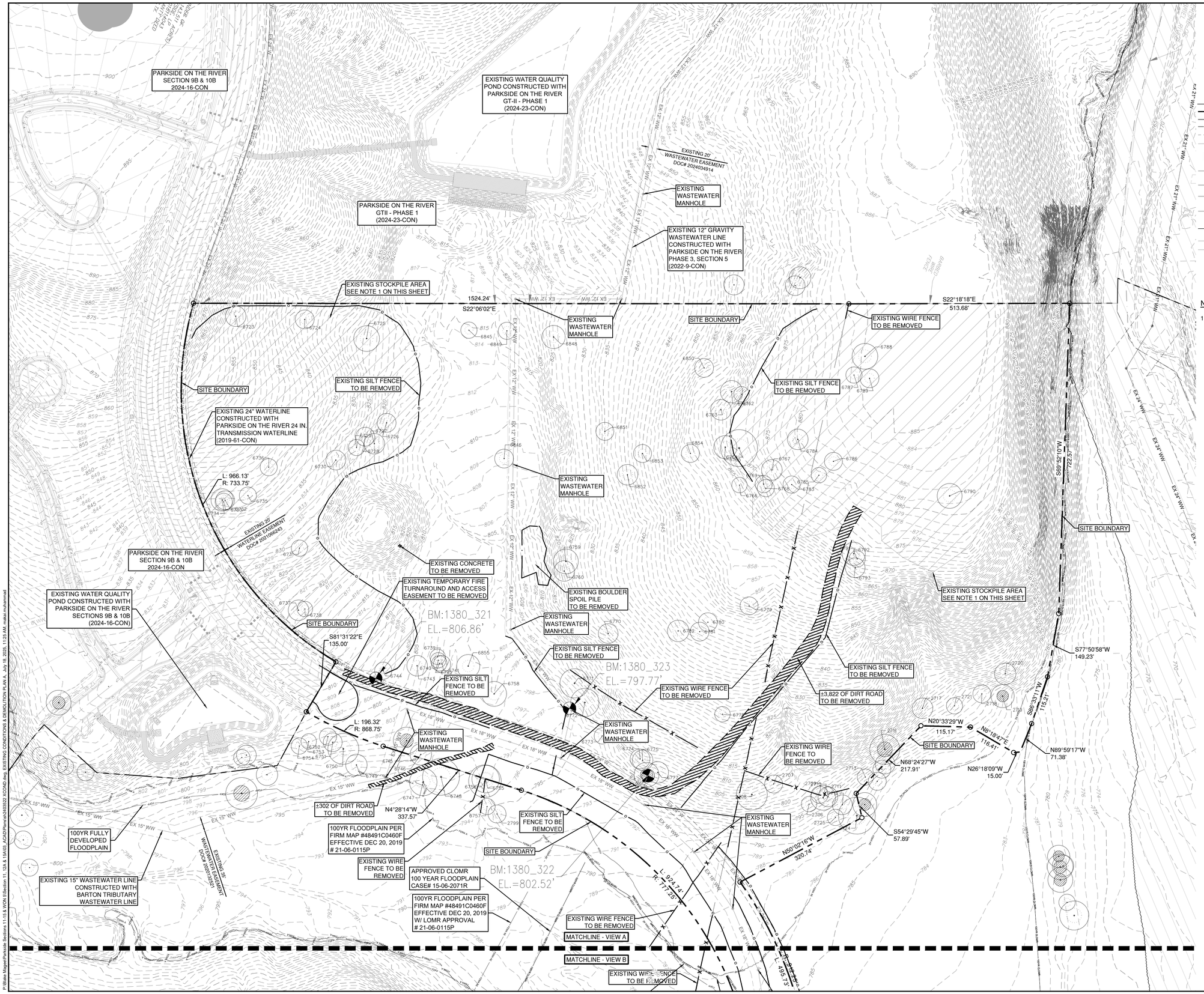

0 100' 200'

SCALE: 1" = 100'

LEGEND

- SITE BOUNDARY
- PROPOSED LOT LINE
- EASEMENT
- 840 EXISTING MAJOR CONTOUR
- 834 EXISTING MINOR CONTOUR
- FEMA FLOODWAY PER FIRM# 48491C0460F & LOMR# 21-06-0115P
- FEMA AE — 100YR ATLAS 14 FEMA ZONE AE FLOODPLAIN PER FIRM# 48491C0460F & LOMR# 21-06-0115P
- FEMA A — 100YR FEMA ZONE A FLOODPLAIN PER FIRM MAP# 48491C0460F
- 100YR CLOMR — 100YR CLOMR FLOODPLAIN CASE# 15-06-2071R
- FDFP — 100YR ATLAS 14 FULLY DEVELOPED FLOODPLAIN (STANTEC DRAINAGE STUDY, SHERVIN NOOSHIN, 3/25/19) APPROVED WITH PP# 2019-5-PP
- OHWM — ORDINARY HIGH WATER MARK PER ADAMS ENVIRONMENTAL
- OHE — OVERHEAD ELECTRIC LINE
- OLD PARCEL LINE
- EXISTING TREES
- EXISTING HERITAGE TREES

NOTES:

1. HR GREEN DID NOT PERFORM A TOPOGRAPHIC SURVEY OF THE HATCHED STOCKPILE AREA DURING AUGUST AND SEPTEMBER 2024, AS IT IS CURRENTLY UNDERGOING SIGNIFICANT EARTH MOVING WORK.

NO	BY	DATE
	REVISION	

811 Know what's below. Call before you dig.

5508 HIGHWAY 290 WEST
SUITE 150
AUSTIN, TX 78735
512.872.6696
HRGREEN.COM

TBPE NO: 16384
TBPLS NO: 10194101

HRGreen®
DEVELOPMENT TX

STATE OF TEXAS
CHRISTINE N. CAMPBELL
142536
LICENSED
PROFESSIONAL
ENGINEER

07/15/2025

EXISTING CONDITIONS & DEMOLITION PLAN A

PARKSIDE ON THE RIVER SECTIONS 11, 12A & 15A CONSTRUCTION PLANS

GEORGETOWN, WILLIAMSON, TEXAS

DESIGNED BY: CC
DRAWN BY: MM
CHECKED BY: SN
APPROVED BY:

SHEET 29 OF 141

2025-XX-CON

P:\Blair Magnet\Parkside Sections 11-15 & WOA II\Sections 11, 12A & 15A\00_ACAD\Permit\240503\2 XCOND.dwg, EXISTING CONDITIONS & DEMOLITION PLAN A, July 16, 2025, 11:25 AM, nabil.muhammad

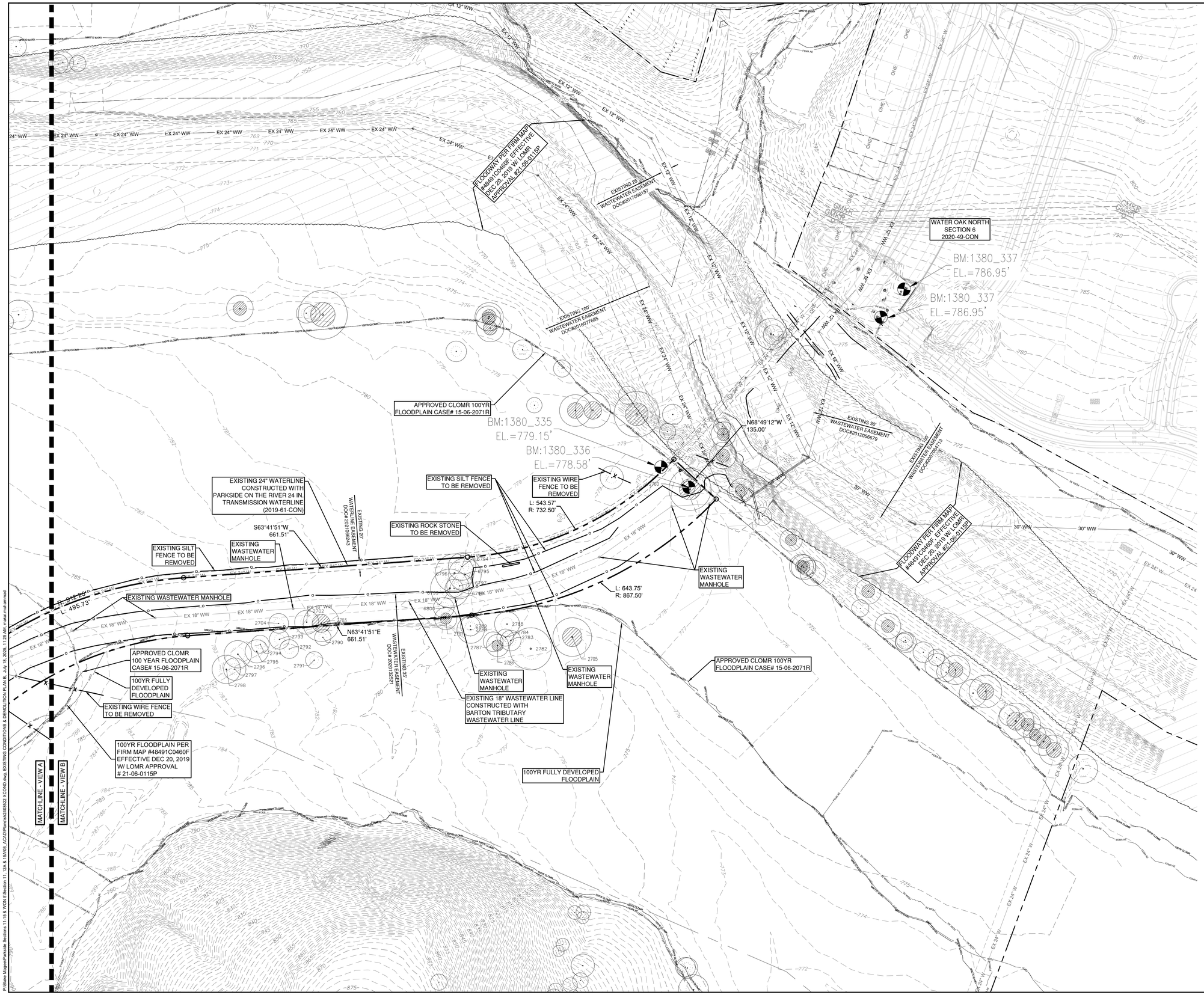

0 100' 200'

SCALE: 1" = 100'

LEGEND

- SITE BOUNDARY
- PROPOSED LOT LINE
- EASEMENT
- 840 EXISTING MAJOR CONTOUR
- 834 EXISTING MINOR CONTOUR
- FEMA FLOODWAY PER FIRM# 48491C0460F & LOMR# 21-06-0115P
- FEMA AE — 100YR ATLAS 14 FEMA ZONE AE FLOODPLAIN PER FIRM# 48491C0460F & LOMR# 21-06-0115P
- FEMA A — 100YR FEMA ZONE A FLOODPLAIN PER FIRM MAP# 48491C0460F
- 100YR CLOMR — 100YR CLOMR FLOODPLAIN CASE# 15-06-2071R
- FDFP — 100YR ATLAS 14 FULLY DEVELOPED FLOODPLAIN (STANTEC DRAINAGE STUDY, SHERVIN NOOSHIN, 3/25/19) APPROVED WITH PP# 2019-5-PP
- OHWM — ORDINARY HIGH WATER MARK PER ADAMS ENVIRONMENTAL
- OHE — OVERHEAD ELECTRIC LINE
- OLD PARCEL LINE
- EXISTING TREES
- EXISTING HERITAGE TREES

NO.	REVISION	BY	DATE

811 Know what's below. Call before you dig.

HRGreen® DEVELOPMENT TX
5508 HIGHWAY 290 WEST
SUITE 150
AUSTIN, TX 78735
512.872.6696
HRGREEN.COM
TBPE NO: 16384
TBPLS NO: 10194101

STATE OF TEXAS
CHRISTINE N. CAMPBELL
142536
LICENSED PROFESSIONAL ENGINEER
07/03/2025

EXISTING CONDITIONS & DEMOLITION PLAN B

PARKSIDE ON THE RIVER SECTIONS 11, 12A & 15A CONSTRUCTION PLANS

GEORGETOWN, WILLIAMSON, TEXAS

DESIGNED BY: CC
DRAWN BY: MM
CHECKED BY: SN
APPROVED BY:

2025-XX-CON

P:\Blake Magee\Parkside Sections 11-15 & WON 5\Section 11, 12A & 15A\03_ACAD\Plans\sh2403522 XCOND.dwg, EXISTING CONDITIONS & DEMOLITION PLAN B, July 18, 2025, 11:25 AM, makai.muhammad

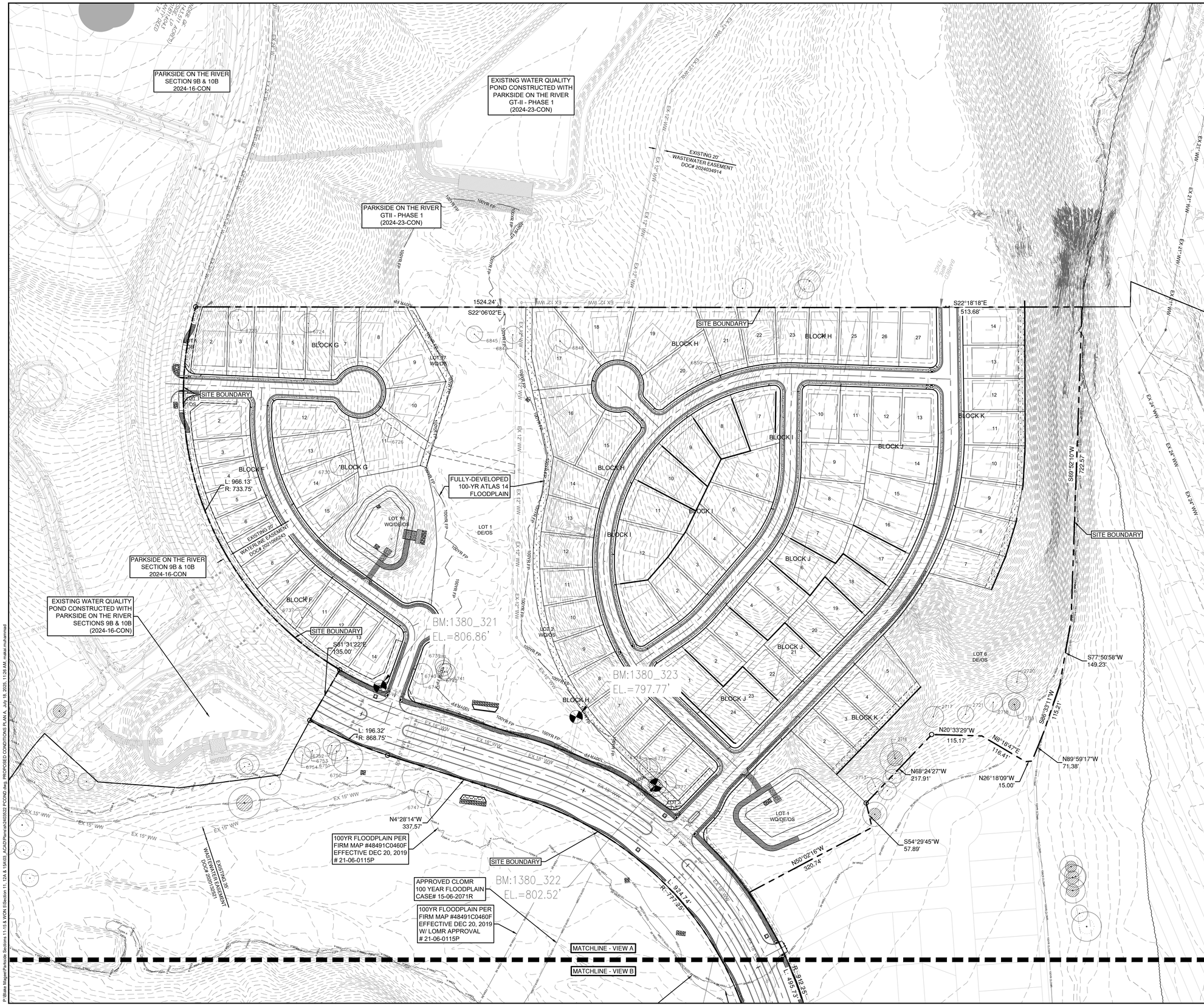

0 100' 200'

SCALE: 1" = 100'

LEGEND

- SITE BOUNDARY
- PROPOSED LOT LINE
- EASEMENT
- 840 — EXISTING MAJOR CONTOUR
- 834 — EXISTING MINOR CONTOUR
- FEMA FLOODWAY PER FIRM# 48491C0460F & LOMR# 21-06-0115P
- FEMA AE — 100YR ATLAS 14 FEMA ZONE AE FLOODPLAIN PER FIRM# 48491C0460F & LOMR# 21-06-0115P
- FEMA A — 100YR FEMA ZONE A FLOODPLAIN PER FIRM MAP# 48491C0460F
- 100YR CLOMR — 100YR CLOMR FLOODPLAIN CASE# 15-06-2071R
- FDFP — 100YR ATLAS 14 FULLY DEVELOPED FLOODPLAIN (STANTEC DRAINAGE STUDY, SHERVIN NOOSHIN, 3/25/19) APPROVED WITH PP# 2019-5-PP
- OHWM — ORDINARY HIGH WATER MARK PER ADAMS ENVIRONMENTAL
- OHE — OVERHEAD ELECTRIC LINE
- OLD PARCEL LINE
- EXISTING TREES
- EXISTING HERITAGE TREES

NO.	REVISION	BY	DATE

811 Know what's below. Call before you dig.

HRGreen® DEVELOPMENT TX
5508 HIGHWAY 290 WEST
SUITE 150
AUSTIN, TX 78735
512.872.6696
HRGREEN.COM
TBPE NO: 16384
TBPLS NO: 10194101

STATE OF TEXAS
CHRISTINE N. CAMPBELL
142536
LICENSED PROFESSIONAL ENGINEER
07/03/2025

PROPOSED CONDITIONS PLAN A

PARKSIDE ON THE RIVER SECTIONS 11, 12A & 15A CONSTRUCTION PLANS

GEORGETOWN, WILLIAMSON, TEXAS

DESIGNED BY: CC
DRAWN BY: MM
CHECKED BY: SN
APPROVED BY:

SHEET 31 OF 141

2025-XX-CON

P:\Blake Magee\Parkside Sections 11-15 & WON 5\Section 11, 12A & 15A\03_ACAD\Plans\sh2403522 PCOND.dwg, PROPOSED CONDITIONS PLAN A, July 18, 2025, 11:26 AM, makai.muhammad

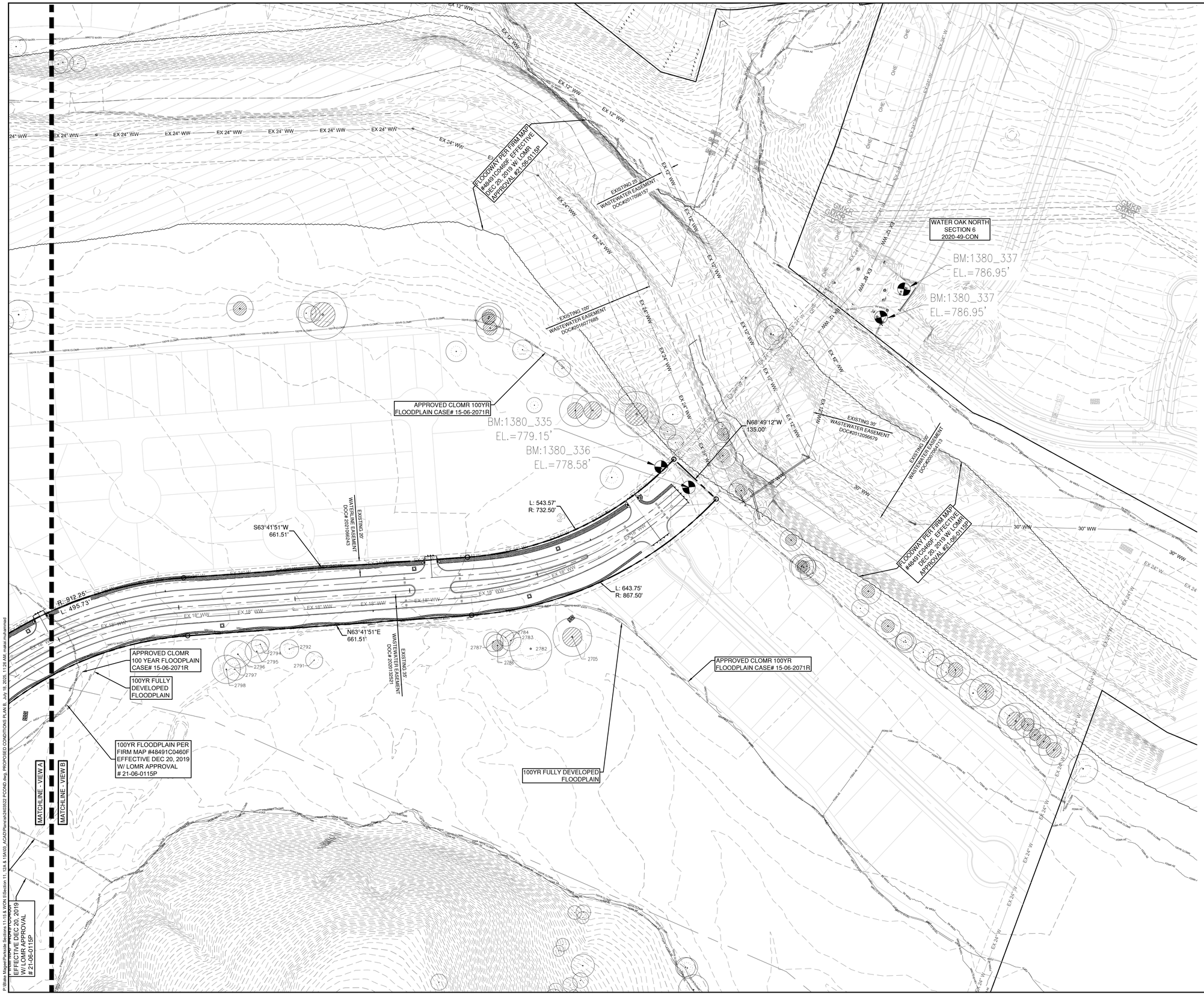

0 100' 200'

SCALE: 1" = 100'

LEGEND

- SITE BOUNDARY
- PROPOSED LOT LINE
- EASEMENT
- 840 — EXISTING MAJOR CONTOUR
- 834 — EXISTING MINOR CONTOUR
- FEMA FLOODWAY PER FIRM# 48491C0460F & LOMR# 21-06-0115P
- FEMA AE — 100YR ATLAS 14 FEMA ZONE AE FLOODPLAIN PER FIRM# 48491C0460F & LOMR# 21-06-0115P
- FEMA A — 100YR FEMA ZONE A FLOODPLAIN PER FIRM MAP# 48491C0460F
- 100YR CLOMR — 100YR CLOMR FLOODPLAIN CASE# 15-06-2071R
- FDFP — 100YR ATLAS 14 FULLY DEVELOPED FLOODPLAIN (STANTEC DRAINAGE STUDY, SHERVIN NOOSHIN, 3/25/19) APPROVED WITH PP# 2019-5-PP
- OHWM — ORDINARY HIGH WATER MARK PER ADAMS ENVIRONMENTAL
- OHE — OVERHEAD ELECTRIC LINE
- OLD PARCEL LINE
- EXISTING TREES
- EXISTING HERITAGE TREES

NO.	REVISION	BY	DATE

811 Know what's below. Call before you dig.

HRGreen®
DEVELOPMENT TX
5508 HIGHWAY 290 WEST
SUITE 150
AUSTIN, TX 78735
512.872.6696
HRGREEN.COM
TBPE NO: 16384
TBPLS NO: 10194101

STATE OF TEXAS
CHRISTINE N. CAMPBELL
142536
LICENSED PROFESSIONAL ENGINEER
07/03/2025

PROPOSED CONDITIONS PLAN B

PARKSIDE ON THE RIVER SECTIONS 11, 12A & 15A CONSTRUCTION PLANS

GEORGETOWN, WILLIAMSON, TEXAS

DESIGNED BY: CC
DRAWN BY: MM
CHECKED BY: SN
APPROVED BY:

2025-XX-CON

P:\Blake Magee\Parkside Sections 11-15 & WON 5\Section 11, 12A & 15A\03_ACAD\Plans\sh24\03522 PCOND.dwg, PROPOSED CONDITIONS PLAN B, July 18, 2025, 11:26 AM, makai.muhammad

INSTALL INLET PROTECTION

MATCHLINE - VIEW B

MATCHLINE - VIEW A

LIMITS OF CONSTRUCTION

EXISTING 20' WASTEWATER EASEMENT DOC#2024034914

INSTALL ±945 LF OF SILT FENCE

INSTALL ±1,504 LF OF SILT FENCE

INSTALL ±147 LF OF TREE PROTECTION

FULLY-DEVELOPED 100-YR ATLAS 14 FLOODPLAIN

INSTALL ±160 LF OF TREE PROTECTION

INSTALL ±61 LF OF ROCK BERM

INSTALL ±101 LF OF SILT FENCE

INSTALL ±142 LF OF SILT FENCE

INSTALL INLET PROTECTION

INSTALL INLET PROTECTION

INSTALL INLET PROTECTION

PARKSIDE ON THE RIVER SECTIONS 9B & 10B (2024-16-CON)

LIMITS OF CONSTRUCTION

STABILIZED CONSTRUCTION ENTRANCE

EXISTING WATER QUALITY POND CONSTRUCTED WITH PARKSIDE ON THE RIVER SECTIONS 9B & 10B (2024-16-CON)

INSTALL INLET PROTECTION

INSTALL ±54 LF OF SILT FENCE

INSTALL ±145 LF OF TREE PROTECTION

INSTALL ±11 LF OF ROCK BERM

INSTALL ±176 LF OF SILT FENCE

INSTALL ±99 LF OF TREE PROTECTION

100YR FULLY DEVELOPED FLOODPLAIN

100YR FLOODPLAIN PER FIRM MAP #48491C0460F EFFECTIVE DEC 20, 2019 # 21-06-0115P

LIMITS OF CONSTRUCTION

INSTALL ±1,464 LF OF SILT FENCE

INSTALL ±93 LF OF ROCK BERM

APPROVED CLOMR 100 YEAR FLOODPLAIN CASE# 15-06-2071R

100YR FLOODPLAIN PER FIRM MAP #48491C0460F EFFECTIVE DEC 20, 2019 W/ LOMR APPROVAL # 21-06-0115P

EXISTING 20' WASTEWATER EASEMENT DOC#2020120321

EXISTING 20' WATERLINE EASEMENT DOC#2019064243

PARKSIDE PARKWAY OUTBOUND

PARKSIDE PARKWAY INBOUND

GAMALIEL LOOP

MORNING

LOCK H

LOT 2 WQ/OS

BLOCK F

0 40' 80'

SCALE: 1" = 40'

LEGEND

- PROPERTY BOUNDARY
- EASEMENT
- EXISTING MAJOR CONTOUR
- EXISTING MINOR CONTOUR
- PROPOSED MAJOR CONTOUR
- PROPOSED MINOR CONTOUR
- LOC — LIMITS OF CONSTRUCTION
- SF — SILT FENCE
- TP — TREE PROTECTION FENCE
- FEMA FLOODWAY PER FIRM# 48491C0460F & LOMR# 21-06-0115P
- FEMA AE — 100YR ATLAS 14 FEMA ZONE AE FLOODPLAIN PER FIRM# 48491C0460F & LOMR# 21-06-0115P
- FEMA A — 100YR FEMA ZONE A FLOODPLAIN PER FIRM MAP# 48491C0460F
- 100YR CLOMR — 100YR CLOMR FLOODPLAIN CASE# 15-06-2071R
- FDFP — 100YR ATLAS 14 FULLY DEVELOPED FLOODPLAIN (STANTEC DRAINAGE STUDY, SHERVIN NOOSHIN, 3/25/19) APPROVED WITH PP# 2019-5-PP
- OHWM — ORDINARY HIGH WATER MARK PER ADAMS ENVIRONMENTAL
- MASONRY WALL
- TREES TO REMAIN - HERITAGE
- TREES TO BE REMOVED - HERITAGE
- TREES TO REMAIN - NON HERITAGE
- TREES TO BE REMOVED - NON HERITAGE
- STABILIZED CONSTRUCTION ENTRANCE
- INLET PROTECTION
- TEMPORARY SPOILS AREA
- CONCRETE WASHOUT AREA
- STOCKPILE
- ROCK BERM

SEQUENCE OF MAJOR ACTIVITIES:

1. TEMPORARY EROSION AND SEDIMENTATION CONTROL MEASURES TO INCLUDE SILT FENCE, ROCK BERMS, AND STABILIZED CONSTRUCTION ENTRANCES WILL BE INSTALLED ACCORDING TO CONSTRUCTION PLANS AND IN ACCORDANCE WITH THE STORM WATER POLLUTION PREVENTION PLAN (SWPPP).
2. TREE PROTECTION MEASURES WILL ALSO BE INSTALLED FOR ALL TREES WITH CONSTRUCTION ACTIVITIES WITHIN CRITICAL ROOT ZONE.
3. TEMPORARY SPOILS, CONSTRUCTION STAGING AND CONCRETE WASHOUT AREA WILL BE CONSTRUCTED.
4. THE SEDIMENTATION TRAP LOCATED AT THE SOUTHEAST CORNER OF THE SITE WILL BE EXCAVATED AND THE OUTFALL STRUCTURE CONSTRUCTED.
5. FILTER FABRIC WILL BE USED TO COVER THE OVERFLOW WEIR TO PREVENT UNFILTERED RUNOFF FROM ENTERING THE LAND DOWNSTREAM.
6. AFTER THE SITE IS MASS GRADED, THE ONSITE DRAINAGE, UTILITIES, AND PAVING WILL BE INSTALLED.
7. INLET PROTECTION BARRIERS WILL BE INSTALLED AS CONSTRUCTION OF STORM SEWER TAKES PLACE IN ORDER TO PREVENT SEDIMENTS FROM ENTERING THE SYSTEM.
8. TEMPORARY SEDIMENTATION BASINS WILL BE CONVERTED TO PERMANENT WATER QUALITY PONDS.
9. SEDIMENTATION TRAPS SHALL BE CLEANED OUT AND FILTER MEDIUM INSTALLED CONCURRENT WITH RE-VEGETATION.
10. THE DISTURBED AREA TO REMAIN PERVIOUS WILL BE VEGETATED USING THE PROCEDURES DETAILED IN THE CONSTRUCTION PLANS AND ALL TEMPORARY EROSION CONTROL MEASURES WILL BE REMOVED UPON RE-VEGETATION.

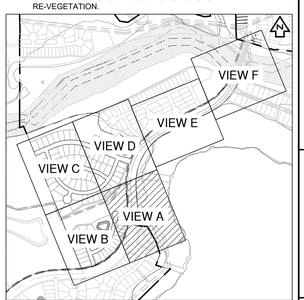

KEY MAP (N.T.S.)

NO	REVISION	BY	DATE

811 Know what's below. Call before you dig.

5508 HIGHWAY 290 WEST
SUITE 150
AUSTIN, TX 78735
512.872.6696
HRGREEN.COM

TBPE NO: 16384
TBPLS NO: 10194101

HRGreen® DEVELOPMENT TX

STATE OF TEXAS
CHRISTINE N. CAMPBELL
142536
LICENSED PROFESSIONAL ENGINEER

07/05/2025

EROSION & SEDIMENTATION CONTROL PLAN A

PARKSIDE ON THE RIVER SECTIONS 11, 12A & 15A CONSTRUCTION PLANS

GEORGETOWN, WILLIAMSON, TEXAS

DESIGNED BY: CC
DRAWN BY: MM
CHECKED BY: SN
APPROVED BY:

SHEET 34 OF 141

2025-XX-CON

P:\Data\Mapp\Parkside Sections 11-15 & WOW FS\active 11, 12A & 15A\03_ACAD\Plans\drb240502 EROS.dwg, EROSION & SEDIMENTATION CONTROL PLAN A, July 18, 2025, 11:29 AM, nalai.muhammad

LEGEND

- PROPERTY BOUNDARY
- EASEMENT
- 840 EXISTING MAJOR CONTOUR
- 834 EXISTING MINOR CONTOUR
- 940 PROPOSED MAJOR CONTOUR
- 934 PROPOSED MINOR CONTOUR
- LOC LIMITS OF CONSTRUCTION
- SF SILT FENCE
- TP TREE PROTECTION FENCE
- FEMA FLOODWAY PER FIRM# 48491C0460F & LOMR# 21-06-0115P
- FEMA AE 100YR ATLAS 14 FEMA ZONE AE FLOODPLAIN PER FIRM# 48491C0460F & LOMR# 21-06-0115P
- FEMA A 100YR FEMA ZONE A FLOODPLAIN PER FIRM MAP# 48491C0460F
- 100YR CLOMR 100YR CLOMR FLOODPLAIN CASE# 15-06-2071R
- FDFP 100YR ATLAS 14 FULLY DEVELOPED FLOODPLAIN (STANTEC DRAINAGE STUDY, SHERVIN NOOSHIN, 3/25/19) APPROVED WITH PP# 2019-5-PP
- OHWM ORDINARY HIGH WATER MARK PER ADAMS ENVIRONMENTAL
- MASONRY WALL
- TREES TO REMAIN - HERITAGE
- TREES TO BE REMOVED - HERITAGE
- TREES TO REMAIN - NON HERITAGE
- TREES TO BE REMOVED - NON HERITAGE
- STABILIZED CONSTRUCTION ENTRANCE
- INLET PROTECTION
- TEMPORARY SPOILS AREA
- CONCRETE WASHOUT AREA
- STOCKPILE
- ROCK BERM

SEQUENCE OF MAJOR ACTIVITIES:

1. TEMPORARY EROSION AND SEDIMENTATION CONTROL MEASURES TO INCLUDE SILT FENCE, ROCK BERMS, AND STABILIZED CONSTRUCTION ENTRANCES WILL BE INSTALLED ACCORDING TO CONSTRUCTION PLANS AND IN ACCORDANCE WITH THE STORM WATER POLLUTION PREVENTION PLAN (SWPPP).
2. TREE PROTECTION MEASURES WILL ALSO BE INSTALLED FOR ALL TREES WITH CONSTRUCTION ACTIVITIES WITHIN CRITICAL ROOT ZONE.
3. TEMPORARY SPOILS, CONSTRUCTION STAGING AND CONCRETE WASHOUT AREA WILL BE CONSTRUCTED.
4. THE SEDIMENTATION TRAP LOCATED AT THE SOUTHEAST CORNER OF THE SITE WILL BE EXCAVATED AND THE OUTFALL STRUCTURE CONSTRUCTED.
5. FILTER FABRIC WILL BE USED TO COVER THE OVERFLOW WEIR TO PREVENT UNFILTERED RUNOFF FROM ENTERING THE LAND DOWNSTREAM.
6. AFTER THE SITE IS MASS GRADED, THE ONSITE DRAINAGE, UTILITIES, AND PAVING WILL BE INSTALLED.
7. INLET PROTECTION BARRIERS WILL BE INSTALLED AS CONSTRUCTION OF STORM SEWER TAKES PLACE IN ORDER TO PREVENT SEDIMENTS FROM ENTERING THE SYSTEM.
8. TEMPORARY SEDIMENTATION BASINS WILL BE CONVERTED TO PERMANENT WATER QUALITY PONDS.
9. SEDIMENTATION TRAPS SHALL BE CLEANED OUT AND FILTER MEDIUM INSTALLED CONCURRENT WITH RE-VEGETATION.
10. THE DISTURBED AREA TO REMAIN PERVIOUS WILL BE VEGETATED USING THE PROCEDURES DETAILED IN THE CONSTRUCTION PLANS AND ALL TEMPORARY EROSION CONTROL MEASURES WILL BE REMOVED UPON RE-VEGETATION.

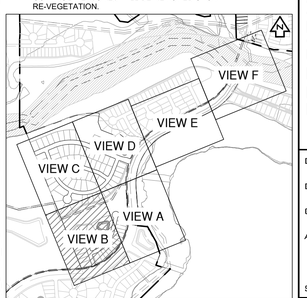

KEY MAP (N.T.S.)

NO	REVISION	BY	DATE

811 Know what's below. Call before you dig.

HRGreen DEVELOPMENT TX
5508 HIGHWAY 290 WEST
SUITE 150
AUSTIN, TX 78735
512.872.6696
HRGREEN.COM
TBPE NO: 16384
TBPLS NO: 10194101

STATE OF TEXAS
CHRISTINE N. CAMPBELL
142536
LICENSED PROFESSIONAL ENGINEER
07/05/2025

EROSION & SEDIMENTATION CONTROL PLAN B

PARKSIDE ON THE RIVER SECTIONS 11, 12A & 15A CONSTRUCTION PLANS

GEORGETOWN, WILLIAMSON, TEXAS

DESIGNED BY: CC
DRAWN BY: MM
CHECKED BY: SN
APPROVED BY:

SHEET 35 OF 141

2025-XX-CON

P:\Blake Magee\Parkside Sections 11-15 & WON S\Section 11, 12A & 15A\03_ACAD\Planset\240925\02 EROS.dwg, EROSION & SEDIMENTATION CONTROL PLAN B, July 18, 2025, 11:29 AM, waka.muhammed

EXISTING 20' WASTEWATER EASEMENT DOC#2024034914

INSTALL ±1,504 LF OF SILT FENCE

LIMITS OF CONSTRUCTION

INSTALL INLET PROTECTION

INSTALL ±127 LF OF TREE PROTECTION

PROPOSED 20' DRAINAGE EASEMENT

KAVOD COVE

MORNING SUNRISE CIRCLE

ELIEL WAY

TREASURE HOUSE WAY

BLOCK H

BLOCK I

BLOCK J

BLOCK K

INSTALL ±4,921 LF OF SILT FENCE

LIMITS OF CONSTRUCTION

MATCHLINE - VIEW B

MATCHLINE - VIEW C

MATCHLINE - VIEW C

MATCHLINE - VIEW D

0 40' 80'

SCALE: 1" = 40'

LEGEND

- PROPERTY BOUNDARY
- EASEMENT
- 840 EXISTING MAJOR CONTOUR
- 834 EXISTING MINOR CONTOUR
- 940 PROPOSED MAJOR CONTOUR
- 934 PROPOSED MINOR CONTOUR
- LOC LIMITS OF CONSTRUCTION
- SF SILT FENCE
- TP TREE PROTECTION FENCE
- FEMA FLOODWAY PER FIRM# 48491C0460F & LOMR# 21-06-0115P
- FEMA AE 100YR ATLAS 14 FEMA ZONE AE FLOODPLAIN PER FIRM# 48491C0460F & LOMR# 21-06-0115P
- FEMA A 100YR FEMA ZONE A FLOODPLAIN PER FIRM MAP# 48491C0460F
- 100YR CLOMR 100YR CLOMR FLOODPLAIN CASE# 15-06-2071R
- FDFP 100YR ATLAS 14 FULLY DEVELOPED FLOODPLAIN (STANTEC DRAINAGE STUDY, SHERVIN NOOSHIN, 3/25/19) APPROVED WITH PP# 2019-5-PP
- OHWM ORDINARY HIGH WATER MARK PER ADAMS ENVIRONMENTAL
- MASONRY WALL
- TREES TO REMAIN - HERITAGE
- TREES TO BE REMOVED - HERITAGE
- TREES TO REMAIN - NON HERITAGE
- TREES TO BE REMOVED - NON HERITAGE
- STABILIZED CONSTRUCTION ENTRANCE
- INLET PROTECTION
- TEMPORARY SPOILS AREA
- CONCRETE WASHOUT AREA
- STOCKPILE
- ROCK BERM

SEQUENCE OF MAJOR ACTIVITIES:

1. TEMPORARY EROSION AND SEDIMENTATION CONTROL MEASURES TO INCLUDE SILT FENCE, ROCK BERMS, AND STABILIZED CONSTRUCTION ENTRANCES WILL BE INSTALLED ACCORDING TO CONSTRUCTION PLANS AND IN ACCORDANCE WITH THE STORM WATER POLLUTION PREVENTION PLAN (SWPPP).
2. TREE PROTECTION MEASURES WILL ALSO BE INSTALLED FOR ALL TREES WITH CONSTRUCTION ACTIVITIES WITHIN CRITICAL ROOT ZONE.
3. TEMPORARY SPOILS, CONSTRUCTION STAGING AND CONCRETE WASHOUT AREA WILL BE CONSTRUCTED.
4. THE SEDIMENTATION TRAP LOCATED AT THE SOUTHEAST CORNER OF THE SITE WILL BE EXCAVATED AND THE OUTFALL STRUCTURE CONSTRUCTED.
5. FILTER FABRIC WILL BE USED TO COVER THE OVERFLOW WEIR TO PREVENT UNFILTERED RUNOFF FROM ENTERING THE LAND DOWNSTREAM.
6. AFTER THE SITE IS MASS GRADED, THE ONSITE DRAINAGE, UTILITIES, AND PAVING WILL BE INSTALLED.
7. INLET PROTECTION BARRIERS WILL BE INSTALLED AS CONSTRUCTION OF STORM SEWER TAKES PLACE IN ORDER TO PREVENT SEDIMENTS FROM ENTERING THE SYSTEM.
8. TEMPORARY SEDIMENTATION BASINS WILL BE CONVERTED TO PERMANENT WATER QUALITY PONDS.
9. SEDIMENTATION TRAPS SHALL BE CLEANED OUT AND FILTER MEDIUM INSTALLED CONCURRENT WITH RE-VEGETATION.
10. THE DISTURBED AREA TO REMAIN PERVIOUS WILL BE VEGETATED USING THE PROCEDURES DETAILED IN THE CONSTRUCTION PLANS AND ALL TEMPORARY EROSION CONTROL MEASURES WILL BE REMOVED UPON RE-VEGETATION.

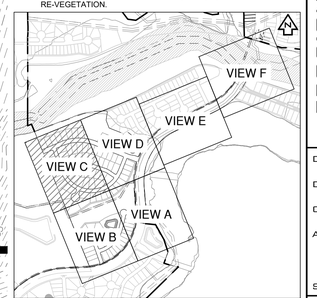

KEY MAP (N.T.S.)

NO	REVISION	BY	DATE

811 Know what's below. Call before you dig.

HRGreen DEVELOPMENT TX
5508 HIGHWAY 290 WEST
SUITE 150
AUSTIN, TX 78735
512.872.6696
HRGREEN.COM
TBPE NO: 16384
TBPLS NO: 10194101

STATE OF TEXAS
CHRISTINE N. CAMPBELL
142536
LICENSED PROFESSIONAL ENGINEER

07/03/2025

EROSION & SEDIMENTATION CONTROL PLAN C

PARKSIDE ON THE RIVER SECTIONS 11, 12A & 15A CONSTRUCTION PLANS

GEORGETOWN, WILLIAMSON, TEXAS

DESIGNED BY: CC
DRAWN BY: MM
CHECKED BY: SN
APPROVED BY:

SHEET 36 OF 141

2025-XX-CON

P:\Blake Magee\Parkside Sections 11-12-15 WDN S\Section 11, 12A & 15A\03_ACAD\Planset\240523 EROS.dwg, EROSION & SEDIMENTATION CONTROL PLAN C, July 18, 2025, 11:29 AM, nalas.muhammad

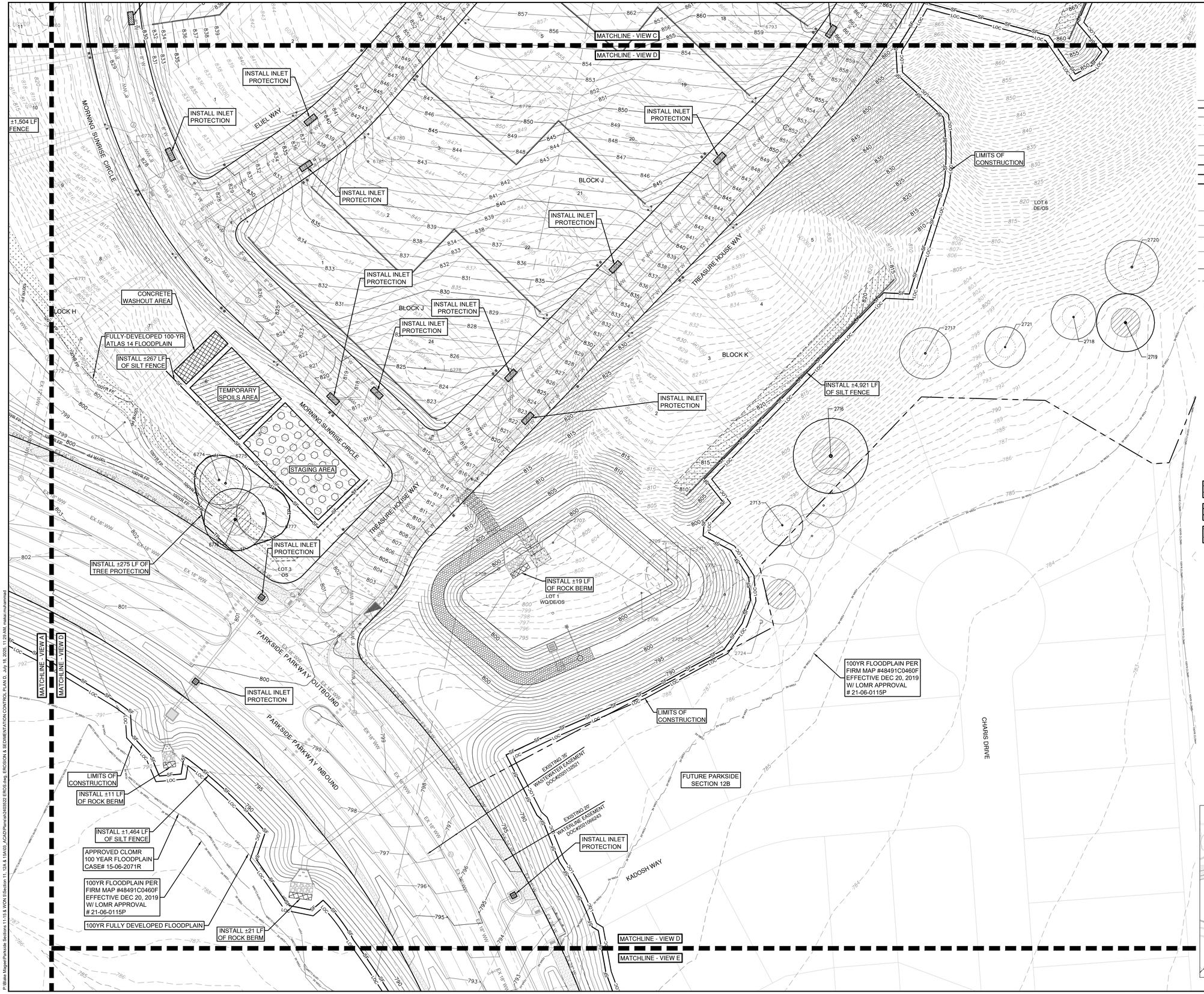

0 40' 80'

SCALE: 1" = 40'

LEGEND

- PROPERTY BOUNDARY
- EASEMENT
- 840 EXISTING MAJOR CONTOUR
- 834 EXISTING MINOR CONTOUR
- 940 PROPOSED MAJOR CONTOUR
- 934 PROPOSED MINOR CONTOUR
- LOC LIMITS OF CONSTRUCTION
- SF SILT FENCE
- TP TREE PROTECTION FENCE
- FEMA FLOODWAY PER FIRM# 48491C0460F & LOMR# 21-06-0115P
- FEMA AE 100YR ATLAS 14 FEMA ZONE AE FLOODPLAIN PER FIRM# 48491C0460F & LOMR# 21-06-0115P
- FEMA A 100YR FEMA ZONE A FLOODPLAIN PER FIRM MAP# 48491C0460F
- 100YR CLOMR 100YR CLOMR FLOODPLAIN CASE# 15-06-2071R
- FDFP 100YR ATLAS 14 FULLY DEVELOPED FLOODPLAIN (STANTEC DRAINAGE STUDY, SHERVIN NOOSHIN, 3/25/19) APPROVED WITH PP# 2019-5-PP
- OHWM ORDINARY HIGH WATER MARK PER ADAMS ENVIRONMENTAL
- MASONRY WALL
- TREES TO REMAIN - HERITAGE
- TREES TO BE REMOVED - HERITAGE
- TREES TO REMAIN - NON HERITAGE
- TREES TO BE REMOVED - NON HERITAGE
- STABILIZED CONSTRUCTION ENTRANCE
- INLET PROTECTION
- TEMPORARY SPOILS AREA
- CONCRETE WASHOUT AREA
- STOCKPILE
- ROCK BERM

SEQUENCE OF MAJOR ACTIVITIES:

1. TEMPORARY EROSION AND SEDIMENTATION CONTROL MEASURES TO INCLUDE SILT FENCE, ROCK BERMS, AND STABILIZED CONSTRUCTION ENTRANCES WILL BE INSTALLED ACCORDING TO CONSTRUCTION PLANS AND IN ACCORDANCE WITH THE STORM WATER POLLUTION PREVENTION PLAN (SWPPP).
2. TREE PROTECTION MEASURES WILL ALSO BE INSTALLED FOR ALL TREES WITH CONSTRUCTION ACTIVITIES WITHIN CRITICAL ROOT ZONE.
3. TEMPORARY SPOILS, CONSTRUCTION STAGING AND CONCRETE WASHOUT AREA WILL BE CONSTRUCTED.
4. THE SEDIMENTATION TRAP LOCATED AT THE SOUTHEAST CORNER OF THE SITE WILL BE EXCAVATED AND THE OUTFALL STRUCTURE CONSTRUCTED.
5. FILTER FABRIC WILL BE USED TO COVER THE OVERFLOW WEIR TO PREVENT UNFILTERED RUNOFF FROM ENTERING THE LAND DOWNSTREAM.
6. AFTER THE SITE IS MASS GRADED, THE ONSITE DRAINAGE, UTILITIES, AND PAVING WILL BE INSTALLED.
7. INLET PROTECTION BARRIERS WILL BE INSTALLED AS CONSTRUCTION OF STORM SEWER TAKES PLACE IN ORDER TO PREVENT SEDIMENTS FROM ENTERING THE SYSTEM.
8. TEMPORARY SEDIMENTATION BASINS WILL BE CONVERTED TO PERMANENT WATER QUALITY PONDS.
9. SEDIMENTATION TRAPS SHALL BE CLEANED OUT AND FILTER MEDIUM INSTALLED CONCURRENT WITH RE-VEGETATION.
10. THE DISTURBED AREA TO REMAIN PERVIOUS WILL BE VEGETATED USING THE PROCEDURES DETAILED IN THE CONSTRUCTION PLANS AND ALL TEMPORARY EROSION CONTROL MEASURES WILL BE REMOVED UPON RE-VEGETATION.

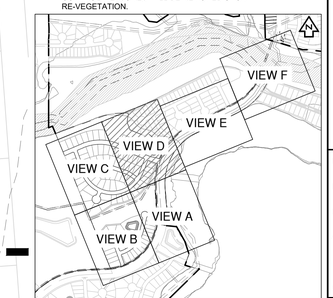

KEY MAP (N.T.S.)

NO	REVISION	BY	DATE

811 Know what's below. Call before you dig.

HRGreen DEVELOPMENT TX
5508 HIGHWAY 290 WEST
SUITE 150
AUSTIN, TX 78735
512.872.6696
HRGREEN.COM
TBPE NO: 16384
TBPLS NO: 10194101

STATE OF TEXAS
CHRISTINE N. CAMPBELL
142536
LICENSED PROFESSIONAL ENGINEER

07/05/2025

EROSION & SEDIMENTATION CONTROL PLAN D

PARKSIDE ON THE RIVER SECTIONS 11, 12A & 15A CONSTRUCTION PLANS

GEORGETOWN, WILLIAMSON, TEXAS

DESIGNED BY: CC
DRAWN BY: MM
CHECKED BY: SN
APPROVED BY:

SHEET 37 OF 141

2025-XX-CON

P:\Blake Magee\Parkside Sections 11-15 & WON S\Section 11, 12A & 15A\03_ACAD\Planset\240503\02 EROS.dwg, EROSION & SEDIMENTATION CONTROL PLAN D, July 18, 2025, 11:29 AM, nakia.muhammad

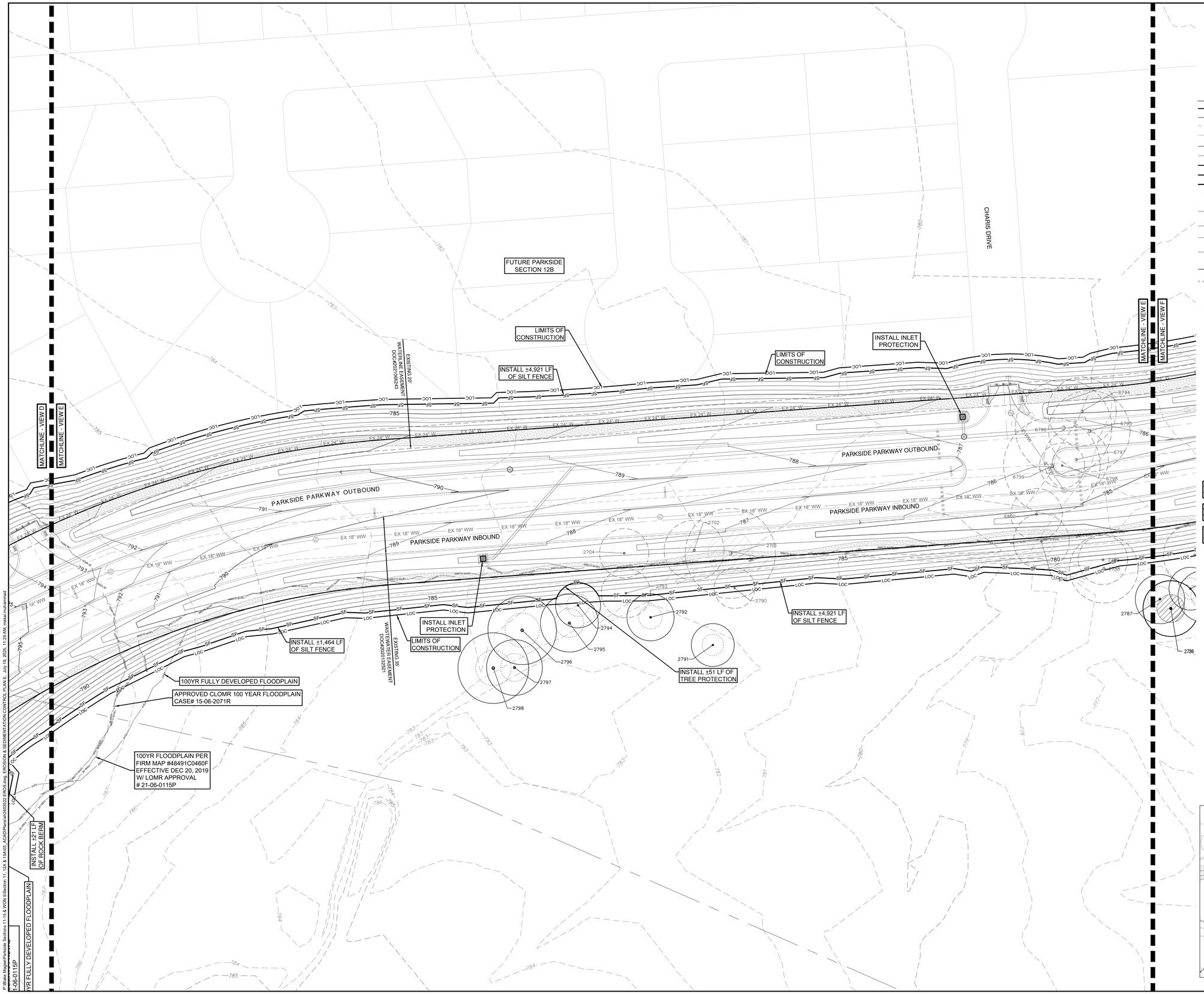

LEGEND

- PROPERTY BOUNDARY
- EASEMENT
- 840 EXISTING MAJOR CONTOUR
- 834 EXISTING MINOR CONTOUR
- 940 PROPOSED MAJOR CONTOUR
- 934 PROPOSED MINOR CONTOUR
- LOC LIMITS OF CONSTRUCTION
- SF SILT FENCE
- TP TREE PROTECTION FENCE
- FEMA FLOODWAY PER FIRM# 48491C0460F & LOMR# 21-06-0115P
- FEMA AE 100YR ATLAS 14 FEMA ZONE AE FLOODPLAIN PER FIRM# 48491C0460F & LOMR# 21-06-0115P
- FEMA A 100YR FEMA ZONE A FLOODPLAIN PER FIRM MAP# 48491C0460F
- 100YR CLOMR 100YR FLOODPLAIN CASE# 15-06-2071R
- FDFP 100YR ATLAS 14 FULLY DEVELOPED FLOODPLAIN (STANTEC DRAINAGE STUDY, SHERVIN NOOSHIN, 3/25/19) APPROVED WITH PP# 2019-5-PP
- OHWM ORDINARY HIGH WATER MARK PER ADAMS ENVIRONMENTAL
- MASONRY WALL
- TREES TO REMAIN - HERITAGE
- TREES TO BE REMOVED - HERITAGE
- TREES TO REMAIN - NON HERITAGE
- TREES TO BE REMOVED - NON HERITAGE
- STABILIZED CONSTRUCTION ENTRANCE
- INLET PROTECTION
- TEMPORARY SPOILS AREA
- CONCRETE WASHOUT AREA
- STOCKPILE
- ROCK BERM

SEQUENCE OF MAJOR ACTIVITIES:

1. TEMPORARY EROSION AND SEDIMENTATION CONTROL MEASURES TO INCLUDE SILT FENCE, ROCK BERMS, AND STABILIZED CONSTRUCTION ENTRANCES WILL BE INSTALLED ACCORDING TO CONSTRUCTION PLANS AND IN ACCORDANCE WITH THE STORM WATER POLLUTION PREVENTION PLAN (SWPPP).
2. TREE PROTECTION MEASURES WILL ALSO BE INSTALLED FOR ALL TREES WITH CONSTRUCTION ACTIVITIES WITHIN CRITICAL ROOT ZONE.
3. TEMPORARY SPOILS, CONSTRUCTION STAGING AND CONCRETE WASHOUT AREA WILL BE CONSTRUCTED.
4. THE SEDIMENTATION TRAP LOCATED AT THE SOUTHEAST CORNER OF THE SITE WILL BE EXCAVATED AND THE OUTFALL STRUCTURE CONSTRUCTED.
5. FILTER FABRIC WILL BE USED TO COVER THE OVERFLOW WEIR TO PREVENT UNFILTERED RUNOFF FROM ENTERING THE LAND DOWNSTREAM.
6. AFTER THE SITE IS MASS GRADED, THE ONSITE DRAINAGE, UTILITIES, AND PAVING WILL BE INSTALLED.
7. INLET PROTECTION BARRIERS WILL BE INSTALLED AS CONSTRUCTION OF STORM SEWER TAKES PLACE IN ORDER TO PREVENT SEDIMENTS FROM ENTERING THE SYSTEM.
8. TEMPORARY SEDIMENTATION BASINS WILL BE CONVERTED TO PERMANENT WATER QUALITY PONDS.
9. SEDIMENTATION TRAPS SHALL BE CLEANED OUT AND FILTER MEDIUM INSTALLED CONCURRENT WITH RE-VEGETATION.
10. THE DISTURBED AREA TO REMAIN PERVIOUS WILL BE VEGETATED USING THE PROCEDURES DETAILED IN THE CONSTRUCTION PLANS AND ALL TEMPORARY EROSION CONTROL MEASURES WILL BE REMOVED UPON RE-VEGETATION.

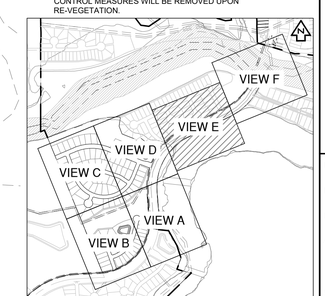

KEY MAP (N.T.S.)

NO.	REVISION	BY	DATE

811 Know what's below. Call before you dig.

5508 HIGHWAY 290 WEST
SUITE 150
AUSTIN, TX 78735
512.872.6696
HRGREEN.COM

TBPE NO: 16384
TBPLS NO: 10194101

HRGreen®
DEVELOPMENT TX

STATE OF TEXAS
CHRISTINE N. CAMPBELL
142536
LICENSED PROFESSIONAL ENGINEER
07/03/2025

EROSION & SEDIMENTATION CONTROL PLAN E

PARKSIDE ON THE RIVER SECTIONS 11, 12A & 15A CONSTRUCTION PLANS

GEORGETOWN, WILLIAMSON, TEXAS

DESIGNED BY: CC
DRAWN BY: MM
CHECKED BY: SN
APPROVED BY:

SHEET 38 OF 141

2025-XX-CON

LIMITS OF MAX 3:1 SLOPE TO EXISTING GRADE IN THE EVENT THAT PARKSIDE ON THE RIVER SECTIONS 11, 12A & 15A AND PARKSIDE ON THE RIVER SECTION 15B ARE NOT CONCURRENTLY CONSTRUCTED

EXISTING 25' WASTEWATER EASEMENT DOC#2017098157

EXISTING 100' WASTEWATER EASEMENT DOC#2017098157

EXISTING 30' WASTEWATER EASEMENT DOC#2012056679

EXISTING 100' WASTEWATER EASEMENT DOC#2007064713

EXISTING 30' WATERLINE EASEMENT DOC#2007064624

EXISTING 30' WASTEWATER EASEMENT DOC#2018018221

LIMITS OF CONSTRUCTION

INSTALL INLET PROTECTION

INSTALL ±4,921 LF OF SILT FENCE

INSTALL ±16 LF OF ROCK BERM

INSTALL INLET PROTECTION

PARKSIDE PARKWAY OUTBOUND

PARKSIDE PARKWAY INBOUND

TRANQUIL SERENITY WAY

FUTURE PARKSIDE SECTION 14A

APPROVED CLOMR 100 YEAR FLOODPLAIN CASE# 15-06-2071R

100YR FULLY DEVELOPED FLOODPLAIN

FLOODWAY PER FIRM MAP #48491C0460F, EFFECTIVE DEC 20, 2019 W/ LOMR APPROVAL #21-06-0115P

MATCHLINE - VIEW E

MATCHLINE - VIEW F

0 40' 80'

SCALE: 1" = 40'

LEGEND

- PROPERTY BOUNDARY
- EASEMENT
- 840 EXISTING MAJOR CONTOUR
- 834 EXISTING MINOR CONTOUR
- 940 PROPOSED MAJOR CONTOUR
- 934 PROPOSED MINOR CONTOUR
- LOC LIMITS OF CONSTRUCTION
- SF SILT FENCE
- TP TREE PROTECTION FENCE
- FEMA FLOODWAY PER FIRM# 48491C0460F & LOMR# 21-06-0115P
- FEMA AE 100YR ATLAS 14 FEMA ZONE AE FLOODPLAIN PER FIRM# 48491C0460F & LOMR# 21-06-0115P
- FEMA A 100YR FEMA ZONE A FLOODPLAIN PER FIRM MAP# 48491C0460F
- 100YR CLOMR 100YR FLOODPLAIN CASE# 15-06-2071R
- FDFP 100YR ATLAS 14 FULLY DEVELOPED FLOODPLAIN (STANTEC DRAINAGE STUDY, SHERVIN NOOSHIN, 3/25/19) APPROVED WITH PP# 2019-5-PP
- OHWM ORDINARY HIGH WATER MARK PER ADAMS ENVIRONMENTAL
- MASONRY WALL
- TREES TO REMAIN - HERITAGE
- TREES TO BE REMOVED - HERITAGE
- TREES TO REMAIN - NON HERITAGE
- TREES TO BE REMOVED - NON HERITAGE
- STABILIZED CONSTRUCTION ENTRANCE
- INLET PROTECTION
- TEMPORARY SPOILS AREA
- CONCRETE WASHOUT AREA
- STOCKPILE
- ROCK BERM

SEQUENCE OF MAJOR ACTIVITIES:

1. TEMPORARY EROSION AND SEDIMENTATION CONTROL MEASURES TO INCLUDE SILT FENCE, ROCK BERMS, AND STABILIZED CONSTRUCTION ENTRANCES WILL BE INSTALLED ACCORDING TO CONSTRUCTION PLANS AND IN ACCORDANCE WITH THE STORM WATER POLLUTION PREVENTION PLAN (SWPPP).
2. TREE PROTECTION MEASURES WILL ALSO BE INSTALLED FOR ALL TREES WITH CONSTRUCTION ACTIVITIES WITHIN CRITICAL ROOT ZONE.
3. TEMPORARY SPOILS, CONSTRUCTION STAGING AND CONCRETE WASHOUT AREA WILL BE CONSTRUCTED.
4. THE SEDIMENTATION TRAP LOCATED AT THE SOUTHEAST CORNER OF THE SITE WILL BE EXCAVATED AND THE OUTFALL STRUCTURE CONSTRUCTED.
5. FILTER FABRIC WILL BE USED TO COVER THE OVERFLOW WEIR TO PREVENT UNFILTERED RUNOFF FROM ENTERING THE LAND DOWNSTREAM.
6. AFTER THE SITE IS MASS GRADED, THE ONSITE DRAINAGE, UTILITIES, AND PAVING WILL BE INSTALLED.
7. INLET PROTECTION BARRIERS WILL BE INSTALLED AS CONSTRUCTION OF STORM SEWER TAKES PLACE IN ORDER TO PREVENT SEDIMENTS FROM ENTERING THE SYSTEM.
8. TEMPORARY SEDIMENTATION BASINS WILL BE CONVERTED TO PERMANENT WATER QUALITY PONDS.
9. SEDIMENTATION TRAPS SHALL BE CLEANED OUT AND FILTER MEDIUM INSTALLED CONCURRENT WITH RE-VEGETATION.
10. THE DISTURBED AREA TO REMAIN PERVIOUS WILL BE VEGETATED USING THE PROCEDURES DETAILED IN THE CONSTRUCTION PLANS AND ALL TEMPORARY EROSION CONTROL MEASURES WILL BE REMOVED UPON RE-VEGETATION.

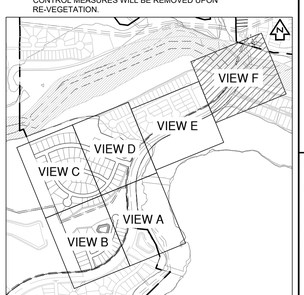

KEY MAP (N.T.S.)

NO.	REVISION	BY	DATE

811 Know what's below. Call before you dig.

HRGreen
5508 HIGHWAY 290 WEST
SUITE 150
AUSTIN, TX 78735
512.872.6696
HRGREEN.COM
TBPE NO: 16384
TBPLS NO: 10194101
DEVELOPMENT TX

STATE OF TEXAS
CHRISTINE N. CAMPBELL
142536
LICENSED PROFESSIONAL ENGINEER

07/03/2025

EROSION & SEDIMENTATION CONTROL PLAN F

PARKSIDE ON THE RIVER SECTIONS 11, 12A & 15A CONSTRUCTION PLANS

GEORGETOWN, WILLIAMSON, TEXAS

DESIGNED BY: CC
DRAWN BY: MM
CHECKED BY: SN
APPROVED BY:

SHEET 39 OF 141

2025-XX-CON

P:\Blake Magee\Parkside Sections 11,15 & WSN 5\Sections 11, 12A & 15A\03_ACAD\Planning\040302 EROS\dwg EROSION & SEDIMENTATION CONTROL PLAN F, July 18, 2025, 11:29 AM, mdan.muhammad

GUIDELINES FOR DESIGN AND INSTALLATION OF TEMPORARY EROSION AND SEDIMENTATION CONTROLS

TYPE OF STRUCTURE	REACH LENGTH	MAXIMUM DRAINAGE AREA	SLOPE
SILT FENCE	N/A	2 ACRES	0 – 10%
	200 FEET	2 ACRES	10 – 20%
	100 FEET	1 ACRE	20 – 30%
	50 FEET	1/2 ACRE	> 30%
TRIANGLE FILTER DIKE	100 FEET	1/2 ACRE	< 30% SLOPE
	50 FEET	1/4 ACRE	> 30% SLOPE
ROCK BERM *, **	500 FEET	< 5 ACRES	0 – 10%

* FOR ROCK BERM DESIGN WHERE PARAMETERS ARE OTHER THAN STATED, DRAINAGE AREA CALCULATIONS AND ROCK BERM DESIGN MUST BE SUBMITTED FOR REVIEW.

** HIGH SERVICE ROCK BERMS MAY BE REQUIRED IN AREAS OF ENVIRONMENTAL SIGNIFICANCE AS DETERMINED BY THE CITY OF GEORGETOWN.

The Architect/Engineer assumes responsibility for appropriate use of this standard.

ADOPTED 6/21/2006 | CITY OF GEORGETOWN CONSTRUCTION STANDARDS AND DETAILS | TEMPORARY EROSION AND SEDIMENTATION CONTROL GUIDELINES | EC01 | NTS | 1/2003 | MRS | TRB

NOTE: THIS SECTION IS INTENDED TO ASSIST THOSE PERSONS PREPARING WATER POLLUTION ABATEMENT PLANS (WPAP) OR STORM WATER POLLUTION PREVENTION PLANS (SW3P) THAT COMPLY WITH FEDERAL, STATE AND/OR LOCAL STORM WATER REGULATIONS.

1. THE CONTRACTOR TO INSTALL AND MAINTAIN EROSION/SEDIMENTATION CONTROLS AND TREE/NATURAL AREA PROTECTIVE FENCING PRIOR TO ANY SITE PREPARATION WORK (CLEARING, GRUBBING, GRADING, OR EXCAVATION). CONTRACTOR TO REMOVE EROSION/SEDIMENTATION CONTROLS AT THE COMPLETION OF PROJECT AND GRASS RESTORATION.
2. ALL PROJECTS WITHIN THE RECHARGE ZONE OF THE EDWARD'S AQUIFER SHALL SUBMIT A BEST MANAGEMENT PRACTICES AND WATER POLLUTION AND ABATEMENT PLAN TO THE TNRCC FOR APPROVAL PRIOR TO ANY CONSTRUCTION.
3. THE PLACEMENT OF EROSION/SEDIMENTATION CONTROLS TO BE IN ACCORDANCE WITH THE APPROVED EROSION AND SEDIMENTATION CONTROL PLAN AND WATER POLLUTION ABATEMENT PLAN. DEVIATIONS FROM THE APPROVED PLAN MUST BE SUBMITTED TO AND APPROVED BY THE OWNER'S REPRESENTATIVE.
4. ALL PLANTING SHALL BE DONE BETWEEN MAY 1 AND SEPTEMBER 15 EXCEPT AS SPECIFICALLY AUTHORIZED IN WRITING. IF PLANTING IS AUTHORIZED TO BE DONE OUTSIDE THE DATES SPECIFIED, THE SEED SHALL BE PLANTED WITH THE ADDITION OF WINTER FESCUE (KENTUCKY 31) AT A RATE OF 100lb/ACRE. GRASS SHALL BE COMMON BERMUDA GRASS, HULLED, MINIMUM 82% PURE LIVE SEED. ALL GRASS SEED SHALL BE FREE FROM NOXIOUS WEED, GRADE "A" RECENT CROP, RECLEANED AND TREATED WITH APPROPRIATE FUNGICIDE AT TIME OF MIXING. SEED SHALL BE FURNISHED IN SEALED, STANDARD CONTAINERS WITH DEALER'S GUARANTEED ANALYSIS.
5. ALL DISTURBED AREAS TO BE RESTORED AS NOTED IN THE WATER POLLUTION ABATEMENT PLAN.
6. THE PLANTED AREA TO BE IRRIGATED OR SPRINKLED IN A MANNER THAT WILL NOT ERODE THE TOPSOIL, BUT WILL SUFFICIENTLY SOAK THE SOIL TO A DEPTH OF FOUR (4) INCHES. THE IRRIGATION TO OCCUR AT 10-DAY INTERVALS DURING THE FIRST TWO MONTHS TO INSURE GERMINATION AND ESTABLISHMENT OF THE GRASS . RAINFALL OCCURRENCES OF 1/2 INCH OR GREATER TO POSTPONE THE WATERING SCHEDULE ONE WEEK.
7. RESTORATION TO BE ACCEPTABLE WHEN THE GRASS HAS GROWN AT LEAST 1-1/2 INCHES HIGH WITH 95% *COVERAGE*, PROVIDED NO BARE SPOTS LARGER THAN 25 SQUARE FEET EXIST.
8. A MINIMUM OF FOUR (4) INCHES OF TOPSOIL TO BE PLACED IN ALL AREAS DISTURBED BY CONSTRUCTION.
9. THE CONTRACTOR TO HYDROMULCH OR SOD (AS SHOWN ON PLANS) ALL EXPOSED CUTS AND FILLS UPON COMPLETION OF CONSTRUCTION.
10. EROSION AND SEDIMENTATION CONTROLS TO BE INSTALLED OR MAINTAINED IN A MANNER WHICH DOES NOT RESULT IN SOIL BUILDUP WITHIN TREE DRIPLINE.
11. TO AVOID SOIL COMPACTION, CONTRACTOR SHALL NOT ALLOW VEHICULAR TRAFFIC, PARKING, OR STORAGE OF EQUIPMENT OR MATERIALS IN THE TREE DRIPLINE AREAS.
12. WHERE A FENCE IS CLOSER THAN FOUR (4) FEET TO A TREE TRUNK, PROTECT THE TRUNK WITH STRAPPED-ON PLANKING TO A HEIGHT OF EIGHT (8) FEET (OR TO THE LIMITS OF LOWER BRANCHING) IN ADDITION TO THE FENCING.
13. TREES TO BE REMOVED IN A MANNER WHICH DOES NOT IMPACT TREES TO BE PRESERVED.
14. ANY ROOT EXPOSED BY CONSTRUCTION ACTIVITY TO BE PRUNED FLUSH WITH THE SOIL. BACKFILL ROOT AREAS WITH GOOD QUALITY TOPSOIL AS SOON AS POSSIBLE. IF EXPOSED ROOT AREAS ARE NOT BACKFILLED WITHIN TWO DAYS, COVER THEM WITH ORGANIC MATERIAL IN A MANNER WHICH REDUCES SOIL TEMPERATURE AND MINIMIZES WATER LOSS DUE TO EVAPORATION.
15. CONTRACTOR TO PRUNE VEGETATION TO PROVIDE CLEARANCE FOR STRUCTURES, VEHICULAR TRAFFIC, AND EQUIPMENT BEFORE DAMAGE OCCURS (RIPPING OF BRANCHES, ETC.). ALL FINISHED PRUNING TO BE DONE ACCORDING TO RECOGNIZED, APPROVED STANDARDS OF THE INDUSTRY (REFERENCE THE "NATIONAL ARBORIST ASSOCIATION PRUNING STANDARDS FOR SHADE TREES").
16. THE CONTRACTOR IS TO INSPECT THE CONTROLS AT WEEKLY INTERVALS AND AFTER EVERY RAINFALL EXCEEDING 1/4 INCH TO VERIFY THAT THEY HAVE NOT BEEN SIGNIFICANTLY DISTURBED. ANY ACCUMULATED SEDIMENT AFTER A SIGNIFICANT RAINFALL TO BE REMOVED AND PLACED IN THE OWNER DESIGNATED SPOIL DISPOSAL SITE. THE CONTRACTOR TO CONDUCT PERIODIC INSPECTIONS OF ALL EROSION/SEDIMENTATION CONTROLS AND TO MAKE ANY REPAIRS OR MODIFICATIONS NECESSARY TO ASSURE CONTINUED EFFECTIVE OPERATION OF EACH DEVICE.
17. WHERE THERE IS TO BE AN APPROVED GRADE CHANGE, IMPERMEABLE PAVING SURFACE, TREE WELL, OR OTHER SUCH SITE DEVELOPMENT IMMEDIATELY ADJACENT TO A PROTECTED TREE, ERECT THE FENCE APPROXIMATELY TWO TO FOUR FEET (2'-4') BEHIND THE AREA IN QUESTION.
18. NO ABOVE AND/OR BELOW GROUND TEMPORARY FUEL STORAGE FACILITIES TO BE STORED ON THE PROJECT SITE.
19. IF EROSION AND SEDIMENTATION CONTROL SYSTEMS ARE EXISTING FROM PRIOR CONTRACTS, OWNER'S REPRESENTATIVE AND THE CONTRACTOR TO EXAMINE THE EXISTING EROSION AND SEDIMENTATION CONTROL SYSTEMS FOR DAMAGE PRIOR TO CONSTRUCTION. ANY DAMAGE TO PREEXISTING EROSION AND SEDIMENTATION CONTROLS NOTED TO BE REPAIRED AT OWNERS EXPENSE.
20. INTENTIONAL RELEASE OF VEHICLE OR EQUIPMENT FLUIDS ONTO THE GROUND IS NOT ALLOWED. CONTAMINATED SOIL RESULTING FROM ACCIDENTAL SPILL TO BE REMOVED AND DISPOSED OF PROPERLY.

The Architect/Engineer assumes responsibility for appropriate use of this standard.

ADOPTED 6/21/2006 | CITY OF GEORGETOWN CONSTRUCTION STANDARDS AND DETAILS | EROSION AND SEDIMENTATION AND TREE PROTECTION NOTES | EC01A | NTS | 1/2003 | MRS | TRB

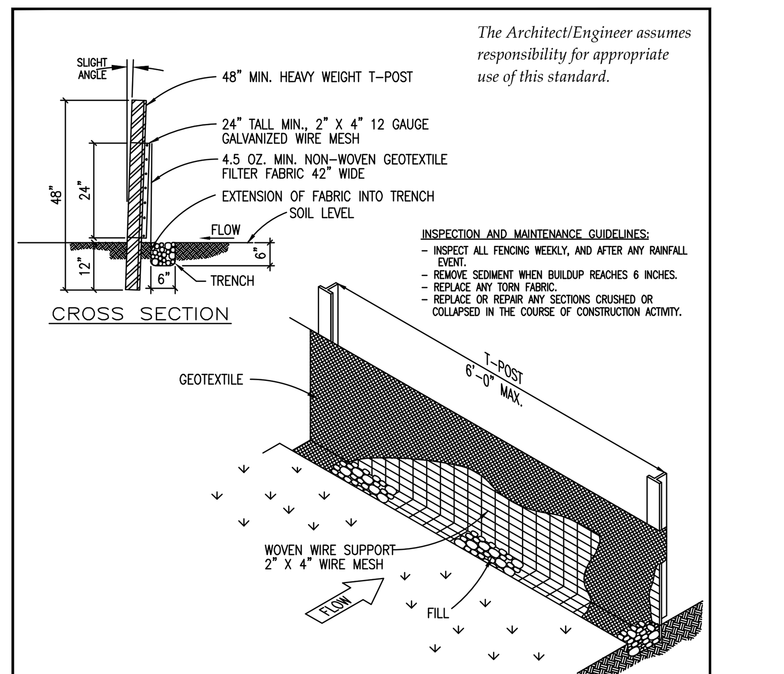

The Architect/Engineer assumes responsibility for appropriate use of this standard.

INSPECTION AND MAINTENANCE GUIDELINES:
- INSPECT ALL FENCING WEEKLY, AND AFTER ANY RAINFALL EVENT.
- REMOVE SEDIMENT WHEN BUILDUP REACHES 6 INCHES.
- REPLACE ANY TORN FABRIC.
- REPLACE OR REPAIR ANY SECTIONS CRUSHED OR COLLAPSED IN THE COURSE OF CONSTRUCTION ACTIVITY.

INSTALLATION:
- LAYOUT THE SILT FENCE FOLLOWING AS CLOSELY AS POSSIBLE TO THE CONTOUR.
- CLEAR THE GROUND OF DEBRIS, ROCKS, PLANTS (INCLUDING GRASSES TALLER THAN 2") TO PROVIDE A SMOOTH FLOW APPROACH SURFACE. EXCAVATE 6" DEEP X 6" WIDE TRENCH ON UPSTREAM SIDE OF FACE PER PLANS.
- DRIVE THE HEAVY DUTY T-POST AT LEAST 12 INCHES INTO THE GROUND AND AT A SLIGHT ANGLE TOWARDS THE FLOW.
- ATTACH THE 2" X 4" 12 GAUGE WELDED WIRE MESH TO THE T-POST WITH 11 1/2 GAUGE GALVANIZED T-POST CLIPS. THE TOP OF THE WIRE TO BE 24" ABOVE GROUND LEVEL. THE WELDED WIRE MESH TO BE OVERLAPPED 6" AND TIED AT LEAST 6 TIMES WITH HOG RINGS.
- THE SILT FENCE TO BE INSTALLED WITH A SKIRT A MINIMUM OF 6" WIDE PLACED ON THE UPHILL SIDE OF THE FENCE INSIDE EXCAVATED TRENCH. THE FABRIC TO OVERLAP THE TOP OF THE WIRE BY 1".
- ANCHOR THE SILT FENCE BY BACKFILLING WITH EXCAVATED DIRT AND ROCKS (NOT LARGER THAN 2").
- GEOTEXTILE SPLICES SHOULD BE A MINIMUM OF 18" WIDE ATTACHED IN AT LEAST 6 PLACES. SPLICES IN CONCENTRATED FLOW AREAS WILL NOT BE ACCEPTED.
- SILT FENCE SHALL BE REMOVED WHEN THE SITE IS COMPLETELY STABILIZED SO AS NOT TO BLOCK OR IMPEDE STORM FLOW OR DRAINAGE.

ADOPTED 6/21/2006 | CITY OF GEORGETOWN CONSTRUCTION STANDARDS AND DETAILS | SILT FENCE DETAIL | EC02 | NTS | 1/2003 | MRS | TRB

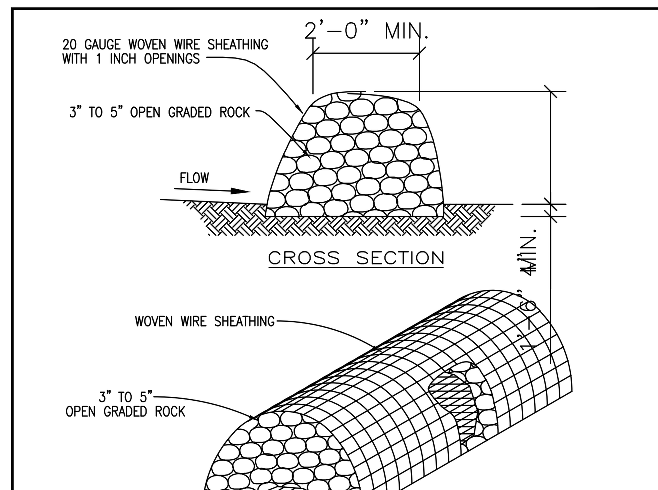

INSTALLATION:
- LAYOUT THE ROCK BERM FOLLOWING AS CLOSELY AS POSSIBLE TO THE CONTOUR.
- CLEAR THE GROUND OF DEBRIS, ROCKS OR PLANTS THAT WILL INTERFERE WITH INSTALLATION.
- PLACE WOVEN WIRE FABRIC ON THE GROUND ALONG THE PROPOSED INSTALLATION WITH ENOUGH OVERLAP TO COMPLETELY ENCIRCLE THE FINISHED SIZE OF THE BERM.
- PLACE THE ROCK ALONG THE CENTER OF THE WIRE TO THE DESIGNATED HEIGHT.
- WRAP THE STRUCTURE WITH THE PREVIOUSLY PLACED WIRE MESH SECURE ENOUGH SO THAT WHEN WALKED ACROSS THE STRUCTURE RETAINS IT'S SHAPE.
- SECURE WITH TIE WIRE.
- THE ENDS OF THE BERM SHOULD BE TIED INTO EXISTING UPSLOPE GRADE AND THE BERM SHOULD BE BURIED IN A TRENCH APPROX. 4 INCHES DEEP TO PREVENT FAILURE OF THE CONTROL.
- THE ROCK BERM SHOULD BE LEFT IN PLACE UNTIL ALL UPSTREAM AREAS ARE STABILIZED AND ACCUMULATED SILT REMOVED.

INSPECTION AND MAINTENANCE GUIDELINES:
- INSPECTION SHOULD BE MADE WEEKLY AND AFTER EACH RAINFALL EVENT BY THE RESPONSIBLE PARTY. FOR INSTALLATIONS IN STREAMBEDS, ADDITIONAL DAILY INSPECTIONS SHOULD BE MADE.
- REMOVE SEDIMENT AND OTHER DEBRIS WHEN BUILDUP REACHES 6 INCHES AND DISPOSE OF THE ACCUMULATED SILT IN AN APPROVED MANNER.
- REPAIR ANY LOOSE WIRE SHEATHING.
- THE BERM SHOULD BE RESHAPED AS NEEDED DURING INSPECTION.
- THE BERM SHOULD BE REPLACED WHEN THE STRUCTURE CEASES TO FUNCTION AS INTENDED DUE TO SILT ACCUMULATION AMONG THE ROCKS, WASHOUT, CONSTRUCTION TRAFFIC DAMAGE, ETC.

The Architect/Engineer assumes responsibility for appropriate use of this standard.

ADOPTED 6/21/2006 | CITY OF GEORGETOWN CONSTRUCTION STANDARDS AND DETAILS | ROCK BERM DETAIL | EC03 | NTS | 1/2003 | MRS | TRB

The Architect/Engineer assumes responsibility for appropriate use of this standard.

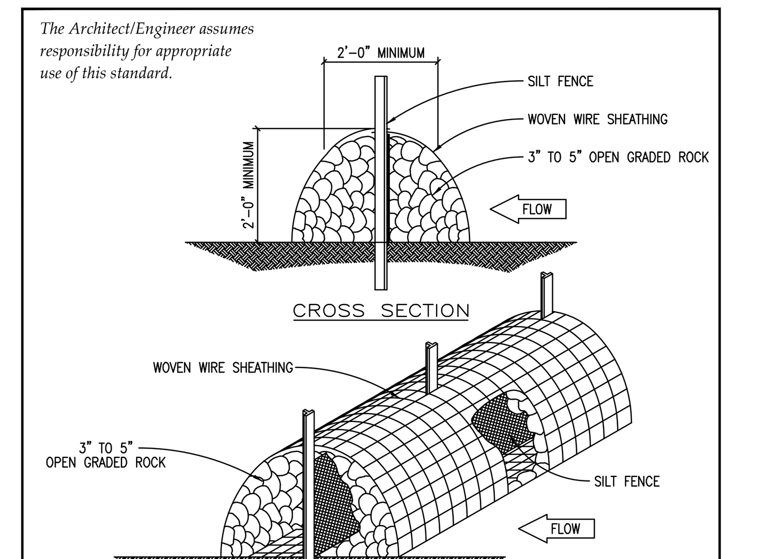

INSTALLATION:
- LAYOUT THE ROCK BERM FOLLOWING AS CLOSELY AS POSSIBLE TO THE CONTOUR.
- CLEAR THE GROUND OF DEBRIS, ROCKS OR PLANTS THAT WILL INTERFERE WITH INSTALLATION.
- PLACE WOVEN WIRE FABRIC ON THE GROUND ALONG THE PROPOSED INSTALLATION WITH ENOUGH OVERLAP TO COMPLETELY ENCIRCLE THE FINISHED SIZE OF THE BERM.
- INSTALL THE SILT FENCE ALONG THE CENTER OF THE PROPOSED BERM PLACEMENT. INSTALLATION SHOULD BE AS DESCRIBED IN DRAWING NO. EC-02 "SILT FENCE DETAIL".
- PLACE THE ROCK ALONG THE CENTER OF THE WIRE AND ON BOTH SIDES OF THE SILT FENCE TO THE DESIGNATED HEIGHT.
- WRAP THE STRUCTURE WITH THE PREVIOUSLY PLACED WIRE MESH SECURE ENOUGH SO THAT WHEN WALKED ACROSS THE STRUCTURE RETAINS IT'S SHAPE.
- SECURE WITH TIE WIRE.
- THE ROCK BERM SHOULD BE LEFT IN PLACE UNTIL ALL UPSTREAM AREAS ARE STABILIZED AND ACCUMULATED SILT REMOVED.

INSPECTION AND MAINTENANCE GUIDELINES:
- INSPECTION SHOULD BE MADE WEEKLY AND AFTER EACH RAINFALL EVENT BY THE CONTRACTOR. FOR THE INSTALLATIONS IN STREAMBEDS, ADDITIONAL DAILY INSPECTIONS SHOULD BE MADE ON ROCK BERM.
- REMOVE SEDIMENT AND OTHER DEBRIS WHEN BUILDUP REACHES 6 INCHES AND DISPOSE OF THE ACCUMULATED SILT IN AN APPROVED MANNER.
- REPAIR ANY LOOSE WIRE SHEATHING.
- THE BERM SHOULD BE RESHAPED AS NEEDED DURING INSPECTION.
- THE BERM SHOULD BE REPLACES WHEN THE STRUCTURE CEASES TO FUNCTION AS INTENDED DUE TO SILT ACCUMULATION AMONG THE ROCKS, WASHOUT, CONSTRUCTION TRAFFIC DAMAGE, ETC.

ADOPTED 6/21/2006 | CITY OF GEORGETOWN CONSTRUCTION STANDARDS AND DETAILS | HIGH SERVICE ROCK BERM DETAIL | EC04 | NTS | 1/2003 | MRS | TRB

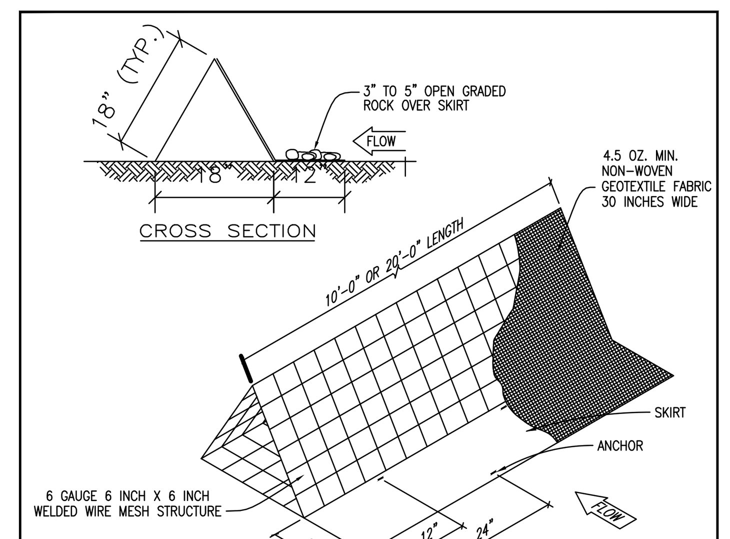

INSTALLATION:
- LAYOUT THE FILTER DIKE FOLLOWING AS CLOSELY AS POSSIBLE TO THE CONTOUR.
- CLEAR THE GROUND OF DEBRIS, ROCKS OR PLANTS THAT WILL INTERFERE WITH INSTALLATION.
- PLACE THE FILTER DIKE SECTIONS ONE AT A TIME, WITH THE SKIRT ON THE UPHILL SIDE TOWARDS THE DIRECTION OF FLOW, ANCHORING EACH SECTION TO THE GROUND BEFORE THE NEXT SECTION IS PLACED.
- ANCHORS SHOULD BE PLACED ON 2'-0" CENTERS ALTERNATING FROM FRONT TO BACK SO THAT THERE IS ACTUALLY ONLY 1'-0" IN BETWEEN ANCHORS.
- SECURELY FASTEN THE SKIRT FROM ONE SECTION OF FILTER DIKE TO THE NEXT.
- FILTER DIKES MUST MAINTAIN CONTINUOUS CONTACT WITH THE GROUND.
- AFTER THE SITE IS COMPLETELY STABILIZED, THE DIKES AND ANY REMAINING SILT SHOULD BE REMOVED. SILT SHOULD BE DISPOSED OF IN A MANNER THAT WILL NOT CONTRIBUTE TO ADDITIONAL SILTATION.

INSPECTION AND MAINTENANCE GUIDELINES:
- INSPECTION SHOULD BE MADE WEEKLY OR AFTER EACH RAINFALL EVENT AND REPAIR OR REPLACEMENT SHOULD BE MADE PROMPTLY AS NEEDED BY THE CONTRACTOR.
- INSPECT AND REALIGN BERMS AS NEEDED TO PREVENT GAPS BETWEEN THE SECTIONS.
- ACCUMULATED SILT SHOULD BE REMOVED AFTER EACH RAINFALL EVENT, AND DISPOSED OF IN A MANNER WHICH WILL NOT CAUSE ADDITIONAL SILTATION.

The Architect/Engineer assumes responsibility for appropriate use of this standard.

ADOPTED 6/21/2006 | CITY OF GEORGETOWN CONSTRUCTION STANDARDS AND DETAILS | TRIANGULAR FILTER DIKE | EC05 | NTS | 1/2003 | MRS | TRB

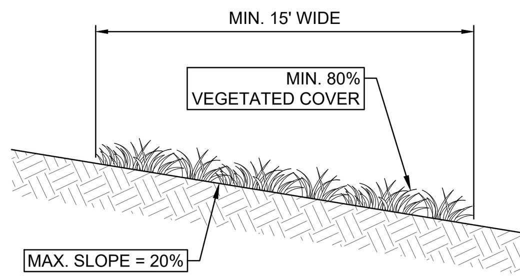

ENGINEERED VEGETATIVE FILTER STRIP DETAIL

N.T.S.

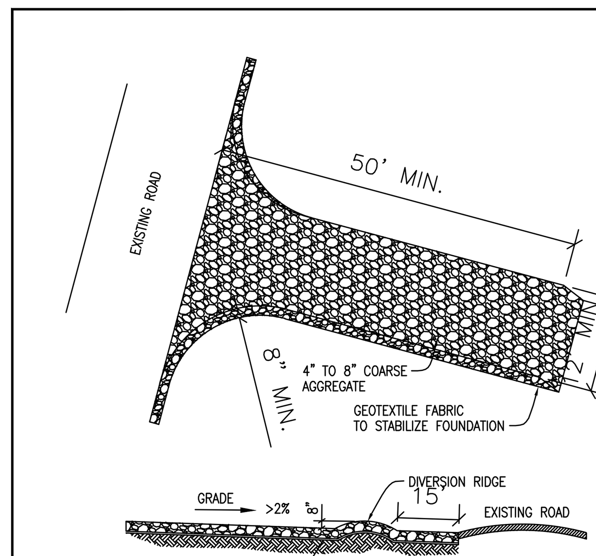

INSTALLATION:
- CLEAR THE AREA OF DEBRIS, ROCKS OR PLANTS THAT WILL INTERFERE WITH INSTALLATION.
- GRADE THE AREA FOR THE ENTRANCE TO FLOW BACK ON TO THE CONSTRUCTION SITE. RUNOFF FROM THE STABILIZED CONSTRUCTION
- PLACE GEOTEXTILE FABRIC AS APPROVED BY THE CITY.
- PLACE ROCK AS APPROVED BY THE CITY.

INSPECTIONS AND MAINTENANCE GUIDELINES:
- THE ENTRANCE SHOULD BE MAINTAINED IN A CONDITION, WHICH WILL PREVENT TRACKING OR FLOWING OF SEDIMENT ONTO PUBLIC RIGHTS-OF-WAY. THIS MAY REQUIRE PERIODIC TOP DRESSING WITH ADDITIONAL STONE AS CONDITIONS DEMAND AND REPAIR AND/OR CLEANOUT OF ANY MEASURES USED TO TRAP SEDIMENT.
- ALL SEDIMENT SPILLED, DROPPED, WASHED OR TRACKED ON TO PUBLIC RIGHTS-OF-WAY SHOULD BE REMOVED IMMEDIATELY BY CONTRACTOR.
- WHEN NECESSARY, WHEELS SHOULD BE CLEANED TO REMOVE SEDIMENT PRIOR TO ENTRANCE ONTO PUBLIC RIGHTS-OF-WAY.
- WHEN WASHING IS REQUIRED, IT SHOULD BE DONE ON AN AREA STABILIZED WITH CRUSHED STONE THAT DRAINS INTO AN APPROVED SEDIMENT TRAP OR SEDIMENT BASIN.
- ALL SEDIMENT SHOULD BE PREVENTED FROM ENTERING ANY STORM DRAIN, DITCH OR WATER COURSE BY USING APPROVED METHODS.

The Architect/Engineer assumes responsibility for appropriate use of this standard.

ADOPTED 6/21/2006 | CITY OF GEORGETOWN CONSTRUCTION STANDARDS AND DETAILS | STABILIZED CONSTRUCTION ENTRANCE | EC06 | NTS | 1/2003 | MRS | TRB

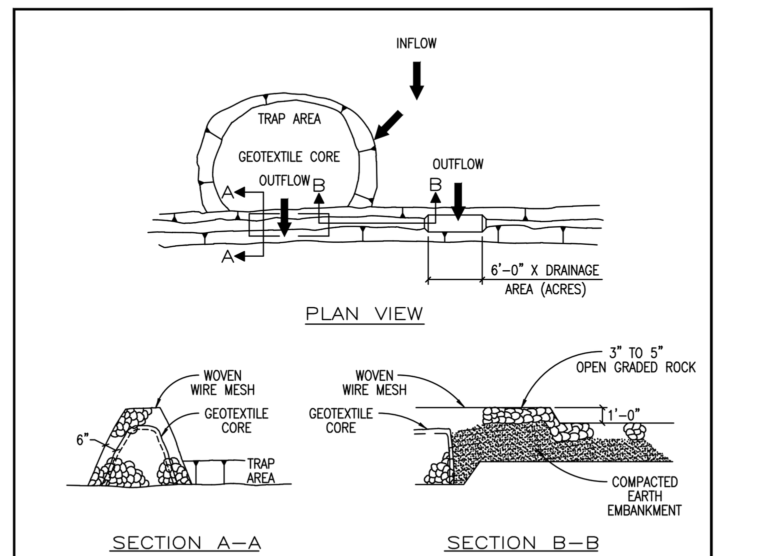

INSTALLATION:
- LOCATE THE SEDIMENT TRAP SO AS TO DISTURB AS FEW TREES AS POSSIBLE.
- CLEAR AND GRUB THE AREA UNDER THE EMBANKMENT OF ALL VEGETATION AND ROOT MATS.
- LAYOUT THE WIRE MESH AND THEN THE GEOTEXTILE FABRIC.
- CONSTRUCT THE GEOTEXTILE CORE AND CORRESPONDING ROCK EMBANKMENT TO THE DESIGNATED HEIGHT AND CONFIGURATION.
- WRAP THE STRUCTURE WITH THE PREVIOUSLY PLACED WIRE MESH SECURE ENOUGH SO THAT WHEN WALKED ACROSS THE STRUCTURE RETAINS IT'S SHAPE. SECURE WITH TIE WIRE.
- PLACE THE EMBANKMENT MATERIAL IN 8 TO 12 INCH LIFTS AND MACHINE COMPACT.

INSPECTION AND MAINTENANCE GUIDELINES:
- INSPECTION SHOULD BE MADE WEEKLY AND AFTER EACH RAINFALL. CHECK THE EMBANKMENT, SPILLWAYS, AND OUTLET FOR EROSION DAMAGE AND INSPECT THE EMBANKMENT FOR PIPING AND SETTLEMENT. REPAIR SHOULD BE MADE PROMPTLY AS NEEDED BY THE CONTRACTOR.
- TRASH AND OTHER DEBRIS SHOULD BE REMOVED AND THE TRAP RESTORED TO ITS ORIGINAL DIMENSIONS WHEN THE SEDIMENT HAS ACCUMULATED TO HALF OF THE DESIGN DEPTH OF THE TRAP.
- SEDIMENT REMOVED FROM THE TRAP SHOULD BE DEPOSITED IN AN APPROVED SPOILS AREA AND IN SUCH A MANNER THAT IT WILL NOT CAUSE ADDITIONAL SILTATION.

The Architect/Engineer assumes responsibility for appropriate use of this standard.

ADOPTED 6/21/2006 | CITY OF GEORGETOWN CONSTRUCTION STANDARDS AND DETAILS | SEDIMENT TRAP DETAIL | EC07 | NTS | 1/2003 | MRS | TRB

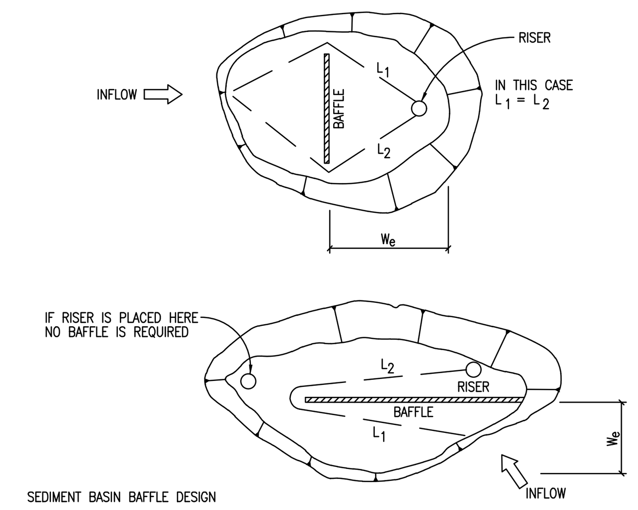

SEDIMENT BASIN BAFFLE DESIGN

$W_e = A / (L_1 + L_2)$

W_e = EFFECTIVE WIDTH OF BASIN

A = SURFACE AREA OF BASIN WHEN FILLED TO RISER CREST

L_1, L_2 = SHORTEST TRAVEL DISTANCE AROUND THE BAFFLE FROM INLET TO OUTLET

INSPECTION AND MAINTENANCE GUIDELINES:
- INSPECTION SHOULD BE MADE WEEKLY AND AFTER EACH RAINFALL. CHECK THE EMBANKMENT, SPILLWAYS, AND OUTLET FOR EROSION DAMAGE, AND INSPECT THE EMBANKMENT FOR PIPING AND SETTLEMENT. REPAIR SHOULD BE MADE PROMPTLY AS NEEDED BY THE CONTRACTOR.
- TRASH AND OTHER DEBRIS SHOULD BE REMOVED AFTER EACH RAINFALL TO PREVENT CLOGGING OF THE OUTLET STRUCTURE.
- ACCUMULATED SILT SHOULD BE REMOVED AND THE BASIN SHOULD BE RE-GRADED TO ITS ORIGINAL DIMENSIONS AT SUCH POINT THAT THE CAPACITY OF THE IMPOUNDMENT HAS BEEN REDUCED TO 1/2 OF ITS ORIGINAL STORAGE CAPACITY.
- THE REMOVED SEDIMENT SHOULD BE STOCKPILED OR REDISTRIBUTED IN AREAS THAT ARE PROTECTED FROM EROSION.

The Architect/Engineer assumes responsibility for appropriate use of this standard.

ADOPTED 6/21/2006 | CITY OF GEORGETOWN CONSTRUCTION STANDARDS AND DETAILS | SEDIMENT BASIN BAFFLE DESIGN | EC08 | NTS | 1/2003 | MRS | TRB

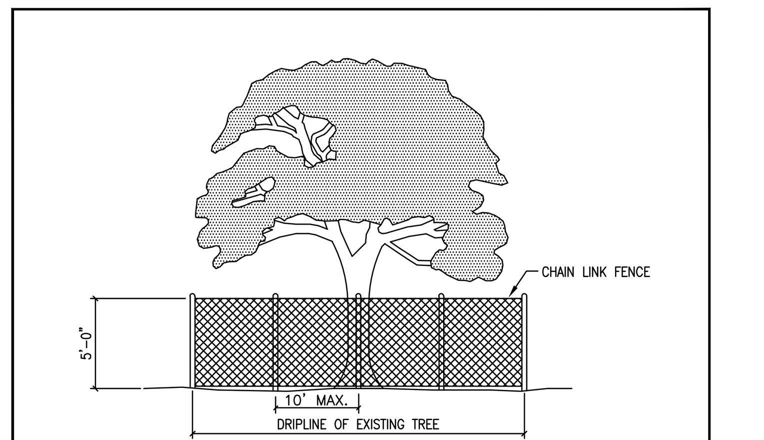

NOTES:
1. TREE PROTECTION FENCES SHALL BE INSTALLED PRIOR TO THE COMMENCEMENT OF ANY SITE PREPARATION WORK (CLEARING, GRUBBING OR GRADING).
2. FENCES SHALL COMPLETELY SURROUND THE TREE, OR CLUSTERS OF TREES; WILL BE LOCATED AT THE OUTERMOST LIMIT OF THE TREE BRANCHES (DRIPLINE), AND WILL BE MAINTAINED THROUGHOUT THE CONSTRUCTION PROJECT IN ORDER TO PREVENT THE FOLLOWING:
   A. SOIL COMPACTION IN THE ROOT ZONE AREA RESULTING FROM VEHICULAR TRAFFIC, OR STORAGE OF EQUIPMENT OR MATERIALS.
   B. ROOT ZONE DISTURBANCES DUE TO GRADE CHANGES (GREATER THAN SIX INCHES (6") CUT OR FILL, OR TRENCHING NOT REVIEWED AND AUTHORIZED BY THE CITY.
   C. WOUNDS TO EXPOSED ROOTS, TRUNKS OR LIMBS BY MECHANICAL EQUIPMENT.
   D. OTHER ACTIVITIES DETRIMENTAL TO TREES, SUCH AS CHEMICAL STORAGE, CEMENT TRUCK CLEANING AND FIRE.
3. EXCEPTIONS TO INSTALLING FENCES AT TREE DRIPLINES MAY BE PERMITTED IN THE FOLLOWING CASES:
   A. WHERE PERMEABLE PAVING IS TO BE INSTALLED, ERECT THE FENCE AT THE OUTER LIMITS OF THE PERMEABLE PAVING AREA.
   B. WHERE TREES ARE CLOSE TO PROPOSED BUILDINGS, ERECT THE FENCE NO CLOSER THAN SIX FEET (6'-0") TO BUILDING.

The Architect/Engineer assumes responsibility for appropriate use of this standard.

ADOPTED 6/21/2006 | CITY OF GEORGETOWN CONSTRUCTION STANDARDS AND DETAILS | TREE PROTECTION – CHAIN LINK FENCE | EC09 | NTS | 1/2003 | MRS | TRB

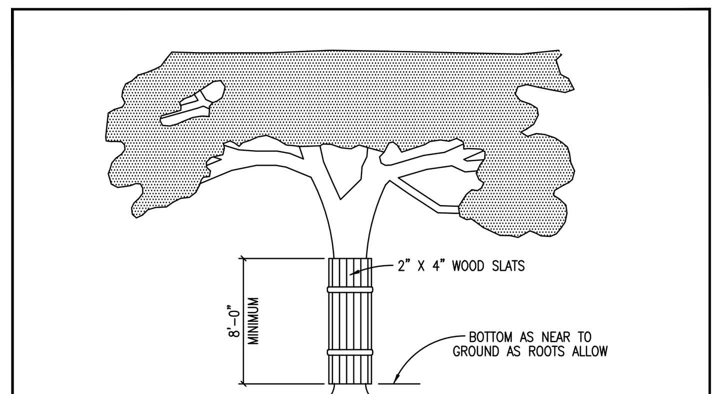

NOTES:
1. WHERE ANY EXCEPTIONS RESULT IN A FENCE BEING CLOSER THAN FOUR FEET (4'-0") TO A TREE TRUNK; PROTECT THE TRUNK WITH STRAPPED-ON-PLANKING TO A HEIGHT OF EIGHT FEET (8'-0"), OR TO THE LIMITS OF LOWER BRANCHING IN ADDITION TO THE REDUCED FENCING PROVIDED.
2. ANY ROOTS EXPOSED BY CONSTRUCTION ACTIVITY SHALL BE PRUNED FLUSH WITH THE SOIL. BACKFILL ROOT AREAS WITH GOOD QUALITY TOP SOIL AS SOON AS POSSIBLE. IF EXPOSED ROOT AREAS ARE NOT BACKFILLED WITHIN TWO (2) DAYS, COVER THEM WITH ORGANIC MATERIAL IN A MANNER WHICH REDUCES SOIL TEMPERATURE, AND MINIMIZES WATER LOSS DUE TO EVAPORATION.
3. PRIOR EXCAVATION OR GRADE CUTTING WITHIN TREE DRIPLINE. MAKE A CLEAN CUT BETWEEN THE DISTURBED AND UNDISTURBED ROOT ZONES WITH A ROCK SAW OR SIMILAR EQUIPMENT, TO MINIMIZE DAMAGE TO REMAINING ROOTS.
4. TREES MOST HEAVILY IMPACTED BY CONSTRUCTION ACTIVITIES SHOULD BE WATERED DEEPLY ONCE A WEEK DURING PERIODS OF HOT, DRY WEATHER. TREE CROWNS SHOULD BE SPRAYED WITH WATER PERIODICALLY TO REDUCE DUST ACCUMULATION ON THE LEAVES.
5. ANY TRENCHING REQUIRED FOR THE INSTALLATION OF LANDSCAPE IRRIGATION SHALL BE PLACED AS FAR FROM EXISTING TREE TRUNKS AS POSSIBLE.
6. NO LANDSCAPE TOPSOIL DRESSING GREATER THE FOUR INCHES (4") SHALL BE PERMITTED WITHIN THE DRIPLINE OF A TREE. NO SOIL IS PERMITTED ON THE ROOT FLARE OF ANY TREE.
7. PRUNING TO PROVIDE CLEARANCE FOR STRUCTURES, VEHICULAR TRAFFIC AND EQUIPMENT SHALL TAKE PLACE BEFORE CONSTRUCTION BEGINS.

The Architect/Engineer assumes responsibility for appropriate use of this standard.

ADOPTED 6/21/2006 | CITY OF GEORGETOWN CONSTRUCTION STANDARDS AND DETAILS | TREE PROTECTION – WOOD SLATS | EC10 | NTS | 1/2003 | MRS | TRB

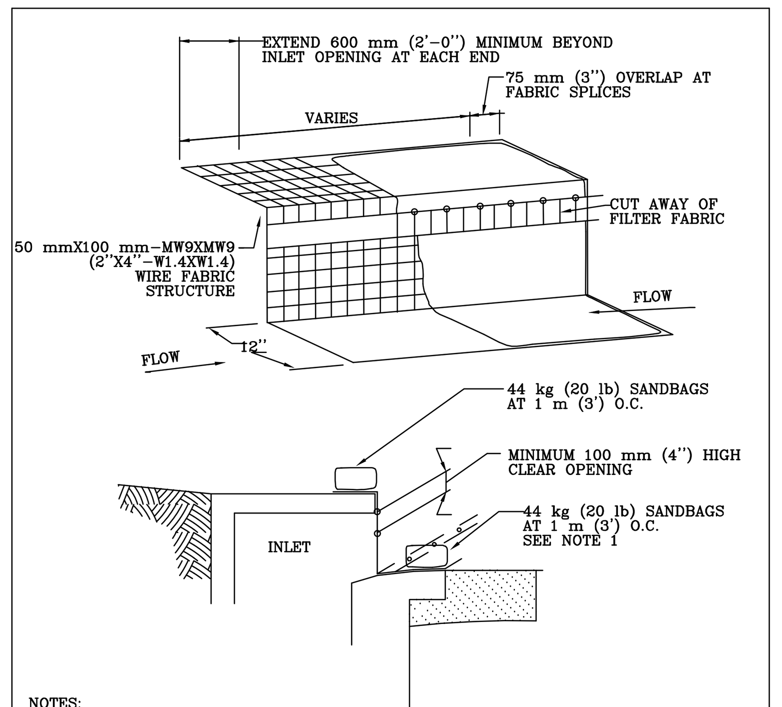

NOTES:
1. WHERE MINIMUM CLEARANCES CAUSE TRAFFIC TO DRIVE IN THE GUTTER, THE CONTRACTOR MAY SUBSTITUTE A 25 mm X 100 mm (1''x4'') BOARD SECURED WITH CONCRETE NAILS 1 m (3') O.C. NAILED INTO THE GUTTER IN LIEU OF SANDBAGS TO HOLD THE FILTER DIKE IN PLACE. UPON REMOVAL, CLEAN ANY DIRT/DEBRIS FROM NAILING LOCATIONS, APPLY CHEMICAL SANDING AGENT AND APPLY NON-SHRINK GROUT FLUSH WITH SURFACE OF GUTTER.
2. A SECTION OF FILTER FABRIC SHALL BE REMOVED AS SHOWN ON THIS DETAIL OR AS DIRECTED BY THE ENGINEER OR DESIGNATED REPRESENTATIVE. FABRIC MUST BE SECURED TO WIRE BACKING WITH CLIPS OR HOG RINGS AT THIS LOCATION.
3. DAILY INSPECTION SHALL BE MADE BY THE CONTRACTOR AND SILT ACCUMULATION MUST BE REMOVED WHEN DEPTH REACHES 50 mm (2'').
4. CONTRACTOR SHALL MONITOR THE PERFORMANCE OF INLET PROTECTION DURING EACH RAINFALL EVENT AND IMMEDIATELY REMOVE THE INLET PROTECTIONS IF THE STORM-WATER BEGINS TO OVERTOP THE CURB.
5. INLET PROTECTIONS SHALL BE REMOVED AS SOON AS THE SOURCE OF SEDIMENT IS STABILIZED.

FILTER DIKE CURB INLET PROTECTION

THE ARCHITECT/ENGINEER ASSUMES RESPONSIBILITY FOR APPROPRIATE USE OF THIS STANDARD.

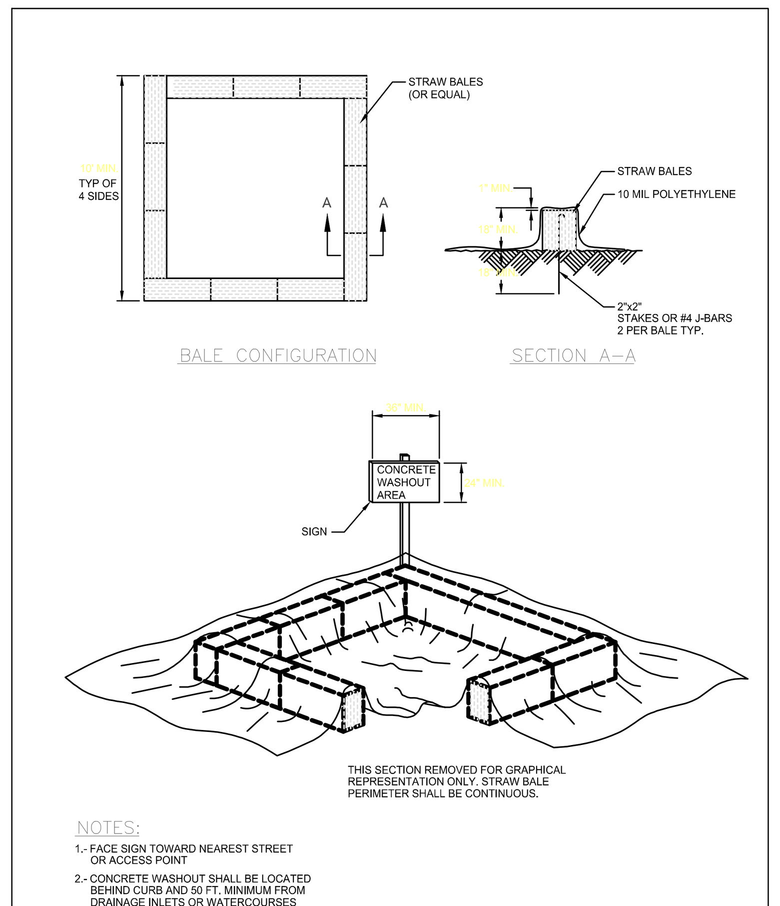

NOTES:
1.- FACE SIGN TOWARD NEAREST STREET OR ACCESS POINT
2.- CONCRETE WASHOUT SHALL BE LOCATED BEHIND CURB AND 50 FT. MINIMUM FROM DRAINAGE INLETS OR WATERCOURSES

Concrete Washout Area

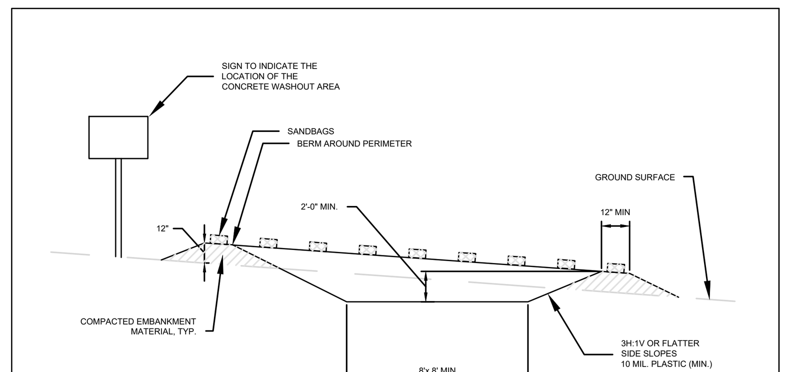

NOTES:
1. CONCRETE WASHOUT AREA SHALL BE INSTALLED PRIOR TO ANY CONCRETE PLACEMENT ON SITE.
2. VEHICLE TRACKING CONTROL (DETAIL SW-14) IS REQUIRED IF ACCESS TO CONCRETE WASHOUT AREA IS OFF PAVEMENT.
3. SIGNS SHALL BE PLACED AT THE CONSTRUCTION ENTRANCE, AT THE WASHOUT AREA, AND ELSEWHERE AS NECESSARY TO CLEARLY INDICATE THE LOCATION OF THE CONCRETE WASHOUT AREA TO OPERATORS OF CONCRETE TRUCKS AND PUMP RIGS.
4. THE CONCRETE WASHOUT AREA SHALL BE REPAIRED AND ENLARGED OR CLEANED OUT AS NECESSARY TO MAINTAIN CAPACITY FOR WASTED CONCRETE.
5. AT THE END OF CONSTRUCTION, ALL CONCRETE SHALL BE REMOVED FROM THE SITE AND DISPOSED OF AT AN ACCEPTED WASTE SITE.
6. WHEN THE CONCRETE WASHOUT AREA IS REMOVED, THE DISTURBED AREA SHALL BE SEEDED AND MULCHED OR OTHERWISE STABILIZED IN A MANNER ACCEPTED BY THE CITY.

CONCRETE WASHOUT AREA

Figure 1.4-F Silt Fence Typical Placement – Two Slopes

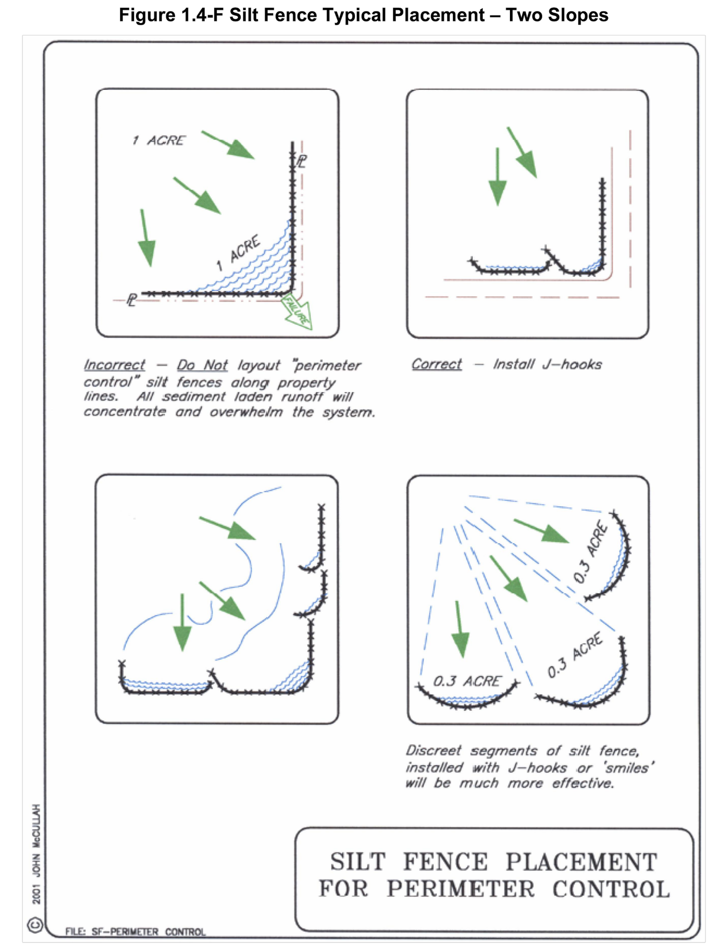

Figure 1.4-G Silt Fence Placement for Perimeter Control

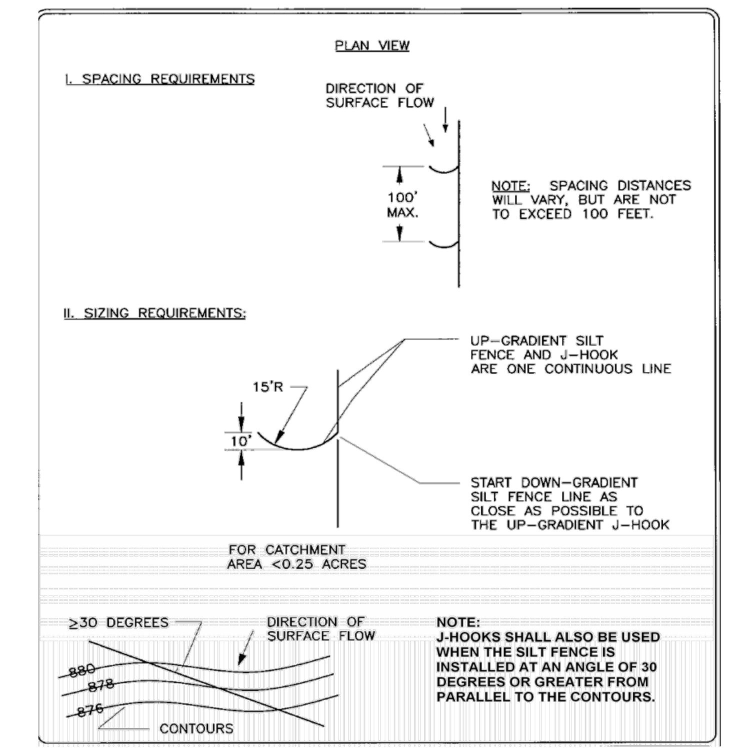

Figure 1.4-H Silt Fence J - Hook Detail (N.T.S.)

H. *Triangular Sediment Filter Dikes.*

(See Standard Specifications manual item 648S and Specifications manual item 648S *for detail)*

1. Description.

A temporary barrier constructed of wire mesh and geotextile fabric, installed along a flat area.

2. Purpose.

The purpose of a triangular sediment filter dike is to intercept and detain water-borne sediment from a stabilized construction entrance, roadway

NO.	REVISION	BY	DATE

811 Know what's below. Call before you dig.

5508 HIGHWAY 290 WEST
SUITE 150
AUSTIN, TX 78735
512.872.6696
HRGREEN.COM

TBPE NO: 16384
TBPLS NO: 10194101

HRGreen® DEVELOPMENT TX

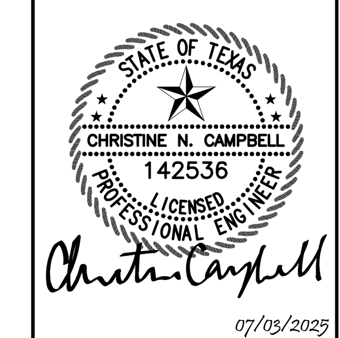

07/03/2025

EROSION & SEDIMENTATION CONTROL DETAILS

PARKSIDE ON THE RIVER SECTIONS 11, 12A & 15A CONSTRUCTION PLANS GEORGETOWN, WILLIAMSON, TEXAS

DESIGNED BY: CC
DRAWN BY: MM
CHECKED BY: SN
APPROVED BY:

SHEET 40 OF 141

2025-XX-CON

Plot Style: LandDev Global.ctb
Template: LDC_C3D2022.DWT
P:\Blake Magee\Parkside Sections 11-15 & WON 5\Section 11, 12A & 15A\03_ACAD\Plans\sh2403522 DTLS.dwg, EROSION & SEDIMENTATION CONTROL DETAILS, July 18, 2025, 11:30 AM, makai.muhammad

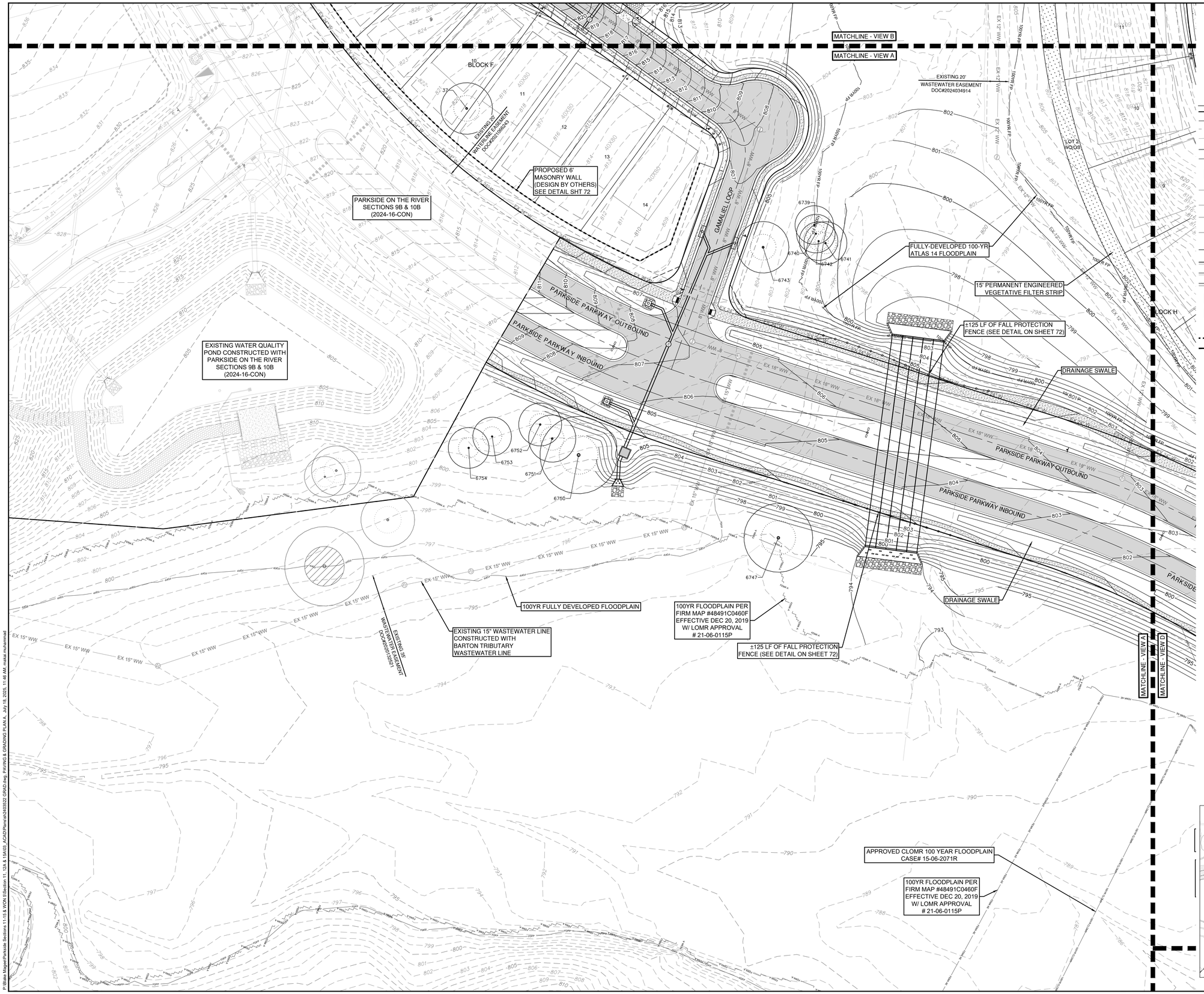

0 40' 80'

SCALE: 1" = 40'

LEGEND

- PROPERTY BOUNDARY
- EASEMENT
- EXISTING MAJOR CONTOUR
- EXISTING MINOR CONTOUR
- PROPOSED MAJOR CONTOUR
- PROPOSED MINOR CONTOUR
- FEMA FLOODWAY PER FIRM# 48491C0460F & LOMR# 21-06-0115P
- FEMA AE — 100YR ATLAS 14 FEMA ZONE AE FLOODPLAIN PER FIRM# 48491C0460F & LOMR# 21-06-0115P
- FEMA A — 100YR FEMA ZONE A FLOODPLAIN PER FIRM MAP# 48491C0460F
- 100YR CLOMR — 100YR CLOMR FLOODPLAIN CASE# 15-06-2071R
- FDFP — 100YR ATLAS 14 FULLY DEVELOPED FLOODPLAIN (STANTEC DRAINAGE STUDY, SHERVIN NOOSHIN, 3/25/19) APPROVED WITH PP# 2019-5-PP
- OHWM — ORDINARY HIGH WATER MARK PER ADAMS ENVIRONMENTAL
- STANDARD CURB AND GUTTER
- RIBBON CURB
- MOUNTABLE CURB
- SIDEWALK (BY DEVELOPER)
- SIDEWALK (BY BUILDER)
- ADA RAMP
- MASONRY WALL (DESIGN BY OTHERS)
- RETAINING WALL (DESIGN BY OTHERS)
- 10339 — TREES TO REMAIN - HERITAGE
- 10538 — TREES TO REMAIN - NON-HERITAGE
- ASPHALT PAVING (REFER TO SHEET 72 FOR PAVEMENT DESIGN SECTIONS)
- VEGETATIVE FILTER STRIP

NOTES:

1. FILL SHOULD BE COMPACTED TO AT LEAST 95% OF THE MAXIMUM DRY DENSITY AS DETERMINED BY TxDOT - 114 - E, AND PER GEOTECHNICAL ENGINEERS RECOMMENDATION.
2. FILL WITHIN THE RESIDENTIAL LOT AREAS SHALL BE PLACED ACCORDING TO THE HUD 79G REQUIREMENTS SPECIFICATIONS
3. VEGETATE ALL DISTURBED AREAS WITHIN THE ROW AND OPEN SPACE LOT AREAS PER CITY OF GEORGETOWN SPECIFICATIONS.
4. BOTTOM OF WALL (BW) ELEVATIONS INDICATE FINISHED GRADE. IT DOES NOT INCLUDE THE FOOTING.

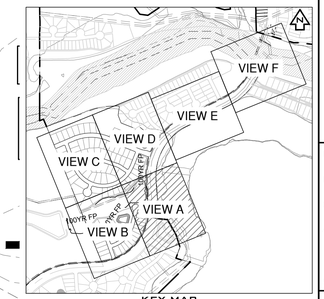

KEY MAP (N.T.S.)

NO	REVISION	BY	DATE

811 Know what's below. Call before you dig.

5508 HIGHWAY 290 WEST
SUITE 150
AUSTIN, TX 78735
512.872.6696
HRGREEN.COM

TBPE NO: 16384
TBPLS NO: 10194101

HRGreen® DEVELOPMENT TX

STATE OF TEXAS
CHRISTINE N. CAMPBELL
142536
LICENSED PROFESSIONAL ENGINEER
07/05/2025

PAVING & GRADING PLAN A

PARKSIDE ON THE RIVER SECTIONS 11, 12A & 15A CONSTRUCTION PLANS

GEORGETOWN, WILLIAMSON, TEXAS

DESIGNED BY: CC
DRAWN BY: MM
CHECKED BY: SN
APPROVED BY:

SHEET 62 OF 141

2025-XX-CON

P:\Bldo Mgmt\Parkside Sections 11,15 & WCN 1\Section 11, 12A & 15A\03_ACAD\Planset\2400322 GRAD.dwg, PAVING & GRADING PLAN A, July 16, 2025, 11:46 AM, malak.muhammad

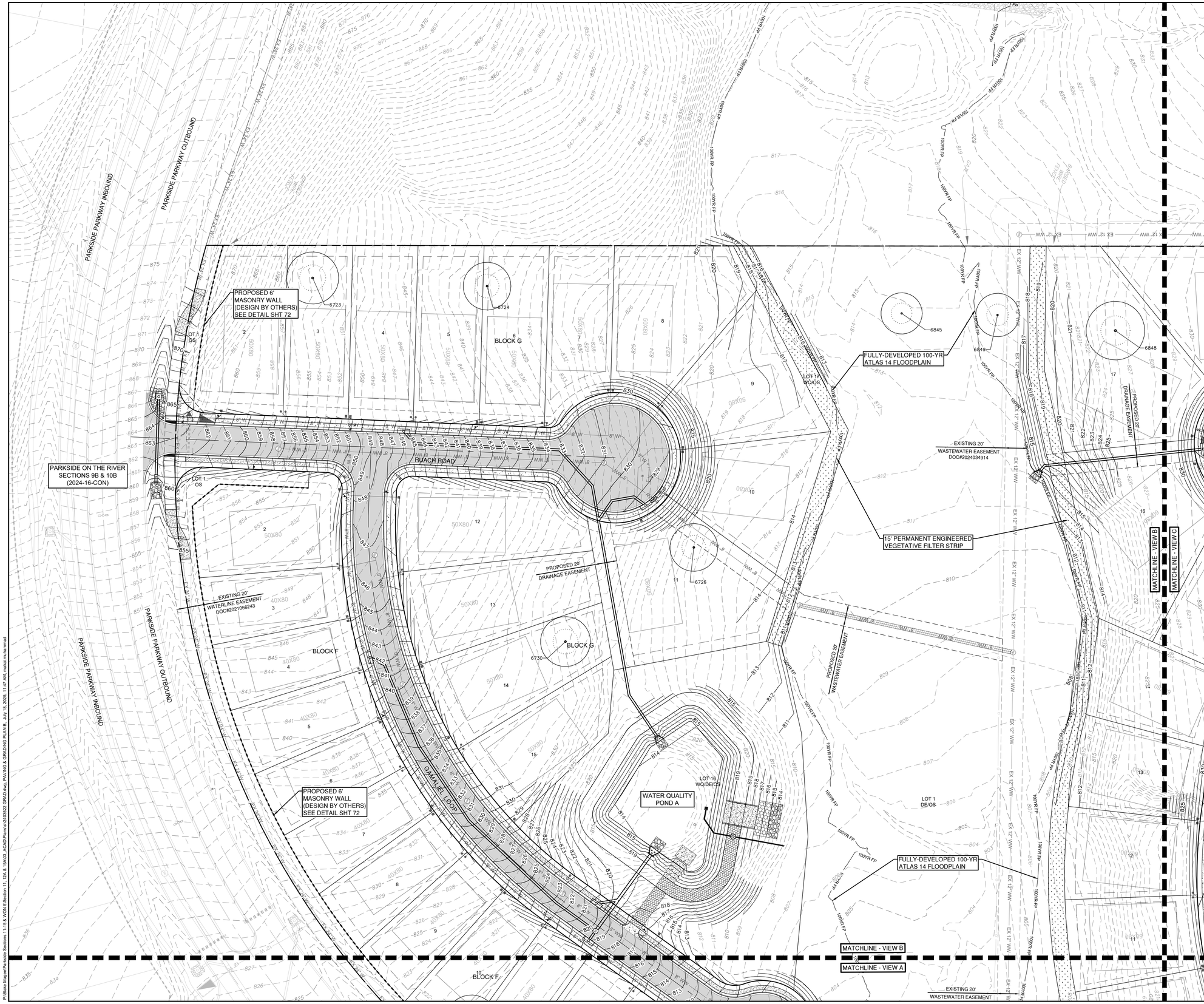

0 40' 80'

SCALE: 1" = 40'

LEGEND

- PROPERTY BOUNDARY
- EASEMENT
- EXISTING MAJOR CONTOUR
- EXISTING MINOR CONTOUR
- PROPOSED MAJOR CONTOUR
- PROPOSED MINOR CONTOUR
- FEMA FLOODWAY PER FIRM# 48491C0460F & LOMR# 21-06-0115P
- FEMA AE — 100YR ATLAS 14 FEMA ZONE AE FLOODPLAIN PER FIRM# 48491C0460F & LOMR# 21-06-0115P
- FEMA A — 100YR FEMA ZONE A FLOODPLAIN PER FIRM MAP# 48491C0460F
- 100YR CLOMR — 100YR CLOMR FLOODPLAIN CASE# 15-06-2071R
- FDFP — 100YR ATLAS 14 FULLY DEVELOPED FLOODPLAIN (STANTEC DRAINAGE STUDY, SHERVIN NOOSHIN, 3/25/19) APPROVED WITH PP# 2019-5-PP
- OHWM — ORDINARY HIGH WATER MARK PER ADAMS ENVIRONMENTAL
- STANDARD CURB AND GUTTER
- RIBBON CURB
- MOUNTABLE CURB
- SIDEWALK (BY DEVELOPER)
- SIDEWALK (BY BUILDER)
- ADA RAMP
- MASONRY WALL (DESIGN BY OTHERS)
- RETAINING WALL (DESIGN BY OTHERS)
- TREES TO REMAIN - HERITAGE
- TREES TO REMAIN - NON-HERITAGE
- ASPHALT PAVING (REFER TO SHEET 72 FOR PAVEMENT DESIGN SECTIONS)
- VEGETATIVE FILTER STRIP

NOTES:

1. FILL SHOULD BE COMPACTED TO AT LEAST 95% OF THE MAXIMUM DRY DENSITY AS DETERMINED BY TxDOT - 114 - E, AND PER GEOTECHNICAL ENGINEERS RECOMMENDATION.
2. FILL WITHIN THE RESIDENTIAL LOT AREAS SHALL BE PLACED ACCORDING TO THE HUD 79G REQUIREMENTS SPECIFICATIONS
3. VEGETATE ALL DISTURBED AREAS WITHIN THE ROW AND OPEN SPACE LOT AREAS PER CITY OF GEORGETOWN SPECIFICATIONS.
4. BOTTOM OF WALL (BW) ELEVATIONS INDICATE FINISHED GRADE. IT DOES NOT INCLUDE THE FOOTING.

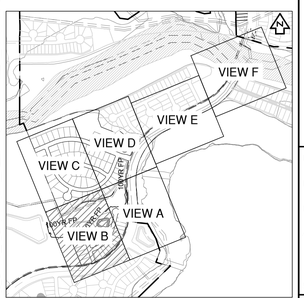

KEY MAP (N.T.S.)

NO.	REVISION	BY	DATE

811 Know what's below. Call before you dig.

HRGreen® DEVELOPMENT TX
5508 HIGHWAY 290 WEST
SUITE 150
AUSTIN, TX 78735
512.872.6696
HRGREEN.COM
TBPE NO: 16384
TBPLS NO: 10194101

STATE OF TEXAS
CHRISTINE N. CAMPBELL
142536
LICENSED PROFESSIONAL ENGINEER
07/03/2025

PAVING & GRADING PLAN B

PARKSIDE ON THE RIVER SECTIONS 11, 12A & 15A CONSTRUCTION PLANS GEORGETOWN, WILLIAMSON, TEXAS

DESIGNED BY: CC
DRAWN BY: MM
CHECKED BY: SN
APPROVED BY:

SHEET 63 OF 141

2025-XX-CON

P:\Blake Magee\Parkside Sections 11-15 & WON 5\Section 11, 12A & 15A\03_ACAD\Plans\sh2403522 GRAD.dwg, PAVING & GRADING PLAN B, July 18, 2025, 11:47 AM, makai.muhammad

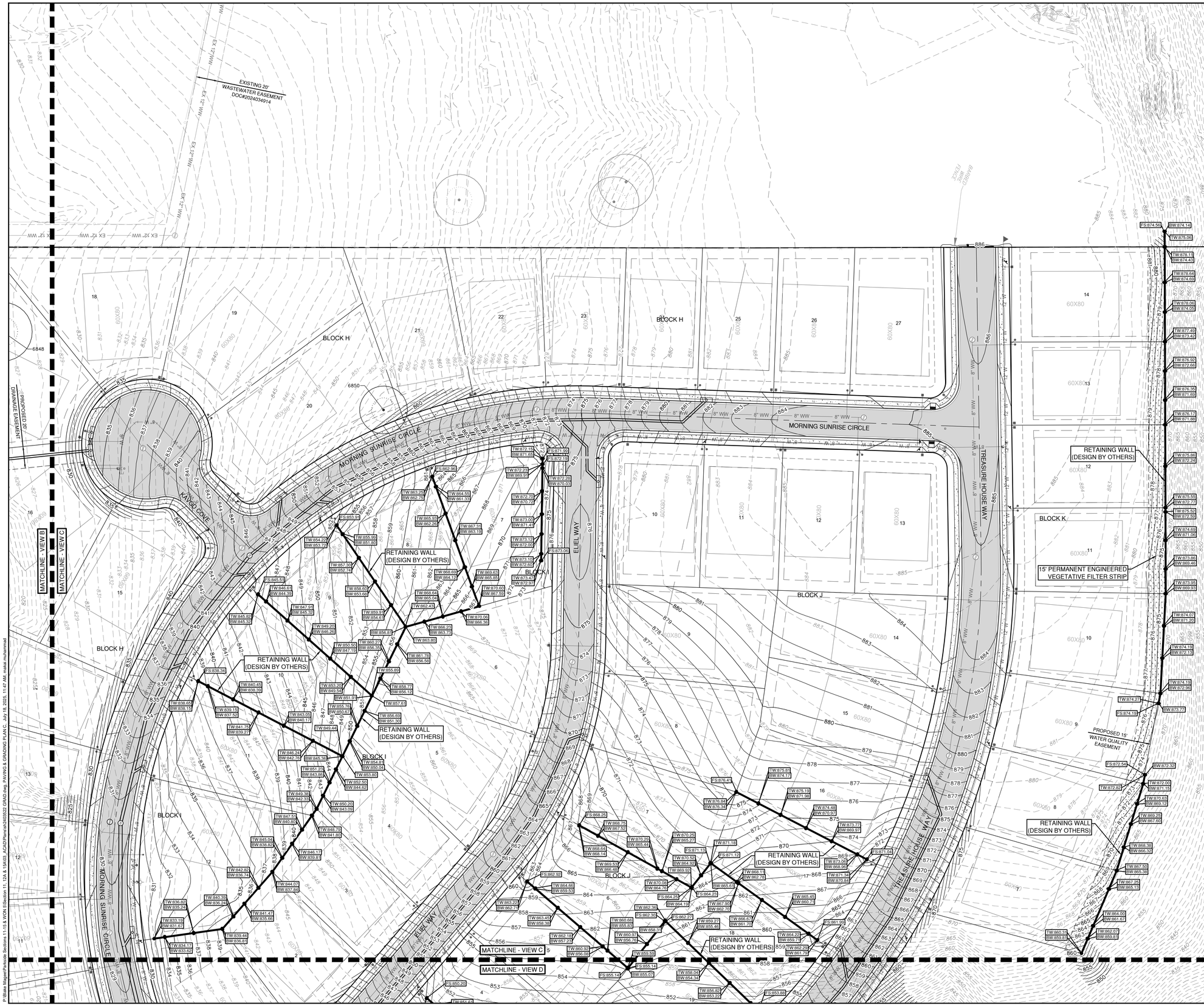

0 40' 80'

SCALE: 1" = 40'

LEGEND

- PROPERTY BOUNDARY
- EASEMENT
- 840 EXISTING MAJOR CONTOUR
- EXISTING MINOR CONTOUR
- 940 PROPOSED MAJOR CONTOUR
- PROPOSED MINOR CONTOUR
- FEMA FLOODWAY PER FIRM# 48491C0460F & LOMR# 21-06-0115P
- FEMA AE — 100YR ATLAS 14 FEMA ZONE AE FLOODPLAIN PER FIRM# 48491C0460F & LOMR# 21-06-0115P
- FEMA A — 100YR FEMA ZONE A FLOODPLAIN PER FIRM MAP# 48491C0460F
- 100YR CLOMR — 100YR CLOMR FLOODPLAIN CASE# 15-06-2071R
- FDFP — 100YR ATLAS 14 FULLY DEVELOPED FLOODPLAIN (STANTEC DRAINAGE STUDY, SHERVIN NOOSHIN, 3/25/19) APPROVED WITH PP# 2019-5-PP
- OHWM — ORDINARY HIGH WATER MARK PER ADAMS ENVIRONMENTAL
- STANDARD CURB AND GUTTER
- RIBBON CURB
- MOUNTABLE CURB
- SIDEWALK (BY DEVELOPER)
- SIDEWALK (BY BUILDER)
- ADA RAMP
- MASONRY WALL (DESIGN BY OTHERS)
- RETAINING WALL (DESIGN BY OTHERS)
- 10539 TREES TO REMAIN - HERITAGE
- 10538 TREES TO REMAIN - NON-HERITAGE
- ASPHALT PAVING (REFER TO SHEET 72 FOR PAVEMENT DESIGN SECTIONS)
- VEGETATIVE FILTER STRIP

NOTES:

1. FILL SHOULD BE COMPACTED TO AT LEAST 95% OF THE MAXIMUM DRY DENSITY AS DETERMINED BY TxDOT - 114 - E, AND PER GEOTECHNICAL ENGINEERS RECOMMENDATION.
2. FILL WITHIN THE RESIDENTIAL LOT AREAS SHALL BE PLACED ACCORDING TO THE HUD 79G REQUIREMENTS SPECIFICATIONS
3. VEGETATE ALL DISTURBED AREAS WITHIN THE ROW AND OPEN SPACE LOT AREAS PER CITY OF GEORGETOWN SPECIFICATIONS.
4. BOTTOM OF WALL (BW) ELEVATIONS INDICATE FINISHED GRADE. IT DOES NOT INCLUDE THE FOOTING.

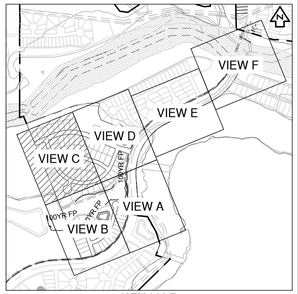

KEY MAP (N.T.S.)

NO.	REVISION	BY	DATE

811 Know what's below. Call before you dig.

HRGreen®
DEVELOPMENT TX
5508 HIGHWAY 290 WEST
SUITE 150
AUSTIN, TX 78735
512.872.6696
HRGREEN.COM
TBPE NO: 16384
TBPLS NO: 10194101

STATE OF TEXAS
CHRISTINE N. CAMPBELL
142536
LICENSED PROFESSIONAL ENGINEER
07/03/2025

PAVING & GRADING PLAN C

PARKSIDE ON THE RIVER SECTIONS 11, 12A & 15A CONSTRUCTION PLANS GEORGETOWN, WILLIAMSON, TEXAS

DESIGNED BY: CC
DRAWN BY: MM
CHECKED BY: SN
APPROVED BY:

SHEET 64 OF 141

2025-XX-CON

P:\Blake Magee\Parkside Sections 11-15 & WON 5\Section 11, 12A & 15A\03_ACAD\Plans\a\24\03522 GRAD.dwg, PAVING & GRADING PLAN C, July 18, 2025, 11:47 AM, makai.muhammad

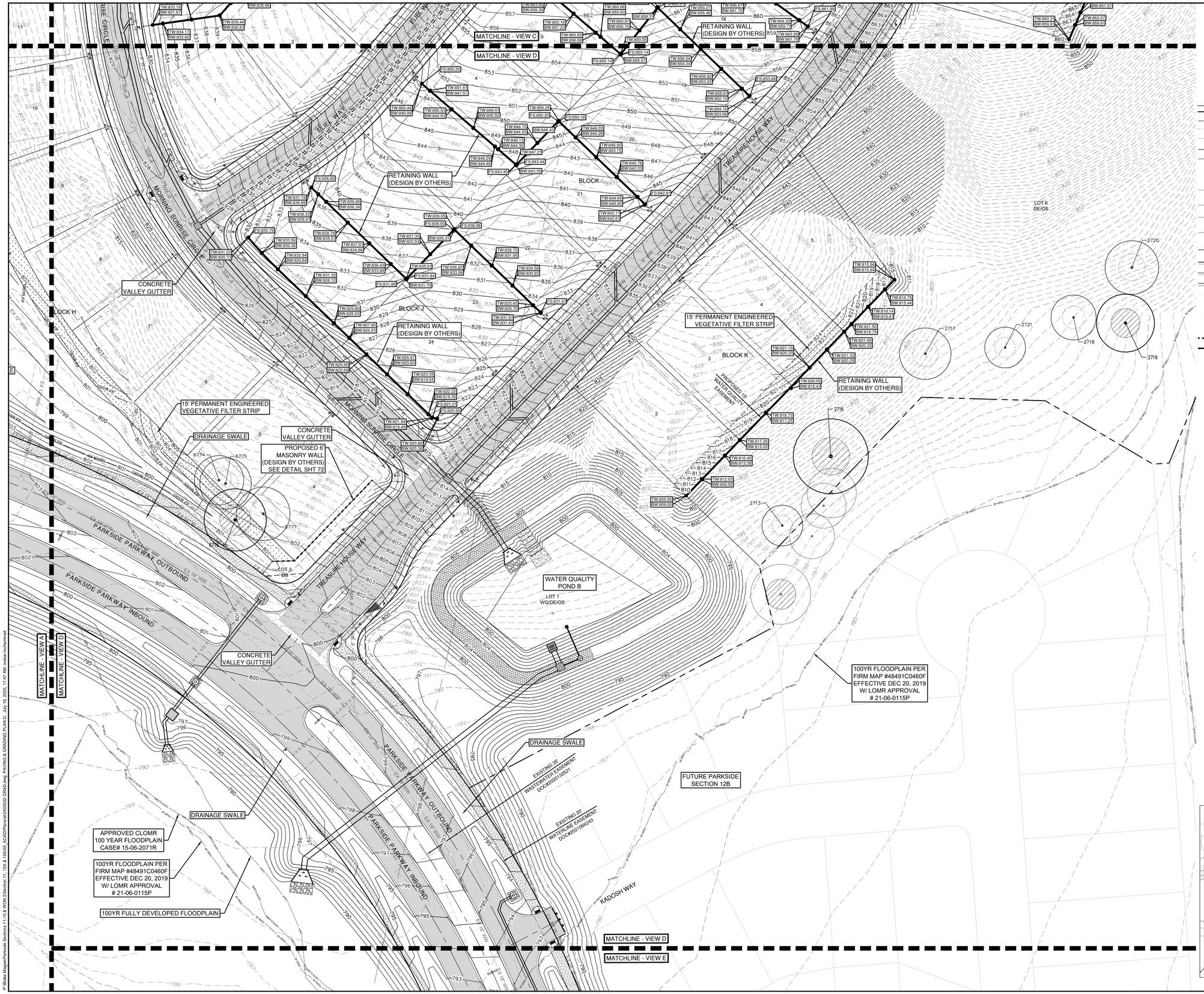

0 40' 80'

SCALE: 1" = 40'

LEGEND

- PROPERTY BOUNDARY
- EASEMENT
- EXISTING MAJOR CONTOUR
- EXISTING MINOR CONTOUR
- PROPOSED MAJOR CONTOUR
- PROPOSED MINOR CONTOUR
- FEMA FLOODWAY PER FIRM# 48491C0460F & LOMR# 21-06-0115P
- FEMA AE — 100YR ATLAS 14 FEMA ZONE AE FLOODPLAIN PER FIRM# 48491C0460F & LOMR# 21-06-0115P
- FEMA A — 100YR FEMA ZONE A FLOODPLAIN PER FIRM MAP# 48491C0460F
- 100YR CLOMR — 100YR CLOMR FLOODPLAIN CASE# 15-06-2071R
- FDFP — 100YR ATLAS 14 FULLY DEVELOPED FLOODPLAIN (STANTEC DRAINAGE STUDY, SHERVIN NOOSHIN, 3/25/19) APPROVED WITH PP# 2019-5-PP
- OHWM — ORDINARY HIGH WATER MARK PER ADAMS ENVIRONMENTAL
- STANDARD CURB AND GUTTER
- RIBBON CURB
- MOUNTABLE CURB
- SIDEWALK (BY DEVELOPER)
- SIDEWALK (BY BUILDER)
- ADA RAMP
- MASONRY WALL (DESIGN BY OTHERS)
- RETAINING WALL (DESIGN BY OTHERS)
- 10539 — TREES TO REMAIN - HERITAGE
- 10538 — TREES TO REMAIN - NON-HERITAGE
- ASPHALT PAVING (REFER TO SHEET 72 FOR PAVEMENT DESIGN SECTIONS)
- VEGETATIVE FILTER STRIP

NOTES:

1. FILL SHOULD BE COMPACTED TO AT LEAST 95% OF THE MAXIMUM DRY DENSITY AS DETERMINED BY TxDOT - 114 - E, AND PER GEOTECHNICAL ENGINEERS RECOMMENDATION.
2. FILL WITHIN THE RESIDENTIAL LOT AREAS SHALL BE PLACED ACCORDING TO THE HUD 79G REQUIREMENTS SPECIFICATIONS
3. VEGETATE ALL DISTURBED AREAS WITHIN THE ROW AND OPEN SPACE LOT AREAS PER CITY OF GEORGETOWN SPECIFICATIONS.
4. BOTTOM OF WALL (BW) ELEVATIONS INDICATE FINISHED GRADE. IT DOES NOT INCLUDE THE FOOTING.

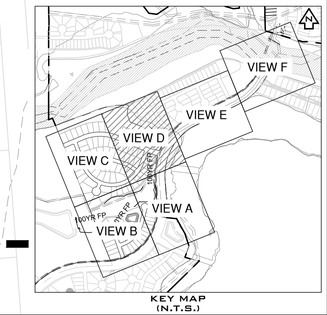

KEY MAP (N.T.S.)

NO.	REVISION	BY	DATE

811 Know what's below. Call before you dig.

HRGreen® DEVELOPMENT TX
5508 HIGHWAY 290 WEST
SUITE 150
AUSTIN, TX 78735
512.872.6696
HRGREEN.COM
TBPE NO: 16384
TBPLS NO: 10194101

STATE OF TEXAS
CHRISTINE N. CAMPBELL
142536
LICENSED PROFESSIONAL ENGINEER
07/03/2025

PAVING & GRADING PLAN D

PARKSIDE ON THE RIVER SECTIONS 11, 12A & 15A CONSTRUCTION PLANS GEORGETOWN, WILLIAMSON, TEXAS

DESIGNED BY: CC
DRAWN BY: MM
CHECKED BY: SN
APPROVED BY:

SHEET 65 OF 141

2025-XX-CON

P:\Blake Magee\Parkside Sections 11-15 & WON 5\Section 11, 12A & 15A\03_ACAD\Plans\sh2403522 GRAD.dwg, PAVING & GRADING PLAN D, July 18, 2025, 11:47 AM, makai.muhammad

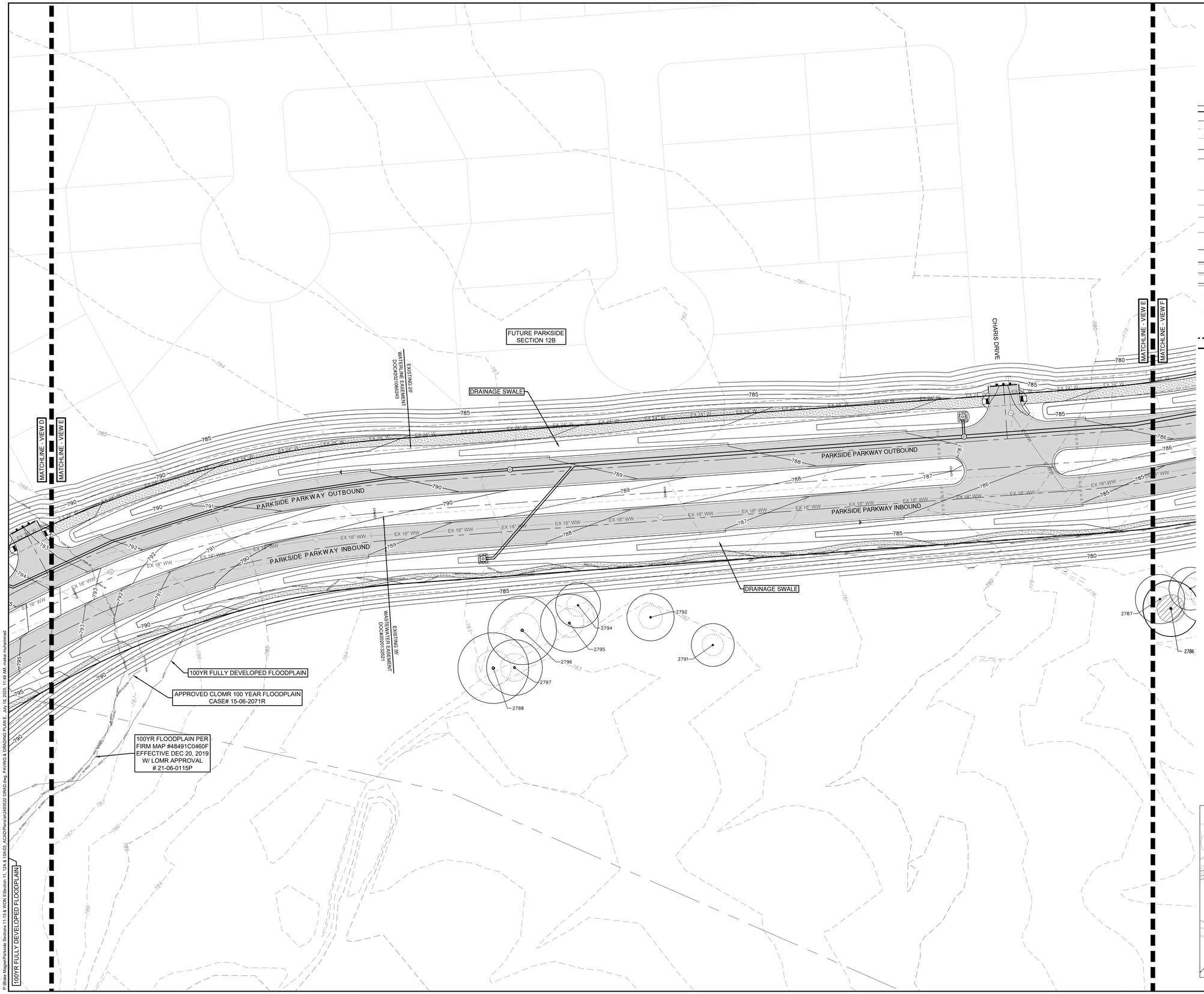

0 40' 80'

SCALE: 1" = 40'

LEGEND

- PROPERTY BOUNDARY
- EASEMENT
- EXISTING MAJOR CONTOUR
- EXISTING MINOR CONTOUR
- PROPOSED MAJOR CONTOUR
- PROPOSED MINOR CONTOUR
- FEMA FLOODWAY PER FIRM# 48491C0460F & LOMR# 21-06-0115P
- 100YR ATLAS 14 FEMA ZONE AE FLOODPLAIN PER FIRM# 48491C0460F & LOMR# 21-06-0115P
- 100YR FEMA ZONE A FLOODPLAIN PER FIRM MAP# 48491C0460F
- 100YR CLOMR FLOODPLAIN CASE# 15-06-2071R
- 100YR ATLAS 14 FULLY DEVELOPED FLOODPLAIN (STANTEC DRAINAGE STUDY, SHERVIN NOOSHIN, 3/25/19) APPROVED WITH PP# 2019-5-PP
- ORDINARY HIGH WATER MARK PER ADAMS ENVIRONMENTAL
- STANDARD CURB AND GUTTER
- RIBBON CURB
- MOUNTABLE CURB
- SIDEWALK (BY DEVELOPER)
- SIDEWALK (BY BUILDER)
- ADA RAMP
- MASONRY WALL (DESIGN BY OTHERS)
- RETAINING WALL (DESIGN BY OTHERS)
- TREES TO REMAIN - HERITAGE
- TREES TO REMAIN - NON-HERITAGE
- ASPHALT PAVING (REFER TO SHEET 72 FOR PAVEMENT DESIGN SECTIONS)
- VEGETATIVE FILTER STRIP

NOTES:

1. FILL SHOULD BE COMPACTED TO AT LEAST 95% OF THE MAXIMUM DRY DENSITY AS DETERMINED BY TxDOT - 114 - E, AND PER GEOTECHNICAL ENGINEERS RECOMMENDATION.
2. FILL WITHIN THE RESIDENTIAL LOT AREAS SHALL BE PLACED ACCORDING TO THE HUD 79G REQUIREMENTS SPECIFICATIONS
3. VEGETATE ALL DISTURBED AREAS WITHIN THE ROW AND OPEN SPACE LOT AREAS PER CITY OF GEORGETOWN SPECIFICATIONS.
4. BOTTOM OF WALL (BW) ELEVATIONS INDICATE FINISHED GRADE. IT DOES NOT INCLUDE THE FOOTING.

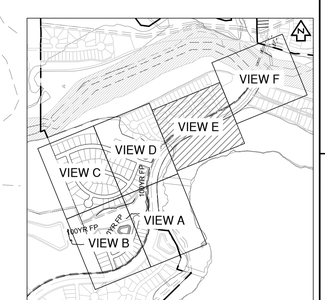

KEY MAP (N.T.S.)

NO.	REVISION	BY	DATE

811 Know what's below. Call before you dig.

HRGreen®
DEVELOPMENT TX
5508 HIGHWAY 290 WEST
SUITE 150
AUSTIN, TX 78735
512.872.6696
HRGREEN.COM
TBPE NO: 16384
TBPLS NO: 10194101

STATE OF TEXAS
CHRISTINE N. CAMPBELL
142536
LICENSED PROFESSIONAL ENGINEER
07/03/2025

PAVING & GRADING PLAN E

PARKSIDE ON THE RIVER SECTIONS 11, 12A & 15A CONSTRUCTION PLANS GEORGETOWN, WILLIAMSON, TEXAS

DESIGNED BY: CC
DRAWN BY: MM
CHECKED BY: SN
APPROVED BY:

SHEET 66 OF 141

2025-XX-CON

P:\Blake Magee\Parkside Sections 11-15 & WON 5\Section 11, 12A & 15A\03_ACAD\Plans\sh2403522 GRAD.dwg, PAVING & GRADING PLAN E, July 18, 2025, 11:48 AM, makai.muhammad

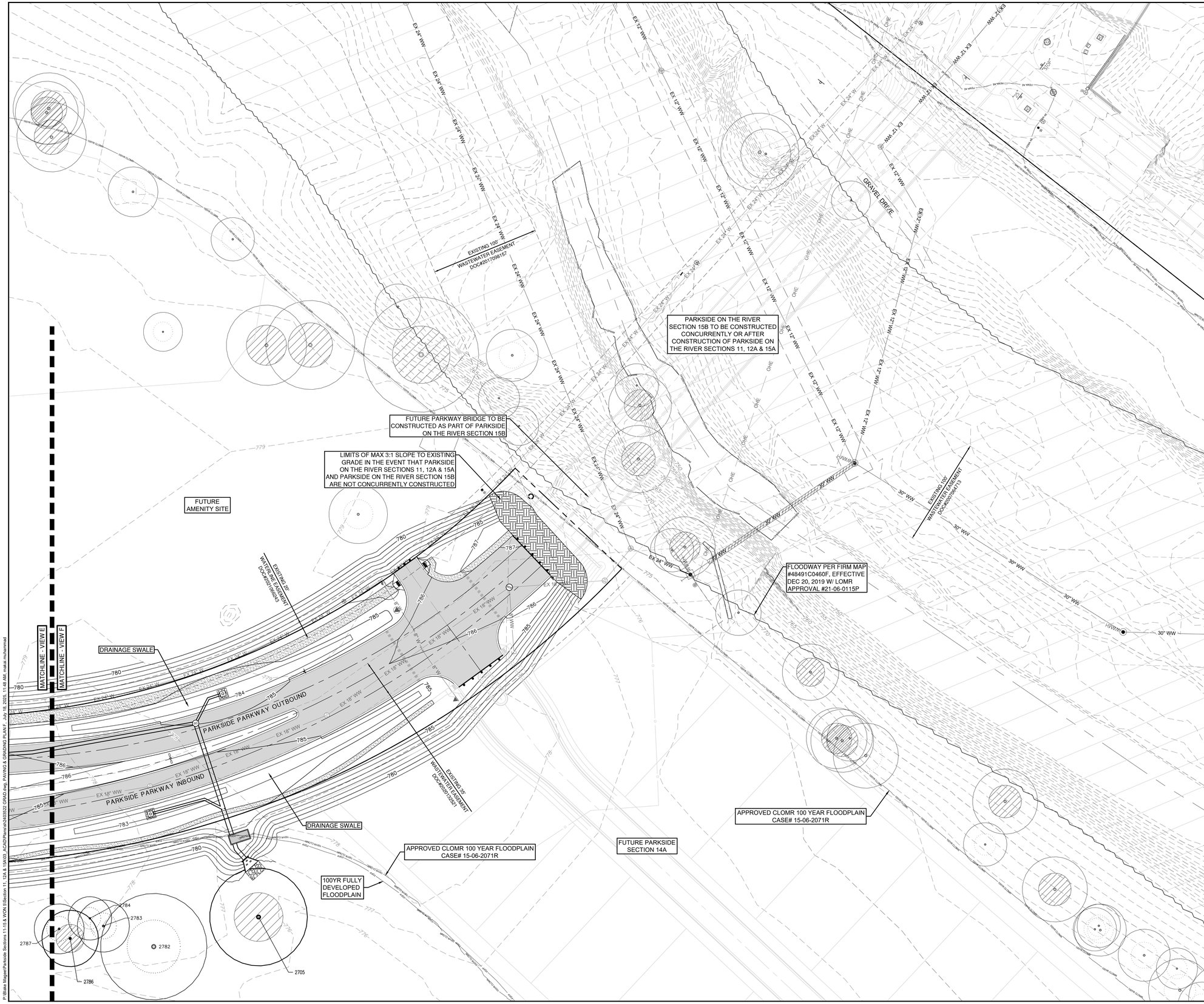

0 40' 80'

SCALE: 1" = 40'

LEGEND

- PROPERTY BOUNDARY
- EASEMENT
- 840 EXISTING MAJOR CONTOUR
- EXISTING MINOR CONTOUR
- 940 PROPOSED MAJOR CONTOUR
- PROPOSED MINOR CONTOUR
- FEMA FLOODWAY PER FIRM# 48491C0460F & LOMR# 21-06-0115P
- FEMA AE — 100YR ATLAS 14 FEMA ZONE AE FLOODPLAIN PER FIRM# 48491C0460F & LOMR# 21-06-0115P
- FEMA A — 100YR FEMA ZONE A FLOODPLAIN PER FIRM MAP# 48491C0460F
- 100YR CLOMR — 100YR CLOMR FLOODPLAIN CASE# 15-06-2071R
- FDFP — 100YR ATLAS 14 FULLY DEVELOPED FLOODPLAIN (STANTEC DRAINAGE STUDY, SHERVIN NOOSHIN, 3/25/19) APPROVED WITH PP# 2019-5-PP
- OHWM — ORDINARY HIGH WATER MARK PER ADAMS ENVIRONMENTAL
- STANDARD CURB AND GUTTER
- RIBBON CURB
- MOUNTABLE CURB
- SIDEWALK (BY DEVELOPER)
- SIDEWALK (BY BUILDER)
- ADA RAMP
- MASONRY WALL (DESIGN BY OTHERS)
- RETAINING WALL (DESIGN BY OTHERS)
- 105J9 TREES TO REMAIN - HERITAGE
- 105J8 TREES TO REMAIN - NON-HERITAGE
- ASPHALT PAVING (REFER TO SHEET 72 FOR PAVEMENT DESIGN SECTIONS)
- VEGETATIVE FILTER STRIP

NOTES:

1. FILL SHOULD BE COMPACTED TO AT LEAST 95% OF THE MAXIMUM DRY DENSITY AS DETERMINED BY TxDOT - 114 - E, AND PER GEOTECHNICAL ENGINEERS RECOMMENDATION.
2. FILL WITHIN THE RESIDENTIAL LOT AREAS SHALL BE PLACED ACCORDING TO THE HUD 79G REQUIREMENTS SPECIFICATIONS
3. VEGETATE ALL DISTURBED AREAS WITHIN THE ROW AND OPEN SPACE LOT AREAS PER CITY OF GEORGETOWN SPECIFICATIONS.
4. BOTTOM OF WALL (BW) ELEVATIONS INDICATE FINISHED GRADE. IT DOES NOT INCLUDE THE FOOTING.

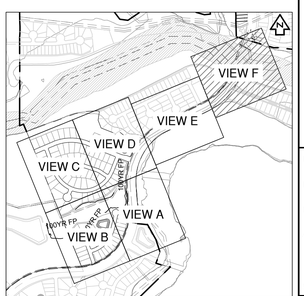

KEY MAP (N.T.S.)

NO.	REVISION	BY	DATE

811 Know what's below. Call before you dig.

HRGreen® DEVELOPMENT TX
5508 HIGHWAY 290 WEST
SUITE 150
AUSTIN, TX 78735
512.872.6696
HRGREEN.COM
TBPE NO: 16384
TBPLS NO: 10194101

STATE OF TEXAS
CHRISTINE N. CAMPBELL
142536
LICENSED PROFESSIONAL ENGINEER
07/03/2025

PAVING & GRADING PLAN F

PARKSIDE ON THE RIVER SECTIONS 11, 12A & 15A CONSTRUCTION PLANS

GEORGETOWN, WILLIAMSON, TEXAS

DESIGNED BY: CC
DRAWN BY: MM
CHECKED BY: SN
APPROVED BY:

2025-XX-CON

P:\Blake Magee\Parkside Sections 11-15 & WON 5\Section 11, 12A & 15A\03_ACAD\Plans\sh2403522 GRAD.dwg, PAVING & GRADING PLAN F, July 18, 2025, 11:48 AM, makai.muhammad

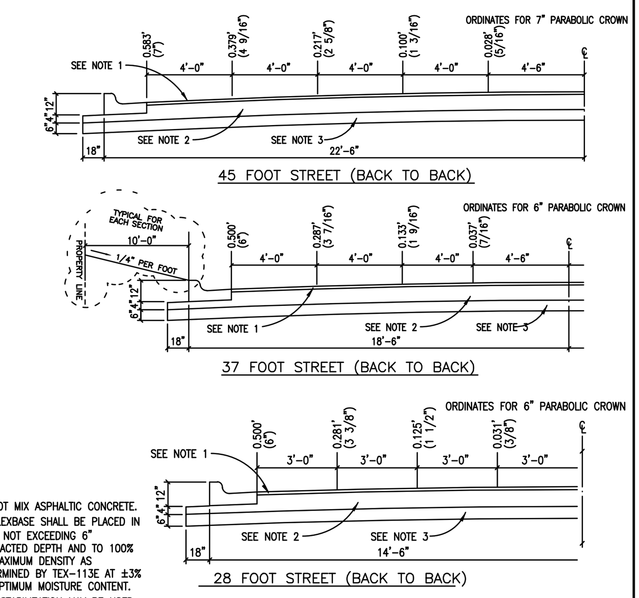

NOTES:
1. 2" HOT MIX ASPHALTIC CONCRETE.
2. 8" FLEXBASE SHALL BE PLACED IN LIFTS NOT EXCEEDING 6" COMPACTED DEPTH AND TO 100% OF MAXIMUM DENSITY AS DETERMINED BY TEX-113E AT ±3% OF OPTIMUM MOISTURE CONTENT.
3. LIME STABILIZATION MAY BE USED IF A QUALIFIED GEOTECHNICAL REPORT INDICATES THAT THE SULFATE LEVELS ARE LOW ENOUGH.

STREET AND ROADWAY DESIGN CRITERIA

STREET CLASSIFICATION	TOTAL EQUIVALENT 18K AXLE LOAD APPLICATIONS (20 YEAR FLEXIBLE DESIGN)
LOCAL	
ALLEY	20,000
RESIDENTIAL LANE	20,000
LOCAL STREET	20,000
COLLECTORS	
RESIDENTIAL	80,000
MAJOR NEIGHBOORHOOD	290,000
ARTERIALS	
MINOR ARTERIAL	1,020,000
MAJOR ARTERIAL	5,200,000

The Architect/Engineer assumes responsibility for appropriate use of this standard.

ADOPTED 6/21/2006
CITY OF GEORGETOWN CONSTRUCTION STANDARDS AND DETAILS
TYPICAL HALF CROSS – SECTIONS FOR H.M.A.C. SURFACED STREETS
SD01
NTS 1/2003 MRS TRB

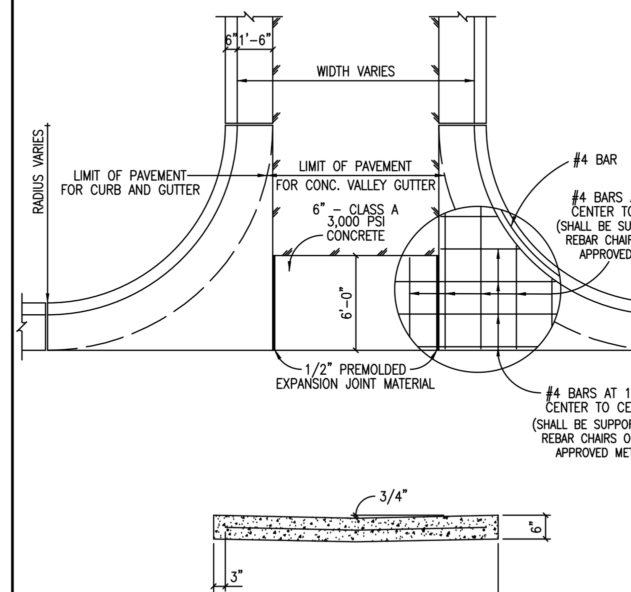

The Architect/Engineer assumes responsibility for appropriate use of this standard.

ADOPTED 6/21/2006
CITY OF GEORGETOWN CONSTRUCTION STANDARDS AND DETAILS
CONCRETE VALLEY GUTTER DETAIL
SD03
NTS 1/2003 MRS TRB

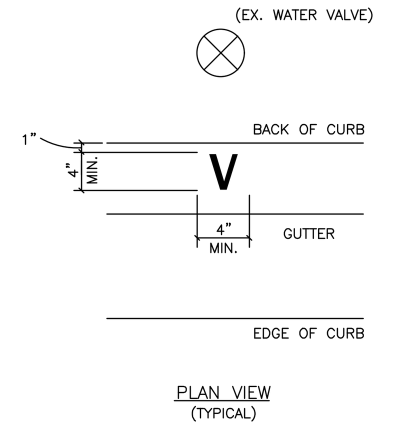

NOTES:
1. ALL WATER SERVICE, WASTE WATER SERVICE AND VALVE LOCATIONS SHALL BE APPROXIMATLEY MARKED AS FOLLOWS:

WATER SERVICE	"W"	TOP OF CURB
WASTE WATER SERVICE	"S"	TOP OF CURB
VALVE	"V"	TOP OF CURB

2. LETTERS SHALL HAVE A 1/2" MAX. WIDTH.

The Architect/Engineer assumes responsibility for appropriate use of this standard.

ADOPTED 6/21/2006
CITY OF GEORGETOWN CONSTRUCTION STANDARDS AND DETAILS
CURB STAMP DETAIL
SD05
NTS 1/2003 MRS TRB

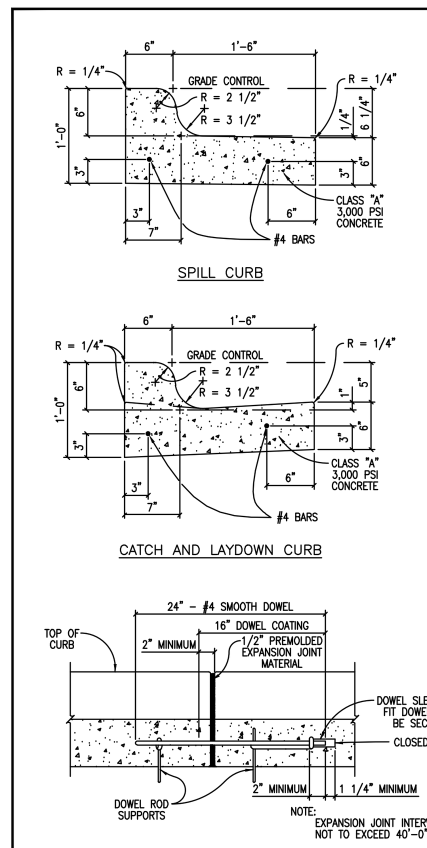

NOTES:
1. ALL WORK AND MATERIAL SHALL CONFORM TO ASTM A615, A615M, C309, AND D1752. BROOM FINISH EXPOSED SURFACE.
2. CONTRACTION JOINT SPACING 10' MAX.
3. EXPANSION JOINTS AS PER STD. ASTM D-1752.
4. 1/2" EXPANSION JOINT MATERIAL SHALL BE PROVIDED WHERE CURB IS ADJACENT TO SIDEWALK OR RIP-RAP.
5. TRANSITIONS BETWEEN CURBS OR DIFFERING CROSS SECTIONS SHALL OCCUR OVER A 20 FOOT LENGTH AS APPROVED BY THE ENGINEER OR THE CITY OF GEORGETOWN.
6. ALL CONCRETE SHALL BE CLASS A, 3000 PSI.
7. ALL SURFACES THAT ARE CHIPPED OR OTHERWISE DAMAGED DURING CONSTRUCTION SHALL BE REPAIRED.
8. THE FOLLOWING SCHEME OF REINFORCEMENT SHALL BE REQUIRED. THE MANNER OF PLACEMENT AND LOCATION SHALL BE TO THE SATISFACTION OF THE ENGINEER OR THE CITY OF GEORGETOWN.
   A. ALL CURB AND CURB AND GUTTER (REINFORCED) SHALL HAVE TWO #4 LONGITUDINAL REINFORCING BARS.
9. REINFORCING BARS SHALL BE LAPPED A MINIMUM OF 15 INCH.
10. REINFORCING BARS SHALL BE SUPPORTED WITH REBAR CHAIRS OR OTHER APPROVED METHODS.
11. REBAR SUPPORTS ARE NOT REQUIRED ON MACHINE PLACED CURB PROVIDED THAT REBAR IS PROPERLY GUIDED INTO THE CURB SECTION.

The Architect/Engineer assumes responsibility for appropriate use of this standard.

ADOPTED 6/21/2006
CITY OF GEORGETOWN CONSTRUCTION STANDARDS AND DETAILS
CURB AND GUTTER DETAILS
SD06
NTS MRS TRB

NOTES:
1. ALL WORK AND MATERIAL SHALL CONFORM TO ASTM A615, A615M, C309, AND D1752. BROOM FINISH EXPOSED SURFACE.
2. CONTRACTION JOINT SPACING 10' MAX.
3. EXPANSION JOINTS AS PER STD. ASTM D-1752.
4. 1/2" EXPANSION JOINT MATERIAL SHALL BE PROVIDED WHERE CURB IS ADJACENT TO SIDEWALK OR RIP-RAP.
5. TRANSITIONS BETWEEN CURBS OR DIFFERING CROSS SECTIONS SHALL OCCUR OVER A 20 FOOT LENGTH AS APPROVED BY THE ENGINEER OR TH CITY OF GEORGETOWN.
6. ALL CONCRETE SHALL BE CLASS A, 3000 PSI.
7. ALL SURFACES THAT ARE CHIPPED OR OTHERWISE DAMAGED DURING CONSTRUCTION SHALL BE REPAIRED.
8. ONE OF THE FOLLOWING SCHEMES OF REINFORCEMENT SHALL BE REQUIRED. THE MANNER OF PLACEMENT AND LOCATION SHALL BE TO THE SATISFACTION OF THE ENGINEER OR THE CITY OF GEORGETOWN.
   A. CURB AND GUTTER (REINFORCED) SHALL HAVE LONGITUDINAL REINFORCING BARS AS FOLLOWS: THREE #4.
   B. ALL TYPES OF CURB (REINFORCED) SHALL HAVE #4 BAR FOR LONGITUDINAL REINFORCEMENT.
9. REINFORCING BARS SHALL BE LAPPED A MINIMUM OF 15 INCH.
10. REINFORCING BARS SHALL BE SUPPORTED WITH REBAR CHAIRS OR OTHER APPROVED METHODS.
11. REBAR SUPPORTS ARE NOT REQUIRED ON MACHINE PLACED CURB PROVIDED THAT REBAR IS PROPERLY GUIDED INTO THE CURB SECTION.

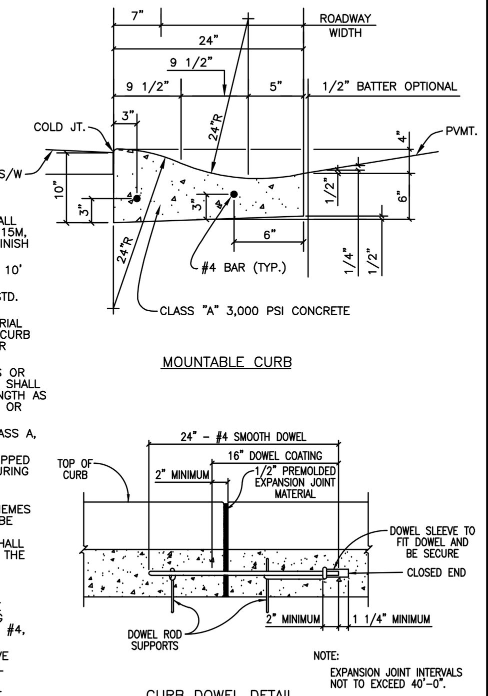

The Architect/Engineer assumes responsibility for appropriate use of this standard.

ADOPTED 6/21/2006
CITY OF GEORGETOWN CONSTRUCTION STANDARDS AND DETAILS
MOUNTABLE CURB AND GUTTER DETAILS
SD07
NTS 1/2003 MRS TRB

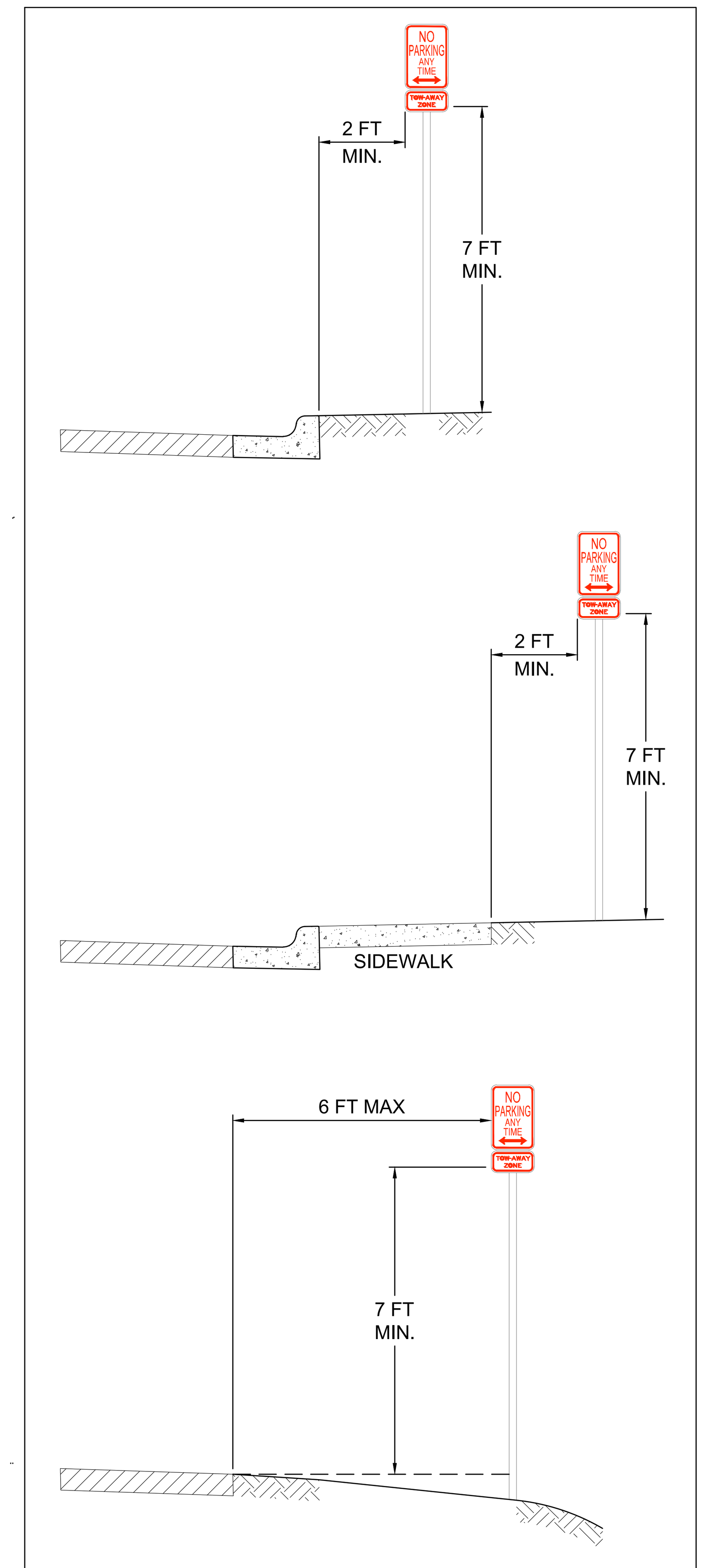

FIRE LANE SIGN PLACEMENT DETAILS

NOTES:
1. ALL WORK AND MATERIAL SHALL CONFORM TO ASTM A615, A615M, C309, AND D1752. BROOM FINISH EXPOSED SURFACE.
2. CONTRACTION JOINT SPACING 10' MAX.
3. EXPANSION JOINTS AS PER STD. ASTM D-1752.
4. 1/2" EXPANSION JOINT MATERIAL SHALL BE PROVIDED WHERE CURB IS ADJACENT TO SIDEWALK OR RIP-RAP.
5. TRANSITIONS BETWEEN CURBS OR DIFFERING CROSS SECTIONS SHALL OCCUR OVER A 20 FOOT LENGTH AS APPROVED BY THE ENGINEER OR TH CITY OF GEORGETOWN.
6. ALL CONCRETE SHALL BE CLASS A, 3000 PSI.
7. ALL SURFACES THAT ARE CHIPPED OR OTHERWISE DAMAGED DURING CONSTRUCTION SHALL BE REPAIRED.
8. ONE OF THE FOLLOWING SCHEMES OF REINFORCEMENT SHALL BE REQUIRED. THE MANNER OF PLACEMENT AND LOCATION SHALL BE TO THE SATISFACTION OF THE ENGINEER OR THE CITY OF GEORGETOWN.
   A. CURB AND GUTTER (REINFORCED) SHALL HAVE LONGITUDINAL REINFORCING BARS AS FOLLOWS: THREE #4.
   B. ALL TYPES OF CURB (REINFORCED) SHALL HAVE #4 BAR FOR LONGITUDINAL REINFORCEMENT.
9. REINFORCING BARS SHALL BE LAPPED A MINIMUM OF 15 INCH.
10. REINFORCING BARS SHALL BE SUPPORTED WITH REBAR CHAIRS OR OTHER APPROVED METHODS.
11. REBAR SUPPORTS ARE NOT REQUIRED ON MACHINE PLACED CURB PROVIDED THAT REBAR IS PROPERLY GUIDED INTO THE CURB SECTION.

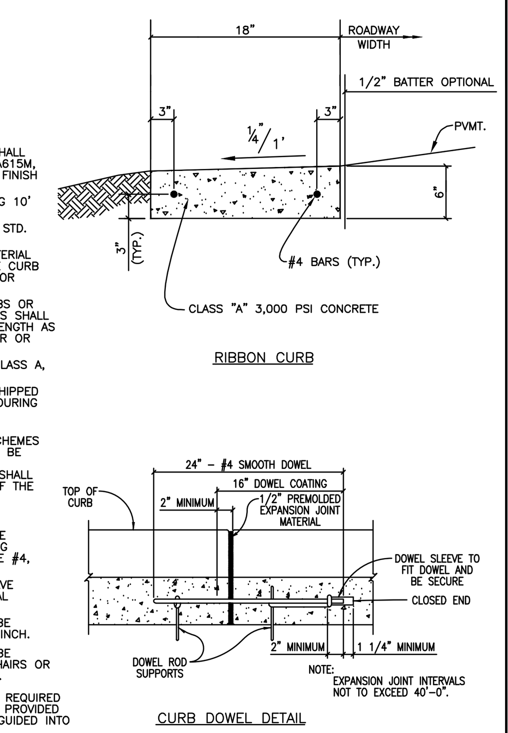

The Architect/Engineer assumes responsibility for appropriate use of this standard.

ADOPTED 6/21/2006
CITY OF GEORGETOWN CONSTRUCTION STANDARDS AND DETAILS
RIBBON CURB DETAILS
SD08
NTS 1/2003 MRS TRB

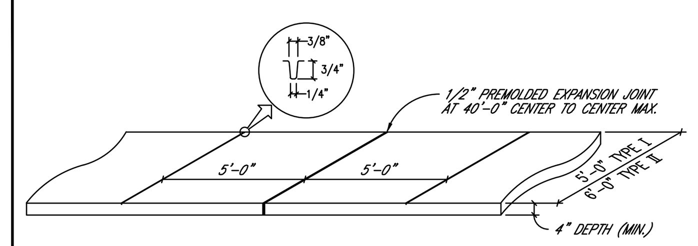

TYPE I – AS REQUIRED FOR SINGLE FAMILY, DUPLEXES AND TOWNHOUSES, TRIPLEXES AND QUADRAPLEXES.
TYPE II – AS REQUIRED FOR MULTI-FAMILY, OTHER NON-RESIDENTIAL USES AND PARKING LOTS/STRUCTURES.
ALL THOROUGHFARES (COLLECTOR AND ABOVE) REQUIRE TYPE II.

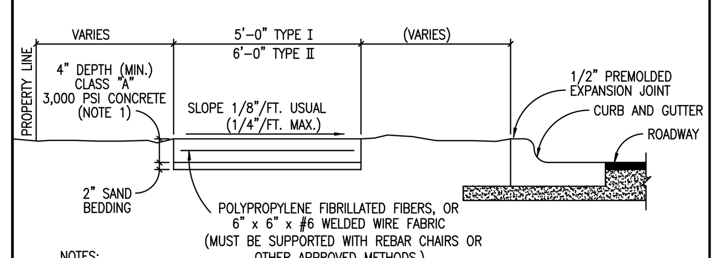

NOTES:
1. STANDARD LOCATION OF SIDEWALK SHALL BE IN CONFORMANCE WITH THE UDC.
2. SIDEWALK SHALL CONFORM TO CURRENT TDLR/TAS STANDARDS.
3. ALL SIDEWALKS SHALL BE SUBMITTED AND APPROVED BY THE REGISTERED ACCESSIBILITY SPECIALIST (RAS) AND ENGINEER OF RECORD.
4. ANY VARIANCE IN TEXTURE, GRADE OR ALIGNMENT SHALL BE APPROVED BY THE REGISTERED ACCESSIBILITY SPECIALIST (RAS) AND BY THE CITY ENGINEER.
5. SLIP DOWEL SHALL BE INSTALLED AT EVERY LONGITUDINAL EXPANSION JOINT (UNLESS OTHERWISE APPROVED BY THE CITY ENGINEER DURING ENGINEERING PLAN REVIEW PRIOR TO FINAL DESIGN).

The Architect/Engineer assumes responsibility for appropriate use of this standard.

ADOPTED 6/21/2006 TRB
CITY OF GEORGETOWN CONSTRUCTION STANDARDS AND DETAILS
SIDEWALK SECTION AND JOINT DETAIL
SD14
NTS 1/2003 MRS TRB

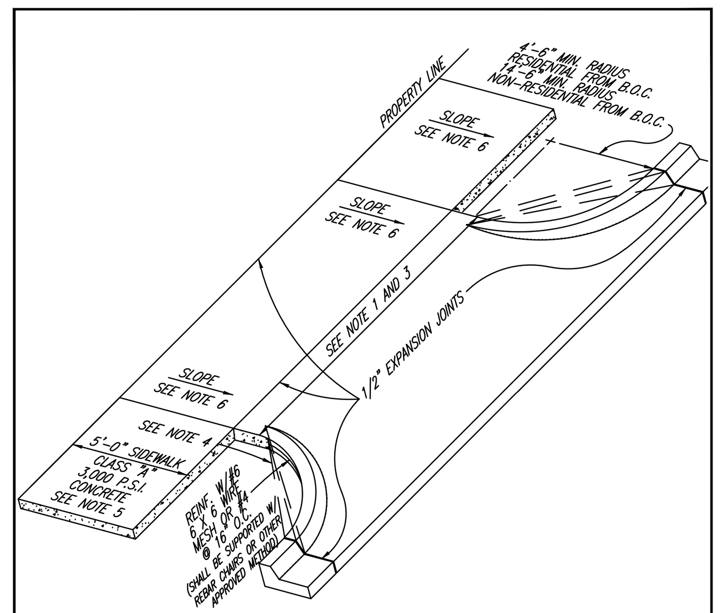

NOTES:
1. MAXIMUM WIDTH OF APPROACH SHALL BE 24'-0" FOR RESIDENTIAL, 30'-0" FOR NON-RESIDENTIAL UNDIVIDED AND 45'-0" FOR NON-RESIDENTIAL DIVIDED.
2. DRIVEWAY PERMITS SHALL BE ACQUIRED FROM CITY INSPECTION OFFICE.
3. MINIMUM WIDTH OF APPROACH SHALL BE 10'-0" FOR RESIDENTIAL AND 15'-0" FOR NON-RESIDENTIAL.
4. LINEAR "RADIUS" AT CORNERS, PERMITTED FOR "SINGLE FAMILY" OR "TWO FAMILY" RESIDENTIAL DRIVEWAY APPROACH.
5. SIDEWALK LOCATION SHALL BE APPROVED BY CITY ENGINEER PRIOR TO FINAL DESIGN.
6. SLOPE 1/8" PER FOOT USUAL, SHALL NOT EXCEED 2.0%.
7. DRIVEWAY APPROACH THICKNESS SHALL BE A MIN. OF 6".

The Architect/Engineer assumes responsibility for appropriate use of this standard.

ADOPTED 6/21/2006 TRB
CITY OF GEORGETOWN CONSTRUCTION STANDARDS AND DETAILS
CONCRETE DRIVEWAY APPROACH TYPICAL
SD15
NTS 1/2003 MRS TRB

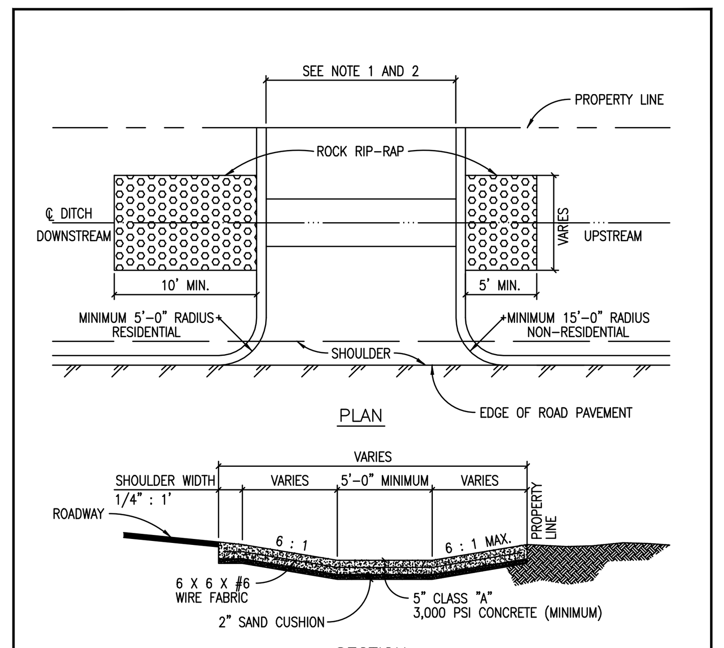

NOTES:
1. MINIMUM WIDTH OF APPROACH SHALL BE 12'-0" FOR RESIDENTIAL AND 15'-0" FOR NON-RESIDENTIAL.
2. MAXIMUM WIDTH OF APPROACH SHALL BE 24'-0" FOR RESIDENTIAL, 30'-0" FOR NON-RESIDENTIAL UNDIVIDED AND 45'-0" FOR NON-RESIDENTIAL DIVIDED.
3. ROCK RIP-RAP SHALL EXTEND 10' MINIMUM FROM THE DOWN STREAM SIDE AND 5' MINIMUM FROM THE UPSTREAM SIDE USING THE AVERAGE STONE SIZE DIA. OF 8" AT A DEPTH OF 16" (MINIMUM).
4. MINIMUM CHANNEL SIDE SLOPE SHALL BE 4:1.
5. SUPPORT REINFORCING WIRE MESH IS REQUIRED AS SUPPORT FOR APPROACH SLAB AND SHALL BE SUPPORTED WITH REBAR CHAIRS OR OTHER APPROVED METHODS.

The Architect/Engineer assumes responsibility for appropriate use of this standard.

ADOPTED 6/21/2006
CITY OF GEORGETOWN CONSTRUCTION STANDARDS AND DETAILS
CONCRETE DIP DRIVEWAY APPROACH
SD16
NTS 1/2003 MRS TRB

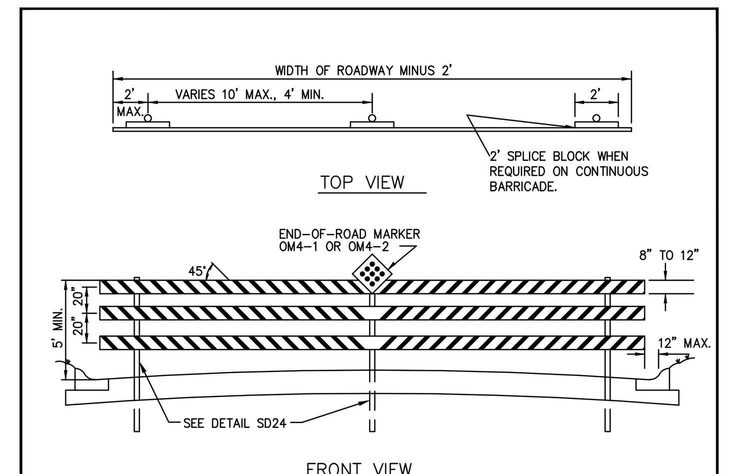

GENERAL NOTES FOR THIN WALL TUBE TYPE SIGN SUPPORT:
1. THE BASE SOCKET IS FORMED FROM 2 7/8 " O.D. X 12 GAUGE GALVANIZED PIPE.
2. THE WEDGE IS FORMED FROM 11 GAUGE STEEL GALVANIZED PER ASTM A525.
3. THE SIGN POST IS 2.375" O.D. X 0.095" THIN WALL STEEL TUBING.
4. STEEL SUPPORTS SHALL BE MADE FROM NEW MATERIAL AND SHALL BE CORROSION RESISTANT. STEEL SUPPORTS SHALL BE GALVANIZED IN ACCORDANCE WITH ASTM DESIGNATIONS A123 OR A525 (G-90 OR BETTER).
5. SUPPORTS SHALL BE STRAIGHT WITHIN 1/4 " PER 5 FEET OF LENGTH AND SHALL HAVE A SMOOTH, UNIFORM FINISH FREE FROM DEFECTS AFFECTING STRENGTH OR APPEARANCE. ANY BOLT HOLES AND SHEARED ENDS SHALL BE FREE FROM BURRS. BASES OF MULTISECTION SUPPORTS SHALL NOT EXTEND MORE THAN 5 INCHES ABOVE GROUND WHEN INSTALLED.
6. BOLTS, NUTS, SCREWS, WASHERS AND OTHER MISCELLANEOUS HARDWARE SHALL BE GALVANIZED IN ACCORDANCE TO ASTM DESIGNATION: A153 CLASS C OR D, OR B695 CLASS 50.
7. BARRICADE SUPPORTS SYSTEMS USED ON THIS SHEET MAY BE SUITABLE FOR ONLY CERTAIN SOIL TYPES. THE CONTRACTOR IS RESPONSIBLE FOR SELECTING THE APPROPRIATE SUPPORT SYSTEM FOR SOIL CONDITIONS ON EACH PROJECT.
8. ALL BARRICADES TO BE IN CONFORMANCE WITH THE CURRENT EDITION OF THE TEXAS MANUAL OF UNIFORM TRAFFIC CONTROL DEVICES (TMUTCD).
9. RAIL-HIGH DENSITY POLYETHYLENE OR HOLLOW PROFILE PLASTIC LUMBER AND SHEETING SHALL BE RETROREFLECTIVE, INCLUDING SPLICE BLOCKS.

The Architect/Engineer assumes responsibility for appropriate use of this standard.

ADOPTED 6/21/2006
CITY OF GEORGETOWN CONSTRUCTION STANDARDS AND DETAILS
PERMANENT END-OF-ROAD BARRICADE
SD21
NTS 1/2003 MRS TRB

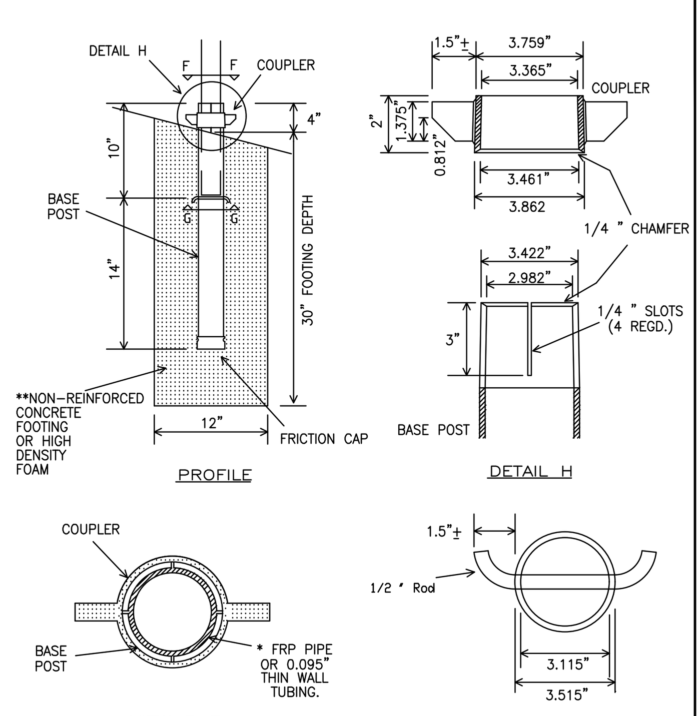

* PLASTING INSERT MUST BE USED WITH 1/16 " THIN WALL TUBING.
** FOOTING SHALL BE REMOVED AND BACKFILLED WHEN BARRICADE IS REMOVED.

The Architect/Engineer assumes responsibility for appropriate use of this standard.

ADOPTED 6/21/2006
CITY OF GEORGETOWN CONSTRUCTION STANDARDS AND DETAILS
UNIVERSAL ANCHOR SYSTEM
SD23
NTS 1/2003 MRS TRB

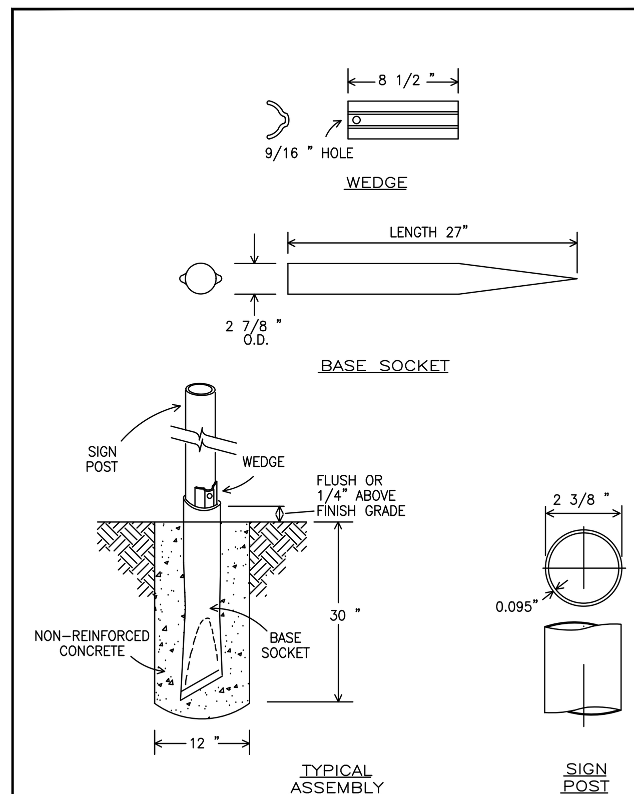

The Architect/Engineer assumes responsibility for appropriate use of this standard.

ADOPTED 6/21/2006
CITY OF GEORGETOWN CONSTRUCTION STANDARDS AND DETAILS
POZ-LOC (BREAKAWAY FOUNDATION)
SD24
NTS 1/2003 MRS TRB

*REVISED PER WILLIAMSON COUNTY

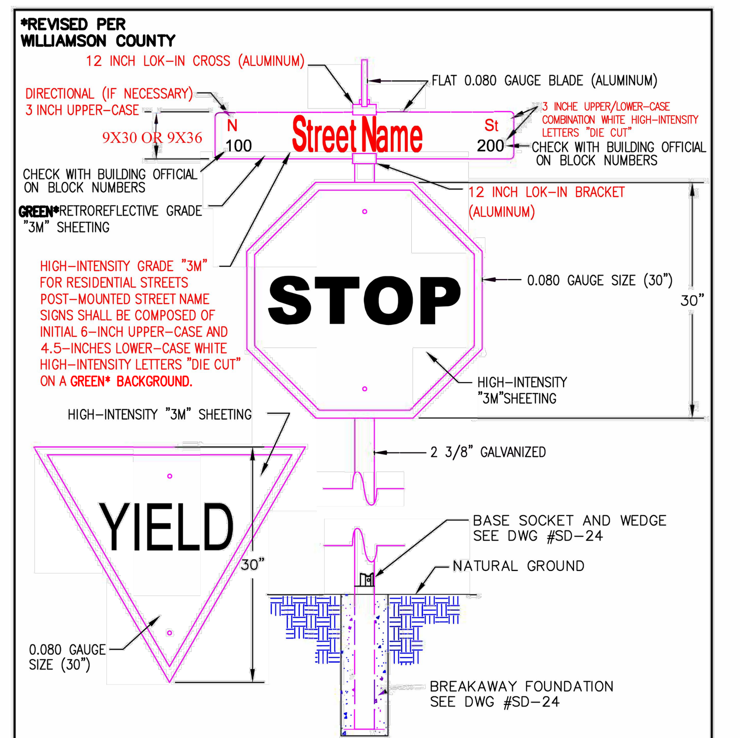

NOTES:
1. 7-FOOT MIN. HEIGHT FROM GROUND TO BOTTOM OF SIGN.
2. ALL SIGNS TO BE IN CONFORMANCE WITH THE CURRENT EDITION OF THE TEXAS MANUAL OF UNIFORM TRAFFIC CONTROL DEVICES (TMUTCD).
3. ALL SIGNAGE SHEETINGS SHALL BE HIGH-INTENSITY "3M" SHEETING.
4. ANY MODIFICATION TO THIS STANDARD SHALL BE SUBMITTED FOR APPROVAL.

The Architect/Engineer assumes responsibility for appropriate use of this standard.

REVISED 1/14/2014 WBD
ADOPTED 6/21/2006 TRB
CITY OF GEORGETOWN CONSTRUCTION STANDARDS AND DETAILS
STANDARD STREET SIGN DETAIL
SD25
NTS 1/2003 MRS/AP TRB

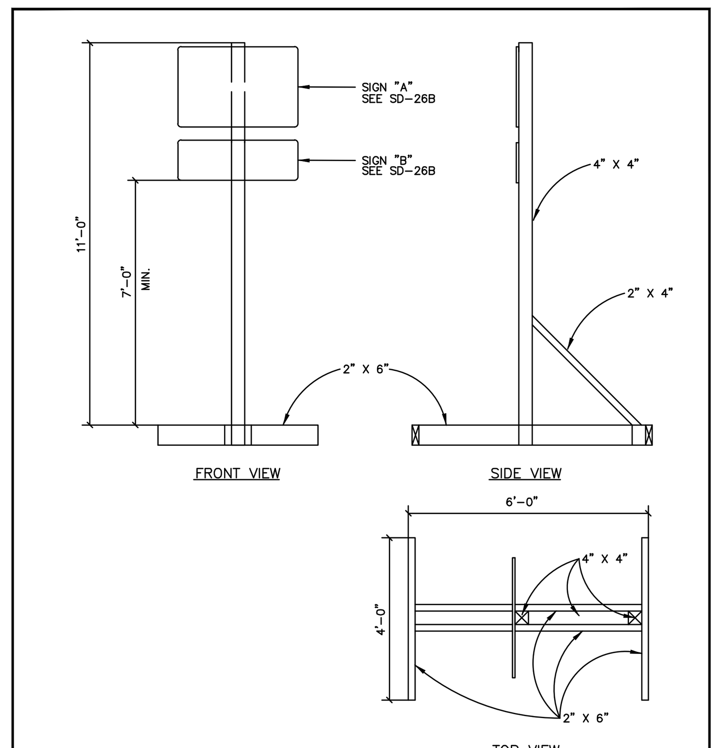

NOTES:
1. ALL MATERIALS SHALL BE FURNISHED BY THE CONTRACTOR WITH THE EXCEPTION OF THE CITY OF GEORGETOWN G.U.S. LOGO WHICH WILL BE FURNISHED BY THE CITY.
2. ALL SIGNS TO BE IN CONFORMANCE WITH THE CURRENT EDITION OF THE TEXAS MANUAL OF UNIFORM TRAFFIC CONTROL DEVICES (TMUTCD).

The Architect/Engineer assumes responsibility for appropriate use of this standard.

ADOPTED 6/21/2006
CITY OF GEORGETOWN CONSTRUCTION STANDARDS AND DETAILS
PROJECT SIGN TYPE II
SD26
NTS 1/2003 MRS TRB

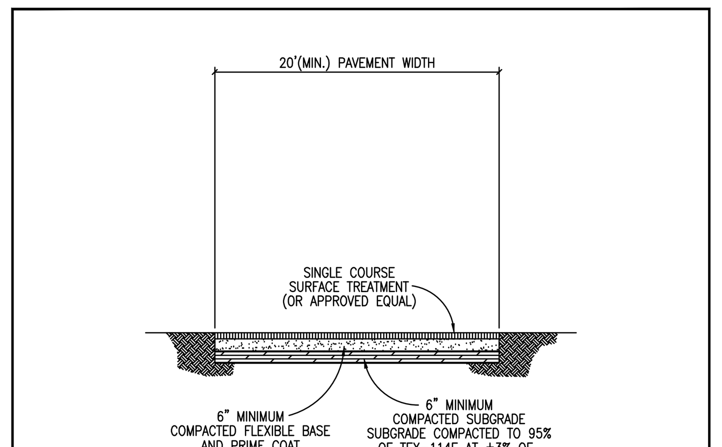

NOTES:
1. EVERY BUILDING CONSTRUCTED SHALL BE ACCESSIBLE TO EMERGENCY APPARATUS BY WAY OF TEMPORARY ALL WEATHER DRIVING SURFACES.
2. A TEMPORARY ALL WEATHER DRIVING SURFACE SHALL EXTEND TO WITHIN 150' OF ALL EXTERIOR PORTIONS OF BUILDINGS
3. TEMPORARY ALL WEATHER DRIVING SURFACES SHALL BE CONSTRUCTED AS SHOWN ON CONSTRUCTION PLANS AND IN ACCORDANCE WITH ITEM 316 SURFACE TREATMENTS OF THE TXDOT STANDARD SPECIFICATIONS FOR CONSTRUCTION OF HIGHWAYS, STREETS AND BRIDGES.
4. TEMPORARY ALL WEATHER DRIVING SURFACES SHALL BE CAPABLE OF SUPPORTING A DESIGN WHEEL LOAD OF 16,000 LB. (H-20 LOADING) IN ORDER TO SUPPORT A GROSS VEHICLE WEIGHT OF 80,000 LB. IF SUBGRADE CONDITIONS CHANGE OR ARE VERY UNSTABLE, AN ADDITIONAL GEOTECHNICAL AND/OR ENGINEERING DESIGN MAY REQUIRE A GREATER CROSS SECTION.
5. CONTRACTOR OR DEVELOPER SHALL MAINTAIN TEMPORARY ALL WEATHER DRIVING SURFACE THROUGHOUT CONSTRUCTION.
6. APPLICABLE SIGNAGE SHALL BE INSTALLED BY THE CONTRACTOR TO DISALLOW PARKING (NO PARKING – FIRE LANE).
7. TEMPORARY ALL WEATHER DRIVING SURFACES SHALL BE INSTALLED PRIOR TO THE ERECTION OF ANY STRUCTURAL FRAMING ABOVE THE FOUNDATION SLAB. CONTACT FIRE SERVICES FOR THE COORDINATION OF TEMPORARY ALL WEATHER DRIVING SURFACES FOR CONSTRUCTION.

The Architect/Engineer assumes responsibility for appropriate use of this standard.

ADOPTED 6/21/2006
CITY OF GEORGETOWN CONSTRUCTION STANDARDS AND DETAILS
TEMPORARY ALL WEATHER DRIVING SURFACE
SD43
NTS 1/2003 MRS TRB

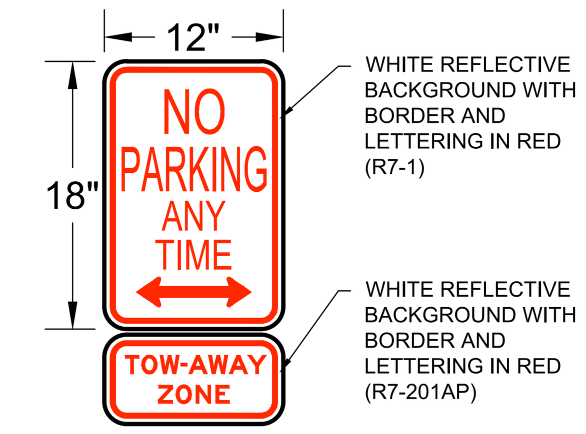

FIRE LANE SIGN DETAIL

NO.	REVISION	BY	DATE

Know what's below. Call before you dig.

5508 HIGHWAY 290 WEST
SUITE 150
AUSTIN, TX 78735
512.872.6696
HRGREEN.COM
TBPE NO: 16384
TBPLS NO: 10194101
HRGreen® DEVELOPMENT TX

STATE OF TEXAS
CHRISTINE N. CAMPBELL
142536
LICENSED PROFESSIONAL ENGINEER
07/03/2025

PAVING DETAILS

PARKSIDE ON THE RIVER SECTIONS 11, 12A & 15A CONSTRUCTION PLANS GEORGETOWN, WILLIAMSON, TEXAS

DESIGNED BY: CC
DRAWN BY: MM
CHECKED BY: SN
APPROVED BY:

SHEET 71 OF 141

2025-XX-CON

Plot Style: LandDev Global.ctb
Template: LDC_C3D2022.DWT
P:\Blake Magee\Parkside Sections 11-15 & WON 5\Section 11, 12A & 15A\03_ACAD\Plans\sh2403522 DTLS.dwg, PAVING DETAILS, July 18, 2025, 11:50 AM, makai.muhammad

The Architect/Engineer assumes responsibility for appropriate use of this standard.

NOTES:

1. COMMERCIAL SIDEWALKS WIDTHS – 6'
   RESIDENTIAL SIDEWALKS WIDTHS – 5'
2. ALL SLOPES ARE MAXIMUM ALLOWABLE. FLATTER SLOPES THAT WILL STILL DRAIN PROPERLY ARE ENCOURAGED.
3. ALL CONCRETE SURFACES SHALL RECEIVE A LIGHT BROOM FINISH UNLESS NOTED OTHERWISE IN THE PLANS.
4. FOR PURPOSES OF WARNING, THE CURB RAMPS SHALL HAVE A LIGHT REFLECTIVE VALUE AND TEXTURE THAT SIGNIFICANTLY CONTRASTS WITH THAT OF ADJOINING PEDESTRIAN ROUTES.
5. TEXTURES MAY CONSIST OF PAVERS WITH TRUNCATED DOMED SURFACES. TEXTURES ARE REQUIRED TO BE DETECTABLE UNDERFOOT. SURFACES THAT WOULD ALLOW WATER TO ACCUMULATE ARE PROHIBITED.
6. COLOR CONTRAST, FOR EXAMPLE, MAY BE ACCOMPLISHED WITH COLORED CONCRETE PAVERS THAT HAVE TRUNCATED DOMES WHICH WOULD PROVIDE A CONTRAST WITH TYPICALLY LIGHT COLORED CONCRETE.
7. ADDITIONAL INFORMATION ON CURB RAMP LOCATION, DESIGN, VISIBILITY AND TEXTURE MAY BE FOUND IN THE CURRENT EDITION OF THE TEXAS ACCESSIBILITY STANDARDS (TAS) PREPARED AND ADMINISTERED BY THE TEXAS DEPARTMENT OF LICENSING AND REGULATION (TDLR).
8. RAISED MEDIANS SEPARATE OPPOSING DIRECTIONS OF TRAFFIC AND PROVIDE A REFUGE AREA FOR PEDESTRIANS IF THEY ARE UNABLE TO CROSS THE ENTIRE ROADWAY IN THE ALLOTTED SIGNAL PHASE. MEDIAN CROSSING SHALL BE A MINIMUM OF 5' WIDE. MEDIANS SHIOULD BE DESIGNED TO PROVIDE ACCESSIBLE PASSAGE OVER OR TROUGH THEM.
9. ALL SIDEWALK PLANS AND DETAILS SHALL BE SUBMITTED AND APPROVED BY "REGISTERED ACCESSIBILITY SPECIALIST" (RAS).
10. ANY PART OF THE ACCESSIBLE ROUTE WITH A SLOPE GRATER THAN 1:20 (5%) SHALL BE CONSIDERED A RAMP. IF A RAMP HAS A RISE GREATER THAN 6 INCHES OR A HORIZONTAL PROJECTION GREATER THAN 72 INCHES, THEN IT SHALL MEET THE REQUIREMENTS OF A RAMP PER TAS 405.THE ONLY EXCEPTION IS AT CURB RAMPS. HANDRAILS ARE NOT REQUIRED ON CURB RAMPS. CURB RAMPS SHALL BE PROVIDED WHERE EVER AN ACCESSIBLE ROUTE CROSSES (PENETRATES) A CURB.
11. TRAFFIC SIGNAL OR ILLUMINATION POLES, GROUND BOXES, CONTROLLER BOXES, SIGNS, DRAINAGE FACILITIES AND OTHER ITEMS SHALL BE PLACED SO NOT TO OBSTRUCT THE ACCESSIBLE ROUTE OR ACT PROTRUDING OBJECTS.
12. ALL SIDEWALKS SHALL BE DOWELED INTO EXISTING SIDEWALKS, DRIVEWALKS, DRIVEWAYS, INLET BOXES, RETAINING WALLS, ETC.
13. ALL SIDEWALK CROSS–SLOPES SHALL NOT EXCEED 1:50, UNLESS A VARIANCE IS PROVIDED BY TDLR.

(PENETRATES) A CURB.

ADOPTED 6/21/2006 TRB
GEORGETOWN TEXAS — CITY OF GEORGETOWN CONSTRUCTION STANDARDS AND DETAILS — PEDESTRIAN RAMPS GENERAL NOTES — SD28 — NTS — 1/2003 — MRS — TRB

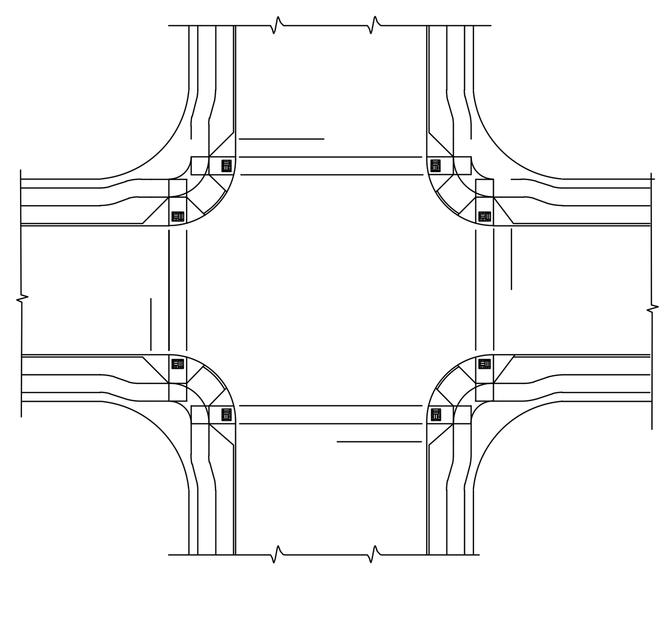

NOTE: ALL RAMPS SHALL BE CONTAINED WITHIN THE RESPECTIVE CURB RETURN RADIUS.

The Architect/Engineer assumes responsibility for appropriate use of this standard.

ADOPTED 6/21/2006 TRB
CITY OF GEORGETOWN CONSTRUCTION STANDARDS AND DETAILS — TYPICAL INTERSECTON LAYOUT — SD29 — NTS — 1/2003 — MRS — TRB

The Architect/Engineer assumes responsibility for appropriate use of this standard.

CURB RAMP

FOR ON–SYSTEM PROJECTS SUCH AS RESTORATION, SEAL COAT AND OVERLAY PROJECTS, PLACEMENT OF CURB RAMPS SHALL BE EVALUATED IN THE FOLLOWING ORDER OF PREFERENCE: PERPENDICULAR, PARALLEL OR COMBINATION. THE MOST PREFERABLE OPTION THAT IS FEASIBLE AT EACH CORNER SHALL BE PROVIDED.

ALL RAMPS SHALL BE CONTAINED WITHIN THE RESPECTIVE CURB RETURN RADIUS.

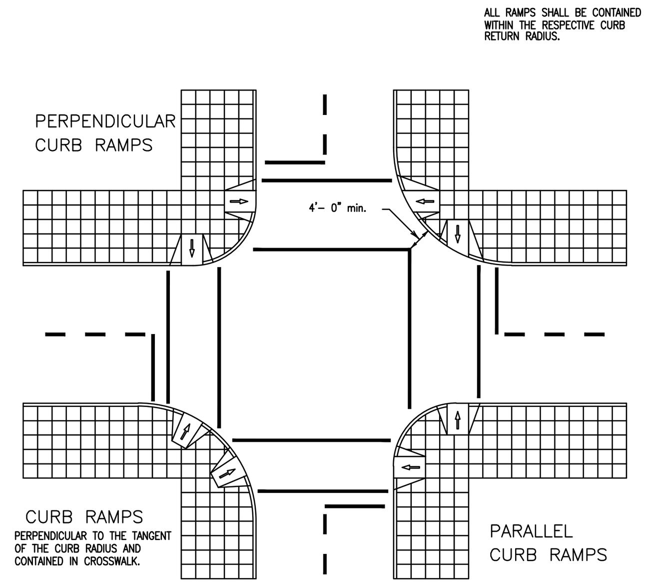

ADOPTED 6/21/2006 TRB
CITY OF GEORGETOWN CONSTRUCTION STANDARDS AND DETAILS — CURB RAMP PLACEMENTS AT INTERSECTIONS — SD30 — NTS — 1/2003 — MRS — TRB

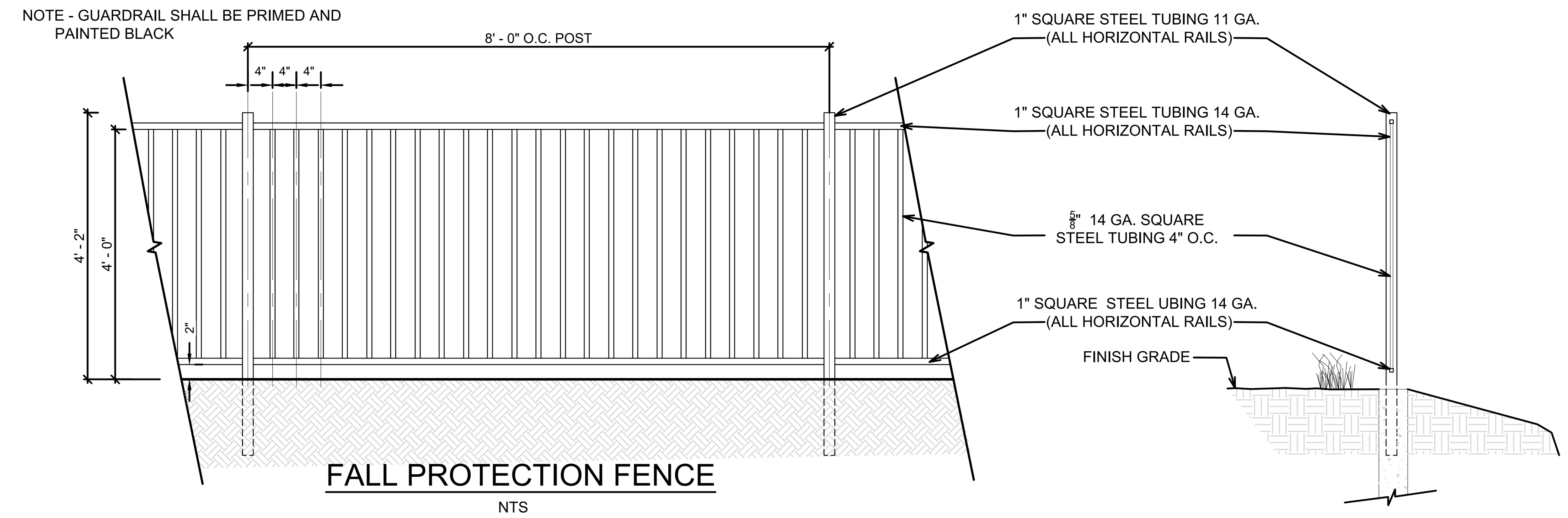

FALL PROTECTION FENCE

NTS

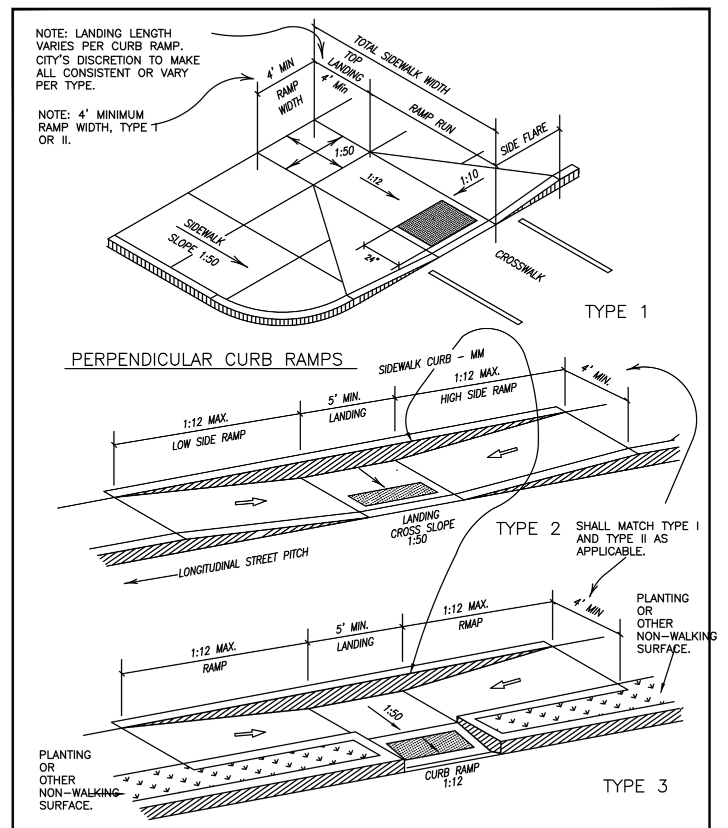

The Architect/Engineer assumes responsibility for appropriate use of this standard.

PARALLEL CURB RAMPS

ADOPTED 6/21/2006 TRB
CITY OF GEORGETOWN CONSTRUCTION STANDARDS AND DETAILS — SIDEWALK RAMP DETAILS TYPE 1–3 — SD31 — NTS — 1/2003 — MRS — TRB

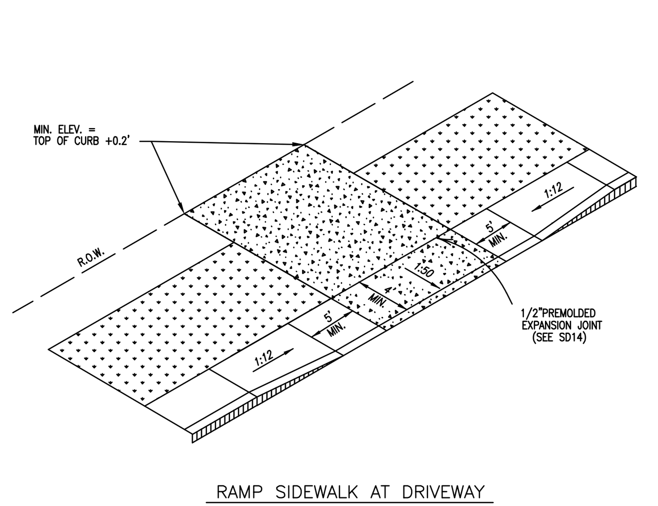

RAMP SIDEWALK AT DRIVEWAY
TYPE 10

The Architect/Engineer assumes responsibility for appropriate use of this standard.

ADOPTED 6/21/2006 TRB
CITY OF GEORGETOWN CONSTRUCTION STANDARDS AND DETAILS — DRIVEWAY APRON TYPE 10 — SD34 — NTS — 1/2003 — MRS — TRB

The Architect/Engineer assumes responsibility for appropriate use of this standard.

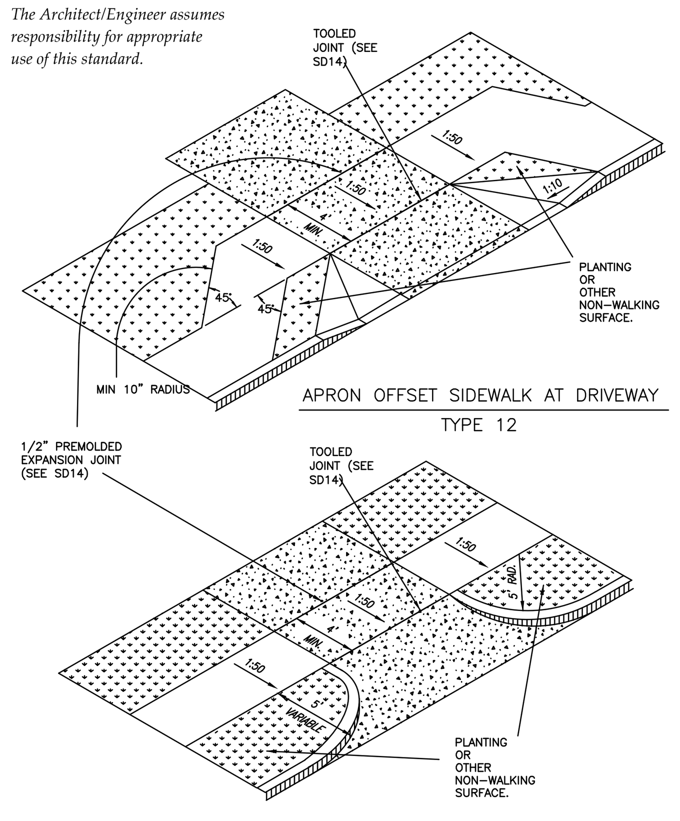

SETBACK SIDEWALK AT DRIVEWAY
TYPE 13

ADOPTED 6/21/2006 TRB
CITY OF GEORGETOWN CONSTRUCTION STANDARDS AND DETAILS — DRIVEWAY APRONS TYPES 12 & 13 — SD35 — NTS — 1/2003 — MRS — TRB

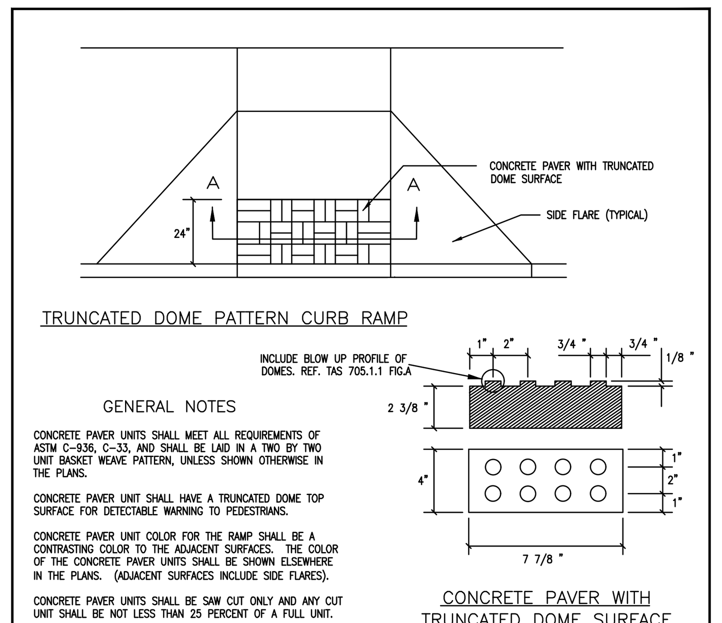

GENERAL NOTES

CONCRETE PAVER UNITS SHALL MEET ALL REQUIREMENTS OF ASTM C–936, C–33, AND SHALL BE LAID IN A TWO BY TWO UNIT BASKET WEAVE PATTERN, UNLESS SHOWN OTHERWISE IN THE PLANS.

CONCRETE PAVER UNIT SHALL HAVE A TRUNCATED DOME TOP SURFACE FOR DETECTABLE WARNING TO PEDESTRIANS.

CONCRETE PAVER UNIT COLOR FOR THE RAMP SHALL BE A CONTRASTING COLOR TO THE ADJACENT SURFACES. THE COLOR OF THE CONCRETE PAVER UNITS SHALL BE SHOWN ELSEWHERE IN THE PLANS. (ADJACENT SURFACES INCLUDE SIDE FLARES).

CONCRETE PAVER UNITS SHALL BE SAW CUT ONLY AND ANY CUT UNIT SHALL BE NOT LESS THAN 25 PERCENT OF A FULL UNIT.

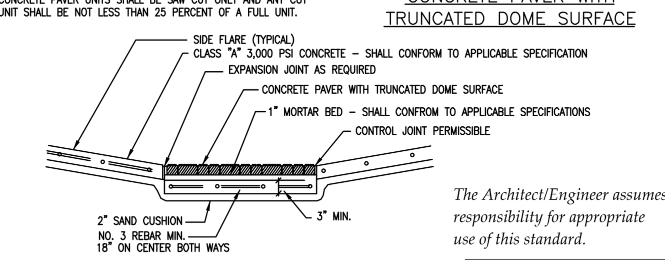

SECTION A–A

The Architect/Engineer assumes responsibility for appropriate use of this standard.

DETAIL MODIFIED TO MEET PROWAG SPECIFICATIONS

REVISED 7/7/2015 WBD
REVISED 3/14/2014 WBD
ADOPTED 6/21/2006 TRB
CITY OF GEORGETOWN CONSTRUCTION STANDARDS AND DETAILS — CURB RAMP TEXTURES TYPE A — SD37 — NTS — 1/2003 — MRS/AP — TRB

Parkside on the River Sections 11, 12A & 15A
Engineer's Job No. 24101123.005

RECOMMENDATIONS - PAVEMENT THICKNESS SECTIONS

Street Classification	Subgrade Material	Hot Mix Asphaltic Concrete, in	Crushed Limestone Base, in	Low Plasticity Sub-Base, in	Lime Stabilized Subgrade, in
Local Streets	Subgrade PI greater than 20 – Option 1	2.0	14	-	-
	Subgrade PI greater than 20 – Option 2	2.0	8	18**	-
	Subgrade PI greater than 20 – Option 3	2.0	8	-	8
	Subgrade PI less than 20	2.0	8	-	-
Residential Collectors	Subgrade PI greater than 20 – Option 1	2.0	15	-	-
	Subgrade PI greater than 20 – Option 2	2.0	10	18**	-
	Subgrade PI greater than 20 – Option 3	2.0	10	-	8
	Subgrade PI less than 20	2.0	10	-	-
Neighborhood Collector	Subgrade PI greater than 20 – Option 1	2.0	21	-	-
	Subgrade PI greater than 20 – Option 2	2.0	14	18**	-
	Subgrade PI greater than 20 – Option 3	2.0	14	-	8
	Subgrade PI less than 20	2.0	11	-	-
Minor Arterial	Subgrade PI greater than 20 – Option 1	5.0	32	-	-
	Subgrade PI greater than 20 – Option 2	5.0	21	18**	-
	Subgrade PI greater than 20 – Option 3	5.0	21	-	8
	Subgrade PI less than 20	5.0	21	-	-
Major Arterial	Subgrade PI greater than 20 – Option 1	6.0	41	-	-
	Subgrade PI greater than 20 – Option 2	6.0	27	18**	-
	Subgrade PI greater than 20 – Option 3	6.0	27	-	8
	Subgrade PI less than 20	6.0	27	-	-

Notes:

1. ** - Or the remaining thickness of surface clay. Natural weathered or intact limestone should not be removed to place low plasticity subbase. The low plasticity subbase should consist of on-site soils only.
2. Any expansive fill (PI > 20) placed in the subgrade after boring completion shall be considered expansive subgrade.
3. The concern has arisen that ground water may enter the utility trenches at this site causing detrimental settlement of the utility trench backfill. To address this concern, the wastewater utility trenches could be turned in to French drains. To achieve this, additional open-graded gravel, such as the gravel already being used for pipe bedding at this site, should be placed above the pipe bedding material to the elevation where ground water is encountered. This extra layer of gravel should be covered with a geotextile fabric to prevent material above the gravel from infiltrating the gravel layer. Then, the utility trench should be filled in compacted layers in accordance with the construction plans. The wastewater utility trench must then be allowed to daylight from its lowest point such that water does not accumulate in the utility trench. Additional gravel may be required in the utility trench depending upon the depth that ground water is entering the utility trench during construction. A line item for French drains should be included in construction bid documents.
4. **Delineation between these different pavement thickness sections should be completed in the field by observation of open utility trenches and the pavement subgrade by the Geotechnical Engineer or his designate.** Given the known variability of surface soils at this site, the Geotechnical Engineer

-6-

MLA Geotechnical Dallas/Fort Worth Austin San Antonio Houston Bryan/College Station Killeen *"put us to the test"*

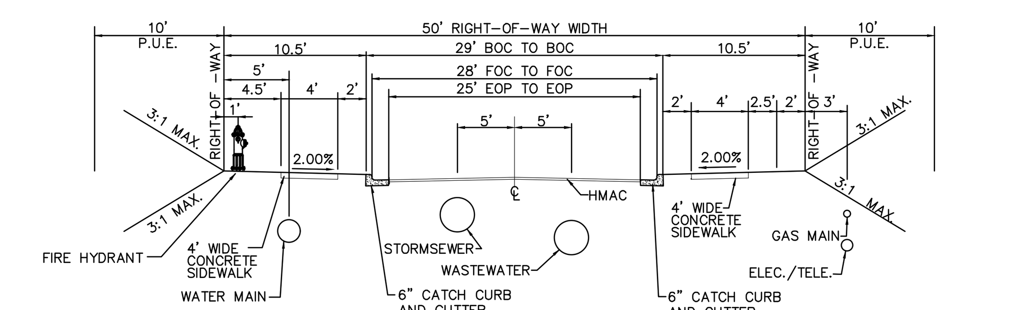

TYPICAL RESIDENTIAL LOCAL STREET CROSS SECTION AND UTILITIES LAYOUT

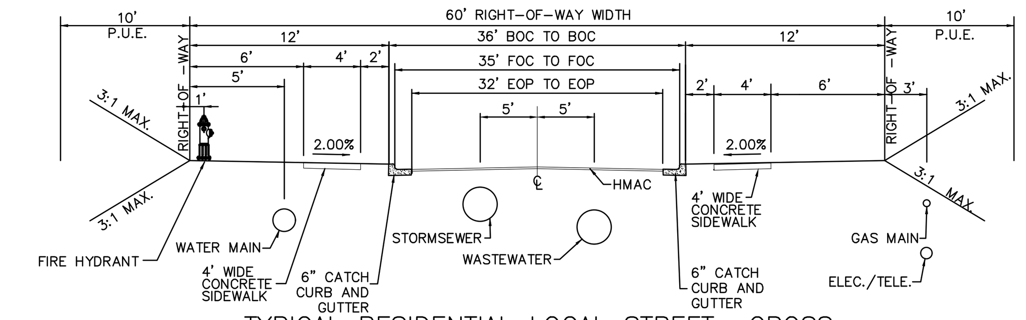

TYPICAL RESIDENTIAL LOCAL STREET CROSS SECTION AND UTILITIES LAYOUT

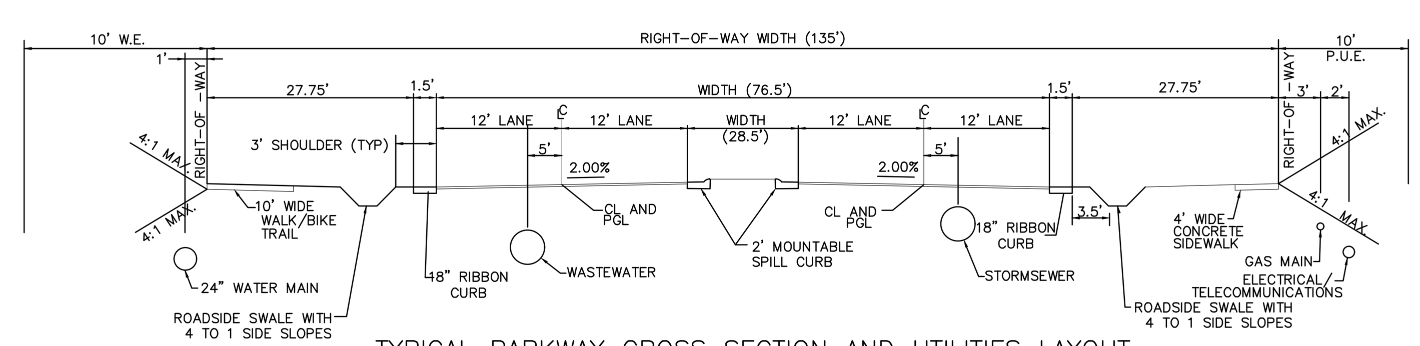

TYPICAL PARKWAY CROSS SECTION AND UTILITIES LAYOUT

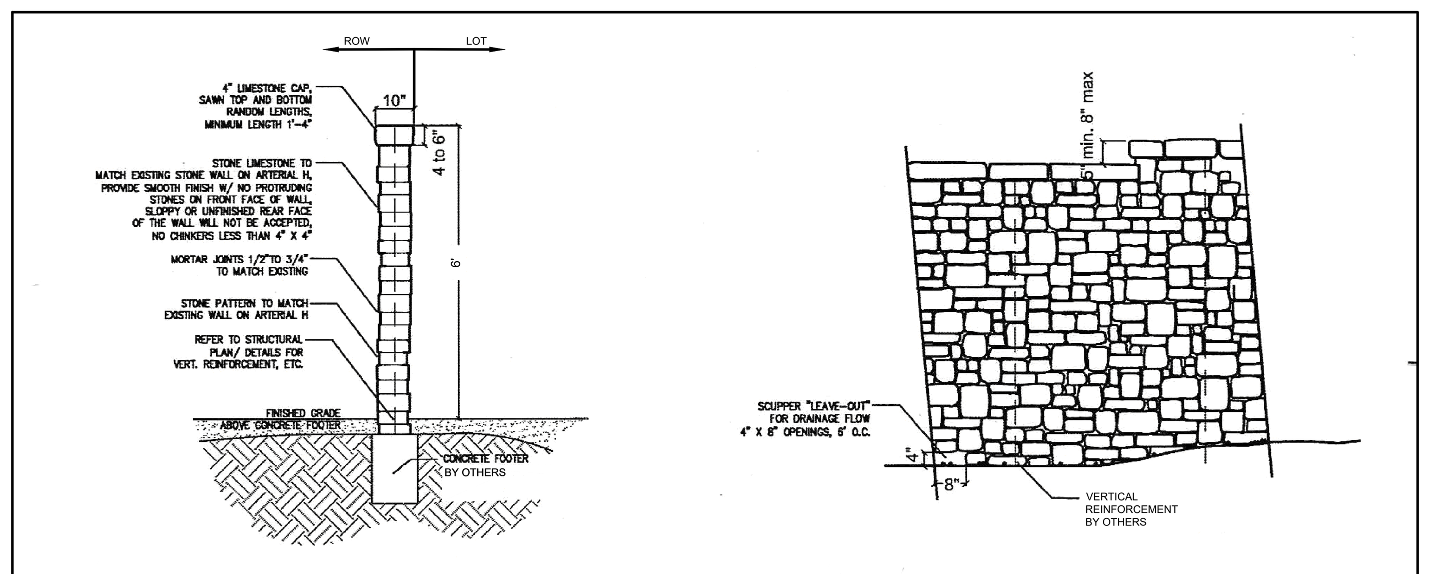

SINGLE WYTHE SCREEN WALL SECTION

SINGLE WYTHE WALL ELEVATION

MASONRY WALL DETAIL

NOTE:

1. CONTRACTOR SHALL REFERENCE "GEOTECHNICAL INVESTIGATION PAVEMENT THICKNESS RECOMMENDATIONS FOR PARKSIDE ON THE RIVER SECTIONS 11, 12A, & 15A" CREATED JANUARY 2025 BY MLA GEOTECHNICAL, ENGINEER'S JOB # 24101123.005. CONTRACTOR IS RESPONSIBLE FOR VERIFYING WITH MLA GEOTECHNICAL.
2. CONTRACTOR TO USE "VIRGIN MIX" TXDOT HMAC WEARING SURFACE 340 TYPE D, WITHOUT RAP OR RAZ. IN THE EVENT THAT THE CITY SPECIFICATIONS OR GEOTECH REPORT CONFLICT WITH THIS THEN THIS NOTE SHALL CONTROL.
3. THE BASE OVERBUILD SHOULD BE EXTENDED A MINIMUM OF 18" BEYOND THE BACK OF CURB. IF LIME TREATMENT IS BEING USED, THE BASE OVERBUILD SHOULD BE EXTENDED 3 FEET BEYOND THE BACK OF THE CURB.
4. AVOID INSTALLATION OF IRRIGATION, PLANTINGS, SILT FENCE, ETC. IN THE BASE OVERBUILD.
5. ALL MATERIAL IMPORTED AND USED FOR ROADWAY FILL AND SUBGRADE SHALL BE LOW P.I MATERIAL UNLESS CONTRACTOR OBTAINS APPROVAL FROM DEVELOPER . IF CONTRACTOR CHOOSES TO BRING IN HIGH PI MATERIAL FOR SUBGRADE, CONTRACTOR IS RESPONSIBLE FOR ALTERNATE PAVEMENT DESIGN PER THE GEOTECH REPORT AND ASSOCIATED COSTS.
6. CONTRACTOR TO ENSURE THAT ALL ONSITE MATERIAL USED FOR ROADWAY FILL AND SUBGRADE SHALL BE LOW P.I. MATERIAL UNLESS LOW P.I. MATERIAL DOES NOT EXIST FROM ONSITE MATERIAL. CONTRACTOR TO COORDINATE FINDINGS WITH THE DEVELOPER AND OBTAIN APPROVAL FOR NEEDING TO USE ALTERNATE PAVEMENT DESIGN PER THE GEOTECH REPORT.

NO. | REVISION | BY | DATE

811 Know what's below. Call before you dig.

5508 HIGHWAY 290 WEST
SUITE 150
AUSTIN, TX 78735
512.872.6696
HRGREEN.COM

TBPE NO: 16384
TBPLS NO: 10194101

HRGreen DEVELOPMENT TX

STATE OF TEXAS — CHRISTINE N. CAMPBELL — 142536 — LICENSED PROFESSIONAL ENGINEER
07/03/2025

PAVING DETAILS

PARKSIDE ON THE RIVER SECTIONS 11, 12A & 15A CONSTRUCTION PLANS
GEORGETOWN, WILLIAMSON, TEXAS

DESIGNED BY: CC
DRAWN BY: MM
CHECKED BY: SN
APPROVED BY:

SHEET 72 OF 141

2025-XX-CON

Plot Style: LandDev Global.ctb
Template: LDC_C3D2022.DWT
P:\Blake Magee\Parkside Sections 11-15 & WON 5\Section 11, 12A & 15A\03_ACAD\Plans\sh2403522 DTLS.dwg, PAVING DETAILS 2, July 18, 2025, 11:50 AM, makai.muhammad

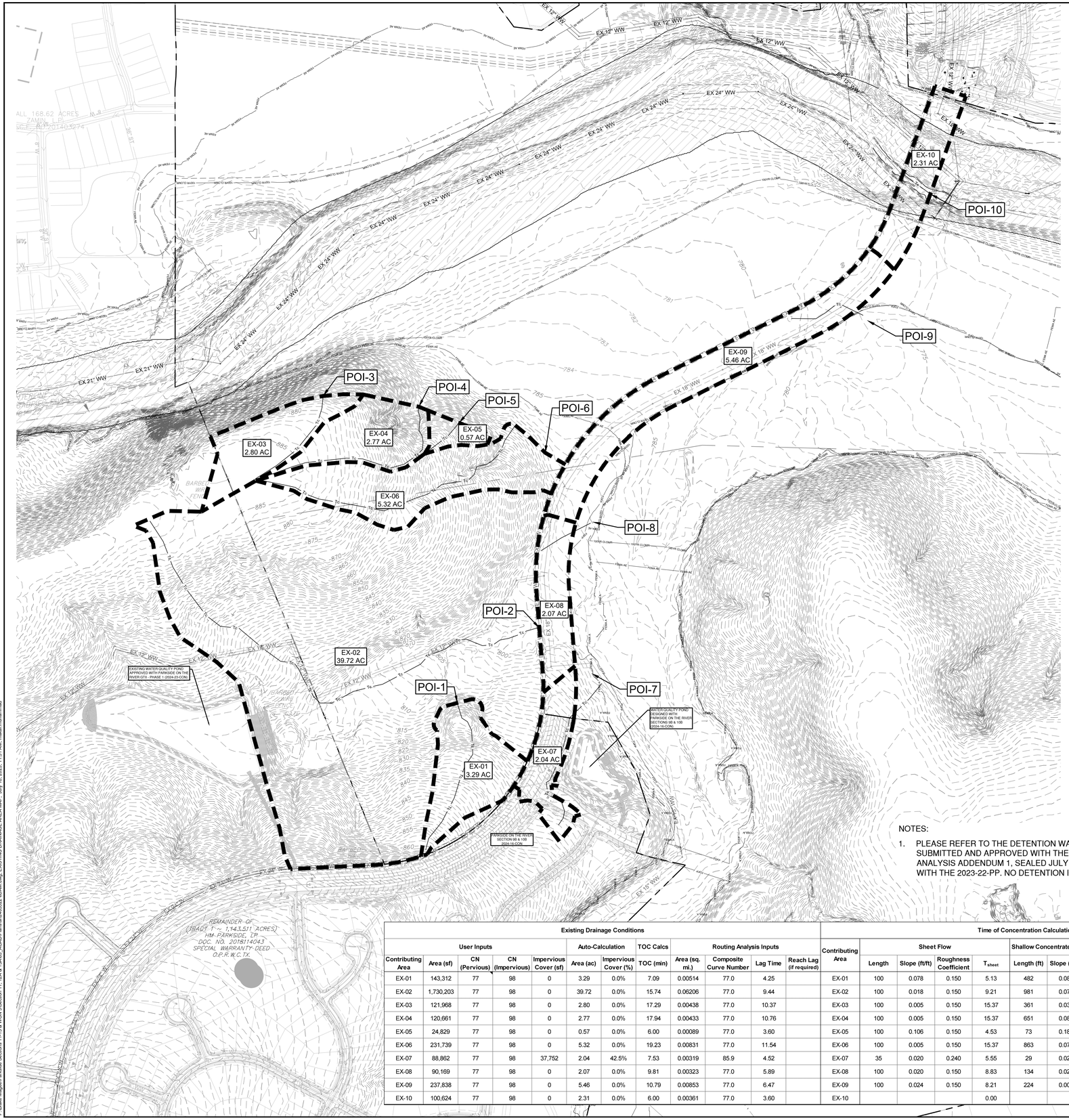

0 200' 400'

SCALE: 1" = 200'

LEGEND

- EXISTING MINOR CONTOUR
- EXISTING MAJOR CONTOUR
- PROPOSED MINOR CONTOUR
- PROPOSED MAJOR CONTOUR
- BOUNDARY
- EASEMENT
- FEMA FLOODWAY PER FIRM# 48491C0460F & LOMR# 21-06-0115P
- FEMA AE — 100YR ATLAS 14 FEMA ZONE AE FLOODPLAIN PER FIRM# 48491C0460F & LOMR# 21-06-0115P
- FEMA A — 100YR FEMA ZONE A FLOODPLAIN PER FIRM MAP# 48491C0460F
- 100YR CLOMR — 100YR CLOMR FLOODPLAIN CASE# 15-06-2071R
- FDFP — 100YR ATLAS 14 FULLY DEVELOPED FLOODPLAIN (STANTEC DRAINAGE STUDY, SHERVIN NOOSHIN, 3/25/19) APPROVED WITH PP# 2019-5-PP
- OHWM — ORDINARY HIGH WATER MARK PER ADAMS ENVIRONMENTAL
- PROPOSED STORM LINE
- FIRE HYDRANT
- WATER VALVE
- STORM SEWER MAHNOLE
- WASTEWATER MANHOLE
- CURB INLET
- P-1 / 5.00 AC — DRAINAGE AREA NAME / DRAINAGE AREA (IN ACRES)
- Tc — TIME OF CONCENTRATION
- POI-15 — DRAINAGE DESIGN POINT
- DIRECTION OF FLOW
- DRAINAGE AREA

NOTES:

1. PLEASE REFER TO THE DETENTION WAIVER ANALYSIS, SEALED MARCH 25, 2019, SUBMITTED AND APPROVED WITH THE 2019-5-PP AND THE DETENTION WAIVER ANALYSIS ADDENDUM 1, SEALED JULY 28, 2023, SUBMITTED AND APPROVED WITH THE 2023-22-PP. NO DETENTION IS REQUIRED FOR THIS PROJECT.

Existing Drainage Conditions

Contributing Area	User Inputs: Area (sf)	CN (Pervious)	CN (Impervious)	Impervious Cover (sf)	Auto-Calculation: Area (ac)	Impervious Cover (%)	TOC Calcs: TOC (min)	Routing Analysis Inputs: Area (sq. mi.)	Composite Curve Number	Lag Time	Reach Lag (if required)
EX-01	143,312	77	98	0	3.29	0.0%	7.09	0.00514	77.0	4.25	
EX-02	1,730,203	77	98	0	39.72	0.0%	15.74	0.06206	77.0	9.44	
EX-03	121,968	77	98	0	2.80	0.0%	17.29	0.00438	77.0	10.37	
EX-04	120,661	77	98	0	2.77	0.0%	17.94	0.00433	77.0	10.76	
EX-05	24,829	77	98	0	0.57	0.0%	6.00	0.00089	77.0	3.60	
EX-06	231,739	77	98	0	5.32	0.0%	19.23	0.00831	77.0	11.54	
EX-07	88,862	77	98	37,752	2.04	42.5%	7.53	0.00319	85.9	4.52	
EX-08	90,169	77	98	0	2.07	0.0%	9.81	0.00323	77.0	5.89	
EX-09	237,838	77	98	0	5.46	0.0%	10.79	0.00853	77.0	6.47	
EX-10	100,624	77	98	0	2.31	0.0%	6.00	0.00361	77.0	3.60	

Time of Concentration Calculations

Contributing Area	Sheet Flow: Length	Slope (ft/ft)	Roughness Coefficient	T_{sheet}	Shallow Concentrated Flow (Unpaved): Length (ft)	Slope (ft/ft)	$T_{unpaved}$	Pipe/Channel Flow 1: Length (ft)	Velocity (ft)	$T_{channel}$ (min)
EX-01	100	0.078	0.150	5.13	482	0.086	1.70	93	6	0.26
EX-02	100	0.018	0.150	9.21	981	0.072	3.77	994	6	2.76
EX-03	100	0.005	0.150	15.37	361	0.038	1.91			0.00
EX-04	100	0.005	0.150	15.37	651	0.086	2.29	99	6	0.28
EX-05	100	0.106	0.150	4.53	73	0.189	0.17			0.00
EX-06	100	0.005	0.150	15.37	863	0.079	3.17	246	6	0.68
EX-07	35	0.020	0.240	5.55	29	0.020	0.21	637	6	1.77
EX-08	100	0.020	0.150	8.83	134	0.020	0.98			0.00
EX-09	100	0.024	0.150	8.21	224	0.008	2.58			0.00
EX-10				0.00			0.00	140	6	0.39

Existing Conditions - Flows & Volumes - Atlas 14

ID	Peak Flows (cfs): 2-yr	10-yr	25-yr	100-yr	Volumes (ac-ft): 2-yr	10-yr	25-yr	100-yr
EX-01	6.07	12.92	18.17	27.77	0.48	1.03	1.46	2.27
EX-02	61.29	131.19	185.05	283.74	5.84	12.39	17.58	27.38
EX-03	4.19	8.98	12.67	19.43	0.41	0.87	1.24	1.93
EX-04	4.09	8.76	12.36	18.98	0.41	0.86	1.23	1.91
EX-05	1.07	2.28	3.21	4.90	0.08	0.18	0.25	0.39
EX-06	7.66	16.41	23.16	35.55	0.78	1.66	2.35	3.67
EX-07	5.25	9.68	12.92	18.76	0.42	0.80	1.08	1.61
EX-08	3.62	7.69	10.82	16.58	0.30	0.64	0.91	1.43
EX-09	10.32	22.02	31.02	47.50	0.89	1.88	2.67	4.16
EX-10	3.29	6.99	9.84	15.04	0.26	0.54	0.77	1.20
POI-01	6.07	12.92	18.17	27.77	0.48	1.03	1.46	2.27
POI-02	61.29	131.19	185.05	283.74	5.84	12.39	17.58	27.38
POI-03	4.19	8.98	12.67	19.43	0.41	0.87	1.24	1.93
POI-04	4.09	8.76	12.36	18.98	0.41	0.86	1.23	1.91
POI-05	1.07	2.28	3.21	4.90	0.08	0.18	0.25	0.39
POI-06	7.66	16.41	23.16	35.55	0.78	1.66	2.35	3.67
POI-07	5.25	9.68	12.92	18.76	0.42	0.80	1.08	1.61
POI-08	3.62	7.69	10.82	16.58	0.30	0.64	0.91	1.43
POI-09	10.32	22.02	31.02	47.50	0.89	1.88	2.67	4.16
POI-10	3.29	6.99	9.84	15.04	0.26	0.54	0.77	1.20

Proposed Conditions - Flows & Volumes - Atlas 14

ID	Peak Flows (cfs): 2-yr	10-yr	25-yr	100-yr	Volumes (ac-ft): 2-yr	10-yr	25-yr	100-yr
PR-01	14.36	26.26	35.00	50.69	1.16	2.18	2.95	4.37
PR-02	46.76	95.97	133.28	201.14	4.43	9.09	12.74	19.57
PR-03	5.88	10.79	14.39	20.87	0.46	0.87	1.17	1.74
PR-04	1.37	2.92	4.11	6.28	0.11	0.23	0.32	0.50
PR-05	2.02	3.64	4.83	6.96	0.16	0.29	0.40	0.59
PR-06	42.04	75.39	99.86	143.86	3.47	6.41	8.63	12.70
PR-07	9.70	17.37	22.98	33.09	0.78	1.44	1.93	2.84
PR-08	6.31	11.21	14.79	21.22	0.50	0.91	1.22	1.80
PR-09	17.16	30.37	40.00	57.30	1.36	2.48	3.32	4.86
PR-10	6.29	11.43	15.19	21.95	0.49	0.92	1.24	1.84
POI-01	13.35	24.96	33.57	49.03	1.16	2.18	2.95	4.37
POI-02	46.76	95.97	133.28	201.14	4.43	9.09	12.74	19.57
POI-03	5.88	10.79	14.39	20.87	0.46	0.87	1.17	1.74
POI-04	1.37	2.92	4.11	6.28	0.11	0.23	0.32	0.50
POI-05	2.02	3.64	4.83	6.96	0.16	0.29	0.40	0.59
POI-06	38.59	71.12	94.79	137.55	3.47	6.41	8.63	12.70
POI-07	9.70	17.37	22.98	33.09	0.78	1.44	1.93	2.84
POI-08	6.31	11.21	14.79	21.22	0.50	0.91	1.22	1.80
POI-09	17.16	30.37	40.00	57.30	1.36	2.48	3.32	4.86
POI-10	6.29	11.43	15.19	21.95	0.49	0.92	1.24	1.84

Flow & Volume Comparison (Proposed - Existing) - Atlas 14

ID	Peak Flows (cfs): 2-yr	10-yr	25-yr	100-yr	Volumes (ac-ft): 2-yr	10-yr	25-yr	100-yr
POI-1	7.28	12.04	15.40	21.26	0.68	1.15	1.49	2.10
POI-2	-14.53	-35.22	-51.77	-82.60	-1.41	-3.30	-4.84	-7.81
POI-3	1.69	1.81	1.72	1.44	0.05	0.00	-0.07	-0.19
POI-4	-2.72	-5.84	-8.25	-12.70	-0.30	-0.63	-0.91	-1.41
POI-5	0.95	1.36	1.62	2.06	0.08	0.11	0.15	0.20
POI-6	30.93	54.71	71.63	102.00	2.69	4.75	6.28	9.03
POI-7	4.45	7.69	10.06	14.33	0.36	0.64	0.85	1.23
POI-8	2.69	3.52	3.97	4.64	0.20	0.27	0.31	0.37
POI-9	6.84	8.35	8.98	9.80	0.47	0.60	0.65	0.70
POI-10	3.00	4.44	5.35	6.91	0.23	0.38	0.47	0.64

NO	BY	DATE

811 Know what's below. Call before you dig.

5508 HIGHWAY 290 WEST
SUITE 150
AUSTIN, TX 78735
512.872.6696
HRGREEN.COM

TBPE NO: 16384
TBPLS NO: 10194101

HRGreen® DEVELOPMENT TX

STATE OF TEXAS — CHRISTINE N. CAMPBELL — 142536 — LICENSED PROFESSIONAL ENGINEER

07/15/2025

EXISTING DRAINAGE AREA MAP

PARKSIDE ON THE RIVER SECTIONS 11, 12A & 15A CONSTRUCTION PLANS

GEORGETOWN, WILLIAMSON, TEXAS

DESIGNED BY: CC
DRAWN BY: MM
CHECKED BY: SN
APPROVED BY:

SHEET 73 OF 141

2025-XX-CON

P:\Blkan Meghe\Parkside Sections 11-15 & WOA S\Sections 11, 12A & 15A\03_ACAD\Planset\20250723 xDIM.dwg, EXISTING DRAINAGE AREA MAP, July 18, 2025, 11:51 AM, malan.muhammad

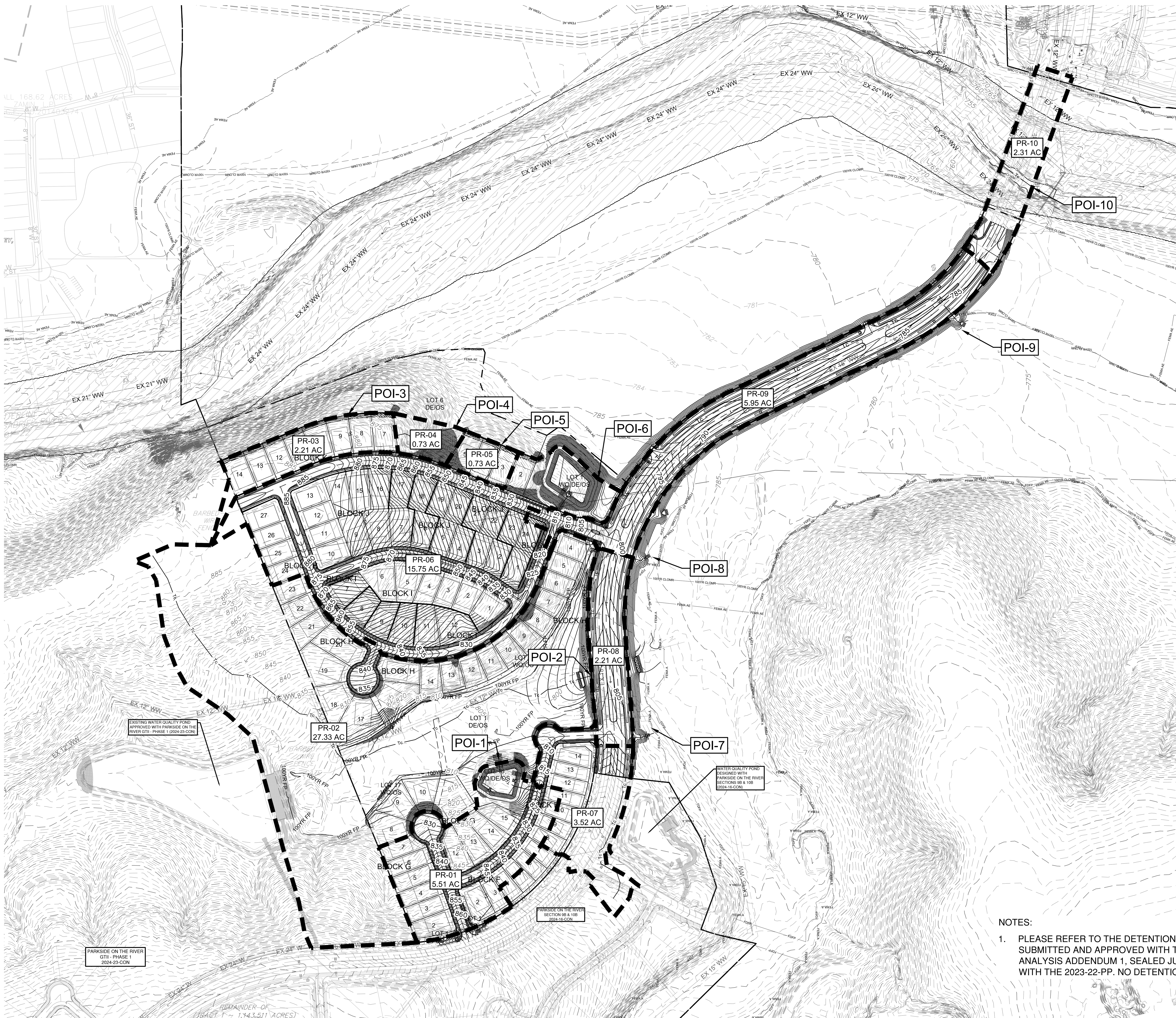

SCALE: 1" = 200'

0 200' 400'

LEGEND

- 834 — EXISTING MINOR CONTOUR
- 835 — EXISTING MAJOR CONTOUR
- 834 — PROPOSED MINOR CONTOUR
- 835 — PROPOSED MAJOR CONTOUR
- BOUNDARY
- EASEMENT
- FEMA FLOODWAY PER FIRM# 48491C0460F & LOMR# 21-06-0115P
- FEMA AE — 100YR ATLAS 14 FEMA ZONE AE FLOODPLAIN PER FIRM# 48491C0460F & LOMR# 21-06-0115P
- FEMA A — 100YR FEMA ZONE A FLOODPLAIN PER FIRM MAP# 48491C0460F
- 100YR CLOMR — 100YR CLOMR FLOODPLAIN CASE# 15-06-2071R
- FDFP — 100YR ATLAS 14 FULLY DEVELOPED FLOODPLAIN (STANTEC DRAINAGE STUDY, SHERVIN NOOSHIN, 3/25/19) APPROVED WITH PP# 2019-5-PP
- OHWM — ORDINARY HIGH WATER MARK PER ADAMS ENVIRONMENTAL
- SD — PROPOSED STORM LINE
- FIRE HYDRANT
- WATER VALVE
- SD — STORM SEWER MAHNOLE
- WW — WASTEWATER MANHOLE
- CURB INLET
- P-1 5.00 AC — DRAINAGE AREA NAME / DRAINAGE AREA (IN ACRES)
- Tc — TIME OF CONCENTRATION
- POI-15 — DRAINAGE DESIGN POINT
- DIRECTION OF FLOW
- DRAINAGE AREA

NOTES:

1. PLEASE REFER TO THE DETENTION WAIVER ANALYSIS, SEALED MARCH 25, 2019, SUBMITTED AND APPROVED WITH THE 2019-5-PP AND THE DETENTION WAIVER ANALYSIS ADDENDUM 1, SEALED JULY 28, 2023, SUBMITTED AND APPROVED WITH THE 2023-22-PP. NO DETENTION IS REQUIRED FOR THIS PROJECT.

Proposed Drainage Conditions

User Inputs					Auto-Calculation		TOC Calcs	Routing Analysis Inputs			
Contributing Area	Area (sf)	CN (Pervious)	CN (Impervious)	Impervious Cover (sf)	Area (ac)	Impervious Cover (%)	TOC (min)	Area (sq. mi.)	Composite Curve Number	Lag Time	Reach Lag (if required)
PR-01	240,016	77	98	107,575	5.51	44.8%	7.71	0.00861	86.4	4.63	
PR-02	1,190,495	77	98	134,580	27.33	11.3%	15.74	0.04270	79.4	9.44	
PR-03	96,268	77	98	41,600	2.21	43.2%	6.00	0.00345	86.1	3.60	
PR-04	31,799	77	98	0	0.73	0.0%	6.00	0.00114	77.0	3.60	
PR-05	31,799	77	98	15,600	0.73	49.1%	6.00	0.00114	87.3	3.60	
PR-06	686,070	77	98	348,312	15.75	50.8%	8.58	0.02461	87.7	5.15	
PR-07	153,331	77	98	79,131	3.52	51.6%	7.01	0.00550	87.8	4.21	
PR-08	96,268	77	98	52,373	2.21	54.4%	6.00	0.00345	88.4	3.60	
PR-09	259,182	77	98	144,474	5.95	55.7%	6.00	0.00930	88.7	3.60	
PR-10	100,624	77	98	46,882	2.31	46.6%	6.00	0.00361	86.8	3.60	

Time of Concentration Calculations

Contributing Area	Sheet Flow				Shallow Concentrated Flow (Unpaved)			Pipe/Channel Flow 1		
	Length	Slope (ft/ft)	Roughness Coefficient	T_{sheet}	Length (ft)	Slope (ft/ft)	$T_{unpaved}$	Length (ft)	Velocity (ft)	$T_{channel}$ (min)
PR-01	30	0.020	0.240	4.91	163	0.020	1.19	581	6	1.61
PR-02	100	0.018	0.150	9.21	981	0.072	3.77	994	6	2.76
PR-03	30	0.020	0.240	4.91	112	0.060	0.47			0.00
PR-04	30	0.206	0.150	1.33	197	0.282	0.38			0.00
PR-05	30	0.060	0.240	3.16	112	0.060	0.47			0.00
PR-06	30	0.030	0.240	4.17	242	0.040	1.25	1135	6	3.15
PR-07	30	0.020	0.240	4.91	29	0.020	0.21	680	6	1.89
PR-08				0.00			0.00	817	6	2.27
PR-09				0.00			0.00	1633	6	4.54
PR-10				0.00			0.00	140	6	0.39

Existing Conditions - Flows & Volumes - Atlas 14

ID	Peak Flows (cfs)				Volumes (ac-ft)			
	2-yr	10-yr	25-yr	100-yr	2-yr	10-yr	25-yr	100-yr
EX-01	6.07	12.92	18.17	27.77	0.48	1.03	1.46	2.27
EX-02	61.29	131.19	185.05	283.74	5.84	12.39	17.58	27.38
EX-03	4.19	8.98	12.67	19.43	0.41	0.87	1.24	1.93
EX-04	4.09	8.76	12.36	18.98	0.41	0.86	1.23	1.91
EX-05	1.07	2.28	3.21	4.90	0.08	0.18	0.25	0.39
EX-06	7.66	16.41	23.16	35.55	0.78	1.66	2.35	3.67
EX-07	5.25	9.68	12.92	18.76	0.42	0.80	1.08	1.61
EX-08	3.62	7.69	10.82	16.58	0.30	0.64	0.91	1.43
EX-09	10.32	22.02	31.02	47.50	0.89	1.88	2.67	4.16
EX-10	3.29	6.99	9.84	15.04	0.26	0.54	0.77	1.20
POI-01	6.07	12.92	18.17	27.77	0.48	1.03	1.46	2.27
POI-02	61.29	131.19	185.05	283.74	5.84	12.39	17.58	27.38
POI-03	4.19	8.98	12.67	19.43	0.41	0.87	1.24	1.93
POI-04	4.09	8.76	12.36	18.98	0.41	0.86	1.23	1.91
POI-05	1.07	2.28	3.21	4.90	0.08	0.18	0.25	0.39
POI-06	7.66	16.41	23.16	35.55	0.78	1.66	2.35	3.67
POI-07	5.25	9.68	12.92	18.76	0.42	0.80	1.08	1.61
POI-08	3.62	7.69	10.82	16.58	0.30	0.64	0.91	1.43
POI-09	10.32	22.02	31.02	47.50	0.89	1.88	2.67	4.16
POI-10	3.29	6.99	9.84	15.04	0.26	0.54	0.77	1.20

Proposed Conditions - Flows & Volumes - Atlas 14

ID	Peak Flows (cfs)				Volumes (ac-ft)			
	2-yr	10-yr	25-yr	100-yr	2-yr	10-yr	25-yr	100-yr
PR-01	14.36	26.26	35.00	50.69	1.16	2.18	2.95	4.37
PR-02	46.76	95.97	133.28	201.14	4.43	9.09	12.74	19.57
PR-03	5.88	10.79	14.39	20.87	0.46	0.87	1.17	1.74
PR-04	1.37	2.92	4.11	6.28	0.11	0.23	0.32	0.50
PR-05	2.02	3.64	4.83	6.96	0.16	0.29	0.40	0.59
PR-06	42.04	75.39	99.86	143.86	3.47	6.41	8.63	12.70
PR-07	9.70	17.37	22.98	33.09	0.78	1.44	1.93	2.84
PR-08	6.31	11.21	14.79	21.22	0.50	0.91	1.22	1.80
PR-09	17.16	30.37	40.00	57.30	1.36	2.48	3.32	4.86
PR-10	6.29	11.43	15.19	21.95	0.49	0.92	1.24	1.84
POI-01	13.35	24.96	33.57	49.03	1.16	2.18	2.95	4.37
POI-02	46.76	95.97	133.28	201.14	4.43	9.09	12.74	19.57
POI-03	5.88	10.79	14.39	20.87	0.46	0.87	1.17	1.74
POI-04	1.37	2.92	4.11	6.28	0.11	0.23	0.32	0.50
POI-05	2.02	3.64	4.83	6.96	0.16	0.29	0.40	0.59
POI-06	38.59	71.12	94.79	137.55	3.47	6.41	8.63	12.70
POI-07	9.70	17.37	22.98	33.09	0.78	1.44	1.93	2.84
POI-08	6.31	11.21	14.79	21.22	0.50	0.91	1.22	1.80
POI-09	17.16	30.37	40.00	57.30	1.36	2.48	3.32	4.86
POI-10	6.29	11.43	15.19	21.95	0.49	0.92	1.24	1.84

Flow & Volume Comparison (Proposed - Existing) - Atlas 14

ID	Peak Flows (cfs)				Volumes (ac-ft)			
	2-yr	10-yr	25-yr	100-yr	2-yr	10-yr	25-yr	100-yr
POI-1	7.28	12.04	15.40	21.26	0.68	1.15	1.49	2.10
POI-2	-14.53	-35.22	-51.77	-82.60	-1.41	-3.30	-4.84	-7.81
POI-3	1.69	1.81	1.72	1.44	0.05	0.00	-0.07	-0.19
POI-4	-2.72	-5.84	-8.25	-12.70	-0.30	-0.63	-0.91	-1.41
POI-5	0.95	1.36	1.62	2.06	0.08	0.11	0.15	0.20
POI-6	30.93	54.71	71.63	102.00	2.69	4.75	6.28	9.03
POI-7	4.45	7.69	10.06	14.33	0.36	0.64	0.85	1.23
POI-8	2.69	3.52	3.97	4.64	0.20	0.27	0.31	0.37
POI-9	6.84	8.35	8.98	9.80	0.47	0.60	0.65	0.70
POI-10	3.00	4.44	5.35	6.91	0.23	0.38	0.47	0.64

NO.	REVISION	BY	DATE

811 Know what's below. Call before you dig.

5508 HIGHWAY 290 WEST
SUITE 150
AUSTIN, TX 78735
512.872.6696
HRGREEN.COM

TBPE NO: 16384
TBPLS NO: 10194101

HRGreen DEVELOPMENT TX

STATE OF TEXAS CHRISTINE N. CAMPBELL 142536 LICENSED PROFESSIONAL ENGINEER
07/03/2025

PROPOSED DRAINAGE AREA MAP

PARKSIDE ON THE RIVER SECTIONS 11, 12A & 15A CONSTRUCTION PLANS GEORGETOWN, WILLIAMSON, TEXAS

DESIGNED BY: CC
DRAWN BY: MM
CHECKED BY: SN
APPROVED BY:

SHEET 74 OF 141

2025-XX-CON

P:\Blake Magee\Parkside Sections 11-15 & WON 5\Section 11, 12A & 15A\03_ACAD\Plans\sh2403522 pDAM.dwg, PROPOSED DRAINAGE AREA MAP, July 18, 2025, 11:52 AM, makai.muhammad

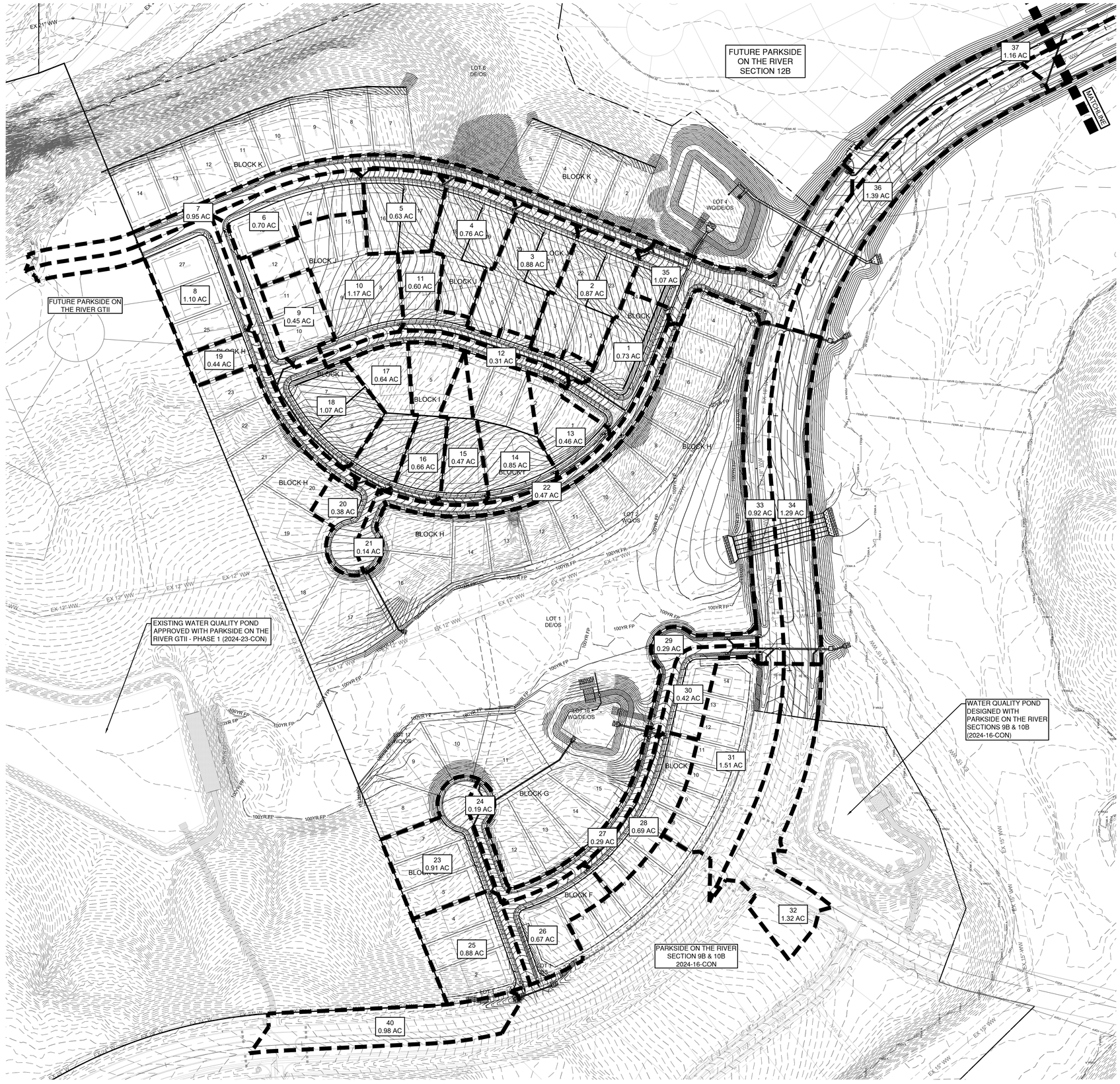

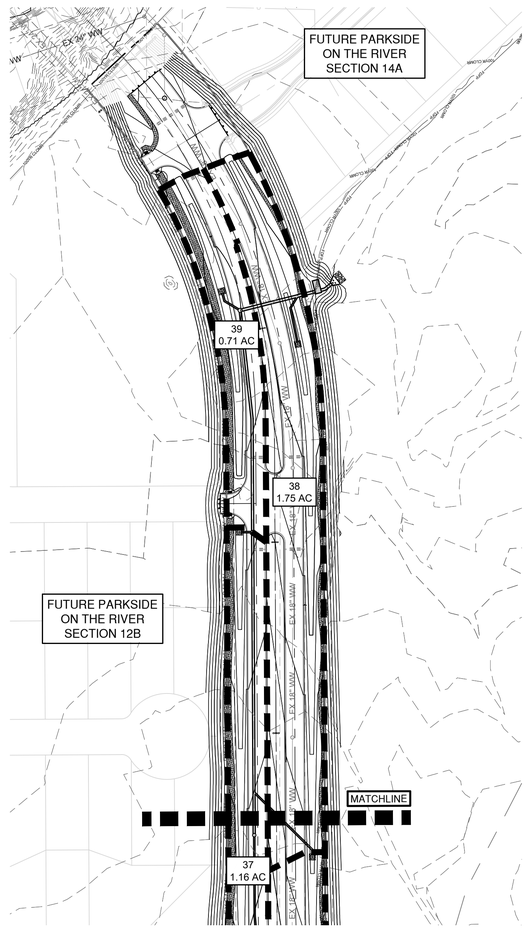

0 100' 200'

SCALE: 1" = 100'

LEGEND

- 834 — EXISTING MINOR CONTOUR
- 835 — EXISTING MAJOR CONTOUR
- 834 — PROPOSED MINOR CONTOUR
- 835 — PROPOSED MAJOR CONTOUR
- BOUNDARY
- EASEMENT
- FEMA FLOODWAY PER FIRM# 48491C0460F & LOMR# 21-06-0115P
- FEMA AE — 100YR ATLAS 14 FEMA ZONE AE FLOODPLAIN PER FIRM# 48491C0460F & LOMR# 21-06-0115P
- FEMA A — 100YR FEMA ZONE A FLOODPLAIN PER FIRM MAP# 48491C0460F
- 100YR CLOMR — 100YR CLOMR FLOODPLAIN CASE# 15-06-2071R
- FDFP — 100YR ATLAS 14 FULLY DEVELOPED FLOODPLAIN (STANTEC DRAINAGE STUDY, SHERVIN NOOSHIN, 3/25/19) APPROVED WITH PP# 2019-5-PP
- OHWM — ORDINARY HIGH WATER MARK PER ADAMS ENVIRONMENTAL
- SD — PROPOSED STORM LINE
- FIRE HYDRANT
- WATER VALVE
- SD — STORM SEWER MAHNOLE
- WW — WASTEWATER MANHOLE
- CURB INLET
- P-1 / 5.00 AC — DRAINAGE AREA NAME / DRAINAGE AREA (IN ACRES)
- Tc — TIME OF CONCENTRATION
- DRAINAGE AREA

NO	REVISION	BY	DATE

Know what's below. Call before you dig.

HRGreen
DEVELOPMENT TX
5508 HIGHWAY 290 WEST
SUITE 150
AUSTIN, TX 78735
512.872.6696
HRGREEN.COM
TBPE NO: 16384
TBPLS NO: 10194101

STATE OF TEXAS
CHRISTINE N. CAMPBELL
142536
LICENSED PROFESSIONAL ENGINEER
07/03/2025

INLET DRAINAGE AREA MAP

PARKSIDE ON THE RIVER SECTIONS 11, 12A & 15A CONSTRUCTION PLANS

GEORGETOWN, WILLIAMSON, TEXAS

DESIGNED BY: CC
DRAWN BY: MM
CHECKED BY: SN
APPROVED BY:

SHEET 75 OF 141

2025-XX-CON

P:\Blake Magee\Parkside Sections 11-15 & VCM 1\Sections 11, 12A & 15A\03_ACAD\Planset\sh04DS02 print\DRAM.dwg, INLET DRAINAGE AREA MAP, July 09, 2025, 11:54 AM, mateo.mohammad

COG C-Values				
	2	10	25	100
Impervious	0.95	0.95	0.95	0.95
Pervious	0.24	0.28	0.31	0.36

COG IDF Curve Values			
Year	a	b	c
2	106.29	16.81	0.9076
10	96.84	15.88	0.7952
25	111.07	17.23	0.7815
100	129.03	17.83	0.7625

PARKSIDE ON THE RIVER SECTIONS 11, 12A & 15A
RATIONAL METHOD FLOW CALCULATIONS FOR STORM INLETS

BASIN LABEL	INLET LABEL	INLET TYPE*	AREA (SQ FT)	AREA (AC)	IMPERVIOUS (LOTS) (SF)	IMPERVIOUS (ROADS) (SF)	IMPERVIOUS %	PERVIOUS %	TC (MIN)	2-YR			10-YR			25-YR			100-YR		
										C	I	Q	C	I	Q	C	I	Q	C	I	Q
1	D28	CGRD	31,633	0.73	8,000	9,468	55%	45%	5.0	0.63	6.48	2.97	0.65	8.64	4.08	0.66	9.84	4.74	0.69	11.88	5.92
2	D51	CGRD	37,890	0.87	20,400	3,057	62%	38%	5.0	0.68	6.48	3.83	0.69	8.64	5.22	0.71	9.84	6.04	0.73	11.88	7.49
3	D52	CGRD	38,235	0.88	20,400	3,095	61%	39%	5.0	0.68	6.48	3.85	0.69	8.64	5.25	0.70	9.84	6.07	0.72	11.88	7.53
4	D53	CGRD	33,003	0.76	15,200	3,552	57%	43%	5.0	0.64	6.48	3.16	0.66	8.64	4.33	0.67	9.84	5.02	0.70	11.88	6.26
5	D54	CGRD	27,294	0.63	10,400	3,922	52%	48%	5.0	0.61	6.48	2.49	0.63	8.64	3.42	0.65	9.84	3.98	0.67	11.88	4.98
6	D49	CGRD	30,306	0.70	10,800	7,025	59%	41%	5.0	0.66	6.48	2.96	0.67	8.64	4.05	0.69	9.84	4.70	0.71	11.88	5.84
7	D50	CGRD	41,492	0.95	0	30,372	73%	27%	5.0	0.76	6.48	4.69	0.77	8.64	6.34	0.78	9.84	7.30	0.79	11.88	8.96
8	D27	CGRD	48,010	1.10	15,600	13,691	61%	39%	5.0	0.67	6.48	4.81	0.69	8.64	6.56	0.70	9.84	7.60	0.72	11.88	9.43
9	D39	CSAG	19,408	0.45	9,600	1,214	56%	44%	6.2	0.64	6.17	1.75	0.65	8.27	2.41	0.67	9.44	2.81	0.69	11.43	3.51
10	D62	CGRD	51,094	1.17	20,000	3,336	46%	54%	6.3	0.56	6.15	4.07	0.59	8.24	5.66	0.60	9.42	6.65	0.63	11.39	8.41
11	D63	CGRD	26,256	0.60	6,400	7,591	53%	47%	5.0	0.62	6.48	2.41	0.64	8.64	3.32	0.65	9.84	3.86	0.67	11.88	4.83
12	D64	CGRD	13,502	0.31	0	10,021	74%	26%	5.0	0.77	6.48	1.54	0.78	8.64	2.08	0.78	9.84	2.39	0.80	11.88	2.94
13	D30	CGRD	20,024	0.46	7,600	2,664	51%	49%	5.0	0.60	6.48	1.80	0.62	8.64	2.48	0.64	9.84	2.89	0.66	11.88	3.62
14	D31	CGRD	37,173	0.85	15,600	2,908	50%	50%	5.0	0.59	6.48	3.28	0.61	8.64	4.53	0.63	9.84	5.28	0.65	11.88	6.63
15	D32	CGRD	20,498	0.47	7,600	1,971	47%	53%	5.0	0.57	6.48	1.74	0.59	8.64	2.41	0.61	9.84	2.82	0.64	11.88	3.55
16	D33	CGRD	28,596	0.66	10,400	1,864	43%	57%	5.0	0.54	6.48	2.32	0.57	8.64	3.22	0.58	9.84	3.78	0.61	11.88	4.78
17	D34	CGRD	27,776	0.64	10,400	1,903	44%	56%	5.0	0.55	6.48	2.29	0.58	8.64	3.18	0.59	9.84	3.72	0.62	11.88	4.71
18	D36	CGRD	46,577	1.07	11,600	13,891	55%	45%	5.0	0.63	6.48	4.35	0.65	8.64	5.98	0.66	9.84	6.95	0.68	11.88	8.67
19	D35	CGRD	19,253	0.44	5,200	7,512	66%	34%	5.0	0.71	6.48	2.03	0.72	8.64	2.76	0.73	9.84	3.19	0.75	11.88	3.94
20	E5	CSAG	16,453	0.38	2,800	8,030	66%	34%	5.0	0.71	6.48	1.73	0.72	8.64	2.35	0.73	9.84	2.72	0.75	11.88	3.36
21	E3	CGRD	5,897	0.14	0	4,918	83%	17%	5.0	0.83	6.48	0.73	0.84	8.64	0.98	0.84	9.84	1.12	0.85	11.88	1.37
22	D29	CGRD	20,423	0.47	0	15,104	74%	26%	5.0	0.77	6.48	2.32	0.78	8.64	3.14	0.78	9.84	3.61	0.80	11.88	4.44
23	A12	CSAG	39,423	0.91	13,200	8,516	55%	45%	5.4	0.63	6.37	3.64	0.65	8.51	5.00	0.66	9.70	5.81	0.68	11.72	7.26
24	A10	CGRD	8,078	0.19	0	6,530	81%	19%	5.0	0.81	6.48	0.98	0.82	8.64	1.32	0.83	9.84	1.51	0.84	11.88	1.84
25	A7	CGRD	38,339	0.88	13,200	3,910	45%	55%	5.0	0.56	6.48	3.18	0.58	8.64	4.40	0.60	9.84	5.16	0.62	11.88	6.52
26	B8	CGRD	29,365	0.67	8,400	6,754	52%	48%	5.0	0.61	6.48	2.65	0.63	8.64	3.65	0.64	9.84	4.25	0.66	11.88	5.32
27	B9	CGRD	12,454	0.29	0	9,321	75%	25%	5.0	0.77	6.48	1.43	0.78	8.64	1.93	0.79	9.84	2.22	0.80	11.88	2.72
28	B10	CGRD	30,221	0.69	14,000	6,112	67%	33%	5.0	0.71	6.48	3.20	0.73	8.64	4.35	0.74	9.84	5.02	0.75	11.88	6.20
29	C14	CSAG	12,620	0.29	0	9,734	77%	23%	5.0	0.79	6.48	1.48	0.80	8.64	1.99	0.80	9.84	2.29	0.82	11.88	2.81
30	C9	CSAG	18,264	0.42	6,000	6,068	66%	34%	5.0	0.71	6.48	1.93	0.72	8.64	2.62	0.73	9.84	3.02	0.75	11.88	3.74
31	C13	ASAG	65,838	1.51	11,200	17,553	44%	56%	5.0	0.55	6.48	5.39	0.57	8.64	7.48	0.59	9.84	8.77	0.62	11.88	11.09
32	C11	ASAG	57,508	1.32	2,400	25,215	48%	52%	5.0	0.58	6.48	4.97	0.60	8.64	6.87	0.62	9.84	8.02	0.64	11.88	10.09
33	F5	ASAG	39,893	0.92	0	27,545	69%	31%	5.0	0.73	6.48	4.33	0.74	8.64	5.88	0.75	9.84	6.78	0.77	11.88	8.35
34	F4	ASAG	56,258	1.29	0	24,597	44%	56%	5.0	0.55	6.48	4.61	0.57	8.64	6.39	0.59	9.84	7.50	0.62	11.88	9.48
35	G15	ASAG	46,754	1.07	2,800	31,503	73%	27%	5.0	0.76	6.48	5.29	0.77	8.64	7.16	0.78	9.84	8.23	0.79	11.88	10.11
36	G22	ASAG	60,518	1.39	0	26,348	44%	56%	5.0	0.55	6.48	4.94	0.57	8.64	6.86	0.59	9.84	8.05	0.62	11.88	10.18
37	G20	ASAG	50,614	1.16	0	35,005	69%	31%	5.0	0.73	6.48	5.50	0.74	8.64	7.46	0.75	9.84	8.60	0.77	11.88	10.60
38	G17	ASAG	76,252	1.75	0	33,497	44%	56%	5.0	0.55	6.48	6.26	0.57	8.64	8.69	0.59	9.84	10.18	0.62	11.88	12.88
39	G19	ASAG	30,734	0.71	0	20,135	66%	34%	5.0	0.71	6.48	3.22	0.72	8.64	4.38	0.73	9.84	5.06	0.75	11.88	6.26
40	J2	ASAG	42,592	0.98	0	22,370	53%	47%	5.0	0.61	6.48	3.88	0.63	8.64	5.34	0.65	9.84	6.22	0.67	11.88	7.78

PARKSIDE ON THE RIVER SECTIONS 11, 12A & 15A
TIME OF CONCENTRATION CALCULATIONS

Contributing Area	Sheet Flow				Shallow Concentrated Flow (Unpaved)				Gutter Flow		
	Length (ft)	Slope (ft/ft)	Roughness Coefficient	T_{sheet}	Length (ft)	Slope (ft/ft)	Roughness Coefficient	$T_{unpaved}$	Length (ft)	Velocity (ft/s)	Tpaved
1	30	0.06	0.24	0.70	71.65	0.06	0.24	1.17	61	6	0.17
2	30	0.06	0.24	0.70	181.9	0.06	0.24	2.97	61.6	6	0.17
3	30	0.06	0.24	0.70	191.53	0.06	0.24	3.13	62.11	6	0.17
4	30	0.06	0.24	0.70	156.6	0.06	0.24	2.56	61.59	6	0.17
5	30	0.06	0.24	0.70	168.62	0.06	0.24	2.75	82.1	6	0.23
6	30	0.02	0.24	1.21	71.76	0.02	0.24	2.03	166.52	6	0.46
7	0	0	0	0.00	0	0	0	0.00	0	0	0.00
8	30	0.02	0.24	1.21	119	0.02	0.24	3.37	131	6	0.36
9	30	0.02	0.24	1.21	171	0.02	0.24	4.84	52.6	6	0.15
10	30	0.02	0.24	1.21	301	0.06	0.24	4.92	58	6	0.16
11	30	0.06	0.24	0.70	183.74	0.06	0.24	3.00	335.29	6	0.93
12	0	0	0	0.00	0	0	0	0.00	0	0	0.00
13	30	0.1	0.24	0.54	57.1	0.1	0.24	0.72	102.41	6	0.28
14	30	0.1	0.24	0.54	193.72	0.1	0.24	2.45	0	6	0.00
15	30	0.1	0.24	0.54	215.91	0.1	0.24	2.73	0	6	0.00
16	30	0.1	0.24	0.54	239.31	0.1	0.24	3.03	0	6	0.00
17	30	0.1	0.24	0.54	236.77	0.1	0.24	2.99	0	6	0.00
18	30	0.08	0.24	0.61	139.62	0.08	0.24	1.97	95.49	6	0.27
19	30	0.08	0.24	0.61	114	0.02	0.24	3.22	332	6	0.92
20	0	0	0	0.00	0	0	0	0.00	0	0	0.00
21	0	0	0	0.00	0	0	0	0.00	0	0	0.00
22	0	0	0	0.00	0	0	0	0.00	0	0	0.00
23	30	0.1	0.24	0.54	148	0.02	0.24	4.19	249.18	6	0.69
24	0	0	0	0.00	0	0	0	0.00	0	0	0.00
25	30	0.1	0.24	0.54	143	0.02	0.24	4.04	111.54	6	0.31
26	30	0.1	0.24	0.54	158.26	0.06	0.24	2.58	85.44	6	0.24
27	0	0	0	0.00	0	0	0	0.00	0	0	0.00
28	0	0	0	0.00	0	0	0	0.00	0	0	0.00
29	0	0	0	0.00	0	0	0	0.00	0	0	0.00
30	0	0	0	0.00	0	0	0	0.00	0	6	0.00
31	30	0.06	0.24	0.70	70	0.06	0.24	1.14	358.58	6	1.00
32	30	0.02	0.24	1.21	33	0.02	0.24	0.93	563	6	1.56
33	0	0	0	0.00	0	0	0	0.00	0	0	0.00
34	0	0	0	0.00	0	0	0	0.00	0	0	0.00
35	0	0	0	0.00	0	0	0	0.00	0	0	0.00
36	0	0	0	0.00	0	0	0	0.00	0	0	0.00
37	0	0	0	0.00	0	0	0	0.00	0	0	0.00
38	0	0	0	0.00	0	0	0	0.00	0	0	0.00
39	0	0	0	0.00	0	0	0	0.00	0	0	0.00
40	0	0	0	0.00	0	0	0	0.00	0	0	0.00

Curb Inlets in Sump Calculation Summary: 25 year

Drainage Area No.	Inlet No.	Q_{25} (cfs)	Qpass (cfs)	Qtotal (cfs)	W (ft)	Inlet Depression, a (ft)	Curb opening height, h (ft)	Street Width (ft)	Crown Height (%)	Clogging Factor (%)	Inlet Length (ft)	d_{weir} Above S_x (ft)	$d_{orifice}$ above S_x (ft)	a	b	Depth of Ponding over S_x, y0 (ft)	Ponded Width (ft)
9	D39	2.81	0.00	2.81	1.50	0.42	0.52	28.00	0.50	100%	10.00	0.21	0.00	0.07	0.00	0.21	3.33
20	E5	2.72	0.00	2.72	1.50	0.42	0.52	28.00	0.50	100%	10.00	0.21	0.00	0.07	0.00	0.21	3.25
23	A12	5.81	0.00	5.81	1.50	0.42	0.52	28.00	0.50	100%	10.00	0.34	0.00	0.07	0.00	0.31	5.35
29	C14	2.29	0.00	2.29	1.50	0.42	0.52	28.00	0.50	100%	10.00	0.18	0.00	0.07	0.00	0.18	2.86
30	C9	3.02	0.00	3.02	1.50	0.42	0.52	28.00	0.50	100%	10.00	0.22	0.00	0.07	0.00	0.22	3.53

Curb Inlets in Sump Calculation Summary: 100 year

Drainage Area No.	Inlet No.	Q_{100} (cfs)	Qpass (cfs)	Qtotal (cfs)	W (ft)	Inlet Depression, a (ft)	Curb opening height, h (ft)	Street Width (ft)	Crown Height (%)	Clogging Factor (%)	Inlet Length (ft)	d_{weir} Above S_x (ft)	$d_{orifice}$ above S_x (ft)	a	b	Depth of Ponding over S_x, y0 (ft)	Ponded Width (ft)
9	D39	3.51	0.00	3.51	1.50	0.42	0.52	28.00	0.50	100%	10.00	0.24	0.00	0.07	0.00	0.24	3.97
20	E5	3.36	0.00	3.36	1.50	0.42	0.52	28.00	0.50	100%	10.00	0.24	0.00	0.07	0.00	0.24	3.84
23	A12	7.26	0.00	7.26	1.50	0.42	0.52	28.00	0.50	100%	10.00	0.40	0.00	0.07	0.00	0.31	5.35
29	C14	2.81	0.00	2.81	1.50	0.42	0.52	28.00	0.50	100%	10.00	0.21	0.00	0.07	0.00	0.21	3.33
30	C9	3.74	0.00	3.74	1.50	0.42	0.52	28.00	0.50	100%	10.00	0.25	0.00	0.07	0.00	0.25	4.18

Area Inlet in Sag Calculation Summary: 25 year

Drainage Area No.	Inlet No.	Q_{25} (cfs)	Qpass (cfs)	Qtotal (cfs)	Throat Height, h (in)	Inlet Length, L (ft)	Yard Cross Slope, Sx (%)	Weir Depth above FL (ft)	Orifice Depth above FL (ft)	Ponded Depth, d (ft)	Ponding Spread, T (ft)
31	C13	8.77	0.00	8.77	5.00	16.00	1.67%	0.32	0.27	0.32	19.17
32	C11	8.02	0.00	8.02	5.00	16.00	1.67%	0.30	0.26	0.30	18.06
33	F5	6.78	0.00	6.78	5.00	16.00	1.67%	0.27	0.24	0.27	16.13
34	F4	7.50	0.00	7.50	5.00	16.00	1.67%	0.29	0.25	0.29	17.26
35	G15	8.23	0.00	8.23	5.00	16.00	1.67%	0.31	0.26	0.31	18.38
36	G22	8.05	0.00	8.05	5.00	16.00	1.67%	0.30	0.26	0.30	18.10
37	G20	8.60	0.00	8.60	5.00	16.00	1.67%	0.32	0.27	0.32	18.93
38	G17	10.18	0.00	10.18	5.00	16.00	1.67%	0.35	0.29	0.35	21.19
39	G19	5.06	0.00	5.06	5.00	16.00	1.67%	0.22	0.23	0.22	13.27
40	J2	6.22	0.00	6.22	5.00	16.00	1.67%	0.25	0.24	0.25	15.22

Area Inlet in Sag Calculation Summary: 100 year

Drainage Area No.	Inlet No.	Q_{100} (cfs)	Qpass (cfs)	Qtotal (cfs)	Throat Height, h (in)	Inlet Length, L (ft)	Yard Cross Slope, Sx (%)	Weir Depth above FL (ft)	Orifice Depth above FL (ft)	Ponded Depth, d (ft)	Ponding Spread, T (ft)
31	C13	11.09	0.00	11.09	5.00	16.00	1.67%	0.37	0.30	0.37	22.44
32	C11	10.09	0.00	10.09	5.00	16.00	1.67%	0.35	0.29	0.35	21.06
33	F5	8.35	0.00	8.35	5.00	16.00	1.67%	0.31	0.26	0.31	18.55
34	F4	9.48	0.00	9.48	5.00	16.00	1.67%	0.34	0.28	0.34	20.20
35	G15	10.11	0.82	10.93	5.00	16.00	1.67%	0.37	0.30	0.37	22.22
36	G22	10.18	0.00	10.18	5.00	16.00	1.67%	0.35	0.29	0.35	21.19
37	G20	10.60	0.00	10.60	5.00	16.00	1.67%	0.36	0.30	0.36	21.77
38	G17	12.88	0.00	12.88	5.00	16.00	1.67%	0.41	0.34	0.41	24.80
39	G19	6.26	0.00	6.26	5.00	16.00	1.67%	0.26	0.24	0.26	15.29
40	J2	7.78	0.00	7.78	5.00	16.00	1.67%	0.30	0.26	0.30	17.70

Curb Inlets On Grade Calculation Summary: 25 year

Drainage Area No.	Inlet No.	Q_{25} (cfs)	Q_{pass} (cfs)	Q_{total} (cfs)	Slope (%)	n	Ku	Street Width (ft)	Crown Height (ft)	Inlet Depression, a (ft)	K0	K1	K2	y0 (ft)	a	b	Flow Spread, T (ft)	H1 (ft)	H2 (ft)	Qa/La (cfs/ft)	Length (ft)	Qa	Q_{pass} (cfs)	% Captured	Bypass to Inlet
1	D28	4.74	0.00	4.74	6.10%	0.015	0.560	28.00	0.500	0.42	2.85	0.50	3.03	0.30	0.0714	0.0026	5.23	0.72	0.42	0.76	10.00	7.57		100%	G15
2	D51	6.04	0.00	6.04	8.00%	0.015	0.560	35.00	0.500	0.42	2.85	0.50	3.03	0.31	0.0571	0.0016	6.85	0.73	0.42	0.77	10.00	7.69		100%	G15
3	D52	6.07	0.00	6.07	8.00%	0.015	0.560	35.00	0.500	0.42	2.85	0.50	3.03	0.32	0.0571	0.0016	6.87	0.73	0.42	0.77	10.00	7.69		100%	D51
4	D53	5.02	0.00	5.02	8.00%	0.015	0.560	35.00	0.500	0.42	2.85	0.50	3.03	0.30	0.0571	0.0016	6.33	0.71	0.42	0.75	10.00	7.49		100%	D52
5	D54	3.98	0.00	3.98	9.90%	0.015	0.560	35.00	0.500	0.42	2.85	0.50	3.03	0.26	0.0571	0.0016	5.50	0.68	0.42	0.72	10.00	7.17		100%	D53
6	D49	4.70	0.00	4.70	8.10%	0.015	0.560	35.00	0.500	0.42	2.85	0.50	3.03	0.29	0.0571	0.0016	6.14	0.71	0.42	0.74	10.00	7.42		100%	D54
7	D50	7.30	0.00	7.30	8.00%	0.015	0.560	35.00	0.500	0.42	2.85	0.50	3.03	0.34	0.0571	0.0016	7.45	0.75	0.42	0.79	10.00	7.90		100%	G15
8	D27	7.60	0.00	7.60	4.20%	0.015	0.560	28.00	0.500	0.42	2.85	0.50	3.03	0.38	0.0714	0.0026	7.08	0.79	0.42	0.83	10.00	8.35		100%	D35
10	D62	6.65	0.00	6.65	6.60%	0.015	0.560	28.00	0.500	0.42	2.85	0.50	3.03	0.34	0.0714	0.0026	5.97	0.75	0.42	0.79	10.00	7.90		100%	D63
11	D63	3.86	0.00	3.86	10.00%	0.015	0.560	28.00	0.500	0.42	2.85	0.50	3.03	0.26	0.0714	0.0026	4.34	0.68	0.42	0.71	10.00	7.14		100%	D28
12	D64	2.39	0.00	2.39	10.40%	0.015	0.560	28.00	0.500	0.42	2.85	0.50	3.03	0.22	0.0714	0.0026	3.56	0.64	0.42	0.67	10.00	6.75		100%	D28
13	D30	2.89	0.00	2.89	1.00%	0.015	0.560	28.00	0.500	0.42	2.85	0.50	3.03	0.35	0.0714	0.0026	6.28	0.76	0.42	0.80	10.00	8.03		100%	D28
14	D31	5.28	0.00	5.28	1.00%	0.015	0.560	28.00	0.500	0.42	2.85	0.50	3.03	0.42	0.0714	0.0026	8.56	0.84	0.42	0.89	10.00	8.85		100%	D30
15	D32	2.82	0.00	2.82	3.80%	0.015	0.560	28.00	0.500	0.42	2.85	0.50	3.03	0.28	0.0714	0.0026	4.65	0.69	0.42	0.73	10.00	7.29		100%	D31
16	D33	3.78	0.00	3.78	6.70%	0.015	0.560	28.00	0.500	0.42	2.85	0.50	3.03	0.28	0.0714	0.0026	4.66	0.69	0.42	0.73	10.00	7.30		100%	D32
17	D34	3.72	0.00	3.72	6.70%	0.015	0.560	28.00	0.500	0.42	2.85	0.50	3.03	0.28	0.0714	0.0026	4.64	0.69	0.42	0.73	10.00	7.29		100%	D33
18	D36	6.95	0.00	6.95	8.30%	0.015	0.560	28.00	0.500	0.42	2.85	0.50	3.03	0.33	0.0714	0.0026	5.78	0.74	0.42	0.78	10.00	7.82		100%	D34
19	D35	3.19	0.00	3.19	7.30%	0.015	0.560	28.00	0.500	0.42	2.85	0.50	3.03	0.26	0.0714	0.0026	4.28	0.68	0.42	0.71	10.00	7.11		100%	E5
21	E3	1.12	0.00	1.12	1.60%	0.015	0.560	28.00	0.500	0.42	2.85	0.50	3.03	0.24	0.0714	0.0026	3.82	0.65	0.42	0.69	10.00	6.88		100%	E5
22	D29	3.61	0.00	3.61	7.00%	0.015	0.560	28.00	0.500	0.42	2.85	0.50	3.03	0.27	0.0714	0.0026	4.54	0.69	0.42	0.72	10.00	7.24		100%	G15
24	A10	1.51	0.00	1.51	1.20%	0.015	0.560	28.00	0.500	0.42	2.85	0.50	3.03	0.27	0.0714	0.0026	4.56	0.69	0.42	0.72	10.00	7.25		100%	A12
25	A7	5.16	0.00	5.16	10.00%	0.015	0.560	28.00	0.500	0.42	2.85	0.50	3.03	0.29	0.0714	0.0026	4.89	0.70	0.42	0.74	10.00	7.41		100%	A12
26	B8	4.25	0.00	4.25	6.80%	0.015	0.560	28.00	0.500	0.42	2.85	0.50	3.03	0.29	0.0714	0.0026	4.88	0.70	0.42	0.74	10.00	7.41		100%	B10
27	B9	2.22	0.00	2.22	7.00%	0.015	0.560	28.00	0.500	0.42	2.85	0.50	3.03	0.23	0.0714	0.0026	3.74	0.65	0.42	0.68	10.00	6.84		100%	C14
28	B10	5.02	0.00	5.02	7.00%	0.015	0.560	28.00	0.500	0.42	2.85	0.50	3.03	0.30	0.0714	0.0026	5.21	0.72	0.42	0.76	10.00	7.56		100%	C9

Curb Inlets On Grade Calculation Summary: 100 year

Drainage Area No.	Inlet No.	Q_{100} (cfs)	Q_{pass} (cfs)	Q_{total} (cfs)	Slope (%)	n	Ku	Street Width (ft)	Crown Height (ft)	Inlet Depression, a (ft)	K0	K1	K2	y0 (ft)	a	b	Flow Spread, T (ft)	H1 (ft)	H2 (ft)	Qa/La (cfs/ft)	Length (ft)	Qa	Q_{pass} (cfs)	% Captured	Bypass to Inlet
1	D28	5.92	0.00	5.92	6.10%	0.015	0.560	28.00	0.500	0.42	2.85	0.50	3.03	0.33	0.0714	0.0026	5.77	0.74	0.42	0.78	10.00	7.81		100%	G15
2	D51	7.49	0.00	7.49	8.00%	0.015	0.560	35.00	0.500	0.42	2.85	0.50	3.03	0.34	0.0571	0.0016	7.54	0.75	0.42	0.79	10.00	7.93		100%	G15
3	D52	7.53	0.00	7.53	8.00%	0.015	0.560	35.00	0.500	0.42	2.85	0.50	3.03	0.34	0.0571	0.0016	7.56	0.76	0.42	0.79	10.00	7.93		100%	D51
4	D53	6.26	0.00	6.26	8.00%	0.015	0.560	35.00	0.500	0.42	2.85	0.50	3.03	0.32	0.0571	0.0016	6.96	0.74	0.42	0.77	10.00	7.72		100%	D52
5	D54	4.98	0.00	4.98	9.90%	0.015	0.560	35.00	0.500	0.42	2.85	0.50	3.03	0.29	0.0571	0.0016	6.03	0.70	0.42	0.74	10.00	7.38		100%	D53
6	D49	5.84	0.00	5.84	8.10%	0.015	0.560	35.00	0.500	0.42	2.85	0.50	3.03	0.31	0.0571	0.0016	6.74	0.73	0.42	0.76	10.00	7.64		100%	D54
7	D50	8.96	0.00	8.96	8.00%	0.015	0.560	35.00	0.500	0.42	2.85	0.50	3.03	0.36	0.0571	0.0016	8.20	0.78	0.42	0.81	10.00	8.14	0.82	91%	G15
8	D27	9.43	0.00	9.43	4.20%	0.015	0.560	28.00	0.500	0.42	2.85	0.50	3.03	0.41	0.0714	0.0026	7.92	0.82	0.42	0.86	10.00	8.65	0.78	92%	D35
10	D62	8.41	0.00	8.41	6.60%	0.015	0.560	28.00	0.500	0.42	2.85	0.50	3.03	0.36	0.0714	0.0026	6.66	0.78	0.42	0.82	10.00	8.19	0.23	97%	D63
11	D63	4.83	0.23	5.06	10.00%	0.015	0.560	28.00	0.500	0.42	2.85	0.50	3.03	0.29	0.0714	0.0026	4.85	0.70	0.42	0.74	10.00	7.39		100%	D28
12	D64	2.94	0.00	2.94	10.40%	0.015	0.560	28.00	0.500	0.42	2.85	0.50	3.03	0.24	0.0714	0.0026	3.86	0.65	0.42	0.69	10.00	6.90		100%	D28
13	D30	3.62	0.00	3.62	1.00%	0.015	0.560	28.00	0.500	0.42	2.85	0.50	3.03	0.37	0.0714	0.0026	6.99	0.79	0.42	0.83	10.00	8.31		100%	D28
14	D31	6.63	0.00	6.63	1.00%	0.015	0.560	28.00	0.500	0.42	2.85	0.50	3.03	0.46	0.0714	0.0026	9.93	0.87	0.42	0.92	10.00	9.22		100%	D30
15	D32	3.55	0.00	3.55	3.80%	0.015	0.560	28.00	0.500	0.42	2.85	0.50	3.03	0.30	0.0714	0.0026	5.12	0.72	0.42	0.75	10.00	7.52		100%	D31
16	D33	4.78	0.00	4.78	6.70%	0.015	0.560	28.00	0.500	0.42	2.85	0.50	3.03	0.30	0.0714	0.0026	5.15	0.72	0.42	0.75	10.00	7.53		100%	D32
17	D34	4.71	0.59	5.30	6.70%	0.015	0.560	28.00	0.500	0.42	2.85	0.50	3.03	0.31	0.0714	0.0026	5.38	0.73	0.42	0.76	10.00	7.64		100%	D33
18	D36	8.67	0.00	8.67	8.30%	0.015	0.560	28.00	0.500	0.42	2.85	0.50	3.03	0.35	0.0714	0.0026	6.40	0.77	0.42	0.81	10.00	8.08	0.59	93%	D34
19	D35	3.94	0.78	4.72	7.30%	0.015	0.560	28.00	0.500	0.42	2.85	0.50	3.03	0.29	0.0714	0.0026	5.03	0.71	0.42	0.75	10.00	7.48		100%	E5
21	E3	1.37	0.00	1.37	1.60%	0.015	0.560	28.00	0.500	0.42	2.85	0.50	3.03	0.25	0.0714	0.0026	4.13	0.67	0.42	0.70	10.00	7.04		100%	E5
22	D29	4.44	0.00	4.44	7.00%	0.015	0.560	28.00	0.500	0.42	2.85	0.50	3.03	0.29	0.0714	0.0026	4.94	0.71	0.42	0.74	10.00	7.44		100%	G15
24	A10	1.84	0.00	1.84	1.20%	0.015	0.560	28.00	0.500	0.42	2.85	0.50	3.03	0.29	0.0714	0.0026	4.95	0.71	0.42	0.74	10.00	7.44		100%	A12
25	A7	6.52	0.00	6.52	10.00%	0.015	0.560	28.00	0.500	0.42	2.85	0.50	3.03	0.31	0.0714	0.0026	5.40	0.73	0.42	0.76	10.00	7.65		100%	A12
26	B8	5.32	0.00	5.32	6.80%	0.015	0.560	28.00	0.500	0.42	2.85	0.50	3.03	0.31	0.0714	0.0026	5.38	0.73	0.42	0.76	10.00	7.64		100%	B10
27	B9	2.72	0.00	2.72	7.00%	0.015	0.560	28.00	0.500	0.42	2.85	0.50	3.03	0.25	0.0714	0.0026	4.05	0.66	0.42	0.70	10.00	7.00		100%	C14
28	B10	6.20	0.00	6.20	7.00%	0.015	0.560	28.00	0.500	0.42	2.85	0.50	3.03	0.32	0.0714	0.0026	5.71	0.74	0.42	0.78	10.00	7.79		100%	C9

NO.	REVISION	BY	DATE

811 Know what's below. Call before you dig.

5508 HIGHWAY 290 WEST
SUITE 150
AUSTIN, TX 78735
512.872.6696
HRGREEN.COM
TBPE NO: 16384
TBPLS NO: 10194101

HRGreen®
DEVELOPMENT TX

STATE OF TEXAS
CHRISTINE N. CAMPBELL
142536
LICENSED PROFESSIONAL ENGINEER
07/03/2025

INLET DRAINAGE CALCULATIONS

PARKSIDE ON THE RIVER SECTIONS 11, 12A & 15A CONSTRUCTION PLANS
GEORGETOWN, WILLIAMSON, TEXAS

DESIGNED BY: CC
DRAWN BY: MM
CHECKED BY: SN
APPROVED BY:

2025-XX-CON

P:\Blake Magee\Parkside Sections 11-15 & WON 5\Section 11, 12A & 15A\03_ACAD\Plans\sh2403522 pInletDAM.dwg, INLET DRAINAGE CALCULATIONS, July 18, 2025, 11:55 AM, makai.muhammad

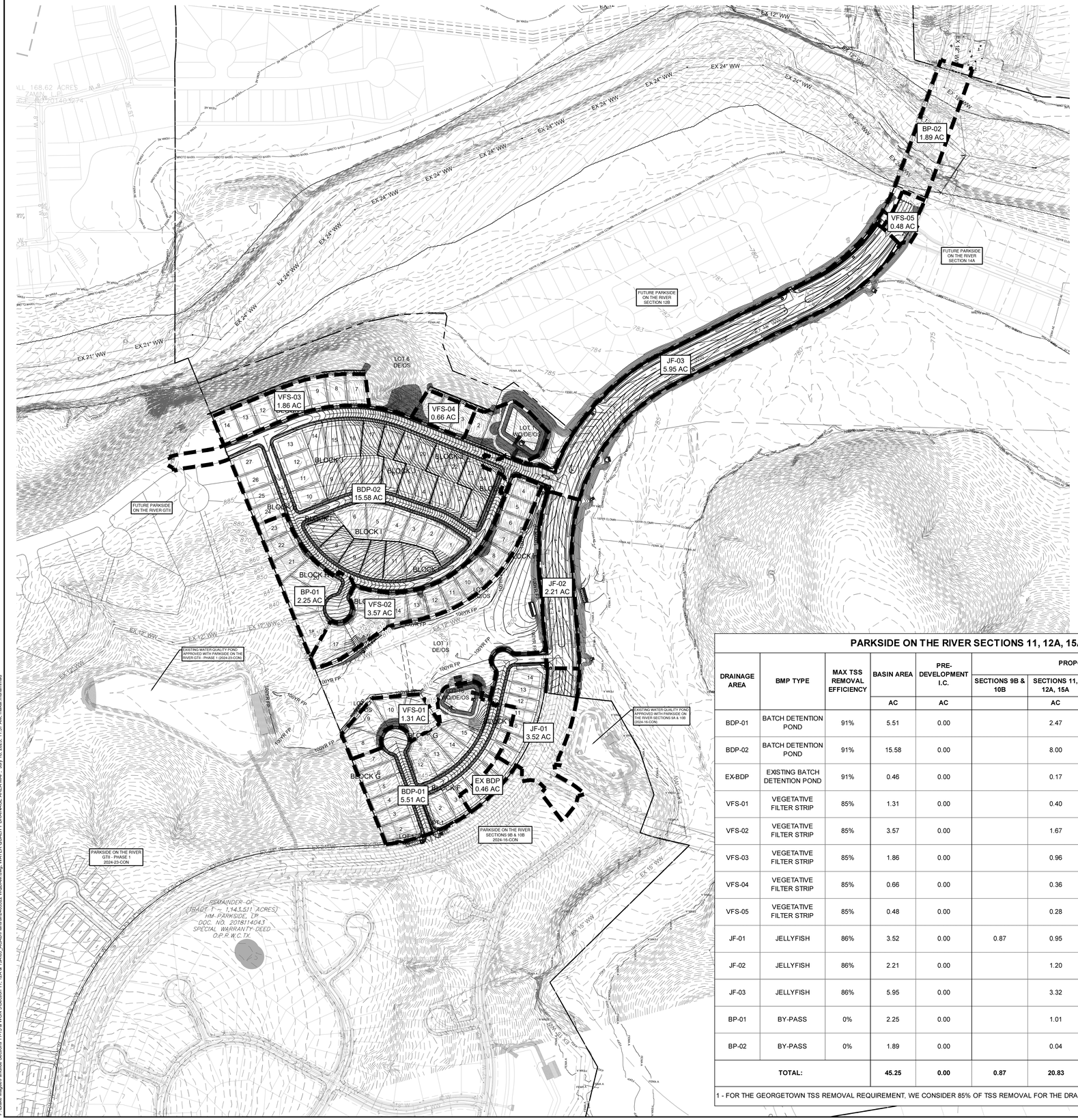

0 200′ 400′

SCALE: 1" = 200′

LEGEND

- EXISTING MINOR CONTOUR
- EXISTING MAJOR CONTOUR
- PROPOSED MINOR CONTOUR
- PROPOSED MAJOR CONTOUR
- BOUNDARY
- EASEMENT
- FEMA FLOODWAY PER FIRM# 48491C0460F & LOMR# 21-06-0115P
- FEMA AE — 100YR ATLAS 14 FEMA ZONE AE FLOODPLAIN PER FIRM# 48491C0460F & LOMR# 21-06-0115P
- FEMA A — 100YR FEMA ZONE A FLOODPLAIN PER FIRM MAP# 48491C0460F
- 100YR CLOMR — 100YR CLOMR FLOODPLAIN CASE# 15-06-2071R
- FDFP — 100YR ATLAS 14 FULLY DEVELOPED FLOODPLAIN (STANTEC DRAINAGE STUDY, SHERVIN NOOSHIN, 3/25/19) APPROVED WITH PP# 2019-5-PP
- OHWM — ORDINARY HIGH WATER MARK PER ADAMS ENVIRONMENTAL
- PROPOSED STORM LINE
- FIRE HYDRANT
- WATER VALVE
- STORM SEWER MAHNOLE
- WASTEWATER MANHOLE
- CURB INLET
- P-1 / 5.00 AC — DRAINAGE AREA NAME / DRAINAGE AREA (IN ACRES)
- DIRECTION OF FLOW
- DRAINAGE AREA

PARKSIDE ON THE RIVER SECTIONS 11, 12A, 15A AND SECTION 15B - TSS REMOVAL SUMMARY - FULLY-DEVELOPED

DRAINAGE AREA	BMP TYPE	MAX TSS REMOVAL EFFICIENCY	BASIN AREA	PRE-DEVELOPMENT I.C.	PROPOSED I.C.				POST-DEVELOPMENT I.C.		TCEQ REQUIRED 80% TSS LOAD REMOVAL	CITY OF GEORGETOWN REQUIRED 85% TSS LOAD REMOVAL	PROVIDED TSS LOAD REMOVAL	VOLUME REQUIRED	VOLUME PROVIDED
					SECTIONS 9B & 10B	SECTIONS 11, 12A, 15A	SECTION 15B	FUTURE							
			AC	AC		AC	AC	AC	AC	%	LB	LB	LB	CF	CF
BDP-01	BATCH DETENTION POND	91%	5.51	0.00		2.47			2.47	45%	2,150	2,284	2,475	26,411	35,491
BDP-02	BATCH DETENTION POND	91%	15.58	0.00		8.00		0.25	8.25	53%	7,181	7,630	7,850	55,888	66,371
EX-BDP	EXISTING BATCH DETENTION POND	91%	0.46	0.00		0.17			0.17	37%	148	157	157		
VFS-01	VEGETATIVE FILTER STRIP	85%	1.31	0.00		0.40			0.40	31%	348		390		
VFS-02	VEGETATIVE FILTER STRIP	85%	3.57	0.00		1.67			1.67	47%	1,454		1,600		
VFS-03	VEGETATIVE FILTER STRIP	85%	1.86	0.00		0.96			0.96	52%	836		917		
VFS-04	VEGETATIVE FILTER STRIP	85%	0.66	0.00		0.36			0.36	55%	313		343		
VFS-05	VEGETATIVE FILTER STRIP	85%	0.48	0.00		0.28			0.28	58%	244		266		
JF-01	JELLYFISH	86%	3.52	0.00	0.87	0.95			1.82	52%	830	882	1,582		
JF-02	JELLYFISH	86%	2.21	0.00		1.20			1.20	54%	1,044	1,110	1,101		
JF-03	JELLYFISH	86%	5.95	0.00		3.32			3.32	56%	2,890	3,070	3,089		
BP-01	BY-PASS	0%	2.25	0.00		1.01			1.01	45%	879		0		
BP-02	BY-PASS	0%	1.89	0.00		0.04	0.76		0.80	42%	696		0		
TOTAL:			45.25	0.00	0.87	20.83	0.76	0.25	22.71	50%	19,012		19,770		

1 - FOR THE GEORGETOWN TSS REMOVAL REQUIREMENT, WE CONSIDER 85% OF TSS REMOVAL FOR THE DRAINAGE AREA THAT DRAINS TOWARD THE JELLYFISH AND BATCH DETENTION PONDS.

NO.	REVISION	BY	DATE

811 Know what's below. Call before you dig.

HRGreen® DEVELOPMENT TX
5508 HIGHWAY 290 WEST
SUITE 150
AUSTIN, TX 78735
512.872.6696
HRGREEN.COM
TBPE NO: 16384
TBPLS NO: 10194101

STATE OF TEXAS
CHRISTINE N. CAMPBELL
142536
LICENSED PROFESSIONAL ENGINEER
07/15/2025

WATER QUALITY DRAINAGE AREA MAP

PARKSIDE ON THE RIVER SECTIONS 11, 12A & 15A CONSTRUCTION PLANS

GEORGETOWN, WILLIAMSON, TEXAS

DESIGNED BY: CC
DRAWN BY: MM
CHECKED BY: SN
APPROVED BY:

SHEET 77 OF 141

2025-XX-CON

P:\Blake Magee\Parkside Sections 11-15 & WOH S\Sections 11, 12A & 15A\00_ACAD\Planset\240502\2 WQDAM.dwg, WATER QUALITY DRAINAGE AREA MAP, July 16, 2025, 11:57 AM, mslak muhammad

BATCH DETENTION POND - BDP-01

Texas Commission on Environmental Quality

TSS Removal Calculations 04-20-2009 — **Project Name:** Parkside Secs. 11, 12A, 15A, 15B — **Date Prepared:** 6/2/2025

Additional information is provided for cells with a red triangle in the upper right corner. Place the cursor over the cell.
Text shown in blue indicate location of instructions in the Technical Guidance Manual - RG-348.
Characters shown in red are data entry fields.
Characters shown in black (Bold) are calculated fields. Changes to these fields will remove the equations used in the spreadsheet.

1. The Required Load Reduction for the total project: Calculations from RG-348 Pages 3-27 to 3-30

Page 3-29 Equation 3.3: $L_M = 27.2(A_N \times P)$

where: $L_{M\ TOTAL\ PROJECT}$ = Required TSS removal resulting from the proposed development = 80% of increased load
A_N = Net increase in impervious area for the project
P = Average annual precipitation, inches

Site Data: Determine Required Load Removal Based on the Entire Project
County = Williamson
Total project area included in plan * = 56.78 acres
Predevelopment impervious area within the limits of the plan * = 0.00 acres
Total post-development impervious area within the limits of the plan * = 21.58 acres
Total post-development impervious cover fraction * = 0.38
P = 32 inches

$L_{M\ TOTAL\ PROJECT}$ = 18783 lbs.
* The values entered in these fields should be for the total project area.

Number of drainage basins / outfalls areas leaving the plan area = 13

2. Drainage Basin Parameters (This information should be provided for each basin):

Drainage Basin/Outfall Area No. = BDP-01

Total drainage basin/outfall area = 5.51 acres
Predevelopment impervious area within drainage basin/outfall area = 0.00 acres
Post-development impervious area within drainage basin/outfall area = 2.47 acres
Post-development impervious fraction within drainage basin/outfall area = 0.45
$L_{M\ THIS\ BASIN}$ = 2150 lbs.

3. Indicate the proposed BMP Code for this basin.

Proposed BMP = Batch Detention
Removal efficiency = 91 percent

4. Calculate Maximum TSS Load Removed (L_R) for this Drainage Basin by the selected BMP Type.

RG-348 Page 3-33 Equation 3.7: L_R = (BMP efficiency) x P x (A_I x 34.6 + A_P x 0.54)

where: A_C = Total On-Site drainage area in the BMP catchment area
A_I = Impervious area proposed in the BMP catchment area
A_P = Pervious area remaining in the BMP catchment area
L_R = TSS Load removed from this catchment area by the proposed BMP

A_C = 5.51 acres
A_I = 2.47 acres
A_P = 3.04 acres
L_R = 2536 lbs

5. Calculate Fraction of Annual Runoff to Treat the drainage basin / outfall area

Desired $L_{M\ THIS\ BASIN}$ = 2475 lbs.

F = 0.98

6. Calculate Capture Volume required by the BMP Type for this drainage basin / outfall area. Calculations from RG-348 Pages 3-34 to 3-36

Rainfall Depth = 3.33 inches
Post Development Runoff Coefficient = 0.33
On-site Water Quality Volume = 22009 cubic feet

Calculations from RG-348 Pages 3-36 to 3-37

Off-site area draining to BMP = 0.00 acres
Off-site Impervious cover draining to BMP = 0.00 acres
Impervious fraction of off-site area = 0
Off-site Runoff Coefficient = 0.00
Off-site Water Quality Volume = 0 cubic feet

Storage for Sediment = 4402
Total Capture Volume (required water quality volume(s) x 1.20) = 26411 cubic feet

1/2 WQV = 13205

BATCH DETENTION POND - BDP-02

Texas Commission on Environmental Quality

TSS Removal Calculations 04-20-2009 — **Project Name:** Parkside Secs. 11, 12A, 15A, 15B — **Date Prepared:** 6/2/2025

Additional information is provided for cells with a red triangle in the upper right corner. Place the cursor over the cell.
Text shown in blue indicate location of instructions in the Technical Guidance Manual - RG-348.
Characters shown in red are data entry fields.
Characters shown in black (Bold) are calculated fields. Changes to these fields will remove the equations used in the spreadsheet.

1. The Required Load Reduction for the total project: Calculations from RG-348 Pages 3-27 to 3-30

Page 3-29 Equation 3.3: $L_M = 27.2(A_N \times P)$

where: $L_{M\ TOTAL\ PROJECT}$ = Required TSS removal resulting from the proposed development = 80% of increased load
A_N = Net increase in impervious area for the project
P = Average annual precipitation, inches

Site Data: Determine Required Load Removal Based on the Entire Project
County = Williamson
Total project area included in plan * = 56.78 acres
Predevelopment impervious area within the limits of the plan * = 0.00 acres
Total post-development impervious area within the limits of the plan * = 21.58 acres
Total post-development impervious cover fraction * = 0.38
P = 32 inches

$L_{M\ TOTAL\ PROJECT}$ = 18783 lbs.
* The values entered in these fields should be for the total project area.

Number of drainage basins / outfalls areas leaving the plan area = 13

2. Drainage Basin Parameters (This information should be provided for each basin):

Drainage Basin/Outfall Area No. = BDP-02

Total drainage basin/outfall area = 15.58 acres
Predevelopment impervious area within drainage basin/outfall area = 0.00 acres
Post-development impervious area within drainage basin/outfall area = 8.25 acres
Post-development impervious fraction within drainage basin/outfall area = 0.53
$L_{M\ THIS\ BASIN}$ = 7181 lbs.

3. Indicate the proposed BMP Code for this basin.

Proposed BMP = Batch Detention
Removal efficiency = 91 percent

4. Calculate Maximum TSS Load Removed (L_R) for this Drainage Basin by the selected BMP Type.

RG-348 Page 3-33 Equation 3.7: L_R = (BMP efficiency) x P x (A_I x 34.6 + A_P x 0.54)

where: A_C = Total On-Site drainage area in the BMP catchment area
A_I = Impervious area proposed in the BMP catchment area
A_P = Pervious area remaining in the BMP catchment area
L_R = TSS Load removed from this catchment area by the proposed BMP

A_C = 15.58 acres
A_I = 8.25 acres
A_P = 7.33 acres
L_R = 8428 lbs

5. Calculate Fraction of Annual Runoff to Treat the drainage basin / outfall area

Desired $L_{M\ THIS\ BASIN}$ = 7850 lbs.

F = 0.93

6. Calculate Capture Volume required by the BMP Type for this drainage basin / outfall area. Calculations from RG-348 Pages 3-34 to 3-36

Rainfall Depth = 2.20 inches
Post Development Runoff Coefficient = 0.37
On-site Water Quality Volume = 46573 cubic feet

Calculations from RG-348 Pages 3-36 to 3-37

Off-site area draining to BMP = 0.00 acres
Off-site Impervious cover draining to BMP = 0.00 acres
Impervious fraction of off-site area = 0
Off-site Runoff Coefficient = 0.00
Off-site Water Quality Volume = 0 cubic feet

Storage for Sediment = 9315
Total Capture Volume (required water quality volume(s) x 1.20) = 55888 cubic feet

1/2 WQV = 27944

VEGETATIVE FILTER STRIP - VFS-01

Texas Commission on Environmental Quality

TSS Removal Calculations 04-20-2009 — **Project Name:** Parkside Secs. 11, 12A, 15A, 15B — **Date Prepared:** 6/2/2025

Additional information is provided for cells with a red triangle in the upper right corner. Place the cursor over the cell.
Text shown in blue indicate location of instructions in the Technical Guidance Manual - RG-348.
Characters shown in red are data entry fields.
Characters shown in black (Bold) are calculated fields. Changes to these fields will remove the equations used in the spreadsheet.

1. The Required Load Reduction for the total project: Calculations from RG-348 Pages 3-27 to 3-30

Page 3-29 Equation 3.3: $L_M = 27.2(A_N \times P)$

where: $L_{M\ TOTAL\ PROJECT}$ = Required TSS removal resulting from the proposed development = 80% of increased load
A_N = Net increase in impervious area for the project
P = Average annual precipitation, inches

Site Data: Determine Required Load Removal Based on the Entire Project
County = Williamson
Total project area included in plan * = 56.78 acres
Predevelopment impervious area within the limits of the plan * = 0.00 acres
Total post-development impervious area within the limits of the plan * = 21.58 acres
Total post-development impervious cover fraction * = 0.38
P = 32 inches

$L_{M\ TOTAL\ PROJECT}$ = 18783 lbs.
* The values entered in these fields should be for the total project area.

Number of drainage basins / outfalls areas leaving the plan area = 13

2. Drainage Basin Parameters (This information should be provided for each basin):

Drainage Basin/Outfall Area No. = VFS-01

Total drainage basin/outfall area = 1.31 acres
Predevelopment impervious area within drainage basin/outfall area = 0.00 acres
Post-development impervious area within drainage basin/outfall area = 0.40 acres
Post-development impervious fraction within drainage basin/outfall area = 0.31
$L_{M\ THIS\ BASIN}$ = 348 lbs.

3. Indicate the proposed BMP Code for this basin.

Proposed BMP = Vegetated Filter Strips
Removal efficiency = 85 percent

4. Calculate Maximum TSS Load Removed (L_R) for this Drainage Basin by the selected BMP Type.

RG-348 Page 3-33 Equation 3.7: L_R = (BMP efficiency) x P x (A_I x 34.6 + A_P x 0.54)

where: A_C = Total On-Site drainage area in the BMP catchment area
A_I = Impervious area proposed in the BMP catchment area
A_P = Pervious area remaining in the BMP catchment area
L_R = TSS Load removed from this catchment area by the proposed BMP

A_C = 1.31 acres
A_I = 0.40 acres
A_P = 0.91 acres
L_R = 390 lbs

5. Calculate Fraction of Annual Runoff to Treat the drainage basin / outfall area

Desired $L_{M\ THIS\ BASIN}$ = 390 lbs.

F = 1.00

VEGETATIVE FILTER STRIP - VFS-02

Texas Commission on Environmental Quality

TSS Removal Calculations 04-20-2009 — **Project Name:** Parkside Secs. 11, 12A, 15A, 15B — **Date Prepared:** 6/2/2025

Additional information is provided for cells with a red triangle in the upper right corner. Place the cursor over the cell.
Text shown in blue indicate location of instructions in the Technical Guidance Manual - RG-348.
Characters shown in red are data entry fields.
Characters shown in black (Bold) are calculated fields. Changes to these fields will remove the equations used in the spreadsheet.

1. The Required Load Reduction for the total project: Calculations from RG-348 Pages 3-27 to 3-30

Page 3-29 Equation 3.3: $L_M = 27.2(A_N \times P)$

where: $L_{M\ TOTAL\ PROJECT}$ = Required TSS removal resulting from the proposed development = 80% of increased load
A_N = Net increase in impervious area for the project
P = Average annual precipitation, inches

Site Data: Determine Required Load Removal Based on the Entire Project
County = Williamson
Total project area included in plan * = 56.78 acres
Predevelopment impervious area within the limits of the plan * = 0.00 acres
Total post-development impervious area within the limits of the plan * = 21.58 acres
Total post-development impervious cover fraction * = 0.38
P = 32 inches

$L_{M\ TOTAL\ PROJECT}$ = 18783 lbs.
* The values entered in these fields should be for the total project area.

Number of drainage basins / outfalls areas leaving the plan area = 13

2. Drainage Basin Parameters (This information should be provided for each basin):

Drainage Basin/Outfall Area No. = VFS-02

Total drainage basin/outfall area = 3.57 acres
Predevelopment impervious area within drainage basin/outfall area = 0.00 acres
Post-development impervious area within drainage basin/outfall area = 1.67 acres
Post-development impervious fraction within drainage basin/outfall area = 0.47
$L_{M\ THIS\ BASIN}$ = 1454 lbs.

3. Indicate the proposed BMP Code for this basin.

Proposed BMP = Vegetated Filter Strips
Removal efficiency = 85 percent

4. Calculate Maximum TSS Load Removed (L_R) for this Drainage Basin by the selected BMP Type.

RG-348 Page 3-33 Equation 3.7: L_R = (BMP efficiency) x P x (A_I x 34.6 + A_P x 0.54)

where: A_C = Total On-Site drainage area in the BMP catchment area
A_I = Impervious area proposed in the BMP catchment area
A_P = Pervious area remaining in the BMP catchment area
L_R = TSS Load removed from this catchment area by the proposed BMP

A_C = 3.57 acres
A_I = 1.67 acres
A_P = 1.90 acres
L_R = 1600 lbs

5. Calculate Fraction of Annual Runoff to Treat the drainage basin / outfall area

Desired $L_{M\ THIS\ BASIN}$ = 1600 lbs.

F = 1.00

VEGETATIVE FILTER STRIP - VFS-03

Texas Commission on Environmental Quality

TSS Removal Calculations 04-20-2009 — **Project Name:** Parkside Secs. 11, 12A, 15A, 15B — **Date Prepared:** 6/2/2025

Additional information is provided for cells with a red triangle in the upper right corner. Place the cursor over the cell.
Text shown in blue indicate location of instructions in the Technical Guidance Manual - RG-348.
Characters shown in red are data entry fields.
Characters shown in black (Bold) are calculated fields. Changes to these fields will remove the equations used in the spreadsheet.

1. The Required Load Reduction for the total project: Calculations from RG-348 Pages 3-27 to 3-30

Page 3-29 Equation 3.3: $L_M = 27.2(A_N \times P)$

where: $L_{M\ TOTAL\ PROJECT}$ = Required TSS removal resulting from the proposed development = 80% of increased load
A_N = Net increase in impervious area for the project
P = Average annual precipitation, inches

Site Data: Determine Required Load Removal Based on the Entire Project
County = Williamson
Total project area included in plan * = 56.78 acres
Predevelopment impervious area within the limits of the plan * = 0.00 acres
Total post-development impervious area within the limits of the plan * = 21.58 acres
Total post-development impervious cover fraction * = 0.38
P = 32 inches

$L_{M\ TOTAL\ PROJECT}$ = 18783 lbs.
* The values entered in these fields should be for the total project area.

Number of drainage basins / outfalls areas leaving the plan area = 13

2. Drainage Basin Parameters (This information should be provided for each basin):

Drainage Basin/Outfall Area No. = VFS-03

Total drainage basin/outfall area = 1.86 acres
Predevelopment impervious area within drainage basin/outfall area = 0.00 acres
Post-development impervious area within drainage basin/outfall area = 0.96 acres
Post-development impervious fraction within drainage basin/outfall area = 0.52
$L_{M\ THIS\ BASIN}$ = 836 lbs.

3. Indicate the proposed BMP Code for this basin.

Proposed BMP = Vegetated Filter Strips
Removal efficiency = 85 percent

4. Calculate Maximum TSS Load Removed (L_R) for this Drainage Basin by the selected BMP Type.

RG-348 Page 3-33 Equation 3.7: L_R = (BMP efficiency) x P x (A_I x 34.6 + A_P x 0.54)

where: A_C = Total On-Site drainage area in the BMP catchment area
A_I = Impervious area proposed in the BMP catchment area
A_P = Pervious area remaining in the BMP catchment area
L_R = TSS Load removed from this catchment area by the proposed BMP

A_C = 1.86 acres
A_I = 0.96 acres
A_P = 0.90 acres
L_R = 917 lbs

5. Calculate Fraction of Annual Runoff to Treat the drainage basin / outfall area

Desired $L_{M\ THIS\ BASIN}$ = 917 lbs.

F = 1.00

VEGETATIVE FILTER STRIP - VFS-04

Texas Commission on Environmental Quality

TSS Removal Calculations 04-20-2009 — **Project Name:** Parkside Secs. 11, 12A, 15A, 15B — **Date Prepared:** 6/2/2025

Additional information is provided for cells with a red triangle in the upper right corner. Place the cursor over the cell.
Text shown in blue indicate location of instructions in the Technical Guidance Manual - RG-348.
Characters shown in red are data entry fields.
Characters shown in black (Bold) are calculated fields. Changes to these fields will remove the equations used in the spreadsheet.

1. The Required Load Reduction for the total project: Calculations from RG-348 Pages 3-27 to 3-30

Page 3-29 Equation 3.3: $L_M = 27.2(A_N \times P)$

where: $L_{M\ TOTAL\ PROJECT}$ = Required TSS removal resulting from the proposed development = 80% of increased load
A_N = Net increase in impervious area for the project
P = Average annual precipitation, inches

Site Data: Determine Required Load Removal Based on the Entire Project
County = Williamson
Total project area included in plan * = 56.78 acres
Predevelopment impervious area within the limits of the plan * = 0.00 acres
Total post-development impervious area within the limits of the plan * = 21.58 acres
Total post-development impervious cover fraction * = 0.38
P = 32 inches

$L_{M\ TOTAL\ PROJECT}$ = 18783 lbs.
* The values entered in these fields should be for the total project area.

Number of drainage basins / outfalls areas leaving the plan area = 13

2. Drainage Basin Parameters (This information should be provided for each basin):

Drainage Basin/Outfall Area No. = VFS-04

Total drainage basin/outfall area = 0.66 acres
Predevelopment impervious area within drainage basin/outfall area = 0.00 acres
Post-development impervious area within drainage basin/outfall area = 0.36 acres
Post-development impervious fraction within drainage basin/outfall area = 0.55
$L_{M\ THIS\ BASIN}$ = 313 lbs.

3. Indicate the proposed BMP Code for this basin.

Proposed BMP = Vegetated Filter Strips
Removal efficiency = 85 percent

4. Calculate Maximum TSS Load Removed (L_R) for this Drainage Basin by the selected BMP Type.

RG-348 Page 3-33 Equation 3.7: L_R = (BMP efficiency) x P x (A_I x 34.6 + A_P x 0.54)

where: A_C = Total On-Site drainage area in the BMP catchment area
A_I = Impervious area proposed in the BMP catchment area
A_P = Pervious area remaining in the BMP catchment area
L_R = TSS Load removed from this catchment area by the proposed BMP

A_C = 0.66 acres
A_I = 0.36 acres
A_P = 0.30 acres
L_R = 343 lbs

5. Calculate Fraction of Annual Runoff to Treat the drainage basin / outfall area

Desired $L_{M\ THIS\ BASIN}$ = 343 lbs.

F = 1.00

VEGETATIVE FILTER STRIP - VFS-05

Texas Commission on Environmental Quality

TSS Removal Calculations 04-20-2009 — **Project Name:** Parkside Secs. 11, 12A, 15A, 15B — **Date Prepared:** 6/2/2025

Additional information is provided for cells with a red triangle in the upper right corner. Place the cursor over the cell.
Text shown in blue indicate location of instructions in the Technical Guidance Manual - RG-348.
Characters shown in red are data entry fields.
Characters shown in black (Bold) are calculated fields. Changes to these fields will remove the equations used in the spreadsheet.

1. The Required Load Reduction for the total project: Calculations from RG-348 Pages 3-27 to 3-30

Page 3-29 Equation 3.3: $L_M = 27.2(A_N \times P)$

where: $L_{M\ TOTAL\ PROJECT}$ = Required TSS removal resulting from the proposed development = 80% of increased load
A_N = Net increase in impervious area for the project
P = Average annual precipitation, inches

Site Data: Determine Required Load Removal Based on the Entire Project
County = Williamson
Total project area included in plan * = 56.78 acres
Predevelopment impervious area within the limits of the plan * = 0.00 acres
Total post-development impervious area within the limits of the plan * = 21.58 acres
Total post-development impervious cover fraction * = 0.38
P = 32 inches

$L_{M\ TOTAL\ PROJECT}$ = 18783 lbs.
* The values entered in these fields should be for the total project area.

Number of drainage basins / outfalls areas leaving the plan area = 13

2. Drainage Basin Parameters (This information should be provided for each basin):

Drainage Basin/Outfall Area No. = VFS-05

Total drainage basin/outfall area = 0.48 acres
Predevelopment impervious area within drainage basin/outfall area = 0.00 acres
Post-development impervious area within drainage basin/outfall area = 0.28 acres
Post-development impervious fraction within drainage basin/outfall area = 0.58
$L_{M\ THIS\ BASIN}$ = 244 lbs.

3. Indicate the proposed BMP Code for this basin.

Proposed BMP = Vegetated Filter Strips
Removal efficiency = 85 percent

4. Calculate Maximum TSS Load Removed (L_R) for this Drainage Basin by the selected BMP Type.

RG-348 Page 3-33 Equation 3.7: L_R = (BMP efficiency) x P x (A_I x 34.6 + A_P x 0.54)

where: A_C = Total On-Site drainage area in the BMP catchment area
A_I = Impervious area proposed in the BMP catchment area
A_P = Pervious area remaining in the BMP catchment area
L_R = TSS Load removed from this catchment area by the proposed BMP

A_C = 0.48 acres
A_I = 0.28 acres
A_P = 0.20 acres
L_R = 266 lbs

5. Calculate Fraction of Annual Runoff to Treat the drainage basin / outfall area

Desired $L_{M\ THIS\ BASIN}$ = 266 lbs.

F = 1.00

NO.	REVISION	BY	DATE

Know what's **below.** **Call** before you dig.

5508 HIGHWAY 290 WEST
SUITE 150
AUSTIN, TX 78735
512.872.6696
HRGREEN.COM
TBPE NO: 16384
TBPLS NO: 10194101
HRGreen®
DEVELOPMENT TX

STATE OF TEXAS
CHRISTINE N. CAMPBELL
142536
LICENSED PROFESSIONAL ENGINEER
07/03/2025

WATER QUALITY CALCULATIONS

PARKSIDE ON THE RIVER SECTIONS 11, 12A & 15A CONSTRUCTION PLANS GEORGETOWN, WILLIAMSON, TEXAS

DESIGNED BY: CC
DRAWN BY: MM
CHECKED BY: SN
APPROVED BY:

SHEET 78 OF 141

2025-XX-CON

P:\Blake Magee\Parkside Sections 11-15 & WON 5\Section 11, 12A & 15A\03_ACAD\Plans\sh2403522 WQDAM.dwg, WATER QUALITY CALCULATIONS, July 18, 2025, 11:57 AM, makai.muhammad

JELLYFISH - JF-01

Contech Engineered Solutions Calculations for Texas Commission on Environmental Quality
TSS Removal Calculations

Project Name: **Parkside on the River**
Date Prepared: **6/4/2025**

1. The Required Load Reduction for the total project:

Calculations from RG-348 — Page 3-29 Equation 3.3: $L_M = 27.2(A_N \times P)$
Pages 3-27 to 3-30

$L_{M\ TOTAL\ PROJECT}$ = Required TSS removal resulting from the proposed development = 80% of increased load
A_N = Net increase in impervious area for the project
P = Average annual precipitation, inches

Site Data: Determine Required Load Removal Based on the Entire Project

County =	**Williamson**	
Total project area included in plan * =	56.78	acres
Predevelopment impervious area within the limits of the plan * =	**0.00**	acres
Total post-development impervious area within the limits of the plan* =	21.58	acres
Total post-development impervious cover fraction * =	0.38	
P =	**32**	inches
$L_{M\ TOTAL\ PROJECT}$ =	18783	lbs.
Number of drainage basins / outfalls areas leaving the plan area =	**13**	

2. Drainage Basin Parameters (This information should be provided for each basin):

Drainage Basin/Outfall Area No. =	**JF-01**	
Total drainage basin/outfall area =	**3.52**	acres
Predevelopment impervious area within drainage basin/outfall area =	**0.00**	acres
Post-development impervious area within drainage basin/outfall area =	**1.82**	acres
Post-development impervious fraction within drainage basin/outfall area =	**0.52**	
$L_{M\ THIS\ BASIN}$ =	**1584**	lbs.

3. Indicate the proposed BMP Code for this basin.

Proposed BMP =	**JF**	abbreviation
Removal efficiency =	**86**	percent

4. Calculate Maximum TSS Load Removed (L_R) for this Drainage Basin by the selected BMP Type.

RG-348 Page 3-33 Equation 3.7:
LR = (BMP efficiency) x P x (A_I x 34.6 + A_P x 0.54)

A_C = Total On-Site drainage area in the BMP catchment area
A_I = Impervious area proposed in the BMP catchment area
A_P = Pervious area remaining in the BMP catchment area
L_R = TSS Load removed from this catchment area by the proposed BMP

A_C =	**3.52**	acres
A_I =	**1.82**	acres
A_P =	**1.70**	acres
L_R =	**1758**	lbs.

5. Calculate Fraction of Annual Runoff to Treat the drainage basin / outfall area

Desired $L_{M\ THIS\ BASIN}$ =	**1582**	lbs.
F =	**0.90**	

6. Calculate Treated Flow required by the BMP Type for this drainage basin / outfall area.

Calculations from RG-348
Pages Section 3.2.22

Offsite area draining to BMP =	**0.00**	acres
Offsite impervious cover draining to BMP =	**0.00**	acres
Rainfall Intensity =	**1.10**	inches per hour
Effective Area =	**1.69**	acres
Cartridge Length =	**54**	inches
Peak Treatment Flow Required =	**1.87**	cubic feet per second

7. Jellyfish
Designed as Required in RG-348
Section 3.2.22

Flow Through Jellyfish Size	Vault	
Jellyfish Size for Flow-Based Configuration =	**JFPD0806-10-2**	
Jellyfish Treatment Flow Rate =	**1.96**	cfs

JELLYFISH - JF-02

Contech Engineered Solutions Calculations for Texas Commission on Environmental Quality
TSS Removal Calculations

Project Name: **Parkside on the River**
Date Prepared: **6/4/2025**

1. The Required Load Reduction for the total project:

Calculations from RG-348 — Page 3-29 Equation 3.3: $L_M = 27.2(A_N \times P)$
Pages 3-27 to 3-30

$L_{M\ TOTAL\ PROJECT}$ = Required TSS removal resulting from the proposed development = 80% of increased load
A_N = Net increase in impervious area for the project
P = Average annual precipitation, inches

Site Data: Determine Required Load Removal Based on the Entire Project

County =	**Williamson**	
Total project area included in plan * =	56.78	acres
Predevelopment impervious area within the limits of the plan * =	**0.00**	acres
Total post-development impervious area within the limits of the plan* =	21.58	acres
Total post-development impervious cover fraction * =	0.38	
P =	**32**	inches
$L_{M\ TOTAL\ PROJECT}$ =	18783	lbs.
Number of drainage basins / outfalls areas leaving the plan area =	**13**	

2. Drainage Basin Parameters (This information should be provided for each basin):

Drainage Basin/Outfall Area No. =	**JF-02**	
Total drainage basin/outfall area =	**2.21**	acres
Predevelopment impervious area within drainage basin/outfall area =	**0.00**	acres
Post-development impervious area within drainage basin/outfall area =	**1.20**	acres
Post-development impervious fraction within drainage basin/outfall area =	**0.54**	
$L_{M\ THIS\ BASIN}$ =	**1044**	lbs.

3. Indicate the proposed BMP Code for this basin.

Proposed BMP =	**JF**	abbreviation
Removal efficiency =	**86**	percent

4. Calculate Maximum TSS Load Removed (L_R) for this Drainage Basin by the selected BMP Type.

RG-348 Page 3-33 Equation 3.7:
LR = (BMP efficiency) x P x (A_I x 34.6 + A_P x 0.54)

A_C = Total On-Site drainage area in the BMP catchment area
A_I = Impervious area proposed in the BMP catchment area
A_P = Pervious area remaining in the BMP catchment area
L_R = TSS Load removed from this catchment area by the proposed BMP

A_C =	**2.21**	acres
A_I =	**1.20**	acres
A_P =	**1.01**	acres
L_R =	**1158**	lbs.

5. Calculate Fraction of Annual Runoff to Treat the drainage basin / outfall area

Desired $L_{M\ THIS\ BASIN}$ =	**1101**	lbs.
F =	**0.95**	

6. Calculate Treated Flow required by the BMP Type for this drainage basin / outfall area.

Calculations from RG-348
Pages Section 3.2.22

Offsite area draining to BMP =	**0.00**	acres
Offsite impervious cover draining to BMP =	**0.00**	acres
Rainfall Intensity =	**1.60**	inches per hour
Effective Area =	**1.11**	acres
Cartridge Length =	**54**	inches
Peak Treatment Flow Required =	**1.79**	cubic feet per second

7. Jellyfish
Designed as Required in RG-348
Section 3.2.22

Flow Through Jellyfish Size	Vault	
Jellyfish Size for Flow-Based Configuration =	**JFPD0806-10-2**	
Jellyfish Treatment Flow Rate =	**1.96**	cfs

JELLYFISH - JF-03

Contech Engineered Solutions Calculations for Texas Commission on Environmental Quality
TSS Removal Calculations

Project Name: **Parkside on the River**
Date Prepared: **6/4/2025**

1. The Required Load Reduction for the total project:

Calculations from RG-348 — Page 3-29 Equation 3.3: $L_M = 27.2(A_N \times P)$
Pages 3-27 to 3-30

$L_{M\ TOTAL\ PROJECT}$ = Required TSS removal resulting from the proposed development = 80% of increased load
A_N = Net increase in impervious area for the project
P = Average annual precipitation, inches

Site Data: Determine Required Load Removal Based on the Entire Project

County =	**Williamson**	
Total project area included in plan * =	56.78	acres
Predevelopment impervious area within the limits of the plan * =	**0.00**	acres
Total post-development impervious area within the limits of the plan* =	21.58	acres
Total post-development impervious cover fraction * =	0.38	
P =	**32**	inches
$L_{M\ TOTAL\ PROJECT}$ =	18783	lbs.
Number of drainage basins / outfalls areas leaving the plan area =	**13**	

2. Drainage Basin Parameters (This information should be provided for each basin):

Drainage Basin/Outfall Area No. =	**JF-03**	
Total drainage basin/outfall area =	**5.95**	acres
Predevelopment impervious area within drainage basin/outfall area =	**0.00**	acres
Post-development impervious area within drainage basin/outfall area =	**3.32**	acres
Post-development impervious fraction within drainage basin/outfall area =	**0.56**	
$L_{M\ THIS\ BASIN}$ =	**2890**	lbs.

3. Indicate the proposed BMP Code for this basin.

Proposed BMP =	**JF**	abbreviation
Removal efficiency =	**86**	percent

4. Calculate Maximum TSS Load Removed (L_R) for this Drainage Basin by the selected BMP Type.

RG-348 Page 3-33 Equation 3.7:
LR = (BMP efficiency) x P x (A_I x 34.6 + A_P x 0.54)

A_C = Total On-Site drainage area in the BMP catchment area
A_I = Impervious area proposed in the BMP catchment area
A_P = Pervious area remaining in the BMP catchment area
L_R = TSS Load removed from this catchment area by the proposed BMP

A_C =	**5.95**	acres
A_I =	**3.32**	acres
A_P =	**2.63**	acres
L_R =	**3200**	lbs.

5. Calculate Fraction of Annual Runoff to Treat the drainage basin / outfall area

Desired $L_{M\ THIS\ BASIN}$ =	**3089**	lbs.
F =	**0.97**	

6. Calculate Treated Flow required by the BMP Type for this drainage basin / outfall area.

Calculations from RG-348
Pages Section 3.2.22

Offsite area draining to BMP =	**0.00**	acres
Offsite impervious cover draining to BMP =	**0.00**	acres
Rainfall Intensity =	**2.00**	inches per hour
Effective Area =	**3.07**	acres
Cartridge Length =	**54**	inches
Peak Treatment Flow Required =	**6.18**	cubic feet per second

7. Jellyfish
Designed as Required in RG-348
Section 3.2.22

Flow Through Jellyfish Size	Vault	
Jellyfish Size for Flow-Based Configuration =	**JFPD0816-32-7**	
Jellyfish Treatment Flow Rate =	**6.33**	cfs

BYPASS - BP-01

Texas Commission on Environmental Quality

TSS Removal Calculations 04-20-2009 — **Project Name:** **Parkside Secs. 11, 12A, 15A, 15B** — **Date Prepared:** **6/2/2025**

Additional information is provided for cells with a red triangle in the upper right corner. Place the cursor over the cell.
Text shown in blue indicate location of instructions in the Technical Guidance Manual - RG-348.
Characters shown in red are data entry fields.
Characters shown in black (Bold) are calculated fields. Changes to these fields will remove the equations used in the spreadsheet.

1. The Required Load Reduction for the total project: — Calculations from RG-348 — Pages 3-27 to 3-30

Page 3-29 Equation 3.3: $L_M = 27.2(A_N \times P)$

where: $L_{M\ TOTAL\ PROJECT}$ = Required TSS removal resulting from the proposed development = 80% of increased load
A_N = Net increase in impervious area for the project
P = Average annual precipitation, inches

Site Data: Determine Required Load Removal Based on the Entire Project

County =	**Williamson**	
Total project area included in plan * =	**56.78**	acres
Predevelopment impervious area within the limits of the plan * =	**0.00**	acres
Total post-development impervious area within the limits of the plan * =	**21.58**	acres
Total post-development impervious cover fraction * =	**0.38**	
P =	32	inches
$L_{M\ TOTAL\ PROJECT}$ =	**18783**	lbs.

* The values entered in these fields should be for the total project area.

Number of drainage basins / outfalls areas leaving the plan area =	**13**	

2. Drainage Basin Parameters (This information should be provided for each basin):

Drainage Basin/Outfall Area No. =	**BP-01**	
Total drainage basin/outfall area =	**2.25**	acres
Predevelopment impervious area within drainage basin/outfall area =	**0.00**	acres
Post-development impervious area within drainage basin/outfall area =	**1.01**	acres
Post-development impervious fraction within drainage basin/outfall area =	**0.45**	
$L_{M\ THIS\ BASIN}$ =	**879**	lbs.

BYPASS - BP-02

Texas Commission on Environmental Quality

TSS Removal Calculations 04-20-2009 — **Project Name:** **Parkside Secs. 11, 12A, 15A, 15B** — **Date Prepared:** **6/2/2025**

Additional information is provided for cells with a red triangle in the upper right corner. Place the cursor over the cell.
Text shown in blue indicate location of instructions in the Technical Guidance Manual - RG-348.
Characters shown in red are data entry fields.
Characters shown in black (Bold) are calculated fields. Changes to these fields will remove the equations used in the spreadsheet.

1. The Required Load Reduction for the total project: — Calculations from RG-348 — Pages 3-27 to 3-30

Page 3-29 Equation 3.3: $L_M = 27.2(A_N \times P)$

where: $L_{M\ TOTAL\ PROJECT}$ = Required TSS removal resulting from the proposed development = 80% of increased load
A_N = Net increase in impervious area for the project
P = Average annual precipitation, inches

Site Data: Determine Required Load Removal Based on the Entire Project

County =	**Williamson**	
Total project area included in plan * =	**56.78**	acres
Predevelopment impervious area within the limits of the plan * =	**0.00**	acres
Total post-development impervious area within the limits of the plan * =	**21.58**	acres
Total post-development impervious cover fraction * =	**0.38**	
P =	32	inches
$L_{M\ TOTAL\ PROJECT}$ =	**18783**	lbs.

* The values entered in these fields should be for the total project area.

Number of drainage basins / outfalls areas leaving the plan area =	**13**	

2. Drainage Basin Parameters (This information should be provided for each basin):

Drainage Basin/Outfall Area No. =	**BP-02**	
Total drainage basin/outfall area =	**1.89**	acres
Predevelopment impervious area within drainage basin/outfall area =	**0.00**	acres
Post-development impervious area within drainage basin/outfall area =	**0.80**	acres
Post-development impervious fraction within drainage basin/outfall area =	**0.42**	
$L_{M\ THIS\ BASIN}$ =	**696**	lbs.

P:\Blake Magee\Parkside Sections 11-15 & WON 5\Section 11, 12A & 15A\03_ACAD\Plans\sh2403522 WQDAM.dwg, WATER QUALITY CALCULATIONS 2, July 18, 2025, 11:57 AM, makai.muhammad

NO.	REVISION	BY	DATE

Know what's below. Call before you dig. 811

5508 HIGHWAY 290 WEST
SUITE 150
AUSTIN, TX 78735
512.872.6696
HRGREEN.COM
TBPE NO: 16384
TBPLS NO: 10194101
HRGreen® DEVELOPMENT TX

STATE OF TEXAS
CHRISTINE N. CAMPBELL
142536
LICENSED PROFESSIONAL ENGINEER
07/03/2025

WATER QUALITY CALCULATIONS 2

PARKSIDE ON THE RIVER
SECTIONS 11, 12A & 15A
CONSTRUCTION PLANS
GEORGETOWN, WILLIAMSON, TEXAS

DESIGNED BY: CC
DRAWN BY: MM
CHECKED BY: SN
APPROVED BY:

SHEET 79 OF 141

2025-XX-CON

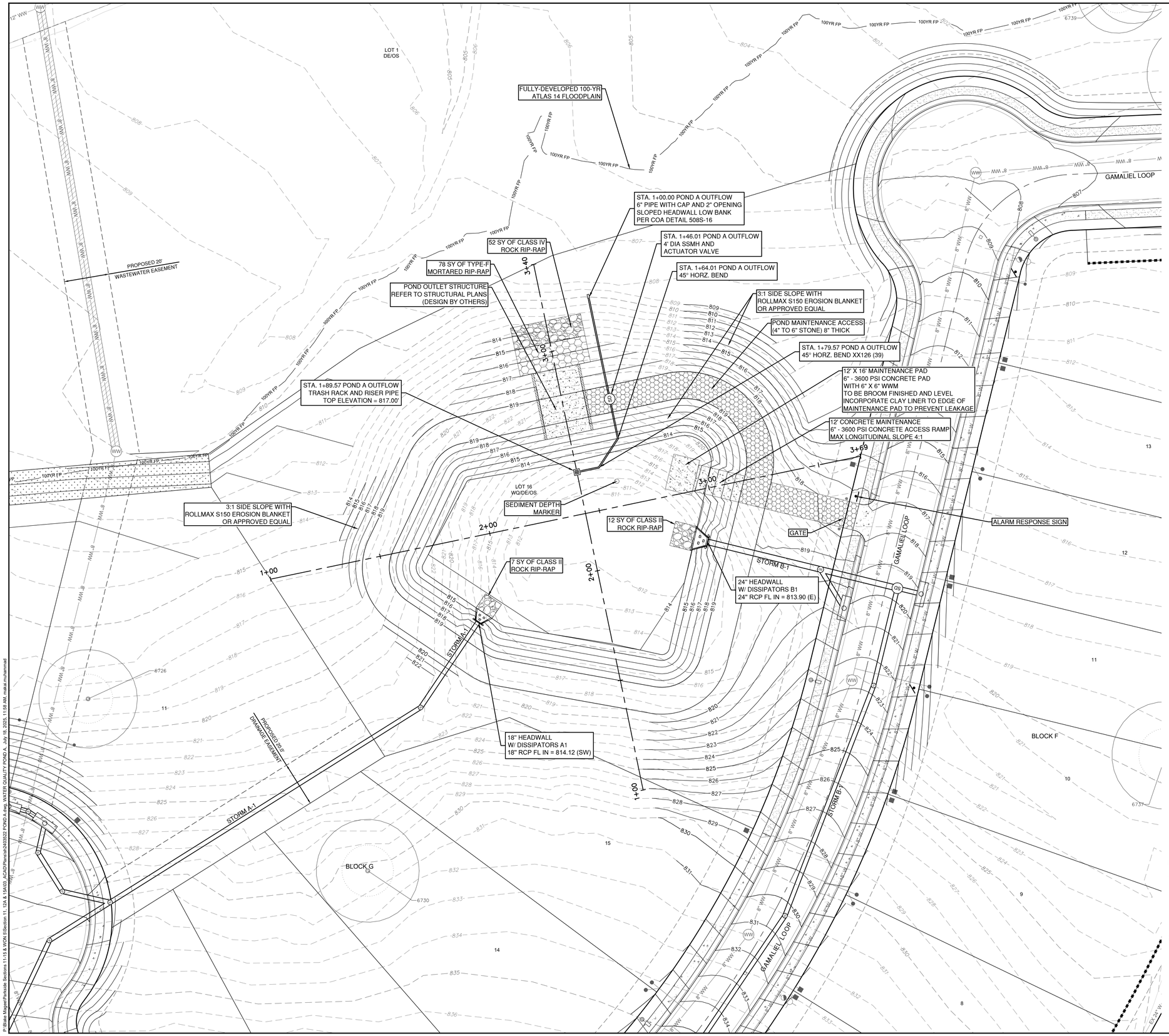

GENERAL NOTES:

1. CONTRACTOR TO UTILIZE A TEMPORARY CONSTRUCTION PUMP TO DISCHARGE WATER FROM THE POND AFTER A RAINFALL EVENT, DURING CONSTRUCTION. PUMP IS TO DISCHARGE UPSTREAM OF PROPOSED ROCK BERM LOCATED BEFORE THE CREEK BED. AT NO TIME SHALL THE PUMP BE DISCHARGED DIRECTLY INTO STORMSEWER SYSTEM BEFORE CROSSING A ROCK BERM.
2. ALL MUD, DIRT, ROCKS, DEBRIS, ETC., SPILLED, TRACKED OR OTHERWISE DEPOSITED ON EXISTING PAVED STREETS, DRIVES, AND AREAS USED BY THE PUBLIC SHALL BE CLEANED UP IMMEDIATELY. CONTRACTOR WILL CLEAN UP SPOILS THAT MIGRATE ONTO ROADS A MINIMUM OF ONCE DAILY.
3. ALL DISTURBED AREAS TO BE REVEGETATED PRIOR TO ACCEPTANCE.
4. IF DISTURBED AREA IS NOT TO BE WORKED ON FOR MORE THAN 14 DAYS, DISTURBED AREA NEEDS TO BE STABILIZED BY REVEGETATION, MULCH, TARP OR REVEGETATION MATTING.
5. THE STABILIZED CONSTRUCTION ENTRANCE SHALL BE MAINTAINED IN A CONDITION THAT WILL PREVENT TRACKING OR FLOWING OF SEDIMENT INTO PUBLIC ROADWAY.
6. THE ENVIRONMENTAL INSPECTOR HAS THE AUTHORITY TO ADD AND/OR MODIFY EROSION/SEDIMENTATION CONTROLS ON SITE TO KEEP PROJECT IN COMPLIANCE WITH THE CITY OF GEORGETOWN RULES AND REGULATIONS. HOWEVER, MODIFICATIONS TO THE ENGINEERING DESIGN AND FUNCTIONS OF THE EROSION AND SEDIMENTATION CONTROLS SYSTEMS CONTAINED HERE IN IS STRICTLY FORBIDDEN WITHOUT THE EXPRESSED WRITTEN CONSENT OF THE SIGNING PROJECT PROFESSIONAL ENGINEER (TAC22 §137.3 AND §137.37).
7. CONTRACTOR SHALL UTILIZE DUST CONTROL MEASURES DURING SITE CONSTRUCTION SUCH AS IRRIGATION TRUCKS AND MULCHING AS PER 1.4.5(A) OR AS DIRECTED BY THE ENVIRONMENTAL INSPECTOR.
8. ALL POND BOTTOMS, SIDE SLOPES, AND EARTHEN EMBANKMENTS SHALL BE COMPACTED TO 95% MAXIMUM DENSITY, IN ACCORDANCE WITH THE CITY OF GEORGETOWN STANDARD SPECIFICATIONS AND PER GEOTECHNICAL ENGINEER'S RECOMMENDATION. ALLOW ADEQUATE VOLUME FOR TOPSOIL TO SUPPORT VEGETATION.
9. GRADING WITHIN THE 1/2 CRITICAL ROOT ZONE OF PROTECTED TREES, IDENTIFIED BY A HATCH PATTERN ON THESE PLANS, SHALL BE LIMITED TO LESS THAN 12 INCHES OF DISTURBANCE. NO GRADING ACTIVITY WITH DISTURBANCE OF MORE THAN 6 INCHES IS ALLOWED IN THE 1/4 CRITICAL ROOT ZONE.
10. GRADING WORK WITHIN THE 1/2 CRITICAL ROOT ZONE OF ALL PROTECTED TREES SHALL BE DONE BY HAND OR WITH RUBBER TIRED EQUIPMENT.
11. ALL RETAINING WALLS GREATER THAN FOUR FEET IN HEIGHT MEASURED FROM THE BOTTOM OF THE FOOTING TO THE TOP OF THE WALL SHALL BE DESIGNED BY A PROFESSIONAL ENGINEER.

DEWATERING PLAN NOTES:

1. CONTRACTOR SHALL MAINTAIN THE DEWATERING SYSTEM TO ENSURE PERFORMANCE. IF THE DEWATERING SYSTEM IS NOT PERFORMING, THE CONTRACTOR MUST IMMEDIATELY MAKE THE NECESSARY MODIFICATIONS, FOLLOWING THE ENVIRONMENTAL INSPECTOR'S DIRECTION TO ENSURE ADEQUATE SYSTEM PERFORMANCE. CONTRACTOR SHALL PROVIDE THE DEWATERING PLAN AT THE PRECONSTRUCTION MEETING.
2. THE SKIMMER IS TO BE USED DURING CONSTRUCTION AND SHALL BE REMOVED AFTER COMPLETING CONSTRUCTION OF THE BATCH DETENTION POND.

NO | REVISION | BY | DATE

Know what's below. Call before you dig.

5508 HIGHWAY 290 WEST
SUITE 150
AUSTIN, TX 78735
512.872.6696
HRGREEN.COM

TBPE NO: 16384
TBPLS NO: 10194101

HRGreen® DEVELOPMENT TX

STATE OF TEXAS
CHRISTINE N. CAMPBELL
142536
LICENSED PROFESSIONAL ENGINEER
07/15/2025

WATER QUALITY POND A

PARKSIDE ON THE RIVER
SECTIONS 11, 12A & 15A
CONSTRUCTION PLANS
GEORGETOWN, WILLIAMSON, TEXAS

DESIGNED BY: CC
DRAWN BY: MM
CHECKED BY: SN
APPROVED BY:

SHEET 80 OF 141

2025-XX-CON

P:\Plan Merge\Parkside Sections 11-15 & WQA S\Section 11, 12A & 15A\03_ACAD\Plans\240503\2 POND A.dwg, WATER QUALITY POND A, July 18, 2025, 11:58 AM, makar.muhammad

SECTION A-A

POND A OUTFLOW

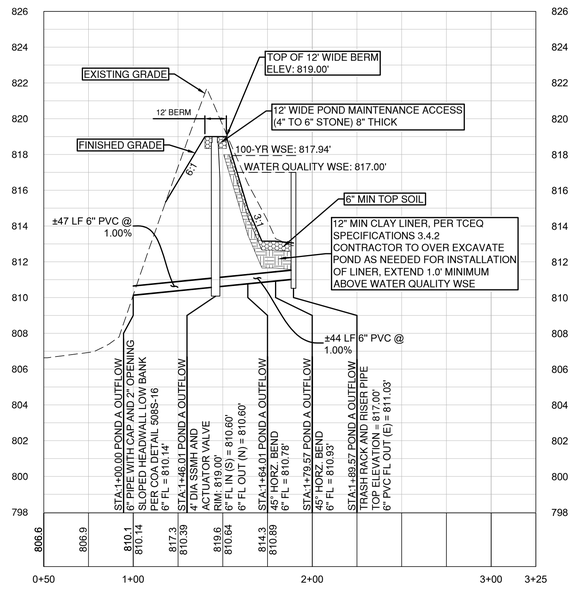

SECTION B-B

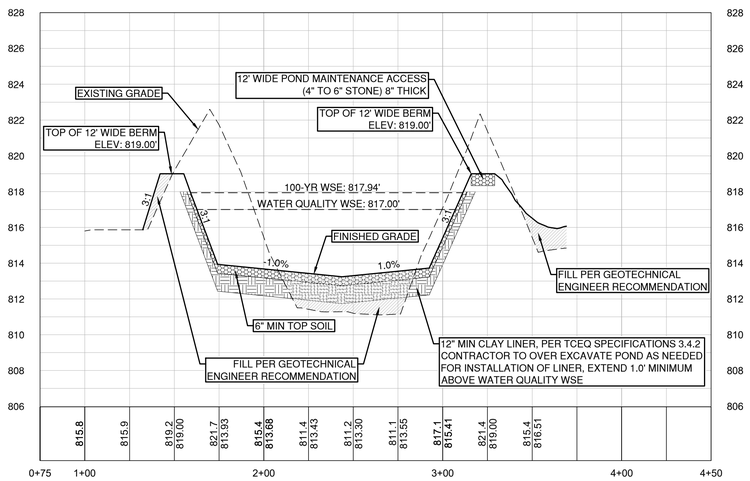

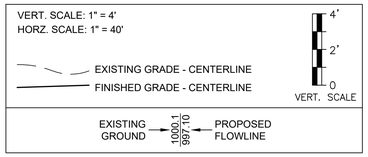

0 20' 40'

SCALE: 1" = 20'

Pond Volume

Elevation	Area		Volume		Cumulative Volume		Comments
	SF	ac	cf	ac*ft	cf	ac*ft	
813.00	0	0.00					
814.00	8,165	0.19	4,083	0.09	4,083	0.09	
815.00	9,947	0.23	9,056	0.21	13,139	0.30	Water Quality Volume
816.00	11,162	0.26	10,555	0.24	23,693	0.54	
817.00	12,433	0.29	11,798	0.27	35,491	0.81	
818.00	13,759	0.32	13,096	0.30	48,587	1.12	Routing
818.50	14,449	0.33	7,052	0.16	55,639	1.28	
819.00	15,140	0.35	7,397	0.17	63,036	1.45	Freeboard

OUTFLOW STRUCTURE	
Elevation	Flow
ft	cfs
817.00	0
817.50	18
818.00	52
818.50	96
819.00	147

$$Q = C_w L H^{1.5}$$

Q - *weir flow rate (cfs)*

C_w - *Weir Coefficient* BROAD: 2.60

L - *horizontal length of weir crest (ft)* BROAD: 20 FT

H - *head above weir crest elevation (ft)*

DRAWDOWN CALCUATIONS FOR A ROUND ORIFICE

PROJECT NAME: PARKSIDE ON THE RIVER SECTIONS 11, 12A & 15A

Pipe Diameter =	6.00	IN	W.Q.V. =	35,491	CF
Orifice Diameter =	2.00	IN	WQ Elev =	817.00	MSL
Outflow Orifice Elev =	810.14	MSL	Pond Bottom Elev =	813.00	MSL
Draining time	44.00	HR	Initial Head =	6.86	FT

TIME	HEAD	OUTFLOW	VOL.	dV	Total dV	H	dH	W.E.
HRS	FT	CFS	CF	CF	CF	FT	FT	MSL
0.00	6.86	0.28	35,491	990	990	0.11	6.75	817.00
1.00	6.75	0.27	34,501	982	1,973	0.11	6.64	816.89
2.00	6.64	0.27	33,518	974	2,947	0.11	6.53	816.78
3.00	6.53	0.27	32,544	966	3,913	0.11	6.42	816.67
4.00	6.42	0.27	31,578	958	4,871	0.11	6.31	816.56
5.00	6.31	0.26	30,620	950	5,821	0.11	6.20	816.45
6.00	6.20	0.26	29,670	942	6,763	0.11	6.10	816.34
7.00	6.10	0.26	28,728	934	7,697	0.11	5.99	816.24
8.00	5.99	0.26	27,794	926	8,623	0.10	5.89	816.13
9.00	5.89	0.25	26,868	918	9,541	0.10	5.78	816.03
10.00	5.78	0.25	25,950	910	10,450	0.10	5.68	815.92
11.00	5.68	0.25	25,041	901	11,352	0.10	5.58	815.82
12.00	5.58	0.25	24,139	893	12,245	0.10	5.48	815.72
13.00	5.48	0.25	23,246	885	13,130	0.10	5.38	815.62
14.00	5.38	0.24	22,361	877	14,007	0.10	5.28	815.52
15.00	5.28	0.24	21,484	869	14,876	0.10	5.18	815.42
16.00	5.18	0.24	20,615	861	15,737	0.10	5.09	815.32
17.00	5.09	0.24	19,754	853	16,590	0.10	4.99	815.23
18.00	4.99	0.23	18,901	845	17,435	0.10	4.89	815.13
19.00	4.89	0.23	18,056	837	18,272	0.09	4.80	815.03
20.00	4.80	0.23	17,219	829	19,100	0.09	4.71	814.94
21.00	4.71	0.23	16,391	820	19,921	0.09	4.61	814.85
22.00	4.61	0.23	15,570	812	20,733	0.09	4.52	814.75
23.00	4.52	0.22	14,758	804	21,538	0.09	4.43	814.66
24.00	4.43	0.22	13,953	796	22,334	0.09	4.34	814.57
25.00	4.34	0.22	13,157	788	23,122	0.09	4.25	814.48
26.00	4.25	0.22	12,369	780	23,902	0.09	4.17	814.39
27.00	4.17	0.21	11,589	772	24,674	0.09	4.08	814.31
28.00	4.08	0.21	10,817	764	25,437	0.09	3.99	814.22
29.00	3.99	0.21	10,054	756	26,193	0.09	3.91	814.13
30.00	3.91	0.21	9,298	748	26,941	0.08	3.82	814.05
31.00	3.82	0.21	8,550	739	27,680	0.08	3.74	813.96
32.00	3.74	0.20	7,811	731	28,412	0.08	3.66	813.88
33.00	3.66	0.20	7,079	723	29,135	0.08	3.58	813.80
34.00	3.58	0.20	6,356	715	29,850	0.08	3.50	813.72
35.00	3.50	0.20	5,641	707	30,557	0.08	3.42	813.64
36.00	3.42	0.19	4,934	699	31,256	0.08	3.34	813.56
37.00	3.34	0.19	4,235	691	31,947	0.08	3.26	813.48
38.00	3.26	0.19	3,544	683	32,630	0.08	3.18	813.40
39.00	3.18	0.19	2,861	675	33,304	0.08	3.11	813.32
40.00	3.11	0.19	2,187	667	33,971	0.08	3.03	813.25
41.00	3.03	0.18	1,520	658	34,629	0.07	2.96	813.17
42.00	2.96	0.18	862	650	35,279	0.07	2.88	813.10
43.00	2.88	0.18	212	642	35,491	0.07	2.86	813.02
44.00	2.86	0.00	0	0	35,491	0.00	2.86	813.00
45.00	2.86	0.00	0	0	35,491	0.00	2.86	813.00
46.00	2.86	0.00	0	0	35,491	0.00	2.86	813.00
47.00	2.86	0.00	0	0	35,491	0.00	2.86	813.00
48.00	2.86	0.00	0	0	35,491	0.00	2.86	813.00

NO.	REVISION	BY	DATE

Know what's below. Call before you dig.

5508 HIGHWAY 290 WEST
SUITE 150
AUSTIN, TX 78735
512.872.6696
HRGREEN.COM
TBPE NO: 16384
TBPLS NO: 10194101

HRGreen® DEVELOPMENT TX

STATE OF TEXAS
CHRISTINE N. CAMPBELL
142536
LICENSED PROFESSIONAL ENGINEER

07/03/2025

POND A SECTIONS

PARKSIDE ON THE RIVER
SECTIONS 11, 12A & 15A
CONSTRUCTION PLANS
GEORGETOWN, WILLIAMSON, TEXAS

DESIGNED BY: CC
DRAWN BY: MM
CHECKED BY: SN
APPROVED BY:

SHEET 81 OF 141

2025-XX-CON

P:\Blake Magee\Parkside Sections 11-15 & WOA S\Section 11, 12A & 15A\03_ACAD\Planset\240502 POND A.dwg, POND A SECTIONS, July 18, 2025, 11:59 AM, malain.muhammad

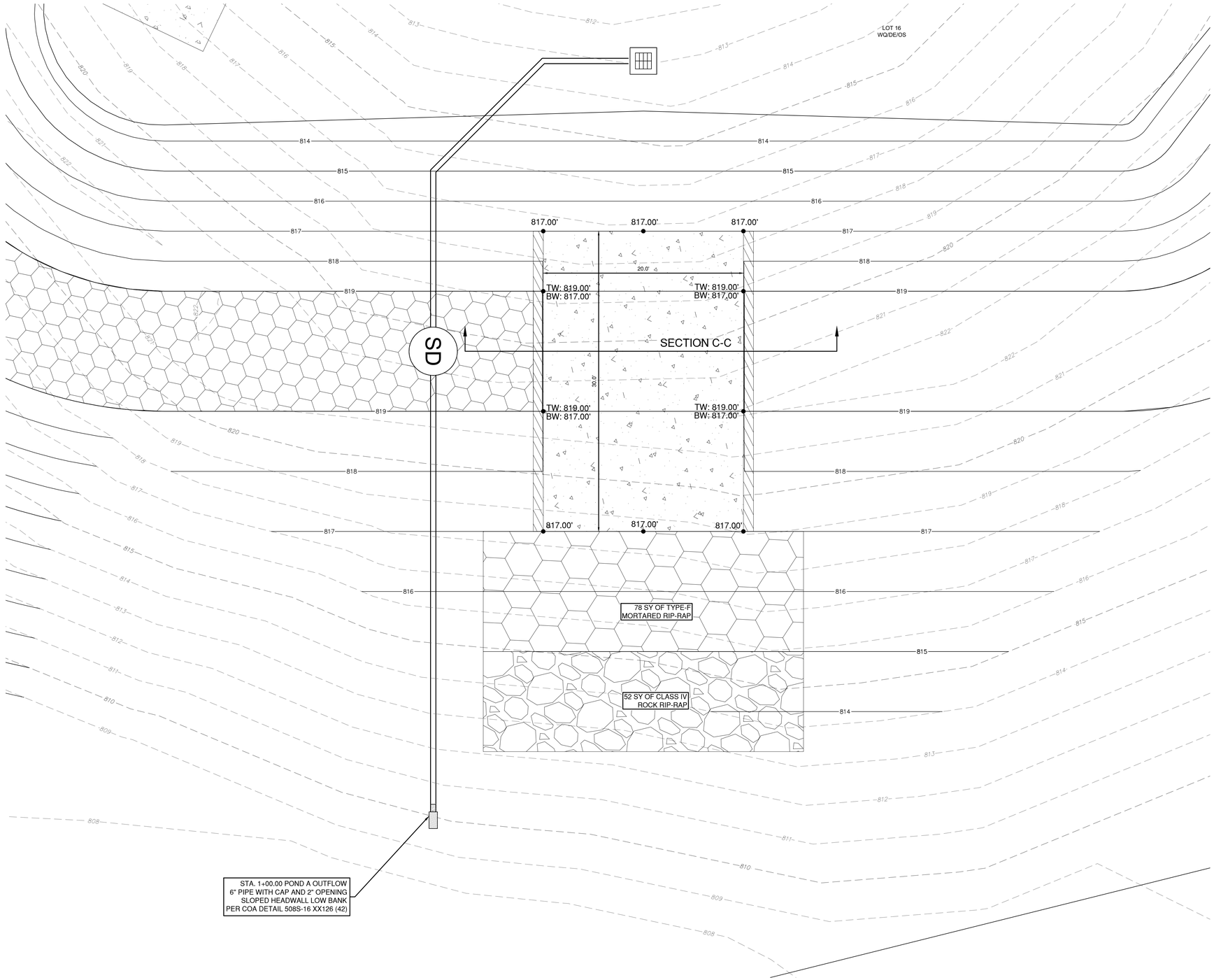

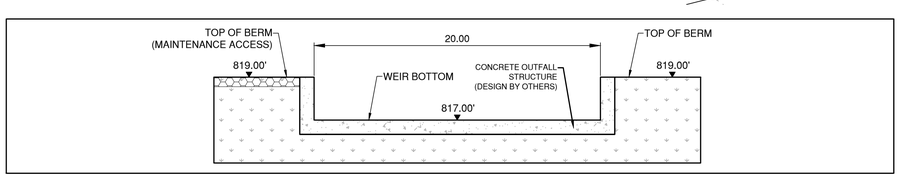

POND OUTFLOW STRUCTURE
SECTION C-C
SCALE 1:5

0 5' 10'
SCALE: 1" = 5'

NO.	REVISION	BY	DATE

811 Know what's below. Call before you dig.

5508 HIGHWAY 290 WEST
SUITE 150
AUSTIN, TX 78735
512.872.6696
HRGREEN.COM

TBPE NO: 16384
TBPLS NO: 10194101

HRGreen®
DEVELOPMENT TX

STATE OF TEXAS
CHRISTINE N. CAMPBELL
142536
LICENSED PROFESSIONAL ENGINEER
07/03/2025

POND OUTLET A STRUCTURE DETAILS

PARKSIDE ON THE RIVER SECTIONS 11, 12A & 15A CONSTRUCTION PLANS GEORGETOWN, WILLIAMSON, TEXAS

DESIGNED BY: CC
DRAWN BY: MM
CHECKED BY: SN
APPROVED BY:

SHEET 82 OF 141

2025-XX-CON

P:\Blake Magee\Parkside Sections 11-15 & VCA 5\Section 11, 12A & 15A\03_ACAD\Planset\sht\250702 POND A.dwg, POND OUTLET A STRUCTURE DETAILS, July 16, 2025, 11:59 AM, mateo.mohammad

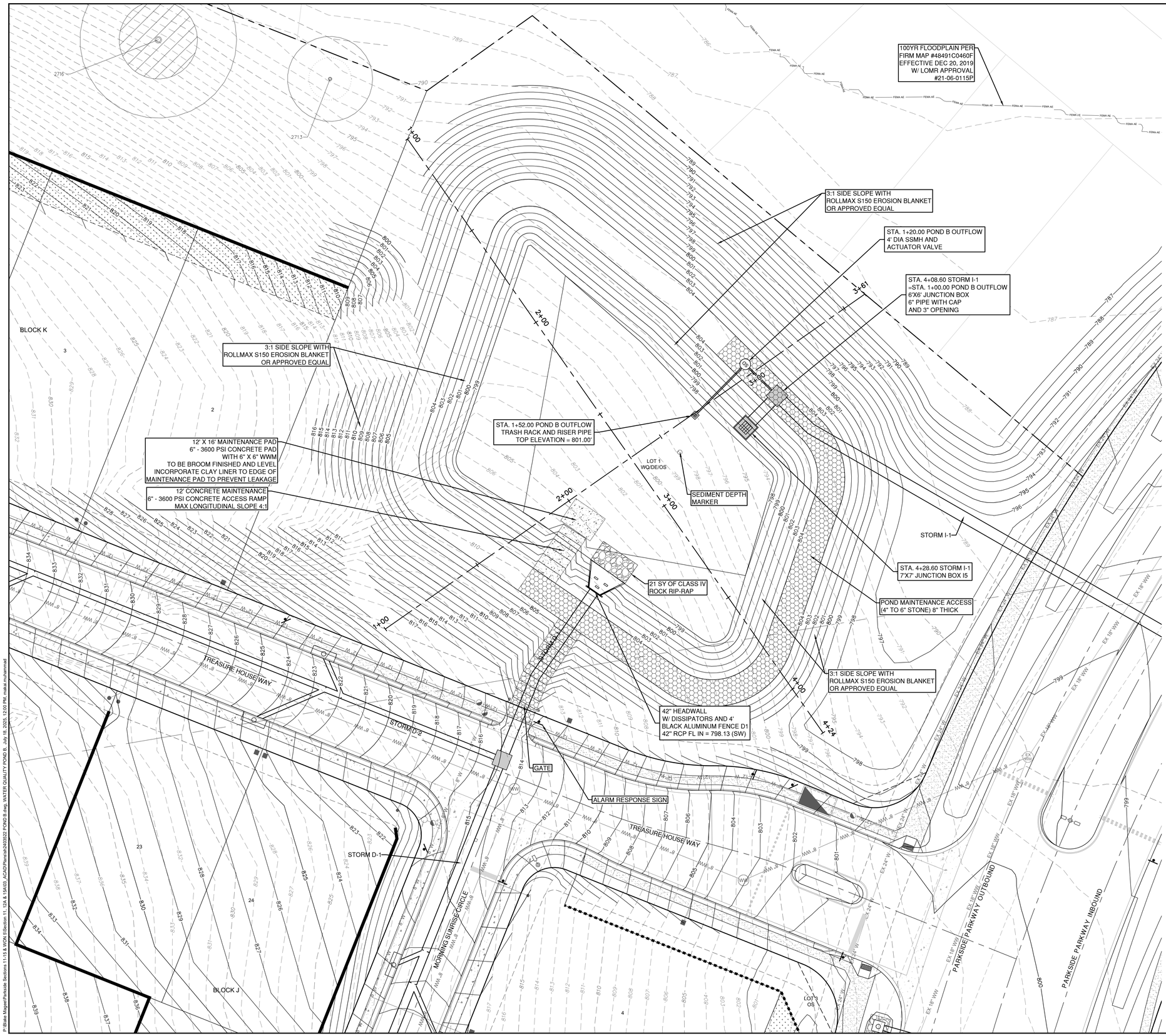

GENERAL NOTES:

1. CONTRACTOR TO UTILIZE A TEMPORARY CONSTRUCTION PUMP TO DISCHARGE WATER FROM THE POND AFTER A RAINFALL EVENT, DURING CONSTRUCTION. PUMP IS TO DISCHARGE UPSTREAM OF PROPOSED ROCK BERM LOCATED BEFORE THE CREEK BED. AT NO TIME SHALL THE PUMP BE DISCHARGED DIRECTLY INTO STORMSEWER SYSTEM BEFORE CROSSING A ROCK BERM.
2. ALL MUD, DIRT, ROCKS, DEBRIS, ETC., SPILLED, TRACKED OR OTHERWISE DEPOSITED ON EXISTING PAVED STREETS, DRIVES, AND AREAS USED BY THE PUBLIC SHALL BE CLEANED UP IMMEDIATELY. CONTRACTOR WILL CLEAN UP SPOILS THAT MIGRATE ONTO ROADS A MINIMUM OF ONCE DAILY.
3. ALL DISTURBED AREAS TO BE REVEGETATED PRIOR TO ACCEPTANCE.
4. IF DISTURBED AREA IS NOT TO BE WORKED ON FOR MORE THAN 14 DAYS, DISTURBED AREA NEEDS TO BE STABILIZED BY REVEGETATION, MULCH, TARP OR REVEGETATION MATTING.
5. THE STABILIZED CONSTRUCTION ENTRANCE SHALL BE MAINTAINED IN A CONDITION THAT WILL PREVENT TRACKING OR FLOWING OF SEDIMENT INTO PUBLIC ROADWAY.
6. THE ENVIRONMENTAL INSPECTOR HAS THE AUTHORITY TO ADD AND/OR MODIFY EROSION/SEDIMENTATION CONTROLS ON SITE TO KEEP PROJECT IN COMPLIANCE WITH THE CITY OF GEORGETOWN RULES AND REGULATIONS. HOWEVER, MODIFICATIONS TO THE ENGINEERING DESIGN AND FUNCTIONS OF THE EROSION AND SEDIMENTATION CONTROLS SYSTEMS CONTAINED HERE IN IS STRICTLY FORBIDDEN WITHOUT THE EXPRESSED WRITTEN CONSENT OF THE SIGNING PROJECT PROFESSIONAL ENGINEER (TAC22 §137.3 AND §137.37).
7. CONTRACTOR SHALL UTILIZE DUST CONTROL MEASURES DURING SITE CONSTRUCTION SUCH AS IRRIGATION TRUCKS AND MULCHING AS PER 1.4.5(A) OR AS DIRECTED BY THE ENVIRONMENTAL INSPECTOR.
8. ALL POND BOTTOMS, SIDE SLOPES, AND EARTHEN EMBANKMENTS SHALL BE COMPACTED TO 95% MAXIMUM DENSITY, IN ACCORDANCE WITH THE CITY OF GEORGETOWN STANDARD SPECIFICATIONS AND PER GEOTECHNICAL ENGINEER'S RECOMMENDATION. ALLOW ADEQUATE VOLUME FOR TOPSOIL TO SUPPORT VEGETATION.
9. GRADING WITHIN THE 1/2 CRITICAL ROOT ZONE OF PROTECTED TREES, IDENTIFIED BY A HATCH PATTERN ON THESE PLANS, SHALL BE LIMITED TO LESS THAN 12 INCHES OF DISTURBANCE. NO GRADING ACTIVITY WITH DISTURBANCE OF MORE THAN 6 INCHES IS ALLOWED IN THE 1/4 CRITICAL ROOT ZONE.
10. GRADING WORK WITHIN THE 1/2 CRITICAL ROOT ZONE OF ALL PROTECTED TREES SHALL BE DONE BY HAND OR WITH RUBBER TIRED EQUIPMENT.
11. ALL RETAINING WALLS GREATER THAN FOUR FEET IN HEIGHT MEASURED FROM THE BOTTOM OF THE FOOTING TO THE TOP OF THE WALL SHALL BE DESIGNED BY A PROFESSIONAL ENGINEER.

DEWATERING PLAN NOTES:

1. CONTRACTOR SHALL MAINTAIN THE DEWATERING SYSTEM TO ENSURE PERFORMANCE. IF THE DEWATERING SYSTEM IS NOT PERFORMING, THE CONTRACTOR MUST IMMEDIATELY MAKE THE NECESSARY MODIFICATIONS, FOLLOWING THE ENVIRONMENTAL INSPECTOR'S DIRECTION TO ENSURE ADEQUATE SYSTEM PERFORMANCE. CONTRACTOR SHALL PROVIDE THE DEWATERING PLAN AT THE PRECONSTRUCTION MEETING.
2. THE SKIMMER IS TO BE USED DURING CONSTRUCTION AND SHALL BE REMOVED AFTER COMPLETING CONSTRUCTION OF THE BATCH DETENTION POND.

NO	REVISION	BY	DATE

811 Know what's below. Call before you dig.

5508 HIGHWAY 290 WEST
SUITE 150
AUSTIN, TX 78735
512.872.6696
HRGREEN.COM

TBPE NO: 16384
TBPLS NO: 10194101

HRGreen® DEVELOPMENT TX

STATE OF TEXAS
CHRISTINE N. CAMPBELL
142536
LICENSED PROFESSIONAL ENGINEER
07/03/2025

WATER QUALITY POND B

PARKSIDE ON THE RIVER
SECTIONS 11, 12A & 15A
CONSTRUCTION PLANS
GEORGETOWN, WILLIAMSON, TEXAS

DESIGNED BY: CC
DRAWN BY: MM
CHECKED BY: SN
APPROVED BY:

SHEET 83 OF 141

2025-XX-CON

P:\Blake Magee\Parkside Sections 11-15 & WQPs\Sections 11, 12A & 15A\00_ACAD\Plans\sht\240502 POND B.dwg, WATER QUALITY POND B, July 18, 2025, 12:00 PM, mailto:mahermad

SECTION A-A

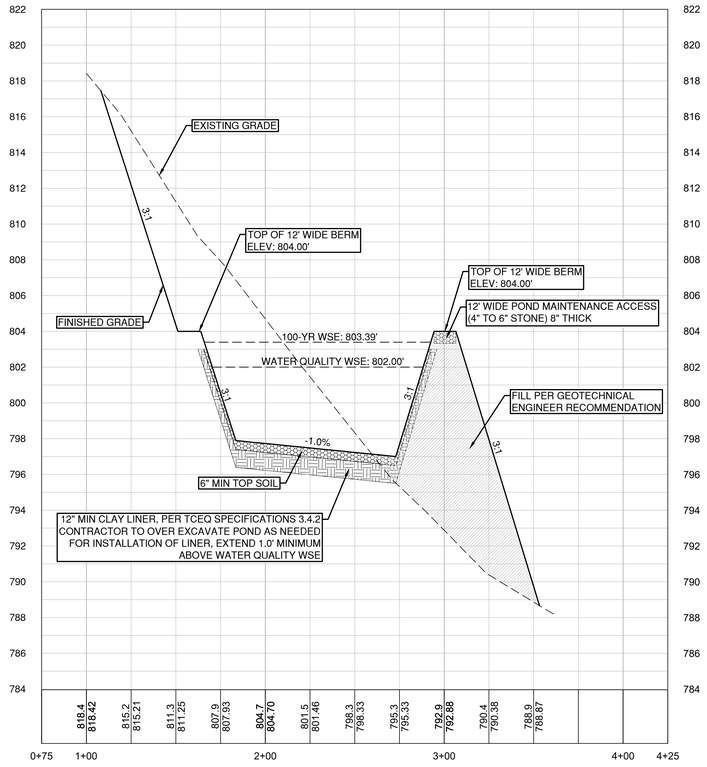

SECTION B-B

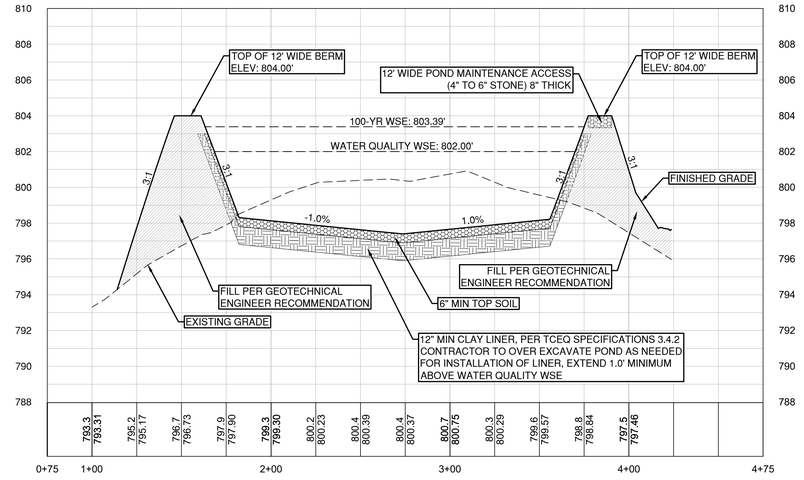

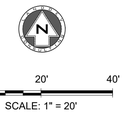

Pond Volume

Elevation	Area		Volume		Cumulative Volume		Comments
	SF	ac	cf	ac*ft	cf	ac*ft	
797.00	0	0.00					
798.00	8879	0.20	4,440	0.10	4,440	0.10	
799.00	14431	0.33	11,655	0.27	16,095	0.37	
800.00	15952	0.37	15,192	0.35	31,286	0.72	
801.00	17529	0.40	16,741	0.38	48,027	1.10	
802.00	19160	0.44	18,345	0.42	66,371	1.52	
803.00	20846	0.48	20,003	0.46	86,374	1.98	Water Quality Volume
803.50	21715	0.50	10,640	0.24	97,014	2.23	Routing
804.00	22587	0.52	11,076	0.25	108,090	2.48	Freeboard

OUTFLOW STRUCTURE	
Elevation	Flow
ft	cfs
802.00	0
802.50	30
803.00	84
803.50	154

$$Q = C_w L H^{1.5}$$

Q - *weir flow rate (cfs)*

C_w - *Weir Coefficient* BROAD: 3.00

L - *horizontal length of weir crest (ft)* BROAD: 28 FT

H - *head above weir crest elevation (ft)*

DRAWDOWN CALCUATIONS FOR A ROUND ORIFICE

PROJECT NAME: PARKSIDE ON THE RIVER SECTIONS 11, 12A & 15A

Pipe Diameter =	6.00	IN	W.Q.V. =	66,371	CF
Orifice Diameter =	3.00	IN	WQ Elev =	802.00	MSL
Outflow Orifice Elev =	793.78	MSL	Pond Bottom Elev =	797.00	MSL
Draining time	34.00	HR	Initial Head =	8.22	FT

TIME	HEAD	OUTFLOW	VOL.	dV	Total dV	H	dH	W.E.
HRS	FT	CFS	CF	CF	CF	FT	FT	MSL
0.00	8.22	0.68	66,371	2,440	2,440	0.18	8.04	802.00
1.00	8.04	0.67	63,931	2,412	4,852	0.18	7.85	801.82
2.00	7.85	0.66	61,519	2,385	7,236	0.18	7.67	801.63
3.00	7.67	0.65	59,135	2,357	9,593	0.18	7.50	801.45
4.00	7.50	0.65	56,778	2,330	11,923	0.18	7.32	801.28
5.00	7.32	0.64	54,448	2,302	14,226	0.17	7.15	801.10
6.00	7.15	0.63	52,145	2,275	16,501	0.17	6.98	800.93
7.00	6.98	0.62	49,870	2,247	18,748	0.17	6.81	800.76
8.00	6.81	0.62	47,623	2,220	20,968	0.17	6.64	800.59
9.00	6.64	0.61	45,403	2,193	23,161	0.17	6.48	800.42
10.00	6.48	0.60	43,210	2,165	25,326	0.16	6.31	800.26
11.00	6.31	0.59	41,045	2,138	27,464	0.16	6.15	800.09
12.00	6.15	0.59	38,907	2,110	29,574	0.16	5.99	799.93
13.00	5.99	0.58	36,797	2,083	31,657	0.16	5.84	799.77
14.00	5.84	0.57	34,714	2,055	33,712	0.15	5.68	799.62
15.00	5.68	0.56	32,659	2,028	35,740	0.15	5.53	799.46
16.00	5.53	0.56	30,631	2,000	37,741	0.15	5.38	799.31
17.00	5.38	0.55	28,630	1,973	39,714	0.15	5.23	799.16
18.00	5.23	0.54	26,657	1,946	41,659	0.15	5.08	799.01
19.00	5.08	0.53	24,712	1,918	43,577	0.14	4.94	798.86
20.00	4.94	0.53	22,794	1,891	45,468	0.14	4.79	798.72
21.00	4.79	0.52	20,903	1,863	47,331	0.14	4.65	798.57
22.00	4.65	0.51	19,040	1,836	49,167	0.14	4.52	798.43
23.00	4.52	0.50	17,204	1,808	50,975	0.14	4.38	798.30
24.00	4.38	0.49	15,396	1,781	52,756	0.13	4.25	798.16
25.00	4.25	0.49	13,615	1,753	54,509	0.13	4.11	798.03
26.00	4.11	0.48	11,862	1,726	56,235	0.13	3.98	797.89
27.00	3.98	0.47	10,136	1,698	57,933	0.13	3.86	797.76
28.00	3.86	0.46	8,438	1,671	59,604	0.13	3.73	797.64
29.00	3.73	0.46	6,767	1,643	61,247	0.12	3.61	797.51
30.00	3.61	0.45	5,124	1,616	62,863	0.12	3.48	797.39
31.00	3.48	0.44	3,508	1,588	64,451	0.12	3.36	797.26
32.00	3.36	0.43	1,920	1,561	66,012	0.12	3.25	797.14
33.00	3.25	0.43	359	1,533	66,371	0.12	3.22	797.03
34.00	3.22	0.00	0	0	66,371	0.00	3.22	797.00
35.00	3.22	0.00	0	0	66,371	0.00	3.22	797.00
36.00	3.22	0.00	0	0	66,371	0.00	3.22	797.00
37.00	3.22	0.00	0	0	66,371	0.00	3.22	797.00
38.00	3.22	0.00	0	0	66,371	0.00	3.22	797.00
39.00	3.22	0.00	0	0	66,371	0.00	3.22	797.00
40.00	3.22	0.00	0	0	66,371	0.00	3.22	797.00
41.00	3.22	0.00	0	0	66,371	0.00	3.22	797.00
42.00	3.22	0.00	0	0	66,371	0.00	3.22	797.00
43.00	3.22	0.00	0	0	66,371	0.00	3.22	797.00
44.00	3.22	0.00	0	0	66,371	0.00	3.22	797.00
45.00	3.22	0.00	0	0	66,371	0.00	3.22	797.00
46.00	3.22	0.00	0	0	66,371	0.00	3.22	797.00
47.00	3.22	0.00	0	0	66,371	0.00	3.22	797.00
48.00	3.22	0.00	0	0	66,371	0.00	3.22	797.00

POND B OUTFLOW

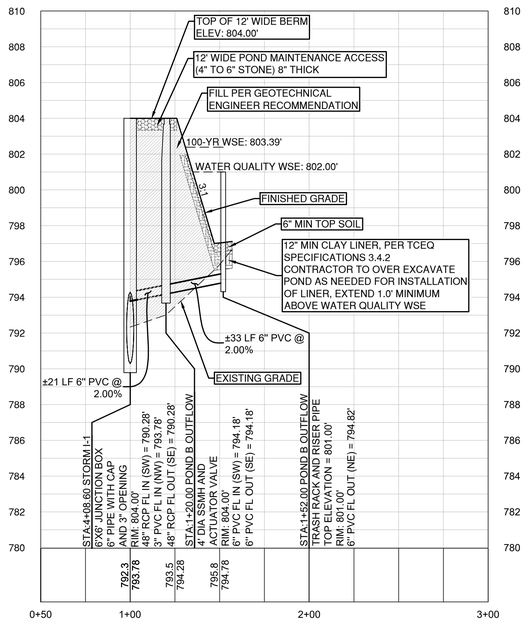

VERT. SCALE: 1" = 4'
HORZ. SCALE: 1" = 40'

4' 2' 0 VERT. SCALE

EXISTING GRADE - CENTERLINE

FINISHED GRADE - CENTERLINE

EXISTING GROUND 1000.1 997.10 PROPOSED FLOWLINE

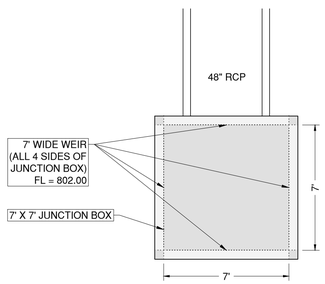

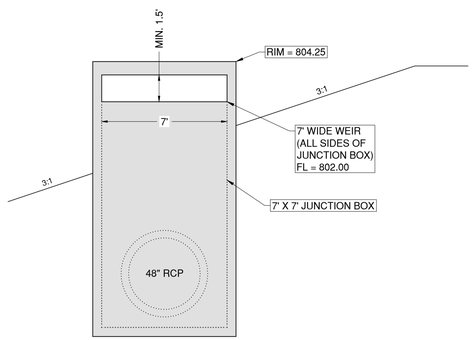

DATE | BY | REVISION | NO.

Know what's below. Call before you dig.

5508 HIGHWAY 290 WEST
SUITE 150
AUSTIN, TX 78735
512.872.6696
HRGREEN.COM

TBPE NO: 16384
TBPLS NO: 10194101

HRGreen®
DEVELOPMENT TX

STATE OF TEXAS
CHRISTINE N. CAMPBELL
142536
LICENSED PROFESSIONAL ENGINEER

07/15/2025

POND B SECTIONS

PARKSIDE ON THE RIVER SECTIONS 11, 12A & 15A CONSTRUCTION PLANS

GEORGETOWN, WILLIAMSON, TEXAS

DESIGNED BY: CC
DRAWN BY: MM
CHECKED BY: SN
APPROVED BY:

SHEET 84 OF 141

2025-XX-CON

P:\Blake Magee\Parkside Sections 11-15 & WOA II\Sections 11, 12A & 15A\03_ACAD\Planset\04052025\POND B.dwg, POND B SECTIONS, July 16, 2025, 12:01 PM, mateo.muhammad

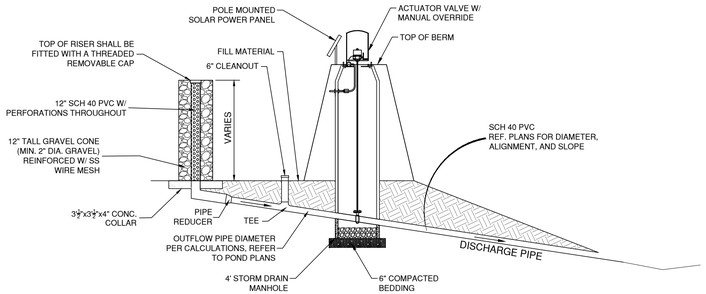

TRASH RACK AND ACTUATOR VALVE
N.T.S.

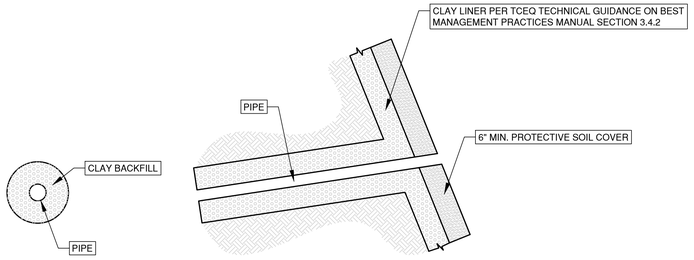

INTERBASIN PIPES DETAIL
N.T.S.

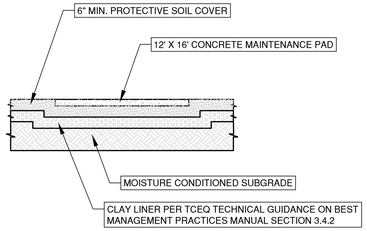

MAINTENANCE PAD INSTALLATION
N.T.S.

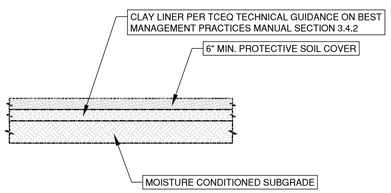

CLAY LINER INSTALLATION
N.T.S.

Table 3-6 Clay Liner Specifications (COA, 2004)

Property	Test Method	Unit	Specification
Permeability	ASTM D-2434	cm/sec	1×10^{-6}
Plasticity Index of Clay	ASTM D-423 & D-424	%	Not less than 15
Liquid Limit of Clay	ASTM D-2216	%	Not less than 30
Clay Particles Passing	ASTM D-422	%	Not less than 30
Clay Compaction	ASTM D-2216	%	95% of Standard Proctor Density

CLAY LINER SPECIFICATIONS PER TCEQ SPECIFICATIONS 3.4.2

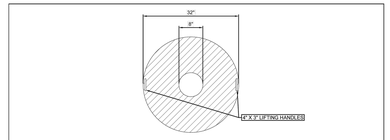

LID DETAIL
1" = 1'

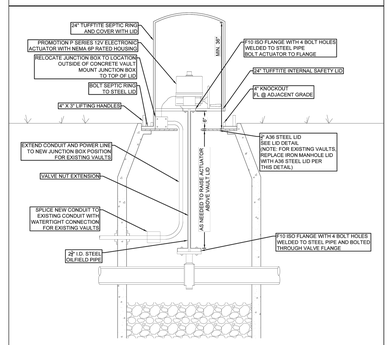

BATCH DETENTION ACTUATOR & VALVE DETAIL
1" = 1'

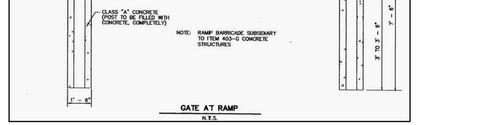

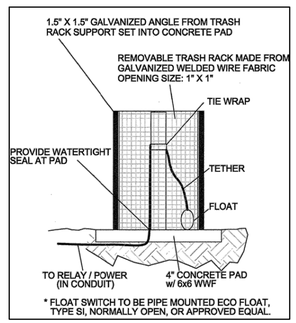

FLOAT SWITCH DETAIL

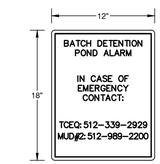

ALARM RESPONSE SIGN
N.T.S.

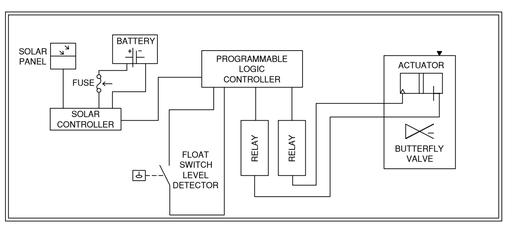

ACTUATOR VALVE POWER & CONTROLLER CIRCUIT BLOCK DIAGRAM

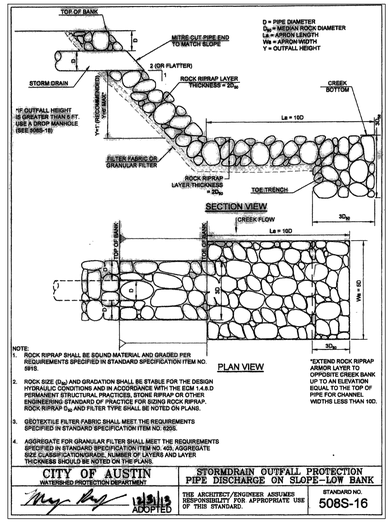

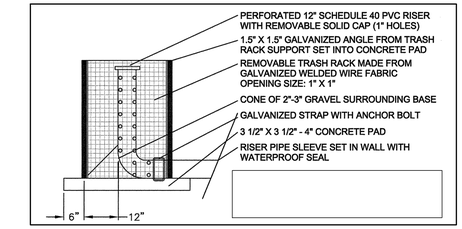

TRASH RACK / RISER PIPE DETAIL
N.T.S.

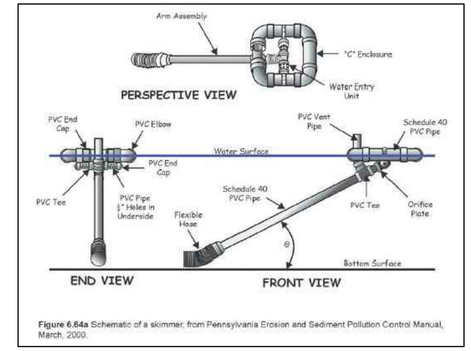

Figure 6.64a Schematic of a skimmer, from Pennsylvania Erosion and Sediment Pollution Control Manual, March, 2000.

DEWATERING SKIMMER
N.T.S.

NOTE: DISCHARGE WATER MUST BE FILTERED USING FILTER BAG OR SOCK. DISCHARGE SHALL ALSO BE DIRECTED TOWARD SILT FENCE FOR ADDITIONAL FILTERING PRIOR TO LEAVING THE SITE.

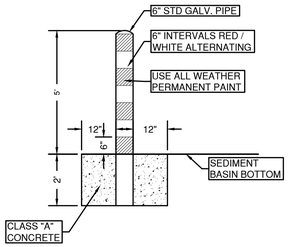

CONCRETE FILLED FIXED SEDIMENT MARKER FOR BATCH DETENTION POND
N.T.S.

NOTE:
1. BATCH DETENTION POND SHALL BE IN ACCORDANCE WITH THE TEXAS COMMISSION ON ENVIRONMENTAL QUALITY (TCEQ) RG-348 MANUAL (ADDENDUM)
2. THE BATCH DETENTION POND AND RISER PIPE / TRASH RACK WILL FUNCTION AS THE DEWATERING OUTLET AND SHALL BE BE INSTALLED AND FUNCTIONAL PRIOR TO ANY GENERAL GRADING AND UTILITY WORK.
3. SYSTEM SHALL BE 12 VDC WITH SOLAR CHARGED 12 VDC BATTERY. ALTERNATE ELECTRICAL DESIGN MAY ALSO BE UTILIZED IN LIEU OF SOLAR POWER WITH ENGINEERS APPROVAL.
4. ACTUATOR SHALL BE ELECTRONIC QUARTER-TURN WITH MANUAL OVERRIDE AND POSITION INDICATOR.
5. ACTUATOR SHALL BE "AVID 12V ACTUATOR, EPI-6" OR EQUIVALENT.
6. ACTUATOR VALVE TO BE SET AT "NORMALLY CLOSED" POSITION.
7. CONTROLLER SHALL BE SET TO OPEN VALVE 12 HOURS AFTER INITIAL RAINFALL DETECTION. VALVE TO REMAIN OPEN UNTIL 2 HRS FOLLOWING BASIN EMPTY SIGNAL.
8. LOGIC CONTROLLER SYSTEM SHALL HAVE TEST SEQUENCE TO DEAL WITH LOW BATTERY/POWER OUTAGES, ON/OFF/RESET SWITCH AND THE PROGRAMMING SHALL BE FIELD UPLOADABLE.
9. CONTROLLER SHALL BE "MORNINGSTAR SOLAR CONTROLLER, 12V, 20 AMP" OR EQUIVALENT.
10. ALL WIRING SHALL BE INSTALLED IN CONDUIT AND BURIED. CONTACT ENGINEER FOR ADDITIONAL CONTROLLER SCHEMATICS.
11. CONTRACTOR TO INSTALL LIBERTY ALARM MODEL ALM-2W OR EQUIVALENT AT A CONTROLLER PANEL.
12. ATTACH ALARM RESPONSE SIGN TO CONTROLLER POLE. REFERENCE ALARM RESPONSE SIGN TO RIGHT.
13. HAZARDOUS MATERIAL THREAT (HMT) OPERATION - THE BASIN'S OUTLET VALVE IS NORMALLY CLOSED AND WILL DETAIN A HAZARDOUS MATERIAL SPILL. HOWEVER, AFTER A SPILL OCCURS, THE MANUAL CONTROLS ON THE CONTROLLER OR THE ACTUATOR/VALVE ARE USED TO PREVENT THE VALVE FROM AUTOMATICALLY OPENING PRIOR TO REMOVAL OF THE HAZARDOUS MATERIAL. ALTHOUGH NOT REQUIRED BY THE EDWARDS RULES, THE HMT OPERATION CAN BE USED TO COMPLY WITH APPENDIX A OF RG-348. IF A SPILL DOES OCCUR IN THE BASIN, ALL COMPONENTS OF THE CONTROLLER MUST BE INSPECTED AND CHECKED FOR PROPER OPERATION WITHIN 7 DAYS.
14. POWER - THE POND CONTROL SYSTEM CONTROLLER AND ACTUATOR SHALL BE 12 VOLT POWERED OR 12 VOLT SOLAR POWERED WITH BACKUP BATTERY POWER TO RESPOND TO A LOSS OF POWER IN THE MIDDLE OF A CYCLE.
15. PARTS ENCLOSURE & ALARM SYSTEM - THE PARTS ENCLOSURE SHALL BE LOCKABLE. AN ALARM SYSTEM CLEARLY VISIBLE TO INDICATE SYSTEM MALFUNCTION.
16. TEMPERATURE/WEATHER - THE SYSTEM SHALL BE CAPABLE OF OPERATION FROM 0 TO 130 DEGREES FAHRENHEIT AND FROM 10 TO 90% HUMIDITY.
17. RELIABILITY - THE SYSTEM SHALL HAVE A MINIMUM RELIABILITY OF 40,000 HOURS (4.6 YEARS).

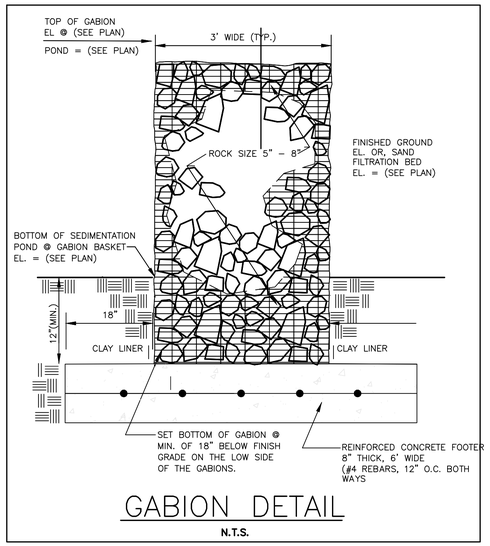

GABION DETAIL
N.T.S.

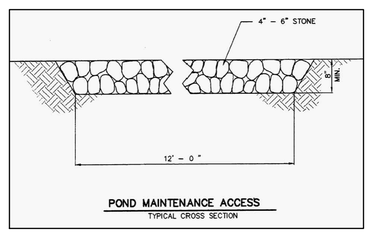

HRGreen
5508 HIGHWAY 290 WEST
SUITE 150
AUSTIN, TX 78735
512.872.6696
HRGREEN.COM
TBPE NO: 16384
TBPLS NO: 10194101

Know what's below. Call before you dig.

DEVELOPMENT TX

NO	REVISION	BY	DATE

STATE OF TEXAS
CHRISTINE N. CAMPBELL
142536
LICENSED PROFESSIONAL ENGINEER
07/15/2025

POND DETAILS

PARKSIDE ON THE RIVER
SECTIONS 11, 12A & 15A
CONSTRUCTION PLANS
GEORGETOWN, WILLIAMSON, TEXAS

DESIGNED BY: CC
DRAWN BY: MM
CHECKED BY: SN
APPROVED BY:

SHEET 85 OF 141

2025-XX-CON

P:\Blake Magee\Parkside Sections 11-15 & WOA S\Section 11, 12A & 15A\00_ACAD\Plans\sh2A\03522 POND B.dwg POND DETAILS, July 15, 2025, 12:01 PM, mateo.mohammad

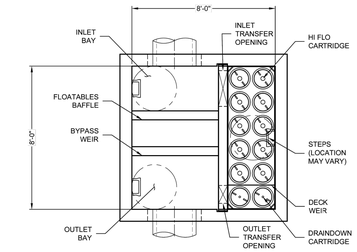

PLAN VIEW
(TOP SLAB NOT SHOWN FOR CLARITY)

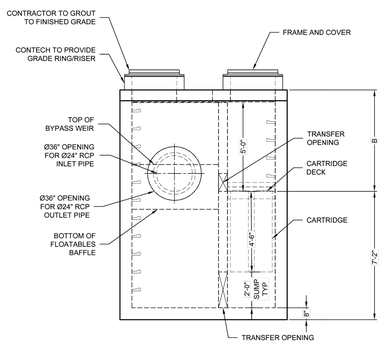

ELEVATION VIEW

RIM
ELEV. = 805.81'

TOP OF STRUCTURE
ELEV. = 804.65'

WEIR ELEV. =800.48'

INLET INV. ELEV. = 798.98'

OUTLET INV. ELEV. = 798.98'

STRUCTURE INV.
ELEV. = 792.48'

BOTTOM OF STRUCTURE
ELEV. = 791.81'

Jellyfish® Filter

THIS PRODUCT MAY BE PROTECTED BY ONE OR MORE OF THE FOLLOWING: U.S. PATENT NO. 8,287,728; 8,221,618; US 8,123,935; OTHER INTERNATIONAL PATENTS PENDING

JELLYFISH DESIGN NOTES

JELLYFISH TREATMENT CAPACITY IS A FUNCTION OF THE CARTRIDGE LENGTH AND THE NUMBER OF CARTRIDGES. THE STANDARD PEAK DIVERSION STYLE WITH PRECAST TOP SLAB IS SHOWN. ALTERNATE OFFLINE VAULT AND/OR SHALLOW ORIENTATIONS ARE AVAILABLE. PEAK CONVEYANCE CAPACITY TO BE DETERMINED BY ENGINEER OF RECORD

CARTRIDGE LENGTH	54"
OUTLET INVERT TO STRUCTURE INVERT (A)	6'-6"
FLOW RATE HI-FLO / DRAINDOWN (CFS) (PER CART)	0.178 / 0.089
MAX. TREATMENT (CFS)	1.96
DECK TO INSIDE TOP (MIN) (B)	5.00

FRAME AND COVER
(DIAMETER VARIES)
N.T.S.

SITE SPECIFIC DATA REQUIREMENTS

STRUCTURE ID						JF-01
WATER QUALITY FLOW RATE (cfs)						1.87
PEAK FLOW RATE (cfs)						33.1
RETURN PERIOD OF PEAK FLOW (yrs)						100
# OF CARTRIDGES REQUIRED (HF / DD)						10/2
CARTRIDGE LENGTH						54
PIPE DATA:	I.E.	MAT'L	DIA	SLOPE %	HGL	
INLET #1	798.98	RCP	24	*	*	
INLET #2	*	*	*	*	*	
OUTLET	798.98	RCP	24	*	*	
SEE GENERAL NOTES 6-7 FOR INLET AND OUTLET HYDRAULIC AND SIZING REQUIREMENTS.						
RIM ELEVATION						805.81
ANTI-FLOTATION BALLAST			WIDTH		HEIGHT	
			*		*	
NOTES/SPECIAL REQUIREMENTS: VAULT INCREASED TO 8'x8' TO ACCOMMODATE PIPE SIZES * PER ENGINEER OF RECORD						

GENERAL NOTES:
1. CONTECH TO PROVIDE ALL MATERIALS UNLESS NOTED OTHERWISE.
2. FOR SITE SPECIFIC DRAWINGS WITH DETAILED STRUCTURE DIMENSIONS AND WEIGHT, PLEASE CONTACT YOUR CONTECH ENGINEERED SOLUTIONS REPRESENTATIVE. www.ContechES.com
3. JELLYFISH WATER QUALITY STRUCTURE SHALL BE IN ACCORDANCE WITH ALL DESIGN DATA AND INFORMATION CONTAINED IN THIS DRAWING. CONTRACTOR TO CONFIRM STRUCTURE MEETS REQUIREMENTS OF PROJECT.
4. STRUCTURE SHALL MEET AASHTO HS-20 OR PER APPROVING JURISDICTION REQUIREMENTS, WHICHEVER IS MORE STRINGENT, ASSUMING EARTH COVER OF 0' - 10', AND GROUNDWATER ELEVATION AT, OR BELOW, THE OUTLET PIPE INVERT ELEVATION. ENGINEER OF RECORD TO CONFIRM ACTUAL GROUNDWATER ELEVATION. CASTINGS SHALL MEET AASHTO M306 LOAD RATING AND BE CAST WITH THE CONTECH LOGO.
5. STRUCTURE SHALL BE PRECAST CONCRETE CONFORMING TO ASTM C-857, ASTM C-918, AND AASHTO LOAD FACTOR DESIGN METHOD.
6. OUTLET PIPE INVERT IS EQUAL TO THE CARTRIDGE DECK ELEVATION.
7. THE OUTLET PIPE DIAMETER FOR NEW INSTALLATIONS IS RECOMMENDED TO BE ONE PIPE SIZE LARGER THAN THE INLET PIPE AT EQUAL OR GREATER SLOPE.
8. NO PRODUCT SUBSTITUTIONS SHALL BE ACCEPTED UNLESS SUBMITTED 10 DAYS PRIOR TO PROJECT BID DATE, OR AS DIRECTED BY THE ENGINEER OF RECORD.

INSTALLATION NOTES
A. ANY SUB-BASE, BACKFILL DEPTH, AND/OR ANTI-FLOTATION PROVISIONS ARE SITE-SPECIFIC DESIGN CONSIDERATIONS AND SHALL BE SPECIFIED BY ENGINEER OF RECORD.
B. CONTRACTOR TO PROVIDE EQUIPMENT WITH SUFFICIENT LIFTING AND REACH CAPACITY TO LIFT AND SET THE STRUCTURE.
C. CONTRACTOR WILL INSTALL AND LEVEL THE STRUCTURE, SEALING THE JOINTS, LINE ENTRY AND EXIT POINTS (NON-SHRINK GROUT WITH APPROVED WATERSTOP OR FLEXIBLE BOOT).
D. CARTRIDGE INSTALLATION, BY CONTECH, SHALL OCCUR ONLY AFTER SITE HAS BEEN STABILIZED AND THE JELLYFISH UNIT IS CLEAN AND FREE OF DEBRIS. CONTACT CONTECH TO COORDINATE CARTRIDGE INSTALLATION WITH SITE STABILIZATION.

CONTECH ENGINEERED SOLUTIONS LLC
www.ContechES.com
9025 Centre Pointe Dr., Suite 400, West Chester, OH 45069
800-338-1122 513-645-7000 513-645-7993 FAX

8' x 6' JELLYFISH - 835683- 10
PROJECT NAME: PARKSIDE ON THE RIVER
LOCATION: GEORGETOWN, TX
SITE DESIGNATION: JF-01

P:\Blake Magee\Parkside Sections 11-15 & WOA 5\Section 11, 12A & 15A\03_ACAD\Planset\240503\22 JELLYFISH.dwg, JELLYFISH-01, July 18, 2025, 12:01 PM, malik.muhammad

\\QUIKRETE.NET\CONTECH\IMR\LIN\PROJECTS\ACTIVE\835600\835683\835683-10-JELLYFISH\DRAWINGS\PROPOSAL\835683-10-JELLYFISH-01.DWG 6/4/2025 2:21 PM

NO.	REVISION	BY	DATE

811 Know what's below. Call before you dig.

5508 HIGHWAY 290 WEST
SUITE 150
AUSTIN, TX 78735
512.872.6696
HRGREEN.COM
TBPE NO: 16384
TBPLS NO: 10194101
HRGreen® DEVELOPMENT TX

STATE OF TEXAS
CHRISTINE N. CAMPBELL
142536
LICENSED PROFESSIONAL ENGINEER
07/15/2025

JELLYFISH-01

PARKSIDE ON THE RIVER
SECTIONS 11, 12A & 15A
CONSTRUCTION PLANS
GEORGETOWN, WILLIAMSON, TEXAS

DESIGNED BY: CC
DRAWN BY: MM
CHECKED BY: SN
APPROVED BY:

SHEET 86 OF 141

2025-XX-CON

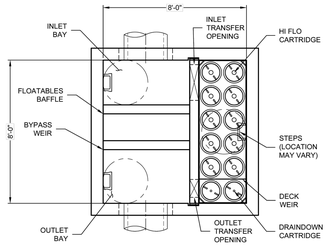

PLAN VIEW
(TOP SLAB NOT SHOWN FOR CLARITY)

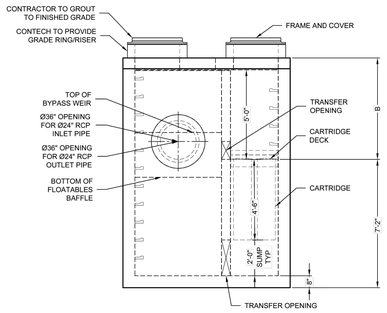

ELEVATION VIEW

RIM
ELEV. = 797.35'

TOP OF STRUCTURE
ELEV. = 796.19'

WEIR ELEV. =792.02'

INLET INV. ELEV. = 790.52'

OUTLET INV. ELEV. = 790.52'

STRUCTURE INV.
ELEV. = 784.02'

BOTTOM OF STRUCTURE
ELEV. = 783.35'

Jellyfish® Filter

THIS PRODUCT MAY BE PROTECTED BY ONE OR MORE OF THE FOLLOWING: U.S. PATENT NO. 8,287,728; 8,221,618; US 8,123,935; OTHER INTERNATIONAL PATENTS PENDING

JELLYFISH DESIGN NOTES

JELLYFISH TREATMENT CAPACITY IS A FUNCTION OF THE CARTRIDGE LENGTH AND THE NUMBER OF CARTRIDGES. THE STANDARD PEAK DIVERSION STYLE WITH PRECAST TOP SLAB IS SHOWN. ALTERNATE OFFLINE VAULT AND/OR SHALLOW ORIENTATIONS ARE AVAILABLE. PEAK CONVEYANCE CAPACITY TO BE DETERMINED BY ENGINEER OF RECORD

CARTRIDGE LENGTH	54"
OUTLET INVERT TO STRUCTURE INVERT (A)	6'-6"
FLOW RATE HI-FLO / DRAINDOWN (CFS) (PER CART)	0.178 / 0.089
MAX. TREATMENT (CFS)	1.96
DECK TO INSIDE TOP (MIN) (B)	5.00

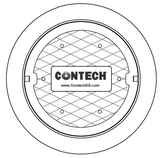

FRAME AND COVER
(DIAMETER VARIES)
N.T.S.

SITE SPECIFIC DATA REQUIREMENTS

STRUCTURE ID					JF-02
WATER QUALITY FLOW RATE (cfs)					1.79
PEAK FLOW RATE (cfs)					21.2
RETURN PERIOD OF PEAK FLOW (yrs)					100
# OF CARTRIDGES REQUIRED (HF / DD)					10/2
CARTRIDGE LENGTH					54
PIPE DATA:	I.E.	MAT'L	DIA	SLOPE %	HGL
INLET #1	790.52	RCP	24	*	*
INLET #2	*	*	*	*	*
OUTLET	790.52	RCP	24	*	*
SEE GENERAL NOTES 6-7 FOR INLET AND OUTLET HYDRAULIC AND SIZING REQUIREMENTS.					
RIM ELEVATION					797.35
ANTI-FLOTATION BALLAST			WIDTH		HEIGHT
			*		*
NOTES/SPECIAL REQUIREMENTS: VAULT INCREASED TO 8'x8' TO ACCOMMODATE PIPE SIZES * PER ENGINEER OF RECORD					

GENERAL NOTES:
1. CONTECH TO PROVIDE ALL MATERIALS UNLESS NOTED OTHERWISE.
2. FOR SITE SPECIFIC DRAWINGS WITH DETAILED STRUCTURE DIMENSIONS AND WEIGHT, PLEASE CONTACT YOUR CONTECH ENGINEERED SOLUTIONS REPRESENTATIVE. www.ContechES.com
3. JELLYFISH WATER QUALITY STRUCTURE SHALL BE IN ACCORDANCE WITH ALL DESIGN DATA AND INFORMATION CONTAINED IN THIS DRAWING. CONTRACTOR TO CONFIRM STRUCTURE MEETS REQUIREMENTS OF PROJECT.
4. STRUCTURE SHALL MEET AASHTO HS-20 OR PER APPROVING JURISDICTION REQUIREMENTS, WHICHEVER IS MORE STRINGENT, ASSUMING EARTH COVER OF 0' - 10', AND GROUNDWATER ELEVATION AT, OR BELOW, THE OUTLET PIPE INVERT ELEVATION. ENGINEER OF RECORD TO CONFIRM ACTUAL GROUNDWATER ELEVATION. CASTINGS SHALL MEET AASHTO M306 LOAD RATING AND BE CAST WITH THE CONTECH LOGO.
5. STRUCTURE SHALL BE PRECAST CONCRETE CONFORMING TO ASTM C-857, ASTM C-918, AND AASHTO LOAD FACTOR DESIGN METHOD.
6. OUTLET PIPE INVERT IS EQUAL TO THE CARTRIDGE DECK ELEVATION.
7. THE OUTLET PIPE DIAMETER FOR NEW INSTALLATIONS IS RECOMMENDED TO BE ONE PIPE SIZE LARGER THAN THE INLET PIPE AT EQUAL OR GREATER SLOPE.
8. NO PRODUCT SUBSTITUTIONS SHALL BE ACCEPTED UNLESS SUBMITTED 10 DAYS PRIOR TO PROJECT BID DATE, OR AS DIRECTED BY THE ENGINEER OF RECORD.

INSTALLATION NOTES
A. ANY SUB-BASE, BACKFILL DEPTH, AND/OR ANTI-FLOTATION PROVISIONS ARE SITE-SPECIFIC DESIGN CONSIDERATIONS AND SHALL BE SPECIFIED BY ENGINEER OF RECORD.
B. CONTRACTOR TO PROVIDE EQUIPMENT WITH SUFFICIENT LIFTING AND REACH CAPACITY TO LIFT AND SET THE STRUCTURE.
C. CONTRACTOR WILL INSTALL AND LEVEL THE STRUCTURE, SEALING THE JOINTS, LINE ENTRY AND EXIT POINTS (NON-SHRINK GROUT WITH APPROVED WATERSTOP OR FLEXIBLE BOOT).
D. CARTRIDGE INSTALLATION, BY CONTECH, SHALL OCCUR ONLY AFTER SITE HAS BEEN STABILIZED AND THE JELLYFISH UNIT IS CLEAN AND FREE OF DEBRIS. CONTACT CONTECH TO COORDINATE CARTRIDGE INSTALLATION WITH SITE STABILIZATION.

CONTECH ENGINEERED SOLUTIONS LLC
www.ContechES.com
9025 Centre Pointe Dr., Suite 400, West Chester, OH 45069
800-338-1122 513-645-7000 513-645-7993 FAX

8' x 6' JELLYFISH - 835683- 015
PROJECT NAME: PARKSIDE ON THE RIVER
LOCATION: GEORGETOWN, TX
SITE DESIGNATION: JF-02

I:\QUIKRETE.NET\CONTECH\MRSLINVPROJECTS\ACTIVE\835600\835683\835683-15-JELLYFISH\DRAWINGS\PROPOSAL\835683-15-JFP00004.RRO.DWG 6/4/2025 1:19 PM

P:\Blake Magee\Parkside Sections 11-15 & WOA 5\Section 11, 12A & 15A\03_ACAD\Parcel\a2d05232_JELLYFISH.dwg, JELLYFISH-02, July 18, 2025, 12:01 PM, makai.muhammad

NO.	REVISION	BY	DATE

811 Know what's below. Call before you dig.

5508 HIGHWAY 290 WEST
SUITE 150
AUSTIN, TX 78735
512.872.6696
HRGREEN.COM
TBPE NO: 16384
TBPLS NO: 10194101
HRGreen® DEVELOPMENT TX

STATE OF TEXAS
CHRISTINE N. CAMPBELL
142536
LICENSED PROFESSIONAL ENGINEER
07/15/2025

JELLYFISH-02

PARKSIDE ON THE RIVER
SECTIONS 11, 12A & 15A
CONSTRUCTION PLANS
GEORGETOWN, WILLIAMSON, TEXAS

DESIGNED BY: CC
DRAWN BY: MM
CHECKED BY: SN
APPROVED BY:

SHEET 87 OF 141

2025-XX-CON

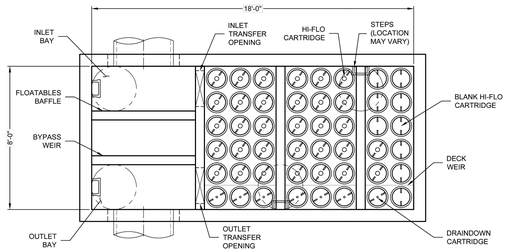

PLAN VIEW
(TOP SLAB NOT SHOWN FOR CLARITY)

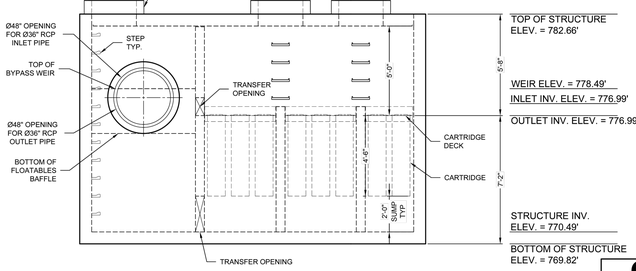

ELEVATION VIEW

JELLYFISH DESIGN NOTES

JELLYFISH TREATMENT CAPACITY IS A FUNCTION OF THE CARTRIDGE LENGTH AND THE NUMBER OF CARTRIDGES. THE STANDARD PEAK DIVERSION STYLE WITH PRECAST TOP SLAB IS SHOWN. ALTERNATE OFFLINE VAULT AND/OR SHALLOW ORIENTATIONS ARE AVAILABLE. PEAK CONVEYANCE CAPACITY TO BE DETERMINED BY ENGINEER OF RECORD.

CARTRIDGE SELECTION

CARTRIDGE LENGTH	54"
OUTLET INVERT TO STRUCTURE INVERT (A)	6'-8"
FLOW RATE HI-FLO / DRAINDOWN (CFS) (PER CART)	0.178 / 0.089
MAX. TREATMENT (CFS)	7.84
DECK TO INSIDE TOP (MIN) (B)	5.00

FRAME AND COVER
(DIAMETER VARIES)
N.T.S.

SITE SPECIFIC DATA REQUIREMENTS

STRUCTURE ID					JF-03
WATER QUALITY FLOW RATE (cfs)					6.18
PEAK FLOW RATE (cfs)					57.3
RETURN PERIOD OF PEAK FLOW (yrs)					100
# OF CARTRIDGES REQUIRED (HF / DD)					32/7
CARTRIDGE LENGTH					54
PIPE DATA:	I.E.	MAT'L	DIA	SLOPE %	HGL
INLET #1	776.99	RCP	36	*	*
INLET #2	*	*	*	*	*
OUTLET	776.99	RCP	36	*	*

SEE GENERAL NOTES 6-7 FOR INLET AND OUTLET HYDRAULIC AND SIZING REQUIREMENTS.

RIM ELEVATION	783.82

ANTI-FLOTATION BALLAST	WIDTH	HEIGHT
	*	*

NOTES/SPECIAL REQUIREMENTS:
VAULT INCREASED TO 8'x18' TO ACCOMMODATE PIPE SIZES
* PER ENGINEER OF RECORD

GENERAL NOTES:
1. CONTECH TO PROVIDE ALL MATERIALS UNLESS NOTED OTHERWISE.
2. FOR SITE SPECIFIC DRAWINGS WITH DETAILED STRUCTURE DIMENSIONS AND WEIGHT, PLEASE CONTACT YOUR CONTECH ENGINEERED SOLUTIONS REPRESENTATIVE. www.ContechES.com
3. JELLYFISH WATER QUALITY STRUCTURE SHALL BE IN ACCORDANCE WITH ALL DESIGN DATA AND INFORMATION CONTAINED IN THIS DRAWING. CONTRACTOR TO CONFIRM STRUCTURE MEETS REQUIREMENTS OF PROJECT.
4. STRUCTURE SHALL MEET AASHTO HS-20 OR PER APPROVING JURISDICTION REQUIREMENTS, WHICHEVER IS MORE STRINGENT, ASSUMING EARTH COVER OF 0' - 10', AND GROUNDWATER ELEVATION AT, OR BELOW, THE OUTLET PIPE INVERT ELEVATION. ENGINEER OF RECORD TO CONFIRM ACTUAL GROUNDWATER ELEVATION. CASTINGS SHALL MEET AASHTO M306 LOAD RATING AND BE CAST WITH THE CONTECH LOGO.
5. STRUCTURE SHALL BE PRECAST CONCRETE CONFORMING TO ASTM C-857, ASTM C-918, AND AASHTO LOAD FACTOR DESIGN METHOD.
6. OUTLET PIPE INVERT IS EQUAL TO THE CARTRIDGE DECK ELEVATION.
7. THE OUTLET PIPE DIAMETER FOR NEW INSTALLATIONS IS RECOMMENDED TO BE ONE PIPE SIZE LARGER THAN THE INLET PIPE AT EQUAL OR GREATER SLOPE.
8. NO PRODUCT SUBSTITUTIONS SHALL BE ACCEPTED UNLESS SUBMITTED 10 DAYS PRIOR TO PROJECT BID DATE, OR AS DIRECTED BY THE ENGINEER OF RECORD.

INSTALLATION NOTES
A. ANY SUB-BASE, BACKFILL DEPTH, AND/OR ANTI-FLOTATION PROVISIONS ARE SITE-SPECIFIC DESIGN CONSIDERATIONS AND SHALL BE SPECIFIED BY ENGINEER OF RECORD.
B. CONTRACTOR TO PROVIDE EQUIPMENT WITH SUFFICIENT LIFTING AND REACH CAPACITY TO LIFT AND SET THE STRUCTURE.
C. CONTRACTOR WILL INSTALL AND LEVEL THE STRUCTURE, SEALING THE JOINTS, LINE ENTRY AND EXIT POINTS (NON-SHRINK GROUT WITH APPROVED WATERSTOP OR FLEXIBLE BOOT).
D. CARTRIDGE INSTALLATION, BY CONTECH, SHALL OCCUR ONLY AFTER SITE HAS BEEN STABILIZED AND THE JELLYFISH UNIT IS CLEAN AND FREE OF DEBRIS. CONTACT CONTECH TO COORDINATE CARTRIDGE INSTALLATION WITH SITE STABILIZATION.

Jellyfish® Filter
THIS PRODUCT MAY BE PROTECTED BY ONE OR MORE OF THE FOLLOWING: U.S. PATENT NO. 8,287,726; 8,221,618; US 8,123,935; OTHER INTERNATIONAL PATENTS PENDING

CONTECH ENGINEERED SOLUTIONS LLC
www.ContechES.com
9100 Centre Pointe Dr., Suite 400, West Chester, OH 45069
800-338-1122 513-645-7000 513-645-7993 FAX

8' x 16' JELLYFISH - 835683 - 20
PARKSIDE ON THE RIVER
GEORGETOWN, TX
SITE DESIGNATION: JF-03

\\QUIKRETE.NET\CONTECH\MEDIA\PROJECT\ACTIVE\835600\835683\835683-20-JELLYFISH\DRAWINGS\PROPOSAL\835683-20-JELLYFISH.DWG, 6/6/2025 9:39 AM

P:\Blake Miguel\Parkside Sections 11-15 & 17\CAD Files\dwg\20250522_JELLYFISH.dwg, JELLYFISH-03, July 18, 2025, 12:01 PM, tmalan.muhammad

NO.	REVISION	BY	DATE

811 Know what's below. Call before you dig.

5508 HIGHWAY 290 WEST
SUITE 150
AUSTIN, TX 78735
512.872.6696
HRGREEN.COM
TBPE NO: 16384
TBPLS NO: 10194101

HRGreen® DEVELOPMENT TX

STATE OF TEXAS
CHRISTINE N. CAMPBELL
142536
LICENSED PROFESSIONAL ENGINEER
07/03/2025

JELLYFISH-03

PARKSIDE ON THE RIVER
SECTIONS 11, 12A & 15A
CONSTRUCTION PLANS
GEORGETOWN, WILLIAMSON, TEXAS

DESIGNED BY: CC
DRAWN BY: MM
CHECKED BY: SN
APPROVED BY:

SHEET 88 OF 141

2025-XX-CON

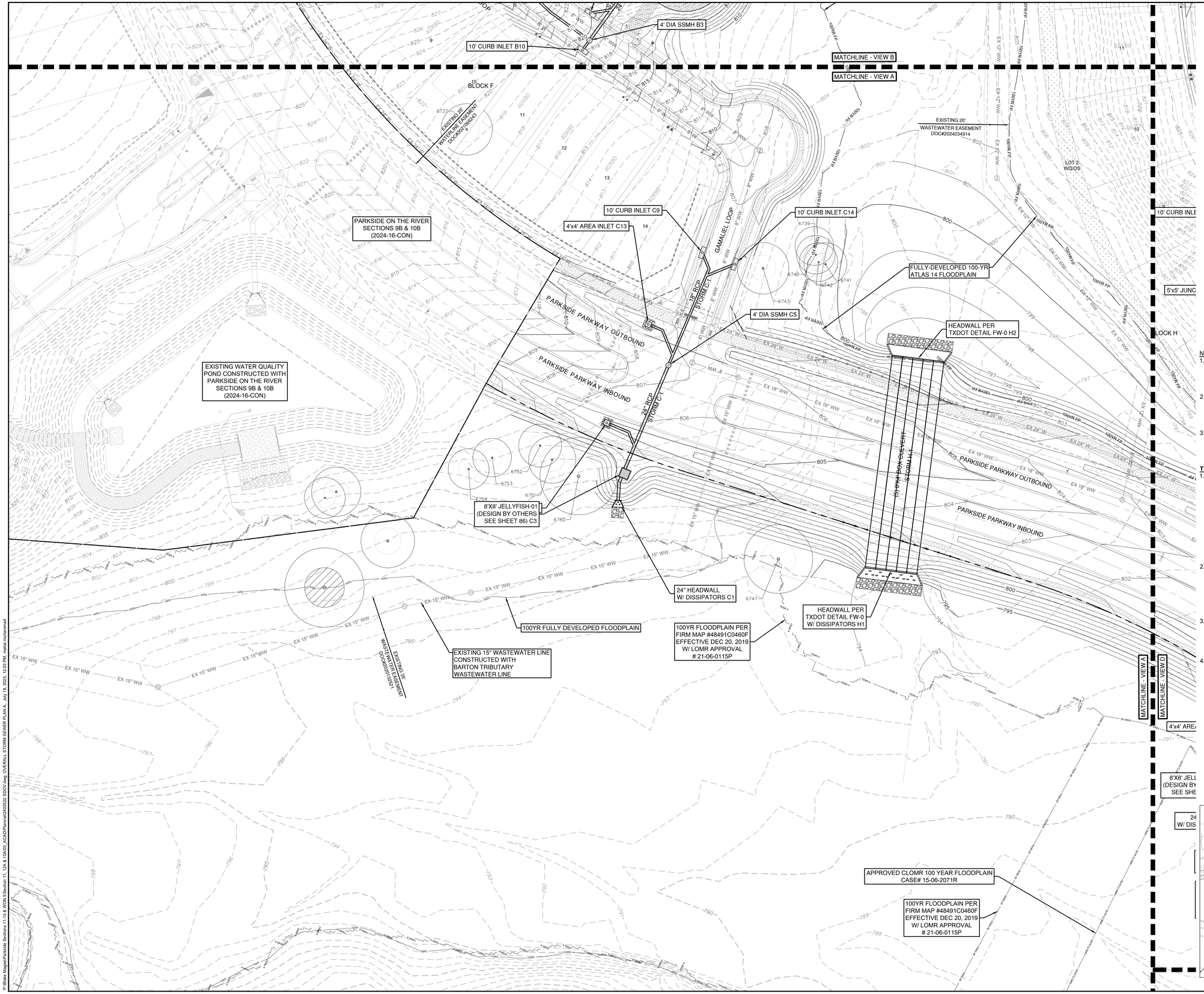

0 40' 80'

SCALE: 1" = 40'

LEGEND

- EXISTING MINOR CONTOUR
- EXISTING MAJOR CONTOUR
- PROPOSED MINOR CONTOUR
- PROPOSED MAJOR CONTOUR
- BOUNDARY
- EASEMENT
- FEMA FLOODWAY PER FIRM# 48491C0460F & LOMR# 21-06-0115P
- FEMA AE — 100YR ATLAS 14 FEMA ZONE AE FLOODPLAIN PER FIRM# 48491C0460F & LOMR# 21-06-0115P
- FEMA A — 100YR FEMA ZONE A FLOODPLAIN PER FIRM MAP# 48491C0460F
- 100YR CLOMR — 100YR CLOMR FLOODPLAIN CASE# 15-06-2071R
- FDFP — 100YR ATLAS 14 FULLY DEVELOPED FLOODPLAIN (STANTEC DRAINAGE STUDY, SHERVIN NOOSHIN, 3/25/19) APPROVED WITH PP# 2019-5-PP
- OHWM — ORDINARY HIGH WATER MARK PER ADAMS ENVIRONMENTAL
- PROPOSED STORM LINE
- FIRE HYDRANT
- WATER VALVE
- STORM SEWER MAHNOLE
- WASTEWATER MANHOLE
- CURB INLET
- TREES TO REMAIN HERITAGE

NOTE:

1. ALL PROPOSED STORM SEWER PIPE LINES SHALL BE CLASS III REINFORCED CONCRETE UNLESS NOTED OTHERWISE.
2. FILL SHALL BE PLACED ACCORDING TO THE GEOTECHNICAL ENGINEERS RECOMMENDATION AND CITY OF GEORGETOWN SPECIFICATIONS.
3. VEGETATE ALL DISTURBED AREAS WITHIN THE ROW AND OPEN SPACE LOT AREAS PER CITY OF GEORGETOWN SPECIFICATIONS.

TRENCH SAFETY NOTES:

1. IN ACCORDANCE WITH THE LAWS OF THE STATE OF TEXAS AND THE U.S. OCCUPATIONAL SAFETY AND HEALTH ADMINISTRATION REGULATIONS, ALL TRENCHES OVER 5 FEET IN DEPTH IN EITHER HARD AND COMPACT OR SOFT AND UNSTABLE SOIL SHALL BE SLOPED, SHORED, SHEETED, BRACED OR OTHERWISE SUPPORTED. FURTHERMORE, ALL TRENCHES LESS THAN 5 FEET IN DEPTH SHALL ALSO BE EFFECTIVELY PROTECTED WHEN HAZARDOUS GROUND MOVEMENT MAY BE EXPECTED. TRENCH SAFETY SYSTEMS TO BE UTILIZED FOR THIS PROJECT WILL BE PROVIDE BY THE CONTRACTOR.
2. IN ACCORDANCE WITH THE U.S. OCCUPATIONAL SAFETY AND HEALTH ADMINISTRATION REGULATIONS,WHEN PERSONS ARE IN TRENCHES 4-FEET DEEP OR MORE, ADEQUATE MEANS OF EXIT, SUCH AS A LADDER OR STEPS, MUST BE PROVIDED AND LOCATED SO AS TO REQUIRE NO MORE THAN 25 FEET OF LATERAL TRAVEL.
3. CONSTRUCTION SHALL NOT PROCEED UNTIL APPROPRIATE TRENCH SAFETY SYSTEM DETAILS, AS DESIGNED BY A PROFESSIONAL ENGINEER, ARE RETAINED AND COPIES SUBMITTED TO THE CITY OF GEORGETOWN.
4. DEEP EXCAVATIONS: ON EXCAVATIONS EXCEEDING 20 FEET IN DEPTH, TWO OR MORE MEANS OF EGRESS FROM THE EXCAVATION SHALL BE PROVIDED. THE CONTRACTOR SHALL CONSULT WITH A REGISTERED ENGINEER, EXPERIENCED IN TRENCH SAFETY SYSTEMS, REGARDING SPECIFIC MEANS AND METHODS EMPLOYED. CONTRACTOR SHALL PROVIDE A TRENCH SAFETY PLAN SEALED BY A REGISTERED PROFESSIONAL ENGINEER AS REQUIRED BY THE CITY OF GEORGETOWN.

NO	REVISION	BY	DATE

811 Know what's below. Call before you dig.

HRGreen DEVELOPMENT TX
5508 HIGHWAY 290 WEST
SUITE 150
AUSTIN, TX 78735
512.872.6696
HRGREEN.COM
TBPE NO: 16384
TBPLS NO: 10194101

STATE OF TEXAS
CHRISTINE N. CAMPBELL
142536
LICENSED PROFESSIONAL ENGINEER

07/03/2025

OVERALL STORM SEWER PLAN A

PARKSIDE ON THE RIVER SECTIONS 11, 12A & 15A CONSTRUCTION PLANS

GEORGETOWN, WILLIAMSON, TEXAS

DESIGNED BY: CC
DRAWN BY: MM
CHECKED BY: SN
APPROVED BY:

SHEET 89 OF 141

2025-XX-CON

P:\Blake Magee\Parkside Sections 11-15 S WON ES\Section 11, 12A & 15A\03_ACAD\Planset\240522 SDO\1.dwg, OVERALL STORM SEWER PLAN A, July 18, 2005, 12:03 PM, melvin.muhammad

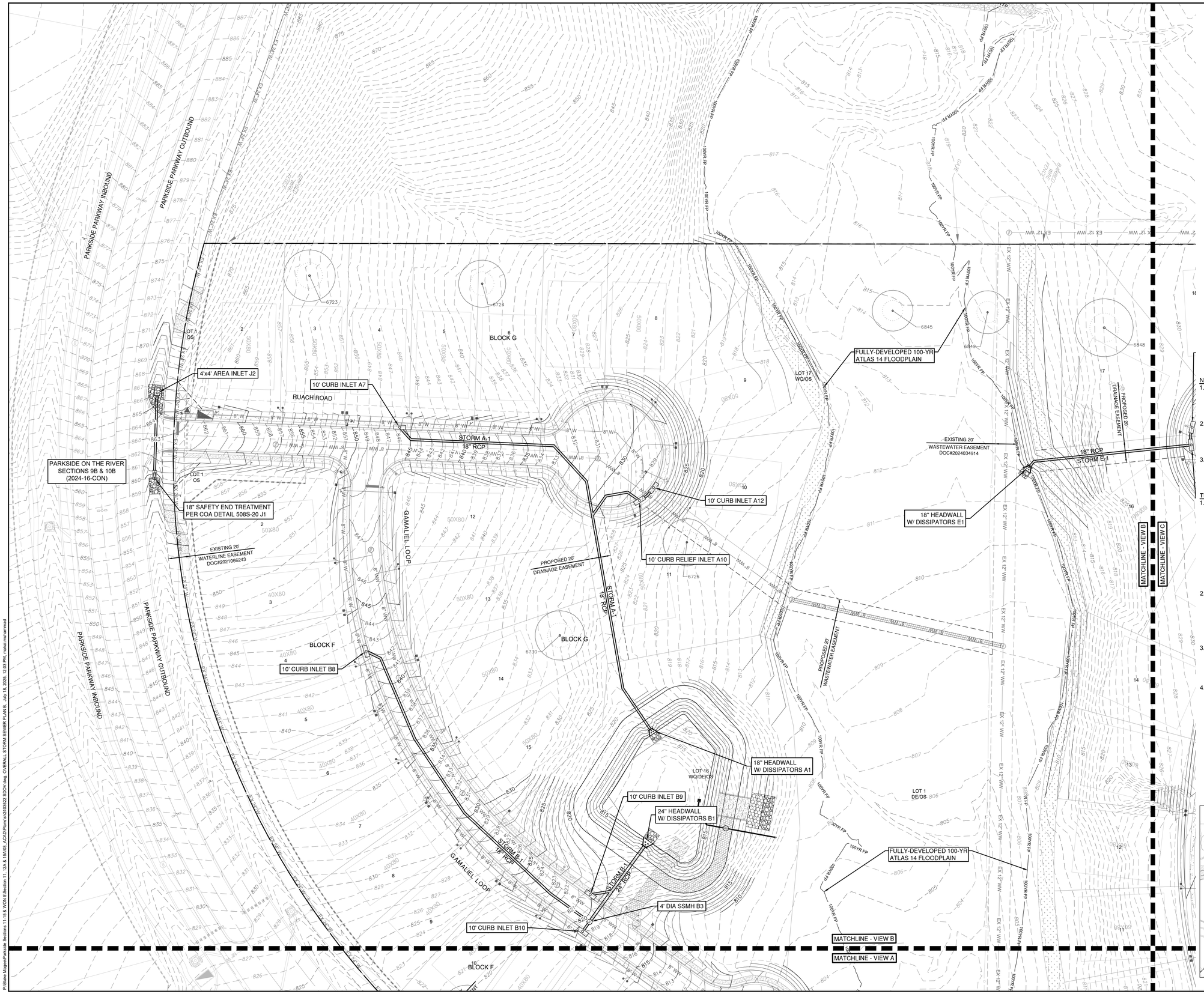

0 40' 80'

SCALE: 1" = 40'

LEGEND

- 834 — EXISTING MINOR CONTOUR
- 835 — EXISTING MAJOR CONTOUR
- 834 — PROPOSED MINOR CONTOUR
- 835 — PROPOSED MAJOR CONTOUR
- BOUNDARY
- EASEMENT
- FEMA FLOODWAY PER FIRM# 48491C0460F & LOMR# 21-06-0115P
- FEMA AE — 100YR ATLAS 14 FEMA ZONE AE FLOODPLAIN PER FIRM# 48491C0460F & LOMR# 21-06-0115P
- FEMA A — 100YR FEMA ZONE A FLOODPLAIN PER FIRM MAP# 48491C0460F
- 100YR CLOMR — 100YR CLOMR FLOODPLAIN CASE# 15-06-2071R
- FDFP — 100YR ATLAS 14 FULLY DEVELOPED FLOODPLAIN (STANTEC DRAINAGE STUDY, SHERVIN NOOSHIN, 3/25/19) APPROVED WITH PP# 2019-5-PP
- OHWM — ORDINARY HIGH WATER MARK PER ADAMS ENVIRONMENTAL
- PROPOSED STORM LINE
- FIRE HYDRANT
- WATER VALVE
- STORM SEWER MAHNOLE
- WASTEWATER MANHOLE
- CURB INLET
- TREES TO REMAIN HERITAGE
- TREES TO REMAIN NON HERITAGE

NOTE:

1. ALL PROPOSED STORM SEWER PIPE LINES SHALL BE CLASS III REINFORCED CONCRETE UNLESS NOTED OTHERWISE.
2. FILL SHALL BE PLACED ACCORDING TO THE GEOTECHNICAL ENGINEERS RECOMMENDATION AND CITY OF GEORGETOWN SPECIFICATIONS.
3. VEGETATE ALL DISTURBED AREAS WITHIN THE ROW AND OPEN SPACE LOT AREAS PER CITY OF GEORGETOWN SPECIFICATIONS.

TRENCH SAFETY NOTES:

1. IN ACCORDANCE WITH THE LAWS OF THE STATE OF TEXAS AND THE U.S. OCCUPATIONAL SAFETY AND HEALTH ADMINISTRATION REGULATIONS, ALL TRENCHES OVER 5 FEET IN DEPTH IN EITHER HARD AND COMPACT OR SOFT AND UNSTABLE SOIL SHALL BE SLOPED, SHORED, SHEETED, BRACED OR OTHERWISE SUPPORTED. FURTHERMORE, ALL TRENCHES LESS THAN 5 FEET IN DEPTH SHALL ALSO BE EFFECTIVELY PROTECTED WHEN HAZARDOUS GROUND MOVEMENT MAY BE EXPECTED. TRENCH SAFETY SYSTEMS TO BE UTILIZED FOR THIS PROJECT WILL BE PROVIDE BY THE CONTRACTOR.
2. IN ACCORDANCE WITH THE U.S. OCCUPATIONAL SAFETY AND HEALTH ADMINISTRATION REGULATIONS,WHEN PERSONS ARE IN TRENCHES 4-FEET DEEP OR MORE, ADEQUATE MEANS OF EXIT, SUCH AS A LADDER OR STEPS, MUST BE PROVIDED AND LOCATED SO AS TO REQUIRE NO MORE THAN 25 FEET OF LATERAL TRAVEL.
3. CONSTRUCTION SHALL NOT PROCEED UNTIL APPROPRIATE TRENCH SAFETY SYSTEM DETAILS, AS DESIGNED BY A PROFESSIONAL ENGINEER, ARE RETAINED AND COPIES SUBMITTED TO THE CITY OF GEORGETOWN.
4. DEEP EXCAVATIONS: ON EXCAVATIONS EXCEEDING 20 FEET IN DEPTH, TWO OR MORE MEANS OF EGRESS FROM THE EXCAVATION SHALL BE PROVIDED. THE CONTRACTOR SHALL CONSULT WITH A REGISTERED ENGINEER, EXPERIENCED IN TRENCH SAFETY SYSTEMS, REGARDING SPECIFIC MEANS AND METHODS EMPLOYED. CONTRACTOR SHALL PROVIDE A TRENCH SAFETY PLAN SEALED BY A REGISTERED PROFESSIONAL ENGINEER AS REQUIRED BY THE CITY OF GEORGETOWN.

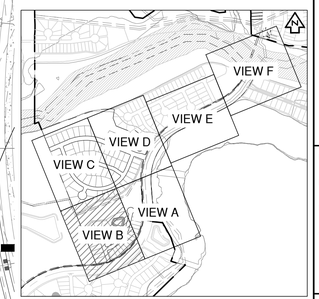

KEY MAP (N.T.S.)

NO	REVISION	BY	DATE

811 Know what's below. Call before you dig.

HRGreen
5508 HIGHWAY 290 WEST
SUITE 150
AUSTIN, TX 78735
512.872.6696
HRGREEN.COM
TBPE NO: 16384
TBPLS NO: 10194101

DEVELOPMENT TX

STATE OF TEXAS
CHRISTINE N. CAMPBELL
142536
LICENSED PROFESSIONAL ENGINEER

07/03/2025

OVERALL STORM SEWER PLAN B

PARKSIDE ON THE RIVER SECTIONS 11, 12A & 15A CONSTRUCTION PLANS GEORGETOWN, WILLIAMSON, TEXAS

DESIGNED BY: CC
DRAWN BY: MM
CHECKED BY: SN
APPROVED BY:

SHEET 90 OF 141

2025-XX-CON

P:\Blake Magee\Projects\Sections 11-15 & 19\GIS\Section 11, 12A & 15A\GIS_ACAD\Planset\24030202 SSOV.mxd, OVERALL STORM SEWER PLAN B, July 18, 2025, 12:03 PM, mekel muhammad

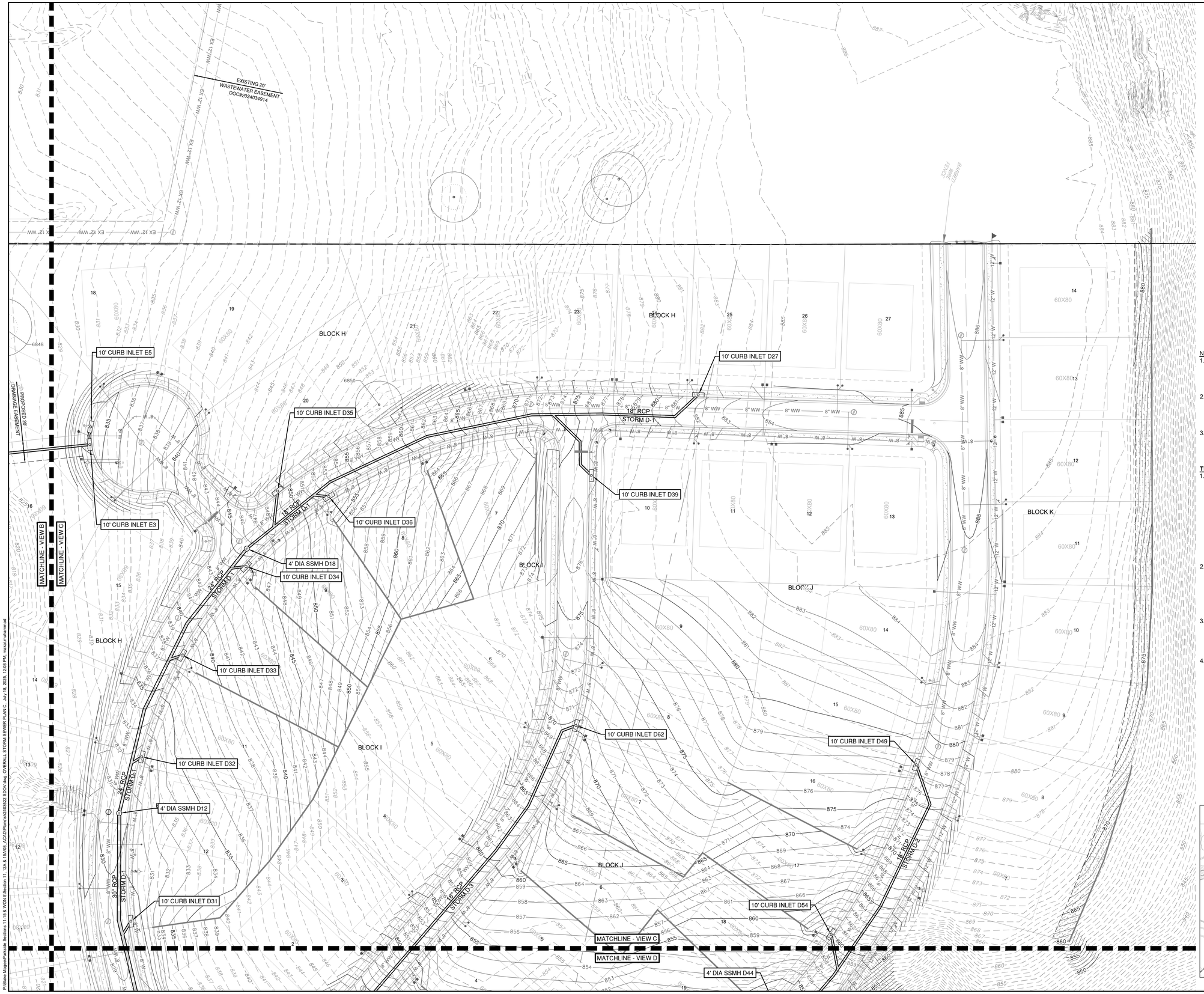

0 40' 80'

SCALE: 1" = 40'

LEGEND

- EXISTING MINOR CONTOUR
- EXISTING MAJOR CONTOUR
- PROPOSED MINOR CONTOUR
- PROPOSED MAJOR CONTOUR
- BOUNDARY
- EASEMENT
- FEMA FLOODWAY PER FIRM# 48491C0460F & LOMR# 21-06-0115P
- FEMA AE — 100YR ATLAS 14 FEMA ZONE AE FLOODPLAIN PER FIRM# 48491C0460F & LOMR# 21-06-0115P
- FEMA A — 100YR FEMA ZONE A FLOODPLAIN PER FIRM MAP# 48491C0460F
- 100YR CLOMR — 100YR CLOMR FLOODPLAIN CASE# 15-06-2071R
- FDFP — 100YR ATLAS 14 FULLY DEVELOPED FLOODPLAIN (STANTEC DRAINAGE STUDY, SHERVIN NOOSHIN, 3/25/19) APPROVED WITH PP# 2019-5-PP
- OHWM — ORDINARY HIGH WATER MARK PER ADAMS ENVIRONMENTAL
- PROPOSED STORM LINE
- FIRE HYDRANT
- WATER VALVE
- STORM SEWER MAHNOLE
- WASTEWATER MANHOLE
- CURB INLET
- TREES TO REMAIN HERITAGE
- TREES TO REMAIN STANDARD

NOTE:

1. ALL PROPOSED STORM SEWER PIPE LINES SHALL BE CLASS III REINFORCED CONCRETE UNLESS NOTED OTHERWISE.
2. FILL SHALL BE PLACED ACCORDING TO THE GEOTECHNICAL ENGINEERS RECOMMENDATION AND CITY OF GEORGETOWN SPECIFICATIONS.
3. VEGETATE ALL DISTURBED AREAS WITHIN THE ROW AND OPEN SPACE LOT AREAS PER CITY OF GEORGETOWN SPECIFICATIONS.

TRENCH SAFETY NOTES:

1. IN ACCORDANCE WITH THE LAWS OF THE STATE OF TEXAS AND THE U.S. OCCUPATIONAL SAFETY AND HEALTH ADMINISTRATION REGULATIONS, ALL TRENCHES OVER 5 FEET IN DEPTH IN EITHER HARD AND COMPACT OR SOFT AND UNSTABLE SOIL SHALL BE SLOPED, SHORED, SHEETED, BRACED OR OTHERWISE SUPPORTED. FURTHERMORE, ALL TRENCHES LESS THAN 5 FEET IN DEPTH SHALL ALSO BE EFFECTIVELY PROTECTED WHEN HAZARDOUS GROUND MOVEMENT MAY BE EXPECTED. TRENCH SAFETY SYSTEMS TO BE UTILIZED FOR THIS PROJECT WILL BE PROVIDE BY THE CONTRACTOR.
2. IN ACCORDANCE WITH THE U.S. OCCUPATIONAL SAFETY AND HEALTH ADMINISTRATION REGULATIONS,WHEN PERSONS ARE IN TRENCHES 4-FEET DEEP OR MORE, ADEQUATE MEANS OF EXIT, SUCH AS A LADDER OR STEPS, MUST BE PROVIDED AND LOCATED SO AS TO REQUIRE NO MORE THAN 25 FEET OF LATERAL TRAVEL.
3. CONSTRUCTION SHALL NOT PROCEED UNTIL APPROPRIATE TRENCH SAFETY SYSTEM DETAILS, AS DESIGNED BY A PROFESSIONAL ENGINEER, ARE RETAINED AND COPIES SUBMITTED TO THE CITY OF GEORGETOWN.
4. DEEP EXCAVATIONS: ON EXCAVATIONS EXCEEDING 20 FEET IN DEPTH, TWO OR MORE MEANS OF EGRESS FROM THE EXCAVATION SHALL BE PROVIDED. THE CONTRACTOR SHALL CONSULT WITH A REGISTERED ENGINEER, EXPERIENCED IN TRENCH SAFETY SYSTEMS, REGARDING SPECIFIC MEANS AND METHODS EMPLOYED. CONTRACTOR SHALL PROVIDE A TRENCH SAFETY PLAN SEALED BY A REGISTERED PROFESSIONAL ENGINEER AS REQUIRED BY THE CITY OF GEORGETOWN.

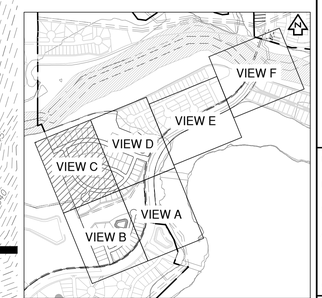

KEY MAP (N.T.S.)

NO	REVISION	BY	DATE

811 Know what's below. Call before you dig.

HRGreen® DEVELOPMENT TX
5508 HIGHWAY 290 WEST
SUITE 150
AUSTIN, TX 78735
512.872.6696
HRGREEN.COM
TBPE NO: 16384
TBPLS NO: 10194101

STATE OF TEXAS
CHRISTINE N. CAMPBELL
142536
LICENSED PROFESSIONAL ENGINEER

07/03/2025

OVERALL STORM SEWER PLAN C

PARKSIDE ON THE RIVER SECTIONS 11, 12A & 15A CONSTRUCTION PLANS

GEORGETOWN, WILLIAMSON, TEXAS

DESIGNED BY: CC
DRAWN BY: MM
CHECKED BY: SN
APPROVED BY:

SHEET 91 OF 141

2025-XX-CON

P:\Blake Magee\Parkside Sections 11-15 & WOA 5\Section 11, 12A & 15A\03_ACAD\Planset\240523 SDO\1.orig_OVERALL STORM SEWER PLAN C - July 18, 2005, 12:03 PM, melan.mohammad

10' CURB INLET D31
10' CURB INLET D54
MATCHLINE - VIEW C
MATCHLINE - VIEW D
4' DIA SSMH D44
10' CURB INLET D64
10' CURB INLET D53
10' CURB INLET D63
10' CURB INLET D30
10' CURB INLET D52
5'x5' JUNCTION BOX D7
10' CURB INLET D28
10' CURB INLET D51
10' CURB INLET D29
10' CURB INLET D50
6'x6' JUNCTION BOX D3
4'x4' AREA INLET F5
42" HEADWALL
W/ DISSIPATORS AND 4'
BLACK ALUMINUM FENCE D1
(SEE DETAIL ON SHEET 113)
7'X7' JUNCTION BOX I5
6'X6' JUNCTION BOX
6" PIPE WITH CAP
AND 3" OPENING I4
4'x4' AREA INLET F4
8'X8' JELLYFISH-02
(DESIGN BY OTHERS
SEE SHEET 87) F3
24" HEADWALL
W/ DISSIPATORS F1
APPROVED CLOMR
100 YEAR FLOODPLAIN
CASE# 15-06-2071R
100YR FLOODPLAIN PER
FIRM MAP #48491C0460F
EFFECTIVE DEC 20, 2019
W/ LOMR APPROVAL
21-06-0115P
100YR FULLY DEVELOPED FLOODPLAIN
48" HEADWALL
W/ DISSIPATORS AND 4'
BLACK ALUMINUM FENCE I1
(SEE DETAIL ON SHEET 113)
4'x4' AREA INLET G15
100YR FLOODPLAIN PER
FIRM MAP #48491C0460F
EFFECTIVE DEC 20, 2019
W/ LOMR APPROVAL
21-06-0115P
FUTURE PARKSIDE
SECTION 12B
EXISTING 35'
WASTEWATER EASEMENT
DOC#2020120541
EXISTING 20'
WATERLINE EASEMENT
DOC#2021066240
MATCHLINE - VIEW A
MATCHLINE - VIEW D
MATCHLINE - VIEW D
MATCHLINE - VIEW E
STORM D1
STORM D2
STORM D3
STORM D4
STORM D7
ELIEL WAY
TREASURE HOUSE WAY
MORNING SUNRISE CIRCLE
PARKSIDE PARKWAY INBOUND
PARKSIDE PARKWAY OUTBOUND
KADOSH WAY
BLOCK J
BLOCK K
LOCK H
LOT 6
DE/OS
LOT 3
OS
LOT 1
WQ/DE/OS
2713
2716
2718
2719
2720
2721
6774
6775
6777
6778

0 40' 80'
SCALE: 1" = 40'

LEGEND

- EXISTING MINOR CONTOUR
- EXISTING MAJOR CONTOUR
- PROPOSED MINOR CONTOUR
- PROPOSED MAJOR CONTOUR
- BOUNDARY
- EASEMENT
- FEMA FLOODWAY PER FIRM# 48491C0460F & LOMR# 21-06-0115P
- FEMA AE — 100YR ATLAS 14 FEMA ZONE AE FLOODPLAIN PER FIRM# 48491C0460F & LOMR# 21-06-0115P
- FEMA A — 100YR FEMA ZONE A FLOODPLAIN PER FIRM MAP# 48491C0460F
- 100YR CLOMR — 100YR CLOMR FLOODPLAIN CASE# 15-06-2071R
- FDFP — 100YR ATLAS 14 FULLY DEVELOPED FLOODPLAIN (STANTEC DRAINAGE STUDY, SHERVIN NOOSHIN, 3/25/19) APPROVED WITH PP# 2019-5-PP
- OHWM — ORDINARY HIGH WATER MARK PER ADAMS ENVIRONMENTAL
- PROPOSED STORM LINE
- FIRE HYDRANT
- WATER VALVE
- STORM SEWER MAHNOLE
- WASTEWATER MANHOLE
- CURB INLET
- TREES TO REMAIN
  HERITAGE
- STEEP SLOPE REMAIN UNDISTURBED

NOTE:

1. ALL PROPOSED STORM SEWER PIPE LINES SHALL BE CLASS III REINFORCED CONCRETE UNLESS NOTED OTHERWISE.
2. FILL SHALL BE PLACED ACCORDING TO THE GEOTECHNICAL ENGINEERS RECOMMENDATION AND CITY OF GEORGETOWN SPECIFICATIONS.
3. VEGETATE ALL DISTURBED AREAS WITHIN THE ROW AND OPEN SPACE LOT AREAS OVER CITY OF GEORGETOWN SPECIFICATIONS.

TRENCH SAFETY NOTES:

1. IN ACCORDANCE WITH THE LAWS OF THE STATE OF TEXAS AND THE U.S. OCCUPATIONAL SAFETY AND HEALTH ADMINISTRATION REGULATIONS, ALL TRENCHES OVER 5 FEET IN DEPTH IN EITHER HARD AND COMPACT OR SOFT AND UNSTABLE SOIL SHALL BE SLOPED, SHORED, SHEETED, BRACED OR OTHERWISE SUPPORTED. FURTHERMORE, ALL TRENCHES LESS THAN 5 FEET IN DEPTH SHALL ALSO BE EFFECTIVELY PROTECTED WHEN HAZARDOUS GROUND MOVEMENT MAY BE EXPECTED. TRENCH SAFETY SYSTEMS TO BE UTILIZED FOR THIS PROJECT WILL BE PROVIDE BY THE CONTRACTOR.
2. IN ACCORDANCE WITH THE U.S. OCCUPATIONAL SAFETY AND HEALTH ADMINISTRATION REGULATIONS,WHEN PERSONS ARE IN TRENCHES 4-FEET DEEP OR MORE, ADEQUATE MEANS OF EXIT, SUCH AS A LADDER OR STEPS, MUST BE PROVIDED AND LOCATED SO AS TO REQUIRE NO MORE THAN 25 FEET OF LATERAL TRAVEL.
3. CONSTRUCTION SHALL NOT PROCEED UNTIL APPROPRIATE TRENCH SAFETY SYSTEM DETAILS, AS DESIGNED BY A PROFESSIONAL ENGINEER, ARE RETAINED AND COPIES SUBMITTED TO THE CITY OF GEORGETOWN.
4. DEEP EXCAVATIONS: ON EXCAVATIONS EXCEEDING 20 FEET IN DEPTH, TWO OR MORE MEANS OF EGRESS FROM THE EXCAVATION SHALL BE PROVIDED. THE CONTRACTOR SHALL CONSULT WITH A REGISTERED ENGINEER, EXPERIENCED IN TRENCH SAFETY SYSTEMS, REGARDING SPECIFIC MEANS AND METHODS EMPLOYED. CONTRACTOR SHALL PROVIDE A TRENCH SAFETY PLAN SEALED BY A REGISTERED PROFESSIONAL ENGINEER AS REQUIRED BY THE CITY OF GEORGETOWN.

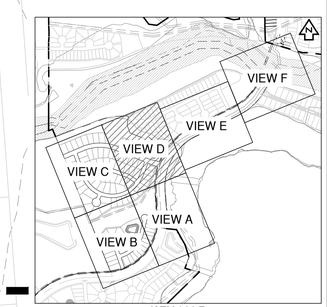

KEY MAP
(N.T.S.)

NO	REVISION	BY	DATE

811 Know what's below. Call before you dig.

HRGreen
DEVELOPMENT TX
5508 HIGHWAY 290 WEST
SUITE 150
AUSTIN, TX 78735
512.872.6696
HRGREEN.COM
TBPE NO: 16384
TBPLS NO: 10194101

STATE OF TEXAS
CHRISTINE N. CAMPBELL
142536
LICENSED
PROFESSIONAL ENGINEER
07/03/2025

OVERALL STORM SEWER PLAN D

PARKSIDE ON THE RIVER SECTIONS 11, 12A & 15A CONSTRUCTION PLANS

GEORGETOWN, WILLIAMSON, TEXAS

DESIGNED BY: CC
DRAWN BY: MM
CHECKED BY: SN
APPROVED BY:

SHEET 92 OF 141

2025-XX-CON

P:\Blake Magee\Parkside Sections 11\15 & VION 5\Section 11, 12A & 15A\03_ACAD\Planset\sht\20250220 SDCV.dwg, OVERALL STORM SEWER PLAN D, July 16, 2025, 12:54 PM, nakai.mohammad

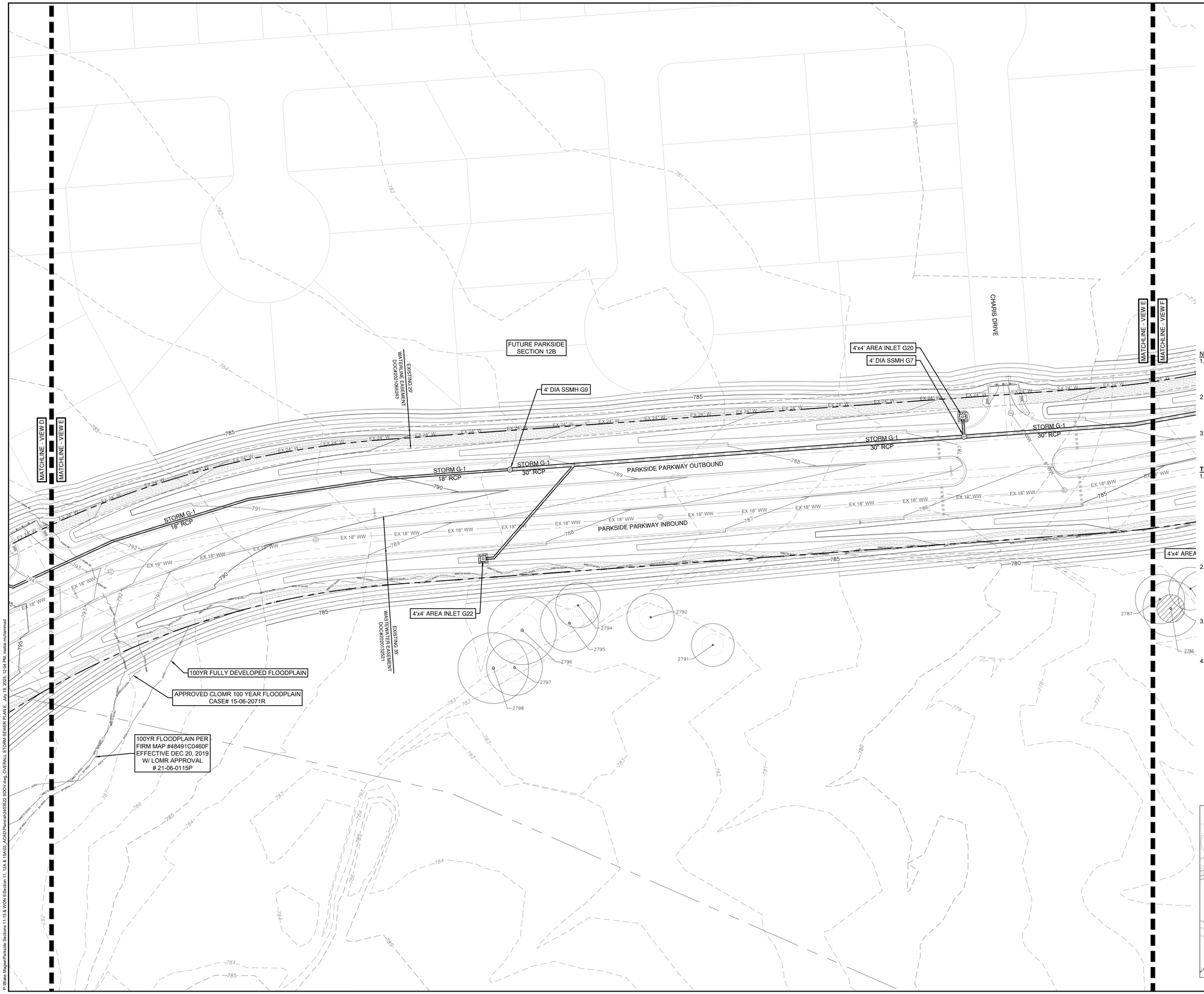

0 40' 80'

SCALE: 1" = 40'

LEGEND

- EXISTING MINOR CONTOUR
- EXISTING MAJOR CONTOUR
- PROPOSED MINOR CONTOUR
- PROPOSED MAJOR CONTOUR
- BOUNDARY
- EASEMENT
- FEMA FLOODWAY PER FIRM# 48491C0460F & LOMR# 21-06-0115P
- FEMA AE — 100YR ATLAS 14 FEMA ZONE AE FLOODPLAIN PER FIRM# 48491C0460F & LOMR# 21-06-0115P
- FEMA A — 100YR FEMA ZONE A FLOODPLAIN PER FIRM MAP# 48491C0460F
- 100YR CLOMR — 100YR CLOMR FLOODPLAIN CASE# 15-06-2071R
- FDFP — 100YR ATLAS 14 FULLY DEVELOPED FLOODPLAIN (STANTEC DRAINAGE STUDY, SHERVIN NOOSHIN, 3/25/19) APPROVED WITH PP# 2019-5-PP
- OHWM — ORDINARY HIGH WATER MARK PER ADAMS ENVIRONMENTAL
- PROPOSED STORM LINE
- FIRE HYDRANT
- WATER VALVE
- STORM SEWER MAHNOLE
- WASTEWATER MANHOLE
- CURB INLET
- TREES TO REMAIN HERITAGE

NOTE:

1. ALL PROPOSED STORM SEWER PIPE LINES SHALL BE CLASS III REINFORCED CONCRETE UNLESS NOTED OTHERWISE.
2. FILL SHALL BE PLACED ACCORDING TO THE GEOTECHNICAL ENGINEERS RECOMMENDATION AND CITY OF GEORGETOWN SPECIFICATIONS.
3. VEGETATE ALL DISTURBED AREAS WITHIN THE ROW AND OPEN SPACE LOT AREAS PER CITY OF GEORGETOWN SPECIFICATIONS.

TRENCH SAFETY NOTES:

1. IN ACCORDANCE WITH THE LAWS OF THE STATE OF TEXAS AND THE U.S. OCCUPATIONAL SAFETY AND HEALTH ADMINISTRATION REGULATIONS, ALL TRENCHES OVER 5 FEET IN DEPTH IN EITHER HARD AND COMPACT OR SOFT AND UNSTABLE SOIL SHALL BE SLOPED, SHORED, SHEETED, BRACED OR OTHERWISE SUPPORTED. FURTHERMORE, ALL TRENCHES LESS THAN 5 FEET IN DEPTH SHALL ALSO BE EFFECTIVELY PROTECTED WHEN HAZARDOUS GROUND MOVEMENT MAY BE EXPECTED. TRENCH SAFETY SYSTEMS TO BE UTILIZED FOR THIS PROJECT WILL BE PROVIDE BY THE CONTRACTOR.
2. IN ACCORDANCE WITH THE U.S. OCCUPATIONAL SAFETY AND HEALTH ADMINISTRATION REGULATIONS,WHEN PERSONS ARE IN TRENCHES 4-FEET DEEP OR MORE, ADEQUATE MEANS OF EXIT, SUCH AS A LADDER OR STEPS, MUST BE PROVIDED AND LOCATED SO AS TO REQUIRE NO MORE THAN 25 FEET OF LATERAL TRAVEL.
3. CONSTRUCTION SHALL NOT PROCEED UNTIL APPROPRIATE TRENCH SAFETY SYSTEM DETAILS, AS DESIGNED BY A PROFESSIONAL ENGINEER, ARE RETAINED AND COPIES SUBMITTED TO THE CITY OF GEORGETOWN.
4. DEEP EXCAVATIONS: ON EXCAVATIONS EXCEEDING 20 FEET IN DEPTH, TWO OR MORE MEANS OF EGRESS FROM THE EXCAVATION SHALL BE PROVIDED. THE CONTRACTOR SHALL CONSULT WITH A REGISTERED ENGINEER, EXPERIENCED IN TRENCH SAFETY SYSTEMS, REGARDING SPECIFIC MEANS AND METHODS EMPLOYED. CONTRACTOR SHALL PROVIDE A TRENCH SAFETY PLAN SEALED BY A REGISTERED PROFESSIONAL ENGINEER AS REQUIRED BY THE CITY OF GEORGETOWN.

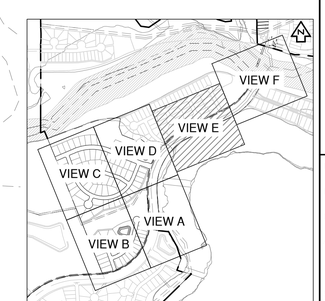

KEY MAP (N.T.S.)

NO	REVISION	BY	DATE

811 Know what's below. Call before you dig.

5508 HIGHWAY 290 WEST
SUITE 150
AUSTIN, TX 78735
512.872.6696
HRGREEN.COM

TBPE NO: 16384
TBPLS NO: 10194101

HRGreen®
DEVELOPMENT TX

STATE OF TEXAS
CHRISTINE N. CAMPBELL
142536
LICENSED PROFESSIONAL ENGINEER

07/05/2025

OVERALL STORM SEWER PLAN E

PARKSIDE ON THE RIVER SECTIONS 11, 12A & 15A CONSTRUCTION PLANS GEORGETOWN, WILLIAMSON, TEXAS

DESIGNED BY: CC
DRAWN BY: MM
CHECKED BY: SN
APPROVED BY:

SHEET 93 OF 141

2025-XX-CON

P:\Blake Magee\Parkside Sections 11-15 & WOA 15\Section 11, 12A & 15A\00_ACAD\Plans\sh\A00522.SSOV.dwg, OVERALL STORM SEWER PLAN E, July 19, 2025, 12:04 PM, mateo.muhammad

PARKSIDE ON THE RIVER SECTION 15B TO BE CONSTRUCTED CONCURRENTLY OR AFTER CONSTRUCTION OF PARKSIDE ON THE RIVER SECTIONS 11, 12A & 15A

EXISTING 100' WASTEWATER EASEMENT DOC#2017098157

EXISTING 100' WASTEWATER EASEMENT DOC#2007106940

EXISTING 100' WASTEWATER EASEMENT DOC#2007106941

EXISTING 100' WASTEWATER EASEMENT DOC#2007106942

FLOODWAY PER FIRM MAP #48491C0460F, EFFECTIVE DEC 20, 2019 W/ LOMR APPROVAL #21-06-0115P

APPROVED CLOMR 100 YEAR FLOODPLAIN CASE# 15-06-2071R

APPROVED CLOMR 100 YEAR FLOODPLAIN CASE# 15-06-2071R

100YR FULLY DEVELOPED FLOODPLAIN

FUTURE PARKSIDE SECTION 14A

TRANQUIL SERENITY WAY

MATCHLINE - VIEW E

MATCHLINE - VIEW F

4'x4' AREA INLET G19

5' DIA SSMH G5

STORM G-1 30" RCP

STORM G-1 36" RCP

4'x4' AREA INLET G17

8'X18' JELLYFISH-03 (DESIGN BY OTHERS SEE SHEET 88) G3

36" HEADWALL W/ DISSIPATORS AND 4' BLACK ALUMINUM FENCE G1 (SEE DETAIL ON SHEET 113)

0 40' 80'

SCALE: 1" = 40'

LEGEND

- 834 — EXISTING MINOR CONTOUR
- 835 — EXISTING MAJOR CONTOUR
- 834 — PROPOSED MINOR CONTOUR
- 835 — PROPOSED MAJOR CONTOUR
- BOUNDARY
- EASEMENT
- FEMA FLOODWAY PER FIRM# 48491C0460F & LOMR# 21-06-0115P
- FEMA AE — 100YR ATLAS 14 FEMA ZONE AE FLOODPLAIN PER FIRM# 48491C0460F & LOMR# 21-06-0115P
- FEMA A — 100YR FEMA ZONE A FLOODPLAIN PER FIRM MAP# 48491C0460F
- 100YR CLOMR — 100YR CLOMR FLOODPLAIN CASE# 15-06-2071R
- FDFP — 100YR ATLAS 14 FULLY DEVELOPED FLOODPLAIN (STANTEC DRAINAGE STUDY, SHERVIN NOOSHIN, 3/25/19) APPROVED WITH PP# 2019-5-PP
- OHWM — ORDINARY HIGH WATER MARK PER ADAMS ENVIRONMENTAL
- SD — PROPOSED STORM LINE
- FIRE HYDRANT
- WATER VALVE
- SD — STORM SEWER MAHNOLE
- WW — WASTEWATER MANHOLE
- CURB INLET
- TREES TO REMAIN HERITAGE
- TREES TO REMAIN OTHER

NOTE:

1. ALL PROPOSED STORM SEWER PIPE LINES SHALL BE CLASS III REINFORCED CONCRETE UNLESS NOTED OTHERWISE.
2. FILL SHALL BE PLACED ACCORDING TO THE GEOTECHNICAL ENGINEERS RECOMMENDATION AND CITY OF GEORGETOWN SPECIFICATIONS.
3. VEGETATE ALL DISTURBED AREAS WITHIN THE ROW AND OPEN SPACE LOT AREAS PER CITY OF GEORGETOWN SPECIFICATIONS.

TRENCH SAFETY NOTES:

1. IN ACCORDANCE WITH THE LAWS OF THE STATE OF TEXAS AND THE U.S. OCCUPATIONAL SAFETY AND HEALTH ADMINISTRATION REGULATIONS, ALL TRENCHES OVER 5 FEET IN DEPTH IN EITHER HARD AND COMPACT OR SOFT AND UNSTABLE SOIL SHALL BE SLOPED, SHORED, SHEETED, BRACED OR OTHERWISE SUPPORTED. FURTHERMORE, ALL TRENCHES LESS THAN 5 FEET IN DEPTH SHALL ALSO BE EFFECTIVELY PROTECTED WHEN HAZARDOUS GROUND MOVEMENT MAY BE EXPECTED. TRENCH SAFETY SYSTEMS TO BE UTILIZED FOR THIS PROJECT WILL BE PROVIDE BY THE CONTRACTOR.
2. IN ACCORDANCE WITH THE U.S. OCCUPATIONAL SAFETY AND HEALTH ADMINISTRATION REGULATIONS,WHEN PERSONS ARE IN TRENCHES 4-FEET DEEP OR MORE, ADEQUATE MEANS OF EXIT, SUCH AS A LADDER OR STEPS, MUST BE PROVIDED AND LOCATED SO AS TO REQUIRE NO MORE THAN 25 FEET OF LATERAL TRAVEL.
3. CONSTRUCTION SHALL NOT PROCEED UNTIL APPROPRIATE TRENCH SAFETY SYSTEM DETAILS, AS DESIGNED BY A PROFESSIONAL ENGINEER, ARE RETAINED AND COPIES SUBMITTED TO THE CITY OF GEORGETOWN.
4. DEEP EXCAVATIONS: ON EXCAVATIONS EXCEEDING 20 FEET IN DEPTH, TWO OR MORE MEANS OF EGRESS FROM THE EXCAVATION SHALL BE PROVIDED. THE CONTRACTOR SHALL CONSULT WITH A REGISTERED ENGINEER, EXPERIENCED IN TRENCH SAFETY SYSTEMS, REGARDING SPECIFIC MEANS AND METHODS EMPLOYED. CONTRACTOR SHALL PROVIDE A TRENCH SAFETY PLAN SEALED BY A REGISTERED PROFESSIONAL ENGINEER AS REQUIRED BY THE CITY OF GEORGETOWN.

KEY MAP (N.T.S.)

VIEW A, VIEW B, VIEW C, VIEW D, VIEW E, VIEW F, 100YR FD, FFE FP

NO	REVISION	BY	DATE

811 Know what's below. Call before you dig.

HRGreen®
5508 HIGHWAY 290 WEST
SUITE 150
AUSTIN, TX 78735
512.872.6696
HRGREEN.COM
TBPE NO: 16384
TBPLS NO: 10194101
DEVELOPMENT TX

STATE OF TEXAS
CHRISTINE N. CAMPBELL
142536
LICENSED PROFESSIONAL ENGINEER
07/03/2025

OVERALL STORM SEWER PLAN F

PARKSIDE ON THE RIVER
SECTIONS 11, 12A & 15A
CONSTRUCTION PLANS
GEORGETOWN, WILLIAMSON, TEXAS

DESIGNED BY: CC
DRAWN BY: MM
CHECKED BY: SN
APPROVED BY:

SHEET 94 OF 141

2025-XX-CON

P:\Base Maps\Parkside Sections 11-15 & WDN's\Section 11, 12A & 15A\03_ACAD\Planset\ADSO2_SDOV.dwg, OVERALL STORM SEWER PLAN F, July 18, 2025, 12:04 PM, malak.muhammad

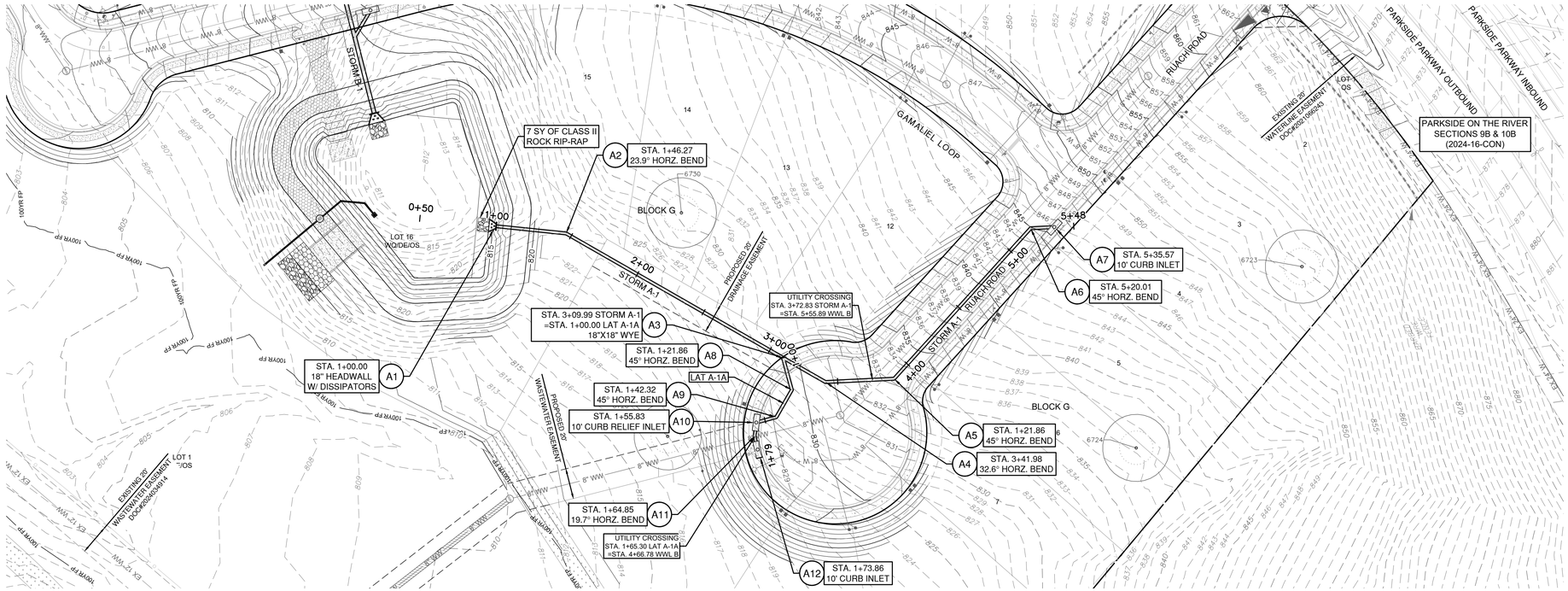

0 40' 80'

SCALE: 1" = 40'

LEGEND

- EXISTING MINOR CONTOUR
- EXISTING MAJOR CONTOUR
- PROPOSED MINOR CONTOUR
- PROPOSED MAJOR CONTOUR
- BOUNDARY
- EASEMENT
- FEMA FLOODWAY PER FIRM# 48491C0460F & LOMR# 21-06-0115P
- FEMA AE — 100YR ATLAS 14 FEMA ZONE AE FLOODPLAIN PER FIRM# 48491C0460F & LOMR# 21-06-0115P
- FEMA A — 100YR FEMA ZONE A FLOODPLAIN PER FIRM MAP# 48491C0460F
- 100YR CLOMR — 100YR CLOMR FLOODPLAIN CASE# 15-06-2071R
- FDFP — 100YR ATLAS 14 FULLY DEVELOPED FLOODPLAIN (STANTEC DRAINAGE STUDY, SHERVIN NOOSHIN, 3/25/19) APPROVED WITH PP# 2019-5-PP
- OHWM — ORDINARY HIGH WATER MARK PER ADAMS ENVIRONMENTAL
- SD — PROPOSED STORM LINE
- FIRE HYDRANT
- WATER VALVE
- SD — STORM SEWER MAHNOLE
- WW — WASTEWATER MANHOLE
- CURB INLET
- TREES TO REMAIN HERITAGE
- TREES TO REMAIN NON HERITAGE

VERT. SCALE: 1" = 4'
HORZ. SCALE: 1" = 40'

4' 2' 0 VERT. SCALE

EXISTING GRADE - CENTERLINE
FINISHED GRADE - CENTERLINE

EXISTING GROUND 1000.1 997.10 PROPOSED FLOWLINE

NOTE:

1. ALL PROPOSED STORM SEWER PIPE LINES SHALL BE CLASS III REINFORCED CONCRETE UNLESS NOTED OTHERWISE.
2. FILL SHALL BE PLACED ACCORDING TO THE GEOTECHNICAL ENGINEERS RECOMMENDATION AND CITY OF GEORGETOWN SPECIFICATIONS.
3. VEGETATE ALL DISTURBED AREAS WITHIN THE ROW AND OPEN SPACE LOT AREAS PER CITY OF GEORGETOWN SPECIFICATIONS.

TRENCH SAFETY NOTES:

1. IN ACCORDANCE WITH THE LAWS OF THE STATE OF TEXAS AND THE U.S. OCCUPATIONAL SAFETY AND HEALTH ADMINISTRATION REGULATIONS, ALL TRENCHES OVER 5 FEET IN DEPTH IN EITHER HARD AND COMPACT OR SOFT AND UNSTABLE SOIL SHALL BE SLOPED, SHORED, SHEETED, BRACED OR OTHERWISE SUPPORTED. FURTHERMORE, ALL TRENCHES LESS THAN 5 FEET IN DEPTH SHALL ALSO BE EFFECTIVELY PROTECTED WHEN HAZARDOUS GROUND MOVEMENT MAY BE EXPECTED. TRENCH SAFETY SYSTEMS TO BE UTILIZED FOR THIS PROJECT WILL BE PROVIDE BY THE CONTRACTOR.
2. IN ACCORDANCE WITH THE U.S. OCCUPATIONAL SAFETY AND HEALTH ADMINISTRATION REGULATIONS,WHEN PERSONS ARE IN TRENCHES 4-FEET DEEP OR MORE, ADEQUATE MEANS OF EXIT, SUCH AS A LADDER OR STEPS, MUST BE PROVIDED AND LOCATED SO AS TO REQUIRE NO MORE THAN 25 FEET OF LATERAL TRAVEL.
3. CONSTRUCTION SHALL NOT PROCEED UNTIL APPROPRIATE TRENCH SAFETY SYSTEM DETAILS, AS DESIGNED BY A PROFESSIONAL ENGINEER, ARE RETAINED AND COPIES SUBMITTED TO THE CITY OF GEORGETOWN.
4. DEEP EXCAVATIONS: ON EXCAVATIONS EXCEEDING 20 FEET IN DEPTH, TWO OR MORE MEANS OF EGRESS FROM THE EXCAVATION SHALL BE PROVIDED. THE CONTRACTOR SHALL CONSULT WITH A REGISTERED ENGINEER, EXPERIENCED IN TRENCH SAFETY SYSTEMS, REGARDING SPECIFIC MEANS AND METHODS EMPLOYED. CONTRACTOR SHALL PROVIDE A TRENCH SAFETY PLAN SEALED BY A REGISTERED PROFESSIONAL ENGINEER AS REQUIRED BY THE CITY OF GEORGETOWN.

STORM A-1

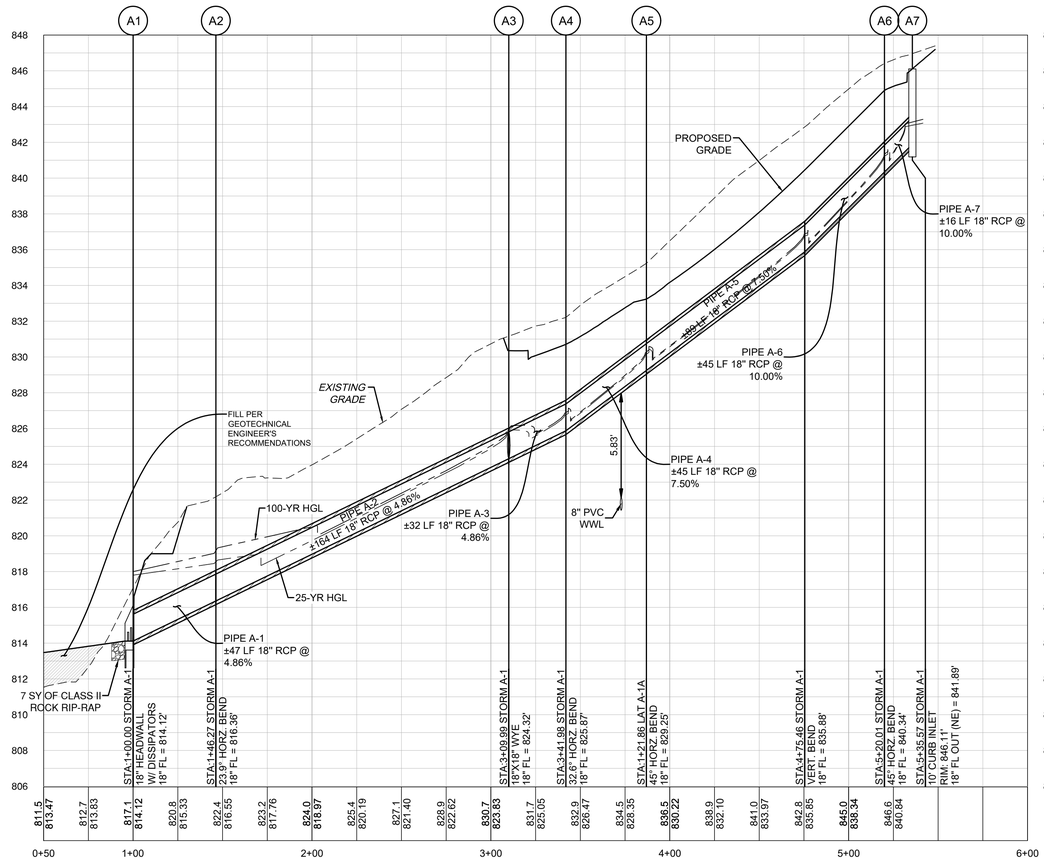

LAT A-1A

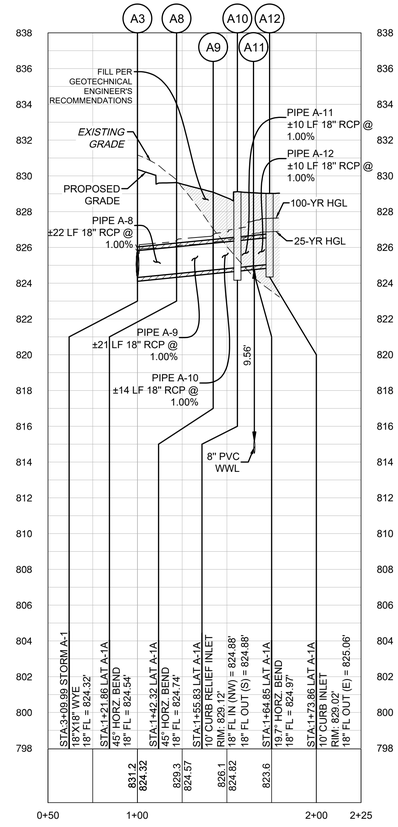

Pipe Label	Slope (%)	Q25 (cfs)	V25 (ft/s)	D25 (ft)	Q100 (cfs)	V100 (ft/s)	D100 (ft)
PIPE A-1	4.86%	12.48	7.06	3.68	15.63	8.84	3.88
PIPE A-2	4.86%	12.48	7.29	2.28	15.63	8.94	2.96
PIPE A-3	4.86%	5.16	3.87	1.60	6.52	4.49	1.84
PIPE A-4	7.50%	5.16	4.24	1.12	6.52	4.69	1.27
PIPE A-5	7.50%	5.16	4.14	1.18	6.52	4.59	1.34
PIPE A-6	10.00%	5.16	4.36	1.05	6.52	4.80	1.20
PIPE A-7	10.00%	5.16	4.14	1.18	6.52	4.59	1.34
PIPE A-8	1.00%	7.32	4.15	1.60	9.11	5.16	1.84
PIPE A-9	1.00%	7.32	4.15	1.58	9.11	5.16	1.94
PIPE A-10	1.00%	7.32	4.14	1.58	9.11	5.16	2.04
PIPE A-11	1.00%	5.81	3.29	1.85	7.26	4.11	2.53
PIPE A-12	1.00%	5.81	3.29	1.83	7.26	4.11	2.54

NO	REVISION	BY	DATE

811 Know what's below. Call before you dig.

HRGreen
DEVELOPMENT TX
5508 HIGHWAY 290 WEST
SUITE 150
AUSTIN, TX 78735
512.872.6696
HRGREEN.COM
TBPE NO: 16384
TBPLS NO: 10194101

STATE OF TEXAS
CHRISTINE N. CAMPBELL
142536
LICENSED PROFESSIONAL ENGINEER
07/15/2025

STORM A-1 & LATERALS PLAN & PROFILE

PARKSIDE ON THE RIVER SECTIONS 11, 12A & 15A CONSTRUCTION PLANS
GEORGETOWN, WILLIAMSON, TEXAS

DESIGNED BY: CC
DRAWN BY: MM
CHECKED BY: SN
APPROVED BY:

SHEET 95 OF 141

2025-XX-CON

P:\Blake Magee\Parkside Sections 11-15 & WCN 15\Section 11, 12A & 14\01_ACAD\Planview\340532.02\PP STORM A-1 & LATERALS PLAN & PROFILE July 16, 2025, 12:05 PM, malak.muhammad

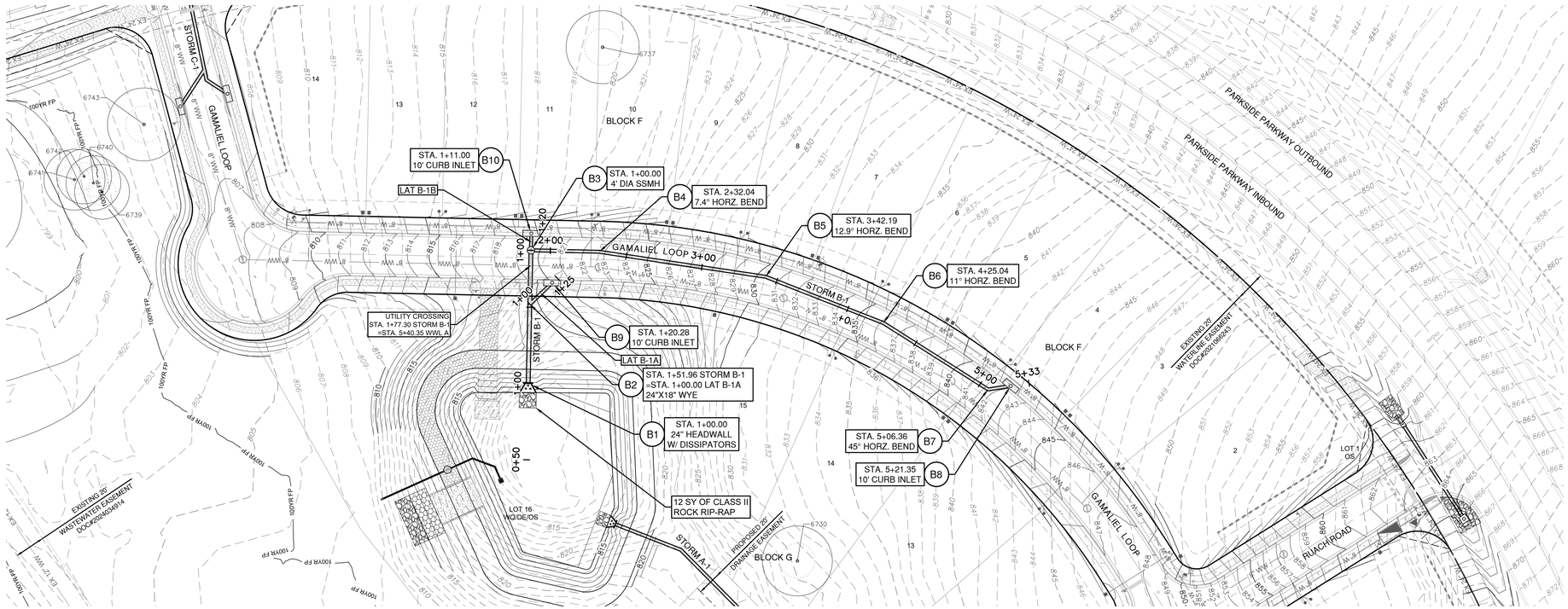

STORM B-1

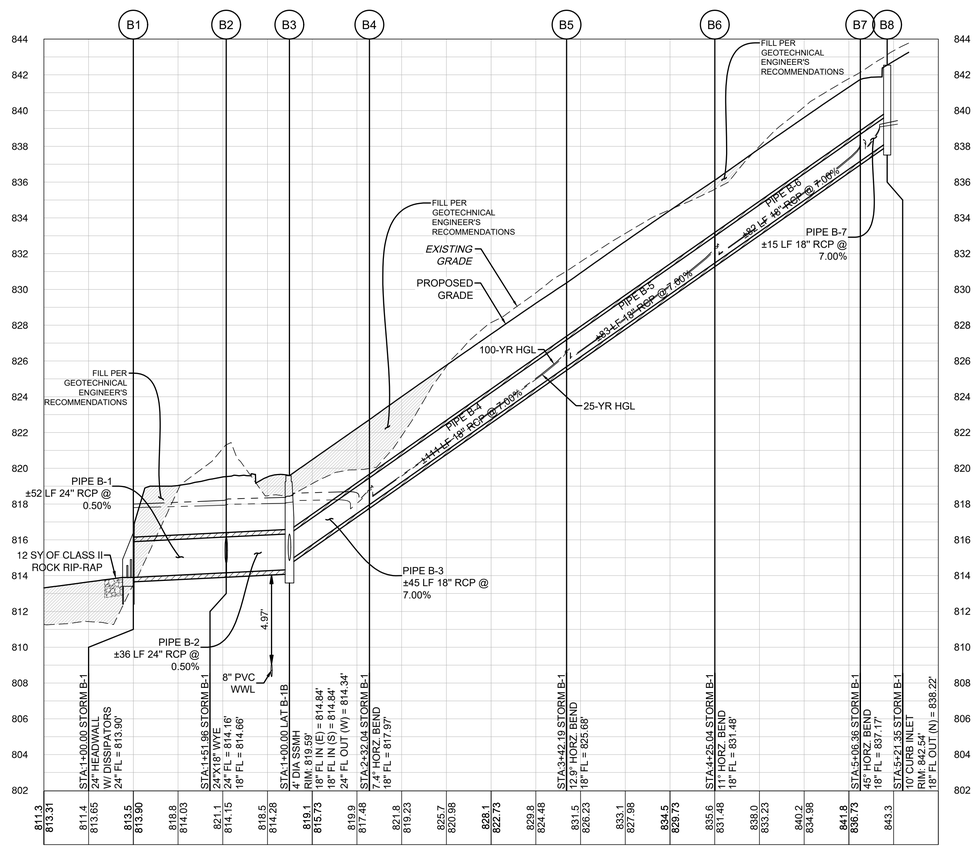

LAT B-1A

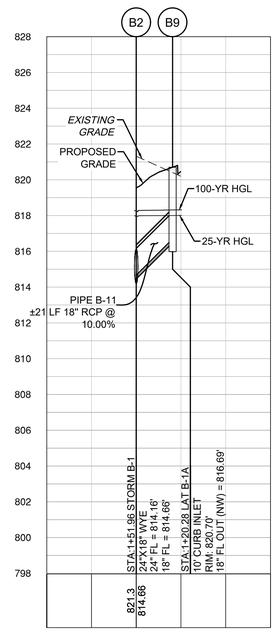

LAT B-1B

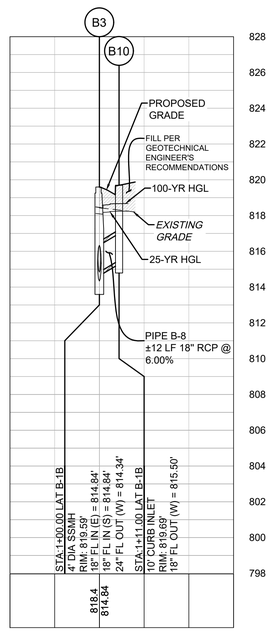

0 40' 80'

SCALE: 1" = 40'

LEGEND

- EXISTING MINOR CONTOUR
- EXISTING MAJOR CONTOUR
- PROPOSED MINOR CONTOUR
- PROPOSED MAJOR CONTOUR
- BOUNDARY
- EASEMENT
- FEMA FLOODWAY PER FIRM# 48491C0460F & LOMR# 21-06-0115P
- FEMA AE — 100YR ATLAS 14 FEMA ZONE AE FLOODPLAIN PER FIRM# 48491C0460F & LOMR# 21-06-0115P
- FEMA A — 100YR FEMA ZONE A FLOODPLAIN PER FIRM MAP# 48491C0460F
- 100YR CLOMR — 100YR CLOMR FLOODPLAIN CASE# 15-06-2071R
- FDFP — 100YR ATLAS 14 FULLY DEVELOPED FLOODPLAIN (STANTEC DRAINAGE STUDY, SHERVIN NOOSHIN, 3/25/19) APPROVED WITH PP# 2019-5-PP
- OHWM — ORDINARY HIGH WATER MARK PER ADAMS ENVIRONMENTAL
- PROPOSED STORM LINE
- FIRE HYDRANT
- WATER VALVE
- STORM SEWER MAHNOLE
- WASTEWATER MANHOLE
- CURB INLET
- TREES TO REMAIN HERITAGE
- TREES TO REMAIN NON HERITAGE

VERT. SCALE: 1" = 4'
HORZ. SCALE: 1" = 40'

4' 2' 0 VERT. SCALE

EXISTING GRADE - CENTERLINE
FINISHED GRADE - CENTERLINE

EXISTING GROUND 1000.1 / 997.10 PROPOSED FLOWLINE

NOTE:

1. ALL PROPOSED STORM SEWER PIPE LINES SHALL BE CLASS III REINFORCED CONCRETE UNLESS NOTED OTHERWISE.
2. FILL SHALL BE PLACED ACCORDING TO THE GEOTECHNICAL ENGINEERS RECOMMENDATION AND CITY OF GEORGETOWN SPECIFICATIONS.
3. VEGETATE ALL DISTURBED AREAS WITHIN THE ROW AND OPEN SPACE LOT AREAS PER CITY OF GEORGETOWN SPECIFICATIONS.

TRENCH SAFETY NOTES:

1. IN ACCORDANCE WITH THE LAWS OF THE STATE OF TEXAS AND THE U.S. OCCUPATIONAL SAFETY AND HEALTH ADMINISTRATION REGULATIONS, ALL TRENCHES OVER 5 FEET IN DEPTH IN EITHER HARD AND COMPACT OR SOFT AND UNSTABLE SOIL SHALL BE SLOPED, SHORED, SHEETED, BRACED OR OTHERWISE SUPPORTED. FURTHERMORE, ALL TRENCHES LESS THAN 5 FEET IN DEPTH SHALL ALSO BE EFFECTIVELY PROTECTED WHEN HAZARDOUS GROUND MOVEMENT MAY BE EXPECTED. TRENCH SAFETY SYSTEMS TO BE UTILIZED FOR THIS PROJECT WILL BE PROVIDE BY THE CONTRACTOR.
2. IN ACCORDANCE WITH THE U.S. OCCUPATIONAL SAFETY AND HEALTH ADMINISTRATION REGULATIONS,WHEN PERSONS ARE IN TRENCHES 4-FEET DEEP OR MORE, ADEQUATE MEANS OF EXIT, SUCH AS A LADDER OR STEPS, MUST BE PROVIDED AND LOCATED SO AS TO REQUIRE NO MORE THAN 25 FEET OF LATERAL TRAVEL.
3. CONSTRUCTION SHALL NOT PROCEED UNTIL APPROPRIATE TRENCH SAFETY SYSTEM DETAILS, AS DESIGNED BY A PROFESSIONAL ENGINEER, ARE RETAINED AND COPIES SUBMITTED TO THE CITY OF GEORGETOWN.
4. DEEP EXCAVATIONS: ON EXCAVATIONS EXCEEDING 20 FEET IN DEPTH, TWO OR MORE MEANS OF EGRESS FROM THE EXCAVATION SHALL BE PROVIDED. THE CONTRACTOR SHALL CONSULT WITH A REGISTERED ENGINEER, EXPERIENCED IN TRENCH SAFETY SYSTEMS, REGARDING SPECIFIC MEANS AND METHODS EMPLOYED. CONTRACTOR SHALL PROVIDE A TRENCH SAFETY PLAN SEALED BY A REGISTERED PROFESSIONAL ENGINEER AS REQUIRED BY THE CITY OF GEORGETOWN.

Pipe Label	Slope (%)	Q25 (cfs)	V25 (ft/s)	D25 (ft)	Q100 (cfs)	V100 (ft/s)	D100 (ft)
PIPE B-1	0.50%	11.49	3.66	3.90	14.24	4.53	4.10
PIPE B-2	0.50%	9.27	2.95	3.82	11.52	3.67	4.12
PIPE B-3	7.00%	4.25	3.45	3.36	5.32	3.95	3.77
PIPE B-4	7.00%	4.25	4.05	0.95	5.32	4.41	1.07
PIPE B-5	7.00%	4.25	4.05	0.95	5.32	4.41	1.07
PIPE B-6	7.00%	4.25	4.05	0.95	5.32	4.41	1.07
PIPE B-7	7.00%	4.25	3.84	1.07	5.32	4.19	1.20
PIPE B-8	6.00%	5.02	2.84	3.34	6.20	3.51	3.74
PIPE B-11	10.00%	2.22	1.31	3.32	2.72	1.54	3.62

NO	REVISION	BY	DATE

811 Know what's below. Call before you dig.

5508 HIGHWAY 290 WEST
SUITE 150
AUSTIN, TX 78735
512.872.6696
HRGREEN.COM

TBPE NO: 16384
TBPLS NO: 10194101

HRGreen®
DEVELOPMENT TX

STATE OF TEXAS
CHRISTINE N. CAMPBELL
142536
LICENSED PROFESSIONAL ENGINEER

07/03/2025

STORM B-1 & LATERALS PLAN & PROFILE

PARKSIDE ON THE RIVER SECTIONS 11, 12A & 15A CONSTRUCTION PLANS

GEORGETOWN, WILLIAMSON, TEXAS

DESIGNED BY: CC
DRAWN BY: MM
CHECKED BY: SN
APPROVED BY:

SHEET 96 OF 141

2025-XX-CON

P:\Blake.Magee\Parkside Sections 11-15 & WCN Election 11, 12A & 14A\03_ACAD\Planset\240522 SDPP STORM B-1 & LATERALS PLAN & PROFILE July 16, 2025, 12:07 PM, mekai.muhammad

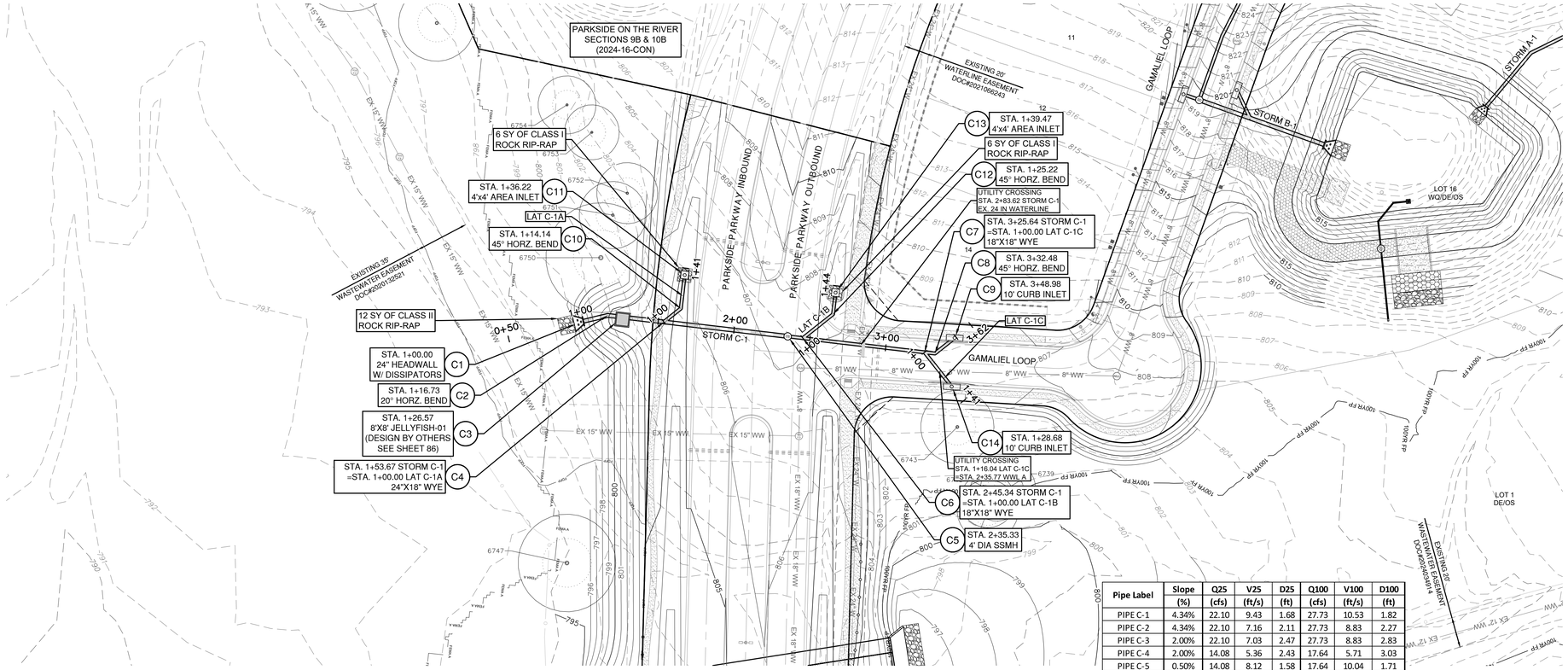

LEGEND

- EXISTING MINOR CONTOUR
- EXISTING MAJOR CONTOUR
- PROPOSED MINOR CONTOUR
- PROPOSED MAJOR CONTOUR
- BOUNDARY
- EASEMENT
- FEMA FLOODWAY PER FIRM# 48491C0460F & LOMR# 21-06-0115P
- 100YR ATLAS 14 FEMA ZONE AE FLOODPLAIN PER FIRM# 48491C0460F & LOMR# 21-06-0115P
- 100YR FEMA ZONE A FLOODPLAIN PER FIRM MAP# 48491C0460F
- 100YR CLOMR — 100YR CLOMR FLOODPLAIN CASE# 15-06-2071R
- FDFP — 100YR ATLAS 14 FULLY DEVELOPED FLOODPLAIN (STANTEC DRAINAGE STUDY, SHERVIN NOOSHIN, 3/25/19) APPROVED WITH PP# 2019-5-PP
- OHWM — ORDINARY HIGH WATER MARK PER ADAMS ENVIRONMENTAL
- PROPOSED STORM LINE
- FIRE HYDRANT
- WATER VALVE
- STORM SEWER MAHNOLE
- WASTEWATER MANHOLE
- CURB INLET
- TREES TO REMAIN HERITAGE
- TREES TO REMAIN NON HERITAGE

VERT. SCALE: 1" = 4'
HORZ. SCALE: 1" = 40'

EXISTING GRADE - CENTERLINE
FINISHED GRADE - CENTERLINE

4' 2' 0 VERT. SCALE

EXISTING GROUND 1000.1 997.10 PROPOSED FLOWLINE

Pipe Label	Slope (%)	Q25 (cfs)	V25 (ft/s)	D25 (ft)	Q100 (cfs)	V100 (ft/s)	D100 (ft)
PIPE C-1	4.34%	22.10	9.43	1.68	27.73	10.53	1.82
PIPE C-2	4.34%	22.10	7.16	2.11	27.73	8.83	2.27
PIPE C-3	2.00%	22.10	7.03	2.47	27.73	8.83	2.83
PIPE C-4	2.00%	14.08	5.36	2.43	17.64	5.71	3.03
PIPE C-5	0.50%	14.08	8.12	1.58	17.64	10.04	1.71
PIPE C-6	0.50%	5.31	3.00	1.89	6.55	3.71	2.18
PIPE C-7	0.50%	3.02	1.71	1.75	3.74	2.12	2.18
PIPE C-8	0.50%	3.02	1.71	1.74	3.74	2.12	2.18
PIPE C-9	3.33%	8.02	4.54	1.93	10.09	5.71	2.53
PIPE C-10	3.33%	8.02	5.17	1.66	10.09	5.71	2.38
PIPE C-11	2.00%	8.77	4.96	1.89	11.09	6.28	2.18
PIPE C-12	2.00%	8.77	4.96	1.70	11.09	6.28	2.18
PIPE C-13	0.75%	2.29	1.30	1.75	2.81	1.59	2.18

NOTE:

1. ALL PROPOSED STORM SEWER PIPE LINES SHALL BE CLASS III REINFORCED CONCRETE UNLESS NOTED OTHERWISE.
2. FILL SHALL BE PLACED ACCORDING TO THE GEOTECHNICAL ENGINEERS RECOMMENDATION AND CITY OF GEORGETOWN SPECIFICATIONS.
3. VEGETATE ALL DISTURBED AREAS WITHIN THE ROW AND OPEN SPACE LOT AREAS PER CITY OF GEORGETOWN SPECIFICATIONS.

TRENCH SAFETY NOTES:

1. IN ACCORDANCE WITH THE LAWS OF THE STATE OF TEXAS AND THE U.S. OCCUPATIONAL SAFETY AND HEALTH ADMINISTRATION REGULATIONS, ALL TRENCHES OVER 5 FEET IN DEPTH IN EITHER HARD AND COMPACT OR SOFT AND UNSTABLE SOIL SHALL BE SLOPED, SHORED, SHEETED, BRACED OR OTHERWISE SUPPORTED. FURTHERMORE, ALL TRENCHES LESS THAN 5 FEET IN DEPTH SHALL ALSO BE EFFECTIVELY PROTECTED WHEN HAZARDOUS GROUND MOVEMENT MAY BE EXPECTED. TRENCH SAFETY SYSTEMS TO BE UTILIZED FOR THIS PROJECT WILL BE PROVIDE BY THE CONTRACTOR.
2. IN ACCORDANCE WITH THE U.S. OCCUPATIONAL SAFETY AND HEALTH ADMINISTRATION REGULATIONS,WHEN PERSONS ARE IN TRENCHES 4-FEET DEEP OR MORE, ADEQUATE MEANS OF EXIT, SUCH AS A LADDER OR STEPS, MUST BE PROVIDED AND LOCATED SO AS TO REQUIRE NO MORE THAN 25 FEET OF LATERAL TRAVEL.
3. CONSTRUCTION SHALL NOT PROCEED UNTIL APPROPRIATE TRENCH SAFETY SYSTEM DETAILS, AS DESIGNED BY A PROFESSIONAL ENGINEER, ARE RETAINED AND COPIES SUBMITTED TO THE CITY OF GEORGETOWN.
4. DEEP EXCAVATIONS: ON EXCAVATIONS EXCEEDING 20 FEET IN DEPTH, TWO OR MORE MEANS OF EGRESS FROM THE EXCAVATION SHALL BE PROVIDED. THE CONTRACTOR SHALL CONSULT WITH A REGISTERED ENGINEER, EXPERIENCED IN TRENCH SAFETY SYSTEMS, REGARDING SPECIFIC MEANS AND METHODS EMPLOYED. CONTRACTOR SHALL PROVIDE A TRENCH SAFETY PLAN SEALED BY A REGISTERED PROFESSIONAL ENGINEER AS REQUIRED BY THE CITY OF GEORGETOWN.

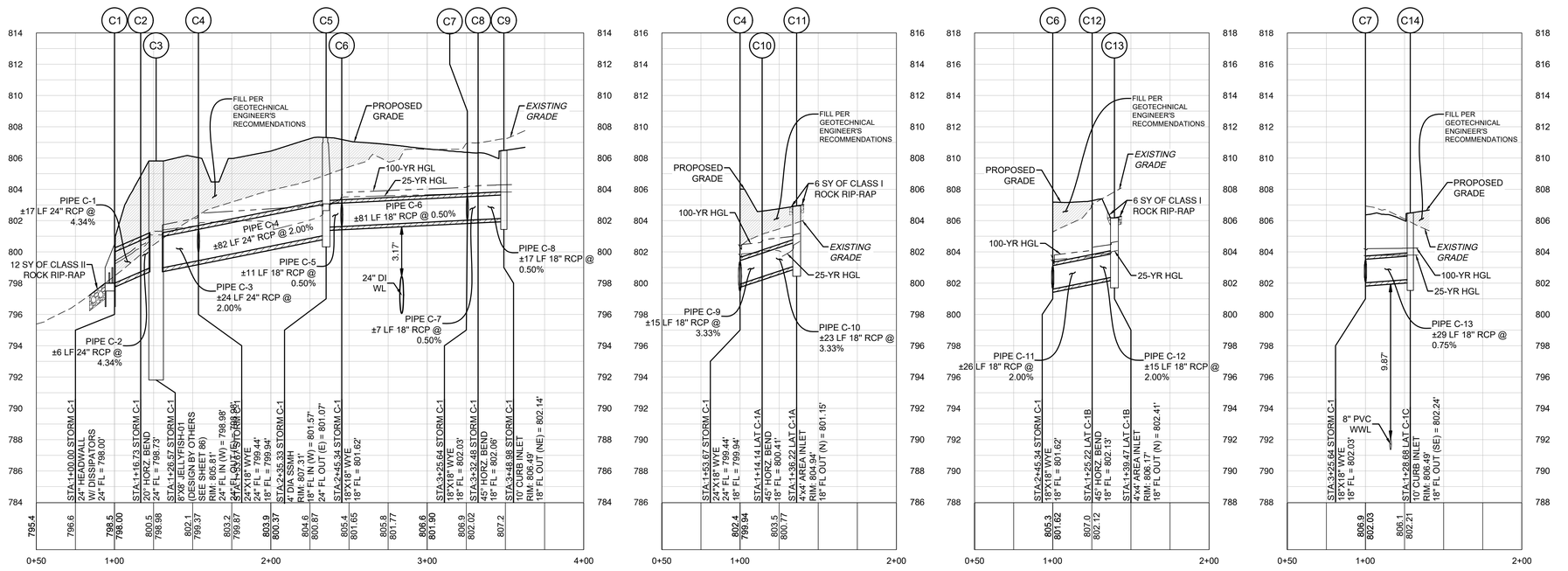

5508 HIGHWAY 290 WEST
SUITE 150
AUSTIN, TX 78735
512.872.6696
HRGREEN.COM

TBPE NO: 16384
TBPLS NO: 10194101

HRGreen®
DEVELOPMENT TX

STATE OF TEXAS
CHRISTINE N. CAMPBELL
142536
LICENSED PROFESSIONAL ENGINEER
07/03/2025

STORM C-1 PLAN & PROFILE

PARKSIDE ON THE RIVER
SECTIONS 11, 12A & 15A
CONSTRUCTION PLANS
GEORGETOWN, WILLIAMSON, TEXAS

DESIGNED BY: CC
DRAWN BY: MM
CHECKED BY: SN
APPROVED BY:

SHEET 97 OF 141

2025-XX-CON

NO | REVISION | BY | DATE

811 Know what's below. Call before you dig.

P:\Blue Mound\Parkside Sections 11-15 & WOA\1Section 11, 12A & 15A\03_ACAD\Plans\sh\400522.SDP STORM C-1.dwg, STORM C-1 PLAN & PROFILE, July 18, 2025, 12:09 PM, mdarshmuhammad

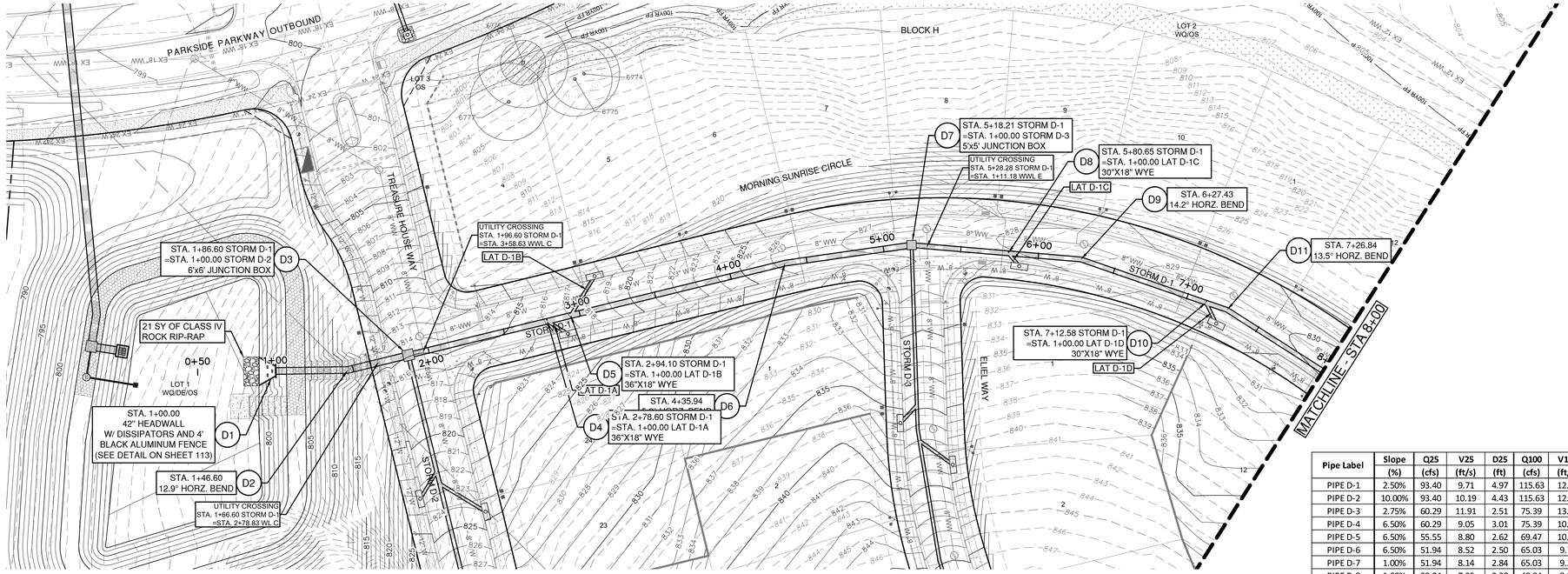

Pipe Label	Slope	Q25	V25	D25	Q100	V100	D100
	(%)	(cfs)	(ft/s)	(ft)	(cfs)	(ft/s)	(ft)
PIPE D-1	2.50%	93.40	9.71	4.97	115.63	12.02	5.27
PIPE D-2	10.00%	93.40	10.19	4.43	115.63	12.26	5.06
PIPE D-3	2.75%	60.29	11.91	2.51	75.39	13.13	2.72
PIPE D-4	6.50%	60.29	9.05	3.01	75.39	10.93	3.19
PIPE D-5	6.50%	55.55	8.80	2.62	69.47	10.21	2.92
PIPE D-6	6.50%	51.94	8.52	2.50	65.03	9.77	2.79
PIPE D-7	1.00%	51.94	8.14	2.84	65.03	9.20	3.07
PIPE D-8	1.00%	39.04	7.95	3.38	48.84	9.95	3.78
PIPE D-9	1.00%	36.15	7.36	3.44	45.22	9.21	4.06
PIPE D-10	1.00%	36.15	7.36	3.46	45.22	9.21	4.45
PIPE D-11	1.00%	30.87	6.29	3.43	38.59	7.86	4.69
PIPE D-12	1.00%	30.87	6.29	3.46	38.59	7.86	4.82

STORM D-1

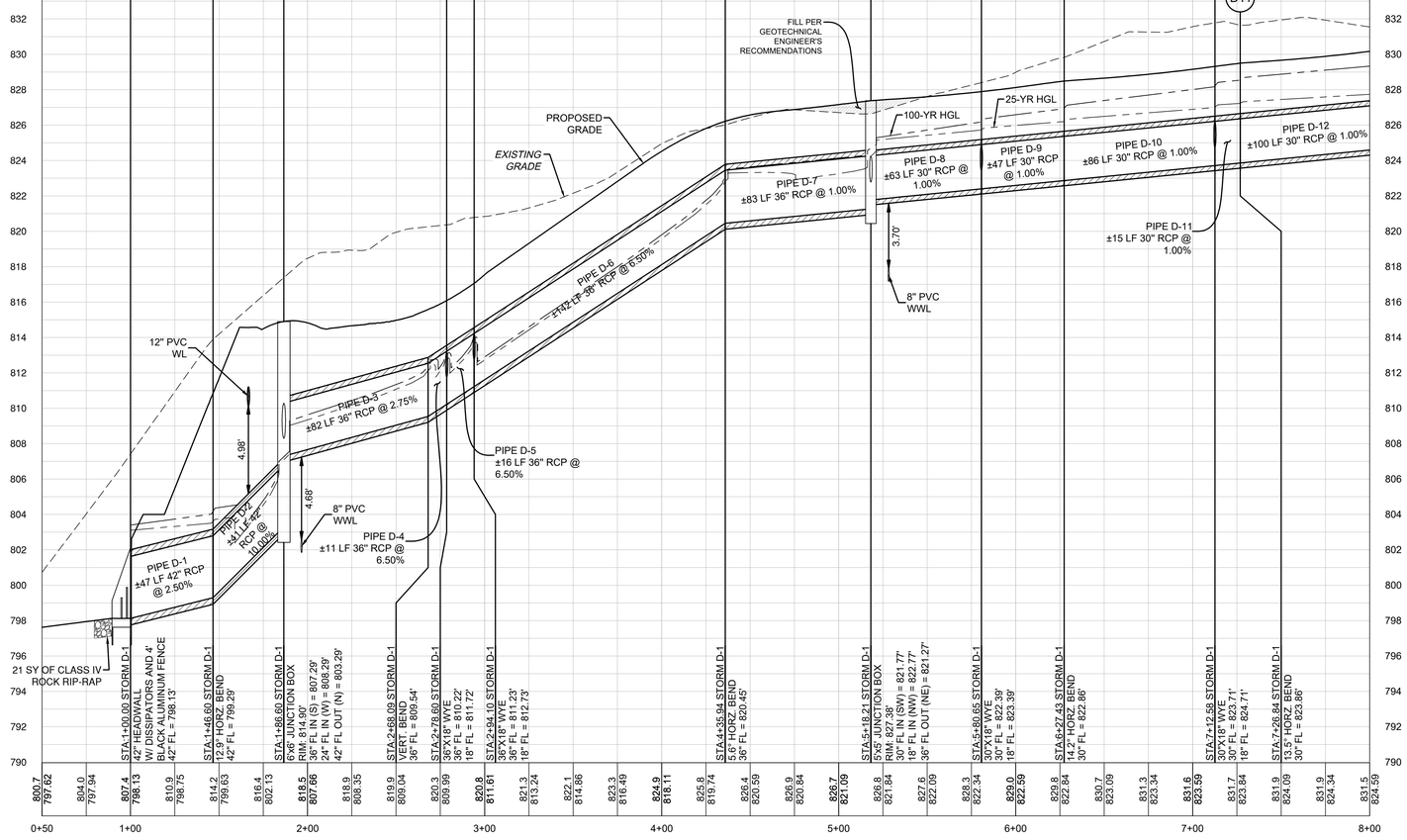

LEGEND

- EXISTING MINOR CONTOUR
- EXISTING MAJOR CONTOUR
- PROPOSED MINOR CONTOUR
- PROPOSED MAJOR CONTOUR
- BOUNDARY
- EASEMENT
- FEMA FLOODWAY PER FIRM# 48491C0460F & LOMR# 21-06-0115P
- FEMA AE — 100YR ATLAS 14 FEMA ZONE AE FLOODPLAIN PER FIRM# 48491C0460F & LOMR# 21-06-0115P
- FEMA A — 100YR FEMA ZONE A FLOODPLAIN PER FIRM MAP# 48491C0460F
- 100YR CLOMR — 100YR CLOMR FLOODPLAIN CASE# 15-06-2071R
- FDFP — 100YR ATLAS 14 FULLY DEVELOPED FLOODPLAIN (STANTEC DRAINAGE STUDY, SHERVIN NOOSHIN, 3/25/19) APPROVED WITH PP# 2019-5-PP
- OHWM — ORDINARY HIGH WATER MARK PER ADAMS ENVIRONMENTAL
- PROPOSED STORM LINE
- FIRE HYDRANT
- WATER VALVE
- STORM SEWER MAHNOLE
- WASTEWATER MANHOLE
- CURB INLET
- TREES TO REMAIN HERITAGE
- TREES TO REMAIN NON HERITAGE

VERT. SCALE: 1" = 4'
HORZ. SCALE: 1" = 40'

EXISTING GRADE - CENTERLINE
FINISHED GRADE - CENTERLINE

4' 2' 0 VERT. SCALE

EXISTING GROUND 1000.1 / 997.10 PROPOSED FLOWLINE

NOTE:

1. ALL PROPOSED STORM SEWER PIPE LINES SHALL BE CLASS III REINFORCED CONCRETE UNLESS NOTED OTHERWISE.
2. FILL SHALL BE PLACED ACCORDING TO THE GEOTECHNICAL ENGINEERS RECOMMENDATION AND CITY OF GEORGETOWN SPECIFICATIONS.
3. VEGETATE ALL DISTURBED AREAS WITHIN THE ROW AND OPEN SPACE LOT AREAS PER CITY OF GEORGETOWN SPECIFICATIONS.

TRENCH SAFETY NOTES:

1. IN ACCORDANCE WITH THE LAWS OF THE STATE OF TEXAS AND THE U.S. OCCUPATIONAL SAFETY AND HEALTH ADMINISTRATION REGULATIONS, ALL TRENCHES OVER 5 FEET IN DEPTH IN EITHER HARD AND COMPACT OR SOFT AND UNSTABLE SOIL SHALL BE SLOPED, SHORED, SHEETED, BRACED OR OTHERWISE SUPPORTED. FURTHERMORE, ALL TRENCHES LESS THAN 5 FEET IN DEPTH SHALL ALSO BE EFFECTIVELY PROTECTED WHEN HAZARDOUS GROUND MOVEMENT MAY BE EXPECTED. TRENCH SAFETY SYSTEMS TO BE UTILIZED FOR THIS PROJECT WILL BE PROVIDE BY THE CONTRACTOR.
2. IN ACCORDANCE WITH THE U.S. OCCUPATIONAL SAFETY AND HEALTH ADMINISTRATION REGULATIONS,WHEN PERSONS ARE IN TRENCHES 4-FEET DEEP OR MORE, ADEQUATE MEANS OF EXIT, SUCH AS A LADDER OR STEPS, MUST BE PROVIDED AND LOCATED SO AS TO REQUIRE NO MORE THAN 25 FEET OF LATERAL TRAVEL.
3. CONSTRUCTION SHALL NOT PROCEED UNTIL APPROPRIATE TRENCH SAFETY SYSTEM DETAILS, AS DESIGNED BY A PROFESSIONAL ENGINEER, ARE RETAINED AND COPIES SUBMITTED TO THE CITY OF GEORGETOWN.
4. DEEP EXCAVATIONS: ON EXCAVATIONS EXCEEDING 20 FEET IN DEPTH, TWO OR MORE MEANS OF EGRESS FROM THE EXCAVATION SHALL BE PROVIDED. THE CONTRACTOR SHALL CONSULT WITH A REGISTERED ENGINEER, EXPERIENCED IN TRENCH SAFETY SYSTEMS, REGARDING SPECIFIC MEANS AND METHODS EMPLOYED. CONTRACTOR SHALL PROVIDE A TRENCH SAFETY PLAN SEALED BY A REGISTERED PROFESSIONAL ENGINEER AS REQUIRED BY THE CITY OF GEORGETOWN.

NO	REVISION	BY	DATE

811 Know what's below. Call before you dig.

5508 HIGHWAY 290 WEST
SUITE 150
AUSTIN, TX 78735
512.872.6696
HRGREEN.COM

TBPE NO: 16384
TBPLS NO: 10194101

HRGreen®
DEVELOPMENT TX

STATE OF TEXAS
CHRISTINE N. CAMPBELL
142536
LICENSED PROFESSIONAL ENGINEER
07/03/2025

STORM D-1 PLAN & PROFILE
1+00 - 8+00

PARKSIDE ON THE RIVER
SECTIONS 11, 12A & 15A
CONSTRUCTION PLANS
GEORGETOWN, WILLIAMSON, TEXAS

DESIGNED BY: CC
DRAWN BY: MM
CHECKED BY: SN
APPROVED BY:

SHEET 98 OF 141

2025-XX-CON

P:\Blaise Maigan\Parkside Sections 11-15 & WOA\Sections 11, 12A & 15A\03_ACAD\Plans\sht\A00S202 SDPP STORM D-1 Avwg STORM D-1 PLAN & PROFILE 1+00 - 8+00, July 18, 2025, 12:09 PM, nwaiz muhammad

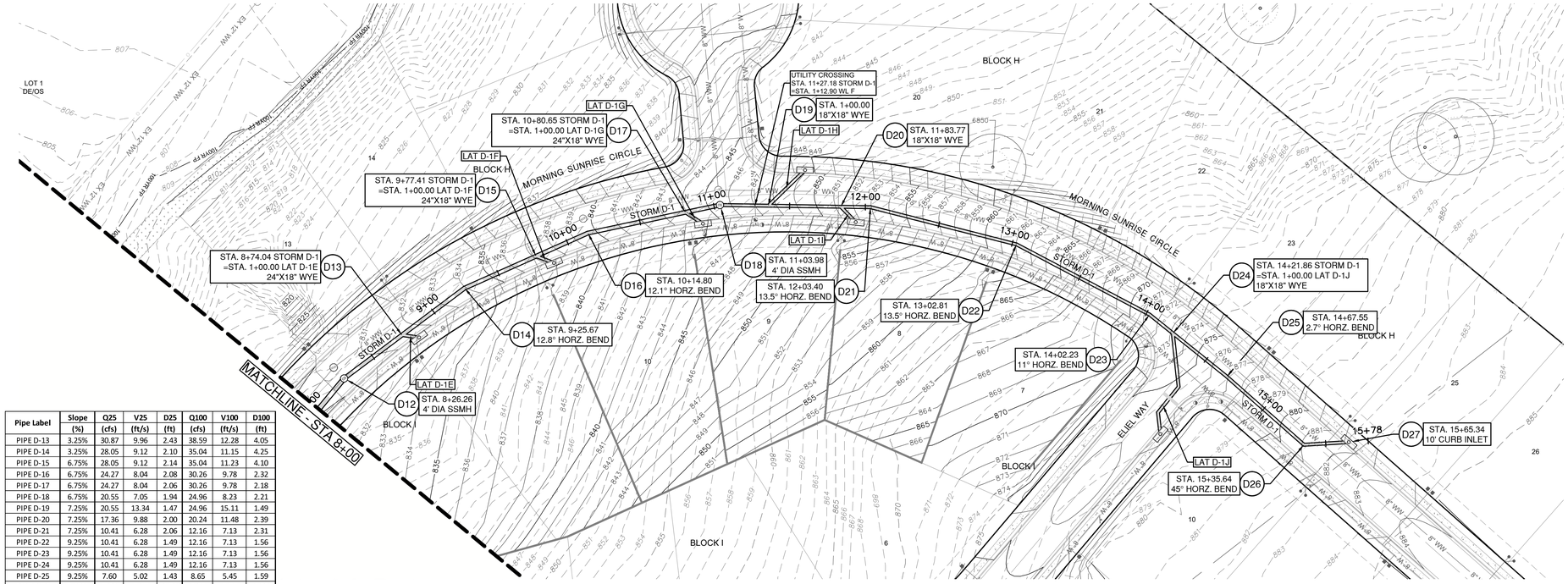

Pipe Label	Slope (%)	Q25 (cfs)	V25 (ft/s)	D25 (ft)	Q100 (cfs)	V100 (ft/s)	D100 (ft)
PIPE D-13	3.25%	30.87	9.96	2.43	38.59	12.28	4.05
PIPE D-14	3.25%	28.05	9.12	2.10	35.04	11.15	4.25
PIPE D-15	6.75%	28.05	9.12	2.14	35.04	11.23	4.10
PIPE D-16	6.75%	24.27	8.04	2.08	30.26	9.78	2.32
PIPE D-17	6.75%	24.27	8.04	2.06	30.26	9.78	2.18
PIPE D-18	6.75%	20.55	7.05	1.94	24.96	8.23	2.21
PIPE D-19	7.25%	20.55	13.34	1.47	24.96	15.11	1.49
PIPE D-20	7.25%	17.36	9.88	2.00	20.24	11.48	2.39
PIPE D-21	7.25%	10.41	6.28	2.06	12.16	7.13	2.31
PIPE D-22	9.25%	10.41	6.28	1.49	12.16	7.13	1.56
PIPE D-23	9.25%	10.41	6.28	1.49	12.16	7.13	1.56
PIPE D-24	9.25%	10.41	6.28	1.49	12.16	7.13	1.56
PIPE D-25	9.25%	7.60	5.02	1.43	8.65	5.45	1.59
PIPE D-26	5.25%	7.60	5.17	1.30	8.65	5.55	1.38
PIPE D-27	5.25%	7.60	5.00	1.45	8.65	5.45	1.53

STORM D-1

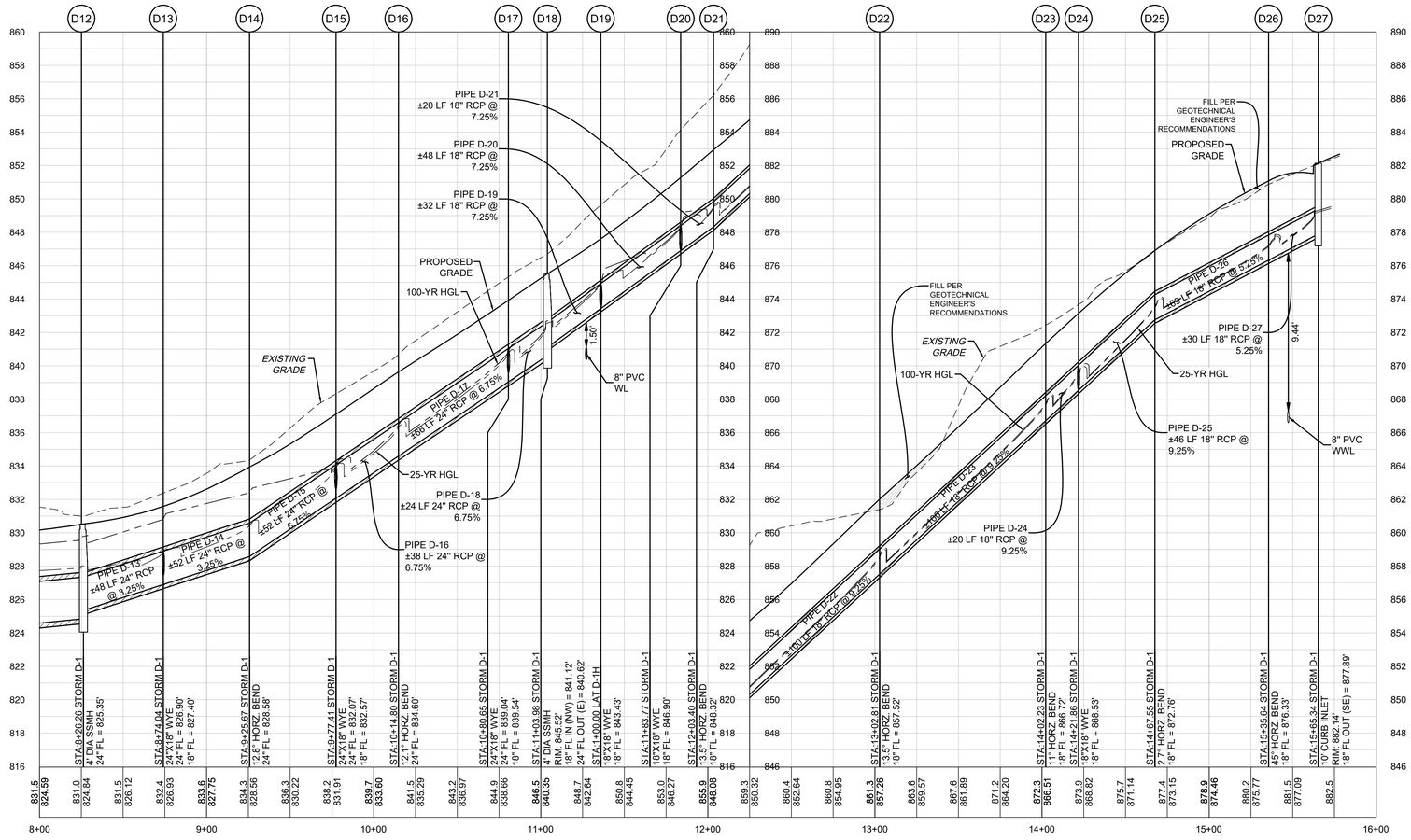

0 40' 80'

SCALE: 1" = 40'

LEGEND

- EXISTING MINOR CONTOUR
- EXISTING MAJOR CONTOUR
- PROPOSED MINOR CONTOUR
- PROPOSED MAJOR CONTOUR
- BOUNDARY
- EASEMENT
- FEMA FLOODWAY PER FIRM# 48491C0460F & LOMR# 21-06-0115P
- 100YR ATLAS 14 FEMA ZONE AE FLOODPLAIN PER FIRM# 48491C0460F & LOMR# 21-06-0115P
- 100YR FEMA ZONE A FLOODPLAIN PER FIRM MAP# 48491C0460F
- 100YR CLOMR FLOODPLAIN CASE# 15-06-2071R
- 100YR ATLAS 14 FULLY DEVELOPED FLOODPLAIN (STANTEC DRAINAGE STUDY, SHERVIN NOOSHIN, 3/25/19) APPROVED WITH PP# 2019-5-PP
- ORDINARY HIGH WATER MARK PER ADAMS ENVIRONMENTAL
- PROPOSED STORM LINE
- FIRE HYDRANT
- WATER VALVE
- STORM SEWER MAHNOLE
- WASTEWATER MANHOLE
- CURB INLET
- TREES TO REMAIN HERITAGE
- TREES TO REMAIN NON HERITAGE

VERT. SCALE: 1" = 4'
HORZ. SCALE: 1" = 40'

4' 2' 0 VERT. SCALE

EXISTING GRADE - CENTERLINE
FINISHED GRADE - CENTERLINE

EXISTING GROUND 1000.1 997.10 PROPOSED FLOWLINE

NOTE:

1. ALL PROPOSED STORM SEWER PIPE LINES SHALL BE CLASS III REINFORCED CONCRETE UNLESS NOTED OTHERWISE.
2. FILL SHALL BE PLACED ACCORDING TO THE GEOTECHNICAL ENGINEERS RECOMMENDATION AND CITY OF GEORGETOWN SPECIFICATIONS.
3. VEGETATE ALL DISTURBED AREAS WITHIN THE ROW AND OPEN SPACE LOT AREAS PER CITY OF GEORGETOWN SPECIFICATIONS.

TRENCH SAFETY NOTES:

1. IN ACCORDANCE WITH THE LAWS OF THE STATE OF TEXAS AND THE U.S. OCCUPATIONAL SAFETY AND HEALTH ADMINISTRATION REGULATIONS, ALL TRENCHES OVER 5 FEET IN DEPTH IN EITHER HARD AND COMPACT OR SOFT AND UNSTABLE SOIL SHALL BE SLOPED, SHORED, SHEETED, BRACED OR OTHERWISE SUPPORTED. FURTHERMORE, ALL TRENCHES LESS THAN 5 FEET IN DEPTH SHALL ALSO BE EFFECTIVELY PROTECTED WHEN HAZARDOUS GROUND MOVEMENT MAY BE EXPECTED. TRENCH SAFETY SYSTEMS TO BE UTILIZED FOR THIS PROJECT WILL BE PROVIDE BY THE CONTRACTOR.
2. IN ACCORDANCE WITH THE U.S. OCCUPATIONAL SAFETY AND HEALTH ADMINISTRATION REGULATIONS,WHEN PERSONS ARE IN TRENCHES 4-FEET DEEP OR MORE, ADEQUATE MEANS OF EXIT, SUCH AS A LADDER OR STEPS, MUST BE PROVIDED AND LOCATED SO AS TO REQUIRE NO MORE THAN 25 FEET OF LATERAL TRAVEL.
3. CONSTRUCTION SHALL NOT PROCEED UNTIL APPROPRIATE TRENCH SAFETY SYSTEM DETAILS, AS DESIGNED BY A PROFESSIONAL ENGINEER, ARE RETAINED AND COPIES SUBMITTED TO THE CITY OF GEORGETOWN.
4. DEEP EXCAVATIONS: ON EXCAVATIONS EXCEEDING 20 FEET IN DEPTH, TWO OR MORE MEANS OF EGRESS FROM THE EXCAVATION SHALL BE PROVIDED. THE CONTRACTOR SHALL CONSULT WITH A REGISTERED ENGINEER, EXPERIENCED IN TRENCH SAFETY SYSTEMS, REGARDING SPECIFIC MEANS AND METHODS EMPLOYED. CONTRACTOR SHALL PROVIDE A TRENCH SAFETY PLAN SEALED BY A REGISTERED PROFESSIONAL ENGINEER AS REQUIRED BY THE CITY OF GEORGETOWN.

NO	REVISION	BY	DATE

Know what's below. Call before you dig.

5508 HIGHWAY 290 WEST
SUITE 150
AUSTIN, TX 78735
512.872.6696
HRGREEN.COM
TBPE NO: 16384
TBPLS NO: 10194101

HRGreen®

DEVELOPMENT TX

STATE OF TEXAS
CHRISTINE N. CAMPBELL
142536
LICENSED PROFESSIONAL ENGINEER

07/03/2025

STORM D-1 PLAN & PROFILE 8+00 - END

PARKSIDE ON THE RIVER SECTIONS 11, 12A & 15A CONSTRUCTION PLANS GEORGETOWN, WILLIAMSON, TEXAS

DESIGNED BY: CC
DRAWN BY: MM
CHECKED BY: SN
APPROVED BY:

SHEET 99 OF 141

2025-XX-CON

P:\Blake Magee\Parkside Sections 11-15 & VCM\15Section 11, 12A & 15A\03_ACAD\Plans\sht\260322 SDPP STORM D-1 Prof.dwg, STORM D-1 PLAN & PROFILE 8+00 - END, July 18, 2025, 12:10 PM, malan.muhammad

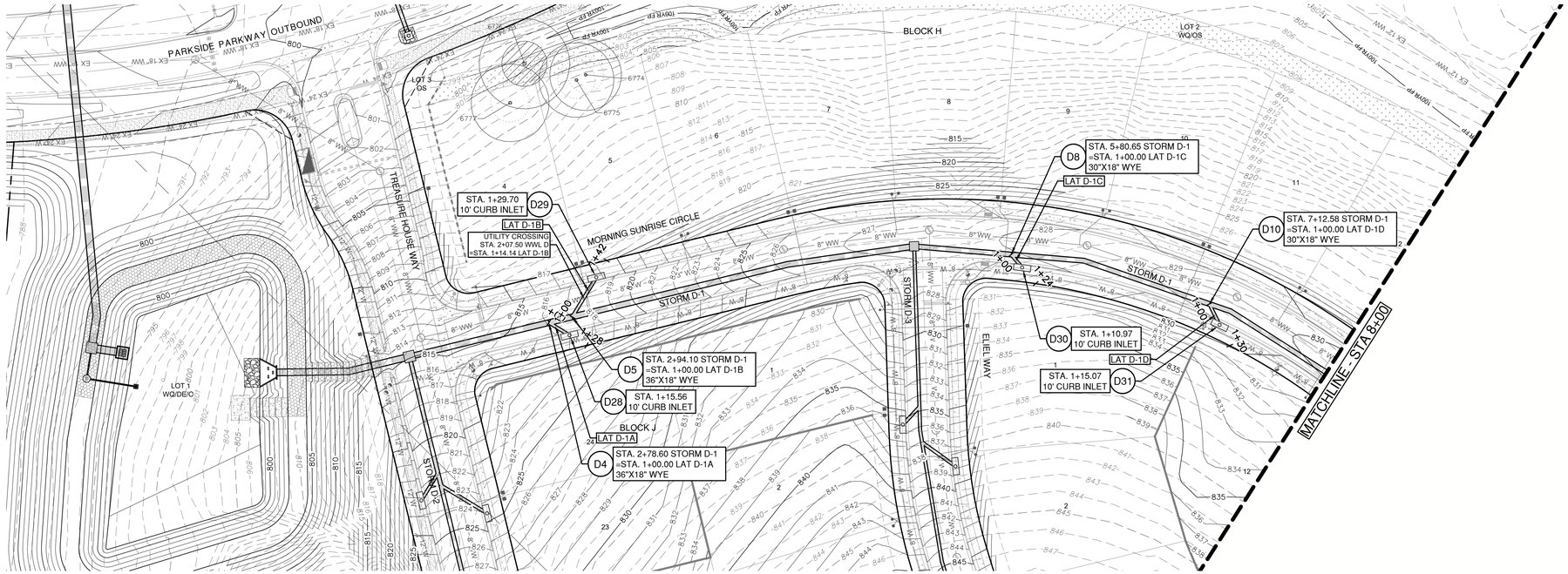

Pipe Label	Slope (%)	Q25 (cfs)	V25 (ft/s)	D25 (ft)	Q100 (cfs)	V100 (ft/s)	D100 (ft)
PIPE D-28	6.00%	4.74	4.02	1.12	5.92	4.25	1.42
PIPE D-29	5.75%	3.61	3.58	1.00	4.44	3.66	1.29
PIPE D-30	6.75%	2.89	1.64	2.44	3.62	2.05	2.96
PIPE D-31	5.00%	5.28	2.99	2.43	6.63	3.75	3.69

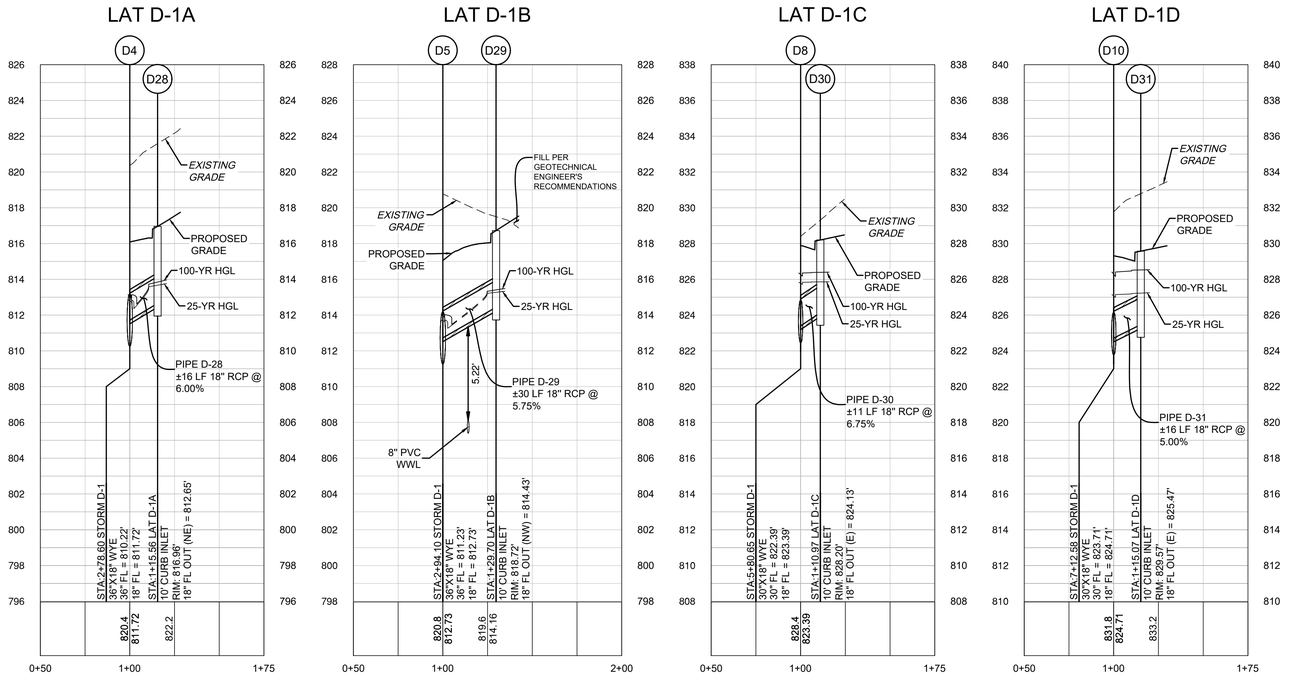

0 40' 80'

SCALE: 1" = 40'

LEGEND

- EXISTING MINOR CONTOUR
- EXISTING MAJOR CONTOUR
- PROPOSED MINOR CONTOUR
- PROPOSED MAJOR CONTOUR
- BOUNDARY
- EASEMENT
- FEMA FLOODWAY PER FIRM# 48491C0460F & LOMR# 21-06-0115P
- FEMA AE — 100YR ATLAS 14 FEMA ZONE AE FLOODPLAIN PER FIRM# 48491C0460F & LOMR# 21-06-0115P
- FEMA A — 100YR FEMA ZONE A FLOODPLAIN PER FIRM MAP# 48491C0460F
- 100YR CLOMR — 100YR CLOMR FLOODPLAIN CASE# 15-06-2071R
- FDFP — 100YR ATLAS 14 FULLY DEVELOPED FLOODPLAIN (STANTEC DRAINAGE STUDY, SHERVIN NOOSHIN, 3/25/19) APPROVED WITH PP# 2019-5-PP
- OHWM — ORDINARY HIGH WATER MARK PER ADAMS ENVIRONMENTAL
- PROPOSED STORM LINE
- FIRE HYDRANT
- WATER VALVE
- STORM SEWER MAHNOLE
- WASTEWATER MANHOLE
- CURB INLET
- TREES TO REMAIN HERITAGE
- TREES TO REMAIN NON HERITAGE

VERT. SCALE: 1" = 4'
HORZ. SCALE: 1" = 40'

EXISTING GRADE - CENTERLINE
FINISHED GRADE - CENTERLINE

4' 2' 0 VERT. SCALE

EXISTING GROUND 1000.1 / 997.10 PROPOSED FLOWLINE

NOTE:

1. ALL PROPOSED STORM SEWER PIPE LINES SHALL BE CLASS III REINFORCED CONCRETE UNLESS NOTED OTHERWISE.
2. FILL SHALL BE PLACED ACCORDING TO THE GEOTECHNICAL ENGINEERS RECOMMENDATION AND CITY OF GEORGETOWN SPECIFICATIONS.
3. VEGETATE ALL DISTURBED AREAS WITHIN THE ROW AND OPEN SPACE LOT AREAS PER CITY OF GEORGETOWN SPECIFICATIONS.

TRENCH SAFETY NOTES:

1. IN ACCORDANCE WITH THE LAWS OF THE STATE OF TEXAS AND THE U.S. OCCUPATIONAL SAFETY AND HEALTH ADMINISTRATION REGULATIONS, ALL TRENCHES OVER 5 FEET IN DEPTH IN EITHER HARD AND COMPACT OR SOFT AND UNSTABLE SOIL SHALL BE SLOPED, SHORED, SHEETED, BRACED OR OTHERWISE SUPPORTED. FURTHERMORE, ALL TRENCHES LESS THAN 5 FEET IN DEPTH SHALL ALSO BE EFFECTIVELY PROTECTED WHEN HAZARDOUS GROUND MOVEMENT MAY BE EXPECTED. TRENCH SAFETY SYSTEMS TO BE UTILIZED FOR THIS PROJECT WILL BE PROVIDE BY THE CONTRACTOR.
2. IN ACCORDANCE WITH THE U.S. OCCUPATIONAL SAFETY AND HEALTH ADMINISTRATION REGULATIONS,WHEN PERSONS ARE IN TRENCHES 4-FEET DEEP OR MORE, ADEQUATE MEANS OF EXIT, SUCH AS A LADDER OR STEPS, MUST BE PROVIDED AND LOCATED SO AS TO REQUIRE NO MORE THAN 25 FEET OF LATERAL TRAVEL.
3. CONSTRUCTION SHALL NOT PROCEED UNTIL APPROPRIATE TRENCH SAFETY SYSTEM DETAILS, AS DESIGNED BY A PROFESSIONAL ENGINEER, ARE RETAINED AND COPIES SUBMITTED TO THE CITY OF GEORGETOWN.
4. DEEP EXCAVATIONS: ON EXCAVATIONS EXCEEDING 20 FEET IN DEPTH, TWO OR MORE MEANS OF EGRESS FROM THE EXCAVATION SHALL BE PROVIDED. THE CONTRACTOR SHALL CONSULT WITH A REGISTERED ENGINEER, EXPERIENCED IN TRENCH SAFETY SYSTEMS, REGARDING SPECIFIC MEANS AND METHODS EMPLOYED. CONTRACTOR SHALL PROVIDE A TRENCH SAFETY PLAN SEALED BY A REGISTERED PROFESSIONAL ENGINEER AS REQUIRED BY THE CITY OF GEORGETOWN.

NO	REVISION	BY	DATE

Know what's below. Call before you dig.

HRGreen
DEVELOPMENT TX
5508 HIGHWAY 290 WEST
SUITE 150
AUSTIN, TX 78735
512.872.6696
HRGREEN.COM
TBPE NO: 16384
TBPLS NO: 10194101

STATE OF TEXAS
CHRISTINE N. CAMPBELL
142536
LICENSED PROFESSIONAL ENGINEER
07/15/2025

STORM D-1 LATERALS D-1A - D-1D

PARKSIDE ON THE RIVER
SECTIONS 11, 12A & 15A
CONSTRUCTION PLANS
GEORGETOWN, WILLIAMSON, TEXAS

DESIGNED BY: CC
DRAWN BY: MM
CHECKED BY: SN
APPROVED BY:

SHEET 100 OF 141

2025-XX-CON

P:\Blake Magee\Parkside Sections 11-15 & WOA 9\Sections 11, 12A & 15A\03_ACAD\Planset\20250523 SDP\ STORM D-1 LATS.dwg, STORM D-1 LATERALS D-1A - D-1D, July 16, 2025, 12:11 PM, mateo.muhammad

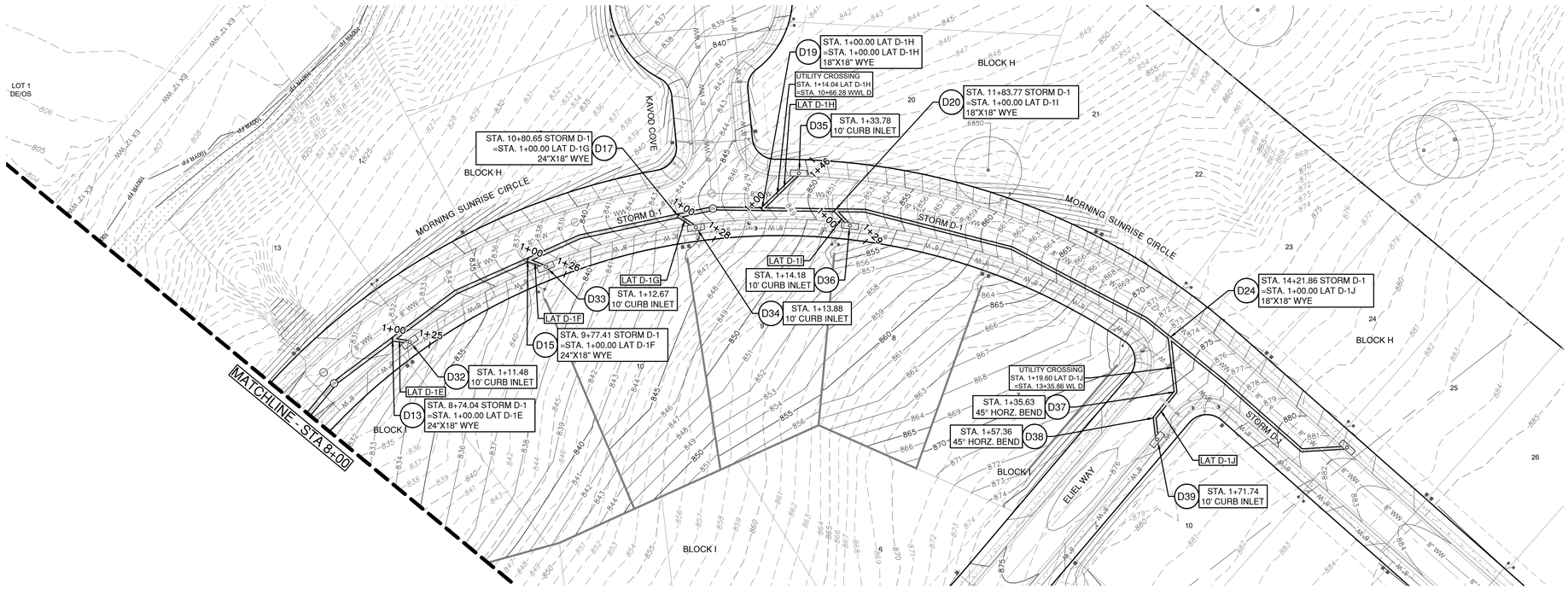

Pipe Label	Slope (%)	Q25 (cfs)	V25 (ft/s)	D25 (ft)	Q100 (cfs)	V100 (ft/s)	D100 (ft)
PIPE D-32	3.33%	2.82	1.72	1.60	3.55	2.01	3.75
PIPE D-33	8.75%	3.78	3.24	1.58	4.78	3.70	1.82
PIPE D-34	7.50%	3.72	3.22	1.44	5.30	3.94	1.71
PIPE D-35	5.25%	3.19	2.96	2.00	4.72	3.67	2.39
PIPE D-36	8.75%	6.95	4.68	2.06	8.08	5.19	2.31
PIPE D-37	4.50%	2.81	2.78	1.43	3.51	3.11	1.59
PIPE D-38	4.50%	2.81	3.33	0.85	3.51	3.58	0.96
PIPE D-39	4.50%	2.81	3.33	0.85	3.51	3.58	0.96

0 40' 80'

SCALE: 1" = 40'

LEGEND

- EXISTING MINOR CONTOUR
- EXISTING MAJOR CONTOUR
- PROPOSED MINOR CONTOUR
- PROPOSED MAJOR CONTOUR
- BOUNDARY
- EASEMENT
- FEMA FLOODWAY PER FIRM# 48491C0460F & LOMR# 21-06-0115P
- FEMA AE — 100YR ATLAS 14 FEMA ZONE AE FLOODPLAIN PER FIRM# 48491C0460F & LOMR# 21-06-0115P
- FEMA A — 100YR FEMA ZONE A FLOODPLAIN PER FIRM MAP# 48491C0460F
- 100YR CLOMR — 100YR CLOMR FLOODPLAIN CASE# 15-06-2071R
- FDFP — 100YR ATLAS 14 FULLY DEVELOPED FLOODPLAIN (STANTEC DRAINAGE STUDY, SHERVIN NOOSHIN, 3/25/19) APPROVED WITH PP# 2019-5-PP
- OHWM — ORDINARY HIGH WATER MARK PER ADAMS ENVIRONMENTAL
- PROPOSED STORM LINE
- FIRE HYDRANT
- WATER VALVE
- STORM SEWER MAHNOLE
- WASTEWATER MANHOLE
- CURB INLET
- TREES TO REMAIN HERITAGE
- TREES TO REMAIN NON HERITAGE

VERT. SCALE: 1" = 4'
HORZ. SCALE: 1" = 40'

EXISTING GRADE - CENTERLINE
FINISHED GRADE - CENTERLINE

4' 2' 0 VERT. SCALE

EXISTING GROUND 1000.1 997.10 PROPOSED FLOWLINE

NOTE:

1. ALL PROPOSED STORM SEWER PIPE LINES SHALL BE CLASS III REINFORCED CONCRETE UNLESS NOTED OTHERWISE.
2. FILL SHALL BE PLACED ACCORDING TO THE GEOTECHNICAL ENGINEERS RECOMMENDATION AND CITY OF GEORGETOWN SPECIFICATIONS.
3. VEGETATE ALL DISTURBED AREAS WITHIN THE ROW AND OPEN SPACE LOT AREAS PER CITY OF GEORGETOWN SPECIFICATIONS.

TRENCH SAFETY NOTES:

1. IN ACCORDANCE WITH THE LAWS OF THE STATE OF TEXAS AND THE U.S. OCCUPATIONAL SAFETY AND HEALTH ADMINISTRATION REGULATIONS, ALL TRENCHES OVER 5 FEET IN DEPTH IN EITHER HARD AND COMPACT OR SOFT AND UNSTABLE SOIL SHALL BE SLOPED, SHORED, SHEETED, BRACED OR OTHERWISE SUPPORTED. FURTHERMORE, ALL TRENCHES LESS THAN 5 FEET IN DEPTH SHALL ALSO BE EFFECTIVELY PROTECTED WHEN HAZARDOUS GROUND MOVEMENT MAY BE EXPECTED. TRENCH SAFETY SYSTEMS TO BE UTILIZED FOR THIS PROJECT WILL BE PROVIDE BY THE CONTRACTOR.
2. IN ACCORDANCE WITH THE U.S. OCCUPATIONAL SAFETY AND HEALTH ADMINISTRATION REGULATIONS,WHEN PERSONS ARE IN TRENCHES 4-FEET DEEP OR MORE, ADEQUATE MEANS OF EXIT, SUCH AS A LADDER OR STEPS, MUST BE PROVIDED AND LOCATED SO AS TO REQUIRE NO MORE THAN 25 FEET OF LATERAL TRAVEL.
3. CONSTRUCTION SHALL NOT PROCEED UNTIL APPROPRIATE TRENCH SAFETY SYSTEM DETAILS, AS DESIGNED BY A PROFESSIONAL ENGINEER, ARE RETAINED AND COPIES SUBMITTED TO THE CITY OF GEORGETOWN.
4. DEEP EXCAVATIONS: ON EXCAVATIONS EXCEEDING 20 FEET IN DEPTH, TWO OR MORE MEANS OF EGRESS FROM THE EXCAVATION SHALL BE PROVIDED. THE CONTRACTOR SHALL CONSULT WITH A REGISTERED ENGINEER, EXPERIENCED IN TRENCH SAFETY SYSTEMS, REGARDING SPECIFIC MEANS AND METHODS EMPLOYED. CONTRACTOR SHALL PROVIDE A TRENCH SAFETY PLAN SEALED BY A REGISTERED PROFESSIONAL ENGINEER AS REQUIRED BY THE CITY OF GEORGETOWN.

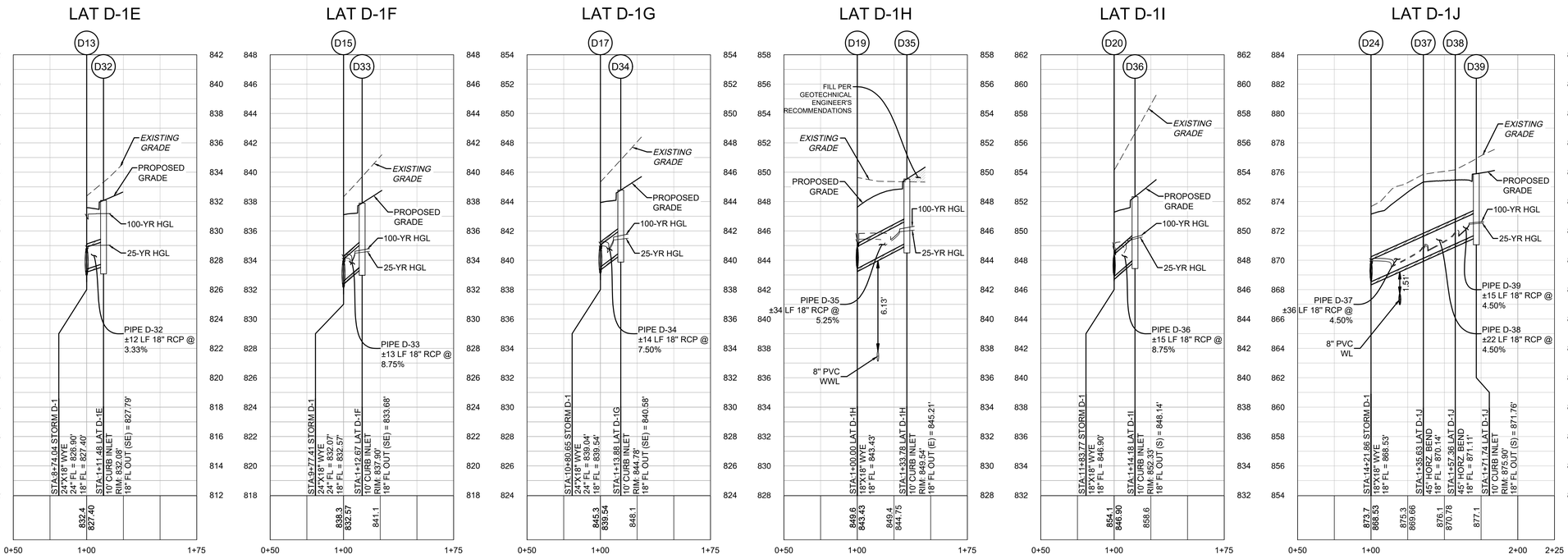

5508 HIGHWAY 290 WEST
SUITE 150
AUSTIN, TX 78735
512.872.6696
HRGREEN.COM

TBPE NO: 16384
TBPLS NO: 10194101

HRGreen®
DEVELOPMENT TX

811 Know what's below. Call before you dig.

NO	REVISION	BY	DATE

STATE OF TEXAS
CHRISTINE N. CAMPBELL
142536
LICENSED PROFESSIONAL ENGINEER

07/05/2025

STORM D-1 LATERALS D-1E - D-1J

PARKSIDE ON THE RIVER SECTIONS 11, 12A & 15A CONSTRUCTION PLANS

GEORGETOWN, WILLIAMSON, TEXAS

DESIGNED BY: CC
DRAWN BY: MM
CHECKED BY: SN
APPROVED BY:

SHEET 101 OF 141

2025-XX-CON

P:\Blake Magee\Parkside Sections 11-15 & HOA Sites\Sec 11, 12A & 15A\05_ACAD\Planset\20250523_SDPP STORM D-1 LATERALS D-1E, D-1J, July 09, 2025, 12:11 PM, mirak.muhammad

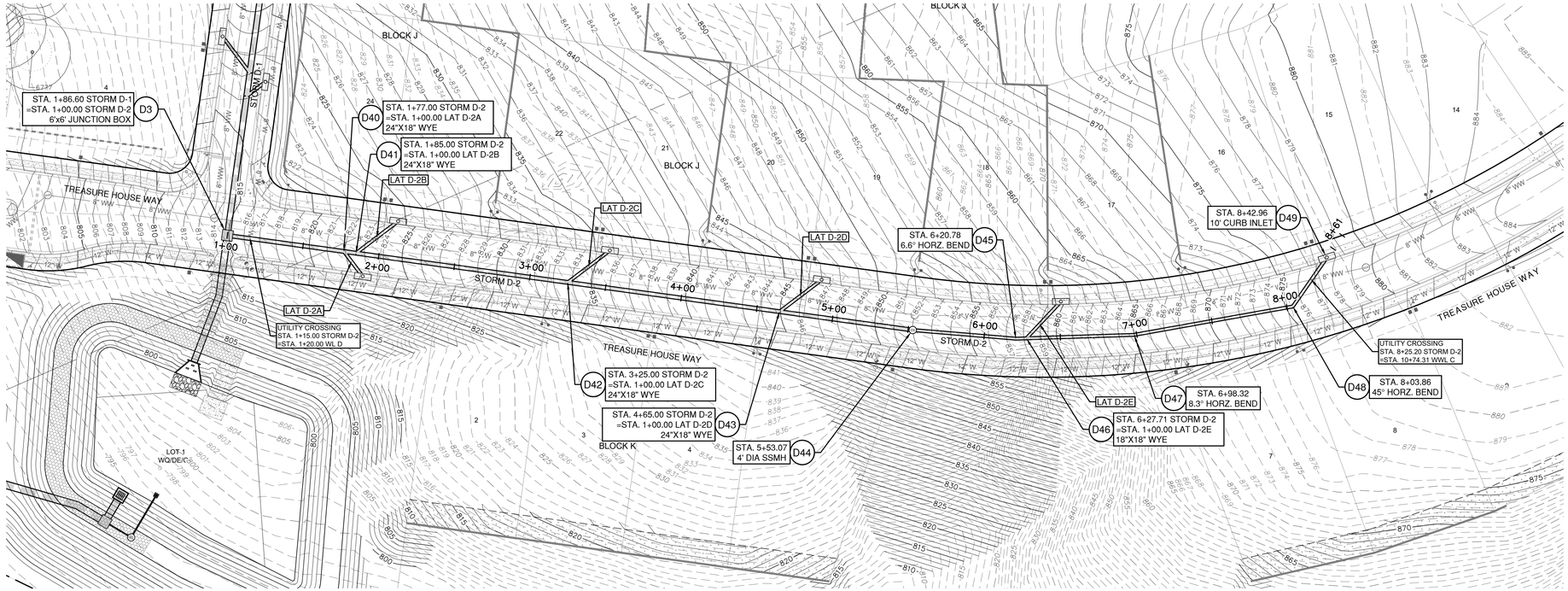

STORM D-2

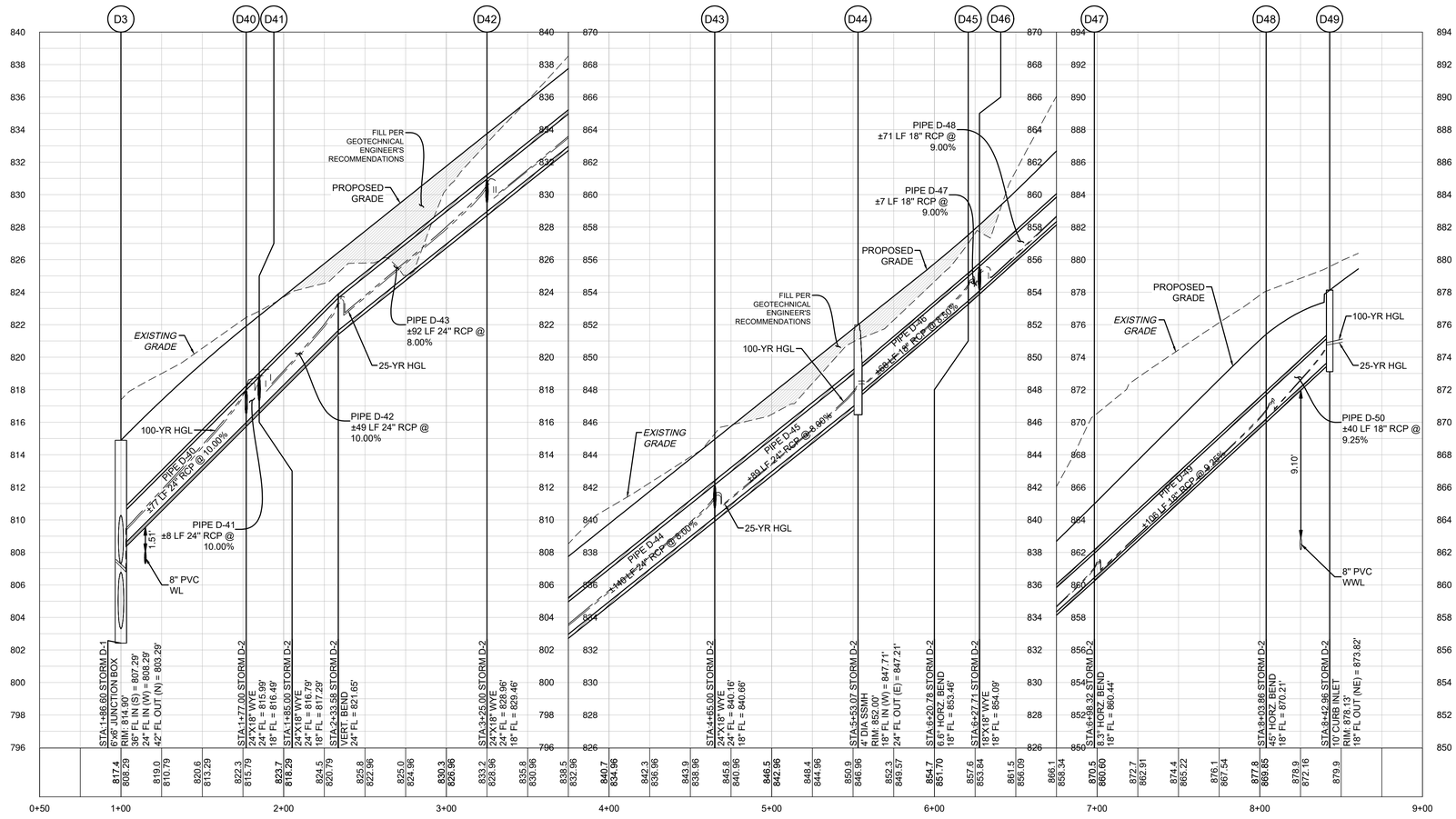

0 40' 80'

SCALE: 1" = 40'

LEGEND

- EXISTING MINOR CONTOUR
- EXISTING MAJOR CONTOUR
- PROPOSED MINOR CONTOUR
- PROPOSED MAJOR CONTOUR
- BOUNDARY
- EASEMENT
- FEMA FLOODWAY PER FIRM# 48491C0460F & LOMR# 21-06-0115P
- FEMA AE — 100YR ATLAS 14 FEMA ZONE AE FLOODPLAIN PER FIRM# 48491C0460F & LOMR# 21-06-0115P
- FEMA A — 100YR FEMA ZONE A FLOODPLAIN PER FIRM MAP# 48491C0460F
- 100YR CLOMR — 100YR CLOMR FLOODPLAIN CASE# 15-06-2071R
- FDFP — 100YR ATLAS 14 FULLY DEVELOPED FLOODPLAIN (STANTEC DRAINAGE STUDY, SHERVIN NOOSHIN, 3/25/19) APPROVED WITH PP# 2019-5-PP
- OHWM — ORDINARY HIGH WATER MARK PER ADAMS ENVIRONMENTAL
- PROPOSED STORM LINE
- FIRE HYDRANT
- WATER VALVE
- STORM SEWER MAHNOLE
- WASTEWATER MANHOLE
- CURB INLET
- TREES TO REMAIN HERITAGE
- TREES TO REMAIN NON HERITAGE

VERT. SCALE: 1" = 4'
HORZ. SCALE: 1" = 40'

4' 2' 0 VERT. SCALE

EXISTING GRADE - CENTERLINE
FINISHED GRADE - CENTERLINE

EXISTING GROUND 1000.1 997.10 PROPOSED FLOWLINE

NOTE:

1. ALL PROPOSED STORM SEWER PIPE LINES SHALL BE CLASS III REINFORCED CONCRETE UNLESS NOTED OTHERWISE.
2. FILL SHALL BE PLACED ACCORDING TO THE GEOTECHNICAL ENGINEERS RECOMMENDATION AND CITY OF GEORGETOWN SPECIFICATIONS.
3. VEGETATE ALL DISTURBED AREAS WITHIN THE ROW AND OPEN SPACE LOT AREAS PER CITY OF GEORGETOWN SPECIFICATIONS.

TRENCH SAFETY NOTES:

1. IN ACCORDANCE WITH THE LAWS OF THE STATE OF TEXAS AND THE U.S. OCCUPATIONAL SAFETY AND HEALTH ADMINISTRATION REGULATIONS, ALL TRENCHES OVER 5 FEET IN DEPTH IN EITHER HARD AND COMPACT OR SOFT AND UNSTABLE SOIL SHALL BE SLOPED, SHORED, SHEETED, BRACED OR OTHERWISE SUPPORTED. FURTHERMORE, ALL TRENCHES LESS THAN 5 FEET IN DEPTH SHALL ALSO BE EFFECTIVELY PROTECTED WHEN HAZARDOUS GROUND MOVEMENT MAY BE EXPECTED. TRENCH SAFETY SYSTEMS TO BE UTILIZED FOR THIS PROJECT WILL BE PROVIDE BY THE CONTRACTOR.
2. IN ACCORDANCE WITH THE U.S. OCCUPATIONAL SAFETY AND HEALTH ADMINISTRATION REGULATIONS,WHEN PERSONS ARE IN TRENCHES 4-FEET DEEP OR MORE, ADEQUATE MEANS OF EXIT, SUCH AS A LADDER OR STEPS, MUST BE PROVIDED AND LOCATED SO AS TO REQUIRE NO MORE THAN 25 FEET OF LATERAL TRAVEL.
3. CONSTRUCTION SHALL NOT PROCEED UNTIL APPROPRIATE TRENCH SAFETY SYSTEM DETAILS, AS DESIGNED BY A PROFESSIONAL ENGINEER, ARE RETAINED AND COPIES SUBMITTED TO THE CITY OF GEORGETOWN.
4. DEEP EXCAVATIONS: ON EXCAVATIONS EXCEEDING 20 FEET IN DEPTH, TWO OR MORE MEANS OF EGRESS FROM THE EXCAVATION SHALL BE PROVIDED. THE CONTRACTOR SHALL CONSULT WITH A REGISTERED ENGINEER, EXPERIENCED IN TRENCH SAFETY SYSTEMS, REGARDING SPECIFIC MEANS AND METHODS EMPLOYED. CONTRACTOR SHALL PROVIDE A TRENCH SAFETY PLAN SEALED BY A REGISTERED PROFESSIONAL ENGINEER AS REQUIRED BY THE CITY OF GEORGETOWN.

Pipe Label	Slope (%)	Q25 (cfs)	V25 (ft/s)	D25 (ft)	Q100 (cfs)	V100 (ft/s)	D100 (ft)
PIPE D-40	10.00%	33.11	15.47	1.90	40.24	16.96	1.95
PIPE D-41	10.00%	25.81	8.48	2.37	32.10	10.24	2.62
PIPE D-42	10.00%	19.77	6.82	2.07	24.61	8.14	2.42
PIPE D-43	8.00%	19.77	6.86	1.93	24.61	8.14	2.07
PIPE D-44	8.00%	13.70	5.45	1.74	17.08	6.12	2.02
PIPE D-45	8.00%	8.68	4.51	1.36	10.82	4.90	1.53
PIPE D-46	8.50%	8.68	10.34	1.14	10.82	11.07	1.26
PIPE D-47	9.00%	8.68	5.56	1.38	10.82	6.47	1.51
PIPE D-48	9.00%	4.70	3.81	1.26	5.84	4.18	1.49
PIPE D-49	9.25%	4.70	4.20	1.00	5.84	4.58	1.13
PIPE D-50	9.25%	4.70	3.98	1.13	5.84	4.36	1.27

NO	BY	DATE

811 Know what's below. Call before you dig.

5508 HIGHWAY 290 WEST
SUITE 150
AUSTIN, TX 78735
512.872.6696
HRGREEN.COM

TBPE NO: 16384
TBPLS NO: 10194101

HRGreen®
DEVELOPMENT TX

STATE OF TEXAS
CHRISTINE N. CAMPBELL
142536
LICENSED PROFESSIONAL ENGINEER

07/05/2025

STORM D-2 PLAN & PROFILE

PARKSIDE ON THE RIVER SECTIONS 11, 12A & 15A CONSTRUCTION PLANS GEORGETOWN, WILLIAMSON, TEXAS

DESIGNED BY: CC
DRAWN BY: MM
CHECKED BY: SN
APPROVED BY:

SHEET 102 OF 141

2025-XX-CON

P:\Blue Mound\Parkside Sections 11-15 & WOA S\Section 11, 12A & 15A\03_ACAD\Plans\sht\A003232 SDP\P STORM D-2.dwg, STORM D-2 PLAN & PROFILE, July 18, 2025, 12:12 PM, malal.muhammad

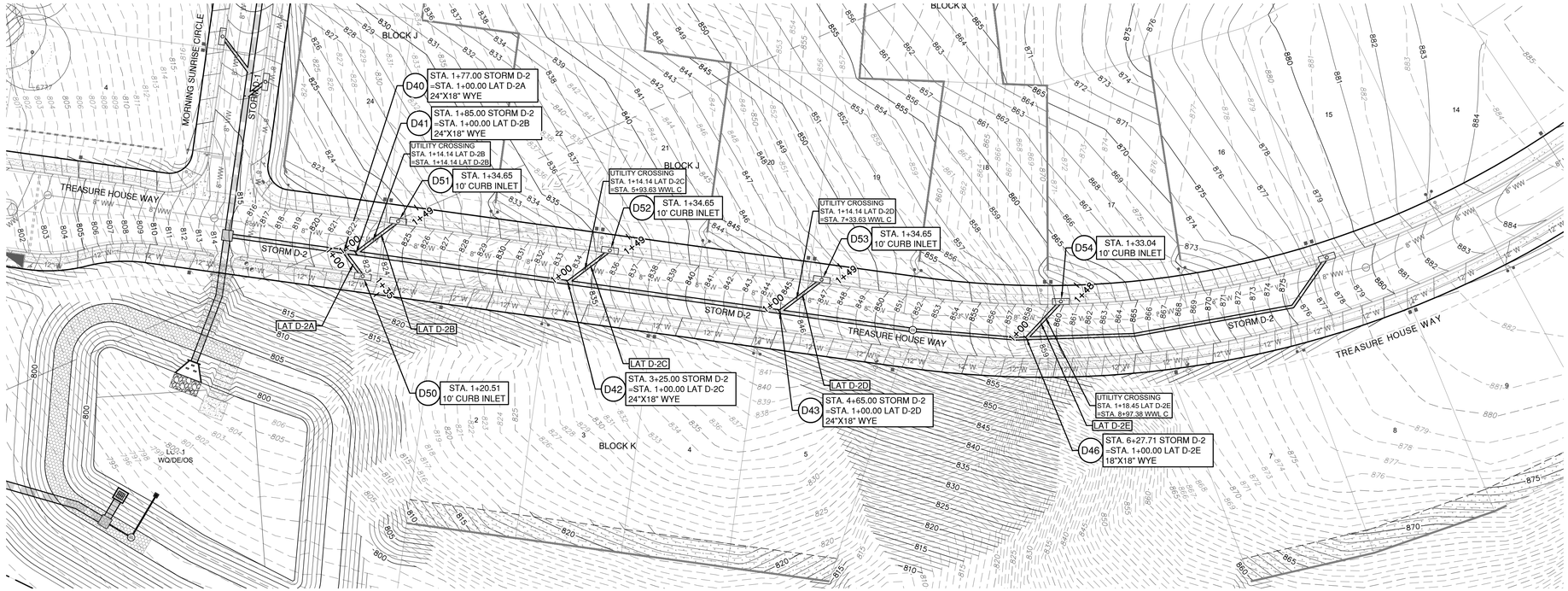

Pipe Label	Slope (%)	Q25 (cfs)	V25 (ft/s)	D25 (ft)	Q100 (cfs)	V100 (ft/s)	D100 (ft)
PIPE D-51	10.00%	7.30	4.84	1.87	8.14	5.22	2.12
PIPE D-52	8.75%	6.04	4.27	1.57	7.49	4.93	1.92
PIPE D-53	6.00%	6.07	4.51	1.24	7.53	4.94	1.52
PIPE D-54	6.00%	5.02	7.63	0.86	6.26	5.01	1.03
PIPE D-55	6.00%	3.98	3.45	1.26	4.98	3.79	1.49

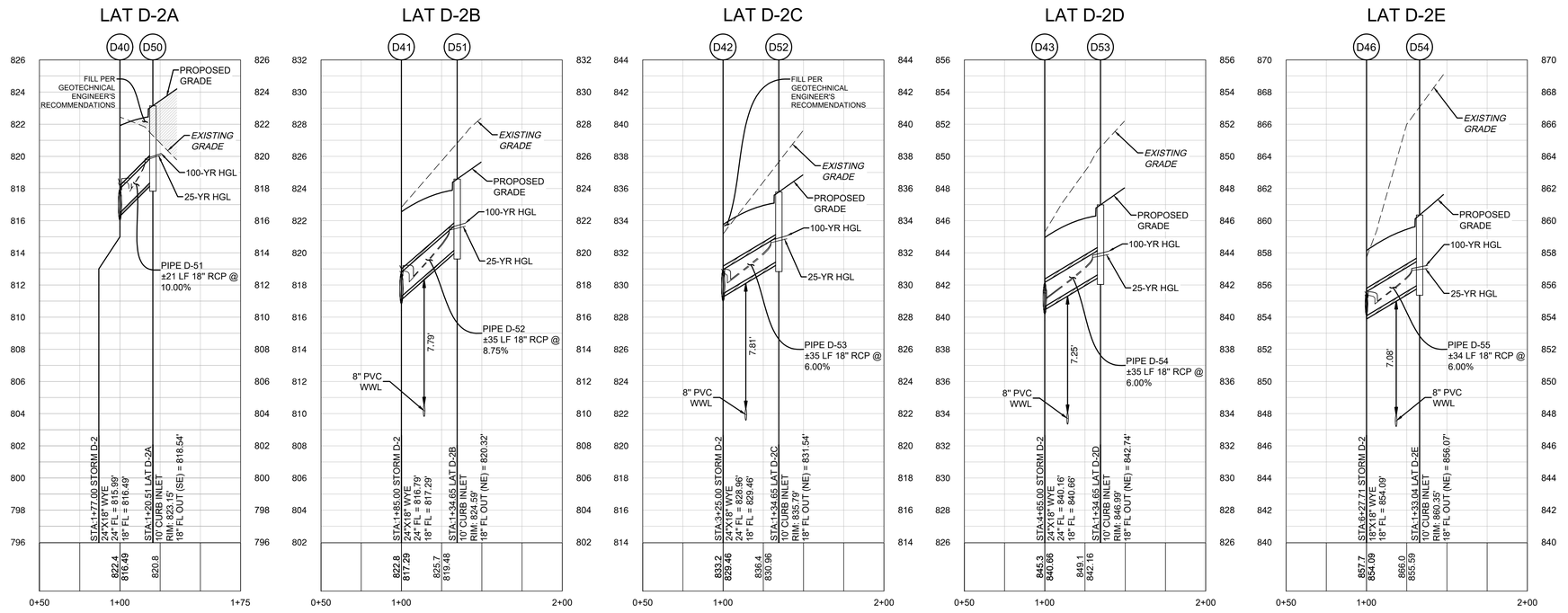

LEGEND

- EXISTING MINOR CONTOUR
- EXISTING MAJOR CONTOUR
- PROPOSED MINOR CONTOUR
- PROPOSED MAJOR CONTOUR
- BOUNDARY
- EASEMENT
- FEMA FLOODWAY PER FIRM# 48491C0460F & LOMR# 21-06-0115P
- FEMA AE — 100YR ATLAS 14 FEMA ZONE AE FLOODPLAIN PER FIRM# 48491C0460F & LOMR# 21-06-0115P
- FEMA A — 100YR FEMA ZONE A FLOODPLAIN PER FIRM MAP# 48491C0460F
- 100YR CLOMR — 100YR CLOMR FLOODPLAIN CASE# 15-06-2071R
- FDFP — 100YR ATLAS 14 FULLY DEVELOPED FLOODPLAIN (STANTEC DRAINAGE STUDY, SHERVIN NOOSHIN, 3/25/19) APPROVED WITH PP# 2019-5-PP
- OHWM — ORDINARY HIGH WATER MARK PER ADAMS ENVIRONMENTAL
- PROPOSED STORM LINE
- FIRE HYDRANT
- WATER VALVE
- STORM SEWER MAHNOLE
- WASTEWATER MANHOLE
- CURB INLET
- TREES TO REMAIN HERITAGE
- TREES TO REMAIN NON HERITAGE

VERT. SCALE: 1" = 4'
HORZ. SCALE: 1" = 40'

EXISTING GRADE - CENTERLINE
FINISHED GRADE - CENTERLINE

4'
2'
0
VERT. SCALE

EXISTING GROUND — 1000.1 / 997.10 — PROPOSED FLOWLINE

NOTE:

1. ALL PROPOSED STORM SEWER PIPE LINES SHALL BE CLASS III REINFORCED CONCRETE UNLESS NOTED OTHERWISE.
2. FILL SHALL BE PLACED ACCORDING TO THE GEOTECHNICAL ENGINEERS RECOMMENDATION AND CITY OF GEORGETOWN SPECIFICATIONS.
3. VEGETATE ALL DISTURBED AREAS WITHIN THE ROW AND OPEN SPACE LOT AREAS PER CITY OF GEORGETOWN SPECIFICATIONS.

TRENCH SAFETY NOTES:

1. IN ACCORDANCE WITH THE LAWS OF THE STATE OF TEXAS AND THE U.S. OCCUPATIONAL SAFETY AND HEALTH ADMINISTRATION REGULATIONS, ALL TRENCHES OVER 5 FEET IN DEPTH IN EITHER HARD AND COMPACT OR SOFT AND UNSTABLE SOIL SHALL BE SLOPED, SHORED, SHEETED, BRACED OR OTHERWISE SUPPORTED. FURTHERMORE, ALL TRENCHES LESS THAN 5 FEET IN DEPTH SHALL ALSO BE EFFECTIVELY PROTECTED WHEN HAZARDOUS GROUND MOVEMENT MAY BE EXPECTED. TRENCH SAFETY SYSTEMS TO BE UTILIZED FOR THIS PROJECT WILL BE PROVIDE BY THE CONTRACTOR.
2. IN ACCORDANCE WITH THE U.S. OCCUPATIONAL SAFETY AND HEALTH ADMINISTRATION REGULATIONS,WHEN PERSONS ARE IN TRENCHES 4-FEET DEEP OR MORE, ADEQUATE MEANS OF EXIT, SUCH AS A LADDER OR STEPS, MUST BE PROVIDED AND LOCATED SO AS TO REQUIRE NO MORE THAN 25 FEET OF LATERAL TRAVEL.
3. CONSTRUCTION SHALL NOT PROCEED UNTIL APPROPRIATE TRENCH SAFETY SYSTEM DETAILS, AS DESIGNED BY A PROFESSIONAL ENGINEER, ARE RETAINED AND COPIES SUBMITTED TO THE CITY OF GEORGETOWN.
4. DEEP EXCAVATIONS: ON EXCAVATIONS EXCEEDING 20 FEET IN DEPTH, TWO OR MORE MEANS OF EGRESS FROM THE EXCAVATION SHALL BE PROVIDED. THE CONTRACTOR SHALL CONSULT WITH A REGISTERED ENGINEER, EXPERIENCED IN TRENCH SAFETY SYSTEMS, REGARDING SPECIFIC MEANS AND METHODS EMPLOYED. CONTRACTOR SHALL PROVIDE A TRENCH SAFETY PLAN SEALED BY A REGISTERED PROFESSIONAL ENGINEER AS REQUIRED BY THE CITY OF GEORGETOWN.

NO	REVISION	BY	DATE

811 Know what's below. Call before you dig.

HRGreen
5508 HIGHWAY 290 WEST
SUITE 150
AUSTIN, TX 78735
512.872.6696
HRGREEN.COM
TBPE NO: 16384
TBPLS NO: 10194101
DEVELOPMENT TX

STATE OF TEXAS
CHRISTINE N. CAMPBELL
142536
LICENSED PROFESSIONAL ENGINEER

07/03/2025

STORM D-2 LATERALS D-2A - D-2E

PARKSIDE ON THE RIVER SECTIONS 11, 12A & 15A CONSTRUCTION PLANS

GEORGETOWN, WILLIAMSON, TEXAS

DESIGNED BY: CC
DRAWN BY: MM
CHECKED BY: SN
APPROVED BY:

SHEET 103 OF 141

2025-XX-CON

P:\Blake Magee\Parkside Sections 11-15 & WCN S\Section 11, 12A & 15A\03_ACAD\Planset\240522 SDPP STORM D-2 LATERALS.dwg, STORM D-2 LATERALS D-2A - D-2E, July 16, 2025, 12:14 PM, maria.muhammad

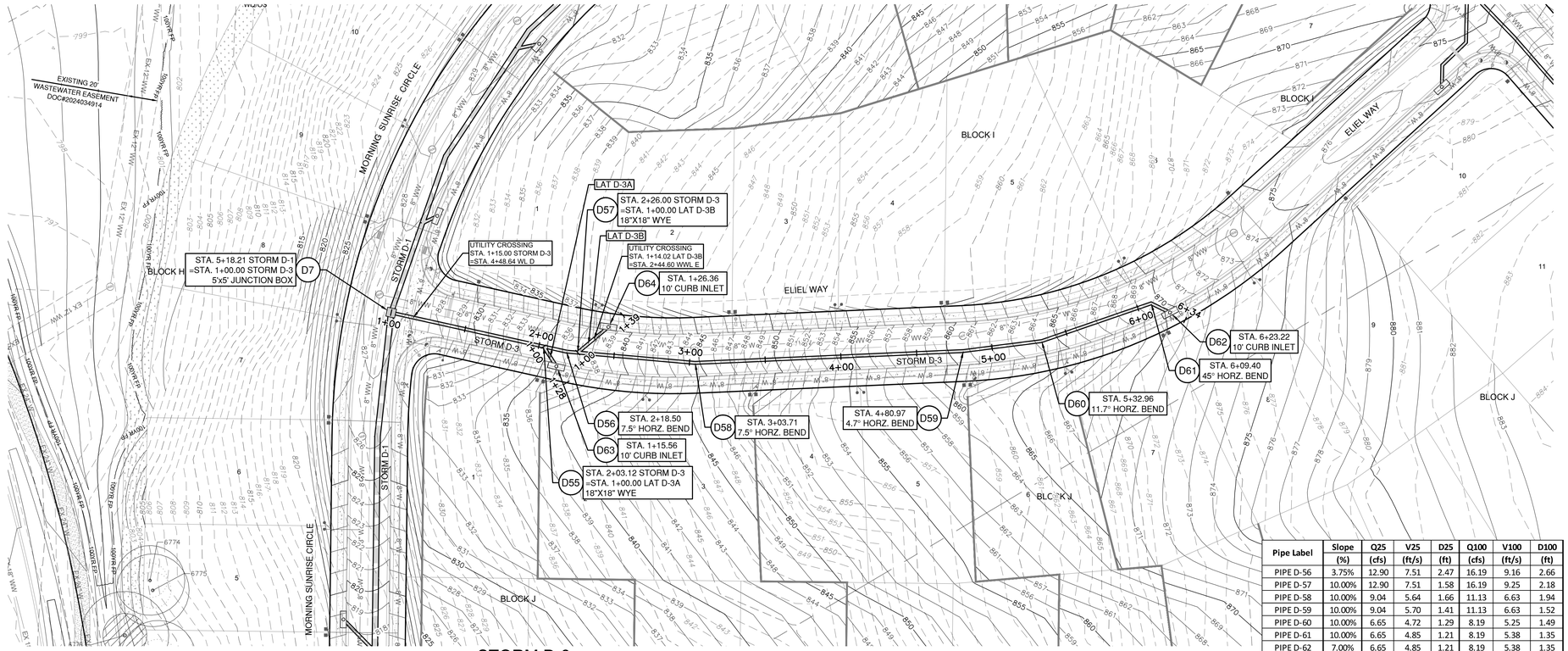

Pipe Label	Slope (%)	Q25 (cfs)	V25 (ft/s)	D25 (ft)	Q100 (cfs)	V100 (ft/s)	D100 (ft)
PIPE D-56	3.75%	12.90	7.51	2.47	16.19	9.16	2.66
PIPE D-57	10.00%	12.90	7.51	1.58	16.19	9.25	2.18
PIPE D-58	10.00%	9.04	5.64	1.66	11.13	6.63	1.94
PIPE D-59	10.00%	9.04	5.70	1.41	11.13	6.63	1.52
PIPE D-60	10.00%	6.65	4.72	1.29	8.19	5.25	1.49
PIPE D-61	10.00%	6.65	4.85	1.21	8.19	5.38	1.35
PIPE D-62	7.00%	6.65	4.85	1.21	8.19	5.38	1.35
PIPE D-63	7.00%	6.65	4.85	1.21	8.19	5.38	1.35
PIPE D-64	7.00%	6.65	4.85	1.21	8.19	5.38	1.35
PIPE D-65	7.00%	6.65	4.64	1.36	8.19	5.24	1.50
PIPE D-66	10.00%	3.86	3.27	1.66	5.06	3.83	1.94
PIPE D-67	8.75%	2.39	2.62	1.29	2.94	2.83	1.49

STORM D-3

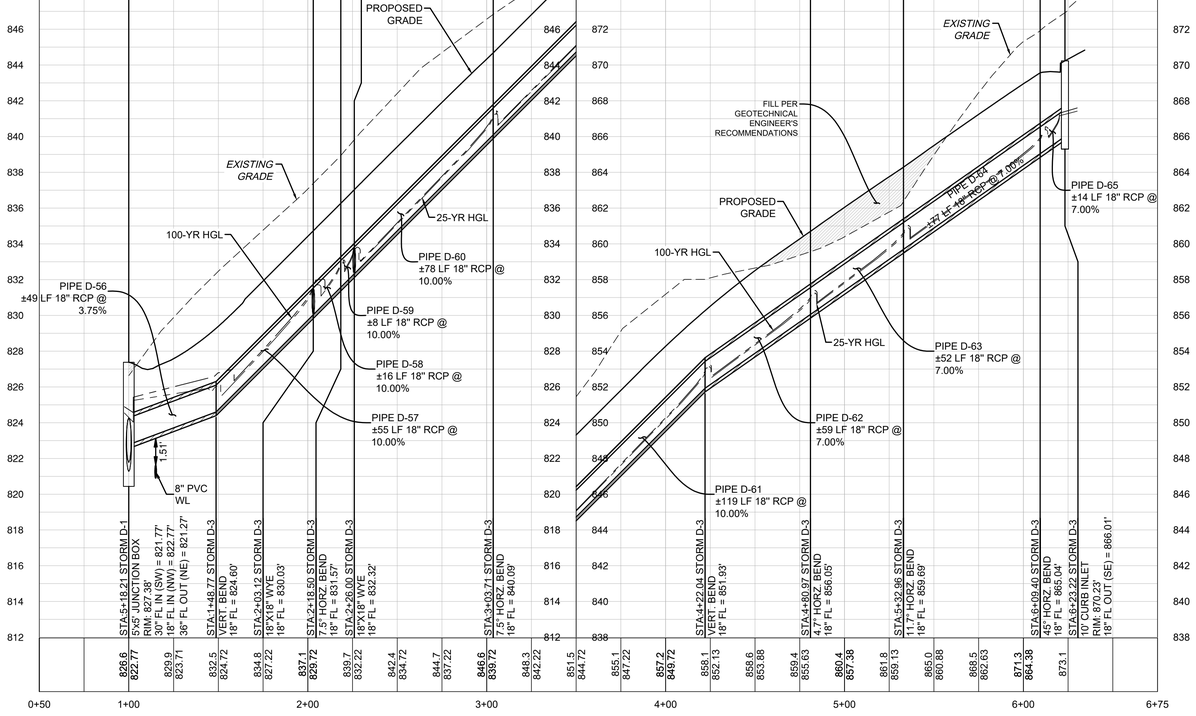

LAT D-3A

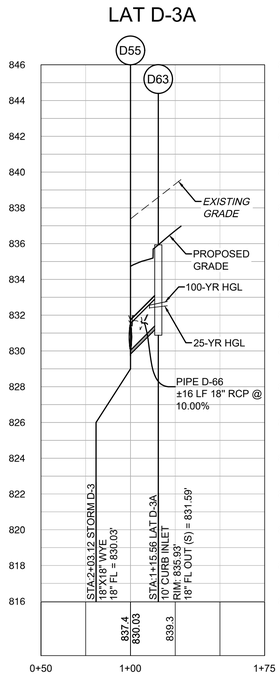

LAT D-3B

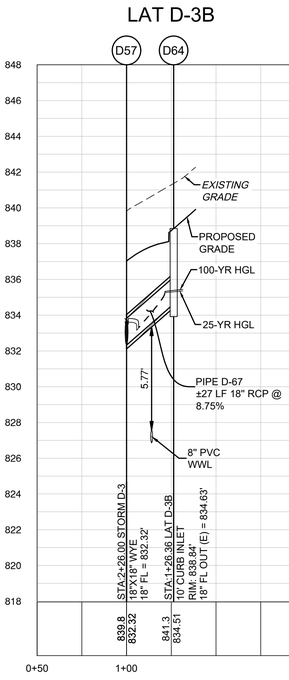

0 40' 80'

SCALE: 1" = 40'

LEGEND

- EXISTING MINOR CONTOUR
- EXISTING MAJOR CONTOUR
- PROPOSED MINOR CONTOUR
- PROPOSED MAJOR CONTOUR
- BOUNDARY
- EASEMENT
- FEMA FLOODWAY PER FIRM# 48491C0460F & LOMR# 21-06-0115P
- FEMA AE — 100YR ATLAS 14 FEMA ZONE AE FLOODPLAIN PER FIRM# 48491C0460F & LOMR# 21-06-0115P
- FEMA A — 100YR FEMA ZONE A FLOODPLAIN PER FIRM MAP# 48491C0460F
- 100YR CLOMR — 100YR CLOMR FLOODPLAIN CASE# 15-06-2071R
- FDFP — 100YR ATLAS 14 FULLY DEVELOPED FLOODPLAIN (STANTEC DRAINAGE STUDY, SHERVIN NOOSHIN, 3/25/19) APPROVED WITH PP# 2019-5-PP
- OHWM — ORDINARY HIGH WATER MARK PER ADAMS ENVIRONMENTAL
- PROPOSED STORM LINE
- FIRE HYDRANT
- WATER VALVE
- STORM SEWER MAHNOLE
- WASTEWATER MANHOLE
- CURB INLET
- TREES TO REMAIN HERITAGE
- TREES TO REMAIN NON HERITAGE

VERT. SCALE: 1" = 4'
HORZ. SCALE: 1" = 40'

4' 2' 0 VERT. SCALE

EXISTING GRADE - CENTERLINE
FINISHED GRADE - CENTERLINE

EXISTING GROUND 1000.1 997.10 PROPOSED FLOWLINE

NOTE:

1. ALL PROPOSED STORM SEWER PIPE LINES SHALL BE CLASS III REINFORCED CONCRETE UNLESS NOTED OTHERWISE.
2. FILL SHALL BE PLACED ACCORDING TO THE GEOTECHNICAL ENGINEERS RECOMMENDATION AND CITY OF GEORGETOWN SPECIFICATIONS.
3. VEGETATE ALL DISTURBED AREAS WITHIN THE ROW AND OPEN SPACE LOT AREAS PER CITY OF GEORGETOWN SPECIFICATIONS.

TRENCH SAFETY NOTES:

1. IN ACCORDANCE WITH THE LAWS OF THE STATE OF TEXAS AND THE U.S. OCCUPATIONAL SAFETY AND HEALTH ADMINISTRATION REGULATIONS, ALL TRENCHES OVER 5 FEET IN DEPTH IN EITHER HARD AND COMPACT OR SOFT AND UNSTABLE SOIL SHALL BE SLOPED, SHORED, SHEETED, BRACED OR OTHERWISE SUPPORTED. FURTHERMORE, ALL TRENCHES LESS THAN 5 FEET IN DEPTH SHALL ALSO BE EFFECTIVELY PROTECTED WHEN HAZARDOUS GROUND MOVEMENT MAY BE EXPECTED. TRENCH SAFETY SYSTEMS TO BE UTILIZED FOR THIS PROJECT WILL BE PROVIDE BY THE CONTRACTOR.
2. IN ACCORDANCE WITH THE U.S. OCCUPATIONAL SAFETY AND HEALTH ADMINISTRATION REGULATIONS,WHEN PERSONS ARE IN TRENCHES 4-FEET DEEP OR MORE, ADEQUATE MEANS OF EXIT, SUCH AS A LADDER OR STEPS, MUST BE PROVIDED AND LOCATED SO AS TO REQUIRE NO MORE THAN 25 FEET OF LATERAL TRAVEL.
3. CONSTRUCTION SHALL NOT PROCEED UNTIL APPROPRIATE TRENCH SAFETY SYSTEM DETAILS, AS DESIGNED BY A PROFESSIONAL ENGINEER, ARE RETAINED AND COPIES SUBMITTED TO THE CITY OF GEORGETOWN.
4. DEEP EXCAVATIONS: ON EXCAVATIONS EXCEEDING 20 FEET IN DEPTH, TWO OR MORE MEANS OF EGRESS FROM THE EXCAVATION SHALL BE PROVIDED. THE CONTRACTOR SHALL CONSULT WITH A REGISTERED ENGINEER, EXPERIENCED IN TRENCH SAFETY SYSTEMS, REGARDING SPECIFIC MEANS AND METHODS EMPLOYED. CONTRACTOR SHALL PROVIDE A TRENCH SAFETY PLAN SEALED BY A REGISTERED PROFESSIONAL ENGINEER AS REQUIRED BY THE CITY OF GEORGETOWN.

NO	REVISION	BY	DATE

811 Know what's below. Call before you dig.

HRGreen DEVELOPMENT TX
5508 HIGHWAY 290 WEST
SUITE 150
AUSTIN, TX 78735
512.872.6696
HRGREEN.COM
TBPE NO: 16384
TBPLS NO: 10194101

STATE OF TEXAS
CHRISTINE N. CAMPBELL
142536
LICENSED PROFESSIONAL ENGINEER
07/03/2025

STORM D-3 & LATERALS PLAN & PROFILE

PARKSIDE ON THE RIVER SECTIONS 11, 12A & 15A CONSTRUCTION PLANS

GEORGETOWN, WILLIAMSON, TEXAS

DESIGNED BY: CC
DRAWN BY: MM
CHECKED BY: SN
APPROVED BY:

SHEET 104 OF 141

2025-XX-CON

P:\Blake Magee\Parkside Sections 11-15 & WON ES\Section 11, 12A & 15A\03_ACAD\Planset\20250523 SDP\P STORM D-3.dwg, STORM D-3 & LATERALS PLAN & PROFILE, July 18, 2025, 12:15 PM, mekal.muhammad

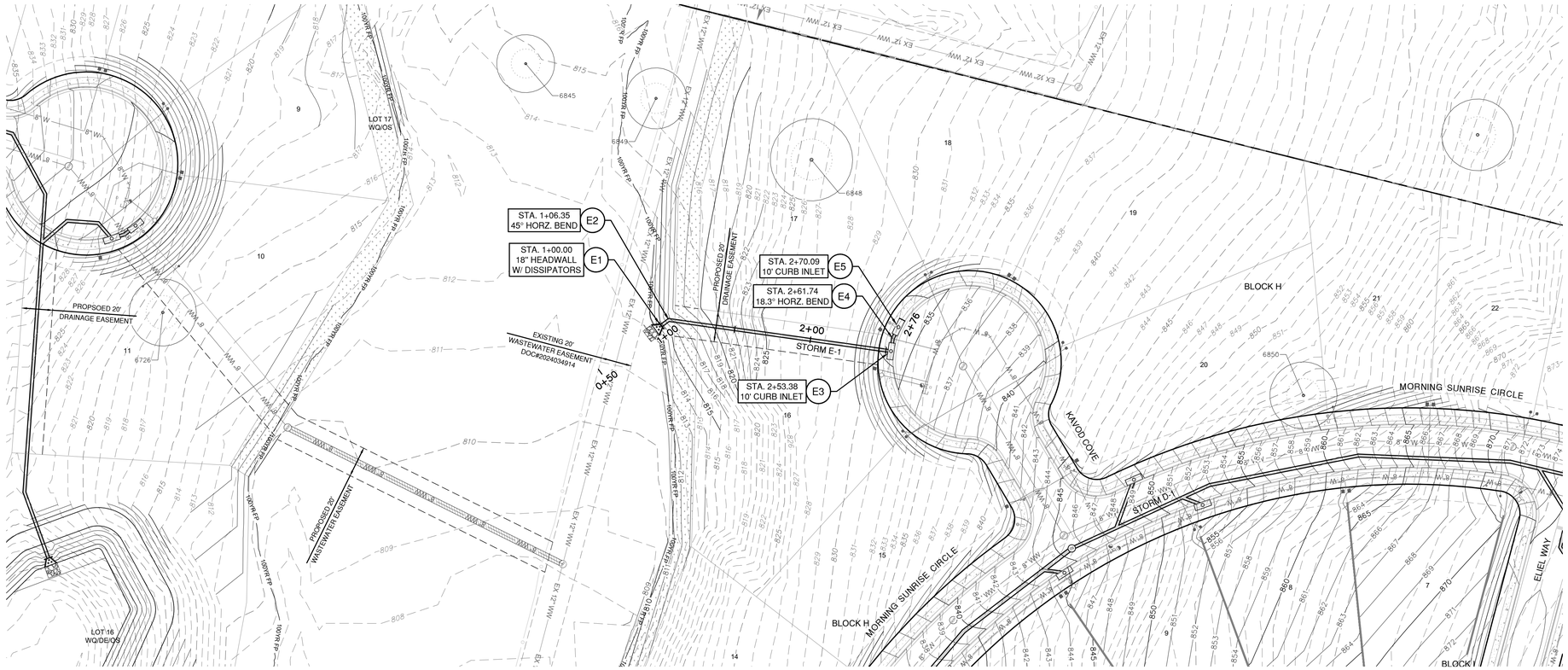

0 40' 80'

SCALE: 1" = 40'

LEGEND

- EXISTING MINOR CONTOUR
- EXISTING MAJOR CONTOUR
- PROPOSED MINOR CONTOUR
- PROPOSED MAJOR CONTOUR
- BOUNDARY
- EASEMENT
- FEMA FLOODWAY PER FIRM# 48491C0460F & LOMR# 21-06-0115P
- FEMA AE — 100YR ATLAS 14 FEMA ZONE AE FLOODPLAIN PER FIRM# 48491C0460F & LOMR# 21-06-0115P
- FEMA A — 100YR FEMA ZONE A FLOODPLAIN PER FIRM MAP# 48491C0460F
- 100YR CLOMR — 100YR CLOMR FLOODPLAIN CASE# 15-06-2071R
- FDFP — 100YR ATLAS 14 FULLY DEVELOPED FLOODPLAIN (STANTEC DRAINAGE STUDY, SHERVIN NOOSHIN, 3/25/19) APPROVED WITH PP# 2019-5-PP
- OHWM — ORDINARY HIGH WATER MARK PER ADAMS ENVIRONMENTAL
- PROPOSED STORM LINE
- FIRE HYDRANT
- WATER VALVE
- STORM SEWER MAHNOLE
- WASTEWATER MANHOLE
- CURB INLET
- TREES TO REMAIN HERITAGE
- TREES TO REMAIN NON HERITAGE

VERT. SCALE: 1" = 4'
HORZ. SCALE: 1" = 40'

EXISTING GRADE - CENTERLINE
FINISHED GRADE - CENTERLINE

4' 2' 0 VERT. SCALE

EXISTING GROUND 1000.1 / 997.10 PROPOSED FLOWLINE

Pipe Label	Slope	Q25	V25	D25	Q100	V100	D100
	(%)	(cfs)	(ft/s)	(ft)	(cfs)	(ft/s)	(ft)
PIPE E-1	10.00%	3.84	6.36	0.75	4.73	6.66	0.84
PIPE E-2	10.00%	3.84	3.70	1.01	4.73	3.99	1.13
PIPE E-3	10.00%	2.72	6.19	0.63	3.36	6.46	0.70
PIPE E-4	10.00%	2.72	3.39	0.79	3.36	3.63	0.89

STORM E-1

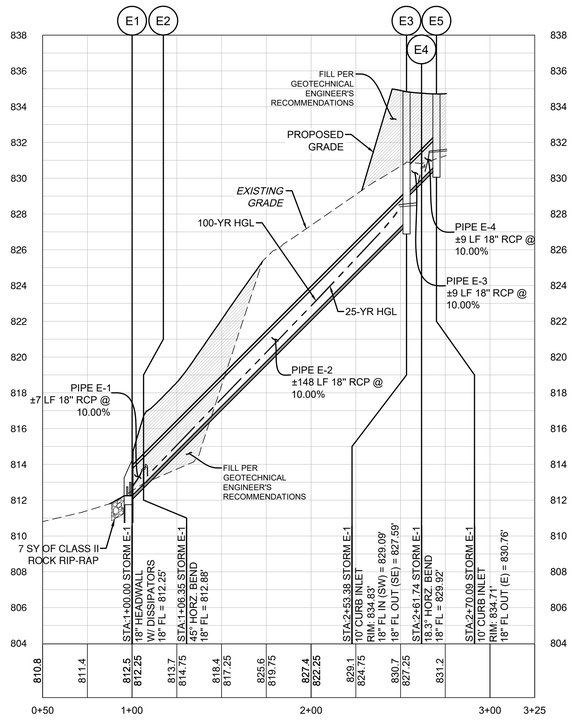

NOTE:

1. ALL PROPOSED STORM SEWER PIPE LINES SHALL BE CLASS III REINFORCED CONCRETE UNLESS NOTED OTHERWISE.
2. FILL SHALL BE PLACED ACCORDING TO THE GEOTECHNICAL ENGINEERS RECOMMENDATION AND CITY OF GEORGETOWN SPECIFICATIONS.
3. VEGETATE ALL DISTURBED AREAS WITHIN THE ROW AND OPEN SPACE LOT AREAS PER CITY OF GEORGETOWN SPECIFICATIONS.

TRENCH SAFETY NOTES:

1. IN ACCORDANCE WITH THE LAWS OF THE STATE OF TEXAS AND THE U.S. OCCUPATIONAL SAFETY AND HEALTH ADMINISTRATION REGULATIONS, ALL TRENCHES OVER 5 FEET IN DEPTH IN EITHER HARD AND COMPACT OR SOFT AND UNSTABLE SOIL SHALL BE SLOPED, SHORED, SHEETED, BRACED OR OTHERWISE SUPPORTED. FURTHERMORE, ALL TRENCHES LESS THAN 5 FEET IN DEPTH SHALL ALSO BE EFFECTIVELY PROTECTED WHEN HAZARDOUS GROUND MOVEMENT MAY BE EXPECTED. TRENCH SAFETY SYSTEMS TO BE UTILIZED FOR THIS PROJECT WILL BE PROVIDE BY THE CONTRACTOR.
2. IN ACCORDANCE WITH THE U.S. OCCUPATIONAL SAFETY AND HEALTH ADMINISTRATION REGULATIONS,WHEN PERSONS ARE IN TRENCHES 4-FEET DEEP OR MORE, ADEQUATE MEANS OF EXIT, SUCH AS A LADDER OR STEPS, MUST BE PROVIDED AND LOCATED SO AS TO REQUIRE NO MORE THAN 25 FEET OF LATERAL TRAVEL.
3. CONSTRUCTION SHALL NOT PROCEED UNTIL APPROPRIATE TRENCH SAFETY SYSTEM DETAILS, AS DESIGNED BY A PROFESSIONAL ENGINEER, ARE RETAINED AND COPIES SUBMITTED TO THE CITY OF GEORGETOWN.
4. DEEP EXCAVATIONS: ON EXCAVATIONS EXCEEDING 20 FEET IN DEPTH, TWO OR MORE MEANS OF EGRESS FROM THE EXCAVATION SHALL BE PROVIDED. THE CONTRACTOR SHALL CONSULT WITH A REGISTERED ENGINEER, EXPERIENCED IN TRENCH SAFETY SYSTEMS, REGARDING SPECIFIC MEANS AND METHODS EMPLOYED. CONTRACTOR SHALL PROVIDE A TRENCH SAFETY PLAN SEALED BY A REGISTERED PROFESSIONAL ENGINEER AS REQUIRED BY THE CITY OF GEORGETOWN.

NO	REVISION	BY	DATE

811 Know what's below. Call before you dig.

HRGreen
DEVELOPMENT TX
5508 HIGHWAY 290 WEST
SUITE 150
AUSTIN, TX 78735
512.872.6696
HRGREEN.COM
TBPE NO: 16384
TBPLS NO: 10194101

STATE OF TEXAS
CHRISTINE N. CAMPBELL
142536
LICENSED PROFESSIONAL ENGINEER
07/15/2025

STORM E-1 PLAN & PROFILE

PARKSIDE ON THE RIVER
SECTIONS 11, 12A & 15A
CONSTRUCTION PLANS
GEORGETOWN, WILLIAMSON, TEXAS

DESIGNED BY: CC
DRAWN BY: MM
CHECKED BY: SN
APPROVED BY:

SHEET 105 OF 141

2025-XX-CON

P:\Blake Magee\Parkside Sections 11-15 & WOA 5\Sections 11, 12A & 15A\03_ACAD\Plans\3d\08323 SDP\ STORM E-1 PLAN & PROFILE. July 18, 2025, 12:16 PM, rnabir.muhammad

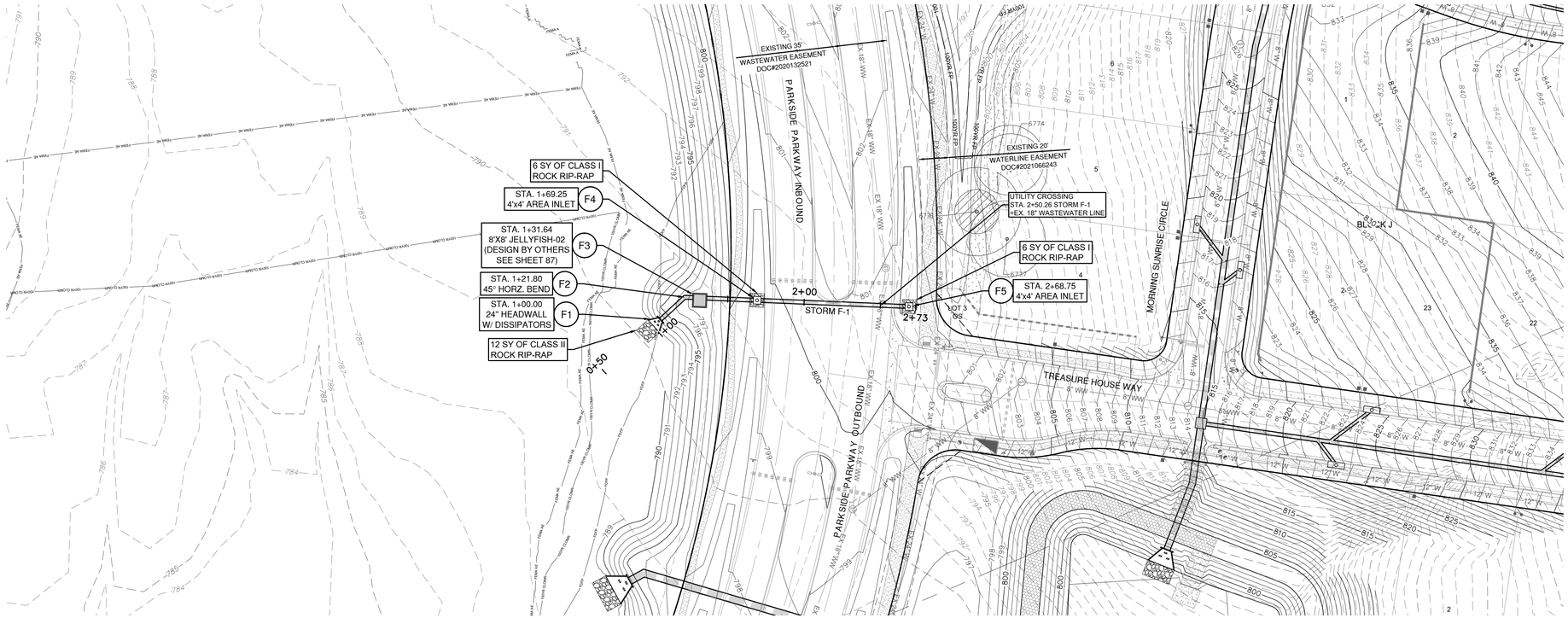

STORM F-1

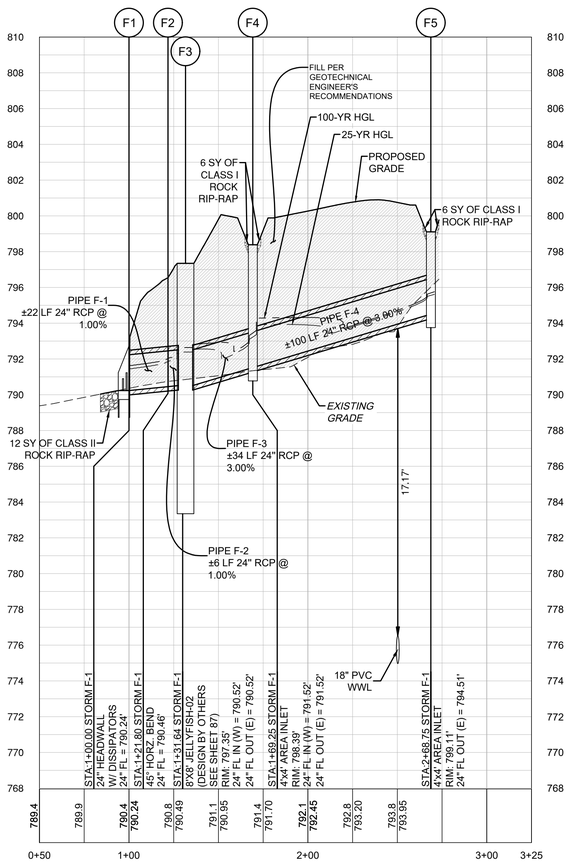

Pipe Label	Slope	Q25	V25	D25	Q100	V100	D100
	(%)	(cfs)	(ft/s)	(ft)	(cfs)	(ft/s)	(ft)
STORM F-1	1.00%	14.27	6.76	1.36	17.83	7.33	1.52
STORM F-2	1.00%	14.27	4.75	1.85	17.83	5.68	2.05
STORM F-3	3.00%	14.27	5.41	2.04	17.83	6.32	2.33
STORM F-4	3.00%	6.78	3.47	2.40	8.35	3.89	2.76

0 40' 80'

SCALE: 1" = 40'

LEGEND

- EXISTING MINOR CONTOUR
- EXISTING MAJOR CONTOUR
- PROPOSED MINOR CONTOUR
- PROPOSED MAJOR CONTOUR
- BOUNDARY
- EASEMENT
- FEMA FLOODWAY PER FIRM# 48491C0460F & LOMR# 21-06-0115P
- FEMA AE — 100YR ATLAS 14 FEMA ZONE AE FLOODPLAIN PER FIRM# 48491C0460F & LOMR# 21-06-0115P
- FEMA A — 100YR FEMA ZONE A FLOODPLAIN PER FIRM MAP# 48491C0460F
- 100YR CLOMR — 100YR CLOMR FLOODPLAIN CASE# 15-06-2071R
- FDFP — 100YR ATLAS 14 FULLY DEVELOPED FLOODPLAIN (STANTEC DRAINAGE STUDY, SHERVIN NOOSHIN, 3/25/19) APPROVED WITH PP# 2019-5-PP
- OHWM — ORDINARY HIGH WATER MARK PER ADAMS ENVIRONMENTAL
- SD — PROPOSED STORM LINE
- FIRE HYDRANT
- WATER VALVE
- SD — STORM SEWER MAHNOLE
- WW — WASTEWATER MANHOLE
- CURB INLET
- TREES TO REMAIN HERITAGE
- TREES TO REMAIN NON HERITAGE

VERT. SCALE: 1" = 4'
HORZ. SCALE: 1" = 40'

4' 2' 0 VERT. SCALE

EXISTING GRADE - CENTERLINE
FINISHED GRADE - CENTERLINE

EXISTING GROUND 1000.1 997.10 PROPOSED FLOWLINE

NOTE:

1. ALL PROPOSED STORM SEWER PIPE LINES SHALL BE CLASS III REINFORCED CONCRETE UNLESS NOTED OTHERWISE.
2. FILL SHALL BE PLACED ACCORDING TO THE GEOTECHNICAL ENGINEERS RECOMMENDATION AND CITY OF GEORGETOWN SPECIFICATIONS.
3. VEGETATE ALL DISTURBED AREAS WITHIN THE ROW AND OPEN SPACE LOT AREAS PER CITY OF GEORGETOWN SPECIFICATIONS.

TRENCH SAFETY NOTES:

1. IN ACCORDANCE WITH THE LAWS OF THE STATE OF TEXAS AND THE U.S. OCCUPATIONAL SAFETY AND HEALTH ADMINISTRATION REGULATIONS, ALL TRENCHES OVER 5 FEET IN DEPTH IN EITHER HARD AND COMPACT OR SOFT AND UNSTABLE SOIL SHALL BE SLOPED, SHORED, SHEETED, BRACED OR OTHERWISE SUPPORTED. FURTHERMORE, ALL TRENCHES LESS THAN 5 FEET IN DEPTH SHALL ALSO BE EFFECTIVELY PROTECTED WHEN HAZARDOUS GROUND MOVEMENT MAY BE EXPECTED. TRENCH SAFETY SYSTEMS TO BE UTILIZED FOR THIS PROJECT WILL BE PROVIDE BY THE CONTRACTOR.
2. IN ACCORDANCE WITH THE U.S. OCCUPATIONAL SAFETY AND HEALTH ADMINISTRATION REGULATIONS,WHEN PERSONS ARE IN TRENCHES 4-FEET DEEP OR MORE, ADEQUATE MEANS OF EXIT, SUCH AS A LADDER OR STEPS, MUST BE PROVIDED AND LOCATED SO AS TO REQUIRE NO MORE THAN 25 FEET OF LATERAL TRAVEL.
3. CONSTRUCTION SHALL NOT PROCEED UNTIL APPROPRIATE TRENCH SAFETY SYSTEM DETAILS, AS DESIGNED BY A PROFESSIONAL ENGINEER, ARE RETAINED AND COPIES SUBMITTED TO THE CITY OF GEORGETOWN.
4. DEEP EXCAVATIONS: ON EXCAVATIONS EXCEEDING 20 FEET IN DEPTH, TWO OR MORE MEANS OF EGRESS FROM THE EXCAVATION SHALL BE PROVIDED. THE CONTRACTOR SHALL CONSULT WITH A REGISTERED ENGINEER, EXPERIENCED IN TRENCH SAFETY SYSTEMS, REGARDING SPECIFIC MEANS AND METHODS EMPLOYED. CONTRACTOR SHALL PROVIDE A TRENCH SAFETY PLAN SEALED BY A REGISTERED PROFESSIONAL ENGINEER AS REQUIRED BY THE CITY OF GEORGETOWN.

NO	REVISION	BY	DATE

811 Know what's below. Call before you dig.

5508 HIGHWAY 290 WEST
SUITE 150
AUSTIN, TX 78735
512.872.6696
HRGREEN.COM

TBPE NO: 16384
TBPLS NO: 10194101

HRGreen® DEVELOPMENT TX

STATE OF TEXAS
CHRISTINE N. CAMPBELL
142536
LICENSED PROFESSIONAL ENGINEER

07/05/2023

STORM F-1 PLAN & PROFILE

PARKSIDE ON THE RIVER SECTIONS 11, 12A & 15A CONSTRUCTION PLANS GEORGETOWN, WILLIAMSON, TEXAS

DESIGNED BY: CC
DRAWN BY: MM
CHECKED BY: SN
APPROVED BY:

SHEET 106 OF 141

2025-XX-CON

P:\Blake Magee\Parkside Sections 11-15 & WCN E\Section 11, 12A & 14A\03_ACAD\Planset\240302 SDP\STORM F-1 PLAN & PROFILE. July 18, 2025, 12:17 PM, mdaci.muhammad

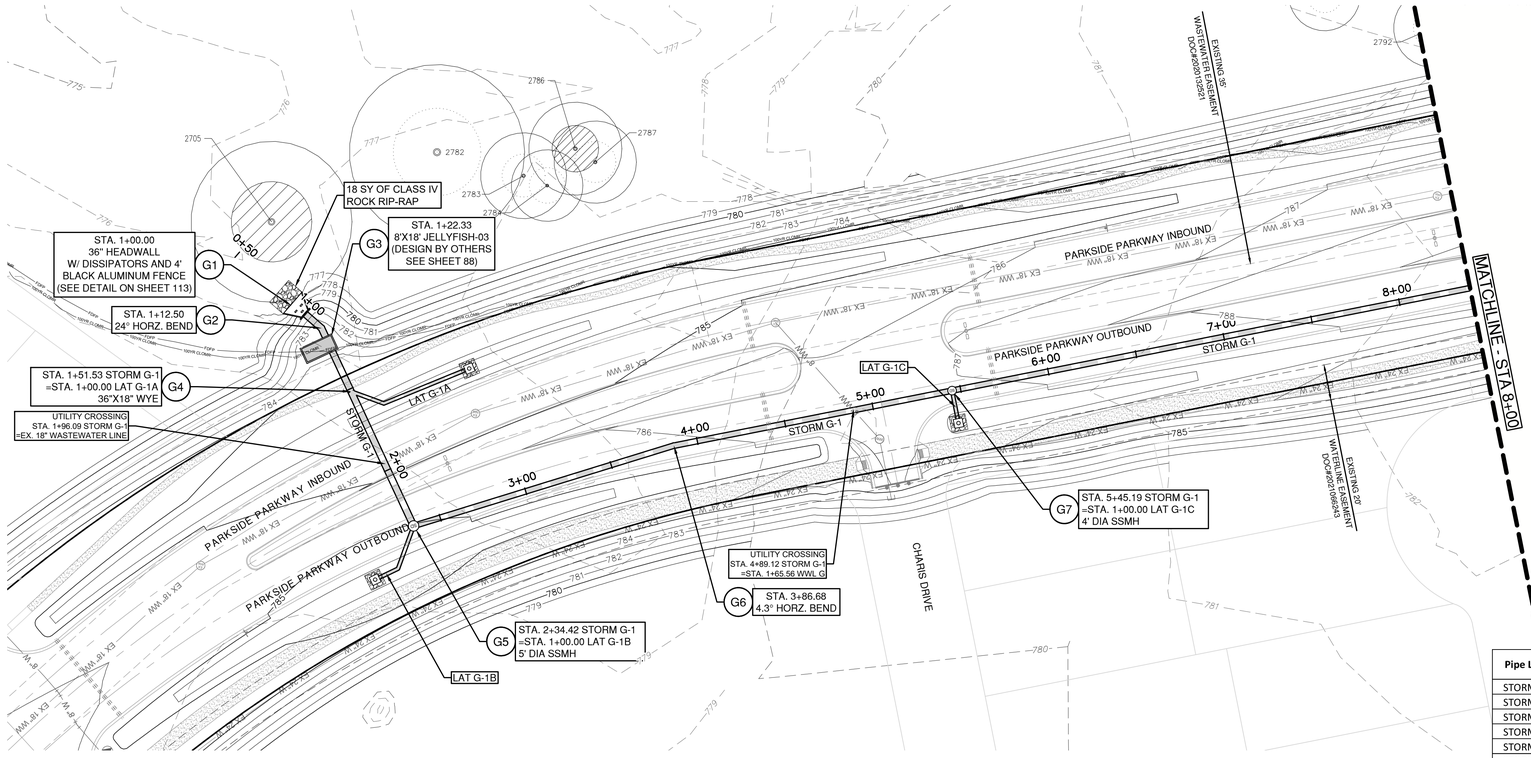

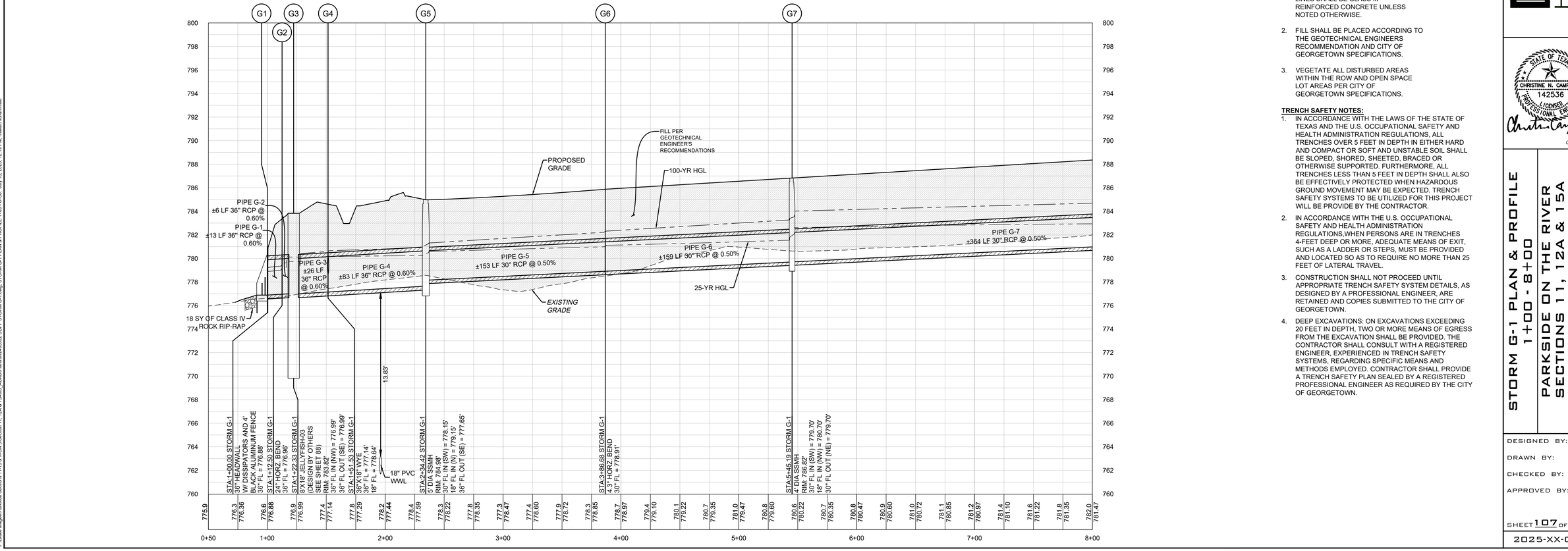

Pipe Label	Slope	Q25	V25	D25	Q100	V100	D100
	(%)	(cfs)	(ft/s)	(ft)	(cfs)	(ft/s)	(ft)
STORM G-1	0.60%	40.12	7.87	2.06	50.85	8.56	2.38
STORM G-2	0.60%	40.12	6.09	2.65	50.85	7.22	2.96
STORM G-3	0.60%	40.12	5.69	3.03	50.85	7.19	3.44
STORM G-4	0.60%	29.94	4.42	3.00	37.97	5.37	3.50
STORM G-5	0.50%	24.88	5.41	2.43	31.71	6.46	3.31
STORM G-6	0.50%	24.88	5.93	2.20	31.71	6.46	3.56
STORM G-7	0.50%	16.28	4.37	2.91	21.11	4.30	4.32

0 40' 80'

SCALE: 1" = 40'

LEGEND

- EXISTING MINOR CONTOUR
- EXISTING MAJOR CONTOUR
- PROPOSED MINOR CONTOUR
- PROPOSED MAJOR CONTOUR
- BOUNDARY
- EASEMENT
- FEMA FLOODWAY PER FIRM# 48491C0460F & LOMR# 21-06-0115P
- FEMA AE — 100YR ATLAS 14 FEMA ZONE AE FLOODPLAIN PER FIRM# 48491C0460F & LOMR# 21-06-0115P
- FEMA A — 100YR FEMA ZONE A FLOODPLAIN PER FIRM MAP# 48491C0460F
- 100YR CLOMR — 100YR CLOMR FLOODPLAIN CASE# 15-06-2071R
- FDFP — 100YR ATLAS 14 FULLY DEVELOPED FLOODPLAIN (STANTEC DRAINAGE STUDY, SHERVIN NOOSHIN, 3/25/19) APPROVED WITH PP# 2019-5-PP
- OHWM — ORDINARY HIGH WATER MARK PER ADAMS ENVIRONMENTAL
- PROPOSED STORM LINE
- FIRE HYDRANT
- WATER VALVE
- STORM SEWER MAHNOLE
- WASTEWATER MANHOLE
- CURB INLET
- TREES TO REMAIN HERITAGE
- TREES TO REMAIN NON HERITAGE

VERT. SCALE: 1" = 4'
HORZ. SCALE: 1" = 40'

EXISTING GRADE - CENTERLINE
FINISHED GRADE - CENTERLINE

4' 2' 0 VERT. SCALE

EXISTING GROUND 1000.1 997.10 PROPOSED FLOWLINE

NOTE:

1. ALL PROPOSED STORM SEWER PIPE LINES SHALL BE CLASS III REINFORCED CONCRETE UNLESS NOTED OTHERWISE.
2. FILL SHALL BE PLACED ACCORDING TO THE GEOTECHNICAL ENGINEERS RECOMMENDATION AND CITY OF GEORGETOWN SPECIFICATIONS.
3. VEGETATE ALL DISTURBED AREAS WITHIN THE ROW AND OPEN SPACE LOT AREAS PER CITY OF GEORGETOWN SPECIFICATIONS.

TRENCH SAFETY NOTES:

1. IN ACCORDANCE WITH THE LAWS OF THE STATE OF TEXAS AND THE U.S. OCCUPATIONAL SAFETY AND HEALTH ADMINISTRATION REGULATIONS, ALL TRENCHES OVER 5 FEET IN DEPTH IN EITHER HARD AND COMPACT OR SOFT AND UNSTABLE SOIL SHALL BE SLOPED, SHORED, SHEETED, BRACED OR OTHERWISE SUPPORTED. FURTHERMORE, ALL TRENCHES LESS THAN 5 FEET IN DEPTH SHALL ALSO BE EFFECTIVELY PROTECTED WHEN HAZARDOUS GROUND MOVEMENT MAY BE EXPECTED. TRENCH SAFETY SYSTEMS TO BE UTILIZED FOR THIS PROJECT WILL BE PROVIDE BY THE CONTRACTOR.
2. IN ACCORDANCE WITH THE U.S. OCCUPATIONAL SAFETY AND HEALTH ADMINISTRATION REGULATIONS,WHEN PERSONS ARE IN TRENCHES 4-FEET DEEP OR MORE, ADEQUATE MEANS OF EXIT, SUCH AS A LADDER OR STEPS, MUST BE PROVIDED AND LOCATED SO AS TO REQUIRE NO MORE THAN 25 FEET OF LATERAL TRAVEL.
3. CONSTRUCTION SHALL NOT PROCEED UNTIL APPROPRIATE TRENCH SAFETY SYSTEM DETAILS, AS DESIGNED BY A PROFESSIONAL ENGINEER, ARE RETAINED AND COPIES SUBMITTED TO THE CITY OF GEORGETOWN.
4. DEEP EXCAVATIONS: ON EXCAVATIONS EXCEEDING 20 FEET IN DEPTH, TWO OR MORE MEANS OF EGRESS FROM THE EXCAVATION SHALL BE PROVIDED. THE CONTRACTOR SHALL CONSULT WITH A REGISTERED ENGINEER, EXPERIENCED IN TRENCH SAFETY SYSTEMS, REGARDING SPECIFIC MEANS AND METHODS EMPLOYED. CONTRACTOR SHALL PROVIDE A TRENCH SAFETY PLAN SEALED BY A REGISTERED PROFESSIONAL ENGINEER AS REQUIRED BY THE CITY OF GEORGETOWN.

NO	REVISION	BY	DATE

811 Know what's below. Call before you dig.

5508 HIGHWAY 290 WEST
SUITE 150
AUSTIN, TX 78735
512.872.6696
HRGREEN.COM
TBPE NO: 16384
TBPLS NO: 10194101

HRGreen® DEVELOPMENT TX

STATE OF TEXAS
CHRISTINE N. CAMPBELL
142536
LICENSED ENGINEER
PROFESSIONAL ENGINEER
07/03/2025

STORM G-1 PLAN & PROFILE 1+00 - 8+00

PARKSIDE ON THE RIVER SECTIONS 11, 12A & 15A CONSTRUCTION PLANS GEORGETOWN, WILLIAMSON, TEXAS

DESIGNED BY: CC
DRAWN BY: MM
CHECKED BY: SN
APPROVED BY:

SHEET 107 OF 141

2025-XX-CON

P:\Blake Magee\Parkside Sections 11-15 & WCN ESection 11, 12A & 14A\03_ACAD\Planset\240502 EDP\ STORM G-1 PLAN & PROFILE 1+00, 8+00, July 18, 2025, 12:19 PM, nsalai-muhammad

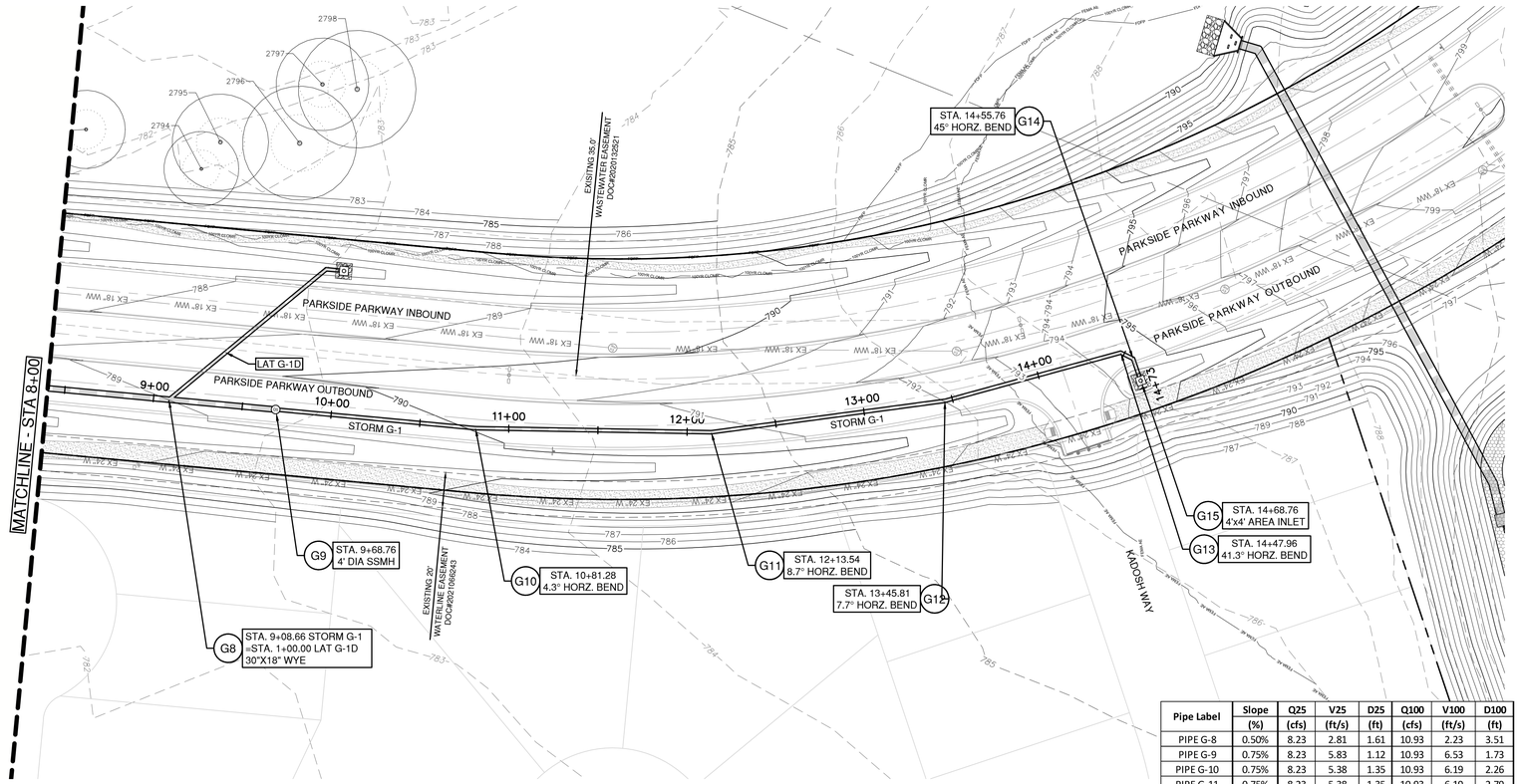

Pipe Label	Slope	Q25	V25	D25	Q100	V100	D100
	(%)	(cfs)	(ft/s)	(ft)	(cfs)	(ft/s)	(ft)
PIPE G-8	0.50%	8.23	2.81	1.61	10.93	2.23	3.51
PIPE G-9	0.75%	8.23	5.83	1.12	10.93	6.53	1.73
PIPE G-10	0.75%	8.23	5.38	1.35	10.93	6.19	2.26
PIPE G-11	0.75%	8.23	5.38	1.35	10.93	6.19	2.79
PIPE G-12	1.50%	8.23	5.39	1.35	10.93	6.19	2.88
PIPE G-13	1.50%	8.23	4.71	1.51	10.93	6.19	2.68
PIPE G-14	1.50%	8.23	4.70	1.56	10.93	6.19	2.86

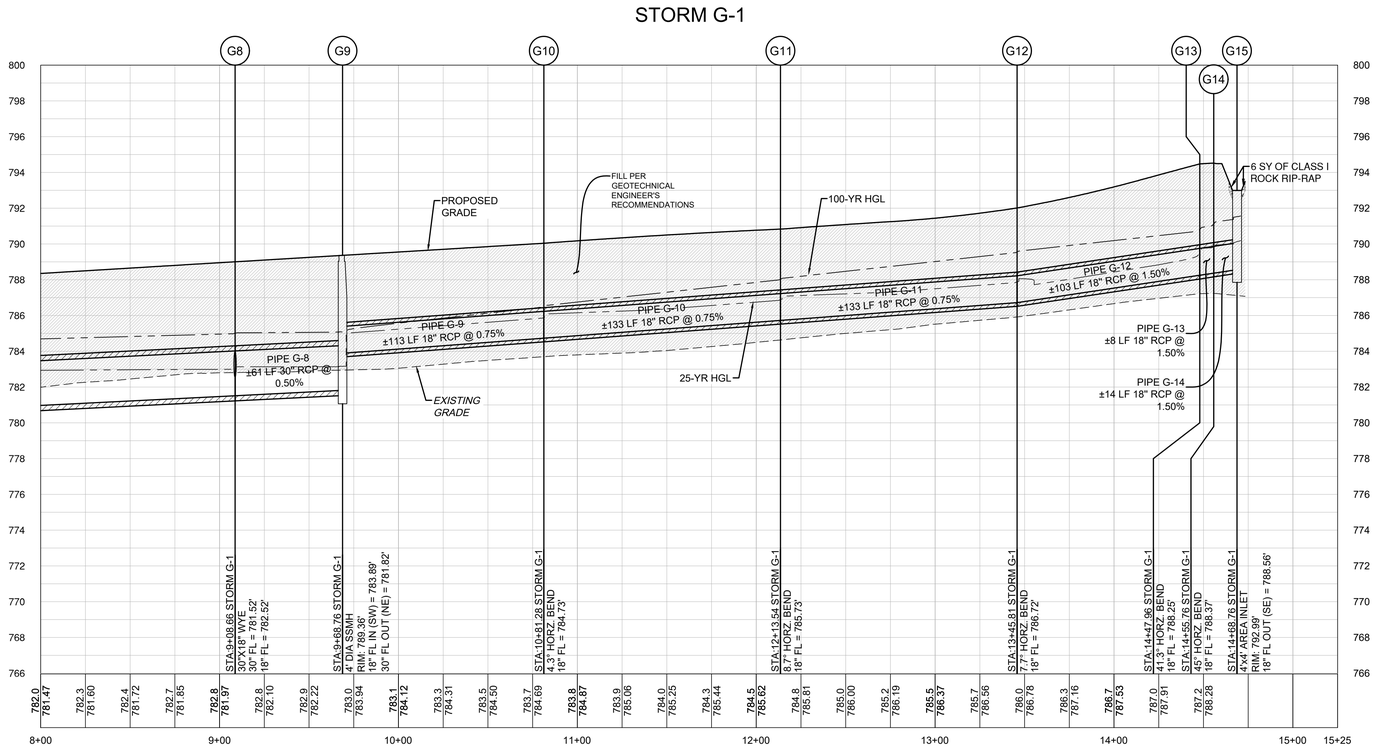

0 40' 80'

SCALE: 1" = 40'

LEGEND

- EXISTING MINOR CONTOUR
- EXISTING MAJOR CONTOUR
- PROPOSED MINOR CONTOUR
- PROPOSED MAJOR CONTOUR
- BOUNDARY
- EASEMENT
- FEMA FLOODWAY PER FIRM# 48491C0460F & LOMR# 21-06-0115P
- FEMA AE — 100YR ATLAS 14 FEMA ZONE AE FLOODPLAIN PER FIRM# 48491C0460F & LOMR# 21-06-0115P
- FEMA A — 100YR FEMA ZONE A FLOODPLAIN PER FIRM MAP# 48491C0460F
- 100YR CLOMR — 100YR CLOMR FLOODPLAIN CASE# 15-06-2071R
- FDFP — 100YR ATLAS 14 FULLY DEVELOPED FLOODPLAIN (STANTEC DRAINAGE STUDY, SHERVIN NOOSHIN, 3/25/19) APPROVED WITH P# 2019-5-PP
- OHWM — ORDINARY HIGH WATER MARK PER ADAMS ENVIRONMENTAL
- PROPOSED STORM LINE
- FIRE HYDRANT
- WATER VALVE
- STORM SEWER MAHNOLE
- WASTEWATER MANHOLE
- CURB INLET
- TREES TO REMAIN HERITAGE
- TREES TO REMAIN NON HERITAGE

VERT. SCALE: 1" = 4'
HORZ. SCALE: 1" = 40'

4' 2' 0 VERT. SCALE

EXISTING GRADE - CENTERLINE
FINISHED GRADE - CENTERLINE

EXISTING GROUND 1000.1 997.10 PROPOSED FLOWLINE

NOTE:

1. ALL PROPOSED STORM SEWER PIPE LINES SHALL BE CLASS III REINFORCED CONCRETE UNLESS NOTED OTHERWISE.
2. FILL SHALL BE PLACED ACCORDING TO THE GEOTECHNICAL ENGINEERS RECOMMENDATION AND CITY OF GEORGETOWN SPECIFICATIONS.
3. VEGETATE ALL DISTURBED AREAS WITHIN THE ROW AND OPEN SPACE LOT AREAS PER CITY OF GEORGETOWN SPECIFICATIONS.

TRENCH SAFETY NOTES:

1. IN ACCORDANCE WITH THE LAWS OF THE STATE OF TEXAS AND THE U.S. OCCUPATIONAL SAFETY AND HEALTH ADMINISTRATION REGULATIONS, ALL TRENCHES OVER 5 FEET IN DEPTH IN EITHER HARD AND COMPACT OR SOFT AND UNSTABLE SOIL SHALL BE SLOPED, SHORED, SHEETED, BRACED OR OTHERWISE SUPPORTED. FURTHERMORE, ALL TRENCHES LESS THAN 5 FEET IN DEPTH SHALL ALSO BE EFFECTIVELY PROTECTED WHEN HAZARDOUS GROUND MOVEMENT MAY BE EXPECTED. TRENCH SAFETY SYSTEMS TO BE UTILIZED FOR THIS PROJECT WILL BE PROVIDE BY THE CONTRACTOR.
2. IN ACCORDANCE WITH THE U.S. OCCUPATIONAL SAFETY AND HEALTH ADMINISTRATION REGULATIONS,WHEN PERSONS ARE IN TRENCHES 4-FEET DEEP OR MORE, ADEQUATE MEANS OF EXIT, SUCH AS A LADDER OR STEPS, MUST BE PROVIDED AND LOCATED SO AS TO REQUIRE NO MORE THAN 25 FEET OF LATERAL TRAVEL.
3. CONSTRUCTION SHALL NOT PROCEED UNTIL APPROPRIATE TRENCH SAFETY SYSTEM DETAILS, AS DESIGNED BY A PROFESSIONAL ENGINEER, ARE RETAINED AND COPIES SUBMITTED TO THE CITY OF GEORGETOWN.
4. DEEP EXCAVATIONS: ON EXCAVATIONS EXCEEDING 20 FEET IN DEPTH, TWO OR MORE MEANS OF EGRESS FROM THE EXCAVATION SHALL BE PROVIDED. THE CONTRACTOR SHALL CONSULT WITH A REGISTERED ENGINEER, EXPERIENCED IN TRENCH SAFETY SYSTEMS, REGARDING SPECIFIC MEANS AND METHODS EMPLOYED. CONTRACTOR SHALL PROVIDE A TRENCH SAFETY PLAN SEALED BY A REGISTERED PROFESSIONAL ENGINEER AS REQUIRED BY THE CITY OF GEORGETOWN.

NO	REVISION	BY	DATE

811 Know what's below. Call before you dig.

5508 HIGHWAY 290 WEST
SUITE 150
AUSTIN, TX 78735
512.872.6696
HRGREEN.COM

TBPE NO: 16384
TBPLS NO: 10194101

HRGreen® DEVELOPMENT TX

STATE OF TEXAS
CHRISTINE N. CAMPBELL
142536
LICENSED PROFESSIONAL ENGINEER

07/03/2025

STORM G-1 PLAN & PROFILE 8+00 - END

PARKSIDE ON THE RIVER SECTIONS 11, 12A & 15A CONSTRUCTION PLANS

GEORGETOWN, WILLIAMSON, TEXAS

DESIGNED BY: CC
DRAWN BY: MM
CHECKED BY: SN
APPROVED BY:

SHEET 108 OF 141

2025-XX-CON

P:\Blake.Magee\Parkside Sections 11-15 & WCN S\Section 11, 12A & 14\03_ACAD\Panels\340522.SDP* STORM G-1 Long_STORM G-1 PLAN & PROFILE 8+00 - END.dwg, July 18, 2025, 12:19 PM, mateo.muhammad

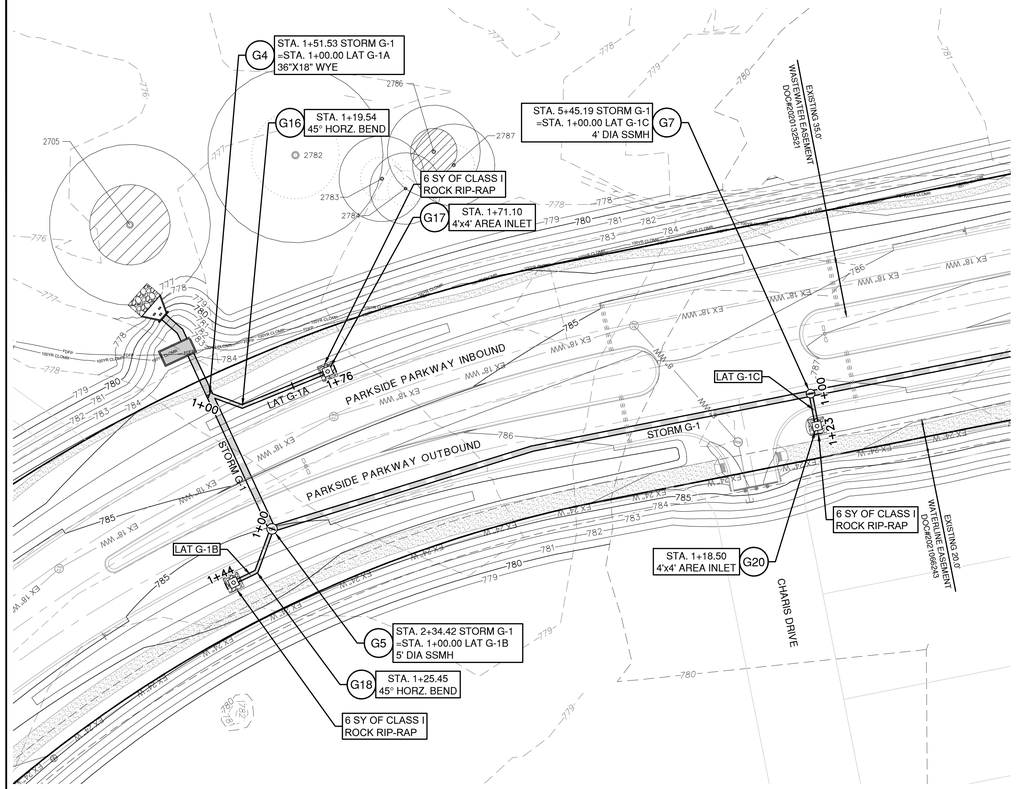

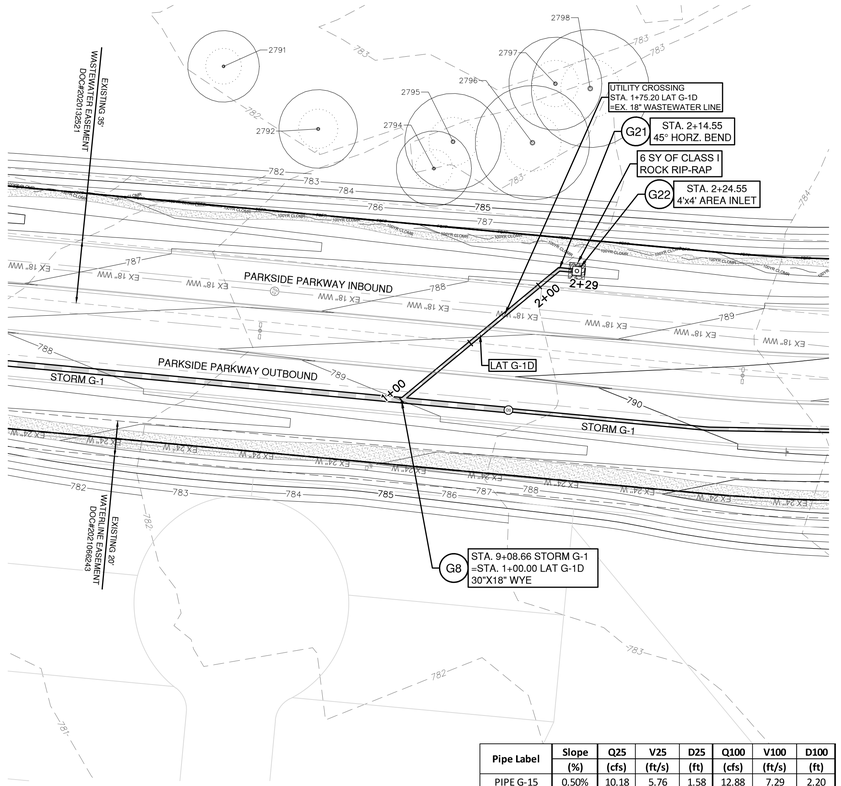

Pipe Label	Slope	Q25	V25	D25	Q100	V100	D100
	(%)	(cfs)	(ft/s)	(ft)	(cfs)	(ft/s)	(ft)
PIPE G-15	0.50%	10.18	5.76	1.58	12.88	7.29	2.20
PIPE G-16	0.50%	10.18	5.76	2.00	12.88	7.29	3.02
PIPE G-17	1.00%	5.06	2.91	1.59	6.26	3.54	2.43
PIPE G-18	1.00%	5.06	2.99	1.45	6.26	3.54	2.34
PIPE G-19	4.00%	8.60	5.43	1.79	10.60	6.00	3.15
PIPE G-20	0.50%	8.05	5.33	1.33	10.18	5.76	3.01
PIPE G-21	0.50%	8.05	4.56	1.52	10.18	5.76	3.25

0 40' 80'

SCALE: 1" = 40'

LEGEND

- 834 — EXISTING MINOR CONTOUR
- 835 — EXISTING MAJOR CONTOUR
- 834 — PROPOSED MINOR CONTOUR
- 835 — PROPOSED MAJOR CONTOUR
- BOUNDARY
- EASEMENT
- FEMA FLOODWAY PER FIRM# 48491C0460F & LOMR# 21-06-0115P
- FEMA AE — 100YR ATLAS 14 FEMA ZONE AE FLOODPLAIN PER FIRM# 48491C0460F & LOMR# 21-06-0115P
- FEMA A — 100YR FEMA ZONE A FLOODPLAIN PER FIRM MAP# 48491C0460F
- 100YR CLOMR — 100YR CLOMR FLOODPLAIN CASE# 15-06-2071R
- FDFP — 100YR ATLAS 14 FULLY DEVELOPED FLOODPLAIN (STANTEC DRAINAGE STUDY, SHERVIN NOOSHIN, 3/25/19) APPROVED WITH PP# 2019-5-PP
- OHWM — ORDINARY HIGH WATER MARK PER ADAMS ENVIRONMENTAL
- PROPOSED STORM LINE
- FIRE HYDRANT
- WATER VALVE
- STORM SEWER MAHNOLE
- WASTEWATER MANHOLE
- CURB INLET
- TREES TO REMAIN HERITAGE
- TREES TO REMAIN NON HERITAGE

VERT. SCALE: 1" = 4'
HORZ. SCALE: 1" = 40'

EXISTING GRADE - CENTERLINE
FINISHED GRADE - CENTERLINE

4' 2' 0 VERT. SCALE

EXISTING GROUND 1000.1 / 997.10 PROPOSED FLOWLINE

NOTE:

1. ALL PROPOSED STORM SEWER PIPE LINES SHALL BE CLASS III REINFORCED CONCRETE UNLESS NOTED OTHERWISE.
2. FILL SHALL BE PLACED ACCORDING TO THE GEOTECHNICAL ENGINEERS RECOMMENDATION AND CITY OF GEORGETOWN SPECIFICATIONS.
3. VEGETATE ALL DISTURBED AREAS WITHIN THE ROW AND OPEN SPACE LOT AREAS PER CITY OF GEORGETOWN SPECIFICATIONS.

TRENCH SAFETY NOTES:

1. IN ACCORDANCE WITH THE LAWS OF THE STATE OF TEXAS AND THE U.S. OCCUPATIONAL SAFETY AND HEALTH ADMINISTRATION REGULATIONS, ALL TRENCHES OVER 5 FEET IN DEPTH IN EITHER HARD AND COMPACT OR SOFT AND UNSTABLE SOIL SHALL BE SLOPED, SHORED, SHEETED, BRACED OR OTHERWISE SUPPORTED. FURTHERMORE, ALL TRENCHES LESS THAN 5 FEET IN DEPTH SHALL ALSO BE EFFECTIVELY PROTECTED WHEN HAZARDOUS GROUND MOVEMENT MAY BE EXPECTED. TRENCH SAFETY SYSTEMS TO BE UTILIZED FOR THIS PROJECT WILL BE PROVIDE BY THE CONTRACTOR.
2. IN ACCORDANCE WITH THE U.S. OCCUPATIONAL SAFETY AND HEALTH ADMINISTRATION REGULATIONS,WHEN PERSONS ARE IN TRENCHES 4-FEET DEEP OR MORE, ADEQUATE MEANS OF EXIT, SUCH AS A LADDER OR STEPS, MUST BE PROVIDED AND LOCATED SO AS TO REQUIRE NO MORE THAN 25 FEET OF LATERAL TRAVEL.
3. CONSTRUCTION SHALL NOT PROCEED UNTIL APPROPRIATE TRENCH SAFETY SYSTEM DETAILS, AS DESIGNED BY A PROFESSIONAL ENGINEER, ARE RETAINED AND COPIES SUBMITTED TO THE CITY OF GEORGETOWN.
4. DEEP EXCAVATIONS: ON EXCAVATIONS EXCEEDING 20 FEET IN DEPTH, TWO OR MORE MEANS OF EGRESS FROM THE EXCAVATION SHALL BE PROVIDED. THE CONTRACTOR SHALL CONSULT WITH A REGISTERED ENGINEER, EXPERIENCED IN TRENCH SAFETY SYSTEMS, REGARDING SPECIFIC MEANS AND METHODS EMPLOYED. CONTRACTOR SHALL PROVIDE A TRENCH SAFETY PLAN SEALED BY A REGISTERED PROFESSIONAL ENGINEER AS REQUIRED BY THE CITY OF GEORGETOWN.

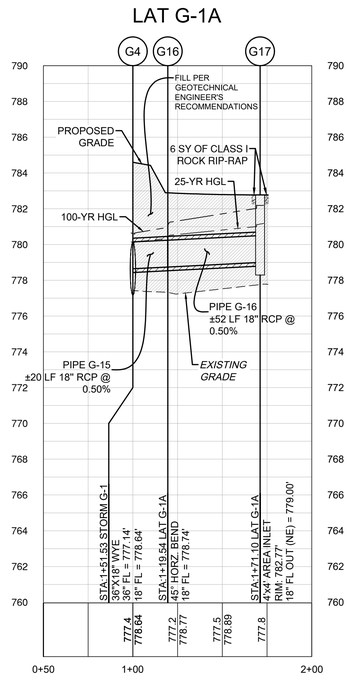

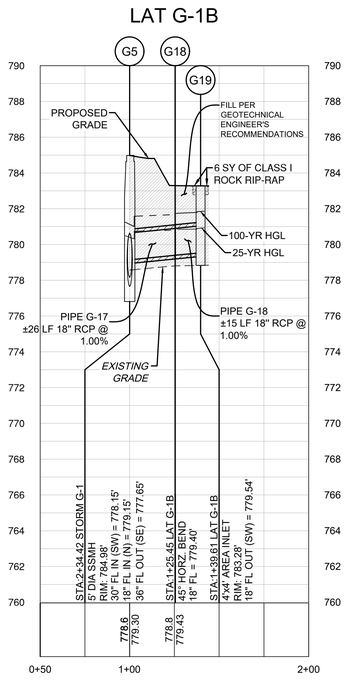

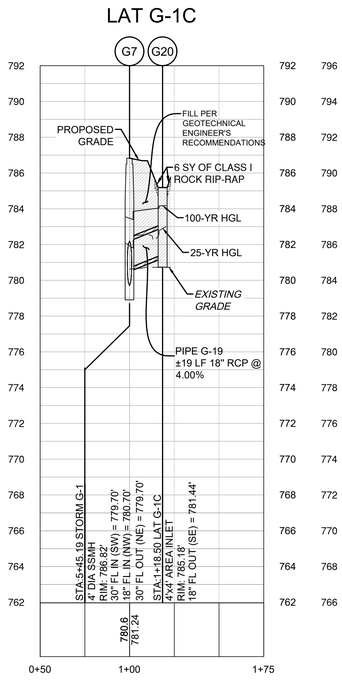

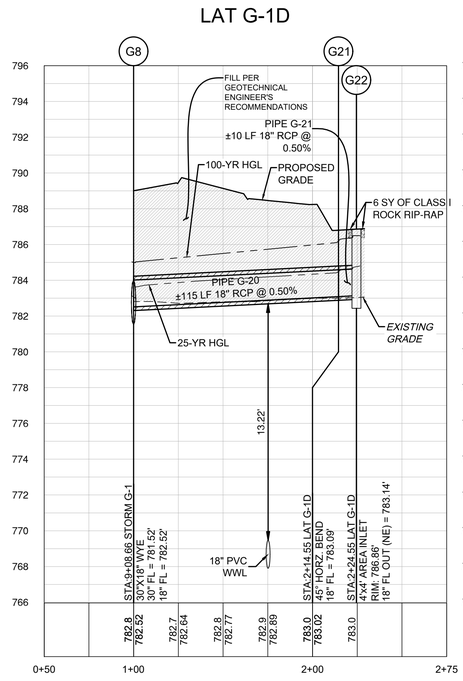

Know what's below. Call before you dig.

5508 HIGHWAY 290 WEST
SUITE 150
AUSTIN, TX 78735
512.872.6696
HRGREEN.COM
TBPE NO: 16384
TBPLS NO: 10194101

HRGreen®
DEVELOPMENT TX

STATE OF TEXAS
CHRISTINE N. CAMPBELL
142536
LICENSED PROFESSIONAL ENGINEER
07/03/2025

STORM G-1 LATERALS G-1A - G-1D

PARKSIDE ON THE RIVER
SECTIONS 11, 12A & 15A
CONSTRUCTION PLANS
GEORGETOWN, WILLIAMSON, TEXAS

DESIGNED BY: CC
DRAWN BY: MM
CHECKED BY: SN
APPROVED BY:

SHEET 109 OF 141

2025-XX-CON

NO | BY | DATE | REVISION

P:\Blake Magee\Parkside Sections 11-15 & WCN E\Section 11, 12A & 14A\03_ACAD\Planset\240322 ESPP STORM G-1 LATS.dwg, STORM G-1 PLAN & PROFILE 1+00, 9+60, July 18, 2025, 12:20 PM, rakai.muhammad

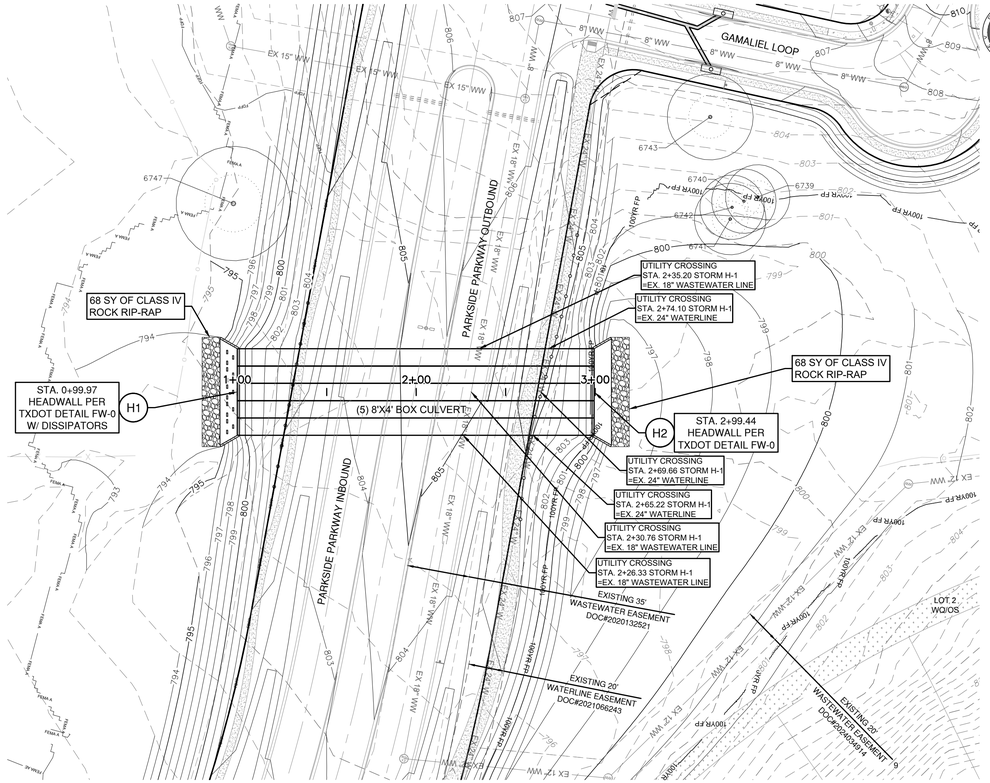

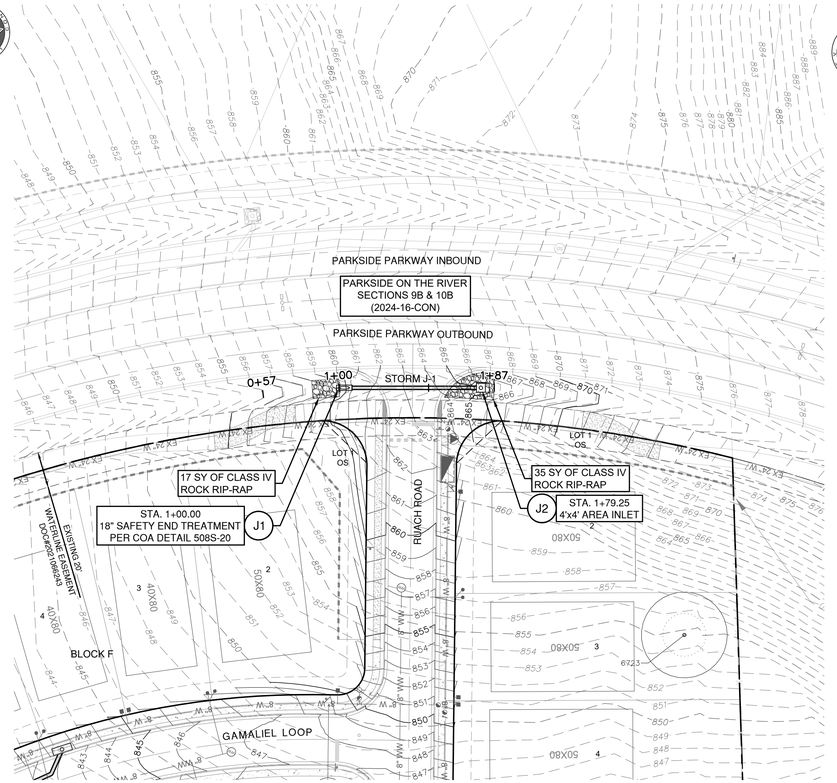

0 40' 80'

SCALE: 1" = 40'

LEGEND

- EXISTING MINOR CONTOUR
- EXISTING MAJOR CONTOUR
- PROPOSED MINOR CONTOUR
- PROPOSED MAJOR CONTOUR
- BOUNDARY
- EASEMENT
- FEMA FLOODWAY PER FIRM# 48491C0460F & LOMR# 21-06-0115P
- FEMA AE — 100YR ATLAS 14 FEMA ZONE AE FLOODPLAIN PER FIRM# 48491C0460F & LOMR# 21-06-0115P
- FEMA A — 100YR FEMA ZONE A FLOODPLAIN PER FIRM MAP# 48491C0460F
- 100YR CLOMR — 100YR CLOMR FLOODPLAIN CASE# 15-06-2071R
- FDFP — 100YR ATLAS 14 FULLY DEVELOPED FLOODPLAIN (STANTEC DRAINAGE STUDY, SHERVIN NOOSHIN, 3/25/19) APPROVED WITH PP# 2019-5-PP
- OHWM — ORDINARY HIGH WATER MARK PER ADAMS ENVIRONMENTAL
- PROPOSED STORM LINE
- FIRE HYDRANT
- WATER VALVE
- STORM SEWER MAHNOLE
- WASTEWATER MANHOLE
- CURB INLET
- TREES TO REMAIN HERITAGE
- TREES TO REMAIN NON HERITAGE

VERT. SCALE: 1" = 4'
HORZ. SCALE: 1" = 40'

4' 2' 0 VERT. SCALE

EXISTING GRADE - CENTERLINE
FINISHED GRADE - CENTERLINE

EXISTING GROUND 1000.1 997.10 PROPOSED FLOWLINE

NOTE:

1. ALL PROPOSED STORM SEWER PIPE LINES SHALL BE CLASS III REINFORCED CONCRETE UNLESS NOTED OTHERWISE.
2. FILL SHALL BE PLACED ACCORDING TO THE GEOTECHNICAL ENGINEERS RECOMMENDATION AND CITY OF GEORGETOWN SPECIFICATIONS.
3. VEGETATE ALL DISTURBED AREAS WITHIN THE ROW AND OPEN SPACE LOT AREAS PER CITY OF GEORGETOWN SPECIFICATIONS.

TRENCH SAFETY NOTES:

1. IN ACCORDANCE WITH THE LAWS OF THE STATE OF TEXAS AND THE U.S. OCCUPATIONAL SAFETY AND HEALTH ADMINISTRATION REGULATIONS, ALL TRENCHES OVER 5 FEET IN DEPTH IN EITHER HARD AND COMPACT OR SOFT AND UNSTABLE SOIL SHALL BE SLOPED, SHORED, SHEETED, BRACED OR OTHERWISE SUPPORTED. FURTHERMORE, ALL TRENCHES LESS THAN 5 FEET IN DEPTH SHALL ALSO BE EFFECTIVELY PROTECTED WHEN HAZARDOUS GROUND MOVEMENT MAY BE EXPECTED. TRENCH SAFETY SYSTEMS TO BE UTILIZED FOR THIS PROJECT WILL BE PROVIDE BY THE CONTRACTOR.
2. IN ACCORDANCE WITH THE U.S. OCCUPATIONAL SAFETY AND HEALTH ADMINISTRATION REGULATIONS,WHEN PERSONS ARE IN TRENCHES 4-FEET DEEP OR MORE, ADEQUATE MEANS OF EXIT, SUCH AS A LADDER OR STEPS, MUST BE PROVIDED AND LOCATED SO AS TO REQUIRE NO MORE THAN 25 FEET OF LATERAL TRAVEL.
3. CONSTRUCTION SHALL NOT PROCEED UNTIL APPROPRIATE TRENCH SAFETY SYSTEM DETAILS, AS DESIGNED BY A PROFESSIONAL ENGINEER, ARE RETAINED AND COPIES SUBMITTED TO THE CITY OF GEORGETOWN.
4. DEEP EXCAVATIONS: ON EXCAVATIONS EXCEEDING 20 FEET IN DEPTH, TWO OR MORE MEANS OF EGRESS FROM THE EXCAVATION SHALL BE PROVIDED. THE CONTRACTOR SHALL CONSULT WITH A REGISTERED ENGINEER, EXPERIENCED IN TRENCH SAFETY SYSTEMS, REGARDING SPECIFIC MEANS AND METHODS EMPLOYED. CONTRACTOR SHALL PROVIDE A TRENCH SAFETY PLAN SEALED BY A REGISTERED PROFESSIONAL ENGINEER AS REQUIRED BY THE CITY OF GEORGETOWN.

STORM H-1

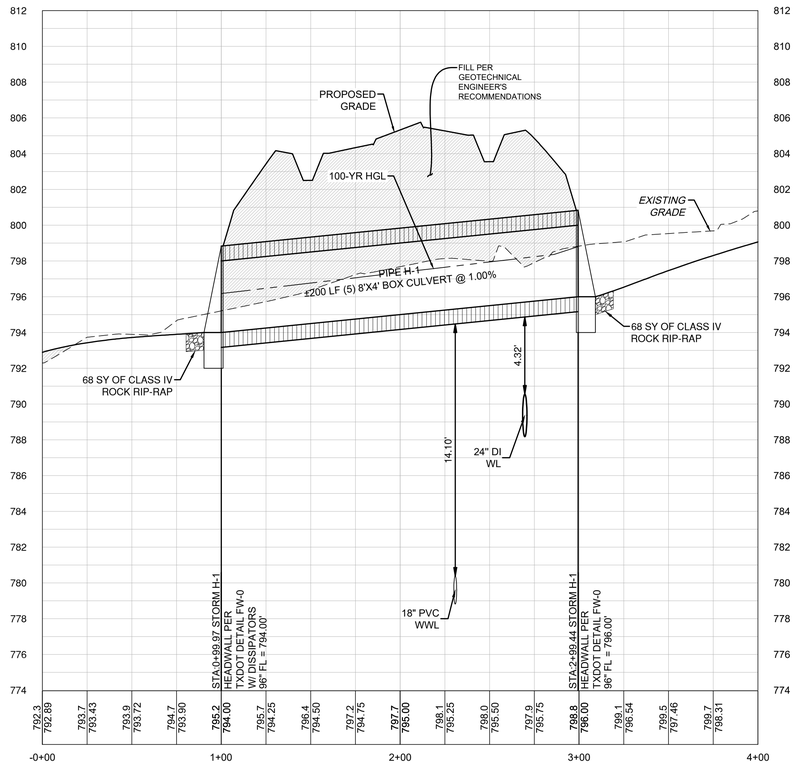

PIPE H-1
(5) 8' X 4' BOX CULVERTS
Q100 = 1,266.5 CFS V100 = 10.86 FT/S D100 = 2.80'
SLOPE = 1.00%

Pipe Label	Slope	Q25	V25	D25	Q100	V100	D100
	(%)	(cfs)	(ft/s)	(ft)	(cfs)	(ft/s)	(ft)
PIPE J-1	2.00%	6.22	6.61	0.96	7.78	7.10	1.08

STORM J-1

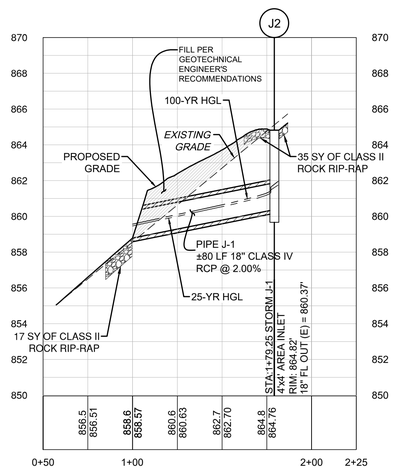

DATE	BY	REVISION	NO

811 Know what's below. Call before you dig.

5508 HIGHWAY 290 WEST
SUITE 150
AUSTIN, TX 78735
512.872.6696
HRGREEN.COM

TBPE NO: 16384
TBPLS NO: 10194101

HRGreen®
DEVELOPMENT TX

STATE OF TEXAS
CHRISTINE N. CAMPBELL
142536
LICENSED PROFESSIONAL ENGINEER

07/15/2025

STORM H-1 & STORM J-1 PLAN & PROFILE

PARKSIDE ON THE RIVER SECTIONS 11, 12A & 15A CONSTRUCTION PLANS

GEORGETOWN, WILLIAMSON, TEXAS

DESIGNED BY: CC
DRAWN BY: MM
CHECKED BY: SN
APPROVED BY:

SHEET 110 OF 141

2025-XX-CON

P:\Blake Magee\Parkside Sections 11-15 & WOA 5\Sections 11, 12A & 15A\03_ACAD\Planset\04052023 SDP\ STORM H-1 & STORM J-1 PLAN & PROFILE - July 16, 2025, 12:22 PM, makia.mohammad

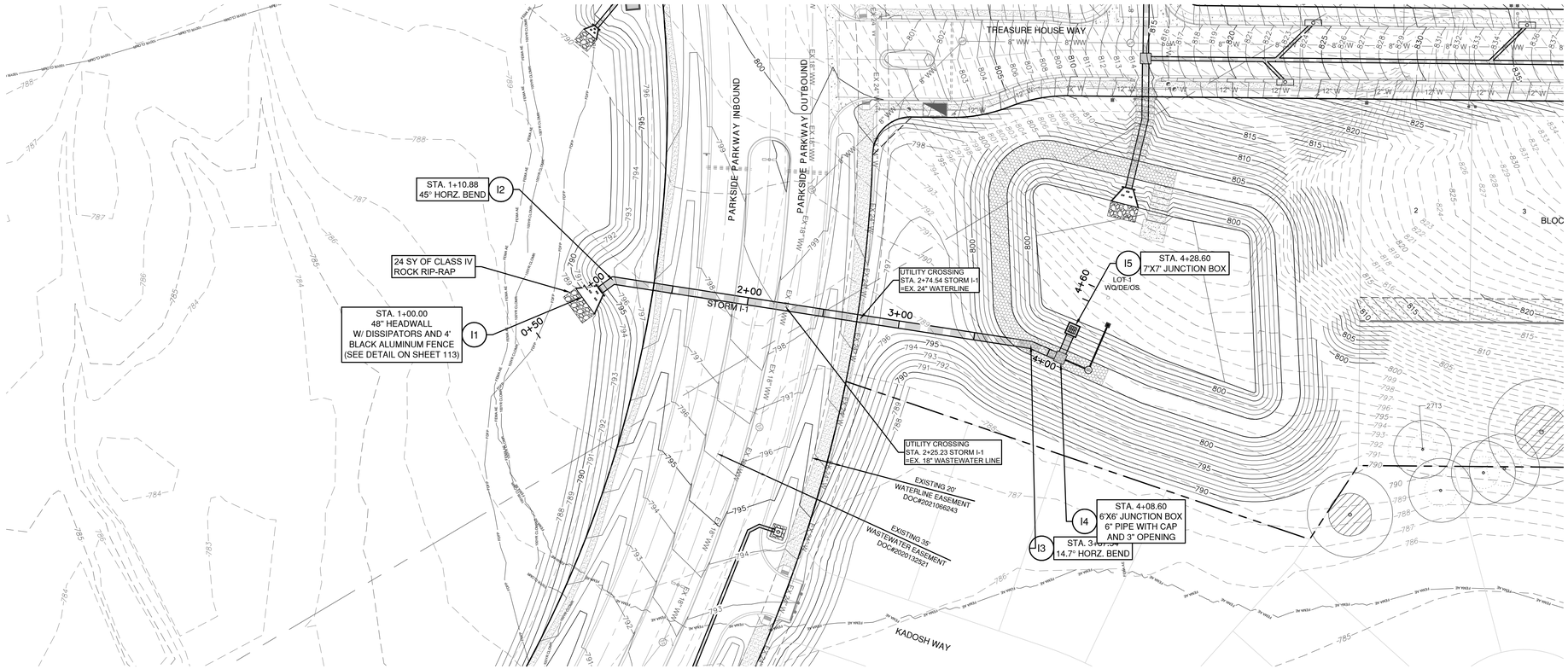

STORM I-1

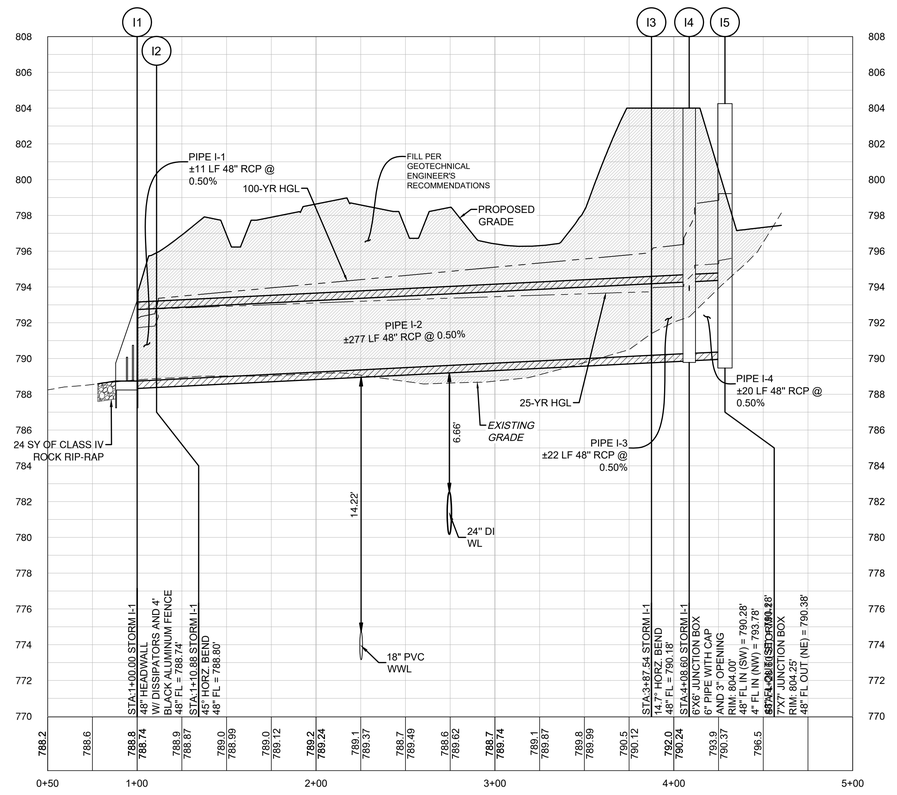

Pipe Label	Slope	Q25	V25	D25	Q100	V100	D100
	(%)	(cfs)	(ft/s)	(ft)	(cfs)	(ft/s)	(ft)
PIPE I-1	0.50%	94.79	9.43	3.02	137.55	11.58	3.70
PIPE I-2	0.50%	94.79	7.80	3.98	137.55	10.95	5.73
PIPE I-3	0.50%	94.79	7.73	3.79	137.55	10.95	6.09
PIPE I-4	0.50%	94.79	7.54	4.93	137.55	10.95	8.46

0 40' 80'

SCALE: 1" = 40'

LEGEND

- EXISTING MINOR CONTOUR
- EXISTING MAJOR CONTOUR
- PROPOSED MINOR CONTOUR
- PROPOSED MAJOR CONTOUR
- BOUNDARY
- EASEMENT
- FEMA FLOODWAY PER FIRM# 48491C0460F & LOMR# 21-06-0115P
- FEMA AE — 100YR ATLAS 14 FEMA ZONE AE FLOODPLAIN PER FIRM# 48491C0460F & LOMR# 21-06-0115P
- FEMA A — 100YR FEMA ZONE A FLOODPLAIN PER FIRM MAP# 48491C0460F
- 100YR CLOMR — 100YR CLOMR FLOODPLAIN CASE# 15-06-2071R
- FDFP — 100YR ATLAS 14 FULLY DEVELOPED FLOODPLAIN (STANTEC DRAINAGE STUDY, SHERVIN NOOSHIN, 3/25/19) APPROVED WITH PP# 2019-5-PP
- OHWM — ORDINARY HIGH WATER MARK PER ADAMS ENVIRONMENTAL
- PROPOSED STORM LINE
- FIRE HYDRANT
- WATER VALVE
- STORM SEWER MAHNOLE
- WASTEWATER MANHOLE
- CURB INLET
- TREES TO REMAIN HERITAGE
- TREES TO REMAIN NON HERITAGE

VERT. SCALE: 1" = 4'
HORZ. SCALE: 1" = 40'

EXISTING GRADE - CENTERLINE
FINISHED GRADE - CENTERLINE

4' 2' 0 VERT. SCALE

EXISTING GROUND 1000.1 997.10 PROPOSED FLOWLINE

NOTE:

1. ALL PROPOSED STORM SEWER PIPE LINES SHALL BE CLASS III REINFORCED CONCRETE UNLESS NOTED OTHERWISE.
2. FILL SHALL BE PLACED ACCORDING TO THE GEOTECHNICAL ENGINEERS RECOMMENDATION AND CITY OF GEORGETOWN SPECIFICATIONS.
3. VEGETATE ALL DISTURBED AREAS WITHIN THE ROW AND OPEN SPACE LOT AREAS PER CITY OF GEORGETOWN SPECIFICATIONS.

TRENCH SAFETY NOTES:

1. IN ACCORDANCE WITH THE LAWS OF THE STATE OF TEXAS AND THE U.S. OCCUPATIONAL SAFETY AND HEALTH ADMINISTRATION REGULATIONS, ALL TRENCHES OVER 5 FEET IN DEPTH IN EITHER HARD AND COMPACT OR SOFT AND UNSTABLE SOIL SHALL BE SLOPED, SHORED, SHEETED, BRACED OR OTHERWISE SUPPORTED. FURTHERMORE, ALL TRENCHES LESS THAN 5 FEET IN DEPTH SHALL ALSO BE EFFECTIVELY PROTECTED WHEN HAZARDOUS GROUND MOVEMENT MAY BE EXPECTED. TRENCH SAFETY SYSTEMS TO BE UTILIZED FOR THIS PROJECT WILL BE PROVIDE BY THE CONTRACTOR.
2. IN ACCORDANCE WITH THE U.S. OCCUPATIONAL SAFETY AND HEALTH ADMINISTRATION REGULATIONS,WHEN PERSONS ARE IN TRENCHES 4-FEET DEEP OR MORE, ADEQUATE MEANS OF EXIT, SUCH AS A LADDER OR STEPS, MUST BE PROVIDED AND LOCATED SO AS TO REQUIRE NO MORE THAN 25 FEET OF LATERAL TRAVEL.
3. CONSTRUCTION SHALL NOT PROCEED UNTIL APPROPRIATE TRENCH SAFETY SYSTEM DETAILS, AS DESIGNED BY A PROFESSIONAL ENGINEER, ARE RETAINED AND COPIES SUBMITTED TO THE CITY OF GEORGETOWN.
4. DEEP EXCAVATIONS: ON EXCAVATIONS EXCEEDING 20 FEET IN DEPTH, TWO OR MORE MEANS OF EGRESS FROM THE EXCAVATION SHALL BE PROVIDED. THE CONTRACTOR SHALL CONSULT WITH A REGISTERED ENGINEER, EXPERIENCED IN TRENCH SAFETY SYSTEMS, REGARDING SPECIFIC MEANS AND METHODS EMPLOYED. CONTRACTOR SHALL PROVIDE A TRENCH SAFETY PLAN SEALED BY A REGISTERED PROFESSIONAL ENGINEER AS REQUIRED BY THE CITY OF GEORGETOWN.

NO	REVISION	BY	DATE

811 Know what's below. Call before you dig.

5508 HIGHWAY 290 WEST
SUITE 150
AUSTIN, TX 78735
512.872.6696
HRGREEN.COM

TBPE NO: 16384
TBPLS NO: 10194101

HRGreen®
DEVELOPMENT TX

STATE OF TEXAS
CHRISTINE N. CAMPBELL
142536
LICENSED PROFESSIONAL ENGINEER

07/15/2025

STORM I-1 PLAN & PROFILE

PARKSIDE ON THE RIVER
SECTIONS 11, 12A & 15A
CONSTRUCTION PLANS
GEORGETOWN, WILLIAMSON, TEXAS

DESIGNED BY: CC
DRAWN BY: MM
CHECKED BY: SN
APPROVED BY:

SHEET 111 OF 141

2025-XX-CON

P:\Blake Magee\Parkside Sections 11-15 & WOA 5\Section 11, 12A & 15A\00_ACAD\Parkside\240302D SDPP STORM I-1.dwg, STORM I-1 PLAN & PROFILE, July 16, 2025, 12:23 PM, malia.muhammad

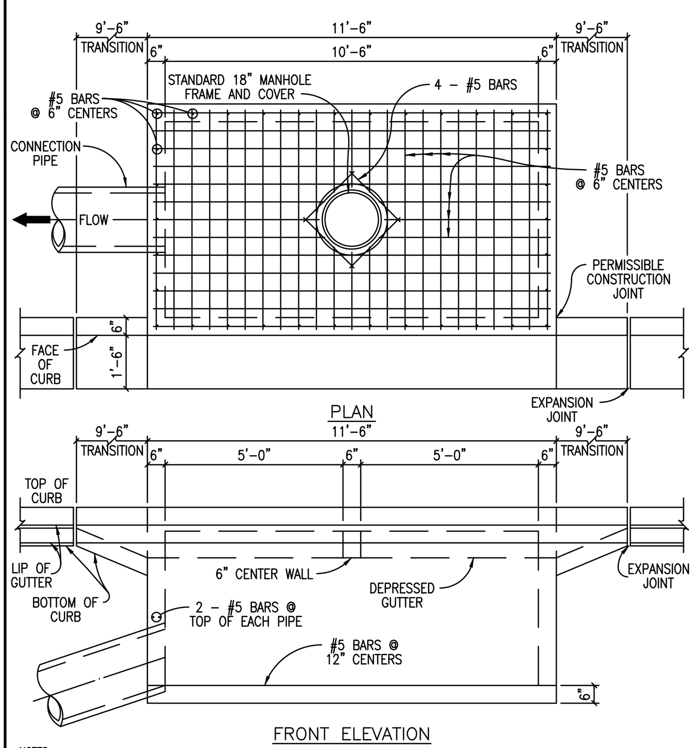

NOTES:
1. ALL CONCRETE SHALL BE CLASS "A" 3,000 PSI CONCRETE.
2. STORM SEWER PIPE MATERIAL TO BE R.C.P. (CLASS III) UNLESS OTHERWISE APPROVED BY THE CITY OF GEORGETOWN.

The Architect/Engineer assumes responsibility for appropriate use of this standard.

ADOPTED 6/21/2006 | CITY OF GEORGETOWN CONSTRUCTION STANDARDS AND DETAILS | CURB INLET DETAIL | SD09 | NTS | 1/2003 | MRS | TRB

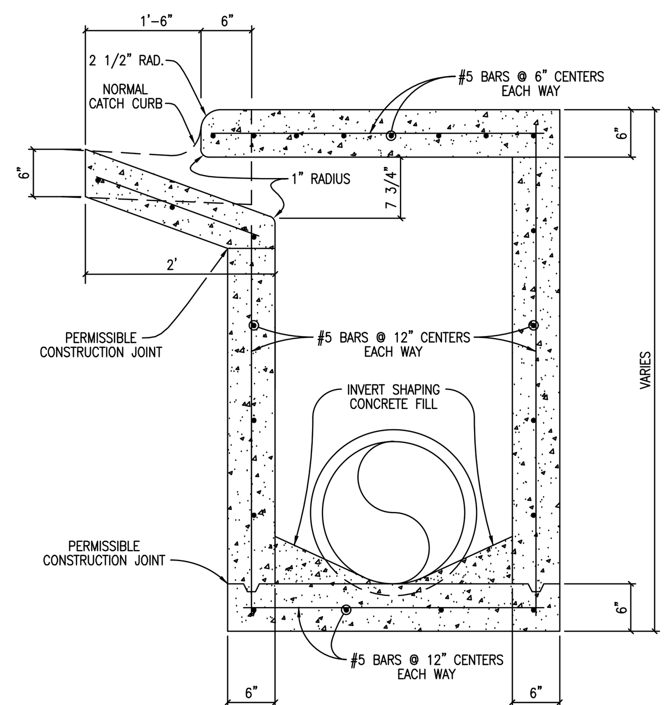

NOTES:
1. ALL CONCRETE SHALL BE CLASS "A" 3,000 PSI CONCRETE.
2. STORM SEWER PIPE MATERIAL TO BE R.C.P. (CLASS III) UNLESS OTHERWISE APPROVED BY THE CITY OF GEORGETOWN.

The Architect/Engineer assumes responsibility for appropriate use of this standard.

ADOPTED 6/21/2006 | CITY OF GEORGETOWN CONSTRUCTION STANDARDS AND DETAILS | CURB DRAIN INLET TYPICAL SECTION | SD10 | NTS | 1/2003 | MRS | TRB

The Architect/Engineer assumes responsibility for appropriate use of this standard.

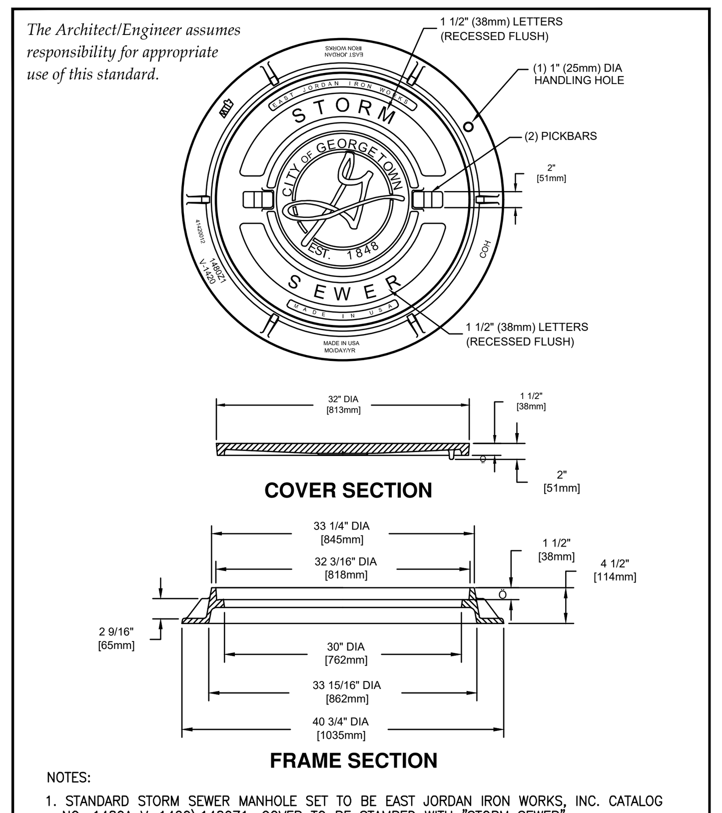

NOTES:
1. STANDARD STORM SEWER MANHOLE SET TO BE EAST JORDAN IRON WORKS, INC. CATALOG NO. 1480A V–1420\1480Z1, COVER TO BE STAMPED WITH "STORM SEWER".
2. STANDARD STORM SEWER MANHOLE SET TO BE HEAVY DUTY LOAD RATED.
3. FOR MORE DETAILED SPECIFICATIONS REFER TO EAST JORDAN IRON WORKS, INC. REFERENCE PRODUCT DRAWING 41420012 00148391.
4. FOR BOLTED STORM SEWER MANHOLE SET REFER TO DETAIL SD11A.

ADOPTED 6/21/2006 | CITY OF GEORGETOWN CONSTRUCTION STANDARDS AND DETAILS | STANDARD STORM SEWER MANHOLE SET | SD11 | NTS | 1/2003 | MRS | TRB

The Architect/Engineer assumes responsibility for appropriate use of this standard.

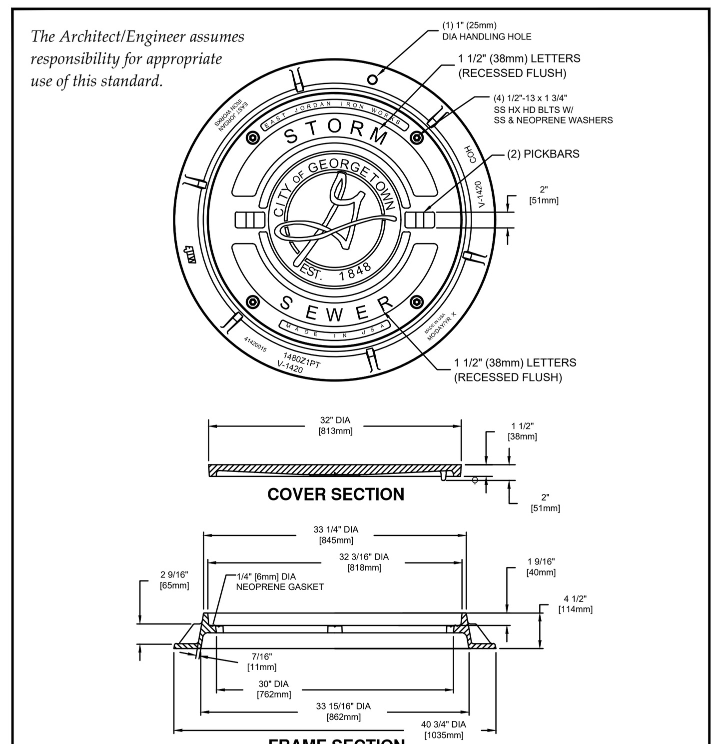

NOTES:
1. BOLTED STORM SEWER MANHOLE SET TO BE EAST JORDAN IRON WORKS, INC. CATALOG NO. 1480APT V–1420\1480Z1PT. COVER TO BE STAMPED WITH "STORM SEWER"
2. BOLTED STORM SEWER MANHOLE SET TO BE HEAVY DUTY LOAD RATED.
3. FOR MORE DETAILED SPECIFICATIONS REFER TO EAST JORDAN IRON WORKS, INC. REFERENCE PRODUCT DRAWING 00148393 41420015.
4. FOR STANDARD STORM SEWER MANHOLE SET REFER TO DETAIL SD11.

ADOPTED 6/21/2006 | CITY OF GEORGETOWN CONSTRUCTION STANDARDS AND DETAILS | BOLTED STORM SEWER MANHOLE SET | SD11A | NTS | 1/2006 | MRS | TRB

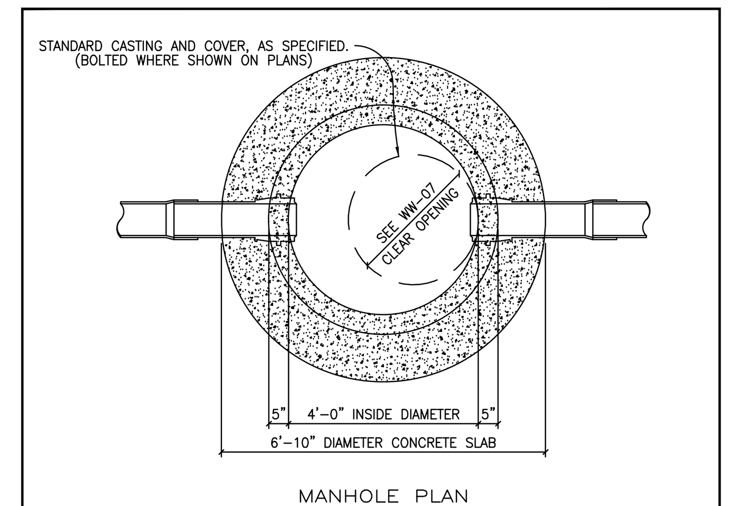

CITY OF GEORGETOWN NOTES:

MANHOLE DETAILS SHALL REFLECT THE CITY'S MINIMUM SPECIFICATIONS, AS STATED BELOW:

A. ALL MANHOLES SHALL BE 48" I.D., R.C.P., CLASS III, WITH RUBBER O–RING GASKET JOINTS CONFORMING TO ASTM C478, C433 AND C76.
B. ALL MANHOLES SHALL HAVE FRAME AND COVER, AS MANUFACTURED BY EAST JORDAN IRON WORKS (AS PER DETAIL # WW–07) OR APPROVED EQUIVALENT.
C. ALL MANHOLES SHALL BE CONCRETE WITH CAST IRON FRAME AND COVER.
D. ALL MANHOLES SHALL HAVE AN ECCENTRIC CONE.
E. MANHOLES MAY HAVE A FLAT LID, IF APPROVED BY CITY OF GEORGETOWN, BEING 12" THICK WITH A MINIMUM 30" OPENING, AS MANUFACTURED BY CALVERT CONCRETE OR APPROVED EQUAL M.F.G. CONFORMING TO ASTM C478, 5000 P.S.I. CONCRETE, TRAFFIC BEARING, AND O–RING JOINT CONFORMING TO ASTM C443.
F. INVERTS AND FLEXIBLE SEAL BOOTS, PER ASTM C–923, SHALL BE CAST INTO BASE SECTION.
G. MINIMUM DROP BETWEEN INVERTS SHALL BE ONE–TENTH OF A FOOT (0.1').
H. GRADE RINGS WITH AN I.D. TO MATCH FRAMES CLEAR OPENING WITH A MAXIMUM OF FIVE (5) GRADE RINGS ARE ALLOWED.

The Architect/Engineer assumes responsibility for appropriate use of this standard.

ADOPTED 6/21/2006 | CITY OF GEORGETOWN CONSTRUCTION STANDARDS AND DETAILS | STANDARD STORM SEWER MANHOLE PLAN | SD12 | NTS | 1/2003 | MRS | TRB

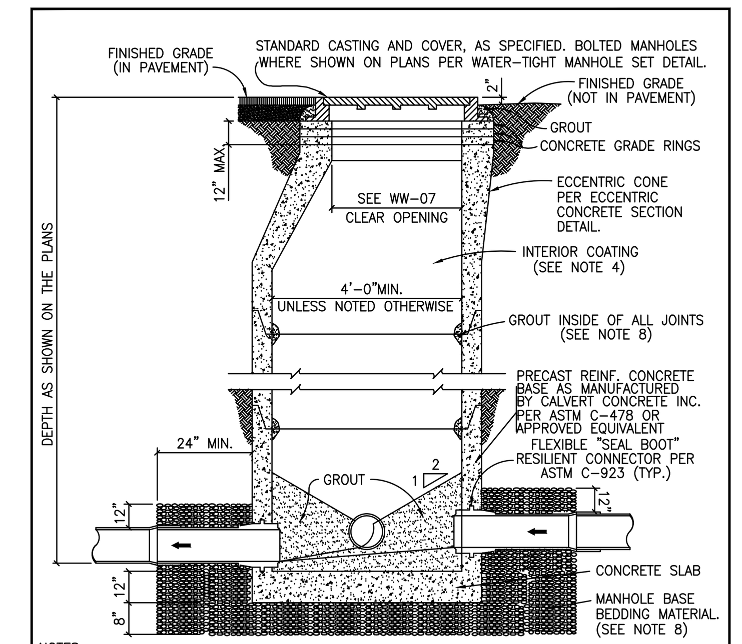

NOTES:
1. MANHOLES SHALL BE PRECAST ASTM C–478 BELL AND SPIGOT WITH PROFILE GASKET – SINGLE OFF–SET JOINTS.
2. SEE PLANS AND MANHOLE SCHEDULE, FOR MANHOLE SIZE, LOCATION, CONFIGURATION, TYPE OF TOP SECTION, VENTING REQUIREMENTS, PIPE SIZE AND TYPES.
3. SEE SPECIFICATIONS ON MATERIALS AND CONSTRUCTION.
4. AN 80 MIL COAT OF RAVEN LINING SYSTEMS, RAVEN 405 ULTRA HIGH BUILD EPOXY COATING, OR SPRAY WALL EPOXY COATING, OR APPROVED EQUAL, TO BE APPLIED TO ENTIRE INTERIOR OF EACH STORM SEWER MANHOLE AND UNDERSIDE OF FLAT TOPS.
5. ALL MANHOLE COVERS SHALL BE BOLTED AND GASKETTED WHEN MANHOLES ARE LOCATED OUT FROM PAVEMENT.
6. MANHOLES TO BE VENTED ARE IDENTIFIED ON MANHOLE SCHEDULE. REFERENCE MANHOLE VENT DETAIL.
7. MANHOLES ARE TO BE DESIGNED TO RESIST LATERAL AND VERTICAL SOIL FORCES RESULTING FROM MANHOLE DEPTH. ADDITIONALLY, MANHOLES LOCATED IN PAVEMENT TO BE DESIGNED FOR HS–20 TRAFFIC LOADS.
8. GROUT SHALL MEET THE REQUIREMENTS AS STATED BY THE COATING MANUFACTURER.
8. MANHOLE BASE BEDDING MATERIAL SPECS. FOR 3/4" WASHED GRAVEL: SIEVE SIZE 2", PERCENT (%) RETAINED 0; SIEVE SIZE 1 1/2", % RETAINED 0–10; SIEVE SIZE 1", % RETAINED 45–80; SIEVE SIZE 3/4", % RETAINED 85–100; SIEVE SIZE 3/8", % RETAINED 95–100

The Architect/Engineer assumes responsibility for appropriate use of this standard.

ADOPTED 6/21/2006 | CITY OF GEORGETOWN CONSTRUCTION STANDARDS AND DETAILS | STANDARD STORM SEWER MANHOLE – SECTION | SD13 | NTS | 1/2003 | MRS | TRB

MINIMUM RIP–RAP QUANTITIES	
PIPE	SQ. YDS.
18"	6.2
24"	6.9
27"	7.8
30"	9.5
36"	10.4
42"	12.0
48"	14.3
54"	16.4

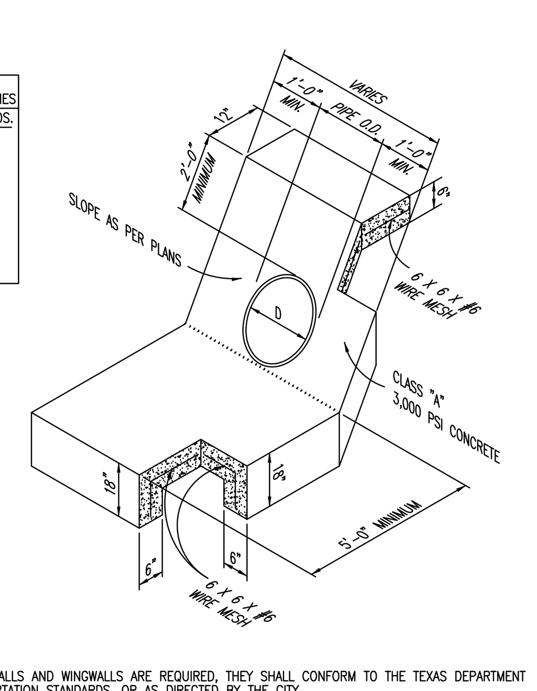

NOTES:
1. WHEN HEADWALLS AND WINGWALLS ARE REQUIRED, THEY SHALL CONFORM TO THE TEXAS DEPARTMENT OF TRANSPORTATION STANDARDS, OR AS DIRECTED BY THE CITY.
2. ENERGY DISSIPATERS SHALL BE REQUIRED IF PIPE VELOCITY IS GREATER THAN 5.0 F.P.S. OR AS DIRECTED BY THE CITY OF GEORGETOWN.
3. SUPPORT REINFORCING WIRE MESH REQUIRED AS SUPPORT FOR APPROACH SLAB AND SHALL BE SUPPORTED BY REBAR CHAIRS OR OTHER APPROVED METHODS.

The Architect/Engineer assumes responsibility for appropriate use of this standard.

ADOPTED 6/21/2006 | CITY OF GEORGETOWN CONSTRUCTION STANDARDS AND DETAILS | TYPICAL CONCRETE RIP–RAP AT PIPE | SD19 | NTS | 1/2003 | MRS | TRB

The Architect/Engineer assumes responsibility for appropriate use of this standard.

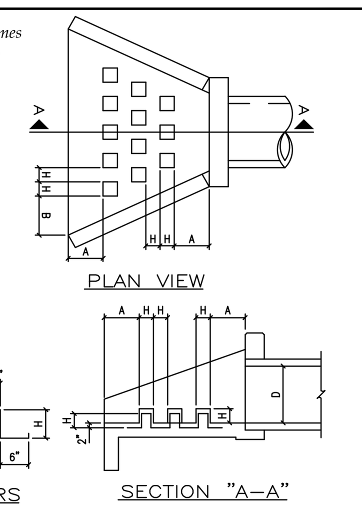

NOTES:
1. USE CLASS "A" CONCRETE, 3,000 PSI AT 28 DAYS, UNLESS NOTED.
2. REINFORCING STEEL – ASTM A615, GRADE 40, UNLESS NOTED.
3. LAP REINFORCING 30 BAR DIAMETERS MIN. AT SPLICES, UNLESS NOTED.
4. CHAMFER EXPOSED EDGES OF CONCRETE 3/4", UNLESS NOTED.
5. PLACE REINFORCING WITH THE CENTER OF THE OUTSIDE BARS 2 INCHES FROM THE SURFACE OF THE CONCRETE.

TABLE OF DIMENSIONS FOR ENERGY DISSIPATOR DETAIL

D PIPE DIAMETER (INCHES)	NUMBER OF ROWS OF DISSIPATORS	NUMBER OF DISSIPATORS IN FRONT ROW	H (INCHES)	A (INCHES)	B (INCHES)
12	1	3	4	4	9.1875
18	2	4	4 1/2	9 1/2	15.5625
24	2	5	6	14 3/4	16 1/2
30	3	6	7 1/2	12 1/2	14 3/8
36	3	6	9	16 1/4	18 5/16
42	3	6	10 1/2	20	22 1/4
48	3	6	12	23 3/4	26 1/4
54	3	6	13 1/2	27 1/2	27 3/4
60	3	6	15	31 1/4	31 5/8

ADOPTED 6/21/2006 | CITY OF GEORGETOWN CONSTRUCTION STANDARDS AND DETAILS | ENERGY DISSIPATER DETAIL | SD20 | NTS | 1/2003 | MRS | TRB

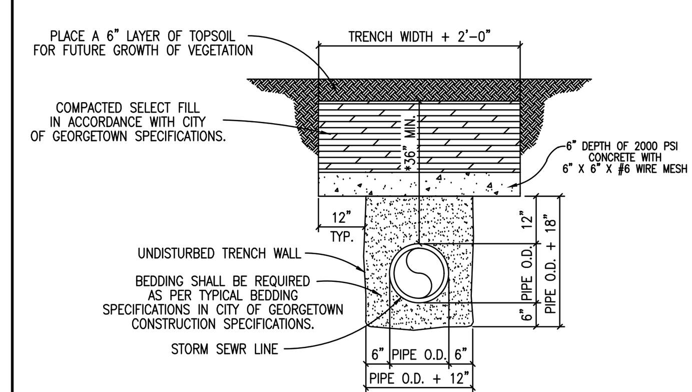

TRENCH WIDTHS
*PIPE LESS THAN 20" DIAMETER 1'–0" + PIPE O.D.
*20" DIAMETER PIPE AND LARGER 2'–0" + PIPE O.D.

The Architect/Engineer assumes responsibility for appropriate use of this standard.

ADOPTED 6/21/2006 | CITY OF GEORGETOWN CONSTRUCTION STANDARDS AND DETAILS | CONCRETE TRANCH CAP DETAIL FOR STORM SEWER | SD39 | NTS | 1/2003 | MRS | TRB

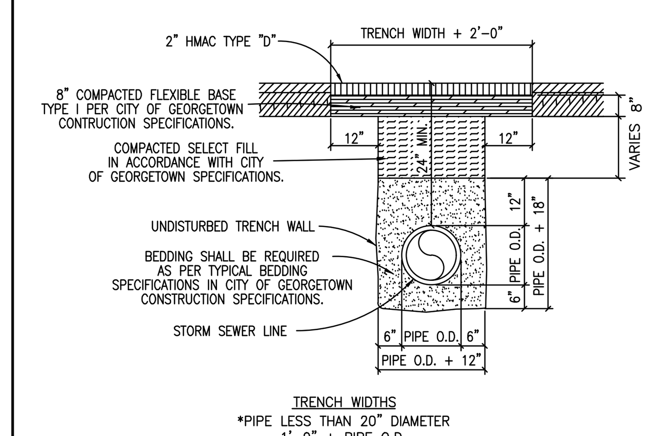

TRENCH WIDTHS
*PIPE LESS THAN 20" DIAMETER 1'–0" + PIPE O.D.
*20" DIAMETER PIPE AND LARGER 2'–0" + PIPE O.D.

NOTES:
1. REPLACED BASE MATERIAL OVER DITCH SHALL BE TWICE THE THICKNESS OF THE ORIGINAL BASE.
2. BASE MATERIAL SHALL BE IN LIFTS NOT TO EXCEED 6" AND EACH LIFT THOROUGHLY ROLLED OR TAMPED TO SPECIFIED MAXIMUM DENSITY.
3. ASPHALT CONCRETE PAVEMENT JOINTS SHALL BE MECHANICALLY SAWED.
4. SURFACE MATERIAL WILL BE CONSISTENT WITH THE EXISTING SURFACE.
5. DENSITY TESTS SHALL BE TAKEN IN ACCORDANCE WITH THE CITY OF GEORGETOWN CONSTRUCTION SPECIFICATIONS AND STANDARDS.
6. CONTRACTOR OR ENGINEER MAY USE FLOWABLE BACKFILL AS AN ALTERNATE BACKFILL MATERIAL (SEE C9 FLOWABLE BACKFILL FOR THE SPECIFICATION).

The Architect/Engineer assumes responsibility for appropriate use of this standard.

ADOPTED 6/21/2006 | CITY OF GEORGETOWN CONSTRUCTION STANDARDS AND DETAILS | TRENCH, EMBEDMENT AND PAVEMENT REPLACEMENT DETAIL UNDER EXISTING ROADWAY FOR STORM SEWER | SD40 | NTS | 1/2003 | MRS | TRB

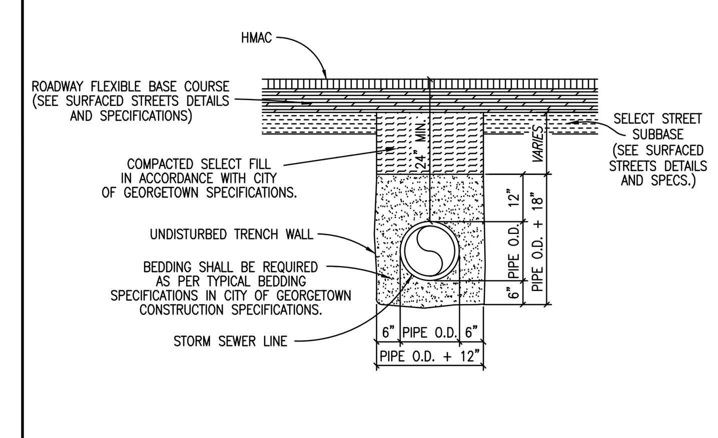

NOTES:
1. DENSITY TESTS SHALL BE TAKEN IN ACCORDANCE WITH THE CITY OF GEORGETOWN CONSTRUCTION SPECIFICATIONS AND STANDARDS.
2. CONTRACTOR OR ENGINEER MAY USE FLOWABLE BACKFILL AS AN ALTERNATE BACKFILL MATERIAL (SEE C9 FLOWABLE BACKFILL FOR THE SPECIFICATION).

TRENCH WIDTHS
*PIPE LESS THAN 20" DIAMETER 1'–0" + PIPE O.D.
*20" DIAMETER PIPE AND LARGER 2'–0" + PIPE O.D.

The Architect/Engineer assumes responsibility for appropriate use of this standard.

ADOPTED 6/21/2006 | CITY OF GEORGETOWN CONSTRUCTION STANDARDS AND DETAILS | TRENCH AND EMBEDMENT DETAIL UNDER PROPOSED ROADWAY FOR STORM SEWER | SD41 | NTS | 1/2003 | MRS | TRB

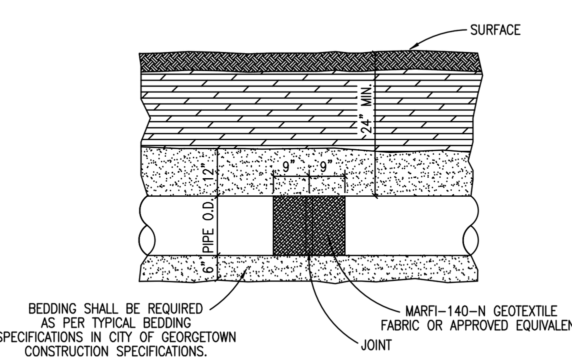

NOTES
1. PIPE SHALL BE REINFORCED CONCRETE PIPE CLASS III UNLESS THE DEPTH OF PIPE REQUIRES A STRONGER CLASS.
2. ALL FITTINGS AND WYES SHALL BE MANUFACTURED AND NOT CONSTRUCTED ON THE PROJECT WITHOUT PRIOR APPROVAL FROM THE CITY.
3. ALL JOINTS SHALL BE WRAPPED WITH MARF1–140–N GEOTEXTILE FABRIC OR APPROVED EQUIVALENT. EACH JOINT SHALL BE WRAPPED WITH 18" WIDE FABRIC CENTERED ON THE JOINT.

The Architect/Engineer assumes responsibility for appropriate use of this standard.

ADOPTED 6/21/2006 | CITY OF GEORGETOWN CONSTRUCTION STANDARDS AND DETAILS | TRENCH AND EMBEDMENT DETAIL (PROFILE) FOR STORM SEWER | SD42 | NTS | 1/2003 | MRS | TRB

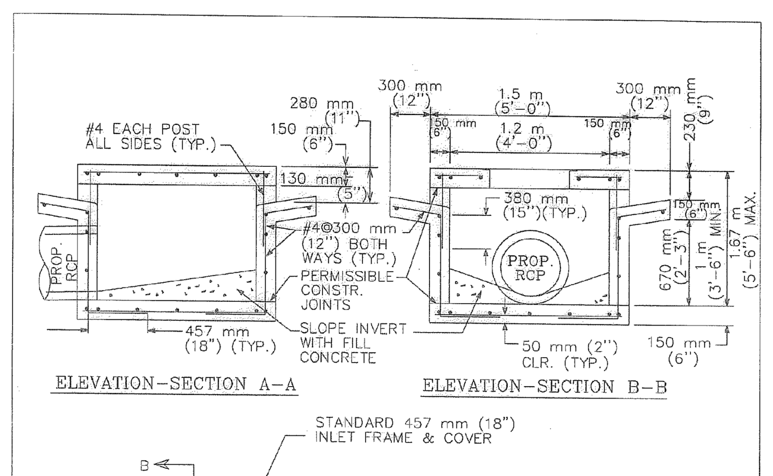

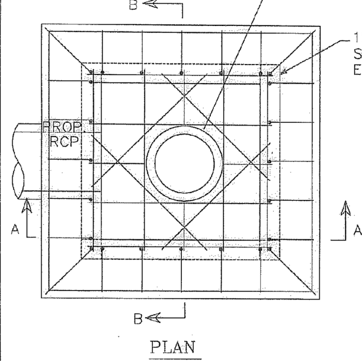

NOTES:
1. CHAMFER ALL EXPOSED EDGES 20 mm (3/4").
2. REINFORCING STEEL SHALL BE CUT OR FIELD–BENT AS REQUIRED TO CLEAR PIPE AND MANHOLE OPENING. ALL CUT STEEL SHALL BE REPLACED WITH ADDITIONAL DIAGONAL BARS OF THE SAME DIAMETER.
3. INLET FRAME AND COVER SHALL BE IN ACCORDANCE WITH CITY OF AUSTIN STANDARD 503S–1.
4. CONCRETE COVERAGE OF STEEL SHALL BE 50 mm (2") MIN. AT ALL SURFACES.
5. ANY MODIFICATION TO THIS STANDARD SHALL BE THE RESPONSIBLITY OF THE DESIGN ENGINEER.

N.T.S.

CITY OF AUSTIN WATERSHED PROTECTION DEPARTMENT | 4-SIDED AREA INLET | THE ARCHITECT/ENGINEER ASSUMES RESPONSIBILITY FOR APPROPRIATE USE OF THIS STANDARD | STANDARD NO. 508S-9 | ADOPTED 3/18/2010

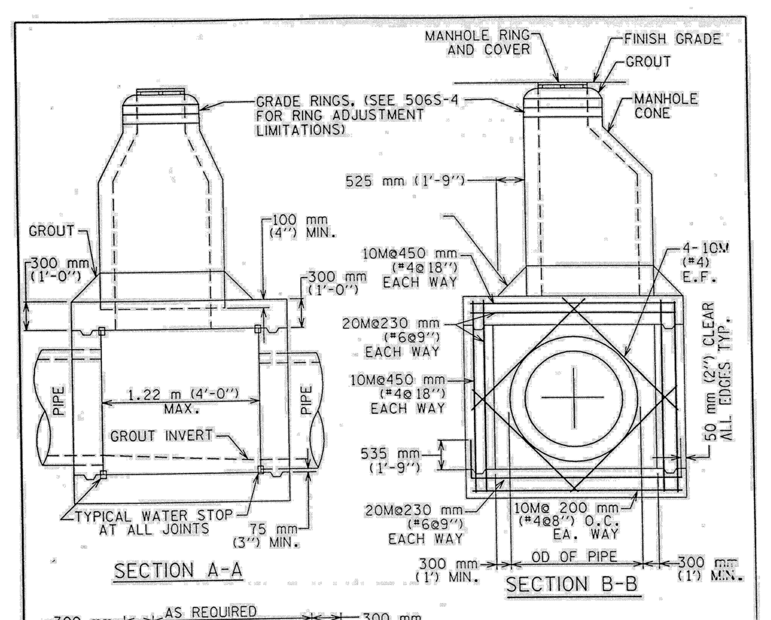

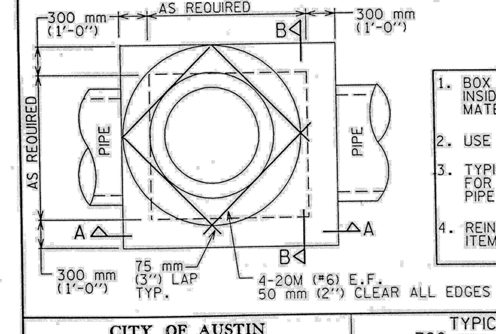

1. BOX WALLS MUST BE FORMED INSIDE AND OUTSIDE WITH APPROVED MATERIALS.
2. USE CLASS "A" CONCRETE.
3. TYPICAL CAST IN PLACE BOX FOR 760 mm (30") OR LARGER PIPE.
4. REINFORCING STEEL SHALL MEET ITEM 406, REINFORCING STEEL.

CITY OF AUSTIN WATER AND WASTEWATER UTILITY | TYPICAL BOX MANHOLE 760 mm (30") & LARGER PIPE | THE ARCHITECT/ENGINEER ASSUMES RESPONSIBILITY FOR APPROPRIATE USE OF THIS STANDARD. | STANDARD NO. 506S-5 | ADOPTED 2-17-00

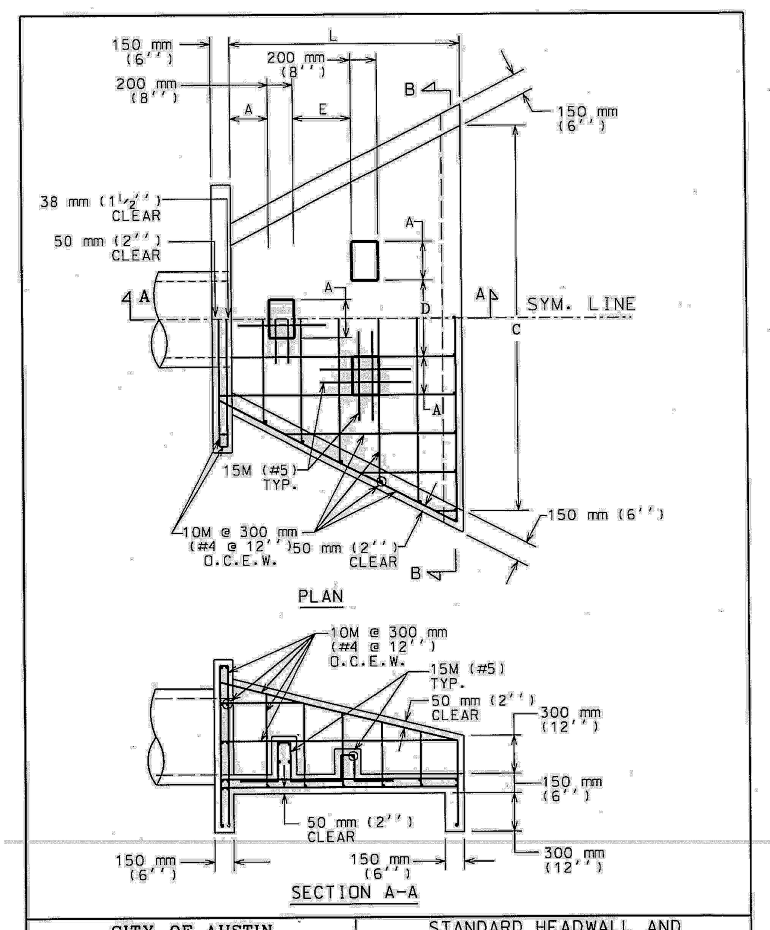

CITY OF AUSTIN DEPARTMENT OF WATERSHED PROTECTION AND DEVELOPMENT REVIEW | STANDARD HEADWALL AND ENERGY DISSIPATORS | THE ARCHITECT/ENGINEER ASSUMES RESPONSIBILITY FOR APPROPRIATE USE OF THIS STANDARD. | STANDARD NO. 508S-13 1 OF 2 | ADOPTED 8/20/07

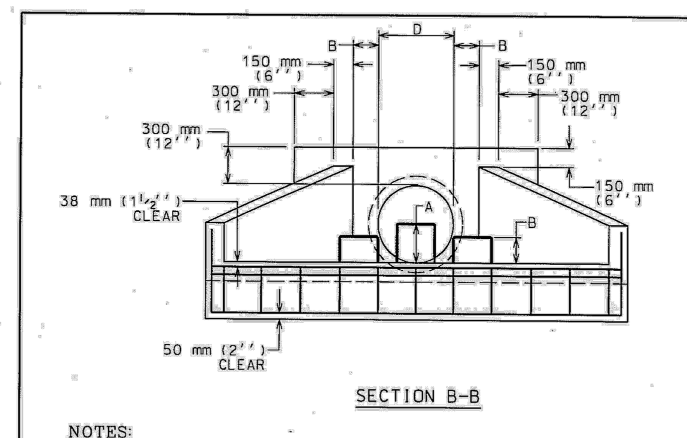

NOTES:
1. ALL CONCRETE SHALL BE TYPE "C" AS PER SPEC. 403S. CONCRETE FOR STURCTURES.
2. CHAMFER ALL EXTERNAL VISIBLE CORNERS.
3. DISSIPATOR BLOCKS REQUIRED ON DISCHARGE HEADWALLS ONLY.

D	457 mm (18")	533 mm (21")	610 mm (24")	685 mm (27")	765 mm (30")	838 mm (33")	914 mm (36")	1.067 m (42")	1.219 m (48")	1.372 m (54")	1.524 m (60")
A	225 mm (9")	250 mm (10")	300 mm (12")	350 mm (14")	375 mm (15")	400 mm (16")	450 mm (18")	525 mm (21")	600 mm (24")	675 mm (27")	750 mm (30")
B	150 mm (6")	175 mm (7")	200 mm (8")	225 mm (9")	250 mm (10")	275 mm (11")	300 mm (12")	350 mm (14")	400 mm (16")	450 mm (18")	500 mm (20")
C	2.29 m (90")	2.67 m (105")	3.05 m (120")	343 m (135")	3.81 m (150")	4.19 m (165")	4.57 m (180")	5.33 m (210")	6.10 m (240")	6.86 m (270")	7.62 m (300")
L	1.37 m (54")	1.60 m (63")	1.83 m (72")	2.06 m (81")	2.29 m (90")	2.51 m (99")	2.74 m (108")	3.20 m (126")	3.66 m (144")	4.11 m (162")	4.57 m (180")
E	300 mm (12")	350 mm (14")	400 mm (16")	450 mm (18")	500 mm (20")	550 mm (22")	600 mm (24")	700 mm (28")	800m (32")	900 mm (36")	1000 mm (40")

DIMENSIONS IN MILLIMETERS, METERS AND (INCHES).
DISCHARGE VELOCITIES GREATER THAN 3 METERS/SECOND (10 fps) REQUIRE ROCK OUTLET PROTECTION.

CITY OF AUSTIN DEPARTMENT OF WATERSHED PROTECTION AND DEVELOPMENT REVIEW | STANDARD HEADWALL AND ENERGY DISSIPATORS | THE ARCHITECT/ENGINEER ASSUMES RESPONSIBILITY FOR APPROPRIATE USE OF THIS STANDARD. | STANDARD NO. 508S-13 2 OF 2 | ADOPTED 8/20/07

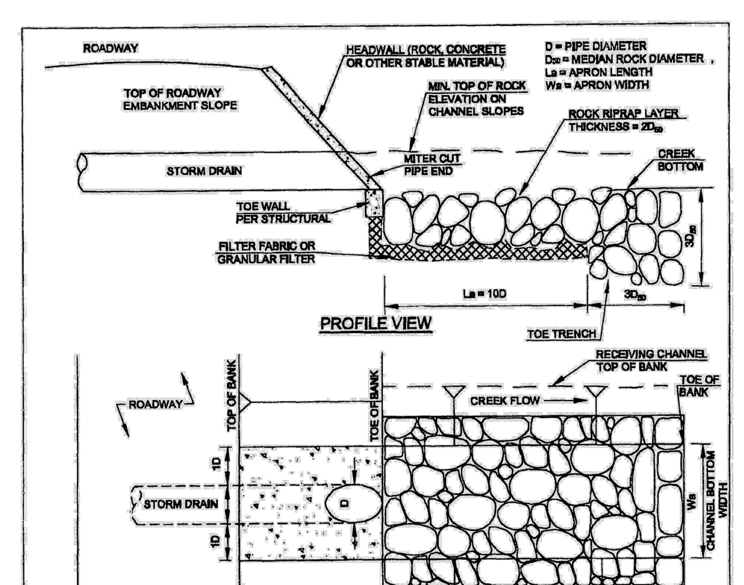

NOTE:
1. ROCK RIPRAP SHALL BE SOUND MATERIAL AND GRADED PER REQUIREMENTS SPECIFIED IN STANDARD SPECIFICATION ITEM NO. 591S.
2. ROCK SIZE (D_{50}) AND GRADATION SHALL BE STABLE FOR THE DESIGN HYDRAULIC CONDITIONS AND IN ACCORDANCE WITH THE ECM 1.4.6.D PERMANENT STRUCTURAL PRACTICES, STONE RIPRAP OR OTHER ENGINEERING STANDARD OF PRACTICE FOR SIZING ROCK RIPRAP. ROCK RIPRAP D_{50} AND FILTER TYPE SHALL BE NOTED ON PLANS.
3. GEOTEXTILE FILTER FABRIC SHALL MEET THE REQUIREMENTS SPECIFIED IN STANDARD SPECIFICATION ITEM NO. 620S.
4. AGGREGATE FOR GRANULAR FILTER SHALL MEET THE REQUIREMENTS SPECIFIED IN STANDARD SPECIFICATION ITEM NO. 403, AGGREGATE SIZE CLASSIFICATION/GRADE, NUMBER OF LAYERS AND LAYER THICKNESS SHOULD BE NOTED ON THE PLANS.

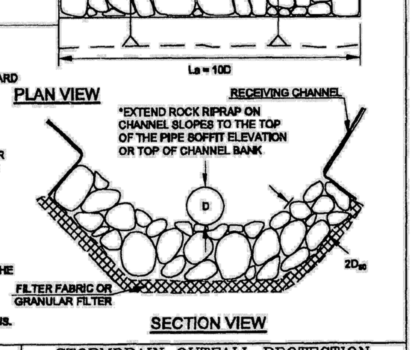

CITY OF AUSTIN WATERSHED PROTECTION DEPARTMENT | STORMDRAIN OUTFALL PROTECTION CULVERT UNDER ROADWAY/INLINE | THE ARCHITECT/ENGINEER ASSUMES RESPONSIBILITY FOR APPROPRIATE USE OF THIS STANDARD. | STANDARD NO. 508S-20 | ADOPTED 9/1/2011

RIP-RAP CLASSIFICATION SPECIFICATIONS

CLASS 1 RIP-RAP

No more than 10% of the stone will have a diameter greater than twelve (12) inches; no more than 50% of the stone will have a diameter less than ten (10) inches; and no more than 10% of the stone will have a diameter of less than six (6) inches. The thickness of the rip-rap liner will be no less than twelve (12) inches.

CLASS 2 RIP-RAP

No more than 10% of the stone will have a diameter greater than sixteen (16) inches; no more than 50% of the stone will have a diameter less than twelve (12) inches; and no more than 10% of the stone will have a diameter of less than six (6) inches. The thickness of the rip-rap liner will be no less than sixteen (16) inches.

CLASS 3 RIP-RAP

No more than 10% of the stone will have a diameter greater than twenty two (22) inches; no more than 50% of the stone will have a diameter less than sixteen (16) inches; and no more than 10% of the stone will have a diameter of less than eight (8) inches. The thickness of the rip-rap liner will be no less than twenty two (22) inches.

CLASS 4 RIP-RAP

No more than 10% of the stone will have a diameter greater than twenty seven (27) inches; no more than 50% of the stone will have a diameter less than twenty two (22) inches; and no more than 10% of the stone will have a diameter of less than ten (10) inches. The thickness of the rip-rap liner will be no less than twenty seven (27) inches.

CLASS 5 RIP-RAP

No more than 10% of the stone will have a diameter greater than thirty four (34) inches; no more than 50% of the stone will have a diameter less than twenty seven (27) inches; and no more than 10% of the stone will have a diameter of less than sixteen (16) inches. The thickness of the rip-rap liner will be no less than thirty four (34) inches.

NO.	REVISION	BY	DATE

811 Know what's below. Call before you dig.

5508 HIGHWAY 290 WEST
SUITE 150
AUSTIN, TX 78735
512.872.6696
HRGREEN.COM
TBPE NO: 16384
TBPLS NO: 10194101
HRGreen® DEVELOPMENT TX

STATE OF TEXAS CHRISTINE N. CAMPBELL 142536 LICENSED PROFESSIONAL ENGINEER
07/03/2025

DRAINAGE DETAILS

PARKSIDE ON THE RIVER SECTIONS 11, 12A & 15A CONSTRUCTION PLANS GEORGETOWN, WILLIAMSON, TEXAS

DESIGNED BY: CC
DRAWN BY: MM
CHECKED BY: SN
APPROVED BY: ______

SHEET 112 OF 141

2025-XX-CON

Plot Style: LandDev Global.ctb
Template: LDC_C3D2022.DWT
P:\Blake Magee\Parkside Sections 11-15 & WON 5\Section 11, 12A & 15A\03_ACAD\Plans\sh2403522 DTLS.dwg, DRAINAGE DETAILS, July 18, 2025, 12:24 PM, makai.muhammad

NOTE - GUARDRAIL SHALL BE PRIMED AND PAINTED BLACK

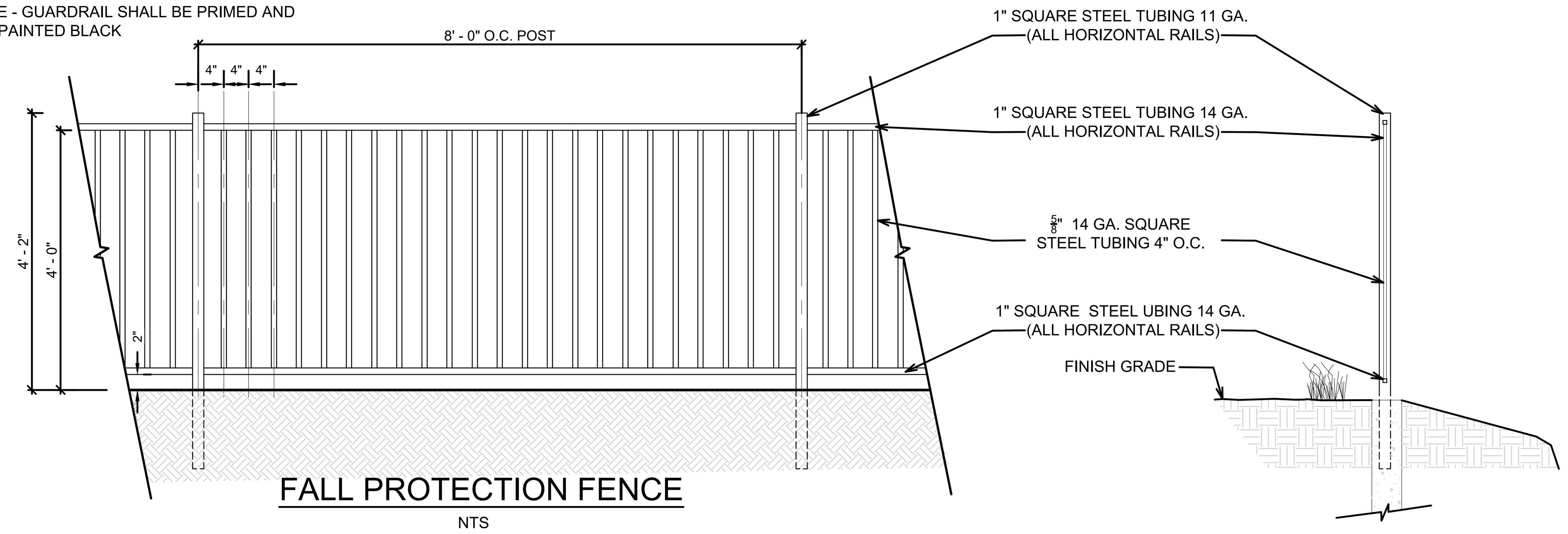

FALL PROTECTION FENCE

NTS

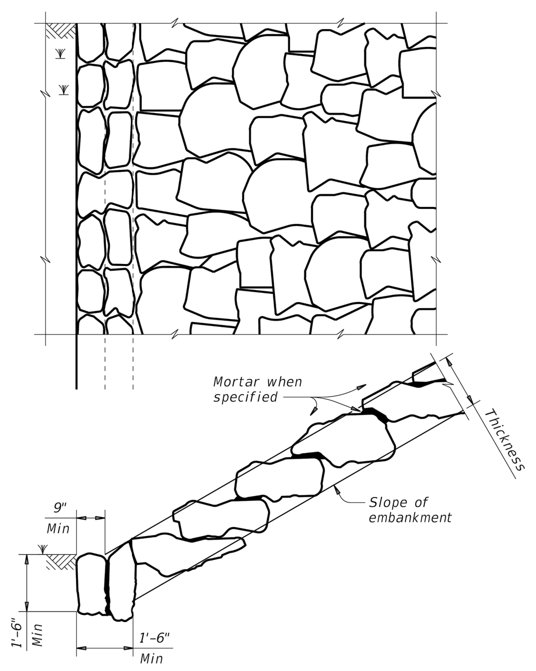

FIGURE 2 ~ TYPE F STONE RIPRAP

dry or mortared

SHEET 2 OF 2

Texas Department of Transportation — Bridge Division Standard

STONE RIPRAP

SRR

FILE: srrstde1-19.dgn	DN: AES	CK: JGD	DW: BWH	CK: AES
©TxDOT April 2019	CONT	SECT	JOB	HIGHWAY
REVISIONS	DIST	COUNTY		SHEET NO.

TYPE F STONE RIPRAP - MORTARED (TXDOT DETAIL - SRR)

N.T.S.

DISCLAIMER: The use of this standard is governed by the "Texas Engineering Practice Act". No warranty of any kind is made by TxDOT for any purpose whatsoever. TxDOT assumes no responsibility for the conversion of this standard to other formats or for incorrect results or damages resulting from its use.

TABLE OF DIMENSIONS AND REINFORCING STEEL (Wings for one structure end)

Maximum Wingwall Height Hw	W	X	Y	Z	Bars J1 Size	Bars J1 Spa	Bars J2 Size	Bars J2 Spa	Reinf (Lb/Ft)	Conc (CY/Ft)
2'-6"	2'-5"	1'-0"	9"	7"	#4	1'-0"	#4	1'-0"	33.73	0.248
3'-0"	2'-5"	1'-0"	9"	7"	#4	1'-0"	#4	1'-0"	37.07	0.261
3'-6"	2'-5"	1'-0"	9"	7"	#4	1'-0"	#4	1'-0"	37.74	0.273
4'-0"	2'-5"	1'-0"	9"	7"	#4	1'-0"	#4	1'-0"	38.41	0.285
4'-6"	3'-2"	1'-6"	1'-0"	7"	#4	1'-0"	#4	1'-0"	41.75	0.330
5'-0"	3'-2"	1'-6"	1'-0"	7"	#4	1'-0"	#4	1'-0"	45.09	0.343
5'-6"	3'-2"	1'-6"	1'-0"	7"	#4	1'-0"	#4	1'-0"	45.75	0.355
6'-0"	3'-2"	1'-6"	1'-0"	7"	#4	1'-0"	#4	1'-0"	46.42	0.367
7'-0"	3'-8"	1'-9"	1'-3"	7"	#4	1'-0"	#4	1'-0"	52.77	0.414
8'-0"	4'-2"	2'-0"	1'-6"	8"	#5	1'-0"	#4	1'-0"	60.19	0.486
9'-0"	4'-8"	2'-3"	1'-9"	8"	#4	6"	#4	6"	81.49	0.535
10'-0"	5'-2"	2'-6"	2'-0"	8"	#5	6"	#4	6"	97.25	0.584
11'-0"	5'-8"	2'-9"	2'-3"	8"	#6	6"	#5	6"	133.65	0.634
12'-0"	6'-2"	3'-0"	2'-6"	9"	#7	6"	#5	6"	162.29	0.721
13'-0"	6'-8"	3'-3"	2'-9"	11"	#7	6"	#5	6"	178.80	0.856
14'-0"	7'-2"	3'-6"	3'-0"	1'-0"	#8	6"	#5	6"	216.78	0.959
15'-0"	7'-8"	4'-0"	3'-0"	1'-1"	#9	6"	#6	6"	283.06	1.068
16'-0"	8'-2"	4'-6"	3'-0"	1'-3"	#9	6"	#6	6"	297.02	1.234

(Dimensions: Hw, W, X, Y, Z; Variable Reinforcing: Bars J1, Bars J2; Estimated Quantities (3) per ft of wing length (2~wings): Reinf, Conc)

TABLE OF WINGWALL REINFORCING (2~wings)

Bar	Size	No.	Spa
D	#5	~	1'-0"
E	#4	~	1'-0"
F	#4	~	1'-0"
G	#6	4	~
M	#4	4	~
P	#4	~	1'-0"
R	#5	6	~
V	#4	~	1'-0"

TABLE OF ESTIMATED CULVERT TOEWALL QUANTITIES

Bar	Size	No.	Spa
L	#4	~	1'-6"
Q	#4	1	~
Reinf (Lb/Ft)			2.45
Conc (CY/Ft)			0.037

WING DIMENSION FORMULAS:

(All values are in feet.)

Hw = H + T + C - 0.250'
A = (Hw - 0.333') (SL)
B = (A) tangent (30°)
Lw = (A) ÷ cosine (30°)

For cast-in-place culverts:
Ltw = (N) (S) + (N + 1) (U)

For precast culverts:
Ltw = (N) (2U + S) + (N - 1) (0.5')

Total wingwall area (two wings ~ SF) = (Hw + 0.333') (Lw)

Hw = Height of wingwall
SL:1 = Side slope ratio (horizontal:1 vertical)
Lw = Length of wingwall
Ltw = Culvert toewall length
N = Number of culvert spans

See applicable box culvert standard sheet for H, S, T, and U values.

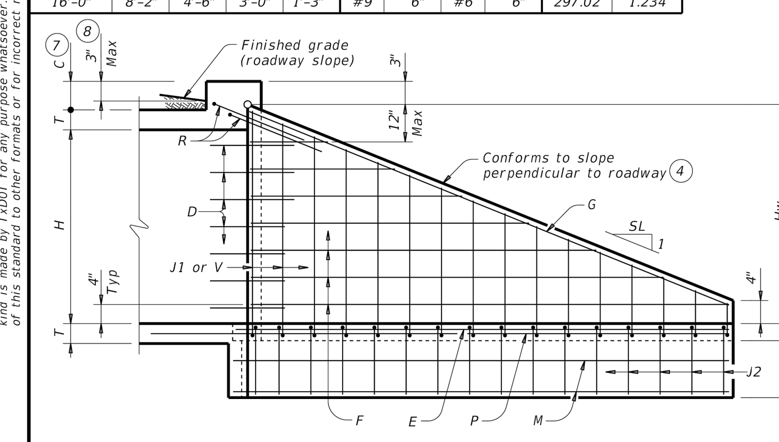

INSIDE ELEVATION

(Showing reinforcing. Culvert and culvert toewall reinforcing not shown for clarity.)

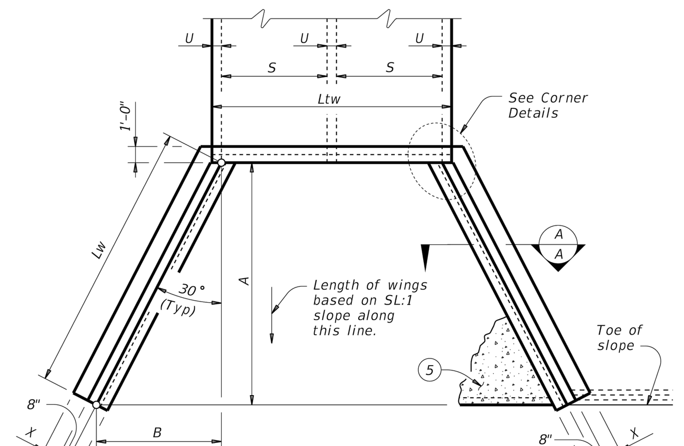

PLAN

(Showing dimensions.)

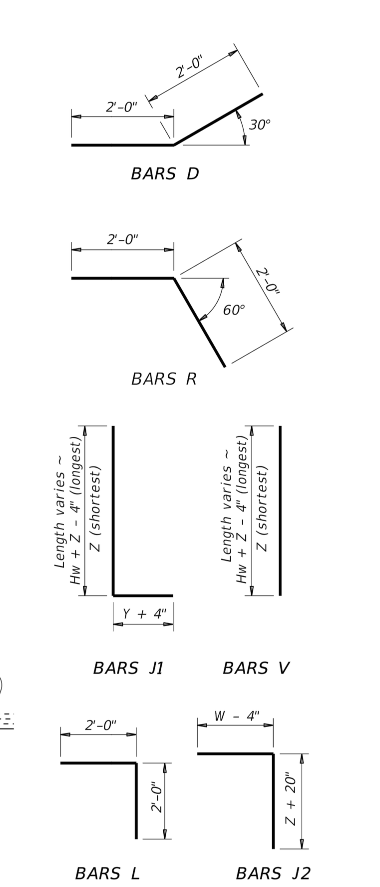

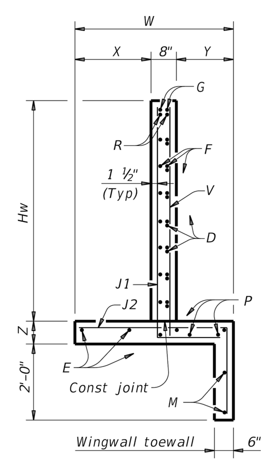

SECTION A-A

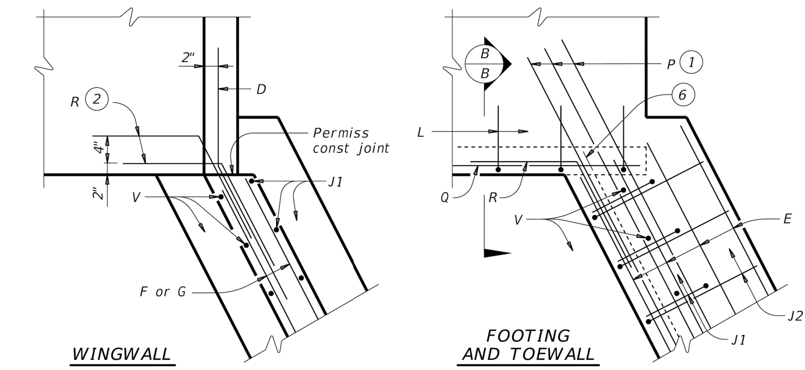

CORNER DETAILS

(Culvert and culvert toewall reinforcing not shown for clarity.)

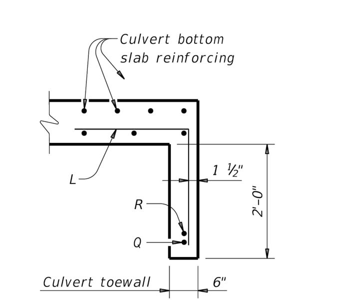

SECTION B-B (5)

(1) Extend Bars P 3'-0" minimum into bottom slab of box culvert.

(2) Adjust as necessary to maintain 1 1#2" clear cover and 4" minimum between bars.

(3) Quantities shown are based on an average wing height for two wings (one structure end). To determine total quantities for two wings, multiply the tabulated values by Lw.

(4) Recommended values of side slope are: 2:1, 3:1, 4:1, and 6:1.

(5) When shown elsewhere on the plans, construct 5" deep concrete riprap. Payment for riprap is as required by Item 432, "Riprap". Unless otherwise shown on the plans or directed by the Engineer, provide a 6" wide by 1'-6" deep reinforced concrete toewall along all edges of the riprap adjacent to natural ground; reinforce the toewall by extending typical riprap reinforcing into the toewall; and extend construction joints or grooved joints oriented in the direction of flow across the full distance of the riprap at intervals of approximately 20'. When such riprap is provided, the culvert toewall shown in SECTION B-B will not be required.

(6) At Contractor's option, culvert toewall may be ended flush with wingwall toewall. Adjust reinforcing as needed.

(7) 0" Min to 5'-0" Max. Estimated curb heights are shown elsewhere in the plans. For structures with pedestrian rail or curbs taller than 1'-0, refer to the Extended Curb Details (ECD) standard sheet. For structures with T631 or T631LS bridge rail, refer to the Mounting Details for T631 & T631LS Rails (T631-CM) standard sheet. Refer to the Box Culvert Rail Mounting Details (RAC) standard sheet for structures with bridge rail other than T631 or T631LS.

(8) For vehicle safety, the following requirements must be met:
- For structures without bridge rail, construct curbs no more than 3" above finished grade.
- For structures with bridge rail, construct curbs flush with finished grade.

Reduce curb heights, if necessary, to meet the above requirements. No changes will be made in quantities and no additional compensation will be allowed for this work.

MATERIAL NOTES:
Provide Class C concrete (f'c=3,600 psi).
Provide Grade 60 reinforcing steel.
Provide galvanized reinforcing steel if required elsewhere in the plans.
In riprap concrete synthetic fibers listed on the "Fibers for Concrete" Material Producer List (MPL) may be used in lieu of steel reinforcing unless noted otherwise.

GENERAL NOTES:
Designed according to AASHTO LRFD Bridge Design Specifications.
When structure is founded on solid rock, depth of toewalls for culverts and wingwalls may be reduced or eliminated as directed by the Engineer.
See Box Culvert Supplement (BCS) standard sheet for additional dimensions and information.
The quantities for concrete and reinforcing steel resulting from the formulas given on this sheet are for Contractor's information only.

Cover dimensions are clear dimensions, unless noted otherwise. Reinforcing dimensions are out-to-out of bars.

Texas Department of Transportation — Bridge Division Standard

CONCRETE WINGWALLS WITH FLARED WINGS FOR 0° SKEW BOX CULVERTS

FW-0

FILE: fw-0stde-20.dgn	DN: GAF	CK: CAT	DW: TxDOT	CK: TxDOT
©TxDOT February 2020	CONT	SECT	JOB	HIGHWAY
REVISIONS	DIST	COUNTY		SHEET NO.

DATE:
FILE:

DISCLAIMER: The use of this standard is governed by the "Texas Engineering Practice Act". No warranty of any kind is made by TxDOT for any purpose whatsoever. TxDOT assumes no responsibility for the conversion of this standard to other formats or for incorrect results or damages resulting from its use.

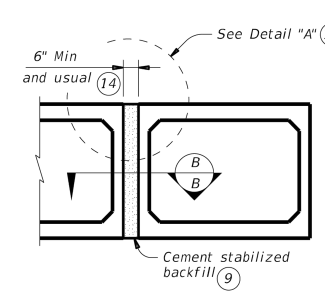

MULTIPLE UNIT PLACEMENT

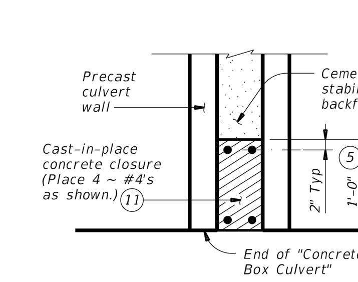

SECTION B-B

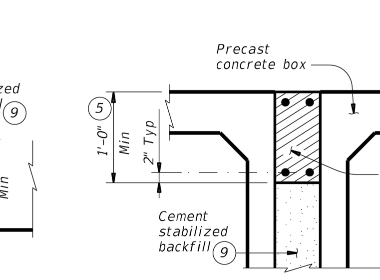

DETAIL "A" (13)

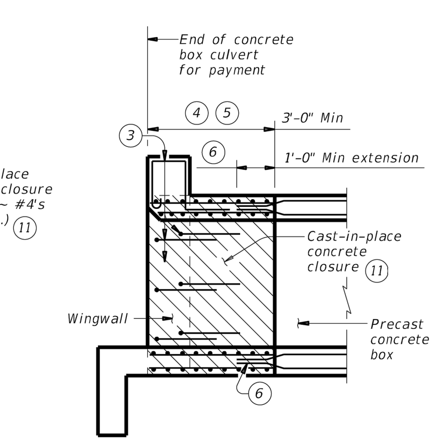

WINGWALL CONNECTION

(Also applies to safety end treatment.)

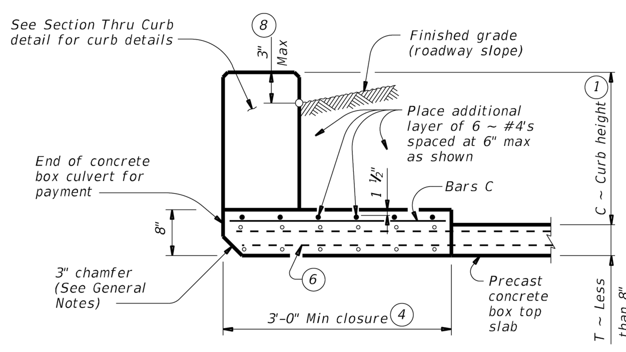

SECTION THRU TOP SLABS LESS THAN 8"

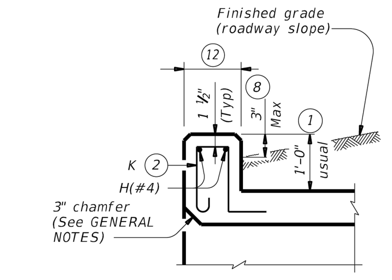

SECTION THRU CURB

QUANTITIES PER FOOT OF CURB (10)	
Reinforcing Steel	4.12 Lb
Concrete	0.037 CY

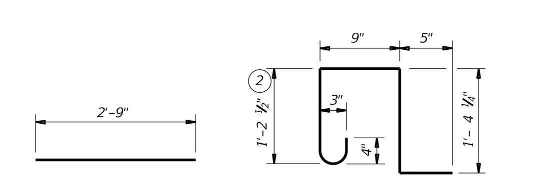

BARS C (#4)
(Spa = 1'-0" Max)

BARS K (#4)
(Spa = 1'-0" Max)
(Length = 4'-2")

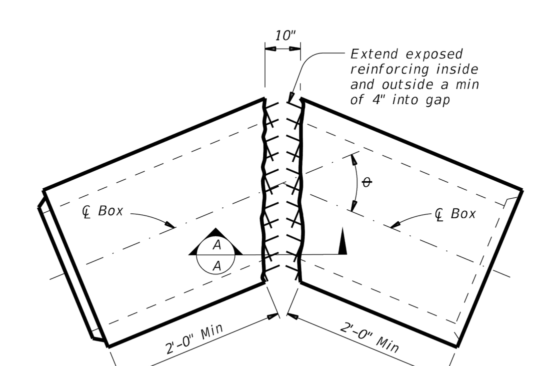

ANGLE DETAIL

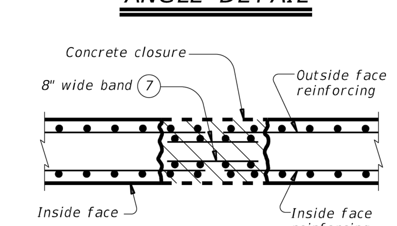

SECTION A-A

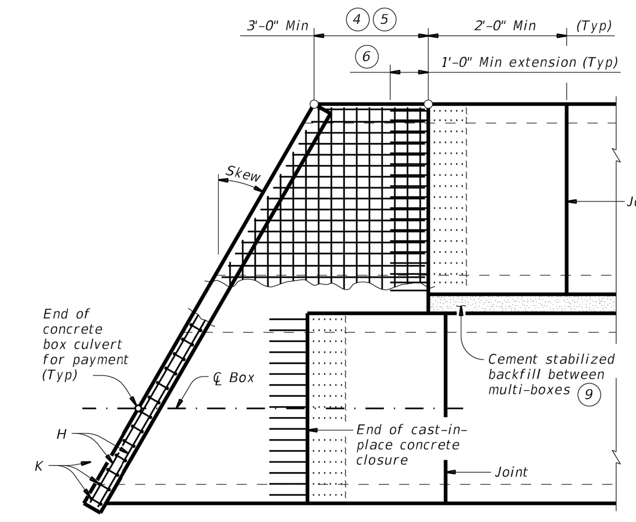

PLAN OF SKEWED ENDS

(Showing multi-box placement.)

(1) 0" Min to 5'-0" Max. Estimated curb heights are shown elsewhere in the plans. For structures with pedestrian rail, bicycle rail, or curbs taller than 1'-0, refer to the Extended Curb Details (ECD) standard sheet. For structures with T631 or T631LS bridge rail, refer to the Mounting Details for T631 & T631LS Rails (T631-CM) standard sheet. Refer to the Box Culvert Rail Mounting Details (RAC) standard sheet for structures with bridge rail other than T631 or T631LS.

(2) For curbs less than 1'-0" high, tilt Bars K or reduce bar height as necessary to maintain cover. For curbs less than 3" high, Bars K may be omitted.

(3) Extend curb, wingwall, or safety end treatment reinforcing into concrete closure. Bend or trim, as necessary, any reinforcing that does not fit into closure area.

(4) Provide a 3'-0" Min cast-in-place concrete closure. Break back boxes in the field or cast boxes short. Provide bands of reinforcing in the closure that are the same size and spacing as in the precast box section. Provide #4 longitudinal reinforcement spaced at 12 inches Max within the closure. Except where shown otherwise, construct the cast-in-place closure flush with the inside and outside faces of the precast box section.

(5) For multiple unit placements, adjust the length of the closure for the interior walls as necessary. Provide a 3'-0" Min cast-in-place closure in the top slab, bottom slab, and exterior wall. See Section B-B detail when interior walls are cast full length.

(6) Extend precast box reinforcing a minimum of 1'-0" into concrete closure (Typ).

(7) Place bands of reinforcing matching the inside and outside face reinforcing in the gaps of the top and bottom slabs. Place a band matching the outside face reinforcing of the wall in the gaps of the walls (placed in the outside face only). Tack weld the bands to the exposed reinforcing at each point of contact.

(8) For vehicle safety, the following requirements must be met:
- For structures without bridge rail, construct curbs no more than 3" above finished grade.
- For structures with bridge rail, construct curbs flush with finished grade.

Reduce curb heights, if necessary, to meet the above requirements. No changes will be made in quantities and no additional compensation will be allowed for this work.

(9) Cement stabilized backfill between boxes is considered part of the box culvert for payment.

(10) All curb concrete and reinforcing is considered part of the box culvert for payment.

(11) Any additional concrete and reinforcing required for the closures will be considered subsidiary to the box culvert for payment.

(12) 1'-0" typical. 2'-3" when the Box Culvert Rail Mounting Details (RAC) standard sheet is referred to elsewhere in the plans.

(13) For multiple unit placement with overlay, with 1 to 2 course surface treatment, or with the top slab as the final riding surface, provide wall closure as shown in Detail "A".

(14) This dimension may be increased with approval of the Engineer to allow the precast boxes to be tunneled or jacked in accordance with Item 476, "Jacking, Boring, or Tunneling Pipe or Box". No payment will be made for any additional material in the gap between adjacent boxes.

MATERIAL NOTES:
Provide Grade 60 reinforcing steel.
Provide ASTM A1064 welded wire reinforcement.
Provide Class C concrete (f'c = 3,600 psi) for the closures.
Provide cement stabilized backfill meeting the requirements of Item 400, "Excavation and Backfill for Structures."
Any additional concrete required for the closures will be considered subsidiary to the box culvert.

GENERAL NOTES:
Designed according to AASHTO LRFD Bridge Design Specifications.
Refer to the Single Box Culverts Precast (SCP) standard sheets for details and notes not shown.
Chamfer the bottom edge of the top slab closure 3 inches at culvert closure ends.

Cover dimensions are clear dimensions, unless noted otherwise. Reinforcing bars dimensions are out-to-out of bars.

HL93 LOADING

Texas Department of Transportation — Bridge Division Standard

BOX CULVERTS PRECAST MISCELLANEOUS DETAILS

SCP-MD

FILE: scpmdsts-20.dgn	DN: GAF	CK: LMW	DW: BWH/TxDOT	CK: GAF
©TxDOT February 2020	CONT	SECT	JOB	HIGHWAY
REVISIONS	DIST	COUNTY		SHEET NO.

DATE:
FILE:

NO.	REVISION	BY	DATE

811 Know what's below. Call before you dig.

5508 HIGHWAY 290 WEST
SUITE 150
AUSTIN, TX 78735
512.872.6696
HRGREEN.COM

TBPE NO: 16384
TBPLS NO: 10194101

HRGreen® DEVELOPMENT TX

STATE OF TEXAS — CHRISTINE N. CAMPBELL — 142536 — LICENSED PROFESSIONAL ENGINEER

07/03/2025

DRAINAGE DETAILS

PARKSIDE ON THE RIVER
SECTIONS 11, 12A & 15A
CONSTRUCTION PLANS
GEORGETOWN, WILLIAMSON, TEXAS

DESIGNED BY: CC
DRAWN BY: MM
CHECKED BY: SN
APPROVED BY:

SHEET 113 OF 141

2025-XX-CON

Plot Style: LandDev Global.ctb
Template: LDC_C3D2022.DWT
P:\Blake Magee\Parkside Sections 11-15 & WON 5\Section 11, 12A & 15A\03_ACAD\Plans\sh2403522 DTLS.dwg, DRAINAGE DETAILS 2, July 18, 2025, 12:24 PM, makai.muhammad

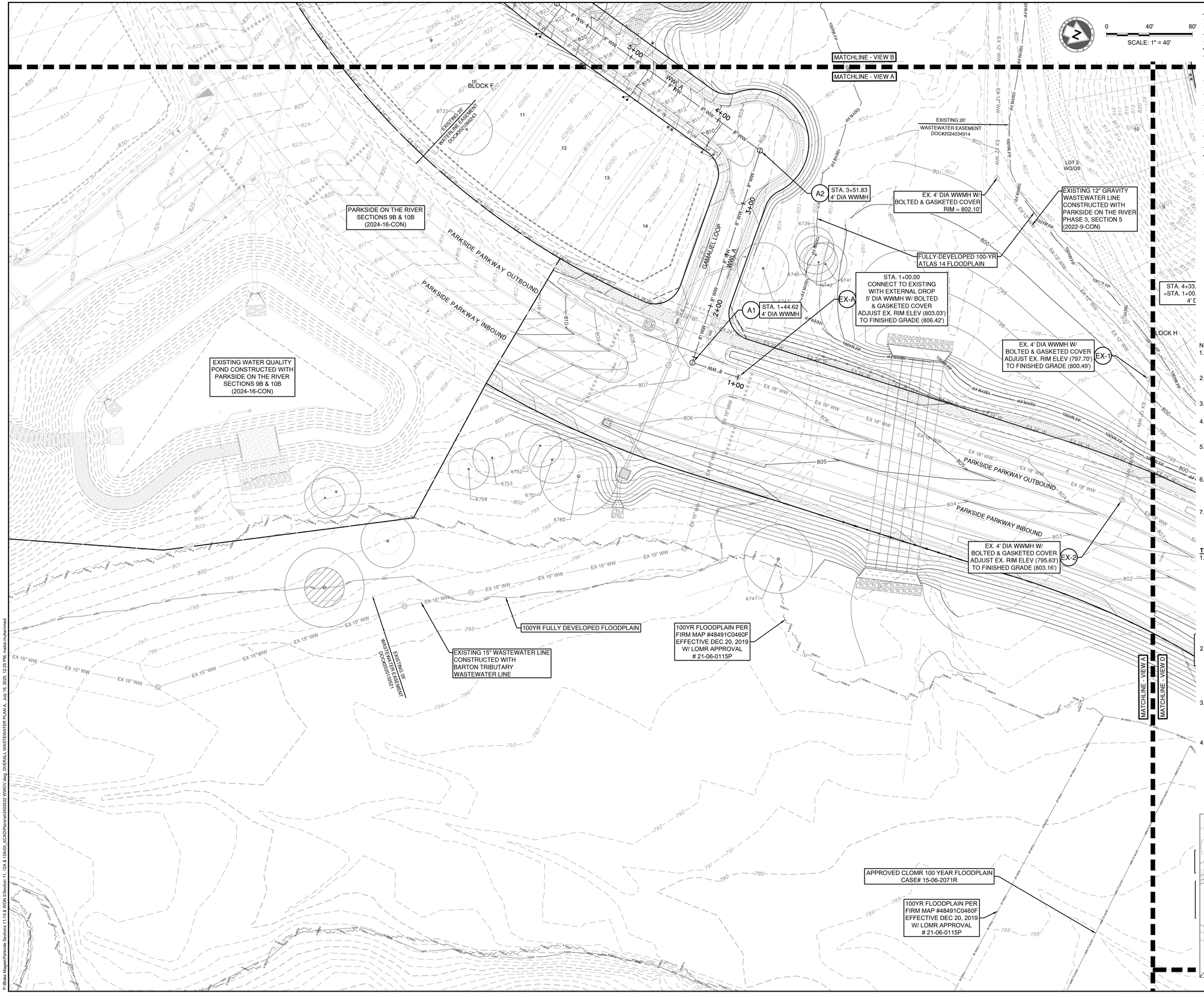

LEGEND

- EXISTING MINOR CONTOUR
- EXISTING MAJOR CONTOUR
- PROPOSED MINOR CONTOUR
- PROPOSED MAJOR CONTOUR
- BOUNDARY
- EASEMENT
- FEMA FLOODWAY PER FIRM# 48491C0460F & LOMR# 21-06-0115P
- FEMA AE — 100YR ATLAS 14 FEMA ZONE AE FLOODPLAIN PER FIRM# 48491C0460F & LOMR# 21-06-0115P
- FEMA A — 100YR FEMA ZONE A FLOODPLAIN PER FIRM MAP# 48491C0460F
- 100YR CLOMR — 100YR CLOMR FLOODPLAIN CASE# 15-06-2071R
- FDFP — 100YR ATLAS 14 FULLY DEVELOPED FLOODPLAIN (STANTEC DRAINAGE STUDY, SHERVIN NOOSHIN, 3/25/19) APPROVED WITH PP# 2019-5-PP
- OHWM — ORDINARY HIGH WATER MARK PER ADAMS ENVIRONMENTAL
- 2-4" SCH 40 PVC SLEEVE
- 8" WW — PROPOSED WASTEWATER LINE
- SD — PROPOSED STORM LINE
- 8" W — PROPOSED WATER LINE
- FIRE HYDRANT
- WATER VALVE
- STORM SEWER MAHNOLE
- WW — WASTEWATER MANHOLE
- CURB INLET
- PROPOSED SINGLE WASTEWATER SERVICE
- PROPOSED DOUBLE WASTEWATER SERVICE
- PROPOSED SINGLE WATER SERVICE
- PROPOSED DOUBLE WATER SERVICE
- TREES TO REMAIN HERITAGE
- TREES TO REMAIN NON HERITAGE

NOTES:

1. REFER TO THE WATER AND WASTEWATER DETAIL SHEET(S) FOR TYPE S AND TYPE D SERVICE CONNECTIONS.
2. UTILITIES ON THIS SITE TO BE BUILT PER THE APPROVED UTILITY ASSIGNMENT SHOWN ON THE WATER AND WASTEWATER DETAIL SHEET.
3. PORTIONS OF THIS SITE LIE WITHIN THE FEMA 100-YR FLOODPLAIN.
4. ALL PROPOSED GRAVITY WASTEWATER PIPES TO BE SDR-26 UNLESS OTHERWISE SPECIFIED ON THE PLANS.
5. UNLESS OTHERWISE NOTED, CONTRACTOR TO ENSURE WW SERVICES ARE SET TO MAXIMUM DEPTH (PER DETAIL WW13) FOR ALL LOTS IN ORDER TO PROVIDE SUFFICIENT DEPTH TO CONNECT SERVICE.
6. ALL MANHOLES TO BE COATED PER CITY OF GEORGETOWN SPECIFICATIONS. EXISTING MANHOLES WITH PROPOSED CONNECTIONS TO BE COATED.
7. IF THE HOME BUILDER CANNOT ACHIEVE THE MINIMUM FINISHED FLOOR ELEVATIONS SPECIFIED, THEN A WASTEWATER GRINDER PUMP SYSTEM MAY BE NEEDED TO CONNECT TO THE WASTEWATER MAIN.

TRENCH SAFETY NOTES:

1. IN ACCORDANCE WITH THE LAWS OF THE STATE OF TEXAS AND THE U.S. OCCUPATIONAL SAFETY AND HEALTH ADMINISTRATION REGULATIONS, ALL TRENCHES OVER 5 FEET IN DEPTH IN EITHER HARD AND COMPACT OR SOFT AND UNSTABLE SOIL SHALL BE SLOPED, SHORED, SHEETED, BRACED OR OTHERWISE SUPPORTED. FURTHERMORE, ALL TRENCHES LESS THAN 5 FEET IN DEPTH SHALL ALSO BE EFFECTIVELY PROTECTED WHEN HAZARDOUS GROUND MOVEMENT MAY BE EXPECTED. TRENCH SAFETY SYSTEMS TO BE UTILIZED FOR THIS PROJECT WILL BE PROVIDE BY THE CONTRACTOR.
2. IN ACCORDANCE WITH THE U.S. OCCUPATIONAL SAFETY AND HEALTH ADMINISTRATION REGULATIONS,WHEN PERSONS ARE IN TRENCHES 4-FEET DEEP OR MORE, ADEQUATE MEANS OF EXIT, SUCH AS A LADDER OR STEPS, MUST BE PROVIDED AND LOCATED SO AS TO REQUIRE NO MORE THAN 25 FEET OF LATERAL TRAVEL.
3. CONSTRUCTION SHALL NOT PROCEED UNTIL APPROPRIATE TRENCH SAFETY SYSTEM DETAILS, AS DESIGNED BY A PROFESSIONAL ENGINEER, ARE RETAINED AND COPIES SUBMITTED TO THE CITY OF GEORGETOWN.
4. DEEP EXCAVATIONS: ON EXCAVATIONS EXCEEDING 20 FEET IN DEPTH, TWO OR MORE MEANS OF EGRESS FROM THE EXCAVATION SHALL BE PROVIDED. THE CONTRACTOR SHALL CONSULT WITH A REGISTERED ENGINEER, EXPERIENCED IN TRENCH SAFETY SYSTEMS, REGARDING SPECIFIC MEANS AND METHODS EMPLOYED. CONTRACTOR SHALL PROVIDE A TRENCH SAFETY PLAN SEALED BY A REGISTERED PROFESSIONAL ENGINEER AS REQUIRED BY THE CITY OF GEORGETOWN.

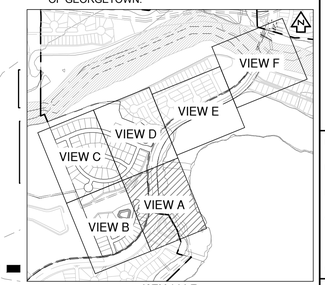

KEY MAP (N.T.S.)

NO	REVISION	BY	DATE

811 Know what's below. Call before you dig.

HRGreen DEVELOPMENT TX
5508 HIGHWAY 290 WEST
SUITE 150
AUSTIN, TX 78735
512.872.6696
HRGREEN.COM
TBPE NO: 16384
TBPLS NO: 10194101

STATE OF TEXAS — CHRISTINE N. CAMPBELL — 142536 — LICENSED PROFESSIONAL ENGINEER

07/15/2025

OVERALL WASTEWATER PLAN A

PARKSIDE ON THE RIVER SECTIONS 11, 12A & 15A CONSTRUCTION PLANS

GEORGETOWN, WILLIAMSON, TEXAS

DESIGNED BY: CC
DRAWN BY: MM
CHECKED BY: SN
APPROVED BY:

SHEET 114 OF 141

2025-XX-CON

P:\Blake Magee\Parkside Sections 11-15 & WCN ESection 11, 12A & 14A\03_ACAD\Planset\240522 WWOV.dwg OVERALL WASTEWATER PLAN A July 16, 2025, 12:25 PM, mkleinmahrmad

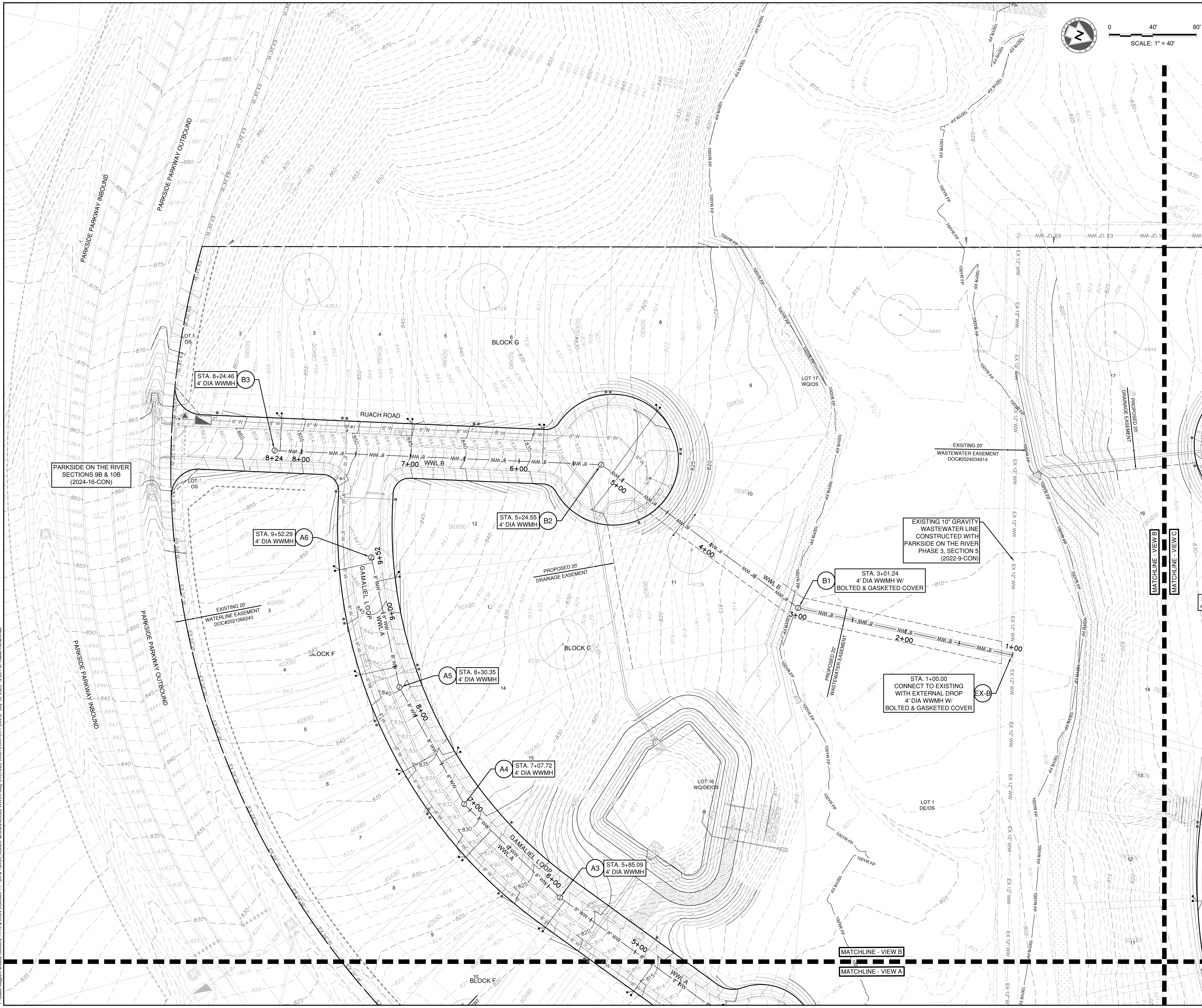

LEGEND

- 834 — EXISTING MINOR CONTOUR
- 835 — EXISTING MAJOR CONTOUR
- 834 — PROPOSED MINOR CONTOUR
- 835 — PROPOSED MAJOR CONTOUR
- BOUNDARY
- EASEMENT
- FEMA FLOODWAY PER FIRM# 48491C0460F & LOMR# 21-06-0115P
- FEMA AE — 100YR ATLAS 14 FEMA ZONE AE FLOODPLAIN PER FIRM# 48491C0460F & LOMR# 21-06-0115P
- FEMA A — 100YR FEMA ZONE A FLOODPLAIN PER FIRM MAP# 48491C0460F
- 100YR CLOMR — 100YR CLOMR FLOODPLAIN CASE# 15-06-2071R
- FDFP — 100YR ATLAS 14 FULLY DEVELOPED FLOODPLAIN (STANTEC DRAINAGE STUDY, SHERVIN NOOSHIN, 3/25/19) APPROVED WITH PP# 2019-5-PP
- OHWM — ORDINARY HIGH WATER MARK PER ADAMS ENVIRONMENTAL
- 2-4" SCH 40 PVC SLEEVE
- 8" WW — PROPOSED WASTEWATER LINE
- SD — PROPOSED STORM LINE
- 8" W — PROPOSED WATER LINE
- FIRE HYDRANT
- WATER VALVE
- SD — STORM SEWER MAHNOLE
- WW — WASTEWATER MANHOLE
- CURB INLET
- PROPOSED SINGLE WASTEWATER SERVICE
- PROPOSED DOUBLE WASTEWATER SERVICE
- PROPOSED SINGLE WATER SERVICE
- PROPOSED DOUBLE WATER SERVICE
- TREES TO REMAIN HERITAGE
- TREES TO REMAIN NON HERITAGE

NOTES:

1. REFER TO THE WATER AND WASTEWATER DETAIL SHEET(S) FOR TYPE S AND TYPE D SERVICE CONNECTIONS.
2. UTILITIES ON THIS SITE TO BE BUILT PER THE APPROVED UTILITY ASSIGNMENT SHOWN ON THE WATER AND WASTEWATER DETAIL SHEET.
3. PORTIONS OF THIS SITE LIE WITHIN THE FEMA 100-YR FLOODPLAIN.
4. ALL PROPOSED GRAVITY WASTEWATER PIPES TO BE SDR-26 UNLESS OTHERWISE SPECIFIED ON THE PLANS.
5. UNLESS OTHERWISE NOTED, CONTRACTOR TO ENSURE WW SERVICES ARE SET TO MAXIMUM DEPTH (PER DETAIL WW13) FOR ALL LOTS IN ORDER TO PROVIDE SUFFICIENT DEPTH TO CONNECT SERVICE.
6. ALL MANHOLES TO BE COATED PER CITY OF GEORGETOWN SPECIFICATIONS. EXISTING MANHOLES WITH PROPOSED CONNECTIONS TO BE COATED.
7. IF THE HOME BUILDER CANNOT ACHIEVE THE MINIMUM FINISHED FLOOR ELEVATIONS SPECIFIED, THEN A WASTEWATER GRINDER PUMP SYSTEM MAY BE NEEDED TO CONNECT TO THE WASTEWATER MAIN.

TRENCH SAFETY NOTES:

1. IN ACCORDANCE WITH THE LAWS OF THE STATE OF TEXAS AND THE U.S. OCCUPATIONAL SAFETY AND HEALTH ADMINISTRATION REGULATIONS, ALL TRENCHES OVER 5 FEET IN DEPTH IN EITHER HARD AND COMPACT OR SOFT AND UNSTABLE SOIL SHALL BE SLOPED, SHORED, SHEETED, BRACED OR OTHERWISE SUPPORTED. FURTHERMORE, ALL TRENCHES LESS THAN 5 FEET IN DEPTH SHALL ALSO BE EFFECTIVELY PROTECTED WHEN HAZARDOUS GROUND MOVEMENT MAY BE EXPECTED. TRENCH SAFETY SYSTEMS TO BE UTILIZED FOR THIS PROJECT WILL BE PROVIDE BY THE CONTRACTOR.
2. IN ACCORDANCE WITH THE U.S. OCCUPATIONAL SAFETY AND HEALTH ADMINISTRATION REGULATIONS,WHEN PERSONS ARE IN TRENCHES 4-FEET DEEP OR MORE, ADEQUATE MEANS OF EXIT, SUCH AS A LADDER OR STEPS, MUST BE PROVIDED AND LOCATED SO AS TO REQUIRE NO MORE THAN 25 FEET OF LATERAL TRAVEL.
3. CONSTRUCTION SHALL NOT PROCEED UNTIL APPROPRIATE TRENCH SAFETY SYSTEM DETAILS, AS DESIGNED BY A PROFESSIONAL ENGINEER, ARE RETAINED AND COPIES SUBMITTED TO THE CITY OF GEORGETOWN.
4. DEEP EXCAVATIONS: ON EXCAVATIONS EXCEEDING 20 FEET IN DEPTH, TWO OR MORE MEANS OF EGRESS FROM THE EXCAVATION SHALL BE PROVIDED. THE CONTRACTOR SHALL CONSULT WITH A REGISTERED ENGINEER, EXPERIENCED IN TRENCH SAFETY SYSTEMS, REGARDING SPECIFIC MEANS AND METHODS EMPLOYED. CONTRACTOR SHALL PROVIDE A TRENCH SAFETY PLAN SEALED BY A REGISTERED PROFESSIONAL ENGINEER AS REQUIRED BY THE CITY OF GEORGETOWN.

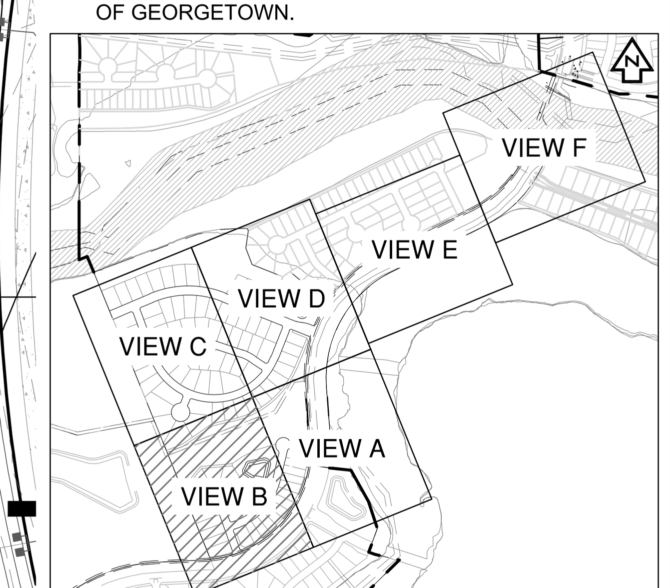

KEY MAP
(N.T.S.)

NO.	REVISION	BY	DATE

Know what's below. Call before you dig. 811

HRGreen DEVELOPMENT TX
5508 HIGHWAY 290 WEST
SUITE 150
AUSTIN, TX 78735
512.872.6696
HRGREEN.COM
TBPE NO: 16384
TBPLS NO: 10194101

STATE OF TEXAS
CHRISTINE N. CAMPBELL
142536
LICENSED PROFESSIONAL ENGINEER
07/03/2025

OVERALL WASTEWATER PLAN B

PARKSIDE ON THE RIVER SECTIONS 11, 12A & 15A CONSTRUCTION PLANS GEORGETOWN, WILLIAMSON, TEXAS

DESIGNED BY: CC
DRAWN BY: MM
CHECKED BY: SN
APPROVED BY:

SHEET 115 OF 141

2025-XX-CON

P:\Blake Magee\Parkside Sections 11-15 & WON 5\Section 11, 12A & 15A\03_ACAD\Plans\sh2403522 WWOV.dwg, OVERALL WASTEWATER PLAN B, July 18, 2025, 12:26 PM, makai.muhammad

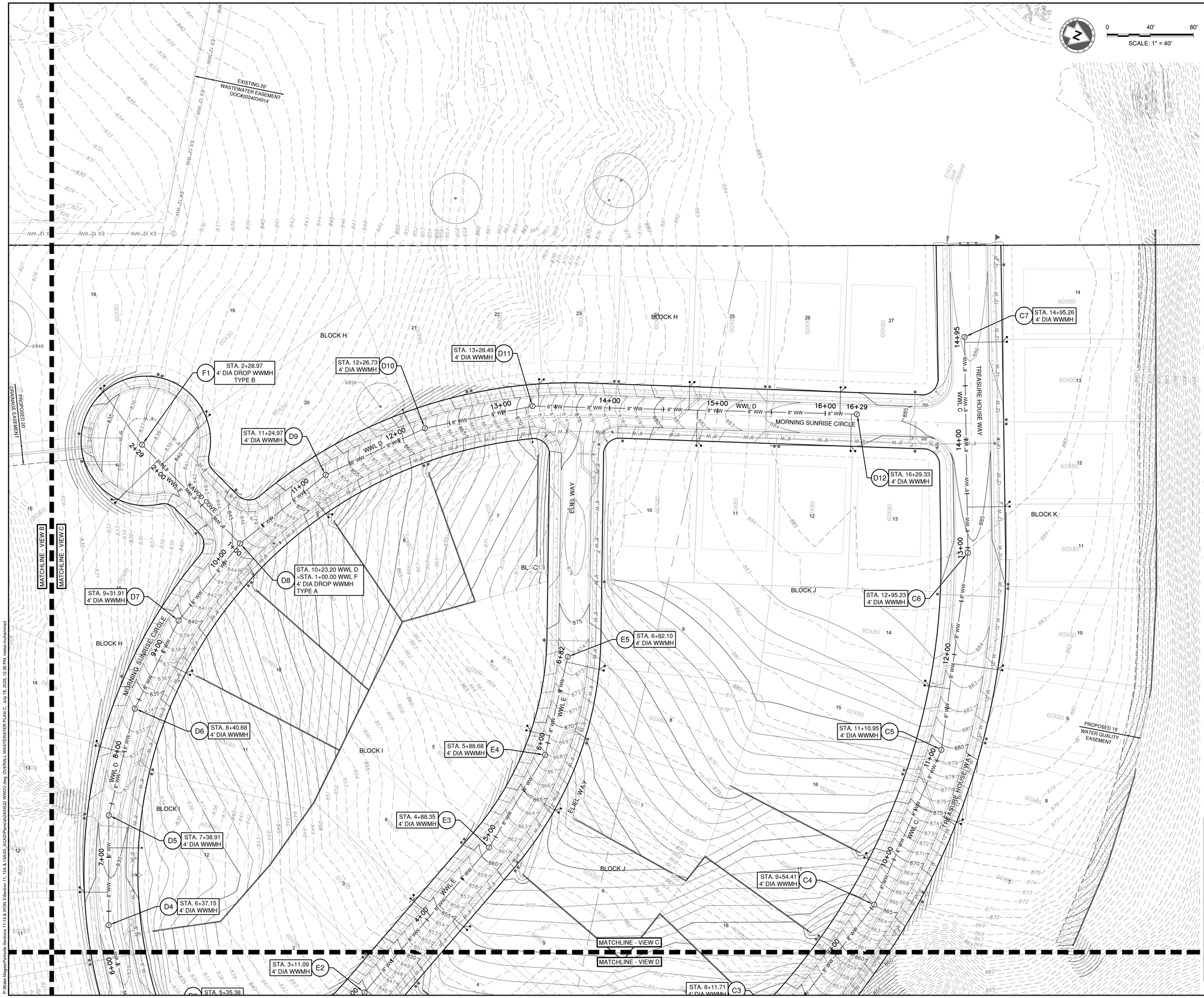

SCALE: 1" = 40'

LEGEND

- EXISTING MINOR CONTOUR
- EXISTING MAJOR CONTOUR
- PROPOSED MINOR CONTOUR
- PROPOSED MAJOR CONTOUR
- BOUNDARY
- EASEMENT
- FEMA FLOODWAY PER FIRM# 48491C0460F & LOMR# 21-06-0115P
- FEMA AE — 100YR ATLAS 14 FEMA ZONE AE FLOODPLAIN PER FIRM# 48491C0460F & LOMR# 21-06-0115P
- FEMA A — 100YR FEMA ZONE A FLOODPLAIN PER FIRM MAP# 48491C0460F
- 100YR CLOMR — 100YR CLOMR FLOODPLAIN CASE# 15-06-2071R
- FDFP — 100YR ATLAS 14 FULLY DEVELOPED FLOODPLAIN (STANTEC DRAINAGE STUDY, SHERVIN NOOSHIN, 3/25/19) APPROVED WITH PP# 2019-5-PP
- OHWM — ORDINARY HIGH WATER MARK PER ADAMS ENVIRONMENTAL
- 2-4" SCH 40 PVC SLEEVE
- 8" WW — PROPOSED WASTEWATER LINE
- SD — PROPOSED STORM LINE
- 8" W — PROPOSED WATER LINE
- FIRE HYDRANT
- WATER VALVE
- STORM SEWER MAHNOLE
- WW — WASTEWATER MANHOLE
- CURB INLET
- PROPOSED SINGLE WASTEWATER SERVICE
- PROPOSED DOUBLE WASTEWATER SERVICE
- PROPOSED SINGLE WATER SERVICE
- PROPOSED DOUBLE WATER SERVICE
- TREES TO REMAIN HERITAGE
- TREES TO REMAIN NON HERITAGE

NOTES:

1. REFER TO THE WATER AND WASTEWATER DETAIL SHEET(S) FOR TYPE S AND TYPE D SERVICE CONNECTIONS.
2. UTILITIES ON THIS SITE TO BE BUILT PER THE APPROVED UTILITY ASSIGNMENT SHOWN ON THE WATER AND WASTEWATER DETAIL SHEET.
3. PORTIONS OF THIS SITE LIE WITHIN THE FEMA 100-YR FLOODPLAIN.
4. ALL PROPOSED GRAVITY WASTEWATER PIPES TO BE SDR-26 UNLESS OTHERWISE SPECIFIED ON THE PLANS.
5. UNLESS OTHERWISE NOTED, CONTRACTOR TO ENSURE WW SERVICES ARE SET TO MAXIMUM DEPTH (PER DETAIL WW13) FOR ALL LOTS IN ORDER TO PROVIDE SUFFICIENT DEPTH TO CONNECT SERVICE.
6. ALL MANHOLES TO BE COATED PER CITY OF GEORGETOWN SPECIFICATIONS. EXISTING MANHOLES WITH PROPOSED CONNECTIONS TO BE COATED.
7. IF THE HOME BUILDER CANNOT ACHIEVE THE MINIMUM FINISHED FLOOR ELEVATIONS SPECIFIED, THEN A WASTEWATER GRINDER PUMP SYSTEM MAY BE NEEDED TO CONNECT TO THE WASTEWATER MAIN.

TRENCH SAFETY NOTES:

1. IN ACCORDANCE WITH THE LAWS OF THE STATE OF TEXAS AND THE U.S. OCCUPATIONAL SAFETY AND HEALTH ADMINISTRATION REGULATIONS, ALL TRENCHES OVER 5 FEET IN DEPTH IN EITHER HARD AND COMPACT OR SOFT AND UNSTABLE SOIL SHALL BE SLOPED, SHORED, SHEETED, BRACED OR OTHERWISE SUPPORTED. FURTHERMORE, ALL TRENCHES LESS THAN 5 FEET IN DEPTH SHALL ALSO BE EFFECTIVELY PROTECTED WHEN HAZARDOUS GROUND MOVEMENT MAY BE EXPECTED. TRENCH SAFETY SYSTEMS TO BE UTILIZED FOR THIS PROJECT WILL BE PROVIDE BY THE CONTRACTOR.
2. IN ACCORDANCE WITH THE U.S. OCCUPATIONAL SAFETY AND HEALTH ADMINISTRATION REGULATIONS,WHEN PERSONS ARE IN TRENCHES 4-FEET DEEP OR MORE, ADEQUATE MEANS OF EXIT, SUCH AS A LADDER OR STEPS, MUST BE PROVIDED AND LOCATED SO AS TO REQUIRE NO MORE THAN 25 FEET OF LATERAL TRAVEL.
3. CONSTRUCTION SHALL NOT PROCEED UNTIL APPROPRIATE TRENCH SAFETY SYSTEM DETAILS, AS DESIGNED BY A PROFESSIONAL ENGINEER, ARE RETAINED AND COPIES SUBMITTED TO THE CITY OF GEORGETOWN.
4. DEEP EXCAVATIONS: ON EXCAVATIONS EXCEEDING 20 FEET IN DEPTH, TWO OR MORE MEANS OF EGRESS FROM THE EXCAVATION SHALL BE PROVIDED. THE CONTRACTOR SHALL CONSULT WITH A REGISTERED ENGINEER, EXPERIENCED IN TRENCH SAFETY SYSTEMS, REGARDING SPECIFIC MEANS AND METHODS EMPLOYED. CONTRACTOR SHALL PROVIDE A TRENCH SAFETY PLAN SEALED BY A REGISTERED PROFESSIONAL ENGINEER AS REQUIRED BY THE CITY OF GEORGETOWN.

NO	REVISION	BY	DATE

811 Know what's below. Call before you dig.

5508 HIGHWAY 290 WEST
SUITE 150
AUSTIN, TX 78735
512.872.6696
HRGREEN.COM
TBPE NO: 16384
TBPLS NO: 10194101

HRGreen® DEVELOPMENT TX

STATE OF TEXAS
CHRISTINE N. CAMPBELL
142536
LICENSED PROFESSIONAL ENGINEER
07/05/2025

OVERALL WASTEWATER PLAN C

PARKSIDE ON THE RIVER SECTIONS 11, 12A & 15A CONSTRUCTION PLANS

GEORGETOWN, WILLIAMSON, TEXAS

DESIGNED BY: CC
DRAWN BY: MM
CHECKED BY: SN
APPROVED BY:

SHEET 116 OF 141

2025-XX-CON

P:\Blake Magee\Parkside Sections 11-15 & WGN EISection 11, 12A & 15A\03_ACAD\Planset\040523 WWOV.dwg, OVERALL WASTEWATER PLAN C, July 18, 2025, 12:26 PM, mstarr.mcdonnell

STA. 6+37.15
4' DIA WWMH
D4

STA. 3+11.09
4' DIA WWMH
E2

STA. 5+35.38
4' DIA WWMH
D3

STA. 2+28.50
4' DIA WWMH
E1

STA. 8+11.71
4' DIA WWMH
C3

STA. 4+33.62 WWL D
=STA. 1+00.00 WWL E
4' DIA WWMH
D2

STA. 3+39.35
4' DIA WWMH
D1

STA. 2+38.51
4' DIA DROP WWMH
TYPE A
C1

STA. 3+48.63 WWL C
=STA. 1+00.00 WWL D
4' DIA WWMH
C2

EX. 4' DIA WWMH W/
BOLTED & GASKETED COVER
ADJUST EX. RIM ELEV (794.65')
TO FINISHED GRADE (800.94')
EX-3

STA. 1+00.00
CONNECT TO EXISTING
4' DIA WWMH W/
BOLTED & GASKETED COVER
ADJUST EX. RIM ELEV (790.55')
TO FINISHED GRADE (799.45')
EX-C

EX. 4' DIA WWMH W/
BOLTED & GASKETED COVER
ADJUST EX. RIM ELEV (788.39')
TO FINISHED GRADE (796.61')
EX-4

APPROVED CLOMR
100 YEAR FLOODPLAIN
CASE# 15-06-2071R

100YR FLOODPLAIN PER
FIRM MAP #48491C0460F
EFFECTIVE DEC 20, 2019
W/ LOMR APPROVAL
21-06-0115P

100YR FULLY DEVELOPED FLOODPLAIN

100YR FLOODPLAIN PER
FIRM MAP #48491C0460F
EFFECTIVE DEC 20, 2019
W/ LOMR APPROVAL
21-06-0115P

FUTURE PARKSIDE
SECTION 12B

EXISTING 35'
WASTEWATER EASEMENT
DOC#2021095521

EXISTING 20'
WATERLINE EASEMENT
DOC#2021095243

PROPOSED 15'
WATER QUALITY
EASEMENT

MATCHLINE - VIEW A

MATCHLINE - VIEW C

MATCHLINE - VIEW D

MATCHLINE - VIEW E

BLOCK H

BLOCK J

BLOCK K

LOT 6
DE/OS

LOT 3
OS

LOT
WQ/DE/OS

TREASURE HOUSE WAY

MORNING SUNRISE CIRCLE

PARKSIDE PARKWAY OUTBOUND

PARKSIDE PARKWAY INBOUND

KADOSH WAY

WWL C

WWL D

WWL E

LEGEND

- EXISTING MINOR CONTOUR
- EXISTING MAJOR CONTOUR
- PROPOSED MINOR CONTOUR
- PROPOSED MAJOR CONTOUR
- BOUNDARY
- EASEMENT
- FEMA FLOODWAY PER FIRM# 48491C0460F & LOMR# 21-06-0115P
- FEMA AE — 100YR ATLAS 14 FEMA ZONE AE FLOODPLAIN PER FIRM# 48491C0460F & LOMR# 21-06-0115P
- FEMA A — 100YR FEMA ZONE A FLOODPLAIN PER FIRM MAP# 48491C0460F
- 100YR CLOMR — 100YR CLOMR FLOODPLAIN CASE# 15-06-2071R
- FDFP — 100YR ATLAS 14 FULLY DEVELOPED FLOODPLAIN (STANTEC DRAINAGE STUDY, SHERVIN NOOSHIN, 3/25/19) APPROVED WITH PP# 2019-5-PP
- OHWM — ORDINARY HIGH WATER MARK PER ADAMS ENVIRONMENTAL
- 2-4" SCH 40 PVC SLEEVE
- 8" WW — PROPOSED WASTEWATER LINE
- SD — PROPOSED STORM LINE
- 8" W — PROPOSED WATER LINE
- FIRE HYDRANT
- WATER VALVE
- SS — STORM SEWER MAHNOLE
- WW — WASTEWATER MANHOLE
- CURB INLET
- PROPOSED SINGLE WASTEWATER SERVICE
- PROPOSED DOUBLE WASTEWATER SERVICE
- PROPOSED SINGLE WATER SERVICE
- PROPOSED DOUBLE WATER SERVICE
- TREES TO REMAIN HERITAGE
- TREES TO REMAIN NON HERITAGE

SCALE: 1" = 40'

NOTES:

1. REFER TO THE WATER AND WASTEWATER DETAIL SHEET(S) FOR TYPE S AND TYPE D SERVICE CONNECTIONS.
2. UTILITIES ON THIS SITE TO BE BUILT PER THE APPROVED UTILITY ASSIGNMENT SHOWN ON THE WATER AND WASTEWATER DETAIL SHEET.
3. PORTIONS OF THIS SITE LIE WITHIN THE FEMA 100-YR FLOODPLAIN.
4. ALL PROPOSED GRAVITY WASTEWATER PIPES TO BE SDR-26 UNLESS OTHERWISE SPECIFIED ON THE PLANS.
5. UNLESS OTHERWISE NOTED, CONTRACTOR TO ENSURE WW SERVICES ARE SET TO MAXIMUM DEPTH (PER DETAIL WW13) FOR ALL LOTS IN ORDER TO PROVIDE SUFFICIENT DEPTH TO CONNECT SERVICE.
6. ALL MANHOLES TO BE COATED PER CITY OF GEORGETOWN SPECIFICATIONS. EXISTING MANHOLES WITH PROPOSED CONNECTIONS TO BE COATED.
7. IF THE HOME BUILDER CANNOT ACHIEVE THE MINIMUM FINISHED FLOOR ELEVATIONS SPECIFIED, THEN A WASTEWATER GRINDER PUMP SYSTEM MAY BE NEEDED TO CONNECT TO THE WASTEWATER MAIN.

TRENCH SAFETY NOTES:

1. IN ACCORDANCE WITH THE LAWS OF THE STATE OF TEXAS AND THE U.S. OCCUPATIONAL SAFETY AND HEALTH ADMINISTRATION REGULATIONS, ALL TRENCHES OVER 5 FEET IN DEPTH IN EITHER HARD AND COMPACT OR SOFT AND UNSTABLE SOIL SHALL BE SLOPED, SHORED, SHEETED, BRACED OR OTHERWISE SUPPORTED. FURTHERMORE, ALL TRENCHES LESS THAN 5 FEET IN DEPTH SHALL ALSO BE EFFECTIVELY PROTECTED WHEN HAZARDOUS GROUND MOVEMENT MAY BE EXPECTED. TRENCH SAFETY SYSTEMS TO BE UTILIZED FOR THIS PROJECT WILL BE PROVIDE BY THE CONTRACTOR.
2. IN ACCORDANCE WITH THE U.S. OCCUPATIONAL SAFETY AND HEALTH ADMINISTRATION REGULATIONS,WHEN PERSONS ARE IN TRENCHES 4-FEET DEEP OR MORE, ADEQUATE MEANS OF EXIT, SUCH AS A LADDER OR STEPS, MUST BE PROVIDED AND LOCATED SO AS TO REQUIRE NO MORE THAN 25 FEET OF LATERAL TRAVEL.
3. CONSTRUCTION SHALL NOT PROCEED UNTIL APPROPRIATE TRENCH SAFETY SYSTEM DETAILS, AS DESIGNED BY A PROFESSIONAL ENGINEER, ARE RETAINED AND COPIES SUBMITTED TO THE CITY OF GEORGETOWN.
4. DEEP EXCAVATIONS: ON EXCAVATIONS EXCEEDING 20 FEET IN DEPTH, TWO OR MORE MEANS OF EGRESS FROM THE EXCAVATION SHALL BE PROVIDED. THE CONTRACTOR SHALL CONSULT WITH A REGISTERED ENGINEER, EXPERIENCED IN TRENCH SAFETY SYSTEMS, REGARDING SPECIFIC MEANS AND METHODS EMPLOYED. CONTRACTOR SHALL PROVIDE A TRENCH SAFETY PLAN SEALED BY A REGISTERED PROFESSIONAL ENGINEER AS REQUIRED BY THE CITY OF GEORGETOWN.

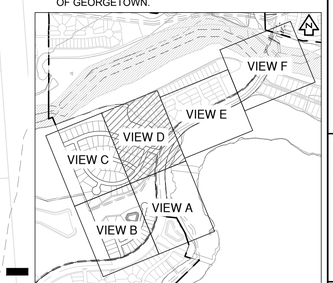

KEY MAP
(N.T.S.)

NO	REVISION	BY	DATE

811 Know what's below. Call before you dig.

HRGreen
DEVELOPMENT TX
5508 HIGHWAY 290 WEST
SUITE 150
AUSTIN, TX 78735
512.872.6696
HRGREEN.COM
TBPE NO: 16384
TBPLS NO: 10194101

STATE OF TEXAS
CHRISTINE N. CAMPBELL
142536
LICENSED PROFESSIONAL ENGINEER
07/15/2025

OVERALL WASTEWATER PLAN D

PARKSIDE ON THE RIVER SECTIONS 11, 12A & 15A CONSTRUCTION PLANS

GEORGETOWN, WILLIAMSON, TEXAS

DESIGNED BY: CC
DRAWN BY: MM
CHECKED BY: SN
APPROVED BY:

SHEET 117 OF 141

2025-XX-CON

P:\Ellen Magner\Parkside Sections 11-15 & WON 5\Section 11, 12A & 15A\03_ACAD\Parkside\240502 WWOV.dwg, OVERALL WASTEWATER PLAN D, July 16, 2025, 12:26 PM, melanie.mohammed

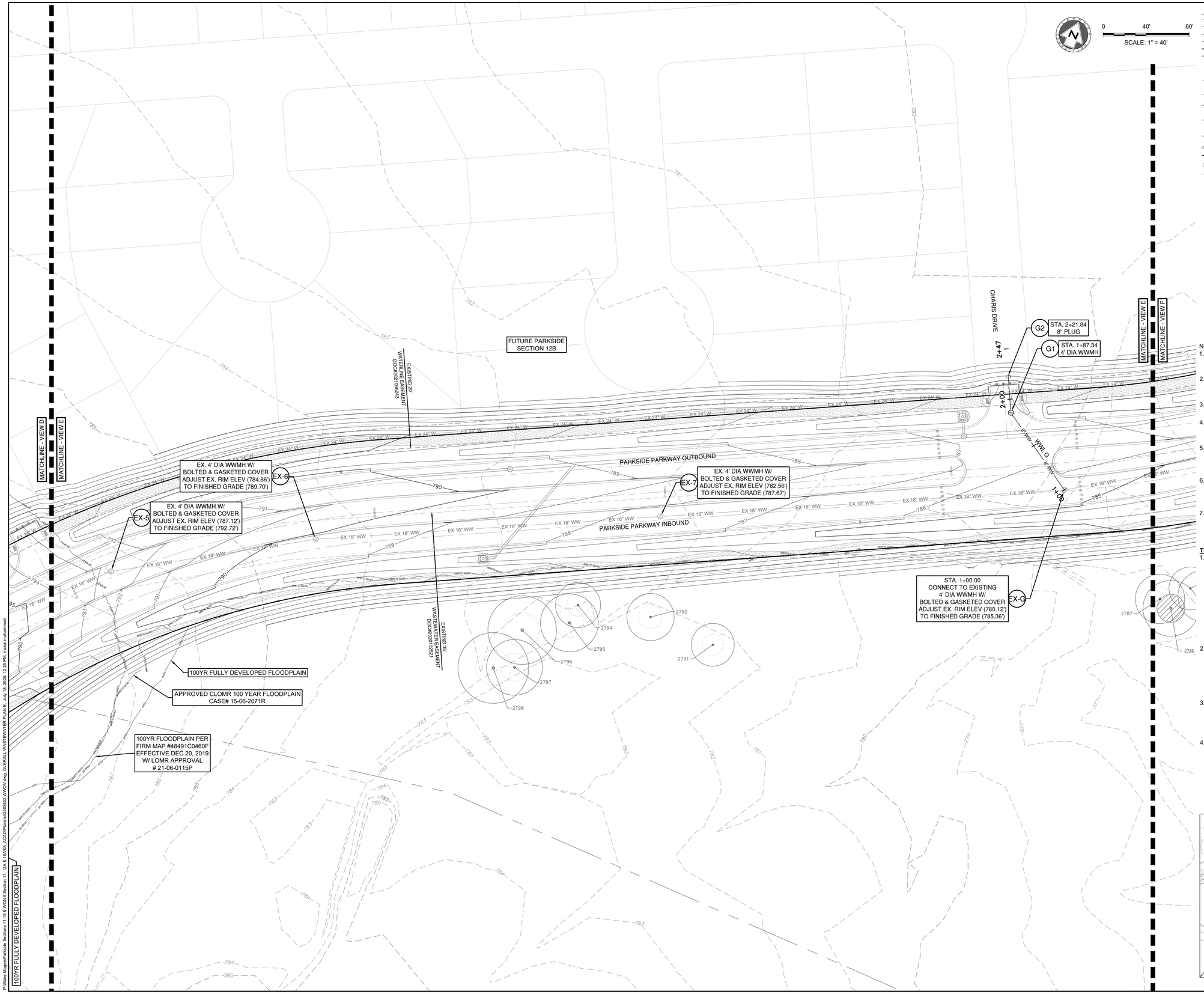

LEGEND

- EXISTING MINOR CONTOUR
- EXISTING MAJOR CONTOUR
- PROPOSED MINOR CONTOUR
- PROPOSED MAJOR CONTOUR
- BOUNDARY
- EASEMENT
- FEMA FLOODWAY PER FIRM# 48491C0460F & LOMR# 21-06-0115P
- FEMA AE — 100YR ATLAS 14 FEMA ZONE AE FLOODPLAIN PER FIRM# 48491C0460F & LOMR# 21-06-0115P
- FEMA A — 100YR FEMA ZONE A FLOODPLAIN PER FIRM MAP# 48491C0460F
- 100YR CLOMR — 100YR CLOMR FLOODPLAIN CASE# 15-06-2071R
- FDFP — 100YR ATLAS 14 FULLY DEVELOPED FLOODPLAIN (STANTEC DRAINAGE STUDY, SHERVIN NOOSHIN, 3/25/19) APPROVED WITH PP# 2019-5-PP
- OHWM — ORDINARY HIGH WATER MARK PER ADAMS ENVIRONMENTAL
- 2-4" SCH 40 PVC SLEEVE
- 8" WW — PROPOSED WASTEWATER LINE
- SD — PROPOSED STORM LINE
- 8" W — PROPOSED WATER LINE
- FIRE HYDRANT
- WATER VALVE
- SD — STORM SEWER MAHNOLE
- WW — WASTEWATER MANHOLE
- CURB INLET
- PROPOSED SINGLE WASTEWATER SERVICE
- PROPOSED DOUBLE WASTEWATER SERVICE
- PROPOSED SINGLE WATER SERVICE
- PROPOSED DOUBLE WATER SERVICE
- TREES TO REMAIN HERITAGE
- TREES TO REMAIN NON HERITAGE

NOTES:

1. REFER TO THE WATER AND WASTEWATER DETAIL SHEET(S) FOR TYPE S AND TYPE D SERVICE CONNECTIONS.
2. UTILITIES ON THIS SITE TO BE BUILT PER THE APPROVED UTILITY ASSIGNMENT SHOWN ON THE WATER AND WASTEWATER DETAIL SHEET.
3. PORTIONS OF THIS SITE LIE WITHIN THE FEMA 100-YR FLOODPLAIN.
4. ALL PROPOSED GRAVITY WASTEWATER PIPES TO BE SDR-26 UNLESS OTHERWISE SPECIFIED ON THE PLANS.
5. UNLESS OTHERWISE NOTED, CONTRACTOR TO ENSURE WW SERVICES ARE SET TO MAXIMUM DEPTH (PER DETAIL WW13) FOR ALL LOTS IN ORDER TO PROVIDE SUFFICIENT DEPTH TO CONNECT SERVICE.
6. ALL MANHOLES TO BE COATED PER CITY OF GEORGETOWN SPECIFICATIONS. EXISTING MANHOLES WITH PROPOSED CONNECTIONS TO BE COATED.
7. IF THE HOME BUILDER CANNOT ACHIEVE THE MINIMUM FINISHED FLOOR ELEVATIONS SPECIFIED, THEN A WASTEWATER GRINDER PUMP SYSTEM MAY BE NEEDED TO CONNECT TO THE WASTEWATER MAIN.

TRENCH SAFETY NOTES:

1. IN ACCORDANCE WITH THE LAWS OF THE STATE OF TEXAS AND THE U.S. OCCUPATIONAL SAFETY AND HEALTH ADMINISTRATION REGULATIONS, ALL TRENCHES OVER 5 FEET IN DEPTH IN EITHER HARD AND COMPACT OR SOFT AND UNSTABLE SOIL SHALL BE SLOPED, SHORED, SHEETED, BRACED OR OTHERWISE SUPPORTED. FURTHERMORE, ALL TRENCHES LESS THAN 5 FEET IN DEPTH SHALL ALSO BE EFFECTIVELY PROTECTED WHEN HAZARDOUS GROUND MOVEMENT MAY BE EXPECTED. TRENCH SAFETY SYSTEMS TO BE UTILIZED FOR THIS PROJECT WILL BE PROVIDE BY THE CONTRACTOR.
2. IN ACCORDANCE WITH THE U.S. OCCUPATIONAL SAFETY AND HEALTH ADMINISTRATION REGULATIONS,WHEN PERSONS ARE IN TRENCHES 4-FEET DEEP OR MORE, ADEQUATE MEANS OF EXIT, SUCH AS A LADDER OR STEPS, MUST BE PROVIDED AND LOCATED SO AS TO REQUIRE NO MORE THAN 25 FEET OF LATERAL TRAVEL.
3. CONSTRUCTION SHALL NOT PROCEED UNTIL APPROPRIATE TRENCH SAFETY SYSTEM DETAILS, AS DESIGNED BY A PROFESSIONAL ENGINEER, ARE RETAINED AND COPIES SUBMITTED TO THE CITY OF GEORGETOWN.
4. DEEP EXCAVATIONS: ON EXCAVATIONS EXCEEDING 20 FEET IN DEPTH, TWO OR MORE MEANS OF EGRESS FROM THE EXCAVATION SHALL BE PROVIDED. THE CONTRACTOR SHALL CONSULT WITH A REGISTERED ENGINEER, EXPERIENCED IN TRENCH SAFETY SYSTEMS, REGARDING SPECIFIC MEANS AND METHODS EMPLOYED. CONTRACTOR SHALL PROVIDE A TRENCH SAFETY PLAN SEALED BY A REGISTERED PROFESSIONAL ENGINEER AS REQUIRED BY THE CITY OF GEORGETOWN.

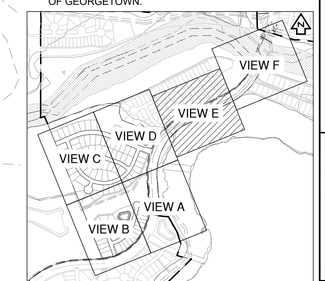

KEY MAP (N.T.S.)

NO	REVISION	BY	DATE

811 Know what's below. Call before you dig.

5508 HIGHWAY 290 WEST
SUITE 150
AUSTIN, TX 78735
512.872.6696
HRGREEN.COM

TBPE NO: 16384
TBPLS NO: 10194101

HRGreen®
DEVELOPMENT TX

STATE OF TEXAS
CHRISTINE N. CAMPBELL
142536
LICENSED PROFESSIONAL ENGINEER
07/15/2025

OVERALL WASTEWATER PLAN E

PARKSIDE ON THE RIVER SECTIONS 11, 12A & 15A CONSTRUCTION PLANS

GEORGETOWN, WILLIAMSON, TEXAS

DESIGNED BY: CC
DRAWN BY: MM
CHECKED BY: SN
APPROVED BY:

SHEET 118 OF 141

2025-XX-CON

P:\Blue Mage\Parkside Sections 11-15 & WOA\Sections 11, 12A & 15A\00_ACAD\Plans\sh2400522 WWOV.dwg, OVERALL WASTEWATER PLAN E, July 16, 2025, 12:28 PM, natalia.muhammed

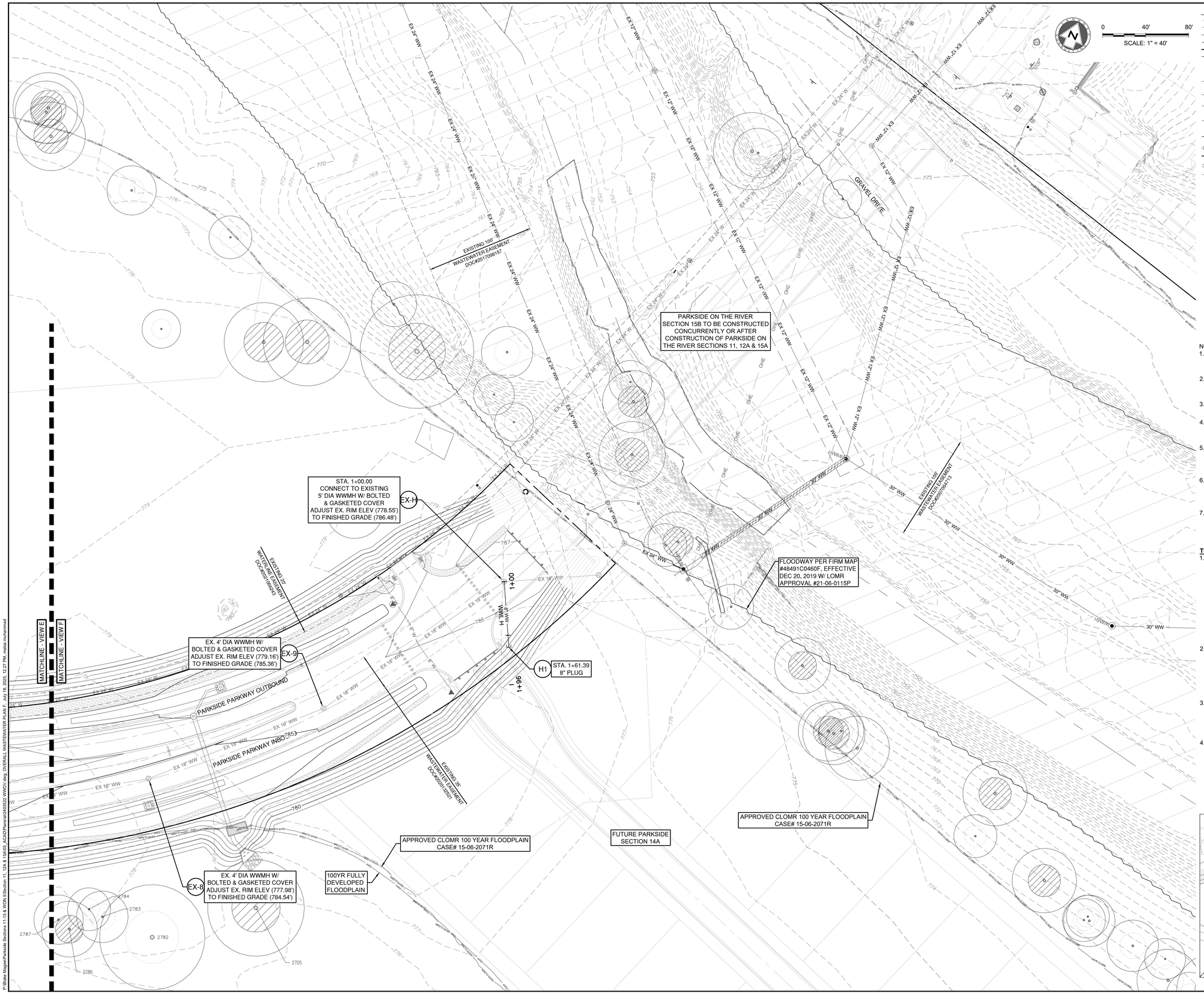

LEGEND

- EXISTING MINOR CONTOUR
- EXISTING MAJOR CONTOUR
- PROPOSED MINOR CONTOUR
- PROPOSED MAJOR CONTOUR
- BOUNDARY
- EASEMENT
- FEMA FLOODWAY PER FIRM# 48491C0460F & LOMR# 21-06-0115P
- FEMA AE — 100YR ATLAS 14 FEMA ZONE AE FLOODPLAIN PER FIRM# 48491C0460F & LOMR# 21-06-0115P
- FEMA A — 100YR FEMA ZONE A FLOODPLAIN PER FIRM MAP# 48491C0460F
- 100YR CLOMR — 100YR CLOMR FLOODPLAIN CASE# 15-06-2071R
- FDFP — 100YR ATLAS 14 FULLY DEVELOPED FLOODPLAIN (STANTEC DRAINAGE STUDY, SHERVIN NOOSHIN, 3/25/19) APPROVED WITH PP# 2019-5-PP
- OHWM — ORDINARY HIGH WATER MARK PER ADAMS ENVIRONMENTAL
- 2-4" SCH 40 PVC SLEEVE
- 8" WW — PROPOSED WASTEWATER LINE
- SD — PROPOSED STORM LINE
- 8" W — PROPOSED WATER LINE
- FIRE HYDRANT
- WATER VALVE
- STORM SEWER MAHNOLE
- WW — WASTEWATER MANHOLE
- CURB INLET
- PROPOSED SINGLE WASTEWATER SERVICE
- PROPOSED DOUBLE WASTEWATER SERVICE
- PROPOSED SINGLE WATER SERVICE
- PROPOSED DOUBLE WATER SERVICE
- TREES TO REMAIN HERITAGE
- TREES TO REMAIN NON HERITAGE

NOTES:

1. REFER TO THE WATER AND WASTEWATER DETAIL SHEET(S) FOR TYPE S AND TYPE D SERVICE CONNECTIONS.
2. UTILITIES ON THIS SITE TO BE BUILT PER THE APPROVED UTILITY ASSIGNMENT SHOWN ON THE WATER AND WASTEWATER DETAIL SHEET.
3. PORTIONS OF THIS SITE LIE WITHIN THE FEMA 100-YR FLOODPLAIN.
4. ALL PROPOSED GRAVITY WASTEWATER PIPES TO BE SDR-26 UNLESS OTHERWISE SPECIFIED ON THE PLANS.
5. UNLESS OTHERWISE NOTED, CONTRACTOR TO ENSURE WW SERVICES ARE SET TO MAXIMUM DEPTH (PER DETAIL WW13) FOR ALL LOTS IN ORDER TO PROVIDE SUFFICIENT DEPTH TO CONNECT SERVICE.
6. ALL MANHOLES TO BE COATED PER CITY OF GEORGETOWN SPECIFICATIONS. EXISTING MANHOLES WITH PROPOSED CONNECTIONS TO BE COATED.
7. IF THE HOME BUILDER CANNOT ACHIEVE THE MINIMUM FINISHED FLOOR ELEVATIONS SPECIFIED, THEN A WASTEWATER GRINDER PUMP SYSTEM MAY BE NEEDED TO CONNECT TO THE WASTEWATER MAIN.

TRENCH SAFETY NOTES:

1. IN ACCORDANCE WITH THE LAWS OF THE STATE OF TEXAS AND THE U.S. OCCUPATIONAL SAFETY AND HEALTH ADMINISTRATION REGULATIONS, ALL TRENCHES OVER 5 FEET IN DEPTH IN EITHER HARD AND COMPACT OR SOFT AND UNSTABLE SOIL SHALL BE SLOPED, SHORED, SHEETED, BRACED OR OTHERWISE SUPPORTED. FURTHERMORE, ALL TRENCHES LESS THAN 5 FEET IN DEPTH SHALL ALSO BE EFFECTIVELY PROTECTED WHEN HAZARDOUS GROUND MOVEMENT MAY BE EXPECTED. TRENCH SAFETY SYSTEMS TO BE UTILIZED FOR THIS PROJECT WILL BE PROVIDE BY THE CONTRACTOR.
2. IN ACCORDANCE WITH THE U.S. OCCUPATIONAL SAFETY AND HEALTH ADMINISTRATION REGULATIONS,WHEN PERSONS ARE IN TRENCHES 4-FEET DEEP OR MORE, ADEQUATE MEANS OF EXIT, SUCH AS A LADDER OR STEPS, MUST BE PROVIDED AND LOCATED SO AS TO REQUIRE NO MORE THAN 25 FEET OF LATERAL TRAVEL.
3. CONSTRUCTION SHALL NOT PROCEED UNTIL APPROPRIATE TRENCH SAFETY SYSTEM DETAILS, AS DESIGNED BY A PROFESSIONAL ENGINEER, ARE RETAINED AND COPIES SUBMITTED TO THE CITY OF GEORGETOWN.
4. DEEP EXCAVATIONS: ON EXCAVATIONS EXCEEDING 20 FEET IN DEPTH, TWO OR MORE MEANS OF EGRESS FROM THE EXCAVATION SHALL BE PROVIDED. THE CONTRACTOR SHALL CONSULT WITH A REGISTERED ENGINEER, EXPERIENCED IN TRENCH SAFETY SYSTEMS, REGARDING SPECIFIC MEANS AND METHODS EMPLOYED. CONTRACTOR SHALL PROVIDE A TRENCH SAFETY PLAN SEALED BY A REGISTERED PROFESSIONAL ENGINEER AS REQUIRED BY THE CITY OF GEORGETOWN.

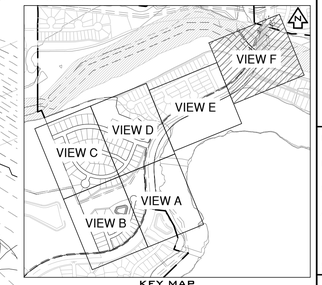

KEY MAP (N.T.S.)

NO	REVISION	BY	DATE

811 Know what's below. Call before you dig.

5508 HIGHWAY 290 WEST
SUITE 150
AUSTIN, TX 78735
512.872.6696
HRGREEN.COM

TBPE NO: 16384
TBPLS NO: 10194101

HRGreen®
DEVELOPMENT TX

STATE OF TEXAS
CHRISTINE N. CAMPBELL
142536
LICENSED PROFESSIONAL ENGINEER
07/15/2025

OVERALL WASTEWATER PLAN F

PARKSIDE ON THE RIVER SECTIONS 11, 12A & 15A CONSTRUCTION PLANS

GEORGETOWN, WILLIAMSON, TEXAS

DESIGNED BY: CC
DRAWN BY: MM
CHECKED BY: SN
APPROVED BY:

SHEET 119 OF 141

2025-XX-CON

P:\Blain Magee\Parkside Sections 11-15 & WOH S\Sections 11, 12A & 15\03_ACAD\Planset\240502\ WWOV.dwg, OVERALL WASTEWATER PLAN F, July 16, 2025, 12:27 PM, malia muhammad

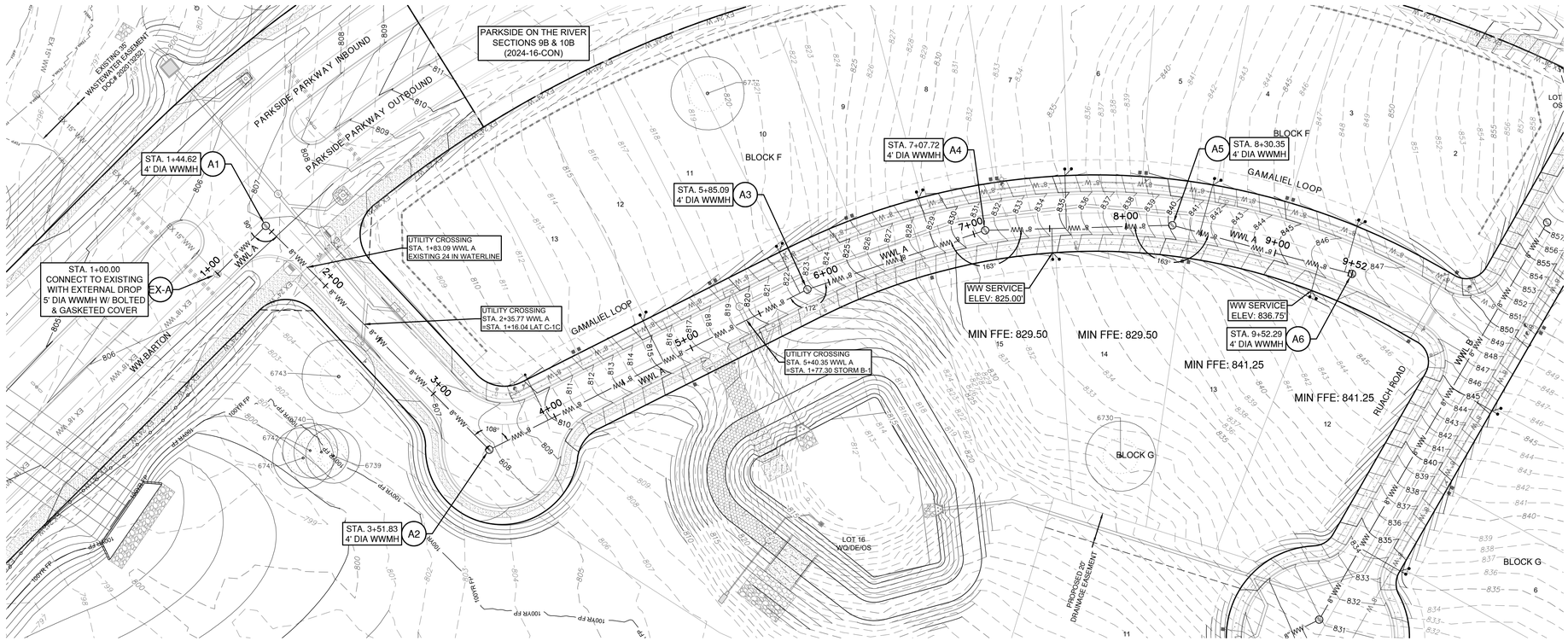

WWL A

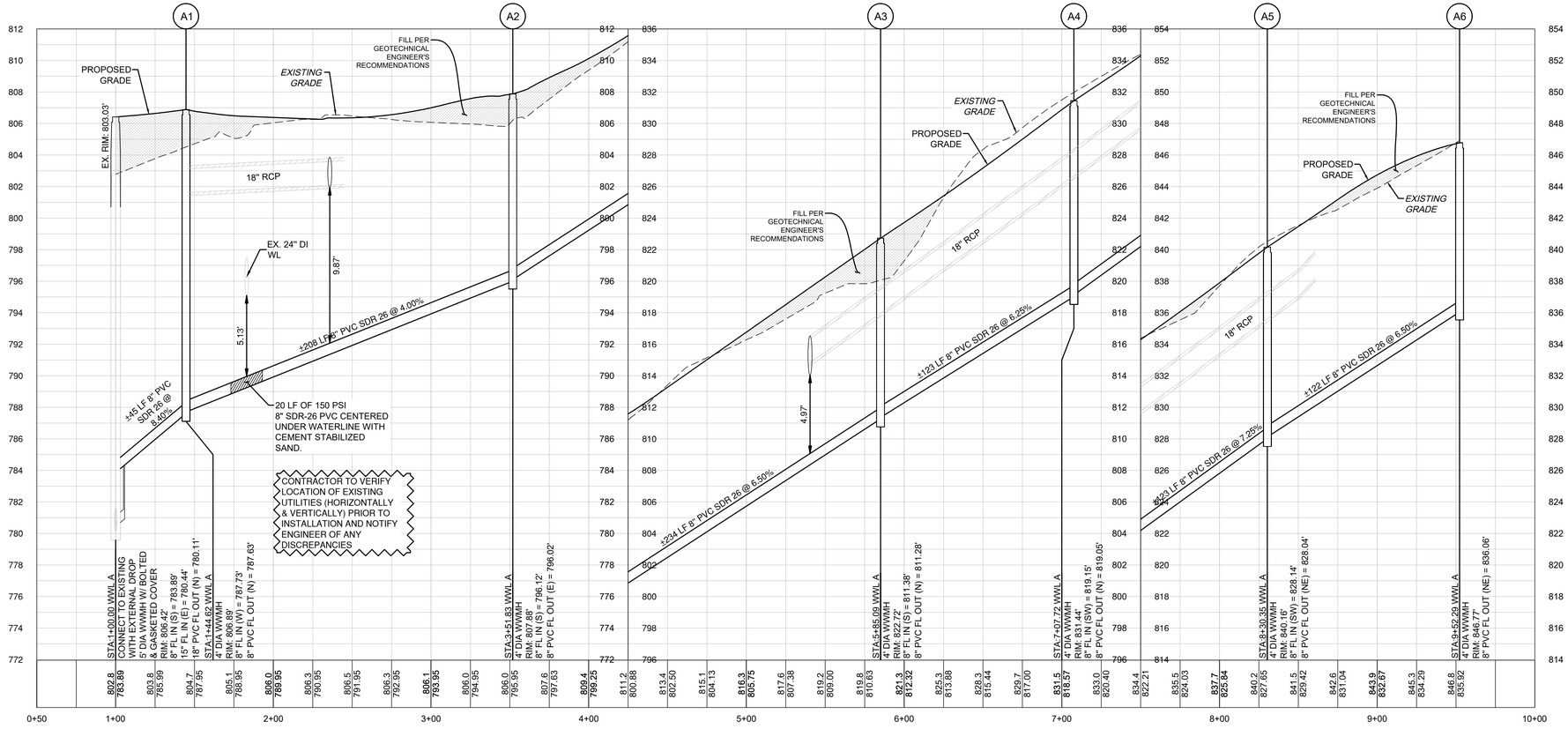

P:\Blkan Magar\Parkside Sections 11-15 & WOA 5\Sections 11, 12A & 15A\03_ACAD\Planset\04052023 WWP\ WWL A.dwg, WWL A PLAN & PROFILE, July 18, 2025, 12:29 PM, makai.muhammad

0 40' 80'
SCALE: 1" = 40'

LEGEND

- EXISTING MINOR CONTOUR
- EXISTING MAJOR CONTOUR
- PROPOSED MINOR CONTOUR
- PROPOSED MAJOR CONTOUR
- BOUNDARY
- EASEMENT
- FEMA FLOODWAY PER FIRM# 48491C0460F & LOMR# 21-06-0115P
- FEMA AE — 100YR ATLAS 14 FEMA ZONE AE FLOODPLAIN PER FIRM# 48491C0460F & LOMR# 21-06-0115P
- FEMA A — 100YR FEMA ZONE A FLOODPLAIN PER FIRM MAP# 48491C0460F
- 100YR CLOMR — 100YR CLOMR FLOODPLAIN CASE# 15-06-2071R
- FDFP — 100YR ATLAS 14 FULLY DEVELOPED FLOODPLAIN (STANTEC DRAINAGE STUDY, SHERVIN NOOSHIN, 3/25/19) APPROVED WITH PP# 2019-5-PP
- OHWM — ORDINARY HIGH WATER MARK PER ADAMS ENVIRONMENTAL
- 2-4" SCH 40 PVC SLEEVE
- 8" WW — PROPOSED WASTEWATER LINE
- SD — PROPOSED STORM LINE
- 8" W — PROPOSED WATER LINE
- FIRE HYDRANT
- WATER VALVE
- STORM SEWER MAHNOLE
- WW — WASTEWATER MANHOLE
- CURB INLET
- PROPOSED SINGLE WASTEWATER SERVICE
- PROPOSED DOUBLE WASTEWATER SERVICE
- PROPOSED SINGLE WATER SERVICE
- PROPOSED DOUBLE WATER SERVICE
- TREES TO REMAIN HERITAGE
- TREES TO REMAIN NON HERITAGE

VERT. SCALE: 1" = 4'
HORZ. SCALE: 1" = 40'

- EXISTING GRADE - CENTERLINE
- FINISHED GRADE - CENTERLINE

4' 2' 0 VERT. SCALE

EXISTING GROUND — 100.0 / 90.0 — PROPOSED FLOWLINE

NOTES:
1. REFER TO THE WATER AND WASTEWATER DETAIL SHEET(S) FOR TYPE S AND TYPE D SERVICE CONNECTIONS.
2. UTILITIES ON THIS SITE TO BE BUILT PER THE APPROVED UTILITY ASSIGNMENT SHOWN ON THE WATER AND WASTEWATER DETAIL SHEET.
3. PORTIONS OF THIS SITE LIE WITHIN THE FEMA 100-YR FLOODPLAIN.
4. ALL PROPOSED GRAVITY WASTEWATER PIPES TO BE SDR-26 UNLESS OTHERWISE SPECIFIED ON THE PLANS.
5. UNLESS OTHERWISE NOTED, CONTRACTOR TO ENSURE WW SERVICES ARE SET TO MAXIMUM DEPTH (PER DETAIL WW13) FOR ALL LOTS IN ORDER TO PROVIDE SUFFICIENT DEPTH TO CONNECT SERVICE.
6. ALL MANHOLES TO BE COATED PER CITY OF GEORGETOWN SPECIFICATIONS. EXISTING MANHOLES WITH PROPOSED CONNECTIONS TO BE COATED.
7. IF THE HOME BUILDER CANNOT ACHIEVE THE MINIMUM FINISHED FLOOR ELEVATIONS SPECIFIED, THEN A WASTEWATER GRINDER PUMP SYSTEM MAY BE NEEDED TO CONNECT TO THE WASTEWATER MAIN.

TRENCH SAFETY NOTES:
1. IN ACCORDANCE WITH THE LAWS OF THE STATE OF TEXAS AND THE U.S. OCCUPATIONAL SAFETY AND HEALTH ADMINISTRATION REGULATIONS, ALL TRENCHES OVER 5 FEET IN DEPTH IN EITHER HARD AND COMPACT OR SOFT AND UNSTABLE SOIL SHALL BE SLOPED, SHORED, SHEETED, BRACED OR OTHERWISE SUPPORTED. FURTHERMORE, ALL TRENCHES LESS THAN 5 FEET IN DEPTH SHALL ALSO BE EFFECTIVELY PROTECTED WHEN HAZARDOUS GROUND MOVEMENT MAY BE EXPECTED. TRENCH SAFETY SYSTEMS TO BE UTILIZED FOR THIS PROJECT WILL BE PROVIDE BY THE CONTRACTOR.
2. IN ACCORDANCE WITH THE U.S. OCCUPATIONAL SAFETY AND HEALTH ADMINISTRATION REGULATIONS,WHEN PERSONS ARE IN TRENCHES 4-FEET DEEP OR MORE, ADEQUATE MEANS OF EXIT, SUCH AS A LADDER OR STEPS, MUST BE PROVIDED AND LOCATED SO AS TO REQUIRE NO MORE THAN 25 FEET OF LATERAL TRAVEL.
3. CONSTRUCTION SHALL NOT PROCEED UNTIL APPROPRIATE TRENCH SAFETY SYSTEM DETAILS, AS DESIGNED BY A PROFESSIONAL ENGINEER, ARE RETAINED AND COPIES SUBMITTED TO THE CITY OF GEORGETOWN.
4. DEEP EXCAVATIONS: ON EXCAVATIONS EXCEEDING 20 FEET IN DEPTH, TWO OR MORE MEANS OF EGRESS FROM THE EXCAVATION SHALL BE PROVIDED. THE CONTRACTOR SHALL CONSULT WITH A REGISTERED ENGINEER, EXPERIENCED IN TRENCH SAFETY SYSTEMS, REGARDING SPECIFIC MEANS AND METHODS EMPLOYED. CONTRACTOR SHALL PROVIDE A TRENCH SAFETY PLAN SEALED BY A REGISTERED PROFESSIONAL ENGINEER AS REQUIRED BY THE CITY OF GEORGETOWN.

NO	REVISION	BY	DATE

Know what's below. Call before you dig.

HRGreen
DEVELOPMENT TX
5508 HIGHWAY 290 WEST
SUITE 150
AUSTIN, TX 78735
512.872.6696
HRGREEN.COM
TBPE NO: 16384
TBPLS NO: 10194101

STATE OF TEXAS
CHRISTINE N. CAMPBELL
142536
LICENSED PROFESSIONAL ENGINEER
07/15/2025

WWL A PLAN & PROFILE

PARKSIDE ON THE RIVER SECTIONS 11, 12A & 15A CONSTRUCTION PLANS

GEORGETOWN, WILLIAMSON, TEXAS

DESIGNED BY: CC
DRAWN BY: MM
CHECKED BY: SN
APPROVED BY:

SHEET 120 OF 141

2025-XX-CON

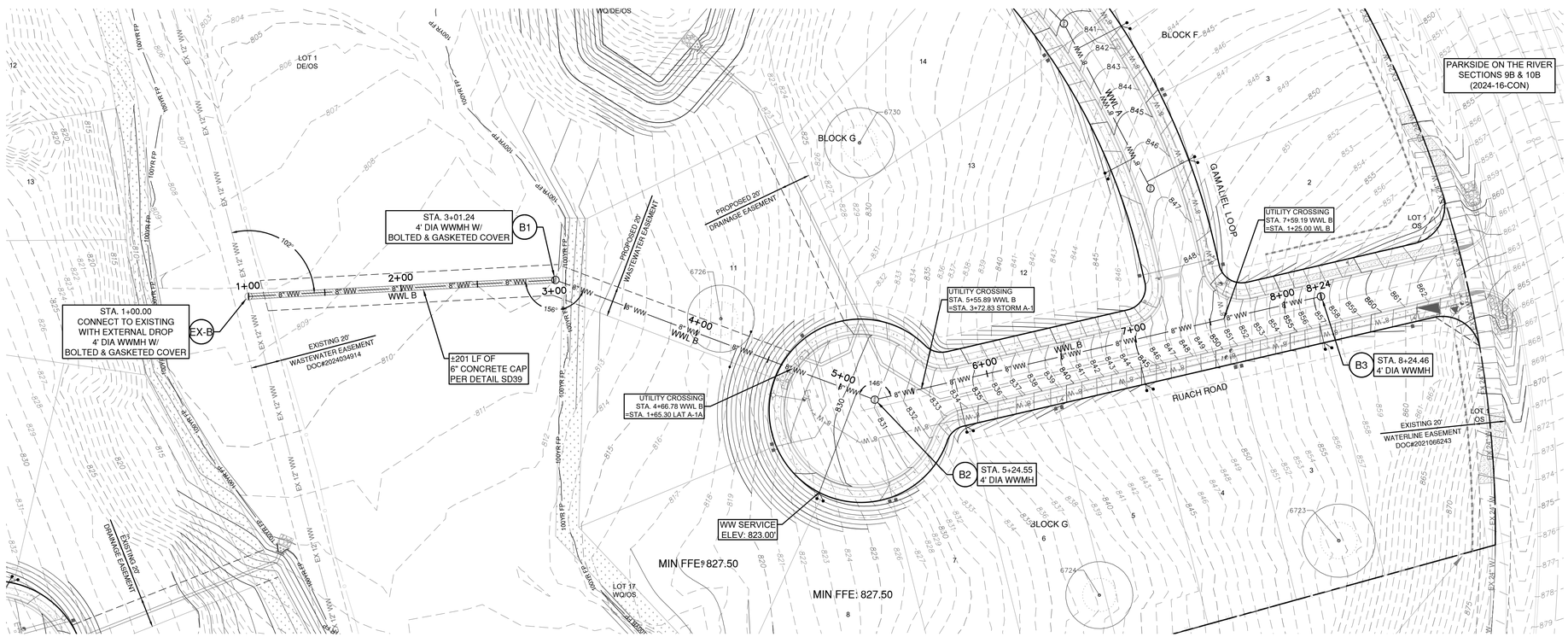

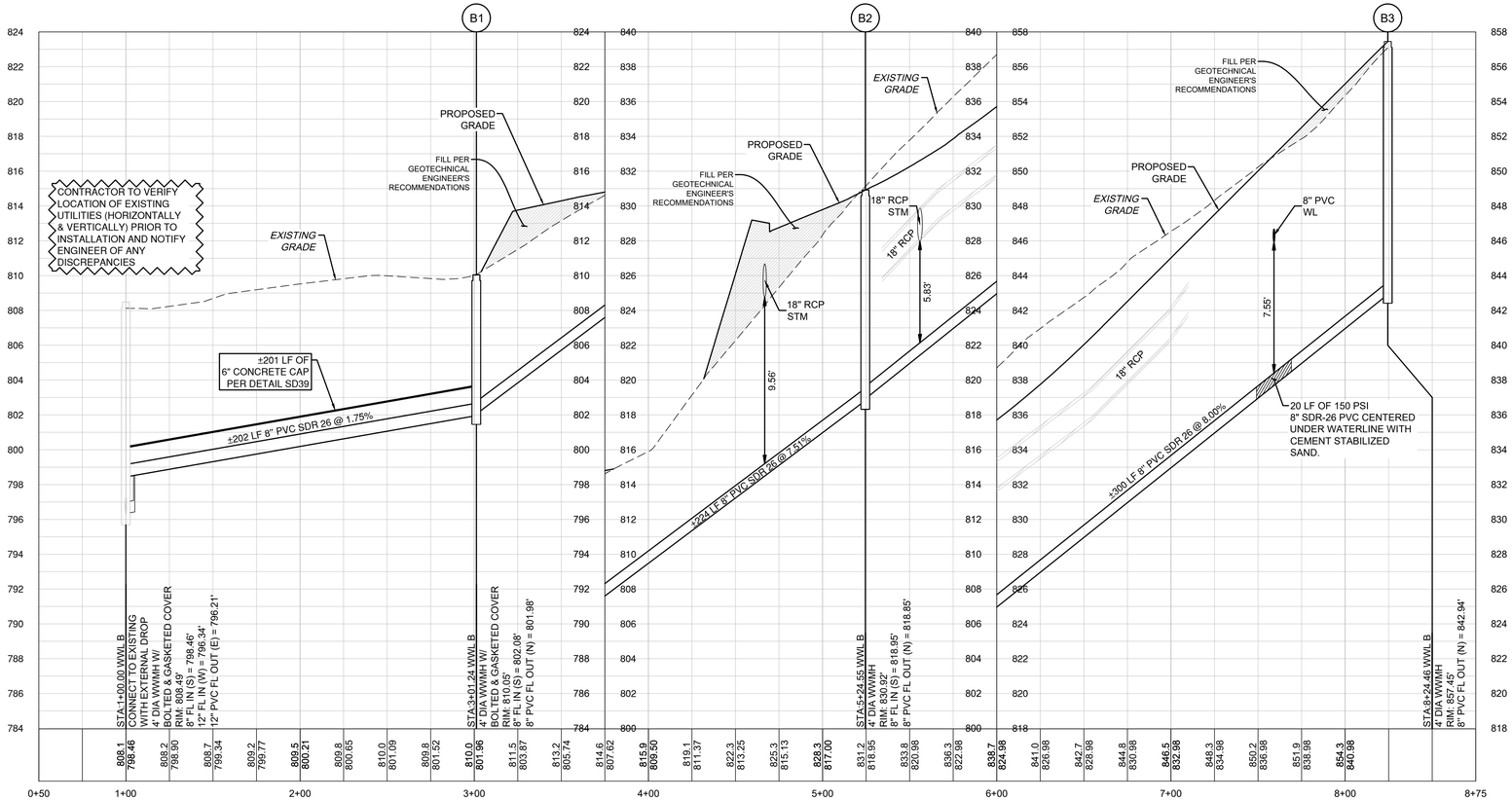

LEGEND

- EXISTING MINOR CONTOUR
- EXISTING MAJOR CONTOUR
- PROPOSED MINOR CONTOUR
- PROPOSED MAJOR CONTOUR
- BOUNDARY
- EASEMENT
- FEMA FLOODWAY PER FIRM# 48491C0460F & LOMR# 21-06-0115P
- FEMA AE — 100YR ATLAS 14 FEMA ZONE AE FLOODPLAIN PER FIRM# 48491C0460F & LOMR# 21-06-0115P
- FEMA A — 100YR FEMA ZONE A FLOODPLAIN PER FIRM MAP# 48491C0460F
- 100YR CLOMR — 100YR CLOMR FLOODPLAIN CASE# 15-06-2071R
- FDFP — 100YR ATLAS 14 FULLY DEVELOPED FLOODPLAIN (STANTEC DRAINAGE STUDY, SHERVIN NOOSHIN, 3/25/19) APPROVED WITH PP# 2019-5-PP
- OHWM — ORDINARY HIGH WATER MARK PER ADAMS ENVIRONMENTAL
- 2-4" SCH 40 PVC SLEEVE
- 8" WW — PROPOSED WASTEWATER LINE
- SD — PROPOSED STORM LINE
- 8" W — PROPOSED WATER LINE
- FIRE HYDRANT
- WATER VALVE
- SD — STORM SEWER MAHNOLE
- AW — WASTEWATER MANHOLE
- CURB INLET
- PROPOSED SINGLE WASTEWATER SERVICE
- PROPOSED DOUBLE WASTEWATER SERVICE
- PROPOSED SINGLE WATER SERVICE
- PROPOSED DOUBLE WATER SERVICE
- TREES TO REMAIN HERITAGE
- TREES TO REMAIN NON HERITAGE

VERT. SCALE: 1" = 4'
HORZ. SCALE: 1" = 40'

EXISTING GRADE - CENTERLINE
FINISHED GRADE - CENTERLINE

4'
2'
0
VERT. SCALE

EXISTING GROUND — 100.0 / 99.0 — PROPOSED FLOWLINE

NOTES:

1. REFER TO THE WATER AND WASTEWATER DETAIL SHEET(S) FOR TYPE S AND TYPE D SERVICE CONNECTIONS.
2. UTILITIES ON THIS SITE TO BE BUILT PER THE APPROVED UTILITY ASSIGNMENT SHOWN ON THE WATER AND WASTEWATER DETAIL SHEET.
3. PORTIONS OF THIS SITE LIE WITHIN THE FEMA 100-YR FLOODPLAIN.
4. ALL PROPOSED GRAVITY WASTEWATER PIPES TO BE SDR-26 UNLESS OTHERWISE SPECIFIED ON THE PLANS.
5. UNLESS OTHERWISE NOTED, CONTRACTOR TO ENSURE WW SERVICES ARE SET TO MAXIMUM DEPTH (PER DETAIL WW13) FOR ALL LOTS IN ORDER TO PROVIDE SUFFICIENT DEPTH TO CONNECT SERVICE.
6. ALL MANHOLES TO BE COATED PER CITY OF GEORGETOWN SPECIFICATIONS. EXISTING MANHOLES WITH PROPOSED CONNECTIONS TO BE COATED.
7. IF THE HOME BUILDER CANNOT ACHIEVE THE MINIMUM FINISHED FLOOR ELEVATIONS SPECIFIED, THEN A WASTEWATER GRINDER PUMP SYSTEM MAY BE NEEDED TO CONNECT TO THE WASTEWATER MAIN.

TRENCH SAFETY NOTES:

1. IN ACCORDANCE WITH THE LAWS OF THE STATE OF TEXAS AND THE U.S. OCCUPATIONAL SAFETY AND HEALTH ADMINISTRATION REGULATIONS, ALL TRENCHES OVER 5 FEET IN DEPTH IN EITHER HARD AND COMPACT OR SOFT AND UNSTABLE SOIL SHALL BE SLOPED, SHORED, SHEETED, BRACED OR OTHERWISE SUPPORTED. FURTHERMORE, ALL TRENCHES LESS THAN 5 FEET IN DEPTH SHALL ALSO BE EFFECTIVELY PROTECTED WHEN HAZARDOUS GROUND MOVEMENT MAY BE EXPECTED. TRENCH SAFETY SYSTEMS TO BE UTILIZED FOR THIS PROJECT WILL BE PROVIDE BY THE CONTRACTOR.
2. IN ACCORDANCE WITH THE U.S. OCCUPATIONAL SAFETY AND HEALTH ADMINISTRATION REGULATIONS,WHEN PERSONS ARE IN TRENCHES 4-FEET DEEP OR MORE, ADEQUATE MEANS OF EXIT, SUCH AS A LADDER OR STEPS, MUST BE PROVIDED AND LOCATED SO AS TO REQUIRE NO MORE THAN 25 FEET OF LATERAL TRAVEL.
3. CONSTRUCTION SHALL NOT PROCEED UNTIL APPROPRIATE TRENCH SAFETY SYSTEM DETAILS, AS DESIGNED BY A PROFESSIONAL ENGINEER, ARE RETAINED AND COPIES SUBMITTED TO THE CITY OF GEORGETOWN.
4. DEEP EXCAVATIONS: ON EXCAVATIONS EXCEEDING 20 FEET IN DEPTH, TWO OR MORE MEANS OF EGRESS FROM THE EXCAVATION SHALL BE PROVIDED. THE CONTRACTOR SHALL CONSULT WITH A REGISTERED ENGINEER, EXPERIENCED IN TRENCH SAFETY SYSTEMS, REGARDING SPECIFIC MEANS AND METHODS EMPLOYED. CONTRACTOR SHALL PROVIDE A TRENCH SAFETY PLAN SEALED BY A REGISTERED PROFESSIONAL ENGINEER AS REQUIRED BY THE CITY OF GEORGETOWN.

NO	REVISION	BY	DATE

811 Know what's below. Call before you dig.

5508 HIGHWAY 290 WEST
SUITE 150
AUSTIN, TX 78735
512.872.6696
HRGREEN.COM

TBPE NO: 16384
TBPLS NO: 10194101

HRGreen®
DEVELOPMENT TX

STATE OF TEXAS
CHRISTINE N. CAMPBELL
142536
LICENSED PROFESSIONAL ENGINEER
07/03/2025

WWL B PLAN & PROFILE

PARKSIDE ON THE RIVER SECTIONS 11, 12A & 15A CONSTRUCTION PLANS GEORGETOWN, WILLIAMSON, TEXAS

DESIGNED BY: CC
DRAWN BY: MM
CHECKED BY: SN
APPROVED BY:

SHEET 121 OF 141

2025-XX-CON

P:\Blue Mound\Parkside Sections 11-15 & WOA\Sheets\11, 12A & 15A\00_ACAD\Plans\sh2400522 WWP\WWL B deg WWL B PLAN & PROFILE, July 08, 2025, 12:29 PM, makai.muhammad

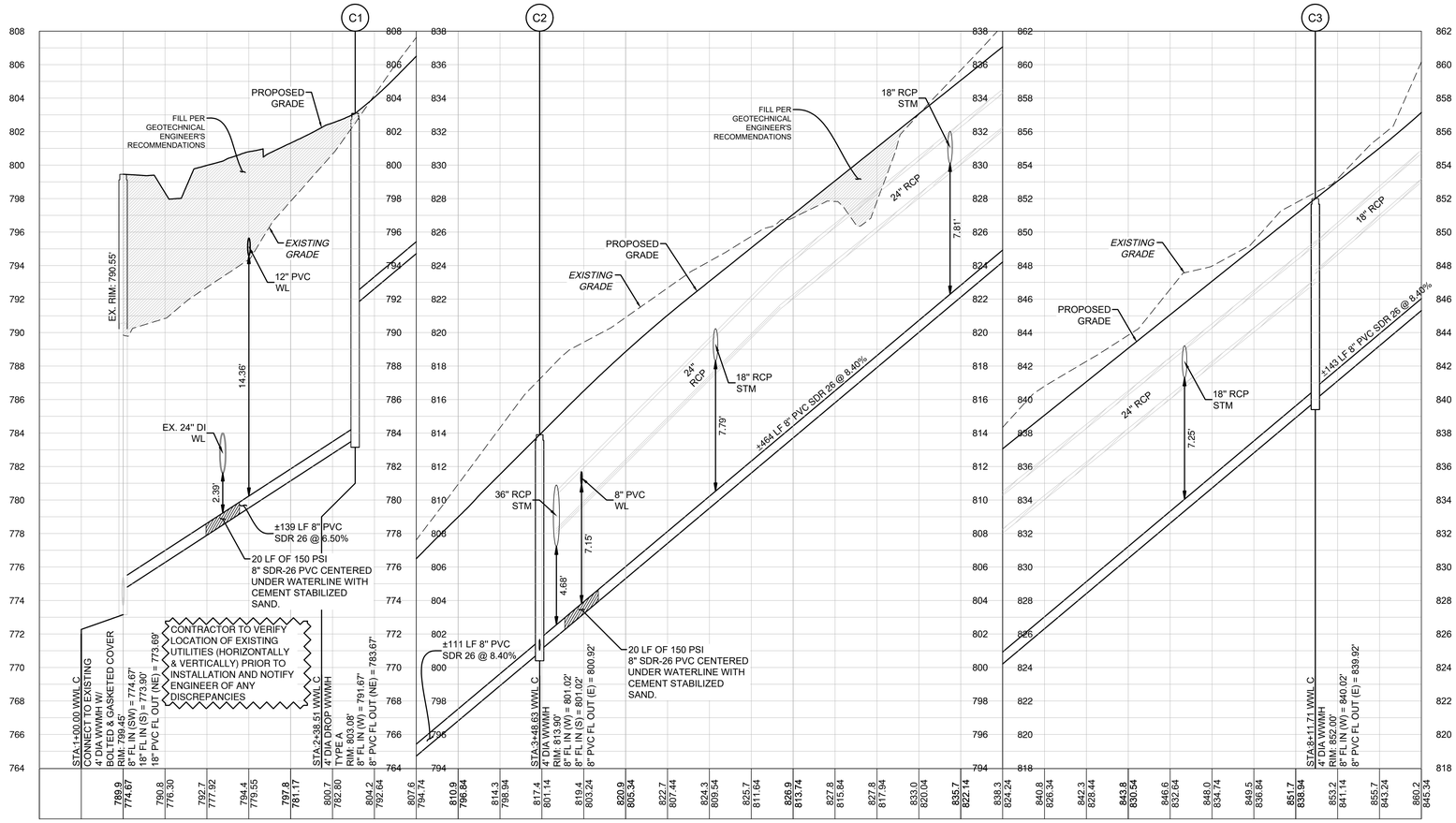

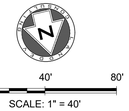

LEGEND

- EXISTING MINOR CONTOUR
- EXISTING MAJOR CONTOUR
- PROPOSED MINOR CONTOUR
- PROPOSED MAJOR CONTOUR
- BOUNDARY
- EASEMENT
- FEMA FLOODWAY PER FIRM# 48491C0460F & LOMR# 21-06-0115P
- FEMA AE — 100YR ATLAS 14 FEMA ZONE AE FLOODPLAIN PER FIRM# 48491C0460F & LOMR# 21-06-0115P
- FEMA A — 100YR FEMA ZONE A FLOODPLAIN PER FIRM MAP# 48491C0460F
- 100YR CLOMR — 100YR CLOMR FLOODPLAIN CASE# 15-06-2071R
- FDFP — 100YR ATLAS 14 FULLY DEVELOPED FLOODPLAIN (STANTEC DRAINAGE STUDY, SHERVIN NOOSHIN, 3/25/19) APPROVED WITH PP# 2019-5-PP
- OHWM — ORDINARY HIGH WATER MARK PER ADAMS ENVIRONMENTAL
- 2-4" SCH 40 PVC SLEEVE
- 8" WW — PROPOSED WASTEWATER LINE
- SD — PROPOSED STORM LINE
- 8" W — PROPOSED WATER LINE
- FIRE HYDRANT
- WATER VALVE
- SD — STORM SEWER MAHNOLE
- WW — WASTEWATER MANHOLE
- CURB INLET
- PROPOSED SINGLE WASTEWATER SERVICE
- PROPOSED DOUBLE WASTEWATER SERVICE
- PROPOSED SINGLE WATER SERVICE
- PROPOSED DOUBLE WATER SERVICE
- TREES TO REMAIN HERITAGE
- TREES TO REMAIN NON HERITAGE

VERT. SCALE: 1" = 4'
HORZ. SCALE: 1" = 40'

4' 2' 0 VERT. SCALE

EXISTING GRADE - CENTERLINE
FINISHED GRADE - CENTERLINE

EXISTING GROUND — 100.0 / 100.0 — PROPOSED FLOWLINE

NOTES:

1. REFER TO THE WATER AND WASTEWATER DETAIL SHEET(S) FOR TYPE S AND TYPE D SERVICE CONNECTIONS.
2. UTILITIES ON THIS SITE TO BE BUILT PER THE APPROVED UTILITY ASSIGNMENT SHOWN ON THE WATER AND WASTEWATER DETAIL SHEET.
3. PORTIONS OF THIS SITE LIE WITHIN THE FEMA 100-YR FLOODPLAIN.
4. ALL PROPOSED GRAVITY WASTEWATER PIPES TO BE SDR-26 UNLESS OTHERWISE SPECIFIED ON THE PLANS.
5. UNLESS OTHERWISE NOTED, CONTRACTOR TO ENSURE WW SERVICES ARE SET TO MAXIMUM DEPTH (PER DETAIL WW13) FOR ALL LOTS IN ORDER TO PROVIDE SUFFICIENT DEPTH TO CONNECT SERVICE.
6. ALL MANHOLES TO BE COATED PER CITY OF GEORGETOWN SPECIFICATIONS. EXISTING MANHOLES WITH PROPOSED CONNECTIONS TO BE COATED.
7. IF THE HOME BUILDER CANNOT ACHIEVE THE MINIMUM FINISHED FLOOR ELEVATIONS SPECIFIED, THEN A WASTEWATER GRINDER PUMP SYSTEM MAY BE NEEDED TO CONNECT TO THE WASTEWATER MAIN.

TRENCH SAFETY NOTES:

1. IN ACCORDANCE WITH THE LAWS OF THE STATE OF TEXAS AND THE U.S. OCCUPATIONAL SAFETY AND HEALTH ADMINISTRATION REGULATIONS, ALL TRENCHES OVER 5 FEET IN DEPTH IN EITHER HARD AND COMPACT OR SOFT AND UNSTABLE SOIL SHALL BE SLOPED, SHORED, SHEETED, BRACED OR OTHERWISE SUPPORTED. FURTHERMORE, ALL TRENCHES LESS THAN 5 FEET IN DEPTH SHALL ALSO BE EFFECTIVELY PROTECTED WHEN HAZARDOUS GROUND MOVEMENT MAY BE EXPECTED. TRENCH SAFETY SYSTEMS TO BE UTILIZED FOR THIS PROJECT WILL BE PROVIDE BY THE CONTRACTOR.
2. IN ACCORDANCE WITH THE U.S. OCCUPATIONAL SAFETY AND HEALTH ADMINISTRATION REGULATIONS,WHEN PERSONS ARE IN TRENCHES 4-FEET DEEP OR MORE, ADEQUATE MEANS OF EXIT, SUCH AS A LADDER OR STEPS, MUST BE PROVIDED AND LOCATED SO AS TO REQUIRE NO MORE THAN 25 FEET OF LATERAL TRAVEL.
3. CONSTRUCTION SHALL NOT PROCEED UNTIL APPROPRIATE TRENCH SAFETY SYSTEM DETAILS, AS DESIGNED BY A PROFESSIONAL ENGINEER, ARE RETAINED AND COPIES SUBMITTED TO THE CITY OF GEORGETOWN.
4. DEEP EXCAVATIONS: ON EXCAVATIONS EXCEEDING 20 FEET IN DEPTH, TWO OR MORE MEANS OF EGRESS FROM THE EXCAVATION SHALL BE PROVIDED. THE CONTRACTOR SHALL CONSULT WITH A REGISTERED ENGINEER, EXPERIENCED IN TRENCH SAFETY SYSTEMS, REGARDING SPECIFIC MEANS AND METHODS EMPLOYED. CONTRACTOR SHALL PROVIDE A TRENCH SAFETY PLAN SEALED BY A REGISTERED PROFESSIONAL ENGINEER AS REQUIRED BY THE CITY OF GEORGETOWN.

NO.	REVISION	BY	DATE

811 Know what's below. Call before you dig.

5508 HIGHWAY 290 WEST
SUITE 150
AUSTIN, TX 78735
512.872.6696
HRGREEN.COM

TBPE NO: 16384
TBPLS NO: 10194101

HRGreen® DEVELOPMENT TX

STATE OF TEXAS
CHRISTINE N. CAMPBELL
142536
LICENSED PROFESSIONAL ENGINEER
07/05/2025

WWL C PLAN & PROFILE 1+00 - 8+75

PARKSIDE ON THE RIVER SECTIONS 11, 12A & 15A CONSTRUCTION PLANS GEORGETOWN, WILLIAMSON, TEXAS

DESIGNED BY: CC
DRAWN BY: MM
CHECKED BY: SN
APPROVED BY:

SHEET 122 OF 141

2025-XX-CON

P:\Blake Magee\Parkside Sections 11-15 & 19\Civil\Sheets\240502 WWP WWL C.dwg, WWL C P+L PLAN & PROFILE 1+00 - 8+75, July 18, 2025, 12:31 PM, nabil.muhammed

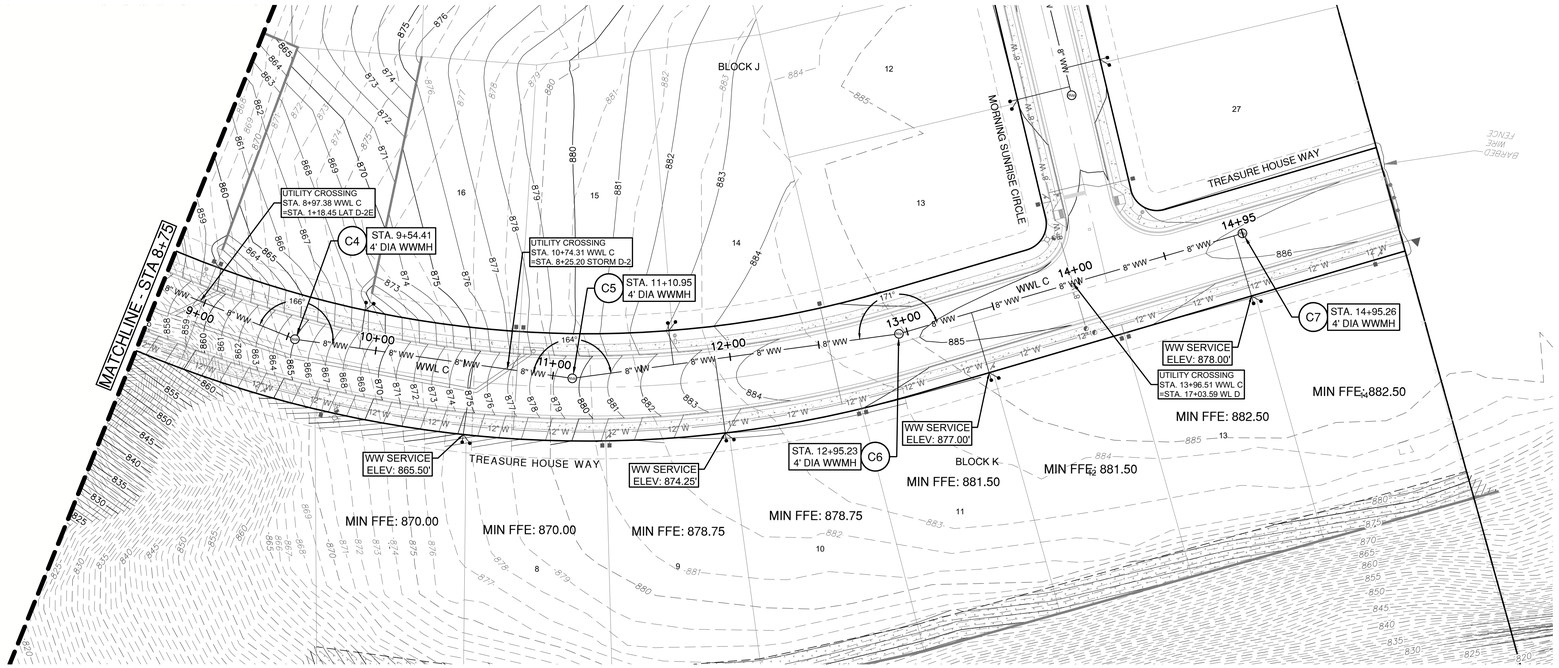

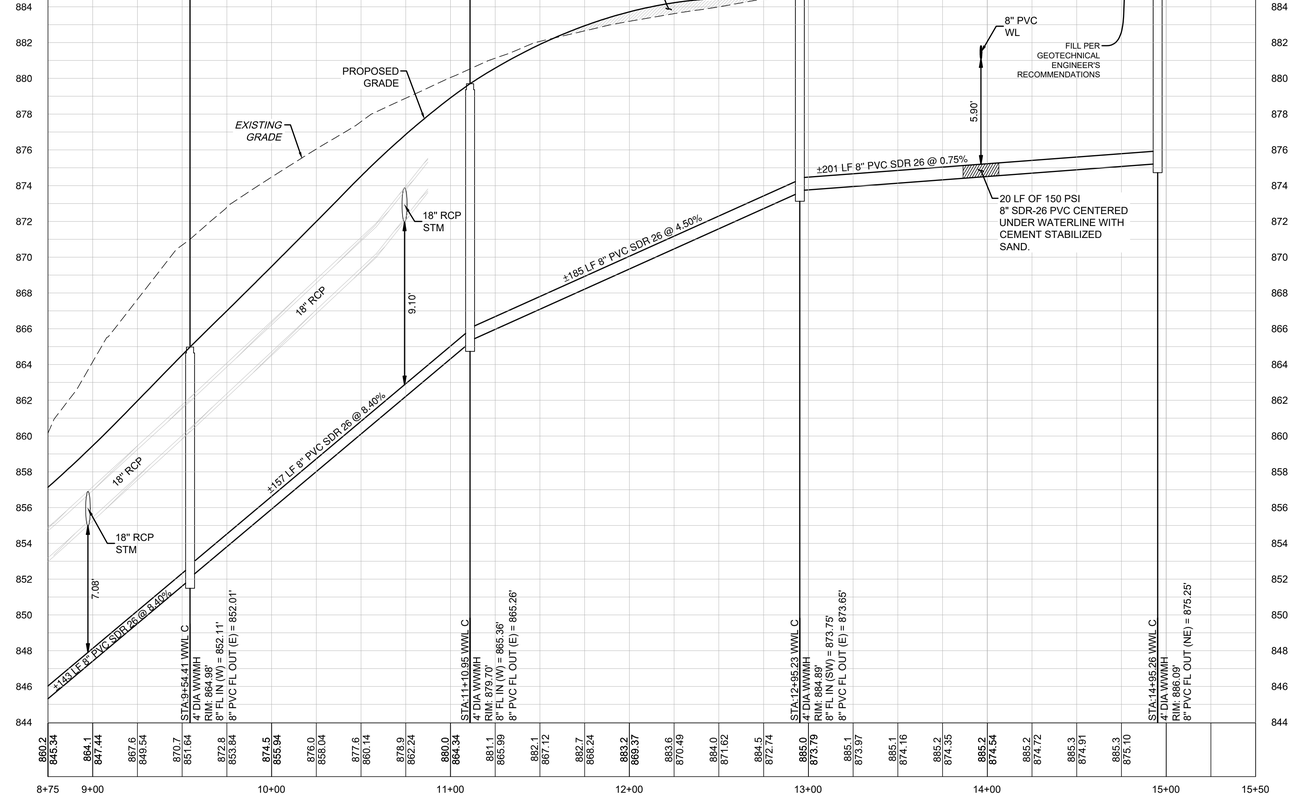

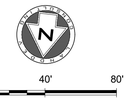

0 40' 80'

SCALE: 1" = 40'

LEGEND

- EXISTING MINOR CONTOUR
- EXISTING MAJOR CONTOUR
- PROPOSED MINOR CONTOUR
- PROPOSED MAJOR CONTOUR
- BOUNDARY
- EASEMENT
- FEMA FLOODWAY PER FIRM# 48491C0460F & LOMR# 21-06-0115P
- FEMA AE — 100YR ATLAS 14 FEMA ZONE AE FLOODPLAIN PER FIRM# 48491C0460F & LOMR# 21-06-0115P
- FEMA A — 100YR FEMA ZONE A FLOODPLAIN PER FIRM MAP# 48491C0460F
- 100YR CLOMR — 100YR CLOMR FLOODPLAIN CASE# 15-06-2071R
- FDFP — 100YR ATLAS 14 FULLY DEVELOPED FLOODPLAIN (STANTEC DRAINAGE STUDY, SHERVIN NOOSHIN, 3/25/19) APPROVED WITH PP# 2019-5-PP
- OHWM — ORDINARY HIGH WATER MARK PER ADAMS ENVIRONMENTAL
- 2-4" SCH 40 PVC SLEEVE
- 8" WW — PROPOSED WASTEWATER LINE
- SD — PROPOSED STORM LINE
- 8" W — PROPOSED WATER LINE
- FIRE HYDRANT
- WATER VALVE
- SD — STORM SEWER MAHNOLE
- WW — WASTEWATER MANHOLE
- CURB INLET
- PROPOSED SINGLE WASTEWATER SERVICE
- PROPOSED DOUBLE WASTEWATER SERVICE
- PROPOSED SINGLE WATER SERVICE
- PROPOSED DOUBLE WATER SERVICE
- TREES TO REMAIN HERITAGE
- TREES TO REMAIN NON HERITAGE

VERT. SCALE: 1" = 4'
HORZ. SCALE: 1" = 40'

4' 2' 0 VERT. SCALE

EXISTING GRADE - CENTERLINE
FINISHED GRADE - CENTERLINE

EXISTING GROUND — 1000.10 / 1005.10 — PROPOSED FLOWLINE

NOTES:

1. REFER TO THE WATER AND WASTEWATER DETAIL SHEET(S) FOR TYPE S AND TYPE D SERVICE CONNECTIONS.
2. UTILITIES ON THIS SITE TO BE BUILT PER THE APPROVED UTILITY ASSIGNMENT SHOWN ON THE WATER AND WASTEWATER DETAIL SHEET.
3. PORTIONS OF THIS SITE LIE WITHIN THE FEMA 100-YR FLOODPLAIN.
4. ALL PROPOSED GRAVITY WASTEWATER PIPES TO BE SDR-26 UNLESS OTHERWISE SPECIFIED ON THE PLANS.
5. UNLESS OTHERWISE NOTED, CONTRACTOR TO ENSURE WW SERVICES ARE SET TO MAXIMUM DEPTH (PER DETAIL WW13) FOR ALL LOTS IN ORDER TO PROVIDE SUFFICIENT DEPTH TO CONNECT SERVICE.
6. ALL MANHOLES TO BE COATED PER CITY OF GEORGETOWN SPECIFICATIONS. EXISTING MANHOLES WITH PROPOSED CONNECTIONS TO BE COATED.
7. IF THE HOME BUILDER CANNOT ACHIEVE THE MINIMUM FINISHED FLOOR ELEVATIONS SPECIFIED, THEN A WASTEWATER GRINDER PUMP SYSTEM MAY BE NEEDED TO CONNECT TO THE WASTEWATER MAIN.

TRENCH SAFETY NOTES:

1. IN ACCORDANCE WITH THE LAWS OF THE STATE OF TEXAS AND THE U.S. OCCUPATIONAL SAFETY AND HEALTH ADMINISTRATION REGULATIONS, ALL TRENCHES OVER 5 FEET IN DEPTH IN EITHER HARD AND COMPACT OR SOFT AND UNSTABLE SOIL SHALL BE SLOPED, SHORED, SHEETED, BRACED OR OTHERWISE SUPPORTED. FURTHERMORE, ALL TRENCHES LESS THAN 5 FEET IN DEPTH SHALL ALSO BE EFFECTIVELY PROTECTED WHEN HAZARDOUS GROUND MOVEMENT MAY BE EXPECTED. TRENCH SAFETY SYSTEMS TO BE UTILIZED FOR THIS PROJECT WILL BE PROVIDE BY THE CONTRACTOR.
2. IN ACCORDANCE WITH THE U.S. OCCUPATIONAL SAFETY AND HEALTH ADMINISTRATION REGULATIONS,WHEN PERSONS ARE IN TRENCHES 4-FEET DEEP OR MORE, ADEQUATE MEANS OF EXIT, SUCH AS A LADDER OR STEPS, MUST BE PROVIDED AND LOCATED SO AS TO REQUIRE NO MORE THAN 25 FEET OF LATERAL TRAVEL.
3. CONSTRUCTION SHALL NOT PROCEED UNTIL APPROPRIATE TRENCH SAFETY SYSTEM DETAILS, AS DESIGNED BY A PROFESSIONAL ENGINEER, ARE RETAINED AND COPIES SUBMITTED TO THE CITY OF GEORGETOWN.
4. DEEP EXCAVATIONS: ON EXCAVATIONS EXCEEDING 20 FEET IN DEPTH, TWO OR MORE MEANS OF EGRESS FROM THE EXCAVATION SHALL BE PROVIDED. THE CONTRACTOR SHALL CONSULT WITH A REGISTERED ENGINEER, EXPERIENCED IN TRENCH SAFETY SYSTEMS, REGARDING SPECIFIC MEANS AND METHODS EMPLOYED. CONTRACTOR SHALL PROVIDE A TRENCH SAFETY PLAN SEALED BY A REGISTERED PROFESSIONAL ENGINEER AS REQUIRED BY THE CITY OF GEORGETOWN.

NO.	REVISION	BY	DATE

Know what's below. Call before you dig.

5508 HIGHWAY 290 WEST
SUITE 150
AUSTIN, TX 78735
512.872.6696
HRGREEN.COM

TBPE NO: 16384
TBPLS NO: 10194101

HRGreen® DEVELOPMENT TX

STATE OF TEXAS
CHRISTINE N. CAMPBELL
142536
LICENSED PROFESSIONAL ENGINEER

07/03/2025

WWL C PLAN & PROFILE 8+75 - END

PARKSIDE ON THE RIVER SECTIONS 11, 12A & 15A CONSTRUCTION PLANS GEORGETOWN, WILLIAMSON, TEXAS

DESIGNED BY: CC
DRAWN BY: MM
CHECKED BY: SN
APPROVED BY:

SHEET 123 OF 141

2025-XX-CON

P:\Blake Magee\Parkside Sections 11-15 & WCN ES\Section 11, 12A & 15A\03_ACAD\Planset\240502 WWPP WWL C-reg WWL C PLAN & PROFILE 8+75 - END- July 18, 2025, 12:31 PM, malak.mahammad

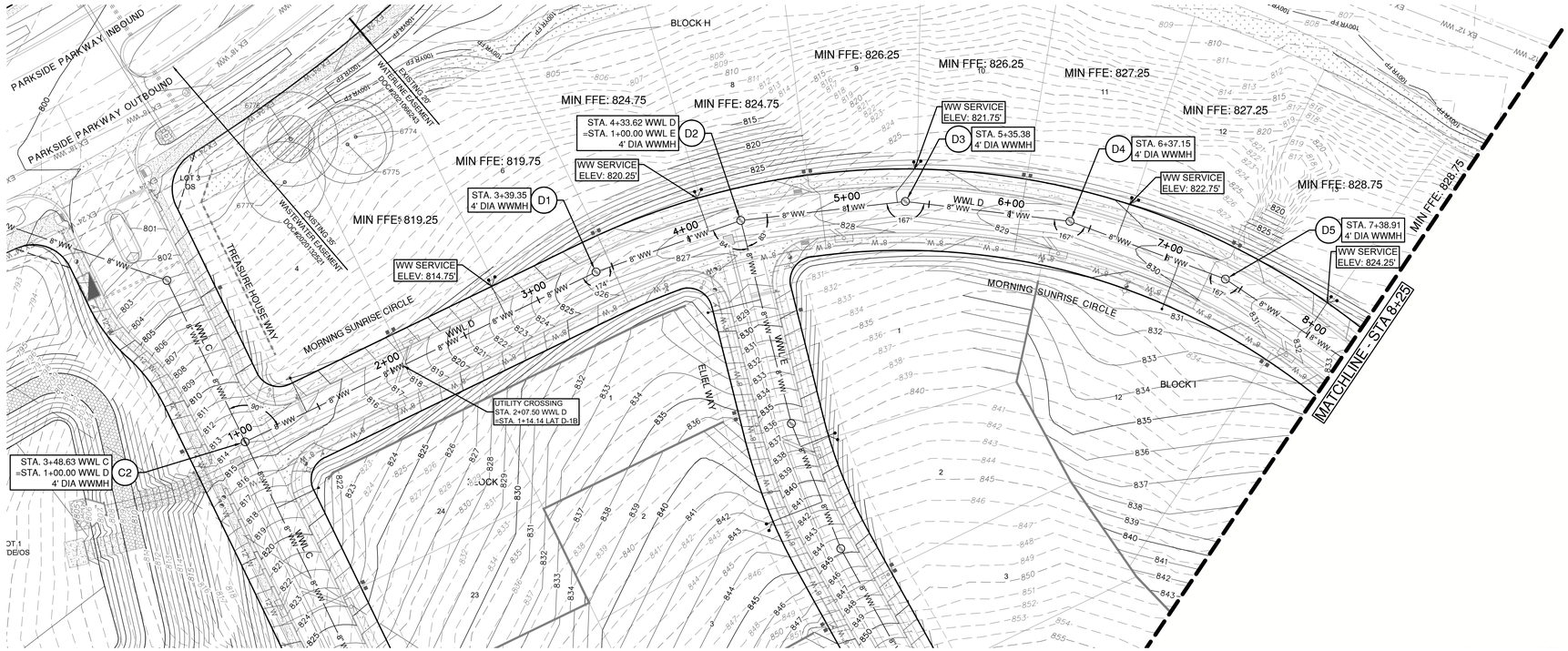

WWL D

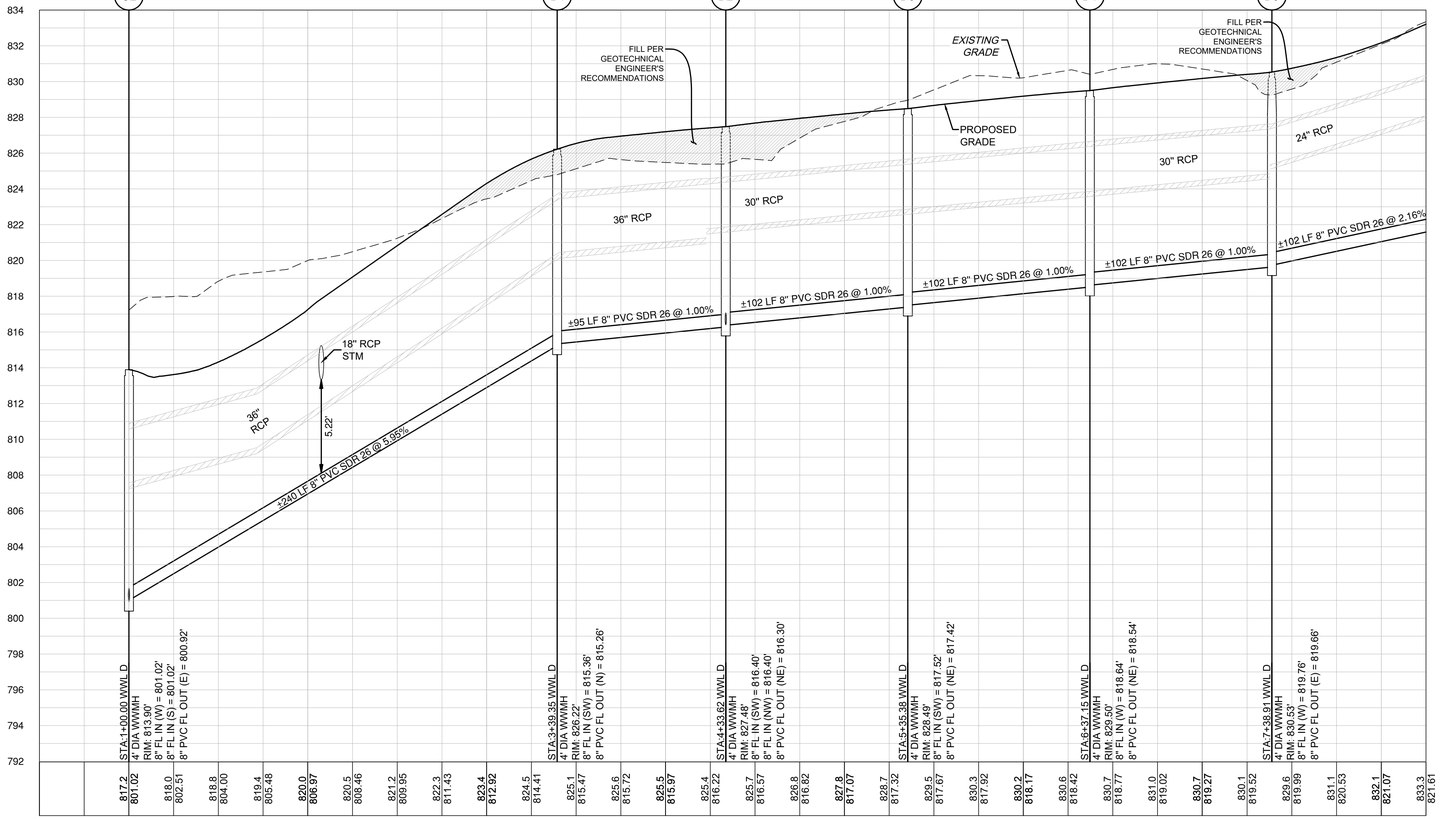

0 40' 80'

SCALE: 1" = 40'

LEGEND

- EXISTING MINOR CONTOUR
- EXISTING MAJOR CONTOUR
- PROPOSED MINOR CONTOUR
- PROPOSED MAJOR CONTOUR
- BOUNDARY
- EASEMENT
- FEMA FLOODWAY PER FIRM# 48491C0460F & LOMR# 21-06-0115P
- FEMA AE — 100YR ATLAS 14 FEMA ZONE AE FLOODPLAIN PER FIRM# 48491C0460F & LOMR# 21-06-0115P
- FEMA A — 100YR FEMA ZONE A FLOODPLAIN PER FIRM MAP# 48491C0460F
- 100YR CLOMR — 100YR CLOMR FLOODPLAIN CASE# 15-06-2071R
- FDFP — 100YR ATLAS 14 FULLY DEVELOPED FLOODPLAIN (STANTEC DRAINAGE STUDY, SHERVIN NOOSHIN, 3/25/19) APPROVED WITH PP# 2019-5-PP
- OHWM — ORDINARY HIGH WATER MARK PER ADAMS ENVIRONMENTAL
- 2-4" SCH 40 PVC SLEEVE
- 8" WW — PROPOSED WASTEWATER LINE
- SD — PROPOSED STORM LINE
- 8" W — PROPOSED WATER LINE
- FIRE HYDRANT
- WATER VALVE
- SD — STORM SEWER MAHNOLE
- WW — WASTEWATER MANHOLE
- CURB INLET
- PROPOSED SINGLE WASTEWATER SERVICE
- PROPOSED DOUBLE WASTEWATER SERVICE
- PROPOSED SINGLE WATER SERVICE
- PROPOSED DOUBLE WATER SERVICE
- TREES TO REMAIN HERITAGE
- TREES TO REMAIN NON HERITAGE

VERT. SCALE: 1" = 4'
HORZ. SCALE: 1" = 40'

4' 2' 0 VERT. SCALE

EXISTING GRADE - CENTERLINE
FINISHED GRADE - CENTERLINE

EXISTING GROUND — 100.0 / 99.0 — PROPOSED FLOWLINE

NOTES:

1. REFER TO THE WATER AND WASTEWATER DETAIL SHEET(S) FOR TYPE S AND TYPE D SERVICE CONNECTIONS.
2. UTILITIES ON THIS SITE TO BE BUILT PER THE APPROVED UTILITY ASSIGNMENT SHOWN ON THE WATER AND WASTEWATER DETAIL SHEET.
3. PORTIONS OF THIS SITE LIE WITHIN THE FEMA 100-YR FLOODPLAIN.
4. ALL PROPOSED GRAVITY WASTEWATER PIPES TO BE SDR-26 UNLESS OTHERWISE SPECIFIED ON THE PLANS.
5. UNLESS OTHERWISE NOTED, CONTRACTOR TO ENSURE WW SERVICES ARE SET TO MAXIMUM DEPTH (PER DETAIL WW13) FOR ALL LOTS IN ORDER TO PROVIDE SUFFICIENT DEPTH TO CONNECT SERVICE.
6. ALL MANHOLES TO BE COATED PER CITY OF GEORGETOWN SPECIFICATIONS. EXISTING MANHOLES WITH PROPOSED CONNECTIONS TO BE COATED.
7. IF THE HOME BUILDER CANNOT ACHIEVE THE MINIMUM FINISHED FLOOR ELEVATIONS SPECIFIED, THEN A WASTEWATER GRINDER PUMP SYSTEM MAY BE NEEDED TO CONNECT TO THE WASTEWATER MAIN.

TRENCH SAFETY NOTES:

1. IN ACCORDANCE WITH THE LAWS OF THE STATE OF TEXAS AND THE U.S. OCCUPATIONAL SAFETY AND HEALTH ADMINISTRATION REGULATIONS, ALL TRENCHES OVER 5 FEET IN DEPTH IN EITHER HARD AND COMPACT OR SOFT AND UNSTABLE SOIL SHALL BE SLOPED, SHORED, SHEETED, BRACED OR OTHERWISE SUPPORTED. FURTHERMORE, ALL TRENCHES LESS THAN 5 FEET IN DEPTH SHALL ALSO BE EFFECTIVELY PROTECTED WHEN HAZARDOUS GROUND MOVEMENT MAY BE EXPECTED. TRENCH SAFETY SYSTEMS TO BE UTILIZED FOR THIS PROJECT WILL BE PROVIDE BY THE CONTRACTOR.
2. IN ACCORDANCE WITH THE U.S. OCCUPATIONAL SAFETY AND HEALTH ADMINISTRATION REGULATIONS,WHEN PERSONS ARE IN TRENCHES 4-FEET DEEP OR MORE, ADEQUATE MEANS OF EXIT, SUCH AS A LADDER OR STEPS, MUST BE PROVIDED AND LOCATED SO AS TO REQUIRE NO MORE THAN 25 FEET OF LATERAL TRAVEL.
3. CONSTRUCTION SHALL NOT PROCEED UNTIL APPROPRIATE TRENCH SAFETY SYSTEM DETAILS, AS DESIGNED BY A PROFESSIONAL ENGINEER, ARE RETAINED AND COPIES SUBMITTED TO THE CITY OF GEORGETOWN.
4. DEEP EXCAVATIONS: ON EXCAVATIONS EXCEEDING 20 FEET IN DEPTH, TWO OR MORE MEANS OF EGRESS FROM THE EXCAVATION SHALL BE PROVIDED. THE CONTRACTOR SHALL CONSULT WITH A REGISTERED ENGINEER, EXPERIENCED IN TRENCH SAFETY SYSTEMS, REGARDING SPECIFIC MEANS AND METHODS EMPLOYED. CONTRACTOR SHALL PROVIDE A TRENCH SAFETY PLAN SEALED BY A REGISTERED PROFESSIONAL ENGINEER AS REQUIRED BY THE CITY OF GEORGETOWN.

NO.	REVISION	BY	DATE

811 Know what's below. Call before you dig.

5508 HIGHWAY 290 WEST
SUITE 150
AUSTIN, TX 78735
512.872.6696
HRGREEN.COM

TBPE NO: 16384
TBPLS NO: 10194101

HRGreen®
DEVELOPMENT TX

STATE OF TEXAS
CHRISTINE N. CAMPBELL
142536
LICENSED PROFESSIONAL ENGINEER
07/03/2025

WWL D PLAN & PROFILE 1+00 - 8+25

PARKSIDE ON THE RIVER SECTIONS 11, 12A & 15A CONSTRUCTION PLANS

GEORGETOWN, WILLIAMSON, TEXAS

DESIGNED BY: CC
DRAWN BY: MM
CHECKED BY: SN
APPROVED BY:

SHEET 124 OF 141

2025-XX-CON

P:\Blake Magee\Parkside Sections 11-15 & WOA S\Section 11, 12A & 15A\05_ACAD\Panels\24035522 WWPP WWL D.dwg, WWL D PLAN & PROFILE 1+00, 9+25, July 18, 2025, 12:32 PM, nabal.muhammad

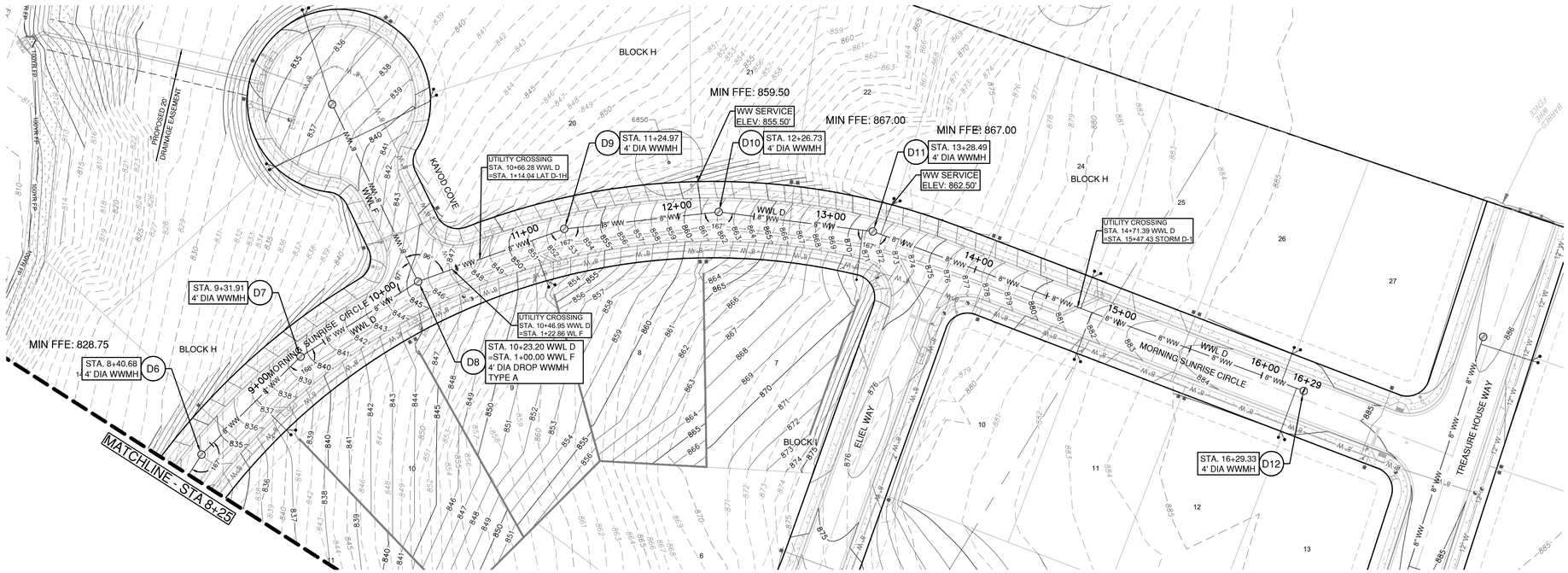

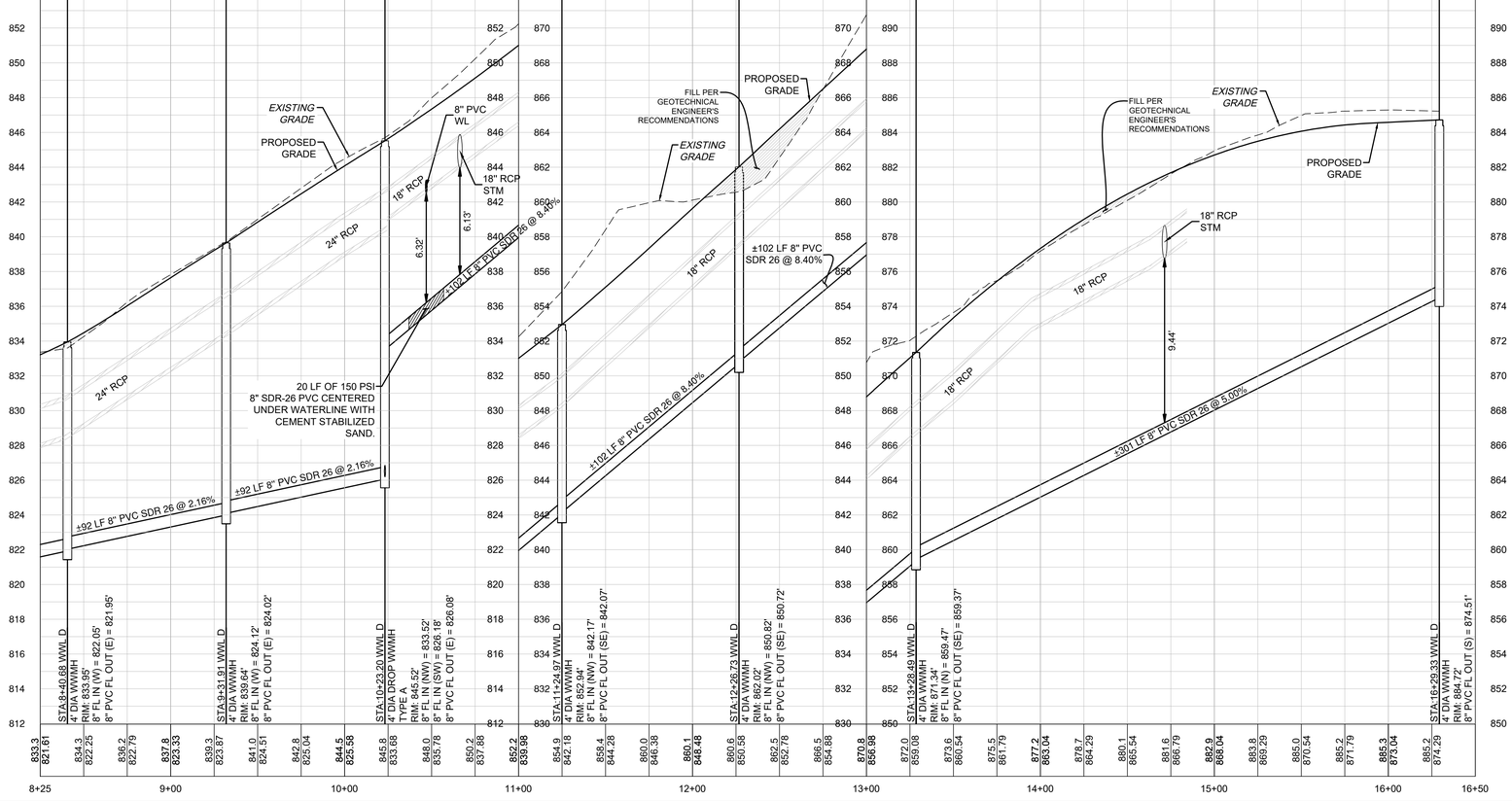

0 40' 80'

SCALE: 1" = 40'

LEGEND

- EXISTING MINOR CONTOUR
- EXISTING MAJOR CONTOUR
- PROPOSED MINOR CONTOUR
- PROPOSED MAJOR CONTOUR
- BOUNDARY
- EASEMENT
- FEMA FLOODWAY PER FIRM# 48491C0460F & LOMR# 21-06-0115P
- FEMA AE — 100YR ATLAS 14 FEMA ZONE AE FLOODPLAIN PER FIRM# 48491C0460F & LOMR# 21-06-0115P
- FEMA A — 100YR FEMA ZONE A FLOODPLAIN PER FIRM MAP# 48491C0460F
- 100YR CLOMR — 100YR CLOMR FLOODPLAIN CASE# 15-06-2071R
- FDFP — 100YR ATLAS 14 FULLY DEVELOPED FLOODPLAIN (STANTEC DRAINAGE STUDY, SHERVIN NOOSHIN, 3/25/19) APPROVED WITH PP# 2019-5-PP
- OHWM — ORDINARY HIGH WATER MARK PER ADAMS ENVIRONMENTAL
- 2-4" SCH 40 PVC SLEEVE
- 8" WW — PROPOSED WASTEWATER LINE
- SD — PROPOSED STORM LINE
- 8" W — PROPOSED WATER LINE
- FIRE HYDRANT
- WATER VALVE
- STORM SEWER MAHNOLE
- WW — WASTEWATER MANHOLE
- CURB INLET
- PROPOSED SINGLE WASTEWATER SERVICE
- PROPOSED DOUBLE WASTEWATER SERVICE
- PROPOSED SINGLE WATER SERVICE
- PROPOSED DOUBLE WATER SERVICE
- TREES TO REMAIN HERITAGE
- TREES TO REMAIN NON HERITAGE

VERT. SCALE: 1" = 4'
HORZ. SCALE: 1" = 40'

EXISTING GRADE - CENTERLINE
FINISHED GRADE - CENTERLINE

4' 2' 0 VERT. SCALE

EXISTING GROUND — 100.0 / 90.0 — PROPOSED FLOWLINE

NOTES:

1. REFER TO THE WATER AND WASTEWATER DETAIL SHEET(S) FOR TYPE S AND TYPE D SERVICE CONNECTIONS.
2. UTILITIES ON THIS SITE TO BE BUILT PER THE APPROVED UTILITY ASSIGNMENT SHOWN ON THE WATER AND WASTEWATER DETAIL SHEET.
3. PORTIONS OF THIS SITE LIE WITHIN THE FEMA 100-YR FLOODPLAIN.
4. ALL PROPOSED GRAVITY WASTEWATER PIPES TO BE SDR-26 UNLESS OTHERWISE SPECIFIED ON THE PLANS.
5. UNLESS OTHERWISE NOTED, CONTRACTOR TO ENSURE WW SERVICES ARE SET TO MAXIMUM DEPTH (PER DETAIL WW13) FOR ALL LOTS IN ORDER TO PROVIDE SUFFICIENT DEPTH TO CONNECT SERVICE.
6. ALL MANHOLES TO BE COATED PER CITY OF GEORGETOWN SPECIFICATIONS. EXISTING MANHOLES WITH PROPOSED CONNECTIONS TO BE COATED.
7. IF THE HOME BUILDER CANNOT ACHIEVE THE MINIMUM FINISHED FLOOR ELEVATIONS SPECIFIED, THEN A WASTEWATER GRINDER PUMP SYSTEM MAY BE NEEDED TO CONNECT TO THE WASTEWATER MAIN.

TRENCH SAFETY NOTES:

1. IN ACCORDANCE WITH THE LAWS OF THE STATE OF TEXAS AND THE U.S. OCCUPATIONAL SAFETY AND HEALTH ADMINISTRATION REGULATIONS, ALL TRENCHES OVER 5 FEET IN DEPTH IN EITHER HARD AND COMPACT OR SOFT AND UNSTABLE SOIL SHALL BE SLOPED, SHORED, SHEETED, BRACED OR OTHERWISE SUPPORTED. FURTHERMORE, ALL TRENCHES LESS THAN 5 FEET IN DEPTH SHALL ALSO BE EFFECTIVELY PROTECTED WHEN HAZARDOUS GROUND MOVEMENT MAY BE EXPECTED. TRENCH SAFETY SYSTEMS TO BE UTILIZED FOR THIS PROJECT WILL BE PROVIDE BY THE CONTRACTOR.
2. IN ACCORDANCE WITH THE U.S. OCCUPATIONAL SAFETY AND HEALTH ADMINISTRATION REGULATIONS,WHEN PERSONS ARE IN TRENCHES 4-FEET DEEP OR MORE, ADEQUATE MEANS OF EXIT, SUCH AS A LADDER OR STEPS, MUST BE PROVIDED AND LOCATED SO AS TO REQUIRE NO MORE THAN 25 FEET OF LATERAL TRAVEL.
3. CONSTRUCTION SHALL NOT PROCEED UNTIL APPROPRIATE TRENCH SAFETY SYSTEM DETAILS, AS DESIGNED BY A PROFESSIONAL ENGINEER, ARE RETAINED AND COPIES SUBMITTED TO THE CITY OF GEORGETOWN.
4. DEEP EXCAVATIONS: ON EXCAVATIONS EXCEEDING 20 FEET IN DEPTH, TWO OR MORE MEANS OF EGRESS FROM THE EXCAVATION SHALL BE PROVIDED. THE CONTRACTOR SHALL CONSULT WITH A REGISTERED ENGINEER, EXPERIENCED IN TRENCH SAFETY SYSTEMS, REGARDING SPECIFIC MEANS AND METHODS EMPLOYED. CONTRACTOR SHALL PROVIDE A TRENCH SAFETY PLAN SEALED BY A REGISTERED PROFESSIONAL ENGINEER AS REQUIRED BY THE CITY OF GEORGETOWN.

NO	REVISION	BY	DATE

811 Know what's below. Call before you dig.

5508 HIGHWAY 290 WEST
SUITE 150
AUSTIN, TX 78735
512.872.6696
HRGREEN.COM

TBPE NO: 16384
TBPLS NO: 10194101

HRGreen® DEVELOPMENT TX

STATE OF TEXAS
CHRISTINE N. CAMPBELL
142536
LICENSED PROFESSIONAL ENGINEER

07/15/2025

WWL D PLAN & PROFILE 8+25 - END

PARKSIDE ON THE RIVER SECTIONS 11, 12A & 15A CONSTRUCTION PLANS GEORGETOWN, WILLIAMSON, TEXAS

DESIGNED BY: CC
DRAWN BY: MM
CHECKED BY: SN
APPROVED BY:

SHEET 125 OF 141

2025-XX-CON

P:\Blake Magee\Parkside Sections 11-15 & WOA S\Section 11, 12A & 15A\00_ACAD\Plans\sh240522 WWPP WWL D.dwg, WWL D PLAN & PROFILE 8+25 - END, July 18, 2025, 12:33 PM, imalal.muhammad

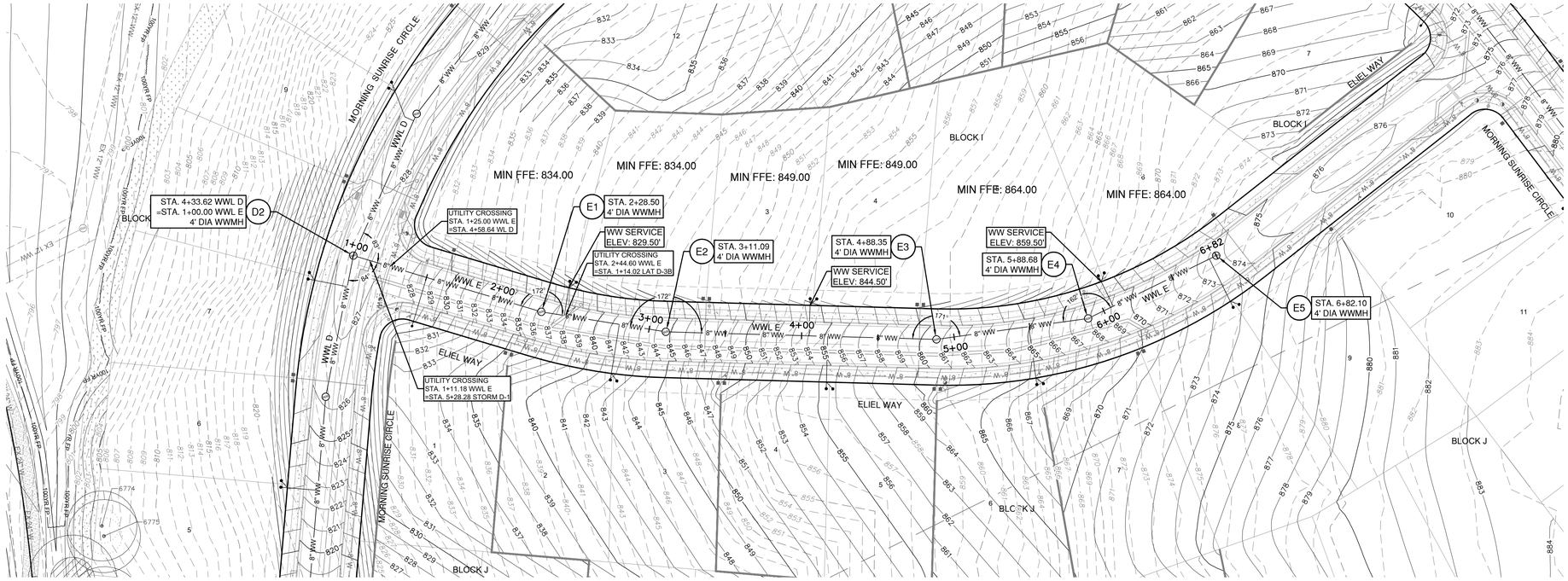

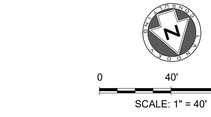

LEGEND

- EXISTING MINOR CONTOUR
- EXISTING MAJOR CONTOUR
- PROPOSED MINOR CONTOUR
- PROPOSED MAJOR CONTOUR
- BOUNDARY
- EASEMENT
- FEMA FLOODWAY PER FIRM# 48491C0460F & LOMR# 21-06-0115P
- FEMA AE — 100YR ATLAS 14 FEMA ZONE AE FLOODPLAIN PER FIRM# 48491C0460F & LOMR# 21-06-0115P
- FEMA A — 100YR FEMA ZONE A FLOODPLAIN PER FIRM MAP# 48491C0460F
- 100YR CLOMR — 100YR CLOMR FLOODPLAIN CASE# 15-06-2071R
- FDFP — 100YR ATLAS 14 FULLY DEVELOPED FLOODPLAIN (STANTEC DRAINAGE STUDY, SHERVIN NOOSHIN, 3/25/19) APPROVED WITH PP# 2019-5-PP
- OHWM — ORDINARY HIGH WATER MARK PER ADAMS ENVIRONMENTAL
- 2-4" SCH 40 PVC SLEEVE
- 8" WW — PROPOSED WASTEWATER LINE
- SD — PROPOSED STORM LINE
- 8" W — PROPOSED WATER LINE
- FIRE HYDRANT
- WATER VALVE
- SD — STORM SEWER MAHNOLE
- WW — WASTEWATER MANHOLE
- CURB INLET
- PROPOSED SINGLE WASTEWATER SERVICE
- PROPOSED DOUBLE WASTEWATER SERVICE
- PROPOSED SINGLE WATER SERVICE
- PROPOSED DOUBLE WATER SERVICE
- TREES TO REMAIN HERITAGE
- TREES TO REMAIN NON HERITAGE

WWL E

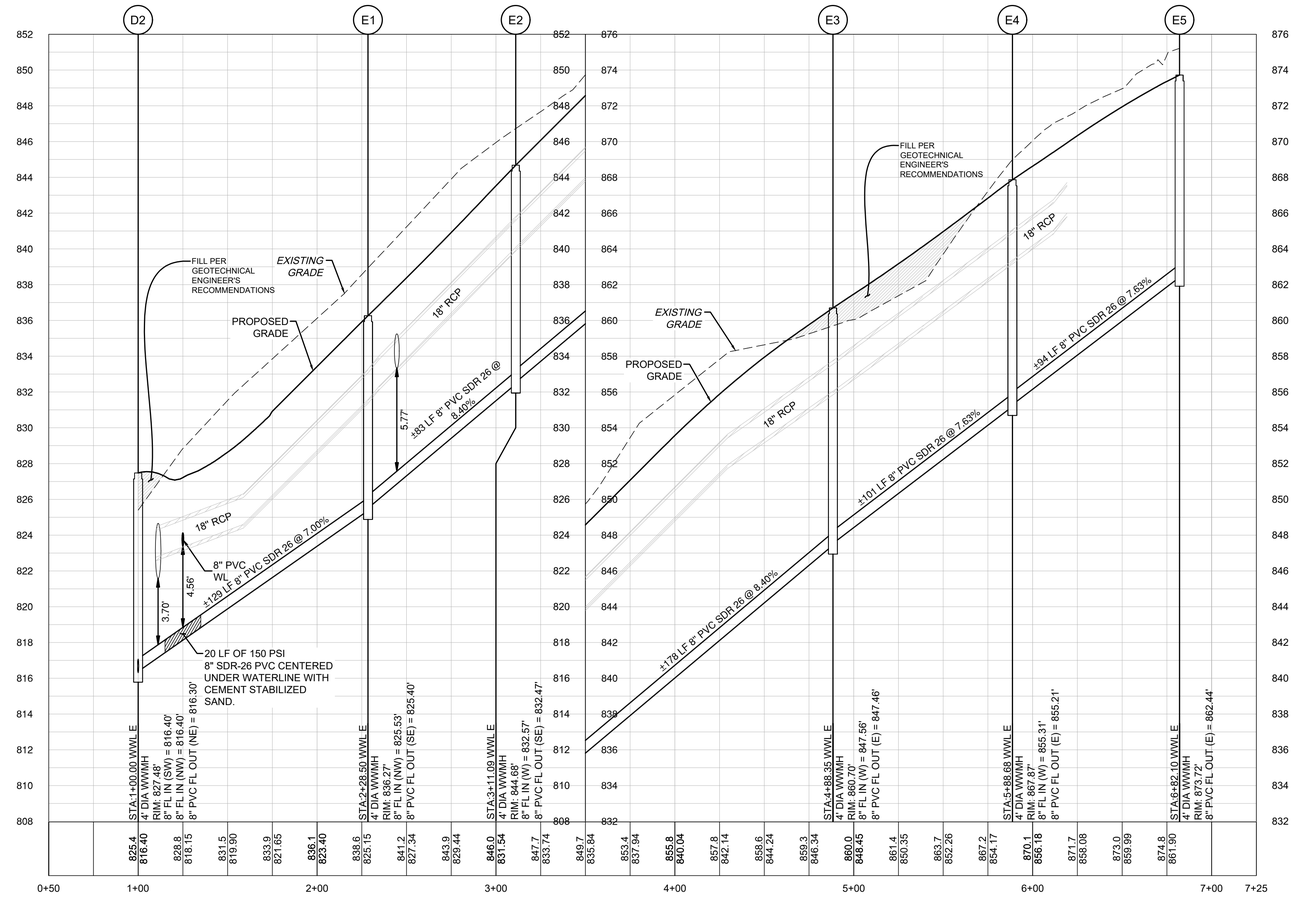

VERT. SCALE: 1" = 4'
HORZ. SCALE: 1" = 40'

4' 2' 0 VERT. SCALE

EXISTING GRADE - CENTERLINE
FINISHED GRADE - CENTERLINE

EXISTING GROUND — 100.1 / 99.0 — PROPOSED FLOWLINE

NOTES:

1. REFER TO THE WATER AND WASTEWATER DETAIL SHEET(S) FOR TYPE S AND TYPE D SERVICE CONNECTIONS.
2. UTILITIES ON THIS SITE TO BE BUILT PER THE APPROVED UTILITY ASSIGNMENT SHOWN ON THE WATER AND WASTEWATER DETAIL SHEET.
3. PORTIONS OF THIS SITE LIE WITHIN THE FEMA 100-YR FLOODPLAIN.
4. ALL PROPOSED GRAVITY WASTEWATER PIPES TO BE SDR-26 UNLESS OTHERWISE SPECIFIED ON THE PLANS.
5. UNLESS OTHERWISE NOTED, CONTRACTOR TO ENSURE WW SERVICES ARE SET TO MAXIMUM DEPTH (PER DETAIL WW13) FOR ALL LOTS IN ORDER TO PROVIDE SUFFICIENT DEPTH TO CONNECT SERVICE.
6. ALL MANHOLES TO BE COATED PER CITY OF GEORGETOWN SPECIFICATIONS. EXISTING MANHOLES WITH PROPOSED CONNECTIONS TO BE COATED.
7. IF THE HOME BUILDER CANNOT ACHIEVE THE MINIMUM FINISHED FLOOR ELEVATIONS SPECIFIED, THEN A WASTEWATER GRINDER PUMP SYSTEM MAY BE NEEDED TO CONNECT TO THE WASTEWATER MAIN.

TRENCH SAFETY NOTES:

1. IN ACCORDANCE WITH THE LAWS OF THE STATE OF TEXAS AND THE U.S. OCCUPATIONAL SAFETY AND HEALTH ADMINISTRATION REGULATIONS, ALL TRENCHES OVER 5 FEET IN DEPTH IN EITHER HARD AND COMPACT OR SOFT AND UNSTABLE SOIL SHALL BE SLOPED, SHORED, SHEETED, BRACED OR OTHERWISE SUPPORTED. FURTHERMORE, ALL TRENCHES LESS THAN 5 FEET IN DEPTH SHALL ALSO BE EFFECTIVELY PROTECTED WHEN HAZARDOUS GROUND MOVEMENT MAY BE EXPECTED. TRENCH SAFETY SYSTEMS TO BE UTILIZED FOR THIS PROJECT WILL BE PROVIDE BY THE CONTRACTOR.
2. IN ACCORDANCE WITH THE U.S. OCCUPATIONAL SAFETY AND HEALTH ADMINISTRATION REGULATIONS,WHEN PERSONS ARE IN TRENCHES 4-FEET DEEP OR MORE, ADEQUATE MEANS OF EXIT, SUCH AS A LADDER OR STEPS, MUST BE PROVIDED AND LOCATED SO AS TO REQUIRE NO MORE THAN 25 FEET OF LATERAL TRAVEL.
3. CONSTRUCTION SHALL NOT PROCEED UNTIL APPROPRIATE TRENCH SAFETY SYSTEM DETAILS, AS DESIGNED BY A PROFESSIONAL ENGINEER, ARE RETAINED AND COPIES SUBMITTED TO THE CITY OF GEORGETOWN.
4. DEEP EXCAVATIONS: ON EXCAVATIONS EXCEEDING 20 FEET IN DEPTH, TWO OR MORE MEANS OF EGRESS FROM THE EXCAVATION SHALL BE PROVIDED. THE CONTRACTOR SHALL CONSULT WITH A REGISTERED ENGINEER, EXPERIENCED IN TRENCH SAFETY SYSTEMS, REGARDING SPECIFIC MEANS AND METHODS EMPLOYED. CONTRACTOR SHALL PROVIDE A TRENCH SAFETY PLAN SEALED BY A REGISTERED PROFESSIONAL ENGINEER AS REQUIRED BY THE CITY OF GEORGETOWN.

NO.	REVISION	BY	DATE

811 Know what's below. Call before you dig.

5508 HIGHWAY 290 WEST
SUITE 150
AUSTIN, TX 78735
512.872.6696
HRGREEN.COM

TBPE NO: 16384
TBPLS NO: 10194101

HRGreen® DEVELOPMENT TX

STATE OF TEXAS
CHRISTINE N. CAMPBELL
142536
LICENSED PROFESSIONAL ENGINEER
07/15/2025

WWL E PLAN & PROFILE

PARKSIDE ON THE RIVER SECTIONS 11, 12A & 15A CONSTRUCTION PLANS

GEORGETOWN, WILLIAMSON, TEXAS

DESIGNED BY: CC
DRAWN BY: MM
CHECKED BY: SN
APPROVED BY:

SHEET 126 OF 141

2025-XX-CON

P:\Blake Magee\Parkside Sections 11-15 & WOH 2\Section 11, 12A & 15A\03_ACAD\Plans\04\08\25 WWP\ WWL E.dwg, WWL E PLAN & PROFILE, July 16, 2025, 12:34 PM, imalak.mohammad

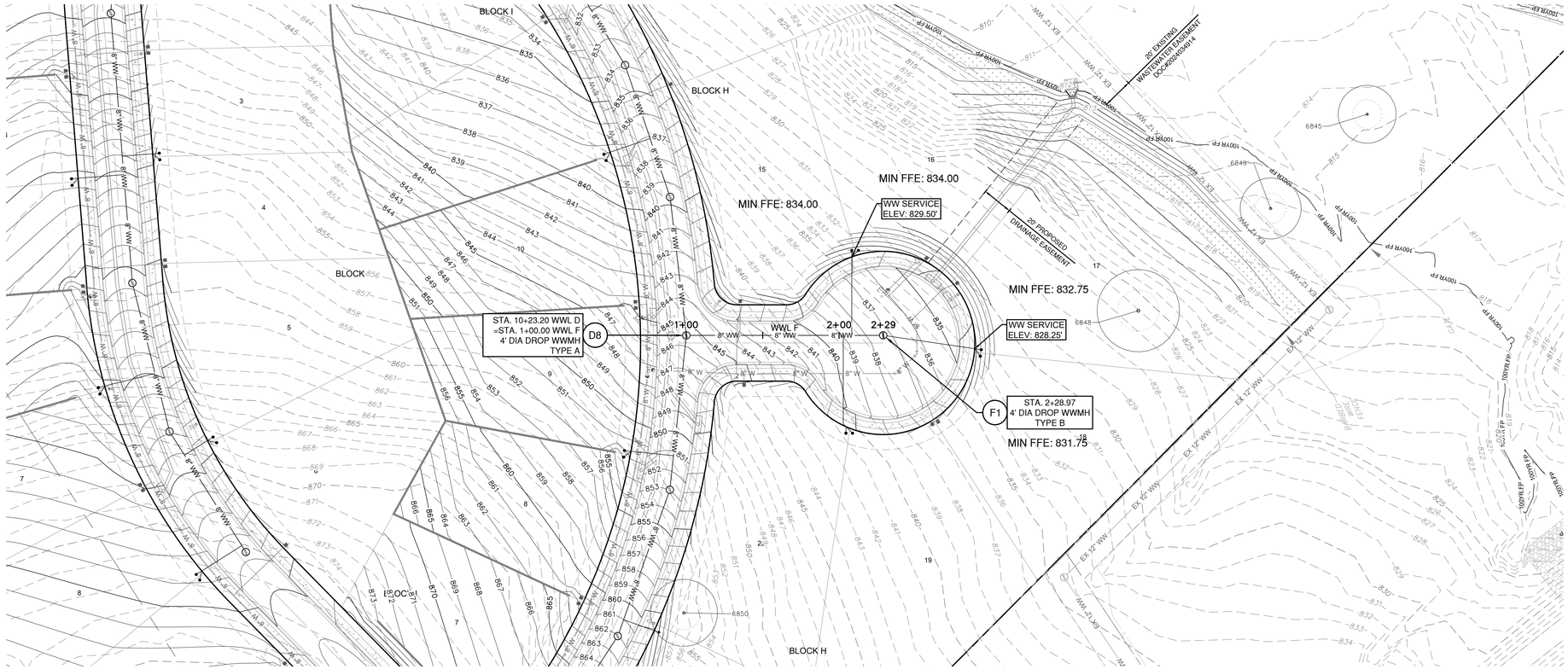

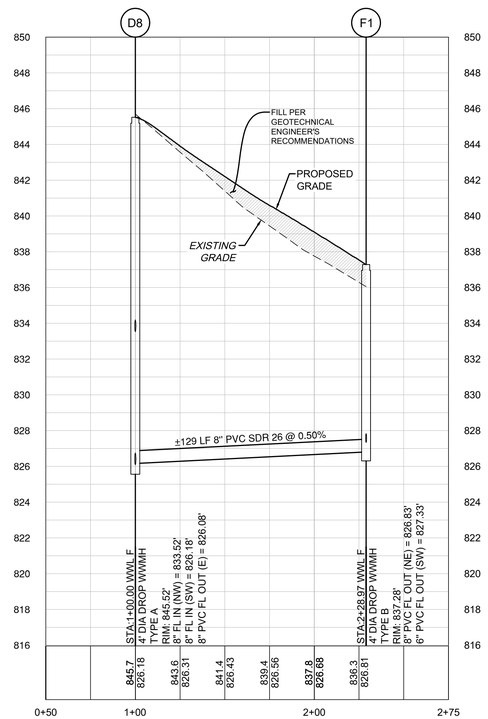

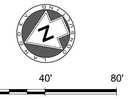

LEGEND

- EXISTING MINOR CONTOUR
- EXISTING MAJOR CONTOUR
- PROPOSED MINOR CONTOUR
- PROPOSED MAJOR CONTOUR
- BOUNDARY
- EASEMENT
- FEMA FLOODWAY PER FIRM# 48491C0460F & LOMR# 21-06-0115P
- FEMA AE — 100YR ATLAS 14 FEMA ZONE AE FLOODPLAIN PER FIRM# 48491C0460F & LOMR# 21-06-0115P
- FEMA A — 100YR FEMA ZONE A FLOODPLAIN PER FIRM MAP# 48491C0460F
- 100YR CLOMR — 100YR CLOMR FLOODPLAIN CASE# 15-06-2071R
- FDFP — 100YR ATLAS 14 FULLY DEVELOPED FLOODPLAIN (STANTEC DRAINAGE STUDY, SHERVIN NOOSHIN, 3/25/19) APPROVED WITH PP# 2019-5-PP
- OHWM — ORDINARY HIGH WATER MARK PER ADAMS ENVIRONMENTAL
- 2-4" SCH 40 PVC SLEEVE
- 8" WW — PROPOSED WASTEWATER LINE
- SD — PROPOSED STORM LINE
- 8" W — PROPOSED WATER LINE
- FIRE HYDRANT
- WATER VALVE
- SD — STORM SEWER MAHNOLE
- WW — WASTEWATER MANHOLE
- CURB INLET
- PROPOSED SINGLE WASTEWATER SERVICE
- PROPOSED DOUBLE WASTEWATER SERVICE
- PROPOSED SINGLE WATER SERVICE
- PROPOSED DOUBLE WATER SERVICE
- TREES TO REMAIN HERITAGE
- TREES TO REMAIN NON HERITAGE

VERT. SCALE: 1" = 4'
HORZ. SCALE: 1" = 40'

4'
2'
0
VERT. SCALE

EXISTING GRADE - CENTERLINE
FINISHED GRADE - CENTERLINE

EXISTING GROUND 1000.1 / 995.0 PROPOSED FLOWLINE

NOTES:

1. REFER TO THE WATER AND WASTEWATER DETAIL SHEET(S) FOR TYPE S AND TYPE D SERVICE CONNECTIONS.
2. UTILITIES ON THIS SITE TO BE BUILT PER THE APPROVED UTILITY ASSIGNMENT SHOWN ON THE WATER AND WASTEWATER DETAIL SHEET.
3. PORTIONS OF THIS SITE LIE WITHIN THE FEMA 100-YR FLOODPLAIN.
4. ALL PROPOSED GRAVITY WASTEWATER PIPES TO BE SDR-26 UNLESS OTHERWISE SPECIFIED ON THE PLANS.
5. UNLESS OTHERWISE NOTED, CONTRACTOR TO ENSURE WW SERVICES ARE SET TO MAXIMUM DEPTH (PER DETAIL WW13) FOR ALL LOTS IN ORDER TO PROVIDE SUFFICIENT DEPTH TO CONNECT SERVICE.
6. ALL MANHOLES TO BE COATED PER CITY OF GEORGETOWN SPECIFICATIONS. EXISTING MANHOLES WITH PROPOSED CONNECTIONS TO BE COATED.
7. IF THE HOME BUILDER CANNOT ACHIEVE THE MINIMUM FINISHED FLOOR ELEVATIONS SPECIFIED, THEN A WASTEWATER GRINDER PUMP SYSTEM MAY BE NEEDED TO CONNECT TO THE WASTEWATER MAIN.

TRENCH SAFETY NOTES:

1. IN ACCORDANCE WITH THE LAWS OF THE STATE OF TEXAS AND THE U.S. OCCUPATIONAL SAFETY AND HEALTH ADMINISTRATION REGULATIONS, ALL TRENCHES OVER 5 FEET IN DEPTH IN EITHER HARD AND COMPACT OR SOFT AND UNSTABLE SOIL SHALL BE SLOPED, SHORED, SHEETED, BRACED OR OTHERWISE SUPPORTED. FURTHERMORE, ALL TRENCHES LESS THAN 5 FEET IN DEPTH SHALL ALSO BE EFFECTIVELY PROTECTED WHEN HAZARDOUS GROUND MOVEMENT MAY BE EXPECTED. TRENCH SAFETY SYSTEMS TO BE UTILIZED FOR THIS PROJECT WILL BE PROVIDE BY THE CONTRACTOR.
2. IN ACCORDANCE WITH THE U.S. OCCUPATIONAL SAFETY AND HEALTH ADMINISTRATION REGULATIONS,WHEN PERSONS ARE IN TRENCHES 4-FEET DEEP OR MORE, ADEQUATE MEANS OF EXIT, SUCH AS A LADDER OR STEPS, MUST BE PROVIDED AND LOCATED SO AS TO REQUIRE NO MORE THAN 25 FEET OF LATERAL TRAVEL.
3. CONSTRUCTION SHALL NOT PROCEED UNTIL APPROPRIATE TRENCH SAFETY SYSTEM DETAILS, AS DESIGNED BY A PROFESSIONAL ENGINEER, ARE RETAINED AND COPIES SUBMITTED TO THE CITY OF GEORGETOWN.
4. DEEP EXCAVATIONS: ON EXCAVATIONS EXCEEDING 20 FEET IN DEPTH, TWO OR MORE MEANS OF EGRESS FROM THE EXCAVATION SHALL BE PROVIDED. THE CONTRACTOR SHALL CONSULT WITH A REGISTERED ENGINEER, EXPERIENCED IN TRENCH SAFETY SYSTEMS, REGARDING SPECIFIC MEANS AND METHODS EMPLOYED. CONTRACTOR SHALL PROVIDE A TRENCH SAFETY PLAN SEALED BY A REGISTERED PROFESSIONAL ENGINEER AS REQUIRED BY THE CITY OF GEORGETOWN.

NO	REVISION	BY	DATE

811 Know what's below. Call before you dig.

HRGreen
DEVELOPMENT TX
5508 HIGHWAY 290 WEST
SUITE 150
AUSTIN, TX 78735
512.872.6696
HRGREEN.COM
TBPE NO: 16384
TBPLS NO: 10194101

STATE OF TEXAS
CHRISTINE N. CAMPBELL
142536
LICENSED PROFESSIONAL ENGINEER
07/15/2025

WWL F PLAN & PROFILE

PARKSIDE ON THE RIVER SECTIONS 11, 12A & 15A CONSTRUCTION PLANS

GEORGETOWN, WILLIAMSON, TEXAS

DESIGNED BY: CC
DRAWN BY: MM
CHECKED BY: SN
APPROVED BY:

SHEET 127 OF 141

2025-XX-CON

P:\Blake Magee\Parkside Sections 11-15 & WOA 5\Sections 11, 12A & 15A\00_ACAD\Planset\040523 WWPP WWL F.dwg, WWL F PLAN & PROFILE, July 16, 2025, 12:25 PM, mallak.muhammad

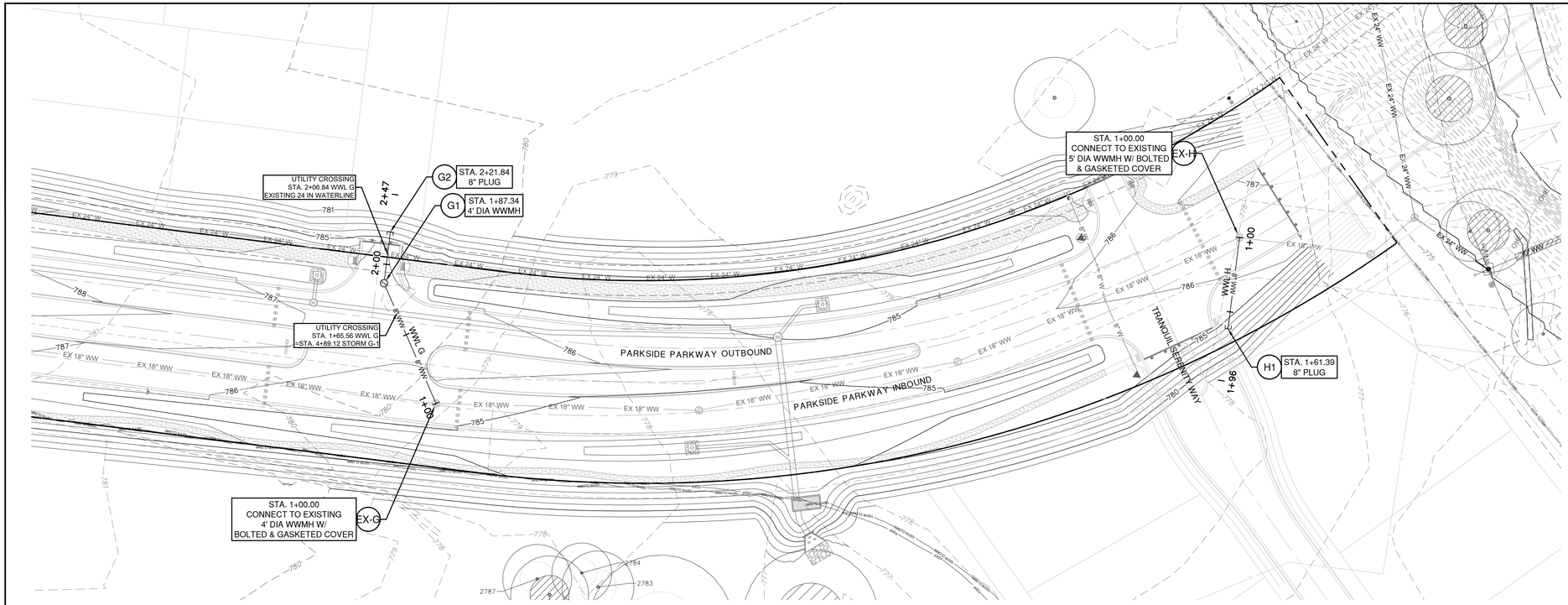

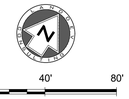

LEGEND

- EXISTING MINOR CONTOUR
- EXISTING MAJOR CONTOUR
- PROPOSED MINOR CONTOUR
- PROPOSED MAJOR CONTOUR
- BOUNDARY
- EASEMENT
- FEMA FLOODWAY PER FIRM# 48491C0460F & LOMR# 21-06-0115P
- FEMA AE — 100YR ATLAS 14 FEMA ZONE AE FLOODPLAIN PER FIRM# 48491C0460F & LOMR# 21-06-0115P
- FEMA A — 100YR FEMA ZONE A FLOODPLAIN PER FIRM MAP# 48491C0460F
- 100YR CLOMR — 100YR CLOMR FLOODPLAIN CASE# 15-06-2071R
- FDFP — 100YR ATLAS 14 FULLY DEVELOPED FLOODPLAIN (STANTEC DRAINAGE STUDY, SHERVIN NOOSHIN, 3/25/19) APPROVED WITH PP# 2019-5-PP
- OHWM — ORDINARY HIGH WATER MARK PER ADAMS ENVIRONMENTAL
- 2-4" SCH 40 PVC SLEEVE
- 8" WW — PROPOSED WASTEWATER LINE
- SD — PROPOSED STORM LINE
- 8" W — PROPOSED WATER LINE
- FIRE HYDRANT
- WATER VALVE
- SD — STORM SEWER MAHNOLE
- WW — WASTEWATER MANHOLE
- CURB INLET
- PROPOSED SINGLE WASTEWATER SERVICE
- PROPOSED DOUBLE WASTEWATER SERVICE
- PROPOSED SINGLE WATER SERVICE
- PROPOSED DOUBLE WATER SERVICE
- TREES TO REMAIN HERITAGE
- TREES TO REMAIN NON HERITAGE

WWL H

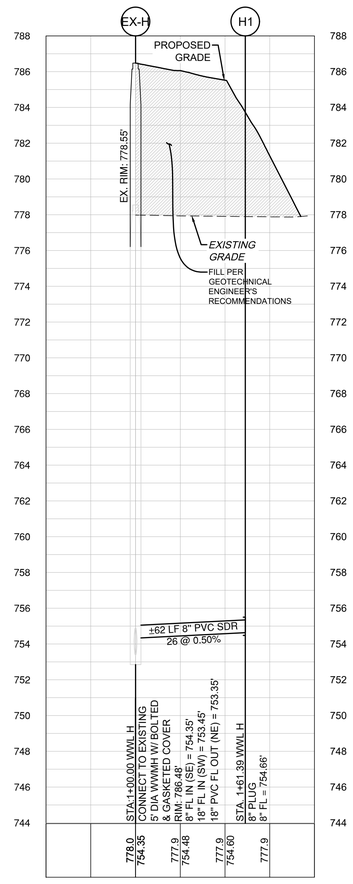

WWL G

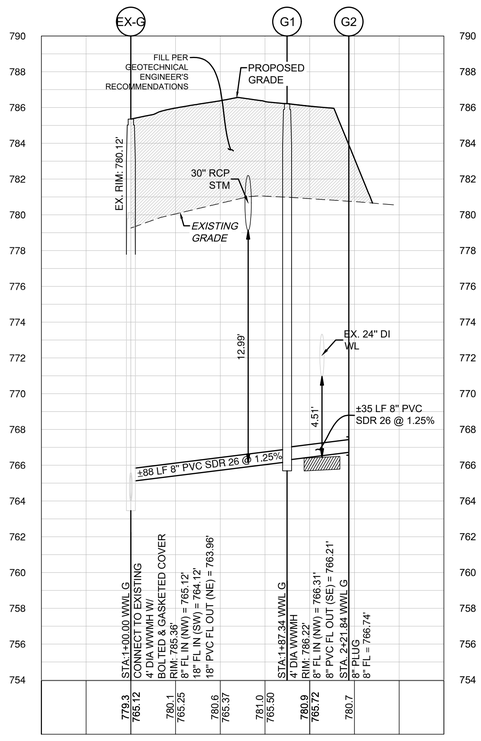

CONTRACTOR TO VERIFY LOCATION OF EXISTING UTILITIES (HORIZONTALLY & VERTICALLY) PRIOR TO INSTALLATION AND NOTIFY ENGINEER OF ANY DISCREPANCIES

VERT. SCALE: 1" = 4'
HORZ. SCALE: 1" = 40'

4'
2'
0
VERT. SCALE

EXISTING GRADE - CENTERLINE
FINISHED GRADE - CENTERLINE

EXISTING GROUND — 100% 10' 90% — PROPOSED FLOWLINE

NOTES:

1. REFER TO THE WATER AND WASTEWATER DETAIL SHEET(S) FOR TYPE S AND TYPE D SERVICE CONNECTIONS.
2. UTILITIES ON THIS SITE TO BE BUILT PER THE APPROVED UTILITY ASSIGNMENT SHOWN ON THE WATER AND WASTEWATER DETAIL SHEET.
3. PORTIONS OF THIS SITE LIE WITHIN THE FEMA 100-YR FLOODPLAIN.
4. ALL PROPOSED GRAVITY WASTEWATER PIPES TO BE SDR-26 UNLESS OTHERWISE SPECIFIED ON THE PLANS.
5. UNLESS OTHERWISE NOTED, CONTRACTOR TO ENSURE WW SERVICES ARE SET TO MAXIMUM DEPTH (PER DETAIL WW13) FOR ALL LOTS IN ORDER TO PROVIDE SUFFICIENT DEPTH TO CONNECT SERVICE.
6. ALL MANHOLES TO BE COATED PER CITY OF GEORGETOWN SPECIFICATIONS. EXISTING MANHOLES WITH PROPOSED CONNECTIONS TO BE COATED.
7. IF THE HOME BUILDER CANNOT ACHIEVE THE MINIMUM FINISHED FLOOR ELEVATIONS SPECIFIED, THEN A WASTEWATER GRINDER PUMP SYSTEM MAY BE NEEDED TO CONNECT TO THE WASTEWATER MAIN.

TRENCH SAFETY NOTES:

1. IN ACCORDANCE WITH THE LAWS OF THE STATE OF TEXAS AND THE U.S. OCCUPATIONAL SAFETY AND HEALTH ADMINISTRATION REGULATIONS, ALL TRENCHES OVER 5 FEET IN DEPTH IN EITHER HARD AND COMPACT OR SOFT AND UNSTABLE SOIL SHALL BE SLOPED, SHORED, SHEETED, BRACED OR OTHERWISE SUPPORTED. FURTHERMORE, ALL TRENCHES LESS THAN 5 FEET IN DEPTH SHALL ALSO BE EFFECTIVELY PROTECTED WHEN HAZARDOUS GROUND MOVEMENT MAY BE EXPECTED. TRENCH SAFETY SYSTEMS TO BE UTILIZED FOR THIS PROJECT WILL BE PROVIDE BY THE CONTRACTOR.
2. IN ACCORDANCE WITH THE U.S. OCCUPATIONAL SAFETY AND HEALTH ADMINISTRATION REGULATIONS,WHEN PERSONS ARE IN TRENCHES 4-FEET DEEP OR MORE, ADEQUATE MEANS OF EXIT, SUCH AS A LADDER OR STEPS, MUST BE PROVIDED AND LOCATED SO AS TO REQUIRE NO MORE THAN 25 FEET OF LATERAL TRAVEL.
3. CONSTRUCTION SHALL NOT PROCEED UNTIL APPROPRIATE TRENCH SAFETY SYSTEM DETAILS, AS DESIGNED BY A PROFESSIONAL ENGINEER, ARE RETAINED AND COPIES SUBMITTED TO THE CITY OF GEORGETOWN.
4. DEEP EXCAVATIONS: ON EXCAVATIONS EXCEEDING 20 FEET IN DEPTH, TWO OR MORE MEANS OF EGRESS FROM THE EXCAVATION SHALL BE PROVIDED. THE CONTRACTOR SHALL CONSULT WITH A REGISTERED ENGINEER, EXPERIENCED IN TRENCH SAFETY SYSTEMS, REGARDING SPECIFIC MEANS AND METHODS EMPLOYED. CONTRACTOR SHALL PROVIDE A TRENCH SAFETY PLAN SEALED BY A REGISTERED PROFESSIONAL ENGINEER AS REQUIRED BY THE CITY OF GEORGETOWN.

NO	REVISION	BY	DATE

811 Know what's below. Call before you dig.

5508 HIGHWAY 290 WEST
SUITE 150
AUSTIN, TX 78735
512.872.6696
HRGREEN.COM

TBPE NO: 16384
TBPLS NO: 10194101

HRGreen®
DEVELOPMENT TX

STATE OF TEXAS
CHRISTINE N. CAMPBELL
142536
LICENSED PROFESSIONAL ENGINEER
07/15/2025

WWL G & H PLAN & PROFILE

PARKSIDE ON THE RIVER SECTIONS 11, 12A & 15A CONSTRUCTION PLANS

GEORGETOWN, WILLIAMSON, TEXAS

DESIGNED BY: CC
DRAWN BY: MM
CHECKED BY: SN
APPROVED BY:

SHEET 128 OF 141

2025-XX-CON

P:\Blake Magee\Parkside Sections 11-15 & WOA 5\Sections 11, 12A & 15A\00_ACAD\Planset\240523 WWPP WWL G.dwg, WWL G & H PLAN & PROFILE, July 16, 2025, 12:39 PM, mallan.muhammad

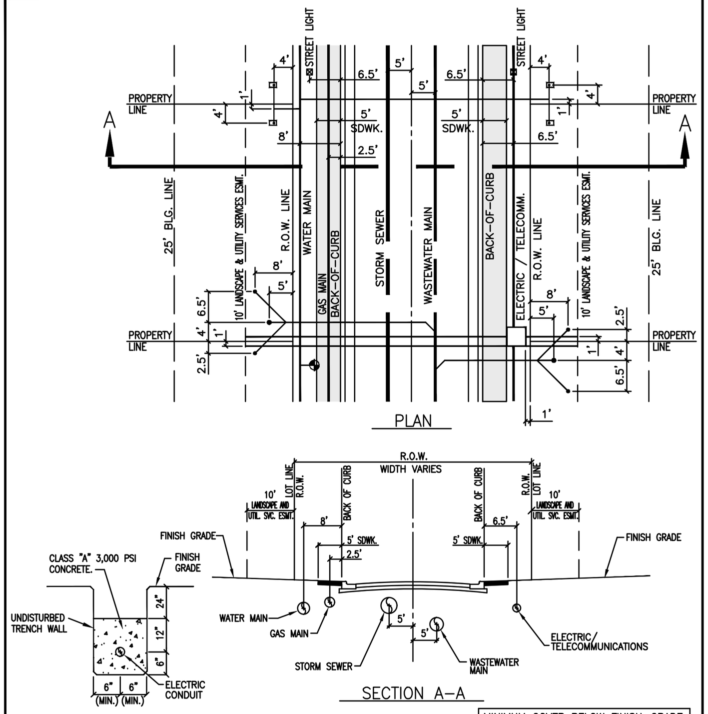

NOTE: WHEN CROSSING A WATER MAIN, THE ELECTRIC CONDUIT MUST BE ENCASED WITH 3,000 PSI RED CONCRETE FOR FIVE (5) FEET BOTH SIDES FROM THE CROSSING POINT.

ELECTRIC CONDUIT CONCRETE ENCASEMENT DETAIL

MINIMUM COVER BELOW FINISH-GRADE	
ALL UTILITIES UNDER ROADWAY - 36"	
ELECTRIC PRIMARY	36"
ELECTRIC SECONDARY	24"
WATER	36"
WASTEWATER	48"
STORM SEWER	36"
GAS	36"
TELECOMMUNICATIONS	36"

CLASSIFICATION	ROW	B-B	PVMT.
LOCAL STREET	50'	28'	24'
RESIDENTIAL STREET	65'	37'	33'
MAJOR COLLECTOR	73'	45'	41'

The Architect/Engineer assumes responsibility for appropriate use of this standard.

ADOPTED 6/21/2006
CITY OF GEORGETOWN CONSTRUCTION STANDARDS AND DETAILS
UTILITY ASSIGNMENTS FOR LOCAL STREETS, RESIDENTIAL COLLECTORS AND MAJOR COLLECTORS
WW01A — NTS — 1/2003 — MRS — TRB

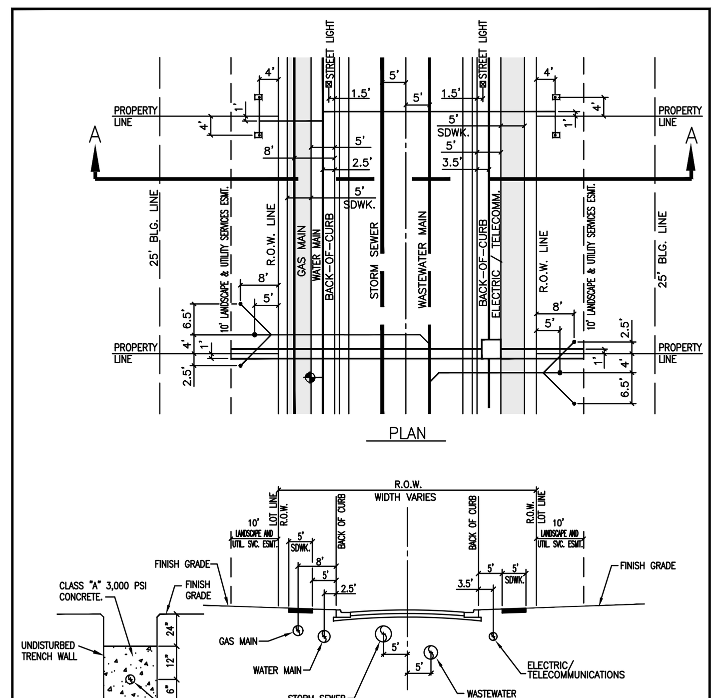

NOTE: WHEN CROSSING A WATER MAIN, THE ELECTRIC CONDUIT MUST BE ENCASED WITH 3,000 PSI RED CONCRETE FOR FIVE (5) FEET BOTH SIDES FROM THE CROSSING POINT.

ELECTRIC CONDUIT CONCRETE ENCASEMENT DETAIL

MINIMUM COVER BELOW FINISH-GRADE	
ALL UTILITIES UNDER ROADWAY - 36"	
ELECTRIC PRIMARY	36"
ELECTRIC SECONDARY	24"
WATER	36"
WASTEWATER	48"
STORM SEWER	36"
GAS	36"
TELECOMMUNICATIONS	36"

CLASSIFICATION	ROW	B-B	PVMT.
MINOR ARTERIAL	VARIES	80'	76'
MAJOR ARTERIAL	VARIES	110'	106'
——	——	——	——

The Architect/Engineer assumes responsibility for appropriate use of this standard.

ADOPTED 6/21/2006
CITY OF GEORGETOWN CONSTRUCTION STANDARDS AND DETAILS
UTILITY ASSIGNMENTS FOR MINOR ARTERIAL AND MAJOR ARTERIAL ROADWAYS
WW01B — NTS — 1/2003 — MRS — TRB

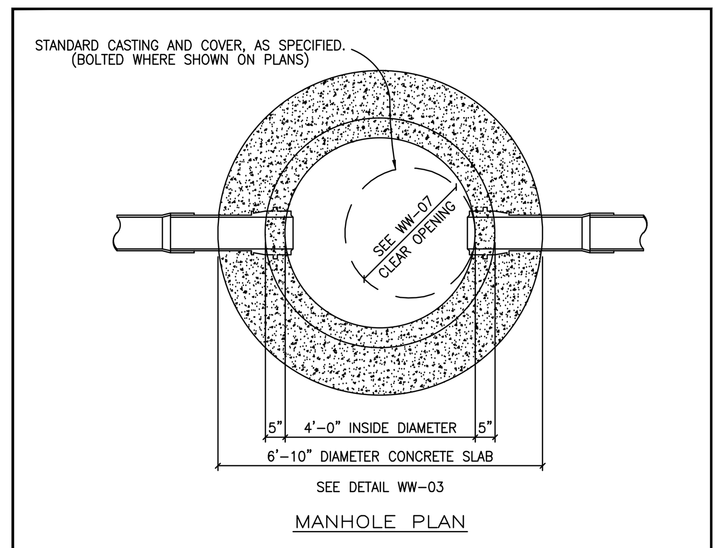

CITY OF GEORGETOWN NOTES:

MANHOLE DETAILS SHALL REFLECT THE CITY'S MINIMUM SPECIFICATIONS, AS STATED BELOW:

A. ALL MANHOLES SHALL BE 48" I.D., R.C.P., CLASS III, WITH RUBBER PROFILE GASKET - SINGLE OFF-SET JOINT CONFORMING TO ASTM C478, C433 AND C76.
B. ALL MANHOLES SHALL HAVE FRAME AND COVER, AS MANUFACTURED BY EAST JORDAN IRON WORKS (AS PER DETAIL # WW-07) OR APPROVED EQUIVALENT.
C. ALL MANHOLES SHALL BE CONCRETE WITH CAST IRON FRAME AND COVER.
D. ALL MANHOLES SHALL HAVE AN ECCENTRIC CONE.
E. MANHOLES MAY HAVE A FLAT LID, IF APPROVED BY CITY OF GEORGETOWN, BEING 12" THICK WITH A MINIMUM 30" OPENING, AS MANUFACTURED BY HANSEN PIPE AND PRECAST OR APPROVED EQUAL M.F.G. CONFORMING TO ASTM C478, 5000 P.S.I. CONCRETE, TRAFFIC BEARING AND WITH PROFILE GASKET - SINGLE OFF-SET JOINT CONFORMING TO ASTM C443.
F. INVERTS AND FLEXIBLE SEAL BOOTS, PER ASTM C-923, SHALL BE CAST INTO BASE SECTION.
G. MINIMUM DROP BETWEEN INVERTS SHALL BE ONE-TENTH OF A FOOT (0.1').
H. GRADE RINGS WITH AN I.D. TO MATCH FRAMES CLEAR OPENING WITH A MAXIMUM ADJUSTMENT OF 12" ARE ALLOWED.

The Architect/Engineer assumes responsibility for appropriate use of this standard.

ADOPTED 6/21/2006
CITY OF GEORGETOWN CONSTRUCTION STANDARDS AND DETAILS
STANDARD MANHOLE - PLAN
WW02 — NTS — 1/2003 — MRS — TRB

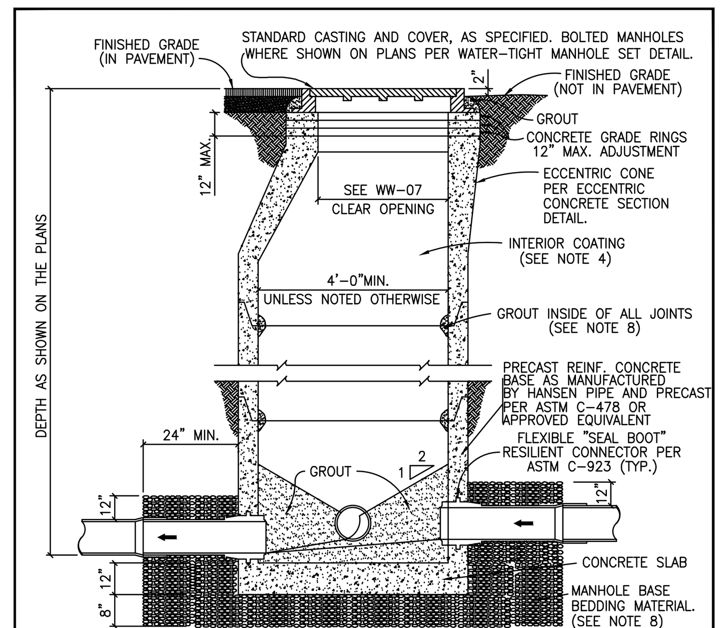

NOTES:
1. MANHOLES SHALL BE PRECAST ASTM C-478 BELL AND SPIGOT WITH PROFILE GASKET - SINGLE OFF-SET JOINTS.
2. SEE PLANS AND MANHOLE SCHEDULE, FOR MANHOLE SIZE, LOCATION, CONFIGURATION, TYPE OF TOP SECTION, VENTING REQUIREMENTS, PIPE SIZE AND TYPES.
3. SEE SPECIFICATIONS ON MATERIALS AND CONSTRUCTION.
4. AN 80 MIL. COAT OF RAVEN LINING SYSTEMS, RAVEN 405 ULTRA HIGH BUILD EPOXY COATING, OR SPRAY WALL EPOXY COATING, OR APPROVED EQUAL, TO BE APPLIED TO ENTIRE INTERIOR OF EACH WASTEWATER MANHOLE AND UNDERSIDE OF FLAT TOPS.
5. ALL MANHOLE COVERS SHALL BE BOLTED AND GASKETTED WHEN MANHOLES ARE LOCATED OUT FROM PAVEMENT.
6. MANHOLES TO BE VENTED ARE IDENTIFIED ON MANHOLE SCHEDULE. REFERENCE MANHOLE VENT DETAIL.
7. MANHOLES ARE TO BE DESIGNED TO RESIST LATERAL AND VERTICAL SOIL FORCES RESULTING FROM MANHOLE DEPTH. ADDITIONALLY, MANHOLES LOCATED IN PAVEMENT TO BE DESIGNED FOR HS-20 TRAFFIC LOADS.
8. GROUT SHALL MEET THE REQUIREMENTS AS STATED BY THE COATING MANUFACTURER.
9. MANHOLE BASE BEDDING MATERIAL SPECS. FOR 3/4" WASHED GRAVEL:
   SIEVE SIZE 2", PERCENT (%) RETAINED 0
   SIEVE SIZE 1 1/2", % RETAINED 0-10
   SIEVE SIZE 1", % RETAINED 45-80
   SIEVE SIZE 3/4", % RETAINED 85-100
   SIEVE SIZE 3/8", % RETAINED 95-100

The Architect/Engineer assumes responsibility for appropriate use of this standard.

ADOPTED 6/21/2006
CITY OF GEORGETOWN CONSTRUCTION STANDARDS AND DETAILS
STANDARD MANHOLE - SECTION
WW03 — NTS — 1/2003 — MRS — TRB

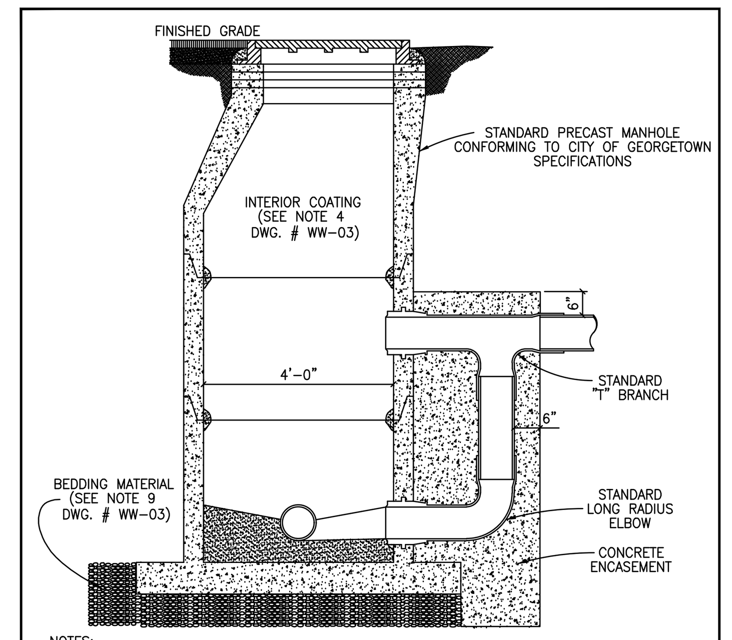

NOTES:
1. CONCRETE ENCASEMENT FOR DROP CONNECTION TO BE POURED INTEGRALLY WITH BOTH MANHOLE SLAB AND WALL.
2. DROP CONNECTIONS SHALL BE REQUIRED WHENEVER AN INFLUENT SEWER IS LOCATED TWO FEET (2') OR MORE ABOVE THE MAIN INVERT CHANNEL.
3. A FLOW CHANNEL SHALL BE CONSTRUCTED INSIDE MANHOLE TO DIRECT INFLUENT INTO FLOW STREAM.
4. WHEN P.V.C. IS USED IN SANITARY SEWER LINES, SOLVENT TYPE JOINT P.V.C. FITTINGS MAY BE UTILIZED IN THE DROP ASSEMBLY ONLY.
5. MINIMUM PIPE SIZE FOR DROP IS EIGHT INCHES (8").
6. SEE STANDARD MANHOLE DETAIL (DWG. # WW-03) FOR ADDITIONAL REQUIREMENTS.

The Architect/Engineer assumes responsibility for appropriate use of this standard.

ADOPTED 6/21/2006
CITY OF GEORGETOWN CONSTRUCTION STANDARDS AND DETAILS
DROP CONNECTION-PRECAST MANHOLE TYPE "A"
WW04 — NTS — 1/2003 — MRS — TRB

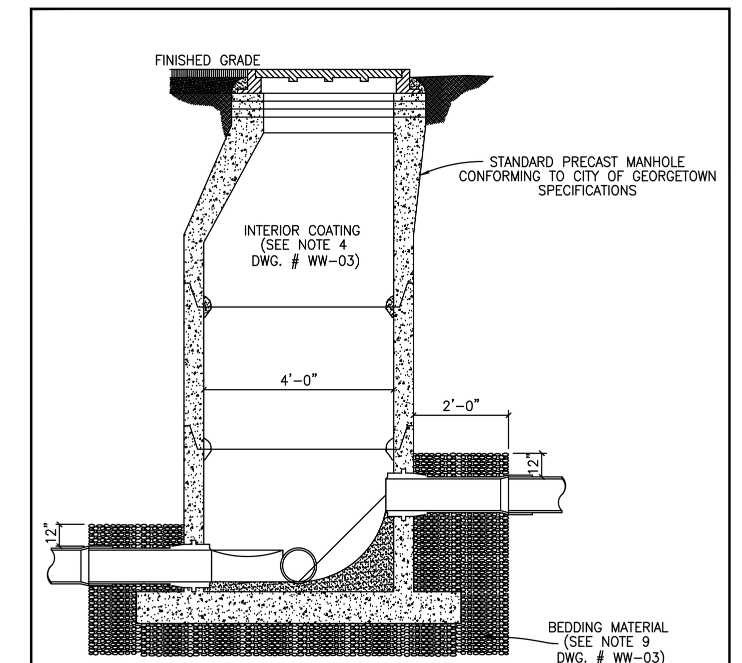

NOTES:
1. TO BE USED WHERE DROP IS SIX INCHES (6") TO TWO FEET (2'-0").
2. A FLOW CHANNEL SHALL BE CONSTRUCTED INSIDE MANHOLE TO DIRECT INFLUENT INTO FLOW STREAM.
3. CONSTRUCTION OF DROP SHALL PROVIDE AN OVERSIZED SLAB TO EXTEND UNDER THE DROP CONNECTION.
4. MINIMUM PIPE SIZE FOR DROP IS EIGHT INCHES (8").
5. SEE STANDARD MANHOLE DETAIL (DWG. # WW-03) FOR ADDITIONAL REQUIREMENTS.

The Architect/Engineer assumes responsibility for appropriate use of this standard.

ADOPTED 6/21/2006
CITY OF GEORGETOWN CONSTRUCTION STANDARDS AND DETAILS
DROP CONNECTION-PRECAST MANHOLE TYPE "B"
WW05 — NTS — 1/2003 — MRS — TRB

FLOW PATTERNS FOR INVERT CHANNELS

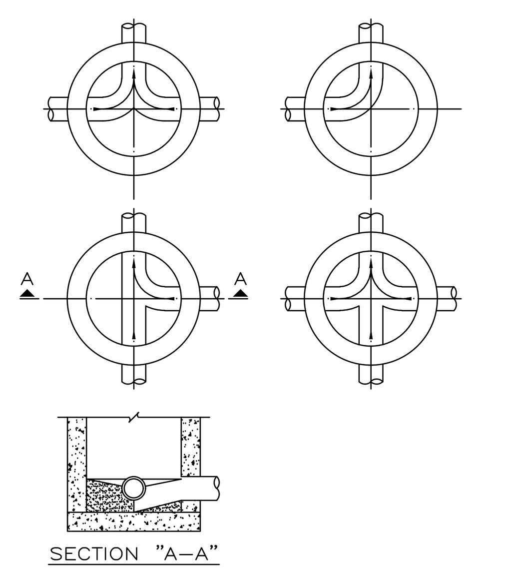

NOTES:
1. INVERT CHANNELS TO BE CONSTRUCTED FOR SMOOTH FLOW WITH NO OBSTRUCTIONS.
2. SPILLWAYS SHALL BE CONSTRUCTED BETWEEN PIPES WITH DIFFERENT INVERT ELEVATIONS PROVIDING FOR SMOOTH FLOW.
3. CHANNELS FOR FUTURE CONSTRUCTIONS (STUBS) SHALL BE CONSTRUCTED, FILLED WITH SAND, AND COVERED WITH 1" OF MORTAR.
4. SLOPE MANHOLE ITSELF WITH A 1:2 SLOPE FROM MANHOLE WALL TO CHANNEL.
5. INVERT SHALL BE A MINIMUM OF 1/2 THE DIAMETER OF THE LARGEST PIPE OR 4" DEEP.

The Architect/Engineer assumes responsibility for appropriate use of this standard.

ADOPTED 6/21/2006
CITY OF GEORGETOWN CONSTRUCTION STANDARDS AND DETAILS
FLOW PATTERNS FOR INVERT CHANNELS
WW06 — NTS — 1/2003 — MRS — TRB

The Architect/Engineer assumes responsibility for appropriate use of this standard.

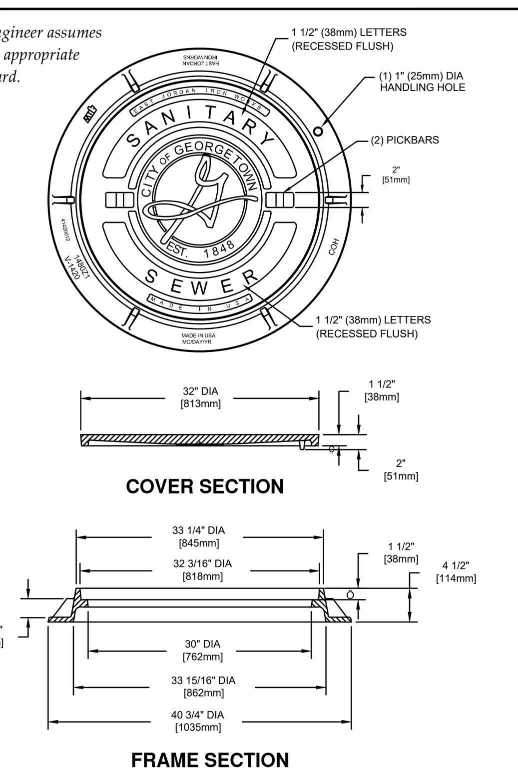

NOTES:
1. STANDARD WASTEWATER MANHOLE SET TO BE EAST JORDAN IRON WORKS, INC. CATALOG NO. 1480A V-1420/1480Z1, COVER TO BE STAMPED WITH "SANITARY SEWER".
2. STANDARD WASTEWATER MANHOLE SET TO BE HEAVY DUTY LOAD RATED.
3. FOR MORE DETAILED SPECIFICATIONS REFER TO EAST JORDAN IRON WORKS, INC. REFERENCE PRODUCT DRAWING 41420012 00148390.
4. FOR BOLTED WASTEWATER MANHOLE SET REFER TO DETAIL WW07A.

ADOPTED 6/21/2006
CITY OF GEORGETOWN CONSTRUCTION STANDARDS AND DETAILS
STANDARD WASTEWATER MANHOLE SET
WW07 — NTS — 1/2003 — MRS — TRB

The Architect/Engineer assumes responsibility for appropriate use of this standard.

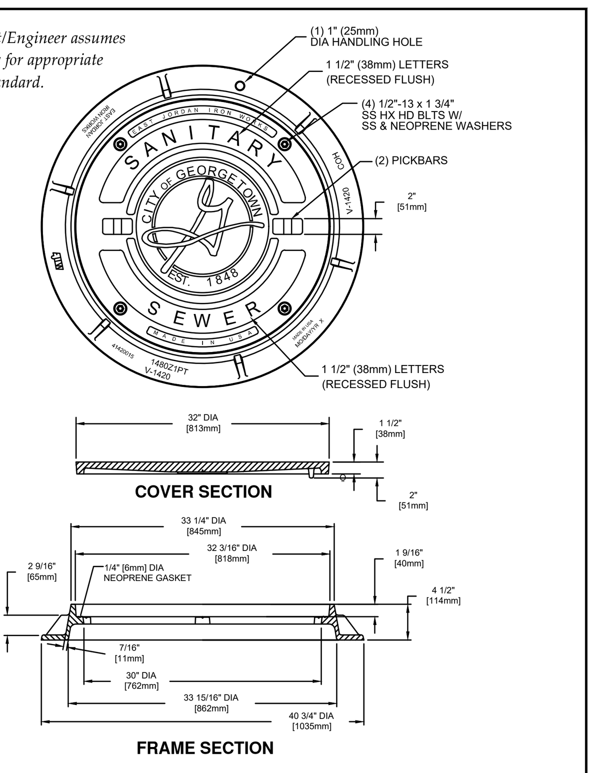

NOTES:
1. BOLTED WASTEWATER MANHOLE SET TO BE EAST JORDAN IRON WORKS, INC. CATALOG NO. 1480APT V-1420/1480Z1PT, COVER TO BE STAMPED WITH "SANITARY SEWER".
2. BOLTED WASTEWATER MANHOLE SET TO BE HEAVY DUTY LOAD RATED.
3. FOR MORE DETAILED SPECIFICATIONS REFER TO EAST JORDAN IRON WORKS, INC. REFERENCE PRODUCT DRAWING 00148392 41420015.
4. FOR STANDARD WASTEWATER MANHOLE SET REFER TO DETAIL WW07.

ADOPTED 6/21/2006
CITY OF GEORGETOWN CONSTRUCTION STANDARDS AND DETAILS
BOLTED WASTEWATER MANHOLE SET
WW07A — NTS — 1/2006 — MRS — TRB

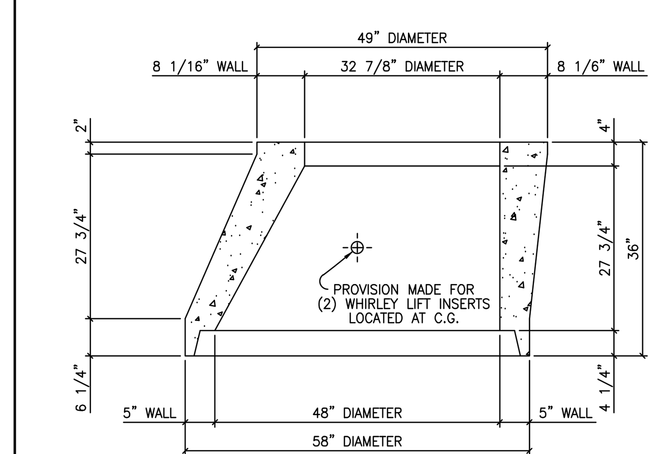

The Architect/Engineer assumes responsibility for appropriate use of this standard.

ADOPTED 6/21/2006
CITY OF GEORGETOWN CONSTRUCTION STANDARDS AND DETAILS
48"X5" TO 33"X8"X36" TALL ECCENTRIC CONCRETE SECTION
WW08 — NTS — 1/2003 — MRS — TRB

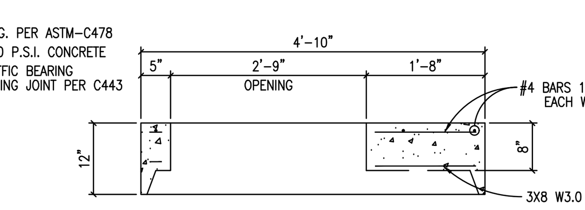

NOTES:
1. AVAILABLE WITH CAST IRON RING AND COVER CAST IN PLACE.
2. PERMITTED ONLY WITH WRITTEN APPROVAL FROM GEORGETOWN UTILITY SYSTEMS, CITY OF GEORGETOWN

The Architect/Engineer assumes responsibility for appropriate use of this standard.

ADOPTED 6/21/2006
CITY OF GEORGETOWN CONSTRUCTION STANDARDS AND DETAILS
48" MANHOLE FLAT LID
WW09 — NTS — 1/2003 — MRS — TRB

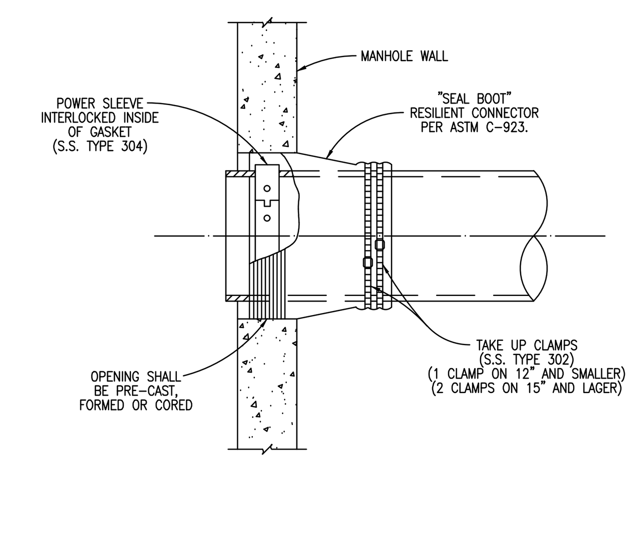

The Architect/Engineer assumes responsibility for appropriate use of this standard.

ADOPTED 6/21/2006
CITY OF GEORGETOWN CONSTRUCTION STANDARDS AND DETAILS
FLEXIBLE "SEAL BOOT" CONNECTOR
WW10 — NTS — 1/2003 — MRS — TRB

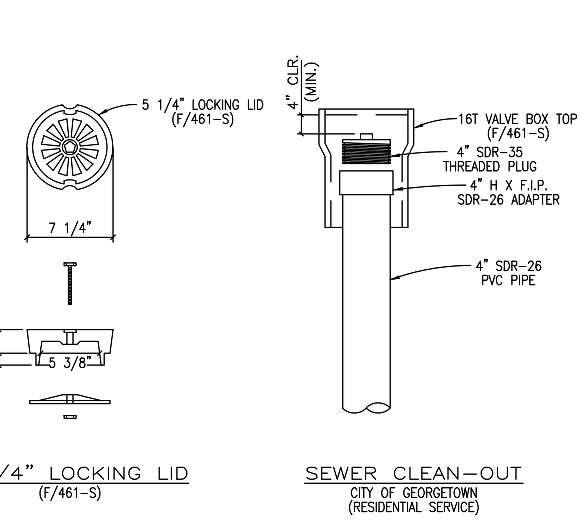

The Architect/Engineer assumes responsibility for appropriate use of this standard.

ADOPTED 6/21/2006
CITY OF GEORGETOWN CONSTRUCTION STANDARDS AND DETAILS
SEWER CLEAN-OUT DETAIL
WW12 — NTS — 1/2003 — MRS — TRB

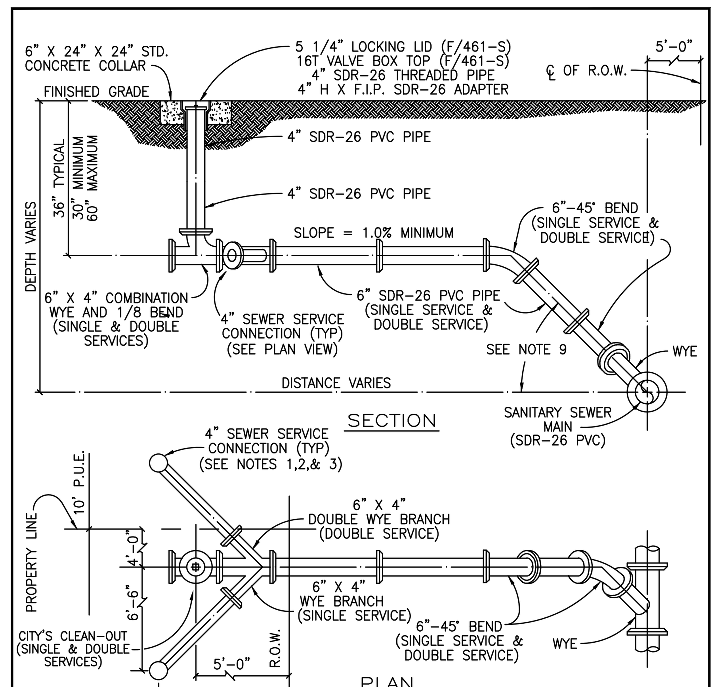

NOTES:
1. SERVICE CONNECTION RISERS SHALL TERMINATE 8' INSIDE THE PROPETY LINE.
2. THE END OF EACH SERVICE CONNECTION RISER SHALL BE EXTENDED 12" ABOVE FINISH GRADE.
3. EACH SERVICE CONNECTION SHALL BE PLUGGED WATER-TIGHT WITH AN APPROVED CAP OR PLUG.
4. FOR P.V.C. INSTALLATIONS, CONNECT TO EXISTING "BELL END" AND CONNECT OPPSITE END WITH P.V.C. TO P.V.C. KNOCK ON SLEEVE.
5. SOLIDLY TAMP BACKFILL AT LEAST ONE FOOT (1'-0") ABOVE TOP OF PIPE. SERVICES UNDER PAVED AREAS SHALL BE BACKFILLED TO THE SAME SPECIFICATIONS AS SHOWN ON PAVEMENT REPLACEMENT DETAIL.
6. CONTRACTOR SHALL MARK ON A CLEAN SET OF PLANS THE FINAL STATIONING OR DISTANCE AND DIRECTION FROM MANHOLE TO EACH SERVICE LATERAL AND GIVE TO ENGINEER FOR RECORD DRAWING PURPOSES.
7. ANY DEVIATION FROM THESE METHODS MUST BE APPROVED BY THE CITY OF GEORGETOWN ENGINEERING DEPARTMENT.
8. SERVICE LINE MATERIAL SHALL BE P.V.C., SDR-26.
9. SEWER SERVICE SLOPE TO BE 45° OFF CENTERLINE OF MAIN.

The Architect/Engineer assumes responsibility for appropriate use of this standard.

ADOPTED 6/21/2006
CITY OF GEORGETOWN CONSTRUCTION STANDARDS AND DETAILS
SEWER SERVICE CONNECTIONS
WW13 — NTS — 1/2003 — MRS — TRB

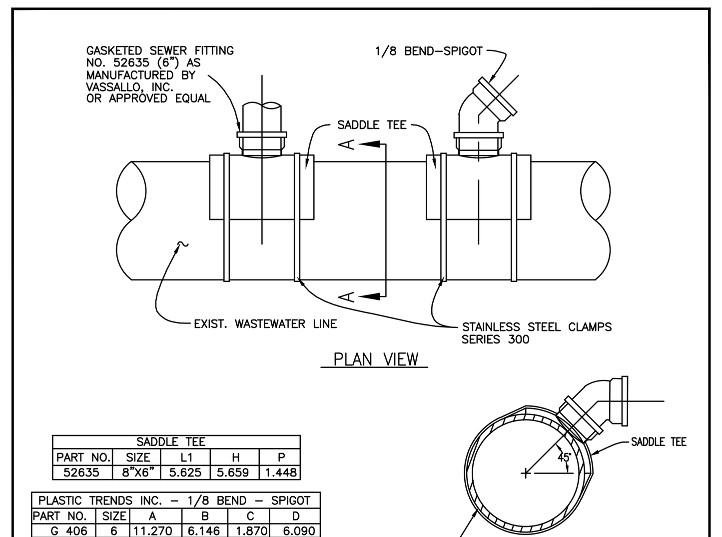

SADDLE TEE				
PART NO.	SIZE	L1	H	P
52635	8"X6"	5.625	5.659	1.448

PLASTIC TRENDS INC. - 1/8 BEND - SPIGOT					
PART NO.	SIZE	A	B	C	D
G 406	6	11.270	6.146	1.870	6.090

NOTES:
1. FLEXIBLE SADDLE TO BE INSTALLED IN ACCORDANCE WITH MANUFACTURER'S REQUIREMENTS.
2. SADDLE TEE SHALL BE ORIENTATED 45° TO MAIN. (SEE SEWER SERVICE CONNECTIONS DETAIL - DWG # WW-13)
3. EXCAVATE AROUND EXISTING 8-INCH PIPE, EXPOSING SUFFICIENT ROOM FOR S.S. CLAMPS.
4. THOROUGHLY CLEAN AND DRY THE MATING SURFACE WITH RAG OR PAPER TOWEL MAKE SURE THEY ARE FREE OF DUST AND MOISTURE.
5. MARK THE SIZE OF THE HOLE TO BE CUT USING THE GASKET SKIRT OR THE SADDLE ITSELF AS THE TEMPLATE.
6. SAW OUT THE SECTION OF THE PIPE WHERE THE SADDLE WILL BE LOCATED, WITH A SABER OR KEY HOLE SAW.
7. TEST TO MAKE SURE SADDLE FITS HOLE PROPERLY.
8. SERVICE PIPE SHALL NOT EXTEND MORE THAN ONE-HALF INCH INTO THE MAIN.
9. PLACE GASKET SKIRT AND SADDLE OVER OPENING AND TIGHTEN BAND CLAMPS EVENLY UNTIL SADDLE IS FIRMLY ATTACHED TO THE PIPE. APPLY PRESSURE ON THE SADDLE AGAINST THE PIPE WHILE TIGHTENING THE CLAMPS AS INDICATED ABOVE. DO NOT OVER TIGHTEN, DO NOT STRIP THREAD.
10. REPLACE THE BEDDING AND BACKFILL IN ACCORDANCE WITH THE TRENCH EMBEDMENT DETAIL.

The Architect/Engineer assumes responsibility for appropriate use of this standard.

ADOPTED 6/21/2006
CITY OF GEORGETOWN CONSTRUCTION STANDARDS AND DETAILS
GASKETED SEWER FITTING FOR SEWER SERVICE CONNECTIONS TO EXISTING MAINS
WW13A — NTS — 1/2003 — MRS — TRB

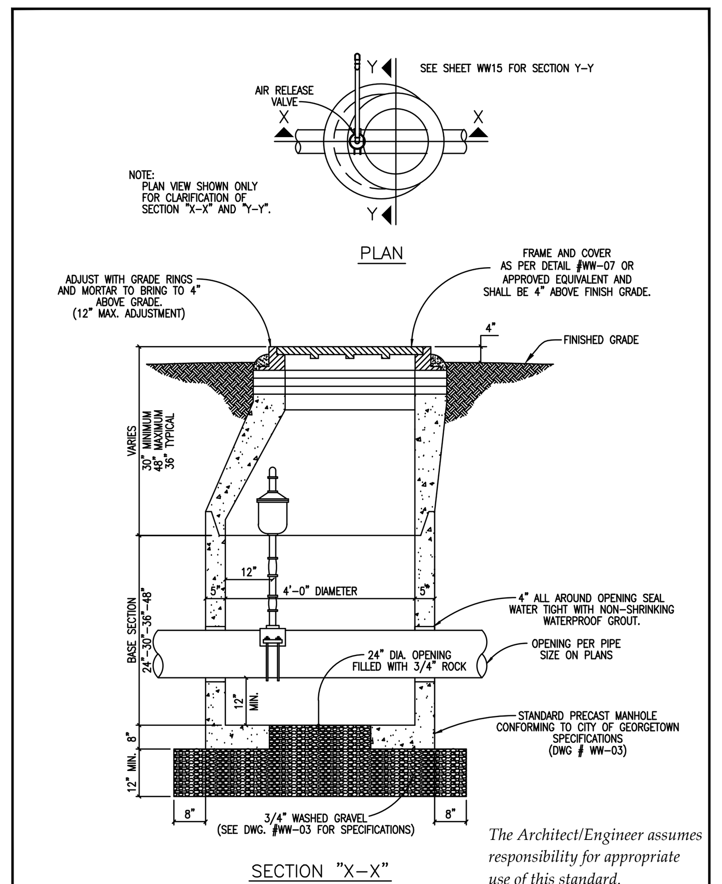

The Architect/Engineer assumes responsibility for appropriate use of this standard.

ADOPTED 6/21/2006
CITY OF GEORGETOWN CONSTRUCTION STANDARDS AND DETAILS
STANDARD AIR RELEASE VALVE FOR FORCE MAIN
WW14 — NTS — 1/2003 — MRS — TRB

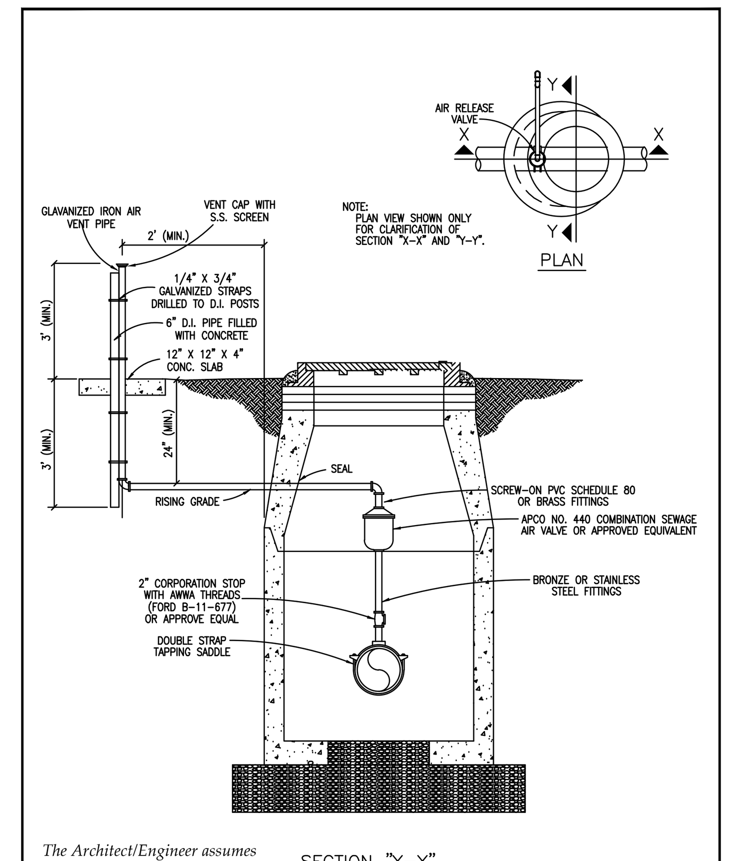

The Architect/Engineer assumes responsibility for appropriate use of this standard.

ADOPTED 6/21/2006
CITY OF GEORGETOWN CONSTRUCTION STANDARDS AND DETAILS
STANDARD AIR RELEASE VALVE FOR FORCE MAIN
WW15 — NTS — 1/2003 — MRS — TRB

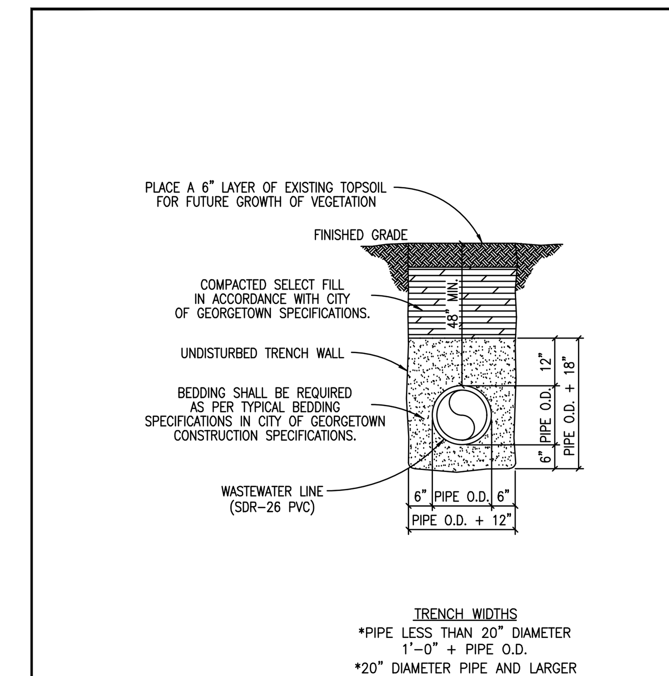

TRENCH WIDTHS
*PIPE LESS THAN 20" DIAMETER 1'-0" + PIPE O.D.
*20" DIAMETER PIPE AND LARGER 2'-0" + PIPE O.D.

The Architect/Engineer assumes responsibility for appropriate use of this standard.

ADOPTED 6/21/2006
CITY OF GEORGETOWN CONSTRUCTION STANDARDS AND DETAILS
TRENCH AND EMBEDMENT DETAIL UNDER NON-PAVED AREAS
WW16 — NTS — 1/2003 — MRS — TRB

NO.	REVISION	BY	DATE

811 Know what's below. Call before you dig.

5508 HIGHWAY 290 WEST
SUITE 150
AUSTIN, TX 78735
512.872.6696
HRGREEN.COM
TBPE NO: 16384
TBPLS NO: 10194101

HRGreen® DEVELOPMENT TX

STATE OF TEXAS — CHRISTINE N. CAMPBELL — 142536 — LICENSED PROFESSIONAL ENGINEER
07/03/2025

WASTEWATER DETAILS

PARKSIDE ON THE RIVER SECTIONS 11, 12A & 15A CONSTRUCTION PLANS
GEORGETOWN, WILLIAMSON, TEXAS

DESIGNED BY: CC
DRAWN BY: MM
CHECKED BY: SN
APPROVED BY: ______

SHEET 129 OF 141
2025-XX-CON

Plot Style: LandDev Global.ctb
Template: LDC_C3D2022.DWT
P:\Blake Magee\Parkside Sections 11-15 & WON 5\Section 11, 12A & 15A\03_ACAD\Plans\sh2403522 DTLS.dwg, WASTEWATER DETAILS, July 18, 2025, 12:37 PM, makai.muhammad

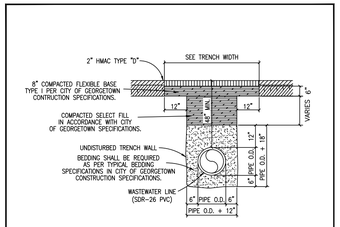

TRENCH WIDTHS
*PIPE LESS THAN 20" DIAMETER
1'-0" + PIPE O.D.
*20" DIAMETER PIPE AND LARGER
2'-0" + PIPE O.D.

NOTES:
1. REPLACED BASE MATERIAL OVER DITCH SHALL BE TWICE THE THICKNESS OF THE ORIGINAL BASE.
2. BASE MATERIAL SHALL BE PLACED IN MULTIPLE LIFTS NOT TO EXCEED 6", EACH LAYER SHALL BE THOROUGHLY ROLLED OR TAMPED TO SPECIFIED MAXIMUM DENSITY.
3. ASPHALT CONCRETE PAVEMENT JOINTS SHALL BE MECHANICALLY SAWED.
4. SURFACE MATERIAL WILL BE CONSISTENT WITH THE EXISTING SURFACE.
5. DENSITY TESTS SHALL BE TAKEN IN ACCORDANCE WITH THE CITY OF GEORGETOWN CONSTRUCTION SPECIFICATIONS AND STANDARDS.
6. CONTRACTOR OR ENGINEER MAY USE FLOWABLE BACKFILL AS AN ALTERNATE BACKFILL MATERIAL (SEE C9 FLOWABLE BACKFILL FOR THE SPECIFICATION).

The Architect/Engineer assumes responsibility for appropriate use of this standard.

CITY OF GEORGETOWN CONSTRUCTION STANDARDS AND DETAILS	DRAWING NO. / ADOPTED 6/21/2006
TRENCH AND EMBEDMENT AND PAVEMENT REPLACEMENT DETAIL UNDER EXISTING ROADWAY	WW17
SCALE: NTS	DATE: 1/2003
DRAWN BY: MRS	APPROVED BY: TRW

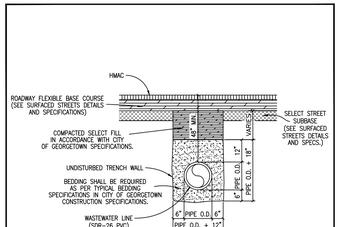

TRENCH WIDTHS
*PIPE LESS THAN 20" DIAMETER
1'-0" + PIPE O.D.
*20" DIAMETER PIPE AND LARGER
2'-0" + PIPE O.D.

NOTES:
1. DENSITY TESTS SHALL BE TAKEN IN ACCORDANCE WITH THE CITY OF GEORGETOWN CONSTRUCTION SPECIFICATIONS AND STANDARDS.
2. CONTRACTOR OR ENGINEER MAY USE FLOWABLE BACKFILL AS AN ALTERNATE BACKFILL MATERIAL (SEE C9 FLOWABLE BACKFILL FOR THE SPECIFICATION).

The Architect/Engineer assumes responsibility for appropriate use of this standard.

CITY OF GEORGETOWN CONSTRUCTION STANDARDS AND DETAILS	DRAWING NO. / ADOPTED 6/21/2006
TRENCH AND EMBEDMENT DETAIL UNDER PROPOSED ROADWAY	WW18
SCALE: NTS	DATE: 1/2003
DRAWN BY: MRS	APPROVED BY: TRW

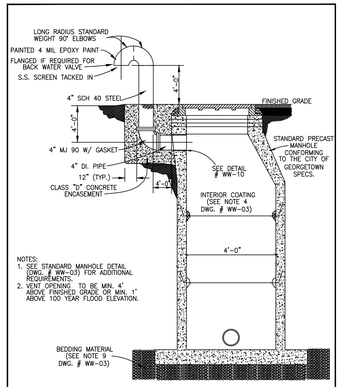

NOTES:
1. SEE STANDARD MANHOLE DETAIL (DWG. # WW-03) FOR ADDITIONAL REQUIREMENTS.
2. VENT OPENING TO BE MIN. 4' ABOVE FINISHED GRADE OR MIN. 1' ABOVE 100 YEAR FLOOD ELEVATION.

The Architect/Engineer assumes responsibility for appropriate use of this standard.

CITY OF GEORGETOWN CONSTRUCTION STANDARDS AND DETAILS	DRAWING NO. / ADOPTED 6/21/2006
TYPICAL MANHOLE WITH VENT	WW19
SCALE: NTS	DATE: 11/2003
DRAWN BY: MRS	APPROVED BY: TRW

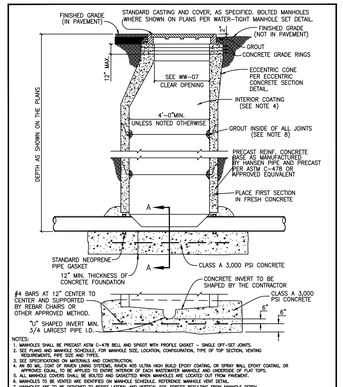

NOTES:
1. MANHOLES SHALL BE PRECAST ASTM C-478 BELL AND SPIGOT WITH PROFILE GASKET – SINGLE OFF-SET JOINTS.
2. SEE STANDARD MANHOLE DETAIL FOR MANHOLE SIZE, LOCATION, CONFIGURATION, TYPE OF TOP SECTION, VENTING REQUIREMENTS, PIPE SIZE AND TYPE.
3. SEE SPECIFICATIONS ON MATERIALS AND CONSTRUCTION.
4. AN MIL COAT OF RAVEN LINING SYSTEMS, RAVEN 405 ULTRA HIGH BUILD EPOXY COATING, OR SPRAY WALL EPOXY COATING, OR APPROVED EQUIVALENT SHALL BE APPLIED TO ALL WASTEWATER MANHOLE SURFACES, INCLUDING THE UNDERSIDE OF PLAC TOPS.
5. ALL MANHOLE COVERS SHALL BE BOLTED AND GASKETED WHEN MANHOLES ARE LOCATED OUT FROM PAVEMENT.
6. MANHOLES TO BE VENTED ARE IDENTIFIED ON MANHOLE SCHEDULE. REFERENCE MANHOLE VENT DETAIL.
7. MANHOLES ARE TO BE DESIGNED TO RESIST LATERAL AND VERTICAL SOIL FORCES RESULTING FROM MANHOLE DEPTH.
8. ALL JOINTS SHALL BE WATER TIGHT AND SHALL BE CAPABLE OF WITHSTANDING 10 PSI TRAFFIC LOADS.
9. GROUT SHALL MEET THE REQUIREMENTS AS STATED BY THE COATING MANUFACTURER.
10. MANHOLE BASE BENDING MATERIAL SPECS. FOR 3/4" BRAIDED GRAVEL:
SIDE SIZE 1", RADIUS (R) RETAINED @ SIDE SIZE 1 1/2", R RETAINED 0-15
SIDE SIZE 1", R RETAINED 45-60 SIDE SIZE 3/4", R RETAINED 85-100
SIDE SIZE 3/4", R RETAINED 90-100
11. ALL PVC PIPE SHALL BE REMOVED FROM INVERT.

The Architect/Engineer assumes responsibility for appropriate use of this standard.

CITY OF GEORGETOWN CONSTRUCTION STANDARDS AND DETAILS	DRAWING NO. / ADOPTED 6/21/2006
PRECAST MANHOLE ON CAST-IN-PLACE FOUNDATION	WW20
SCALE: NTS	DATE: 1/2006
DRAWN BY: MRS	APPROVED BY: TRW

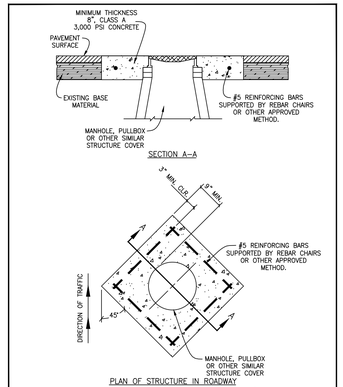

NOTE:
INSTALLATION OF THE CONCRETE CASTING IS REQUIRED FOR AND APPLIES TO ALL TYPES OF MANHOLES TO BE LOCATED IN THE ROADWAY.

The Architect/Engineer assumes responsibility for appropriate use of this standard.

CITY OF GEORGETOWN CONSTRUCTION STANDARDS AND DETAILS	DRAWING NO. / APPROVED 6/21/2006
CONCRETE CASTING MANHOLE DETAIL	WW21
SCALE: NTS	DATE: 1/2006
DRAWN BY: MRS	APPROVED BY: TRW

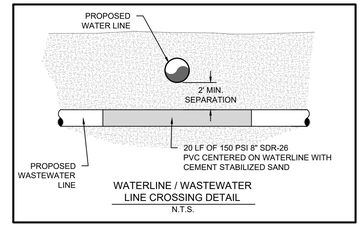

WATERLINE / WASTEWATER LINE CROSSING DETAIL
N.T.S.

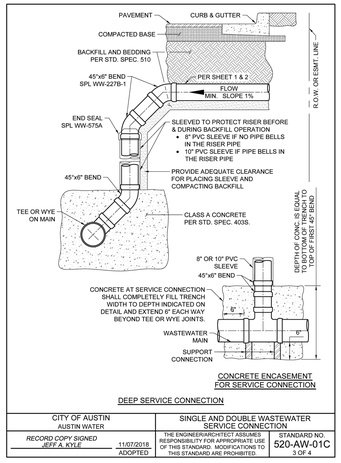

CONCRETE ENCASEMENT FOR SERVICE CONNECTION

DEEP SERVICE CONNECTION

CITY OF AUSTIN AUSTIN WATER	SINGLE AND DOUBLE WASTEWATER SERVICE CONNECTION	
RECORD COPY SIGNED JEFF A. KYLE 11/07/2018 ADOPTED	THE ENGINEER/ARCHITECT ASSUMES RESPONSIBILITY FOR APPROPRIATE USE OF THIS STANDARD. MODIFICATIONS TO THIS STANDARD ARE PROHIBITED.	STANDARD NO. 520-AW-01C 3 OF 4

NO.	REVISION	BY	DATE

811 Know what's below. Call before you dig.

HRGreen
DEVELOPMENT TX
5508 HIGHWAY 290 WEST
SUITE 150
AUSTIN, TX 78735
512.872.6696
HRGREEN.COM
TBPE NO: 16384
TBPLS NO: 10194101

STATE OF TEXAS
CHRISTINE N. CAMPBELL
142536
LICENSED PROFESSIONAL ENGINEER
07/15/2025

WASTEWATER DETAILS

PARKSIDE ON THE RIVER
SECTIONS 11, 12A & 15A
CONSTRUCTION PLANS
GEORGETOWN, WILLIAMSON, TEXAS

DESIGNED BY: CC
DRAWN BY: MM
CHECKED BY: SN
APPROVED BY:

SHEET 130 OF 141

2025-XX-CON

Plot Style: LandDev Global.ctb
Template LDC_C3D2022.DWT
P:\Bilfinger Heidelberg\Parkside Sections 11-15 & WOA 5\Section 11, 12A & 15A\03_ACAD\Plans\dp240522 DTLS.dwg, WASTEWATER DETAILS 2, July 16, 2025, 12:37 PM, mallal muhammad

MATCHLINE - VIEW C

MATCHLINE - VIEW A

MATCHLINE - VIEW B

MATCHLINE - VIEW A

LOT 1 WQ/OS

LOT 17 WQ/OS

LOT 1 DE/OS

LOT 16 WQ/DE/OS

EXISTING 20' WASTEWATER EASEMENT DOC#2024034914

PROPOSED 20' WASTEWATER EASEMENT

PROPOSED 20' DRAINAGE EASEMENT

STA. 5+60.50 WL A
8" DI CAP MJ

STA. 5+55.49 WL A
FIRE HYDRANT ASSEMBLY
8"X6" TEE

STA. 5+45.50 WL A
45° HORZ. BEND

STA. 5+09.04 WL A
45° HORZ. BEND

5+60

5+00

4+00

3+00

2+00

1+00

RUACH ROAD

BLOCK G

BLOCK F

STA. 8+17.55 WL B
8" DI CAP MJ

8+00 B+B

GAMALIEL LOOP

STA. 8+12.55 WL B
FIRE HYDRANT ASSEMBLY
8"X6" TEE

STA. 7+06.10 WL B
2" IRRIGATION SERVICE W/ BACKFLOW PREVENTER (METER TO BE 5/8"-2" ONCE DETERMINED BY LICENSED IRRIGATOR).

7+00

6+00

STA. 6+12.36 WL B
PT 445' RADIUS

STA. 4+65.76 WL B
FIRE HYDRANT ASSEMBLY
8"X6" TEE

STA. 1+47.80 WL B
FIRE HYDRANT ASSEMBLY
8"X6" TEE

STA. 1+72.76 WL B
PC 445' RADIUS

STA. 2+58.33 WL A
=STA. 1+00.00 WL B
8"X8" TEE
2 - 8" GATE VALVE

STA. 1+00.00 WL A
"WET TAP" TAPPING SLEEVE
1 - 8" GATE VALVE
CONNECT TO EXISTING
24" WATERLINE
CONTRACTOR TO VERIFY LOCATION (HORIZONTALLY AND VERTICALLY) PRIOR TO INSTALLATION AND NOTIFY ENGINEER OF ANY DISCREPANCIES.

STA. 1+26.46 WL A
6"X2" PRESSURE REDUCING VALVE IN 14'X7' VAULT PER DETAIL ON SHT 138

STA. 1+09.48 WL A
AIR RELEASE VALVE

UTILITY CROSSING
STA. 1+25.00 WL B
=STA. 7+59.19 WWL B

UTILITY CROSSING
EXISTING 24 IN WATERLINE
=STA. 2+65.22 STORM H-1

UTILITY CROSSING
EXISTING 24 IN WATERLINE
=STA. 2+69.66 STORM H-3

UTILITY CROSSING
EXISTING 24 IN WATERLINE
=STA. 2+74.10 STORM H-5

UTILITY CROSSING
EXISTING 24 IN WATERLINE
=STA. 2+83.62 STORM C-1

100YR FULLY DEVELOPED FLOODPLAIN

EXISTING 15" WASTEWATER LINE CONSTRUCTED WITH BARTON TRIBUTARY WASTEWATER LINE

EXISTING AIR RELEASE VALVE

EXISTING 24" GATE VALVE

EXISTING 24" WATERLINE CONSTRUCTED WITH PARKSIDE ON THE RIVER 24 IN. TRANSMISSION WATERLINE (2019-61-CON)

EXISTING 24" GATE VALVE

EXISTING 35' WASTEWATER EASEMENT DOC#2020132521

EXISTING WATER QUALITY POND CONSTRUCTED WITH PARKSIDE ON THE RIVER SECTIONS 9B & 10B (2024-16-CON)

PARKSIDE ON THE RIVER SECTIONS 9B & 10B (2024-16-CON)

100YR FLOODPLAIN PER FIRM MAP #48491C0460F EFFECTIVE DEC 20, 2019 W/ LOMR APPROVAL # 21-06-0115P

PARKSIDE PARKWAY OUTBOUND

PARKSIDE PARKWAY INBOUND

PARKSIDE PARKWAY OUTBOUND

PARKSIDE PARKWAY INBOUND

EXISTING 24" WATERLINE EASEMENT DOC#2021108943

0 40' 80'

SCALE: 1" = 40'

LEGEND

- 834 — EXISTING MINOR CONTOUR
- 835 — EXISTING MAJOR CONTOUR
- 834 — PROPOSED MINOR CONTOUR
- 835 — PROPOSED MAJOR CONTOUR
- BOUNDARY
- EASEMENT
- FEMA FLOODWAY PER FIRM# 48491C0460F & LOMR# 21-06-0115P
- FEMA AE — 100YR ATLAS 14 FEMA ZONE AE FLOODPLAIN PER FIRM# 48491C0460F & LOMR# 21-06-0115P
- FEMA A — 100YR FEMA ZONE A FLOODPLAIN PER FIRM MAP# 48491C0460F
- 100YR CLOMR — 100YR CLOMR FLOODPLAIN CASE# 15-06-2071R
- FDFP — 100YR ATLAS 14 FULLY DEVELOPED FLOODPLAIN (STANTEC DRAINAGE STUDY, SHERVIN NOOSHIN, 3/25/19) APPROVED WITH PP# 2019-5-PP
- OHWM — ORDINARY HIGH WATER MARK PER ADAMS ENVIRONMENTAL
- 8" WW — PROPOSED WASTEWATER LINE
- PROPOSED STORM LINE
- 8" W — PROPOSED WATER LINE
- FIRE HYDRANT
- WATER VALVE
- TEMP FLUSH VALVE
- AIR RELEASE VALVE
- STORM SEWER MAHNOLE
- WW — WASTEWATER MANHOLE
- CURB INLET
- PROPOSED SINGLE WASTEWATER SERVICE
- PROPOSED DOUBLE WASTEWATER SERVICE
- PROPOSED SINGLE WATER SERVICE
- PROPOSED DOUBLE WATER SERVICE
- TREES TO REMAIN - HERITAGE
- TREES TO REMAIN - NON-HERITAGE

NOTES:

1. ALL PROPOSED WATERLINES EXCEPT FIRE LEADS SHALL BE PVC C900 DR 18 PER CITY OF GEORGETOWN SPECIFICATIONS.
2. THRUST BLOCKING SHALL BE PROVIDED AT BENDS, PI'S, TEES & FITTINGS ACCORDING TO CITY OF GEORGETOWN.
3. ALL JOINT RESTRAINT SHALL BE IN ACCORDANCE TO CITY OF GEORGETOWN SPECIFICATION. REFER TO THE JOINT RESTRAINT TABLE ON SHEET 138.
4. ANY JOINT DEFLECTION VERTICAL OR HORIZONTAL SHALL BE WITHIN THE MANUFACTURES MAXIMUM ALLOWABLE JOINT DEFLECTION.
5. PORTIONS OF THIS PROPOSED DEVELOPMENT LIE WITHIN THE FEMA 100-YR FLOODPLAIN.
6. AT THE CONCLUSION OF CONSTRUCTION AND AS PART OF THE PROCESS FOR THE CITY TO ACCEPT THIS PHASE, THE FIRE HYDRANTS SHALL BE FLOWED AND TESTED. A COPY OF THE REPORT SHALL BE EMAILED INTO THE FIRE DEPARTMENT AND THE HYDRANTS SHALL BE PAINTED AND COLOR CODED.
7. CAUTION: IF PRESSURE REDUCING VALVES WERE INSTALLED IN THIS PHASING, THEY MUST BE SET PRIOR TO FIRE HYDRANT FLOW TESTING.
8. CONTRACTOR AND HOME BUILDER TO ENSURE GATE VALVES ARE ADJUSTED FOR FINISHED SIDEWALK AND PAVEMENT GRADES.
9. CONTRACTOR TO ENSURE ALL GATE VALVES ARE LOCATED OUTSIDE OF PROPOSED CURB AND GUTTER LOCATIONS.
10. HOME BUILDERS ARE EXPECTED TO INSTALL INDIVIDUAL PRESSURE REDUCING VALVES FOR ALL HOMES.

GEORGETOWN FIRE DEPARTMENT NOTES

1. 1,500 GPM FIRE FLOW SHALL BE PROVIDED FOR THIS PROJECT.
2. AT THE CONCLUSION OF CONSTRUCTION AND AS PART OF THE PROCESS FOR THE CITY TO ACCEPT THIS PHASE:
   - THE FIRE HYDRANTS SHALL BE FLOWED AND TESTED
   - A COPY OF THE REPORT SHALL BE EMAILED INTO THE FIRE DEPARTMENT
   - THE HYDRANTS SHALL BE PAINTED AND COLOR CODED.

*** CAUTION IF PRESSURE REDUCING VALVES WERE INSTALLED IN THIS PHASING THEY MUST BE SET PRIOR TO FIRE HYDRANT FLOW TESTING.

3. PER CITY ORDINANCE SEC. 13.15.120, HYDRANT FLOW CODING STANDARDS. PUBLIC HYDRANTS WILL HAVE THE BARRELS PAINTED SILVER, THE HYDRANTS WILL BE FLOW TESTED, AND THE BONNET PAINTED USING THE HYDRANT FLOW STANDARD IN PARAGRAPH C.

FLOW COLOR:
- GREATER THAN 1500 GPM BLUE
- 1000 TO 1500 GPM GREEN
- 500 - 999 GPM ORANGE
- LESS THAN 500 GPM RED
- NOT WORKING BLACK OR BAGGED

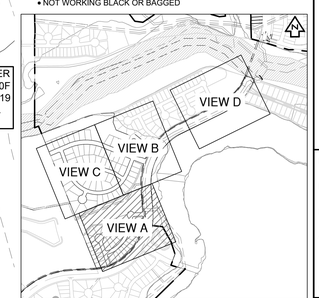

KEY MAP (N.T.S.)

NO	REVISION	BY	DATE

811 Know what's below. Call before you dig.

HRGreen DEVELOPMENT TX
5508 HIGHWAY 290 WEST
SUITE 150
AUSTIN, TX 78735
512.872.6696
HRGREEN.COM
TBPE NO: 16384
TBPLS NO: 10194101

STATE OF TEXAS
CHRISTINE N. CAMPBELL
142536
LICENSED PROFESSIONAL ENGINEER
07/05/2025

OVERALL WATER PLAN A

PARKSIDE ON THE RIVER SECTIONS 11, 12A & 15A CONSTRUCTION PLANS

GEORGETOWN, WILLIAMSON, TEXAS

DESIGNED BY: CC
DRAWN BY: MM
CHECKED BY: SN
APPROVED BY:

SHEET 131 OF 141

2025-XX-CON

P:\Blaze Maps\Parkside Sections 11-15 & WQ\Section 11, 12A & 15A\00_ACAD\Permit\ADS\2025\2 WTCV dwg, OVERALL WATER PLAN A, July 18, 2025, 12:38 PM, nalal.muhammad

STA. 8+06.39 WL C
0.7° VERT. DEFLECTION

STA. 2+92.40 WL E
PT 340' RADIUS

MATCHLINE - VIEW C

MATCHLINE - VIEW B

STA. 2+03.00 WL E
PC 340' RADIUS

STA. 1+33.55 WL E
PT 300' RADIUS

STA. 1+17.85 WL E
PC 300' RADIUS

STA. 4+82.70 WL D
FIRE HYDRANT ASSEMBLY
8"X6" TEE

STA. 4+32.29 WL D
=STA. 1+00.00 WL E
8"X8" TEE
2 - 8" GATE VALVE

UTILITY CROSSING
STA. 4+58.64 WL D
=STA. 1+25.00 WWL E

UTILITY CROSSING
STA. 4+48.64 WL D
=STA. 1+15.00 STORM D-3

20' EXISTING WASTEWATER EASEMENT DOC#2024034911

STA. 3+69.35 WL D
PC 408' RADIUS

STA. 7+31.90 WL C
PC 650' RADIUS

STA. 7+11.07 WL C
FIRE HYDRANT ASSEMBLY
12"X6" TEE

LOT 2 WOOS

LOT 6 DE/OS

BLOCK H

BLOCK J

BLOCK K

EJIEL WAY

MORNING SUNRISE CIRCLE

TREASURE HOUSE WAY

PROPOSED 15' WATER QUALITY EASEMENT

MATCHLINE - VIEW A

MATCHLINE - VIEW B

STA. 1+57.60 WL D
FIRE HYDRANT ASSEMBLY
8"X6" TEE

UTILITY CROSSING
STA. 1+30.00 WL D
=STA. 3+73.63 WWL C

UTILITY CROSSING
STA. 1+20.00 WL D
=STA. 1+15.00 STORM D-2

EXISTING 24" GATE VALVE

STA. 1+68.12 WL C
22.5° HORZ. BEND

STA. 1+21.04 WL C
12" GATE VALVE

STA. 2+93.83 WL C
=STA. 1+00.00 WL D
12"X6" TEE
1 - 12" GATE VALVE
1 - 8" GATE VALVE

UTILITY CROSSING
STA. 2+78.83 WL C
=STA. 1+66.60 STORM D-1

STA. 2+57.33 WL C
2" IRRIGATION SERVICE W/ BACKFLOW PREVENTER (METER TO BE 5/8"-2" ONCE DETERMINED BY LICENSED IRRIGATOR).

STA. 2+07.32 WL C
22.5° HORZ. BEND

STA. 1+87.72 WL C
2" IRRIGATION SERVICE W/ BACKFLOW PREVENTER (METER TO BE 5/8"-2" ONCE DETERMINED BY LICENSED IRRIGATOR).

LOT 1 WQ/DE/OS

STA. 1+38.25 WL C
8"X4" PRESSURE REDUCING VALVE IN 15'X8' VAULT PER DETAIL ON SHT 138

STA. 1+00.00 WL C
"WET TAP" TAPPING SLEEVE
1 - 12" GATE VALVE
CONNECT TO EXISTING 24" WATERLINE
CONTRACTOR TO VERIFY LOCATION (HORIZONTALLY AND VERTICALLY) PRIOR TO INSTALLATION AND NOTIFY ENGINEER OF ANY DISCREPANCIES.

UTILITY CROSSING
STA. 1+11.03 WL C
=STA. 1+75.09 WWL C

UTILITY CROSSING
EXISTING 24 IN WATERLINE
=STA. 1+59.48 WWL C

UTILITY CROSSING
EXISTING 24 IN WATERLINE
=STA. 2+74.54 STORM I-1

PARKSIDE PARKWAY OUTBOUND

PARKSIDE PARKWAY INBOUND

KADOSH WAY

FUTURE PARKSIDE SECTION 12B

EXISTING 15" WASTEWATER LINE CONSTRUCTED WITH BARTON TRIBUTARY WASTEWATER LINE

EXISTING 24" WATERLINE CONSTRUCTED WITH PARKSIDE ON THE RIVER 24 IN. TRANSMISSION WATERLINE (2019-61-CON)

36' EXISTING WASTEWATER EASEMENT DOC#2020012552

EXISTING 20' WATERLINE EASEMENT DOC#2021066243

100YR FLOODPLAIN PER FIRM MAP #48491C0460F EFFECTIVE DEC 20, 2019 W/ LOMR APPROVAL # 21-06-0115P

100YR FLOODPLAIN PER FIRM MAP #48491C0460F EFFECTIVE DEC 20, 2019 W/ LOMR APPROVAL # 21-06-0115P

100YR FULLY DEVELOPED FLOODPLAIN

APPROVED CLOMR 100 YEAR FLOODPLAIN CASE# 15-06-2071R

0 40' 80'

SCALE: 1" = 40'

LEGEND

- EXISTING MINOR CONTOUR
- EXISTING MAJOR CONTOUR
- PROPOSED MINOR CONTOUR
- PROPOSED MAJOR CONTOUR
- BOUNDARY
- EASEMENT
- FEMA FLOODWAY PER FIRM# 48491C0460F & LOMR# 21-06-0115P
- FEMA AE — 100YR ATLAS 14 FEMA ZONE AE FLOODPLAIN PER FIRM# 48491C0460F & LOMR# 21-06-0115P
- FEMA A — 100YR FEMA ZONE A FLOODPLAIN PER FIRM MAP# 48491C0460F
- 100YR CLOMR — 100YR CLOMR FLOODPLAIN CASE# 15-06-2071R
- FDFP — 100YR ATLAS 14 FULLY DEVELOPED FLOODPLAIN (STANTEC DRAINAGE STUDY, SHERVIN NOOSHIN, 3/25/19) APPROVED WITH PP# 2019-5-PP
- OHWM — ORDINARY HIGH WATER MARK PER ADAMS ENVIRONMENTAL
- 8" WW — PROPOSED WASTEWATER LINE
- PROPOSED STORM LINE
- 8" W — PROPOSED WATER LINE
- FIRE HYDRANT
- WATER VALVE
- TEMP FLUSH VALVE
- AIR RELEASE VALVE
- STORM SEWER MAHNOLE
- WASTEWATER MANHOLE
- CURB INLET
- PROPOSED SINGLE WASTEWATER SERVICE
- PROPOSED DOUBLE WASTEWATER SERVICE
- PROPOSED SINGLE WATER SERVICE
- PROPOSED DOUBLE WATER SERVICE
- TREES TO REMAIN - HERITAGE
- TREES TO REMAIN - NON-HERITAGE

NOTES:

1. ALL PROPOSED WATERLINES EXCEPT FIRE LEADS SHALL BE PVC C900 DR 18 PER CITY OF GEORGETOWN SPECIFICATIONS.
2. THRUST BLOCKING SHALL BE PROVIDED AT BENDS, P/S, TEES & FITTINGS ACCORDING TO CITY OF GEORGETOWN.
3. ALL JOINT RESTRAINT SHALL BE IN ACCORDANCE TO CITY OF GEORGETOWN SPECIFICATION. REFER TO THE JOINT RESTRAINT TABLE ON SHEET 138.
4. ANY JOINT DEFLECTION VERTICAL OR HORIZONTAL SHALL BE WITHIN THE MANUFACTURES MAXIMUM ALLOWABLE JOINT DEFLECTION.
5. PORTIONS OF THIS PROPOSED DEVELOPMENT LIE WITHIN THE FEMA 100-YR FLOODPLAIN.
6. AT THE CONCLUSION OF CONSTRUCTION AND AS PART OF THE PROCESS FOR THE CITY TO ACCEPT THIS PHASE, THE FIRE HYDRANTS SHALL BE FLOWED AND TESTED. A COPY OF THE REPORT SHALL BE EMAILED INTO THE FIRE DEPARTMENT AND THE HYDRANTS SHALL BE PAINTED AND COLOR CODED.
7. CAUTION: IF PRESSURE REDUCING VALVES WERE INSTALLED IN THIS PHASING, THEY MUST BE SET PRIOR TO FIRE HYDRANT FLOW TESTING.
8. CONTRACTOR AND HOME BUILDER TO ENSURE GATE VALVES ARE ADJUSTED FOR FINISHED SIDEWALK AND PAVEMENT GRADES.
9. CONTRACTOR TO ENSURE ALL GATE VALVES ARE LOCATED OUTSIDE OF PROPOSED CURB AND GUTTER LOCATIONS.
10. HOME BUILDERS ARE EXPECTED TO INSTALL INDIVIDUAL PRESSURE REDUCING VALVES FOR ALL HOMES.

GEORGETOWN FIRE DEPARTMENT NOTES

1. 1,500 GPM FIRE FLOW SHALL BE PROVIDED FOR THIS PROJECT.
2. AT THE CONCLUSION OF CONSTRUCTION AND AS PART OF THE PROCESS FOR THE CITY TO ACCEPT THIS PHASE:
   - THE FIRE HYDRANTS SHALL BE FLOWED AND TESTED
   - A COPY OF THE REPORT SHALL BE EMAILED INTO THE FIRE DEPARTMENT
   - THE HYDRANTS SHALL BE PAINTED AND COLOR CODED.

*** CAUTION :IF PRESSURE REDUCING VALVES WERE INSTALLED IN THIS PHASING THEY MUST BE SET PRIOR TO FIRE HYDRANT FLOW TESTING.

3. PER CITY ORDINANCE SEC. 13.15.120, HYDRANT FLOW CODING STANDARDS. PUBLIC HYDRANTS WILL HAVE THE BARRELS PAINTED SILVER. THE HYDRANTS WILL BE FLOW TESTED, AND THE BONNET PAINTED USING THE HYDRANT FLOW STANDARD IN PARAGRAPH C.
   FLOW COLOR:
   - GREATER THAN 1500 GPM BLUE
   - 1000 TO 1500 GPM GREEN
   - 500 - 999 GPM ORANGE
   - LESS THAN 500 GPM RED
   - NOT WORKING BLACK OR BAGGED

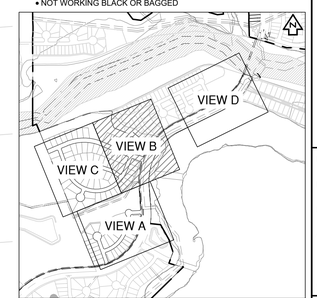

KEY MAP (N.T.S.)

NO	REVISION	BY	DATE

811 Know what's below. Call before you dig.

HRGreen
DEVELOPMENT TX
5508 HIGHWAY 290 WEST
SUITE 150
AUSTIN, TX 78735
512.872.6696
HRGREEN.COM
TBPE NO: 16384
TBPLS NO: 10194101

STATE OF TEXAS
CHRISTINE N. CAMPBELL
142536
LICENSED PROFESSIONAL ENGINEER
07/05/2025

OVERALL WATER PLAN B

PARKSIDE ON THE RIVER SECTIONS 11, 12A & 15A CONSTRUCTION PLANS

GEORGETOWN, WILLIAMSON, TEXAS

DESIGNED BY: CC
DRAWN BY: MM
CHECKED BY: SN
APPROVED BY:

SHEET 132 OF 141

2025-XX-CON

P:\Blake Magee\Parkside Sections 11-15 & WOW ESection 11, 12A & 15A\03_ACAD\Plans\sh\240552 VTCV.dwg, OVERALL WATER PLAN B, July 08, 2025, 12:39 PM, malan.muhammad

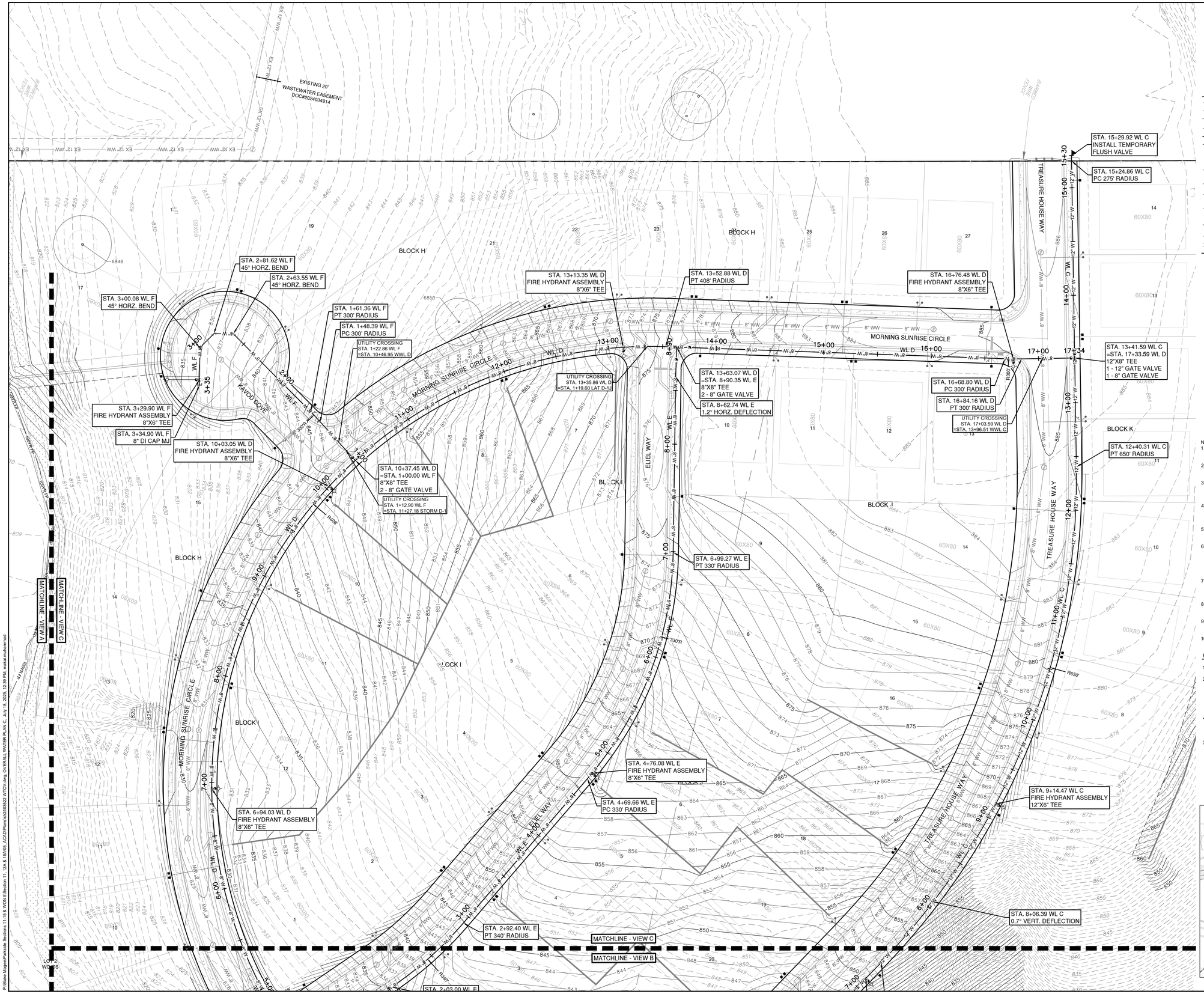

LEGEND

- EXISTING MINOR CONTOUR
- EXISTING MAJOR CONTOUR
- PROPOSED MINOR CONTOUR
- PROPOSED MAJOR CONTOUR
- BOUNDARY
- EASEMENT
- FEMA FLOODWAY PER FIRM# 48491C0460F & LOMR# 21-06-0115P
- FEMA AE — 100YR ATLAS 14 FEMA ZONE AE FLOODPLAIN PER FIRM# 48491C0460F & LOMR# 21-06-0115P
- FEMA A — 100YR FEMA ZONE A FLOODPLAIN PER FIRM MAP# 48491C0460F
- 100YR CLOMR — 100YR CLOMR FLOODPLAIN CASE# 15-06-2071R
- FDFP — 100YR ATLAS 14 FULLY DEVELOPED FLOODPLAIN (STANTEC DRAINAGE STUDY, SHERVIN NOOSHIN, 3/25/19) APPROVED WITH PP# 2019-5-PP
- OHWM — ORDINARY HIGH WATER MARK PER ADAMS ENVIRONMENTAL
- 8" WW — PROPOSED WASTEWATER LINE
- PROPOSED STORM LINE
- 8" W — PROPOSED WATER LINE
- FIRE HYDRANT
- WATER VALVE
- TEMP FLUSH VALVE
- AIR RELEASE VALVE
- STORM SEWER MAHNOLE
- WASTEWATER MANHOLE
- CURB INLET
- PROPOSED SINGLE WASTEWATER SERVICE
- PROPOSED DOUBLE WASTEWATER SERVICE
- PROPOSED SINGLE WATER SERVICE
- PROPOSED DOUBLE WATER SERVICE
- TREES TO REMAIN - HERITAGE
- TREES TO REMAIN - NON-HERITAGE

NOTES:

1. ALL PROPOSED WATERLINES EXCEPT FIRE LEADS SHALL BE PVC C900 DR 18 PER CITY OF GEORGETOWN SPECIFICATIONS.
2. THRUST BLOCKING SHALL BE PROVIDED AT BENDS, P/S, TEES & FITTINGS ACCORDING TO CITY OF GEORGETOWN.
3. ALL JOINT RESTRAINT SHALL BE IN ACCORDANCE TO CITY OF GEORGETOWN SPECIFICATION. REFER TO THE JOINT RESTRAINT TABLE ON SHEET 138.
4. ANY JOINT DEFLECTION VERTICAL OR HORIZONTAL SHALL BE WITHIN THE MANUFACTURES MAXIMUM ALLOWABLE JOINT DEFLECTION.
5. PORTIONS OF THIS PROPOSED DEVELOPMENT LIE WITHIN THE FEMA 100-YR FLOODPLAIN.
6. AT THE CONCLUSION OF CONSTRUCTION AND AS PART OF THE PROCESS FOR THE CITY TO ACCEPT THIS PHASE, THE FIRE HYDRANTS SHALL BE FLOWED AND TESTED. A COPY OF THE REPORT SHALL BE EMAILED INTO THE FIRE DEPARTMENT AND THE HYDRANTS SHALL BE PAINTED AND COLOR CODED.
7. CAUTION: IF PRESSURE REDUCING VALVES WERE INSTALLED IN THIS PHASING, THEY MUST BE SET PRIOR TO FIRE HYDRANT FLOW TESTING.
8. CONTRACTOR AND HOME BUILDER TO ENSURE GATE VALVES ARE ADJUSTED FOR FINISHED SIDEWALK AND PAVEMENT GRADES.
9. CONTRACTOR TO ENSURE ALL GATE VALVES ARE LOCATED OUTSIDE OF PROPOSED CURB AND GUTTER LOCATIONS.
10. HOME BUILDERS ARE EXPECTED TO INSTALL INDIVIDUAL PRESSURE REDUCING VALVES FOR ALL HOMES.

GEORGETOWN FIRE DEPARTMENT NOTES

1. 1,500 GPM FIRE FLOW SHALL BE PROVIDED FOR THIS PROJECT.
2. AT THE CONCLUSION OF CONSTRUCTION AND AS PART OF THE PROCESS FOR THE CITY TO ACCEPT THIS PHASE:
   - THE FIRE HYDRANTS SHALL BE FLOWED AND TESTED
   - A COPY OF THE REPORT SHALL BE EMAILED INTO THE FIRE DEPARTMENT
   - THE HYDRANTS SHALL BE PAINTED AND COLOR CODED.

*** CAUTION: IF PRESSURE REDUCING VALVES WERE INSTALLED IN THIS PHASING THEY MUST BE SET PRIOR TO FIRE HYDRANT FLOW TESTING.

3. PER CITY ORDINANCE SEC. 13.15.120, HYDRANT FLOW CODING STANDARDS. PUBLIC HYDRANTS WILL HAVE THE BARRELS PAINTED SILVER, THE HYDRANTS WILL BE FLOW TESTED, AND THE BONNET PAINTED USING THE HYDRANT FLOW STANDARD IN PARAGRAPH C.

FLOW COLOR:
- GREATER THAN 1500 GPM BLUE
- 1000 TO 1500 GPM GREEN
- 500 - 999 GPM ORANGE
- LESS THAN 500 GPM RED
- NOT WORKING BLACK OR BAGGED

NO.	REVISION	BY	DATE

811 Know what's below. Call before you dig.

5508 HIGHWAY 290 WEST
SUITE 150
AUSTIN, TX 78735
512.872.6696
HRGREEN.COM

TBPE NO: 16384
TBPLS NO: 10194101

HRGreen® DEVELOPMENT TX

STATE OF TEXAS
CHRISTINE N. CAMPBELL
142536
LICENSED PROFESSIONAL ENGINEER
07/03/2025

OVERALL WATER PLAN C

PARKSIDE ON THE RIVER SECTIONS 11, 12A & 15A CONSTRUCTION PLANS

GEORGETOWN, WILLIAMSON, TEXAS

DESIGNED BY: CC
DRAWN BY: MM
CHECKED BY: SN
APPROVED BY:

SHEET 133 OF 141

2025-XX-CON

P:\Blake Magee\Parkside Sections 11-15 & WSN S\Section 11, 12A & 15A\03_ACAD\Planset\sh020522 WTOV.dwg, OVERALL WATER PLAN C, July 16, 2025, 12:39 PM, mekai.muhammad

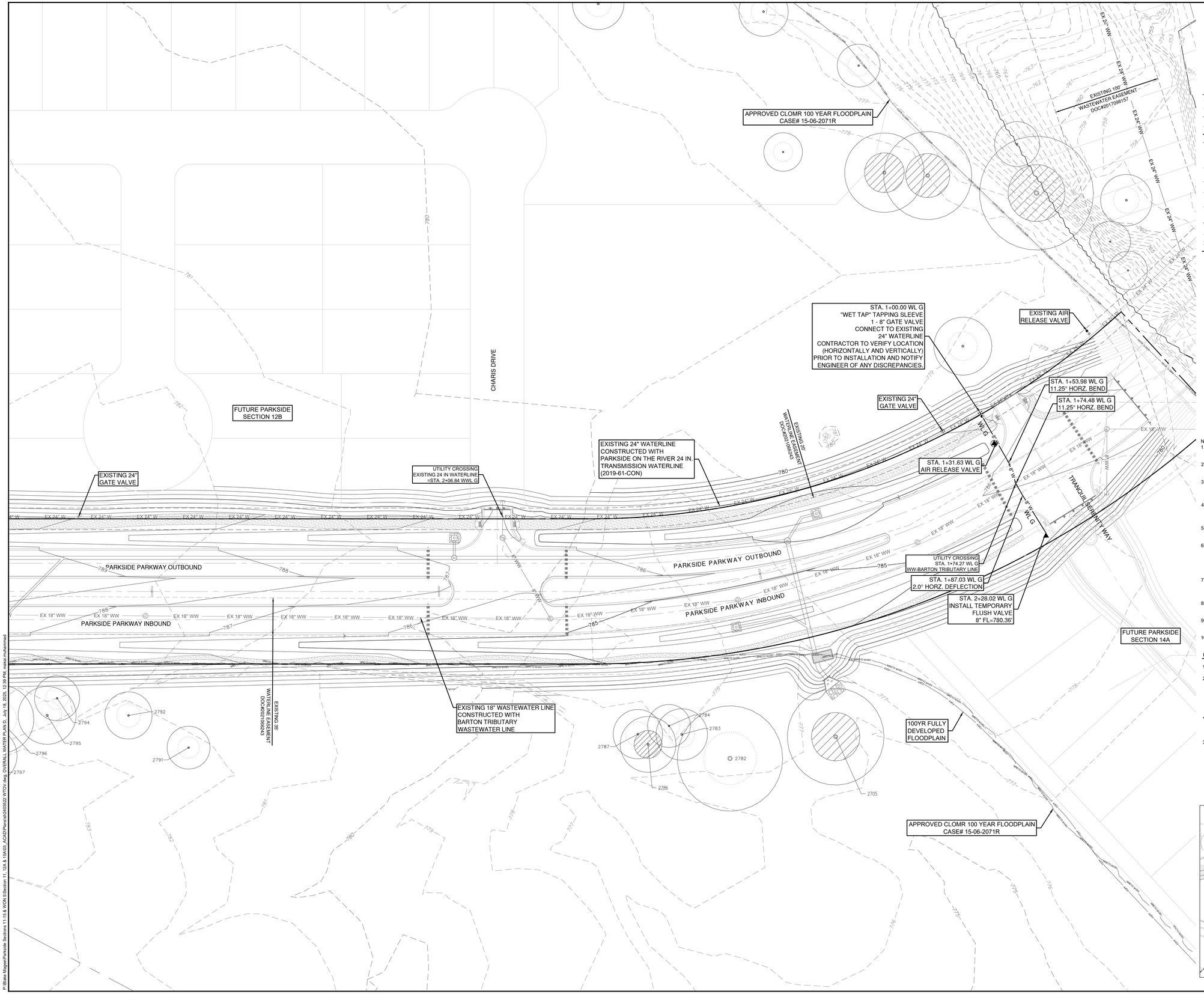

0 40' 80'

SCALE: 1" = 40'

LEGEND

- EXISTING MINOR CONTOUR
- EXISTING MAJOR CONTOUR
- PROPOSED MINOR CONTOUR
- PROPOSED MAJOR CONTOUR
- BOUNDARY
- EASEMENT
- FEMA FLOODWAY PER FIRM# 48491C0460F & LOMR# 21-06-0115P
- FEMA AE — 100YR ATLAS 14 FEMA ZONE AE FLOODPLAIN PER FIRM# 48491C0460F & LOMR# 21-06-0115P
- FEMA A — 100YR FEMA ZONE A FLOODPLAIN PER FIRM MAP# 48491C0460F
- 100YR CLOMR — 100YR CLOMR FLOODPLAIN CASE# 15-06-2071R
- FDFP — 100YR ATLAS 14 FULLY DEVELOPED FLOODPLAIN (STANTEC DRAINAGE STUDY, SHERVIN NOOSHIN, 3/25/19) APPROVED WITH PP# 2019-5-PP
- OHWM — ORDINARY HIGH WATER MARK PER ADAMS ENVIRONMENTAL
- 8" WW — PROPOSED WASTEWATER LINE
- PROPOSED STORM LINE
- 8" W — PROPOSED WATER LINE
- FIRE HYDRANT
- WATER VALVE
- TEMP FLUSH VALVE
- AIR RELEASE VALVE
- STORM SEWER MAHNOLE
- WASTEWATER MANHOLE
- CURB INLET
- PROPOSED SINGLE WASTEWATER SERVICE
- PROPOSED DOUBLE WASTEWATER SERVICE
- PROPOSED SINGLE WATER SERVICE
- PROPOSED DOUBLE WATER SERVICE
- TREES TO REMAIN - HERITAGE
- TREES TO REMAIN - NON-HERITAGE

NOTES:

1. ALL PROPOSED WATERLINES EXCEPT FIRE LEADS SHALL BE PVC C900 DR 18 PER CITY OF GEORGETOWN SPECIFICATIONS.
2. THRUST BLOCKING SHALL BE PROVIDED AT BENDS, P/S, TEES & FITTINGS ACCORDING TO CITY OF GEORGETOWN.
3. ALL JOINT RESTRAINT SHALL BE IN ACCORDANCE TO CITY OF GEORGETOWN SPECIFICATION. REFER TO THE JOINT RESTRAINT TABLE ON SHEET 138.
4. ANY JOINT DEFLECTION VERTICAL OR HORIZONTAL SHALL BE WITHIN THE MANUFACTURES MAXIMUM ALLOWABLE JOINT DEFLECTION.
5. PORTIONS OF THIS PROPOSED DEVELOPMENT LIE WITHIN THE FEMA 100-YR FLOODPLAIN.
6. AT THE CONCLUSION OF CONSTRUCTION AND AS PART OF THE PROCESS FOR THE CITY TO ACCEPT THIS PHASE, THE FIRE HYDRANTS SHALL BE FLOWED AND TESTED. A COPY OF THE REPORT SHALL BE EMAILED INTO THE FIRE DEPARTMENT AND THE HYDRANTS SHALL BE PAINTED AND COLOR CODED.
7. CAUTION: IF PRESSURE REDUCING VALVES WERE INSTALLED IN THIS PHASING, THEY MUST BE SET PRIOR TO FIRE HYDRANT FLOW TESTING.
8. CONTRACTOR AND HOME BUILDER TO ENSURE GATE VALVES ARE ADJUSTED FOR FINISHED SIDEWALK AND PAVEMENT GRADES.
9. CONTRACTOR TO ENSURE ALL GATE VALVES ARE LOCATED OUTSIDE OF PROPOSED CURB AND GUTTER LOCATIONS.
10. HOME BUILDERS ARE EXPECTED TO INSTALL INDIVIDUAL PRESSURE REDUCING VALVES FOR ALL HOMES.

GEORGETOWN FIRE DEPARTMENT NOTES

1. 1,500 GPM FIRE FLOW SHALL BE PROVIDED FOR THIS PROJECT.
2. AT THE CONCLUSION OF CONSTRUCTION AND AS PART OF THE PROCESS FOR THE CITY TO ACCEPT THIS PHASE:
   - THE FIRE HYDRANTS SHALL BE FLOWED AND TESTED
   - A COPY OF THE REPORT SHALL BE EMAILED INTO THE FIRE DEPARTMENT
   - THE HYDRANTS SHALL BE PAINTED AND COLOR CODED.

*** CAUTION :IF PRESSURE REDUCING VALVES WERE INSTALLED IN THIS PHASING THEY MUST BE SET PRIOR TO FIRE HYDRANT FLOW TESTING.

3. PER CITY ORDINANCE SEC. 13.15.120, HYDRANT FLOW CODING STANDARDS. PUBLIC HYDRANTS WILL HAVE THE BARRELS PAINTED SILVER, THE HYDRANTS WILL BE FLOW TESTED, AND THE BONNET PAINTED USING THE HYDRANT FLOW STANDARD IN PARAGRAPH C.

FLOW COLOR:
- GREATER THAN 1500 GPM BLUE
- 1000 TO 1500 GPM GREEN
- 500 - 999 GPM ORANGE
- LESS THAN 500 GPM RED
- NOT WORKING BLACK OR BAGGED

KEY MAP (N.T.S.)

NO	REVISION	BY	DATE

811 Know what's below. Call before you dig.

HRGreen®
DEVELOPMENT TX
5508 HIGHWAY 290 WEST
SUITE 150
AUSTIN, TX 78735
512.872.6696
HRGREEN.COM
TBPE NO: 16384
TBPLS NO: 10194101

STATE OF TEXAS
CHRISTINE N. CAMPBELL
142536
LICENSED PROFESSIONAL ENGINEER
07/03/2025

OVERALL WATER PLAN D

PARKSIDE ON THE RIVER SECTIONS 11, 12A & 15A CONSTRUCTION PLANS GEORGETOWN, WILLIAMSON, TEXAS

DESIGNED BY: CC
DRAWN BY: MM
CHECKED BY: SN
APPROVED BY:

SHEET 134 OF 141

2025-XX-CON

P:\Blake Manger\Parkside Sections 11-15 & WCN 6\Section 11, 12A & 15A\03_ACAD\Planset\20250222 WTGV.dwg, OVERALL WATER PLAN D, Jun 18, 2025, 12:39 PM, mmohammed

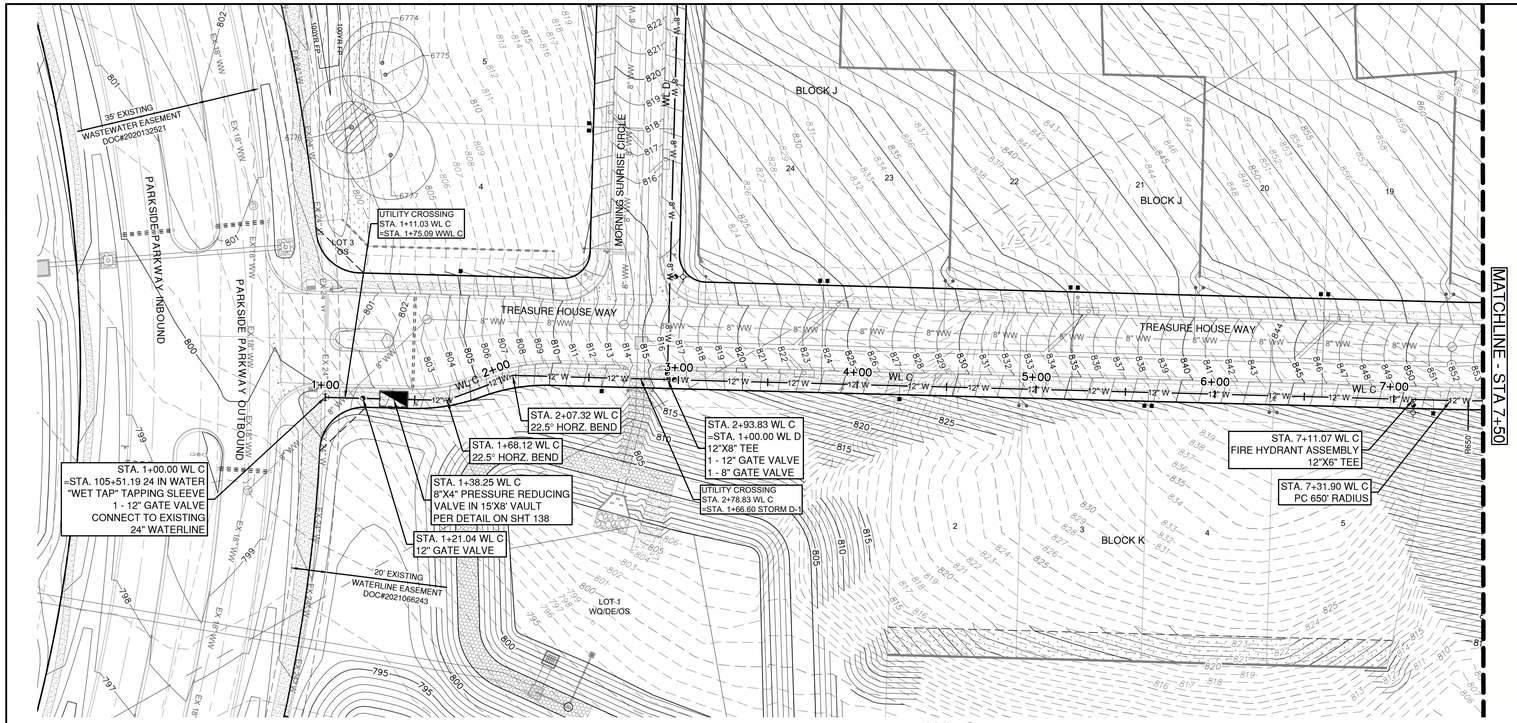

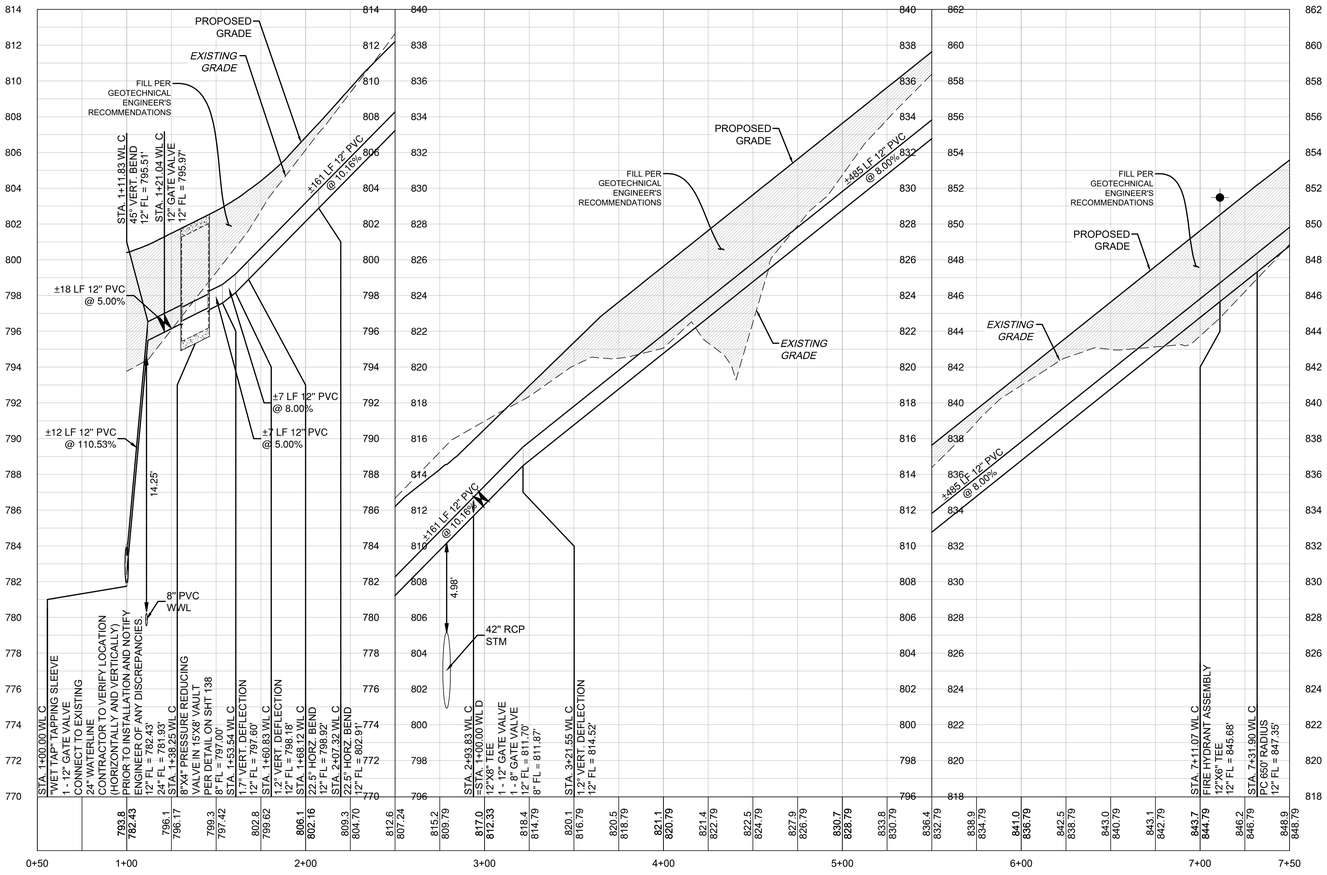

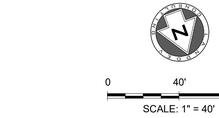

LEGEND

- EXISTING MINOR CONTOUR
- EXISTING MAJOR CONTOUR
- PROPOSED MINOR CONTOUR
- PROPOSED MAJOR CONTOUR
- BOUNDARY
- EASEMENT
- FEMA FLOODWAY PER FIRM# 48491C0460F & LOMR# 21-06-0115P
- FEMA AE — 100YR ATLAS 14 FEMA ZONE AE FLOODPLAIN PER FIRM# 48491C0460F & LOMR# 21-06-0115P
- FEMA A — 100YR FEMA ZONE A FLOODPLAIN PER FIRM MAP# 48491C0460F
- 100YR CLOMR — 100YR CLOMR FLOODPLAIN CASE# 15-06-2071R
- FDFP — 100YR ATLAS 14 FULLY DEVELOPED FLOODPLAIN (STANTEC DRAINAGE STUDY, SHERVIN NOOSHIN, 3/25/19) APPROVED WITH P# 2019-5-PP
- OHWM — ORDINARY HIGH WATER MARK PER ADAMS ENVIRONMENTAL
- PROPOSED WASTEWATER LINE
- PROPOSED STORM LINE
- PROPOSED WATER LINE
- FIRE HYDRANT
- WATER VALVE
- TEMP FLUSH VALVE
- AIR RELEASE VALVE
- STORM SEWER MAHNOLE
- WASTEWATER MANHOLE
- CURB INLET
- PROPOSED SINGLE WASTEWATER SERVICE
- PROPOSED DOUBLE WASTEWATER SERVICE
- PROPOSED SINGLE WATER SERVICE
- PROPOSED DOUBLE WATER SERVICE
- TREES TO REMAIN - HERITAGE
- TREES TO REMAIN - NON-HERITAGE

VERT. SCALE: 1" = 4'
HORZ. SCALE: 1" = 40'

- EXISTING GRADE - CENTERLINE
- FINISHED GRADE - CENTERLINE

4' 2' 0 VERT. SCALE

EXISTING GROUND — PROPOSED FLOWLINE

NOTES:

1. ALL PROPOSED WATERLINES EXCEPT FIRE LEADS SHALL BE PVC C900 DR 18 PER CITY OF GEORGETOWN SPECIFICATIONS.
2. THRUST BLOCKING SHALL BE PROVIDED AT BENDS, PI'S, TEES & FITTINGS ACCORDING TO CITY OF GEORGETOWN.
3. ALL JOINT RESTRAINT SHALL BE IN ACCORDANCE TO CITY OF GEORGETOWN SPECIFICATION. REFER TO THE JOINT RESTRAINT TABLE ON SHEET 138.
4. ANY JOINT DEFLECTION VERTICAL OR HORIZONTAL SHALL BE WITHIN THE MANUFACTURES MAXIMUM ALLOWABLE JOINT DEFLECTION.
5. PORTIONS OF THIS PROPOSED DEVELOPMENT LIE WITHIN THE FEMA 100-YR FLOODPLAIN.
6. AT THE CONCLUSION OF CONSTRUCTION AND AS PART OF THE PROCESS FOR THE CITY TO ACCEPT THIS PHASE, THE FIRE HYDRANTS SHALL BE FLOWED AND TESTED. A COPY OF THE REPORT SHALL BE EMAILED INTO THE FIRE DEPARTMENT AND THE HYDRANTS SHALL BE PAINTED AND COLOR CODED.
7. CAUTION: IF PRESSURE REDUCING VALVES WERE INSTALLED IN THIS PHASING, THEY MUST BE SET PRIOR TO FIRE HYDRANT FLOW TESTING.
8. CONTRACTOR AND HOME BUILDER TO ENSURE GATE VALVES ARE ADJUSTED FOR FINISHED SIDEWALK AND PAVEMENT GRADES.
9. CONTRACTOR TO ENSURE ALL GATE VALVES ARE LOCATED OUTSIDE OF PROPOSED CURB AND GUTTER LOCATIONS.
10. HOME BUILDERS ARE EXPECTED TO INSTALL INDIVIDUAL PRESSURE REDUCING VALVES FOR ALL HOMES.

NO.	REVISION	BY	DATE

Know what's below. Call before you dig.

HRGreen
DEVELOPMENT TX
5508 HIGHWAY 290 WEST
SUITE 150
AUSTIN, TX 78735
512.872.6696
HRGREEN.COM
TBPE NO: 16384
TBPLS NO: 10194101

STATE OF TEXAS
CHRISTINE N. CAMPBELL
142536
LICENSED PROFESSIONAL ENGINEER
07/03/2025

WL C PLAN & PROFILE 1+00 - 7+50

PARKSIDE ON THE RIVER SECTIONS 11, 12A & 15A CONSTRUCTION PLANS

GEORGETOWN, WILLIAMSON, TEXAS

DESIGNED BY: CC
DRAWN BY: MM
CHECKED BY: SN
APPROVED BY:

SHEET 135 OF 141

2025-XX-CON

P:\Blake Magee\Parkside Sections 11\15 & WDN S\Section 11, 12A & 15A\03_ACAD\Plans\sh2025322 WTPP WL C.dwg, WL C PLAN & PROFILE 1+00 - 7+50, July 08, 2025, 12:40 PM, malan.muhammad

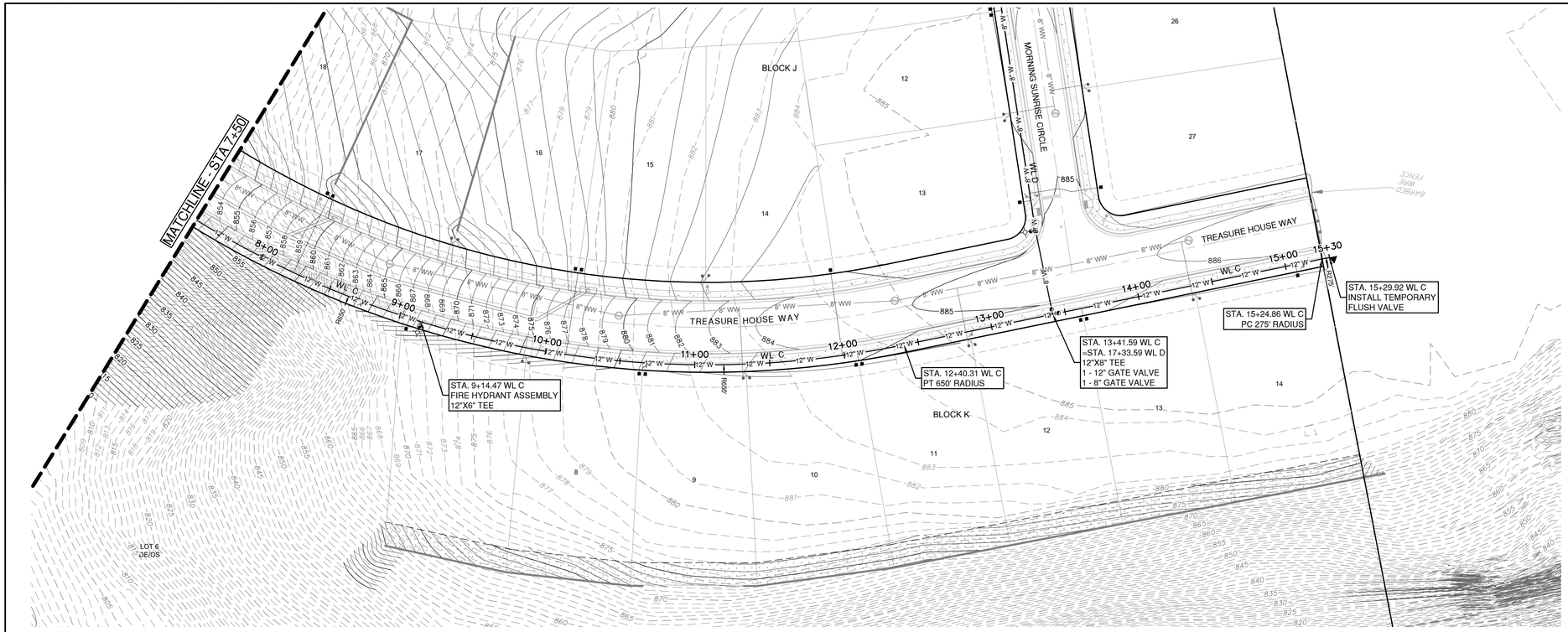

WL C

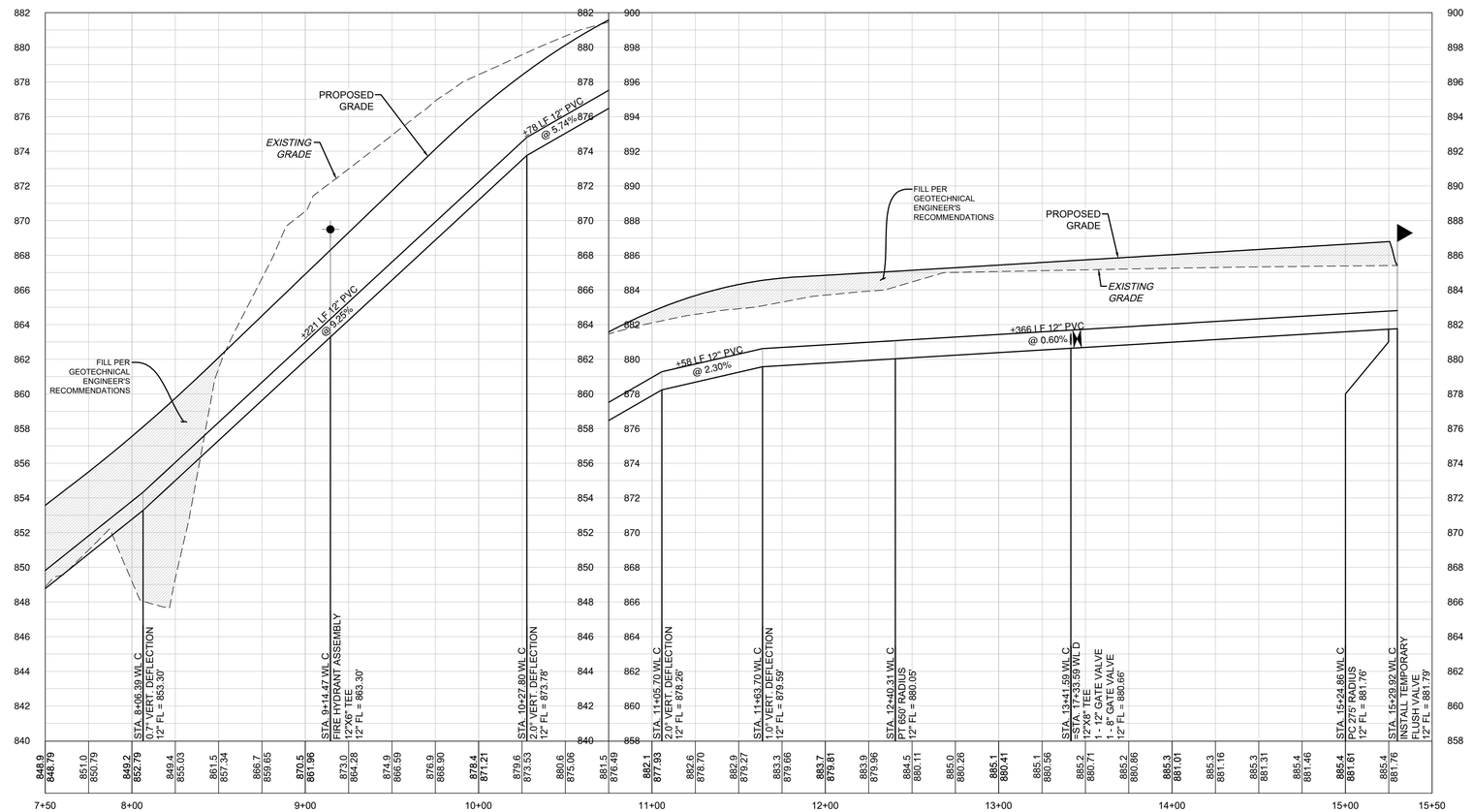

0 40' 80'

SCALE: 1" = 40'

LEGEND

- EXISTING MINOR CONTOUR
- EXISTING MAJOR CONTOUR
- PROPOSED MINOR CONTOUR
- PROPOSED MAJOR CONTOUR
- BOUNDARY
- EASEMENT
- FEMA FLOODWAY PER FIRM# 48491C0460F & LOMR# 21-06-0115P
- FEMA AE — 100YR ATLAS 14 FEMA ZONE AE FLOODPLAIN PER FIRM# 48491C0460F & LOMR# 21-06-0115P
- FEMA A — 100YR FEMA ZONE A FLOODPLAIN PER FIRM MAP# 48491C0460F
- 100YR CLOMR — 100YR CLOMR FLOODPLAIN CASE# 15-06-2071R
- FDFP — 100YR ATLAS 14 FULLY DEVELOPED FLOODPLAIN (STANTEC DRAINAGE STUDY, SHERVIN NOOSHIN, 3/25/19) APPROVED WITH PP# 2019-5-PP
- OHWM — ORDINARY HIGH WATER MARK PER ADAMS ENVIRONMENTAL
- 8" WW — PROPOSED WASTEWATER LINE
- PROPOSED STORM LINE
- 8" W — PROPOSED WATER LINE
- FIRE HYDRANT
- WATER VALVE
- TEMP FLUSH VALVE
- AIR RELEASE VALVE
- STORM SEWER MAHNOLE
- WASTEWATER MANHOLE
- CURB INLET
- PROPOSED SINGLE WASTEWATER SERVICE
- PROPOSED DOUBLE WASTEWATER SERVICE
- PROPOSED SINGLE WATER SERVICE
- PROPOSED DOUBLE WATER SERVICE
- TREES TO REMAIN - HERITAGE
- TREES TO REMAIN - NON-HERITAGE

VERT. SCALE: 1" = 4'
HORZ. SCALE: 1" = 40'

EXISTING GRADE - CENTERLINE
FINISHED GRADE - CENTERLINE

4' 2' 0 VERT. SCALE

EXISTING GROUND — 100YR 10 — 100YR 0.1 — PROPOSED FLOWLINE

NOTES:

1. ALL PROPOSED WATERLINES EXCEPT FIRE LEADS SHALL BE PVC C900 DR 18 PER CITY OF GEORGETOWN SPECIFICATIONS.
2. THRUST BLOCKING SHALL BE PROVIDED AT BENDS, PI'S, TEES & FITTINGS ACCORDING TO CITY OF GEORGETOWN.
3. ALL JOINT RESTRAINT SHALL BE IN ACCORDANCE TO CITY OF GEORGETOWN SPECIFICATION. REFER TO THE JOINT RESTRAINT TABLE ON SHEET 138.
4. ANY JOINT DEFLECTION VERTICAL OR HORIZONTAL SHALL BE WITHIN THE MANUFACTURES MAXIMUM ALLOWABLE JOINT DEFLECTION.
5. PORTIONS OF THIS PROPOSED DEVELOPMENT LIE WITHIN THE FEMA 100-YR FLOODPLAIN.
6. AT THE CONCLUSION OF CONSTRUCTION AND AS PART OF THE PROCESS FOR THE CITY TO ACCEPT THIS PHASE, THE FIRE HYDRANTS SHALL BE FLOWED AND TESTED. A COPY OF THE REPORT SHALL BE EMAILED INTO THE FIRE DEPARTMENT AND THE HYDRANTS SHALL BE PAINTED AND COLOR CODED.
7. CAUTION: IF PRESSURE REDUCING VALVES WERE INSTALLED IN THIS PHASING, THEY MUST BE SET PRIOR TO FIRE HYDRANT FLOW TESTING.
8. CONTRACTOR AND HOME BUILDER TO ENSURE GATE VALVES ARE ADJUSTED FOR FINISHED SIDEWALK AND PAVEMENT GRADES.
9. CONTRACTOR TO ENSURE ALL GATE VALVES ARE LOCATED OUTSIDE OF PROPOSED CURB AND GUTTER LOCATIONS.
10. HOME BUILDERS ARE EXPECTED TO INSTALL INDIVIDUAL PRESSURE REDUCING VALVES FOR ALL HOMES.

NO	REVISION	BY	DATE

811 Know what's below. Call before you dig.

5508 HIGHWAY 290 WEST
SUITE 150
AUSTIN, TX 78735
512.872.6696
HRGREEN.COM

TBPE NO: 16384
TBPLS NO: 10194101

HRGreen®
DEVELOPMENT TX

STATE OF TEXAS
CHRISTINE N. CAMPBELL
142536
LICENSED PROFESSIONAL ENGINEER
07/03/2025

WL C PLAN & PROFILE 7+50 - END

PARKSIDE ON THE RIVER SECTIONS 11, 12A & 15A CONSTRUCTION PLANS GEORGETOWN, WILLIAMSON, TEXAS

DESIGNED BY: CC
DRAWN BY: MM
CHECKED BY: SN
APPROVED BY:

SHEET 136 OF 141

2025-XX-CON

P:\Blake Magee\Parkside Sections 11-15 & WCA\15Section 11, 12A & 15A\03_ACAD\Plans\sht\A2635S2 WTPP WL C.dwg, WL C PLAN & PROFILE 7+50 - END, July 18, 2025, 12:40 PM, makai.muhammad

Plot Style: LandDev Global.ctb
Template: LDC_C3D2022.DWT
P:\Blake Magee\Parkside Sections 11-15 & WON 5\Section 11, 12A & 15A\03_ACAD\Plans\sh2403522 DTLS.dwg, WATER DETAILS, July 18, 2025, 12:41 PM, makai.muhammad

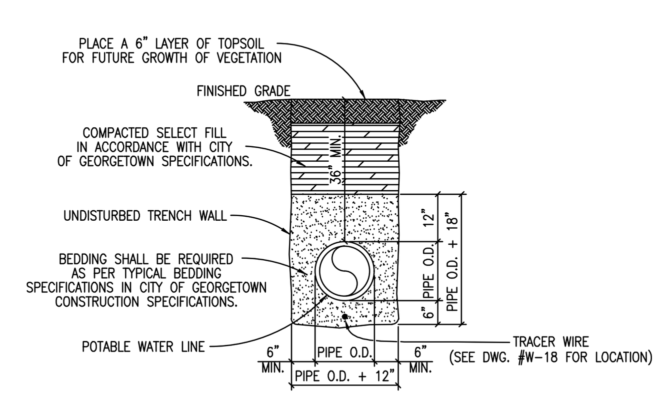

TRENCH WIDTHS
*PIPE LESS THAN 20" DIAMETER
1'-0" + PIPE O.D.
*20" DIAMETER PIPE AND LARGER
2'-0" + PIPE O.D.

The Architect/Engineer assumes responsibility for appropriate use of this standard.

ADOPTED 6/21/2006
CITY OF GEORGETOWN CONSTRUCTION STANDARDS AND DETAILS
TRENCH AND EMBEDMENT DETAIL UNDER NON-PAVED AREAS
W02 | NTS | 1/2003 | MRS | TRB

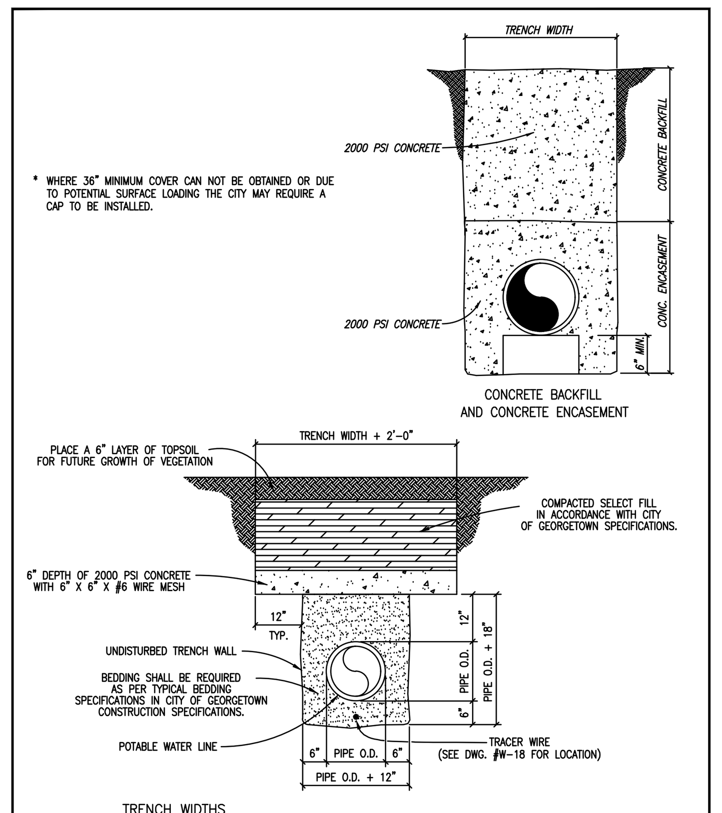

TRENCH WIDTHS
*PIPE LESS THAN 20" DIAMETER
1'-0" + PIPE O.D.
*20" DIAMETER PIPE AND LARGER
2'-0" + PIPE O.D.

The Architect/Engineer assumes responsibility for appropriate use of this standard.

ADOPTED 6/21/2006
CITY OF GEORGETOWN CONSTRUCTION STANDARDS AND DETAILS
CONCRETE TRENCH CAP DETAIL
W02A | NTS | 1/2003 | MRS | TRB

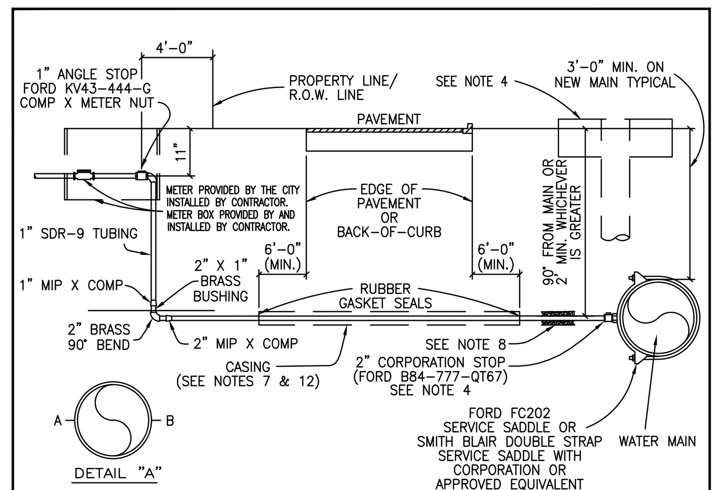

NOTES:
1. SUCCESSIVE TAPS INTO THE WATER MAIN SHALL BE SPACED A MINIMUM OF 18" OFFSET AND AT THE CENTERLINE AS SHOWN ON DETAIL "A".
2. WHERE NO SIDEWALK EXISTS, METER BOXES SHALL BE SET TO CONFORM TO FINISHED GRADE.
3. AUTHORIZED SERVICE LINE MATERIAL: POLYETHYLENE TUBING SHALL BE SDR-9. CLASS 200, SDR TUBING SHALL HAVE STAINLESS STEEL STIFFENERS.
4. ROTATE THE CORPORATION STOP SO THAT THE OPERATING NUT IS ACTUATED FROM THE VERTICAL POSITION RATHER THAN THE HORIZONTAL. SEE STD. RISER FOR CORP. STOP DETAIL, (DWG # W08).
5. SERVICE LINES SHALL BE CONTINUOUS FROM CORPORATION STOP TO CORPORATION STOP WITH NO FITTINGS IN BETWEEN.
6. SERVICE CASING SHALL NOT BE INSTALLED BY WATER JETTING UNDER ROADWAY.
7. CASING REQUIRED FOR ALL PAVEMENT CROSSINGS. 4" SDR-26 REQUIRED FOR OPEN-CUT. STEEL CASING PIPE REQUIRED FOR JACK AND BORE. LIMITS OF CASING SHOULD EXTEND SIX FEET BEYOND THE EDGE OF PAVEMENT OR BACK-OF-CURB.
8. BEDDING MATERIAL AS PER CITY OF GEORGETOWN CONSTRUCTION SPECIFICATIONS.
9. ANY VARIATIONS ON FITTINGS MUST BE APPROVED BY THE CITY ENGINEER.
10. METER BOX TO BE CAPABLE OF HOUSING ITRON AUTOMATIC METER READING DEVICE. USE DFW-PLASTICS, INC. PART NO. 1200.SBAMR OR APPROVED EQUAL.
11. ALL SERVICE LINES SHALL BE PLACED 90° PERPENDICULAR TO THE ROADWAY. SEE DETAIL W23.
12. CASING SHALL EXTEND OUT TO WITHIN 4' INSIDE OF THE R.O.W. LINE, ON BOTH SIDES.

The Architect/Engineer assumes responsibility for appropriate use of this standard.

ADOPTED 01/23/2013
CITY OF GEORGETOWN CONSTRUCTION STANDARDS AND DETAILS
TYPICAL WATER SERVICE-ELEVATION
W03 | NTS | 1/2013 | – | MH

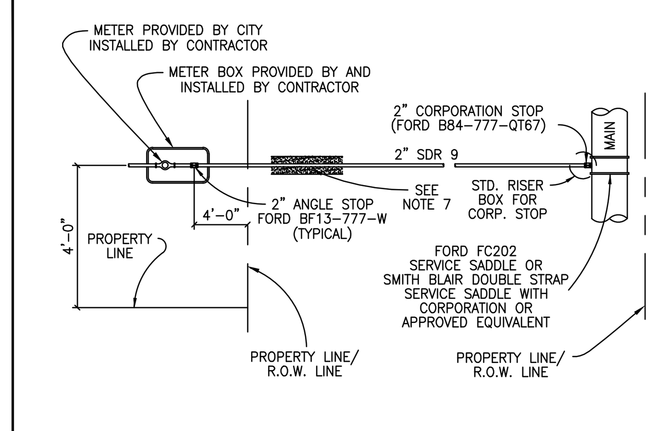

NOTES:
1. AUTHORIZED SERVICE LINE MATERIAL: POLYETHYLENE TUBING SHALL BE SDR-9. CLASS 200, SDR TUBING SHALL HAVE STAINLESS STEEL STIFFENERS.
2. ANGLE STOP SHALL BE 1" MINIMUM.
3. 1" ANGLE STOPS WITH 3/4" VALVES SHALL NOT BE PERMITTED.
4. MULTIPLE SERVICE/METER INSTALLATIONS OF MORE THAN 4 METERS PER SERVICE AND SERVICE LINES LARGER THAN 2" IN DIAMETER SHALL BE HANDLED ON AN INDIVIDUAL BASIS.
5. ANGLE STOPS 1 1/2" AND 2" IN SIZE SHALL BE PROVIDED WITH BOTH A LOCKING CAP AND METER FLANGE.
6. ANGLE STOPS SHALL BE INSTALLED 8" BELOW FINISHED GRADE AND MARKED WITH A 2" X 2" X 48" TREATED WOOD STAKE, PAINTED BLUE.
7. BEDDING MATERIAL AS PER CITY OF GEORGETOWN CONSTRUCTION SPECIFICATIONS.
8. CASING REQUIREMENTS FOR SERVICE LINES CROSSING ROADWAYS SEE DETAIL W-03 NOTE #7.
9. ANY VARIATIONS ON FITTINGS MUST BE APPROVED BY THE CITY ENGINEER.
10. ALL SERVICE LINES SHALL BE PLACED 90° PERPENDICULAR TO THE ROADWAY.

The Architect/Engineer assumes responsibility for appropriate use of this standard.

ADOPTED 01/23/2013
CITY OF GEORGETOWN CONSTRUCTION STANDARDS AND DETAILS
SINGLE WATER SERVICE PLAN
W04 | NTS | 1/2013 | – | MH

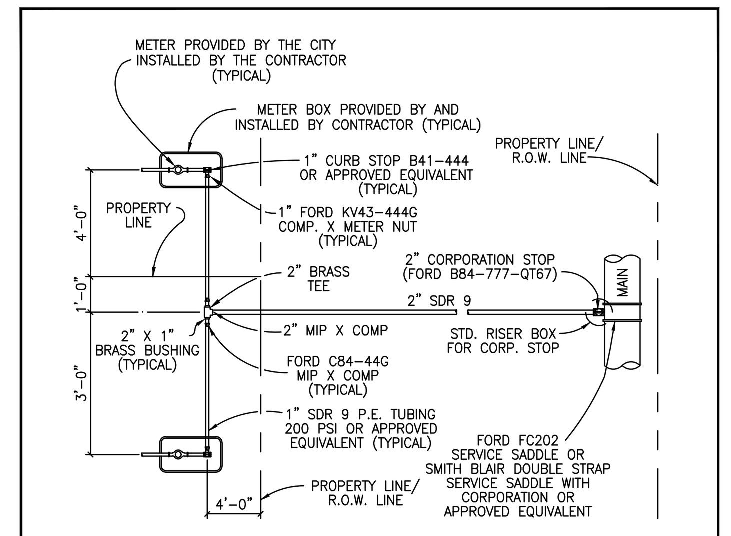

NOTES:
1. AUTHORIZED SERVICE LINE MATERIAL: POLYETHYLENE TUBING SHALL BE SDR-9. CLASS 200, SDR TUBING SHALL HAVE STAINLESS STEEL STIFFENERS.
2. ANGLE STOP SHALL BE 1" MINIMUM.
3. 1" ANGLE STOPS WITH 3/4" VALVES SHALL NOT BE PERMITTED.
4. MULTIPLE SERVICE/METER INSTALLATIONS OF MORE THAN 4 METERS PER SERVICE AND SERVICE LINES LARGER THAN 2" IN DIAMETER SHALL BE HANDLED ON AN INDIVIDUAL BASIS.
5. ANGLE STOPS 1 1/2" AND 2" IN SIZE SHALL BE PROVIDED WITH BOTH A LOCKING CAP AND METER FLANGE.
6. ANGLE STOPS SHALL BE INSTALLED 8" BELOW FINISHED GRADE AND MARKED WITH A 2" X 2" X 48" TREATED WOOD STAKE, PAINTED BLUE.
7. BEDDING MATERIAL AS PER CITY OF GEORGETOWN CONSTRUCTION SPECIFICATIONS.
8. CASING REQUIREMENTS FOR SERVICE LINES CROSSING ROADWAYS SEE DETAIL W-03 NOTE #7.
9. ANY VARIATIONS ON FITTINGS MUST BE APPROVED BY THE CITY ENGINEER.
10. ALL SERVICE LINES SHALL BE PLACED 90° PERPENDICULAR TO THE ROADWAY.

The Architect/Engineer assumes responsibility for appropriate use of this standard.

ADOPTED 01/23/2013
CITY OF GEORGETOWN CONSTRUCTION STANDARDS AND DETAILS
DOUBLE WATER SERVICE PLAN
W05 | NTS | 1/2013 | – | MH

The Architect/Engineer assumes responsibility for appropriate use of this standard.

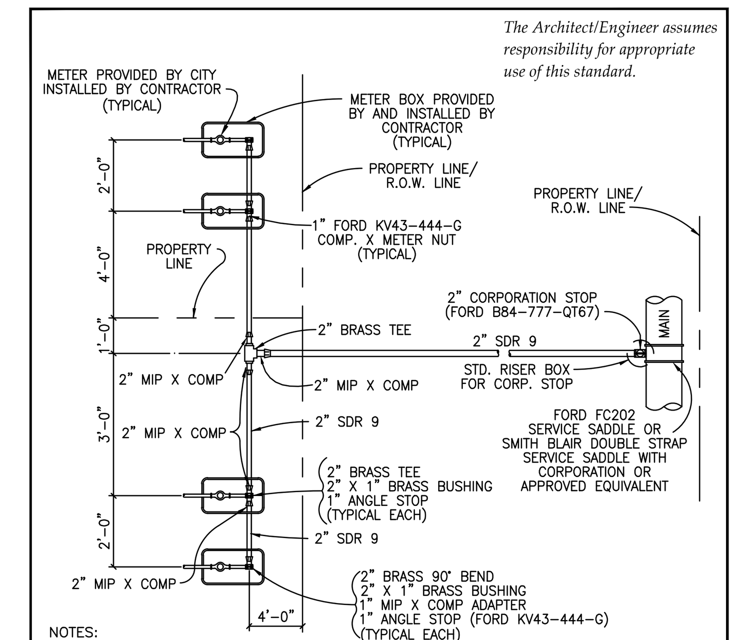

NOTES:
1. AUTHORIZED SERVICE LINE MATERIAL: POLYETHYLENE TUBING SHALL BE SDR-9. CLASS 200, SDR TUBING SHALL HAVE STAINLESS STEEL STIFFENERS.
2. ANGLE STOP SHALL BE 1" MINIMUM.
3. 1" ANGLE STOPS WITH 3/4" VALVES SHALL NOT BE PERMITTED.
4. MULTIPLE SERVICE/METER INSTALLATIONS OF MORE THAN 4 METERS PER SERVICE AND SERVICE LINES LARGER THAN 2" IN DIAMETER SHALL BE HANDLED ON AN INDIVIDUAL BASIS.
5. ANGLE STOPS 1 1/2" AND 2" IN SIZE SHALL BE PROVIDED WITH BOTH A LOCKING CAP AND METER FLANGE.
6. ANGLE STOPS SHALL BE INSTALLED 8" BELOW FINISHED GRADE AND MARKED WITH A 2" X 2" X 48" TREATED WOOD STAKE, PAINTED BLUE.
7. BEDDING MATERIAL AS PER CITY OF GEORGETOWN CONSTRUCTION SPECIFICATIONS.
8. CASING REQUIREMENTS FOR SERVICE LINES CROSSING ROADWAYS SEE DETAIL W-03 NOTE #7.
9. ANY VARIATIONS ON FITTINGS MUST BE APPROVED BY THE CITY ENGINEER.
10. ALL SERVICE LINES SHALL BE PLACED 90° PERPENDICULAR TO THE ROADWAY.

ADOPTED 01/23/2013
CITY OF GEORGETOWN CONSTRUCTION STANDARDS AND DETAILS
QUADRUPLE WATER SERVICE PLAN
W06 | NTS | 1/2013 | – | MH

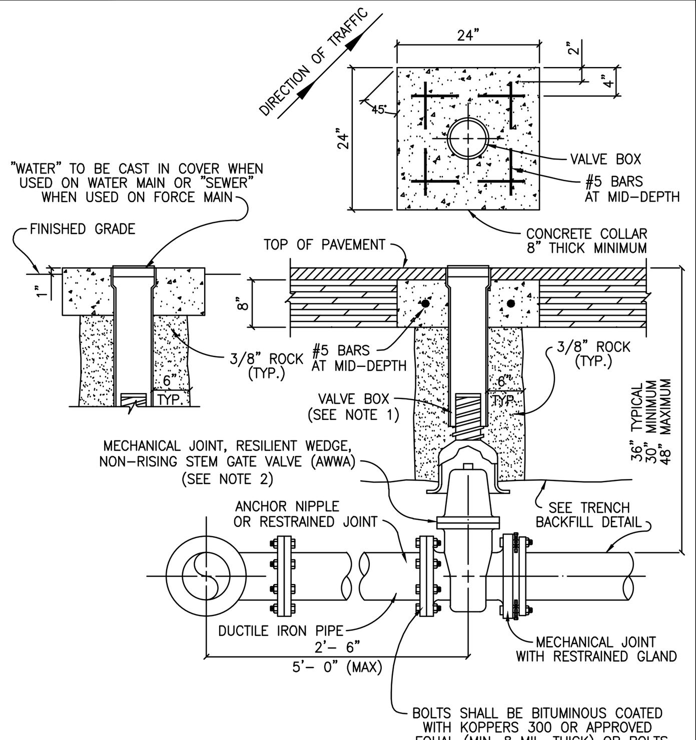

NOTES:
1. VALVE BOX SHALL BE 5 1/4" CAST IRON ADJUSTABLE HAVING AN ADJUSTABLE RANGE OF + OR – 6 INCHES FROM INSTALLED FINISH GRADE.
2. ACCEPTABLE GATE VALVES ARE:
   A. AMERICAN FLOW CONTROL – SERIES 2500
   B. MUELLER – 2360 SERIES
   C. CLOW

The Architect/Engineer assumes responsibility for appropriate use of this standard.

ADOPTED 6/21/2006
CITY OF GEORGETOWN CONSTRUCTION STANDARDS AND DETAILS
TYPICAL VALVE SETTING
W07 | NTS | 1/2003 | MRS | TRB

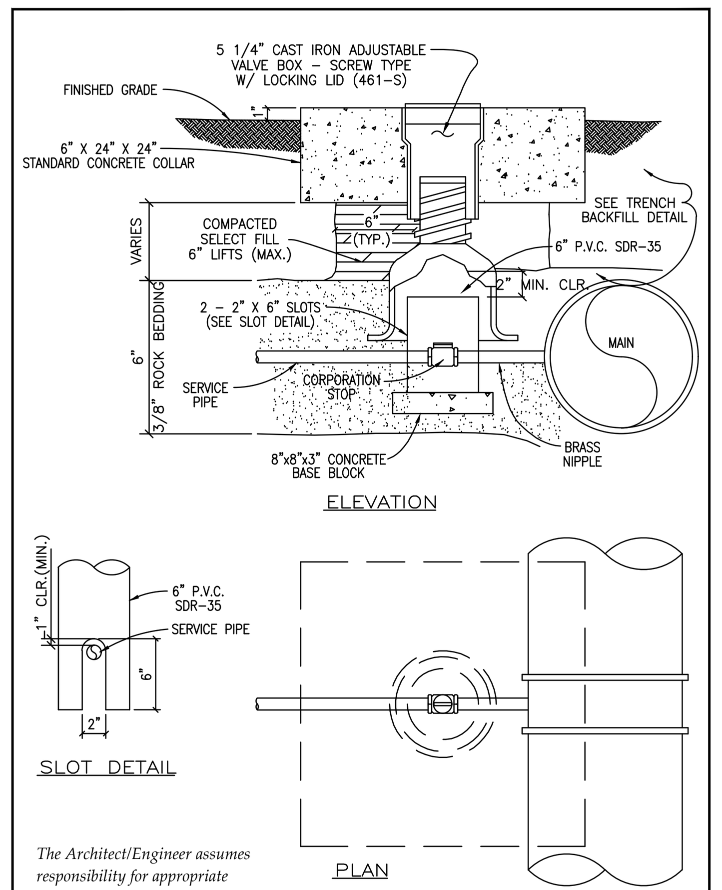

The Architect/Engineer assumes responsibility for appropriate use of this standard.

ADOPTED 6/21/2006
CITY OF GEORGETOWN CONSTRUCTION STANDARDS AND DETAILS
STANDARD RISER BOX FOR CORPORATION STOP
W08 | NTS | 1/2003 | MRS | TRB

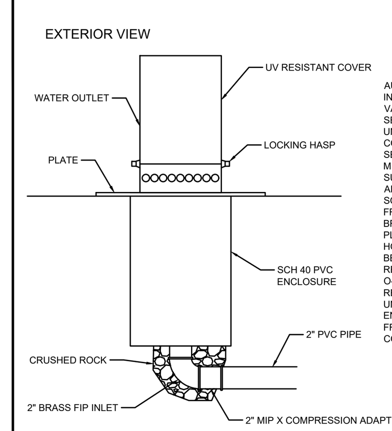

AUTOMATIC FLUSHING DEVICE SHALL HAVE A 2" BRASS FIP INLET, LEADING VERTICALLY INTO A 2" AUTOMATIC SOLENOID VALVE. AUTOMATIC SOLENOID VALVE SHALL HAVE INTERNAL, SELF-CLEANING SCREEN, AND HAVE A 220 PSI RATING. EACH UNIT SHALL BE FURNISHED WITH A STAND-ALONE VALVE CONTROLLER. VALVE CONTROLLER WILL NOT REQUIRE A SECOND HAND DEVICE FOR PROGRAMMING. MUST HAVE A MINIMUM OF 9 POSSIBLE FLUSHING CYCLE PER DAY, SHALL BE SUBMERSIBLE TO 12 FEET, OPERATE WITH A 9 VOLT BATTERY, AND HAVE FRESH-SEALED ELECTRICAL COMPONENTS. SOLENOID SHALL HAVE NO LOOSE PARTS WHEN REMOVED FROM VALVE. EACH UNIT SHALL HAVE A DOUBLE-VALVE. ALL BRASS SAMPLING POINT, AND A UV RESISTANT GROUND PLATE. WATER SHALL EXIT UNIT HORIZONTALLY THROUGH HOLE LOCATED NEAR GROUNDLINE AND WATER FLOW SHALL BE ADJUSTABLE WITHOUT ACCESSING 2" SOLENOID VALVE. REMOVAL OF 2" SOLENOID VALVE SHALL BE POSSIBLE VIA AN O-RING CONNECTOR LOCATED UNDER THE VALVE AFTER REMOVAL OF THE STAINLESS STEEL ACCESS PLATE. UNDERGROUND PARTS SHALL BE HOUSED IN A PVC ENCLOSURE AND EACH UNIT SHALL BE SELF-DRAINING, NON FREEZING. ALL ABOVE GROUND COMPONENTS SHALL BE CONTAINED WITHIN A UV RESISTANT LOCKING GOMES COVER.

The Architect/Engineer assumes responsibility for appropriate use of this standard.

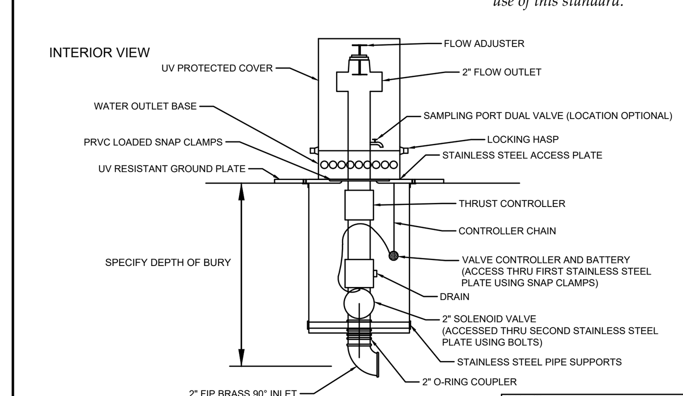

TRANSFERED FROM TCTSUD
CITY OF GEORGETOWN CONSTRUCTION STANDARDS AND DETAILS
AUTOMATIC FLUSHING VALVE
W-08C | NTS | 7/2015 | TP | –

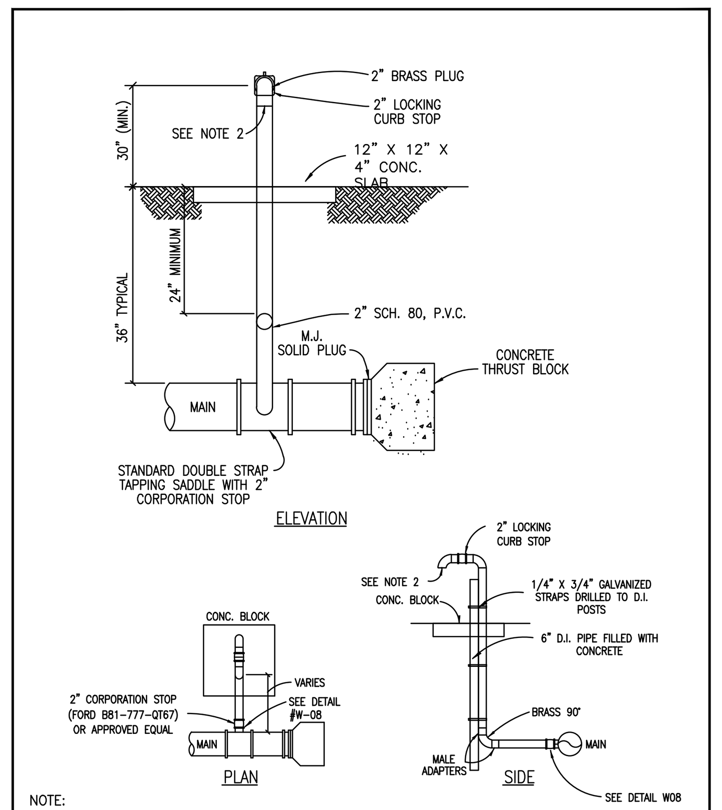

NOTE:
1. ATTACH FIRE HYDRANT CONNECTION AT THE END OF THE BLOW OFF VALVE.

The Architect/Engineer assumes responsibility for appropriate use of this standard.

ADOPTED 6/21/2006
CITY OF GEORGETOWN CONSTRUCTION STANDARDS AND DETAILS
STANDARD BLOW-OFF
W09 | NTS | 1/2003 | MRS | TRB

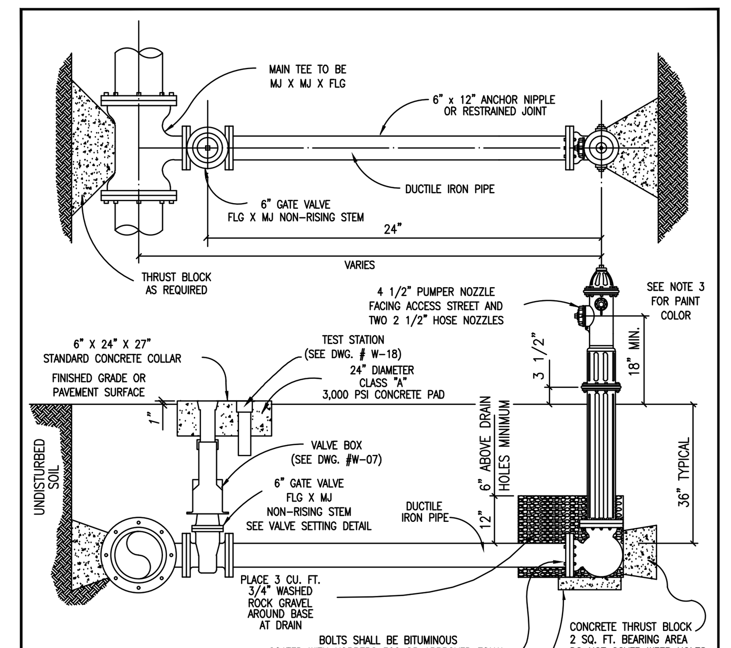

NOTES:
1. FIRE HYDRANT SHALL BE INSTALLED ON SAME SIDE OF ROAD AS WATER MAIN.
2. FIRE HYDRANT SHALL BE INSTALLED PLUMB AND TRUE.
3. ALL FIRE HYDRANT EXTERIORS SHALL BE FACTORY PRIMED AND PAINTED SILVER USING A HIGH GRADE ENAMEL.
4. HEEL AND THRUST BLOCKS TO REST IN UNDISTURBED SOIL.
5. THE ONLY FIRE HYDRANTS ACCEPTABLE ARE:
   A. KENNEDY – K81
   B. AMERICAN DARLING – B84B
   C. CLOW MEDALLION
6. DOUBLE BLUE REFLECTOR "HYE-LITES" BRAND, MANUFACTURED BY PAVEMENT MARKERS INC. TO BE INSTALLED AT CENTERLINE OF STREET PERPENDICULAR TO HYDRANT.
7. ALL METALLIC PIPES AND FITTINGS SHALL BE WRAPPED WITH 8 MILL. POLYETHELENE FILM.

The Architect/Engineer assumes responsibility for appropriate use of this standard.

ADOPTED 6/21/2006
CITY OF GEORGETOWN CONSTRUCTION STANDARDS AND DETAILS
TYPICAL FIRE HYDRANT INSTALLATION
W10 | NTS | 1/2003 | MRS | TRB

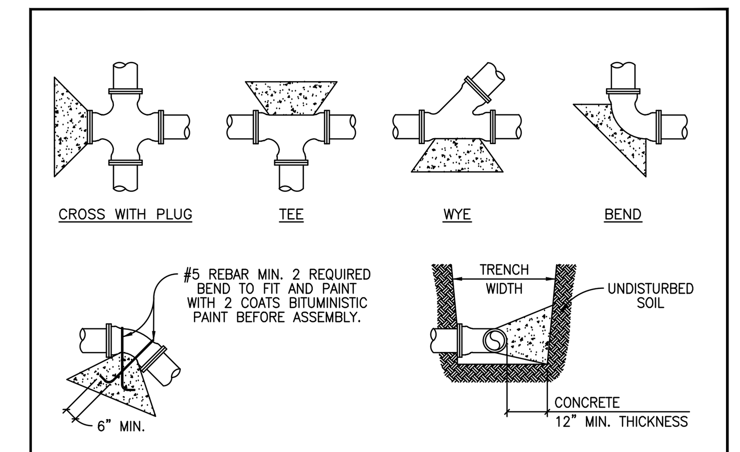

ALL THRUST BLOCKS SHALL BE FORMED. LAID FORMS SHALL BE INSPECTED BY THE CITY OF GEORGETOWN PRIOR TO THE POURING OF CONCRETE AND SHALL ALSO BE INSPECTED BY THE CITY OF GEORGETOWN PRIOR TO COVERING. TYPICAL LOCATIONS WHICH REQUIRE CONCRETE REACTION (THRUST) BLOCKS, FOR PRESSURE MAINS FOUR INCHES (4") AND GREATER. CONCRETE SHALL HAVE 2,500 P.S.I. MINIMUM STRENGTH AT TWENTY EIGHT (28) DAYS AND BEAR AGAINST UNDISTURBED STABLE SOILS, AREA OF CONTACT SHALL BE GOVERNED BY PIPE SIZE, MAXIMUM PRESSURE IN PIPE, AND BEARING CAPACITY OF SOIL. PROTECT FITTINGS, BOLTS, ETC. BY COVERING WITH VISQUEEN OR OTHER ACCEPTABLE MATERIAL. CONCRETE SHALL BE A MINIMUM OF TWELVE INCHES (12") THICK.

PIPE SIZE	THRUST BLOCK AREA REQUIRED	PIPE SIZE	THRUST BLOCK AREA REQUIRED	REMARKS
4"	2.0 SQ. FT.	18"	30.0 SQ. FT.	VALUES ARE FOR 90° BENDS, BASED ON 2000 P.S.F. SAFE BEARING LOAD AND PIPE PRESSURE OF 150 P.S.I. PLUS 33% SAFETY FACTOR FOR OTHER SOILS AND PRESSURES, THE AREA REQUIRED IS IN DIRECT PROPORTION.
6"	4.0 SQ. FT.	20"	37.0 SQ. FT.	
8"	6.6 SQ. FT.	24"	53.0 SQ. FT.	
10"	10.0 SQ. FT.	27"	80.0 SQ. FT.	
12"	14.0 SQ. FT.	30"	98.0 SQ. FT.	
14"	18.0 SQ. FT.	36"	127.0 SQ. FT.	
16"	24.0 SQ. FT.			

* THE ENGINEER OF RECORD SHALL CALCULATE THE SIZE OF THE DEADMAN REQUIRED AS WELL AS ANY INSTALLATION WHICH IS NOT COVERED BY THE ABOVE.

The Architect/Engineer assumes responsibility for appropriate use of this standard.

ADOPTED 6/21/2006
CITY OF GEORGETOWN CONSTRUCTION STANDARDS AND DETAILS
TYPICAL THRUST BLOCKS FOR WATER AND FORCE MAIN
W11 | NTS | 1/2003 | MRS | TRB

The Architect/Engineer assumes responsibility for appropriate use of this standard.

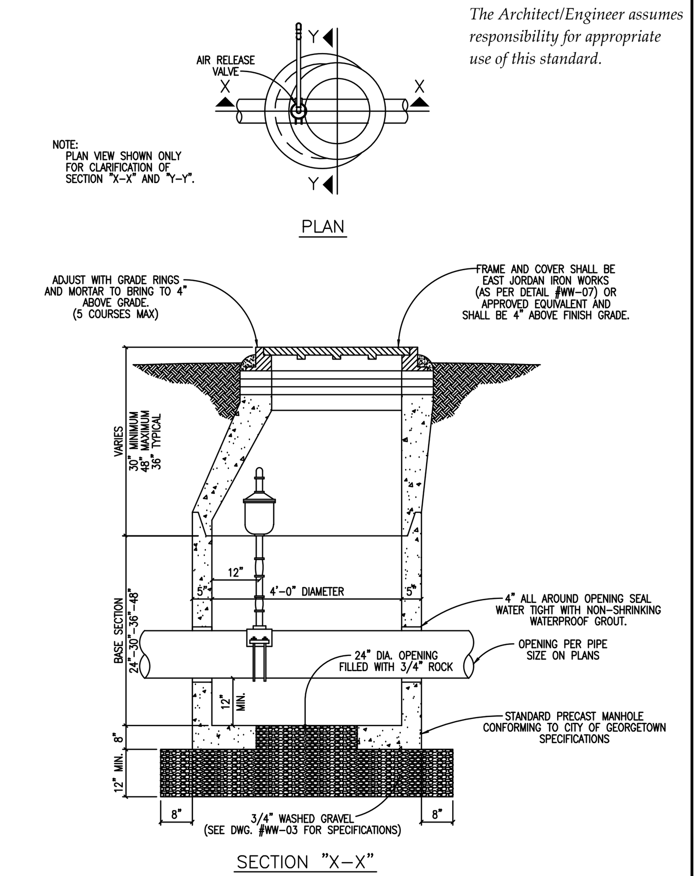

ADOPTED 6/21/2006
CITY OF GEORGETOWN CONSTRUCTION STANDARDS AND DETAILS
STANDARD AIR RELEASE VALVE FOR WATER MAIN
W12 | NTS | 1/2003 | MRS | TRB

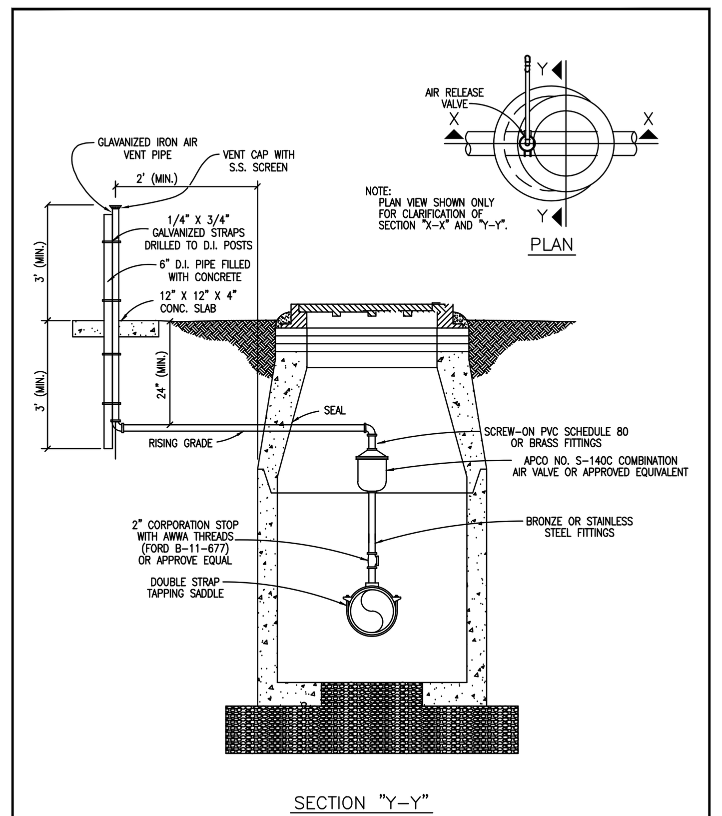

The Architect/Engineer assumes responsibility for appropriate use of this standard.

ADOPTED 6/21/2006
CITY OF GEORGETOWN CONSTRUCTION STANDARDS AND DETAILS
STANDARD AIR RELEASE VALVE FOR WATER MAIN
W13 | NTS | 1/2003 | MRS | TRB

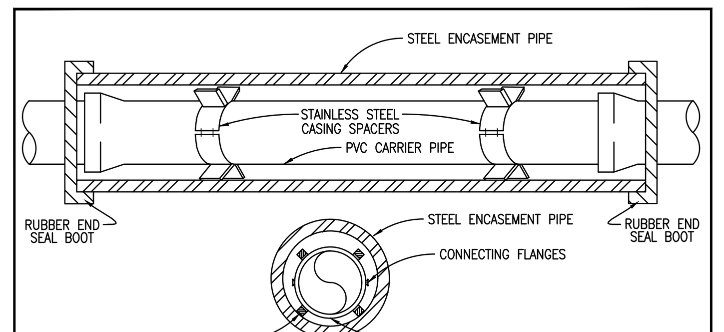

NOTES:
1. CASING SPACERS SHALL BE BOLT ON STYLE WITH A SHELL MADE IN TWO SECTIONS OF HEAVY T-304 STAINLESS STEEL. CONNECTING FLANGES SHALL BE RIBBED FOR EXTRA STRENGTH. CASING SPACERS SHALL BE MADE BY CASCADE WATERWORKS MFG. CO. OR APPROVED EQUAL.
2. CASING SPACERS SHALL HAVE RUNNERS MADE OF ULTRA HIGH MOLECULAR WEIGHT POLYMER, WITH A MINIMUM HEIGHT OF 2 INCHES.
3. DO NOT USE WEDGES BETWEEN TOP OF PVC CARRIER PIPE AND INSIDE OF CASING TO KEEP PVC FROM MOVING.
4. PRIOR TO INSERTING PVC CARRIER PIPE, ANY WATER SHOULD BE PUMPED OUT OF THE CASING PIPE SO THAT NO MORE THAN A FEW INCHES OF WATER REMAINS.
5. SPACERS WILL BE REQUIRED WITHIN AT LEAST 3 FEET FROM BOTH OPENINGS OF THE ENCASEMENT PIPE AND SPACED NO GREATER THAN 6 FEET THROUGHOUT THE ENCASEMENT PIPE.
6. ENCASEMENT PIPE SHALL BE SMOOTH STEEL 35,000 PSI YIELD STRENGTH WITH THICKNESS ACCORDING TO THE FOLLOWING TABLE:
7. WHEN CASING IS REQUIRED UNDER PAVEMENT WITHIN THE R.O.W., THE CASING SHALL EXTEND OUT TO WITHIN 4' INSIDE OF THE R.O.W. LINE, ON BOTH SIDES.
8. ALL JOINTS SHALL BE RESTRAINED ON PVC CARRIER PIPE.

PIPE SIZE-CARRIER (DIAMETER)	PIPE SIZE-CASING (DIAMETER)(MIN.)	MINIMUM PIPE THICKNESS (INCHES)	
6"	16"		
8"	18"	1/4	0.2500
10"	20"	5/16	0.3125
12" – 14"	24"	3/8	0.3750
16" – 18"	30"	7/16	0.4375
20"	36"	1/2	0.5000
24"	42"	1/2	0.5000
30"	48"	1/2	0.5000

The Architect/Engineer assumes responsibility for appropriate use of this standard.

ADOPTED 6/21/2006
CITY OF GEORGETOWN CONSTRUCTION STANDARDS AND DETAILS
INSTALLATION OF P.V.C. PIPE THROUGH CASING
W14 | NTS | 1/2003 | MRS | TRB

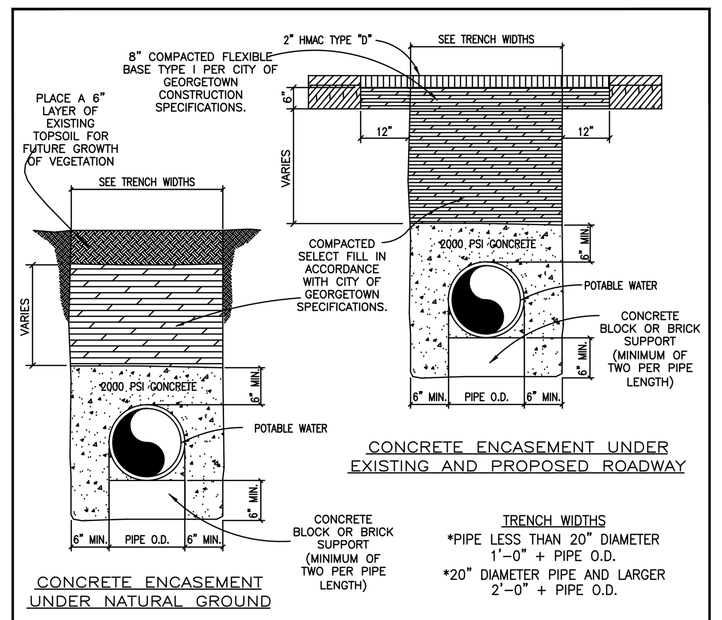

TRENCH WIDTHS
*PIPE LESS THAN 20" DIAMETER
1'-0" + PIPE O.D.
*20" DIAMETER PIPE AND LARGER
2'-0" + PIPE O.D.

NOTES:
1. ENCASEMENT TO BE CONSTRUCTED WHERE SEWER LINES PASS OVER OR UNDER A WATER MAIN WITH LESS THAN TWELVE INCHES (12") CLEAR DISTANCE.
2. AT CROSSINGS, ENCASEMENT SHALL EXTEND TEN FEET (10'-0") ON EITHER SIDE OF CROSSING.
3. BEGINNING AND ENDING OF ENCASEMENTS SHALL NOT BE MORE THAN SIX INCHES (6") FROM A PIPE JOINT.
4. WHERE WATER AND SEWER LINES PARALLEL WITH LESS THAN TEN FEET (10'-0") HORIZONTAL CLEAR DISTANCE, NO ENCASEMENT IS REQUIRED IF BOTH LINES ARE 150 PSI PRESSURE PIPE.
5. RAW WATER MAINS SHALL BE 150 PSI PRESSURE RATED WHEN PARALLELING POTABLE WATER MAINS WITH LESS THAN NINE FEET (9'-0") HORIZONTAL CLEARANCE.
6. WHERE MINIMUM COVER, THIRTY SIX INCHES (36") IS NOT AVAILABLE, ENCASEMENT WILL BE REQUIRED.
7. ALL CONCRETE ENCASEMENTS MUST BE FORMED AND INSPECTED BY THE CITY OF GEORGETOWN INSPECTOR PRIOR TO PLACING CONCRETE AND BACKFILLING.
8. CONTRACTOR OR ENGINEER MAY USE FLOWABLE BACKFILL AS AN ALTERNATE BACKFILL MATERIAL (SEE C9 FLOWABLE BACKFILL FOR THE SPECIFICATION).

The Architect/Engineer assumes responsibility for appropriate use of this standard.

ADOPTED 6/21/2006
CITY OF GEORGETOWN CONSTRUCTION STANDARDS AND DETAILS
CONCRETE ENCASEMENT DETAIL
W15 | NTS | 1/2003 | MRS | TRB

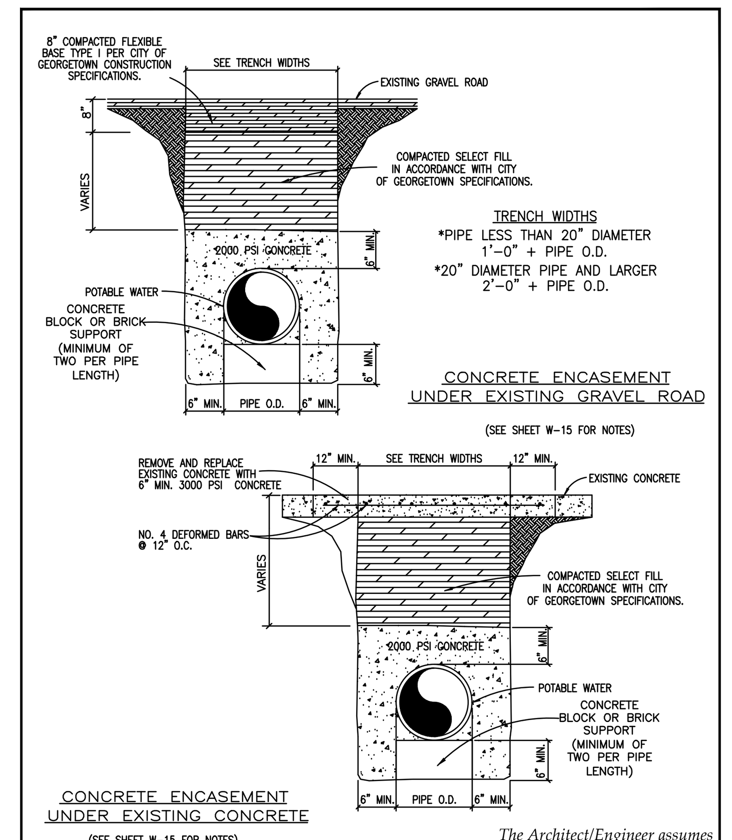

TRENCH WIDTHS
*PIPE LESS THAN 20" DIAMETER
1'-0" + PIPE O.D.
*20" DIAMETER PIPE AND LARGER
2'-0" + PIPE O.D.

The Architect/Engineer assumes responsibility for appropriate use of this standard.

ADOPTED 6/21/2006
CITY OF GEORGETOWN CONSTRUCTION STANDARDS AND DETAILS
CONCRETE ENCASEMENT DETAIL
W16 | NTS | 1/2003 | MRS | TRB

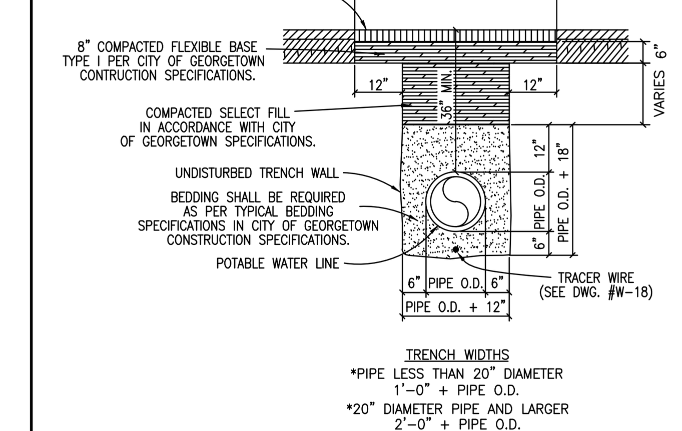

TRENCH WIDTHS
*PIPE LESS THAN 20" DIAMETER
1'-0" + PIPE O.D.
*20" DIAMETER PIPE AND LARGER
2'-0" + PIPE O.D.

NOTES:
1. REPLACED BASE MATERIAL OVER DITCH SHALL BE TWICE THE THICKNESS OF THE ORIGINAL BASE.
2. BASE MATERIAL SHALL BE IN LIFTS NOT TO EXCEED 6" AND EACH LIFT THOROUGHLY ROLLED OR TAMPED TO SPECIFIED MAXIMUM DENSITY.
3. ASPHALT CONCRETE PAVEMENT JOINTS SHALL BE MECHANICALLY SAWED.
4. SURFACE MATERIAL WILL BE CONSISTENT WITH THE EXISTING SURFACE.
5. DENSITY TESTS SHALL BE TAKEN IN ACCORDANCE WITH THE CITY OF GEORGETOWN CONSTRUCTION SPECIFICATIONS AND STANDARDS.
6. CONTRACTOR OR ENGINEER MAY USE FLOWABLE BACKFILL AS AN ALTERNATE BACKFILL MATERIAL (SEE C9 FLOWABLE BACKFILL FOR THE SPECIFICATION).

The Architect/Engineer assumes responsibility for appropriate use of this standard.

ADOPTED 6/21/2006
CITY OF GEORGETOWN CONSTRUCTION STANDARDS AND DETAILS
TRENCH AND EMBEDMENT AND PAVEMENT REPLACEMENT DETAIL UNDER EXISTING ROADWAY
W17 | NTS | 1/2003 | MRS | TRB

NO.	REVISION	BY	DATE

Know what's below. Call before you dig.

5508 HIGHWAY 290 WEST
SUITE 150
AUSTIN, TX 78735
512.872.6696
HRGREEN.COM

TBPE NO: 16384
TBPLS NO: 10194101

HRGreen®
DEVELOPMENT TX

STATE OF TEXAS
CHRISTINE N. CAMPBELL
142536
LICENSED PROFESSIONAL ENGINEER
07/03/2025

WATER DETAILS

PARKSIDE ON THE RIVER
SECTIONS 11, 12A & 15A
CONSTRUCTION PLANS
GEORGETOWN, WILLIAMSON, TEXAS

DESIGNED BY: CC
DRAWN BY: MM
CHECKED BY: SN
APPROVED BY:

SHEET 137 OF 141
2025-XX-CON

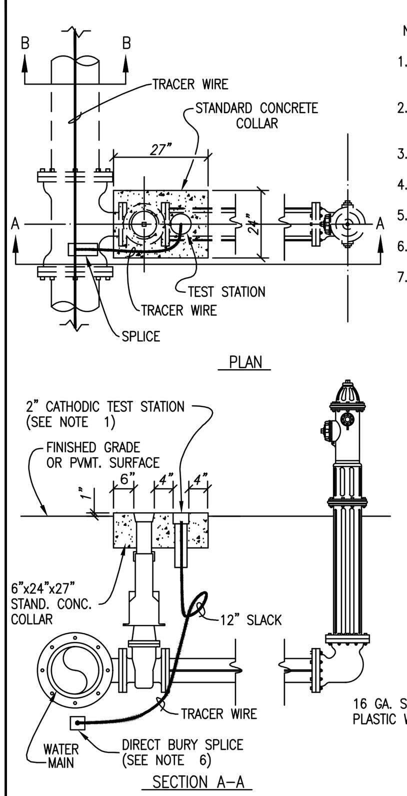

NOTES:

1. TEST STATION SHALL BE HANDLEY INDUSTRIES INC. – 2 INCH CATHODIC TEST STATIONS OR APPROVED EQUAL.
2. THE 15" ABS PLASTIC BOX SHALL BE A FLANGED TOP FOR INSTALLATION AT GROUND LEVEL.
3. ALL TERMINALS ARE TO BE MADE OF SOLID BRASS.
4. PLASTIC LIDS SHALL BE COLOR BLUE AND MARKED "WATER".
5. TEST TERMINALS ARE TO BE INCORPORATED WITH HANDLEY VALVE BOXES.
6. BURY SPLICE SHALL BE 3M DIRECT BURY SPLICE (DBR) OR APPROVED EQUAL.
7. TEST STATIONS SHALL BE INSTALLED AT EACH FIRE HYDRANT LOCATION.

The Architect/Engineer assumes responsibility for appropriate use of this standard.

REVISION NOTE: ADOPTED 6/21/2006 | DRAWING NAME: W18
CITY OF GEORGETOWN CONSTRUCTION STANDARDS AND DETAILS
TRACER WIRE INSTALLATION AND TEST STATION LOCATION
SCALE: NTS | DATE: 1/2003 | DRAWN BY: MRS | APPROVED BY: TRB

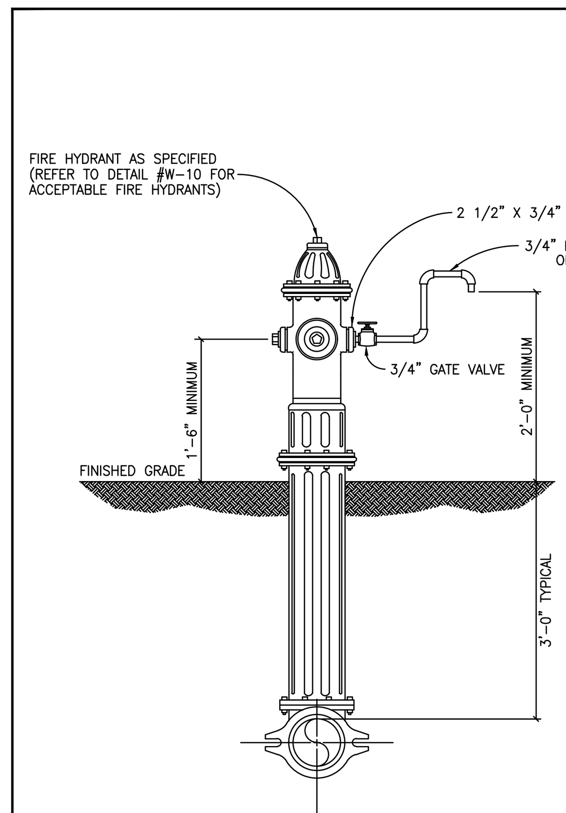

The Architect/Engineer assumes responsibility for appropriate use of this standard.

REVISION NOTE: ADOPTED 6/21/2006 | DRAWING NAME: W19
CITY OF GEORGETOWN CONSTRUCTION STANDARDS AND DETAILS
FIRE HYDRANT SAMPLING POINT
SCALE: NTS | DATE: 1/2003 | DRAWN BY: MRS | APPROVED BY: TRB

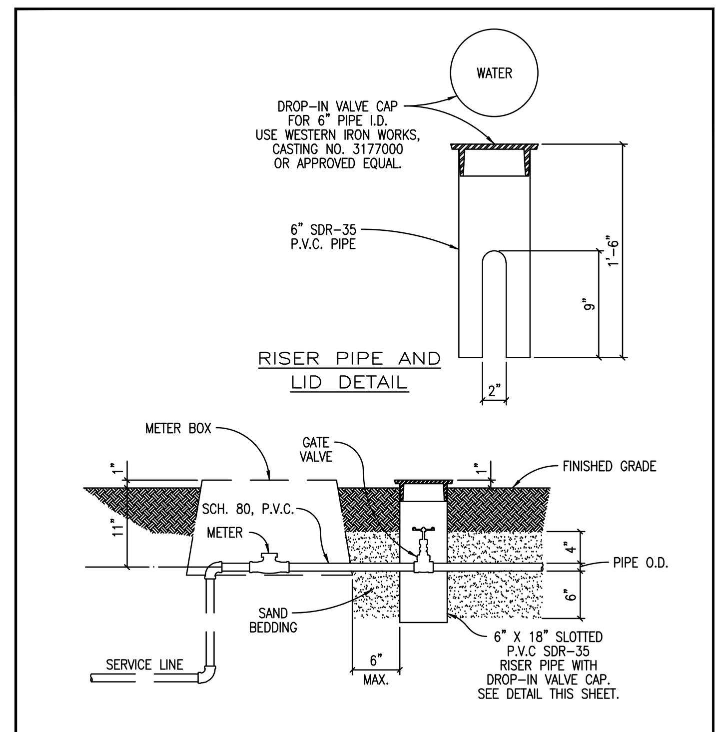

NOTES:
1. GATE VALVE SHALL BE A HAMMOND IB645, CLASS 125, BRONZE GATE, SCREWED BONNET, NON–RISING STEM, SOLID WEDGE DISC WITH THREADED ENDS OR APPROVED EQUAL.
2. DROP–IN VALVE CAP SHALL BE CAST WITH THE WORD "WATER" ON TOP.
3. USE SCHEDULE 80, M.I.P. ADAPTER AS REQUIRED.

The Architect/Engineer assumes responsibility for appropriate use of this standard.

REVISION NOTE: ADOPTED 6/21/2006 | DRAWING NAME: W20
CITY OF GEORGETOWN CONSTRUCTION STANDARDS AND DETAILS
CUSTOMER'S CUT–OFF
SCALE: NTS | DATE: 1/2003 | DRAWN BY: MRS | APPROVED BY: TRB

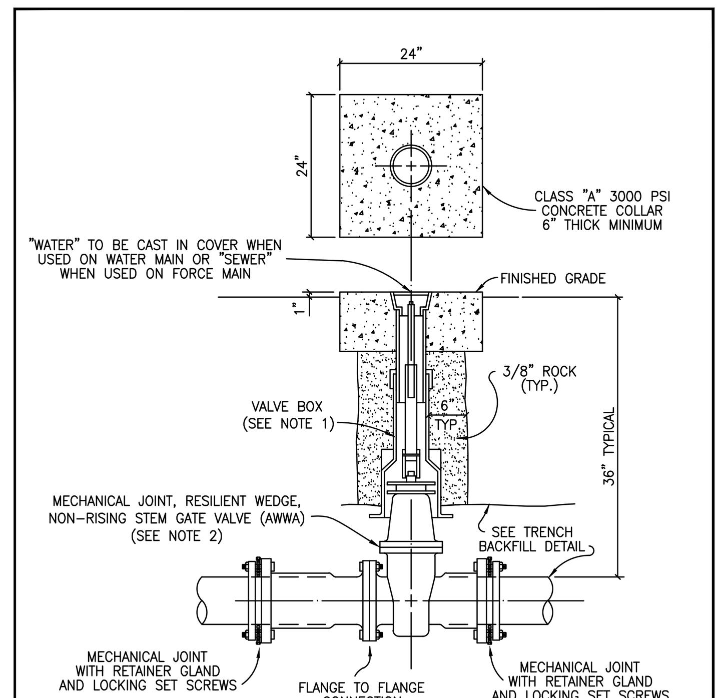

NOTES:

1. SEE VALVE SETTING DETAIL, DWG. #W–07.
2. ACCEPTABLE GATE VALVES ARE:
   A. MUELLER – 2360 SERIES
   B. CLOW

The Architect/Engineer assumes responsibility for appropriate use of this standard.

REVISION NOTE: ADOPTED 6/21/2006 | DRAWING NAME: W21
CITY OF GEORGETOWN CONSTRUCTION STANDARDS AND DETAILS
INLINE VALVE INSTALLATION
SCALE: NTS | DATE: 1/2003 | DRAWN BY: MRS | APPROVED BY: TRB

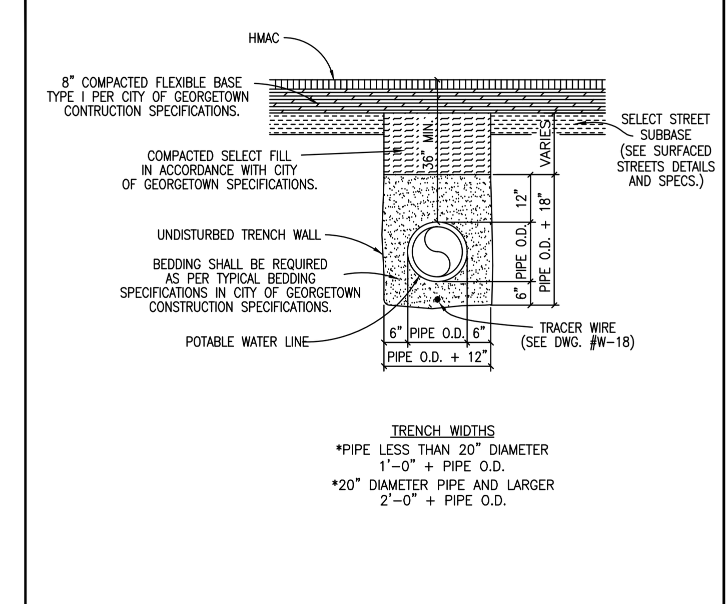

TRENCH WIDTHS
*PIPE LESS THAN 20" DIAMETER 1'–0" + PIPE O.D.
*20" DIAMETER PIPE AND LARGER 2'–0" + PIPE O.D.

NOTES:
1. DENSITY TESTS SHALL BE TAKEN IN ACCORDANCE WITH THE CITY OF GEORGETOWN CONSTRUCTION SPECIFICATIONS AND STANDARDS.
2. CONTRACTOR OR ENGINEER MAY USE FLOWABLE BACKFILL AS AN ALTERNATE BACKFILL MATERIAL (SEE C9 FLOWABLE BACKFILL FOR THE SPECIFICATION).

The Architect/Engineer assumes responsibility for appropriate use of this standard.

REVISION NOTE: ADOPTED 6/21/2006 | DRAWING NAME: W22
CITY OF GEORGETOWN CONSTRUCTION STANDARDS AND DETAILS
TRENCH AND EMBEDMENT DETAIL UNDER PROPOSED ROADWAY
SCALE: NTS | DATE: 1/2003 | DRAWN BY: MRS | APPROVED BY: TRB

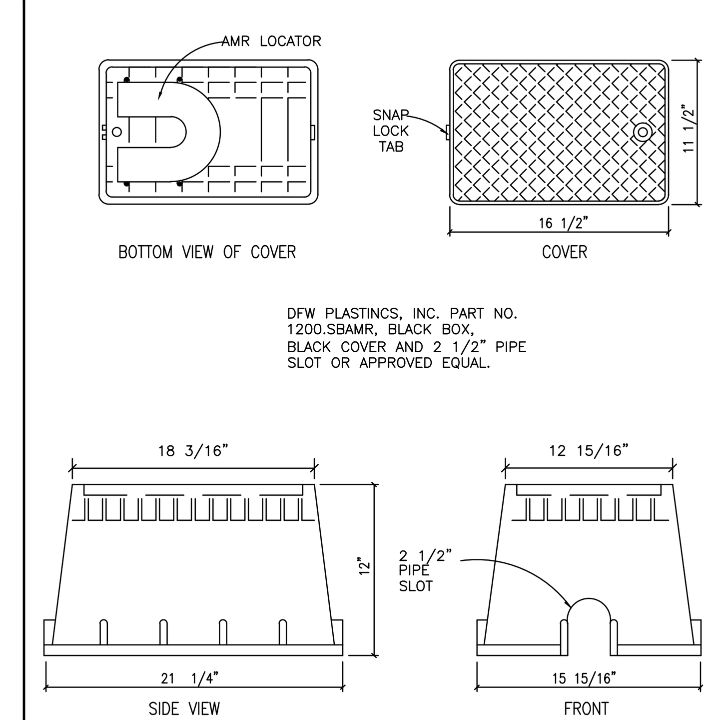

DFW PLASTINCS, INC. PART NO. 1200.SBAMR, BLACK BOX, BLACK COVER AND 2 1/2" PIPE SLOT OR APPROVED EQUAL.

The Architect/Engineer assumes responsibility for appropriate use of this standard.

REVISION NOTE: ADOPTED 6/21/2006 | DRAWING NAME: W23
CITY OF GEORGETOWN CONSTRUCTION STANDARDS AND DETAILS
METER BOX (NON–TRAFFIC AREAS)
SCALE: NTS | DATE: 1/2003 | DRAWN BY: MRS | APPROVED BY: TRB

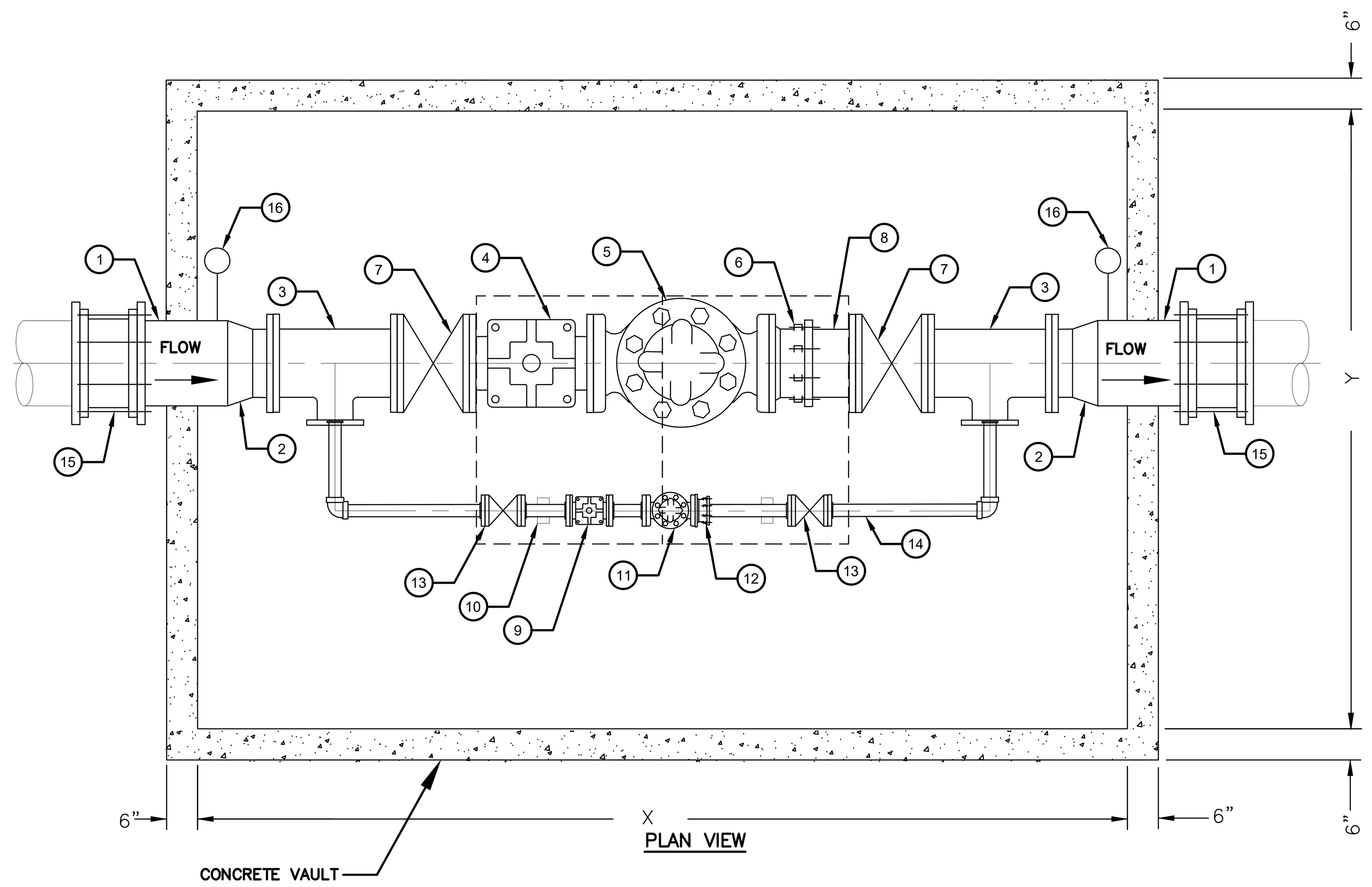

8" PRESSURE REDUCER VALVE ASSEMBLY – MATERIAL LIST VAULT SIZE: 15 FT X 8 FT	
1	12" D.I.
2	12"X8" REDUCER
3	8"X4" FLG TEE
4	8" STRAINER (CLA–VAL MODEL X–43H OR APPROVED EQUAL)
5	8" PRV (CLA–VAL MODEL 90–01 OR APPROVED EQUAL)
6	8" DRESSER DISMANTLING JOINT
7	8" D.I. FLANGED GATE VALVE
8	8" D.I.
9	4" STRAINER (CLA–VAL MODEL X–43H OR APPROVED EQUAL)
10	PIPE SUPPORT
11	4" PRV (CLA–VAL MODEL 90–48 OR APPROVED EQUAL)
12	4" DRESSER DISMANTLING JOINT
13	4" D.I. FLANGED GATE VALVE
14	4" SCH. 40 304 D.I. FLANGED
15	12" RESTRAINED TRANSITION COUPLING
16	PRESSURE GAUGE

6" PRESSURE REDUCER VALVE ASSEMBLY – MATERIAL LIST VAULT SIZE: 14 FT X 7 FT	
1	8" D.I.
2	8"X6" REDUCER
3	6"X2" FLG TEE
4	6" STRAINER (CLA–VAL MODEL X–43H OR APPROVED EQUAL)
5	6" PRV (CLA–VAL MODEL 90–01 OR APPROVED EQUAL)
6	6" DRESSER DISMANTLING JOINT
7	6" D.I. FLANGED GATE VALVE
8	6" D.I.
9	2" STRAINER (CLA–VAL MODEL X–43H OR APPROVED EQUAL)
10	PIPE SUPPORT
11	2" PRV (CLA–VAL MODEL 90–48 OR APPROVED EQUAL)
12	2" DRESSER DISMANTLING JOINT
13	2" D.I. FLANGED GATE VALVE
14	2" SCH. 40 304 D.I. FLANGED
15	8" RESTRAINED TRANSITION COUPLING
16	PRESSURE GAUGE

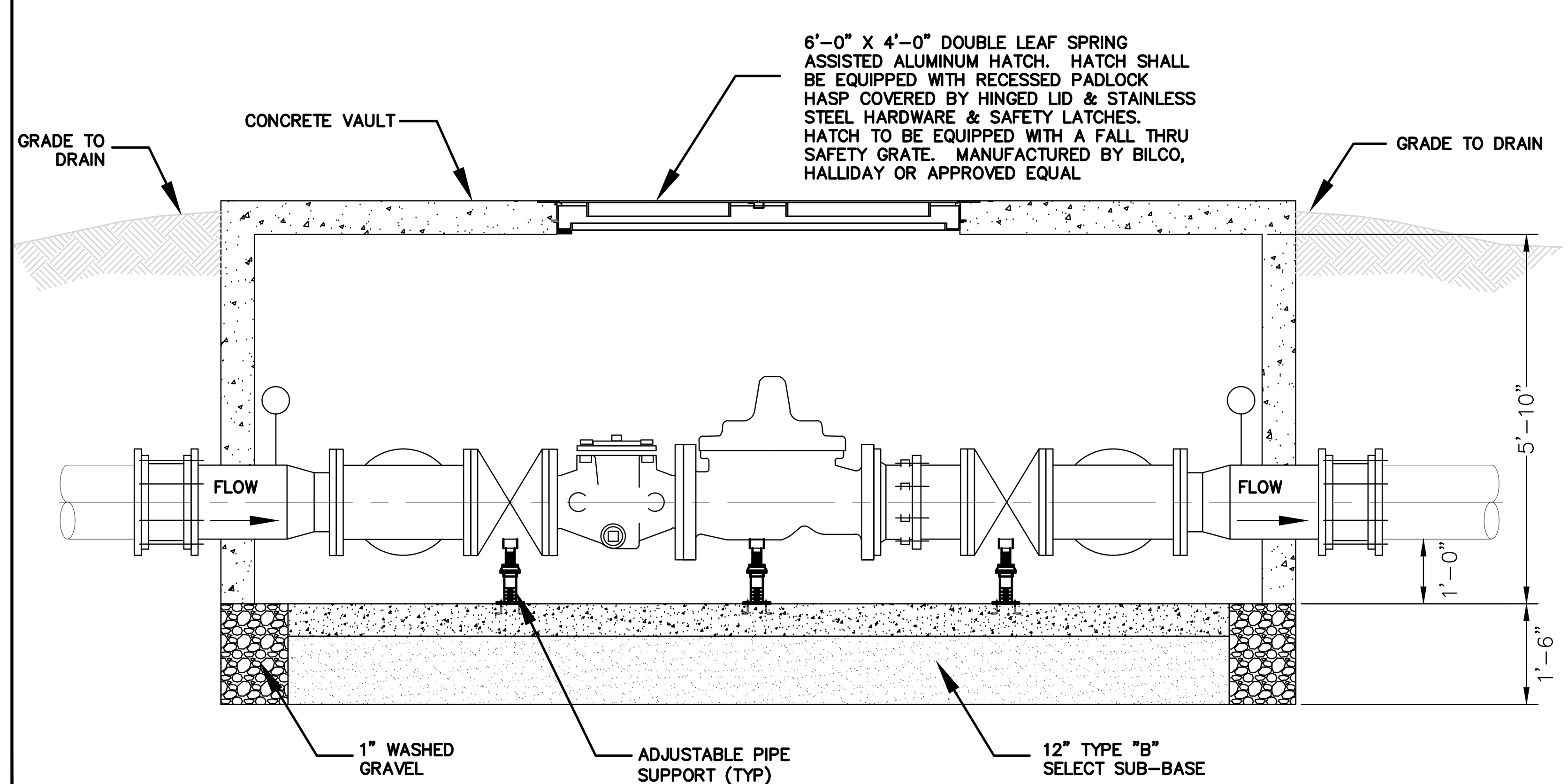

PRESSURE REDUCING VALVE DETAIL
N.T.S.

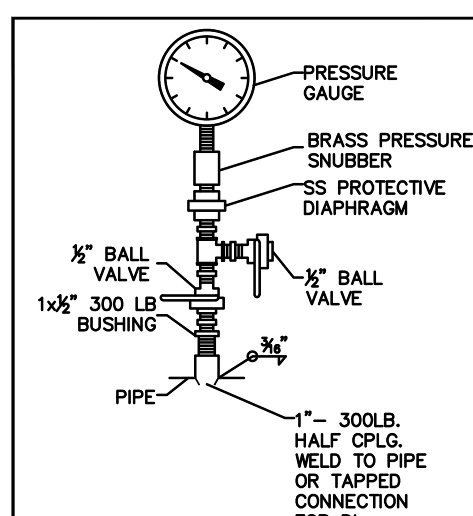

NOTES:
1. USE DIAPHRAGM SEALS AND VALVES FOR ALL CHEMICALS, SEWAGE, SLUDGE AND OTHER LIQUIDS CONTAINING SOLIDS.

PRESSURE GAUGE DETAIL

	WGT APPROX. LBS EACH					D	
PIPE SIZE	COMPLETE	SADDLE ONLY	A	B	C	MINIMUM	MAXIMUM
2 1/2	9.0	4.8	2 1/2	3 1/2	1 1/2	8	13
3	9.2	5.0	2 /12	3 3/4	1 1/2	8 1/4	13 1/4
3 1/2	9.4	5.2	2 1/2	4	1 1/2	8 1/2	13 1/2
4	15.0	7.6	3	4 1/4	2 1/2	9 1/4	14
5	16.7	8.3	3	4 7/8	2 1/2	10	14 3/4
6	17.7	10.3	3	5 1/2	2 1/2	10 1/2	15 1/4
8	20.2	12.8	3	6 7/8	2 1/2	11 3/4	16 1/2
10	25.2	17.8	3	8 1/2	2 1/2	13 1/2	18 1/4
12	29.0	21.6	3	9 15/16	2 1/2	15	19 3/4
14	40.2	38.0	4	10 15/16	3	16 1/4	20 3/4
16	53.2	42.0	4	12 3/8	3	17 3/4	22 1/4
18	70.8	51.0	6	13 7/8	3 1/2	19 1/2	24
20	104.8	85.0	6	15 3/8	3 1/2	21	25 1/2
24	137.0	110.0	6	17 15/16	4	23 3/4	28 1/2
30	170.0	150.0	6	21 5/16	4	27	31 1/2
32	181.0	161.1	6	22 1/2	4	28 1/8	32 3/4
36	249.0	229.0	6	24 1/4	4	30 1/4	34 3/4

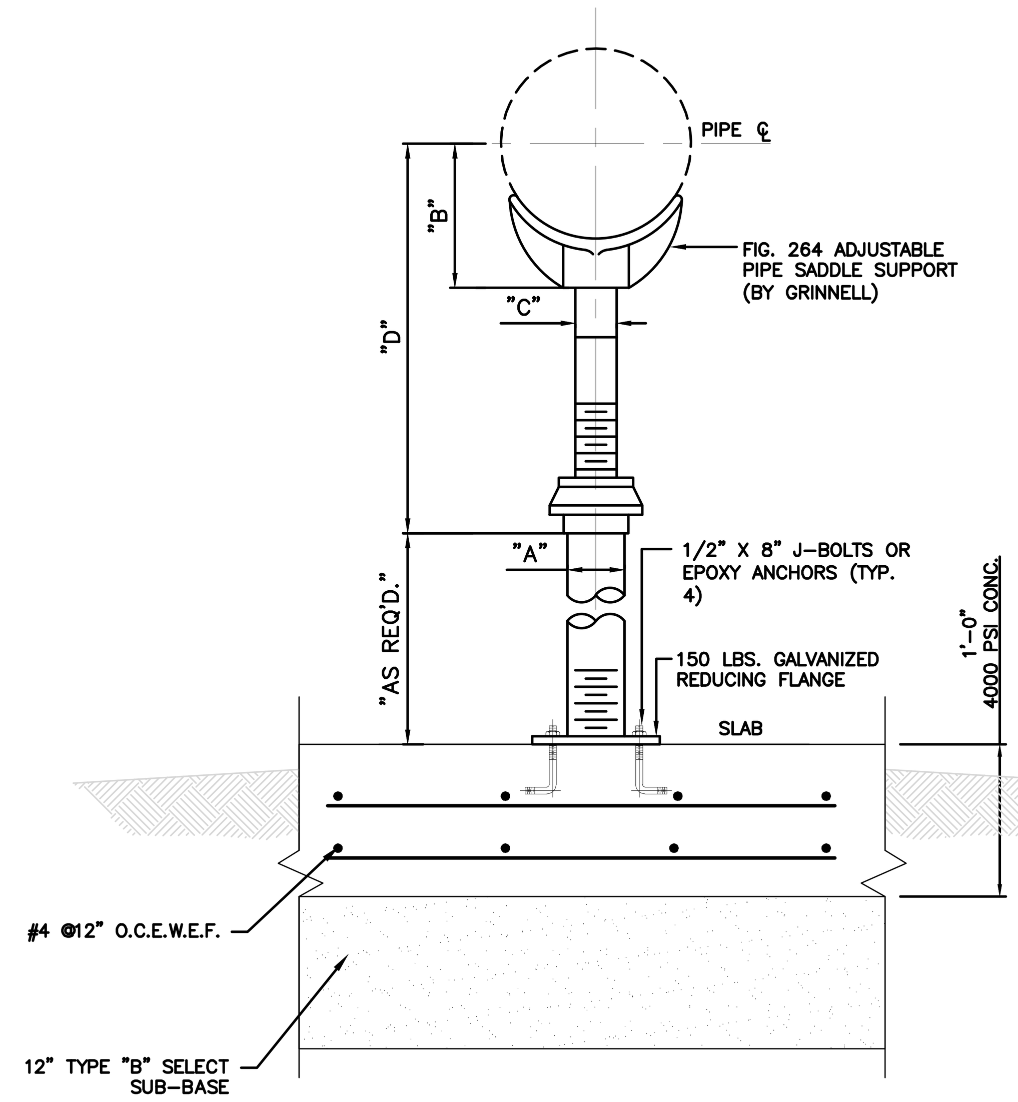

ADJUSTABLE PIPE SUPPORT DETAIL
N.T.S.

HATCH TO INCLUDE:

- AUTO–LOCK T–316 STAINLESS STEEL HOLD OPEN ARM WITH RELEASE HANDLE
- T–316 STAINLESS STEEL HINGES AND ATTACHING HARDWARE
- T–316 STAINLESS STEEL SLAM LOCK WITH REMOVABLE KEY
- STAINLESS STEEL COMPRESSION SPRING ASSIST
- BUILT–IN NEOPRENE CUSHION/GASKET
- NON–OZONE DEPLETING BITUMINOUS COATING
- DOUBLE LEAF CONSTRUCTION
- 300 LBS. PER SQ. FT. LOAD RATING (1464 KG. PER SQ. METER LOAD RATING)
- EXTRUDED ALUMINUM CHANNEL FRAME
- RECESSED LIFTING HANDLE
- LIFETIME GUARANTEE
- RETRO GATE FALL PROTECTION

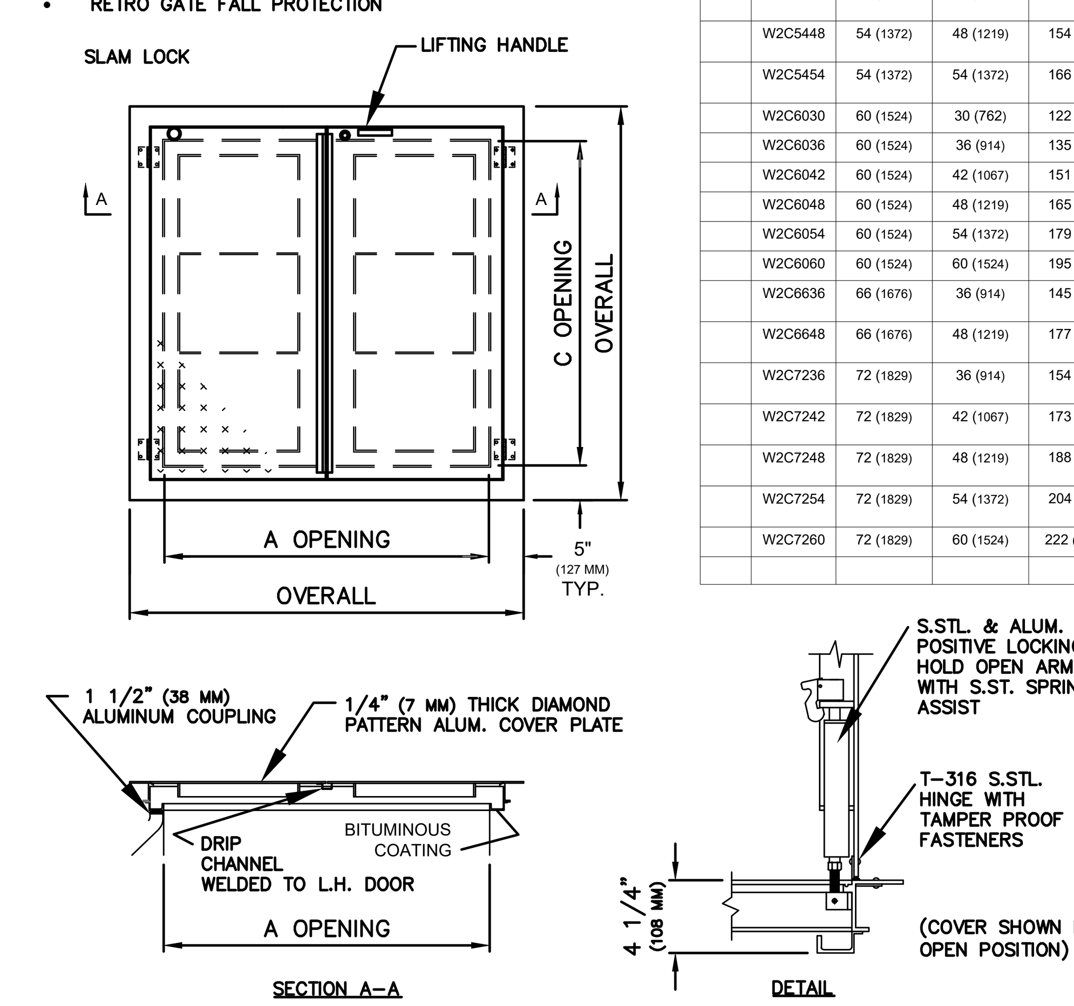

STANDARD SIZES				
QTY.	MODEL NO.	A DIM. INCHES (MM)	C DIM. INCHES (MM)	UNIT WT. LBS. (KG.)
	W2C4242	42 (1067)	42 (1067)	119 (54)
	W2C4842	48 (1219)	42 (1067)	130 (59)
	W2C4848	48 (1219)	48 (1219)	142 (64)
	W2C5442	54 (1372)	42 (1067)	141 (64)
	W2C5448	54 (1372)	48 (1219)	154 (70)
	W2C5454	54 (1372)	54 (1372)	166 (75)
	W2C6030	60 (1524)	30 (762)	122 (55)
	W2C6036	60 (1524)	36 (914)	135 (61)
	W2C6042	60 (1524)	42 (1067)	151 (68)
	W2C6048	60 (1524)	48 (1219)	165 (75)
	W2C6054	60 (1524)	54 (1372)	179 (81)
	W2C6060	60 (1524)	60 (1524)	195 (88)
	W2C6636	66 (1676)	36 (914)	145 (66)
	W2C6648	66 (1676)	48 (1219)	177 (80)
	W2C7236	72 (1829)	36 (914)	154 (70)
	W2C7242	72 (1829)	42 (1067)	173 (78)
	W2C7248	72 (1829)	48 (1219)	188 (85)
	W2C7254	72 (1829)	54 (1372)	204 (92)
	W2C7260	72 (1829)	60 (1524)	222 (101)

ALUMINUM HATCH DETAIL
N.T.S.

PVC C900 Joint Restraints			
Pipe Size	Fitting	Bend Angle	Restraint Length
8"	Horizontal Bend	11.25	4'
8"	Horizontal Bend	22.5	8'
8"	Horizontal Bend	45	16'
8"	Horizontal Bend	90	38'
8"	Vertical Bend	11.25	11'
8"	Vertical Bend	22.5	21'
8"	Vertical Bend	45	43'
8"	Gate Valve	-	103'
12"	Horizontal Bend	11.25	6'
12"	Horizontal Bend	22.5	11'
12"	Horizontal Bend	45	22'
12"	Horizontal Bend	90	53'
12"	Vertical Bend	11.25	15'
12"	Vertical Bend	22.5	30'
12"	Vertical Bend	45	61'
12"	Reducer (12" to 8")	-	78'
12"	Gate Valve	-	146'

* Assumes 4' bury depth, 200 psi test pressure, trench type of 5, safety factor of 2.0, and CH granular soil

NO.	REVISION	BY	DATE

811 Know what's below. Call before you dig.

5508 HIGHWAY 290 WEST
SUITE 150
AUSTIN, TX 78735
512.872.6696
HRGREEN.COM

TBPE NO: 16384
TBPLS NO: 10194101

HRGreen DEVELOPMENT TX

STATE OF TEXAS
CHRISTINE N. CAMPBELL
142536
LICENSED PROFESSIONAL ENGINEER
07/03/2025

WATER DETAILS

PARKSIDE ON THE RIVER SECTIONS 11, 12A & 15A CONSTRUCTION PLANS GEORGETOWN, WILLIAMSON, TEXAS

DESIGNED BY: CC
DRAWN BY: MM
CHECKED BY: SN
APPROVED BY:

SHEET 138 OF 141

2025-XX-CON

Plot Style: LandDev Global.ctb
Template: LDC_C3D2022.DWT
P:\Blake Magee\Parkside Sections 11-15 & WON 5\Section 11, 12A & 15A\03_ACAD\Plans\sh2403522 DTLS.dwg, WATER DETAILS 2, July 18, 2025, 12:41 PM, makai.muhammad

Sewage Collection System (SCS)

Parkside on the River
Sections 11, 12A & 15A

CITY OF GEORGETOWN
WILLIAMSON COUNTY, TEXAS

July 18, 2025

HR Green Project No: 2403522

Prepared For:
HM Parkside Development, Inc.
P.O. Box 5397
Austin, Texas 78763

Prepared By:
HR Green Development TX, LLC
5508 Highway 290 West, Suite 150
Austin, Texas 78735
TBPE Firm No. F-16384

07/18/2025

TABLE OF CONTENTS

Edwards Aquifer Application Cover Page (TCEQ-20705)……1

General Information Form (TCEQ-0587)……..……...2

Attachment A - Road Map
Attachment B - USGS Quadrangle Map
Attachment C - Project Narrative

Geologic Assessment Form (TCEQ-0585)…… ……3

Attachment A – Project Figures: Stratigraphic Column (Figure 5)
Attachment B – Site Geologic Map
Attachment C – Geologic Assessment Table (TCEQ-0585-Table)
Attachment D – Site Photographs

Organized Sewage Collection System Plan (TCEQ-0582)……...……4

Attachment A – Engineering Design Report

Temporary Stormwater Section (TCEQ-0602)……5

Attachment A – Spill Response Actions
Attachment B – Potential Sources of Contamination
Attachment C – Sequence of Major Activities
Attachment D – Temporary Best Management Practices and Measures
Attachment F – Structural Practices
Attachment G – Drainage Area Map
Attachment H – Temporary Sediment Pond(s) Plans and Calculations
Attachment I – Inspection and Maintenance for BMPs
Attachment J – Schedule of Interim and Permanent Soil Stabilization Practices

Agent Authorization Form (TCEQ-0599) – Authorizing HR Green Development TX, LLC……..6

Owner Authorization Form (TCEQ-21019)……..7

Application Fee Form (TCEQ-0574)……8

Core Data Form (TCEQ-10400)…… 9

Texas Commission on Environmental Quality

Edwards Aquifer Application Cover Page

Our Review of Your Application

The Edwards Aquifer Program staff conducts an administrative and technical review of all applications. The turnaround time for administrative review can be up to 30 days as outlined in 30 TAC 213.4(e). Generally administrative completeness is determined during the intake meeting or within a few days of receipt. The turnaround time for technical review of an administratively complete Edwards Aquifer application is 90 days as outlined in 30 TAC 213.4(e). Please know that the review and approval time is directly impacted by the quality and completeness of the initial application that is received. In order to conduct a timely review, it is imperative that the information provided in an Edwards Aquifer application include final plans, be accurate, complete, and in compliance with 30 TAC 213.

Administrative Review

1. Edwards Aquifer applications must be deemed administratively complete before a technical review can begin. To be considered administratively complete, the application must contain completed forms and attachments, provide the requested information, and meet all the site plan requirements. The submitted application and plan sheets should be final plans. Please submit one full-size set of plan sheets with the original application, and half-size sets with the additional copies.

   To ensure that all applicable documents are included in the application, the program has developed tools to guide you and web pages to provide all forms, checklists, and guidance. Please visit the below website for assistance: http://www.tceq.texas.gov/field/eapp.

2. This Edwards Aquifer Application Cover Page form (certified by the applicant or agent) must be included in the application and brought to the administrative review meeting.

3. Administrative reviews are scheduled with program staff who will conduct the review. Applicants or their authorized agent should call the appropriate regional office, according to the county in which the project is located, to schedule a review. The average meeting time is one hour.

4. In the meeting, the application is examined for administrative completeness. Deficiencies will be noted by staff and emailed or faxed to the applicant and authorized agent at the end of the meeting, or shortly after. Administrative deficiencies will cause the application to be deemed incomplete and returned.

   An appointment should be made to resubmit the application. The application is re-examined to ensure all deficiencies are resolved. The application will only be deemed administratively complete when all administrative deficiencies are addressed.

5. If an application is received by mail, courier service, or otherwise submitted without a review meeting, the administrative review will be conducted within 30 days. The applicant and agent will be contacted with the results of the administrative review. If the application is found to be administratively incomplete, it can be retrieved from the regional office or returned by regular mail. If returned by mail, the regional office may require arrangements for return shipping.

6. If the geologic assessment was completed before October 1, 2004 and the site contains "possibly sensitive" features, the assessment must be updated in accordance with the *Instructions to Geologists* (TCEQ-0585 Instructions).

Technical Review

1. When an application is deemed administratively complete, the technical review period begins. The regional office will distribute copies of the application to the identified affected city, county, and groundwater conservation district whose jurisdiction includes the subject site. These entities and the public have 30 days to provide comments on the application to the regional office. All comments received are reviewed by TCEQ.

2. A site assessment is usually conducted as part of the technical review, to evaluate the geologic assessment and observe existing site conditions. The site must be accessible to our staff. The site boundaries should be

clearly marked, features identified in the geologic assessment should be flagged, roadways marked and the alignment of the Sewage Collection System and manholes should be staked at the time the application is submitted. If the site is not marked the application may be returned.

3. We evaluate the application for technical completeness and contact the applicant and agent via Notice of Deficiency (NOD) to request additional information and identify technical deficiencies. There are two deficiency response periods available to the applicant. There are 14 days to resolve deficiencies noted in the first NOD. If a second NOD is issued, there is an additional 14 days to resolve deficiencies. If the response to the second notice is not received, is incomplete or inadequate, or provides new information that is incomplete or inadequate, the application must be withdrawn or will be denied. Please note that because the technical review is underway, whether the application is withdrawn or denied **the application fee will be forfeited**.
4. The program has 90 calendar days to complete the technical review of the application. If the application is technically adequate, such that it complies with the Edwards Aquifer rules, and is protective of the Edwards Aquifer during and after construction, an approval letter will be issued. Construction or other regulated activity may not begin until an approval is issued.

Mid-Review Modifications

It is important to have final site plans prior to beginning the permitting process with TCEQ to avoid delays.

Occasionally, circumstances arise where you may have significant design and/or site plan changes after your Edwards Aquifer application has been deemed administratively complete by TCEQ. This is considered a "Mid-Review Modification". Mid-Review Modifications may require redistribution of an application that includes the proposed modifications for public comment.

If you are proposing a Mid-Review Modification, two options are available:

- If the technical review has begun your application can be denied/withdrawn, your fees will be forfeited, and the plan will have to be resubmitted.
- TCEQ can continue the technical review of the application as it was submitted, and a modification application can be submitted at a later time.

If the application is denied/withdrawn, the resubmitted application will be subject to the administrative and technical review processes and will be treated as a new application. The application will be redistributed to the affected jurisdictions.

Please contact the regional office if you have questions. If your project is located in Williamson, Travis, or Hays County, contact TCEQ's Austin Regional Office at 512-339-2929. If your project is in Comal, Bexar, Medina, Uvalde, or Kinney County, contact TCEQ's San Antonio Regional Office at 210-490-3096

Please fill out all required fields below and submit with your application.

1. Regulated Entity Name: Parkside on the River Sections 11, 12A & 15A						**2. Regulated Entity No.:**			
3. Customer Name: HM Parkside Development, Inc.						**4. Customer No.: CN605674258**			
5. Project Type: (Please circle/check one)	New **X**		Modification			Extension		Exception	
6. Plan Type: (Please circle/check one)	WPAP	CZP	SCS **X**	UST	AST	EXP	EXT	Technical Clarification	Optional Enhanced Measures
7. Land Use: (Please circle/check one)	Residential **X**		Non-residential			**8. Site (acres):**		55.16	
9. Application Fee:	$3,381.50		**10. Permanent BMP(s):**			Batch Detention Ponds, Jellyfish, Vegetative Filter Strips			
11. SCS (Linear Ft.):	6,763		**12. AST/UST (No. Tanks):**			N/A			
13. County:	Williamson County		**14. Watershed:**			South Fork San Gabriel River			

Application Distribution

Instructions: Use the table below to determine the number of applications required. One original and one copy of the application, plus additional copies (as needed) for each affected incorporated city, county, and groundwater conservation district are required. Linear projects or large projects, which cross into multiple jurisdictions, can require additional copies. Refer to the "Texas Groundwater Conservation Districts within the EAPP Boundaries" map found at:

http://www.tceq.texas.gov/assets/public/compliance/field_ops/eapp/EAPP%20GWCD%20map.pdf

For more detailed boundaries, please contact the conservation district directly.

Austin Region			
County:	**Hays**	**Travis**	**Williamson**
Original (1 req.)	___	___	_X
Region (1 req.)	___	___	_X
County(ies)	___	___	_X
Groundwater Conservation District(s)	___Edwards Aquifer Authority ___Barton Springs/ Edwards Aquifer ___Hays Trinity ___Plum Creek	___Barton Springs/ Edwards Aquifer	NA
City(ies) Jurisdiction	___Austin ___Buda ___Dripping Springs ___Kyle ___Mountain City ___San Marcos ___Wimberley ___Woodcreek	___Austin ___Bee Cave ___Pflugerville ___Rollingwood ___Round Rock ___Sunset Valley ___West Lake Hills	___Austin ___Cedar Park ___Florence X_Georgetown ___Jerrell ___Leander ___Liberty Hill ___Pflugerville ___Round Rock

San Antonio Region					
County:	**Bexar**	**Comal**	**Kinney**	**Medina**	**Uvalde**
Original (1 req.)	___	___	___	___	___
Region (1 req.)	___	___	___	___	___
County(ies)	___	___	___	___	___
Groundwater Conservation District(s)	___ Edwards Aquifer Authority ___Trinity-Glen Rose	___Edwards Aquifer Authority	___Kinney	___EAA ___Medina	___EAA ___Uvalde
City(ies) Jurisdiction	___Castle Hills ___Fair Oaks Ranch ___Helotes ___Hill Country Village ___Hollywood Park ___San Antonio (SAWS) ___Shavano Park	___Bulverde ___Fair Oaks Ranch ___Garden Ridge ___New Braunfels ___Schertz	NA	___San Antonio ETJ (SAWS)	NA

I certify that to the best of my knowledge, that the application is complete and accurate. This application is hereby submitted to TCEQ for administrative review and technical review.	
Christine Campbell	
Print Name of Customer/Authorized Agent	
Christine Campbell	07/18/2025
Signature of Customer/Authorized Agent	Date

FOR TCEQ INTERNAL USE ONLY				
Date(s)Reviewed:		Date Administratively Complete:		
Received From:		Correct Number of Copies:		
Received By:		Distribution Date:		
EAPP File Number:		Complex:		
Admin. Review(s) (No.):		No. AR Rounds:		
Delinquent Fees (Y/N):		Review Time Spent:		
Lat./Long. Verified:		SOS Customer Verification:		
Agent Authorization Complete/Notarized (Y/N):		Fee Check:	Payable to TCEQ (Y/N):	
Core Data Form Complete (Y/N):			Signed (Y/N):	
Core Data Form Incomplete Nos.:			Less than 90 days old (Y/N):	

General Information Form

Texas Commission on Environmental Quality

For Regulated Activities on the Edwards Aquifer Recharge and Transition Zones and Relating to 30 TAC §213.4(b) & §213.5(b)(2)(A), (B) Effective June 1, 1999

To ensure that the application is administratively complete, confirm that all fields in the form are complete, verify that all requested information is provided, consistently reference the same site and contact person in all forms in the application, and ensure forms are signed by the appropriate party.

Note: Including all the information requested in the form and attachments contributes to more streamlined technical reviews.

Signature

To the best of my knowledge, the responses to this form accurately reflect all information requested concerning the proposed regulated activities and methods to protect the Edwards Aquifer. This **General Information Form** is hereby submitted for TCEQ review. The application was prepared by:

Print Name of Customer/Agent: Christine Campbell, P.E.

Date: 07/18/2025

Signature of Customer/Agent:

Project Information

1. Regulated Entity Name: Parkside on the River Sections 11, 12A & 15A
2. County: Williamson
3. Stream Basin: Brazos River Basin
4. Groundwater Conservation District (If applicable): N/A
5. Edwards Aquifer Zone:

   ☒ Recharge Zone
   ☐ Transition Zone

6. Plan Type:

   ☐ WPAP
   ☒ SCS
   ☐ Modification
   ☐ AST
   ☐ UST
   ☐ Exception Request

7. Customer (Applicant):

   Contact Person: Blake Magee
   Entity: HM Parkside Development, Inc.
   Mailing Address: P.O. Box 5397
   City, State: Austin, TX Zip: 78763
   Telephone: 512-481-0303 FAX: _____
   Email Address: Blake@blakemageeco.com

8. Agent/Representative (If any):

   Contact Person: Christine Campbell
   Entity: HR Green Development TX, LLC
   Mailing Address: 5508 US Highway 290 West, Suite #150
   City, State: Austin, TX Zip: 78735
   Telephone: 512-872-6696 FAX: _____
   Email Address: christine.campbell@hrgreen.com

9. Project Location:

   ☐ The project site is located inside the city limits of _____.
   ☒ The project site is located outside the city limits but inside the ETJ (extra-territorial jurisdiction) of Georgetown.
   ☐ The project site is not located within any city's limits or ETJ.

10. ☒ The location of the project site is described below. The description provides sufficient detail and clarity so that the TCEQ's Regional staff can easily locate the project and site boundaries for a field investigation.

    Located west of Parkside Parkway, northeast of Parkside on the River GTII - Phase 1, and north of Parkside on the River Sections 9B & 10B.

11. ☒ **Attachment A – Road Map**. A road map showing directions to and the location of the project site is attached. The project location and site boundaries are clearly shown on the map.

12. ☒ **Attachment B - USGS / Edwards Recharge Zone Map**. A copy of the official 7 ½ minute USGS Quadrangle Map (Scale: 1" = 2000') of the Edwards Recharge Zone is attached. The map(s) clearly show:

    ☒ Project site boundaries.
    ☒ USGS Quadrangle Name(s).
    ☒ Boundaries of the Recharge Zone (and Transition Zone, if applicable).
    ☒ Drainage path from the project site to the boundary of the Recharge Zone.

13. ☒ **The TCEQ must be able to inspect the project site or the application will be returned**. Sufficient survey staking is provided on the project to allow TCEQ regional staff to locate the boundaries and alignment of the regulated activities and the geologic or manmade features noted in the Geologic Assessment.

☒ Survey staking will be completed by this date: July 16, 2025

14. ☒ **Attachment C – Project Description**. Attached at the end of this form is a detailed narrative description of the proposed project. The project description is consistent throughout the application and contains, at a minimum, the following details:

☒ Area of the site
☒ Offsite areas
☒ Impervious cover
☒ Permanent BMP(s)
☒ Proposed site use
☒ Site history
☒ Previous development
☒ Area(s) to be demolished

15. Existing project site conditions are noted below:

☐ Existing commercial site
☐ Existing industrial site
☐ Existing residential site
☐ Existing paved and/or unpaved roads
☒ Undeveloped (Cleared)
☒ Undeveloped (Undisturbed/Uncleared)
☐ Other: _____

Prohibited Activities

16. ☒ I am aware that the following activities are prohibited on the Recharge Zone and are not proposed for this project:

(1) Waste disposal wells regulated under 30 TAC Chapter 331 of this title (relating to Underground Injection Control);

(2) New feedlot/concentrated animal feeding operations, as defined in 30 TAC §213.3;

(3) Land disposal of Class I wastes, as defined in 30 TAC §335.1;

(4) The use of sewage holding tanks as parts of organized collection systems; and

(5) New municipal solid waste landfill facilities required to meet and comply with Type I standards which are defined in §330.41(b), (c), and (d) of this title (relating to Types of Municipal Solid Waste Facilities).

(6) New municipal and industrial wastewater discharges into or adjacent to water in the state that would create additional pollutant loading.

17. ☒ I am aware that the following activities are prohibited on the Transition Zone and are not proposed for this project:

(1) Waste disposal wells regulated under 30 TAC Chapter 331 (relating to Underground Injection Control);

(2) Land disposal of Class I wastes, as defined in 30 TAC §335.1; and

(3) New municipal solid waste landfill facilities required to meet and comply with Type I standards which are defined in §330.41 (b), (c), and (d) of this title.

Administrative Information

18. The fee for the plan(s) is based on:

- ☐ For a Water Pollution Abatement Plan or Modification, the total acreage of the site where regulated activities will occur.
- ☒ For an Organized Sewage Collection System Plan or Modification, the total linear footage of all collection system lines.
- ☐ For a UST Facility Plan or Modification or an AST Facility Plan or Modification, the total number of tanks or piping systems.
- ☐ A request for an exception to any substantive portion of the regulations related to the protection of water quality.
- ☐ A request for an extension to a previously approved plan.

19. ☒ Application fees are due and payable at the time the application is filed. If the correct fee is not submitted, the TCEQ is not required to consider the application until the correct fee is submitted. Both the fee and the Edwards Aquifer Fee Form have been sent to the Commission's:

- ☒ TCEQ cashier
- ☐ Austin Regional Office (for projects in Hays, Travis, and Williamson Counties)
- ☐ San Antonio Regional Office (for projects in Bexar, Comal, Kinney, Medina, and Uvalde Counties)

20. ☒ Submit one (1) original and one (1) copy of the application, plus additional copies as needed for each affected incorporated city, groundwater conservation district, and county in which the project will be located. The TCEQ will distribute the additional copies to these jurisdictions. The copies must be submitted to the appropriate regional office.

21. ☒ No person shall commence any regulated activity until the Edwards Aquifer Protection Plan(s) for the activity has been filed with and approved by the Executive Director.

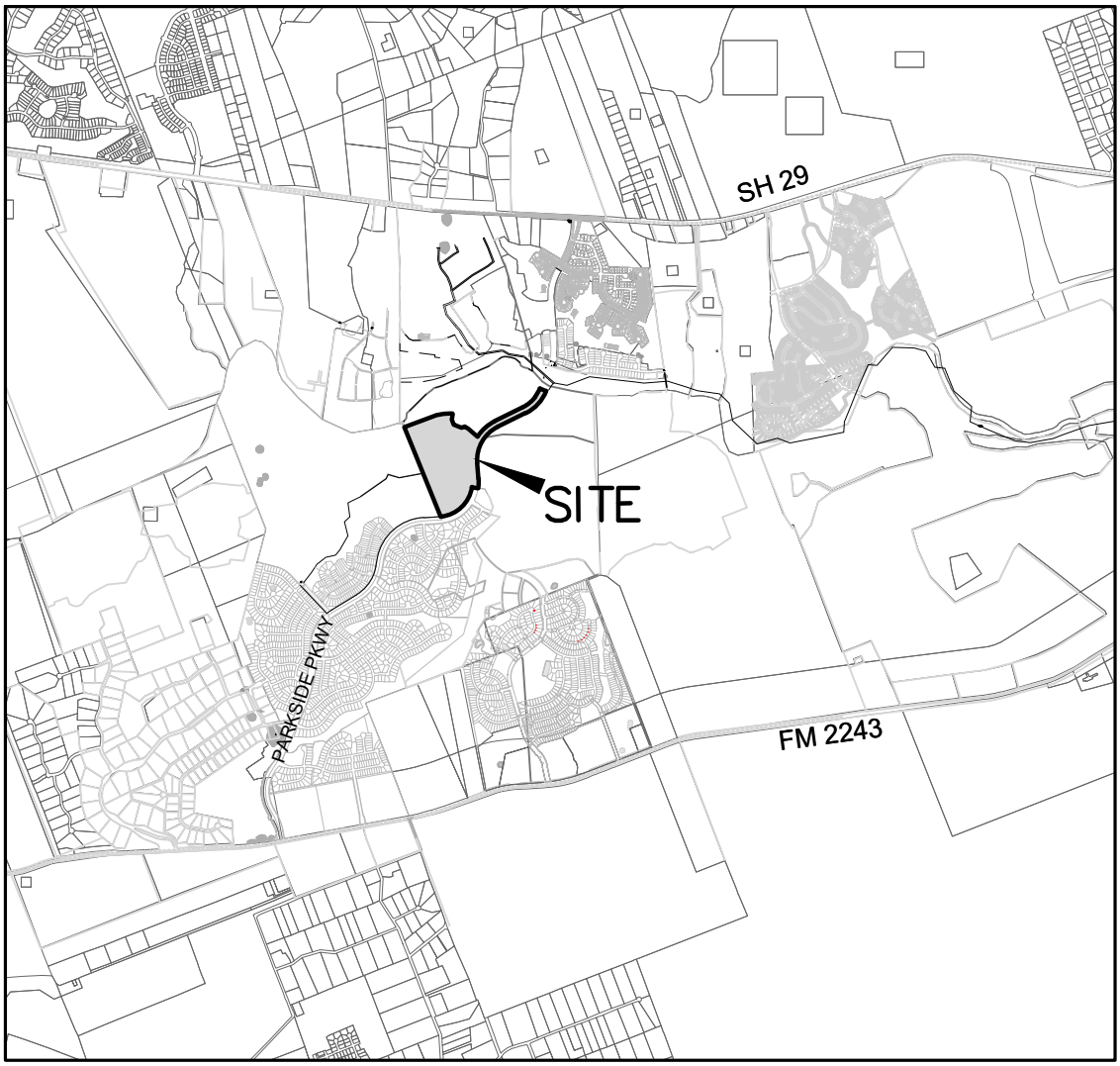

VICINITY MAP

SCALE: 1"=4000'

HRGreen®
DEVELOPMENT TX

5508 HIGHWAY 290 WEST
SUITE 150
AUSTIN, TX 78735
512.872.6696
HRGREEN.COM

TBPE NO: 16384
TBPLS NO: 10194101

PARKSIDE ON THE RIVER
SECTIONS 11, 12A & 15A
LOCATION MAP

P:\blake magee\parkside sections 11-15 & won 5\section 11, 12a & 15a\03_ACAD\Plans\sh2403522 COVR.dwg, July 14, 2025, 3:18 PM, ccampbell

UNITED STATES
DEPARTMENT OF THE INTERIOR
GEOLOGICAL SURVEY

LEANDER QUADRANGLE
TEXAS
7.5 MINUTE SERIES (TOPOGRAPHIC)

Edwards Aquifer Recharge Zone

SUBJECT SITE

Edwards Aquifer Recharge Zone

Edwards Aquifer Contributing Zone

Edwards Aquifer Recharge Zone

Mapped, edited, and published by the Geological Survey

Control by USGS and NOS/NOAA

Topography by photogrammetric methods from aerial photographs taken 1962. Field checked 1963. Revised from aerial photographs taken 1985. Field checked 1986. Map edited 1987

Projection and 10,000-foot grid ticks: Texas coordinate system, central zone (Lambert conformal conic)
1000-meter Universal Transverse Mercator grid, zone 14
1927 North American Datum
To place on the predicted North American Datum 1983 move the projection lines 17 meters south and 28 meters east as shown by dashed corner ticks

Fine red dashed lines indicate selected fence line

UTM GRID AND 1987 MAGNETIC NORTH DECLINATION AT CENTER OF MAP DIAGRAM IS APPROXIMATE

Red tint indicates areas in which only landmark buildings are shown

Areas covered by dashed light-blue pattern are subject to controlled inundation

SCALE 1:24 000

CONTOUR INTERVAL 10 FEET
NATIONAL GEODETIC VERTICAL DATUM OF 1929

THIS MAP COMPLIES WITH NATIONAL MAP ACCURACY STANDARDS
FOR SALE BY U. S. GEOLOGICAL SURVEY, DENVER, COLORADO 80225, OR RESTON, VIRGINIA 22092
A FOLDER DESCRIBING TOPOGRAPHIC MAPS AND SYMBOLS IS AVAILABLE ON REQUEST

QUADRANGLE LOCATION

3097–321

ROAD CLASSIFICATION

Primary highway, hard surface
Secondary highway, hard surface
Light-duty road, hard or improved surface
Unimproved road
Interstate Route U. S. Route State Route

LEANDER, TEX.
30097–E7–TF–024

1987

DMA 6445 III SE–SERIES V882

ISBN 0-607-51609-7

Texas Commission on Environmental Quality
Edwards Aquifer Protection Program

Regulatory Zones

30 TAC Chapter 213- Edwards Aquifer
Effective May 1985

This map was produced by the Groundwater Planning and Assessment Team of the Texas Commission on Environmental Quality to detail the boundaries of the regulatory zones of the Edwards Aquifer Protection Program, as described in Texas Administrative Code Title 30, Part 1, §213.3. No other claims are made to the accuracy or completeness of the data or to its suitability for a particular use. For more information about the Edwards Aquifer Protection Program, please contact the TCEQ Regional Offices in San Antonio or Austin. Printed June 2006.

ATTACHMENT C – PROJECT NARRATIVE

The Parkside on the River Sections 11, 12A & 15A development is a proposed single-family residential development tract, including associated right-of-way, drainage, and utilities located in the City of Georgetown and Williamson County. The project site is located within the Edwards Aquifer Recharge Zone, the Edwards Aquifer Contributing Zone, and within the San Gabriel River watershed. The overall project site encompasses a 55.16-acre tract of land located west of Parkside Parkway, northeast of Parkside on the River GTII – Phase 1, and north of Parkside on the River Sections 9B & 10B. There will be roughly 51.42-acres of disturbed land.

The project site is primarily undeveloped wooded land with grass. Runoff flows northeast towards the South Fork San Gabriel River. Portions of the project site are located within the 100-year floodplain as defined by FEMA FIRM Panel No. 48491C0460F, dated December 20, 2019. Portions of this subdivision are also affected by the approved CLOMR #15-06-2071R and the approved LOMR #21-06-0115P.

The proposed site's SCS system will be composed of a total of 6,763 LF of wastewater line. There is 5,236 LF of 8-inch (8") 115 psi (ASTM D3034) gravity wastewater pipe, 160 LF of 8-inch (8") pressure rated (ASTM D2241) wastewater pipe, and 1,367 LF of 6-inch (6") gravity wastewater pipe. The proposed improvements will tie into the existing 18" Barton Tributary Wastewater Line. This line connects to the existing San Gabriel River Interceptor, and ultimately flows to the Dove Springs WWTP for treatment. The Dove Springs Wastewater Treatment Plant has the capacity to adequately treat the proposed peak flow.

The proposed development results in an impervious cover of approximately 37.7% and will have the associated runoff treated by three batch detention ponds – one approved with Parkside on the River Sections 9B & 10B and the other two are in this proposed set of plans. Of the 55.16 acres of the proposed Parkside on the River Sections 11, 12A & 15A property, there is approximately 20.82 acres of impervious cover. There is also 0.76 acres of impervious cover proposed with the future Parkside on the River Section 15B project. Based on the 80% TSS removal requirement by TCEQ, we need to provide 18,783 lbs. of TSS removal for the total 21.58 acres of impervious cover proposed in Parkside on the River Sections 11, 12A & 15A and Parkside on the River Section 15B. As shown in the calculations, the BMPs satisfy the TSS removal requirement. The 85% TSS removal requirement by the City of Georgetown is also satisfied by the batch detention ponds.

The fully-developed conditions for the overall area propose approximately 22.70 acres of post-development impervious cover, of which approximately 0.87 acres are existing from Parkside on the River Sections 9B & 10B, 20.82 acres are from proposed Parkside on the River Sections 11, 12A & 15A, 0.76 acres are from proposed Parkside on the River Section 15B, and an estimated 0.25 acres of future impervious cover from future Parkside on the River developments. Based on the 80% TSS removal requirement by TCEQ we need to provide 19,012 lbs. of TSS removal in the fully-developed case. As shown in the calculations, the existing Parkside on the River Sections 9B & 10B batch detention pond (EX-BDP), the proposed Parkside on the River Sections 11, 12A & 15A batch detention ponds (BDP-01 & BDP-02), Jellyfish (JF-01, JF-02 & JF-03), and vegetative filter strips (VFS-01, VFS-02, VFS-03, VFS-04 & VFS-05) satisfy this requirement. The 85% TSS removal requirement by the City of Georgetown is also satisfied with the batch detention ponds.

In the fully-developed condition, the proposed batch detention pond (BDP-01) will treat a total of approximately 2.47 acres of impervious cover from Parkside on the River Sections 11, 12A & 15A and provide 2,475 lbs. of TSS removal. The proposed batch detention pond (BDP-02) will treat a total of approximately 8.25 acres of impervious cover (8.00 acres from Parkside on the River Sections 11, 12A & 15A and 0.25 acres from future Parkside on the River development) and provide 7,850 lbs. of TSS removal. The existing Parkside on the River Section 9B & 10B batch detention pond (EX-BDP) will treat a total of approximately 0.17 acres of impervious cover from Parkside on the River Sections 11, 12A & 15A and has capacity to provide 157 lbs. of TSS removal for the proposed Parkside Sections 11, 12A & 15A impervious cover. The proposed Jellyfish (JF-01) will treat a total of approximately 1.82 acres of impervious cover (0.87 acres of impervious cover from the existing Parkside on the River Sections 9B & 10B and 0.95 acres of impervious cover from the proposed Parkside on the River Sections 11, 12A & 15A) and provide 1,582 lbs. of TSS removal. The proposed Jellyfish (JF-02) will treat 1.20 acres of impervious cover from

the proposed Parkside on the River Sections 11, 12A & 15A and provide 1,101 lbs. of TSS removal. The proposed Jellyfish (JF-03) will treat 3.32 acres of impervious cover from the proposed Parkside on the River Sections 11, 12A & 15A and provide 3,089 lbs. of TSS removal. Approximately 1.81 acres of impervious cover proposed with Parkside on the River Sections 11, 12A & 15A and Section 15B are bypassing treatment. The BMPs are overtreating to account for the bypassed impervious cover.

Refer to the construction plans for water quality calculations. Refer to the attached Parkside on the River Sections 9B & 10B for the existing batch detention pond designs. Refer to the table below for the proposed sedimentation treatment breakdown provided.

A tree demolition schedule is included in the construction plans.

The associated combination of roadways, drainage, water quality, water, and wastewater improvements will be designed and built to serve this residential development.

PARKSIDE ON THE RIVER SECTIONS 11, 12A, 15A AND SECTION 15B - TSS REMOVAL SUMMARY - FULLY-DEVELOPED

DRAINAGE AREA	BMP TYPE	MAX TSS REMOVAL EFFICIENCY	BASIN AREA	PRE-DEVELOPMENT I.C.	PROPOSED I.C.				POST-DEVELOPMENT I.C.		TCEQ REQUIRED 80% TSS LOAD REMOVAL	CITY OF GEORGETOWN REQUIRED 85% TSS LOAD REMOVAL	PROVIDED TSS LOAD REMOVAL	VOLUME REQUIRED	VOLUME PROVIDED
					SECTIONS 9B & 10B	SECTIONS 11, 12A, 15A	SECTION 15B	FUTURE							
			AC	AC		AC	AC	AC	AC	%	LB	LB	LB	CF	CF
BDP-01	BATCH DETENTION POND	91%	5.51	0.00		2.47			2.47	45%	2,150	2,284	2,475	26,411	35,491
BDP-02	BATCH DETENTION POND	91%	15.58	0.00		8.00		0.25	8.25	53%	7,181	7,630	7,850	55,888	66,371
EX-BDP	EXISTING BATCH DETENTION POND	91%	0.46	0.00		0.17			0.17	37%	148	157	157		
VFS-01	VEGETATIVE FILTER STRIP	85%	1.31	0.00		0.40			0.40	31%	348		390		
VFS-02	VEGETATIVE FILTER STRIP	85%	3.57	0.00		1.67			1.67	47%	1,454		1,600		
VFS-03	VEGETATIVE FILTER STRIP	85%	1.86	0.00		0.96			0.96	52%	836		917		
VFS-04	VEGETATIVE FILTER STRIP	85%	0.66	0.00		0.36			0.36	55%	313		343		
VFS-05	VEGETATIVE FILTER STRIP	85%	0.48	0.00		0.28			0.28	58%	244		266		
JF-01	JELLYFISH	86%	3.52	0.00	0.87	0.95			1.82	52%	830	882	1,582		
JF-02	JELLYFISH	86%	2.21	0.00		1.20			1.20	54%	1,044	1,110	1,101		
JF-03	JELLYFISH	86%	5.95	0.00		3.32			3.32	56%	2,890	3,070	3,089		
BP-01	BY-PASS	0%	2.25	0.00		1.01			1.01	45%	879		0		
BP-02	BY-PASS	0%	1.89	0.00		0.04	0.76		0.80	42%	696		0		
TOTAL:			**45.25**	**0.00**	**0.87**	**20.83**	**0.76**	**0.25**	**22.71**	**50%**	**19,012**		**19,770**		

1 - FOR THE GEORGETOWN TSS REMOVAL REQUIREMENT, WE CONSIDER 85% OF TSS REMOVAL FOR THE DRAINAGE AREA THAT DRAINS TOWARD THE JELLYFISH AND BATCH DETENTION PONDS.

Narrative Description of Site-Specific Geology for the 417-acre Parcel of the Parkside on the River Property Located in Georgetown, Williamson County, Texas

Prepared for:

HM PARKSIDE DEVELOPMENT, INC

Prepared by:

CAMBRIAN ENVIRONMENTAL

April 4th, 2025

NARRATIVE DESCRIPTION OF SITE-SPECIFIC GEOLOGY FOR THE 417-ACRE PARCEL OF THE PARKSIDE ON THE RIVER PROPERTY LOCATED IN GEORGETOWN, WILLIAMSON COUNTY, TEXAS

Prepared for:

HM Parkside Development, Inc.
Blake Magee Co.
1011 North Lamar Blvd.
Austin, Texas 78703

Prepared by:

Craig Crawford, P.G.
TX Geoscience License #10791

Cambrian Environmental
4422 Pack Saddle Pass
Suite 204
Austin, Texas 78745

TX Geoscience Firm Registration #50484

As a licensed professional geoscientist I attest that the contents of this report are complete and accurate to the best of my knowledge.

Geologic Assessment

Texas Commission on Environmental Quality

For Regulated Activities on The Edwards Aquifer Recharge/transition Zones and Relating to 30 TAC §213.5(b)(3), Effective June 1, 1999

To ensure that the application is administratively complete, confirm that all fields in the form are complete, verify that all requested information is provided, consistently reference the same site and contact person in all forms in the application, and ensure forms are signed by the appropriate party.

Note: Including all the information requested in the form and attachments contributes to more streamlined technical reviews.

Signature

To the best of my knowledge, the responses to this form accurately reflect all information requested concerning the proposed regulated activities and methods to protect the Edwards Aquifer. My signature certifies that I am qualified as a geologist as defined by 30 TAC Chapter 213.

Print Name of Geologist: Craig Crawford, PG Telephone: 512.705.5541

Date: 4 April 2025 Fax: _____

Representing: Cambrian Environmental (TBPG Firm # 50484) (Name of Company and TBPG or TBPE registration number)

Signature of Geologist:

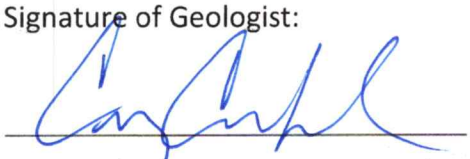

Regulated Entity Name: HM Parkside Development, Inc.(Parkside on the River 417-acre tract)

Project Information

1. Date(s) Geologic Assessment was performed: March 24th through April 1st, 2025
2. Type of Project:
   - ☒ WPAP
   - ☐ SCS
   - ☐ AST
   - ☐ UST
3. Location of Project:
   - ☒ Recharge Zone
   - ☐ Transition Zone
   - ☐ Contributing Zone within the Transition Zone

4. ☒ **Attachment A - Geologic Assessment Table**. Completed Geologic Assessment Table (Form TCEQ-0585-Table) is attached.

5. ☒ Soil cover on the project site is summarized in the table below and uses the SCS Hydrologic Soil Groups* (Urban Hydrology for Small Watersheds, Technical Release No. 55, Appendix A, Soil Conservation Service, 1986). If there is more than one soil type on the project site, show each soil type on the site Geologic Map or a separate soils map.

Table 1 - Soil Units, Infiltration Characteristics and Thickness

Soil Name	Group*	Thickness(feet)
Brackett (BkG)	C	< 2
Denton (DnB)	D	< 3.5
Eckrant (ErE,ErG)	D	< 2
Oakalla (Oa)	B	> 5
Sunev (SuB)	B	> 5

** Soil Group Definitions (Abbreviated)*

A. Soils having a high infiltration rate when thoroughly wetted.

B. Soils having a moderate infiltration rate when thoroughly wetted.

C. Soils having a slow infiltration rate when thoroughly wetted.

D. Soils having a very slow infiltration rate when thoroughly wetted.

6. ☒ **Attachment B – Stratigraphic Column**. A stratigraphic column showing formations, members, and thicknesses is attached. The outcropping unit, if present, should be at the top of the stratigraphic column. Otherwise, the uppermost unit should be at the top of the stratigraphic column.

7. ☒ **Attachment C – Site Geology**. A narrative description of the site specific geology including any features identified in the Geologic Assessment Table, a discussion of the potential for fluid movement to the Edwards Aquifer, stratigraphy, structure(s), and karst characteristics is attached.

8. ☒ **Attachment D – Site Geologic Map(s)**. The Site Geologic Map must be the same scale as the applicant's Site Plan. The minimum scale is 1": 400'

   Applicant's Site Plan Scale: 1" = 200'
   Site Geologic Map Scale: 1" = 200'
   Site Soils Map Scale (if more than 1 soil type): 1" = 2000'

9. Method of collecting positional data:

   ☒ Global Positioning System (GPS) technology.
   ☐ Other method(s). Please describe method of data collection: _____

10. ☒ The project site and boundaries are clearly shown and labeled on the Site Geologic Map.

11. ☒ Surface geologic units are shown and labeled on the Site Geologic Map.

12. ☒ Geologic or manmade features were discovered on the project site during the field investigation. They are shown and labeled on the Site Geologic Map and are described in the attached Geologic Assessment Table.

    ☐ Geologic or manmade features were not discovered on the project site during the field investigation.

13. ☒ The Recharge Zone boundary is shown and labeled, if appropriate.

14. All known wells (test holes, water, oil, unplugged, capped and/or abandoned, etc.): If applicable, the information must agree with Item No. 20 of the WPAP Application Section.

    ☐ There are _____ (#) wells present on the project site and the locations are shown and labeled. (Check all of the following that apply.)
    - ☐ The wells are not in use and have been properly abandoned.
    - ☐ The wells are not in use and will be properly abandoned.
    - ☐ The wells are in use and comply with 16 TAC Chapter 76.

    ☒ There are no wells or test holes of any kind known to exist on the project site.

Administrative Information

15. ☒ Submit one (1) original and one (1) copy of the application, plus additional copies as needed for each affected incorporated city, groundwater conservation district, and county in which the project will be located. The TCEQ will distribute the additional copies to these jurisdictions. The copies must be submitted to the appropriate regional office.

NARRATIVE DESCRIPTION OF SITE-SPECIFIC GEOLOGY FOR THE 417-ACRE PARCEL OF THE PARKSIDE ON THE RIVER PROPERTY LOCATED IN GEORGETOWN, WILLIAMSON COUNTY, TEXAS

INTRODUCTION

This narrative Geologic Assessment accompanies the Texas Commission on Environmental Quality (TCEQ) Geologic Assessment Form TCEQ-0585 completed for a 417-acre parcel located on the Parkside on the River property in Georgetown, Williamson County, Texas (see Site Location Map). The project area is located on the north side of Leander Road (FM 2243), approximately 5 miles west of the intersection with Interstate Highway (IH) 35. The northern limits of the 417-acre parcel are located adjacent to the South Fork of the San Gabriel River.

METHODOLOGY

A Cambrian Environmental Registered Professional Geoscientist (Texas License #10791) and several karst technicians conducted a field survey for a TCEQ Geologic Assessment on various dates between March 24th and April 1st 2025. The pedestrian survey was completed by walking parallel transects spaced approximately 50 feet apart as directed by the TCEQ in the Instructions to Geologists for Geologic Assessments on the Edwards Aquifer Recharge/Transition Zones (Rev. 10-01-04). Closer spacing was used where vegetation inhibited clear observation. The project site was thoroughly examined for the presence of potential karst features, including depressions, holes, and animal burrows. A number of techniques can be used for this effort, including probing with a digging implement to determine the thickness and consistency of fill material and feeling for the presence of air flow, which may indicate the presence of a sub-surface void space. Other techniques include making observations of any notable characteristics of the feature site such as the presence of various types of vegetation or a semi-circular burrow mound produced by the activities of small mammals. As part of this evaluation and assessment, a number of features were further investigated by way of hand excavation in order to better determine feature type and sensitivity.

RESULTS

Soils

Soils mapped within the project area consist of the Brackett-Rock outcrop-Real complex (BkG), Denton silty clay (DnB), Eckrant-Rock outcrop (ErE, ErG), Oakalla (Oa), and Sunev silty clay (SuB) series soils[1] (see Site Soils Map). The Oakalla and Sunev series soils are within the "B" classification of the hydrologic soil groups. Type "B" soils have a moderate rate of infiltration rate (moderate runoff potential) when thoroughly wet. The Brackett-Rock outcrop-Real complex is within the "C" classification of the hydrologic soil groups. Type "C" have a slow infiltration rate (high runoff potential) when thoroughly wet. The Denton and Eckrant series soils are within the "D" classification of the hydrologic soil groups. Type "D" soils have a very slow infiltration rate (very high runoff potential) when thoroughly wet.

[1] United States Department of Agriculture, Natural Resource Conservation Service. Online Web Soil Survey, Williamson County, Texas. http://websoilsurvey.sc.egov.usda.gov/

Geology

The mapped bedrock lithology underlying the project area consists of the Edwards Limestone (Ked), with the Comanche Peak Limestone (Kc) present in the lower elevation areas. The Comanche Peak Limestone serves as the lower confining unit of the Edwards Aquifer. Quaternary alluvial and terrace deposits (Qal, Qt, and Qt+Kc) are present on the lower elevation portions of the property adjacent to the South Fork of the San Gabriel River. The tract is located partially within the Edwards Aquifer Recharge Zone, but a large portion of this tract is within the Contributing Zone (see Site Geologic Map). Based on topographic and geologic maps, the Edwards outcrop present on this property is likely no more than 40 to 50 feet thick in the areas of highest elevation. The geology of the property has been mapped most recently at a useful scale by Collins (2005) and we find his interpretation of the geology to be generally accurate.[2] Bedrock outcrops were common in some areas, while other areas seemed to have relatively thick soil cover. No faults are mapped within the project limits, and none were observed during the pedestrian survey.

Recharge into the aquifer primarily occurs in areas where the Edwards Group and upper confining units are exposed at the surface. Most recharge is from direct infiltration via precipitation and streamflow loss. Recharge occurs predominantly along secondary porosity features such as faults, fractures, and karst features (caves, solution cavities, sinkholes, etc.); and these types of karst features are commonly formed along joints, fractures, and bedding plane surfaces formed within the Edwards Group Limestone.

Site Hydrogeologic Assessment

No sensitive features were identified during the pedestrian survey. In the absence of discrete recharge features, the potential for rapid recharge to occur is thought to be low on this tract. Additionally, should any karst features be discovered during the construction phase of the project, they should be reported to TCEQ to determine the appropriate mitigation measures.

Feature Descriptions

F-1 The feature consists of a previously disturbed and quarried area of the property. The area is approximately 800 feet by 1100 feet. In one area, an excavated quarry pit is now holding water as a pond and is about 40 feet deep below the ground surface elevation. Portions of this large disturbed area appear to have been excavated and then subsequently backfilled.

F-2 The feature consists of a test boring that is likely related to the quarry activities that occurred on this tract in the past. The boring appears to have been backfilled when it was abandoned, as it is only about 1 foot deep. The boring is approximately 4 inches in diameter.

City of Georgetown Salamander Ordinance

No springs were identified within the interior of the property during the pedestrian survey, and therefore no occupied site protection, or spring buffer protection measures will be required for the property. A number of drainages are present on the property, but they appear to only flow during heavy rain when there is high

[2] E.W. Collins, 2005, Geologic Map of the West Half of the Taylor Texas 30x60 Quadrangle: Central Texas Urban Corridor Encompassing Round Rock, Georgetown, Salado, Briggs, Liberty Hill, and Leander, Bureau of Economic Geology, University of Texas at Austin. Scale 1:100,000

runoff potential. None of these drainages had any water present during the course of the field work, even after a couple of precipitation events. Portions of the tract are directly adjacent to the South Fork of the San Gabriel River and within the Edwards Aquifer Contributing Zone. The 100-year floodplain is present in these lower elevation areas. A stream buffer will be required in these areas in accordance with the Ordinance.

Additionally, all regulated activities within the Recharge Zone must follow water quality best management practices, and development of the property will need to comply with the water quality protection measures as outlined in Section 8 of the Ordinance.

Stratigraphic Column

*Area shaded gray represents the lithology directly underlying the project site

Period	Group	Stratigraphic Unit	Hydrologic Unit	Maximum Thickness (Feet)
Quaternary to Tertiary		Stream and river alluvium (Qal)	Overlying Units	70
		Terrace alluvium (Qt)		
		Older alluvium (QTa)		
Upper Cretaceous (Gulf Series)	Taylor	Taylor Clay (Ktl)	Confining Units	300
	Austin	Austin Chalk (Kau)		400
	Eagle Ford	Eagle Ford Shale (Kef)		60
	Washita	Buda Limestone (Kbu)		20
		Del Rio Clay (Kdr)		60
Lower Cretaceous (Comanche Series)	Fredericksburg	Georgetown Limestone (Kgt)	Edwards Aquifer	100
		Edwards Limestone (Ked)		120
		Comanche Peak Formation (Kc)		50
	Trinity	Walnut Formation (Kw)	Confining Unit	140
		Upper Glen Rose Limestone (Kgru)	Upper Trinity Aquifer	200

GEOLOGIC ASSESSMENT TABLE

PROJECT NAME: Parkside on the River 417-acre Tracts

LOCATION			FEATURE CHARACTERISTICS												EVALUATION			PHYSICAL SETTING		
1A	1B *	1C*	2A	2B	3	4			5	5A	6	7	8A	8B	9	10		11		12
FEATURE ID	LATITUDE	LONGITUDE	FEATURE TYPE	POINTS	FORMATION	DIMENSIONS (FEET)			TREND (DEGREES)	DOM	DENSITY (NO/FT)	APERTURE (FEET)	INFILL	RELATIVE INFILTRATION RATE	TOTAL	SENSITIVITY		CATCHMENT AREA (ACRES)		TOPOGRAPHY
						X	Y	Z		10						<40	>40	<1.6	>1.6	
F-1	30.61328	-97.752672	O	5	Ked	800	1100	40					C,F,O,V	20	25	X		X		Hilltop
F-2	30.616117	-97.751753	MB	30	Ked	0.25	0.25	1					C,F	5	35	X		X		Hilltop

* DATUM: WGS84

2A TYPE	TYPE	2B POINTS
C	Cave	30
SC	Solution cavity	20
SF	Solution-enlarged fracture(s)	20
F	Fault	20
O	Other natural bedrock features	5
MB	Manmade feature in bedrock	30
SW	Swallow hole	30
SH	Sinkhole	20
CD	Non-karst closed depression	5
Z	Zone, clustered or aligned features	30

8A INFILLING	
N	None, exposed bedrock
C	Coarse - cobbles, breakdown, sand, gravel
O	Loose or soft mud or soil, organics, leaves, sticks, dark colors
F	Fines, compacted clay-rich sediment, soil profile, gray or red colors
V	Vegetation. Give details in narrative description
FS	Flowstone, cements, cave deposits
X	Other materials

12 TOPOGRAPHY
Cliff, Hilltop, Hillside, Drainage, Floodplain, Streambed

I have read, I understood, and I have followed the Texas Commission on Environmental Quality's Instructions to Geologists. The information presented here complies with that document and is a true representation of the conditions observed in the field.
My signature certifies that I am qualified as a geologist as defined by 30 TAC Chapter 213.

Date 4 April 2025

Sheet 1 of 1

STATE OF TEXAS
CRAIG CRAWFORD
GEOLOGY
NO. 10791
LICENSED
PROFESSIONAL GEOSCIENTIST

TCEQ-0585-Table (Rev. 10-01-04)

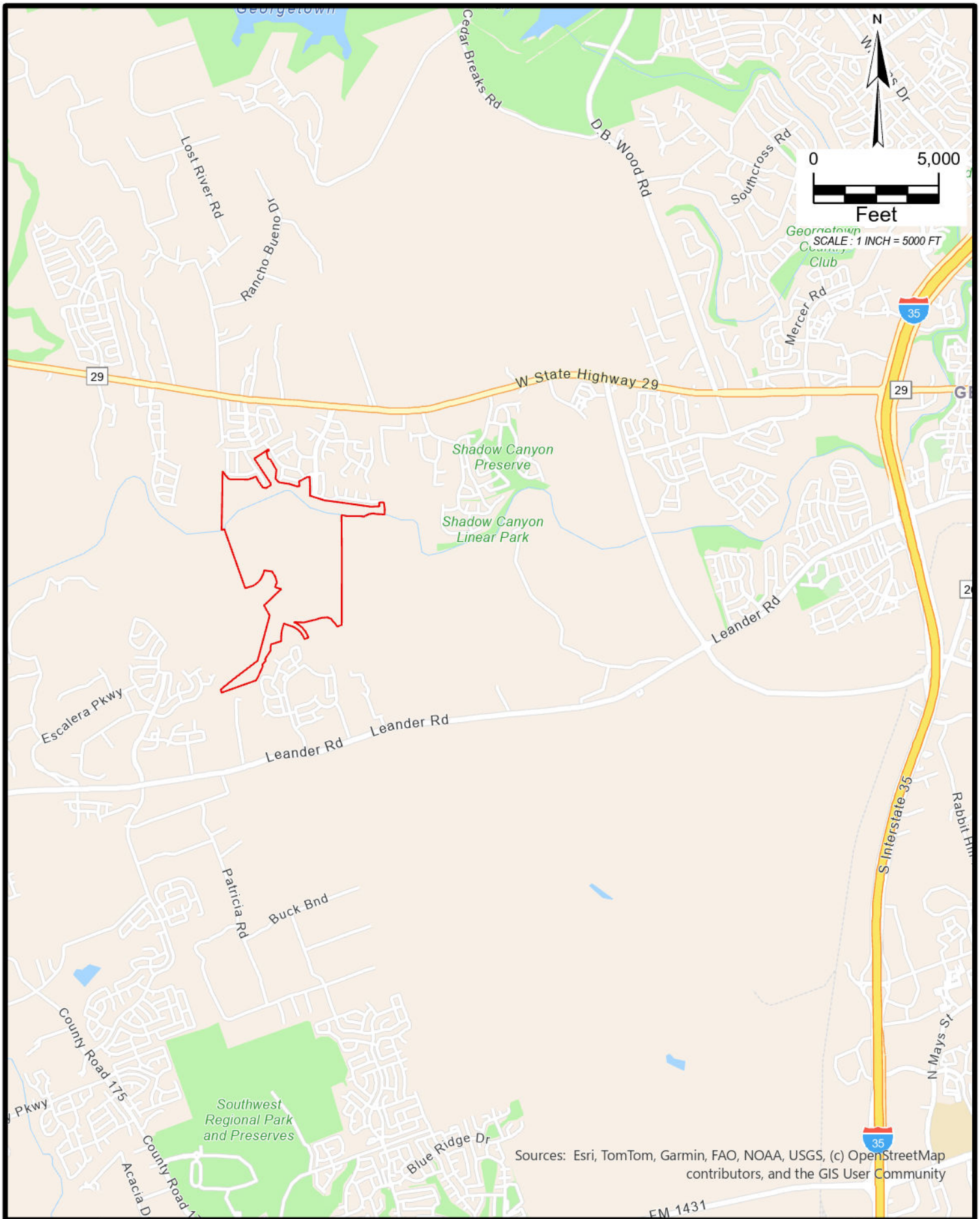

Cambrian

PARKSIDE ON THE RIVER SECTIONS 11-15 & WON 5
GEORGETOWN ETJ, WILLIAMSON COUNTY, TEXAS
GEOLOGIC ASSESSMENT
SITE LOCATION MAP

REVISIONS:	ISSUE DATE:
PROJECT NO.	
DATE: March 2025	DESIGNER:
DRAWN: RCP	CHECKED: CC

THIS DOCUMENT HAS BEEN PRODUCED FROM MATERIAL THAT WAS STORED AND/OR TRANSMITTED ELECTRONICALLY AND MAY HAVE BEEN INADVERTENTLY ALTERED. RELY ONLY ON FINAL HARDCOPY MATERIALS BEARING THE CONSULTANT'S ORIGINAL SIGNATURE AND SEAL.

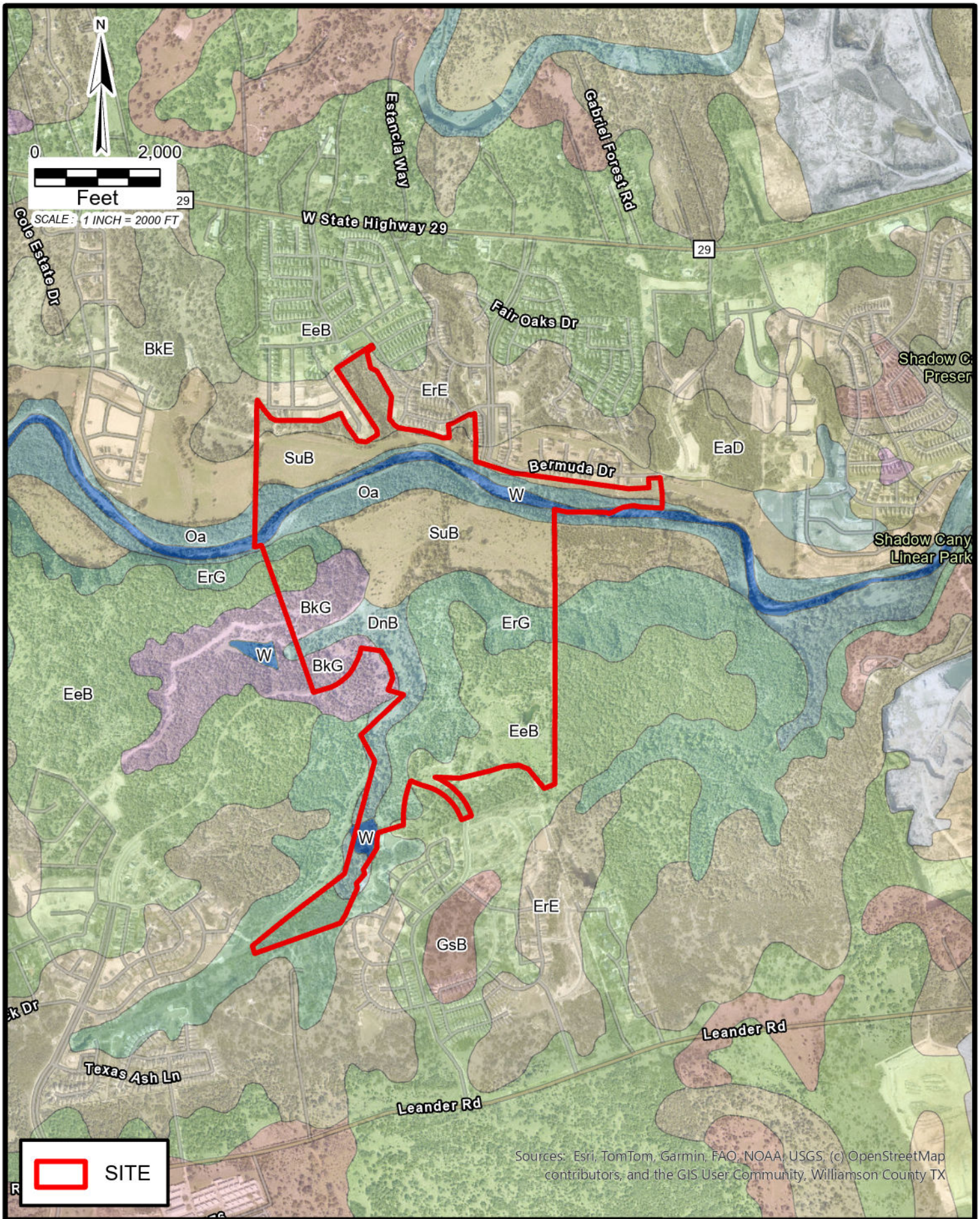

Cambrian

PARKSIDE ON THE RIVER SECTIONS 11-15 & WON 5
GEORGETOWN ETJ, WILLIAMSON COUNTY, TEXAS
GEOLOGIC ASSESSMENT
SITE SOILS MAP

REVISIONS:	ISSUE DATE:
PROJECT NO.	
DATE: April 2025	DESIGNER: RCP
DRAWN: RCP	CHECKED: CC

THIS DOCUMENT HAS BEEN PRODUCED FROM MATERIAL THAT WAS STORED AND/OR TRANSMITTED ELECTRONICALLY AND MAY HAVE BEEN INADVERTENTLY ALTERED. RELY ONLY ON FINAL HARDCOPY MATERIALS BEARING THE CONSULTANT'S ORIGINAL SIGNATURE AND SEAL.

EDWARDS AQUIFER RECHARGE ZONE

EDWARDS AQUIFER CONTRIBUTING ZONE

EDWARDS AQUIFER CONTRIBUTING ZONE

EDWARDS AQUIFER RECHARGE ZONE

EDWARDS AQUIFER CONTRIBUTING ZONE

EDWARDS AQUIFER RECHARGE ZONE

Ked

Kc

Qt

Qal

Qt+Kc

F-2

F-1

N

0 200 400 800

Feet

SCALE 1" = 200'

LEGEND

- Site Boundary
- Edwards Aquifer Recharge Zone Boundary
- FEMA 100-Yr Floodplain
- F-# Feature
- Qal — Quaternary stream and river alluvium
- Qt — Quaternary Terrace alluvium
- Qt+Kc — Undivided terrace deposits (Quaternary) and Comanche Peak Formation
- Ked — Edwards Formation
- Kc — Comanche Peak Formation

Cambrian

PARKSIDE ON THE RIVER SECTIONS 11-15 & WON 5
GEORGETOWN ETJ, WILLIAMSON COUNTY, TEXAS
GEOLOGIC ASSESSMENT - SITE GEOLOGIC MAP

FIGURE
3

Organized Sewage Collection System Application

Texas Commission on Environmental Quality

For Regulated Activities on the Edwards Aquifer Recharge Zone and Relating to 30 TAC §213.5(c), Effective June 1, 1999

To ensure that the application is administratively complete, confirm that all fields in the form are complete, verify that all requested information is provided, consistently reference the same site and contact person in all forms in the application, and ensure forms are signed by the appropriate party.

Note: Including all the information requested in the form and attachments contributes to more streamlined technical reviews.

Regulated Entity Name: Parkside on the River Sections 11, 12A & 15A

1. ☒ **Attachment A – SCS Engineering Design Report**. This Engineering Design Report is provided to fulfill the requirements of 30 TAC Chapter 217, including 217.10 of Subchapter A, §§217.51 – 217.70 of Subchapter C, and Subchapter D as applicable, and is required to be submitted with this SCS Application Form.

Customer Information

2. The entity and contact person responsible for providing the required engineering certification of testing for this sewage collection system upon completion (including private service connections) and every five years thereafter to the appropriate TCEQ region office pursuant to 30 TAC §213.5(c) is:

   Contact Person: Blake Magee
   Entity: HM Parkside Development, Inc.
   Mailing Address: P.O. Box 5397
   City, State: Austin, TX Zip: 78763
   Telephone: 512-481-0303 Fax: _____
   Email Address: Blake@blakemageeco.com
   The appropriate regional office must be informed of any changes in this information within 30 days of the change.

3. The engineer responsible for the design of this sewage collection system is:

   Contact Person: Christine Campbell, P.E.
   Texas Licensed Professional Engineer's Number: 142536
   Entity: HR Green Development TX, LLC
   Mailing Address: 5508 Highway 290 West, #150
   City, State:Austin, TX Zip: 78735
   Telephone:512-872-6696 Fax:_____
   Email Address:christine.campbell@hrgreen.com

Project Information

4. Anticipated type of development to be served (estimated future population to be served, plus adequate allowance for institutional and commercial flows):

   ☒ Residential: Number of single-family lots: 99
   ☐ Multi-family: Number of residential units: _____
   ☐ Commercial
   ☐ Industrial
   ☐ Off-site system (not associated with any development)
   ☐ Other: _____

5. The character and volume of wastewater is shown below:

100% Domestic	24,750 gallons/day
_____% Industrial	_____ gallons/day
_____% Commingled	_____ gallons/day

   Total gallons/day: 24,750

6. Existing and anticipated infiltration/inflow is 55,160 (per City of Georgetown I&I calculations of 1,000 gallons/day/acre gallons/day. This will be addressed by: Using standard manholes and included in/out calculations for pipe design and flow determination.

7. A Water Pollution Abatement Plan (WPAP) is required for construction of any associated commercial, industrial or residential project located on the Recharge Zone.

   ☐ The WPAP application for this development was approved by letter dated _____. A copy of the approval letter is attached.
   ☒ The WPAP application for this development was submitted to the TCEQ on 07/21/2025, but has not been approved.
   ☐ A WPAP application is required for an associated project, but it has not been submitted.
   ☐ There is no associated project requiring a WPAP application.

8. Pipe description:

Table 1 - Pipe Description

Pipe Diameter(Inches)	*Linear Feet (1)*	*Pipe Material (2)*	*Specifications (3)*
8"	5236	PVC SDR 26	ASTM D3034
8"	160	PVC SDR 26	ASTM D2241
6"	1367	PVC SDR 26	ASTM D3034

Total Linear Feet: 6,763

(1) Linear feet - Include stub-outs and double service connections. Do not include private service laterals.
(2) Pipe Material - If PVC, state SDR value.

(3) Specifications - ASTM / ANSI / AWWA specification and class numbers should be included.

9. The sewage collection system will convey the wastewater to the Dove Springs WWTP (name) Treatment Plant. The treatment facility is:

☒ Existing
☐ Proposed

10. All components of this sewage collection system will comply with:

☒ The City of Georgetown standard specifications.
☐ Other. Specifications are attached.

11. ☒ No force main(s) and/or lift station(s) are associated with this sewage collection system.

☐ A force main(s) and/or lift station(s) is associated with this sewage collection system and the **Lift Station/Force Main System Application** form (TCEQ-0624) is included with this application.

Alignment

12. ☒ There are no deviations from uniform grade in this sewage collection system without manholes and with open cut construction.

13. ☒ There are no deviations from straight alignment in this sewage collection system without manholes.

☐ **Attachment B - Justification and Calculations for Deviation in Straight Alignment without Manholes**. A justification for deviations from straight alignment in this sewage collection system without manholes with documentation from pipe manufacturer allowing pipe curvature is attached.

☐ For curved sewer lines, all curved sewer line notes (TCEQ-0596) are included on the construction plans for the wastewater collection system.

Manholes and Cleanouts

14. ☒ Manholes or clean-outs exist at the end of each sewer line(s). These locations are listed below: (Please attach additional sheet if necessary)

Table 2 - Manholes and Cleanouts

Line	*Shown on Sheet*	*Station*	*Manhole or Clean-out?*
A1	120 Of 141	1+44.62	MH
A2	120 Of 141	3+51.83	MH
A3	120 Of 141	5+85.09	MH
A4	120 Of 141	7+07.72	MH
A5	120 Of 141	8+30.35	MH
A6	120 Of 141	9+52.29	MH

Line	*Shown on Sheet*	*Station*	*Manhole or Clean-out?*
B1	121 Of 141	3+01.24	MH
B2	121 Of 141	5+24.55	MH
B3	121 Of 141	8+24.46	MH
C1	122 Of 141	2+38.51	MH

15. ☒ Manholes are installed at all Points of Curvature and Points of Termination of a sewer line.

16. ☒ The maximum spacing between manholes on this project for each pipe diameter is no greater than:

Pipe Diameter (inches)	**Max. Manhole Spacing (feet)**
6 - 15	500
16 - 30	800
36 - 48	1000
≥54	2000

☐ **Attachment C – Justification for Variance from Maximum Manhole Spacing**. The maximum spacing between manholes on this project (for each pipe diameter used) is greater than listed in the table above. A justification for any variance from the maximum spacing is attached, and must include a letter from the entity which will operate and maintain the system stating that it has the capability to maintain lines with manhole spacing greater than the allowed spacing.

17. ☐ All manholes will be monolithic, cast-in-place concrete.

☒ The use of pre-cast manholes is requested for this project. The manufacturer's specifications and construction drawings, showing the method of sealing the joints, are attached.

Site Plan Requirements

Items 18 - 25 must be included on the Site Plan.

18. ☒ The Site Plan must have a minimum scale of 1" = 400'.

Site Plan Scale: 1" = 40'.

19. ☒ The Site Plan must include the sewage collection system general layout, including manholes with station numbers, and sewer pipe stub outs (if any). Site plan must be overlain by topographic contour lines, using a contour interval of not greater than ten feet and showing the area within both the five-year floodplain and the 100-year floodplain of any drainage way.

20. Lateral stub-outs:

☒ The location of all lateral stub-outs are shown and labeled.

☐ No lateral stub-outs will be installed during the construction of this sewer collection system.

21. Location of existing and proposed water lines:

☒ The entire water distribution system for this project is shown and labeled.
☐ If not shown on the Site Plan, a Utility Plan is provided showing the entire water and sewer systems.
☐ There will be no water lines associated with this project.

22. 100-year floodplain:

☐ After construction is complete, no part of this project will be in or cross a 100-year floodplain, either naturally occurring or manmade. (Do not include streets or concrete-lined channels constructed above of sewer lines.)
☒ After construction is complete, all sections located within the 100-year floodplain will have water-tight manholes. These locations are listed in the table below and are shown and labeled on the Site Plan. (Do not include streets or concrete-lined channels constructed above sewer lines.)

Table 3 - 100-Year Floodplain

Line	***Sheet***	***Station***
WWL B	121 of 141	1+00 to 3+09
	of	to
	of	to
	of	to

23. 5-year floodplain:

☐ After construction is complete, no part of this project will be in or cross a 5-year floodplain, either naturally occurring or man-made. (Do not include streets or concrete-lined channels constructed above sewer lines.)
☒ After construction is complete, all sections located within the 5-year floodplain will be encased in concrete or capped with concrete. These locations are listed in the table below and are shown and labeled on the Site Plan. (Do not include streets or concrete-lined channels constructed above sewer lines.)

Table 4 - 5-Year Floodplain

Line	***Sheet***	***Station***
WWL B	121 of 141	1+00 to 3+01
	of	to
	of	to
	of	to

24. ☒ Legal boundaries of the site are shown.

25. ☒ The ***final plans and technical specifications*** are submitted for the TCEQ's review. Each sheet of the construction plans and specifications are dated, signed, and sealed by the Texas Licensed Professional Engineer responsible for the design on each sheet.

Items 26 - 33 must be included on the Plan and Profile sheets.

26. ☒ All existing or proposed water line crossings and any parallel water lines within 9 feet of sewer lines are listed in the table below. These lines must have the type of pressure rated pipe to be installed shown on the plan and profile sheets. Any request for a variance from the required pressure rated piping at crossings must include a variance approval from 30 TAC Chapter 290.

☐ There will be no water line crossings.
☐ There will be no water lines within 9 feet of proposed sewer lines.

Table 5 - Water Line Crossings

Line	*Station or Closest Point*	*Crossing or Parallel*	*Horizontal Separation Distance*	*Vertical Separation Distance*
WWL A	1+83.09	Crossing	-	5.13'
WWL B	7+59.19	Crossing	-	7.55'
WWL C	1+59.48	Crossing	-	2.39'
WWL C	3+73.63	Crossing	-	7.77'
WWL C	13+96.51	Crossing	-	5.90'
WWL D	10+46.95	Crossing	-	6.32'
WWL E	1+25.00	Crossing	-	4.56'

27. Vented Manholes:

☐ **No part** of this sewer line is within the 100-year floodplain and vented manholes are not required by 30 TAC Chapter 217.
☐ **A portion** of this sewer line is within the 100-year floodplain and vented manholes will be provided at less than 1500 foot intervals. These water-tight manholes are listed in the table below and labeled on the appropriate profile sheets.
☐ **A portion** of this sewer line is within the 100-year floodplain and an alternative means of venting shall be provided at less than 1500 feet intervals. A description of the alternative means is described on the following page.
☒ **A portion** of this sewer line is within the 100-year floodplain; however, there is no interval longer than 1500 feet located within. No vented manholes will be used.

Table 6 - Vented Manholes

Line	*Manhole*	*Station*	*Sheet*

Line	*Manhole*	*Station*	*Sheet*

28. Drop manholes:

☐ There are no drop manholes associated with this project.
☒ Sewer lines which enter new or existing manholes or "manhole structures" higher than 24 inches above the manhole invert are listed in the table below and labeled on the appropriate profile sheets. These lines meet the requirements of 30 TAC §217.55(l)(2)(H).

Table 7 - Drop Manholes

Line	*Manhole*	*Station*	*Sheet*
WWL C	C1	2+38.51	122 OF 141
WWL D	D8	10+23.20	125 OF 141

29. Sewer line stub-outs (For proposed extensions):

☐ The placement and markings of all sewer line stub-outs are shown and labeled.
☒ No sewer line stub-outs are to be installed during the construction of this sewage collection system.

30. Lateral stub-outs (For proposed private service connections):

☒ The placement and markings of all lateral stub-outs are shown and labeled.
☐ No lateral stub-outs are to be installed during the construction of this sewage collection system.

31. Minimum flow velocity (From Appendix A)

☒ Assuming pipes are flowing full; all slopes are designed to produce flows equal to or greater than 2.0 feet per second for this system/line.

32. Maximum flow velocity/slopes (From Appendix A)

☒ Assuming pipes are flowing full, all slopes are designed to produce maximum flows of less than or equal to 10 feet per second for this system/line.
☐ **Attachment D – Calculations for Slopes for Flows Greater Than 10.0 Feet per Second.** Assuming pipes are flowing full, some slopes produce flows which are greater than 10 feet per second. These locations are listed in the table below. Calculations are attached.

Table 8 - Flows Greater Than 10 Feet per Second

Line	*Profile Sheet*	*Station to Station*	*FPS*	*% Slope*	*Erosion/Shock Protection*

33. Assuming pipes are flowing full, where flows are ≥ 10 feet per second, the provisions noted below have been made to protect against pipe displacement by erosion and/or shock under 30 TAC §217.53(l)(2)(B).

☐ Concrete encasement shown on appropriate Plan and Profile sheets for the locations listed in the table above.
☐ Steel-reinforced, anchored concrete baffles/retards placed every 50 feet shown on appropriate Plan and Profile sheets for the locations listed in the table above.
☒ N/A

Administrative Information

34. ☒ The final plans and technical specifications are submitted for TCEQ review. Each sheet of the construction plans and specifications are dated, signed, and sealed by the Texas Licensed Professional Engineer responsible for the design on each sheet.

35. ☒ Standard details are shown on the detail sheets, which are dated, signed, and sealed by the Texas Licensed Professional Engineer, as listed in the table below:

Table 9 - Standard Details

Standard Details	*Shown on Sheet*
Lateral stub-out marking **[Required]**	130 of 141
Manhole, showing inverts comply with 30 TAC §217.55(l)(2) **[Required]**	129 of 141
Alternate method of joining lateral to existing SCS line for potential future connections **[Required]**	130 of 141
Typical trench cross-sections **[Required]**	129 & 130 of 141
Bolted manholes **[Required]**	129 of 141
Sewer Service lateral standard details **[Required]**	129 of 141
Clean-out at end of line **[Required, if used]**	129 of 141
Baffles or concrete encasement for shock/erosion protection **[Required, if flow velocity of any section of pipe >10 fps]**	N/A of 141
Detail showing Wastewater Line/Water Line Crossing **[Required, if crossings are proposed]**	130 of 141
Mandrel detail or specifications showing compliance with 30 TAC §217.57(b) and (c) **[Required, if Flexible Pipe is used]**	130 of 141

Standard Details	*Shown on Sheet*
Drop manholes **[Required, if a pipe entering a manhole is more than 24 inches above manhole invert]**	129 of 141

36. ☒ All organized sewage collection system general construction notes (TCEQ-0596) are included on the construction plans for this sewage collection system.

37. ☒ All proposed sewer lines will be sufficiently surveyed/staked to allow an assessment prior to TCEQ executive director approval. If the alignments of the proposed sewer lines are not walkable on that date, the application will be deemed incomplete and returned.

    ☒ Survey staking was completed on this date: July 16, 2025

38. ☒ Submit one (1) original and one (1) copy of the application, plus additional copies as needed for each affected incorporated city, groundwater conservation district, and county in which the project will be located. The TCEQ will distribute the additional copies to these jurisdictions. The copies must be submitted to the appropriate regional office.

39. ☒ Any modification of this SCS application will require TCEQ approval, prior to construction, and may require submission of a revised application, with appropriate fees.

Signature

To the best of my knowledge, the responses to this form accurately reflect all information requested concerning the proposed regulated activities and methods to protect the Edwards Aquifer. This **Organized Sewage Collection System Application** is hereby submitted for TCEQ review and executive director approval. The system was designed in accordance with the requirements of 30 TAC §213.5(c) and 30 TAC §217 and prepared by:

Print Name of Licensed Professional Engineer: Christine Campbell, P.E.

Date: 07/18/2025

Place engineer's seal here:

Signature of Licensed Professional Engineer:

Christine Campbell

Appendix A-Flow Velocity Table

Flow Velocity (Flowing Full) All gravity sewer lines on the Edwards Aquifer Recharge Zone shall be designed and constructed with hydraulic slopes sufficient to give a velocity when flowing full of not less than 2.0 feet per second, and not greater than 10 feet per second. The grades shown in the following table are based on Manning's formula and an n factor of 0.013 and shall be the minimum and maximum acceptable slopes unless provisions are made otherwise.

Table 10 - Slope Velocity

Pipe Diameter(Inches)	*% Slope required for minimum flow velocity of 2.0 fps*	*% Slope which produces flow velocity of 10.0 fps*
6	0.50	12.35
8	0.33	8.40
10	0.25	6.23
12	0.20	4.88
15	0.15	3.62
18	0.11	2.83
21	0.09	2.30
24	0.08	1.93
27	0.06	1.65
30	0.055	1.43
33	0.05	1.26
36	0.045	1.12
39	0.04	1.01
>39	*	*

**For lines larger than 39 inches in diameter, the slope may be determined by Manning's formula (as shown below) to maintain a minimum velocity greater than 2.0 feet per second when flowing full and a maximum velocity less than 10 feet per second when flowing full.*

$$v = \frac{1.49}{n} \times R_h^{0.67} \times \sqrt{S}$$

Figure 1 - Manning's Formula

Where:

v = velocity (ft/sec)
n = Manning's roughness coefficient (0.013)
Rh = hydraulic radius (ft)
S = slope (ft/ft)

Attachment A - Engineering Design Report
Organized Sewage Collection System

Parkside on the River
Sections 11, 12A & 15A

CITY OF GEORGETOWN
WILLIAMSON COUNTY, TEXAS

July 18, 2025

HR Green Project No: 2403522

Prepared For:
HM Parkside Development, Inc.
P.O. Box 5397
Austin, Texas 78703

Prepared By:
HR Green Development TX, LLC
5508 Highway 290 West, Suite 150
Austin, Texas 78735
TBPE Firm No. F-16384

07/18/2025

TABLE OF CONTENTS

Introduction 1
Wastewater Collection System Design 1
Proposed Type of Pipe 2
6” SDR-26 Properties 2
8” SDR-26 Properties 2
Structural Calculations 2
Average Values of Modulus of Soil Reaction, E’ 3
Pipe Bedding Class and Modulus of Soil Reaction, E_b: 4
Prism Load Determination: 5
Live Load Determinations: 6
Allowable Buckling Pressure (6” PVC): 7
Installed Condition Buckling Pressure (6” PVC): 8
Allowable Buckling Pressure (8” PVC): 9
Installed Condition Buckling Pressure (8” PVC): 10
Wall Crushing (6” PVC): 11
Wall Crushing (8” PVC): 12
Leonhardt’s Zeta Factor – Deflection Analysis: 13
6” Pipe 13
8” Pipe 13
Pipe Stiffness: 14
6” Pipe 14
8” Pipe 14
Predicted Pipe Deflection 15
6” Pipe 15
8” Pipe 16
Pipe Strain 17
6” Pipe 17
8” Pipe 18

INTRODUCTION

The SCS and WPAP accompanying this submittal will serve the Parkside on the River Sections 11, 12A & 15A Subdivision.

Parkside on the River is a master-planned subdivision located in Williamson County, Texas, within the City of Georgetown's ETJ. The Sections 11, 12A & 15A property consists of 55.16 acres and 99 single-family lots located within the Edwards Aquifer recharge zone and contributing zone, west of Parkside Parkway, northeast of Parkside on the River GTII – Phase 1, and north of Parkside on the River Sections 9B & 10B.

The proposed site's SCS system will be composed of a total of 6,763 LF of wastewater line. There is 5,236 LF of 8-inch (8") 115 psi (ASTM D3034) gravity wastewater pipe, 160 LF of 8-inch (8") pressure rated (ASTM D2241) wastewater pipe, and 1,367 LF of 6-inch (6") gravity wastewater pipe. The proposed improvements will tie into the existing 18" Barton Tributary Wastewater Line. This line connects to the existing San Gabriel River Interceptor, and ultimately flows to the Dove Springs WWTP for treatment. The Dove Springs Wastewater Treatment Plant has the capacity to adequately treat the proposed peak flow.

WASTEWATER COLLECTION SYSTEM DESIGN

The wastewater collection system was designed based on a wastewater flow rate of 250 gallons per day per LUE per City of Georgetown's Criteria Manual. Based on the flow rate and slopes of the system, 8-inch gravity sewer pipe was selected for the collection system.

The SCS and waterline system will maintain 9 feet of separation as required. Although, the SCS and waterline system has eight (8) water crossings within 9 feet of separation due to design constraints at the intersections.

Line	Station or Closest Point	Crossing or Parallel	Horizontal Separation Distance	Vertical Separation Distance
WWL A	1+83.09	Crossing	-	5.13'
WWL B	7+59.19	Crossing	-	7.55'
WWL C	1+59.48	Crossing	-	2.39"
WWL C	3+73.63	Crossing	-	7.77'
WWL C	13+96.51	Crossing	-	5.90'
WWL D	10+46.95	Crossing	-	6.32'
WWL E	1+25.00	Crossing	-	4.56'
WWL G	1+65.56	Crossing	-	4.51'

When wastewater lines are within 9 feet of a water line, the wastewater pipe will be 20 LF of pressure rated pipe (ASTM D2241) embedded in cement stabilized sand centered on the pipe's utility crossing. For further detail, refer to the Wastewater Plan & Profiles in the Construction Plans.

The gravity sewage collection system (all PVC SDR-26) in Parkside on the River Sections 11, 12A & 15A will remain within the TCEQ minimums for pipe slopes: 0.33 – 8.40% for 8-inch pipe. The proposed slopes on the site range from 0.50% – 8.40% for 8-inch pipe. According to Manning's equation for an 8" pipe with a manning's coefficient of 0.013 at a 0.50% slope, the velocity at full flow is 2.44 feet per second. The velocity of an 8" pipe at a slope of 8.40% is 10.00 feet per second. All gravity sewage pipe in this project will be greater than 2.0 feet per second and less than 10 feet per second when flowing full.

The gravity sewage collection system six-inch (6") PVC SDR-26 pipe used for service laterals will remain within the TCEQ minimum 0.50% and maximum of 12.35%.

PROPOSED TYPE OF PIPE

6" SDR-26 PROPERTIES

Pipe Compliance:	ASTM D-3034
Joint Compliance:	ASTM D-3212
Minimum Tensile Strength (psi):	7,000
Minimum Modulus of Elasticity (psi):	400,000
Average Inner Diameter (inch):	5.793
Average Outer Diameter (inch):	6.275
Wall Thickness (inch):	0.241
Approximate Trenching Width (feet):	5.583
Minimum Pipe Depth (Cover) used (feet):	9.73'
Maximum Pipe Depth (Cover) used (feet):	14.19'

8" SDR-26 PROPERTIES

Pipe Compliance:	ASTM D-3034
Joint Compliance:	ASTM D-3212
Minimum Tensile Strength (psi):	7,000
Minimum Modulus of Elasticity (psi):	400,000
Average Inner Diameter (inch):	7.754
Average Outer Diameter (inch):	8.400
Wall Thickness (inch):	0.323
Approximate Trenching Width (feet):	5.583
Minimum Pipe Depth (Cover) used (feet):	5.69'
Maximum Pipe Depth (Cover) used (feet):	31.13'

STRUCTURAL CALCULATIONS

Since the deepest wastewater pipe is greater than 17 feet below ground, structural calculations have been prepared for this SCS application. The structural calculations for 6" and 8" PVC pipe are as follows. Please note, most pipes proposed in the SCS application meet the following requirements listed in 30 TAC 217.53(k)(4):

(A) Open trench design – All pipe construction will be open trench.
(B) Flexible pipe with a pipe stiffness of 46 psi or greater – The pipe stiffness for 8" SDR ASTM D3034 is greater than 46 psi.
(C) Buried 17 feet or less – Gravity pipes are buried greater than 17 feet. The deepest pipes have been evaluated for structural calculations.
(D) Diameter of 12 inches or less - All proposed wastewater pipe is less than 12 inches.
(E) Modulus of soil reaction for the in-situ soil of 200 psi or greater – The modulus of soil reaction is greater than 200 psi.
(F) No effects on a pipe due to live loads – The ring deflection of flexible pipe relieves the pipe of the major portion of the vertical soil load; which is then carried by the surrounding soil through the mechanism of an arching action over the pipe.
(G) A unit weight of soil of 120 pounds per cubic foot or less – The unit weight of soil will be 120 pcf.
(H) A typical pipe trench width of 36 inches or greater - Trench width of 67 inches will be used for manhole or wastewater lines deeper than 17 feet.

AVERAGE VALUES OF MODULUS OF SOIL REACTION, E'

TABLE 2

AVERAGE VALUES OF MODULUS OF SOIL REACTION, E'
(For Initial Flexible Pipe Deflection)

Soil type-pipe bedding material (Unified Classification System[a]) (1)	E' for Degree of Compaction of Pipe Zone Backfill, psi			
	Loose (2)	Slight <85% Proctor, <40% relative density (3)	Moderate 85%-95% Proctor, 40%-70% relative density (4)	High >95% Proctor, >70% relative density (5)
Fine-grained Soils (LL > 50)[b] Soils with medium to high plasticity CH, MH, CH-MH	No data available; consult a competent soils engineer; Otherwise use E' = 0			
Fine-grained Soils (LL < 50) Soils with medium to no plasticity CL, ML ML-CL, with less than 25% coarse-grained particles	50	200	400	1,000
Fine-grained Soils (LL < 50) Soils with medium to no plasticity CL, ML, ML-CL, with more than 25% coarse-grained particles Coarse-grained Soils with Fines GM, GC, SM, SC[c] contains more than 12% fines	100	400	1,000	2,000
Coarse-grained Soils with Little or No Fines GW, GP, SW, SP[c] contains less than 12% fines	200	1,000	2,000	3,000
Crushed Rock	1,000	3,000	3,000	3,000
Accuracy in Terms of Percentage Deflection[d]	±2	±2	±1	±0.5

[a]ASTM Designation D 2487, USBR Designation E-3.
[b]LL = Liquid limit.
[c]Or any borderline soil beginning with one of these symbols (i.e., GM-GC, GC-SC).
[d]For ±1% accuracy and predicted deflection of 3%, actual deflection would be between 2% and 4%.
Note: Values applicable only for fills less than 50 ft (15 m). Table does not include any safety factor. For use in predicting initial deflections only, appropriate Deflection Lag Factor must be applied for long-term deflections. If bedding falls on the borderline between two compaction categories, select lower E' value or average the two values. Percentage Proctor based on laboratory maximum dry density from test standards using about 12,500 ft-lb/cu ft (598,000 J/m^3) (ASTM D 698, AASHTO T-99, USBR Designation E-11). 1 psi = 6.9 kN/m^2.

SOURCE: "Soil Reaction for Buried Flexible Pipe," by Amster K. Howard, U.S. Bureau of Reclamation, Denver, Colorado. Reprinted with Permission from American Society of Civil Engineers Journal of Geotechnical Engineering Division, January 1977, pp. 33-43.

Modulus of Soil Reaction for the in-situ soil is determined to be 200 psi based on fine-grained soils (CL) with slight to moderate proctor.

PIPE BEDDING CLASS AND MODULUS OF SOIL REACTION, E_b:

TABLE 7 - DESCRIPTION OF MATERIAL CLASSIFICATION

Class	Type	Soil Group Symbol	Description ASTM D 2487	Percentage Passing Sieve Sizes			Atterberg Limits		Coefficients	
				1.5 in (40 mm)	No. 4 (4.75 mm)	No. 200 (0.075 mm)	LL	PI	Uniformity C_u	Curvature C_c
IA	Manufactured Aggregates: open-graded, clean.	None	Angular, crushed stone or rock, crushed gravel, broken coral, crushed slag, cinders or shells; large void content, contain little or no fines	100%	≤10%	<5%	Non Plastic			
IB	Manufactured, Processed Aggregates; dense-graded, clean.	None	Angular, crushed stone (or other Class IA materials) and stone/sand mixtures with gradations selected to minimize migration of adjacent soils; contain little or no fines	100%	≤50%	<5%	Non Plastic			
II	Coarse-Grained Soils, clean	GW	Well-graded gravels and gravel-sand mixtures; little or no fines	100%	<50% of Coarse Fraction	<5%	Non Plastic		>4	1 to 3
		GP	Poorly-graded gravels and gravel-sand mixtures; little or no fines						<4	<1 or >3
		SW	Well-graded sands and gravelly sands; little or no fines		>50% of Coarse Fraction				>6	1 to 3
		SP	Poorly-graded sands and gravelly sands; little or no fines						<6	<1 or >3
	Coarse-Grained Soils, borderline clean to w/fines	e.g. GW-GC, SP-SM.	Sands and gravels which are border-line between clean and with fines	100%	Vanes	5% to 12%	Non Plastic		Same as for GW, GP, SW and SP	
III	Coarse-Grained Soils With Fines	GM	Silty gravels, gravel-sand-silt mixtures	100%	<50% of Coarse Fraction	>12% to <50%		<4 or <"A" Line		
		GC	Clayey gravels, gravel-sand-clay mixtures					<7 and >"A" Line		
		SM	Silty sands, sand-silt mixtures		>50% of Coarse Fraction			>4 or <"A" Line		
		SC	Clayey sands, sand-clay mixtures					>7 and >"A" Line		
IVA[A]	Fine-Grained Soils (inorganic)	ML	Inorganic silts and very fine sands, rock flour, silty or clayey fine sands, silts with slight plasticity	100%	100%	>50%	<50	<4 or <"A" Line		
		CL	Inorganic clays of low to medium plasticity, gravely clays, sandy clays, silty clays, lean clays					>7 and >"A" Line		
IVB	Fine-Grained Soils (inorganic)	MH	Inorganic silts, micaceous or diatomaceous fine sandy or silty soils, elastic silts	100%	100%	>50%	>50	<"A" Line		
		CH	Inorganic clays of high plasticity, fat clays					>"A" Line		
V	Organic Soils	OL	Organic silts and organic silty clays of low plasticity	100%	100%	>50%	<50	<4 or <"A" Line		
		OH	Organic clays of medium to high plasticity, organic silts				>50	<"A" Line		
	Highly Organic	PT	Peat and other high organic soils							

[A]Includes Test Method ASTM D 2487 borderline classifications and dual symbols depending on plasticity index and liquid limits.
NOTE: "Coarse Fraction" as used in this table is defined as material retained on a No. 200 sieve.

SOURCE: ASTM D 2321 AND AASHTO M43, AND AS PUBLISHED ON TABLE 7, IN DEFLECTION: THE PIPE/SOIL MECHANISM UNI-TR-1-97, UNI-BELL PVC PIPE ASSOCIATION, PG. 24

Per TCEQ guidelines, a contractor is allowed to use ASTM D 2321 Bedding Class 1A, 1B, II, or III at no less than 85% compaction. The calculations in this Engineering Design Report reflect the use of Bedding Class III, at 85-95% compaction with an E_b value of 1,000 psi. This represents the worst-case bedding class a contractor can choose. All other bedding class options will provide an improved value for the zeta factor as well as pipe deflection.

PRISM LOAD DETERMINATION:

TABLE 3
PRISM LOAD (LBS/IN²)

$$P = \frac{w\,H}{144}$$

Height of Cover (ft)	Soil Wt. (lbs/ft³) 100	110	120	130	Height of Cover (ft)	Soil Wt. (lbs/ft³) 100	110	120	130
1	0.69	0.76	0.83	0.90	16	11.11	12.22	13.33	14.44
2	1.39	1.53	1.67	1.81	17	11.81	12.97	14.17	15.35
3	2.08	2.29	2.50	2.71	18	12.50	13.75	15.00	16.25
4	2.78	3.06	3.33	3.61	19	13.19	14.51	15.83	17.15
5	3.47	3.82	4.17	4.51	20	13.89	15.28	16.67	18.06
6	4.17	4.58	5.00	5.42	21	14.58	16.04	17.50	18.96
7	4.86	5.35	5.83	6.32	22	15.28	16.81	18.33	19.86
8	5.56	6.11	6.67	7.22	23	15.97	17.57	19.17	20.76
9	6.25	6.88	7.50	8.13	24	16.67	18.33	20.00	21.67
10	6.94	7.64	8.33	9.03	25	17.36	19.10	20.83	22.57
11	7.64	8.40	9.17	9.93	26	18.06	19.86	21.67	23.47
12	8.33	9.17	10.00	10.83	27	18.75	20.63	22.50	24.38
13	9.03	9.93	10.83	11.74	28	19.44	21.39	23.33	25.28
14	9.72	10.69	11.67	12.64	29	20.14	22.15	24.17	26.18
15	10.42	11.46	12.50	13.54	30	20.83	22.92	25.00	27.08

Prism load is the “dead load” or the pressure acting on the pipe by the weight of the soil column above a given section of the pipe. The following prism load columns are industry standards as referenced from Table 3 in Deflection: The Pipe/Soil Mechanism INI-TR-1-97, Uni-Bell Pipe Association, Pg. 13.

The prism loads are calculated using the Marston Theory of Loads and is calculated using the formula:

$$P = \frac{y_s * H}{144}$$, where y_s is the unit weight of the backfill material

6” Pipe: Based on the above table, at a maximum burial depth of 14.19’ and a backfill soil weight of 120 lbs/ft³, the prism load is approximately 11.83 psi.

8” Pipe: Based on the above table, at a maximum burial depth of 31.13’ and a backfill soil weight of 120 lbs/ft³, the prism load is approximately 25.94 psi.

LIVE LOAD DETERMINATIONS:

TABLE 4

LIVE LOADS ON PVC PIPE

Height of Cover (ft)	Live Load Transferred to Pipe, lb/in²			Height of Cover (ft)	Live Load Transferred to Pipe, lb/in²		
	Highway H20[1]	Railway E80[2]	Airport [3]		Highway H20[1]	Railway E80[2]	Airport [3]
1	12.50			14	*	4.17	3.06
2	5.56	26.39	13.14	16	*	3.47	2.29
3	4.17	23.61	12.28	18	*	2.78	1.91
4	2.78	18.40	11.27	20	*	2.08	1.53
5	1.74	16.67	10.09	22	*	1.91	1.14
6	1.39	15.63	8.79	24	*	1.74	1.05
7	1.22	12.15	7.85	26	*	1.39	*
8	0.69	11.11	6.93	28	*	1.04	*
10	*	7.64	6.09	30	*	0.69	*
12	*	5.56	4.76	35	*	*	*
				40	*	*	*

[1] Simulates 20 ton truck traffic + impact.
[2] Simulates 80,000 lb/ft railway load + impact.
[3] 180,000 lbs. dual tandem gear assembly. 26 inch spacing between tires and 66 inch center-to-center spacing between fore and aft tires under a rigid pavement 12 inches thick + impact.
* Negligible live load influence.

SOURCE: AASHTO H20 AND E80 LOADS AND AS PUBLISHED ON TABLE 4 IN DEFLECTION: THE PIPE/SOIL MECHANISM UNI-TR-1-197, UNI-BELL PVC PIPE ASSOCIATION PAGE 14.

The pipe depths of this project range from 5.69 feet to 31.13 feet. The streets in this project are not intended for heavy truck traffic.

Live Load for 5.69 feet (5.69') of cover is 1.50 psi in a highway condition. The roads within the subdivision are not designed or intended for highway conditions so this is considered a worst-case scenario for live loads.

The previous page discusses prism loads which is the dead load acting on the pipe due to the weight of the soil above the pipe. The deepest pipe in this system is approximately 31.13', thus, the prism load at that depth (25.94 psi) puts more pressure on the pipe than the live loading and prism loading combined (1.50 psi + 4.74 psi from Prism Load table on the previous page) at a minimum buried depth of 5.69'.

Since the pipes experience the most pressure at their deepest points, 31.13', it is not necessary to evaluate any other scenario.

ALLOWABLE BUCKLING PRESSURE (6" PVC):

Where:

q_a allowable buckling pressure, pound per inch square (psi)

h height of soil surface above top of pipe in inches (ft / in) = 14.19' / 170.28" max

B' Empirical coefficient of elastic support

E_b modulus of soil reaction for the bedding material (psi)

E modulus of elasticity for the pipe material (psi)

I moment of inertia of the pipe wall cross section per linear inch of pipe, $inch^4$/lineal inch = $inch^3$. For solid wall pipe, I can be calculated with equation 4. If the pipe used is not solid wall pipe (for example a pipe with a ribbed cross section), the proper moment of inertia formula must be obtained from the manufacturer.

t pipe structural wall thickness (in) = 0.241 in.

D mean pipe diameter (in) = 6.034 in.

Solving for the Empirical coefficient of elastic support, given by Luscher in 1966, as referenced on *Pg. 126 OF Moser, A.P., Buried Pipe Design. 2nd. Ed., McGraw-Hill:*

$$B' = \frac{4(h^2+Dh)}{1.5(2h+D)^2} = \frac{4(170.28^2+6.034*170.28)}{1.5(2*170.28+6.034)^2} = 0.67$$

$$I = \frac{t^3}{12} = \frac{0.241^3}{12} in^3 = 0.001166\ in^3$$

Using the Allowable Buckling Pressure Equation as shown in *Moser, A.P., Buried Pipe Design. 2nd. Ed., McGraw-Hill, Pg. 112*, and an initial factor of safety (FS) of 2.5, the Allowable Buckling Pressure is:

$$q_a = \frac{1}{FS} * \sqrt{32 * R_w * B' * E_b * \left(E * \frac{I}{D^3}\right)} psi$$

where Rw = 1 – 0.33 (hw / h)

$$q_a = \frac{1}{2.5} * \sqrt{32 * 1 * 0.67 * 1000 * \left(400{,}000 * \frac{0.001166}{6.034^3}\right)}\ psi = 85.13\ psi$$

INSTALLED CONDITION BUCKLING PRESSURE (6" PVC):

Where:

q_p buckling pressure applied, pound per inch square (psi)

h height of soil surface above top of pipe in inches (ft / in) = 14.19' / 170.28" max

γ_s Specific weight of soil (pcf)

γ_w Specific weight of water = 0.0361 (pci)

W_c Vertical Soil Load on the pipe per unit length (lb/Lin)

W_L Live Load as determined from chart

h_w Height of groundwater above pipe = 0

D mean pipe diameter (in) = 6.034 in

D_o outside pipe diameter (in) = 6.275 in

The Vertical Soil Load can be calculated using Equation 6.6 of *Uni-Bell's Handbook of PVC Pipe; Ch. VI Superimposed Loads on Buried Pipe, Pg. 183.*

$$Wc = h * y_s * D_o \frac{lb}{Lin}$$

where g_s = 120 pcf

$$Wc = 170.28 * \frac{120}{1728} * 6.275 \frac{lb}{Lin} = 74.20 \frac{lb}{Lin}$$

Using the equation on *Pg. 114 of Moser, A.P., Buried Pipe Design. 3rd Ed., McGraw-Hill*, Pressure Applied to Pipe under installed conditions at its deepest installed depth:

$$q_p = (\gamma_w * h_w + R_w * \frac{W_c}{D} + \frac{W_L}{D}) psi$$

where Rw = 1 – 0.33 (hw / h)

$$q_p = 0.0361 * 0 + 1 * \frac{74.20}{6.034} + \frac{0}{6.034} psi = 12.30\ psi$$

The pressure applied to the pipe under installed conditions is less than the Allowable Buckling Pressure therefore the design is adequate for installation.

ALLOWABLE BUCKLING PRESSURE (8" PVC):

Where:

q_a allowable buckling pressure, pound per inch square (psi)

h height of soil surface above top of pipe in inches (ft / in) = 31.13' / 373.56" max

B' Empirical coefficient of elastic support

E_b modulus of soil reaction for the bedding material (psi)

E modulus of elasticity for the pipe material (psi)

I moment of inertia of the pipe wall cross section per linear inch of pipe, $inch^4$/lineal inch = $inch^3$. For solid wall pipe, I can be calculated with equation 4. If the pipe used is not solid wall pipe (for example a pipe with a ribbed cross section), the proper moment of inertia formula must be obtained from the manufacturer.

t pipe structural wall thickness (in) = 0.323 in.

D mean pipe diameter (in) = 8.077 in.

Solving for the Empirical coefficient of elastic support, given by Luscher in 1966, as referenced on *Pg. 126 OF Moser, A.P., Buried Pipe Design. 2nd. Ed., McGraw-Hill:*

$$B' = \frac{4(h^2+Dh)}{1.5(2h+D)^2} = \frac{4(373.56^2+8.077*373.56)}{1.5(2*373.56+8.077)^2} = 0.67$$

$$I = \frac{t^3}{12} = \frac{0.323^3}{12}\,in^3 = 0.002808\,in^3$$

Using the Allowable Buckling Pressure Equation as shown in *Moser, A.P., Buried Pipe Design. 2nd. Ed., McGraw-Hill, Pg. 112*, and an initial factor of safety (FS) of 2.5, the Allowable Buckling Pressure is:

$$q_a = \frac{1}{FS} * \sqrt{32 * R_w * B' * E_b * \left(E * \frac{I}{D^3}\right)}\,psi$$

where Rw = 1 – 0.33 (hw / h)

$$q_a = \frac{1}{2.5} * \sqrt{32 * 1 * 0.67 * 1000 * \left(400{,}000 * \frac{0.002808}{8.077^3}\right)}\ psi = 85.30\,psi$$

INSTALLED CONDITION BUCKLING PRESSURE (8" PVC):

Where:

q_p buckling pressure applied, pound per inch square (psi)

h height of soil surface above top of pipe in inches (ft / in) = 31.13' / 373.56" max

γ_s Specific weight of soil (pcf)

γ_w Specific weight of water = 0.0361 (pci)

W_c Vertical Soil Load on the pipe per unit length (lb/Lin)

W_L Live Load as determined from chart

h_w Height of groundwater above pipe = 0

D mean pipe diameter (in) = 8.077 in

D_o outside pipe diameter (in) = 8.40 in

The Vertical Soil Load can be calculated using Equation 6.6 of *Uni-Bell's Handbook of PVC Pipe; Ch. VI Superimposed Loads on Buried Pipe, Pg. 183.*

$$Wc = h * y_s * D_o \frac{lb}{Lin}$$

where g_s = 120 pcf

$$Wc = 373.56 * \frac{120}{1728} * 8.40 \frac{lb}{Lin} = 217.91 \frac{lb}{Lin}$$

Using the equation on *Pg. 114 of Moser, A.P., Buried Pipe Design. 3rd Ed., McGraw-Hill*, Pressure Applied to Pipe under installed conditions at its deepest installed depth:

$$q_p = (\gamma_w * h_w + R_w * \frac{W_c}{D} + \frac{W_L}{D}) psi$$

where Rw = 1 – 0.33 (hw / h)

$$q_p = 0.0361 * 0 + 1 * \frac{217.91}{8.077} + \frac{0}{8.077} psi = 26.98\, psi$$

The pressure applied to the pipe under installed conditions is less than the Allowable Buckling Pressure therefore the design is adequate for installation.

WALL CRUSHING (6" PVC):

Where:

P_c Compressive stress or hydrostatic design basis (HDB). For typical PVC pipe assume 4,000 (psi)

A Surface area of the pipe wall, in^2/in = 0.241

γ_s Specific weight of soil (pcf) = 120 pcf

D_o outside pipe diameter (in) = 6.275 in

H Depth of burial (ft) from ground surface to crown of pipe

Using the Wall Crushing and Wall Thrust equations from *Plastic Pipe Design Manual published by Vylon Pipe, Pg. 14*, the wall crushing due to compressive stress can be found using the following:

P_c = T / A, where T = Thrust is calculated as T = P_y * D / 2

Substituting T into the thrust wall crushing equation:

$$P_c = \frac{P_y * D/2}{A} = \frac{P_y * D}{2 * A}$$

From the Marston equation determining the Prism Load (see previous section), substitute the equation for P_y:

$$P_c = \frac{y_s * H/144 * D}{2 * A}$$

$$288 * A * P_c = y_s * H * D$$

$$H = \frac{288 * P_c * A}{y_s * D}$$

$$H = \frac{288 * 4000 * 0.241}{120 * 6.275} = 369\ ft$$

The wall crushing depth of 369 feet far exceeds the maximum burial depth of 14.19 feet proposed in this project. Design is adequate for wall crushing.

Wall Crushing Depth for 6" Pipe = 369 feet

WALL CRUSHING (8" PVC):

Where:

P_c Compressive stress or hydrostatic design basis (HDB). For typical PVC pipe assume 4,000 (psi)

A Surface area of the pipe wall, in^2/in = 0.323

γ_s Specific weight of soil (pcf) = 120 pcf

D_o outside pipe diameter (in) = 8.40 in

H Depth of burial (ft) from ground surface to crown of pipe

Using the Wall Crushing and Wall Thrust equations from *Plastic Pipe Design Manual published by Vylon Pipe, Pg. 14*, the wall crushing due to compressive stress can be found using the following:

P_c = T / A, where T = Thrust is calculated as T = P_y * D / 2

Substituting T into the thrust wall crushing equation:

$$P_c = \frac{P_y * D/2}{A} = \frac{P_y * D}{2 * A}$$

From the Marston equation determining the Prism Load (see previous section), substitute the equation for P_y:

$$P_c = \frac{y_s * H/144 * D}{2 * A}$$

$$288 * A * P_c = y_s * H * D$$

$$H = \frac{288 * P_c * A}{y_s * D}$$

$$H = \frac{288 * 4000 * 0.323}{120 * 8.40} = 369\ ft$$

The wall crushing depth of 369 feet far exceeds the maximum burial depth of 31.13 feet proposed in this project. Design is adequate for wall crushing.

Wall Crushing Depth for 8" Pipe = 369 feet

LEONHARDT'S ZETA FACTOR – DEFLECTION ANALYSIS:

6" PIPE

The Leonhardt's Zeta Factor Equation can be calculated using Equation 7.37 of *Uni-Bell's Handbook of PVC Pipe, Ch. VII, Design of Buried PVC Pipe, Pg. 239.*

Where:

E' Modulus of soil reaction for in-situ material (psi) = 200 psi

E_b modulus of soil reaction for the bedding material (psi) = 1000 psi

B Trench Width, in = 67 in

D_o outside pipe diameter (in) = 6.275 in

$$zeta = \frac{1.44}{\mathcal{F} + [1.44 - \mathcal{F}] * \frac{E_b}{E'}}$$

$$\text{where } \mathcal{F} = \frac{\frac{B}{D_o} - 1}{1.154 + 0.4448[\frac{B}{D_o} - 1]} = 1.773$$

$$zeta = \frac{1.44}{1.773 + [1.44 - 1.773] * \frac{1000}{200}} = 13.28$$

8" PIPE

The Leonhardt's Zeta Factor Equation can be calculated using Equation 7.37 of *Uni-Bell's Handbook of PVC Pipe, Ch. VII, Design of Buried PVC Pipe, Pg. 239.*

Where:

E' Modulus of soil reaction for in-situ material (psi) = 200 psi

E_b modulus of soil reaction for the bedding material (psi) = 1000 psi

B Trench Width, in = 67 in

D_o outside pipe diameter (in) = 8.40 in

$$zeta = \frac{1.44}{\mathcal{F} + [1.44 - \mathcal{F}] * \frac{E_b}{E'}}$$

$$\text{where } \mathcal{F} = \frac{\frac{B}{D_o} - 1}{1.154 + 0.4448[\frac{B}{D_o} - 1]} = 1.639$$

$$zeta = \frac{1.44}{1.639 + [1.44 - 1.639] * \frac{1000}{200}} = 2.23$$

PIPE STIFFNESS:

6" PIPE

Using Equation B.1 in 30 TAC 217.53(k)(3), to calculate pipe stiffness:

Where:

PS Pipe Stiffness in lbs per in^2 (psi); for SDR26, pipe stiffness = 115

C Conversion factor; 0.80

RCS Ring Stiffness constant

D mean pipe diameter (in) = 6.034 in.

$$PS = C * RSC * \frac{8.337}{D}$$

$$RSC = \frac{PS}{C * \frac{8.337}{D}} = \frac{115}{0.80 * \frac{8.337}{6.034}} = 104.04$$

8" PIPE

Using Equation B.1 in 30 TAC 217.53(k)(3), to calculate pipe stiffness:

Where:

PS Pipe Stiffness in lbs per in^2 (psi); for SDR26, pipe stiffness = 115

C Conversion factor; 0.80

RCS Ring Stiffness constant

D mean pipe diameter (in) = 8.077 in.

$$PS = C * RSC * \frac{8.337}{D}$$

$$RSC = \frac{PS}{C * \frac{8.337}{D}} = \frac{115}{0.80 * \frac{8.337}{8.077}} = 139.27$$

PREDICTED PIPE DEFLECTION

6" PIPE

Using the Modified Iowa Equation, referenced in the *Uni-Bell PVC Pipe Association as Equation 14 of Deflection: The Pipe/Soil Mechanism UNI-TR-1-97*, the predicted pipe deflection can be calculated as follows:

Where:

%ΔY/D Predicted % vertical deflection under load

P Prism load, psi = 11.83 psi

K Bedding angle constant, assumed to = 0.096

W' Live Load, psi = 0 at max depth (negligible per table)

DR Dimension Ration = 26

E Modulus of tensile elasticity of the pipe material, psi = 400,000

E' Modulus of soil Reaction (zeta x Eb) = 13,283 psi

DL Deflection Lag Factor = 1.5

Using the Modified Iowa Equation:

$$(\%)\frac{\Delta Y}{D} = \frac{DL * K * P + K * W') * 100}{\left[\frac{2E}{3 * (DR-1)^3}\right] + 0.061 * E'}\%$$

$$(\%)\frac{\Delta Y}{D} = \frac{(1.5 * 0.096 * 11.83 + 0.096 * 0) * 100}{\left[\frac{2 * 400{,}000}{3 * (26-1)^3}\right] + 0.061 * 13{,}283}\% = 0.206\%$$

The anticipated deflection of 0.206% is less than the industry standard of 5%, therefore the pipe design is acceptable.

A deflection factor of 1.0 is typically used for new pipes. A deflection factor of 1.5 represents a conservative factor to take into account its 50-year life.

8" PIPE

Using the Modified Iowa Equation, referenced in the *Uni-Bell PVC Pipe Association as Equation 14 of Deflection: The Pipe/Soil Mechanism UNI-TR-1-97*, the predicted pipe deflection can be calculated as follows:

Where:

%ΔY/D Predicted % vertical deflection under load

P Prism load, psi = 25.94 psi

K Bedding angle constant, assumed to = 0.096

W' Live Load, psi = 0 at max depth (negligible per table)

DR Dimension Ration = 26

E Modulus of tensile elasticity of the pipe material, psi = 400,000

E' Modulus of soil Reaction (zeta x Eb) = 2,233 psi

DL Deflection Lag Factor = 1.5

Using the Modified Iowa Equation:

$$(\%)\frac{\Delta Y}{D} = \frac{DL * K * P + K * W') * 100}{\left[\frac{2E}{3 * (DR - 1)^3}\right] + 0.061 * E'}\%$$

$$(\%)\frac{\Delta Y}{D} = \frac{(1.5 * 0.096 * 25.94 + 0.096 * 0) * 100}{\left[\frac{2 * 400{,}000}{3 * (26 - 1)^3}\right] + 0.061 * 2{,}233}\% = 2.44\%$$

The anticipated deflection of 2.44% is less than the industry standard of 5%, therefore the pipe design is acceptable.

A deflection factor of 1.0 is typically used for new pipes. A deflection factor of 1.5 represents a conservative factor to take into account its 50-year life.

PIPE STRAIN

6" PIPE

Pipe strain is the elongation of the pipe over the original length of the pipe. Under normal loading conditions, the variable that affects the elongation or straining of the pipe stems from either the flexure or deflection of the pipe within the bedding material or hoop stress within the pipe wall. These are calculated below using Equation 15 and 16 found in *Deflection: The Pipe/Soil Mechanism UNI-TR-1-97, referenced by Uni-Bell PVC Pipe Association:*

Where:

ε_h Max. Pipe strain due to Hoop Stress, in/in

ε_f Max. Pipe strain due to Ring Deflection, in/in

ΔY Vertical decrease in diameter from previous deflection equation, 0.01291 in

P Pressure on the pipe (Live + Prism Loads), psi = 11.83 psi

t pipe structural wall thickness (in) = 0.241 in.

E Modulus of tensile elasticity of the pipe material, psi = 400,000

Do outside pipe diameter (in) = 6.275 in

DR Dimension Ration = 26

Hoop Stress

$$\varepsilon_h = \frac{P * D}{2 * t * E} = \frac{11.83 * 6.275}{2 * 0.241 * 400{,}000} in/in = 3.8E^{-4}\ in/in$$

Ring Deflection

$$\varepsilon_f = \frac{t}{D}\left[\frac{3 * {\Delta Y}/{D}}{1 - 2 * {\Delta Y}/{D}}\right] in/in = \frac{1}{DR}\left[\frac{3 * \Delta Y}{D - 2 * \Delta Y}\right] in/in$$

$$\varepsilon_f = \frac{1}{26}\left[\frac{3 * 0.01291}{6.275 - 2 * 0.01291}\right] = 2.4E^{-4}\ in/in$$

8" PIPE

Pipe strain is the elongation of the pipe over the original length of the pipe. Under normal loading conditions, the variable that affects the elongation or straining of the pipe stems from either the flexure or deflection of the pipe within the bedding material or hoop stress within the pipe wall. These are calculated below using Equation 15 and 16 found in *Deflection: The Pipe/Soil Mechanism UNI-TR-1-97, referenced by Uni-Bell PVC Pipe Association:*

Where:

ε_h Max. Pipe strain due to Hoop Stress, in/in

ε_f Max. Pipe strain due to Ring Deflection, in/in

ΔY Vertical decrease in diameter from previous deflection equation, 0.20475 in

P Pressure on the pipe (Live + Prism Loads), psi = 25.94 psi

t pipe structural wall thickness (in) = 0.323 in.

E Modulus of tensile elasticity of the pipe material, psi = 400,000

Do outside pipe diameter (in) = 8.40 in

DR Dimension Ration = 26

Hoop Stress

$$\varepsilon_h = \frac{P * D}{2 * t * E} = \frac{25.94 * 8.40}{2 * 0.323 * 400{,}000} in/in = 8.4E^{-4}\ in/in$$

Ring Deflection

$$\varepsilon_f = \frac{t}{D}\left[\frac{3 * {\Delta Y}/{D}}{1 - 2 * {\Delta Y}/{D}}\right] in/in = \frac{1}{DR}\left[\frac{3 * \Delta Y}{D - 2 * \Delta Y}\right] in/in$$

$$\varepsilon_f = \frac{1}{26}\left[\frac{3 * 0.20475}{8.40 - 2 * 0.20475}\right] in/in = 2.96E^{-3}\ in/in$$

Should you have any questions regarding this submittal, please email me at christine.campbell@hrgreen.com or call at 512-872-6696.

Sincerely,

Christine Campbell, P.E.
HR Green Development TX, LLC
TBPE FIRM #16384

TABLE 2 – MANHOLES AND CLEANOUTS (CONTINUED)

Line	*Shown on Sheet*	*Station*	*Manhole or Clean-out?*
C2	122 OF 141	3+48.63	MH
C3	122 OF 141	8+11.71	MH
C4	123 OF 141	9+54.41	MH
C5	123 OF 141	11+10.95	MH
C6	123 OF 141	12+95.23	MH
C7	123 OF 141	14+95.26	MH
D1	124 OF 141	3+39.35	MH
D2	124 OF 141	4+33.62	MH
D3	124 OF 141	5+35.38	MH
D4	124 OF 141	6+37.15	MH
D5	124 OF 141	7+38.91	MH
D6	125 OF 141	8+40.68	MH
D7	125 OF 141	9+31.91	MH
D8	125 OF 141	10+23.20	MH
D9	125 OF 141	11+24.97	MH
D10	125 OF 141	12+26.73	MH
D11	125 OF 141	13+28.49	MH
D12	125 OF 141	16+29.33	MH
E1	126 OF 141	2+28.50	MH
E2	126 OF 141	3+11.09	MH
E3	126 OF 141	4+88.35	MH
E4	126 OF 141	5+88.68	MH
E5	126 OF 141	6+82.10	MH
F1	127 OF 141	2+28.97	MH
G1	128 OF 141	1+87.34	MH

*continued from table on scs application

Parkside on the River Sections 11-12A-15A - Wastewater Line - Flow Calculation & Pipe Sizing

WASTEWATER FLOWS

Project Name: Parkside on the River Sections 11-12A-15A

Project Number: 2403522

Date Prepared: 07/11/2025

Design Parameters		
SF Residents per Unit	2.5	per
Consumption Per Capita	70	gpd
Dry Weather Infiltration	30	gpcd
Wet Weather Infiltration	1000	gpd/acre
Manning Coefficient	0.013	

Line	Manhole		Comments	LUE's		Cumulative LUE's	Population	Cumulative Population	Area (ac)		Cumulative Area (ac)	Dry Weather Flow							Wet Weather Flow				Design Flow			Pipe		Full Capacity		Peak Wastewater Flow Condition (WWF)					
												Average Dry Weather Flow (AvgDWF)			Dry Weather Factor	Peak Dry Weather Flow (DWF)			Rainfall dependent Infiltration & Inflow (RDII)	Peak Wet Weather Flow (WWF)			MAX WW	TRIBUTARY	TOTAL	Pipe Size	Pipe Slope	Full Pipe Velocity	Full Pipe Flow						
				OWN	TRIBUTARY				OWN	TRIBUTARY		gpd	gpm	cfs		gpd	gpm	cfs	gpd	gpd	gpm	cfs	cfs	cfs	cfs	in	%	fps	cfs	q/Q	v/V	y/D	Depth	Velocity	Efficiency
A	A6	A5	6 LOTS OF SECTION 11	6		6	15	15	1.54		1.54	1,500	1.0	0.00	4.51	6,760	4.7	0.01	1,541	8,301	5.8	0.01	0.01		0.01	8	5.50	8.14	2.84	0.01	0.32	0.07	0.6	2.61	7%
	A5	A4	4 LOTS OF SECTION 11	4		10	10	25	0.97		0.97	2,500	1.7	0.00	4.34	10,853	7.5	0.02	968	11,822	8.2	0.02	0.02		0.02	8	7.25	9.35	3.26	0.01	0.32	0.07	0.6	3.00	7%
	A4	A3	2 LOTS OF SECTION 11	2		12	5	30	0.49		1.46	3,000	2.1	0.00	4.28	12,852	8.9	0.02	1,458	14,310	9.9	0.02	0.02		0.02	8	7.25	9.35	3.26	0.01	0.32	0.07	0.6	3.00	7%
	A3	A2	5 LOTS OF SECTION 11	5		17	13	43	1.20		2.66	4,300	3.0	0.01	4.17	17,941	12.5	0.03	2,658	20,600	14.3	0.03	0.03		0.03	8	6.50	8.85	3.09	0.02	0.40	0.10	0.8	3.50	10%
	A2	A1	0 LOTS OF SECTION 11	0		17	0	43	0.25		2.91	4,300	3.0	0.01	4.17	17,941	12.5	0.03	2,907	20,849	14.5	0.03	0.03		0.03	8	2.25	5.21	1.82	0.02	0.40	0.10	0.8	2.06	10%
	A1	EX-A	0 LOTS OF SECTION 11	0		17	0	43	0.06		2.72	4,300	3.0	0.01	4.17	17,941	12.5	0.03	2,718	20,660	14.3	0.03	0.03		0.03	8	8.00	9.82	3.43	0.01	0.32	0.07	0.6	3.15	7%
B	B3	B2	6 LOTS OF SECTION 11	6		6	15	15	1.88		1.88	1,500	1.0	0.00	4.51	6,760	4.7	0.01	1,877	8,637	6.0	0.01	0.01		0.01	8	8.00	9.82	3.43	0.01	0.32	0.07	0.6	3.15	7%
	B2	B1	4 LOTS OF SECTION 11	4		10	10	25	1.49		3.36	2,500	1.7	0.00	4.34	10,853	7.5	0.02	3,365	14,218	9.9	0.02	0.02		0.02	8	3.00	6.01	2.10	0.02	0.40	0.10	0.8	2.38	10%
	B1	EX-B	0 LOTS OF SECTION 11	0		10	0	25	0.09		3.45	2,500	1.7	0.00	4.34	10,853	7.5	0.02	3,455	14,308	9.9	0.02	0.02		0.02	8	3.00	6.01	2.10	0.02	0.40	0.10	0.8	2.38	10%
C	C7	C6	4 LOTS OF SECTION 12	4		4	10	10	1.32		1.32	1,000	0.7	0.00	4.64	4,643	3.2	0.01	1,316	5,959	4.1	0.01	0.01		0.01	8	0.50	2.45	0.86	0.02	0.40	0.10	0.8	0.97	10%
	C6	C5	4 LOTS OF SECTION 12	4		8	10	20	1.25		2.56	2,000	1.4	0.00	4.41	8,826	6.1	0.01	2,565	11,390	7.9	0.02	0.02		0.02	8	3.00	6.01	2.10	0.01	0.32	0.07	0.6	1.93	7%
	C5	C4	4 LOTS OF SECTION 12	4		12	10	30	1.21		3.77	3,000	2.1	0.00	4.28	12,852	8.9	0.02	3,774	16,625	11.5	0.03	0.03		0.03	8	8.00	9.82	3.43	0.01	0.32	0.07	0.6	3.15	7%
	C4	C3	0 LOTS OF SECTION 12	0		12	0	30	0.20		3.97	3,000	2.1	0.00	4.28	12,852	8.9	0.02	3,975	16,826	11.7	0.03	0.03		0.03	8	8.00	9.82	3.43	0.01	0.32	0.07	0.6	3.15	7%
	C3	C2	11 LOTS OF SECTION 12	11		23	28	58	2.95		6.92	5,800	4.0	0.01	4.08	23,676	16.4	0.04	6,921	30,596	21.2	0.05	0.05		0.05	8	8.00	9.82	3.43	0.02	0.40	0.10	0.8	3.88	10%
	C2	C1	0 LOTS OF SECTION 12 & WWL D	0	49	72	0	180	0.15	15.91	22.98	18,000	12.5	0.03	3.76	67,631	47.0	0.10	22,981	90,612	62.9	0.14	0.14		0.14	8	7.87	9.74	3.40	0.05	0.52	0.15	1.2	5.07	15%
	C1	EX-C	0 LOTS OF SECTION 12	0		72	0	180	0.23		23.21	18,000	12.5	0.03	3.76	67,631	47.0	0.10	23,213	90,844	63.1	0.14	0.14		0.14	8	8.15	9.91	3.46	0.04	0.49	0.14	1.1	4.83	14%
D	D13	D12	8 LOTS OF SECTION 12	8		8	20	20	2.21		2.21	2,000	1.4	0.00	4.41	8,826	6.1	0.01	2,212	11,038	7.7	0.02	0.02		0.02	8	3.62	6.60	2.31	0.01	0.32	0.07	0.6	2.12	7%
	D12	D11	2 LOTS OF SECTION 12	2		10	5	25	0.54		2.75	2,500	1.7	0.00	4.34	10,853	7.5	0.02	2,752	13,606	9.4	0.02	0.02		0.02	8	8.00	9.82	3.43	0.01	0.32	0.07	0.6	3.15	7%
	D11	D10	1 LOT OF SECTION 12	1		11	3	28	0.41		3.16	2,800	1.9	0.00	4.31	12,055	8.4	0.02	3,165	15,220	10.6	0.02	0.02		0.02	8	8.00	9.82	3.43	0.01	0.32	0.07	0.6	3.15	7%
	D10	D9	1 LOT OF SECTION 12	1		12	3	30	0.39		3.55	3,000	2.1	0.00	4.28	12,852	8.9	0.02	3,551	16,402	11.4	0.02	0.02		0.02	8	8.00	9.82	3.43	0.01	0.32	0.07	0.6	3.15	7%
	D9	D8	2 LOTS OF SECTION 12 & WWL F	2	6	20	5	50	0.63	2.74	6.92	5,000	3.5	0.01	4.13	20,633	14.3	0.03	6,923	27,556	19.1	0.04	0.04		0.04	8	8.00	9.82	3.43	0.02	0.40	0.10	0.8	3.88	10%
	D8	D7	0 LOTS OF SECTION 12	0		20	0	50	0.09		7.02	5,000	3.5	0.01	4.13	20,633	14.3	0.03	7,016	27,649	19.2	0.04	0.04		0.04	8	0.50	2.45	0.86	0.05	0.52	0.15	1.2	1.28	15%
	D7	D6	2 LOTS OF SECTION 12	2		22	5	55	0.68		7.70	5,500	3.8	0.01	4.10	22,539	15.7	0.03	7,699	30,237	21.0	0.05	0.05		0.05	8	3.00	6.01	2.10	0.03	0.45	0.12	0.9	2.69	12%
	D6	D5	2 LOTS OF SECTION 12	2		24	5	60	0.56		8.26	6,000	4.2	0.01	4.07	24,431	17.0	0.04	8,257	32,689	22.7	0.05	0.05		0.05	8	3.00	6.01	2.10	0.03	0.45	0.12	0.9	2.69	12%
	D5	D4	3 LOTS OF SECTION 12	3		27	8	68	0.90		9.15	6,800	4.7	0.01	4.03	27,436	19.1	0.04	9,154	36,590	25.4	0.06	0.06		0.06	8	1.00	3.47	1.21	0.05	0.52	0.15	1.2	1.81	15%
	D4	D3	0 LOTS OF SECTION 12	0		27	0	68	0.11		9.27	6,800	4.7	0.01	4.03	27,436	19.1	0.04	9,265	36,702	25.5	0.06	0.06		0.06	8	1.00	3.47	1.21	0.05	0.52	0.15	1.2	1.81	15%
	D3	D2	2 LOTS OF SECTION 12	2		29	5	73	0.53		9.80	7,300	5.1	0.01	4.01	29,301	20.3	0.04	9,796	39,097	27.2	0.06	0.06		0.06	8	1.00	3.47	1.21	0.05	0.52	0.15	1.2	1.81	15%
	D2	D1	2 LOTS OF SECTION 12 & WWL E	2	15	46	5	115	0.52	4.67	14.99	11,500	8.0	0.02	3.88	44,649	31.0	0.07	14,989	59,638	41.4	0.09	0.09		0.09	8	1.00	3.47	1.21	0.08	0.60	0.19	1.5	2.08	19%
	D1	C2	3 LOTS OF SECTION 12	3		49	8	123	0.92		15.91	12,300	8.5	0.02	3.86	47,521	33.0	0.07	15,910	63,431	44.0	0.10	0.10		0.10	8	6.31	8.72	3.04	0.04	0.49	0.14	1.1	4.25	14%
E	E5	E4	4 LOTS OF SECTION 12	4		4	10	10	1.53		1.53	1,000	0.7	0.00	4.64	4,643	3.2	0.01	1,535	6,177	4.3	0.01	0.01		0.01	8	7.00	9.18	3.21	0.01	0.32	0.07	0.6	2.95	7%
	E4	E3	2 LOTS OF SECTION 12	2		6	5	15	0.63		2.17	1,500	1.0	0.00	4.51	6,760	4.7	0.01	2,169	8,929	6.2	0.01	0.01		0.01	8	7.00	9.18	3.21	0.01	0.32	0.07	0.6	2.95	7%
	E3	E2	4 LOTS OF SECTION 12	4		10	10	25	1.05		3.22	2,500	1.7	0.00	4.34	10,853	7.5	0.02	3,223	14,076	9.8	0.02	0.02		0.02	8	8.00	9.82	3.43	0.01	0.32	0.07	0.6	3.15	7%
	E2	E1	4 LOTS OF SECTION 12	4		14	10	35	1.04		4.26	3,500	2.4	0.01	4.24	14,825	10.3	0.02	4,260	19,085	13.3	0.03	0.03		0.03	8	8.00	9.82	3.43	0.01	0.32	0.07	0.6	3.15	7%
	E1	D2	1 LOT OF SECTION 12	1		15	3	38	0.41		4.67	3,800	2.6	0.01	4.21	15,999	11.1	0.02	4,672	20,671	14.4	0.03	0.03		0.03	8	1.50	4.25	1.48	0.03	0.45	0.12	0.9	1.90	12%
F	F1	D8	6 LOTS OF SECTION 12	6		6	15	15	2.74		2.74	1,500	1.0	0.00	4.51	6,760	4.7	0.01	2,740	9,500	6.6	0.01	0.01		0.01	8	0.50	2.45	0.86	0.02	0.40	0.10	0.8	0.97	10%
G	G1	EX-G	0 LOTS OF SECTION 15	0		0	0	0	0.06		0.06	0	0.0	0.00	0.00	0	0.0	0.00	60	60	0.0	0.00	0.00		0.00	8	0.50	2.45	0.86	0.01	0.32	0.07	0.6	0.79	7%
H	H1	EX-H	0 LOTS OF SECTION 15	0		0	0	0	0.08		0.08	0	0.0	0.00	0.00	0	0.0	0.00	80	80	0.1	0.00	0.00		0.00	8	0.50	2.45	0.86	0.01	0.32	0.07	0.6	0.79	7%

Temporary Stormwater Section

Texas Commission on Environmental Quality

for Regulated Activities on the Edwards Aquifer Recharge Zone and Relating to 30 TAC §213.5(b)(4)(A), (B), (D)(I) and (G); Effective June 1, 1999

To ensure that the application is administratively complete, confirm that all fields in the form are complete, verify that all requested information is provided, consistently reference the same site and contact person in all forms in the application, and ensure forms are signed by the appropriate party.

Note: Including all the information requested in the form and attachments contributes to more streamlined technical reviews.

Signature

To the best of my knowledge, the responses to this form accurately reflect all information requested concerning the proposed regulated activities and methods to protect the Edwards Aquifer. This **Temporary Stormwater Section** is hereby submitted for TCEQ review and executive director approval. The application was prepared by:

Print Name of Customer/Agent: Christine Campbell, P.E.

Date: 07/18/2025

Signature of Customer/Agent:

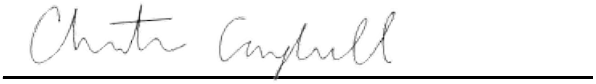

Regulated Entity Name: Parkside on the River Sections 11, 12A & 15A

Project Information

Potential Sources of Contamination

Examples: Fuel storage and use, chemical storage and use, use of asphaltic products, construction vehicles tracking onto public roads, and existing solid waste.

1. Fuels for construction equipment and hazardous substances which will be used during construction:

   ☐ The following fuels and/or hazardous substances will be stored on the site: _____

   These fuels and/or hazardous substances will be stored in:

   ☐ Aboveground storage tanks with a cumulative storage capacity of less than 250 gallons will be stored on the site for less than one (1) year.

☐ Aboveground storage tanks with a cumulative storage capacity between 250 gallons and 499 gallons will be stored on the site for less than one (1) year.

☐ Aboveground storage tanks with a cumulative storage capacity of 500 gallons or more will be stored on the site. An Aboveground Storage Tank Facility Plan application must be submitted to the appropriate regional office of the TCEQ prior to moving the tanks onto the project.

☒ Fuels and hazardous substances will not be stored on the site.

2. ☒ **Attachment A - Spill Response Actions**. A site specific description of the measures to be taken to contain any spill of hydrocarbons or hazardous substances is attached.

3. ☒ Temporary aboveground storage tank systems of 250 gallons or more cumulative storage capacity must be located a minimum horizontal distance of 150 feet from any domestic, industrial, irrigation, or public water supply well, or other sensitive feature.

4. ☒ **Attachment B - Potential Sources of Contamination**. A description of any activities or processes which may be a potential source of contamination affecting surface water quality is attached.

Sequence of Construction

5. ☒ **Attachment C - Sequence of Major Activities**. A description of the sequence of major activities which will disturb soils for major portions of the site (grubbing, excavation, grading, utilities, and infrastructure installation) is attached.

   ☒ For each activity described, an estimate (in acres) of the total area of the site to be disturbed by each activity is given.

   ☐ For each activity described, include a description of appropriate temporary control measures and the general timing (or sequence) during the construction process that the measures will be implemented.

6. ☒ Name the receiving water(s) at or near the site which will be disturbed or which will receive discharges from disturbed areas of the project: San Gabriel River

Temporary Best Management Practices (TBMPs)

Erosion control examples: tree protection, interceptor swales, level spreaders, outlet stabilization, blankets or matting, mulch, and sod. Sediment control examples: stabilized construction exit, silt fence, filter dikes, rock berms, buffer strips, sediment traps, and sediment basins. Please refer to the Technical Guidance Manual for guidelines and specifications. All structural BMPs must be shown on the site plan.

7. ☒ **Attachment D – Temporary Best Management Practices and Measures**. TBMPs and measures will prevent pollution of surface water, groundwater, and stormwater. The construction-phase BMPs for erosion and sediment controls have been designed to retain sediment on site to the extent practicable. The following information is attached:

☒ A description of how BMPs and measures will prevent pollution of surface water, groundwater or stormwater that originates upgradient from the site and flows across the site.

☒ A description of how BMPs and measures will prevent pollution of surface water or groundwater that originates on-site or flows off site, including pollution caused by contaminated stormwater runoff from the site.

☒ A description of how BMPs and measures will prevent pollutants from entering surface streams, sensitive features, or the aquifer.

☒ A description of how, to the maximum extent practicable, BMPs and measures will maintain flow to naturally-occurring sensitive features identified in either the geologic assessment, TCEQ inspections, or during excavation, blasting, or construction.

8. ☒ The temporary sealing of a naturally-occurring sensitive feature which accepts recharge to the Edwards Aquifer as a temporary pollution abatement measure during active construction should be avoided.

☐ **Attachment E - Request to Temporarily Seal a Feature**. A request to temporarily seal a feature is attached. The request includes justification as to why no reasonable and practicable alternative exists for each feature.

☒ There will be no temporary sealing of naturally-occurring sensitive features on the site.

9. ☒ **Attachment F - Structural Practices**. A description of the structural practices that will be used to divert flows away from exposed soils, to store flows, or to otherwise limit runoff discharge of pollutants from exposed areas of the site is attached. Placement of structural practices in floodplains has been avoided.

10. ☒ **Attachment G - Drainage Area Map**. A drainage area map supporting the following requirements is attached:

☒ For areas that will have more than 10 acres within a common drainage area disturbed at one time, a sediment basin will be provided.

☐ For areas that will have more than 10 acres within a common drainage area disturbed at one time, a smaller sediment basin and/or sediment trap(s) will be used.

☐ For areas that will have more than 10 acres within a common drainage area disturbed at one time, a sediment basin or other equivalent controls are not attainable, but other TBMPs and measures will be used in combination to protect down slope and side slope boundaries of the construction area.

☐ There are no areas greater than 10 acres within a common drainage area that will be disturbed at one time. A smaller sediment basin and/or sediment trap(s) will be used in combination with other erosion and sediment controls within each disturbed drainage area.

☐ There are no areas greater than 10 acres within a common drainage area that will be disturbed at one time. Erosion and sediment controls other than sediment basins or sediment traps within each disturbed drainage area will be used.

11. ☒ **Attachment H - Temporary Sediment Pond(s) Plans and Calculations**. Temporary sediment pond or basin construction plans and design calculations for a proposed temporary BMP or measure have been prepared by or under the direct supervision of a Texas Licensed Professional Engineer. All construction plans and design information must be signed, sealed, and dated by the Texas Licensed Professional Engineer. Construction plans for the proposed temporary BMPs and measures are attached.

☐ N/A

12. ☒ **Attachment I - Inspection and Maintenance for BMPs.** A plan for the inspection of each temporary BMP(s) and measure(s) and for their timely maintenance, repairs, and, if necessary, retrofit is attached. A description of the documentation procedures, recordkeeping practices, and inspection frequency are included in the plan and are specific to the site and/or BMP.

13. ☒ All control measures must be properly selected, installed, and maintained in accordance with the manufacturer's specifications and good engineering practices. If periodic inspections by the applicant or the executive director, or other information indicate a control has been used inappropriately, or incorrectly, the applicant must replace or modify the control for site situations.

14. ☒ If sediment escapes the construction site, off-site accumulations of sediment must be removed at a frequency sufficient to minimize offsite impacts to water quality (e.g., fugitive sediment in street being washed into surface streams or sensitive features by the next rain).

15. ☒ Sediment must be removed from sediment traps or sedimentation ponds not later than when design capacity has been reduced by 50%. A permanent stake will be provided that can indicate when the sediment occupies 50% of the basin volume.

16. ☒ Litter, construction debris, and construction chemicals exposed to stormwater shall be prevented from becoming a pollutant source for stormwater discharges (e.g., screening outfalls, picked up daily).

Soil Stabilization Practices

Examples: establishment of temporary vegetation, establishment of permanent vegetation, mulching, geotextiles, sod stabilization, vegetative buffer strips, protection of trees, or preservation of mature vegetation.

17. ☒ **Attachment J - Schedule of Interim and Permanent Soil Stabilization Practices**. A schedule of the interim and permanent soil stabilization practices for the site is attached.

18. ☒ Records must be kept at the site of the dates when major grading activities occur, the dates when construction activities temporarily or permanently cease on a portion of the site, and the dates when stabilization measures are initiated.

19. ☒ Stabilization practices must be initiated as soon as practicable where construction activities have temporarily or permanently ceased.

Administrative Information

20. ☒ All structural controls will be inspected and maintained according to the submitted and approved operation and maintenance plan for the project.

21. ☒ If any geologic or manmade features, such as caves, faults, sinkholes, etc., are discovered, all regulated activities near the feature will be immediately suspended. The appropriate TCEQ Regional Office shall be immediately notified. Regulated activities must cease and not continue until the TCEQ has reviewed and approved the methods proposed to protect the aquifer from any adverse impacts.

22. ☒ Silt fences, diversion berms, and other temporary erosion and sediment controls will be constructed and maintained as appropriate to prevent pollutants from entering sensitive features discovered during construction.

ATTACHMENT A – SPILL RESPONSE ACTIONS

The objective of this section is to describe measures to prevent or reduce the discharge of pollutants to drainage systems or water courses. Measures include reducing the chance for spills, stopping the source of spills, containing and cleaning up spills, properly disposing of spill materials, and training employees.

The following practices will be followed for spill prevention and cleanup:

- Manufacturers' recommended methods for spill cleanup will be clearly posted and site personnel will be made aware of the procedures and the location of the information and cleanup supplies.
- Materials and equipment necessary for spill cleanup will be kept in the material storage area onsite. Equipment and materials will include but not be limited to brooms, dustpans, mops, rags, gloves, goggles, kitty litter, sand, sawdust, and plastic and metal trash containers specifically for this purpose.
- All spills will be cleaned up immediately after discovery.
- The spill area will be kept well-ventilated, and personnel will wear appropriate protective clothing to prevent injury from contact with a hazardous substance.
- Spills of toxic or hazardous material will be reported to the Owner and to the appropriate State or local government agency, regardless of the size.
- The spill prevention plan will be adjusted to include measures to prevent this type of spill from reoccurring and how to clean up the spill if there is another one. A description of the spill, what caused it, and the cleanup measures will also be included.
- The site superintendent responsible for the day-to-day site operations will be the spill prevention and cleanup coordinator. He will designate at least three other site personnel who will receive spill prevention and cleanup training. These individuals will each become responsible for a particular phase of prevention and cleanup. The names of responsible spill personnel will be posted in the material storage area and in the office trailer onsite.
- Any reportable quantity hydrocarbon or hazardous material spill should be reported to the TCEQ at the following 24-hour toll free number 1-800-832-8224.

For a spill of Reportable Quantity:

- Initial notification. Upon the determination that a reportable discharge or spill has occurred, the responsible person shall notify the National Response Center at (800) 424-8802 as soon as possible but not later than 24 hours after the discovery of the spill or discharge.
- Method of notification. The person responsible shall notify the agency in any reasonable manner, including by telephone, in person, or by any other method approved by the agency. In all cases, the initial notification shall provide, to the extent known, the information listed in subsection (d) of Title 30, Part I, Chapter 327, Rule §327.3. Notice provided under this section satisfies the federal requirement to notify the State Emergency Response Commission in the State of Texas.
- Notification of local government authorities. If the discharge or spill creates an imminent health threat, the person responsible shall immediately notify and cooperate with local emergency authorities. The party responsible will cooperate with the local emergency authority in providing support to implement appropriate notification and response actions. The local emergency authority, as necessary, will implement its emergency management plan, which may include notifying and evacuating affected persons. In the absence of a local emergency authority, the person responsible shall take reasonable measures to notify potentially affected people of the imminent health threat.
- As soon as possible, but no later than two (2) weeks after discovery of the spill or discharge, the Contractor shall reasonably attempt to notify the Owner (if identifiable) or Occupant of the property upon which the discharge or spill occurred as well as the occupants of any property that the Contractor believes is adversely affected.

More information on spill rules and appropriate responses is available on the TCEQ website at:
http://www.tceq.texas.gov /response/

Vehicle and Equipment Maintenance:

- If maintenance must occur onsite, use a designated area and a secondary containment, located away from drainage courses, to prevent the runoff of stormwater and the runoff of spills.
- Regularly inspect onsite vehicles and equipment for leaks and repair immediately.
- Check incoming vehicles and equipment (including delivery trucks, and employee and subcontractor vehicles) for leaking oil and fluids. Do not allow leaking vehicles or equipment onsite.
- Always use secondary containment, such as drain pan or drop cloth, to catch spills or leaks when removing or changing fluids.
  - Place drip pans or absorbent materials under paving equipment when not in use.
  - Use absorbent materials on small spills rather than hosing down or burying the spill. Remove the absorbent materials promptly and dispose of properly.
  - Promptly transfer used fluids to the proper waste or recycling drums. Do not leave full drip pans or other containers lying around.
  - Oil filters disposed of in trashcans or dumpsters can leak oil and pollute stormwater. Place the oil filter in a funnel over the waste oil-recycling drum to drain excess oil before disposal. Oil filters can also be recycled. Ask the oil supplier or recycler about recycling oil filters.
  - Store cracked batteries in a non-leaking secondary container. Do this with all cracked batteries even if you think all of the acid has drained out. If you drop a battery, treat it as if it is cracked. Put it into the containment area until you are sure it is not leaking.

ATTACHMENT B – POTENTIAL SOURCES OF CONTAMINATION

Once grading activities begin, erosion of bare soil during rainfall events is the most common source of contamination. Silt fences will be installed at the beginning of the grading operation to minimize the potential for transport of the soil offsite.

Asphalt products will be used on this project. After placement of asphalt, emulsion, or coatings, the applicant will be responsible for immediate cleanup should an unexpected rain occur. For the duration of the asphalt curing time, the applicant should maintain standby personnel and equipment to contain any asphalt wash-off should an unexpected rain occur.

During construction activities, potential sources of contamination would include petroleum products leaking from construction equipment. The contractor will be advised to keep the equipment in working order and report any spills per the spill response plan.

Other potential sources of contamination include hydraulic fluid and diesel fuel from mechanical equipment and vehicles, as well as paints and chemicals used on site. Any spills shall be handled according to the Spill Response Actions in Attachment A.

ATTACHMENT C – SEQUENCE OF MAJOR ACTIVITIES

The first activity of construction will be to install erosion control measures, consisting of silt fences, tree protection, storm drains, inlet protection, rock berms, and stabilized construction entrances. Temporary erosion control measures will remain in place throughout the duration of construction and will be required to be maintained by the contractor to ensure proper functionality, especially after storm events. All disturbed areas to remain pervious will be vegetated using the procedures detailed in the construction plans and all temporary erosion control measures will be removed upon revegetation. Construction activities associated with this application are expected to disturb approximately 51.42 acres of the site.

Major Construction Activities and Sequencing:

The major construction activities for this project will include and be sequenced as follows:

1. Established Best Management Practices shall consist of the following: silt fencing, rock berms, temporary spoils areas, concrete truck washout pits, and temporary construction entrances (Estimated area to be disturbed = 0.44 Acres). These items are to remain and be maintained throughout all construction activities.

2. Initial site mass grading operation including right-of-way and first grading. (Estimated area to be disturbed = 15.31 Acres)
3. Installation of utilities including storm, water, and wastewater (Estimated area to be disturbed = 1.88 Acres)
4. Construction of street/driveway pavement including backfill behind curbs (estimated area to be disturbed = 8.71 Acres)
5. Total Construction (estimated area to be disturbed = 51.42 Acres)
6. Final soil stabilization for the site and removal of temporary BMPs once the soil has been stabilized.

The contractor is responsible for implementing and maintaining the storm water pollution prevention plan which includes maintaining all the necessary erosion controls throughout construction.

ATTACHMENT D – TEMPORARY BEST MANAGEMENT PRACTICES AND MEASURES

As shown on the Construction Erosion Control Plans, temporary BMP practices and measures will include installing silt fences, inlet protection, rock berms, stabilized construction entrances, a concrete truck washout, and a temporary spoils area prior to beginning grading operations on the site. Temporary measures are intended to provide a method of slowing the upgradient flow, onsite flow or runoff from the construction site in order to allow sediment and suspended solids to settle out of the water. By containing the sediment and solids within the site, they will not enter surface streams and/or sensitive features. As a temporary BMP, silt fences will be installed to reduce pollutants. BMP measures utilized in this plan are intended to allow storm water to continue downstream after passing through for treatment.

Site Preparation:
The methodology for pollution prevention of all on-site stormwater will include a) the erection of silt fences along the downgradient boundary of the construction activities, b) installation of inlet protection at all inlets, c) installation of stabilized construction entrances to reduce the dispersion of sediment from the site, and d) installation of a construction staging area.

Construction:
All installed erosion control measures will be inspected, and if necessary, repaired before any additional construction begins, as well as periodically throughout the construction process. The contractor will be responsible for all maintenance of erosion control measures, as well as the installation of all remaining on-site control measures, including the concrete truck washout, as necessary.

ATTACHMENT E – REQUEST TO TEMPORARILY SEAL A FEATURE

There are no sensitive features on-site within Parkside on the River Sections 11, 12A & 15A as shown in the geologic assessment and construction plans. There will be no sealing of sensitive features on the site.

ATTACHMENT F – STRUCTURAL PRACTICES

The site flows and the upgradient run off will encounter batch detention ponds and Jellyfish.

ATTACHMENT G – DRAINAGE AREA MAPS

Refer to the construction plans attached.

ATTACHMENT H – TEMPORARY SEDIMENT POND(S) PLANS AND CALCULATIONS

The batch detention ponds will act as temporary and permanent sedimentation ponds. The proposed batch detention pond (BDP-01) provides 35,491 CF of water quality volume. The proposed batch detention pond (BDP-02) provides 66,371 CF of water quality volume.

The calculated temporary sedimentation pond volume required for BDP-01 is calculated below.
Calculation: Required Volume = (Rainfall Depth*Runoff Coefficient*Drainage Area*120%)
= 3.33 in. * 0.33 * 5.51 acres * 120%
= 26,375 CF

The calculated temporary sedimentation pond volume required for BDP-02 is calculated below.
Calculation: Required Volume = (Rainfall Depth*Runoff Coefficient*Drainage Area*120%)
= 2.20 in. * 0.37 * 15.58 acres * 120%
= 55,243 CF

ATTACHMENT I – INSPECTION AND MAINTENANCE FOR BMPS

See construction plans included with this application submittal.

Temporary Best Management Practices (BMPs) and measures will be used during construction to prevent pollution of groundwater, surface water and naturally occurring environmental features. Silt fences, inlet protection, rock berms, stabilized construction entrances, tree protection, concrete washout area, and a temporary spoils area will be installed prior to beginning construction and prior to commencement of any of the activities defined in the sequence of construction as Attachment C. Inspection and maintenance of the on-site controls shall be performed during the site clearing and rough grading process. Weekly inspections will be documented in an inspection report. The inspection reports will document maintenance activities, sediment removal, and any modifications to the erosion and sedimentation controls. The perimeter fence shall be regularly monitored to ensure that the buffers remain no-construction zones until the site work has been completed and authorization has been granted by the engineer. Refer to the construction plans attached for specific controls and details.

BMPs and measures will prevent pollution of surface water or groundwater that originates on site or flows off-site, including pollution caused by contaminated stormwater run-off from the site, and through the use of silt fences placed immediately downstream of disturbed areas and inlet protection at all inlets. To minimize destruction to any portion of the Recharge Zone, on-site perimeter silt fences will also be implemented for pertinent areas throughout the entirety of construction. The Contractor is expected to inspect the controls weekly and after significant rainfalls to ensure proper function. When silt accumulates six (6) inches in depth the Contractor shall promptly remove the silt from the controls.

BMPs and measures will prevent pollutants from entering surface streams or the aquifer by intercepting stormwater potentially carrying sediment and other pollutants. BMPs and measures will implement stabilized construction entrances, a construction stockpiling/staging area, and a concrete washout area to help minimize pollutant run-off and erosion generated during construction. Paved streets and driveways adjacent to these sites will be cleaned regularly to remove excess mud, dirt or rock tracked from the site. Sedimentation will be concentrated only in these areas for efficient maintenance. Water trucks will be on-site as necessary to aid be cleaned regularly to remove excess mud, dirt or rock tracked from the site. Sedimentation will be concentrated only in these areas for efficient maintenance. Water trucks will be on-site as necessary to aid in controlling dust. BMPs will be implemented to limit/prevent contaminated inflow from entering surface streams or the aquifer. These practices are to include the following measures: the use of silt fence and inlet protection. The fabricated silt fence barricade will provide help to reduce the likelihood of contaminated runoff from entering the aquifer. If any sensitive features are identified by TCEQ inspections, or during excavation or construction, measures appropriate to the sensitivity of the discovered feature will be enacted. No blasting is proposed.

Temporary Erosion and Sedimentation Notes:

1. The Contractor shall maintain, install erosion/sedimentation controls and tree/natural protective fencing prior to any site preparation work (clearing, grubbing or excavation).

2. The placement of erosion/sedimentation controls and tree/natural area protective fencing shall be in accordance with the TCEQ Technical Guidance Manual and the approved Erosion and Sedimentation Control Plan. No erosion controls shall be placed beyond the property lines of the site unless written permission has been obtained from adjacent property owners.
3. A pre-construction conference shall be held on-site with the Contractor, design engineer/permit applicant and Environmental Inspector after installation of the erosion/sedimentation and tree/natural area protection measures and prior to beginning any site preparation work. The Contractor shall notify the Environmental Inspector at least three (3) days prior to the meeting date.
4. Any major variation in materials or locations of controls or fences from those shown on the approved plans will require a revision and must be approved by the reviewing engineer, environmental specialist or city arborist as appropriate. Minor changes to be made as field revisions to the Erosion and Sedimentation Control Plan may be required by the Environmental Inspector during the course of construction to correct control inadequacies.
5. The Contractor is required to inspect the controls at weekly intervals and after significant rainfall events to ensure that they are functioning properly. The person(s) responsible for maintenance of controls shall immediately make any necessary repairs to damaged areas. Silt accumulation at controls must be removed when the depth reaches six (6) inches.
6. Prior to final acceptance by the City, haul roads and waterway crossing constructed for temporary Contractor access must be removed, accumulated sediment removed from the waterway and the area restored to the original grade and revegetated. All land clearing debris shall be disposed of in approved soil disposal sites.
7. All work must stop if a void in the rock substrate is discovered, which is one (1) square foot in total area, blows air from within the substrate, and/or consistently received water during any rain event. At this time it is the responsibility of the project manager to immediately contact an Environmental Inspector for further investigation.
8. All slopes shall be sodded or seeded with approved grass, grass mixtures or ground cover suitable to the area and season in which they are applied.
9. Silt fences, rock berms, sedimentation basins and similarly recognized techniques and materials shall be employed during construction to prevent point source sedimentation loading of downstream facilities. Such installation shall be regularly inspected for effectiveness. Additional measures may be required if, in the opinion of the City Engineer, they are warranted.
10. All temporary erosion control measures shall not be removed until final inspection and approval of the project by the engineer. It shall be the responsibility of the Contractor to maintain all temporary erosion control structures and to remove each structure as approved by the engineer.
11. Any dirt, mud, rocks, debris, etc., that is spilled, tracked, or otherwise deposited on any existing paved street shall be cleaned up immediately.

<u>Dewatering Operations</u>

1. Inspect and verify that activity-based BMPs are in place prior to the commencement of associated activities. While activities associated with the BMP area under way, inspect weekly to verify continued BMP implementation.
2. Inspect BMPs subject to non-stormwater discharges daily while non-stormwater discharges occur.
3. Unit-specific maintenance requirements are included with the description of each technology.
4. Sediment removed during the maintenance of a dewatering device may be either spread onsite and stabilized, or disposed of at a disposal site.
5. Sediment that is commingled with other pollutants must be disposed of in accordance with all applicable laws and regulations.

ATTACHMENT J – SCHEDULE OF INTERIM AND PERMANENT SOIL STABILIZATION PRACTICES

Contractors will ensure that existing vegetation is preserved where attainable and that disturbed portions of the site will be stabilized. Stabilization practices may include but are not limited to temporary seeding, permanent seeding, mulching, geotextiles, sodding, tree protection, preservation of natural vegetation and other appropriate measures. All slopes shall be sodded or seeded with approved grass, grass mixtures or ground cover suitable to the area and season in which they are applied. Except as noted below, stabilization shall be initiated as soon as practicable in portions of the site where construction activities have temporarily or permanently ceased, but in no case more than 14 days after the activity has temporarily or permanently ceased. Refer to the construction plans attached for the TCEQ Notes, the Existing Conditions & Tree Survey, and the Erosion & Sedimentation Control Plan.

Agent Authorization Form
For Required Signature
Edwards Aquifer Protection Program
Relating to 30 TAC Chapter 213
Effective June 1, 1999

I Blake Magee,
Print Name

President,
Title - Owner/President/Other

of HM Parkside Development, Inc.,
Corporation/Partnership/Entity Name

have authorized Christine Campbell, P.E.
Print Name of Agent/Engineer

of HR Green Development TX, LLC
Print Name of Firm

to represent and act on the behalf of the above named Corporation, Partnership, or Entity for the purpose of preparing and submitting this plan application to the Texas Commission on Environmental Quality (TCEQ) for the review and approval consideration of regulated activities.

I also understand that:

1. The applicant is responsible for compliance with 30 Texas Administrative Code Chapter 213 and any condition of the TCEQ's approval letter. The TCEQ is authorized to assess administrative penalties of up to $10,000 per day per violation.

2. For those submitting an application who are not the property owner, but who have the right to control and possess the property, additional authorization is required from the owner.

3. Application fees are due and payable at the time the application is submitted. The application fee must be sent to the TCEQ cashier or to the appropriate regional office. The application will not be considered until the correct fee is received by the commission.

4. A notarized copy of the Agent Authorization Form must be provided for the person preparing the application, and this form must accompany the completed application.

5. No person shall commence any regulated activity on the Edwards Aquifer Recharge Zone, Contributing Zone or Transition Zone until the appropriate application for the activity has been filed with and approved by the Executive Director.

SIGNATURE PAGE:

DocuSigned by:
Blake Magee
Applicant's Signature

6/5/2025
Date

THE STATE OF Texas §

County of Travis §

BEFORE ME, the undersigned authority, on this day personally appeared Blake Magee known to me to be the person whose name is subscribed to the foregoing instrument, and acknowledged to me that (s)he executed same for the purpose and consideration therein expressed.

GIVEN under my hand and seal of office on this 5th day of June 2025.

Amy Lynn Payne
NOTARY PUBLIC

AMY LYNN PAYNE
Notary ID #124190357
My Commission Expires
August 18, 2027

Amy Lynn Payne
Typed or Printed Name of Notary

MY COMMISSION EXPIRES: 8/18/27

Owner Authorization Form

Edwards Aquifer Protection Program

Instructions

Complete the following form by adding the requested information in the fields below. The form must be notarized for it to be considered complete. Attach it to other programmatic submittals required by 30 Texas Administrative Code (30 TAC), Chapter 213, and provide it to TCEQ's Edwards Aquifer Protection Program (EAPP) as part of your application.

If you have questions on how to fill out this form or about EAPP, please contact us by phone at 512-339-2929 or by e-mail at eapp@tceq.texas.gov.

Landowner Authorization

I, Blake Magee of HM Parkside, LP

am the owner of the property located at:

Parkside on the River Sections 11A, 12A, 15A & 15B, 56.78 acres in the Isaac Donagan Survey, Abs No. 178, the Joseph Thompson Survey, Abs No. 608, the W.E. Pate Survey, Abs No. 836, and the Daniel Medlock Survey, Abs No. 839 Williamson County, Texas

and am duly authorized in accordance with 30 TAC 213.4(c)(2) and 213.4(d)(1), or 30 TAC 213.23(c)(2) and 213.23(d), relating to the right to submit an application, signatory authority, and proof of authorized signatory.

I do hereby authorize HM Parkside Development, Inc.
To conduct TCEQ permitting for Parkside on the River Sections 11A, 12A, 15A & 15B
At Parkside on the River Sections 11A, 12A, 15A & 15B, 56.78 acres in the Isaac Donagan Survey, Abs No. 178, the Joseph Thompson Survey, Abs No. 608, the W.E. Pate Survey, Abs No. 836, and the Daniel Medlock Survey, Abs No. 839 Williamson County, Texas

Landowner Acknowledgement

I understand that HM Parkside, LP

Is ultimately responsible for the compliance with the approved or conditionally approved Edwards Aquifer protection plan and any special conditions of the approved plan through all phases of plan implementation even if the responsibility for compliance and the right to possess and control the property referenced in the application has been contractually assumed by another legal entity. I further understand that any failure to comply with any condition of the executive director's approval is a violation and subject to administrative rule or orders and penalties as provided under 30 TAC 213.10, relating to enforcement. Such violations may also be subject to civil penalties.

Landowner Signature

Blake J. Magee

Landowner Signature

7/9/25

Date

THE STATE § OF Texas

County § of Travis

BEFORE ME, the undersigned authority, on this day personally appeared

Blake Magee

known to me to be the person whose name is subscribed to the foregoing instrument and acknowledged to me that (s)he executed same for the purpose and consideration therein expressed.

GIVEN under my hand and seal of office on this 9th day of July 2025.

Amy Lynn Payne

NOTARY PUBLIC

AMY LYNN PAYNE
Notary ID #124190357
My Commission Expires
August 18, 2027

Amy Lynn Payne

MY COMMISSION EXPIRES: 8/18/27

Optional Attachments

Select All that apply:

☐ Lease Agreement

☐ Signed Contract

☐ Deed Restricted Easement

☐ Other legally binding documents

Application Fee Form

Texas Commission on Environmental Quality

Name of Proposed Regulated Entity: Parkside on the River Sections 11, 12A & 15A

Regulated Entity Location: Located west of Parkside Parkway, northeast of Parkside on the River GTII - Phase 1, and north of Parkside on the River Sections 9B & 10B.

Name of Customer: HM Parkside Development, Inc.

Contact Person: Blake Magee Phone: 512-481-0303

Customer Reference Number (if issued):CN 605674258

Regulated Entity Reference Number (if issued):RN _____

Austin Regional Office (3373)

☐ Hays ☐ Travis ☒ Williamson

San Antonio Regional Office (3362)

☐ Bexar ☐ Medina ☐ Uvalde

☐ Comal ☐ Kinney

Application fees must be paid by check, certified check, or money order, payable to the **Texas Commission on Environmental Quality**. Your canceled check will serve as your receipt. **This form must be submitted with your fee payment**. This payment is being submitted to:

☐ Austin Regional Office

☒ Mailed to: TCEQ - Cashier
Revenues Section
Mail Code 214
P.O. Box 13088
Austin, TX 78711-3088

☐ San Antonio Regional Office

☐ Overnight Delivery to: TCEQ - Cashier
12100 Park 35 Circle
Building A, 3rd Floor
Austin, TX 78753
(512)239-0357

Site Location (Check All That Apply):

☒ Recharge Zone ☒ Contributing Zone ☐ Transition Zone

Type of Plan	***Size***	***Fee Due***
Water Pollution Abatement Plan, Contributing Zone Plan: One Single Family Residential Dwelling	Acres	$
Water Pollution Abatement Plan, Contributing Zone Plan: Multiple Single Family Residential and Parks	Acres	$
Water Pollution Abatement Plan, Contributing Zone Plan: Non-residential	Acres	$
Sewage Collection System	6,763 L.F.	$ 3,381.50
Lift Stations without sewer lines	Acres	$
Underground or Aboveground Storage Tank Facility	Tanks	$
Piping System(s)(only)	Each	$
Exception	Each	$
Extension of Time	Each	$

Signature: Christa Caldwell Date: 07/18/2025

Application Fee Schedule

Texas Commission on Environmental Quality
Edwards Aquifer Protection Program 30 TAC Chapter 213 (effective 05/01/2008)

Water Pollution Abatement Plans and Modifications

Contributing Zone Plans and Modifications

Project	*Project Area in Acres*	*Fee*
One Single Family Residential Dwelling	< 5	$650
Multiple Single Family Residential and Parks	< 5 5 < 10 10 < 40 40 < 100 100 < 500 ≥ 500	$1,500 $3,000 $4,000 $6,500 $8,000 $10,000
Non-residential (Commercial, industrial, institutional, multi-family residential, schools, and other sites where regulated activities will occur)	< 1 1 < 5 5 < 10 10 < 40 40 < 100 ≥ 100	$3,000 $4,000 $5,000 $6,500 $8,000 $10,000

Organized Sewage Collection Systems and Modifications

Project	*Cost per Linear Foot*	*Minimum Fee-Maximum Fee*
Sewage Collection Systems	$0.50	$650 - $6,500

Underground and Aboveground Storage Tank System Facility Plans and Modifications

Project	*Cost per Tank or Piping System*	*Minimum Fee-Maximum Fee*
Underground and Aboveground Storage Tank Facility	$650	$650 - $6,500

Exception Requests

Project	*Fee*
Exception Request	$500

Extension of Time Requests

Project	***Fee***
Extension of Time Request	$150

TCEQ Core Data Form

TCEQ Use Only

For detailed instructions regarding completion of this form, please read the Core Data Form Instructions or call 512-239-5175.

SECTION I: General Information

1. Reason for Submission *(If other is checked please describe in space provided.)*

☒ New Permit, Registration or Authorization (*Core Data Form should be submitted with the program application.)*

☐ Renewal *(Core Data Form should be submitted with the renewal form)* ☐ Other

2. Customer Reference Number *(if issued)*	Follow this link to search for CN or RN numbers in Central Registry**	3. Regulated Entity Reference Number *(if issued)*
CN 605674258		RN

SECTION II: Customer Information

4. General Customer Information | **5. Effective Date for Customer Information Updates** (mm/dd/yyyy)

☐ New Customer ☐ Update to Customer Information ☐ Change in Regulated Entity Ownership

☐ Change in Legal Name (Verifiable with the Texas Secretary of State or Texas Comptroller of Public Accounts)

The Customer Name submitted here may be updated automatically based on what is current and active with the Texas Secretary of State (SOS) or Texas Comptroller of Public Accounts (CPA).

6. Customer Legal Name *(If an individual, print last name first: eg: Doe, John)* *If new Customer, enter previous Customer below:*

HM Parkside Development, Inc.

7. TX SOS/CPA Filing Number	8. TX State Tax ID (11 digits)	9. Federal Tax ID (9 digits)	10. DUNS Number *(if applicable)*
0803161900	32068900318		

11. Type of Customer: ☒ Corporation ☐ Individual Partnership: ☐ General ☐ Limited

Government: ☐ City ☐ County ☐ Federal ☐ State ☐ Other ☐ Sole Proprietorship ☐ Other:

12. Number of Employees
☒ 0-20 ☐ 21-100 ☐ 101-250 ☐ 251-500 ☐ 501 and higher

13. Independently Owned and Operated?
☒ Yes ☐ No

14. Customer Role (Proposed or Actual) – *as it relates to the Regulated Entity listed on this form. Please check one of the following:*

☒ Owner ☐ Operator ☐ Owner & Operator

☐ Occupational Licensee ☐ Responsible Party ☐ Voluntary Cleanup Applicant ☐ Other:

15. Mailing Address:

P.O. Box 5397

City	State	ZIP	ZIP + 4
Austin	TX	78763	

16. Country Mailing Information *(if outside USA)*

17. E-Mail Address *(if applicable)*

Blake@blakemageeco.com

18. Telephone Number	19. Extension or Code	20. Fax Number *(if applicable)*
(512) 481-0303		( ) -

SECTION III: Regulated Entity Information

21. General Regulated Entity Information *(If 'New Regulated Entity" is selected below this form should be accompanied by a permit application)*

☒ New Regulated Entity ☐ Update to Regulated Entity Name ☐ Update to Regulated Entity Information

The Regulated Entity Name submitted may be updated in order to meet TCEQ Agency Data Standards (removal of organizational endings such as Inc, LP, or LLC.)

22. Regulated Entity Name *(Enter name of the site where the regulated action is taking place.)*

Parkside on the River Sections 11, 12A & 15A

23. Street Address of the Regulated Entity: *(No PO Boxes)*	Located west of Parkside Parkway, northeast of Parkside on the River GTII - Phase 1, and north of Parkside on the River Sections 9B & 10B.							
	City	Georgetown	**State**	TX	**ZIP**	78628	**ZIP + 4**	
24. County	Williamson County							

Enter Physical Location Description if no street address is provided.

25. Description to Physical Location:	Located west of Parkside Parkway, northeast of Parkside on the River GTII - Phase 1, and north of Parkside on the River Sections 9B & 10B.

26. Nearest City	**State**	**Nearest ZIP Code**
Georgetown	TX	78628

27. Latitude (N) In Decimal:	30.619349	**28. Longitude (W) In Decimal:**	-97.760147

Degrees	Minutes	Seconds	Degrees	Minutes	Seconds
30	37	10N	97	45	37W

29. Primary SIC Code (4 digits)	**30. Secondary SIC Code** (4 digits)	**31. Primary NAICS Code** (5 or 6 digits)	**32. Secondary NAICS Code** (5 or 6 digits)
1521		236115	

33. What is the Primary Business of this entity? *(Do not repeat the SIC or NAICS description.)*

Land Development - Single Family Residential

34. Mailing Address:	**P.O. Box 5397**							
	City	**Austin**	**State**	**TX**	**ZIP**	**78763**	**ZIP + 4**	
35. E-Mail Address:	**blake@blakemageeco.com**							

36. Telephone Number	**37. Extension or Code**	**38. Fax Number** *(if applicable)*
(512) 481-0303		**( ) -**

39. TCEQ Programs and ID Numbers Check all Programs and write in the permits/registration numbers that will be affected by the updates submitted on this form. See the Core Data Form instructions for additional guidance.

☐ Dam Safety	☐ Districts	☒ Edwards Aquifer	☐ Emissions Inventory Air	☐ Industrial Hazardous Waste
☐ Municipal Solid Waste	☐ New Source Review Air	☐ OSSF	☐ Petroleum Storage Tank	☐ PWS
☐ Sludge	☐ Storm Water	☐ Title V Air	☐ Tires	☐ Used Oil
☐ Voluntary Cleanup	☐ Waste Water	☐ Wastewater Agriculture	☐ Water Rights	☐ Other:

SECTION IV: Preparer Information

40. Name:	Christine Campbell	**41. Title:**	Project Manager

42. Telephone Number	**43. Ext./Code**	**44. Fax Number**	**45. E-Mail Address**
(512 **)** 872-6696		**( ) -**	christine.campbell@hrgreen.com

SECTION V: Authorized Signature

46. By my signature below, I certify, to the best of my knowledge, that the information provided in this form is true and complete, and that I have signature authority to submit this form on behalf of the entity specified in Section II, Field 6 and/or as required for the updates to the ID numbers identified in field 39.

Company:	HR Green Development TX, LLC	**Job Title:**	Project Manager	
Name*(In Print)* **:**	Christine Campbell		**Phone:**	**(** 512 **)** 872-6696
Signature:	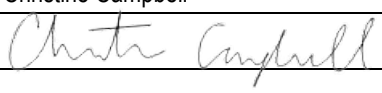		**Date:**	7/18/2025

CIVIL CONSTRUCTION PLANS

PARKSIDE ON THE RIVER MUNICIPAL UTILITY DISTRICT NO. 2

PARKSIDE ON THE RIVER
SECTIONS 11, 12A & 15A

GEORGETOWN, WILLIAMSON COUNTY, TEXAS

2025-XX-CON

INITIAL SUBMITTAL DATE: 07/07/2025

OWNER/DEVELOPER:

HM PARKSIDE, LP
P.O. BOX 5397
AUSTIN, TX 78763
(512) 481-0303
BLAKE@BLAKEMAGEECO.COM

ENGINEER/SURVEYOR:

HR GREEN DEVELOPMENT TX, LLC
5508 HIGHWAY 290 WEST, SUITE 150
AUSTIN, TEXAS 78735
512.872.6696
CHRISTINE.CAMPBELL@HRGREEN.COM

WATERSHED STATUS:

THIS SITE IS LOCATED IN THE SOUTH FORK OF THE SAN GABRIEL WATERSHED. THIS SITE IS LOCATED OVER THE EDWARDS AQUIFER RECHARGE ZONE AND CONTRIBUTING ZONE.

FLOODPLAIN INFORMATION:

PORTIONS OF THIS SUBDIVISION ARE WITHIN SPECIAL FLOOD HAZARD AREAS INUNDATED BY THE 100 YEAR FLOOD AS IDENTIFIED BY THE U.S. FEDERAL EMERGENCY MANAGEMENT AGENCY FLOOD INSURANCE RATE MAP NUMBER 48491C0460F, EFFECTIVE DATE DECEMBER 20, 2019. PORTIONS OF THIS SUBDIVISION ARE ALSO AFFECTED BY THE APPROVED CLOMR #15-06-2071R AND THE APPROVED LOMR #21-06-0115P.

LEGAL DESCRIPTION:

55.16 ACRES OF LAND IN THE JOSEPH THOMPSON SURVEY, ABSTRACT NO. 608, AND THE ISAAC DONAGAN SURVEY, ABSTRACT NO. 178, WILLIAMSON COUNTY, TEXAS; BEING A PORTION OF A CERTAIN CALLED 1,143.511 ACRE TRACT OF LAND, DESIGNATED AS TRACT 1, AND DESCRIBED IN THE SPECIAL WARRANTY DEED TO HM PARKSIDE, LP OF RECORD IN DOCUMENT NO. 2018114043, OFFICIAL PUBLIC RECORDS OF WILLIAMSON COUNTY, TEXAS, AND BEING ALL OF A CERTAIN CALLED 3.080 ACRE TRACT DESCRIBED IN THE QUITCLAIM DEED TO HM PARKSIDE LP OF RECORD IN DOCUMENT NO. 2020031564, OFFICIAL PUBLIC RECORDS OF WILLIAMSON COUNTY, TEXAS

BENCHMARK NOTE:

NAVD88 - GEOID12B

BM(1380)-321:
"SQUARE" CUT ON A CONCRETE BASE CORNER OF A WATER MAIN VENT PIPE.
ELEVATION = 806.86 FEET.

BM(1380)-322:
COTTON GIN SPINDLE SET IN A ROOT/BASE OF A 28-INCH LIVE OAK TREE (TREE TAG # 6776).
ELEVATION = 940.16 FEET.

BM(1380)-323:
MAG-NAIL WITH A WASHER STAMPED "HR GREEN" SET ON A CONCRETE ENCASEMENT OF A WASTEWATER MANHOLE.
ELEVATION = 797.76 FEET.

BM(1380)-335:
MAG-NAIL WITH A WASHER STAMPED "HR GREEN" SET ON THE CORNER A OF CONCRETE WATER VALVE ENCASEMENT.
ELEVATION = 779.15 FEET.

BM(1380)-337:
MAG-NAIL WITH A WASHER STAMPED "HR GREEN" SET ON THE NORTHEAST CORNER A OF CONCRETE WATER VAULT, NEAR INTERSECTING SOUTHEAST CORNER OF PARKSIDE PARKWAY AND BERMUDA DRIVE.
ELEVATION = 786.95 FEET.

BM(1380)-338:
MAG-NAIL WITH A WASHER STAMPED "HR GREEN" SET ON THE SOUTHWEST CORNER A OF CONCRETE ELECTRIC VAULT, NEAR INTERSECTING NORTHEAST CORNER OF PARKSIDE PARKWAY AND BERMUDA DRIVE.
ELEVATION = 790.85 FEET.

UTILITY PROVIDERS:

WATER & WASTEWATER: GEORGETOWN UTILITY SYSTEMS
300-1 INDUSTRIAL AVENUE, GEORGETOWN TX 78626
(512) 930-3555
GUS@GEORGETOWN.ORG

ELECTRIC: PEDERNALES ELECTRIC COOPERATIVE
(877) 372-0391

NO LIABILITY NOTE:

LIMITATION OF LIABILITY – HR GREEN DEVELOPMENT TX, LLC ASSUMES NO LIABILITY FOR ANY DESIGN OR DRAWINGS IN THESE PLANS, THAT ARE NOT SIGNED AND SEALED BY A PROFESSIONAL ENGINEER REGISTERED WITH THE TEXAS BOARD OF PROFESSIONAL ENGINEERS AS A MEMBER OF THIS FIRM (#F-16384). OTHER CONSULTANTS WORK SHOWN IN THESE PLANS IS THE RESPONSIBILITY OF THE CONSULTANT WHO PREPARED SUCH WORK, AND IS INCLUDED IN THIS PLAN SET FOR REVIEW REQUIREMENTS ONLY.

SITE PLAN COMPONENTS – ALL BUILDING AND STRUCTURAL IMPROVEMENTS SHOWN HEREON ARE SHOWN FOR CONCEPTUAL PURPOSES ONLY. HR GREEN DEVELOPMENT TX, LLC IS NOT RESPONSIBLE OR LIABLE FOR THE DESIGN OF BUILDING OR STRUCTURAL IMPROVEMENTS BY OTHERS.

STRUCTURAL COMPONENTS - ALL STRUCTURAL DESIGN IS THE RESPONSIBILITY OF THE OWNER'S STRUCTURAL ENGINEER. STRUCTURAL DESIGN SHOWN HEREON IS THE DESIGN OF THE OWNER'S STRUCTURAL ENGINEER.

PAVEMENT DESIGN – PAVEMENT DESIGN SHOWN HEREON IS THE DESIGN OF THE OWNER'S GEOTECHNICAL CONSULTANT. HR GREEN DEVELOPMENT TX, LLC MAKES NO WARRANTY OR GUARANTEE AS TO ITS SUITABILITY, AND ASSUMES NO LIABILITY THEREFOR.

NOTES:

1. THESE PLANS WERE PREPARED, SEALED, SIGNED AND DATED BY A TEXAS LICENSED PROFESSIONAL ENGINEER. THEREFORE BASED ON THE ENGINEER'S CONCURRENCE OF COMPLIANCE, THE PLANS FOR CONSTRUCTION OF THE PROPOSED PROJECT ARE HEREBY APPROVED SUBJECT TO THE STANDARD CONSTRUCTION SPECIFICATIONS AND DETAILS MANUAL AND ALL OTHER APPLICABLE CITY, STATE AND FEDERAL REQUIREMENTS AND CODES.
2. THIS PROJECT IS SUBJECT TO ALL CITY STANDARD SPECIFICATIONS AND DETAILS IN EFFECT AT THE TIME OF SUBMITTAL OF THE PROJECT TO THE CITY.
3. THE PROPERTY SUBJECT TO THIS APPLICATION IS SUBJECT TO THE WATER QUALITY REGULATIONS OF THE CITY OF GEORGETOWN.
4. A GEOLOGIC ASSESSMENT, IN ACCORDANCE WITH THE CITY OF GEORGETOWN WATER QUALITY REGULATIONS, WAS COMPLETED ON APRIL 2025. ANY SPRINGS AND STREAMS AS IDENTIFIED IN THE GEOLOGIC ASSESSMENT ARE SHOWN HEREIN.
5. THIS PROJECT IS SUBJECT TO THE 2011 UDC AND THE PARKSIDE ON THE RIVER DEVELOPMENT AGREEMENT (ORDINANCE NOS. 2019-69, 2020-84, 2021-40, 2024-18 AND RESPECTIVE DOCUMENT NOS. 2019117041, 2020162167, 2021082512, 2024031828).
6. ALL ELECTRIC DISTRIBUTION LINES AND INDIVIDUAL SERVICE LINES SHALL BE INSTALLED UNDERGROUND. IF OVERHEAD LINES EXISTED PRIOR TO UNDERGROUND INSTALLATION, SUCH POLES, GUY WIRES, AND RELATED STRUCTURES SHALL BE REMOVED FOLLOWING CONSTRUCTION OF THE UNDERGROUND INFRASTRUCTURE.

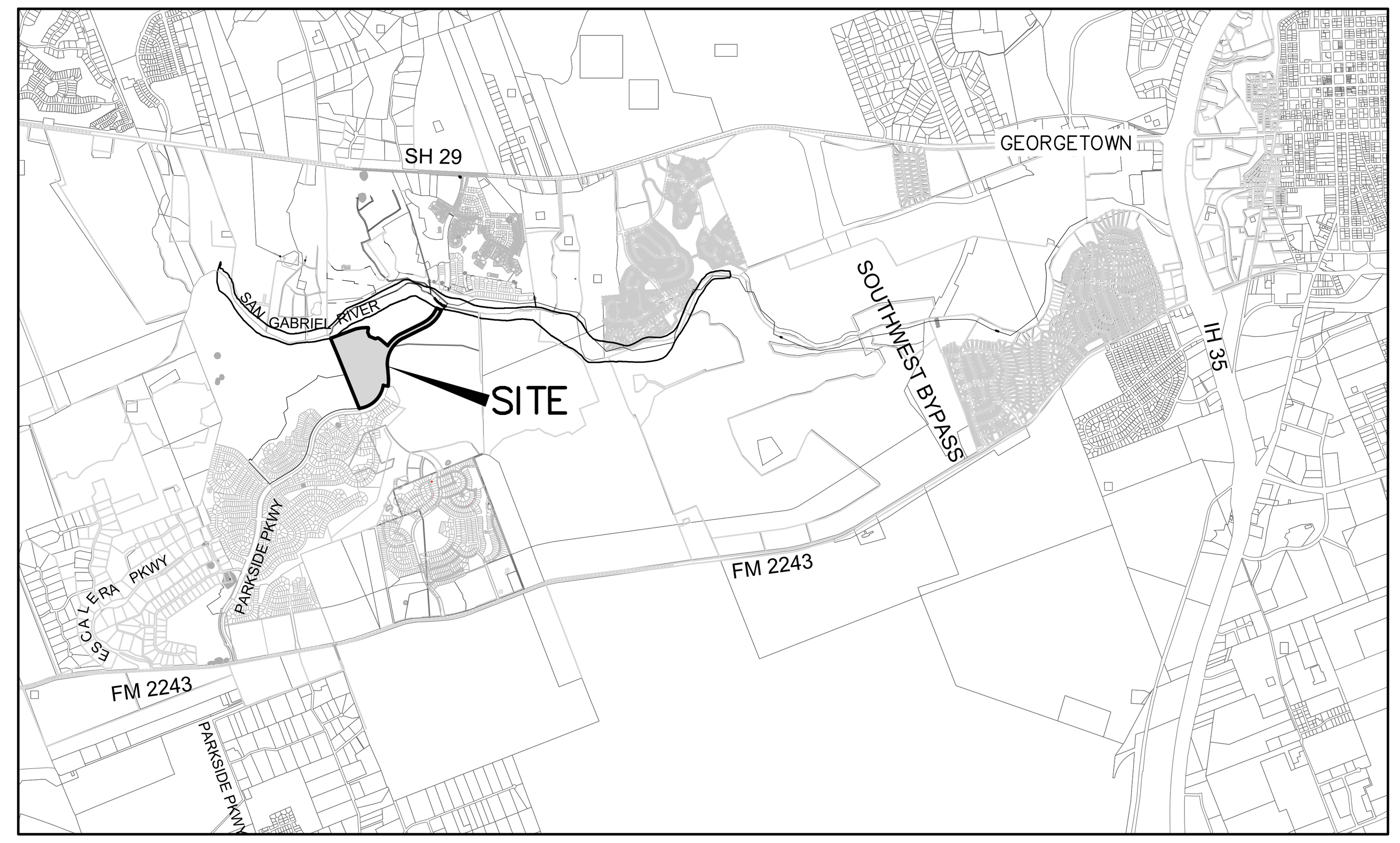

VICINITY MAP
SCALE: 1"=4000'

I, CHRISTINE CAMPBELL, P.E., CERTIFY THAT THESE ENGINEERING DOCUMENTS ARE COMPLETE, ACCURATE AND ADEQUATE FOR THE INTENDED PURPOSES, INCLUDING CONSTRUCTION, BUT ARE NOT AUTHORIZED FOR CONSTRUCTION PRIOR TO FORMAL CITY APPROVAL.

SUBMITTED BY : Christine Campbell 07/03/2025
CHRISTINE CAMPBELL, P.E. DATE
HR GREEN DEVELOPMENT TX, LLC
5508 HIGHWAY 290 WEST, SUITE 150
AUSTIN, TEXAS 78735
512.872.6696

STATE OF TEXAS
CHRISTINE N CAMPBELL
142536
LICENSED
PROFESSIONAL ENGINEER

REVIEWED FOR COMPLIANCE WITH

PARKSIDE ON THE RIVER M.U.D. NO. 2 DATE

REVIEW OF THE PLANS BY THE DISTRICT IS LIMITED TO DISTRICT OWNED FACILITIES AND DOES NOT INDICATE A REVIEW OF THE ADEQUACY OF THE DESIGN FOR THE FACILITIES. IN APPROVING THESE PLANS, THE DISTRICT MUST RELY ON THE ADEQUACY OF THE WORK OF THE DESIGN ENGINEER.

REVISIONS

Number	Date	Description

SHEET INDEX

SHEET NUMBER	SHEET TITLE	SHEET NUMBER	SHEET TITLE
1	COVER SHEET	72	PAVING DETAILS
2	GENERAL NOTES	73	EXISTING DRAINAGE AREA MAP
3	TCEQ NOTES	74	PROPOSED DRAINAGE AREA MAP
4	PRELIMINARY PLAT (1 OF 25)	75	INLET DRAINAGE AREA MAP
5	PRELIMINARY PLAT (2 OF 25)	76	INLET DRAINAGE CALCULATIONS
6	PRELIMINARY PLAT (3 OF 25)	77	WATER QUALITY DRAINAGE AREA MAP
7	PRELIMINARY PLAT (4 OF 25)	78	WATER QUALITY CALCULATIONS
8	PRELIMINARY PLAT (5 OF 25)	79	WATER QUALITY CALCULATIONS 2
9	PRELIMINARY PLAT (6 OF 25)	80	WATER QUALITY POND A
10	PRELIMINARY PLAT (7 OF 25)	81	POND A SECTIONS
11	PRELIMINARY PLAT (8 OF 25)	82	POND OUTLET A STRUCTURE DETAILS
12	PRELIMINARY PLAT (9 OF 25)	83	WATER QUALITY POND B
13	PRELIMINARY PLAT (10 OF 25)	84	POND B SECTIONS
14	PRELIMINARY PLAT (11 OF 25)	85	POND DETAILS
15	PRELIMINARY PLAT (12 OF 25)	86	JELLYFISH-01
16	PRELIMINARY PLAT (13 OF 25)	87	JELLYFISH-02
17	PRELIMINARY PLAT (14 OF 15)	88	JELLYFISH-03
18	PRELIMINARY PLAT (15 OF 25)	89	OVERALL STORM SEWER PLAN A
19	PRELIMINARY PLAT (16 OF 25)	90	OVERALL STORM SEWER PLAN B
20	PRELIMINARY PLAT (17 OF 25)	91	OVERALL STORM SEWER PLAN C
21	PRELIMINARY PLAT (18 OF 25)	92	OVERALL STORM SEWER PLAN D
22	PRELIMINARY PLAT (19 OF 25)	93	OVERALL STORM SEWER PLAN E
23	PRELIMINARY PLAT (20 OF 25)	94	OVERALL STORM SEWER PLAN F
24	PRELIMINARY PLAT (21 OF 25)	95	STORM A-1 & LATERALS PLAN & PROFILE
25	PRELIMINARY PLAT (22 OF 25)	96	STORM B-1 & LATERALS PLAN & PROFILE
26	PRELIMINARY PLAT (23 OF 25)	97	STORM C-1 PLAN & PROFILE
27	PRELIMINARY PLAT (24 OF 25)	98	STORM D-1 PLAN & PROFILE 1+00 - 8+00
28	PRELIMINARY PLAT (25 OF 25)	99	STORM D-1 PLAN & PROFILE 8+00 - END
29	EXISTING CONDITIONS & DEMOLITION PLAN A	100	STORM D-1 LATERALS D-1A - D-1D
30	EXISTING CONDITIONS & DEMOLITION PLAN B	101	STORM D-1 LATERALS D-1E - D-1J
31	PROPOSED CONDITIONS PLAN A	102	STORM D-2 PLAN & PROFILE
32	PROPOSED CONDITIONS PLAN B	103	STORM D-2 LATERALS D-2A - D-2E
33	TREE LIST	104	STORM D-3 & LATERALS PLAN & PROFILE
34	EROSION & SEDIMENTATION CONTROL PLAN A	105	STORM E-1 PLAN & PROFILE
35	EROSION & SEDIMENTATION CONTROL PLAN B	106	STORM F-1 PLAN & PROFILE
36	EROSION & SEDIMENTATION CONTROL PLAN C	107	STORM G-1 PLAN & PROFILE 1+00 - 8+00
37	EROSION & SEDIMENTATION CONTROL PLAN D	108	STORM G-1 PLAN & PROFILE 8+00 - END
38	EROSION & SEDIMENTATION CONTROL PLAN E	109	STORM G-1 LATERALS G-1A - G-1D
39	EROSION & SEDIMENTATION CONTROL PLAN F	110	STORM H-1 & STORM J-1 PLAN & PROFILE
40	EROSION & SEDIMENTATION CONTROL DETAILS	111	STORM I-1 PLAN & PROFILE
41	SIGNAGE, STRIPING & LIGHTING PLAN A	112	DRAINAGE DETAILS
42	SIGNAGE, STRIPING & LIGHTING PLAN B	113	DRAINAGE DETAILS
43	SIGNAGE, STRIPING & LIGHTING PLAN C	114	OVERALL WASTEWATER PLAN A
44	SIGNAGE, STRIPING & LIGHTING PLAN D	115	OVERALL WASTEWATER PLAN B
45	SIGNAGE, STRIPING & LIGHTING PLAN E	116	OVERALL WASTEWATER PLAN C
46	SIGNAGE, STRIPING & LIGHTING PLAN F	117	OVERALL WASTEWATER PLAN D
47	PARKSIDE PARKWAY INBOUND PLAN & PROFILE 1+00 - 9+75	118	OVERALL WASTEWATER PLAN E
48	PARKSIDE PARKWAY INBOUND PLAN & PROFILE 9+75 - 19+75	119	OVERALL WASTEWATER PLAN F
49	PARKSIDE PARKWAY INBOUND PLAN & PROFILE 19+75 - END	120	WWL A PLAN & PROFILE
50	PARKSIDE PARKWAY OUTBOUND PLAN & PROFILE 1+00 - 9+75	121	WWL B PLAN & PROFILE
51	PARKSIDE PARKWAY OUTBOUND PLAN & PROFILE 9+75 - 19+75	122	WWL C PLAN & PROFILE 1+00 - 8+75
52	PARKSIDE PARKWAY OUTBOUND PLAN & PROFILE 19+75 - END	123	WWL C PLAN & PROFILE 8+75 - END
53	RUACH ROAD PLAN & PROFILE	124	WWL D PLAN & PROFILE 1+00 - 8+25
54	GAMALIEL LOOP PLAN & PROFILE 1+00 - 5+00	125	WWL D PLAN & PROFILE 8+25 - END
55	GAMALIEL LOOP PLAN & PROFILE 5+00 - END	126	WWL E PLAN & PROFILE
56	TREASURE HOUSE WAY PLAN & PROFILE 1+00 - 8+50	127	WWL F PLAN & PROFILE
57	TREASURE HOUSE WAY PLAN & PROFILE 8+50 - END	128	WWL G & H PLAN & PROFILE
58	MORNING SUNRISE CIRCLE PLAN & PROFILE 1+00 - 9+50	129	WASTEWATER DETAILS
59	MORNING SUNRISE CIRCLE PLAN & PROFILE 9+50 - END	130	WASTEWATER DETAILS
60	ELIEL WAY PLAN & PROFILE	131	OVERALL WATER PLAN A
61	KAVOD COVE PLAN & PROFILE	132	OVERALL WATER PLAN B
62	PAVING & GRADING PLAN A	133	OVERALL WATER PLAN C
63	PAVING & GRADING PLAN B	134	OVERALL WATER PLAN D
64	PAVING & GRADING PLAN C	135	WL C PLAN & PROFILE 1+00 - 7+50
65	PAVING & GRADING PLAN D	136	WL C PLAN & PROFILE 7+50 - END
66	PAVING & GRADING PLAN E	137	WATER DETAILS
67	PAVING & GRADING PLAN F	138	WATER DETAILS
68	INTERSECTION SHEETS 1 OF 3	139	S-1 STRUCTURAL GEENRAL NOTES & SPECIFICATIONS
69	INTERSECTION SHEETS 2 OF 3	140	S-2 POND A OUTLET STRUCTURE PLAN & SECTIONS
70	INTERSECTION SHEETS 3 OF 3	141	S-3 POND B OUTLET STRUCTURE PLAN & SECTIONS
71	PAVING DETAILS		

NO.	REVISION	BY	DATE

Know what's below. Call before you dig.

5508 HIGHWAY 290 WEST
SUITE 150
AUSTIN, TX 78735
512.872.6696
HRGREEN.COM

TBPE NO: 16384
TBPLS NO: 10194101

HRGreen DEVELOPMENT TX

COVER SHEET

PARKSIDE ON THE RIVER
SECTIONS 11, 12A & 15A
CONSTRUCTION PLANS
GEORGETOWN, WILLIAMSON, TEXAS

DESIGNED BY: CC
DRAWN BY: MM
CHECKED BY: SN
APPROVED BY:

SHEET 1 OF 141

2025-XX-CON

P:\Blake Magee\Parkside Sections 11-15 & WON 5\Section 11, 12A & 15A\03_ACAD\Plans\sh2403522 COVR.dwg, COVER SHEET, July 18, 2025, 11:20 AM, makai.muhammad

GENERAL CONSTRUCTION NOTES

1. ALL RESPONSIBILITY FOR THE ADEQUACY OF THESE PLANS REMAINS WITH THE ENGINEER WHO PREPARED THEM. IN REVIEWING THESE PLANS, THE CITY OF GEORGETOWN MUST RELY ON THE ADEQUACY OF THE WORK OF THE DESIGN ENGINEER.

2. CONTRACTOR SHALL NOTIFY GEORGETOWN UTILITIES AT 512-930-3555 AT LEAST 24 HOURS PRIOR TO THE INSTALLATION OF ANY DRAINAGE FACILITY WITHIN A DRAINAGE EASEMENT OR STREET R.O.W. THE METHOD OF PLACEMENT AND COMPACTION OF BACKFILL IN THE CITY'S R.O.W. MUST BE APPROVED PRIOR TO THE START OF BACKFILL OPERATIONS.

3. FOR SLOPES OR TRENCHES GREATER THAN FIVE (5) FEET IN DEPTH, A NOTE MUST BE ADDED STATING THAT CONSTRUCTION OPERATIONS SHALL BE ACCOMPLISHED IN ACCORDANCE WITH APPLICABLE REGULATIONS OF THE U.S. OCCUPATIONAL SAFETY AND HEALTH ADMINISTRATION. COPIES OF OSHA STANDARDS MAY BE PURCHASED FROM THE U.S. GOVERNMENT PRINTING OFFICE; INFORMATION AND RELATED REFERENCE MATERIALS MAY BE PURCHASED FROM OSHA, 611 E. 6TH STREET, AUSTIN, TEXAS.

4. ALL SITE WORK MUST ALSO COMPLY WITH ENVIRONMENTAL REQUIREMENTS.

5. CONTRACTOR INFORMATION

   CONTRACTOR: UNKNOWN AT TIME OF SUBMITTAL

   CONTRACTOR ADDRESS:: N/A PHONE # N/A

   DEVELOPER'S REPRESENTATIVE RESPONSIBLE FOR PLAN ALTERATIONS:

   HR GREEN DEVELOPMENT TX, LLC. PHONE# (512) 872-6696

   PERSON OR FIRM RESPONSIBLE FOR EROSION/SEDMENTATION CONTROL MAINTENANCE:

   HM PARKSIDE LP. PHONE# 512-481-0303

   PERSON OF FIRM RESPONSIBLE FOR TREE/NATURAL AREA PROTECTION MAINTENANCE:

   HM PARKSIDE LP. PHONE# 512-481-0303

6. TOPOGRAPHIC DATA SHOWN HEREON BASED ON GROUND TOPO SURVEY BY HR GREEN ON DURING THE MONTHS OF MAY, JUNE, AUGUST, AND SEPTEMBER 2024.

7. IF CONTRACTOR FINDS A DISCREPANCY WITH THE TOPOGRAPHIC INFORMATION ON THESE PLANS, HE/SHE SHOULD CONTACT THE ENGINEER/SURVEYOR IMMEDIATELY.

8. ALL AREAS DISTURBED BY CONSTRUCTION SHALL BE RESTORED AND GRADED TO DRAIN.

9. ANY TEMPORARY SPOILS STOCKPILE MUST BE LOCATED OUTSIDE OF ANY TREE DRIPLINES AND IN THE TEMPORARY SPOILS AREA DESIGNATED ON THE APPROVED PLANS. ALL SURPLUS MATERIAL WILL BE DISPOSED OF OFFSITE.

10. ALL DEBRIS AND EXCESS MATERIAL SHALL BE REMOVED FROM THE SITE IN A MANNER NOT TO DAMAGE THE OWNER'S PROPERTY PRIOR TO ACCEPTANCE OF THE PROJECT.

11. IF CONTRACTOR ENCOUNTERS A VOID ON THE PROJECT, CONTRACTOR IS TO CONTACT ENGINEER AT (512) 872-6696 OR CRAIG CRAWFORD AT CAMBRIAN ENVIRONMENTAL AT (512) 705-5541 FOR EVALUATION OF THE FEATURE. ONCE CAMBRIAN ENVIRONMENTAL HAS VERIFIED THAT THE FEATURE IS NOT AN ENDANGERED SPECIES HABITAT, CONTRACTOR MAY PROCEED AS DIRECTED BY THE DETAILS ON THESE PLANS.

12. ALL WATER CONSTRUCTION SHALL BE IN ACCORDANCE WITH THE CITY OF GEORGETOWN CONSTRUCTION SPECIFICATION (MOST CURRENT EDITION).

TRENCH SAFETY NOTES:

1. IN ACCORDANCE WITH THE LAWS OF THE STATE OF TEXAS AND THE U. S. OCCUPATIONAL SAFETY AND HEALTH ADMINISTRATION REGULATIONS, ALL TRENCHES OVER 5 FEET IN DEPTH IN EITHER HARD AND COMPACT OR SOFT AND UNSTABLE SOIL SHALL BE SLOPED, SHORED, SHEETED, BRACED OR OTHERWISE SUPPORTED. FURTHERMORE, ALL TRENCHES LESS THAN 5 FEET IN DEPTH SHALL ALSO BE EFFECTIVELY PROTECTED WHEN HAZARDOUS GROUND MOVEMENT MAY BE EXPECTED. TRENCH SAFETY SYSTEMS TO BE UTILIZED FOR THIS PROJECT WILL BE PROVIDED BY THE CONTRACTOR.
2. IN ACCORDANCE WITH THE U. S. OCCUPATIONAL SAFETY AND HEALTH ADMINISTRATION REGULATIONS, WHEN PERSONS ARE IN TRENCHES 4-FEET DEEP OR MORE, ADEQUATE MEANS OF EXIT, SUCH AS A LADDER OR STEPS, MUST BE PROVIDED AND LOCATED SO AS TO REQUIRE NO MORE THAN 25 FEET OF LATERAL TRAVEL.
3. CONSTRUCTION SHALL NOT PROCEED UNTIL APPROPRIATE TRENCH SAFETY SYSTEM DETAILS, AS DESIGNED BY A PROFESSIONAL ENGINEER, ARE RETAINED AND COPIES SUBMITTED TO THE CITY OF GEORGETOWN.

SEQUENCE OF CONSTRUCTION

1. INSTALL TREE PROTECTION AND INITIATE TREE MITIGATION MEASURES.
2. INSTALL EROSION CONTROLS AND OFF-SITE EROSION CONTROLS AS INDICATED ON APPROVED PLANS.
3. CONTACT CITY OF GEORGETOWN AND WILLIAMSON COUNTY TO SCHEDULE PRE-CONSTRUCTION COORDINATION MEETING
4. EVALUATE TEMPORARY EROSION CONTROL INSTALLATION. REVIEW CONSTRUCTION SCHEDULE WITH THE EROSION CONTROL PLAN.
5. BEGIN SITE CLEARING AND GRADING. INSPECT AND MAINTAIN ALL CONTROLS AS PER GENERAL NOTES.
6. CONSTRUCT UTILITY LINES I.E. WATER, WASTEWATER, STORM DRAINAGE & PONDS.
7. CONSTRUCT SIDEWALK RAMPS.
8. CONSTRUCT PAVING/STREETS.
9. REVEGETATE DISTURBED AREAS OR COMPLETE A DEVELOPERS CONTRACT FOR THE REVEGETATION ALONG WITH THE ENGINEERS CONCURRENCE LETTER.
10. PROJECT ENGINEER INSPECTS JOB AND WRITES CONCURRENCE LETTER TO THE CITY. FINAL INSPECTION IS SCHEDULED UPON RECEIPT OF LETTER.
11. REMOVE TEMPORARY EROSION/SEDIMENTATION CONTROLS AT GRASS GROWTH.

CITY OF GEORGETOWN NOTES:

1. THESE CONSTRUCTION PLANS WERE PREPARED, SEALED, SIGNED, AND DATED BY A TEXAS LICENSED PROFESSIONAL ENGINEER. THEREFORE BASED ON THE ENGINEER'S CONCURRENCE OF COMPLIANCE, THE CONSTRUCTION PLANS FOR CONSTRUCTION OF THE PROPOSED PROJECT ARE HEREBY APPROVED SUBJECT TO THE STANDARD CONSTRUCTION SPECIFICATIONS AND DETAILS MANUAL AND ALL OTHER APPLICABLE CITY, STATE, AND FEDERAL REQUIREMENTS AND CODES.
2. THIS PROJECT IS SUBJECT TO ALL CITY STANDARD SPECIFICATIONS AND DETAILS IN EFFECT AT THE TIME OF SUBMITTAL OF THE PROJECT TO THE CITY.
3. THE SITE CONSTRUCTION PLANS SHALL MEET ALL REQUIREMENTS OF THE APPROVED SITE PLAN.
4. WASTEWATER MAINS AND SERVICE LINES SHALL BE SDR 26 PVC.
5. WASTEWATER MAINS SHALL BE INSTALLED WITHOUT HORIZONTAL OR VERTICAL BENDS.
6. MAXIMUM DISTANCE BETWEEN WASTEWATER MANHOLES IS 500 FEET.
7. WASTEWATER MAINS SHALL BE LOW PRESSURE AIR TESTED AND MANDREL TESTED BY THE CONTRACTOR ACCORDING TO CITY OF GEORGETOWN AND TCEQ REQUIREMENTS.
8. WASTEWATER MANHOLES SHALL BE VACUUM TESTED AND COATED BY THE CONTRACTOR ACCORDING TO CITY OF GEORGETOWN AND TCEQ REQUIREMENTS.
9. WASTEWATER MAINS SHALL BE CAMERA TESTED BY THE CONTRACTOR AND SUBMITTED TO THE CITY ON DVD FORMAT PRIOR TO PAVING THE STREETS.
10. PRIVATE WATER SYSTEM FIRE LINES SHALL BE TESTED BY THE CONTRACTOR TO 200 PSI FOR 2 HOURS.
11. PRIVATE WATER SYSTEM FIRE LINES SHALL BE DUCTILE IRON PIPING FROM THE WATER MAIN TO THE BUILDING SPRINKLER SYSTEM, AND 200 PSI C900 FOR ALL OTHERS.
12. PUBLIC WATER SYSTEM MAINS SHALL BE 150 PSI C900 PVC AND TESTED BY THE CONTRACTOR AT 200 PSI FOR 15 MINUTES AND 150 FOR 2 HOURS.
13. ALL BEND AND CHANGES IN DIRECTION ON WATER MAINS SHALL BE RESTRAINED AND THRUST BLOCKED.
14. LONG FIRE HYDRANT LEADS SHALL BE RESTRAINED.
15. ALL WATER LINES ARE TO BE BACTERIA TESTED BY THE CONTRACTOR ACCORDING TO THE CITY STANDARDS AND SPECIFICATIONS.
16. WATER AND SEWER MAIN CROSSINGS SHALL MEET ALL REQUIREMENTS OF THE TCEQ AND THE CITY.
17. FLEXIBLE BASE MATERIAL FOR PUBLIC STREETS SHALL BE TXDOT TYPE A GRADE 1.
18. HOT MIX ASPHALT CONCRETE PAVEMENT SHALL BE TYPE D UNLESS OTHERWISE SPECIFIED AND SHALL BE A MINIMUM OF 2 INCHES THICK ON PUBLIC STREETS AND ROADWAYS.
19. ALL SIDEWALK RAMPS ARE TO BE INSTALLED WITH THE PUBLIC INFRASTRUCTURE.
20. A MAINTENANCE BOND IS REQUIRED TO BE SUBMITTED TO THE CITY PRIOR TO ACCEPTANCE OF HTE PUBLIC IMPROVEMENTS. THIS BOND SHALL BE ESTABLISHED FOR 2 YEAR IN THE AMOUNT OF 10% OF THE COST OF THE PUBLIC IMPROVEMENTS AND SHALL FOLLOW THE CITY FORMAT.
21. RECORD DRAWINGS OF PUBLIC IMPROVEMENTS SHALL BE SUBMITTED TO THE CITY BY THE DESIGN ENGINEER PRIOR TO ACCEPTANCE OF THE PROJECT. THESE DRAWINGS SHALL BE A PDF EMAILED TO THE CITY DEVELOPMENT ENGINEER.

WATER AND WASTEWATER NOTES:

1. PIPE MATERIAL FOR WATER MAINS SHALL BE PVC (AWWA C-900, MIN. CLASS 200), OR DUCTILE IRON (C-115, MIN. CLASS 200) UNLESS SPECIFIED OTHERWISE.
2. PIPE MATERIAL FOR GRAVITY WASTEWATER MAINS SHALL BE PVC (ASTM D3034, SDR-26) UNLESS SPECIFIED OTHERWISE.
3. THE CONTRACTOR SHALL CONTACT THE CITY INSPECTOR TO COORDINATE UTILITY TIE-INS AND NOTIFY HIM AT LEAST 48 HOURS PRIOR TO CONNECTING TO EXISTING LINES.
4. ALL MANHOLES SHALL HAVE ECCENTRIC CONES AND SHALL BE CONCRETE WITH CAST IRON RING AND COVER. ALL MANHOLES LOCATED OUTSIDE OF THE PAVEMENT SHALL HAVE BOLTED COVERS. TAPPING OF FIBERGLASS MANHOLES SHALL NOT BE ALLOWED.
5. THE CONTRACTOR MUST OBTAIN A BULK WATER PERMIT OR PURCHASE AND INSTALL A WATER METER FOR ALL WATER USED DURING CONSTRUCTION. A COPY OF THIS PERMIT MUST BE CARRIED AT ALL TIMES BY ALL WHO USE WATER. CONTRACTOR TO INSTALL ABOVE GROUND WATER TANK WITH SUPPLY LINE AS INDICATD ON PLANS.
6. LINE FLUSHING OR ANY ACTIVITY USING A LARGE QUANTITY OF WATER MUST BE SCHEDULED WITH THE CITY INSPECTOR.
7. THE CONTRACTOR, AT HIS EXPENSE, SHALL PERFORM QUALITY TESTING FOR ALL WASTEWATER PIPE INSTALLED AND SHALL PROVIDE ALL EQUIPMENT (INCLUDING PUMPS AND GAUGES), SUPPLIES AND LABOR NECESSARY TO PERFORM THE TESTS. QUALITY AND PRESSURE TESTING SHALL BE MONITORED BY CITY OF GEORGETOWN PERSONNEL.
8. THE CONTRACTOR SHALL COORDINATE TESTING WITH THE CITY OF INSPECTOR AND PROVIDE NO LESS THAN 24 HOURS NOTICE PRIOR TO PERFORMING STERILIZATION, QUALITY TESTING OR PRESSURE TESTING.
9. THE CONTRACTOR SHALL NOT OPEN OR CLOSE ANY VALVES UNLESS AUTHORIZED BY THE CITY OF GEORGETOWN.
10. ALL VALVE BOXES AND COVERS SHALL BE CAST IRON.
11. TOOLS FOR MARKING THE CURB SHALL BE PROVIDED BY THE CONTRACTOR. OTHER APPROPRIATE MEANS OF MARKING SERVICE AND VALVE LOCATIONS SHALL BE PROVIDED IN AREAS WITHOUT CURBS. SUCH MEANS OF MARKING SHALL BE AS SPECIFIED BY THE ENGINEER AND ACCEPTED BY THE CITY OF GEORGETOWN.
12. CONTACT CITY OF GEORGETOWN INSPECTION DEPARTMENT FOR ASSISTANCE IN OBTAINING EXISTING WATER AND WASTEWATER LOCATIONS.
13. SAND, AS DESCRIBED IN SPECIFICATION ITEM 510 PIPE, SHALL NOT BE USED AS BEDDING FOR WATER AND WASTEWATER LINES. ACCEPTABLE BEDDING MATERIALS ARE PIPE BEDDING STONE, PEA GRAVEL AND IN LIEU OF SAND, A NATURALLY OCCURRING OR MANUFACTURED STONE MATERIAL CONFORMING TO ASTM C33 FOR STONE QUALITY AND MEETING THE FOLLOWING GRADATION SPECIFICATION:

SIEVE SIZE	PERCENT RETAINED BY WEIGHT
1/2"	0
3/8"	0-2
#4	40-85
#10	95-100

15. THE CONTRACTOR IS HEREBY NOTIFIED THAT CONNECTING TO, SHUTTING DOWN, OR TERMINATING EXISTING UTILITY LINES MAY HAVE TO OCCUR AT OFF-PEAK HOURS. SUCH HOURS ARE USUALLY OUTSIDE NORMAL WORKING HOURS AND POSSIBLY BETWEEN 12 A.M. AND 6 A.M.
16. ALL WASTEWATER CONSTRUCTION SHALL BE IN ACCORDANCE WITH THE TEXAS COMMISSION ON ENVIRONMENTAL QUALITY (TCEQ) REGULATIONS, 30 TAC CHAPTER 313 AND 317, AS APPLICABLE. WHENEVER TCEQ AND CITY OF GEORGETOWN SPECIFICATIONS CONFLICT, THE MORE STRINGENT SHALL APPLY.
17. THE CONTRACTOR SHALL CONTACT THE "DIG TESS" SYSTEM AT 1-800-344-8377 FOR EXISTING UTILITY LOCATIONS PRIOR TO ANY EXCAVATION IN ADVANCE OF CONSTRUCTION. THE CONTRACTOR SHALL VERIFY THE LOCATIONS OF ALL UTILITIES TO BE EXTENDED, TIED TO, OR ALTERED, OR SUBJECT TO DAMAGE/INCONVENIENCE BY THE CONSTRUCTION OPERATIONS. THE CITY OF GEORGETOWN WATER AND WASTEWATER MAINTENANCE RESPONSIBILITY ENDS AT R.O.W./EASEMENT LINES.
18. ALL MANHOLES IN UNPAVED AREAS PROVIDING DIRECT ACCESS TO A WASTEWATER LINE SHALL BE WATERTIGHT AND BEAR THE WORDING AND INSIGNIA FOR THE CITY OF GEORGETOWN.
19. THE OWNER IS RESPONSIBLE FOR ALL COST OF RELOCATION OR DAMAGE TO UTILITIES.
20. THE CONTRACTOR IS RESPONSIBLE FOR ANY AND ALL DAMAGES WHICH OCCUR DUE TO HIS/HER FAILURE TO LOCATE AND PRESERVE ANY AND ALL UTILITIES.
21. THE ENGINEER, IN PREPARING THESE PLANS HAS ATTEMPTED TO LOCATE ALL EXISTING UTILITIES IN THE AREAS OF EXPANSION OR NEW CONSTRUCTION. HOWEVER, THERE MAY BE UTILITIES THAT COULD NOT BE OR WERE NOT LOCATED. UNDERGROUND UTILITIES SHOWN ON THE PLANS ARE SHOWN IN APPROXIMATE LOCATIONS ONLY. CONTRACTOR SHALL DETERMINE THE EXACT LOCATIONS AND ELEVATIONS OF ALL EXISTING UTILITIES BEFORE COMMENCING WORK. THE CONTRACTOR SHALL CALL APPROPRIATE UTILITY COMPANIES FOR LOCATIONS OF THEIR UTILITIES AT LEAST 48 HOURS BEFORE COMMENCING EXCAVATION. IN THE EVENT THAT A UTILITY IS SITUATED SUCH THAT CONSTRUCTION CANNOT PROCEED AS SHOWN ON THE PLANS, THE CONSTRUCTION MANAGER/SUPERVISOR SHALL BE NOTIFIED IMMEDIATELY.
22. CONTRACTOR TO COORDINATE WITH APPROPRIATE UTILITY COMPANIES PRIOR TO CONSTRUCTION, ADJUSTMENT, OR RELOCATION OF EXISTING UTILITIES AS DESIGNATED ON PLANS.
23. THE MINIMUM HORIZONTAL SEPARATION BETWEEN WATER AND ASSOCIATED VALVING AND SEWER LINES AND ASSOCIATED MANHOLES, IS NINE (9) FEET OUTSIDE DIAMETER TO OUTSIDE DIAMETER. THE MINIMUM VERTICAL SEPARATION BETWEEN WATER AND SEWER LINES IS EIGHTEEN (18) INCHES.
24. THE TOP ELEVATION OF MANHOLES IN PAVED AREAS SHALL MATCH FINISH GRADE. THE TOP ELEVATION OF MANHOLES IN UNPAVED AREAS SHALL BE 3" (MIN.) ABOVE FINISH GRADE, UNLESS OTHERWISE NOTED ON PLANS.
25. CONTRACTOR SHALL COORDINATE INSPECTION OF UTILITY LINES WITH APPROPRIATE AUTHORITIES PRIOR TO BACKFILLING TRENCHES.
26. ALL WATER AND WASTEWATER LINES IN CITY R.O.W. AND EASEMENTS WILL MEET THE CITY OF GEORGETOWN WATER AND WASTEWATER DEPARTMENT DESIGN CRITERIA, AT A MINIMUM.
27. CITY MAINTENANCE OF UTILITIES ENDS AT THE PROPERTY LINE UNLESS IN AN EASEMENT.
28. EXTEND ALL EXISTING UTILITY MANHOLES, BOXES, COVERS, ETC. TO PROPOSED FINISH GRADE, UNLESS APPROVED OTHERWISE.
29. ALL UNDERGROUND UTILITY CONSTRUCTION WITHIN CITY R.O.W. OR PUBLIC EASEMENTS MUST BE ACCOMPLISHED IN ACCORDANCE WITH THE CITY OF GEORGETOWN STANDARD SPECIFICATIONS.
30. AN 80 MIL COAT OF RAVEN LINING SYSTEMS, RAVEN 405 ULTRA HIGH BUILD EPOXY COATING, OR APPROVED EQUAL, TO BE APPLIED TO ENTIRE INTERIOR OF EACH WASTEWATER MANHOLE AND UNDERSIDE OF FLAT TOPS.
31. ALL WATER SERVICE, WASTEWATER SERVICE AND VALVE LOCATIONS SHALL BE APPROPRIATELY MARKED AS FOLLOWS:

WATER SERVICE	"W" ON TOP OF CURB
WASTEWATER SERVICE	"S" ON TOP OF CURB
VALVE	"V" ON FACE OF CURB
DRY UTILITIES	"DU" ON FACE OF CURB

32. CENTER ONE 20-FOOT 150 PSI PRESSURE RATED WASTEWATER PIPE SECTION AT ALL WATERLINE CROSSINGS.
33. WHERE WATER LINES AND NEW SEWER LINE ARE INSTALLED WITH A SEPARATION DISTANCE CLOSER THAN NINE FEET (I.E., WATER LINES CROSSING WASTEWATER LINES, WATER LINES PARALLELING WASTEWATER LINES, OR WATER LINES NEXT TO MANHOLES) THE INSTALLATION MUST MEET THE REQUIREMENTS OF 30 TAC CHAPTER 217 (DESIGN CRITERIA FOR DOMESTIC WASTEWATER SYSTEMS) OR 30 TAC CHAPTER 290 (PUBLIC DRINKING WATER).

EROSION AND SEDIMENTATION CONTROL NOTES

1. THE CONTRACTOR SHALL INSTALL EROSION/SEDIMENTATION CONTROLS AND TREE/NATURAL AREA PROTECTIVE FENCING PRIOR TO ANY SITE PREPARATION WORK (CLEARING, GRUBBING OR EXCAVATION).
2. THE PLACEMENT OF EROSION/SEDIMENTATION CONTROLS SHALL BE IN ACCORDANCE WITH THE THE APPROVED EROSION AND SEDIMENTATION CONTROL PLAN.
3. THE PLACEMENT OF TREE/NATURAL AREA PROTECTIVE FENCING SHALL BE IN ACCORDANCE WITH THE CITY OF GEORGETOWN STANDARD NOTES FOR TREE AND NATURAL AREA PROTECTION AND THE APPROVED GRADING/TREE AND NATURAL AREA PLAN.
4. A PRE-CONSTRUCTION CONFERENCE SHALL BE HELD WITH THE CONTRACTOR, DESIGN ENGINEER/PERMIT APPLICANT AND CITY INSPECTOR AFTER INSTALLATION OF THE EROSION/SEDIMENTATION CONTROLS AND TREE/NATURAL AREA PROTECTION MEASURES AND PRIOR TO BEGINNING ANY SITE PREPARATION WORK. THE CONTRACTOR SHALL NOTIFY THE CITY OF GEORGETOWN, AT LEAST THREE DAYS PRIOR TO THE MEETING DATE.
5. THE CONTRACTOR IS REQUIRED TO INSPECT THE CONTROLS AND FENCES AT WEEKLY INTERVALS AND AFTER SIGNIFICANT RAINFALL EVENTS TO INSURE THAT THEY ARE FUNCTIONING PROPERLY. THE PERSON(S) RESPONSIBLE FOR MAINTENANCE OF CONTROLS AND FENCES SHALL IMMEDIATELY MAKE ANY NECESSARY REPAIRS TO DAMAGED AREAS. SILT ACCUMULATION AT CONTROLS MUST BE REMOVED WHEN THE DEPTH REACHES SIX (6) INCHES.
6. PRIOR TO FINAL ACCEPTANCE BY THE CITY, HAUL ROADS AND WATERWAY CROSSINGS CONSTRUCTED FOR TEMPORARY CONTRACTOR ACCESS MUST BE REMOVED, ACCUMULATED SEDIMENT REMOVED FROM THE WATERWAY AND THE AREA RESTORED TO THE ORIGINAL GRADE AND REVEGETATED. ALL LAND CLEARING DEBRIS SHALL BE DISPOSED OF IN APPROVED SPOIL DISPOSAL SITES.

GENERAL NOTES:

1. ALL CONSTRUCTION SHALL BE IN ACCORDANCE WITH THE CITY OF GEORGETOWN STANDARD CONSTRUCTION SPECIFICATIONS AS ADOPTED AND AMENDED UNLESS OTHERWISE SPECIFIED.
2. ANY EXISTING UTILITIES, PAVEMENT, CURBS, SIDEWALKS, STRUCTURES, TREES, ETC., THAT ARE DAMAGED OR REMOVED SHALL BE REPAIRED OR REPLACED BY THE CONTRACTOR AT NO COST TO THE OWNER.
3. THE CONTRACTOR SHALL VERIFY ALL DEPTHS AND LOCATIONS OF EXISTING UTILITIES PRIOR TO ANY CONSTRUCTION. ANY DISCREPANCIES WITH THE CONSTRUCTION PLANS FOUND IN THE FIELD SHALL BE BROUGHT IMMEDIATELY TO THE ATTENTION OF THE ENGINEER.
4. THE CONTRACTOR SHALL GIVE THE CITY OF GEORGETOWN 48 HOURS NOTICE BEFORE BEGINNING EACH PHASE OF CONSTRUCTION.
5. ALL AREAS DISTURBED OR EXPOSED DURING CONSTRUCTION SHALL BE REVEGETATED IN ACCORDANCE WITH THE PLANS AND CITY OF GEORGETOWN STANDARD SPECIFICATIONS. REVEGETATION OF ALL DISTURBED OR EXPOSED AREAS SHALL CONSIST OF SODDING OR SEEDING, AT THE CONTRACTOR'S OPTION. HOWEVER, THE TYPE OF REVEGETATION MUST EQUAL OR EXCEED THE TYPE OF VEGETATION PRESENT BEFORE CONSTRUCTION UNLESS OTHERWISE REQUESTED BY THE OWNER.
6. PRIOR TO ANY CONSTRUCTION, THE CONTRACTOR SHALL CONVENE A PRECONSTRUCTION CONFERENCE BETWEEN THE CITY OF GEORGETOWN, HIMSELF, THE ENGINEER, THE OWNER, THE ENVIRONMENTAL ENGINEER, GEOTECHNICAL ENGINEER, UTILITY COMPANIES, ANY AFFECTED PARTIES AND ANY OTHER ENTITY THE COUNTY OR ENGINEER MAY REQUIRE.
7. WHEN CONSTRUCTION IS BEING CARRIED OUT WITHIN EASEMENTS, THE CONTRACTOR SHALL CONFINE HIS WORK TO WITHIN THE PERMANENT AND ANY TEMPORARY EASEMENTS. PRIOR TO FINAL ACCEPTANCE, THE CONTRACTOR SHALL BE RESPONSIBLE FOR REMOVING ALL TRASH AND DEBRIS WITHIN THE PERMANENT AND TEMPORARY EASEMENTS. CLEANUP SHALL BE TO THE SATISFACTION OF THE ENGINEER.
8. PRIOR TO ANY CONSTRUCTION, THE CONTRACTOR SHALL APPLY FOR AND SECURE ALL PROPER PERMITS FROM THE APPROPRIATE AUTHORITIES.
9. AVAILABLE BENCHMARK(S) THAT MAY BE UTILIZED FOR THE CONSTRUCTION OF THIS PROJECT ARE DESCRIBED AS FOLLOWS:

   NAVD88 - GEOID12B

   BM(1380)-321:
   "SQUARE" CUT ON A CONCRETE BASE CORNER OF A WATER MAIN VENT PIPE.
   ELEVATION = 806.86 FEET.

   BM(1380)-322:
   COTTON GIN SPINDLE SET IN A ROOT/BASE OF A 28-INCH LIVE OAK TREE (TREE TAG # 6776).
   ELEVATION = 940.16 FEET.

   BM(1380)-323:
   MAG-NAIL WITH A WASHER STAMPED "HR GREEN" SET ON A CONCRETE ENCASEMENT OF A WASTEWATER MANHOLE.
   ELEVATION = 797.76 FEET.

   BM(1380)-335:
   MAG-NAIL WITH A WASHER STAMPED "HR GREEN" SET ON THE CORNER A OF CONCRETE WATER VALVE ENCASEMENT.
   ELEVATION = 779.15 FEET.

   BM(1380)-337:
   MAG-NAIL WITH A WASHER STAMPED "HR GREEN" SET ON THE NORTHEAST CORNER A OF CONCRETE WATER VAULT, NEAR INTERSECTING SOUTHEAST CORNER OF PARKSIDE PARKWAY AND BERMUDA DRIVE.
   ELEVATION = 786.95 FEET.

   BM(1380)-338:
   MAG-NAIL WITH A WASHER STAMPED "HR GREEN" SET ON THE SOUTHWEST CORNER A OF CONCRETE ELECTRIC VAULT, NEAR INTERSECTING NORTHEAST CORNER OF PARKSIDE PARKWAY AND BERMUDA DRIVE.
   ELEVATION = 790.85 FEET.

10. SIDEWALK RAMPS AND SIDEWALKS LOCATED IN FRONT OF COMMON AREAS TO BE INSTALLED WITH INFRASTRUCTURE CONSTRUCTION
11. CONTRACTOR IS RESPONSIBLE FOR DAMAGE TO ANY EXISTING UTILITY OR IMPROVEMENTS.
12. CONTRACTOR SHALL REFER TO THE GEOTECHNICAL REPORT TITLED "GEOTECHNICAL INVESTIGATION PAVEMENT THICKNESS RECOMMENDATIONS - PARKSIDE ON THE RIVER SECTIONS 11, 12A, & 15A GEORGETOWN, TEXAS", DATED JANUARY 2025 BY MLA GEOTECHNICAL, ENGINEER'S JOB# 24101123.005 FOR PAVEMENT DESIGN RECOMMENDATIONS. ANY CONFLICT BETWEEN THESE CONSTRUCTION PLANS AND THE GEOTECHNICAL REPORT SHALL BE RESOLVED IN FAVOR OF THE GEOTECHNICAL REPORT.
13. THE DISTRICT ENGINEER, JONES-HEROY & ASSOCIATES, INC. (SHANE POTTER OR CHRIS ULMAN, PH:512-989-2200) SHALL BE CONTACTED 48 HOURS PRIOR TO THE FOLLOWING:
    1) PRE-CONSTRUCTION MEETINGS
    2) BEGINNING EACH PHASE OF CONSTRUCTION
    3) TESTING OF WATER AND/OR WASTEWATER LINES
    4) FINAL WALK-THROUGH OF FACILITIES
14. WHEN REQUIRED, CONTRACTOR SHALL REMOVE PAVEMENT IN ACCORDANCE WITH THE TEXAS DEPARTMENT OF HIGHWAY AND PUBLIC TRANSPORTATION STANDARD SPECIFICATIONS, LATEST EDITION.
15. ALL PAVEMENT REMOVED SHALL BE DONE SUCH THAT THE REMAINING PAVEMENT IS LEFT WITH A CLEAN STRAIGHT EDGE.
16. WHEN REQUIRED, CONTRACTOR SHALL REMOVE EXISTING PAVEMENT STRIPING BY SAND BLASTING FROM EXISTING PAVEMENT IN ACCORDANCE WITH ITEM 678 OF THE TxDOT LATEST EDITION.
17. ALL WORK IN STATE R.O.W. AND EASEMENTS SHALL BE IN ACCORDANCE WITH THE TxDOT LATEST EDITION.
18. EARTHWORK FOR ALL BUILDING FOUNDATIONS AND SLABS SHALL BE IN ACCORDANCE WITH ARCHITECTURAL BUILDING PLANS AND SPECIFICATIONS AND THE GEOTECHNICAL STUDY.
19. IF THE CONTRACTOR FINDS A DISCREPANCY WITH THE TOPOGRAPHIC INFORMATION ON THESE PLANS HE/SHE SHOULD CONTACT THE ENGINEER OR OWNER IMMEDIATELY.
20. CONTRACTOR SHALL PROTECT ALL BENCHMARKS AND PROPERTY MONUMENTATION DISTURBED DURING CONSTRUCTION.
21. DESIGN OF MAJOR DRAINAGE WAYS THROUGH A SUBDIVISION AND MAJOR STRUCTURES SUCH AS BOX CULVERTS OR BRIDGES ACROSS A MAJOR DRAINAGE CHANNEL SHALL BE COORDINATED WITH THE REQUIREMENTS OF THE WILLIAMSON COUNTY HEALTH DISTRICT WHEN ANY PORTION OF THE SUBDIVISION LIES OUTSIDE THE CITY LIMITS, AND WHEN APPLICABLE, A LETTER REQUESTING A LOCAL FLOOD PLAIN MAP AMENDMENT FROM THE FEDERAL EMERGENCY MANAGEMENT AGENCY (FEMA) SHALL BE PROVIDED PRIOR TO FINAL CONSTRUCTION PLAN APPROVAL.

TRAFFIC MARKING NOTE

1. ANY METHODS, STREET MARKINGS AND SIGNAGE NECESSARY FOR WARNING MOTORISTS, WARNING PEDESTRIANS OR DIVERTING TRAFFIC DURING CONSTRUCTION SHALL CONFORM TO THE TEXAS MANUAL OF UNIFORM TRAFFIC CONTROL DEVICES FOR STREETS AND HIGHWAYS, LATEST EDITION.

2. ALL PAVEMENT MARKINGS, MARKERS, PAINT, TRAFFIC BUTTONS, TRAFFIC CONTROLS AND SIGNS SHALL BE INSTALLED IN ACCORDANCE WITH THE TEXAS DEPARTMENT OF TRANSPORTATION STANDARD SPECIFICATIONS FOR CONSTRUCTION OF HIGHWAYS, STREETS AND BRIDGES AND, THE TEXAS MANUAL OF UNIFORM TRAFFIC CONTROL DEVICES FOR STREETS AND HIGHWAYS, LATEST EDITION.

ADDITIONAL NOTES

1. THE CONTRACTOR SHALL BE RESPONSIBLE FOR MOWING AND THE REMOVAL OF ALL LITTER WITHIN THE PROJECT LIMITS SO AS TO KEEP THE SITE OF THE WORK IN A NEAT AND PRESENTABLE CONDITION AT ALL TIMES. THIS WORK WILL BE CONSIDERED SUBSIDIARY TO THE VARIOUS BID ITEMS.

2. THE CONTRACTOR SHALL PROTECT ALL AREAS WHICH ARE NOT INCLUDED IN THE ACTUAL LIMITS OF THE PROPOSED CONSTRUCTION AREAS FROM DESTRUCTION. CARE SHALL BE EXERCISED TO PREVENT DAMAGE TO TREES, VEGETATION, FENCES, POWER POLES, AND OTHER NATURAL SURROUNDINGS. THE AREAS NOT TO BE DISTURBED INCLUDE ALL GOLF COURSE AREAS, UNLESS SPECIFIED OTHERWISE. THE CONTRACTOR SHALL, AT HIS EXPENSE, RESTORE ANY AREA DISTURBED AS A RESULT OF HIS OPERATIONS TO A CONDITION AS GOOD AS, OR BETTER THAN, THAT PRESENT PRIOR TO CONSTRUCTION.

3. THE CONTRACTOR SHALL BE RESPONSIBLE FOR MARKING EVERY 100 FOOT ROAD STATION, AND SHALL MAINTAIN THE MARKINGS FOR THE DURATION OF THE PROJECT. THIS WORK SHALL BE CONSIDERED SUBSIDIARY TO THE ITEMIZED CONSTRUCTION CONTRACT.

4. THE SUPERINTENDENT SHALL BE AVAILABLE ON THE PROJECT AT ALL TIMES WHEN WORK IS BEING PERFORMED.

5. NO BLASTING IS ALLOWED ON THIS PROJECT.

6. NO STORAGE OF HYDROCARBON OR HAZARDOUS MATERIAL IS ALLOWED ON SITE.

PARKSIDE ON THE RIVER M.U.D. No. 2 NOTES

A) THE DISTRICT ENGINEER, JONES-HEROY & ASSOCIATES, INC. (SHANE POTTER OR CHRIS ULMAN, PH:512-989-2200) SHALL BE CONTACTED 48 HOURS PRIOR TO:
   i) PRE-CONSTRUCTION MEETINGS;
   ii) BEGINNING EACH PHASE OF CONSTRUCTION
   iii) TESTING OF WATER AND/OR WASTEWATER LINES; AND,
   iv) FINAL WALK-THROUGH OF FACILITIES.

B) REVIEW OF THE PLANS BY THE DISTRICT IS LIMITED TO DISTRICT OWNED FACILITIES AND DOES NOT INDICATE A REVIEW OF THE ADEQUACY OF THE DESIGN FOR THE FACILITIES. IN APPROVING THESE PLANS, THE DISTRICT MUST RELY ON THE ADEQUACY OF THE WORK OF THE DESIGN ENGINEER.

GEORGETOWN FIRE DEPARTMENT NOTES

1. 1,500 GPM FIRE FLOW SHALL BE PROVIDED FOR THIS PROJECT.
2. AT THE CONCLUSION OF CONSTRUCTION AND AS PART OF THE PROCESS FOR THE CITY TO ACCEPT THIS PHASE:
   - THE FIRE HYDRANTS SHALL BE FLOWED AND TESTED
   - A COPY OF THE REPORT SHALL BE EMAILED INTO THE FIRE DEPARTMENT
   - THE HYDRANTS SHALL BE PAINTED AND COLOR CODED.

*** CAUTION :IF PRESSURE REDUCING VALVES WERE INSTALLED IN THIS PHASING THEY MUST BE SET PRIOR TO FIRE HYDRANT FLOW TESTING.

3. PER CITY ORDINANCE SEC. 13.15.120, HYDRANT FLOW CODING STANDARDS. PUBLIC HYDRANTS WILL HAVE THE BARRELS PAINTED SILVER, THE HYDRANTS WILL BE FLOW TESTED, AND THE BONNET PAINTED USING THE HYDRANT FLOW STANDARD IN PARAGRAPH C.
   FLOW COLOR:
   - GREATER THAN 1500 GPM BLUE
   - 1000 TO 1500 GPM GREEN
   - 500 - 999 GPM ORANGE
   - LESS THAN 500 GPM RED
   - NOT WORKING BLACK OR BAGGED

NO.	REVISION	BY	DATE

811 Know what's below. Call before you dig.

5508 HIGHWAY 290 WEST
SUITE 150
AUSTIN, TX 78735
512.872.6696
HRGREEN.COM
TBPE NO: 16384
TBPLS NO: 10194101
HRGreen® DEVELOPMENT TX

STATE OF TEXAS
CHRISTINE N. CAMPBELL
142536
LICENSED PROFESSIONAL ENGINEER
07/03/2025

GENERAL NOTES

PARKSIDE ON THE RIVER SECTIONS 11, 12A & 15A CONSTRUCTION PLANS GEORGETOWN, WILLIAMSON, TEXAS

DESIGNED BY: CC
DRAWN BY: MM
CHECKED BY: SN
APPROVED BY:

SHEET 2 OF 141

2025-XX-CON

P:\Blake Magee\Parkside Sections 11-15 & WON 5\Section 11, 12A & 15A\03_ACAD\Plans\sh2403522 GNTS.dwg, GENERAL NOTES, July 18, 2025, 11:20 AM, makai.muhammad

TEXAS COMMISSION ON ENVIRONMENTAL QUALITY
ORGANIZED SEWAGE COLLECTION SYSTEM (SCS)
GENERAL CONSTRUCTION NOTES

1. THIS ORGANIZED SEWAGE COLLECTION SYSTEM MUST BE DESIGNED AND CONSTRUCTED IN ACCORDANCE WITH THE TEXAS COMMISSION ON ENVIRONMENTAL QUALITY'S (TCEQ) EDWARDS AQUIFER RULES 30 TEXAS ADMINISTRATIVE CODE (TAC) §§213.5(C) AND 217.51 – 217.70 AND 30 TAC CHAPTER 217, SUBCHAPTER D, AND THE CITY OF ROUND ROCK STANDARD SPECIFICATIONS.

2. ALL CONTRACTORS CONDUCTING REGULATED ACTIVITIES ASSOCIATED WITH THIS PROPOSED REGULATED PROJECT MUST BE PROVIDED WITH COPIES OF THE SEWAGE COLLECTION SYSTEM PLAN AND THE TCEQ LETTER INDICATING THE SPECIFIC CONDITIONS OF ITS APPROVAL. DURING THE COURSE OF THESE REGULATED ACTIVITIES, THE CONTRACTORS MUST BE REQUIRED TO KEEP ON-SITE COPIES OF THE PLAN AND THE APPROVAL LETTER.

3. NO LATER THAN 48 HOURS PRIOR TO COMMENCING ANY REGULATED ACTIVITY, THE APPLICANT OR HIS AGENT MUST NOTIFY THE TCEQ AUSTIN REGIONAL OFFICE, IN WRITING, OF THE DATE ON WHICH THE REGULATED ACTIVITY WILL BEGIN.

4. ANY MODIFICATION TO THE ACTIVITIES DESCRIBED IN THE REFERENCED SCS APPLICATION FOLLOWING THE DATE OF APPROVAL MAY REQUIRE THE SUBMITTAL OF AN SCS APPLICATION TO MODIFY THIS APPROVAL, INCLUDING THE PAYMENT OF APPROPRIATE FEES AND ALL INFORMATION NECESSARY FOR ITS REVIEW AND APPROVAL.

5. ALL TEMPORARY EROSION AND SEDIMENTATION CONTROLS MUST BE INSTALLED PRIOR TO CONSTRUCTION, MUST BE MAINTAINED DURING CONSTRUCTION, AND MUST BE REMOVED WHEN SUFFICIENT VEGETATION IS ESTABLISHED TO CONTROL THE EROSION AND SEDIMENTATION AND THE CONSTRUCTION AREA IS STABILIZED.

6. THE SEWER LINE TRENCH DETAILS SHOWING THE CROSS SECTION WITH THE DIMENSIONS, PIPE PLACEMENT, AND BACKFILL INSTRUCTIONS ARE INCLUDED ON PLAN SHEET 129 AND 130 OF 141 OF THESE PLANS. ALL SEWER PIPES JOINTS MUST MEET THE REQUIREMENTS IN 30 TAC §§217.53(C) AN 217.65.

   GRAVITY LINES MUST HAVE A SDR 35 OR LESS. PRESSURIZED SEWER SYSTEMS MUST HAVE PIPE WITH A MINIMUM WORKING PRESSURE RATING OF 150 PSI.

   THE ASTM, ANSI, OR AWWA SPECIFICATION NUMBERS FOR THE PIPE(S) AND JOINTS ARE ASTM-D3034.

   THE PIPE MATERIAL, THE PRESSURE CLASSES, AND THE SDR AND/OR DR DESIGNATIONS ARE SDR-26.

7. IF ANY SENSITIVE FEATURES ARE DISCOVERED DURING THE WASTEWATER LINE TRENCHING ACTIVITIES, ALL REGULATED ACTIVITIES NEAR THE SENSITIVE FEATURE MUST BE SUSPENDED IMMEDIATELY. THE APPLICANT MUST IMMEDIATELY NOTIFY THE APPROPRIATE REGIONAL OFFICE OF THE TEXAS COMMISSION ON ENVIRONMENTAL QUALITY OF THE FEATURE DISCOVERED. A GEOLOGIST'S ASSESSMENT OF THE LOCATION AND EXTENT OF THE FEATURE DISCOVERED MUST BE REPORTED TO THAT REGIONAL OFFICE IN WRITING WITHIN TWO WORKING DAYS. THE APPLICANT MUST SUBMIT A PLAN FOR ENSURING THE STRUCTURAL INTEGRITY OF THE SEWER LINE OR FOR MODIFYING THE PROPOSED COLLECTION SYSTEM ALIGNMENT AROUND THE FEATURE. THE REGULATED ACTIVITIES NEAR THE SENSITIVE FEATURE MAY NOT PROCEED UNTIL THE EXECUTIVE DIRECTOR HAS REVIEWED AND APPROVED THE METHODS PROPOSED TO PROTECT THE SENSITIVE FEATURE AND THE EDWARDS AQUIFER FROM ANY POTENTIALLY ADVERSE IMPACTS TO WATER QUALITY WHILE MAINTAINING THE STRUCTURAL INTEGRITY OF THE LINE.

8. SEWER LINES LOCATED WITHIN OR CROSSING THE 5-YEAR FLOODPLAIN OF A DRAINAGE WAY WILL BE PROTECTED FROM INUNDATION AND STREAM VELOCITIES WHICH COULD CAUSE EROSION AND SCOURING OF BACKFILL. THE TRENCH MUST BE CAPPED WITH CONCRETE TO PREVENT SCOURING OF BACKFILL, OR THE SEWER LINES MUST BE ENCASED IN CONCRETE. ALL CONCRETE SHALL HAVE A MINIMUM THICKNESS OF SIX (6) INCHES.

9. BLASTING PROCEDURES FOR PROTECTION OF EXISTING SEWER LINES AND OTHER UTILITIES WILL BE IN ACCORDANCE WITH THE NATIONAL FIRE PROTECTION ASSOCIATION CRITERIA. SAND IS NOT ALLOWED AS BEDDING OR BACKFILL IN TRENCHES THAT HAVE BEEN BLASTED. IF ANY EXISTING SEWER LINES ARE DAMAGED, THE LINES MUST BE REPAIRED AND RETESTED.

10. ALL MANHOLES CONSTRUCTED OR REHABILITATED ON THIS PROJECT MUST HAVE WATERTIGHT SIZE ON SIZE RESILIENT CONNECTORS ALLOWING FOR DIFFERENTIAL SETTLEMENT. IF MANHOLES ARE CONSTRUCTED WITHIN THE 100-YEAR FLOODPLAIN, THE COVER MUST HAVE A GASKET AND BE BOLTED TO THE RING. WHERE GASKETED MANHOLE COVERS ARE REQUIRED FOR MORE THAN THREE MANHOLES IN SEQUENCE OR FOR MORE THAN 1500 FEET, ALTERNATE MEANS OF VENTING WILL BE PROVIDED. BRICKS ARE NOT AN ACCEPTABLE CONSTRUCTION MATERIAL FOR ANY PORTION OF THE MANHOLE.

    THE DIAMETER OF THE MANHOLES MUST BE A MINIMUM OF FOUR FEET AND THE MANHOLE FOR ENTRY MUST HAVE A MINIMUM CLEAR OPENING DIAMETER OF 30 INCHES. THESE DIMENSIONS AND OTHER DETAILS SHOWING COMPLIANCE WITH THE COMMISSION'S RULES CONCERNING MANHOLES AND SEWER LINE/MANHOLE INVERTS DESCRIBED IN 30 TAC §217.55 ARE INCLUDED ON PLAN SHEET 129 AND 130 OF 141.

    IT IS SUGGESTED THAT ENTRANCE INTO MANHOLES IN EXCESS OF FOUR FEET DEEP BE ACCOMPLISHED BY MEANS OF A PORTABLE LADDER. THE INCLUSION OF STEPS IN A MANHOLE IS PROHIBITED.

11. WHERE WATER LINES AND NEW SEWER LINE ARE INSTALLED WITH A SEPARATION DISTANCE CLOSER THAN NINE FEET (I.E., WATER LINES CROSSING WASTEWATER LINES, WATER LINES PARALLELING WASTEWATER LINES, OR WATER LINES NEXT TO MANHOLES) THE INSTALLATION MUST MEET THE REQUIREMENTS OF 30 TAC §217.53(D) (PIPE DESIGN) AND 30 TAC §290.44(E) (WATER DISTRIBUTION).

12. WHERE SEWERS LINES DEVIATE FROM STRAIGHT ALIGNMENT AND UNIFORM GRADE ALL CURVATURE OF SEWER PIPE MUST BE ACHIEVED BY THE FOLLOWING PROCEDURE WHICH IS RECOMMENDED BY THE PIPE MANUFACTURER: N/A.

    IF PIPE FLEXURE IS PROPOSED, THE FOLLOWING METHOD OF PREVENTING DEFLECTION OF THE JOINT MUST BE USED: N/A.

    SPECIFIC CARE MUST BE TAKEN TO ENSURE THAT THE JOINT IS PLACED IN THE CENTER OF THE TRENCH AND PROPERLY BEDDED IN ACCORDANCE WITH 30 TAC §217.54.

13. NEW SEWAGE COLLECTION SYSTEM LINES MUST BE CONSTRUCTED WITH STUB OUTS FOR THE CONNECTION OF ANTICIPATED EXTENSIONS. THE LOCATION OF SUCH STUB OUTS MUST BE MARKED ON THE GROUND SUCH THAT THEIR LOCATION CAN BE EASILY DETERMINED AT THE TIME OF CONNECTION OF THE EXTENSIONS. SUCH STUB OUTS MUST BE MANUFACTURED WYES OR TEES THAT ARE COMPATIBLE IN SIZE AND MATERIAL WITH BOTH THE SEWER LINE AND THE EXTENSION. AT THE TIME OF ORIGINAL CONSTRUCTION, NEW STUB-OUTS MUST BE CONSTRUCTED SUFFICIENTLY TO EXTEND BEYOND THE END OF THE STREET PAVEMENT. ALL STUB-OUTS MUST BE SEALED WITH A MANUFACTURED CAP TO PREVENT LEAKAGE. EXTENSIONS THAT WERE NOT ANTICIPATED AT THE TIME OF ORIGINAL CONSTRUCTION OR THAT ARE TO BE CONNECTED TO AN EXISTING SEWER LINE NOT FURNISHED WITH STUB OUTS MUST BE CONNECTED USING A MANUFACTURED SADDLE AND IN ACCORDANCE WITH ACCEPTED PLUMBING TECHNIQUES.

14. TRENCHING, BEDDING AND BACKFILL MUST CONFORM WITH 30 TAC §217.54. THE BEDDING AND BACKFILL FOR FLEXIBLE PIPE MUST COMPLY WITH THE STANDARDS OF ASTM D-2321, CLASSES IA, IB, II OR III. RIGID PIPE BEDDING MUST COMPLY WITH THE REQUIREMENTS OF ASTM C 12 (ANSI A 106.2) CLASSES A, B OR C.

15. SEWER LINES MUST BE TESTED FROM MANHOLE TO MANHOLE. WHEN A NEW SEWER LINE IS CONNECTED TO AN EXISTING STUB OR CLEAN-OUT, IT MUST BE TESTED FROM EXISTING MANHOLE TO NEW MANHOLE. IF A STUB OR CLEAN-OUT IS USED AT THE END OF THE PROPOSED SEWER LINE, NO PRIVATE SERVICE ATTACHMENTS MAY BE CONNECTED BETWEEN THE LAST MANHOLE AND THE CLEANOUT UNLESS IT CAN BE CERTIFIED AS CONFORMING WITH THE PROVISIONS OF 30 TAC §213.5(C)(3)(E).

16. ALL SEWER LINES MUST BE TESTED IN ACCORDANCE WITH 30 TAC §217.57. THE ENGINEER MUST RETAIN COPIES OF ALL TEST RESULTS WHICH MUST BE MADE AVAILABLE TO THE EXECUTIVE DIRECTOR UPON REQUEST. THE ENGINEER MUST CERTIFY IN WRITING THAT ALL WASTEWATER LINES HAVE PASSED ALL REQUIRED TESTING TO THE APPROPRIATE REGIONAL OFFICE WITHIN 30 DAYS OF TEST COMPLETION AND PRIOR TO USE OF THE NEW COLLECTION SYSTEM. TESTING METHOD WILL BE:
    (A) OR A COLLECTION SYSTEM PIPE THAT WILL TRANSPORT WASTEWATER BY GRAVITY FLOW, THE DESIGN MUST SPECIFY AN INFILTRATION AND EXFILTRATION TEST OR A LOW-PRESSURE AIR TEST. A TEST MUST CONFORM TO THE FOLLOWING REQUIREMENTS:
    (1) LOW PRESSURE AIR TEST.
        (A) A LOW PRESSURE AIR TEST MUST FOLLOW THE PROCEDURES DESCRIBED IN AMERICAN SOCIETY FOR TESTING AND MATERIALS (ASTM) C-828, ASTM C-924, OR ASTM F-1417 OR OTHER PROCEDURE APPROVED BY THE EXECUTIVE DIRECTOR, EXCEPT AS TO TESTING TIMES AS REQUIRED IN TABLE C.3 IN SUBPARAGRAPH (C) OF THIS PARAGRAPH OR EQUATION C.3 IN SUBPARAGRAPH (B)(II) OF THIS PARAGRAPH.
        (B) FOR SECTIONS OF COLLECTION SYSTEM PIPE LESS THAN 36 INCH AVERAGE INSIDE DIAMETER, THE FOLLOWING PROCEDURE MUST APPLY, UNLESS A PIPE IS TO BE TESTED AS REQUIRED BY PARAGRAPH (2) OF THIS SUBSECTION.
        (I) A PIPE MUST BE PRESSURIZED TO 3.5 POUNDS PER SQUARE INCH (PSI) GREATER THAN THE PRESSURE EXERTED BY GROUNDWATER ABOVE THE PIPE.
        (II) ONCE THE PRESSURE IS STABILIZED, THE MINIMUM TIME ALLOWABLE FOR THE PRESSURE TO DROP FROM 3.5 PSI GAUGE TO 2.5 PSI GAUGE IS COMPUTED FROM THE FOLLOWING EQUATION:

EQUATION C.3 $$T = \frac{0.085 \times D \times K}{Q}$$

WHERE:

T = TIME FOR PRESSURE TO DROP 1.0 POUND PER SQUARE INCH GAUGE IN SECONDS
K = 0.000419 X D X L, BUT NOT LESS THAN 1.0
D = AVERAGE INSIDE PIPE DIAMETER IN INCHES
L = LENGTH OF LINE OF SAME SIZE BEING TESTED, IN FEET
Q = RATE OF LOSS, 0.0015 CUBIC FEET PER MINUTE PER SQUARE FOOT INTERNAL SURFACE

(C) SINCE A K VALUE OF LESS THAN 1.0 MAY NOT BE USED, THE MINIMUM TESTING TIME FOR EACH PIPE DIAMETER IS SHOWN IN THE FOLLOWING

TABLE C.3:

PIPE DIAMETER (INCHES)	MINIMUM TIME (SECONDS)	MAXIMUM LENGTH FOR MINIMUM TIME (FEET)	TIME FOR LONGER LENGTH (SECONDS/FOOT)
6	340	398	0.855
8	454	298	1.520
10	567	239	2.374
12	680	199	3.419
15	850	159	5.342
18	1020	133	7.693
21	1190	114	10.471
24	1360	100	13.676
27	1530	88	17.309
30	1700	80	21.369
33	1870	72	25.856

(D) AN OWNER MAY STOP A TEST IF NO PRESSURE LOSS HAS OCCURRED DURING THE FIRST 25% OF THE CALCULATED TESTING TIME.
(E) IF ANY PRESSURE LOSS OR LEAKAGE HAS OCCURRED DURING THE FIRST 25% OF A TESTING PERIOD, THEN THE TEST MUST CONTINUE FOR THE ENTIRE TEST DURATION AS OUTLINED ABOVE OR UNTIL FAILURE.
(F) WASTEWATER COLLECTION SYSTEM PIPES WITH A 27 INCH OR LARGER AVERAGE INSIDE DIAMETER MAY BE AIR TESTED AT EACH JOINT INSTEAD OF FOLLOWING THE PROCEDURE OUTLINED IN THIS SECTION.
(G) A TESTING PROCEDURE FOR PIPE WITH AN INSIDE DIAMETER GREATER THAN 33 INCHES MUST BE APPROVED BY THE EXECUTIVE DIRECTOR.

(2) INFILTRATION/EXFILTRATION TEST.

(A) THE TOTAL EXFILTRATION, AS DETERMINED BY A HYDROSTATIC HEAD TEST, MUST NOT EXCEED 50 GALLONS PER INCH OF DIAMETER PER MILE OF PIPE PER 24 HOURS AT A MINIMUM TEST HEAD OF 2.0 FEET ABOVE THE CROWN OF A PIPE AT AN UPSTREAM MANHOLE.
(B) AN OWNER SHALL USE AN INFILTRATION TEST IN LIEU OF AN EXFILTRATION TEST WHEN PIPES ARE INSTALLED BELOW THE GROUNDWATER LEVEL.
(C) THE TOTAL EXFILTRATION, AS DETERMINED BY A HYDROSTATIC HEAD TEST, MUST NOT EXCEED 50 GALLONS PER INCH DIAMETER PER MILE OF PIPE PER 24 HOURS AT A MINIMUM TEST HEAD OF TWO FEET ABOVE THE CROWN OF A PIPE AT AN UPSTREAM MANHOLE, OR AT LEAST TWO FEET ABOVE EXISTING GROUNDWATER LEVEL, WHICHEVER IS GREATER.
(D) FOR CONSTRUCTION WITHIN A 25-YEAR FLOOD PLAIN, THE INFILTRATION OR EXFILTRATION MUST NOT EXCEED 10 GALLONS PER INCH DIAMETER PER MILE OF PIPE PER 24 HOURS AT THE SAME MINIMUM TEST HEAD AS IN SUBPARGRAPH (C) OF THIS PARAGRAPH.
(E) IF THE QUANTITY OF INFILTRATION OR EXFILTRATION EXCEEDS THE MAXIMUM QUANTITY SPECIFIED, AN OWNER SHALL UNDERTAKE REMEDIAL ACTION IN ORDER TO REDUCE THE INFILTRATION OR EXFILTRATION TO AN AMOUNT WITHIN THE LIMITS SPECIFIED. AN OWNER SHALL RETEST A PIPE FOLLOWING A REMEDIATION ACTION.
(F) IF A GRAVITY COLLECTION PIPE IS COMPOSED OF FLEXIBLE PIPE, DEFLECTION TESTING IS ALSO REQUIRED. THE FOLLOWING PROCEDURES MUST BE FOLLOWED:

(1) FOR A COLLECTION PIPE WITH INSIDE DIAMETER LESS THAN 27 INCHES, DEFLECTION MEASUREMENT REQUIRES A RIGID MANDREL.
  (A) MANDREL SIZING.
    (I) A RIGID MANDREL MUST HAVE AN OUTSIDE DIAMETER (OD) NOT LESS THAN 95% OF THE BASE INSIDE DIAMETER (ID) OR AVERAGE ID OF A PIPE, AS SPECIFIED IN THE APPROPRIATE STANDARD BY THE ASTMS, AMERICAN WATER WORKS ASSOCIATION, UNI-BELL, OR AMERICAN NATIONAL STANDARDS INSTITUTE, OR ANY RELATED APPENDIX.
    (II) IF A MANDREL SIZING DIAMETER IS NOT SPECIFIED IN THE APPROPRIATE STANDARD, THE MANDREL MUST HAVE AN OD EQUAL TO 95% OF THE ID OF A PIPE. IN THIS CASE, THE ID OF THE PIPE, FOR THE PURPOSE OF DETERMINING THE OD OF THE MANDREL, MUST EQUAL BE THE AVERAGE OUTSIDE DIAMETER MINUS TWO MINIMUM WALL THICKNESSES FOR OD CONTROLLED PIPE AND THE AVERAGE INSIDE DIAMETER FOR ID CONTROLLED PIPE.
    (III) ALL DIMENSIONS MUST MEET THE APPROPRIATE STANDARD.
  (B) MANDREL DESIGN.
    (I) A RIGID MANDREL MUST BE CONSTRUCTED OF A METAL OR A RIGID PLASTIC MATERIAL THAT CAN WITHSTAND 200 PSI WITHOUT BEING DEFORMED.
    (II) A MANDREL MUST HAVE NINE OR MORE ODD NUMBER OF RUNNERS OR LEGS.
    (III) A BARREL SECTION LENGTH MUST EQUAL AT LEAST 75% OF THE INSIDE DIAMETER OF A PIPE.
    (IV) EACH SIZE MANDREL MUST USE A SEPARATE PROVING RING.
  (C) METHOD OPTIONS.
    (I) AN ADJUSTABLE OR FLEXIBLE MANDREL IS PROHIBITED.
    (II) A TEST MAY NOT USE TELEVISION INSPECTION AS A SUBSTITUTE FOR A DEFLECTION TEST.
    (III) IF REQUESTED, THE EXECUTIVE DIRECTOR MAY APPROVE THE USE OF A DEFLECTOMETER OR A MANDREL WITH REMOVABLE LEGS OR RUNNERS ON A CASE-BY-CASE BASIS.
(2) FOR A GRAVITY COLLECTION SYSTEM PIPE WITH AN INSIDE DIAMETER 27 INCHES AND GREATER, OTHER TEST METHODS MAY BE USED TO DETERMINE VERTICAL DEFLECTION.
(3) A DEFLECTION TEST METHOD MUST BE ACCURATE TO WITHIN PLUS OR MINUS 0.2% DEFLECTION.
(4) AN OWNER SHALL NOT CONDUCT A DEFLECTION TEST UNTIL AT LEAST 30 DAYS AFTER THE FINAL BACKFILL.
(5) GRAVITY COLLECTION SYSTEM PIPE DEFLECTION MUST NOT EXCEED FIVE PERCENT (5%).
(6) IF A PIPE SECTION FAILS A DEFLECTION TEST, AN OWNER SHALL CORRECT THE PROBLEM AND CONDUCT A SECOND TEST AFTER THE FINAL BACKFILL HAS BEEN IN PLACE AT LEAST 30 DAYS.

17. ALL MANHOLES MUST BE TESTED TO MEET OR EXCEED THE REQUIREMENTS OF 30 TAC §217.58.

18. ALL PRIVATE SERVICE LATERALS MUST BE INSPECTED AND CERTIFIED IN ACCORDANCE WITH 30 TAC §213.5(C)(3)(I). AFTER INSTALLATION OF AND, PRIOR TO COVERING AND CONNECTING A PRIVATE SERVICE LATERAL TO AN EXISTING ORGANIZED SEWAGE COLLECTION SYSTEM, A TEXAS LICENSED PROFESSIONAL ENGINEER, TEXAS REGISTERED SANITARIAN, OR APPROPRIATE CITY INSPECTOR MUST VISUALLY INSPECT THE PRIVATE SERVICE LATERAL AND THE CONNECTION TO THE SEWAGE COLLECTION SYSTEM, AND CERTIFY THAT IT IS CONSTRUCTED IN CONFORMITY WITH THE APPLICABLE PROVISIONS OF THIS SECTION. THE OWNER OF THE COLLECTION SYSTEM MUST MAINTAIN SUCH CERTIFICATIONS FOR FIVE YEARS AND FORWARD COPIES TO THE APPROPRIATE REGIONAL OFFICE UPON REQUEST. CONNECTIONS MAY ONLY BE MADE TO AN APPROVED SEWAGE COLLECTION SYSTEM.

SUPPLEMENTAL TCEQ NOTES:

1. WATERTIGHT, SIZE ON SIZE RESILIENT CONNECTORS CONFORMING TO ASTM C-923 ARE REQUIRED FOR CONNECTING PIPE TO MANHOLES.

2. IF FAULTS, CAVERNS, OR SUBSIDENCE ARE DISCOVERED DURING CONSTRUCTION, CONSTRUCTION SHOULD BE HALTED TO ALLOW THE FEATURES TO BE INSPECTED BY THE DESIGN ENGINEER OR GEOLOGICAL OR GEOTECHNICAL PROFESSIONAL.

3. TRENCH WALLS MUST BE VERTICAL TO AT LEAST ONE FOOT ABOVE THE PIPE. TRENCH BACKFILL MUST BE FREE OF STONES GREATER THAN 6-INCHES AND FREE OF ORGANIC OR ANY OTHER UNSTABLE MATERIAL.

4. ALL WASTEWATER PIPE MATERIAL PVC SDR26-ASTM-3034 USED MUST HAVE A MINIMUM ALLOWABLE TENSILE.

TCEQ WATER DISTRIBUTION SYSTEM GENERAL CONSTRUCTION NOTES

1. This water distribution system must be constructed in accordance with the current Texas Commission on Environmental Quality (TCEQ) Rules and Regulations for Public Water Systems 30 Texas Administrative Code (TAC) Chapter 290 Subchapter D. When conflicts are noted with local standards, the more stringent requirement shall be applied. At a minimum, construction for public water systems must always meet TCEQ's "Rules and Regulations for Public Water Systems."

2. All newly installed pipes and related products must conform to American National Standards Institute (ANSI)/NSF International Standard 61 and must be certified by an organization accredited by ANSI [§290.44(a)(1)].

3. Plastic pipe for use in public water systems must bear the NSF International Seal of Approval (NSF-pw) and have an ASTM design pressure rating of at least 150 psi or a standard dimension ratio of 26 or less [§290.44(a)(2)].

4. No pipe which has been used for any purpose other than the conveyance of drinking water shall be accepted or relocated for use in any public drinking water supply [§290.44(a)(3)].

5. All water line crossings of wastewater mains shall be perpendicular [§290.44(e)(4)(B)].

6. Water transmission and distribution lines shall be installed in accordance with the manufacturer's instructions. However, the top of the water line must be located below the frost line and in no case shall the top of the water line be less than 24 inches below ground surface [§290.44(a)(4)].

7. The maximum allowable lead content of pipes, pipe fittings, plumbing fittings, and fixtures is 0.25 percent [§290.44(b)].

8. The contractor shall install appropriate air release devices with vent openings to the atmosphere covered with 16-mesh or finer, corrosion resistant screening material or an acceptable equivalent [§290.44(d)(1)].

9. The contractor shall not place the pipe in water or where it can be flooded with water or sewage during its storage or installation [§290.44(f)(1)].

10. When waterlines are laid under any flowing or intermittent stream or semi-permanent body of water the waterline shall be installed in a separate watertight pipe encasement. Valves must be provided on each side of the crossing with facilities to allow the underwater portion of the system to be isolated and tested [§290.44(f)(2)].

11. Pursuant to 30 TAC §290.44(a)(5), the hydrostatic leakage rate shall not exceed the amount allowed or recommended by the most current AWWA formulas for PVC pipe, cast iron and ductile iron pipe. Include the formulas in the notes on the plans.
    - The hydrostatic leakage rate for polyvinyl chloride (PVC) pipe and appurtenances shall not exceed the amount allowed or recommended by formulas in America Water Works Association (AWWA) C-605 as required in 30 TAC §290.44(a)(5). Please ensure that the formula for this calculation is correct and most current formula is in use;

    $$Q = \frac{LD\sqrt{P}}{148{,}000}$$

    Where:
      - Q = the quantity of makeup water in gallons per hour,
      - L = the length of the pipe section being tested, in feet,
      - D = the nominal diameter of the pipe in inches, and
      - P = the average test pressure during the hydrostatic test in pounds per square inch (psi).
    - The hydrostatic leakage rate for ductile iron (DI) pipe and appurtenances shall not exceed the amount allowed or recommended by formulas in America Water Works Association (AWWA) C-600 as required in 30 TAC §290.44(a)(5). Please ensure that the formula for this calculation is correct and most current formula is in use;

    $$L = \frac{SD\sqrt{P}}{148{,}000}$$

    Where:
      - L = the quantity of makeup water in gallons per hour,
      - S = the length of the pipe section being tested, in feet,
      - D = the nominal diameter of the pipe in inches, and
      - P = the average test pressure during the hydrostatic test in pounds per square inch (psi).

12. The contractor shall maintain a minimum separation distance in all directions of nine feet between the proposed waterline and wastewater collection facilities including manholes. If this distance cannot be maintained, the contractor must immediately notify the project engineer for further direction. Separation distances, installation methods, and materials utilized must meet §290.44(e)(1)-(4).

13. The separation distance from a potable waterline to a wastewater main or lateral manhole or cleanout shall be a minimum of nine feet. Where the nine-foot separation distance cannot be achieved, the potable waterline shall be encased in a joint of at least 150 psi pressure class pipe at least 18 feet long and two nominal sizes larger than the new conveyance. The space around the carrier pipe shall be supported at five-foot intervals with spacers or be filled to the springline with washed sand. The encasement pipe shall be centered on the crossing and both ends sealed with cement grout or manufactured sealant [§290.44(e)(5)].

14. Fire hydrants shall not be installed within nine feet vertically or horizontally of any wastewater line, wastewater lateral, or wastewater service line regardless of construction [§290.44(e)(6)].

15. Suction mains to pumping equipment shall not cross wastewater mains, wastewater laterals, or wastewater service lines. Raw water supply lines shall not be installed within five feet of any tile or concrete wastewater main, wastewater lateral, or wastewater service line [§290.44(e)(7)].

16. Waterlines shall not be installed closer than ten feet to septic tank drainfields [§290.44(e)(8)].

17. The contractor shall disinfect the new waterlines in accordance with AWWA Standard C-651-14 or most recent, then flush and sample the lines before being placed into service. Samples shall be collected for microbiological analysis to check the effectiveness of the disinfection procedure which shall be repeated if contamination persists. A minimum of one sample for each 1,000 feet of completed waterline will be required or at the next available sampling point beyond 1,000 feet as designated by the design engineer [§290.44(f)(3)].

18. Dechlorination of disinfecting water shall be in strict accordance with current AWWA Standard C655-09 or most recent.

Texas Commission on Environmental Quality
Water Pollution Abatement Plan
General Construction Notes

Edwards Aquifer Protection Program Construction Notes – Legal Disclaimer

The following/listed "construction notes" are intended to be advisory in nature only and do not constitute an approval or conditional approval by the Executive Director (ED), nor do they constitute a comprehensive listing of rules or conditions to be followed during construction. Further actions may be required to achieve compliance with TCEQ regulations found in Title 30, Texas Administrative Code (TAC), Chapters 213 and 217, as well as local ordinances and regulations providing for the protection of water quality. Additionally, nothing contained in the following/listed "construction notes" restricts the powers of the ED, the commission or any other governmental entity to prevent, correct, or curtail activities that result or may result in pollution of the Edwards Aquifer or hydrologically connected surface waters. The holder of any Edwards Aquifer Protection Plan containing "construction notes" is still responsible for compliance with Title 30, TAC, Chapters 213 or any other applicable TCEQ regulation, as well as all conditions of an Edwards Aquifer Protection Plan through all phases of plan implementation. Failure to comply with any condition of the ED's approval, whether or not in contradiction of any "construction notes," is a violation of TCEQ regulations and any violation is subject to administrative rules, orders, and penalties as provided under Title 30, TAC § 213.10 (relating to Enforcement). Such violations may also be subject to civil penalties and injunction. The following/listed "construction notes" in no way represent an approved exception by the ED to any part of Title 30 TAC, Chapters 213 and 217, or any other TCEQ applicable regulation

1. A written notice of construction must be submitted to the TCEQ regional office at least 48 hours prior to the start of any regulated activities. This notice must include:
   - the name of the approved project;
   - the activity start date; and
   - the contact information of the prime contractor.

2. All contractors conducting regulated activities associated with this project must be provided with complete copies of the approved Water Pollution Abatement Plan (WPAP) and the TCEQ letter indicating the specific conditions of its approval. During the course of these regulated activities, the contractors are required to keep on-site copies of the approved plan and approval letter.

3. If any sensitive feature(s) (caves, solution cavity, sink hole, etc.) is discovered during construction, all regulated activities near the sensitive feature must be suspended immediately. The appropriate TCEQ regional office must be immediately notified of any sensitive features encountered during construction. Construction activities may not be resumed until the TCEQ has reviewed and approved the appropriate protective measures in order to protect any sensitive feature and the Edwards Aquifer from potentially adverse impacts to water quality.

4. No temporary or permanent hazardous substance storage tank shall be installed within 150 feet of a water supply source, distribution system, well, or sensitive feature.

5. Prior to beginning any construction activity, all temporary erosion and sedimentation (E&S) control measures must be properly installed and maintained in accordance with the approved plans and manufacturers specifications. If inspections indicate a control has been used inappropriately, or incorrectly, the applicant must replace or modify the control for site situations. These controls must remain in place until the disturbed areas have been permanently stabilized.

6. Any sediment that escapes the construction site must be collected and properly disposed of before the next rain event to ensure it is not washed into surface streams, sensitive features, etc.

7. Sediment must be removed from the sediment traps or sedimentation basins not later than when it occupies 50% of the basin's design capacity.

8. Litter, construction debris, and construction chemicals exposed to stormwater shall be prevented from being discharged offsite.

9. All spoils (excavated material) generated from the project site must be stored on-site with proper E&S controls. For storage or disposal of spoils at another site on the Edwards Aquifer Recharge Zone, the owner of the site must receive approval of a water pollution abatement plan for the placement of fill material or mass grading prior to the placement of spoils at the other site.

10. If portions of the site will have a temporary or permanent cease in construction activity lasting longer than 14 days, soil stabilization in those areas shall be initiated as soon as possible prior to the 14th day of inactivity. If activity will resume prior to the 21st day, stabilization measures are not required. If drought conditions or inclement weather prevent action by the 14th day, stabilization measures shall be initiated as soon as possible.

11. The following records shall be maintained and made available to the TCEQ upon request:
    - the dates when major grading activities occur;
    - the dates when construction activities temporarily or permanently cease on a portion of the site; and
    - the dates when stabilization measures are initiated.

12. The holder of any approved Edward Aquifer protection plan must notify the appropriate regional office in writing and obtain approval from the executive director prior to initiating any of the following:

    A. any physical or operational modification of any water pollution abatement structure(s), including but not limited to ponds, dams, berms, sewage treatment plants, and diversionary structures;

    B. any change in the nature or character of the regulated activity from that which was originally approved or a change which would significantly impact the ability of the plan to prevent pollution of the Edwards Aquifer;

    C. any development of land previously identified as undeveloped in the original water pollution abatement plan.

Austin Regional Office	San Antonio Regional Office
12100 Park 35 Circle, Building A	14250 Judson Road
Austin, Texas 78753-1808	San Antonio, Texas 78233-4480
Phone (512) 339-2929	Phone (210) 490-3096
Fax (512) 339-3795	Fax (210) 545-4329

THESE GENERAL CONSTRUCTION NOTES MUST BE INCLUDED ON THE CONSTRUCTION PLANS PROVIDED TO THE CONTRACTOR AND ALL SUBCONTRACTORS.

NO.	REVISION	BY	DATE

Know what's below. Call before you dig.

HRGreen®
DEVELOPMENT TX
5508 HIGHWAY 290 WEST
SUITE 150
AUSTIN, TX 78735
512.872.6696
HRGREEN.COM
TBPE NO: 16384
TBPLS NO: 10194101

STATE OF TEXAS
CHRISTINE N. CAMPBELL
142536
LICENSED PROFESSIONAL ENGINEER
07/03/2025

TCEQ NOTES

PARKSIDE ON THE RIVER
SECTIONS 11, 12A & 15A
CONSTRUCTION PLANS
GEORGETOWN, WILLIAMSON, TEXAS

DESIGNED BY: CC
DRAWN BY: MM
CHECKED BY: SN
APPROVED BY:

SHEET 3 OF 141

2025-XX-CON

P:\Blake Magee\Parkside Sections 11-15 & WON 5\Section 11, 12A & 15A\03_ACAD\Plans\sh2403522 GNTS.dwg, TCEQ NOTES, July 18, 2025, 11:20 AM, makai.muhammad

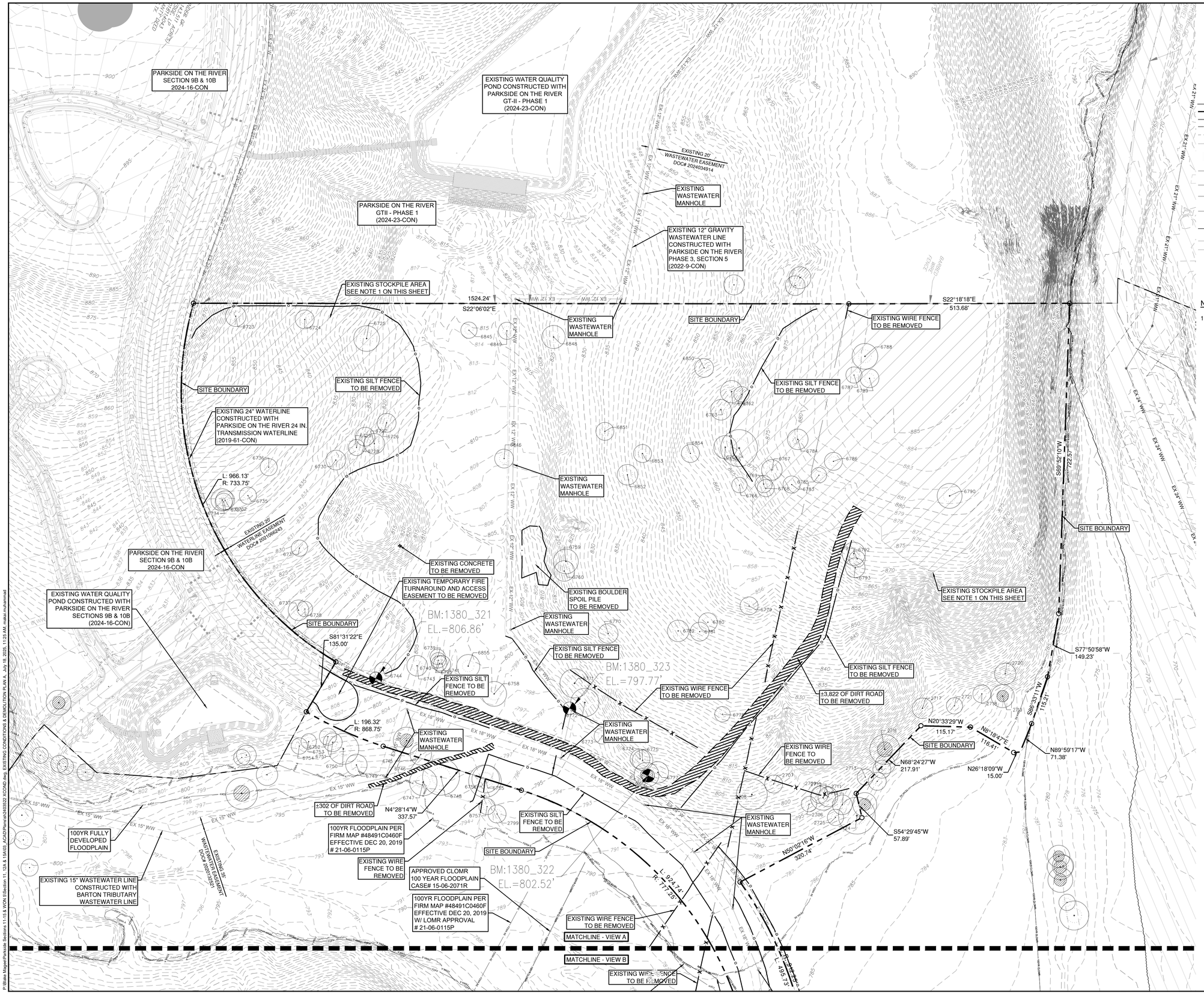

0 100' 200'

SCALE: 1" = 100'

LEGEND

- SITE BOUNDARY
- PROPOSED LOT LINE
- EASEMENT
- 840 EXISTING MAJOR CONTOUR
- 834 EXISTING MINOR CONTOUR
- FEMA FLOODWAY PER FIRM# 48491C0460F & LOMR# 21-06-0115P
- FEMA AE — 100YR ATLAS 14 FEMA ZONE AE FLOODPLAIN PER FIRM# 48491C0460F & LOMR# 21-06-0115P
- FEMA A — 100YR FEMA ZONE A FLOODPLAIN PER FIRM MAP# 48491C0460F
- 100YR CLOMR — 100YR CLOMR FLOODPLAIN CASE# 15-06-2071R
- FDFP — 100YR ATLAS 14 FULLY DEVELOPED FLOODPLAIN (STANTEC DRAINAGE STUDY, SHERVIN NOOSHIN, 3/25/19) APPROVED WITH PP# 2019-5-PP
- OHWM — ORDINARY HIGH WATER MARK PER ADAMS ENVIRONMENTAL
- OHE — OVERHEAD ELECTRIC LINE
- OLD PARCEL LINE
- EXISTING TREES
- EXISTING HERITAGE TREES

NOTES:

1. HR GREEN DID NOT PERFORM A TOPOGRAPHIC SURVEY OF THE HATCHED STOCKPILE AREA DURING AUGUST AND SEPTEMBER 2024, AS IT IS CURRENTLY UNDERGOING SIGNIFICANT EARTH MOVING WORK.

NO	BY	DATE
	REVISION	

811 Know what's below. Call before you dig.

5508 HIGHWAY 290 WEST
SUITE 150
AUSTIN, TX 78735
512.872.6696
HRGREEN.COM

TBPE NO: 16384
TBPLS NO: 10194101

HRGreen®
DEVELOPMENT TX

STATE OF TEXAS
CHRISTINE N. CAMPBELL
142536
LICENSED
PROFESSIONAL
ENGINEER

07/15/2025

EXISTING CONDITIONS & DEMOLITION PLAN A

PARKSIDE ON THE RIVER SECTIONS 11, 12A & 15A CONSTRUCTION PLANS

GEORGETOWN, WILLIAMSON, TEXAS

DESIGNED BY: CC
DRAWN BY: MM
CHECKED BY: SN
APPROVED BY:

SHEET 29 OF 141

2025-XX-CON

P:\Blair Magnet\Parkside Sections 11-15 & WOA II\Sections 11, 12A & 15A\00_ACAD\Permit\240503\2 XCOND.dwg, EXISTING CONDITIONS & DEMOLITION PLAN A, July 16, 2025, 11:25 AM, nabil.muhammad

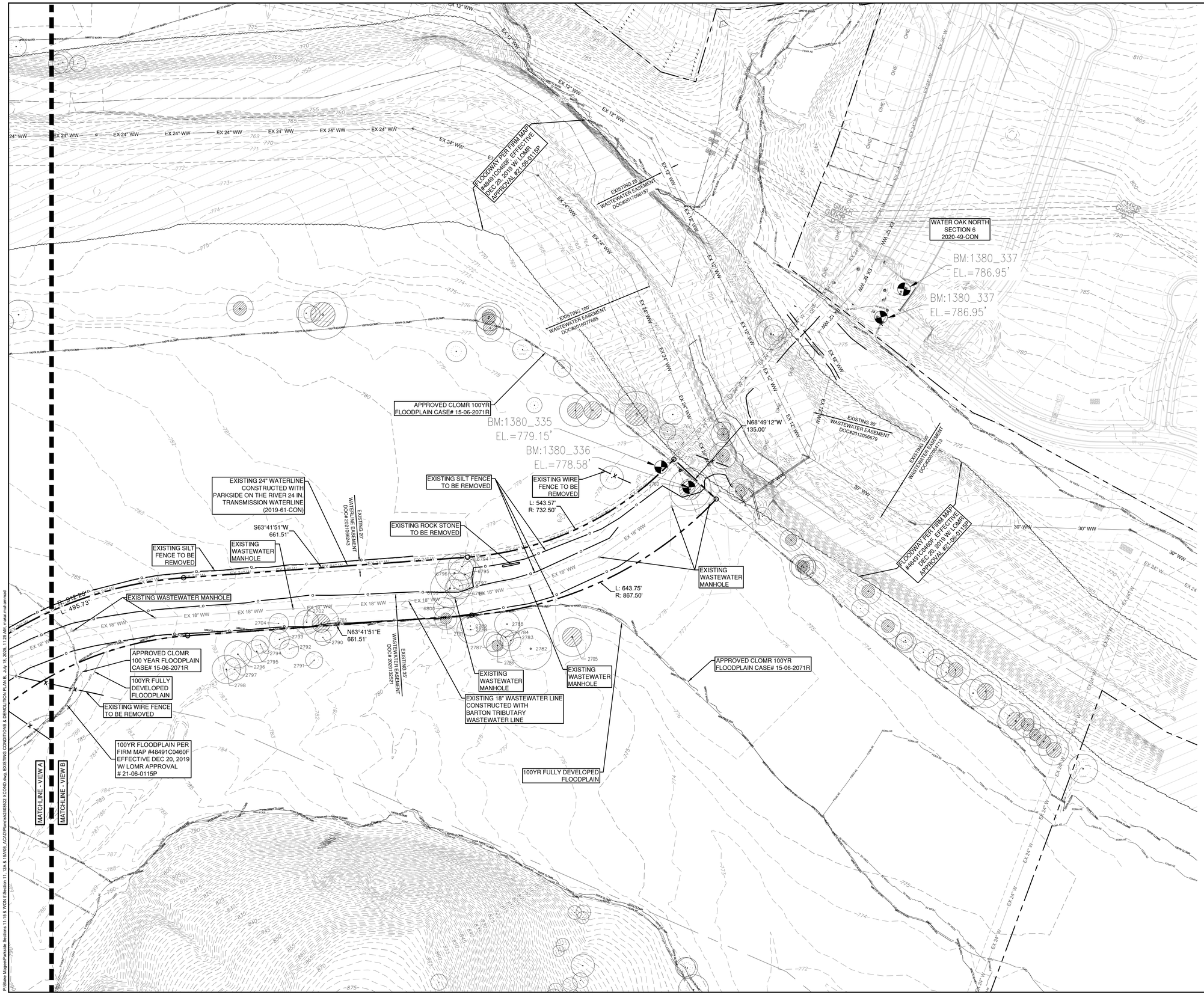

0 100' 200'

SCALE: 1" = 100'

LEGEND

- SITE BOUNDARY
- PROPOSED LOT LINE
- EASEMENT
- 840 EXISTING MAJOR CONTOUR
- 834 EXISTING MINOR CONTOUR
- FEMA FLOODWAY PER FIRM# 48491C0460F & LOMR# 21-06-0115P
- FEMA AE — 100YR ATLAS 14 FEMA ZONE AE FLOODPLAIN PER FIRM# 48491C0460F & LOMR# 21-06-0115P
- FEMA A — 100YR FEMA ZONE A FLOODPLAIN PER FIRM MAP# 48491C0460F
- 100YR CLOMR — 100YR CLOMR FLOODPLAIN CASE# 15-06-2071R
- FDFP — 100YR ATLAS 14 FULLY DEVELOPED FLOODPLAIN (STANTEC DRAINAGE STUDY, SHERVIN NOOSHIN, 3/25/19) APPROVED WITH PP# 2019-5-PP
- OHWM — ORDINARY HIGH WATER MARK PER ADAMS ENVIRONMENTAL
- OHE — OVERHEAD ELECTRIC LINE
- OLD PARCEL LINE
- EXISTING TREES
- EXISTING HERITAGE TREES

NO.	REVISION	BY	DATE

811 Know what's below. Call before you dig.

HRGreen® DEVELOPMENT TX
5508 HIGHWAY 290 WEST
SUITE 150
AUSTIN, TX 78735
512.872.6696
HRGREEN.COM
TBPE NO: 16384
TBPLS NO: 10194101

STATE OF TEXAS
CHRISTINE N. CAMPBELL
142536
LICENSED PROFESSIONAL ENGINEER
07/03/2025

EXISTING CONDITIONS & DEMOLITION PLAN B

PARKSIDE ON THE RIVER SECTIONS 11, 12A & 15A CONSTRUCTION PLANS

GEORGETOWN, WILLIAMSON, TEXAS

DESIGNED BY: CC
DRAWN BY: MM
CHECKED BY: SN
APPROVED BY:

2025-XX-CON

P:\Blake Magee\Parkside Sections 11-15 & WON 5\Section 11, 12A & 15A\03_ACAD\Plans\sh2403522 XCOND.dwg, EXISTING CONDITIONS & DEMOLITION PLAN B, July 18, 2025, 11:25 AM, makai.muhammad

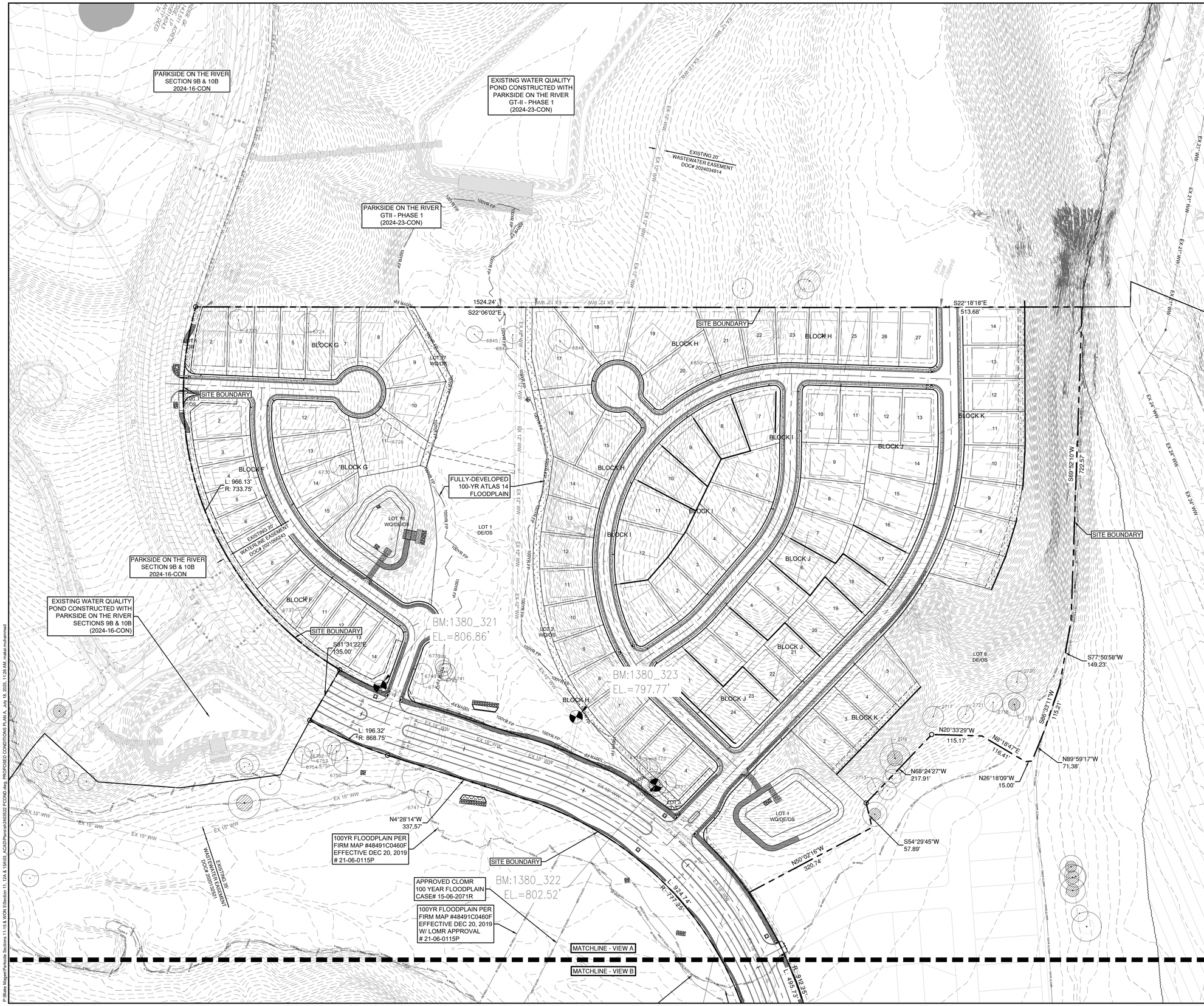

0 100' 200'

SCALE: 1" = 100'

LEGEND

- SITE BOUNDARY
- PROPOSED LOT LINE
- EASEMENT
- 840 — EXISTING MAJOR CONTOUR
- 834 — EXISTING MINOR CONTOUR
- FEMA FLOODWAY PER FIRM# 48491C0460F & LOMR# 21-06-0115P
- FEMA AE — 100YR ATLAS 14 FEMA ZONE AE FLOODPLAIN PER FIRM# 48491C0460F & LOMR# 21-06-0115P
- FEMA A — 100YR FEMA ZONE A FLOODPLAIN PER FIRM MAP# 48491C0460F
- 100YR CLOMR — 100YR CLOMR FLOODPLAIN CASE# 15-06-2071R
- FDFP — 100YR ATLAS 14 FULLY DEVELOPED FLOODPLAIN (STANTEC DRAINAGE STUDY, SHERVIN NOOSHIN, 3/25/19) APPROVED WITH PP# 2019-5-PP
- OHWM — ORDINARY HIGH WATER MARK PER ADAMS ENVIRONMENTAL
- OHE — OVERHEAD ELECTRIC LINE
- OLD PARCEL LINE
- EXISTING TREES
- EXISTING HERITAGE TREES

NO.	REVISION	BY	DATE

811 Know what's below. Call before you dig.

HRGreen®
DEVELOPMENT TX
5508 HIGHWAY 290 WEST
SUITE 150
AUSTIN, TX 78735
512.872.6696
HRGREEN.COM
TBPE NO: 16384
TBPLS NO: 10194101

STATE OF TEXAS
CHRISTINE N. CAMPBELL
142536
LICENSED PROFESSIONAL ENGINEER
07/03/2025

PROPOSED CONDITIONS PLAN A

PARKSIDE ON THE RIVER SECTIONS 11, 12A & 15A CONSTRUCTION PLANS

GEORGETOWN, WILLIAMSON, TEXAS

DESIGNED BY: CC
DRAWN BY: MM
CHECKED BY: SN
APPROVED BY:

SHEET 31 OF 141

2025-XX-CON

P:\Blake Magee\Parkside Sections 11-15 & WON 5\Section 11, 12A & 15A\03_ACAD\Plans\sh2403522 PCOND.dwg, PROPOSED CONDITIONS PLAN A, July 18, 2025, 11:26 AM, makai.muhammad

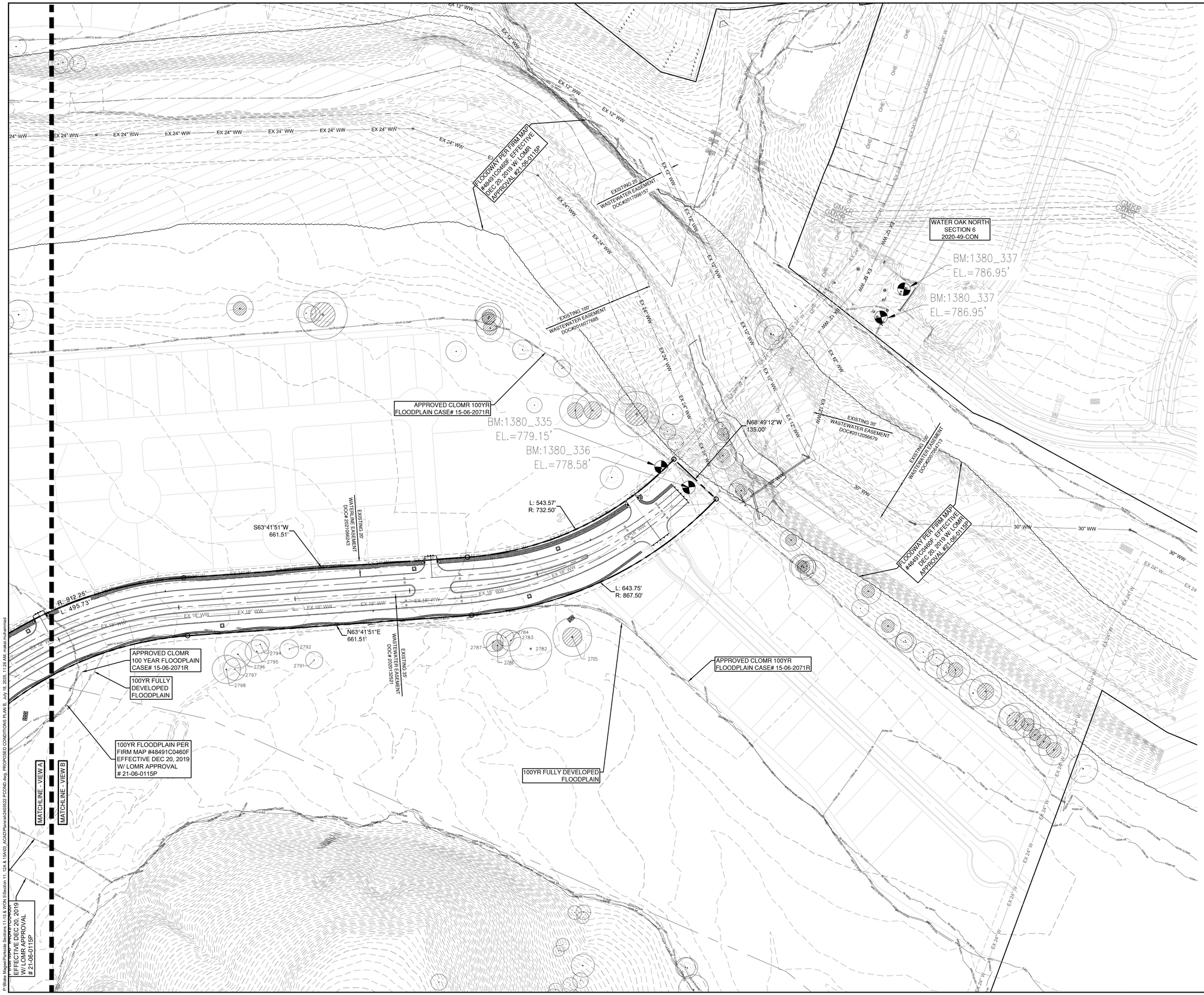

0 100' 200'

SCALE: 1" = 100'

LEGEND

- SITE BOUNDARY
- PROPOSED LOT LINE
- EASEMENT
- 840 — EXISTING MAJOR CONTOUR
- 834 — EXISTING MINOR CONTOUR
- FEMA FLOODWAY PER FIRM# 48491C0460F & LOMR# 21-06-0115P
- FEMA AE — 100YR ATLAS 14 FEMA ZONE AE FLOODPLAIN PER FIRM# 48491C0460F & LOMR# 21-06-0115P
- FEMA A — 100YR FEMA ZONE A FLOODPLAIN PER FIRM MAP# 48491C0460F
- 100YR CLOMR — 100YR CLOMR FLOODPLAIN CASE# 15-06-2071R
- FDFP — 100YR ATLAS 14 FULLY DEVELOPED FLOODPLAIN (STANTEC DRAINAGE STUDY, SHERVIN NOOSHIN, 3/25/19) APPROVED WITH PP# 2019-5-PP
- OHWM — ORDINARY HIGH WATER MARK PER ADAMS ENVIRONMENTAL
- OHE — OVERHEAD ELECTRIC LINE
- OLD PARCEL LINE
- EXISTING TREES
- EXISTING HERITAGE TREES

NO.	REVISION	BY	DATE

811 Know what's below. Call before you dig.

HRGreen® DEVELOPMENT TX
5508 HIGHWAY 290 WEST
SUITE 150
AUSTIN, TX 78735
512.872.6696
HRGREEN.COM
TBPE NO: 16384
TBPLS NO: 10194101

STATE OF TEXAS
CHRISTINE N. CAMPBELL
142536
LICENSED PROFESSIONAL ENGINEER
07/03/2025

PROPOSED CONDITIONS PLAN B

PARKSIDE ON THE RIVER SECTIONS 11, 12A & 15A CONSTRUCTION PLANS GEORGETOWN, WILLIAMSON, TEXAS

DESIGNED BY: CC
DRAWN BY: MM
CHECKED BY: SN
APPROVED BY:

SHEET 32 OF 141

2025-XX-CON

P:\Blake Magee\Parkside Sections 11-15 & WON 5\Section 11, 12A & 15A\03_ACAD\Plans\sh24\03522 PCOND.dwg, PROPOSED CONDITIONS PLAN B, July 18, 2025, 11:26 AM, makai.muhammad

INSTALL INLET PROTECTION

MATCHLINE - VIEW B

MATCHLINE - VIEW A

LIMITS OF CONSTRUCTION

EXISTING 20' WASTEWATER EASEMENT DOC#2024034914

INSTALL ±945 LF OF SILT FENCE

INSTALL ±1,504 LF OF SILT FENCE

INSTALL ±147 LF OF TREE PROTECTION

FULLY-DEVELOPED 100-YR ATLAS 14 FLOODPLAIN

INSTALL ±160 LF OF TREE PROTECTION

INSTALL ±61 LF OF ROCK BERM

INSTALL ±101 LF OF SILT FENCE

INSTALL ±142 LF OF SILT FENCE

INSTALL INLET PROTECTION

INSTALL INLET PROTECTION

INSTALL INLET PROTECTION

PARKSIDE ON THE RIVER SECTIONS 9B & 10B (2024-16-CON)

LIMITS OF CONSTRUCTION

STABILIZED CONSTRUCTION ENTRANCE

EXISTING WATER QUALITY POND CONSTRUCTED WITH PARKSIDE ON THE RIVER SECTIONS 9B & 10B (2024-16-CON)

INSTALL INLET PROTECTION

INSTALL ±54 LF OF SILT FENCE

INSTALL ±145 LF OF TREE PROTECTION

INSTALL ±11 LF OF ROCK BERM

INSTALL ±176 LF OF SILT FENCE

INSTALL ±99 LF OF TREE PROTECTION

100YR FULLY DEVELOPED FLOODPLAIN

100YR FLOODPLAIN PER FIRM MAP #48491C0460F EFFECTIVE DEC 20, 2019 # 21-06-0115P

LIMITS OF CONSTRUCTION

INSTALL ±1,464 LF OF SILT FENCE

INSTALL ±93 LF OF ROCK BERM

APPROVED CLOMR 100 YEAR FLOODPLAIN CASE# 15-06-2071R

100YR FLOODPLAIN PER FIRM MAP #48491C0460F EFFECTIVE DEC 20, 2019 W/ LOMR APPROVAL # 21-06-0115P

EXISTING 20' WASTEWATER EASEMENT DOC#2020120321

EXISTING 20' WATERLINE EASEMENT DOC#2019064243

PARKSIDE PARKWAY OUTBOUND

PARKSIDE PARKWAY INBOUND

GAMALIEL LOOP

MORNING

LOCK H

LOT 2 WQ/OS

BLOCK F

0 40' 80'

SCALE: 1" = 40'

LEGEND

- PROPERTY BOUNDARY
- EASEMENT
- EXISTING MAJOR CONTOUR
- EXISTING MINOR CONTOUR
- PROPOSED MAJOR CONTOUR
- PROPOSED MINOR CONTOUR
- LOC — LIMITS OF CONSTRUCTION
- SF — SILT FENCE
- TP — TREE PROTECTION FENCE
- FEMA FLOODWAY PER FIRM# 48491C0460F & LOMR# 21-06-0115P
- FEMA AE — 100YR ATLAS 14 FEMA ZONE AE FLOODPLAIN PER FIRM# 48491C0460F & LOMR# 21-06-0115P
- FEMA A — 100YR FEMA ZONE A FLOODPLAIN PER FIRM MAP# 48491C0460F
- 100YR CLOMR — 100YR CLOMR FLOODPLAIN CASE# 15-06-2071R
- FDFP — 100YR ATLAS 14 FULLY DEVELOPED FLOODPLAIN (STANTEC DRAINAGE STUDY, SHERVIN NOOSHIN, 3/25/19) APPROVED WITH PP# 2019-5-PP
- OHWM — ORDINARY HIGH WATER MARK PER ADAMS ENVIRONMENTAL
- MASONRY WALL
- TREES TO REMAIN - HERITAGE
- TREES TO BE REMOVED - HERITAGE
- TREES TO REMAIN - NON HERITAGE
- TREES TO BE REMOVED - NON HERITAGE
- STABILIZED CONSTRUCTION ENTRANCE
- INLET PROTECTION
- TEMPORARY SPOILS AREA
- CONCRETE WASHOUT AREA
- STOCKPILE
- ROCK BERM

SEQUENCE OF MAJOR ACTIVITIES:

1. TEMPORARY EROSION AND SEDIMENTATION CONTROL MEASURES TO INCLUDE SILT FENCE, ROCK BERMS, AND STABILIZED CONSTRUCTION ENTRANCES WILL BE INSTALLED ACCORDING TO CONSTRUCTION PLANS AND IN ACCORDANCE WITH THE STORM WATER POLLUTION PREVENTION PLAN (SWPPP).
2. TREE PROTECTION MEASURES WILL ALSO BE INSTALLED FOR ALL TREES WITH CONSTRUCTION ACTIVITIES WITHIN CRITICAL ROOT ZONE.
3. TEMPORARY SPOILS, CONSTRUCTION STAGING AND CONCRETE WASHOUT AREA WILL BE CONSTRUCTED.
4. THE SEDIMENTATION TRAP LOCATED AT THE SOUTHEAST CORNER OF THE SITE WILL BE EXCAVATED AND THE OUTFALL STRUCTURE CONSTRUCTED.
5. FILTER FABRIC WILL BE USED TO COVER THE OVERFLOW WEIR TO PREVENT UNFILTERED RUNOFF FROM ENTERING THE LAND DOWNSTREAM.
6. AFTER THE SITE IS MASS GRADED, THE ONSITE DRAINAGE, UTILITIES, AND PAVING WILL BE INSTALLED.
7. INLET PROTECTION BARRIERS WILL BE INSTALLED AS CONSTRUCTION OF STORM SEWER TAKES PLACE IN ORDER TO PREVENT SEDIMENTS FROM ENTERING THE SYSTEM.
8. TEMPORARY SEDIMENTATION BASINS WILL BE CONVERTED TO PERMANENT WATER QUALITY PONDS.
9. SEDIMENTATION TRAPS SHALL BE CLEANED OUT AND FILTER MEDIUM INSTALLED CONCURRENT WITH RE-VEGETATION.
10. THE DISTURBED AREA TO REMAIN PERVIOUS WILL BE VEGETATED USING THE PROCEDURES DETAILED IN THE CONSTRUCTION PLANS AND ALL TEMPORARY EROSION CONTROL MEASURES WILL BE REMOVED UPON RE-VEGETATION.

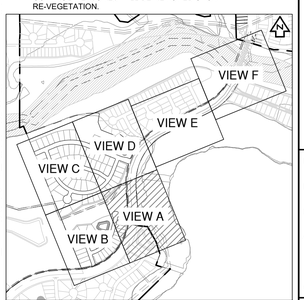

KEY MAP (N.T.S.)

NO	REVISION	BY	DATE

811 Know what's below. Call before you dig.

5508 HIGHWAY 290 WEST
SUITE 150
AUSTIN, TX 78735
512.872.6696
HRGREEN.COM

TBPE NO: 16384
TBPLS NO: 10194101

HRGreen® DEVELOPMENT TX

STATE OF TEXAS
CHRISTINE N. CAMPBELL
142536
LICENSED PROFESSIONAL ENGINEER

07/05/2025

EROSION & SEDIMENTATION CONTROL PLAN A

PARKSIDE ON THE RIVER SECTIONS 11, 12A & 15A CONSTRUCTION PLANS

GEORGETOWN, WILLIAMSON, TEXAS

DESIGNED BY: CC
DRAWN BY: MM
CHECKED BY: SN
APPROVED BY:

SHEET 34 OF 141

2025-XX-CON

P:\Data\Mapp\Parkside Sections 11-15 & WOW FS\active 11, 12A & 15A\03_ACAD\Plans\drb240502 EROS.dwg, EROSION & SEDIMENTATION CONTROL PLAN A, July 18, 2025, 11:29 AM, nalai.muhammad

LEGEND

- PROPERTY BOUNDARY
- EASEMENT
- 840 EXISTING MAJOR CONTOUR
- 834 EXISTING MINOR CONTOUR
- 940 PROPOSED MAJOR CONTOUR
- 934 PROPOSED MINOR CONTOUR
- LOC LIMITS OF CONSTRUCTION
- SF SILT FENCE
- TP TREE PROTECTION FENCE
- FEMA FLOODWAY PER FIRM# 48491C0460F & LOMR# 21-06-0115P
- FEMA AE 100YR ATLAS 14 FEMA ZONE AE FLOODPLAIN PER FIRM# 48491C0460F & LOMR# 21-06-0115P
- FEMA A 100YR FEMA ZONE A FLOODPLAIN PER FIRM MAP# 48491C0460F
- 100YR CLOMR 100YR CLOMR FLOODPLAIN CASE# 15-06-2071R
- FDFP 100YR ATLAS 14 FULLY DEVELOPED FLOODPLAIN (STANTEC DRAINAGE STUDY, SHERVIN NOOSHIN, 3/25/19) APPROVED WITH PP# 2019-5-PP
- OHWM ORDINARY HIGH WATER MARK PER ADAMS ENVIRONMENTAL
- MASONRY WALL
- TREES TO REMAIN - HERITAGE
- TREES TO BE REMOVED - HERITAGE
- TREES TO REMAIN - NON HERITAGE
- TREES TO BE REMOVED - NON HERITAGE
- STABILIZED CONSTRUCTION ENTRANCE
- INLET PROTECTION
- TEMPORARY SPOILS AREA
- CONCRETE WASHOUT AREA
- STOCKPILE
- ROCK BERM

SEQUENCE OF MAJOR ACTIVITIES:

1. TEMPORARY EROSION AND SEDIMENTATION CONTROL MEASURES TO INCLUDE SILT FENCE, ROCK BERMS, AND STABILIZED CONSTRUCTION ENTRANCES WILL BE INSTALLED ACCORDING TO CONSTRUCTION PLANS AND IN ACCORDANCE WITH THE STORM WATER POLLUTION PREVENTION PLAN (SWPPP).
2. TREE PROTECTION MEASURES WILL ALSO BE INSTALLED FOR ALL TREES WITH CONSTRUCTION ACTIVITIES WITHIN CRITICAL ROOT ZONE.
3. TEMPORARY SPOILS, CONSTRUCTION STAGING AND CONCRETE WASHOUT AREA WILL BE CONSTRUCTED.
4. THE SEDIMENTATION TRAP LOCATED AT THE SOUTHEAST CORNER OF THE SITE WILL BE EXCAVATED AND THE OUTFALL STRUCTURE CONSTRUCTED.
5. FILTER FABRIC WILL BE USED TO COVER THE OVERFLOW WEIR TO PREVENT UNFILTERED RUNOFF FROM ENTERING THE LAND DOWNSTREAM.
6. AFTER THE SITE IS MASS GRADED, THE ONSITE DRAINAGE, UTILITIES, AND PAVING WILL BE INSTALLED.
7. INLET PROTECTION BARRIERS WILL BE INSTALLED AS CONSTRUCTION OF STORM SEWER TAKES PLACE IN ORDER TO PREVENT SEDIMENTS FROM ENTERING THE SYSTEM.
8. TEMPORARY SEDIMENTATION BASINS WILL BE CONVERTED TO PERMANENT WATER QUALITY PONDS.
9. SEDIMENTATION TRAPS SHALL BE CLEANED OUT AND FILTER MEDIUM INSTALLED CONCURRENT WITH RE-VEGETATION.
10. THE DISTURBED AREA TO REMAIN PERVIOUS WILL BE VEGETATED USING THE PROCEDURES DETAILED IN THE CONSTRUCTION PLANS AND ALL TEMPORARY EROSION CONTROL MEASURES WILL BE REMOVED UPON RE-VEGETATION.

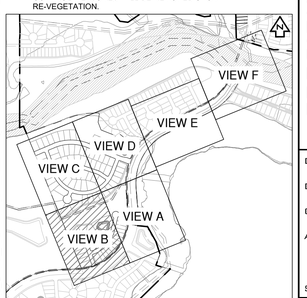

KEY MAP (N.T.S.)

NO	REVISION	BY	DATE

811 Know what's below. Call before you dig.

HRGreen DEVELOPMENT TX
5508 HIGHWAY 290 WEST
SUITE 150
AUSTIN, TX 78735
512.872.6696
HRGREEN.COM
TBPE NO: 16384
TBPLS NO: 10194101

STATE OF TEXAS
CHRISTINE N. CAMPBELL
142536
LICENSED PROFESSIONAL ENGINEER
07/05/2025

EROSION & SEDIMENTATION CONTROL PLAN B

PARKSIDE ON THE RIVER SECTIONS 11, 12A & 15A CONSTRUCTION PLANS

GEORGETOWN, WILLIAMSON, TEXAS

DESIGNED BY: CC
DRAWN BY: MM
CHECKED BY: SN
APPROVED BY:

SHEET 35 OF 141

2025-XX-CON

P:\Blake Magee\Parkside Sections 11-15 & WON S\Section 11, 12A & 15A\03_ACAD\Planset\240925\02 EROS.dwg, EROSION & SEDIMENTATION CONTROL PLAN B, July 18, 2025, 11:29 AM, waka.muhammed

EXISTING 20' WASTEWATER EASEMENT DOC#2024034914

INSTALL ±1,504 LF OF SILT FENCE

LIMITS OF CONSTRUCTION

INSTALL INLET PROTECTION

INSTALL ±127 LF OF TREE PROTECTION

PROPOSED 20' DRAINAGE EASEMENT

KAVOD COVE

MORNING SUNRISE CIRCLE

ELIEL WAY

TREASURE HOUSE WAY

BLOCK H

BLOCK I

BLOCK J

BLOCK K

INSTALL ±4,921 LF OF SILT FENCE

LIMITS OF CONSTRUCTION

MATCHLINE - VIEW B

MATCHLINE - VIEW C

MATCHLINE - VIEW C

MATCHLINE - VIEW D

0 40' 80'

SCALE: 1" = 40'

LEGEND

- PROPERTY BOUNDARY
- EASEMENT
- 840 EXISTING MAJOR CONTOUR
- 834 EXISTING MINOR CONTOUR
- 940 PROPOSED MAJOR CONTOUR
- 934 PROPOSED MINOR CONTOUR
- LOC LIMITS OF CONSTRUCTION
- SF SILT FENCE
- TP TREE PROTECTION FENCE
- FEMA FLOODWAY PER FIRM# 48491C0460F & LOMR# 21-06-0115P
- FEMA AE 100YR ATLAS 14 FEMA ZONE AE FLOODPLAIN PER FIRM# 48491C0460F & LOMR# 21-06-0115P
- FEMA A 100YR FEMA ZONE A FLOODPLAIN PER FIRM MAP# 48491C0460F
- 100YR CLOMR 100YR CLOMR FLOODPLAIN CASE# 15-06-2071R
- FDFP 100YR ATLAS 14 FULLY DEVELOPED FLOODPLAIN (STANTEC DRAINAGE STUDY, SHERVIN NOOSHIN, 3/25/19) APPROVED WITH PP# 2019-5-PP
- OHWM ORDINARY HIGH WATER MARK PER ADAMS ENVIRONMENTAL
- MASONRY WALL
- TREES TO REMAIN - HERITAGE
- TREES TO BE REMOVED - HERITAGE
- TREES TO REMAIN - NON HERITAGE
- TREES TO BE REMOVED - NON HERITAGE
- STABILIZED CONSTRUCTION ENTRANCE
- INLET PROTECTION
- TEMPORARY SPOILS AREA
- CONCRETE WASHOUT AREA
- STOCKPILE
- ROCK BERM

SEQUENCE OF MAJOR ACTIVITIES:

1. TEMPORARY EROSION AND SEDIMENTATION CONTROL MEASURES TO INCLUDE SILT FENCE, ROCK BERMS, AND STABILIZED CONSTRUCTION ENTRANCES WILL BE INSTALLED ACCORDING TO CONSTRUCTION PLANS AND IN ACCORDANCE WITH THE STORM WATER POLLUTION PREVENTION PLAN (SWPPP).
2. TREE PROTECTION MEASURES WILL ALSO BE INSTALLED FOR ALL TREES WITH CONSTRUCTION ACTIVITIES WITHIN CRITICAL ROOT ZONE.
3. TEMPORARY SPOILS, CONSTRUCTION STAGING AND CONCRETE WASHOUT AREA WILL BE CONSTRUCTED.
4. THE SEDIMENTATION TRAP LOCATED AT THE SOUTHEAST CORNER OF THE SITE WILL BE EXCAVATED AND THE OUTFALL STRUCTURE CONSTRUCTED.
5. FILTER FABRIC WILL BE USED TO COVER THE OVERFLOW WEIR TO PREVENT UNFILTERED RUNOFF FROM ENTERING THE LAND DOWNSTREAM.
6. AFTER THE SITE IS MASS GRADED, THE ONSITE DRAINAGE, UTILITIES, AND PAVING WILL BE INSTALLED.
7. INLET PROTECTION BARRIERS WILL BE INSTALLED AS CONSTRUCTION OF STORM SEWER TAKES PLACE IN ORDER TO PREVENT SEDIMENTS FROM ENTERING THE SYSTEM.
8. TEMPORARY SEDIMENTATION BASINS WILL BE CONVERTED TO PERMANENT WATER QUALITY PONDS.
9. SEDIMENTATION TRAPS SHALL BE CLEANED OUT AND FILTER MEDIUM INSTALLED CONCURRENT WITH RE-VEGETATION.
10. THE DISTURBED AREA TO REMAIN PERVIOUS WILL BE VEGETATED USING THE PROCEDURES DETAILED IN THE CONSTRUCTION PLANS AND ALL TEMPORARY EROSION CONTROL MEASURES WILL BE REMOVED UPON RE-VEGETATION.

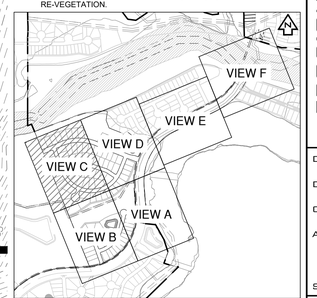

KEY MAP (N.T.S.)

NO	REVISION	BY	DATE

811 Know what's below. Call before you dig.

HRGreen DEVELOPMENT TX
5508 HIGHWAY 290 WEST
SUITE 150
AUSTIN, TX 78735
512.872.6696
HRGREEN.COM
TBPE NO: 16384
TBPLS NO: 10194101

STATE OF TEXAS
CHRISTINE N. CAMPBELL
142536
LICENSED PROFESSIONAL ENGINEER

07/03/2025

EROSION & SEDIMENTATION CONTROL PLAN C

PARKSIDE ON THE RIVER SECTIONS 11, 12A & 15A CONSTRUCTION PLANS

GEORGETOWN, WILLIAMSON, TEXAS

DESIGNED BY: CC
DRAWN BY: MM
CHECKED BY: SN
APPROVED BY:

SHEET 36 OF 141

2025-XX-CON

P:\Blake Magee\Parkside Sections 11-12-15 WDN S\Section 11, 12A & 15A\03_ACAD\Planset\240523 EROS.dwg, EROSION & SEDIMENTATION CONTROL PLAN C, July 18, 2025, 11:29 AM, nalas.muhammad

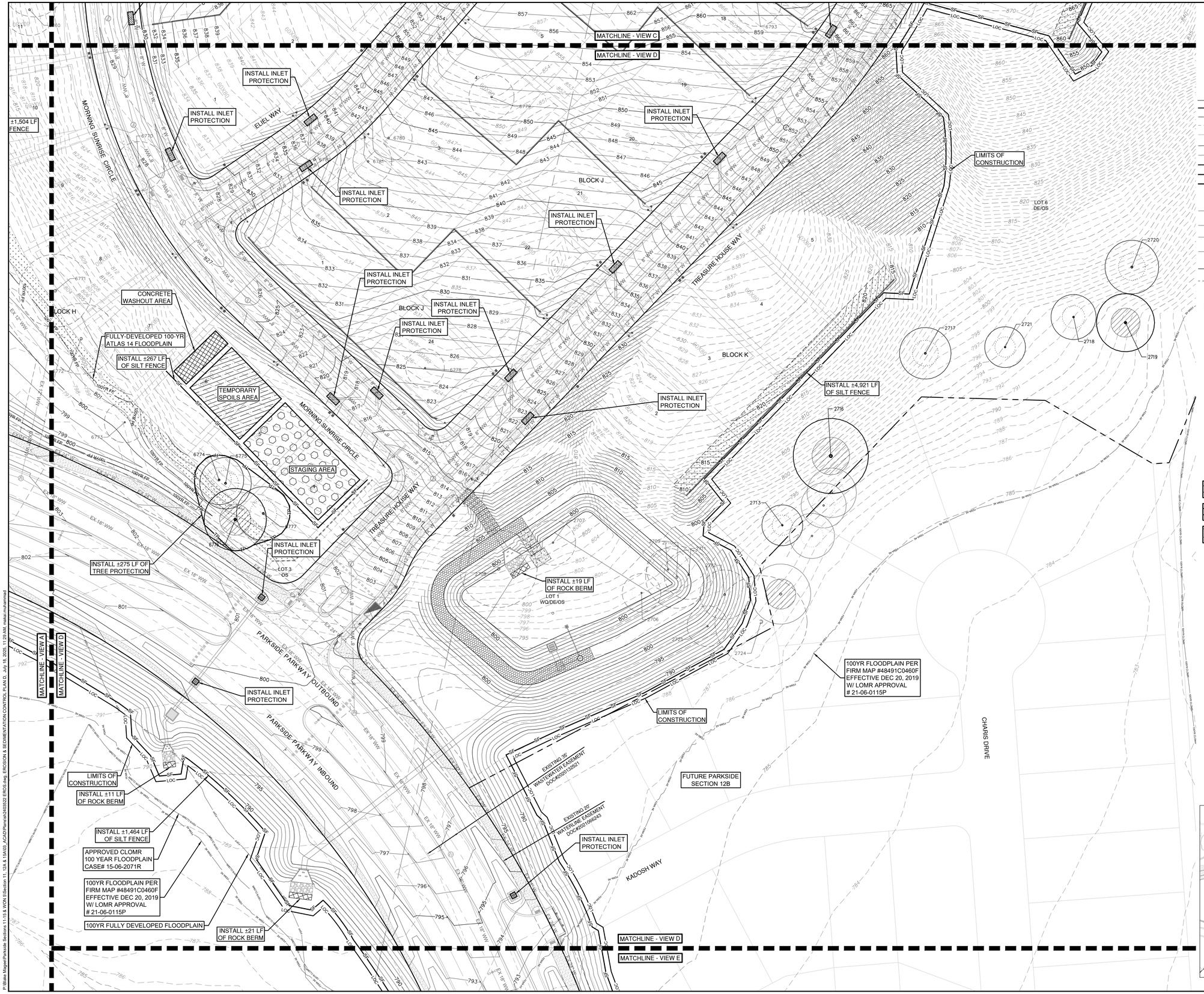

0 40' 80'

SCALE: 1" = 40'

LEGEND

- PROPERTY BOUNDARY
- EASEMENT
- 840 EXISTING MAJOR CONTOUR
- 834 EXISTING MINOR CONTOUR
- 940 PROPOSED MAJOR CONTOUR
- 934 PROPOSED MINOR CONTOUR
- LOC LIMITS OF CONSTRUCTION
- SF SILT FENCE
- TP TREE PROTECTION FENCE
- FEMA FLOODWAY PER FIRM# 48491C0460F & LOMR# 21-06-0115P
- FEMA AE 100YR ATLAS 14 FEMA ZONE AE FLOODPLAIN PER FIRM# 48491C0460F & LOMR# 21-06-0115P
- FEMA A 100YR FEMA ZONE A FLOODPLAIN PER FIRM MAP# 48491C0460F
- 100YR CLOMR 100YR CLOMR FLOODPLAIN CASE# 15-06-2071R
- FDFP 100YR ATLAS 14 FULLY DEVELOPED FLOODPLAIN (STANTEC DRAINAGE STUDY, SHERVIN NOOSHIN, 3/25/19) APPROVED WITH PP# 2019-5-PP
- OHWM ORDINARY HIGH WATER MARK PER ADAMS ENVIRONMENTAL
- MASONRY WALL
- TREES TO REMAIN - HERITAGE
- TREES TO BE REMOVED - HERITAGE
- TREES TO REMAIN - NON HERITAGE
- TREES TO BE REMOVED - NON HERITAGE
- STABILIZED CONSTRUCTION ENTRANCE
- INLET PROTECTION
- TEMPORARY SPOILS AREA
- CONCRETE WASHOUT AREA
- STOCKPILE
- ROCK BERM

SEQUENCE OF MAJOR ACTIVITIES:

1. TEMPORARY EROSION AND SEDIMENTATION CONTROL MEASURES TO INCLUDE SILT FENCE, ROCK BERMS, AND STABILIZED CONSTRUCTION ENTRANCES WILL BE INSTALLED ACCORDING TO CONSTRUCTION PLANS AND IN ACCORDANCE WITH THE STORM WATER POLLUTION PREVENTION PLAN (SWPPP).
2. TREE PROTECTION MEASURES WILL ALSO BE INSTALLED FOR ALL TREES WITH CONSTRUCTION ACTIVITIES WITHIN CRITICAL ROOT ZONE.
3. TEMPORARY SPOILS, CONSTRUCTION STAGING AND CONCRETE WASHOUT AREA WILL BE CONSTRUCTED.
4. THE SEDIMENTATION TRAP LOCATED AT THE SOUTHEAST CORNER OF THE SITE WILL BE EXCAVATED AND THE OUTFALL STRUCTURE CONSTRUCTED.
5. FILTER FABRIC WILL BE USED TO COVER THE OVERFLOW WEIR TO PREVENT UNFILTERED RUNOFF FROM ENTERING THE LAND DOWNSTREAM.
6. AFTER THE SITE IS MASS GRADED, THE ONSITE DRAINAGE, UTILITIES, AND PAVING WILL BE INSTALLED.
7. INLET PROTECTION BARRIERS WILL BE INSTALLED AS CONSTRUCTION OF STORM SEWER TAKES PLACE IN ORDER TO PREVENT SEDIMENTS FROM ENTERING THE SYSTEM.
8. TEMPORARY SEDIMENTATION BASINS WILL BE CONVERTED TO PERMANENT WATER QUALITY PONDS.
9. SEDIMENTATION TRAPS SHALL BE CLEANED OUT AND FILTER MEDIUM INSTALLED CONCURRENT WITH RE-VEGETATION.
10. THE DISTURBED AREA TO REMAIN PERVIOUS WILL BE VEGETATED USING THE PROCEDURES DETAILED IN THE CONSTRUCTION PLANS AND ALL TEMPORARY EROSION CONTROL MEASURES WILL BE REMOVED UPON RE-VEGETATION.

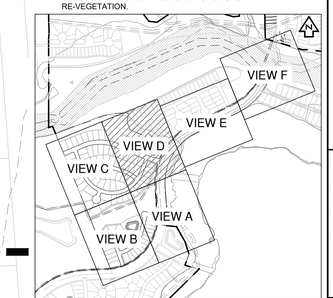

KEY MAP (N.T.S.)

NO	REVISION	BY	DATE

811 Know what's below. Call before you dig.

HRGreen DEVELOPMENT TX
5508 HIGHWAY 290 WEST
SUITE 150
AUSTIN, TX 78735
512.872.6696
HRGREEN.COM
TBPE NO: 16384
TBPLS NO: 10194101

STATE OF TEXAS
CHRISTINE N. CAMPBELL
142536
LICENSED PROFESSIONAL ENGINEER

07/05/2025

EROSION & SEDIMENTATION CONTROL PLAN D

PARKSIDE ON THE RIVER SECTIONS 11, 12A & 15A CONSTRUCTION PLANS

GEORGETOWN, WILLIAMSON, TEXAS

DESIGNED BY: CC
DRAWN BY: MM
CHECKED BY: SN
APPROVED BY:

SHEET 37 OF 141

2025-XX-CON

P:\Blake Magee\Parkside Sections 11-15 & WON S\Section 11, 12A & 15A\03_ACAD\Planset\240503\02 EROS.dwg, EROSION & SEDIMENTATION CONTROL PLAN D, July 18, 2025, 11:29 AM, nakia.muhammad

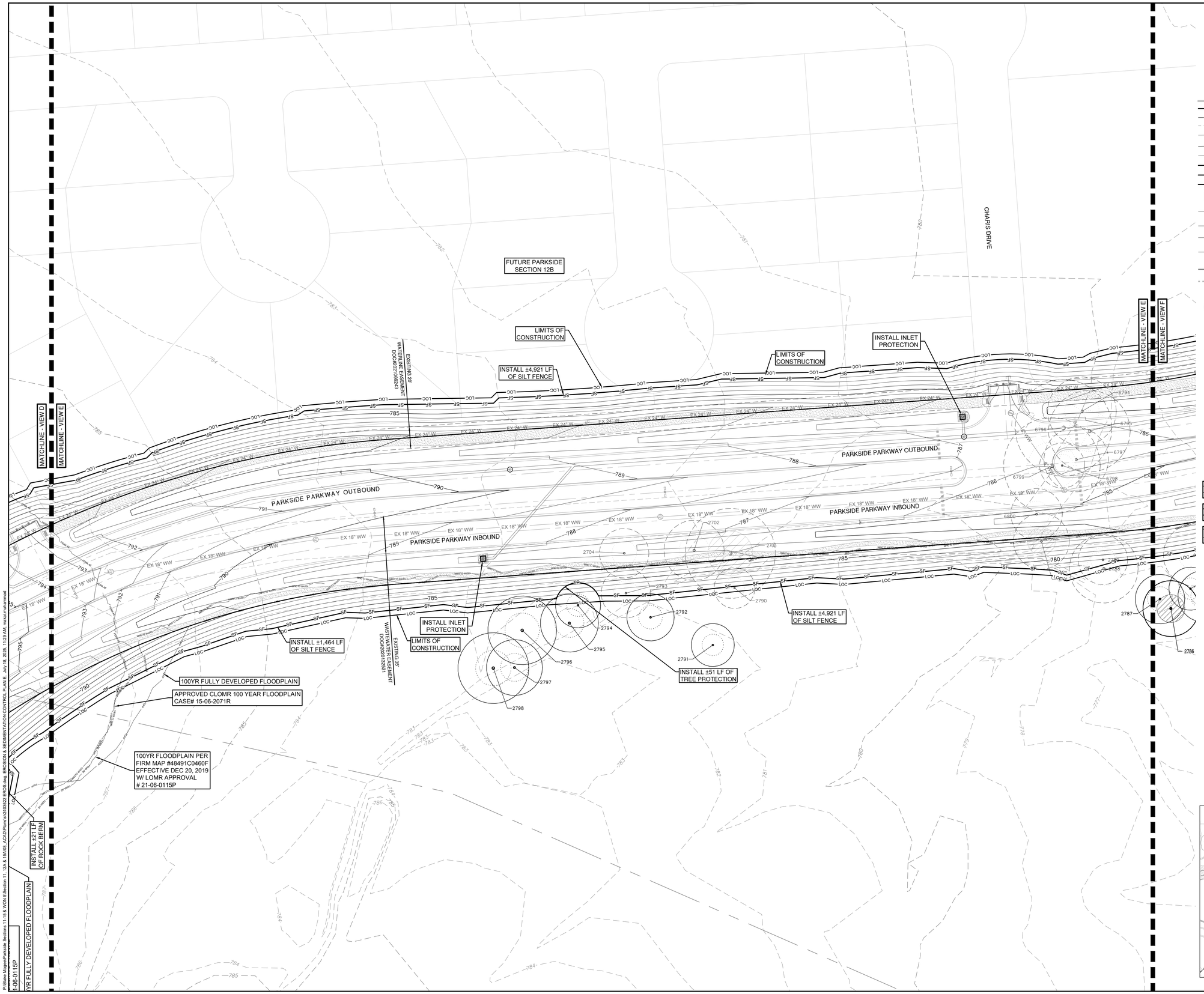

LEGEND

- PROPERTY BOUNDARY
- EASEMENT
- 840 EXISTING MAJOR CONTOUR
- 834 EXISTING MINOR CONTOUR
- 940 PROPOSED MAJOR CONTOUR
- 934 PROPOSED MINOR CONTOUR
- LOC LIMITS OF CONSTRUCTION
- SF SILT FENCE
- TP TREE PROTECTION FENCE
- FEMA FLOODWAY PER FIRM# 48491C0460F & LOMR# 21-06-0115P
- FEMA AE 100YR ATLAS 14 FEMA ZONE AE FLOODPLAIN PER FIRM# 48491C0460F & LOMR# 21-06-0115P
- FEMA A 100YR FEMA ZONE A FLOODPLAIN PER FIRM MAP# 48491C0460F
- 100YR CLOMR 100YR FLOODPLAIN CASE# 15-06-2071R
- FDFP 100YR ATLAS 14 FULLY DEVELOPED FLOODPLAIN (STANTEC DRAINAGE STUDY, SHERVIN NOOSHIN, 3/25/19) APPROVED WITH PP# 2019-5-PP
- OHWM ORDINARY HIGH WATER MARK PER ADAMS ENVIRONMENTAL
- MASONRY WALL
- TREES TO REMAIN - HERITAGE
- TREES TO BE REMOVED - HERITAGE
- TREES TO REMAIN - NON HERITAGE
- TREES TO BE REMOVED - NON HERITAGE
- STABILIZED CONSTRUCTION ENTRANCE
- INLET PROTECTION
- TEMPORARY SPOILS AREA
- CONCRETE WASHOUT AREA
- STOCKPILE
- ROCK BERM

SEQUENCE OF MAJOR ACTIVITIES:

1. TEMPORARY EROSION AND SEDIMENTATION CONTROL MEASURES TO INCLUDE SILT FENCE, ROCK BERMS, AND STABILIZED CONSTRUCTION ENTRANCES WILL BE INSTALLED ACCORDING TO CONSTRUCTION PLANS AND IN ACCORDANCE WITH THE STORM WATER POLLUTION PREVENTION PLAN (SWPPP).
2. TREE PROTECTION MEASURES WILL ALSO BE INSTALLED FOR ALL TREES WITH CONSTRUCTION ACTIVITIES WITHIN CRITICAL ROOT ZONE.
3. TEMPORARY SPOILS, CONSTRUCTION STAGING AND CONCRETE WASHOUT AREA WILL BE CONSTRUCTED.
4. THE SEDIMENTATION TRAP LOCATED AT THE SOUTHEAST CORNER OF THE SITE WILL BE EXCAVATED AND THE OUTFALL STRUCTURE CONSTRUCTED.
5. FILTER FABRIC WILL BE USED TO COVER THE OVERFLOW WEIR TO PREVENT UNFILTERED RUNOFF FROM ENTERING THE LAND DOWNSTREAM.
6. AFTER THE SITE IS MASS GRADED, THE ONSITE DRAINAGE, UTILITIES, AND PAVING WILL BE INSTALLED.
7. INLET PROTECTION BARRIERS WILL BE INSTALLED AS CONSTRUCTION OF STORM SEWER TAKES PLACE IN ORDER TO PREVENT SEDIMENTS FROM ENTERING THE SYSTEM.
8. TEMPORARY SEDIMENTATION BASINS WILL BE CONVERTED TO PERMANENT WATER QUALITY PONDS.
9. SEDIMENTATION TRAPS SHALL BE CLEANED OUT AND FILTER MEDIUM INSTALLED CONCURRENT WITH RE-VEGETATION.
10. THE DISTURBED AREA TO REMAIN PERVIOUS WILL BE VEGETATED USING THE PROCEDURES DETAILED IN THE CONSTRUCTION PLANS AND ALL TEMPORARY EROSION CONTROL MEASURES WILL BE REMOVED UPON RE-VEGETATION.

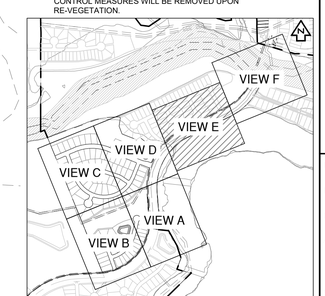

KEY MAP (N.T.S.)

NO.	REVISION	BY	DATE

811 Know what's below. Call before you dig.

5508 HIGHWAY 290 WEST
SUITE 150
AUSTIN, TX 78735
512.872.6696
HRGREEN.COM

TBPE NO: 16384
TBPLS NO: 10194101

HRGreen®
DEVELOPMENT TX

STATE OF TEXAS
CHRISTINE N. CAMPBELL
142536
LICENSED PROFESSIONAL ENGINEER
07/03/2025

EROSION & SEDIMENTATION CONTROL PLAN E

PARKSIDE ON THE RIVER SECTIONS 11, 12A & 15A CONSTRUCTION PLANS

GEORGETOWN, WILLIAMSON, TEXAS

DESIGNED BY: CC
DRAWN BY: MM
CHECKED BY: SN
APPROVED BY:

SHEET 38 OF 141

2025-XX-CON

LIMITS OF MAX 3:1 SLOPE TO EXISTING GRADE IN THE EVENT THAT PARKSIDE ON THE RIVER SECTIONS 11, 12A & 15A AND PARKSIDE ON THE RIVER SECTION 15B ARE NOT CONCURRENTLY CONSTRUCTED

EXISTING 25' WASTEWATER EASEMENT DOC#2017098157

EXISTING 100' WASTEWATER EASEMENT DOC#2017098157

EXISTING 30' WASTEWATER EASEMENT DOC#2012056679

EXISTING 100' WASTEWATER EASEMENT DOC#2007064713

EXISTING 30' WATERLINE EASEMENT DOC#2007064624

EXISTING 30' WASTEWATER EASEMENT DOC#2018018221

LIMITS OF CONSTRUCTION

INSTALL INLET PROTECTION

INSTALL ±4,921 LF OF SILT FENCE

INSTALL ±16 LF OF ROCK BERM

INSTALL INLET PROTECTION

PARKSIDE PARKWAY OUTBOUND

PARKSIDE PARKWAY INBOUND

TRANQUIL SERENITY WAY

FUTURE PARKSIDE SECTION 14A

APPROVED CLOMR 100 YEAR FLOODPLAIN CASE# 15-06-2071R

100YR FULLY DEVELOPED FLOODPLAIN

FLOODWAY PER FIRM MAP #48491C0460F, EFFECTIVE DEC 20, 2019 W/ LOMR APPROVAL #21-06-0115P

MATCHLINE - VIEW E

MATCHLINE - VIEW F

0 40' 80'

SCALE: 1" = 40'

LEGEND

- PROPERTY BOUNDARY
- EASEMENT
- 840 EXISTING MAJOR CONTOUR
- 834 EXISTING MINOR CONTOUR
- 940 PROPOSED MAJOR CONTOUR
- 934 PROPOSED MINOR CONTOUR
- LOC LIMITS OF CONSTRUCTION
- SF SILT FENCE
- TP TREE PROTECTION FENCE
- FEMA FLOODWAY PER FIRM# 48491C0460F & LOMR# 21-06-0115P
- FEMA AE 100YR ATLAS 14 FEMA ZONE AE FLOODPLAIN PER FIRM# 48491C0460F & LOMR# 21-06-0115P
- FEMA A 100YR FEMA ZONE A FLOODPLAIN PER FIRM MAP# 48491C0460F
- 100YR CLOMR 100YR FLOODPLAIN CASE# 15-06-2071R
- FDFP 100YR ATLAS 14 FULLY DEVELOPED FLOODPLAIN (STANTEC DRAINAGE STUDY, SHERVIN NOOSHIN, 3/25/19) APPROVED WITH PP# 2019-5-PP
- OHWM ORDINARY HIGH WATER MARK PER ADAMS ENVIRONMENTAL
- MASONRY WALL
- TREES TO REMAIN - HERITAGE
- TREES TO BE REMOVED - HERITAGE
- TREES TO REMAIN - NON HERITAGE
- TREES TO BE REMOVED - NON HERITAGE
- STABILIZED CONSTRUCTION ENTRANCE
- INLET PROTECTION
- TEMPORARY SPOILS AREA
- CONCRETE WASHOUT AREA
- STOCKPILE
- ROCK BERM

SEQUENCE OF MAJOR ACTIVITIES:

1. TEMPORARY EROSION AND SEDIMENTATION CONTROL MEASURES TO INCLUDE SILT FENCE, ROCK BERMS, AND STABILIZED CONSTRUCTION ENTRANCES WILL BE INSTALLED ACCORDING TO CONSTRUCTION PLANS AND IN ACCORDANCE WITH THE STORM WATER POLLUTION PREVENTION PLAN (SWPPP).
2. TREE PROTECTION MEASURES WILL ALSO BE INSTALLED FOR ALL TREES WITH CONSTRUCTION ACTIVITIES WITHIN CRITICAL ROOT ZONE.
3. TEMPORARY SPOILS, CONSTRUCTION STAGING AND CONCRETE WASHOUT AREA WILL BE CONSTRUCTED.
4. THE SEDIMENTATION TRAP LOCATED AT THE SOUTHEAST CORNER OF THE SITE WILL BE EXCAVATED AND THE OUTFALL STRUCTURE CONSTRUCTED.
5. FILTER FABRIC WILL BE USED TO COVER THE OVERFLOW WEIR TO PREVENT UNFILTERED RUNOFF FROM ENTERING THE LAND DOWNSTREAM.
6. AFTER THE SITE IS MASS GRADED, THE ONSITE DRAINAGE, UTILITIES, AND PAVING WILL BE INSTALLED.
7. INLET PROTECTION BARRIERS WILL BE INSTALLED AS CONSTRUCTION OF STORM SEWER TAKES PLACE IN ORDER TO PREVENT SEDIMENTS FROM ENTERING THE SYSTEM.
8. TEMPORARY SEDIMENTATION BASINS WILL BE CONVERTED TO PERMANENT WATER QUALITY PONDS.
9. SEDIMENTATION TRAPS SHALL BE CLEANED OUT AND FILTER MEDIUM INSTALLED CONCURRENT WITH RE-VEGETATION.
10. THE DISTURBED AREA TO REMAIN PERVIOUS WILL BE VEGETATED USING THE PROCEDURES DETAILED IN THE CONSTRUCTION PLANS AND ALL TEMPORARY EROSION CONTROL MEASURES WILL BE REMOVED UPON RE-VEGETATION.

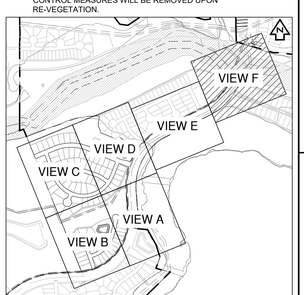

KEY MAP (N.T.S.)

NO.	REVISION	BY	DATE

811 Know what's below. Call before you dig.

HRGreen
5508 HIGHWAY 290 WEST
SUITE 150
AUSTIN, TX 78735
512.872.6696
HRGREEN.COM
TBPE NO: 16384
TBPLS NO: 10194101
DEVELOPMENT TX

STATE OF TEXAS
CHRISTINE N. CAMPBELL
142536
LICENSED PROFESSIONAL ENGINEER

07/03/2025

EROSION & SEDIMENTATION CONTROL PLAN F

PARKSIDE ON THE RIVER SECTIONS 11, 12A & 15A CONSTRUCTION PLANS

GEORGETOWN, WILLIAMSON, TEXAS

DESIGNED BY: CC
DRAWN BY: MM
CHECKED BY: SN
APPROVED BY:

SHEET 39 OF 141

2025-XX-CON

P:\Blake Magee\Parkside Sections 11,15 & WSN 5\Sections 11, 12A & 15A\03_ACAD\Planning\040302 EROS\dwg EROSION & SEDIMENTATION CONTROL PLAN F, July 18, 2025, 11:29 AM, mdan.muhammad

GUIDELINES FOR DESIGN AND INSTALLATION OF TEMPORARY EROSION AND SEDIMENTATION CONTROLS

TYPE OF STRUCTURE	REACH LENGTH	MAXIMUM DRAINAGE AREA	SLOPE
SILT FENCE	N/A	2 ACRES	0 – 10%
	200 FEET	2 ACRES	10 – 20%
	100 FEET	1 ACRE	20 – 30%
	50 FEET	1/2 ACRE	> 30%
TRIANGLE FILTER DIKE	100 FEET	1/2 ACRE	< 30% SLOPE
	50 FEET	1/4 ACRE	> 30% SLOPE
ROCK BERM *, **	500 FEET	< 5 ACRES	0 – 10%

* FOR ROCK BERM DESIGN WHERE PARAMETERS ARE OTHER THAN STATED, DRAINAGE AREA CALCULATIONS AND ROCK BERM DESIGN MUST BE SUBMITTED FOR REVIEW.

** HIGH SERVICE ROCK BERMS MAY BE REQUIRED IN AREAS OF ENVIRONMENTAL SIGNIFICANCE AS DETERMINED BY THE CITY OF GEORGETOWN.

The Architect/Engineer assumes responsibility for appropriate use of this standard.

ADOPTED 6/21/2006 | CITY OF GEORGETOWN CONSTRUCTION STANDARDS AND DETAILS | TEMPORARY EROSION AND SEDIMENTATION CONTROL GUIDELINES | EC01 | NTS | 1/2003 | MRS | TRB

NOTE: THIS SECTION IS INTENDED TO ASSIST THOSE PERSONS PREPARING WATER POLLUTION ABATEMENT PLANS (WPAP) OR STORM WATER POLLUTION PREVENTION PLANS (SW3P) THAT COMPLY WITH FEDERAL, STATE AND/OR LOCAL STORM WATER REGULATIONS.

1. THE CONTRACTOR TO INSTALL AND MAINTAIN EROSION/SEDIMENTATION CONTROLS AND TREE/NATURAL AREA PROTECTIVE FENCING PRIOR TO ANY SITE PREPARATION WORK (CLEARING, GRUBBING, GRADING, OR EXCAVATION). CONTRACTOR TO REMOVE EROSION/SEDIMENTATION CONTROLS AT THE COMPLETION OF PROJECT AND GRASS RESTORATION.
2. ALL PROJECTS WITHIN THE RECHARGE ZONE OF THE EDWARD'S AQUIFER SHALL SUBMIT A BEST MANAGEMENT PRACTICES AND WATER POLLUTION AND ABATEMENT PLAN TO THE TNRCC FOR APPROVAL PRIOR TO ANY CONSTRUCTION.
3. THE PLACEMENT OF EROSION/SEDIMENTATION CONTROLS TO BE IN ACCORDANCE WITH THE APPROVED EROSION AND SEDIMENTATION CONTROL PLAN AND WATER POLLUTION ABATEMENT PLAN. DEVIATIONS FROM THE APPROVED PLAN MUST BE SUBMITTED TO AND APPROVED BY THE OWNER'S REPRESENTATIVE.
4. ALL PLANTING SHALL BE DONE BETWEEN MAY 1 AND SEPTEMBER 15 EXCEPT AS SPECIFICALLY AUTHORIZED IN WRITING. IF PLANTING IS AUTHORIZED TO BE DONE OUTSIDE THE DATES SPECIFIED, THE SEED SHALL BE PLANTED WITH THE ADDITION OF WINTER FESCUE (KENTUCKY 31) AT A RATE OF 100lb/ACRE. GRASS SHALL BE COMMON BERMUDA GRASS, HULLED, MINIMUM 82% PURE LIVE SEED. ALL GRASS SEED SHALL BE FREE FROM NOXIOUS WEED, GRADE "A" RECENT CROP, RECLEANED AND TREATED WITH APPROPRIATE FUNGICIDE AT TIME OF MIXING. SEED SHALL BE FURNISHED IN SEALED, STANDARD CONTAINERS WITH DEALER'S GUARANTEED ANALYSIS.
5. ALL DISTURBED AREAS TO BE RESTORED AS NOTED IN THE WATER POLLUTION ABATEMENT PLAN.
6. THE PLANTED AREA TO BE IRRIGATED OR SPRINKLED IN A MANNER THAT WILL NOT ERODE THE TOPSOIL, BUT WILL SUFFICIENTLY SOAK THE SOIL TO A DEPTH OF FOUR (4) INCHES. THE IRRIGATION TO OCCUR AT 10–DAY INTERVALS DURING THE FIRST TWO MONTHS TO INSURE GERMINATION AND ESTABLISHMENT OF THE GRASS . RAINFALL OCCURRENCES OF 1/2 INCH OR GREATER TO POSTPONE THE WATERING SCHEDULE ONE WEEK.
7. RESTORATION TO BE ACCEPTABLE WHEN THE GRASS HAS GROWN AT LEAST 1–1/2 INCHES HIGH WITH 95% *COVERAGE*, PROVIDED NO BARE SPOTS LARGER THAN 25 SQUARE FEET EXIST.
8. A MINIMUM OF FOUR (4) INCHES OF TOPSOIL TO BE PLACED IN ALL AREAS DISTURBED BY CONSTRUCTION.
9. THE CONTRACTOR TO HYDROMULCH OR SOD (AS SHOWN ON PLANS) ALL EXPOSED CUTS AND FILLS UPON COMPLETION OF CONSTRUCTION.
10. EROSION AND SEDIMENTATION CONTROLS TO BE INSTALLED OR MAINTAINED IN A MANNER WHICH DOES NOT RESULT IN SOIL BUILDUP WITHIN TREE DRIPLINE.
11. TO AVOID SOIL COMPACTION, CONTRACTOR SHALL NOT ALLOW VEHICULAR TRAFFIC, PARKING, OR STORAGE OF EQUIPMENT OR MATERIALS IN THE TREE DRIPLINE AREAS.
12. WHERE A FENCE IS CLOSER THAN FOUR (4) FEET TO A TREE TRUNK, PROTECT THE TRUNK WITH STRAPPED–ON PLANKING TO A HEIGHT OF EIGHT (8) FEET (OR TO THE LIMITS OF LOWER BRANCHING) IN ADDITION TO THE FENCING.
13. TREES TO BE REMOVED IN A MANNER WHICH DOES NOT IMPACT TREES TO BE PRESERVED.
14. ANY ROOT EXPOSED BY CONSTRUCTION ACTIVITY TO BE PRUNED FLUSH WITH THE SOIL. BACKFILL ROOT AREAS WITH GOOD QUALITY TOPSOIL AS SOON AS POSSIBLE. IF EXPOSED ROOT AREAS ARE NOT BACKFILLED WITHIN TWO DAYS, COVER THEM WITH ORGANIC MATERIAL IN A MANNER WHICH REDUCES SOIL TEMPERATURE AND MINIMIZES WATER LOSS DUE TO EVAPORATION.
15. CONTRACTOR TO PRUNE VEGETATION TO PROVIDE CLEARANCE FOR STRUCTURES, VEHICULAR TRAFFIC, AND EQUIPMENT BEFORE DAMAGE OCCURS (RIPPING OF BRANCHES, ETC.). ALL FINISHED PRUNING TO BE DONE ACCORDING TO RECOGNIZED, APPROVED STANDARDS OF THE INDUSTRY (REFERENCE THE "NATIONAL ARBORIST ASSOCIATION PRUNING STANDARDS FOR SHADE TREES").
16. THE CONTRACTOR IS TO INSPECT THE CONTROLS AT WEEKLY INTERVALS AND AFTER EVERY RAINFALL EXCEEDING 1/4 INCH TO VERIFY THAT THEY HAVE NOT BEEN SIGNIFICANTLY DISTURBED. ANY ACCUMULATED SEDIMENT AFTER A SIGNIFICANT RAINFALL TO BE REMOVED AND PLACED IN THE OWNER DESIGNATED SPOIL DISPOSAL SITE. THE CONTRACTOR TO CONDUCT PERIODIC INSPECTIONS OF ALL EROSION/SEDIMENTATION CONTROLS AND TO MAKE ANY REPAIRS OR MODIFICATIONS NECESSARY TO ASSURE CONTINUED EFFECTIVE OPERATION OF EACH DEVICE.
17. WHERE THERE IS TO BE AN APPROVED GRADE CHANGE, IMPERMEABLE PAVING SURFACE, TREE WELL, OR OTHER SUCH SITE DEVELOPMENT IMMEDIATELY ADJACENT TO A PROTECTED TREE, ERECT THE FENCE APPROXIMATELY TWO TO FOUR FEET (2'–4') BEHIND THE AREA IN QUESTION.
18. NO ABOVE AND/OR BELOW GROUND TEMPORARY FUEL STORAGE FACILITIES TO BE STORED ON THE PROJECT SITE.
19. IF EROSION AND SEDIMENTATION CONTROL SYSTEMS ARE EXISTING FROM PRIOR CONTRACTS, OWNER'S REPRESENTATIVE AND THE CONTRACTOR TO EXAMINE THE EXISTING EROSION AND SEDIMENTATION CONTROL SYSTEMS FOR DAMAGE PRIOR TO CONSTRUCTION. ANY DAMAGE TO PREEXISTING EROSION AND SEDIMENTATION CONTROLS NOTED TO BE REPAIRED AT OWNERS EXPENSE.
20. INTENTIONAL RELEASE OF VEHICLE OR EQUIPMENT FLUIDS ONTO THE GROUND IS NOT ALLOWED. CONTAMINATED SOIL RESULTING FROM ACCIDENTAL SPILL TO BE REMOVED AND DISPOSED OF PROPERLY.

The Architect/Engineer assumes responsibility for appropriate use of this standard.

ADOPTED 6/21/2006 | CITY OF GEORGETOWN CONSTRUCTION STANDARDS AND DETAILS | EROSION AND SEDIMENTATION AND TREE PROTECTION NOTES | EC01A | NTS | 1/2003 | MRS | TRB

The Architect/Engineer assumes responsibility for appropriate use of this standard.

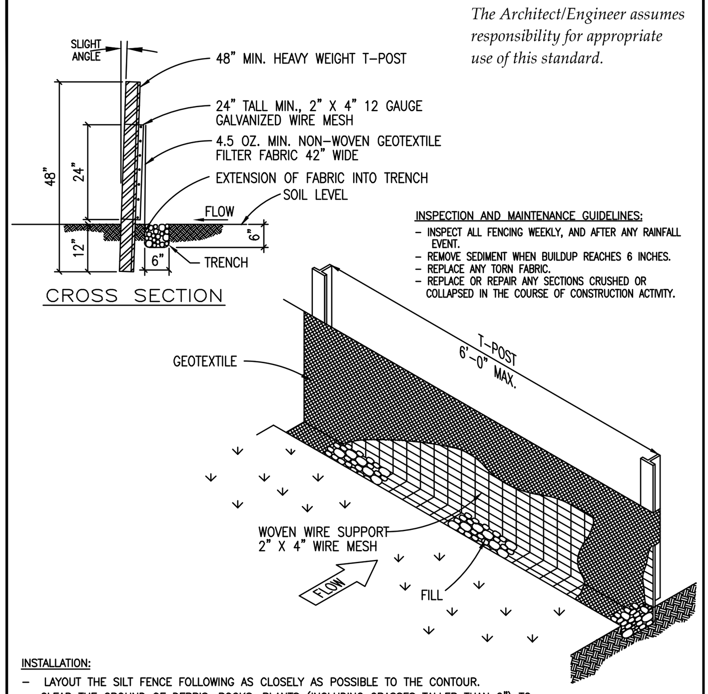

INSPECTION AND MAINTENANCE GUIDELINES:
- INSPECT ALL FENCING WEEKLY, AND AFTER ANY RAINFALL EVENT.
- REMOVE SEDIMENT WHEN BUILDUP REACHES 6 INCHES.
- REPLACE ANY TORN FABRIC.
- REPLACE OR REPAIR ANY SECTIONS CRUSHED OR COLLAPSED IN THE COURSE OF CONSTRUCTION ACTIVITY.

INSTALLATION:
- LAYOUT THE SILT FENCE FOLLOWING AS CLOSELY AS POSSIBLE TO THE CONTOUR.
- CLEAR THE GROUND OF DEBRIS, ROCKS, PLANTS (INCLUDING GRASSES TALLER THAN 2") TO PROVIDE A SMOOTH FLOW APPROACH SURFACE. EXCAVATE 6" DEEP X 6" WIDE TRENCH ON UPSTREAM SIDE OF FACE PER PLANS.
- DRIVE THE HEAVY DUTY T–POST AT LEAST 12 INCHES INTO THE GROUND AND AT A SLIGHT ANGLE TOWARDS THE FLOW.
- ATTACH THE 2" X 4" 12 GAUGE WELDED WIRE MESH TO THE T–POST WITH 11 1/2 GAUGE GALVANIZED T–POST CLIPS. THE TOP OF THE WIRE TO BE 24" ABOVE GROUND LEVEL. THE WELDED WIRE MESH TO BE OVERLAPPED 6" AND TIED AT LEAST 6 TIMES WITH HOG RINGS.
- THE SILT FENCE TO BE INSTALLED WITH A SKIRT A MINIMUM OF 6" WIDE PLACED ON THE UPHILL SIDE OF THE FENCE INSIDE EXCAVATED TRENCH. THE FABRIC TO OVERLAP THE TOP OF THE WIRE BY 1".
- ANCHOR THE SILT FENCE BY BACKFILLING WITH EXCAVATED DIRT AND ROCKS (NOT LARGER THAN 2").
- GEOTEXTILE SPLICES SHOULD BE A MINIMUM OF 18" WIDE ATTACHED IN AT LEAST 6 PLACES. SPLICES IN CONCENTRATED FLOW AREAS WILL NOT BE ACCEPTED.
- SILT FENCE SHALL BE REMOVED WHEN THE SITE IS COMPLETELY STABILIZED SO AS NOT TO BLOCK OR IMPEDE STORM FLOW OR DRAINAGE.

ADOPTED 6/21/2006 | CITY OF GEORGETOWN CONSTRUCTION STANDARDS AND DETAILS | SILT FENCE DETAIL | EC02 | NTS | 1/2003 | MRS | TRB

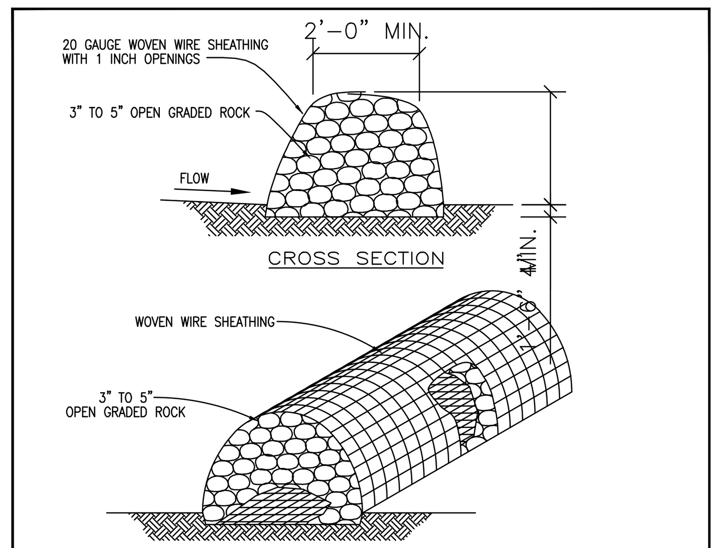

INSTALLATION:
- LAYOUT THE ROCK BERM FOLLOWING AS CLOSELY AS POSSIBLE TO THE CONTOUR.
- CLEAR THE GROUND OF DEBRIS, ROCKS OR PLANTS THAT WILL INTERFERE WITH INSTALLATION.
- PLACE WOVEN WIRE FABRIC ON THE GROUND ALONG THE PROPOSED INSTALLATION WITH ENOUGH OVERLAP TO COMPLETELY ENCIRCLE THE FINISHED SIZE OF THE BERM.
- PLACE THE ROCK ALONG THE CENTER OF THE WIRE TO THE DESIGNATED HEIGHT.
- WRAP THE STRUCTURE WITH THE PREVIOUSLY PLACED WIRE MESH SECURE ENOUGH SO THAT WHEN WALKED ACROSS THE STRUCTURE RETAINS IT'S SHAPE.
- SECURE WITH TIE WIRE.
- THE ENDS OF THE BERM SHOULD BE TIED INTO EXISTING UPSLOPE GRADE AND THE BERM SHOULD BE BURIED IN A TRENCH APPROX. 4 INCHES DEEP TO PREVENT FAILURE OF THE CONTROL.
- THE ROCK BERM SHOULD BE LEFT IN PLACE UNTIL ALL UPSTREAM AREAS ARE STABILIZED AND ACCUMULATED SILT REMOVED.

INSPECTION AND MAINTENANCE GUIDELINES:
- INSPECTION SHOULD BE MADE WEEKLY AND AFTER EACH RAINFALL EVENT BY THE RESPONSIBLE PARTY. FOR INSTALLATIONS IN STREAMBEDS, ADDITIONAL DAILY INSPECTIONS SHOULD BE MADE.
- REMOVE SEDIMENT AND OTHER DEBRIS WHEN BUILDUP REACHES 6 INCHES AND DISPOSE OF THE ACCUMULATED SILT IN AN APPROVED MANNER.
- REPAIR ANY LOOSE WIRE SHEATHING.
- THE BERM SHOULD BE RESHAPED AS NEEDED DURING INSPECTION.
- THE BERM SHOULD BE REPLACED WHEN THE STRUCTURE CEASES TO FUNCTION AS INTENDED DUE TO SILT ACCUMULATION AMONG THE ROCKS, WASHOUT, CONSTRUCTION TRAFFIC DAMAGE, ETC.

The Architect/Engineer assumes responsibility for appropriate use of this standard.

ADOPTED 6/21/2006 | CITY OF GEORGETOWN CONSTRUCTION STANDARDS AND DETAILS | ROCK BERM DETAIL | EC03 | NTS | 1/2003 | MRS | TRB

The Architect/Engineer assumes responsibility for appropriate use of this standard.

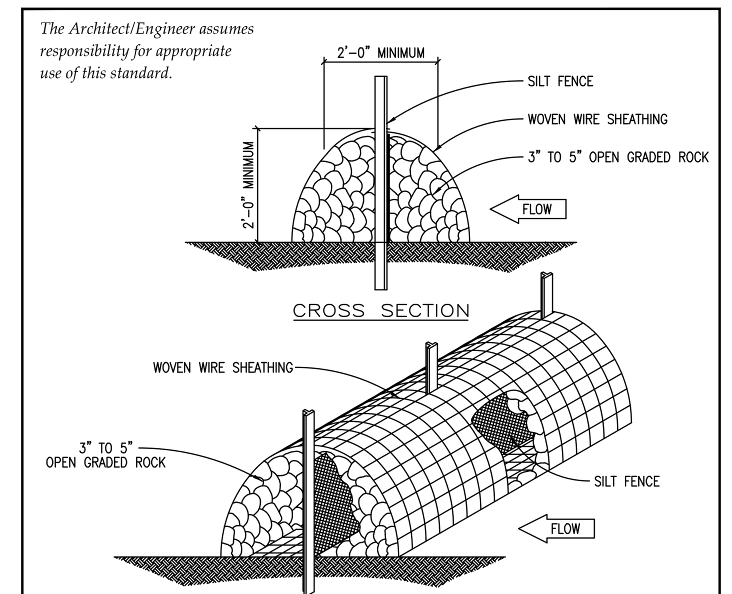

INSTALLATION:
- LAYOUT THE ROCK BERM FOLLOWING AS CLOSELY AS POSSIBLE TO THE CONTOUR.
- CLEAR THE GROUND OF DEBRIS, ROCKS OR PLANTS THAT WILL INTERFERE WITH INSTALLATION.
- PLACE WOVEN WIRE FABRIC ON THE GROUND ALONG THE PROPOSED INSTALLATION WITH ENOUGH OVERLAP TO COMPLETELY ENCIRCLE THE FINISHED SIZE OF THE BERM.
- INSTALL THE SILT FENCE ALONG THE CENTER OF THE PROPOSED BERM PLACEMENT. INSTALLATION SHOULD BE AS DESCRIBED IN DRAWING NO. EC–02 "SILT FENCE DETAIL".
- PLACE THE ROCK ALONG THE CENTER OF THE WIRE AND ON BOTH SIDES OF THE SILT FENCE TO THE DESIGNATED HEIGHT.
- WRAP THE STRUCTURE WITH THE PREVIOUSLY PLACED WIRE MESH SECURE ENOUGH SO THAT WHEN WALKED ACROSS THE STRUCTURE RETAINS IT'S SHAPE.
- SECURE WITH TIE WIRE.
- THE ROCK BERM SHOULD BE LEFT IN PLACE UNTIL ALL UPSTREAM AREAS ARE STABILIZED AND ACCUMULATED SILT REMOVED.

INSPECTION AND MAINTENANCE GUIDELINES:
- INSPECTION SHOULD BE MADE WEEKLY AND AFTER EACH RAINFALL EVENT BY THE CONTRACTOR. FOR THE INSTALLATIONS IN STREAMBEDS, ADDITIONAL DAILY INSPECTIONS SHOULD BE MADE ON ROCK BERM.
- REMOVE SEDIMENT AND OTHER DEBRIS WHEN BUILDUP REACHES 6 INCHES AND DISPOSE OF THE ACCUMULATED SILT IN AN APPROVED MANNER.
- REPAIR ANY LOOSE WIRE SHEATHING.
- THE BERM SHOULD BE RESHAPED AS NEEDED DURING INSPECTION.
- THE BERM SHOULD BE REPLACES WHEN THE STRUCTURE CEASES TO FUNCTION AS INTENDED DUE TO SILT ACCUMULATION AMONG THE ROCKS, WASHOUT, CONSTRUCTION TRAFFIC DAMAGE, ETC.

ADOPTED 6/21/2006 | CITY OF GEORGETOWN CONSTRUCTION STANDARDS AND DETAILS | HIGH SERVICE ROCK BERM DETAIL | EC04 | NTS | 1/2003 | MRS | TRB

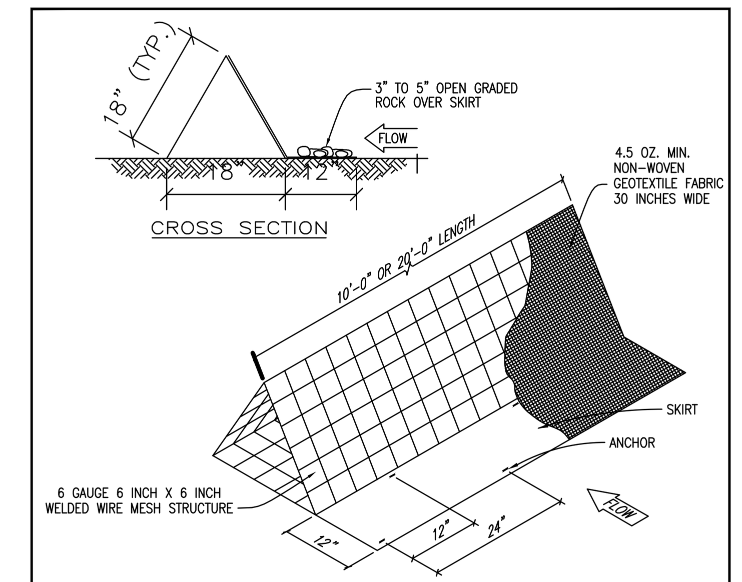

INSTALLATION:
- LAYOUT THE FILTER DIKE FOLLOWING AS CLOSELY AS POSSIBLE TO THE CONTOUR.
- CLEAR THE GROUND OF DEBRIS, ROCKS OR PLANTS THAT WILL INTERFERE WITH INSTALLATION.
- PLACE THE FILTER DIKE SECTIONS ONE AT A TIME, WITH THE SKIRT ON THE UPHILL SIDE TOWARDS THE DIRECTION OF FLOW, ANCHORING EACH SECTION TO THE GROUND BEFORE THE NEXT SECTION IS PLACED.
- ANCHORS SHOULD BE PLACED ON 2'–0" CENTERS ALTERNATING FROM FRONT TO BACK SO THAT THERE IS ACTUALLY ONLY 1'–0" IN BETWEEN ANCHORS.
- SECURELY FASTEN THE SKIRT FROM ONE SECTION OF FILTER DIKE TO THE NEXT.
- FILTER DIKES MUST MAINTAIN CONTINUOUS CONTACT WITH THE GROUND.
- AFTER THE SITE IS COMPLETELY STABILIZED, THE DIKES AND ANY REMAINING SILT SHOULD BE REMOVED. SILT SHOULD BE DISPOSED OF IN A MANNER THAT WILL NOT CONTRIBUTE TO ADDITIONAL SILTATION.

INSPECTION AND MAINTENANCE GUIDELINES:
- INSPECTION SHOULD BE MADE WEEKLY OR AFTER EACH RAINFALL EVENT AND REPAIR OR REPLACEMENT SHOULD BE MADE PROMPTLY AS NEEDED BY THE CONTRACTOR.
- INSPECT AND REALIGN BERMS AS NEEDED TO PREVENT GAPS BETWEEN THE SECTIONS.
- ACCUMULATED SILT SHOULD BE REMOVED AFTER EACH RAINFALL EVENT, AND DISPOSED OF IN A MANNER WHICH WILL NOT CAUSE ADDITIONAL SILTATION.

The Architect/Engineer assumes responsibility for appropriate use of this standard.

ADOPTED 6/21/2006 | CITY OF GEORGETOWN CONSTRUCTION STANDARDS AND DETAILS | TRIANGULAR FILTER DIKE | EC05 | NTS | 1/2003 | MRS | TRB

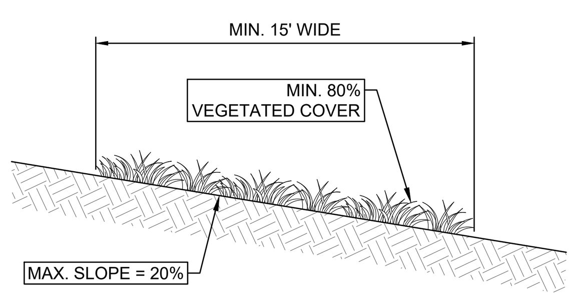

ENGINEERED VEGETATIVE FILTER STRIP DETAIL

N.T.S.

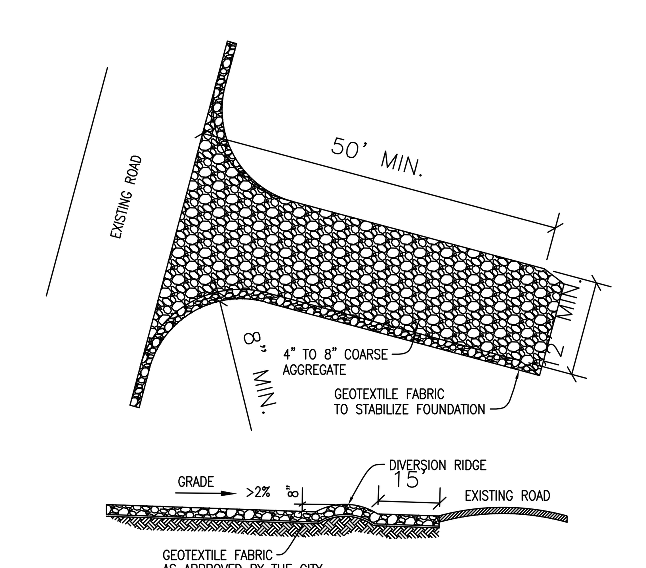

INSTALLATION:
- CLEAR THE AREA OF DEBRIS, ROCKS OR PLANTS THAT WILL INTERFERE WITH INSTALLATION.
- GRADE THE AREA FOR THE ENTRANCE TO FLOW BACK ON TO THE CONSTRUCTION SITE. RUNOFF FROM THE STABILIZED CONSTRUCTION
- PLACE GEOTEXTILE FABRIC AS APPROVED BY THE CITY.
- PLACE ROCK AS APPROVED BY THE CITY.

INSPECTIONS AND MAINTENANCE GUIDELINES:
- THE ENTRANCE SHOULD BE MAINTAINED IN A CONDITION, WHICH WILL PREVENT TRACKING OR FLOWING OF SEDIMENT ONTO PUBLIC RIGHTS–OF–WAY. THIS MAY REQUIRE PERIODIC TOP DRESSING WITH ADDITIONAL STONE AS CONDITIONS DEMAND AND REPAIR AND/OR CLEANOUT OF ANY MEASURES USED TO TRAP SEDIMENT.
- ALL SEDIMENT SPILLED, DROPPED, WASHED OR TRACKED ON TO PUBLIC RIGHTS–OF–WAY SHOULD BE REMOVED IMMEDIATELY BY CONTRACTOR.
- WHEN NECESSARY, WHEELS SHOULD BE CLEANED TO REMOVE SEDIMENT PRIOR TO ENTRANCE ONTO PUBLIC RIGHTS–OF–WAY.
- WHEN WASHING IS REQUIRED, IT SHOULD BE DONE ON AN AREA STABILIZED WITH CRUSHED STONE THAT DRAINS INTO AN APPROVED SEDIMENT TRAP OR SEDIMENT BASIN.
- ALL SEDIMENT SHOULD BE PREVENTED FROM ENTERING ANY STORM DRAIN, DITCH OR WATER COURSE BY USING APPROVED METHODS.

The Architect/Engineer assumes responsibility for appropriate use of this standard.

ADOPTED 6/21/2006 | CITY OF GEORGETOWN CONSTRUCTION STANDARDS AND DETAILS | STABILIZED CONSTRUCTION ENTRANCE | EC06 | NTS | 1/2003 | MRS | TRB

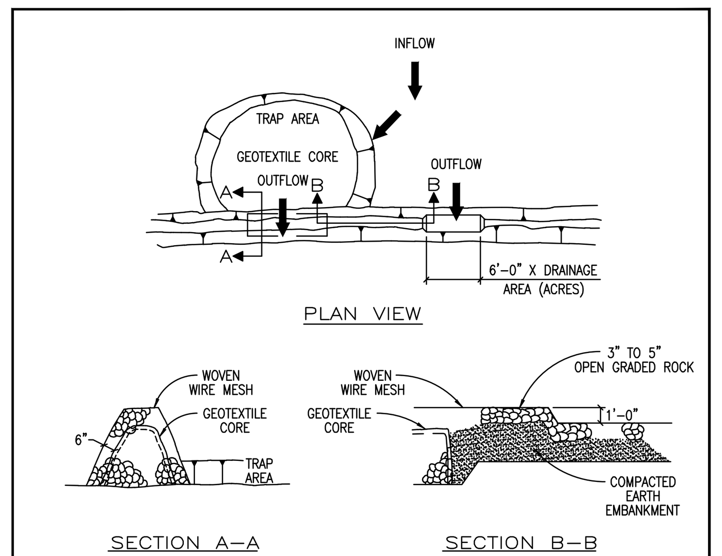

INSTALLATION:
- LOCATE THE SEDIMENT TRAP SO AS TO DISTURB AS FEW TREES AS POSSIBLE.
- CLEAR AND GRUB THE AREA UNDER THE EMBANKMENT OF ALL VEGETATION AND ROOT MATS.
- LAYOUT THE WIRE MESH AND THEN THE GEOTEXTILE FABRIC.
- CONSTRUCT THE GEOTEXTILE CORE AND CORRESPONDING ROCK EMBANKMENT TO THE DESIGNATED HEIGHT AND CONFIGURATION.
- WRAP THE STRUCTURE WITH THE PREVIOUSLY PLACED WIRE MESH SECURE ENOUGH SO THAT WHEN WALKED ACROSS THE STRUCTURE RETAINS IT'S SHAPE. SECURE WITH TIE WIRE.
- PLACE THE EMBANKMENT MATERIAL IN 8 TO 12 INCH LIFTS AND MACHINE COMPACT.

INSPECTION AND MAINTENANCE GUIDELINES:
- INSPECTION SHOULD BE MADE WEEKLY AND AFTER EACH RAINFALL. CHECK THE EMBANKMENT, SPILLWAYS, AND OUTLET FOR EROSION DAMAGE AND INSPECT THE EMBANKMENT FOR PIPING AND SETTLEMENT. REPAIR SHOULD BE MADE PROMPTLY AS NEEDED BY THE CONTRACTOR.
- TRASH AND OTHER DEBRIS SHOULD BE REMOVED AND THE TRAP RESTORED TO ITS ORIGINAL DIMENSIONS WHEN THE SEDIMENT HAS ACCUMULATED TO HALF OF THE DESIGN DEPTH OF THE TRAP.
- SEDIMENT REMOVED FROM THE TRAP SHOULD BE DEPOSITED IN AN APPROVED SPOILS AREA AND IN SUCH A MANNER THAT IT WILL NOT CAUSE ADDITIONAL SILTATION.

The Architect/Engineer assumes responsibility for appropriate use of this standard.

ADOPTED 6/21/2006 | CITY OF GEORGETOWN CONSTRUCTION STANDARDS AND DETAILS | SEDIMENT TRAP DETAIL | EC07 | NTS | 1/2003 | MRS | TRB

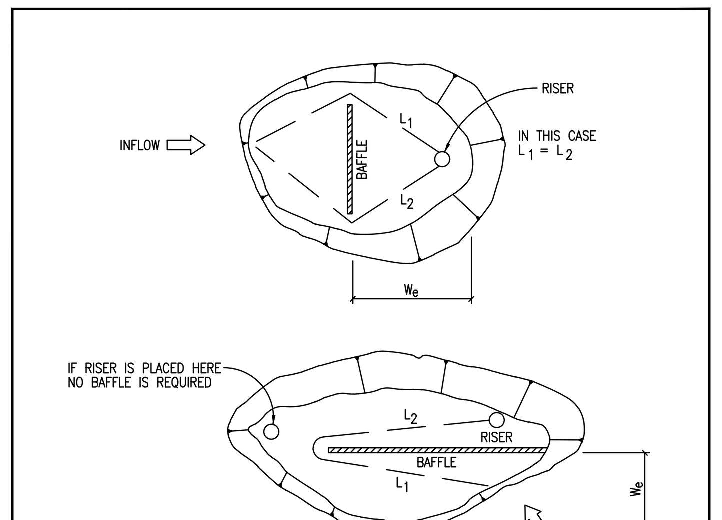

SEDIMENT BASIN BAFFLE DESIGN

$W_e = A / (L_1 + L_2)$

W_e = EFFECTIVE WIDTH OF BASIN

A = SURFACE AREA OF BASIN WHEN FILLED TO RISER CREST

L_1, L_2 = SHORTEST TRAVEL DISTANCE AROUND THE BAFFLE FROM INLET TO OUTLET

INSPECTION AND MAINTENANCE GUIDELINES:
- INSPECTION SHOULD BE MADE WEEKLY AND AFTER EACH RAINFALL. CHECK THE EMBANKMENT, SPILLWAYS, AND OUTLET FOR EROSION DAMAGE, AND INSPECT THE EMBANKMENT FOR PIPING AND SETTLEMENT. REPAIR SHOULD BE MADE PROMPTLY AS NEEDED BY THE CONTRACTOR.
- TRASH AND OTHER DEBRIS SHOULD BE REMOVED AFTER EACH RAINFALL TO PREVENT CLOGGING OF THE OUTLET STRUCTURE.
- ACCUMULATED SILT SHOULD BE REMOVED AND THE BASIN SHOULD BE RE–GRADED TO ITS ORIGINAL DIMENSIONS AT SUCH POINT THAT THE CAPACITY OF THE IMPOUNDMENT HAS BEEN REDUCED TO 1/2 OF ITS ORIGINAL STORAGE CAPACITY.
- THE REMOVED SEDIMENT SHOULD BE STOCKPILED OR REDISTRIBUTED IN AREAS THAT ARE PROTECTED FROM EROSION.

The Architect/Engineer assumes responsibility for appropriate use of this standard.

ADOPTED 6/21/2006 | CITY OF GEORGETOWN CONSTRUCTION STANDARDS AND DETAILS | SEDIMENT BASIN BAFFLE DESIGN | EC08 | NTS | 1/2003 | MRS | TRB

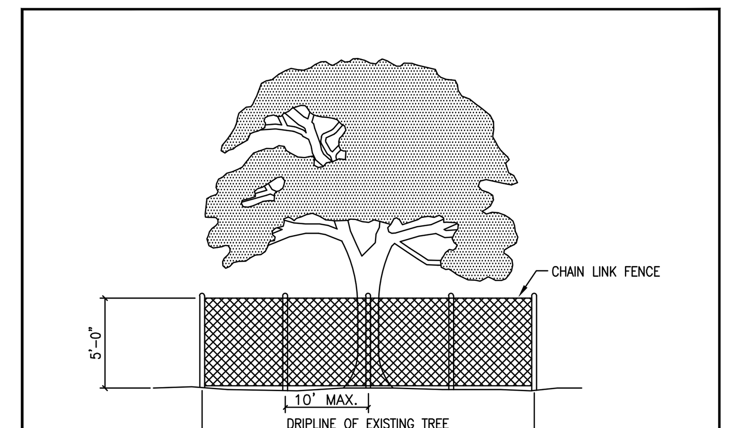

NOTES:

1. TREE PROTECTION FENCES SHALL BE INSTALLED PRIOR TO THE COMMENCEMENT OF ANY SITE PREPARATION WORK (CLEARING, GRUBBING OR GRADING).
2. FENCES SHALL COMPLETELY SURROUND THE TREE, OR CLUSTERS OF TREES; WILL BE LOCATED AT THE OUTERMOST LIMIT OF THE TREE BRANCHES (DRIPLINE), AND WILL BE MAINTAINED THROUGHOUT THE CONSTRUCTION PROJECT IN ORDER TO PREVENT THE FOLLOWING:
   A. SOIL COMPACTION IN THE ROOT ZONE AREA RESULTING FROM VEHICULAR TRAFFIC, OR STORAGE OF EQUIPMENT OR MATERIALS.
   B. ROOT ZONE DISTURBANCES DUE TO GRADE CHANGES (GREATER THAN SIX INCHES (6") CUT OR FILL, OR TRENCHING NOT REVIEWED AND AUTHORIZED BY THE CITY.
   C. WOUNDS TO EXPOSED ROOTS, TRUNKS OR LIMBS BY MECHANICAL EQUIPMENT.
   D. OTHER ACTIVITIES DETRIMENTAL TO TREES, SUCH AS CHEMICAL STORAGE, CEMENT TRUCK CLEANING AND FIRE.
3. EXCEPTIONS TO INSTALLING FENCES AT TREE DRIPLINES MAY BE PERMITTED IN THE FOLLOWING CASES:
   A. WHERE PERMEABLE PAVING IS TO BE INSTALLED, ERECT THE FENCE AT THE OUTER LIMITS OF THE PERMEABLE PAVING AREA.
   B. WHERE TREES ARE CLOSE TO PROPOSED BUILDINGS, ERECT THE FENCE NO CLOSER THAN SIX FEET (6'–0") TO BUILDING.

The Architect/Engineer assumes responsibility for appropriate use of this standard.

ADOPTED 6/21/2006 | CITY OF GEORGETOWN CONSTRUCTION STANDARDS AND DETAILS | TREE PROTECTION – CHAIN LINK FENCE | EC09 | NTS | 1/2003 | MRS | TRB

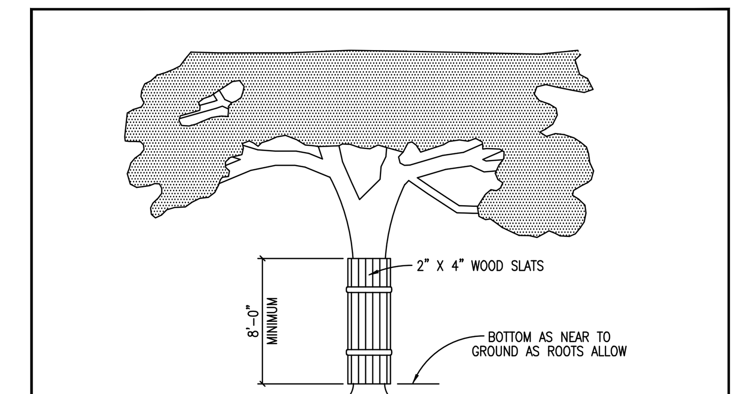

NOTES:

1. WHERE ANY EXCEPTIONS RESULT IN A FENCE BEING CLOSER THAN FOUR FEET (4'–0") TO A TREE TRUNK; PROTECT THE TRUNK WITH STRAPPED–ON–PLANKING TO A HEIGHT OF EIGHT FEET (8'–0"), OR TO THE LIMITS OF LOWER BRANCHING IN ADDITION TO THE REDUCED FENCING PROVIDED.
2. ANY ROOTS EXPOSED BY CONSTRUCTION ACTIVITY SHALL BE PRUNED FLUSH WITH THE SOIL. BACKFILL ROOT AREAS WITH GOOD QUALITY TOP SOIL AS SOON AS POSSIBLE. IF EXPOSED ROOT AREAS ARE NOT BACKFILLED WITHIN TWO (2) DAYS, COVER THEM WITH ORGANIC MATERIAL IN A MANNER WHICH REDUCES SOIL TEMPERATURE, AND MINIMIZES WATER LOSS DUE TO EVAPORATION.
3. PRIOR EXCAVATION OR GRADE CUTTING WITHIN TREE DRIPLINE. MAKE A CLEAN CUT BETWEEN THE DISTURBED AND UNDISTURBED ROOT ZONES WITH A ROCK SAW OR SIMILAR EQUIPMENT, TO MINIMIZE DAMAGE TO REMAINING ROOTS.
4. TREES MOST HEAVILY IMPACTED BY CONSTRUCTION ACTIVITIES SHOULD BE WATERED DEEPLY ONCE A WEEK DURING PERIODS OF HOT, DRY WEATHER. TREE CROWNS SHOULD BE SPRAYED WITH WATER PERIODICALLY TO REDUCE DUST ACCUMULATION ON THE LEAVES.
5. ANY TRENCHING REQUIRED FOR THE INSTALLATION OF LANDSCAPE IRRIGATION SHALL BE PLACED AS FAR FROM EXISTING TREE TRUNKS AS POSSIBLE.
6. NO LANDSCAPE TOPSOIL DRESSING GREATER THE FOUR INCHES (4") SHALL BE PERMITTED WITHIN THE DRIPLINE OF A TREE. NO SOIL IS PERMITTED ON THE ROOT FLARE OF ANY TREE.
7. PRUNING TO PROVIDE CLEARANCE FOR STRUCTURES, VEHICULAR TRAFFIC AND EQUIPMENT SHALL TAKE PLACE BEFORE CONSTRUCTION BEGINS.

The Architect/Engineer assumes responsibility for appropriate use of this standard.

ADOPTED 6/21/2006 | CITY OF GEORGETOWN CONSTRUCTION STANDARDS AND DETAILS | TREE PROTECTION – WOOD SLATS | EC10 | NTS | 1/2003 | MRS | TRB

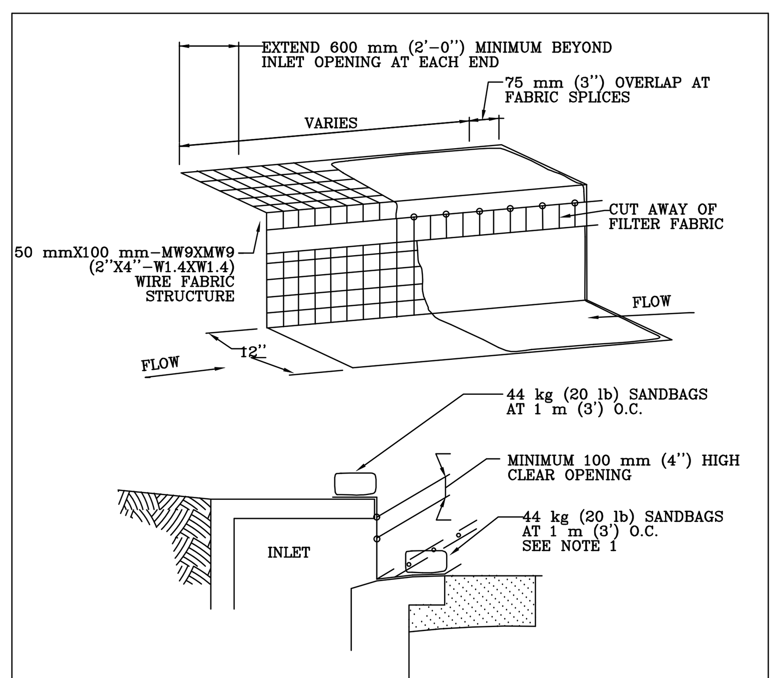

NOTES:
1. WHERE MINIMUM CLEARANCES CAUSE TRAFFIC TO DRIVE IN THE GUTTER, THE CONTRACTOR MAY SUBSTITUTE A 25 mm X 100 mm (1''x4'') BOARD SECURED WITH CONCRETE NAILS 1 m (3') O.C. NAILED INTO THE GUTTER IN LIEU OF SANDBAGS TO HOLD THE FILTER DIKE IN PLACE. UPON REMOVAL, CLEAN ANY DIRT/DEBRIS FROM NAILING LOCATIONS, APPLY CHEMICAL SANDING AGENT AND APPLY NON–SHRINK GROUT FLUSH WITH SURFACE OF GUTTER.
2. A SECTION OF FILTER FABRIC SHALL BE REMOVED AS SHOWN ON THIS DETAIL OR AS DIRECTED BY THE ENGINEER OR DESIGNATED REPRESENTATIVE. FABRIC MUST BE SECURED TO WIRE BACKING WITH CLIPS OR HOG RINGS AT THIS LOCATION.
3. DAILY INSPECTION SHALL BE MADE BY THE CONTRACTOR AND SILT ACCUMULATION MUST BE REMOVED WHEN DEPTH REACHES 50 mm (2'').
4. CONTRACTOR SHALL MONITOR THE PERFORMANCE OF INLET PROTECTION DURING EACH RAINFALL EVENT AND IMMEDIATELY REMOVE THE INLET PROTECTIONS IF THE STORM–WATER BEGINS TO OVERTOP THE CURB.
5. INLET PROTECTIONS SHALL BE REMOVED AS SOON AS THE SOURCE OF SEDIMENT IS STABILIZED.

FILTER DIKE CURB INLET PROTECTION

THE ARCHITECT/ENGINEER ASSUMES RESPONSIBILITY FOR APPROPRIATE USE OF THIS STANDARD.

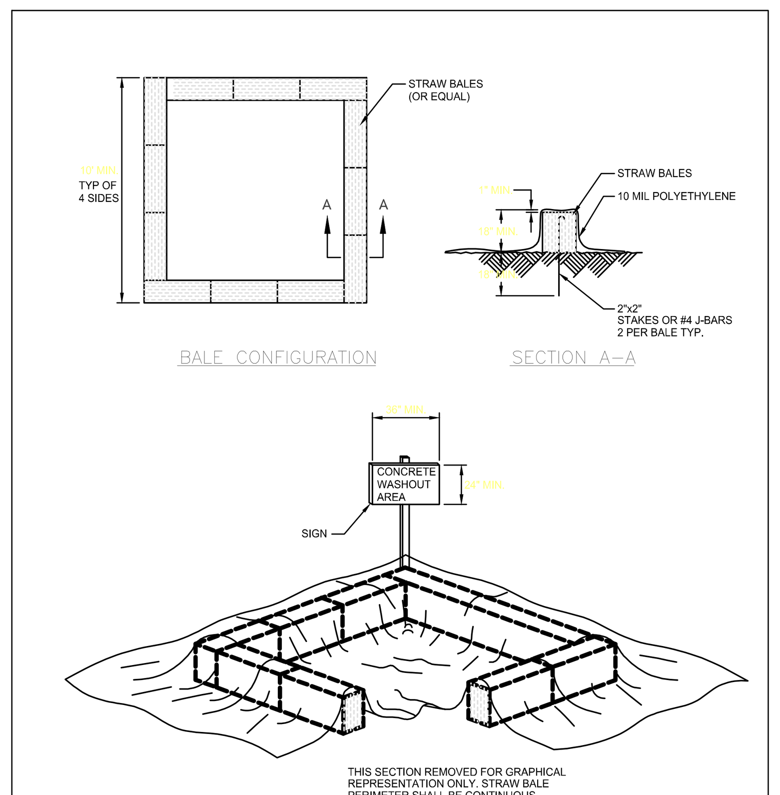

NOTES:
1.- FACE SIGN TOWARD NEAREST STREET OR ACCESS POINT
2.- CONCRETE WASHOUT SHALL BE LOCATED BEHIND CURB AND 50 FT. MINIMUM FROM DRAINAGE INLETS OR WATERCOURSES

Concrete Washout Area

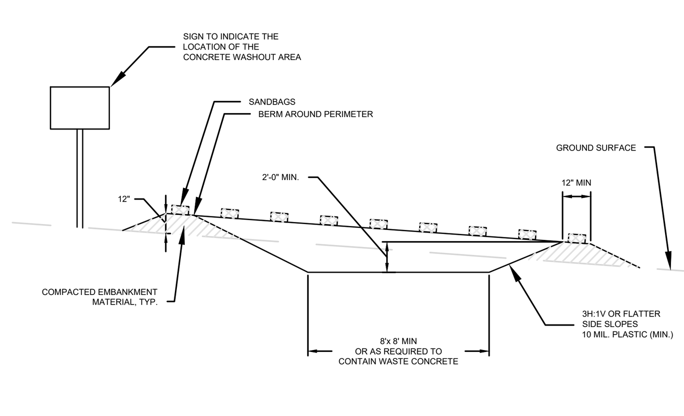

NOTES:
1. CONCRETE WASHOUT AREA SHALL BE INSTALLED PRIOR TO ANY CONCRETE PLACEMENT ON SITE.
2. VEHICLE TRACKING CONTROL (DETAIL SW-14) IS REQUIRED IF ACCESS TO CONCRETE WASHOUT AREA IS OFF PAVEMENT.
3. SIGNS SHALL BE PLACED AT THE CONSTRUCTION ENTRANCE, AT THE WASHOUT AREA, AND ELSEWHERE AS NECESSARY TO CLEARLY INDICATE THE LOCATION OF THE CONCRETE WASHOUT AREA TO OPERATORS OF CONCRETE TRUCKS AND PUMP RIGS.
4. THE CONCRETE WASHOUT AREA SHALL BE REPAIRED AND ENLARGED OR CLEANED OUT AS NECESSARY TO MAINTAIN CAPACITY FOR WASTED CONCRETE.
5. AT THE END OF CONSTRUCTION, ALL CONCRETE SHALL BE REMOVED FROM THE SITE AND DISPOSED OF AT AN ACCEPTED WASTE SITE.
6. WHEN THE CONCRETE WASHOUT AREA IS REMOVED, THE DISTURBED AREA SHALL BE SEEDED AND MULCHED OR OTHERWISE STABILIZED IN A MANNER ACCEPTED BY THE CITY.

CONCRETE WASHOUT AREA

Figure 1.4-F Silt Fence Typical Placement – Two Slopes

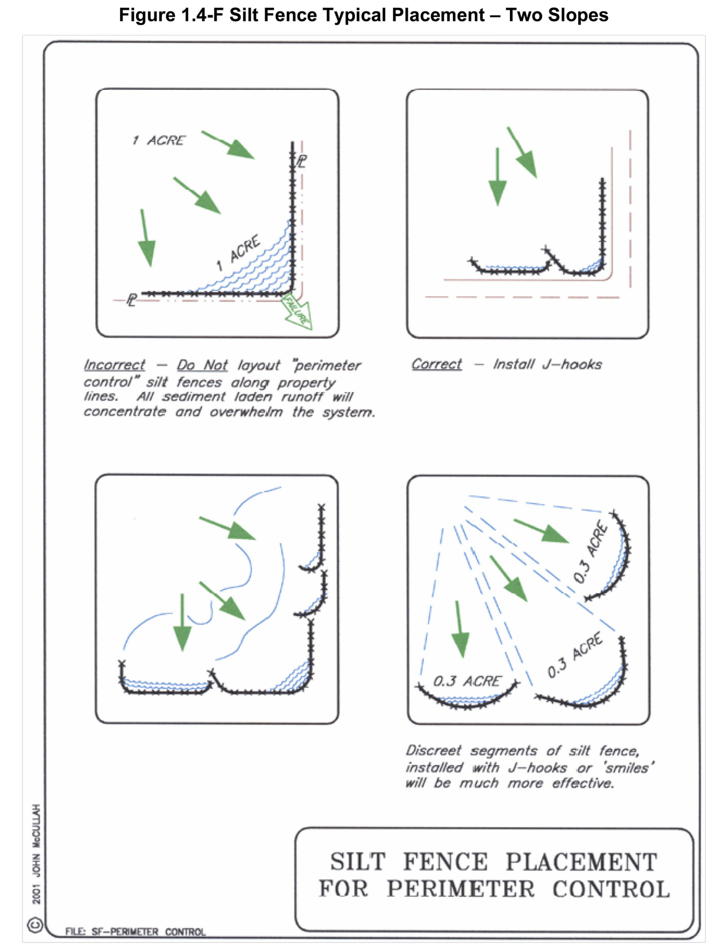

Figure 1.4-G Silt Fence Placement for Perimeter Control

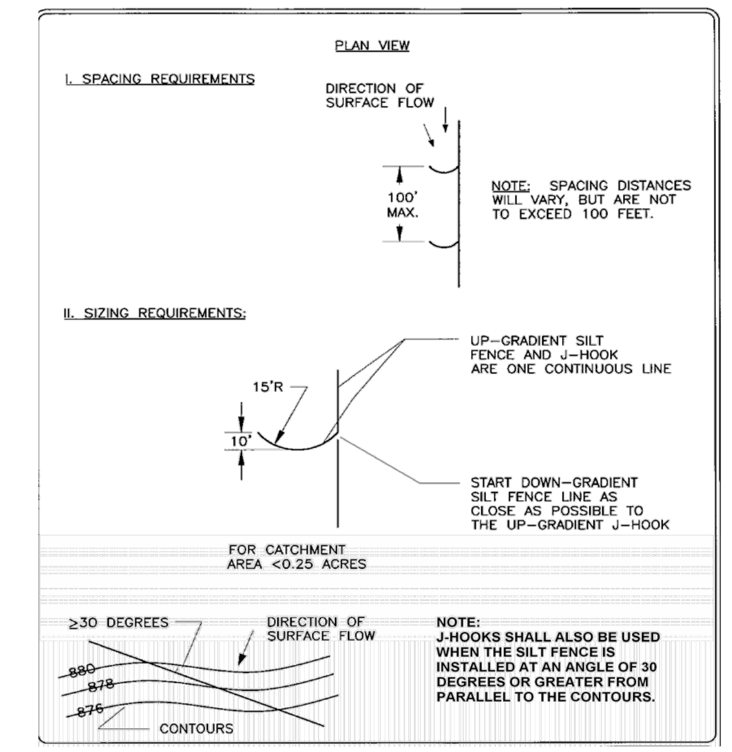

Figure 1.4-H Silt Fence J - Hook Detail (N.T.S.)

H. Triangular Sediment Filter Dikes.

(See Standard Specifications manual item 648S and Specifications manual item 648S *for detail)*

1. Description.

A temporary barrier constructed of wire mesh and geotextile fabric, installed along a flat area.

2. Purpose.

The purpose of a triangular sediment filter dike is to intercept and detain water-borne sediment from a stabilized construction entrance, roadway

---

NO.	REVISION	BY	DATE

811 Know what's below. Call before you dig.

HRGreen® DEVELOPMENT TX

5508 HIGHWAY 290 WEST
SUITE 150
AUSTIN, TX 78735
512.872.6696
HRGREEN.COM

TBPE NO: 16384
TBPLS NO: 10194101

STATE OF TEXAS
CHRISTINE N. CAMPBELL
142536
LICENSED PROFESSIONAL ENGINEER
07/03/2025

EROSION & SEDIMENTATION CONTROL DETAILS

PARKSIDE ON THE RIVER SECTIONS 11, 12A & 15A CONSTRUCTION PLANS GEORGETOWN, WILLIAMSON, TEXAS

DESIGNED BY: CC
DRAWN BY: MM
CHECKED BY: SN
APPROVED BY:

SHEET 40 OF 141

2025-XX-CON

Plot Style: LandDev Global.ctb
Template: LDC_C3D2022.DWT
P:\Blake Magee\Parkside Sections 11-15 & WON 5\Section 11, 12A & 15A\03_ACAD\Plans\sh2403522 DTLS.dwg, EROSION & SEDIMENTATION CONTROL DETAILS, July 18, 2025, 11:30 AM, makai.muhammad

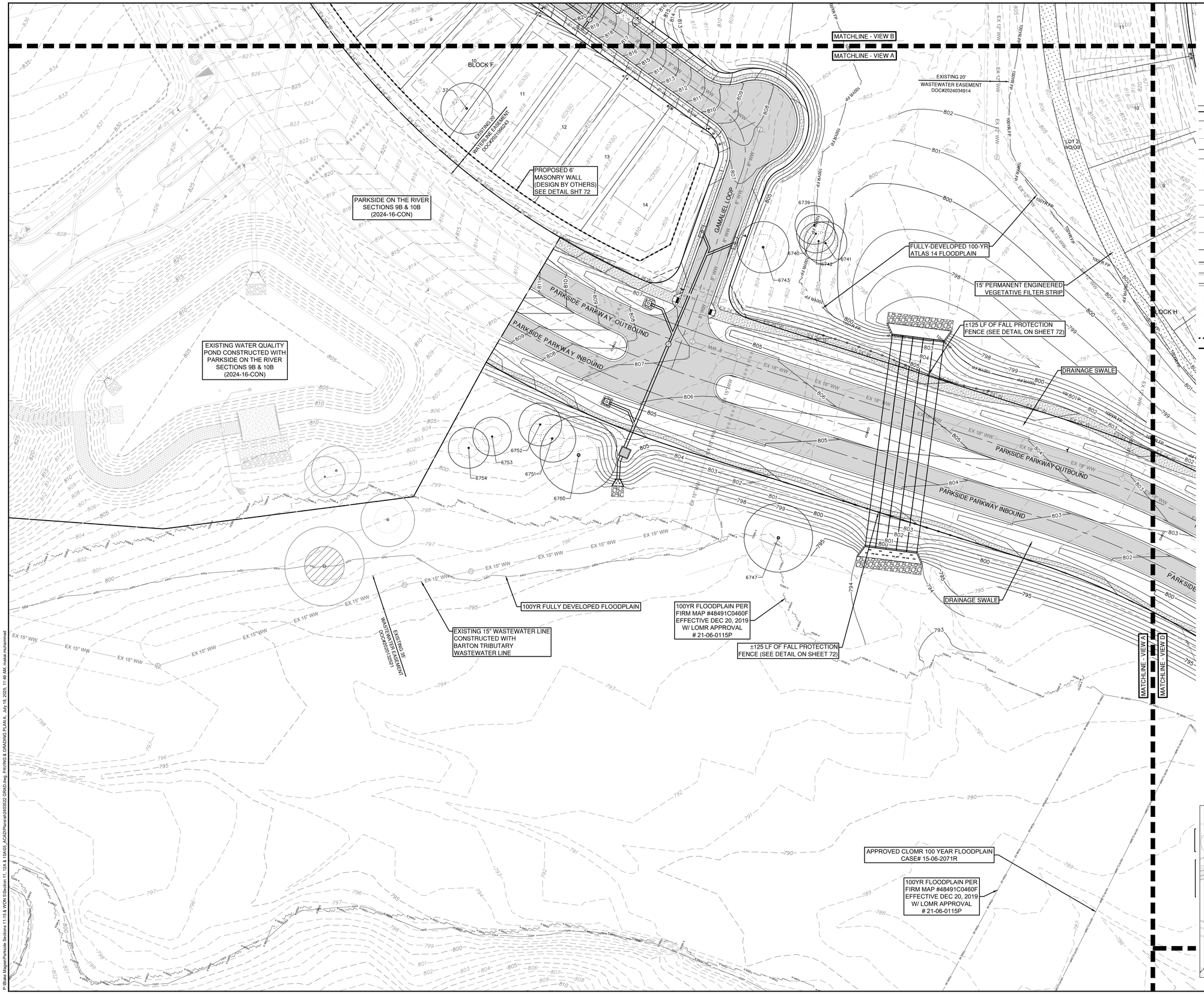

0 40' 80'

SCALE: 1" = 40'

LEGEND

- PROPERTY BOUNDARY
- EASEMENT
- EXISTING MAJOR CONTOUR
- EXISTING MINOR CONTOUR
- PROPOSED MAJOR CONTOUR
- PROPOSED MINOR CONTOUR
- FEMA FLOODWAY PER FIRM# 48491C0460F & LOMR# 21-06-0115P
- FEMA AE — 100YR ATLAS 14 FEMA ZONE AE FLOODPLAIN PER FIRM# 48491C0460F & LOMR# 21-06-0115P
- FEMA A — 100YR FEMA ZONE A FLOODPLAIN PER FIRM MAP# 48491C0460F
- 100YR CLOMR — 100YR CLOMR FLOODPLAIN CASE# 15-06-2071R
- FDFP — 100YR ATLAS 14 FULLY DEVELOPED FLOODPLAIN (STANTEC DRAINAGE STUDY, SHERVIN NOOSHIN, 3/25/19) APPROVED WITH PP# 2019-5-PP
- OHWM — ORDINARY HIGH WATER MARK PER ADAMS ENVIRONMENTAL
- STANDARD CURB AND GUTTER
- RIBBON CURB
- MOUNTABLE CURB
- SIDEWALK (BY DEVELOPER)
- SIDEWALK (BY BUILDER)
- ADA RAMP
- MASONRY WALL (DESIGN BY OTHERS)
- RETAINING WALL (DESIGN BY OTHERS)
- 10339 — TREES TO REMAIN - HERITAGE
- 10538 — TREES TO REMAIN - NON-HERITAGE
- ASPHALT PAVING (REFER TO SHEET 72 FOR PAVEMENT DESIGN SECTIONS)
- VEGETATIVE FILTER STRIP

NOTES:

1. FILL SHOULD BE COMPACTED TO AT LEAST 95% OF THE MAXIMUM DRY DENSITY AS DETERMINED BY TxDOT - 114 - E, AND PER GEOTECHNICAL ENGINEERS RECOMMENDATION.
2. FILL WITHIN THE RESIDENTIAL LOT AREAS SHALL BE PLACED ACCORDING TO THE HUD 79G REQUIREMENTS SPECIFICATIONS
3. VEGETATE ALL DISTURBED AREAS WITHIN THE ROW AND OPEN SPACE LOT AREAS PER CITY OF GEORGETOWN SPECIFICATIONS.
4. BOTTOM OF WALL (BW) ELEVATIONS INDICATE FINISHED GRADE. IT DOES NOT INCLUDE THE FOOTING.

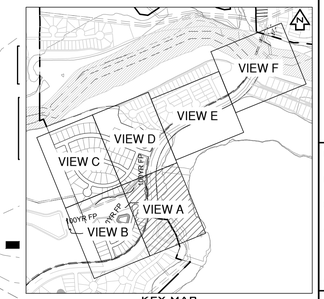

KEY MAP (N.T.S.)

NO	REVISION	BY	DATE

811 Know what's below. Call before you dig.

5508 HIGHWAY 290 WEST
SUITE 150
AUSTIN, TX 78735
512.872.6696
HRGREEN.COM

TBPE NO: 16384
TBPLS NO: 10194101

HRGreen® DEVELOPMENT TX

STATE OF TEXAS
CHRISTINE N. CAMPBELL
142536
LICENSED PROFESSIONAL ENGINEER
07/05/2025

PAVING & GRADING PLAN A

PARKSIDE ON THE RIVER SECTIONS 11, 12A & 15A CONSTRUCTION PLANS

GEORGETOWN, WILLIAMSON, TEXAS

DESIGNED BY: CC
DRAWN BY: MM
CHECKED BY: SN
APPROVED BY:

SHEET 62 OF 141

2025-XX-CON

P:\Bldo Mgmt\Parkside Sections 11,15 & WCN 1\Section 11, 12A & 15A\03_ACAD\Planset\2400322 GRAD.dwg, PAVING & GRADING PLAN A, July 16, 2025, 11:46 AM, malak.muhammad

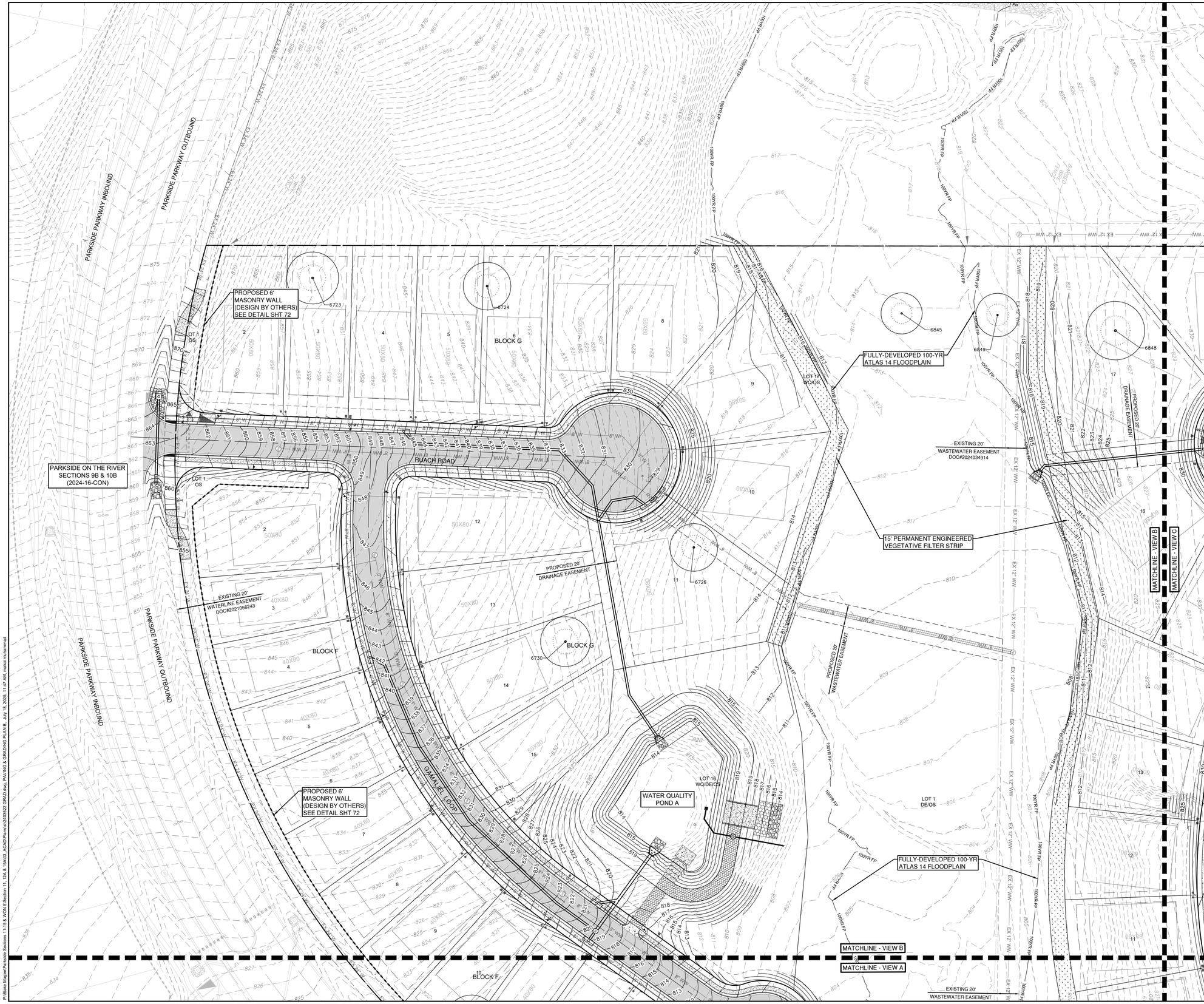

0 40' 80'

SCALE: 1" = 40'

LEGEND

- PROPERTY BOUNDARY
- EASEMENT
- EXISTING MAJOR CONTOUR
- EXISTING MINOR CONTOUR
- PROPOSED MAJOR CONTOUR
- PROPOSED MINOR CONTOUR
- FEMA FLOODWAY PER FIRM# 48491C0460F & LOMR# 21-06-0115P
- FEMA AE — 100YR ATLAS 14 FEMA ZONE AE FLOODPLAIN PER FIRM# 48491C0460F & LOMR# 21-06-0115P
- FEMA A — 100YR FEMA ZONE A FLOODPLAIN PER FIRM MAP# 48491C0460F
- 100YR CLOMR — 100YR CLOMR FLOODPLAIN CASE# 15-06-2071R
- FDFP — 100YR ATLAS 14 FULLY DEVELOPED FLOODPLAIN (STANTEC DRAINAGE STUDY, SHERVIN NOOSHIN, 3/25/19) APPROVED WITH PP# 2019-5-PP
- OHWM — ORDINARY HIGH WATER MARK PER ADAMS ENVIRONMENTAL
- STANDARD CURB AND GUTTER
- RIBBON CURB
- MOUNTABLE CURB
- SIDEWALK (BY DEVELOPER)
- SIDEWALK (BY BUILDER)
- ADA RAMP
- MASONRY WALL (DESIGN BY OTHERS)
- RETAINING WALL (DESIGN BY OTHERS)
- TREES TO REMAIN - HERITAGE
- TREES TO REMAIN - NON-HERITAGE
- ASPHALT PAVING (REFER TO SHEET 72 FOR PAVEMENT DESIGN SECTIONS)
- VEGETATIVE FILTER STRIP

NOTES:

1. FILL SHOULD BE COMPACTED TO AT LEAST 95% OF THE MAXIMUM DRY DENSITY AS DETERMINED BY TxDOT - 114 - E, AND PER GEOTECHNICAL ENGINEERS RECOMMENDATION.
2. FILL WITHIN THE RESIDENTIAL LOT AREAS SHALL BE PLACED ACCORDING TO THE HUD 79G REQUIREMENTS SPECIFICATIONS
3. VEGETATE ALL DISTURBED AREAS WITHIN THE ROW AND OPEN SPACE LOT AREAS PER CITY OF GEORGETOWN SPECIFICATIONS.
4. BOTTOM OF WALL (BW) ELEVATIONS INDICATE FINISHED GRADE. IT DOES NOT INCLUDE THE FOOTING.

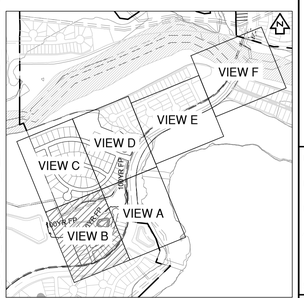

KEY MAP (N.T.S.)

NO.	REVISION	BY	DATE

811 Know what's below. Call before you dig.

HRGreen® DEVELOPMENT TX
5508 HIGHWAY 290 WEST
SUITE 150
AUSTIN, TX 78735
512.872.6696
HRGREEN.COM
TBPE NO: 16384
TBPLS NO: 10194101

STATE OF TEXAS
CHRISTINE N. CAMPBELL
142536
LICENSED PROFESSIONAL ENGINEER
07/03/2025

PAVING & GRADING PLAN B

PARKSIDE ON THE RIVER SECTIONS 11, 12A & 15A CONSTRUCTION PLANS GEORGETOWN, WILLIAMSON, TEXAS

DESIGNED BY: CC
DRAWN BY: MM
CHECKED BY: SN
APPROVED BY:

SHEET 63 OF 141

2025-XX-CON

P:\Blake Magee\Parkside Sections 11-15 & WON 5\Section 11, 12A & 15A\03_ACAD\Plans\sh2403522 GRAD.dwg, PAVING & GRADING PLAN B, July 18, 2025, 11:47 AM, makai.muhammad

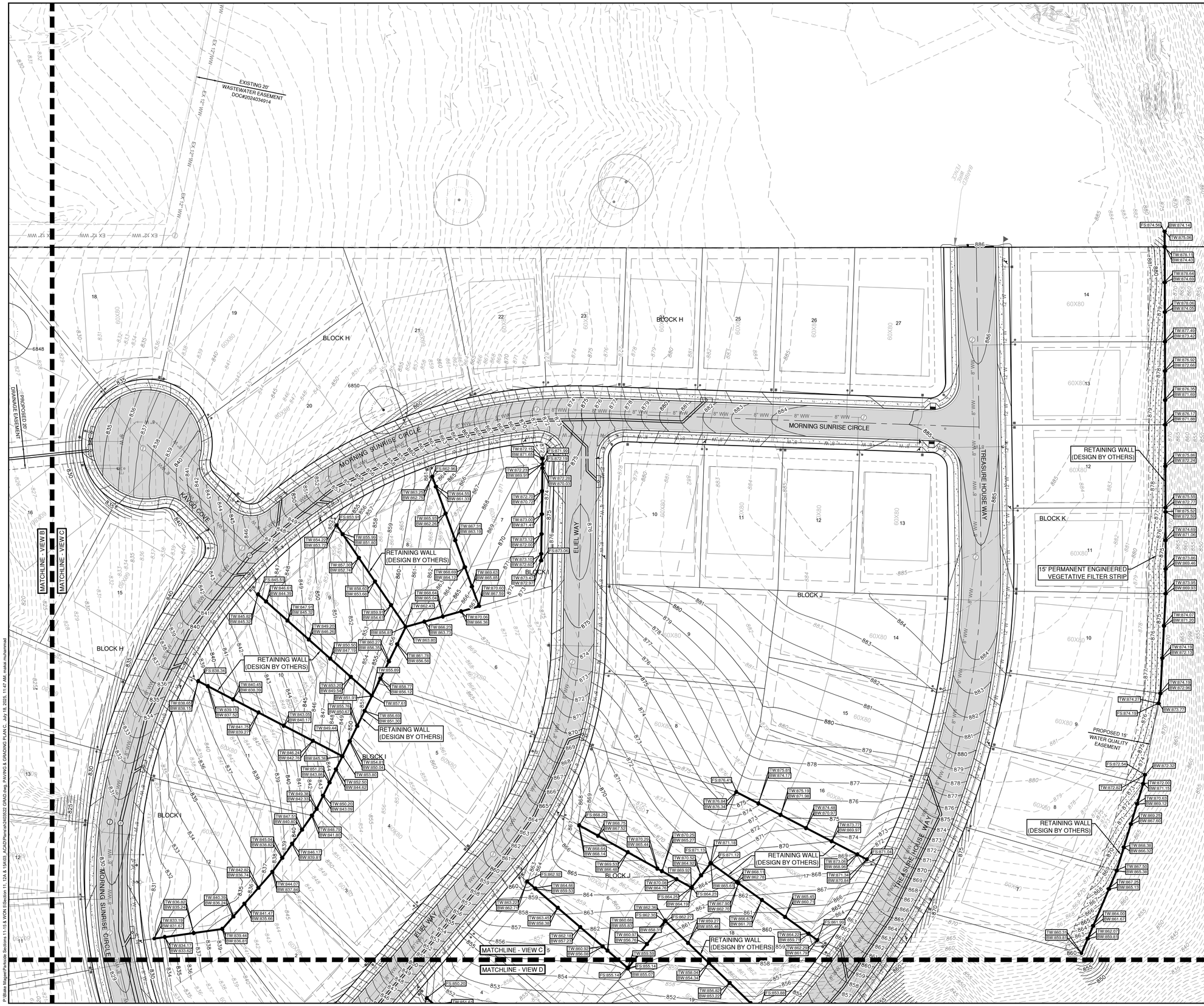

0 40' 80'

SCALE: 1" = 40'

LEGEND

- PROPERTY BOUNDARY
- EASEMENT
- 840 EXISTING MAJOR CONTOUR
- EXISTING MINOR CONTOUR
- 940 PROPOSED MAJOR CONTOUR
- PROPOSED MINOR CONTOUR
- FEMA FLOODWAY PER FIRM# 48491C0460F & LOMR# 21-06-0115P
- FEMA AE — 100YR ATLAS 14 FEMA ZONE AE FLOODPLAIN PER FIRM# 48491C0460F & LOMR# 21-06-0115P
- FEMA A — 100YR FEMA ZONE A FLOODPLAIN PER FIRM MAP# 48491C0460F
- 100YR CLOMR — 100YR CLOMR FLOODPLAIN CASE# 15-06-2071R
- FDFP — 100YR ATLAS 14 FULLY DEVELOPED FLOODPLAIN (STANTEC DRAINAGE STUDY, SHERVIN NOOSHIN, 3/25/19) APPROVED WITH PP# 2019-5-PP
- OHWM — ORDINARY HIGH WATER MARK PER ADAMS ENVIRONMENTAL
- STANDARD CURB AND GUTTER
- RIBBON CURB
- MOUNTABLE CURB
- SIDEWALK (BY DEVELOPER)
- SIDEWALK (BY BUILDER)
- ADA RAMP
- MASONRY WALL (DESIGN BY OTHERS)
- RETAINING WALL (DESIGN BY OTHERS)
- 10539 TREES TO REMAIN - HERITAGE
- 10538 TREES TO REMAIN - NON-HERITAGE
- ASPHALT PAVING (REFER TO SHEET 72 FOR PAVEMENT DESIGN SECTIONS)
- VEGETATIVE FILTER STRIP

NOTES:

1. FILL SHOULD BE COMPACTED TO AT LEAST 95% OF THE MAXIMUM DRY DENSITY AS DETERMINED BY TxDOT - 114 - E, AND PER GEOTECHNICAL ENGINEERS RECOMMENDATION.
2. FILL WITHIN THE RESIDENTIAL LOT AREAS SHALL BE PLACED ACCORDING TO THE HUD 79G REQUIREMENTS SPECIFICATIONS
3. VEGETATE ALL DISTURBED AREAS WITHIN THE ROW AND OPEN SPACE LOT AREAS PER CITY OF GEORGETOWN SPECIFICATIONS.
4. BOTTOM OF WALL (BW) ELEVATIONS INDICATE FINISHED GRADE. IT DOES NOT INCLUDE THE FOOTING.

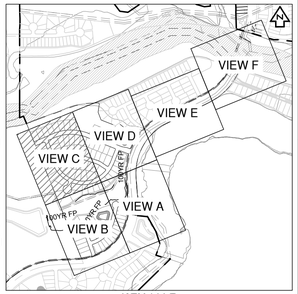

KEY MAP (N.T.S.)

NO.	REVISION	BY	DATE

811 Know what's below. Call before you dig.

HRGreen®
DEVELOPMENT TX
5508 HIGHWAY 290 WEST
SUITE 150
AUSTIN, TX 78735
512.872.6696
HRGREEN.COM
TBPE NO: 16384
TBPLS NO: 10194101

STATE OF TEXAS
CHRISTINE N. CAMPBELL
142536
LICENSED PROFESSIONAL ENGINEER
07/03/2025

PAVING & GRADING PLAN C

PARKSIDE ON THE RIVER SECTIONS 11, 12A & 15A CONSTRUCTION PLANS GEORGETOWN, WILLIAMSON, TEXAS

DESIGNED BY: CC
DRAWN BY: MM
CHECKED BY: SN
APPROVED BY:

SHEET 64 OF 141

2025-XX-CON

P:\Blake Magee\Parkside Sections 11-15 & WON 5\Section 11, 12A & 15A\03_ACAD\Plans\ah2403522 GRAD.dwg, PAVING & GRADING PLAN C, July 18, 2025, 11:47 AM, makai.muhammad

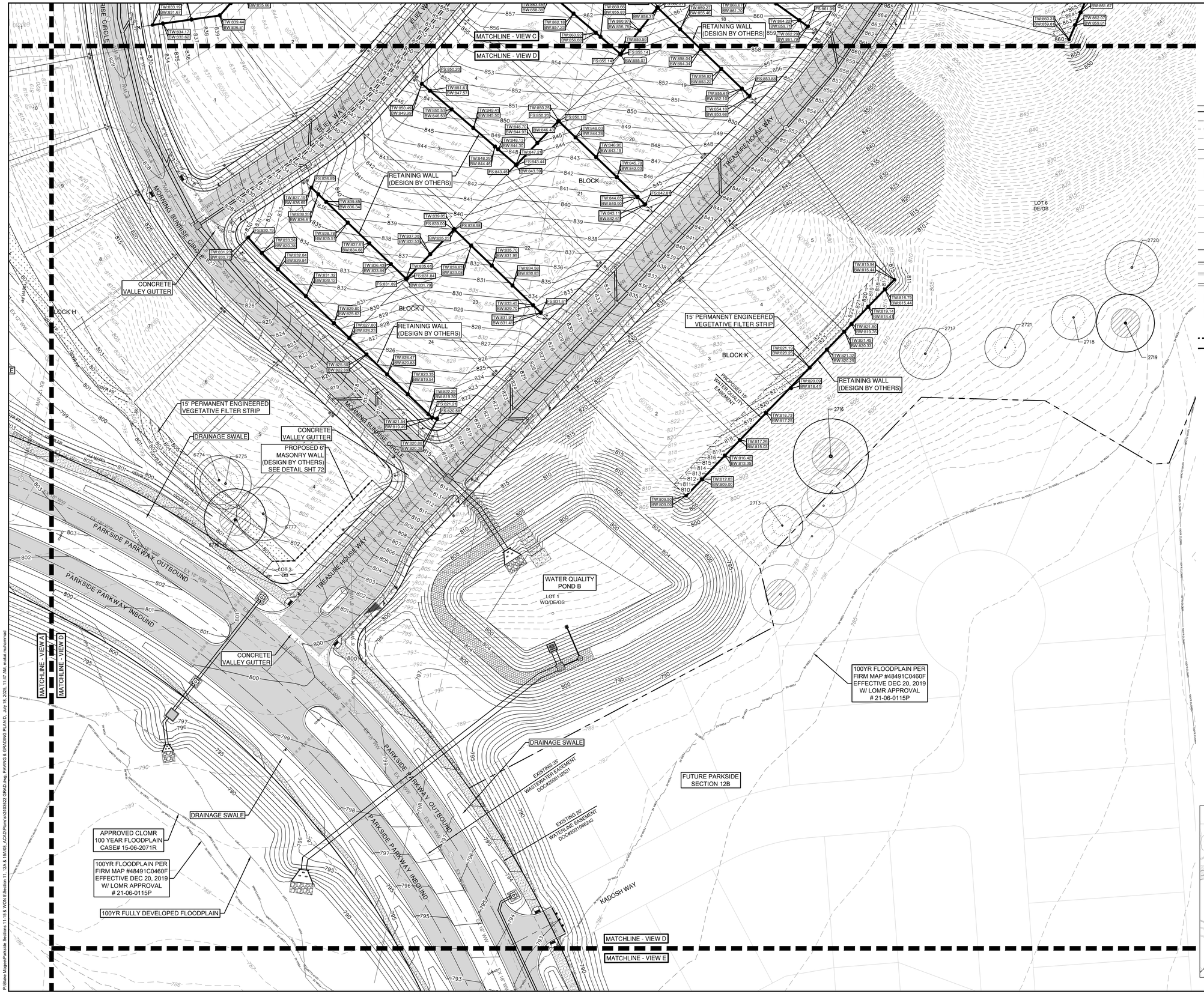

0 40' 80'

SCALE: 1" = 40'

LEGEND

- PROPERTY BOUNDARY
- EASEMENT
- 840 EXISTING MAJOR CONTOUR
- EXISTING MINOR CONTOUR
- 940 PROPOSED MAJOR CONTOUR
- PROPOSED MINOR CONTOUR
- FEMA FLOODWAY PER FIRM# 48491C0460F & LOMR# 21-06-0115P
- FEMA AE — 100YR ATLAS 14 FEMA ZONE AE FLOODPLAIN PER FIRM# 48491C0460F & LOMR# 21-06-0115P
- FEMA A — 100YR FEMA ZONE A FLOODPLAIN PER FIRM MAP# 48491C0460F
- 100YR CLOMR — 100YR CLOMR FLOODPLAIN CASE# 15-06-2071R
- FDFP — 100YR ATLAS 14 FULLY DEVELOPED FLOODPLAIN (STANTEC DRAINAGE STUDY, SHERVIN NOOSHIN, 3/25/19) APPROVED WITH PP# 2019-5-PP
- OHWM — ORDINARY HIGH WATER MARK PER ADAMS ENVIRONMENTAL
- STANDARD CURB AND GUTTER
- RIBBON CURB
- MOUNTABLE CURB
- SIDEWALK (BY DEVELOPER)
- SIDEWALK (BY BUILDER)
- ADA RAMP
- MASONRY WALL (DESIGN BY OTHERS)
- RETAINING WALL (DESIGN BY OTHERS)
- 10539 TREES TO REMAIN - HERITAGE
- 10538 TREES TO REMAIN - NON-HERITAGE
- ASPHALT PAVING (REFER TO SHEET 72 FOR PAVEMENT DESIGN SECTIONS)
- VEGETATIVE FILTER STRIP

NOTES:

1. FILL SHOULD BE COMPACTED TO AT LEAST 95% OF THE MAXIMUM DRY DENSITY AS DETERMINED BY TxDOT - 114 - E, AND PER GEOTECHNICAL ENGINEERS RECOMMENDATION.
2. FILL WITHIN THE RESIDENTIAL LOT AREAS SHALL BE PLACED ACCORDING TO THE HUD 79G REQUIREMENTS SPECIFICATIONS
3. VEGETATE ALL DISTURBED AREAS WITHIN THE ROW AND OPEN SPACE LOT AREAS PER CITY OF GEORGETOWN SPECIFICATIONS.
4. BOTTOM OF WALL (BW) ELEVATIONS INDICATE FINISHED GRADE. IT DOES NOT INCLUDE THE FOOTING.

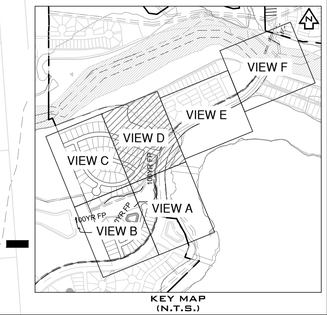

KEY MAP (N.T.S.)

NO.	REVISION	BY	DATE

811 Know what's below. Call before you dig.

HRGreen® DEVELOPMENT TX
5508 HIGHWAY 290 WEST
SUITE 150
AUSTIN, TX 78735
512.872.6696
HRGREEN.COM
TBPE NO: 16384
TBPLS NO: 10194101

STATE OF TEXAS
CHRISTINE N. CAMPBELL
142536
LICENSED PROFESSIONAL ENGINEER
07/03/2025

PAVING & GRADING PLAN D

PARKSIDE ON THE RIVER SECTIONS 11, 12A & 15A CONSTRUCTION PLANS GEORGETOWN, WILLIAMSON, TEXAS

DESIGNED BY: CC
DRAWN BY: MM
CHECKED BY: SN
APPROVED BY:

SHEET 65 OF 141

2025-XX-CON

P:\Blake Magee\Parkside Sections 11-15 & WON 5\Section 11, 12A & 15A\03_ACAD\Plans\sh2403522 GRAD.dwg, PAVING & GRADING PLAN D, July 18, 2025, 11:47 AM, makai.muhammad

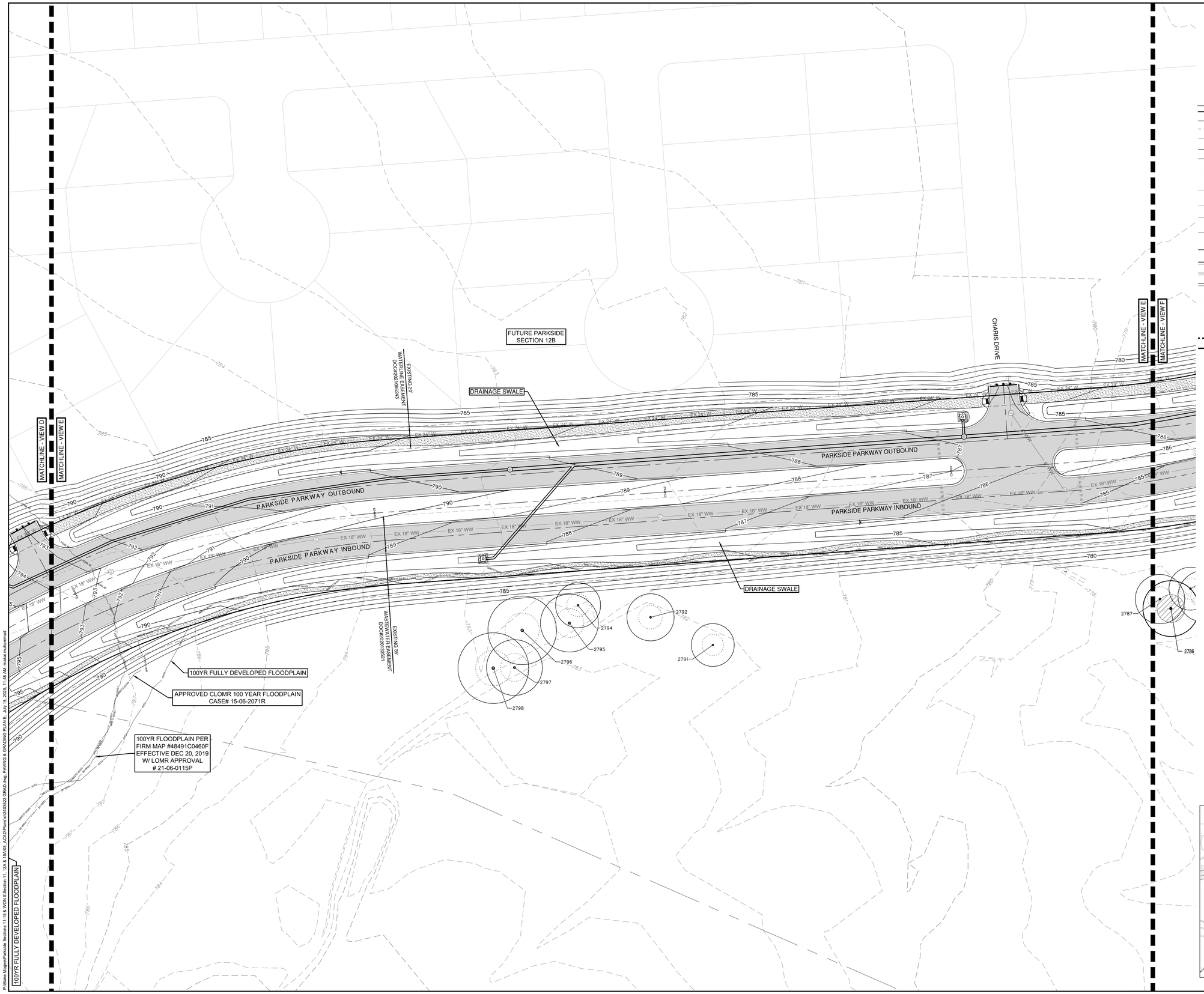

0 40' 80'

SCALE: 1" = 40'

LEGEND

- PROPERTY BOUNDARY
- EASEMENT
- EXISTING MAJOR CONTOUR
- EXISTING MINOR CONTOUR
- PROPOSED MAJOR CONTOUR
- PROPOSED MINOR CONTOUR
- FEMA FLOODWAY PER FIRM# 48491C0460F & LOMR# 21-06-0115P
- 100YR ATLAS 14 FEMA ZONE AE FLOODPLAIN PER FIRM# 48491C0460F & LOMR# 21-06-0115P
- 100YR FEMA ZONE A FLOODPLAIN PER FIRM MAP# 48491C0460F
- 100YR CLOMR FLOODPLAIN CASE# 15-06-2071R
- 100YR ATLAS 14 FULLY DEVELOPED FLOODPLAIN (STANTEC DRAINAGE STUDY, SHERVIN NOOSHIN, 3/25/19) APPROVED WITH PP# 2019-5-PP
- ORDINARY HIGH WATER MARK PER ADAMS ENVIRONMENTAL
- STANDARD CURB AND GUTTER
- RIBBON CURB
- MOUNTABLE CURB
- SIDEWALK (BY DEVELOPER)
- SIDEWALK (BY BUILDER)
- ADA RAMP
- MASONRY WALL (DESIGN BY OTHERS)
- RETAINING WALL (DESIGN BY OTHERS)
- TREES TO REMAIN - HERITAGE
- TREES TO REMAIN - NON-HERITAGE
- ASPHALT PAVING (REFER TO SHEET 72 FOR PAVEMENT DESIGN SECTIONS)
- VEGETATIVE FILTER STRIP

NOTES:

1. FILL SHOULD BE COMPACTED TO AT LEAST 95% OF THE MAXIMUM DRY DENSITY AS DETERMINED BY TxDOT - 114 - E, AND PER GEOTECHNICAL ENGINEERS RECOMMENDATION.
2. FILL WITHIN THE RESIDENTIAL LOT AREAS SHALL BE PLACED ACCORDING TO THE HUD 79G REQUIREMENTS SPECIFICATIONS
3. VEGETATE ALL DISTURBED AREAS WITHIN THE ROW AND OPEN SPACE LOT AREAS PER CITY OF GEORGETOWN SPECIFICATIONS.
4. BOTTOM OF WALL (BW) ELEVATIONS INDICATE FINISHED GRADE. IT DOES NOT INCLUDE THE FOOTING.

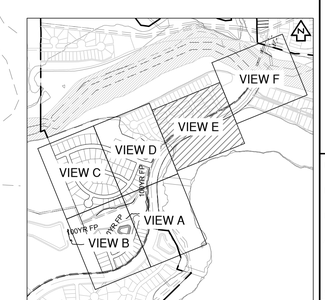

KEY MAP (N.T.S.)

NO.	REVISION	BY	DATE

811 Know what's below. Call before you dig.

HRGreen®
DEVELOPMENT TX
5508 HIGHWAY 290 WEST
SUITE 150
AUSTIN, TX 78735
512.872.6696
HRGREEN.COM
TBPE NO: 16384
TBPLS NO: 10194101

STATE OF TEXAS
CHRISTINE N. CAMPBELL
142536
LICENSED PROFESSIONAL ENGINEER
07/03/2025

PAVING & GRADING PLAN E

PARKSIDE ON THE RIVER SECTIONS 11, 12A & 15A CONSTRUCTION PLANS GEORGETOWN, WILLIAMSON, TEXAS

DESIGNED BY: CC
DRAWN BY: MM
CHECKED BY: SN
APPROVED BY:

SHEET 66 OF 141

2025-XX-CON

P:\Blake Magee\Parkside Sections 11-15 & WON 5\Section 11, 12A & 15A\03_ACAD\Plans\sh2403522 GRAD.dwg, PAVING & GRADING PLAN E, July 18, 2025, 11:48 AM, makai.muhammad

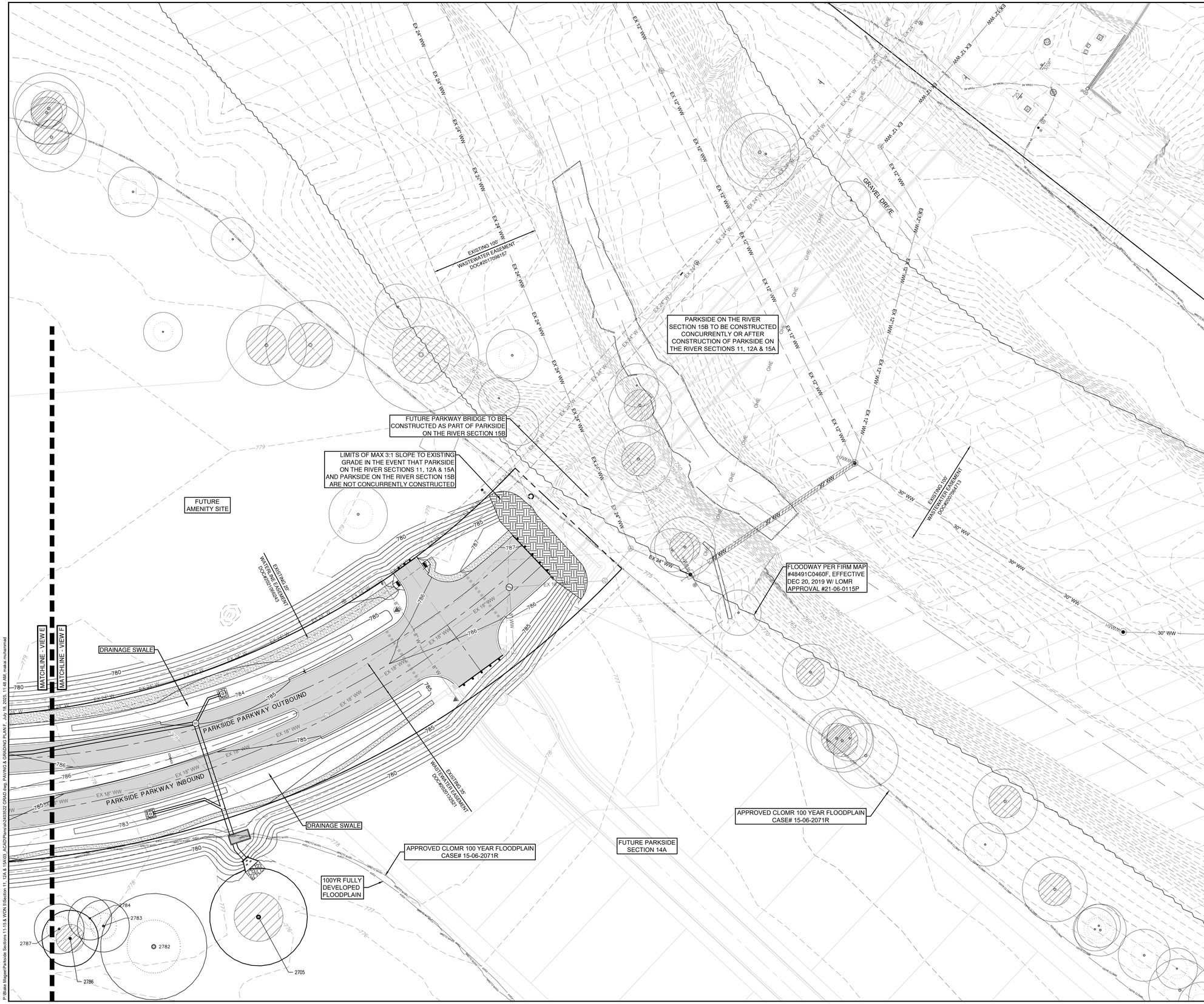

0 40' 80'

SCALE: 1" = 40'

LEGEND

- PROPERTY BOUNDARY
- EASEMENT
- 840 EXISTING MAJOR CONTOUR
- EXISTING MINOR CONTOUR
- 940 PROPOSED MAJOR CONTOUR
- PROPOSED MINOR CONTOUR
- FEMA FLOODWAY PER FIRM# 48491C0460F & LOMR# 21-06-0115P
- FEMA AE — 100YR ATLAS 14 FEMA ZONE AE FLOODPLAIN PER FIRM# 48491C0460F & LOMR# 21-06-0115P
- FEMA A — 100YR FEMA ZONE A FLOODPLAIN PER FIRM MAP# 48491C0460F
- 100YR CLOMR — 100YR CLOMR FLOODPLAIN CASE# 15-06-2071R
- FDFP — 100YR ATLAS 14 FULLY DEVELOPED FLOODPLAIN (STANTEC DRAINAGE STUDY, SHERVIN NOOSHIN, 3/25/19) APPROVED WITH PP# 2019-5-PP
- OHWM — ORDINARY HIGH WATER MARK PER ADAMS ENVIRONMENTAL
- STANDARD CURB AND GUTTER
- RIBBON CURB
- MOUNTABLE CURB
- SIDEWALK (BY DEVELOPER)
- SIDEWALK (BY BUILDER)
- ADA RAMP
- MASONRY WALL (DESIGN BY OTHERS)
- RETAINING WALL (DESIGN BY OTHERS)
- 105J9 TREES TO REMAIN - HERITAGE
- 105J8 TREES TO REMAIN - NON-HERITAGE
- ASPHALT PAVING (REFER TO SHEET 72 FOR PAVEMENT DESIGN SECTIONS)
- VEGETATIVE FILTER STRIP

NOTES:

1. FILL SHOULD BE COMPACTED TO AT LEAST 95% OF THE MAXIMUM DRY DENSITY AS DETERMINED BY TxDOT - 114 - E, AND PER GEOTECHNICAL ENGINEERS RECOMMENDATION.
2. FILL WITHIN THE RESIDENTIAL LOT AREAS SHALL BE PLACED ACCORDING TO THE HUD 79G REQUIREMENTS SPECIFICATIONS
3. VEGETATE ALL DISTURBED AREAS WITHIN THE ROW AND OPEN SPACE LOT AREAS PER CITY OF GEORGETOWN SPECIFICATIONS.
4. BOTTOM OF WALL (BW) ELEVATIONS INDICATE FINISHED GRADE. IT DOES NOT INCLUDE THE FOOTING.

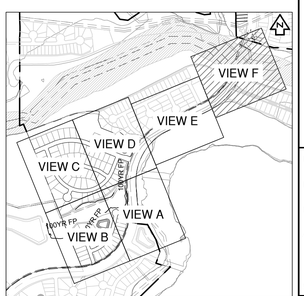

KEY MAP (N.T.S.)

NO.	REVISION	BY	DATE

811 Know what's below. Call before you dig.

HRGreen® DEVELOPMENT TX
5508 HIGHWAY 290 WEST
SUITE 150
AUSTIN, TX 78735
512.872.6696
HRGREEN.COM
TBPE NO: 16384
TBPLS NO: 10194101

STATE OF TEXAS
CHRISTINE N. CAMPBELL
142536
LICENSED PROFESSIONAL ENGINEER
07/03/2025

PAVING & GRADING PLAN F

PARKSIDE ON THE RIVER SECTIONS 11, 12A & 15A CONSTRUCTION PLANS

GEORGETOWN, WILLIAMSON, TEXAS

DESIGNED BY: CC
DRAWN BY: MM
CHECKED BY: SN
APPROVED BY:

SHEET 67 OF 141

2025-XX-CON

P:\Blake Magee\Parkside Sections 11-15 & WON 5\Section 11, 12A & 15A\03_ACAD\Plans\sh2403522 GRAD.dwg, PAVING & GRADING PLAN F, July 18, 2025, 11:48 AM, makai.muhammad

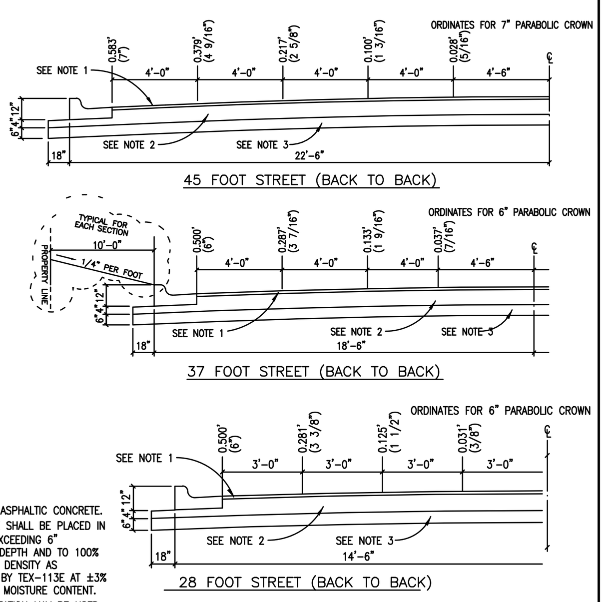

NOTES:
1. 2" HOT MIX ASPHALTIC CONCRETE.
2. 8" FLEXBASE SHALL BE PLACED IN LIFTS NOT EXCEEDING 6" COMPACTED DEPTH AND TO 100% OF MAXIMUM DENSITY AS DETERMINED BY TEX-113E AT ±3% OF OPTIMUM MOISTURE CONTENT.
3. LIME STABILIZATION MAY BE USED IF A QUALIFIED GEOTECHNICAL REPORT INDICATES THAT THE SULFATE LEVELS ARE LOW ENOUGH.

STREET AND ROADWAY DESIGN CRITERIA

STREET CLASSIFICATION	TOTAL EQUIVALENT 18K AXLE LOAD APPLICATIONS (20 YEAR FLEXIBLE DESIGN)
LOCAL	
ALLEY	20,000
RESIDENTIAL LANE	20,000
LOCAL STREET	20,000
COLLECTORS	
RESIDENTIAL	80,000
MAJOR NEIGHBOORHOOD	290,000
ARTERIALS	
MINOR ARTERIAL	1,020,000
MAJOR ARTERIAL	5,200,000

The Architect/Engineer assumes responsibility for appropriate use of this standard.

ADOPTED 6/21/2006

CITY OF GEORGETOWN CONSTRUCTION STANDARDS AND DETAILS
TYPICAL HALF CROSS – SECTIONS FOR H.M.A.C. SURFACED STREETS
SD01 — NTS — 1/2003 — MRS — TRB

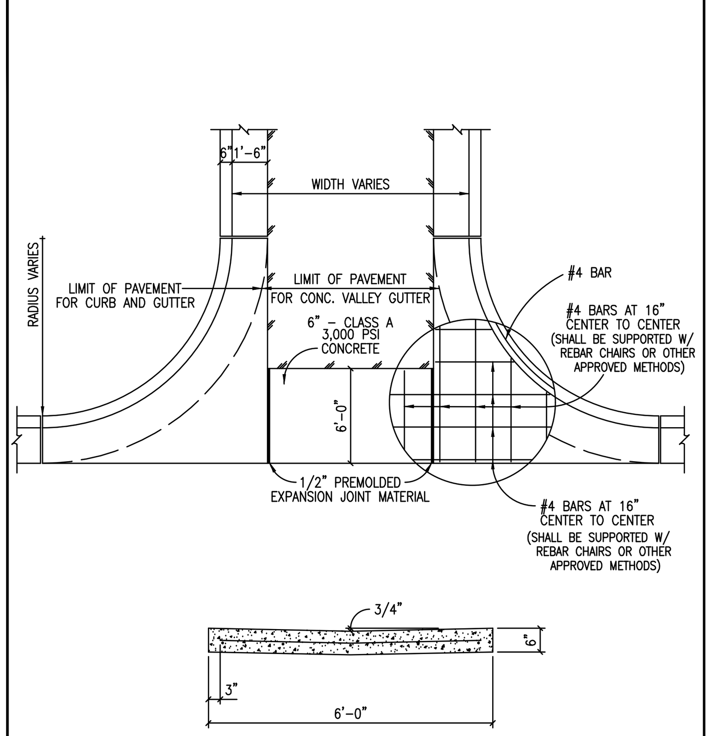

The Architect/Engineer assumes responsibility for appropriate use of this standard.

ADOPTED 6/21/2006

CITY OF GEORGETOWN CONSTRUCTION STANDARDS AND DETAILS
CONCRETE VALLEY GUTTER DETAIL
SD03 — NTS — 1/2003 — MRS — TRB

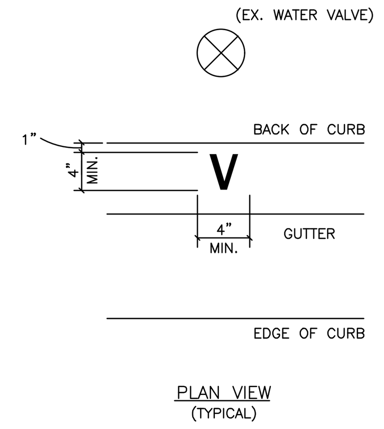

NOTES:
1. ALL WATER SERVICE, WASTE WATER SERVICE AND VALVE LOCATIONS SHALL BE APPROXIMATLEY MARKED AS FOLLOWS:

WATER SERVICE	"W"	TOP OF CURB
WASTE WATER SERVICE	"S"	TOP OF CURB
VALVE	"V"	TOP OF CURB

2. LETTERS SHALL HAVE A 1/2" MAX. WIDTH.

The Architect/Engineer assumes responsibility for appropriate use of this standard.

ADOPTED 6/21/2006

CITY OF GEORGETOWN CONSTRUCTION STANDARDS AND DETAILS
CURB STAMP DETAIL
SD05 — NTS — 1/2003 — MRS — TRB

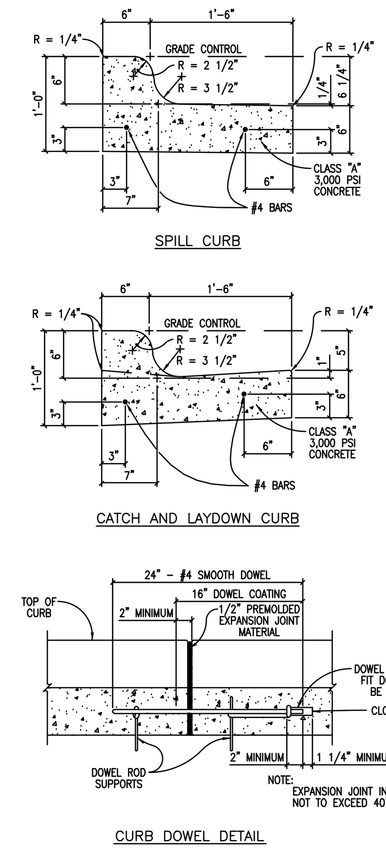

NOTES:
1. ALL WORK AND MATERIAL SHALL CONFORM TO ASTM A615, A615M, C309, AND D1752. BROOM FINISH EXPOSED SURFACE.
2. CONTRACTION JOINT SPACING 10' MAX.
3. EXPANSION JOINTS AS PER STD. ASTM D-1752.
4. 1/2" EXPANSION JOINT MATERIAL SHALL BE PROVIDED WHERE CURB IS ADJACENT TO SIDEWALK OR RIP-RAP.
5. TRANSITIONS BETWEEN CURBS OR DIFFERING CROSS SECTIONS SHALL OCCUR OVER A 20 FOOT LENGTH AS APPROVED BY THE ENGINEER OR THE CITY OF GEORGETOWN.
6. ALL CONCRETE SHALL BE CLASS A, 3000 PSI.
7. ALL SURFACES THAT ARE CHIPPED OR OTHERWISE DAMAGED DURING CONSTRUCTION SHALL BE REPAIRED.
8. THE FOLLOWING SCHEME OF REINFORCEMENT SHALL BE REQUIRED. THE MANNER OF PLACEMENT AND LOCATION SHALL BE TO THE SATISFACTION OF THE ENGINEER OR THE CITY OF GEORGETOWN.
   A. ALL CURB AND CURB AND GUTTER (REINFORCED) SHALL HAVE TWO #4 LONGITUDINAL REINFORCING BARS.
9. REINFORCING BARS SHALL BE LAPPED A MINIMUM OF 15 INCH.
10. REINFORCING BARS SHALL BE SUPPORTED WITH REBAR CHAIRS OR OTHER APPROVED METHODS.
11. REBAR SUPPORTS ARE NOT REQUIRED ON MACHINE PLACED CURB PROVIDED THAT REBAR IS PROPERLY GUIDED INTO THE CURB SECTION.

The Architect/Engineer assumes responsibility for appropriate use of this standard.

ADOPTED 6/21/2006

CITY OF GEORGETOWN CONSTRUCTION STANDARDS AND DETAILS
CURB AND GUTTER DETAILS
SD06 — NTS — MRS — TRB

NOTES:
1. ALL WORK AND MATERIAL SHALL CONFORM TO ASTM A615, A615M, C309, AND D1752. BROOM FINISH EXPOSED SURFACE.
2. CONTRACTION JOINT SPACING 10' MAX.
3. EXPANSION JOINTS AS PER STD. ASTM D-1752.
4. 1/2" EXPANSION JOINT MATERIAL SHALL BE PROVIDED WHERE CURB IS ADJACENT TO SIDEWALK OR RIP-RAP.
5. TRANSITIONS BETWEEN CURBS OR DIFFERING CROSS SECTIONS SHALL OCCUR OVER A 20 FOOT LENGTH AS APPROVED BY THE ENGINEER OR TH CITY OF GEORGETOWN.
6. ALL CONCRETE SHALL BE CLASS A, 3000 PSI.
7. ALL SURFACES THAT ARE CHIPPED OR OTHERWISE DAMAGED DURING CONSTRUCTION SHALL BE REPAIRED.
8. ONE OF THE FOLLOWING SCHEMES OF REINFORCEMENT SHALL BE REQUIRED. THE MANNER OF PLACEMENT AND LOCATION SHALL BE TO THE SATISFACTION OF THE ENGINEER OR THE CITY OF GEORGETOWN.
   A. CURB AND GUTTER (REINFORCED) SHALL HAVE LONGITUDINAL REINFORCING BARS AS FOLLOWS: THREE #4,
   B. ALL TYPES OF CURB (REINFORCED) SHALL HAVE #4 BAR FOR LONGITUDINAL REINFORCEMENT.
9. REINFORCING BARS SHALL BE LAPPED A MINIMUM OF 15 INCH.
10. REINFORCING BARS SHALL BE SUPPORTED WITH REBAR CHAIRS OR OTHER APPROVED METHODS.
11. REBAR SUPPORTS ARE NOT REQUIRED ON MACHINE PLACED CURB PROVIDED THAT REBAR IS PROPERLY GUIDED INTO THE CURB SECTION.

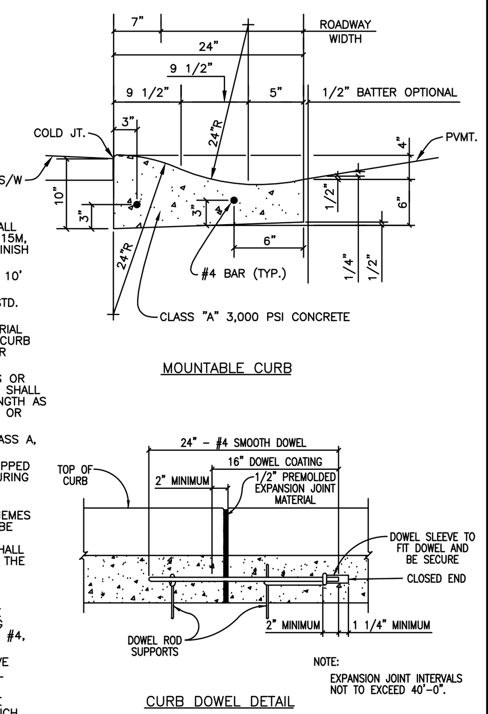

The Architect/Engineer assumes responsibility for appropriate use of this standard.

ADOPTED 6/21/2006

CITY OF GEORGETOWN CONSTRUCTION STANDARDS AND DETAILS
MOUNTABLE CURB AND GUTTER DETAILS
SD07 — NTS — 1/2003 — MRS — TRB

NOTES:
1. ALL WORK AND MATERIAL SHALL CONFORM TO ASTM A615, A615M, C309, AND D1752. BROOM FINISH EXPOSED SURFACE.
2. CONTRACTION JOINT SPACING 10' MAX.
3. EXPANSION JOINTS AS PER STD. ASTM D-1752.
4. 1/2" EXPANSION JOINT MATERIAL SHALL BE PROVIDED WHERE CURB IS ADJACENT TO SIDEWALK OR RIP-RAP.
5. TRANSITIONS BETWEEN CURBS OR DIFFERING CROSS SECTIONS SHALL OCCUR OVER A 20 FOOT LENGTH AS APPROVED BY THE ENGINEER OR TH CITY OF GEORGETOWN.
6. ALL CONCRETE SHALL BE CLASS A, 3000 PSI.
7. ALL SURFACES THAT ARE CHIPPED OR OTHERWISE DAMAGED DURING CONSTRUCTION SHALL BE REPAIRED.
8. ONE OF THE FOLLOWING SCHEMES OF REINFORCEMENT SHALL BE REQUIRED. THE MANNER OF PLACEMENT AND LOCATION SHALL BE TO THE SATISFACTION OF THE ENGINEER OR THE CITY OF GEORGETOWN.
   A. CURB AND GUTTER (REINFORCED) SHALL HAVE LONGITUDINAL REINFORCING BARS AS FOLLOWS: THREE #4,
   B. ALL TYPES OF CURB (REINFORCED) SHALL HAVE #4 BAR FOR LONGITUDINAL REINFORCEMENT.
9. REINFORCING BARS SHALL BE LAPPED A MINIMUM OF 15 INCH.
10. REINFORCING BARS SHALL BE SUPPORTED WITH REBAR CHAIRS OR OTHER APPROVED METHODS.
11. REBAR SUPPORTS ARE NOT REQUIRED ON MACHINE PLACED CURB PROVIDED THAT REBAR IS PROPERLY GUIDED INTO THE CURB SECTION.

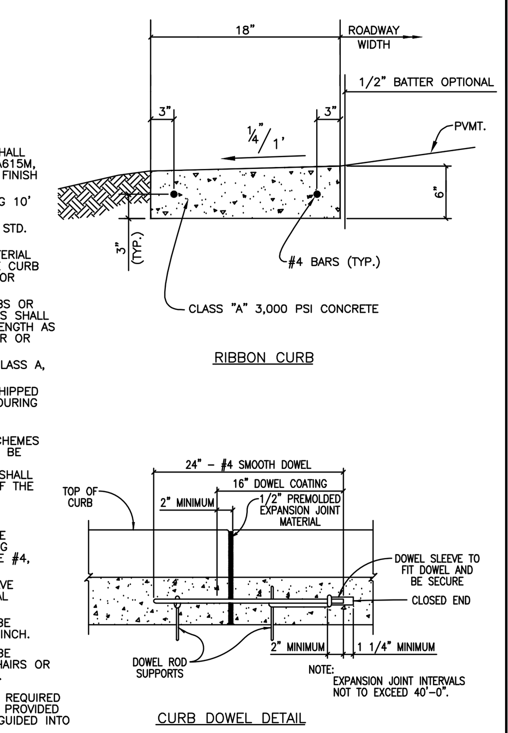

The Architect/Engineer assumes responsibility for appropriate use of this standard.

ADOPTED 6/21/2006

CITY OF GEORGETOWN CONSTRUCTION STANDARDS AND DETAILS
RIBBON CURB DETAILS
SD08 — NTS — 1/2003 — MRS — TRB

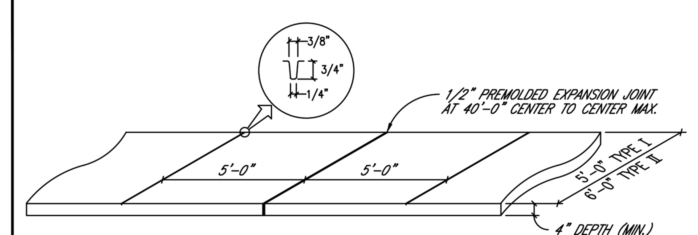

TYPE I – AS REQUIRED FOR SINGLE FAMILY, DUPLEXES AND TOWNHOUSES, TRIPLEXES AND QUADRAPLEXES.
TYPE II – AS REQUIRED FOR MULTI-FAMILY, OTHER NON-RESIDENTIAL USES AND PARKING LOTS/STRUCTURES.
ALL THOROUGHFARES (COLLECTOR AND ABOVE) REQUIRE TYPE II.

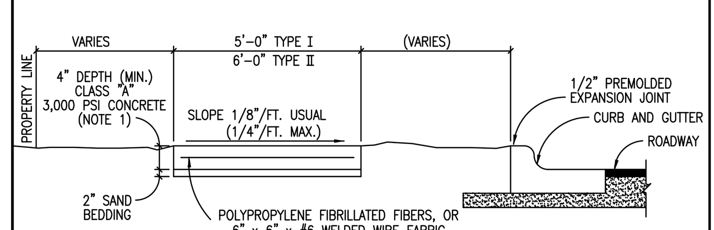

NOTES:
1. STANDARD LOCATION OF SIDEWALK SHALL BE IN CONFORMANCE WITH THE UDC.
2. SIDEWALK SHALL CONFORM TO CURRENT TDLR/TAS STANDARDS.
3. ALL SIDEWALKS SHALL BE SUBMITTED AND APPROVED BY THE REGISTERED ACCESSIBILITY SPECIALIST (RAS) AND ENGINEER OF RECORD.
4. ANY VARIANCE IN TEXTURE, GRADE OR ALIGNMENT SHALL BE APPROVED BY THE REGISTERED ACCESSIBILITY SPECIALIST (RAS) AND BY THE CITY ENGINEER.
5. SLIP DOWEL SHALL BE INSTALLED AT EVERY LONGITUDINAL EXPANSION JOINT (UNLESS OTHERWISE APPROVED BY THE CITY ENGINEER DURING ENGINEERING PLAN REVIEW PRIOR TO FINAL DESIGN).

The Architect/Engineer assumes responsibility for appropriate use of this standard.

ADOPTED 6/21/2006 TRB

CITY OF GEORGETOWN CONSTRUCTION STANDARDS AND DETAILS
SIDEWALK SECTION AND JOINT DETAIL
SD14 — NTS — 1/2003 — MRS — TRB

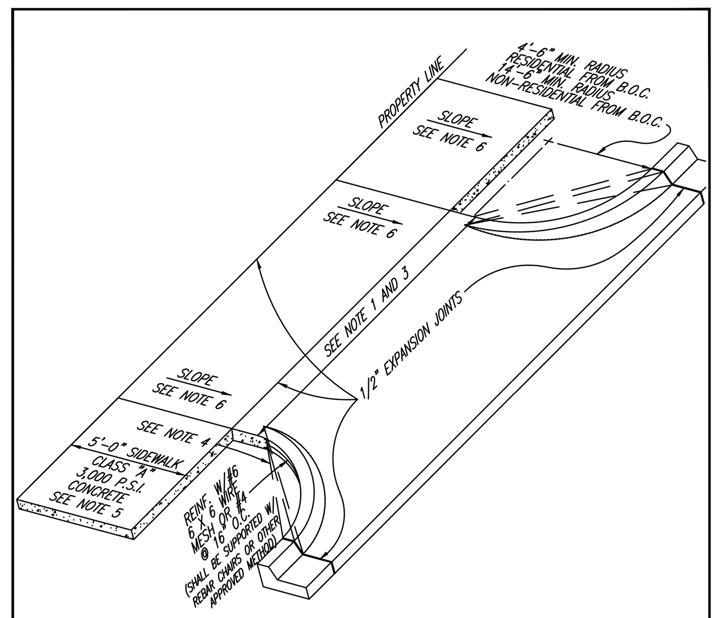

NOTES:
1. MAXIMUM WIDTH OF APPROACH SHALL BE 24'-0" FOR RESIDENTIAL, 30'-0" FOR NON-RESIDENTIAL UNDIVIDED AND 45'-0" FOR NON-RESIDENTIAL DIVIDED.
2. DRIVEWAY PERMITS SHALL BE ACQUIRED FROM CITY INSPECTION OFFICE.
3. MINIMUM WIDTH OF APPROACH SHALL BE 10'-0" FOR RESIDENTIAL AND 15'-0" FOR NON-RESIDENTIAL.
4. LINEAR "RADIUS" AT CORNERS, PERMITTED FOR "SINGLE FAMILY" OR "TWO FAMILY" RESIDENTIAL DRIVEWAY APPROACH.
5. SIDEWALK LOCATION SHALL BE APPROVED BY CITY ENGINEER PRIOR TO FINAL DESIGN.
6. SLOPE 1/8" PER FOOT USUAL, SHALL NOT EXCEED 2.0%.
7. DRIVEWAY APPROACH THICKNESS SHALL BE A MIN. OF 6".

The Architect/Engineer assumes responsibility for appropriate use of this standard.

ADOPTED 6/21/2006 TRB

CITY OF GEORGETOWN CONSTRUCTION STANDARDS AND DETAILS
CONCRETE DRIVEWAY APPROACH TYPICAL
SD15 — NTS — 1/2003 — MRS — TRB

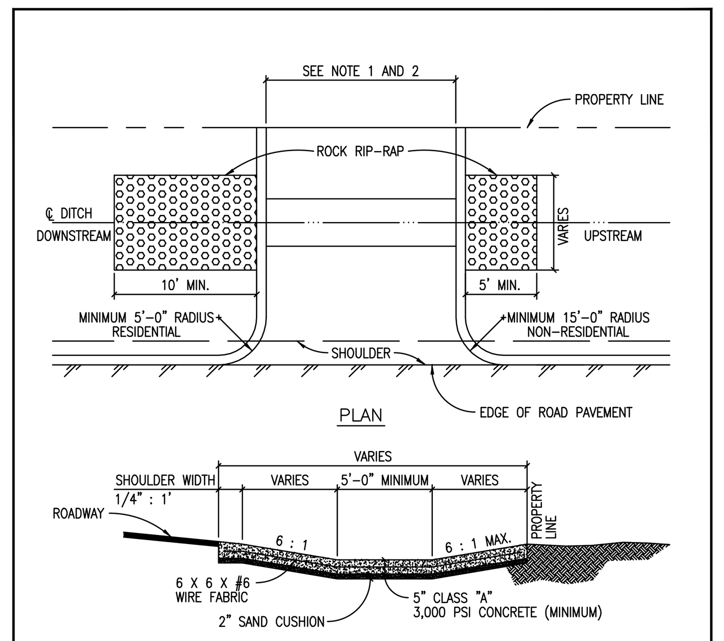

NOTES:
1. MINIMUM WIDTH OF APPROACH SHALL BE 12'-0" FOR RESIDENTIAL AND 15'-0" FOR NON-RESIDENTIAL.
2. MAXIMUM WIDTH OF APPROACH SHALL BE 24'-0" FOR RESIDENTIAL, 30'-0" FOR NON-RESIDENTIAL UNDIVIDED AND 45'-0" FOR NON-RESIDENTIAL DIVIDED.
3. ROCK RIP-RAP SHALL EXTEND 10' MINIMUM FROM THE DOWN STREAM SIDE AND 5' MINIMUM FROM THE UPSTREAM SIDE USING THE AVERAGE STONE SIZE DIA. OF 8" AT A DEPTH OF 16" (MINIMUM).
4. MINIMUM CHANNEL SIDE SLOPE SHALL BE 4:1.
5. SUPPORT REINFORCING WIRE MESH IS REQUIRED AS SUPPORT FOR APPROACH SLAB AND SHALL BE SUPPORTED WITH REBAR CHAIRS OR OTHER APPROVED METHODS.

The Architect/Engineer assumes responsibility for appropriate use of this standard.

ADOPTED 6/21/2006

CITY OF GEORGETOWN CONSTRUCTION STANDARDS AND DETAILS
CONCRETE DIP DRIVEWAY APPROACH
SD16 — NTS — 1/2003 — MRS — TRB

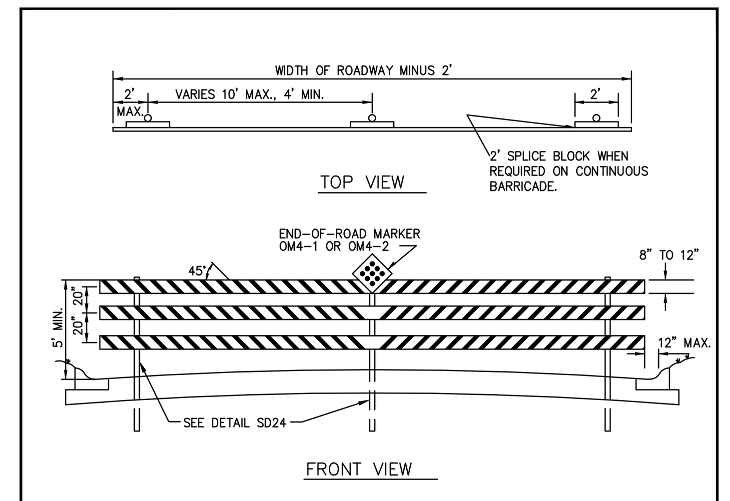

GENERAL NOTES FOR THIN WALL TUBE TYPE SIGN SUPPORT:
1. THE BASE SOCKET IS FORMED FROM 2 7/8 " O.D. X 12 GAUGE GALVANIZED PIPE.
2. THE WEDGE IS FORMED FROM 11 GAUGE STEEL GALVANIZED PER ASTM A525.
3. THE SIGN POST IS 2.375" O.D. X 0.095" THIN WALL STEEL TUBING.
4. STEEL SUPPORTS SHALL BE MADE FROM NEW MATERIAL AND SHALL BE CORROSION RESISTANT. STEEL SUPPORTS SHALL BE GALVANIZED IN ACCORDANCE WITH ASTM DESIGNATIONS A123 OR A525 (G-90 OR BETTER).
5. SUPPORTS SHALL BE STRAIGHT WITHIN 1/4 " PER 5 FEET OF LENGTH AND SHALL HAVE A SMOOTH, UNIFORM FINISH FREE FROM DEFECTS AFFECTING STRENGTH OR APPEARANCE. ANY BOLT HOLES AND SHEARED ENDS SHALL BE FREE FROM BURRS. BASES OF MULTISECTION SUPPORTS SHALL NOT EXTEND MORE THAN 5 INCHES ABOVE GROUND WHEN INSTALLED.
6. BOLTS, NUTS, SCREWS, WASHERS AND OTHER MISCELLANEOUS HARDWARE SHALL BE GALVANIZED IN ACCORDANCE TO ASTM DESIGNATION: A153 CLASS C OR D, OR B695 CLASS 50.
7. BARRICADE SUPPORTS SYSTEMS USED ON THIS SHEET MAY BE SUITABLE FOR ONLY CERTAIN SOIL TYPES. THE CONTRACTOR IS RESPONSIBLE FOR SELECTING THE APPROPRIATE SUPPORT SYSTEM FOR SOIL CONDITIONS ON EACH PROJECT.
8. ALL BARRICADES TO BE IN CONFORMANCE WITH THE CURRENT EDITION OF THE TEXAS MANUAL OF UNIFORM TRAFFIC CONTROL DEVICES (TMUTCD).
9. RAIL-HIGH DENSITY POLYETHYLENE OR HOLLOW PROFILE PLASTIC LUMBER AND SHEETING SHALL BE RETROREFLECTIVE, INCLUDING SPLICE BLOCKS.

The Architect/Engineer assumes responsibility for appropriate use of this standard.

ADOPTED 6/21/2006

CITY OF GEORGETOWN CONSTRUCTION STANDARDS AND DETAILS
PERMANENT END-OF-ROAD BARRICADE
SD21 — NTS — 1/2003 — MRS — TRB

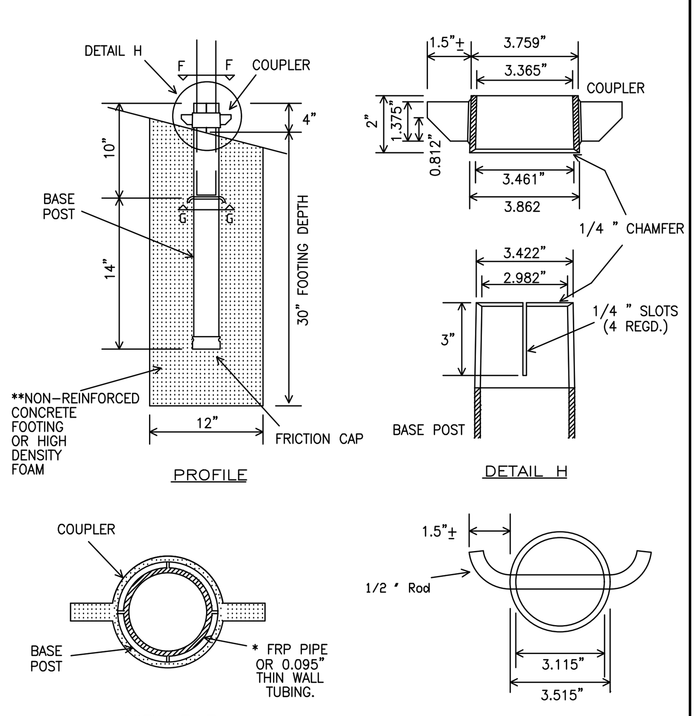

* PLASTING INSERT MUST BE USED WITH 1/16 " THIN WALL TUBING.
** FOOTING SHALL BE REMOVED AND BACKFILLED WHEN BARRICADE IS REMOVED.

The Architect/Engineer assumes responsibility for appropriate use of this standard.

ADOPTED 6/21/2006

CITY OF GEORGETOWN CONSTRUCTION STANDARDS AND DETAILS
UNIVERSAL ANCHOR SYSTEM
SD23 — NTS — 1/2003 — MRS — TRB

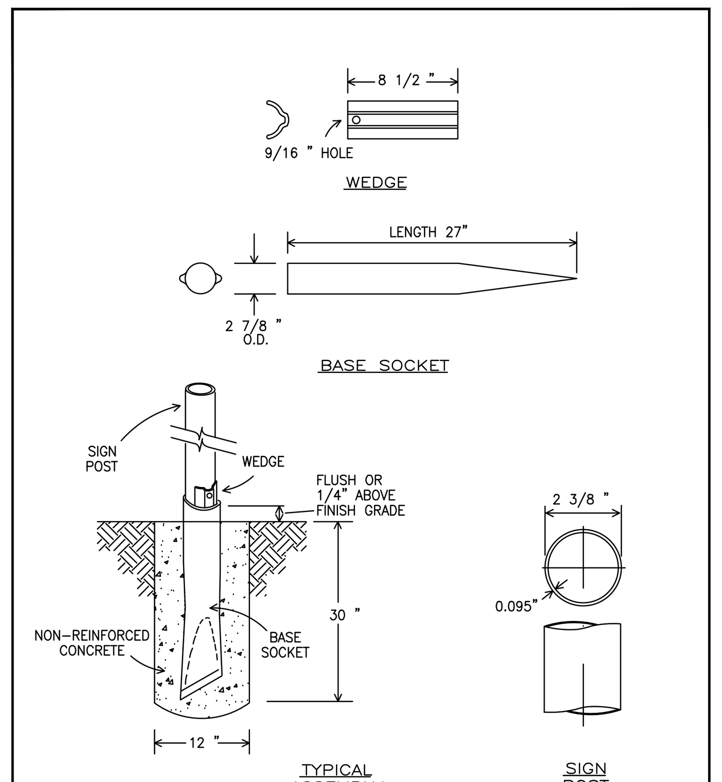

The Architect/Engineer assumes responsibility for appropriate use of this standard.

ADOPTED 6/21/2006

CITY OF GEORGETOWN CONSTRUCTION STANDARDS AND DETAILS
POZ-LOC (BREAKAWAY FOUNDATION)
SD24 — NTS — 1/2003 — MRS — TRB

*REVISED PER WILLIAMSON COUNTY

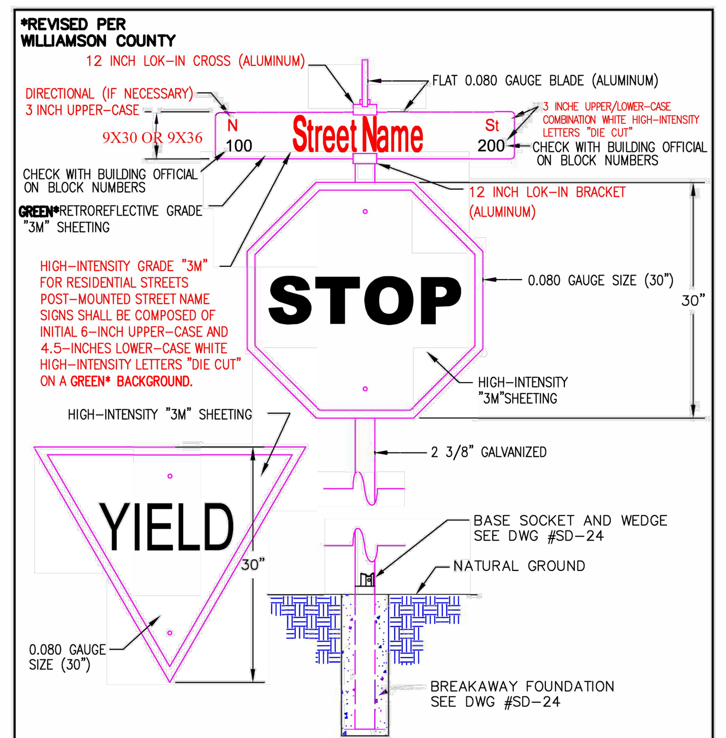

NOTES:
1. 7-FOOT MIN. HEIGHT FROM GROUND TO BOTTOM OF SIGN.
2. ALL SIGNS TO BE IN CONFORMANCE WITH THE CURRENT EDITION OF THE TEXAS MANUAL OF UNIFORM TRAFFIC CONTROL DEVICES (TMUTCD).
3. ALL SIGNAGE SHEETINGS SHALL BE HIGH-INTENSITY "3M" SHEETING.
4. ANY MODIFICATION TO THIS STANDARD SHALL BE SUBMITTED FOR APPROVAL.

The Architect/Engineer assumes responsibility for appropriate use of this standard.

REVISED 1/14/2014 WBD
ADOPTED 6/21/2006 TRB

CITY OF GEORGETOWN CONSTRUCTION STANDARDS AND DETAILS
STANDARD STREET SIGN DETAIL
SD25 — NTS — 1/2003 — MRS/AP — TRB

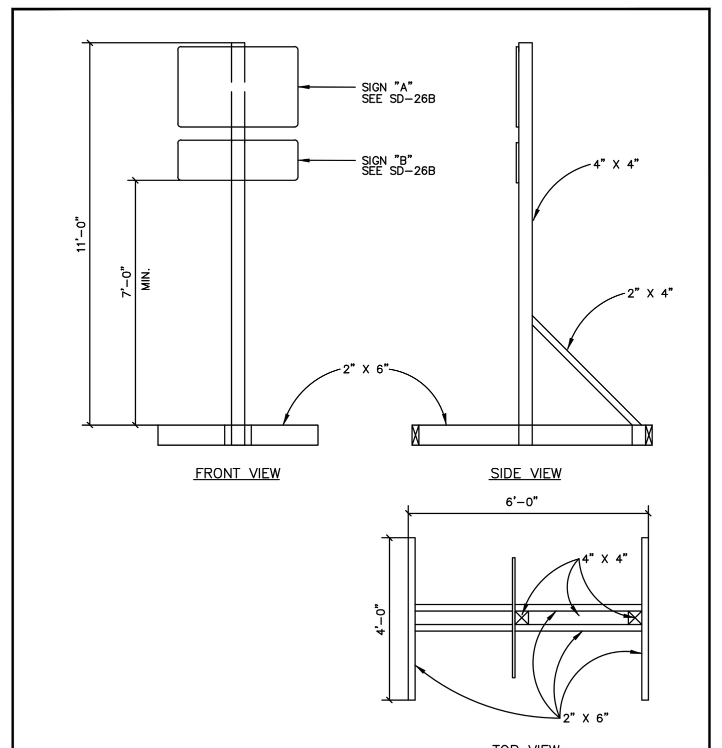

NOTES:
1. ALL MATERIALS SHALL BE FURNISHED BY THE CONTRACTOR WITH THE EXCEPTION OF THE CITY OF GEORGETOWN G.U.S. LOGO WHICH WILL BE FURNISHED BY THE CITY.
2. ALL SIGNS TO BE IN CONFORMANCE WITH THE CURRENT EDITION OF THE TEXAS MANUAL OF UNIFORM TRAFFIC CONTROL DEVICES (TMUTCD).

The Architect/Engineer assumes responsibility for appropriate use of this standard.

ADOPTED 6/21/2006

CITY OF GEORGETOWN CONSTRUCTION STANDARDS AND DETAILS
PROJECT SIGN TYPE II
SD26 — NTS — 1/2003 — MRS — TRB

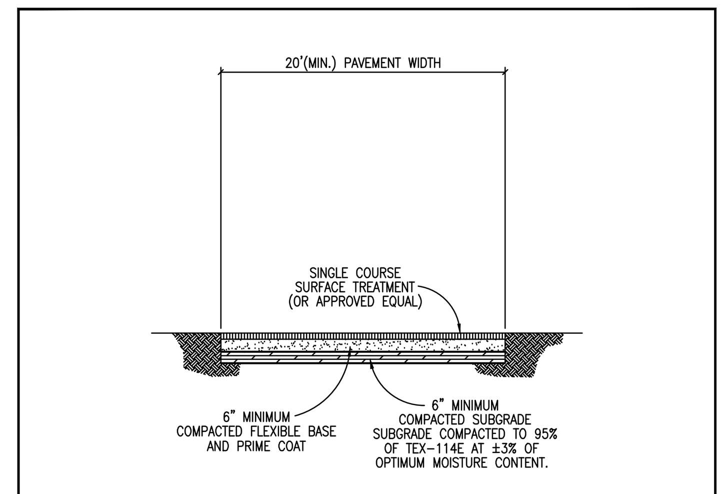

NOTES:
1. EVERY BUILDING CONSTRUCTED SHALL BE ACCESSIBLE TO EMERGENCY APPARATUS BY WAY OF TEMPORARY ALL WEATHER DRIVING SURFACES.
2. A TEMPORARY ALL WEATHER DRIVING SURFACE SHALL EXTEND TO WITHIN 150' OF ALL EXTERIOR PORTIONS OF BUILDINGS
3. TEMPORARY ALL WEATHER DRIVING SURFACES SHALL BE CONSTRUCTED AS SHOWN ON CONSTRUCTION PLANS AND IN ACCORDANCE WITH ITEM 316 SURFACE TREATMENTS OF THE TXDOT STANDARD SPECIFICATIONS FOR CONSTRUCTION OF HIGHWAYS, STREETS AND BRIDGES.
4. TEMPORARY ALL WEATHER DRIVING SURFACES SHALL BE CAPABLE OF SUPPORTING A DESIGN WHEEL LOAD OF 16,000 LB. (H-20 LOADING) IN ORDER TO SUPPORT A GROSS VEHICLE WEIGHT OF 80,000 LB. IF SUBGRADE CONDITIONS CHANGE OR ARE VERY UNSTABLE, AN ADDITIONAL GEOTECHNICAL AND/OR ENGINEERING DESIGN MAY REQUIRE A GREATER CROSS SECTION.
5. CONTRACTOR OR DEVELOPER SHALL MAINTAIN TEMPORARY ALL WEATHER DRIVING SURFACE THROUGHOUT CONSTRUCTION.
6. APPLICABLE SIGNAGE SHALL BE INSTALLED BY THE CONTRACTOR TO DISALLOW PARKING (NO PARKING – FIRE LANE).
7. TEMPORARY ALL WEATHER DRIVING SURFACES SHALL BE INSTALLED PRIOR TO THE ERECTION OF ANY STRUCTURAL FRAMING ABOVE THE FOUNDATION SLAB. CONTACT FIRE SERVICES FOR THE COORDINATION OF TEMPORARY ALL WEATHER DRIVING SURFACES FOR CONSTRUCTION.

The Architect/Engineer assumes responsibility for appropriate use of this standard.

ADOPTED 6/21/2006

CITY OF GEORGETOWN CONSTRUCTION STANDARDS AND DETAILS
TEMPORARY ALL WEATHER DRIVING SURFACE
SD43 — NTS — 1/2003 — MRS — TRB

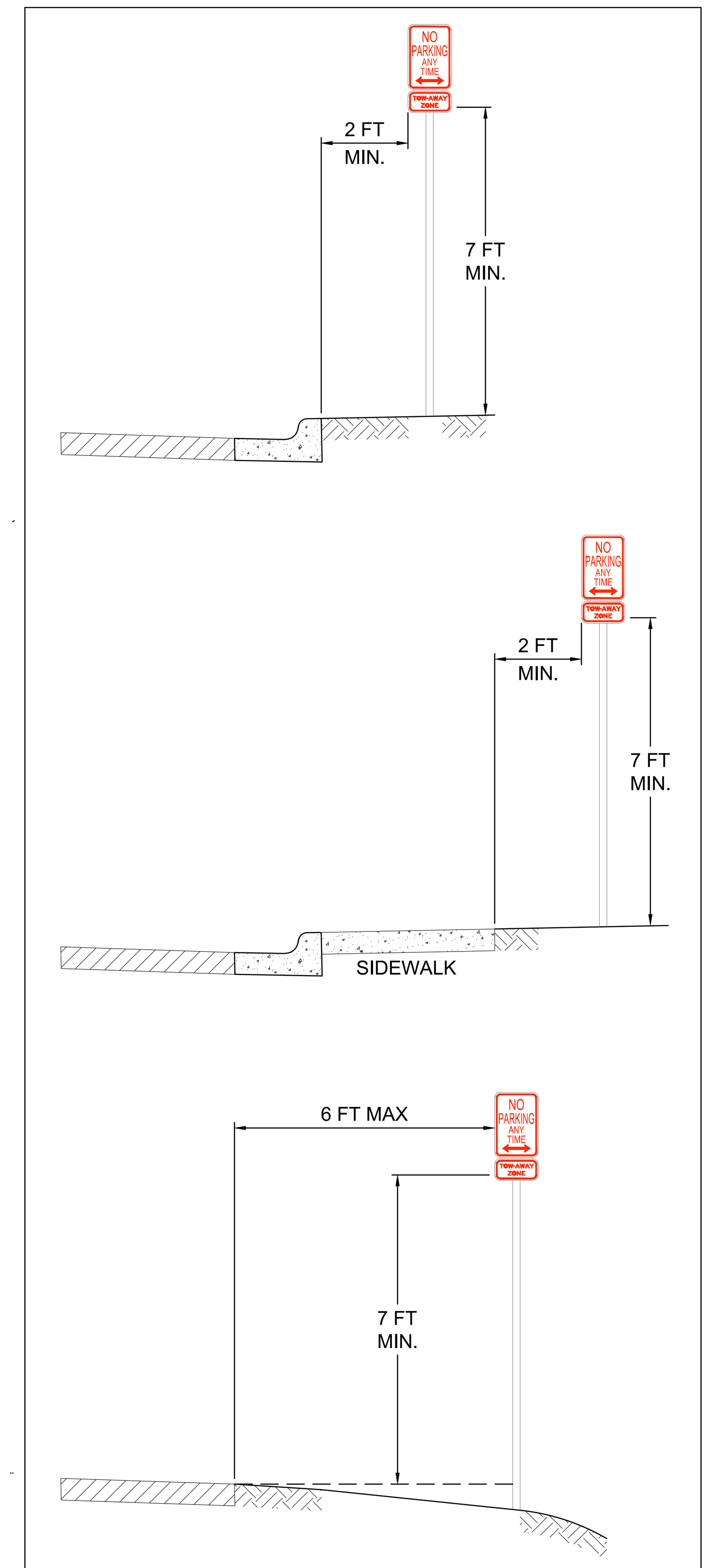

FIRE LANE SIGN PLACEMENT DETAILS

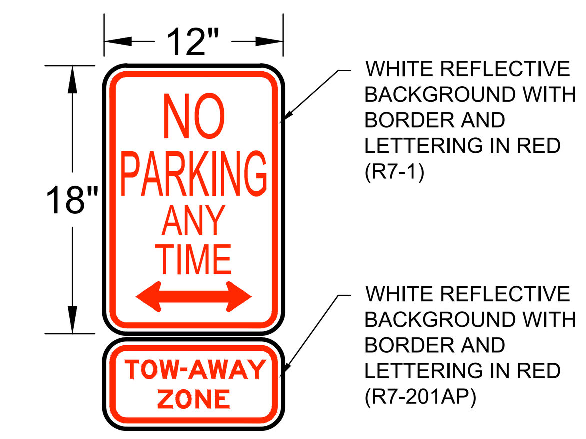

FIRE LANE SIGN DETAIL

NO.	REVISION	BY	DATE

811 Know what's below. Call before you dig.

HRGreen® DEVELOPMENT TX
5508 HIGHWAY 290 WEST
SUITE 150
AUSTIN, TX 78735
512.872.6696
HRGREEN.COM
TBPE NO: 16384
TBPLS NO: 10194101

STATE OF TEXAS — CHRISTINE N. CAMPBELL — 142536 — LICENSED PROFESSIONAL ENGINEER
07/03/2025

PAVING DETAILS

PARKSIDE ON THE RIVER SECTIONS 11, 12A & 15A CONSTRUCTION PLANS
GEORGETOWN, WILLIAMSON, TEXAS

DESIGNED BY: CC
DRAWN BY: MM
CHECKED BY: SN
APPROVED BY:

SHEET 71 OF 141
2025-XX-CON

Plot Style: LandDev Global.ctb
Template: LDC_C3D2022.DWT
P:\Blake Magee\Parkside Sections 11-15 & WON 5\Section 11, 12A & 15A\03_ACAD\Plans\sh2403522 DTLS.dwg, PAVING DETAILS, July 18, 2025, 11:50 AM, makai.muhammad

The Architect/Engineer assumes responsibility for appropriate use of this standard.

NOTES:

1. COMMERCIAL SIDEWALKS WIDTHS – 6'
   RESIDENTIAL SIDEWALKS WIDTHS – 5'
2. ALL SLOPES ARE MAXIMUM ALLOWABLE. FLATTER SLOPES THAT WILL STILL DRAIN PROPERLY ARE ENCOURAGED.
3. ALL CONCRETE SURFACES SHALL RECEIVE A LIGHT BROOM FINISH UNLESS NOTED OTHERWISE IN THE PLANS.
4. FOR PURPOSES OF WARNING, THE CURB RAMPS SHALL HAVE A LIGHT REFLECTIVE VALUE AND TEXTURE THAT SIGNIFICANTLY CONTRASTS WITH THAT OF ADJOINING PEDESTRIAN ROUTES.
5. TEXTURES MAY CONSIST OF PAVERS WITH TRUNCATED DOMED SURFACES. TEXTURES ARE REQUIRED TO BE DETECTABLE UNDERFOOT. SURFACES THAT WOULD ALLOW WATER TO ACCUMULATE ARE PROHIBITED.
6. COLOR CONTRAST, FOR EXAMPLE, MAY BE ACCOMPLISHED WITH COLORED CONCRETE PAVERS THAT HAVE TRUNCATED DOMES WHICH WOULD PROVIDE A CONTRAST WITH TYPICALLY LIGHT COLORED CONCRETE.
7. ADDITIONAL INFORMATION ON CURB RAMP LOCATION, DESIGN, VISIBILITY AND TEXTURE MAY BE FOUND IN THE CURRENT EDITION OF THE TEXAS ACCESSIBILITY STANDARDS (TAS) PREPARED AND ADMINISTERED BY THE TEXAS DEPARTMENT OF LICENSING AND REGULATION (TDLR).
8. RAISED MEDIANS SEPARATE OPPOSING DIRECTIONS OF TRAFFIC AND PROVIDE A REFUGE AREA FOR PEDESTRIANS IF THEY ARE UNABLE TO CROSS THE ENTIRE ROADWAY IN THE ALLOTTED SIGNAL PHASE. MEDIAN CROSSING SHALL BE A MINIMUM OF 5' WIDE. MEDIANS SHIOULD BE DESIGNED TO PROVIDE ACCESSIBLE PASSAGE OVER OR TROUGH THEM.
9. ALL SIDEWALK PLANS AND DETAILS SHALL BE SUBMITTED AND APPROVED BY "REGISTERED ACCESSIBILITY SPECIALIST" (RAS).
10. ANY PART OF THE ACCESSIBLE ROUTE WITH A SLOPE GRATER THAN 1:20 (5%) SHALL BE CONSIDERED A RAMP. IF A RAMP HAS A RISE GREATER THAN 6 INCHES OR A HORIZONTAL PROJECTION GREATER THAN 72 INCHES, THEN IT SHALL MEET THE REQUIREMENTS OF A RAMP PER TAS 405.THE ONLY EXCEPTION IS AT CURB RAMPS. HANDRAILS ARE NOT REQUIRED ON CURB RAMPS. CURB RAMPS SHALL BE PROVIDED WHERE EVER AN ACCESSIBLE ROUTE CROSSES (PENETRATES) A CURB.
11. TRAFFIC SIGNAL OR ILLUMINATION POLES, GROUND BOXES, CONTROLLER BOXES, SIGNS, DRAINAGE FACILITIES AND OTHER ITEMS SHALL BE PLACED SO NOT TO OBSTRUCT THE ACCESSIBLE ROUTE OR ACT PROTRUDING OBJECTS.
12. ALL SIDEWALKS SHALL BE DOWELED INTO EXISTING SIDEWALKS, DRIVEWALKS, DRIVEWAYS, INLET BOXES, RETAINING WALLS, ETC.
13. ALL SIDEWALK CROSS-SLOPES SHALL NOT EXCEED 1:50, UNLESS A VARIANCE IS PROVIDED BY TDLR.

(PENETRATES) A CURB.

ADOPTED 6/21/2006 TRB — CITY OF GEORGETOWN CONSTRUCTION STANDARDS AND DETAILS — PEDESTRIAN RAMPS GENERAL NOTES — SD28 — NTS — 1/2003 — MRS — TRB

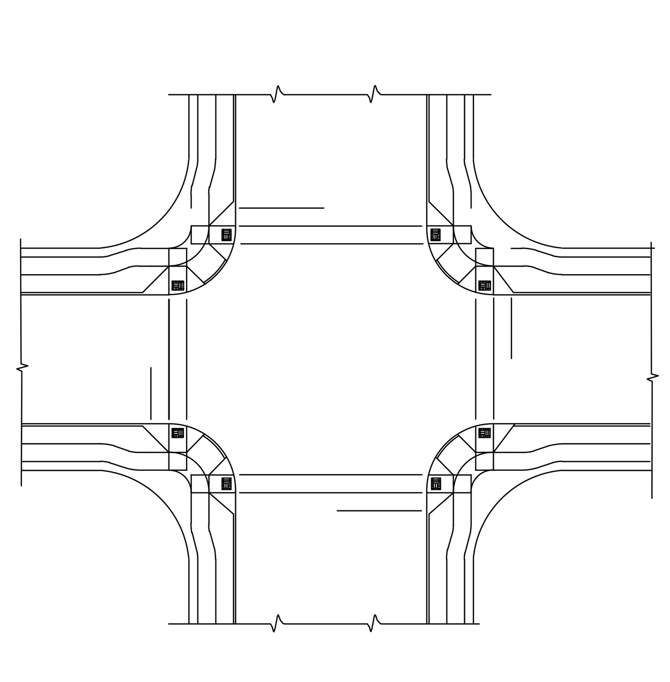

The Architect/Engineer assumes responsibility for appropriate use of this standard.

ADOPTED 6/21/2006 TRB — CITY OF GEORGETOWN CONSTRUCTION STANDARDS AND DETAILS — TYPICAL INTERSECTON LAYOUT — SD29 — NTS — 1/2003 — MRS — TRB

The Architect/Engineer assumes responsibility for appropriate use of this standard.

CURB RAMP

FOR ON-SYSTEM PROJECTS SUCH AS RESTORATION, SEAL COAT AND OVERLAY PROJECTS, PLACEMENT OF CURB RAMPS SHALL BE EVALUATED IN THE FOLLOWING ORDER OF PREFERENCE: PERPENDICULAR, PARALLEL OR COMBINATION. THE MOST PREFERABLE OPTION THAT IS FEASIBLE AT EACH CORNER SHALL BE PROVIDED.

ALL RAMPS SHALL BE CONTAINED WITHIN THE RESPECTIVE CURB RETURN RADIUS.

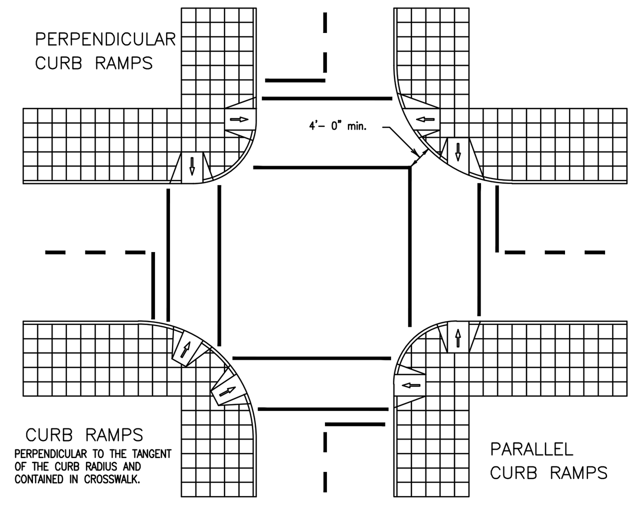

ADOPTED 6/21/2006 TRB — CITY OF GEORGETOWN CONSTRUCTION STANDARDS AND DETAILS — CURB RAMP PLACEMENTS AT INTERSECTIONS — SD30 — NTS — 1/2003 — MRS — TRB

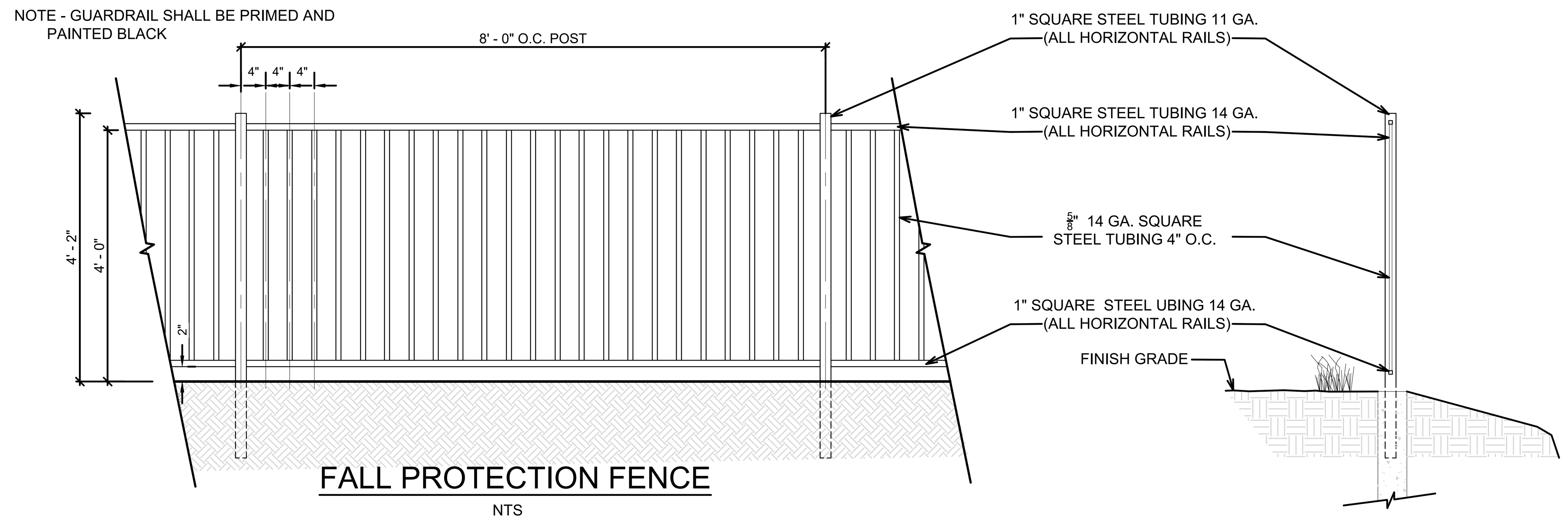

FALL PROTECTION FENCE

NTS

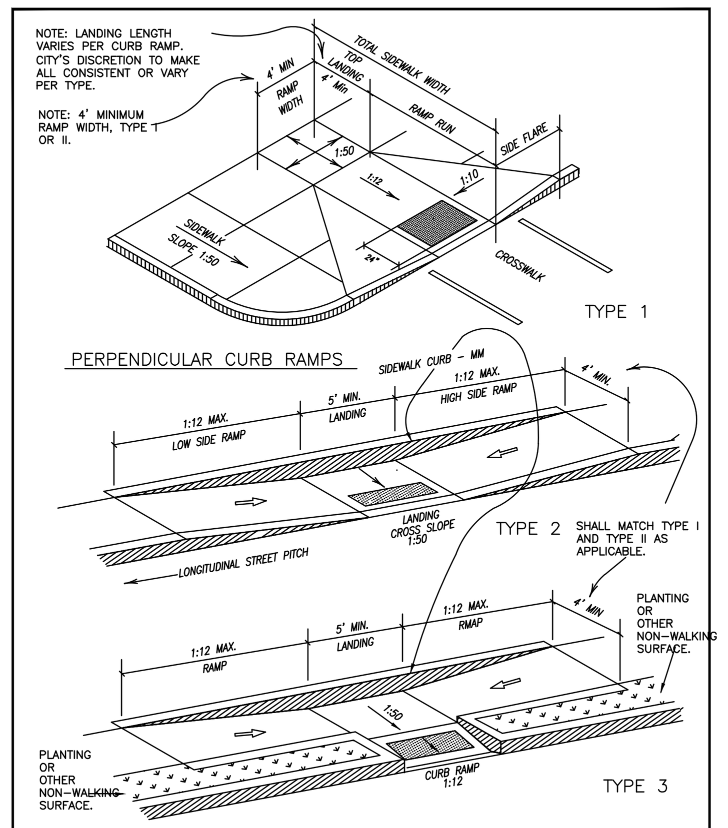

The Architect/Engineer assumes responsibility for appropriate use of this standard.

PARALLEL CURB RAMPS

ADOPTED 6/21/2006 TRB — CITY OF GEORGETOWN CONSTRUCTION STANDARDS AND DETAILS — SIDEWALK RAMP DETAILS TYPE 1–3 — SD31 — NTS — 1/2003 — MRS — TRB

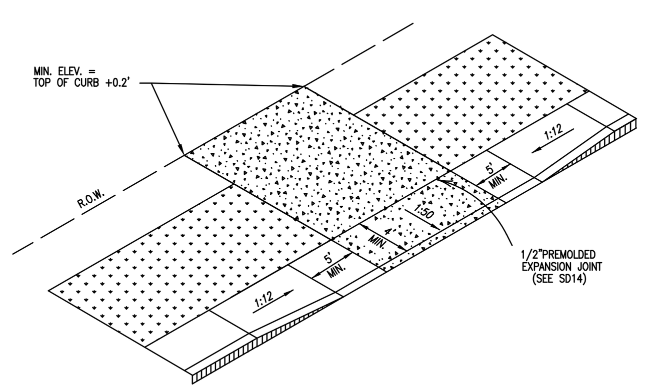

RAMP SIDEWALK AT DRIVEWAY
TYPE 10

The Architect/Engineer assumes responsibility for appropriate use of this standard.

ADOPTED 6/21/2006 TRB — CITY OF GEORGETOWN CONSTRUCTION STANDARDS AND DETAILS — DRIVEWAY APRON TYPE 10 — SD34 — NTS — 1/2003 — MRS — TRB

The Architect/Engineer assumes responsibility for appropriate use of this standard.

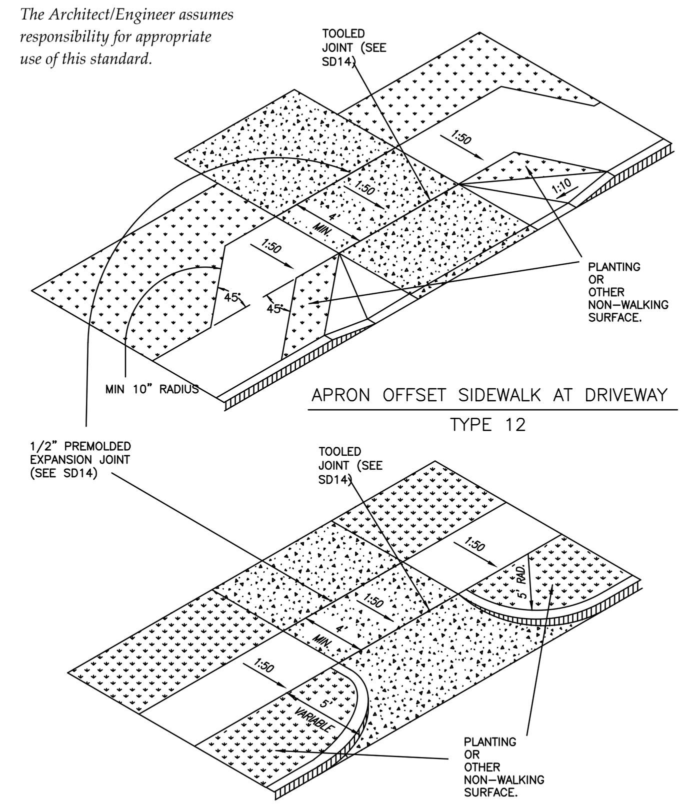

APRON OFFSET SIDEWALK AT DRIVEWAY
TYPE 12

SETBACK SIDEWALK AT DRIVEWAY
TYPE 13

ADOPTED 6/21/2006 TRB — CITY OF GEORGETOWN CONSTRUCTION STANDARDS AND DETAILS — DRIVEWAY APRONS TYPES 12 & 13 — SD35 — NTS — 1/2003 — MRS — TRB

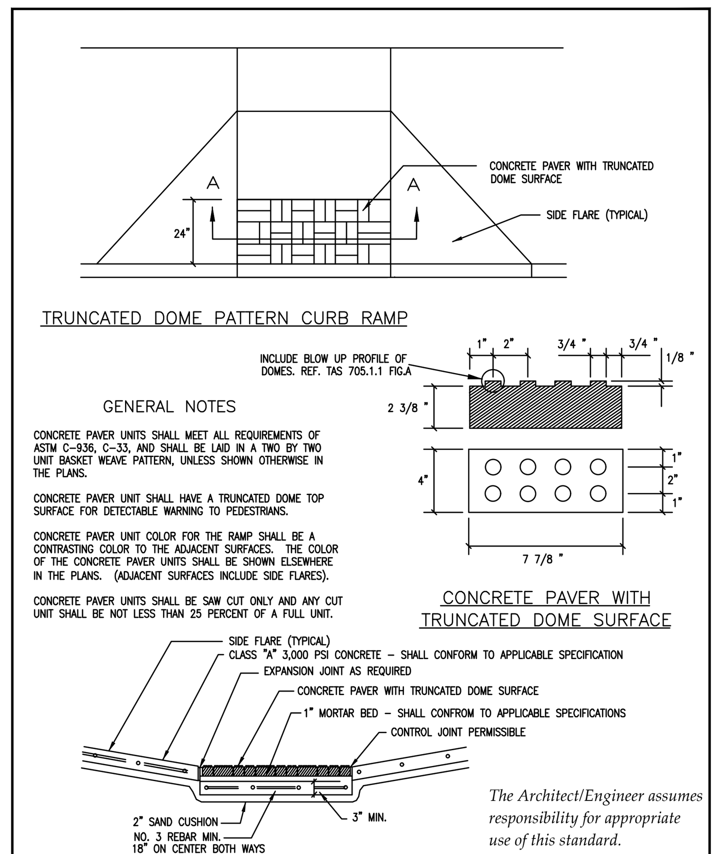

GENERAL NOTES

CONCRETE PAVER UNITS SHALL MEET ALL REQUIREMENTS OF ASTM C-936, C-33, AND SHALL BE LAID IN A TWO BY TWO UNIT BASKET WEAVE PATTERN, UNLESS SHOWN OTHERWISE IN THE PLANS.

CONCRETE PAVER UNIT SHALL HAVE A TRUNCATED DOME TOP SURFACE FOR DETECTABLE WARNING TO PEDESTRIANS.

CONCRETE PAVER UNIT COLOR FOR THE RAMP SHALL BE A CONTRASTING COLOR TO THE ADJACENT SURFACES. THE COLOR OF THE CONCRETE PAVER UNITS SHALL BE SHOWN ELSEWHERE IN THE PLANS. (ADJACENT SURFACES INCLUDE SIDE FLARES).

CONCRETE PAVER UNITS SHALL BE SAW CUT ONLY AND ANY CUT UNIT SHALL BE NOT LESS THAN 25 PERCENT OF A FULL UNIT.

The Architect/Engineer assumes responsibility for appropriate use of this standard.

DETAIL MODIFIED TO MEET PROWAG SPECIFICATIONS

REVISED 7/7/2015 WBD — REVISED 3/14/2014 WBD — ADOPTED 6/21/2006 TRB — CITY OF GEORGETOWN CONSTRUCTION STANDARDS AND DETAILS — CURB RAMP TEXTURES TYPE A — SD37 — NTS — 1/2003 — MRS/AP — TRB

Parkside on the River Sections 11, 12A & 15A
Engineer's Job No. 24101123.005

RECOMMENDATIONS - PAVEMENT THICKNESS SECTIONS

Street Classification	Subgrade Material	Hot Mix Asphaltic Concrete, in	Crushed Limestone Base, in	Low Plasticity Sub-Base, in	Lime Stabilized Subgrade, in
Local Streets	Subgrade PI greater than 20 – Option 1	2.0	14	-	-
	Subgrade PI greater than 20 – Option 2	2.0	8	18**	-
	Subgrade PI greater than 20 – Option 3	2.0	8	-	8
	Subgrade PI less than 20	2.0	8	-	-
Residential Collectors	Subgrade PI greater than 20 – Option 1	2.0	15	-	-
	Subgrade PI greater than 20 – Option 2	2.0	10	18**	-
	Subgrade PI greater than 20 – Option 3	2.0	10	-	8
	Subgrade PI less than 20	2.0	10	-	-
Neighborhood Collector	Subgrade PI greater than 20 – Option 1	2.0	21	-	-
	Subgrade PI greater than 20 – Option 2	2.0	14	18**	-
	Subgrade PI greater than 20 – Option 3	2.0	14	-	8
	Subgrade PI less than 20	2.0	11	-	-
Minor Arterial	Subgrade PI greater than 20 – Option 1	5.0	32	-	-
	Subgrade PI greater than 20 – Option 2	5.0	21	18**	-
	Subgrade PI greater than 20 – Option 3	5.0	21	-	8
	Subgrade PI less than 20	5.0	21	-	-
Major Arterial	Subgrade PI greater than 20 – Option 1	6.0	41	-	-
	Subgrade PI greater than 20 – Option 2	6.0	27	18**	-
	Subgrade PI greater than 20 – Option 3	6.0	27	-	8
	Subgrade PI less than 20	6.0	27	-	-

Notes:

1. ** - Or the remaining thickness of surface clay. Natural weathered or intact limestone should not be removed to place low plasticity subbase. The low plasticity subbase should consist of on-site soils only.
2. Any expansive fill (PI > 20) placed in the subgrade after boring completion shall be considered expansive subgrade.
3. The concern has arisen that ground water may enter the utility trenches at this site causing detrimental settlement of the utility trench backfill. To address this concern, the wastewater utility trenches could be turned in to French drains. To achieve this, additional open-graded gravel, such as the gravel already being used for pipe bedding at this site, should be placed above the pipe bedding material to the elevation where ground water is encountered. This extra layer of gravel should be covered with a geotextile fabric to prevent material above the gravel from infiltrating the gravel layer. Then, the utility trench should be filled in compacted layers in accordance with the construction plans. The wastewater utility trench must then be allowed to daylight from its lowest point such that water does not accumulate in the utility trench. Additional gravel may be required in the utility trench depending upon the depth that ground water is entering the utility trench during construction. A line item for French drains should be included in construction bid documents.
4. **Delineation between these different pavement thickness sections should be completed in the field by observation of open utility trenches and the pavement subgrade by the Geotechnical Engineer or his designate.** Given the known variability of surface soils at this site, the Geotechnical Engineer

-6-

MLA Geotechnical Dallas/Fort Worth Austin San Antonio Houston Bryan/College Station Killeen *"put us to the test"*

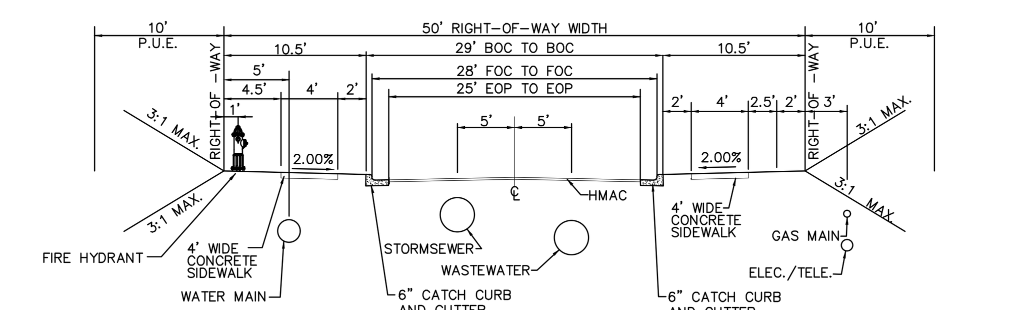

TYPICAL RESIDENTIAL LOCAL STREET CROSS SECTION AND UTILITIES LAYOUT

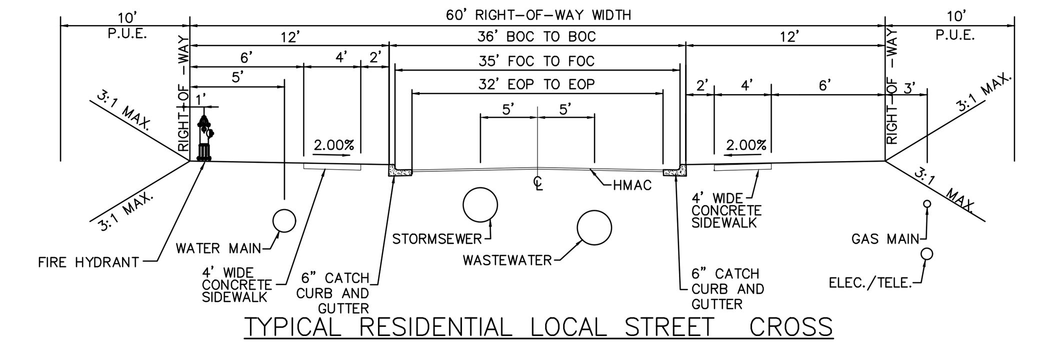

TYPICAL RESIDENTIAL LOCAL STREET CROSS SECTION AND UTILITIES LAYOUT

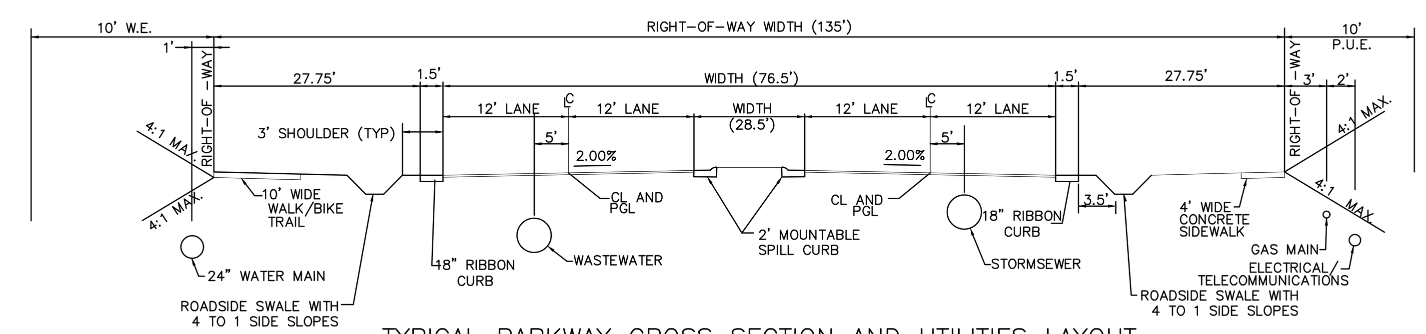

TYPICAL PARKWAY CROSS SECTION AND UTILITIES LAYOUT

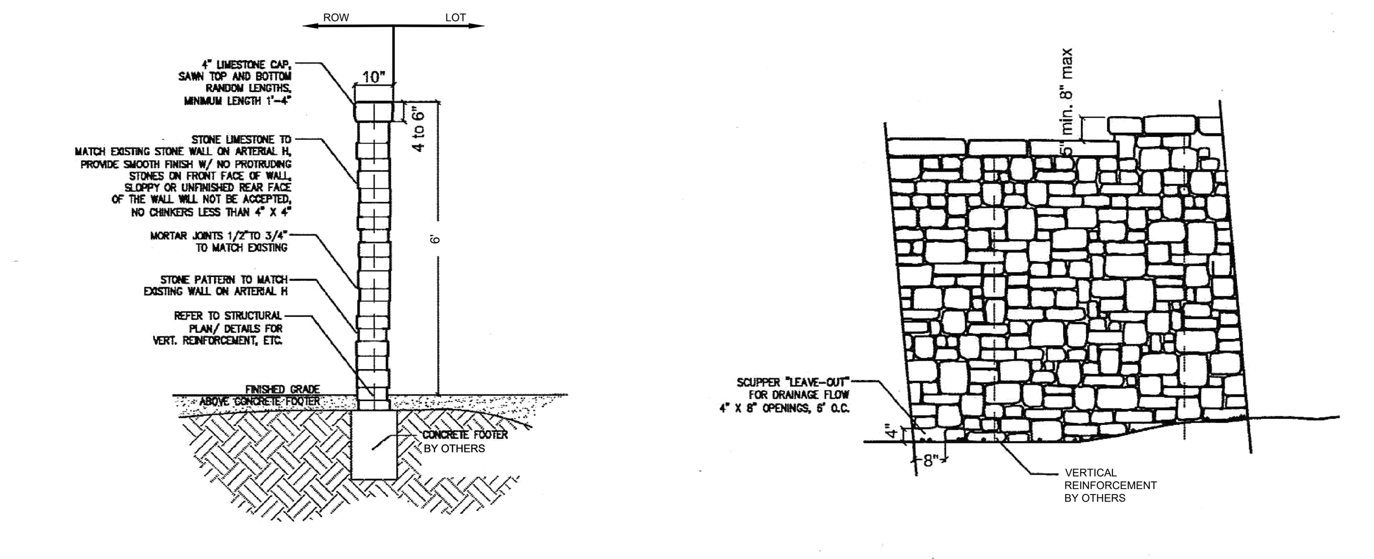

SINGLE WYTHE SCREEN WALL SECTION

SINGLE WYTHE WALL ELEVATION

MASONRY WALL DETAIL

NOTE:

1. CONTRACTOR SHALL REFERENCE "GEOTECHNICAL INVESTIGATION PAVEMENT THICKNESS RECOMMENDATIONS FOR PARKSIDE ON THE RIVER SECTIONS 11, 12A, & 15A" CREATED JANUARY 2025 BY MLA GEOTECHNICAL, ENGINEER'S JOB # 24101123.005. CONTRACTOR IS RESPONSIBLE FOR VERIFYING WITH MLA GEOTECHNICAL.
2. CONTRACTOR TO USE "VIRGIN MIX" TXDOT HMAC WEARING SURFACE 340 TYPE D, WITHOUT RAP OR RAZ. IN THE EVENT THAT THE CITY SPECIFICATIONS OR GEOTECH REPORT CONFLICT WITH THIS THEN THIS NOTE SHALL CONTROL.
3. THE BASE OVERBUILD SHOULD BE EXTENDED A MINIMUM OF 18" BEYOND THE BACK OF CURB. IF LIME TREATMENT IS BEING USED, THE BASE OVERBUILD SHOULD BE EXTENDED 3 FEET BEYOND THE BACK OF THE CURB.
4. AVOID INSTALLATION OF IRRIGATION, PLANTINGS, SILT FENCE, ETC. IN THE BASE OVERBUILD.
5. ALL MATERIAL IMPORTED AND USED FOR ROADWAY FILL AND SUBGRADE SHALL BE LOW P.I MATERIAL UNLESS CONTRACTOR OBTAINS APPROVAL FROM DEVELOPER . IF CONTRACTOR CHOOSES TO BRING IN HIGH PI MATERIAL FOR SUBGRADE, CONTRACTOR IS RESPONSIBLE FOR ALTERNATE PAVEMENT DESIGN PER THE GEOTECH REPORT AND ASSOCIATED COSTS.
6. CONTRACTOR TO ENSURE THAT ALL ONSITE MATERIAL USED FOR ROADWAY FILL AND SUBGRADE SHALL BE LOW P.I. MATERIAL UNLESS LOW P.I. MATERIAL DOES NOT EXIST FROM ONSITE MATERIAL. CONTRACTOR TO COORDINATE FINDINGS WITH THE DEVELOPER AND OBTAIN APPROVAL FOR NEEDING TO USE ALTERNATE PAVEMENT DESIGN PER THE GEOTECH REPORT.

NO.	REVISION	BY	DATE

Know what's **below.** **Call** before you dig. 811

HRGreen DEVELOPMENT TX
5508 HIGHWAY 290 WEST
SUITE 150
AUSTIN, TX 78735
512.872.6696
HRGREEN.COM
TBPE NO: 16384
TBPLS NO: 10194101

STATE OF TEXAS — CHRISTINE N. CAMPBELL — 142536 — LICENSED PROFESSIONAL ENGINEER — 07/03/2025

PAVING DETAILS

PARKSIDE ON THE RIVER SECTIONS 11, 12A & 15A CONSTRUCTION PLANS
GEORGETOWN, WILLIAMSON, TEXAS

DESIGNED BY: CC
DRAWN BY: MM
CHECKED BY: SN
APPROVED BY:

SHEET 72 OF 141

2025-XX-CON

Plot Style: LandDev Global.ctb
Template: LDC_C3D2022.DWT
P:\Blake Magee\Parkside Sections 11-15 & WON 5\Section 11, 12A & 15A\03_ACAD\Plans\sh2403522 DTLS.dwg, PAVING DETAILS 2, July 18, 2025, 11:50 AM, makai.muhammad

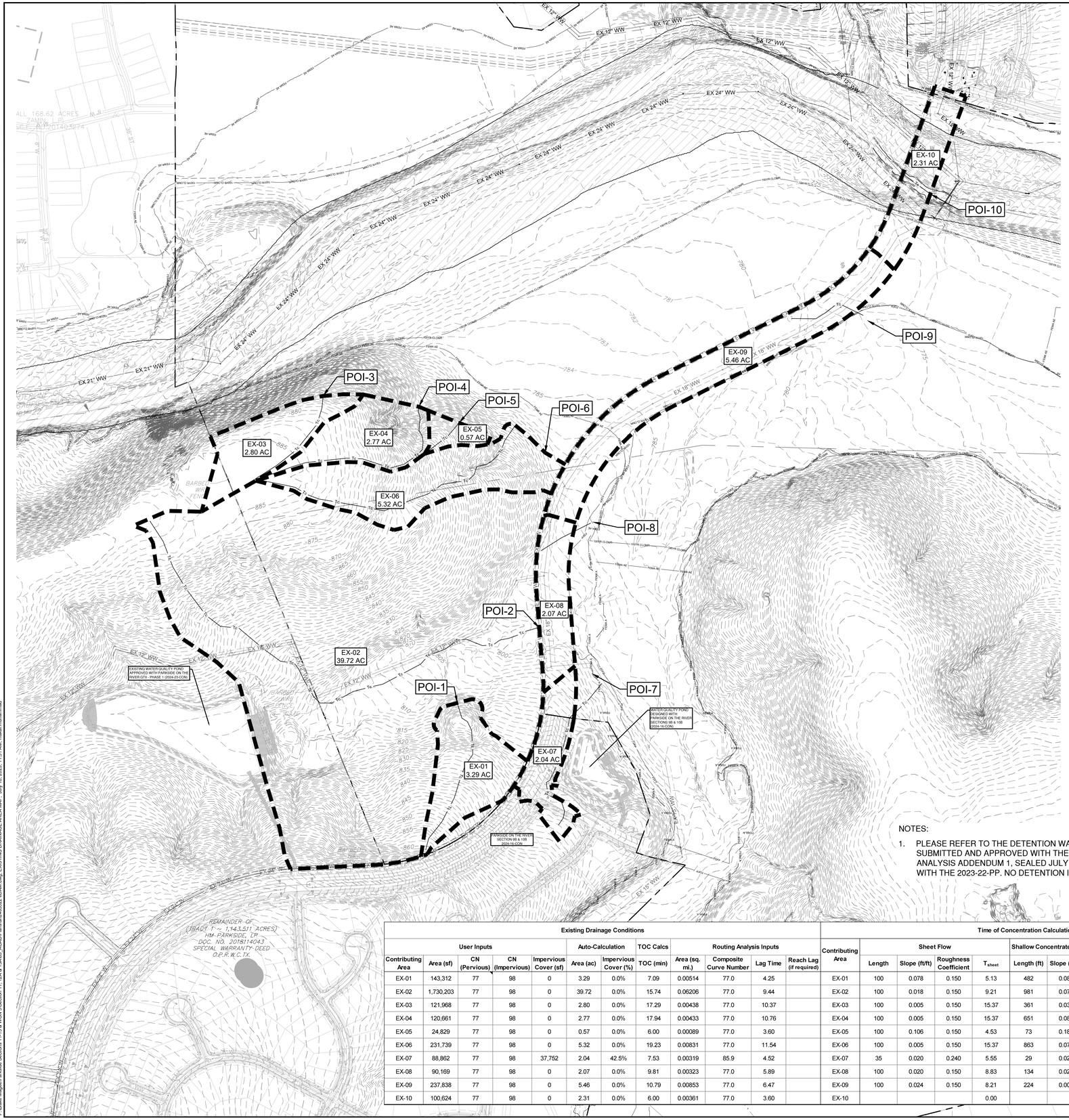

0 200' 400'

SCALE: 1" = 200'

LEGEND

- EXISTING MINOR CONTOUR
- EXISTING MAJOR CONTOUR
- PROPOSED MINOR CONTOUR
- PROPOSED MAJOR CONTOUR
- BOUNDARY
- EASEMENT
- FEMA FLOODWAY PER FIRM# 48491C0460F & LOMR# 21-06-0115P
- FEMA AE — 100YR ATLAS 14 FEMA ZONE AE FLOODPLAIN PER FIRM# 48491C0460F & LOMR# 21-06-0115P
- FEMA A — 100YR FEMA ZONE A FLOODPLAIN PER FIRM MAP# 48491C0460F
- 100YR CLOMR — 100YR CLOMR FLOODPLAIN CASE# 15-06-2071R
- FDFP — 100YR ATLAS 14 FULLY DEVELOPED FLOODPLAIN (STANTEC DRAINAGE STUDY, SHERVIN NOOSHIN, 3/25/19) APPROVED WITH PP# 2019-5-PP
- OHWM — ORDINARY HIGH WATER MARK PER ADAMS ENVIRONMENTAL
- PROPOSED STORM LINE
- FIRE HYDRANT
- WATER VALVE
- STORM SEWER MAHNOLE
- WASTEWATER MANHOLE
- CURB INLET
- P-1 / 5.00 AC — DRAINAGE AREA NAME / DRAINAGE AREA (IN ACRES)
- Tc — TIME OF CONCENTRATION
- POI-15 — DRAINAGE DESIGN POINT
- DIRECTION OF FLOW
- DRAINAGE AREA

NOTES:

1. PLEASE REFER TO THE DETENTION WAIVER ANALYSIS, SEALED MARCH 25, 2019, SUBMITTED AND APPROVED WITH THE 2019-5-PP AND THE DETENTION WAIVER ANALYSIS ADDENDUM 1, SEALED JULY 28, 2023, SUBMITTED AND APPROVED WITH THE 2023-22-PP. NO DETENTION IS REQUIRED FOR THIS PROJECT.

Existing Drainage Conditions

Contributing Area	User Inputs: Area (sf)	CN (Pervious)	CN (Impervious)	Impervious Cover (sf)	Auto-Calculation: Area (ac)	Impervious Cover (%)	TOC Calcs: TOC (min)	Routing Analysis Inputs: Area (sq. mi.)	Composite Curve Number	Lag Time	Reach Lag (if required)
EX-01	143,312	77	98	0	3.29	0.0%	7.09	0.00514	77.0	4.25	
EX-02	1,730,203	77	98	0	39.72	0.0%	15.74	0.06206	77.0	9.44	
EX-03	121,968	77	98	0	2.80	0.0%	17.29	0.00438	77.0	10.37	
EX-04	120,661	77	98	0	2.77	0.0%	17.94	0.00433	77.0	10.76	
EX-05	24,829	77	98	0	0.57	0.0%	6.00	0.00089	77.0	3.60	
EX-06	231,739	77	98	0	5.32	0.0%	19.23	0.00831	77.0	11.54	
EX-07	88,862	77	98	37,752	2.04	42.5%	7.53	0.00319	85.9	4.52	
EX-08	90,169	77	98	0	2.07	0.0%	9.81	0.00323	77.0	5.89	
EX-09	237,838	77	98	0	5.46	0.0%	10.79	0.00853	77.0	6.47	
EX-10	100,624	77	98	0	2.31	0.0%	6.00	0.00361	77.0	3.60	

Time of Concentration Calculations

Contributing Area	Sheet Flow: Length	Slope (ft/ft)	Roughness Coefficient	T_{sheet}	Shallow Concentrated Flow (Unpaved): Length (ft)	Slope (ft/ft)	$T_{unpaved}$	Pipe/Channel Flow 1: Length (ft)	Velocity (ft)	$T_{channel}$ (min)
EX-01	100	0.078	0.150	5.13	482	0.086	1.70	93	6	0.26
EX-02	100	0.018	0.150	9.21	981	0.072	3.77	994	6	2.76
EX-03	100	0.005	0.150	15.37	361	0.038	1.91			0.00
EX-04	100	0.005	0.150	15.37	651	0.086	2.29	99	6	0.28
EX-05	100	0.106	0.150	4.53	73	0.189	0.17			0.00
EX-06	100	0.005	0.150	15.37	863	0.079	3.17	246	6	0.68
EX-07	35	0.020	0.240	5.55	29	0.020	0.21	637	6	1.77
EX-08	100	0.020	0.150	8.83	134	0.020	0.98			0.00
EX-09	100	0.024	0.150	8.21	224	0.008	2.58			0.00
EX-10				0.00			0.00	140	6	0.39

Existing Conditions - Flows & Volumes - Atlas 14

ID	Peak Flows (cfs): 2-yr	10-yr	25-yr	100-yr	Volumes (ac-ft): 2-yr	10-yr	25-yr	100-yr
EX-01	6.07	12.92	18.17	27.77	0.48	1.03	1.46	2.27
EX-02	61.29	131.19	185.05	283.74	5.84	12.39	17.58	27.38
EX-03	4.19	8.98	12.67	19.43	0.41	0.87	1.24	1.93
EX-04	4.09	8.76	12.36	18.98	0.41	0.86	1.23	1.91
EX-05	1.07	2.28	3.21	4.90	0.08	0.18	0.25	0.39
EX-06	7.66	16.41	23.16	35.55	0.78	1.66	2.35	3.67
EX-07	5.25	9.68	12.92	18.76	0.42	0.80	1.08	1.61
EX-08	3.62	7.69	10.82	16.58	0.30	0.64	0.91	1.43
EX-09	10.32	22.02	31.02	47.50	0.89	1.88	2.67	4.16
EX-10	3.29	6.99	9.84	15.04	0.26	0.54	0.77	1.20
POI-01	6.07	12.92	18.17	27.77	0.48	1.03	1.46	2.27
POI-02	61.29	131.19	185.05	283.74	5.84	12.39	17.58	27.38
POI-03	4.19	8.98	12.67	19.43	0.41	0.87	1.24	1.93
POI-04	4.09	8.76	12.36	18.98	0.41	0.86	1.23	1.91
POI-05	1.07	2.28	3.21	4.90	0.08	0.18	0.25	0.39
POI-06	7.66	16.41	23.16	35.55	0.78	1.66	2.35	3.67
POI-07	5.25	9.68	12.92	18.76	0.42	0.80	1.08	1.61
POI-08	3.62	7.69	10.82	16.58	0.30	0.64	0.91	1.43
POI-09	10.32	22.02	31.02	47.50	0.89	1.88	2.67	4.16
POI-10	3.29	6.99	9.84	15.04	0.26	0.54	0.77	1.20

Proposed Conditions - Flows & Volumes - Atlas 14

ID	Peak Flows (cfs): 2-yr	10-yr	25-yr	100-yr	Volumes (ac-ft): 2-yr	10-yr	25-yr	100-yr
PR-01	14.36	26.26	35.00	50.69	1.16	2.18	2.95	4.37
PR-02	46.76	95.97	133.28	201.14	4.43	9.09	12.74	19.57
PR-03	5.88	10.79	14.39	20.87	0.46	0.87	1.17	1.74
PR-04	1.37	2.92	4.11	6.28	0.11	0.23	0.32	0.50
PR-05	2.02	3.64	4.83	6.96	0.16	0.29	0.40	0.59
PR-06	42.04	75.39	99.86	143.86	3.47	6.41	8.63	12.70
PR-07	9.70	17.37	22.98	33.09	0.78	1.44	1.93	2.84
PR-08	6.31	11.21	14.79	21.22	0.50	0.91	1.22	1.80
PR-09	17.16	30.37	40.00	57.30	1.36	2.48	3.32	4.86
PR-10	6.29	11.43	15.19	21.95	0.49	0.92	1.24	1.84
POI-01	13.35	24.96	33.57	49.03	1.16	2.18	2.95	4.37
POI-02	46.76	95.97	133.28	201.14	4.43	9.09	12.74	19.57
POI-03	5.88	10.79	14.39	20.87	0.46	0.87	1.17	1.74
POI-04	1.37	2.92	4.11	6.28	0.11	0.23	0.32	0.50
POI-05	2.02	3.64	4.83	6.96	0.16	0.29	0.40	0.59
POI-06	38.59	71.12	94.79	137.55	3.47	6.41	8.63	12.70
POI-07	9.70	17.37	22.98	33.09	0.78	1.44	1.93	2.84
POI-08	6.31	11.21	14.79	21.22	0.50	0.91	1.22	1.80
POI-09	17.16	30.37	40.00	57.30	1.36	2.48	3.32	4.86
POI-10	6.29	11.43	15.19	21.95	0.49	0.92	1.24	1.84

Flow & Volume Comparison (Proposed - Existing) - Atlas 14

ID	Peak Flows (cfs): 2-yr	10-yr	25-yr	100-yr	Volumes (ac-ft): 2-yr	10-yr	25-yr	100-yr
POI-1	7.28	12.04	15.40	21.26	0.68	1.15	1.49	2.10
POI-2	-14.53	-35.22	-51.77	-82.60	-1.41	-3.30	-4.84	-7.81
POI-3	1.69	1.81	1.72	1.44	0.05	0.00	-0.07	-0.19
POI-4	-2.72	-5.84	-8.25	-12.70	-0.30	-0.63	-0.91	-1.41
POI-5	0.95	1.36	1.62	2.06	0.08	0.11	0.15	0.20
POI-6	30.93	54.71	71.63	102.00	2.69	4.75	6.28	9.03
POI-7	4.45	7.69	10.06	14.33	0.36	0.64	0.85	1.23
POI-8	2.69	3.52	3.97	4.64	0.20	0.27	0.31	0.37
POI-9	6.84	8.35	8.98	9.80	0.47	0.60	0.65	0.70
POI-10	3.00	4.44	5.35	6.91	0.23	0.38	0.47	0.64

NO	BY	DATE

811 Know what's below. Call before you dig.

5508 HIGHWAY 290 WEST
SUITE 150
AUSTIN, TX 78735
512.872.6696
HRGREEN.COM

TBPE NO: 16384
TBPLS NO: 10194101

HRGreen® DEVELOPMENT TX

STATE OF TEXAS — CHRISTINE N. CAMPBELL — 142536 — LICENSED PROFESSIONAL ENGINEER

07/15/2025

EXISTING DRAINAGE AREA MAP

PARKSIDE ON THE RIVER SECTIONS 11, 12A & 15A CONSTRUCTION PLANS

GEORGETOWN, WILLIAMSON, TEXAS

DESIGNED BY: CC
DRAWN BY: MM
CHECKED BY: SN
APPROVED BY:

SHEET 73 OF 141

2025-XX-CON

P:\Blkan Meghe\Parkside Sections 11-15 & WOA S\Sections 11, 12A & 15A\03_ACAD\Planset\20250723 xDIM.dwg, EXISTING DRAINAGE AREA MAP, July 18, 2025, 11:51 AM, malan.muhammad

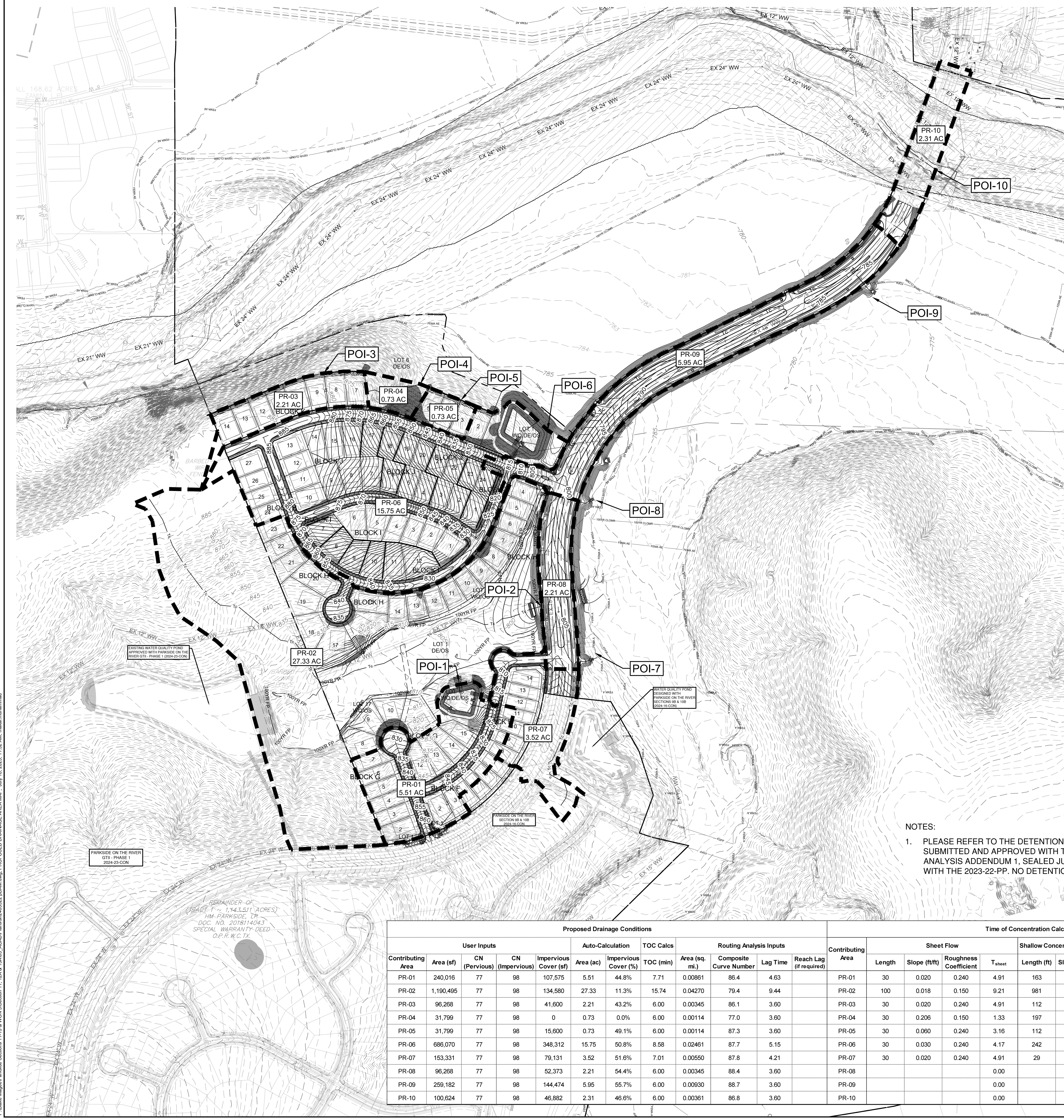

0 200' 400'

SCALE: 1" = 200'

LEGEND

- EXISTING MINOR CONTOUR (834)
- EXISTING MAJOR CONTOUR (835)
- PROPOSED MINOR CONTOUR (834)
- PROPOSED MAJOR CONTOUR (835)
- BOUNDARY
- EASEMENT
- FEMA FLOODWAY PER FIRM# 48491C0460F & LOMR# 21-06-0115P
- FEMA AE — 100YR ATLAS 14 FEMA ZONE AE FLOODPLAIN PER FIRM# 48491C0460F & LOMR# 21-06-0115P
- FEMA A — 100YR FEMA ZONE A FLOODPLAIN PER FIRM MAP# 48491C0460F
- 100YR CLOMR — 100YR CLOMR FLOODPLAIN CASE# 15-06-2071R
- FDFP — 100YR ATLAS 14 FULLY DEVELOPED FLOODPLAIN (STANTEC DRAINAGE STUDY, SHERVIN NOOSHIN, 3/25/19) APPROVED WITH PP# 2019-5-PP
- OHWM — ORDINARY HIGH WATER MARK PER ADAMS ENVIRONMENTAL
- SD — PROPOSED STORM LINE
- FIRE HYDRANT
- WATER VALVE
- SD — STORM SEWER MAHNOLE
- WW — WASTEWATER MANHOLE
- CURB INLET
- P-1 / 5.00 AC — DRAINAGE AREA NAME / DRAINAGE AREA (IN ACRES)
- Tc — TIME OF CONCENTRATION
- POI-15 — DRAINAGE DESIGN POINT
- DIRECTION OF FLOW
- DRAINAGE AREA

NOTES:

1. PLEASE REFER TO THE DETENTION WAIVER ANALYSIS, SEALED MARCH 25, 2019, SUBMITTED AND APPROVED WITH THE 2019-5-PP AND THE DETENTION WAIVER ANALYSIS ADDENDUM 1, SEALED JULY 28, 2023, SUBMITTED AND APPROVED WITH THE 2023-22-PP. NO DETENTION IS REQUIRED FOR THIS PROJECT.

Proposed Drainage Conditions

User Inputs					Auto-Calculation		TOC Calcs	Routing Analysis Inputs			
Contributing Area	Area (sf)	CN (Pervious)	CN (Impervious)	Impervious Cover (sf)	Area (ac)	Impervious Cover (%)	TOC (min)	Area (sq. mi.)	Composite Curve Number	Lag Time	Reach Lag (if required)
PR-01	240,016	77	98	107,575	5.51	44.8%	7.71	0.00861	86.4	4.63	
PR-02	1,190,495	77	98	134,580	27.33	11.3%	15.74	0.04270	79.4	9.44	
PR-03	96,268	77	98	41,600	2.21	43.2%	6.00	0.00345	86.1	3.60	
PR-04	31,799	77	98	0	0.73	0.0%	6.00	0.00114	77.0	3.60	
PR-05	31,799	77	98	15,600	0.73	49.1%	6.00	0.00114	87.3	3.60	
PR-06	686,070	77	98	348,312	15.75	50.8%	8.58	0.02461	87.7	5.15	
PR-07	153,331	77	98	79,131	3.52	51.6%	7.01	0.00550	87.8	4.21	
PR-08	96,268	77	98	52,373	2.21	54.4%	6.00	0.00345	88.4	3.60	
PR-09	259,182	77	98	144,474	5.95	55.7%	6.00	0.00930	88.7	3.60	
PR-10	100,624	77	98	46,882	2.31	46.6%	6.00	0.00361	86.8	3.60	

Time of Concentration Calculations

Contributing Area	Sheet Flow				Shallow Concentrated Flow (Unpaved)			Pipe/Channel Flow 1		
	Length	Slope (ft/ft)	Roughness Coefficient	T_{sheet}	Length (ft)	Slope (ft/ft)	$T_{unpaved}$	Length (ft)	Velocity (ft)	$T_{channel}$ (min)
PR-01	30	0.020	0.240	4.91	163	0.020	1.19	581	6	1.61
PR-02	100	0.018	0.150	9.21	981	0.072	3.77	994	6	2.76
PR-03	30	0.020	0.240	4.91	112	0.060	0.47			0.00
PR-04	30	0.206	0.150	1.33	197	0.282	0.38			0.00
PR-05	30	0.060	0.240	3.16	112	0.060	0.47			0.00
PR-06	30	0.030	0.240	4.17	242	0.040	1.25	1135	6	3.15
PR-07	30	0.020	0.240	4.91	29	0.020	0.21	680	6	1.89
PR-08				0.00			0.00	817	6	2.27
PR-09				0.00			0.00	1633	6	4.54
PR-10				0.00			0.00	140	6	0.39

Existing Conditions - Flows & Volumes - Atlas 14

ID	Peak Flows (cfs)				Volumes (ac-ft)			
	2-yr	10-yr	25-yr	100-yr	2-yr	10-yr	25-yr	100-yr
EX-01	6.07	12.92	18.17	27.77	0.48	1.03	1.46	2.27
EX-02	61.29	131.19	185.05	283.74	5.84	12.39	17.58	27.38
EX-03	4.19	8.98	12.67	19.43	0.41	0.87	1.24	1.93
EX-04	4.09	8.76	12.36	18.98	0.41	0.86	1.23	1.91
EX-05	1.07	2.28	3.21	4.90	0.08	0.18	0.25	0.39
EX-06	7.66	16.41	23.16	35.55	0.78	1.66	2.35	3.67
EX-07	5.25	9.68	12.92	18.76	0.42	0.80	1.08	1.61
EX-08	3.62	7.69	10.82	16.58	0.30	0.64	0.91	1.43
EX-09	10.32	22.02	31.02	47.50	0.89	1.88	2.67	4.16
EX-10	3.29	6.99	9.84	15.04	0.26	0.54	0.77	1.20
POI-01	6.07	12.92	18.17	27.77	0.48	1.03	1.46	2.27
POI-02	61.29	131.19	185.05	283.74	5.84	12.39	17.58	27.38
POI-03	4.19	8.98	12.67	19.43	0.41	0.87	1.24	1.93
POI-04	4.09	8.76	12.36	18.98	0.41	0.86	1.23	1.91
POI-05	1.07	2.28	3.21	4.90	0.08	0.18	0.25	0.39
POI-06	7.66	16.41	23.16	35.55	0.78	1.66	2.35	3.67
POI-07	5.25	9.68	12.92	18.76	0.42	0.80	1.08	1.61
POI-08	3.62	7.69	10.82	16.58	0.30	0.64	0.91	1.43
POI-09	10.32	22.02	31.02	47.50	0.89	1.88	2.67	4.16
POI-10	3.29	6.99	9.84	15.04	0.26	0.54	0.77	1.20

Proposed Conditions - Flows & Volumes - Atlas 14

ID	Peak Flows (cfs)				Volumes (ac-ft)			
	2-yr	10-yr	25-yr	100-yr	2-yr	10-yr	25-yr	100-yr
PR-01	14.36	26.26	35.00	50.69	1.16	2.18	2.95	4.37
PR-02	46.76	95.97	133.28	201.14	4.43	9.09	12.74	19.57
PR-03	5.88	10.79	14.39	20.87	0.46	0.87	1.17	1.74
PR-04	1.37	2.92	4.11	6.28	0.11	0.23	0.32	0.50
PR-05	2.02	3.64	4.83	6.96	0.16	0.29	0.40	0.59
PR-06	42.04	75.39	99.86	143.86	3.47	6.41	8.63	12.70
PR-07	9.70	17.37	22.98	33.09	0.78	1.44	1.93	2.84
PR-08	6.31	11.21	14.79	21.22	0.50	0.91	1.22	1.80
PR-09	17.16	30.37	40.00	57.30	1.36	2.48	3.32	4.86
PR-10	6.29	11.43	15.19	21.95	0.49	0.92	1.24	1.84
POI-01	13.35	24.96	33.57	49.03	1.16	2.18	2.95	4.37
POI-02	46.76	95.97	133.28	201.14	4.43	9.09	12.74	19.57
POI-03	5.88	10.79	14.39	20.87	0.46	0.87	1.17	1.74
POI-04	1.37	2.92	4.11	6.28	0.11	0.23	0.32	0.50
POI-05	2.02	3.64	4.83	6.96	0.16	0.29	0.40	0.59
POI-06	38.59	71.12	94.79	137.55	3.47	6.41	8.63	12.70
POI-07	9.70	17.37	22.98	33.09	0.78	1.44	1.93	2.84
POI-08	6.31	11.21	14.79	21.22	0.50	0.91	1.22	1.80
POI-09	17.16	30.37	40.00	57.30	1.36	2.48	3.32	4.86
POI-10	6.29	11.43	15.19	21.95	0.49	0.92	1.24	1.84

Flow & Volume Comparison (Proposed - Existing) - Atlas 14

ID	Peak Flows (cfs)				Volumes (ac-ft)			
	2-yr	10-yr	25-yr	100-yr	2-yr	10-yr	25-yr	100-yr
POI-1	7.28	12.04	15.40	21.26	0.68	1.15	1.49	2.10
POI-2	-14.53	-35.22	-51.77	-82.60	-1.41	-3.30	-4.84	-7.81
POI-3	1.69	1.81	1.72	1.44	0.05	0.00	-0.07	-0.19
POI-4	-2.72	-5.84	-8.25	-12.70	-0.30	-0.63	-0.91	-1.41
POI-5	0.95	1.36	1.62	2.06	0.08	0.11	0.15	0.20
POI-6	30.93	54.71	71.63	102.00	2.69	4.75	6.28	9.03
POI-7	4.45	7.69	10.06	14.33	0.36	0.64	0.85	1.23
POI-8	2.69	3.52	3.97	4.64	0.20	0.27	0.31	0.37
POI-9	6.84	8.35	8.98	9.80	0.47	0.60	0.65	0.70
POI-10	3.00	4.44	5.35	6.91	0.23	0.38	0.47	0.64

NO.	REVISION	BY	DATE

Know what's below. Call before you dig.

5508 HIGHWAY 290 WEST
SUITE 150
AUSTIN, TX 78735
512.872.6696
HRGREEN.COM

TBPE NO: 16384
TBPLS NO: 10194101

HRGreen DEVELOPMENT TX

STATE OF TEXAS
CHRISTINE N. CAMPBELL
142536
LICENSED PROFESSIONAL ENGINEER
07/03/2025

PROPOSED DRAINAGE AREA MAP

PARKSIDE ON THE RIVER SECTIONS 11, 12A & 15A CONSTRUCTION PLANS GEORGETOWN, WILLIAMSON, TEXAS

DESIGNED BY: CC

DRAWN BY: MM

CHECKED BY: SN

APPROVED BY:

SHEET 74 OF 141

2025-XX-CON

P:\Blake Magee\Parkside Sections 11-15 & WON 5\Section 11, 12A & 15A\03_ACAD\Plans\sh2403522 pDAM.dwg, PROPOSED DRAINAGE AREA MAP, July 18, 2025, 11:52 AM, makai.muhammad

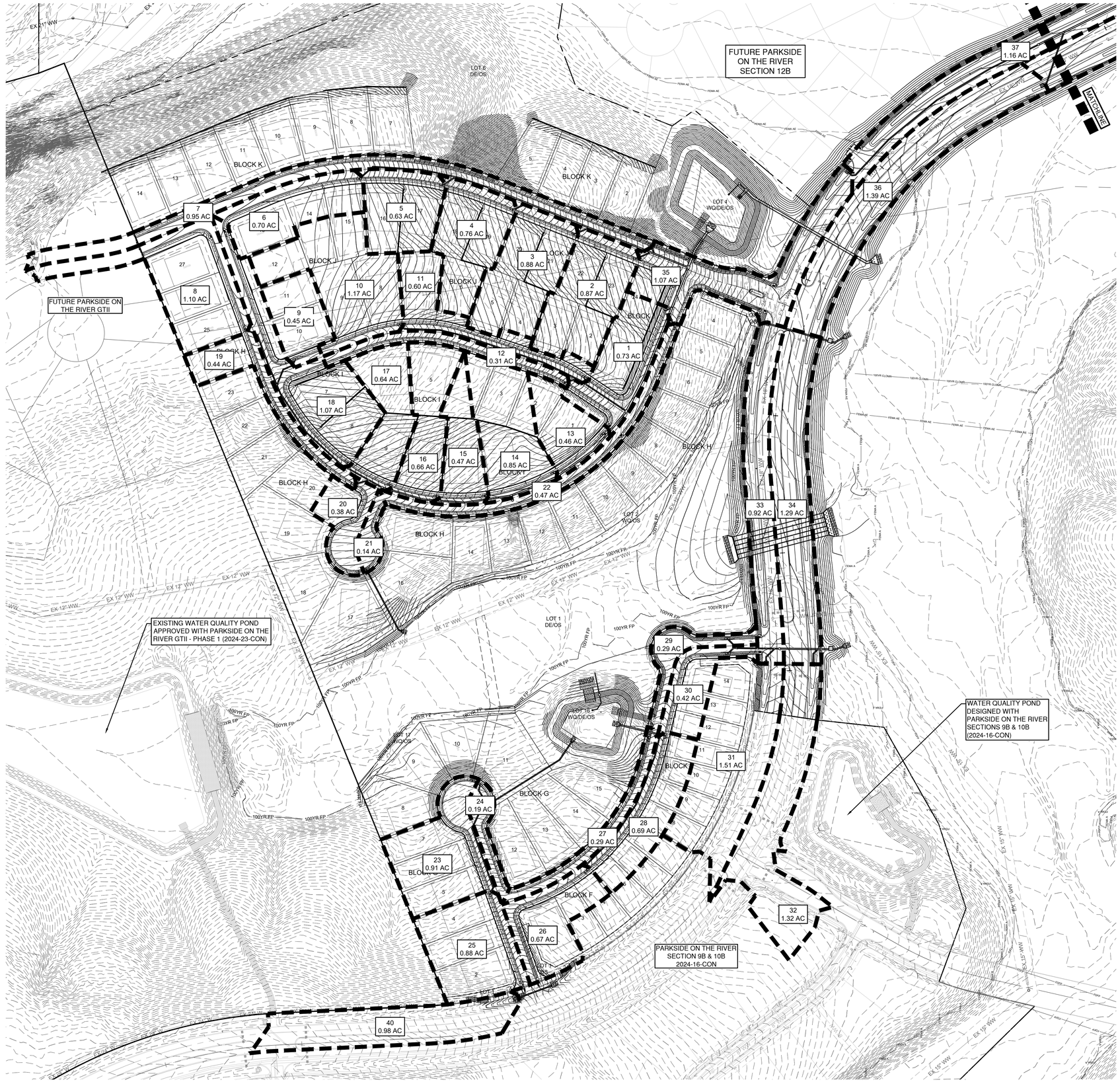

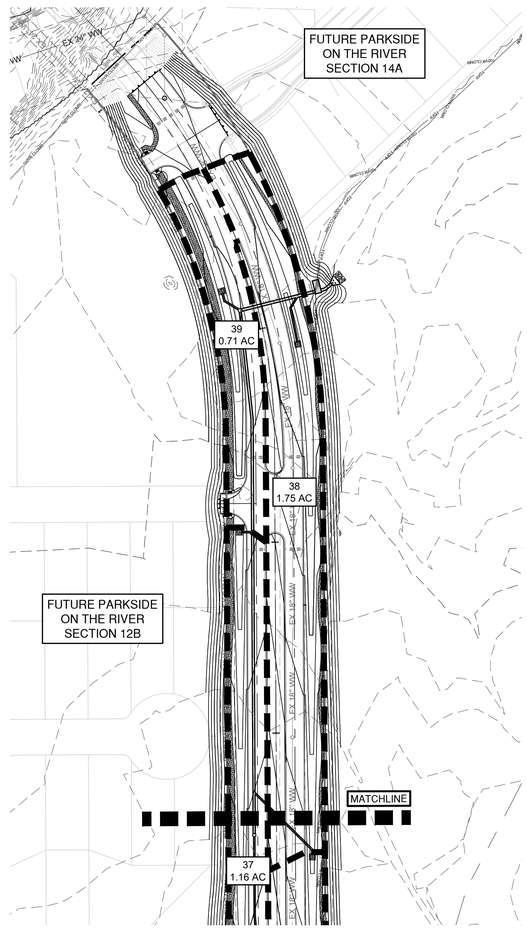

0 100' 200'

SCALE: 1" = 100'

LEGEND

- 834 — EXISTING MINOR CONTOUR
- 835 — EXISTING MAJOR CONTOUR
- 834 — PROPOSED MINOR CONTOUR
- 835 — PROPOSED MAJOR CONTOUR
- BOUNDARY
- EASEMENT
- FEMA FLOODWAY PER FIRM# 48491C0460F & LOMR# 21-06-0115P
- FEMA AE — 100YR ATLAS 14 FEMA ZONE AE FLOODPLAIN PER FIRM# 48491C0460F & LOMR# 21-06-0115P
- FEMA A — 100YR FEMA ZONE A FLOODPLAIN PER FIRM MAP# 48491C0460F
- 100YR CLOMR — 100YR CLOMR FLOODPLAIN CASE# 15-06-2071R
- FDFP — 100YR ATLAS 14 FULLY DEVELOPED FLOODPLAIN (STANTEC DRAINAGE STUDY, SHERVIN NOOSHIN, 3/25/19) APPROVED WITH PP# 2019-5-PP
- OHWM — ORDINARY HIGH WATER MARK PER ADAMS ENVIRONMENTAL
- SD — PROPOSED STORM LINE
- FIRE HYDRANT
- WATER VALVE
- SD — STORM SEWER MAHNOLE
- WW — WASTEWATER MANHOLE
- CURB INLET
- P-1 / 5.00 AC — DRAINAGE AREA NAME / DRAINAGE AREA (IN ACRES)
- Tc — TIME OF CONCENTRATION
- DRAINAGE AREA

NO	REVISION	BY	DATE

Know what's below. Call before you dig.

HRGreen
DEVELOPMENT TX
5508 HIGHWAY 290 WEST
SUITE 150
AUSTIN, TX 78735
512.872.6696
HRGREEN.COM
TBPE NO: 16384
TBPLS NO: 10194101

STATE OF TEXAS
CHRISTINE N. CAMPBELL
142536
LICENSED PROFESSIONAL ENGINEER
07/03/2025

INLET DRAINAGE AREA MAP

PARKSIDE ON THE RIVER SECTIONS 11, 12A & 15A CONSTRUCTION PLANS

GEORGETOWN, WILLIAMSON, TEXAS

DESIGNED BY: CC
DRAWN BY: MM
CHECKED BY: SN
APPROVED BY:

SHEET 75 OF 141

2025-XX-CON

P:\Blake Magee\Parkside Sections 11-15 & VCM 1\Sections 11, 12A & 15A\03_ACAD\Planset\sh04DS02 print\DRAM.dwg, INLET DRAINAGE AREA MAP, July 09, 2025, 11:54 AM, mateo.mohammad

COG C-Values				
	2	10	25	100
Impervious	0.95	0.95	0.95	0.95
Pervious	0.24	0.28	0.31	0.36

COG IDF Curve Values			
Year	a	b	c
2	106.29	16.81	0.9076
10	96.84	15.88	0.7952
25	111.07	17.23	0.7815
100	129.03	17.83	0.7625

PARKSIDE ON THE RIVER SECTIONS 11, 12A & 15A
RATIONAL METHOD FLOW CALCULATIONS FOR STORM INLETS

BASIN LABEL	INLET LABEL	INLET TYPE*	AREA (SQ FT)	AREA (AC)	IMPERVIOUS (LOTS) (SF)	IMPERVIOUS (ROADS) (SF)	IMPERVIOUS %	PERVIOUS %	TC (MIN)	2-YR			10-YR			25-YR			100-YR		
										C	I	Q	C	I	Q	C	I	Q	C	I	Q
1	D28	CGRD	31,633	0.73	8,000	9,468	55%	45%	5.0	0.63	6.48	2.97	0.65	8.64	4.08	0.66	9.84	4.74	0.69	11.88	5.92
2	D51	CGRD	37,890	0.87	20,400	3,057	62%	38%	5.0	0.68	6.48	3.83	0.69	8.64	5.22	0.71	9.84	6.04	0.73	11.88	7.49
3	D52	CGRD	38,235	0.88	20,400	3,095	61%	39%	5.0	0.68	6.48	3.85	0.69	8.64	5.25	0.70	9.84	6.07	0.72	11.88	7.53
4	D53	CGRD	33,003	0.76	15,200	3,552	57%	43%	5.0	0.64	6.48	3.16	0.66	8.64	4.33	0.67	9.84	5.02	0.70	11.88	6.26
5	D54	CGRD	27,294	0.63	10,400	3,922	52%	48%	5.0	0.61	6.48	2.49	0.63	8.64	3.42	0.65	9.84	3.98	0.67	11.88	4.98
6	D49	CGRD	30,306	0.70	10,800	7,025	59%	41%	5.0	0.66	6.48	2.96	0.67	8.64	4.05	0.69	9.84	4.70	0.71	11.88	5.84
7	D50	CGRD	41,492	0.95	0	30,372	73%	27%	5.0	0.76	6.48	4.69	0.77	8.64	6.34	0.78	9.84	7.30	0.79	11.88	8.96
8	D27	CGRD	48,010	1.10	15,600	13,691	61%	39%	5.0	0.67	6.48	4.81	0.69	8.64	6.56	0.70	9.84	7.60	0.72	11.88	9.43
9	D39	CSAG	19,408	0.45	9,600	1,214	56%	44%	6.2	0.64	6.17	1.75	0.65	8.27	2.41	0.67	9.44	2.81	0.69	11.43	3.51
10	D62	CGRD	51,094	1.17	20,000	3,336	46%	54%	6.3	0.56	6.15	4.07	0.59	8.24	5.66	0.60	9.42	6.65	0.63	11.39	8.41
11	D63	CGRD	26,256	0.60	6,400	7,591	53%	47%	5.0	0.62	6.48	2.41	0.64	8.64	3.32	0.65	9.84	3.86	0.67	11.88	4.83
12	D64	CGRD	13,502	0.31	0	10,021	74%	26%	5.0	0.77	6.48	1.54	0.78	8.64	2.08	0.78	9.84	2.39	0.80	11.88	2.94
13	D30	CGRD	20,024	0.46	7,600	2,664	51%	49%	5.0	0.60	6.48	1.80	0.62	8.64	2.48	0.64	9.84	2.89	0.66	11.88	3.62
14	D31	CGRD	37,173	0.85	15,600	2,908	50%	50%	5.0	0.59	6.48	3.28	0.61	8.64	4.53	0.63	9.84	5.28	0.65	11.88	6.63
15	D32	CGRD	20,498	0.47	7,600	1,971	47%	53%	5.0	0.57	6.48	1.74	0.59	8.64	2.41	0.61	9.84	2.82	0.64	11.88	3.55
16	D33	CGRD	28,596	0.66	10,400	1,864	43%	57%	5.0	0.54	6.48	2.32	0.57	8.64	3.22	0.58	9.84	3.78	0.61	11.88	4.78
17	D34	CGRD	27,776	0.64	10,400	1,903	44%	56%	5.0	0.55	6.48	2.29	0.58	8.64	3.18	0.59	9.84	3.72	0.62	11.88	4.71
18	D36	CGRD	46,577	1.07	11,600	13,891	55%	45%	5.0	0.63	6.48	4.35	0.65	8.64	5.98	0.66	9.84	6.95	0.68	11.88	8.67
19	D35	CGRD	19,253	0.44	5,200	7,512	66%	34%	5.0	0.71	6.48	2.03	0.72	8.64	2.76	0.73	9.84	3.19	0.75	11.88	3.94
20	E5	CSAG	16,453	0.38	2,800	8,030	66%	34%	5.0	0.71	6.48	1.73	0.72	8.64	2.35	0.73	9.84	2.72	0.75	11.88	3.36
21	E3	CGRD	5,897	0.14	0	4,918	83%	17%	5.0	0.83	6.48	0.73	0.84	8.64	0.98	0.84	9.84	1.12	0.85	11.88	1.37
22	D29	CGRD	20,423	0.47	0	15,104	74%	26%	5.0	0.77	6.48	2.32	0.78	8.64	3.14	0.78	9.84	3.61	0.80	11.88	4.44
23	A12	CSAG	39,423	0.91	13,200	8,516	55%	45%	5.4	0.63	6.37	3.64	0.65	8.51	5.00	0.66	9.70	5.81	0.68	11.72	7.26
24	A10	CGRD	8,078	0.19	0	6,530	81%	19%	5.0	0.81	6.48	0.98	0.82	8.64	1.32	0.83	9.84	1.51	0.84	11.88	1.84
25	A7	CGRD	38,339	0.88	13,200	3,910	45%	55%	5.0	0.56	6.48	3.18	0.58	8.64	4.40	0.60	9.84	5.16	0.62	11.88	6.52
26	B8	CGRD	29,365	0.67	8,400	6,754	52%	48%	5.0	0.61	6.48	2.65	0.63	8.64	3.65	0.64	9.84	4.25	0.66	11.88	5.32
27	B9	CGRD	12,454	0.29	0	9,321	75%	25%	5.0	0.77	6.48	1.43	0.78	8.64	1.93	0.79	9.84	2.22	0.80	11.88	2.72
28	B10	CGRD	30,221	0.69	14,000	6,112	67%	33%	5.0	0.71	6.48	3.20	0.73	8.64	4.35	0.74	9.84	5.02	0.75	11.88	6.20
29	C14	CSAG	12,620	0.29	0	9,734	77%	23%	5.0	0.79	6.48	1.48	0.80	8.64	1.99	0.80	9.84	2.29	0.82	11.88	2.81
30	C9	CSAG	18,264	0.42	6,000	6,068	66%	34%	5.0	0.71	6.48	1.93	0.72	8.64	2.62	0.73	9.84	3.02	0.75	11.88	3.74
31	C13	ASAG	65,838	1.51	11,200	17,553	44%	56%	5.0	0.55	6.48	5.39	0.57	8.64	7.48	0.59	9.84	8.77	0.62	11.88	11.09
32	C11	ASAG	57,508	1.32	2,400	25,215	48%	52%	5.0	0.58	6.48	4.97	0.60	8.64	6.87	0.62	9.84	8.02	0.64	11.88	10.09
33	F5	ASAG	39,893	0.92	0	27,545	69%	31%	5.0	0.73	6.48	4.33	0.74	8.64	5.88	0.75	9.84	6.78	0.77	11.88	8.35
34	F4	ASAG	56,258	1.29	0	24,597	44%	56%	5.0	0.55	6.48	4.61	0.57	8.64	6.39	0.59	9.84	7.50	0.62	11.88	9.48
35	G15	ASAG	46,754	1.07	2,800	31,503	73%	27%	5.0	0.76	6.48	5.29	0.77	8.64	7.16	0.78	9.84	8.23	0.79	11.88	10.11
36	G22	ASAG	60,518	1.39	0	26,348	44%	56%	5.0	0.55	6.48	4.94	0.57	8.64	6.86	0.59	9.84	8.05	0.62	11.88	10.18
37	G20	ASAG	50,614	1.16	0	35,005	69%	31%	5.0	0.73	6.48	5.50	0.74	8.64	7.46	0.75	9.84	8.60	0.77	11.88	10.60
38	G17	ASAG	76,252	1.75	0	33,497	44%	56%	5.0	0.55	6.48	6.26	0.57	8.64	8.69	0.59	9.84	10.18	0.62	11.88	12.88
39	G19	ASAG	30,734	0.71	0	20,135	66%	34%	5.0	0.71	6.48	3.22	0.72	8.64	4.38	0.73	9.84	5.06	0.75	11.88	6.26
40	J2	ASAG	42,592	0.98	0	22,370	53%	47%	5.0	0.61	6.48	3.88	0.63	8.64	5.34	0.65	9.84	6.22	0.67	11.88	7.78

PARKSIDE ON THE RIVER SECTIONS 11, 12A & 15A
TIME OF CONCENTRATION CALCULATIONS

Contributing Area	Sheet Flow				Shallow Concentrated Flow (Unpaved)				Gutter Flow		
	Length (ft)	Slope (ft/ft)	Roughness Coefficient	T_{sheet}	Length (ft)	Slope (ft/ft)	Roughness Coefficient	$T_{unpaved}$	Length (ft)	Velocity (ft/s)	Tpaved
1	30	0.06	0.24	0.70	71.65	0.06	0.24	1.17	61	6	0.17
2	30	0.06	0.24	0.70	181.9	0.06	0.24	2.97	61.6	6	0.17
3	30	0.06	0.24	0.70	191.53	0.06	0.24	3.13	62.11	6	0.17
4	30	0.06	0.24	0.70	156.6	0.06	0.24	2.56	61.59	6	0.17
5	30	0.06	0.24	0.70	168.62	0.06	0.24	2.75	82.1	6	0.23
6	30	0.02	0.24	1.21	71.76	0.02	0.24	2.03	166.52	6	0.46
7	0	0	0	0.00	0	0	0	0.00	0	0	0.00
8	30	0.02	0.24	1.21	119	0.02	0.24	3.37	131	6	0.36
9	30	0.02	0.24	1.21	171	0.02	0.24	4.84	52.6	6	0.15
10	30	0.02	0.24	1.21	301	0.06	0.24	4.92	58	6	0.16
11	30	0.06	0.24	0.70	183.74	0.06	0.24	3.00	335.29	6	0.93
12	0	0	0	0.00	0	0	0	0.00	0	0	0.00
13	30	0.1	0.24	0.54	57.1	0.1	0.24	0.72	102.41	6	0.28
14	30	0.1	0.24	0.54	193.72	0.1	0.24	2.45	0	6	0.00
15	30	0.1	0.24	0.54	215.91	0.1	0.24	2.73	0	6	0.00
16	30	0.1	0.24	0.54	239.31	0.1	0.24	3.03	0	6	0.00
17	30	0.1	0.24	0.54	236.77	0.1	0.24	2.99	0	6	0.00
18	30	0.08	0.24	0.61	139.62	0.08	0.24	1.97	95.49	6	0.27
19	30	0.08	0.24	0.61	114	0.02	0.24	3.22	332	6	0.92
20	0	0	0	0.00	0	0	0	0.00	0	0	0.00
21	0	0	0	0.00	0	0	0	0.00	0	0	0.00
22	0	0	0	0.00	0	0	0	0.00	0	0	0.00
23	30	0.1	0.24	0.54	148	0.02	0.24	4.19	249.18	6	0.69
24	0	0	0	0.00	0	0	0	0.00	0	0	0.00
25	30	0.1	0.24	0.54	143	0.02	0.24	4.04	111.54	6	0.31
26	30	0.1	0.24	0.54	158.26	0.06	0.24	2.58	85.44	6	0.24
27	0	0	0	0.00	0	0	0	0.00	0	0	0.00
28	0	0	0	0.00	0	0	0	0.00	0	0	0.00
29	0	0	0	0.00	0	0	0	0.00	0	0	0.00
30	0	0	0	0.00	0	0	0	0.00	0	6	0.00
31	30	0.06	0.24	0.70	70	0.06	0.24	1.14	358.58	6	1.00
32	30	0.02	0.24	1.21	33	0.02	0.24	0.93	563	6	1.56
33	0	0	0	0.00	0	0	0	0.00	0	0	0.00
34	0	0	0	0.00	0	0	0	0.00	0	0	0.00
35	0	0	0	0.00	0	0	0	0.00	0	0	0.00
36	0	0	0	0.00	0	0	0	0.00	0	0	0.00
37	0	0	0	0.00	0	0	0	0.00	0	0	0.00
38	0	0	0	0.00	0	0	0	0.00	0	0	0.00
39	0	0	0	0.00	0	0	0	0.00	0	0	0.00
40	0	0	0	0.00	0	0	0	0.00	0	0	0.00

Curb Inlets in Sump Calculation Summary: 25 year

Drainage Area No.	Inlet No.	Q_{25} (cfs)	Qpass (cfs)	Qtotal (cfs)	W (ft)	Inlet Depression, a (ft)	Curb opening height, h (ft)	Street Width (ft)	Crown Height (%)	Clogging Factor (%)	Inlet Length (ft)	d_{weir} Above S_x (ft)	$d_{orifice}$ above S_x (ft)	a	b	Depth of Ponding over S_x, y0 (ft)	Ponded Width (ft)
9	D39	2.81	0.00	2.81	1.50	0.42	0.52	28.00	0.50	100%	10.00	0.21	0.00	0.07	0.00	0.21	3.33
20	E5	2.72	0.00	2.72	1.50	0.42	0.52	28.00	0.50	100%	10.00	0.21	0.00	0.07	0.00	0.21	3.25
23	A12	5.81	0.00	5.81	1.50	0.42	0.52	28.00	0.50	100%	10.00	0.34	0.00	0.07	0.00	0.31	5.35
29	C14	2.29	0.00	2.29	1.50	0.42	0.52	28.00	0.50	100%	10.00	0.18	0.00	0.07	0.00	0.18	2.86
30	C9	3.02	0.00	3.02	1.50	0.42	0.52	28.00	0.50	100%	10.00	0.22	0.00	0.07	0.00	0.22	3.53

Curb Inlets in Sump Calculation Summary: 100 year

Drainage Area No.	Inlet No.	Q_{100} (cfs)	Qpass (cfs)	Qtotal (cfs)	W (ft)	Inlet Depression, a (ft)	Curb opening height, h (ft)	Street Width (ft)	Crown Height (%)	Clogging Factor (%)	Inlet Length (ft)	d_{weir} Above S_x (ft)	$d_{orifice}$ above S_x (ft)	a	b	Depth of Ponding over S_x, y0 (ft)	Ponded Width (ft)
9	D39	3.51	0.00	3.51	1.50	0.42	0.52	28.00	0.50	100%	10.00	0.24	0.00	0.07	0.00	0.24	3.97
20	E5	3.36	0.00	3.36	1.50	0.42	0.52	28.00	0.50	100%	10.00	0.24	0.00	0.07	0.00	0.24	3.84
23	A12	7.26	0.00	7.26	1.50	0.42	0.52	28.00	0.50	100%	10.00	0.40	0.00	0.07	0.00	0.31	5.35
29	C14	2.81	0.00	2.81	1.50	0.42	0.52	28.00	0.50	100%	10.00	0.21	0.00	0.07	0.00	0.21	3.33
30	C9	3.74	0.00	3.74	1.50	0.42	0.52	28.00	0.50	100%	10.00	0.25	0.00	0.07	0.00	0.25	4.18

Area Inlet in Sag Calculation Summary: 25 year

Drainage Area No.	Inlet No.	Q_{25} (cfs)	Qpass (cfs)	Qtotal (cfs)	Throat Height, h (in)	Inlet Length, L (ft)	Yard Cross Slope, Sx (%)	Weir Depth above FL (ft)	Orifice Depth above FL (ft)	Ponded Depth, d (ft)	Ponding Spread, T (ft)
31	C13	8.77	0.00	8.77	5.00	16.00	1.67%	0.32	0.27	0.32	19.17
32	C11	8.02	0.00	8.02	5.00	16.00	1.67%	0.30	0.26	0.30	18.06
33	F5	6.78	0.00	6.78	5.00	16.00	1.67%	0.27	0.24	0.27	16.13
34	F4	7.50	0.00	7.50	5.00	16.00	1.67%	0.29	0.25	0.29	17.26
35	G15	8.23	0.00	8.23	5.00	16.00	1.67%	0.31	0.26	0.31	18.38
36	G22	8.05	0.00	8.05	5.00	16.00	1.67%	0.30	0.26	0.30	18.10
37	G20	8.60	0.00	8.60	5.00	16.00	1.67%	0.32	0.27	0.32	18.93
38	G17	10.18	0.00	10.18	5.00	16.00	1.67%	0.35	0.29	0.35	21.19
39	G19	5.06	0.00	5.06	5.00	16.00	1.67%	0.22	0.23	0.22	13.27
40	J2	6.22	0.00	6.22	5.00	16.00	1.67%	0.25	0.24	0.25	15.22

Area Inlet in Sag Calculation Summary: 100 year

Drainage Area No.	Inlet No.	Q_{100} (cfs)	Qpass (cfs)	Qtotal (cfs)	Throat Height, h (in)	Inlet Length, L (ft)	Yard Cross Slope, Sx (%)	Weir Depth above FL (ft)	Orifice Depth above FL (ft)	Ponded Depth, d (ft)	Ponding Spread, T (ft)
31	C13	11.09	0.00	11.09	5.00	16.00	1.67%	0.37	0.30	0.37	22.44
32	C11	10.09	0.00	10.09	5.00	16.00	1.67%	0.35	0.29	0.35	21.06
33	F5	8.35	0.00	8.35	5.00	16.00	1.67%	0.31	0.26	0.31	18.55
34	F4	9.48	0.00	9.48	5.00	16.00	1.67%	0.34	0.28	0.34	20.20
35	G15	10.11	0.82	10.93	5.00	16.00	1.67%	0.37	0.30	0.37	22.22
36	G22	10.18	0.00	10.18	5.00	16.00	1.67%	0.35	0.29	0.35	21.19
37	G20	10.60	0.00	10.60	5.00	16.00	1.67%	0.36	0.30	0.36	21.77
38	G17	12.88	0.00	12.88	5.00	16.00	1.67%	0.41	0.34	0.41	24.80
39	G19	6.26	0.00	6.26	5.00	16.00	1.67%	0.26	0.24	0.26	15.29
40	J2	7.78	0.00	7.78	5.00	16.00	1.67%	0.30	0.26	0.30	17.70

Curb Inlets On Grade Calculation Summary: 25 year

Drainage Area No.	Inlet No.	Q_{25} (cfs)	Q_{pass} (cfs)	Q_{total} (cfs)	Slope (%)	n	Ku	Street Width (ft)	Crown Height (ft)	Inlet Depression, a (ft)	K0	K1	K2	y0 (ft)	a	b	Flow Spread, T (ft)	H1 (ft)	H2 (ft)	Qa/La (cfs/ft)	Length (ft)	Qa	Q_{pass} (cfs)	% Captured	Bypass to Inlet
1	D28	4.74	0.00	4.74	6.10%	0.015	0.560	28.00	0.500	0.42	2.85	0.50	3.03	0.30	0.0714	0.0026	5.23	0.72	0.42	0.76	10.00	7.57		100%	G15
2	D51	6.04	0.00	6.04	8.00%	0.015	0.560	35.00	0.500	0.42	2.85	0.50	3.03	0.31	0.0571	0.0016	6.85	0.73	0.42	0.77	10.00	7.69		100%	G15
3	D52	6.07	0.00	6.07	8.00%	0.015	0.560	35.00	0.500	0.42	2.85	0.50	3.03	0.32	0.0571	0.0016	6.87	0.73	0.42	0.77	10.00	7.69		100%	D51
4	D53	5.02	0.00	5.02	8.00%	0.015	0.560	35.00	0.500	0.42	2.85	0.50	3.03	0.30	0.0571	0.0016	6.33	0.71	0.42	0.75	10.00	7.49		100%	D52
5	D54	3.98	0.00	3.98	9.90%	0.015	0.560	35.00	0.500	0.42	2.85	0.50	3.03	0.26	0.0571	0.0016	5.50	0.68	0.42	0.72	10.00	7.17		100%	D53
6	D49	4.70	0.00	4.70	8.10%	0.015	0.560	35.00	0.500	0.42	2.85	0.50	3.03	0.29	0.0571	0.0016	6.14	0.71	0.42	0.74	10.00	7.42		100%	D54
7	D50	7.30	0.00	7.30	8.00%	0.015	0.560	35.00	0.500	0.42	2.85	0.50	3.03	0.34	0.0571	0.0016	7.45	0.75	0.42	0.79	10.00	7.90		100%	G15
8	D27	7.60	0.00	7.60	4.20%	0.015	0.560	28.00	0.500	0.42	2.85	0.50	3.03	0.38	0.0714	0.0026	7.08	0.79	0.42	0.83	10.00	8.35		100%	D35
10	D62	6.65	0.00	6.65	6.60%	0.015	0.560	28.00	0.500	0.42	2.85	0.50	3.03	0.34	0.0714	0.0026	5.97	0.75	0.42	0.79	10.00	7.90		100%	D63
11	D63	3.86	0.00	3.86	10.00%	0.015	0.560	28.00	0.500	0.42	2.85	0.50	3.03	0.26	0.0714	0.0026	4.34	0.68	0.42	0.71	10.00	7.14		100%	D28
12	D64	2.39	0.00	2.39	10.40%	0.015	0.560	28.00	0.500	0.42	2.85	0.50	3.03	0.22	0.0714	0.0026	3.56	0.64	0.42	0.67	10.00	6.75		100%	D28
13	D30	2.89	0.00	2.89	1.00%	0.015	0.560	28.00	0.500	0.42	2.85	0.50	3.03	0.35	0.0714	0.0026	6.28	0.76	0.42	0.80	10.00	8.03		100%	D28
14	D31	5.28	0.00	5.28	1.00%	0.015	0.560	28.00	0.500	0.42	2.85	0.50	3.03	0.42	0.0714	0.0026	8.56	0.84	0.42	0.89	10.00	8.85		100%	D30
15	D32	2.82	0.00	2.82	3.80%	0.015	0.560	28.00	0.500	0.42	2.85	0.50	3.03	0.28	0.0714	0.0026	4.65	0.69	0.42	0.73	10.00	7.29		100%	D31
16	D33	3.78	0.00	3.78	6.70%	0.015	0.560	28.00	0.500	0.42	2.85	0.50	3.03	0.28	0.0714	0.0026	4.66	0.69	0.42	0.73	10.00	7.30		100%	D32
17	D34	3.72	0.00	3.72	6.70%	0.015	0.560	28.00	0.500	0.42	2.85	0.50	3.03	0.28	0.0714	0.0026	4.64	0.69	0.42	0.73	10.00	7.29		100%	D33
18	D36	6.95	0.00	6.95	8.30%	0.015	0.560	28.00	0.500	0.42	2.85	0.50	3.03	0.33	0.0714	0.0026	5.78	0.74	0.42	0.78	10.00	7.82		100%	D34
19	D35	3.19	0.00	3.19	7.30%	0.015	0.560	28.00	0.500	0.42	2.85	0.50	3.03	0.26	0.0714	0.0026	4.28	0.68	0.42	0.71	10.00	7.11		100%	E5
21	E3	1.12	0.00	1.12	1.60%	0.015	0.560	28.00	0.500	0.42	2.85	0.50	3.03	0.24	0.0714	0.0026	3.82	0.65	0.42	0.69	10.00	6.88		100%	E5
22	D29	3.61	0.00	3.61	7.00%	0.015	0.560	28.00	0.500	0.42	2.85	0.50	3.03	0.27	0.0714	0.0026	4.54	0.69	0.42	0.72	10.00	7.24		100%	G15
24	A10	1.51	0.00	1.51	1.20%	0.015	0.560	28.00	0.500	0.42	2.85	0.50	3.03	0.27	0.0714	0.0026	4.56	0.69	0.42	0.72	10.00	7.25		100%	A12
25	A7	5.16	0.00	5.16	10.00%	0.015	0.560	28.00	0.500	0.42	2.85	0.50	3.03	0.29	0.0714	0.0026	4.89	0.70	0.42	0.74	10.00	7.41		100%	A12
26	B8	4.25	0.00	4.25	6.80%	0.015	0.560	28.00	0.500	0.42	2.85	0.50	3.03	0.29	0.0714	0.0026	4.88	0.70	0.42	0.74	10.00	7.41		100%	B10
27	B9	2.22	0.00	2.22	7.00%	0.015	0.560	28.00	0.500	0.42	2.85	0.50	3.03	0.23	0.0714	0.0026	3.74	0.65	0.42	0.68	10.00	6.84		100%	C14
28	B10	5.02	0.00	5.02	7.00%	0.015	0.560	28.00	0.500	0.42	2.85	0.50	3.03	0.30	0.0714	0.0026	5.21	0.72	0.42	0.76	10.00	7.56		100%	C9

Curb Inlets On Grade Calculation Summary: 100 year

Drainage Area No.	Inlet No.	Q_{100} (cfs)	Q_{pass} (cfs)	Q_{total} (cfs)	Slope (%)	n	Ku	Street Width (ft)	Crown Height (ft)	Inlet Depression, a (ft)	K0	K1	K2	y0 (ft)	a	b	Flow Spread, T (ft)	H1 (ft)	H2 (ft)	Qa/La (cfs/ft)	Length (ft)	Qa	Q_{pass} (cfs)	% Captured	Bypass to Inlet
1	D28	5.92	0.00	5.92	6.10%	0.015	0.560	28.00	0.500	0.42	2.85	0.50	3.03	0.33	0.0714	0.0026	5.77	0.74	0.42	0.78	10.00	7.81		100%	G15
2	D51	7.49	0.00	7.49	8.00%	0.015	0.560	35.00	0.500	0.42	2.85	0.50	3.03	0.34	0.0571	0.0016	7.54	0.75	0.42	0.79	10.00	7.93		100%	G15
3	D52	7.53	0.00	7.53	8.00%	0.015	0.560	35.00	0.500	0.42	2.85	0.50	3.03	0.34	0.0571	0.0016	7.56	0.76	0.42	0.79	10.00	7.93		100%	D51
4	D53	6.26	0.00	6.26	8.00%	0.015	0.560	35.00	0.500	0.42	2.85	0.50	3.03	0.32	0.0571	0.0016	6.96	0.74	0.42	0.77	10.00	7.72		100%	D52
5	D54	4.98	0.00	4.98	9.90%	0.015	0.560	35.00	0.500	0.42	2.85	0.50	3.03	0.29	0.0571	0.0016	6.03	0.70	0.42	0.74	10.00	7.38		100%	D53
6	D49	5.84	0.00	5.84	8.10%	0.015	0.560	35.00	0.500	0.42	2.85	0.50	3.03	0.31	0.0571	0.0016	6.74	0.73	0.42	0.76	10.00	7.64		100%	D54
7	D50	8.96	0.00	8.96	8.00%	0.015	0.560	35.00	0.500	0.42	2.85	0.50	3.03	0.36	0.0571	0.0016	8.20	0.78	0.42	0.81	10.00	8.14	0.82	91%	G15
8	D27	9.43	0.00	9.43	4.20%	0.015	0.560	28.00	0.500	0.42	2.85	0.50	3.03	0.41	0.0714	0.0026	7.92	0.82	0.42	0.86	10.00	8.65	0.78	92%	D35
10	D62	8.41	0.00	8.41	6.60%	0.015	0.560	28.00	0.500	0.42	2.85	0.50	3.03	0.36	0.0714	0.0026	6.66	0.78	0.42	0.82	10.00	8.19	0.23	97%	D63
11	D63	4.83	0.23	5.06	10.00%	0.015	0.560	28.00	0.500	0.42	2.85	0.50	3.03	0.29	0.0714	0.0026	4.85	0.70	0.42	0.74	10.00	7.39		100%	D28
12	D64	2.94	0.00	2.94	10.40%	0.015	0.560	28.00	0.500	0.42	2.85	0.50	3.03	0.24	0.0714	0.0026	3.86	0.65	0.42	0.69	10.00	6.90		100%	D28
13	D30	3.62	0.00	3.62	1.00%	0.015	0.560	28.00	0.500	0.42	2.85	0.50	3.03	0.37	0.0714	0.0026	6.99	0.79	0.42	0.83	10.00	8.31		100%	D28
14	D31	6.63	0.00	6.63	1.00%	0.015	0.560	28.00	0.500	0.42	2.85	0.50	3.03	0.46	0.0714	0.0026	9.93	0.87	0.42	0.92	10.00	9.22		100%	D30
15	D32	3.55	0.00	3.55	3.80%	0.015	0.560	28.00	0.500	0.42	2.85	0.50	3.03	0.30	0.0714	0.0026	5.12	0.72	0.42	0.75	10.00	7.52		100%	D31
16	D33	4.78	0.00	4.78	6.70%	0.015	0.560	28.00	0.500	0.42	2.85	0.50	3.03	0.30	0.0714	0.0026	5.15	0.72	0.42	0.75	10.00	7.53		100%	D32
17	D34	4.71	0.59	5.30	6.70%	0.015	0.560	28.00	0.500	0.42	2.85	0.50	3.03	0.31	0.0714	0.0026	5.38	0.73	0.42	0.76	10.00	7.64		100%	D33
18	D36	8.67	0.00	8.67	8.30%	0.015	0.560	28.00	0.500	0.42	2.85	0.50	3.03	0.35	0.0714	0.0026	6.40	0.77	0.42	0.81	10.00	8.08	0.59	93%	D34
19	D35	3.94	0.78	4.72	7.30%	0.015	0.560	28.00	0.500	0.42	2.85	0.50	3.03	0.29	0.0714	0.0026	5.03	0.71	0.42	0.75	10.00	7.48		100%	E5
21	E3	1.37	0.00	1.37	1.60%	0.015	0.560	28.00	0.500	0.42	2.85	0.50	3.03	0.25	0.0714	0.0026	4.13	0.67	0.42	0.70	10.00	7.04		100%	E5
22	D29	4.44	0.00	4.44	7.00%	0.015	0.560	28.00	0.500	0.42	2.85	0.50	3.03	0.29	0.0714	0.0026	4.94	0.71	0.42	0.74	10.00	7.44		100%	G15
24	A10	1.84	0.00	1.84	1.20%	0.015	0.560	28.00	0.500	0.42	2.85	0.50	3.03	0.29	0.0714	0.0026	4.95	0.71	0.42	0.74	10.00	7.44		100%	A12
25	A7	6.52	0.00	6.52	10.00%	0.015	0.560	28.00	0.500	0.42	2.85	0.50	3.03	0.31	0.0714	0.0026	5.40	0.73	0.42	0.76	10.00	7.65		100%	A12
26	B8	5.32	0.00	5.32	6.80%	0.015	0.560	28.00	0.500	0.42	2.85	0.50	3.03	0.31	0.0714	0.0026	5.38	0.73	0.42	0.76	10.00	7.64		100%	B10
27	B9	2.72	0.00	2.72	7.00%	0.015	0.560	28.00	0.500	0.42	2.85	0.50	3.03	0.25	0.0714	0.0026	4.05	0.66	0.42	0.70	10.00	7.00		100%	C14
28	B10	6.20	0.00	6.20	7.00%	0.015	0.560	28.00	0.500	0.42	2.85	0.50	3.03	0.32	0.0714	0.0026	5.71	0.74	0.42	0.78	10.00	7.79		100%	C9

P:\Blake Magee\Parkside Sections 11-15 & WON 5\Section 11, 12A & 15A\03_ACAD\Plans\sh2403522 pInletDAM.dwg, INLET DRAINAGE CALCULATIONS, July 18, 2025, 11:55 AM, makai.muhammad

NO. | REVISION | BY | DATE

811 Know what's below. Call before you dig.

5508 HIGHWAY 290 WEST
SUITE 150
AUSTIN, TX 78735
512.872.6696
HRGREEN.COM

TBPE NO: 16384
TBPLS NO: 10194101

HRGreen® DEVELOPMENT TX

STATE OF TEXAS
CHRISTINE N. CAMPBELL
142536
LICENSED PROFESSIONAL ENGINEER
07/03/2025

INLET DRAINAGE CALCULATIONS

PARKSIDE ON THE RIVER SECTIONS 11, 12A & 15A CONSTRUCTION PLANS
GEORGETOWN, WILLIAMSON, TEXAS

DESIGNED BY: CC
DRAWN BY: MM
CHECKED BY: SN
APPROVED BY:

2025-XX-CON

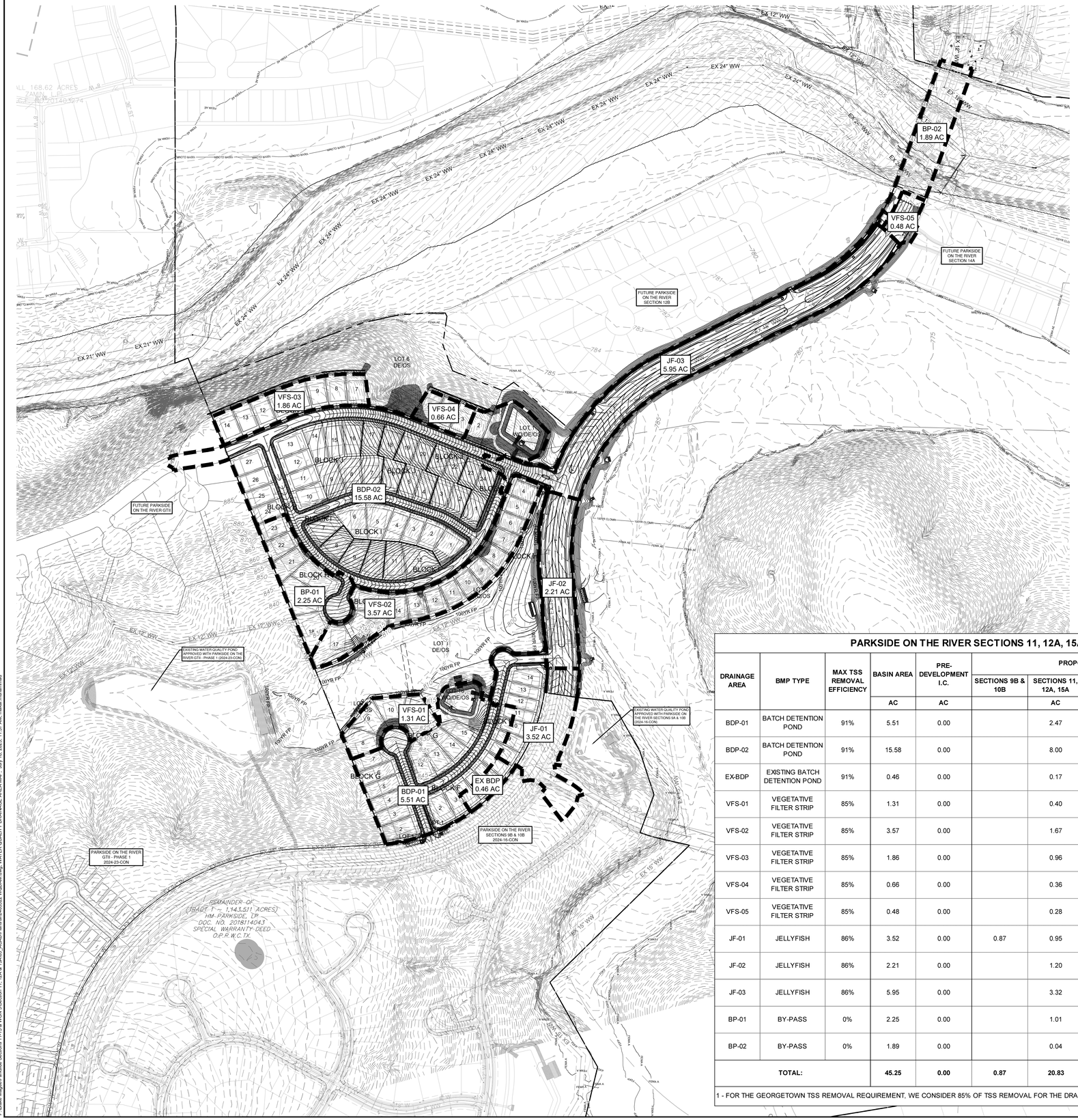

0 200′ 400′

SCALE: 1" = 200′

LEGEND

- EXISTING MINOR CONTOUR
- EXISTING MAJOR CONTOUR
- PROPOSED MINOR CONTOUR
- PROPOSED MAJOR CONTOUR
- BOUNDARY
- EASEMENT
- FEMA FLOODWAY PER FIRM# 48491C0460F & LOMR# 21-06-0115P
- FEMA AE — 100YR ATLAS 14 FEMA ZONE AE FLOODPLAIN PER FIRM# 48491C0460F & LOMR# 21-06-0115P
- FEMA A — 100YR FEMA ZONE A FLOODPLAIN PER FIRM MAP# 48491C0460F
- 100YR CLOMR — 100YR CLOMR FLOODPLAIN CASE# 15-06-2071R
- FDFP — 100YR ATLAS 14 FULLY DEVELOPED FLOODPLAIN (STANTEC DRAINAGE STUDY, SHERVIN NOOSHIN, 3/25/19) APPROVED WITH PP# 2019-5-PP
- OHWM — ORDINARY HIGH WATER MARK PER ADAMS ENVIRONMENTAL
- PROPOSED STORM LINE
- FIRE HYDRANT
- WATER VALVE
- STORM SEWER MAHNOLE
- WASTEWATER MANHOLE
- CURB INLET
- P-1 / 5.00 AC — DRAINAGE AREA NAME / DRAINAGE AREA (IN ACRES)
- DIRECTION OF FLOW
- DRAINAGE AREA

PARKSIDE ON THE RIVER SECTIONS 11, 12A, 15A AND SECTION 15B - TSS REMOVAL SUMMARY - FULLY-DEVELOPED

DRAINAGE AREA	BMP TYPE	MAX TSS REMOVAL EFFICIENCY	BASIN AREA	PRE-DEVELOPMENT I.C.	PROPOSED I.C.				POST-DEVELOPMENT I.C.		TCEQ REQUIRED 80% TSS LOAD REMOVAL	CITY OF GEORGETOWN REQUIRED 85% TSS LOAD REMOVAL	PROVIDED TSS LOAD REMOVAL	VOLUME REQUIRED	VOLUME PROVIDED
					SECTIONS 9B & 10B	SECTIONS 11, 12A, 15A	SECTION 15B	FUTURE							
			AC	AC		AC	AC	AC	AC	%	LB	LB	LB	CF	CF
BDP-01	BATCH DETENTION POND	91%	5.51	0.00		2.47			2.47	45%	2,150	2,284	2,475	26,411	35,491
BDP-02	BATCH DETENTION POND	91%	15.58	0.00		8.00		0.25	8.25	53%	7,181	7,630	7,850	55,888	66,371
EX-BDP	EXISTING BATCH DETENTION POND	91%	0.46	0.00		0.17			0.17	37%	148	157	157		
VFS-01	VEGETATIVE FILTER STRIP	85%	1.31	0.00		0.40			0.40	31%	348		390		
VFS-02	VEGETATIVE FILTER STRIP	85%	3.57	0.00		1.67			1.67	47%	1,454		1,600		
VFS-03	VEGETATIVE FILTER STRIP	85%	1.86	0.00		0.96			0.96	52%	836		917		
VFS-04	VEGETATIVE FILTER STRIP	85%	0.66	0.00		0.36			0.36	55%	313		343		
VFS-05	VEGETATIVE FILTER STRIP	85%	0.48	0.00		0.28			0.28	58%	244		266		
JF-01	JELLYFISH	86%	3.52	0.00	0.87	0.95			1.82	52%	830	882	1,582		
JF-02	JELLYFISH	86%	2.21	0.00		1.20			1.20	54%	1,044	1,110	1,101		
JF-03	JELLYFISH	86%	5.95	0.00		3.32			3.32	56%	2,890	3,070	3,089		
BP-01	BY-PASS	0%	2.25	0.00		1.01			1.01	45%	879		0		
BP-02	BY-PASS	0%	1.89	0.00		0.04	0.76		0.80	42%	696		0		
TOTAL:			45.25	0.00	0.87	20.83	0.76	0.25	22.71	50%	19,012		19,770		

1 - FOR THE GEORGETOWN TSS REMOVAL REQUIREMENT, WE CONSIDER 85% OF TSS REMOVAL FOR THE DRAINAGE AREA THAT DRAINS TOWARD THE JELLYFISH AND BATCH DETENTION PONDS.

NO.	REVISION	BY	DATE

811 Know what's below. Call before you dig.

HRGreen® DEVELOPMENT TX
5508 HIGHWAY 290 WEST
SUITE 150
AUSTIN, TX 78735
512.872.6696
HRGREEN.COM
TBPE NO: 16384
TBPLS NO: 10194101

STATE OF TEXAS
CHRISTINE N. CAMPBELL
142536
LICENSED PROFESSIONAL ENGINEER
07/15/2025

WATER QUALITY DRAINAGE AREA MAP

PARKSIDE ON THE RIVER SECTIONS 11, 12A & 15A CONSTRUCTION PLANS

GEORGETOWN, WILLIAMSON, TEXAS

DESIGNED BY: CC
DRAWN BY: MM
CHECKED BY: SN
APPROVED BY:

SHEET 77 OF 141

2025-XX-CON

P:\Blake Magee\Parkside Sections 11-15 & WOH S\Sections 11, 12A & 15A\00_ACAD\Planset\240502\2 WQDAM.dwg, WATER QUALITY DRAINAGE AREA MAP, July 16, 2025, 11:57 AM, mslak muhammad

BATCH DETENTION POND - BDP-01

Texas Commission on Environmental Quality

TSS Removal Calculations 04-20-2009 **Project Name:** Parkside Secs. 11, 12A, 15A, 15B
Date Prepared: 6/2/2025

Additional information is provided for cells with a red triangle in the upper right corner. Place the cursor over the cell.
Text shown in blue indicate location of instructions in the Technical Guidance Manual - RG-348.
Characters shown in red are data entry fields.
Characters shown in black (Bold) are calculated fields. Changes to these fields will remove the equations used in the spreadsheet.

1. The Required Load Reduction for the total project: Calculations from RG-348 Pages 3-27 to 3-30

Page 3-29 Equation 3.3: $L_M = 27.2(A_N \times P)$

where: $L_{M\ TOTAL\ PROJECT}$ = Required TSS removal resulting from the proposed development = 80% of increased load
A_N = Net increase in impervious area for the project
P = Average annual precipitation, inches

Site Data: Determine Required Load Removal Based on the Entire Project
County = Williamson
Total project area included in plan * = 56.78 acres
Predevelopment impervious area within the limits of the plan * = 0.00 acres
Total post-development impervious area within the limits of the plan * = 21.58 acres
Total post-development impervious cover fraction * = 0.38
P = 32 inches

$L_{M\ TOTAL\ PROJECT}$ = 18783 lbs.
* The values entered in these fields should be for the total project area.

Number of drainage basins / outfalls areas leaving the plan area = 13

2. Drainage Basin Parameters (This information should be provided for each basin):

Drainage Basin/Outfall Area No. = BDP-01

Total drainage basin/outfall area = 5.51 acres
Predevelopment impervious area within drainage basin/outfall area = 0.00 acres
Post-development impervious area within drainage basin/outfall area = 2.47 acres
Post-development impervious fraction within drainage basin/outfall area = 0.45
$L_{M\ THIS\ BASIN}$ = 2150 lbs.

3. Indicate the proposed BMP Code for this basin.

Proposed BMP = Batch Detention
Removal efficiency = 91 percent

4. Calculate Maximum TSS Load Removed (L_R) for this Drainage Basin by the selected BMP Type.

RG-348 Page 3-33 Equation 3.7: L_R = (BMP efficiency) x P x (A_I x 34.6 + A_P x 0.54)

where: A_C = Total On-Site drainage area in the BMP catchment area
A_I = Impervious area proposed in the BMP catchment area
A_P = Pervious area remaining in the BMP catchment area
L_R = TSS Load removed from this catchment area by the proposed BMP

A_C = 5.51 acres
A_I = 2.47 acres
A_P = 3.04 acres
L_R = 2536 lbs

5. Calculate Fraction of Annual Runoff to Treat the drainage basin / outfall area

Desired $L_{M\ THIS\ BASIN}$ = 2475 lbs.

F = 0.98

6. Calculate Capture Volume required by the BMP Type for this drainage basin / outfall area. Calculations from RG-348 Pages 3-34 to 3-36

Rainfall Depth = 3.33 inches
Post Development Runoff Coefficient = 0.33
On-site Water Quality Volume = 22009 cubic feet

Calculations from RG-348 Pages 3-36 to 3-37

Off-site area draining to BMP = 0.00 acres
Off-site Impervious cover draining to BMP = 0.00 acres
Impervious fraction of off-site area = 0
Off-site Runoff Coefficient = 0.00
Off-site Water Quality Volume = 0 cubic feet

Storage for Sediment = 4402
Total Capture Volume (required water quality volume(s) x 1.20) = 26411 cubic feet

1/2 WQV = 13205

BATCH DETENTION POND - BDP-02

Texas Commission on Environmental Quality

TSS Removal Calculations 04-20-2009 **Project Name:** Parkside Secs. 11, 12A, 15A, 15B
Date Prepared: 6/2/2025

Additional information is provided for cells with a red triangle in the upper right corner. Place the cursor over the cell.
Text shown in blue indicate location of instructions in the Technical Guidance Manual - RG-348.
Characters shown in red are data entry fields.
Characters shown in black (Bold) are calculated fields. Changes to these fields will remove the equations used in the spreadsheet.

1. The Required Load Reduction for the total project: Calculations from RG-348 Pages 3-27 to 3-30

Page 3-29 Equation 3.3: $L_M = 27.2(A_N \times P)$

where: $L_{M\ TOTAL\ PROJECT}$ = Required TSS removal resulting from the proposed development = 80% of increased load
A_N = Net increase in impervious area for the project
P = Average annual precipitation, inches

Site Data: Determine Required Load Removal Based on the Entire Project
County = Williamson
Total project area included in plan * = 56.78 acres
Predevelopment impervious area within the limits of the plan * = 0.00 acres
Total post-development impervious area within the limits of the plan * = 21.58 acres
Total post-development impervious cover fraction * = 0.38
P = 32 inches

$L_{M\ TOTAL\ PROJECT}$ = 18783 lbs.
* The values entered in these fields should be for the total project area.

Number of drainage basins / outfalls areas leaving the plan area = 13

2. Drainage Basin Parameters (This information should be provided for each basin):

Drainage Basin/Outfall Area No. = BDP-02

Total drainage basin/outfall area = 15.58 acres
Predevelopment impervious area within drainage basin/outfall area = 0.00 acres
Post-development impervious area within drainage basin/outfall area = 8.25 acres
Post-development impervious fraction within drainage basin/outfall area = 0.53
$L_{M\ THIS\ BASIN}$ = 7181 lbs.

3. Indicate the proposed BMP Code for this basin.

Proposed BMP = Batch Detention
Removal efficiency = 91 percent

4. Calculate Maximum TSS Load Removed (L_R) for this Drainage Basin by the selected BMP Type.

RG-348 Page 3-33 Equation 3.7: L_R = (BMP efficiency) x P x (A_I x 34.6 + A_P x 0.54)

where: A_C = Total On-Site drainage area in the BMP catchment area
A_I = Impervious area proposed in the BMP catchment area
A_P = Pervious area remaining in the BMP catchment area
L_R = TSS Load removed from this catchment area by the proposed BMP

A_C = 15.58 acres
A_I = 8.25 acres
A_P = 7.33 acres
L_R = 8428 lbs

5. Calculate Fraction of Annual Runoff to Treat the drainage basin / outfall area

Desired $L_{M\ THIS\ BASIN}$ = 7850 lbs.

F = 0.93

6. Calculate Capture Volume required by the BMP Type for this drainage basin / outfall area. Calculations from RG-348 Pages 3-34 to 3-36

Rainfall Depth = 2.20 inches
Post Development Runoff Coefficient = 0.37
On-site Water Quality Volume = 46573 cubic feet

Calculations from RG-348 Pages 3-36 to 3-37

Off-site area draining to BMP = 0.00 acres
Off-site Impervious cover draining to BMP = 0.00 acres
Impervious fraction of off-site area = 0
Off-site Runoff Coefficient = 0.00
Off-site Water Quality Volume = 0 cubic feet

Storage for Sediment = 9315
Total Capture Volume (required water quality volume(s) x 1.20) = 55888 cubic feet

1/2 WQV = 27944

VEGETATIVE FILTER STRIP - VFS-01

Texas Commission on Environmental Quality

TSS Removal Calculations 04-20-2009 **Project Name:** Parkside Secs. 11, 12A, 15A, 15B
Date Prepared: 6/2/2025

Additional information is provided for cells with a red triangle in the upper right corner. Place the cursor over the cell.
Text shown in blue indicate location of instructions in the Technical Guidance Manual - RG-348.
Characters shown in red are data entry fields.
Characters shown in black (Bold) are calculated fields. Changes to these fields will remove the equations used in the spreadsheet.

1. The Required Load Reduction for the total project: Calculations from RG-348 Pages 3-27 to 3-30

Page 3-29 Equation 3.3: $L_M = 27.2(A_N \times P)$

where: $L_{M\ TOTAL\ PROJECT}$ = Required TSS removal resulting from the proposed development = 80% of increased load
A_N = Net increase in impervious area for the project
P = Average annual precipitation, inches

Site Data: Determine Required Load Removal Based on the Entire Project
County = Williamson
Total project area included in plan * = 56.78 acres
Predevelopment impervious area within the limits of the plan * = 0.00 acres
Total post-development impervious area within the limits of the plan * = 21.58 acres
Total post-development impervious cover fraction * = 0.38
P = 32 inches

$L_{M\ TOTAL\ PROJECT}$ = 18783 lbs.
* The values entered in these fields should be for the total project area.

Number of drainage basins / outfalls areas leaving the plan area = 13

2. Drainage Basin Parameters (This information should be provided for each basin):

Drainage Basin/Outfall Area No. = VFS-01

Total drainage basin/outfall area = 1.31 acres
Predevelopment impervious area within drainage basin/outfall area = 0.00 acres
Post-development impervious area within drainage basin/outfall area = 0.40 acres
Post-development impervious fraction within drainage basin/outfall area = 0.31
$L_{M\ THIS\ BASIN}$ = 348 lbs.

3. Indicate the proposed BMP Code for this basin.

Proposed BMP = Vegetated Filter Strips
Removal efficiency = 85 percent

4. Calculate Maximum TSS Load Removed (L_R) for this Drainage Basin by the selected BMP Type.

RG-348 Page 3-33 Equation 3.7: L_R = (BMP efficiency) x P x (A_I x 34.6 + A_P x 0.54)

where: A_C = Total On-Site drainage area in the BMP catchment area
A_I = Impervious area proposed in the BMP catchment area
A_P = Pervious area remaining in the BMP catchment area
L_R = TSS Load removed from this catchment area by the proposed BMP

A_C = 1.31 acres
A_I = 0.40 acres
A_P = 0.91 acres
L_R = 390 lbs

5. Calculate Fraction of Annual Runoff to Treat the drainage basin / outfall area

Desired $L_{M\ THIS\ BASIN}$ = 390 lbs.

F = 1.00

VEGETATIVE FILTER STRIP - VFS-02

Texas Commission on Environmental Quality

TSS Removal Calculations 04-20-2009 **Project Name:** Parkside Secs. 11, 12A, 15A, 15B
Date Prepared: 6/2/2025

Additional information is provided for cells with a red triangle in the upper right corner. Place the cursor over the cell.
Text shown in blue indicate location of instructions in the Technical Guidance Manual - RG-348.
Characters shown in red are data entry fields.
Characters shown in black (Bold) are calculated fields. Changes to these fields will remove the equations used in the spreadsheet.

1. The Required Load Reduction for the total project: Calculations from RG-348 Pages 3-27 to 3-30

Page 3-29 Equation 3.3: $L_M = 27.2(A_N \times P)$

where: $L_{M\ TOTAL\ PROJECT}$ = Required TSS removal resulting from the proposed development = 80% of increased load
A_N = Net increase in impervious area for the project
P = Average annual precipitation, inches

Site Data: Determine Required Load Removal Based on the Entire Project
County = Williamson
Total project area included in plan * = 56.78 acres
Predevelopment impervious area within the limits of the plan * = 0.00 acres
Total post-development impervious area within the limits of the plan * = 21.58 acres
Total post-development impervious cover fraction * = 0.38
P = 32 inches

$L_{M\ TOTAL\ PROJECT}$ = 18783 lbs.
* The values entered in these fields should be for the total project area.

Number of drainage basins / outfalls areas leaving the plan area = 13

2. Drainage Basin Parameters (This information should be provided for each basin):

Drainage Basin/Outfall Area No. = VFS-02

Total drainage basin/outfall area = 3.57 acres
Predevelopment impervious area within drainage basin/outfall area = 0.00 acres
Post-development impervious area within drainage basin/outfall area = 1.67 acres
Post-development impervious fraction within drainage basin/outfall area = 0.47
$L_{M\ THIS\ BASIN}$ = 1454 lbs.

3. Indicate the proposed BMP Code for this basin.

Proposed BMP = Vegetated Filter Strips
Removal efficiency = 85 percent

4. Calculate Maximum TSS Load Removed (L_R) for this Drainage Basin by the selected BMP Type.

RG-348 Page 3-33 Equation 3.7: L_R = (BMP efficiency) x P x (A_I x 34.6 + A_P x 0.54)

where: A_C = Total On-Site drainage area in the BMP catchment area
A_I = Impervious area proposed in the BMP catchment area
A_P = Pervious area remaining in the BMP catchment area
L_R = TSS Load removed from this catchment area by the proposed BMP

A_C = 3.57 acres
A_I = 1.67 acres
A_P = 1.90 acres
L_R = 1600 lbs

5. Calculate Fraction of Annual Runoff to Treat the drainage basin / outfall area

Desired $L_{M\ THIS\ BASIN}$ = 1600 lbs.

F = 1.00

VEGETATIVE FILTER STRIP - VFS-03

Texas Commission on Environmental Quality

TSS Removal Calculations 04-20-2009 **Project Name:** Parkside Secs. 11, 12A, 15A, 15B
Date Prepared: 6/2/2025

Additional information is provided for cells with a red triangle in the upper right corner. Place the cursor over the cell.
Text shown in blue indicate location of instructions in the Technical Guidance Manual - RG-348.
Characters shown in red are data entry fields.
Characters shown in black (Bold) are calculated fields. Changes to these fields will remove the equations used in the spreadsheet.

1. The Required Load Reduction for the total project: Calculations from RG-348 Pages 3-27 to 3-30

Page 3-29 Equation 3.3: $L_M = 27.2(A_N \times P)$

where: $L_{M\ TOTAL\ PROJECT}$ = Required TSS removal resulting from the proposed development = 80% of increased load
A_N = Net increase in impervious area for the project
P = Average annual precipitation, inches

Site Data: Determine Required Load Removal Based on the Entire Project
County = Williamson
Total project area included in plan * = 56.78 acres
Predevelopment impervious area within the limits of the plan * = 0.00 acres
Total post-development impervious area within the limits of the plan * = 21.58 acres
Total post-development impervious cover fraction * = 0.38
P = 32 inches

$L_{M\ TOTAL\ PROJECT}$ = 18783 lbs.
* The values entered in these fields should be for the total project area.

Number of drainage basins / outfalls areas leaving the plan area = 13

2. Drainage Basin Parameters (This information should be provided for each basin):

Drainage Basin/Outfall Area No. = VFS-03

Total drainage basin/outfall area = 1.86 acres
Predevelopment impervious area within drainage basin/outfall area = 0.00 acres
Post-development impervious area within drainage basin/outfall area = 0.96 acres
Post-development impervious fraction within drainage basin/outfall area = 0.52
$L_{M\ THIS\ BASIN}$ = 836 lbs.

3. Indicate the proposed BMP Code for this basin.

Proposed BMP = Vegetated Filter Strips
Removal efficiency = 85 percent

4. Calculate Maximum TSS Load Removed (L_R) for this Drainage Basin by the selected BMP Type.

RG-348 Page 3-33 Equation 3.7: L_R = (BMP efficiency) x P x (A_I x 34.6 + A_P x 0.54)

where: A_C = Total On-Site drainage area in the BMP catchment area
A_I = Impervious area proposed in the BMP catchment area
A_P = Pervious area remaining in the BMP catchment area
L_R = TSS Load removed from this catchment area by the proposed BMP

A_C = 1.86 acres
A_I = 0.96 acres
A_P = 0.90 acres
L_R = 917 lbs

5. Calculate Fraction of Annual Runoff to Treat the drainage basin / outfall area

Desired $L_{M\ THIS\ BASIN}$ = 917 lbs.

F = 1.00

VEGETATIVE FILTER STRIP - VFS-04

Texas Commission on Environmental Quality

TSS Removal Calculations 04-20-2009 **Project Name:** Parkside Secs. 11, 12A, 15A, 15B
Date Prepared: 6/2/2025

Additional information is provided for cells with a red triangle in the upper right corner. Place the cursor over the cell.
Text shown in blue indicate location of instructions in the Technical Guidance Manual - RG-348.
Characters shown in red are data entry fields.
Characters shown in black (Bold) are calculated fields. Changes to these fields will remove the equations used in the spreadsheet.

1. The Required Load Reduction for the total project: Calculations from RG-348 Pages 3-27 to 3-30

Page 3-29 Equation 3.3: $L_M = 27.2(A_N \times P)$

where: $L_{M\ TOTAL\ PROJECT}$ = Required TSS removal resulting from the proposed development = 80% of increased load
A_N = Net increase in impervious area for the project
P = Average annual precipitation, inches

Site Data: Determine Required Load Removal Based on the Entire Project
County = Williamson
Total project area included in plan * = 56.78 acres
Predevelopment impervious area within the limits of the plan * = 0.00 acres
Total post-development impervious area within the limits of the plan * = 21.58 acres
Total post-development impervious cover fraction * = 0.38
P = 32 inches

$L_{M\ TOTAL\ PROJECT}$ = 18783 lbs.
* The values entered in these fields should be for the total project area.

Number of drainage basins / outfalls areas leaving the plan area = 13

2. Drainage Basin Parameters (This information should be provided for each basin):

Drainage Basin/Outfall Area No. = VFS-04

Total drainage basin/outfall area = 0.66 acres
Predevelopment impervious area within drainage basin/outfall area = 0.00 acres
Post-development impervious area within drainage basin/outfall area = 0.36 acres
Post-development impervious fraction within drainage basin/outfall area = 0.55
$L_{M\ THIS\ BASIN}$ = 313 lbs.

3. Indicate the proposed BMP Code for this basin.

Proposed BMP = Vegetated Filter Strips
Removal efficiency = 85 percent

4. Calculate Maximum TSS Load Removed (L_R) for this Drainage Basin by the selected BMP Type.

RG-348 Page 3-33 Equation 3.7: L_R = (BMP efficiency) x P x (A_I x 34.6 + A_P x 0.54)

where: A_C = Total On-Site drainage area in the BMP catchment area
A_I = Impervious area proposed in the BMP catchment area
A_P = Pervious area remaining in the BMP catchment area
L_R = TSS Load removed from this catchment area by the proposed BMP

A_C = 0.66 acres
A_I = 0.36 acres
A_P = 0.30 acres
L_R = 343 lbs

5. Calculate Fraction of Annual Runoff to Treat the drainage basin / outfall area

Desired $L_{M\ THIS\ BASIN}$ = 343 lbs.

F = 1.00

VEGETATIVE FILTER STRIP - VFS-05

Texas Commission on Environmental Quality

TSS Removal Calculations 04-20-2009 **Project Name:** Parkside Secs. 11, 12A, 15A, 15B
Date Prepared: 6/2/2025

Additional information is provided for cells with a red triangle in the upper right corner. Place the cursor over the cell.
Text shown in blue indicate location of instructions in the Technical Guidance Manual - RG-348.
Characters shown in red are data entry fields.
Characters shown in black (Bold) are calculated fields. Changes to these fields will remove the equations used in the spreadsheet.

1. The Required Load Reduction for the total project: Calculations from RG-348 Pages 3-27 to 3-30

Page 3-29 Equation 3.3: $L_M = 27.2(A_N \times P)$

where: $L_{M\ TOTAL\ PROJECT}$ = Required TSS removal resulting from the proposed development = 80% of increased load
A_N = Net increase in impervious area for the project
P = Average annual precipitation, inches

Site Data: Determine Required Load Removal Based on the Entire Project
County = Williamson
Total project area included in plan * = 56.78 acres
Predevelopment impervious area within the limits of the plan * = 0.00 acres
Total post-development impervious area within the limits of the plan * = 21.58 acres
Total post-development impervious cover fraction * = 0.38
P = 32 inches

$L_{M\ TOTAL\ PROJECT}$ = 18783 lbs.
* The values entered in these fields should be for the total project area.

Number of drainage basins / outfalls areas leaving the plan area = 13

2. Drainage Basin Parameters (This information should be provided for each basin):

Drainage Basin/Outfall Area No. = VFS-05

Total drainage basin/outfall area = 0.48 acres
Predevelopment impervious area within drainage basin/outfall area = 0.00 acres
Post-development impervious area within drainage basin/outfall area = 0.28 acres
Post-development impervious fraction within drainage basin/outfall area = 0.58
$L_{M\ THIS\ BASIN}$ = 244 lbs.

3. Indicate the proposed BMP Code for this basin.

Proposed BMP = Vegetated Filter Strips
Removal efficiency = 85 percent

4. Calculate Maximum TSS Load Removed (L_R) for this Drainage Basin by the selected BMP Type.

RG-348 Page 3-33 Equation 3.7: L_R = (BMP efficiency) x P x (A_I x 34.6 + A_P x 0.54)

where: A_C = Total On-Site drainage area in the BMP catchment area
A_I = Impervious area proposed in the BMP catchment area
A_P = Pervious area remaining in the BMP catchment area
L_R = TSS Load removed from this catchment area by the proposed BMP

A_C = 0.48 acres
A_I = 0.28 acres
A_P = 0.20 acres
L_R = 266 lbs

5. Calculate Fraction of Annual Runoff to Treat the drainage basin / outfall area

Desired $L_{M\ THIS\ BASIN}$ = 266 lbs.

F = 1.00

NO.	REVISION	BY	DATE

Know what's below. Call before you dig.

5508 HIGHWAY 290 WEST
SUITE 150
AUSTIN, TX 78735
512.872.6696
HRGREEN.COM
TBPE NO: 16384
TBPLS NO: 10194101
HRGreen® DEVELOPMENT TX

STATE OF TEXAS
CHRISTINE N. CAMPBELL
142536
LICENSED PROFESSIONAL ENGINEER
07/03/2025

WATER QUALITY CALCULATIONS

PARKSIDE ON THE RIVER SECTIONS 11, 12A & 15A CONSTRUCTION PLANS GEORGETOWN, WILLIAMSON, TEXAS

DESIGNED BY: CC
DRAWN BY: MM
CHECKED BY: SN
APPROVED BY:

SHEET 78 OF 141

2025-XX-CON

P:\Blake Magee\Parkside Sections 11-15 & WON 5\Section 11, 12A & 15A\03_ACAD\Plans\sh2403522 WQDAM.dwg, WATER QUALITY CALCULATIONS, July 18, 2025, 11:57 AM, makai.muhammad

JELLYFISH - JF-01

Contech Engineered Solutions Calculations for Texas Commission on Environmental Quality
TSS Removal Calculations

Project Name: **Parkside on the River**
Date Prepared: **6/4/2025**

1. The Required Load Reduction for the total project:

Calculations from RG-348 — Page 3-29 Equation 3.3: $L_M = 27.2(A_N \times P)$
Pages 3-27 to 3-30

$L_{M\ TOTAL\ PROJECT}$ = Required TSS removal resulting from the proposed development = 80% of increased load
A_N = Net increase in impervious area for the project
P = Average annual precipitation, inches

Site Data: Determine Required Load Removal Based on the Entire Project

County =	**Williamson**	
Total project area included in plan * =	56.78	acres
Predevelopment impervious area within the limits of the plan * =	**0.00**	acres
Total post-development impervious area within the limits of the plan* =	21.58	acres
Total post-development impervious cover fraction * =	0.38	
P =	**32**	inches
$L_{M\ TOTAL\ PROJECT}$ =	18783	lbs.
Number of drainage basins / outfalls areas leaving the plan area =	**13**	

2. Drainage Basin Parameters (This information should be provided for each basin):

Drainage Basin/Outfall Area No. =	**JF-01**	
Total drainage basin/outfall area =	**3.52**	acres
Predevelopment impervious area within drainage basin/outfall area =	**0.00**	acres
Post-development impervious area within drainage basin/outfall area =	**1.82**	acres
Post-development impervious fraction within drainage basin/outfall area =	**0.52**	
$L_{M\ THIS\ BASIN}$ =	**1584**	lbs.

3. Indicate the proposed BMP Code for this basin.

Proposed BMP =	**JF**	abbreviation
Removal efficiency =	**86**	percent

4. Calculate Maximum TSS Load Removed (L_R) for this Drainage Basin by the selected BMP Type.

RG-348 Page 3-33 Equation 3.7:
LR = (BMP efficiency) x P x (A_I x 34.6 + A_P x 0.54)

A_C = Total On-Site drainage area in the BMP catchment area
A_I = Impervious area proposed in the BMP catchment area
A_P = Pervious area remaining in the BMP catchment area
L_R = TSS Load removed from this catchment area by the proposed BMP

A_C =	**3.52**	acres
A_I =	**1.82**	acres
A_P =	**1.70**	acres
L_R =	**1758**	lbs.

5. Calculate Fraction of Annual Runoff to Treat the drainage basin / outfall area

Desired $L_{M\ THIS\ BASIN}$ =	**1582**	lbs.
F =	**0.90**	

6. Calculate Treated Flow required by the BMP Type for this drainage basin / outfall area.

Calculations from RG-348
Pages Section 3.2.22

Offsite area draining to BMP =	**0.00**	acres
Offsite impervious cover draining to BMP =	**0.00**	acres
Rainfall Intensity =	**1.10**	inches per hour
Effective Area =	**1.69**	acres
Cartridge Length =	**54**	inches
Peak Treatment Flow Required =	**1.87**	cubic feet per second

7. Jellyfish
Designed as Required in RG-348
Section 3.2.22

Flow Through Jellyfish Size	**Vault**	
Jellyfish Size for Flow-Based Configuration =	**JFPD0806-10-2**	
Jellyfish Treatment Flow Rate =	**1.96**	cfs

JELLYFISH - JF-02

Contech Engineered Solutions Calculations for Texas Commission on Environmental Quality
TSS Removal Calculations

Project Name: **Parkside on the River**
Date Prepared: **6/4/2025**

1. The Required Load Reduction for the total project:

Calculations from RG-348 — Page 3-29 Equation 3.3: $L_M = 27.2(A_N \times P)$
Pages 3-27 to 3-30

$L_{M\ TOTAL\ PROJECT}$ = Required TSS removal resulting from the proposed development = 80% of increased load
A_N = Net increase in impervious area for the project
P = Average annual precipitation, inches

Site Data: Determine Required Load Removal Based on the Entire Project

County =	**Williamson**	
Total project area included in plan * =	56.78	acres
Predevelopment impervious area within the limits of the plan * =	**0.00**	acres
Total post-development impervious area within the limits of the plan* =	21.58	acres
Total post-development impervious cover fraction * =	0.38	
P =	**32**	inches
$L_{M\ TOTAL\ PROJECT}$ =	18783	lbs.
Number of drainage basins / outfalls areas leaving the plan area =	**13**	

2. Drainage Basin Parameters (This information should be provided for each basin):

Drainage Basin/Outfall Area No. =	**JF-02**	
Total drainage basin/outfall area =	**2.21**	acres
Predevelopment impervious area within drainage basin/outfall area =	**0.00**	acres
Post-development impervious area within drainage basin/outfall area =	**1.20**	acres
Post-development impervious fraction within drainage basin/outfall area =	**0.54**	
$L_{M\ THIS\ BASIN}$ =	**1044**	lbs.

3. Indicate the proposed BMP Code for this basin.

Proposed BMP =	**JF**	abbreviation
Removal efficiency =	**86**	percent

4. Calculate Maximum TSS Load Removed (L_R) for this Drainage Basin by the selected BMP Type.

RG-348 Page 3-33 Equation 3.7:
LR = (BMP efficiency) x P x (A_I x 34.6 + A_P x 0.54)

A_C = Total On-Site drainage area in the BMP catchment area
A_I = Impervious area proposed in the BMP catchment area
A_P = Pervious area remaining in the BMP catchment area
L_R = TSS Load removed from this catchment area by the proposed BMP

A_C =	**2.21**	acres
A_I =	**1.20**	acres
A_P =	**1.01**	acres
L_R =	**1158**	lbs.

5. Calculate Fraction of Annual Runoff to Treat the drainage basin / outfall area

Desired $L_{M\ THIS\ BASIN}$ =	**1101**	lbs.
F =	**0.95**	

6. Calculate Treated Flow required by the BMP Type for this drainage basin / outfall area.

Calculations from RG-348
Pages Section 3.2.22

Offsite area draining to BMP =	**0.00**	acres
Offsite impervious cover draining to BMP =	**0.00**	acres
Rainfall Intensity =	**1.60**	inches per hour
Effective Area =	**1.11**	acres
Cartridge Length =	**54**	inches
Peak Treatment Flow Required =	**1.79**	cubic feet per second

7. Jellyfish
Designed as Required in RG-348
Section 3.2.22

Flow Through Jellyfish Size	**Vault**	
Jellyfish Size for Flow-Based Configuration =	**JFPD0806-10-2**	
Jellyfish Treatment Flow Rate =	**1.96**	cfs

JELLYFISH - JF-03

Contech Engineered Solutions Calculations for Texas Commission on Environmental Quality
TSS Removal Calculations

Project Name: **Parkside on the River**
Date Prepared: **6/4/2025**

1. The Required Load Reduction for the total project:

Calculations from RG-348 — Page 3-29 Equation 3.3: $L_M = 27.2(A_N \times P)$
Pages 3-27 to 3-30

$L_{M\ TOTAL\ PROJECT}$ = Required TSS removal resulting from the proposed development = 80% of increased load
A_N = Net increase in impervious area for the project
P = Average annual precipitation, inches

Site Data: Determine Required Load Removal Based on the Entire Project

County =	**Williamson**	
Total project area included in plan * =	56.78	acres
Predevelopment impervious area within the limits of the plan * =	**0.00**	acres
Total post-development impervious area within the limits of the plan* =	21.58	acres
Total post-development impervious cover fraction * =	0.38	
P =	**32**	inches
$L_{M\ TOTAL\ PROJECT}$ =	18783	lbs.
Number of drainage basins / outfalls areas leaving the plan area =	**13**	

2. Drainage Basin Parameters (This information should be provided for each basin):

Drainage Basin/Outfall Area No. =	**JF-03**	
Total drainage basin/outfall area =	**5.95**	acres
Predevelopment impervious area within drainage basin/outfall area =	**0.00**	acres
Post-development impervious area within drainage basin/outfall area =	**3.32**	acres
Post-development impervious fraction within drainage basin/outfall area =	**0.56**	
$L_{M\ THIS\ BASIN}$ =	**2890**	lbs.

3. Indicate the proposed BMP Code for this basin.

Proposed BMP =	**JF**	abbreviation
Removal efficiency =	**86**	percent

4. Calculate Maximum TSS Load Removed (L_R) for this Drainage Basin by the selected BMP Type.

RG-348 Page 3-33 Equation 3.7:
LR = (BMP efficiency) x P x (A_I x 34.6 + A_P x 0.54)

A_C = Total On-Site drainage area in the BMP catchment area
A_I = Impervious area proposed in the BMP catchment area
A_P = Pervious area remaining in the BMP catchment area
L_R = TSS Load removed from this catchment area by the proposed BMP

A_C =	**5.95**	acres
A_I =	**3.32**	acres
A_P =	**2.63**	acres
L_R =	**3200**	lbs.

5. Calculate Fraction of Annual Runoff to Treat the drainage basin / outfall area

Desired $L_{M\ THIS\ BASIN}$ =	**3089**	lbs.
F =	**0.97**	

6. Calculate Treated Flow required by the BMP Type for this drainage basin / outfall area.

Calculations from RG-348
Pages Section 3.2.22

Offsite area draining to BMP =	**0.00**	acres
Offsite impervious cover draining to BMP =	**0.00**	acres
Rainfall Intensity =	**2.00**	inches per hour
Effective Area =	**3.07**	acres
Cartridge Length =	**54**	inches
Peak Treatment Flow Required =	**6.18**	cubic feet per second

7. Jellyfish
Designed as Required in RG-348
Section 3.2.22

Flow Through Jellyfish Size	**Vault**	
Jellyfish Size for Flow-Based Configuration =	**JFPD0816-32-7**	
Jellyfish Treatment Flow Rate =	**6.33**	cfs

BYPASS - BP-01

Texas Commission on Environmental Quality

TSS Removal Calculations 04-20-2009 — **Project Name:** **Parkside Secs. 11, 12A, 15A, 15B**
Date Prepared: **6/2/2025**

Additional information is provided for cells with a red triangle in the upper right corner. Place the cursor over the cell.
Text shown in blue indicate location of instructions in the Technical Guidance Manual - RG-348.
Characters shown in red are data entry fields.
Characters shown in black (Bold) are calculated fields. Changes to these fields will remove the equations used in the spreadsheet.

1. The Required Load Reduction for the total project: Calculations from RG-348 — Pages 3-27 to 3-30

Page 3-29 Equation 3.3: $L_M = 27.2(A_N \times P)$

where: $L_{M\ TOTAL\ PROJECT}$ = Required TSS removal resulting from the proposed development = 80% of increased load
A_N = Net increase in impervious area for the project
P = Average annual precipitation, inches

Site Data: Determine Required Load Removal Based on the Entire Project

County =	**Williamson**	
Total project area included in plan * =	**56.78**	acres
Predevelopment impervious area within the limits of the plan * =	**0.00**	acres
Total post-development impervious area within the limits of the plan * =	**21.58**	acres
Total post-development impervious cover fraction * =	**0.38**	
P =	32	inches
$L_{M\ TOTAL\ PROJECT}$ =	**18783**	lbs.

*** The values entered in these fields should be for the total project area.**

Number of drainage basins / outfalls areas leaving the plan area =	**13**

2. Drainage Basin Parameters (This information should be provided for each basin):

Drainage Basin/Outfall Area No. =	**BP-01**	
Total drainage basin/outfall area =	**2.25**	acres
Predevelopment impervious area within drainage basin/outfall area =	**0.00**	acres
Post-development impervious area within drainage basin/outfall area =	**1.01**	acres
Post-development impervious fraction within drainage basin/outfall area =	**0.45**	
$L_{M\ THIS\ BASIN}$ =	**879**	lbs.

BYPASS - BP-02

Texas Commission on Environmental Quality

TSS Removal Calculations 04-20-2009 — **Project Name:** **Parkside Secs. 11, 12A, 15A, 15B**
Date Prepared: **6/2/2025**

Additional information is provided for cells with a red triangle in the upper right corner. Place the cursor over the cell.
Text shown in blue indicate location of instructions in the Technical Guidance Manual - RG-348.
Characters shown in red are data entry fields.
Characters shown in black (Bold) are calculated fields. Changes to these fields will remove the equations used in the spreadsheet.

1. The Required Load Reduction for the total project: Calculations from RG-348 — Pages 3-27 to 3-30

Page 3-29 Equation 3.3: $L_M = 27.2(A_N \times P)$

where: $L_{M\ TOTAL\ PROJECT}$ = Required TSS removal resulting from the proposed development = 80% of increased load
A_N = Net increase in impervious area for the project
P = Average annual precipitation, inches

Site Data: Determine Required Load Removal Based on the Entire Project

County =	**Williamson**	
Total project area included in plan * =	**56.78**	acres
Predevelopment impervious area within the limits of the plan * =	**0.00**	acres
Total post-development impervious area within the limits of the plan * =	**21.58**	acres
Total post-development impervious cover fraction * =	**0.38**	
P =	32	inches
$L_{M\ TOTAL\ PROJECT}$ =	**18783**	lbs.

*** The values entered in these fields should be for the total project area.**

Number of drainage basins / outfalls areas leaving the plan area =	**13**

2. Drainage Basin Parameters (This information should be provided for each basin):

Drainage Basin/Outfall Area No. =	**BP-02**	
Total drainage basin/outfall area =	**1.89**	acres
Predevelopment impervious area within drainage basin/outfall area =	**0.00**	acres
Post-development impervious area within drainage basin/outfall area =	**0.80**	acres
Post-development impervious fraction within drainage basin/outfall area =	**0.42**	
$L_{M\ THIS\ BASIN}$ =	**696**	lbs.

P:\Blake Magee\Parkside Sections 11-15 & WON 5\Section 11, 12A & 15A\03_ACAD\Plans\sh2403522 WQDAM.dwg, WATER QUALITY CALCULATIONS 2, July 18, 2025, 11:57 AM, makai.muhammad

NO. | REVISION | BY | DATE

811 Know what's below. Call before you dig.

HRGreen® DEVELOPMENT TX
5508 HIGHWAY 290 WEST
SUITE 150
AUSTIN, TX 78735
512.872.6696
HRGREEN.COM
TBPE NO: 16384
TBPLS NO: 10194101

STATE OF TEXAS — CHRISTINE N. CAMPBELL — 142536 — LICENSED PROFESSIONAL ENGINEER
07/03/2025

WATER QUALITY CALCULATIONS 2

PARKSIDE ON THE RIVER
SECTIONS 11, 12A & 15A
CONSTRUCTION PLANS
GEORGETOWN, WILLIAMSON, TEXAS

DESIGNED BY: CC
DRAWN BY: MM
CHECKED BY: SN
APPROVED BY:

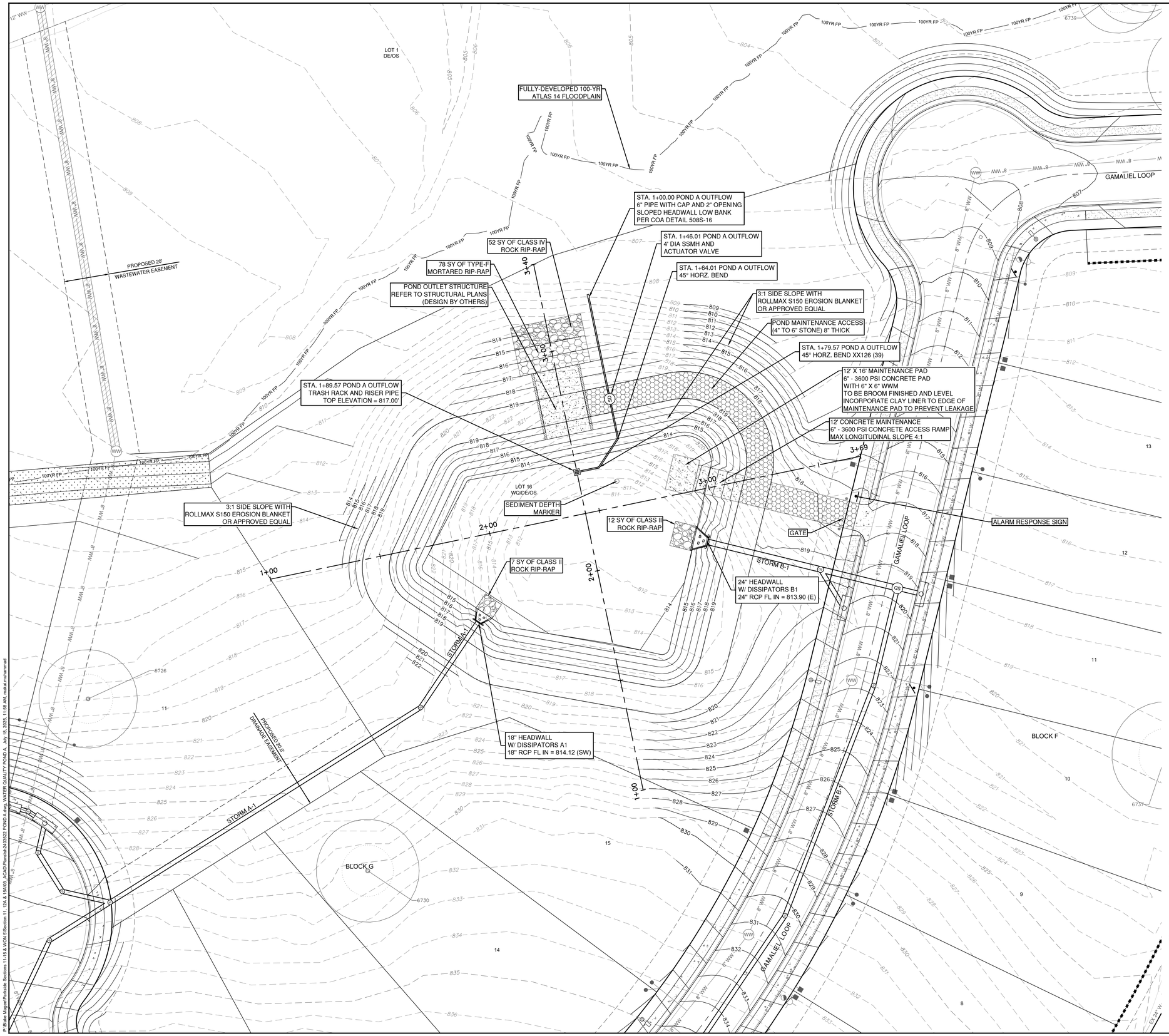

GENERAL NOTES:

1. CONTRACTOR TO UTILIZE A TEMPORARY CONSTRUCTION PUMP TO DISCHARGE WATER FROM THE POND AFTER A RAINFALL EVENT, DURING CONSTRUCTION. PUMP IS TO DISCHARGE UPSTREAM OF PROPOSED ROCK BERM LOCATED BEFORE THE CREEK BED. AT NO TIME SHALL THE PUMP BE DISCHARGED DIRECTLY INTO STORMSEWER SYSTEM BEFORE CROSSING A ROCK BERM.
2. ALL MUD, DIRT, ROCKS, DEBRIS, ETC., SPILLED, TRACKED OR OTHERWISE DEPOSITED ON EXISTING PAVED STREETS, DRIVES, AND AREAS USED BY THE PUBLIC SHALL BE CLEANED UP IMMEDIATELY. CONTRACTOR WILL CLEAN UP SPOILS THAT MIGRATE ONTO ROADS A MINIMUM OF ONCE DAILY.
3. ALL DISTURBED AREAS TO BE REVEGETATED PRIOR TO ACCEPTANCE.
4. IF DISTURBED AREA IS NOT TO BE WORKED ON FOR MORE THAN 14 DAYS, DISTURBED AREA NEEDS TO BE STABILIZED BY REVEGETATION, MULCH, TARP OR REVEGETATION MATTING.
5. THE STABILIZED CONSTRUCTION ENTRANCE SHALL BE MAINTAINED IN A CONDITION THAT WILL PREVENT TRACKING OR FLOWING OF SEDIMENT INTO PUBLIC ROADWAY.
6. THE ENVIRONMENTAL INSPECTOR HAS THE AUTHORITY TO ADD AND/OR MODIFY EROSION/SEDIMENTATION CONTROLS ON SITE TO KEEP PROJECT IN COMPLIANCE WITH THE CITY OF GEORGETOWN RULES AND REGULATIONS. HOWEVER, MODIFICATIONS TO THE ENGINEERING DESIGN AND FUNCTIONS OF THE EROSION AND SEDIMENTATION CONTROLS SYSTEMS CONTAINED HERE IN IS STRICTLY FORBIDDEN WITHOUT THE EXPRESSED WRITTEN CONSENT OF THE SIGNING PROJECT PROFESSIONAL ENGINEER (TAC22 §137.3 AND §137.37).
7. CONTRACTOR SHALL UTILIZE DUST CONTROL MEASURES DURING SITE CONSTRUCTION SUCH AS IRRIGATION TRUCKS AND MULCHING AS PER 1.4.5(A) OR AS DIRECTED BY THE ENVIRONMENTAL INSPECTOR.
8. ALL POND BOTTOMS, SIDE SLOPES, AND EARTHEN EMBANKMENTS SHALL BE COMPACTED TO 95% MAXIMUM DENSITY, IN ACCORDANCE WITH THE CITY OF GEORGETOWN STANDARD SPECIFICATIONS AND PER GEOTECHNICAL ENGINEER'S RECOMMENDATION. ALLOW ADEQUATE VOLUME FOR TOPSOIL TO SUPPORT VEGETATION.
9. GRADING WITHIN THE 1/2 CRITICAL ROOT ZONE OF PROTECTED TREES, IDENTIFIED BY A HATCH PATTERN ON THESE PLANS, SHALL BE LIMITED TO LESS THAN 12 INCHES OF DISTURBANCE. NO GRADING ACTIVITY WITH DISTURBANCE OF MORE THAN 6 INCHES IS ALLOWED IN THE 1/4 CRITICAL ROOT ZONE.
10. GRADING WORK WITHIN THE 1/2 CRITICAL ROOT ZONE OF ALL PROTECTED TREES SHALL BE DONE BY HAND OR WITH RUBBER TIRED EQUIPMENT.
11. ALL RETAINING WALLS GREATER THAN FOUR FEET IN HEIGHT MEASURED FROM THE BOTTOM OF THE FOOTING TO THE TOP OF THE WALL SHALL BE DESIGNED BY A PROFESSIONAL ENGINEER.

DEWATERING PLAN NOTES:

1. CONTRACTOR SHALL MAINTAIN THE DEWATERING SYSTEM TO ENSURE PERFORMANCE. IF THE DEWATERING SYSTEM IS NOT PERFORMING, THE CONTRACTOR MUST IMMEDIATELY MAKE THE NECESSARY MODIFICATIONS, FOLLOWING THE ENVIRONMENTAL INSPECTOR'S DIRECTION TO ENSURE ADEQUATE SYSTEM PERFORMANCE. CONTRACTOR SHALL PROVIDE THE DEWATERING PLAN AT THE PRECONSTRUCTION MEETING.
2. THE SKIMMER IS TO BE USED DURING CONSTRUCTION AND SHALL BE REMOVED AFTER COMPLETING CONSTRUCTION OF THE BATCH DETENTION POND.

NO | REVISION | BY | DATE

Know what's below. Call before you dig.

5508 HIGHWAY 290 WEST
SUITE 150
AUSTIN, TX 78735
512.872.6696
HRGREEN.COM

TBPE NO: 16384
TBPLS NO: 10194101

HRGreen® DEVELOPMENT TX

STATE OF TEXAS
CHRISTINE N. CAMPBELL
142536
LICENSED PROFESSIONAL ENGINEER
07/15/2025

WATER QUALITY POND A

PARKSIDE ON THE RIVER
SECTIONS 11, 12A & 15A
CONSTRUCTION PLANS
GEORGETOWN, WILLIAMSON, TEXAS

DESIGNED BY: CC
DRAWN BY: MM
CHECKED BY: SN
APPROVED BY:

SHEET 80 OF 141

2025-XX-CON

P:\Plan Merge\Parkside Sections 11-15 & WQA S\Section 11, 12A & 15A\03_ACAD\Plans\240503\2 POND A.dwg, WATER QUALITY POND A, July 18, 2025, 11:58 AM, makar.muhammad

SECTION A-A

POND A OUTFLOW

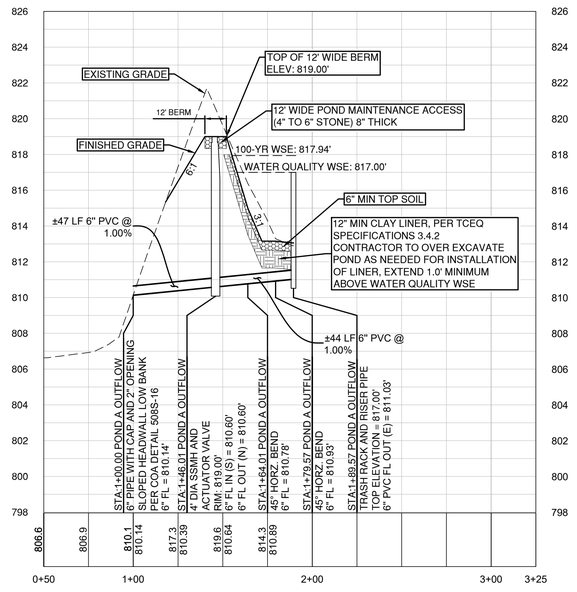

SECTION B-B

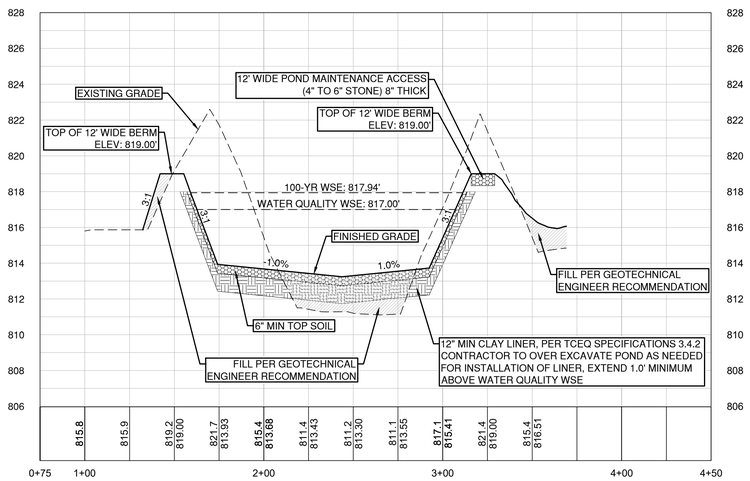

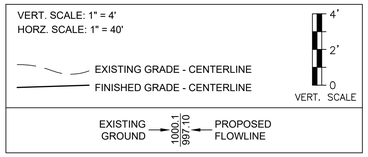

0 20' 40'

SCALE: 1" = 20'

Pond Volume

Elevation	Area		Volume		Cumulative Volume		Comments
	SF	ac	cf	ac*ft	cf	ac*ft	
813.00	0	0.00					
814.00	8,165	0.19	4,083	0.09	4,083	0.09	
815.00	9,947	0.23	9,056	0.21	13,139	0.30	Water Quality Volume
816.00	11,162	0.26	10,555	0.24	23,693	0.54	
817.00	12,433	0.29	11,798	0.27	35,491	0.81	
818.00	13,759	0.32	13,096	0.30	48,587	1.12	Routing
818.50	14,449	0.33	7,052	0.16	55,639	1.28	
819.00	15,140	0.35	7,397	0.17	63,036	1.45	Freeboard

OUTFLOW STRUCTURE	
Elevation	Flow
ft	cfs
817.00	0
817.50	18
818.00	52
818.50	96
819.00	147

$$Q = C_w L H^{1.5}$$

Q - *weir flow rate (cfs)*

C_w - *Weir Coefficient* BROAD: 2.60

L - *horizontal length of weir crest (ft)* BROAD: 20 FT

H - *head above weir crest elevation (ft)*

DRAWDOWN CALCUATIONS FOR A ROUND ORIFICE

PROJECT NAME: PARKSIDE ON THE RIVER SECTIONS 11, 12A & 15A

Pipe Diameter =	6.00	IN	W.Q.V. =	35,491	CF
Orifice Diameter =	2.00	IN	WQ Elev =	817.00	MSL
Outflow Orifice Elev =	810.14	MSL	Pond Bottom Elev =	813.00	MSL
Draining time	44.00	HR	Initial Head =	6.86	FT

TIME	HEAD	OUTFLOW	VOL.	dV	Total dV	H	dH	W.E.
HRS	FT	CFS	CF	CF	CF	FT	FT	MSL
0.00	6.86	0.28	35,491	990	990	0.11	6.75	817.00
1.00	6.75	0.27	34,501	982	1,973	0.11	6.64	816.89
2.00	6.64	0.27	33,518	974	2,947	0.11	6.53	816.78
3.00	6.53	0.27	32,544	966	3,913	0.11	6.42	816.67
4.00	6.42	0.27	31,578	958	4,871	0.11	6.31	816.56
5.00	6.31	0.26	30,620	950	5,821	0.11	6.20	816.45
6.00	6.20	0.26	29,670	942	6,763	0.11	6.10	816.34
7.00	6.10	0.26	28,728	934	7,697	0.11	5.99	816.24
8.00	5.99	0.26	27,794	926	8,623	0.10	5.89	816.13
9.00	5.89	0.25	26,868	918	9,541	0.10	5.78	816.03
10.00	5.78	0.25	25,950	910	10,450	0.10	5.68	815.92
11.00	5.68	0.25	25,041	901	11,352	0.10	5.58	815.82
12.00	5.58	0.25	24,139	893	12,245	0.10	5.48	815.72
13.00	5.48	0.25	23,246	885	13,130	0.10	5.38	815.62
14.00	5.38	0.24	22,361	877	14,007	0.10	5.28	815.52
15.00	5.28	0.24	21,484	869	14,876	0.10	5.18	815.42
16.00	5.18	0.24	20,615	861	15,737	0.10	5.09	815.32
17.00	5.09	0.24	19,754	853	16,590	0.10	4.99	815.23
18.00	4.99	0.23	18,901	845	17,435	0.10	4.89	815.13
19.00	4.89	0.23	18,056	837	18,272	0.09	4.80	815.03
20.00	4.80	0.23	17,219	829	19,100	0.09	4.71	814.94
21.00	4.71	0.23	16,391	820	19,921	0.09	4.61	814.85
22.00	4.61	0.23	15,570	812	20,733	0.09	4.52	814.75
23.00	4.52	0.22	14,758	804	21,538	0.09	4.43	814.66
24.00	4.43	0.22	13,953	796	22,334	0.09	4.34	814.57
25.00	4.34	0.22	13,157	788	23,122	0.09	4.25	814.48
26.00	4.25	0.22	12,369	780	23,902	0.09	4.17	814.39
27.00	4.17	0.21	11,589	772	24,674	0.09	4.08	814.31
28.00	4.08	0.21	10,817	764	25,437	0.09	3.99	814.22
29.00	3.99	0.21	10,054	756	26,193	0.09	3.91	814.13
30.00	3.91	0.21	9,298	748	26,941	0.08	3.82	814.05
31.00	3.82	0.21	8,550	739	27,680	0.08	3.74	813.96
32.00	3.74	0.20	7,811	731	28,412	0.08	3.66	813.88
33.00	3.66	0.20	7,079	723	29,135	0.08	3.58	813.80
34.00	3.58	0.20	6,356	715	29,850	0.08	3.50	813.72
35.00	3.50	0.20	5,641	707	30,557	0.08	3.42	813.64
36.00	3.42	0.19	4,934	699	31,256	0.08	3.34	813.56
37.00	3.34	0.19	4,235	691	31,947	0.08	3.26	813.48
38.00	3.26	0.19	3,544	683	32,630	0.08	3.18	813.40
39.00	3.18	0.19	2,861	675	33,304	0.08	3.11	813.32
40.00	3.11	0.19	2,187	667	33,971	0.08	3.03	813.25
41.00	3.03	0.18	1,520	658	34,629	0.07	2.96	813.17
42.00	2.96	0.18	862	650	35,279	0.07	2.88	813.10
43.00	2.88	0.18	212	642	35,491	0.07	2.86	813.02
44.00	2.86	0.00	0	0	35,491	0.00	2.86	813.00
45.00	2.86	0.00	0	0	35,491	0.00	2.86	813.00
46.00	2.86	0.00	0	0	35,491	0.00	2.86	813.00
47.00	2.86	0.00	0	0	35,491	0.00	2.86	813.00
48.00	2.86	0.00	0	0	35,491	0.00	2.86	813.00

NO.	REVISION	BY	DATE

Know what's below. Call before you dig.

5508 HIGHWAY 290 WEST
SUITE 150
AUSTIN, TX 78735
512.872.6696
HRGREEN.COM
TBPE NO: 16384
TBPLS NO: 10194101

HRGreen® DEVELOPMENT TX

STATE OF TEXAS
CHRISTINE N. CAMPBELL
142536
LICENSED PROFESSIONAL ENGINEER

07/03/2025

POND A SECTIONS

PARKSIDE ON THE RIVER
SECTIONS 11, 12A & 15A
CONSTRUCTION PLANS
GEORGETOWN, WILLIAMSON, TEXAS

DESIGNED BY: CC
DRAWN BY: MM
CHECKED BY: SN
APPROVED BY:

SHEET 81 OF 141

2025-XX-CON

P:\Blake Magee\Parkside Sections 11-15 & WOA S\Section 11, 12A & 15A\03_ACAD\Planset\240502 POND A.dwg, POND A SECTIONS, July 18, 2025, 11:59 AM, malain.muhammad

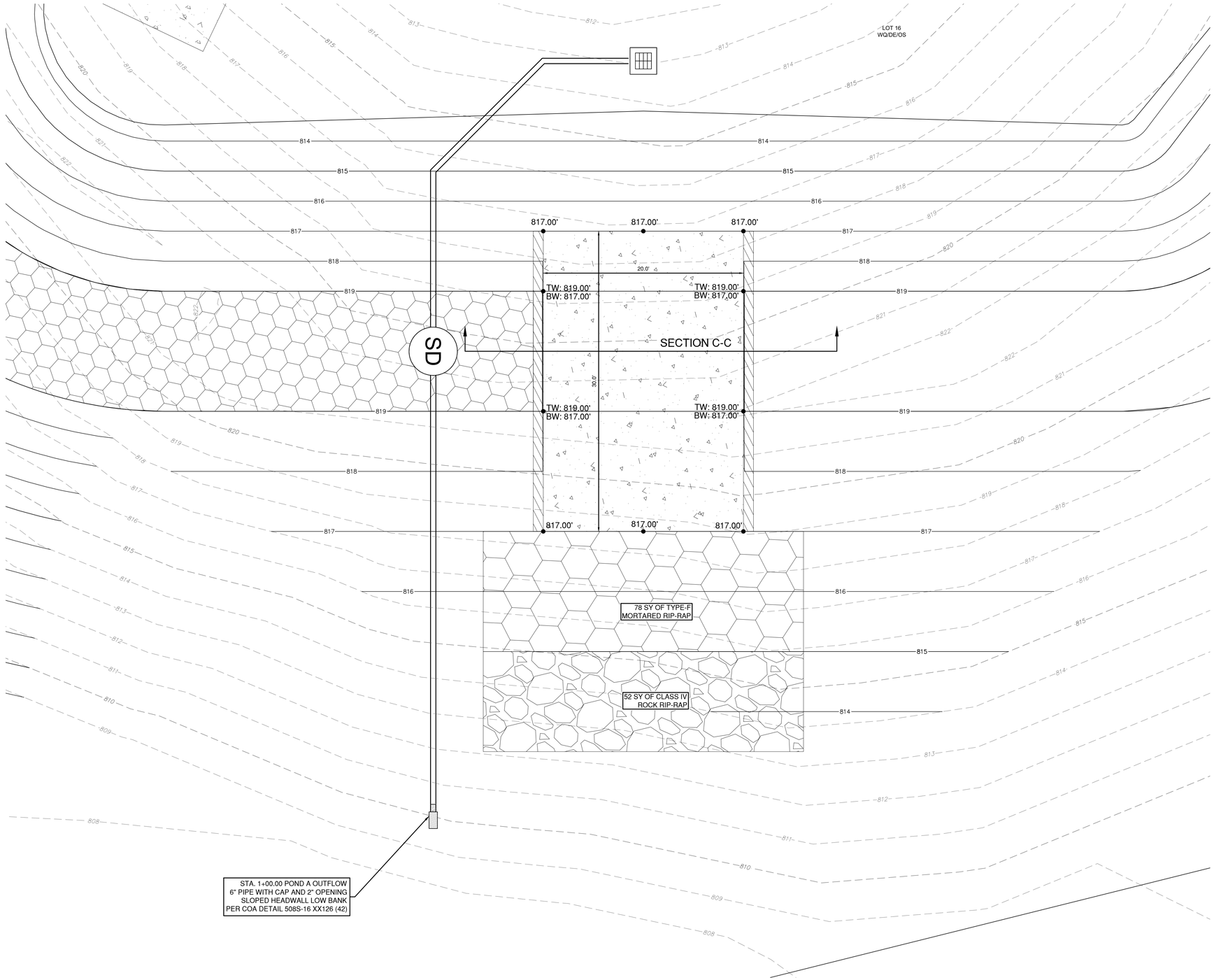

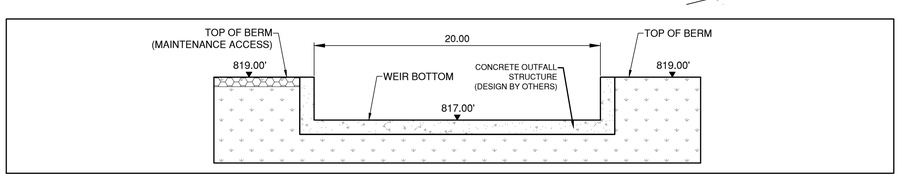

POND OUTFLOW STRUCTURE
SECTION C-C
SCALE 1:5

0 5' 10'
SCALE: 1" = 5'

NO.	REVISION	BY	DATE

811 Know what's below. Call before you dig.

5508 HIGHWAY 290 WEST
SUITE 150
AUSTIN, TX 78735
512.872.6696
HRGREEN.COM

TBPE NO: 16384
TBPLS NO: 10194101

HRGreen®
DEVELOPMENT TX

STATE OF TEXAS
CHRISTINE N. CAMPBELL
142536
LICENSED PROFESSIONAL ENGINEER
07/03/2025

POND OUTLET A STRUCTURE DETAILS

PARKSIDE ON THE RIVER SECTIONS 11, 12A & 15A CONSTRUCTION PLANS GEORGETOWN, WILLIAMSON, TEXAS

DESIGNED BY: CC
DRAWN BY: MM
CHECKED BY: SN
APPROVED BY:

SHEET 82 OF 141

2025-XX-CON

P:\Blake Magee\Parkside Sections 11-15 & VCA 5\Section 11, 12A & 15A\03_ACAD\Planset\sht\250702 POND A.dwg, POND OUTLET A STRUCTURE DETAILS, July 16, 2025, 11:59 AM, mateo.mohammad

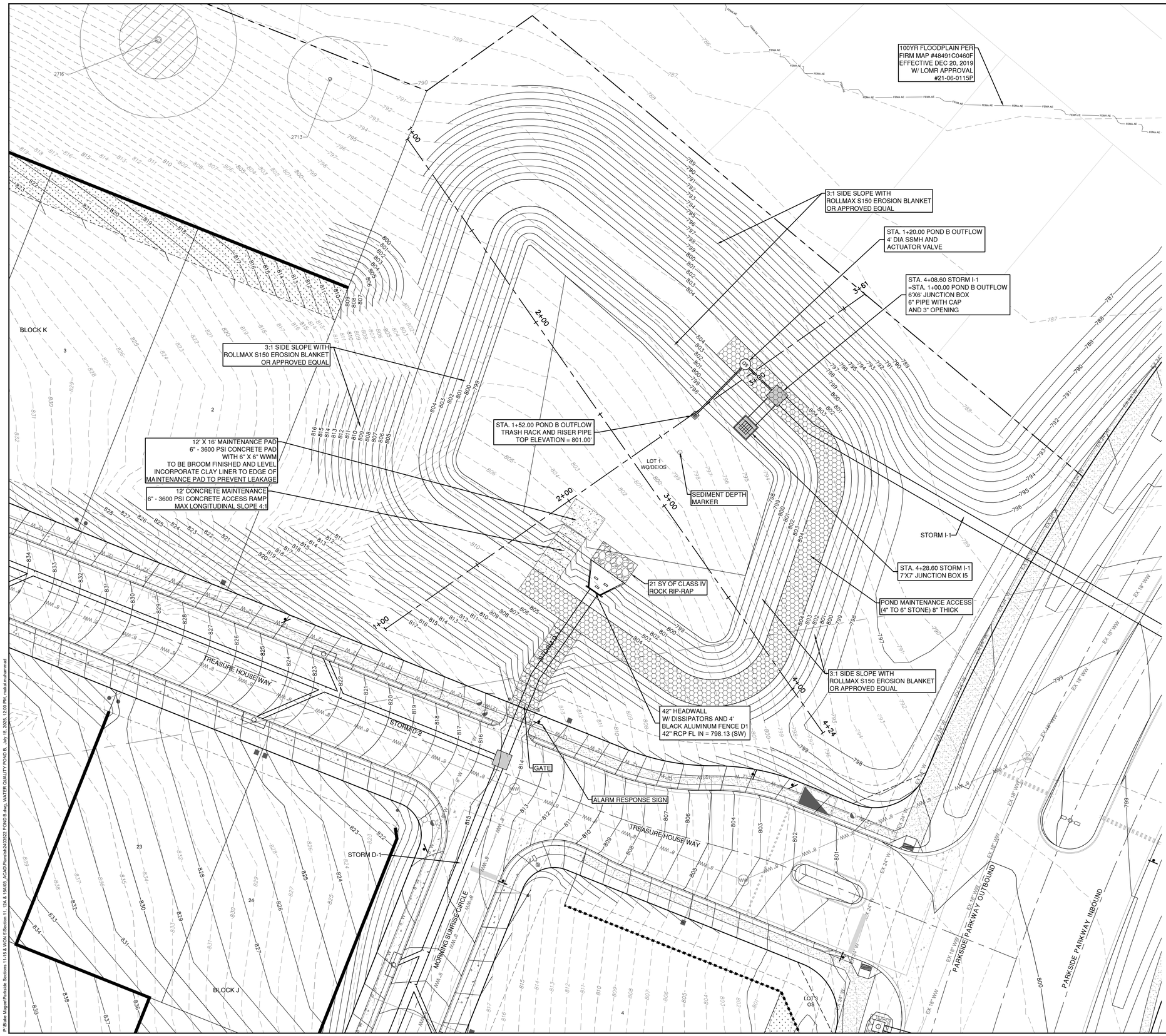

GENERAL NOTES:

1. CONTRACTOR TO UTILIZE A TEMPORARY CONSTRUCTION PUMP TO DISCHARGE WATER FROM THE POND AFTER A RAINFALL EVENT, DURING CONSTRUCTION. PUMP IS TO DISCHARGE UPSTREAM OF PROPOSED ROCK BERM LOCATED BEFORE THE CREEK BED. AT NO TIME SHALL THE PUMP BE DISCHARGED DIRECTLY INTO STORMSEWER SYSTEM BEFORE CROSSING A ROCK BERM.
2. ALL MUD, DIRT, ROCKS, DEBRIS, ETC., SPILLED, TRACKED OR OTHERWISE DEPOSITED ON EXISTING PAVED STREETS, DRIVES, AND AREAS USED BY THE PUBLIC SHALL BE CLEANED UP IMMEDIATELY. CONTRACTOR WILL CLEAN UP SPOILS THAT MIGRATE ONTO ROADS A MINIMUM OF ONCE DAILY.
3. ALL DISTURBED AREAS TO BE REVEGETATED PRIOR TO ACCEPTANCE.
4. IF DISTURBED AREA IS NOT TO BE WORKED ON FOR MORE THAN 14 DAYS, DISTURBED AREA NEEDS TO BE STABILIZED BY REVEGETATION, MULCH, TARP OR REVEGETATION MATTING.
5. THE STABILIZED CONSTRUCTION ENTRANCE SHALL BE MAINTAINED IN A CONDITION THAT WILL PREVENT TRACKING OR FLOWING OF SEDIMENT INTO PUBLIC ROADWAY.
6. THE ENVIRONMENTAL INSPECTOR HAS THE AUTHORITY TO ADD AND/OR MODIFY EROSION/SEDIMENTATION CONTROLS ON SITE TO KEEP PROJECT IN COMPLIANCE WITH THE CITY OF GEORGETOWN RULES AND REGULATIONS. HOWEVER, MODIFICATIONS TO THE ENGINEERING DESIGN AND FUNCTIONS OF THE EROSION AND SEDIMENTATION CONTROLS SYSTEMS CONTAINED HERE IN IS STRICTLY FORBIDDEN WITHOUT THE EXPRESSED WRITTEN CONSENT OF THE SIGNING PROJECT PROFESSIONAL ENGINEER (TAC22 §137.3 AND §137.37).
7. CONTRACTOR SHALL UTILIZE DUST CONTROL MEASURES DURING SITE CONSTRUCTION SUCH AS IRRIGATION TRUCKS AND MULCHING AS PER 1.4.5(A) OR AS DIRECTED BY THE ENVIRONMENTAL INSPECTOR.
8. ALL POND BOTTOMS, SIDE SLOPES, AND EARTHEN EMBANKMENTS SHALL BE COMPACTED TO 95% MAXIMUM DENSITY, IN ACCORDANCE WITH THE CITY OF GEORGETOWN STANDARD SPECIFICATIONS AND PER GEOTECHNICAL ENGINEER'S RECOMMENDATION. ALLOW ADEQUATE VOLUME FOR TOPSOIL TO SUPPORT VEGETATION.
9. GRADING WITHIN THE 1/2 CRITICAL ROOT ZONE OF PROTECTED TREES, IDENTIFIED BY A HATCH PATTERN ON THESE PLANS, SHALL BE LIMITED TO LESS THAN 12 INCHES OF DISTURBANCE. NO GRADING ACTIVITY WITH DISTURBANCE OF MORE THAN 6 INCHES IS ALLOWED IN THE 1/4 CRITICAL ROOT ZONE.
10. GRADING WORK WITHIN THE 1/2 CRITICAL ROOT ZONE OF ALL PROTECTED TREES SHALL BE DONE BY HAND OR WITH RUBBER TIRED EQUIPMENT.
11. ALL RETAINING WALLS GREATER THAN FOUR FEET IN HEIGHT MEASURED FROM THE BOTTOM OF THE FOOTING TO THE TOP OF THE WALL SHALL BE DESIGNED BY A PROFESSIONAL ENGINEER.

DEWATERING PLAN NOTES:

1. CONTRACTOR SHALL MAINTAIN THE DEWATERING SYSTEM TO ENSURE PERFORMANCE. IF THE DEWATERING SYSTEM IS NOT PERFORMING, THE CONTRACTOR MUST IMMEDIATELY MAKE THE NECESSARY MODIFICATIONS, FOLLOWING THE ENVIRONMENTAL INSPECTOR'S DIRECTION TO ENSURE ADEQUATE SYSTEM PERFORMANCE. CONTRACTOR SHALL PROVIDE THE DEWATERING PLAN AT THE PRECONSTRUCTION MEETING.
2. THE SKIMMER IS TO BE USED DURING CONSTRUCTION AND SHALL BE REMOVED AFTER COMPLETING CONSTRUCTION OF THE BATCH DETENTION POND.

NO	REVISION	BY	DATE

811 Know what's below. Call before you dig.

5508 HIGHWAY 290 WEST
SUITE 150
AUSTIN, TX 78735
512.872.6696
HRGREEN.COM

TBPE NO: 16384
TBPLS NO: 10194101

HRGreen® DEVELOPMENT TX

STATE OF TEXAS
CHRISTINE N. CAMPBELL
142536
LICENSED PROFESSIONAL ENGINEER
07/03/2025

WATER QUALITY POND B

PARKSIDE ON THE RIVER
SECTIONS 11, 12A & 15A
CONSTRUCTION PLANS
GEORGETOWN, WILLIAMSON, TEXAS

DESIGNED BY: CC
DRAWN BY: MM
CHECKED BY: SN
APPROVED BY:

SHEET 83 OF 141

2025-XX-CON

P:\Blake Magee\Parkside Sections 11-15 & WQPs\Sections 11, 12A & 15A\00_ACAD\Plans\sht\240502 POND B.dwg, WATER QUALITY POND B, July 18, 2025, 12:00 PM, mailto:mahermad

SECTION A-A

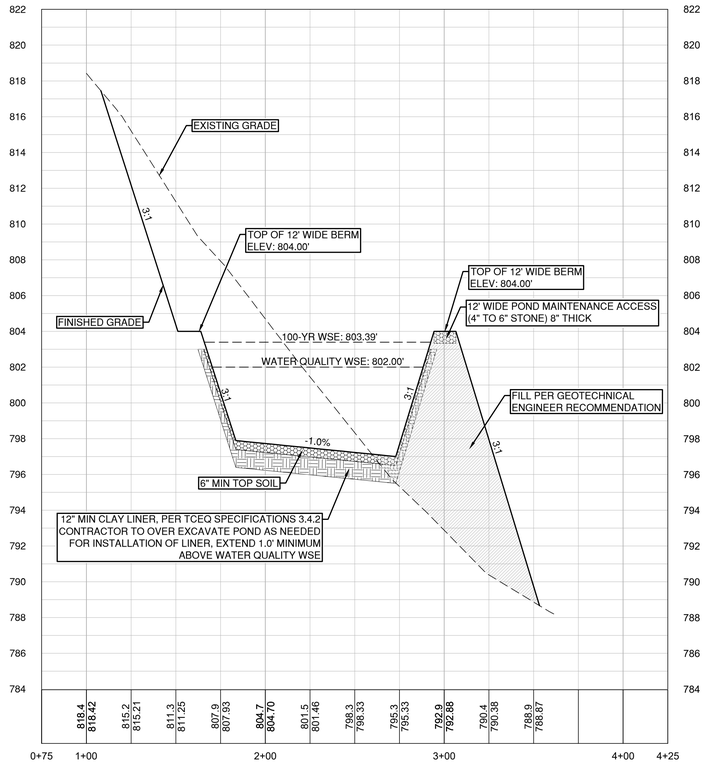

SECTION B-B

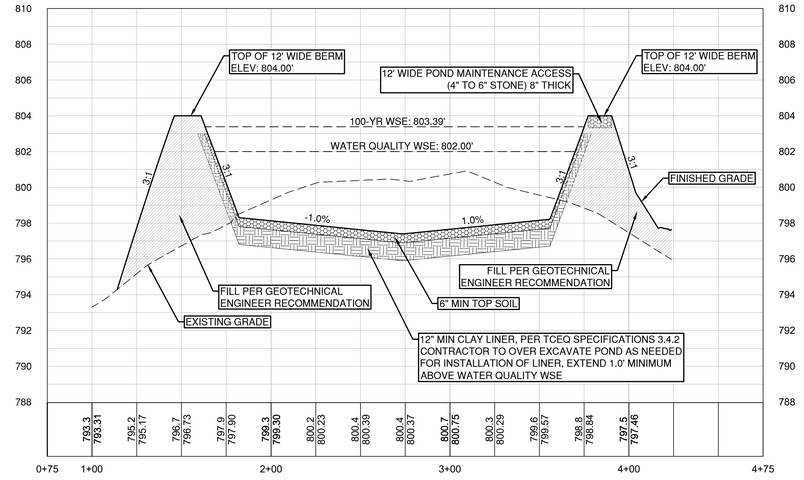

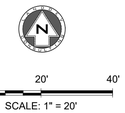

Pond Volume

Elevation	Area		Volume		Cumulative Volume		Comments
	SF	ac	cf	ac*ft	cf	ac*ft	
797.00	0	0.00					
798.00	8879	0.20	4,440	0.10	4,440	0.10	
799.00	14431	0.33	11,655	0.27	16,095	0.37	
800.00	15952	0.37	15,192	0.35	31,286	0.72	
801.00	17529	0.40	16,741	0.38	48,027	1.10	
802.00	19160	0.44	18,345	0.42	66,371	1.52	
803.00	20846	0.48	20,003	0.46	86,374	1.98	Water Quality Volume
803.50	21715	0.50	10,640	0.24	97,014	2.23	Routing
804.00	22587	0.52	11,076	0.25	108,090	2.48	Freeboard

OUTFLOW STRUCTURE	
Elevation	Flow
ft	cfs
802.00	0
802.50	30
803.00	84
803.50	154

$$Q = C_w L H^{1.5}$$

Q - *weir flow rate (cfs)*

C_w - *Weir Coefficient* BROAD: 3.00

L - *horizontal length of weir crest (ft)* BROAD: 28 FT

H - *head above weir crest elevation (ft)*

DRAWDOWN CALCUATIONS FOR A ROUND ORIFICE

PROJECT NAME: PARKSIDE ON THE RIVER SECTIONS 11, 12A & 15A

Pipe Diameter =	6.00	IN	W.Q.V. =	66,371	CF
Orifice Diameter =	3.00	IN	WQ Elev =	802.00	MSL
Outflow Orifice Elev =	793.78	MSL	Pond Bottom Elev =	797.00	MSL
Draining time	34.00	HR	Initial Head =	8.22	FT

TIME	HEAD	OUTFLOW	VOL.	dV	Total dV	H	dH	W.E.
HRS	FT	CFS	CF	CF	CF	FT	FT	MSL
0.00	8.22	0.68	66,371	2,440	2,440	0.18	8.04	802.00
1.00	8.04	0.67	63,931	2,412	4,852	0.18	7.85	801.82
2.00	7.85	0.66	61,519	2,385	7,236	0.18	7.67	801.63
3.00	7.67	0.65	59,135	2,357	9,593	0.18	7.50	801.45
4.00	7.50	0.65	56,778	2,330	11,923	0.18	7.32	801.28
5.00	7.32	0.64	54,448	2,302	14,226	0.17	7.15	801.10
6.00	7.15	0.63	52,145	2,275	16,501	0.17	6.98	800.93
7.00	6.98	0.62	49,870	2,247	18,748	0.17	6.81	800.76
8.00	6.81	0.62	47,623	2,220	20,968	0.17	6.64	800.59
9.00	6.64	0.61	45,403	2,193	23,161	0.17	6.48	800.42
10.00	6.48	0.60	43,210	2,165	25,326	0.16	6.31	800.26
11.00	6.31	0.59	41,045	2,138	27,464	0.16	6.15	800.09
12.00	6.15	0.59	38,907	2,110	29,574	0.16	5.99	799.93
13.00	5.99	0.58	36,797	2,083	31,657	0.16	5.84	799.77
14.00	5.84	0.57	34,714	2,055	33,712	0.15	5.68	799.62
15.00	5.68	0.56	32,659	2,028	35,740	0.15	5.53	799.46
16.00	5.53	0.56	30,631	2,000	37,741	0.15	5.38	799.31
17.00	5.38	0.55	28,630	1,973	39,714	0.15	5.23	799.16
18.00	5.23	0.54	26,657	1,946	41,659	0.15	5.08	799.01
19.00	5.08	0.53	24,712	1,918	43,577	0.14	4.94	798.86
20.00	4.94	0.53	22,794	1,891	45,468	0.14	4.79	798.72
21.00	4.79	0.52	20,903	1,863	47,331	0.14	4.65	798.57
22.00	4.65	0.51	19,040	1,836	49,167	0.14	4.52	798.43
23.00	4.52	0.50	17,204	1,808	50,975	0.14	4.38	798.30
24.00	4.38	0.49	15,396	1,781	52,756	0.13	4.25	798.16
25.00	4.25	0.49	13,615	1,753	54,509	0.13	4.11	798.03
26.00	4.11	0.48	11,862	1,726	56,235	0.13	3.98	797.89
27.00	3.98	0.47	10,136	1,698	57,933	0.13	3.86	797.76
28.00	3.86	0.46	8,438	1,671	59,604	0.13	3.73	797.64
29.00	3.73	0.46	6,767	1,643	61,247	0.12	3.61	797.51
30.00	3.61	0.45	5,124	1,616	62,863	0.12	3.48	797.39
31.00	3.48	0.44	3,508	1,588	64,451	0.12	3.36	797.26
32.00	3.36	0.43	1,920	1,561	66,012	0.12	3.25	797.14
33.00	3.25	0.43	359	1,533	66,371	0.12	3.22	797.03
34.00	3.22	0.00	0	0	66,371	0.00	3.22	797.00
35.00	3.22	0.00	0	0	66,371	0.00	3.22	797.00
36.00	3.22	0.00	0	0	66,371	0.00	3.22	797.00
37.00	3.22	0.00	0	0	66,371	0.00	3.22	797.00
38.00	3.22	0.00	0	0	66,371	0.00	3.22	797.00
39.00	3.22	0.00	0	0	66,371	0.00	3.22	797.00
40.00	3.22	0.00	0	0	66,371	0.00	3.22	797.00
41.00	3.22	0.00	0	0	66,371	0.00	3.22	797.00
42.00	3.22	0.00	0	0	66,371	0.00	3.22	797.00
43.00	3.22	0.00	0	0	66,371	0.00	3.22	797.00
44.00	3.22	0.00	0	0	66,371	0.00	3.22	797.00
45.00	3.22	0.00	0	0	66,371	0.00	3.22	797.00
46.00	3.22	0.00	0	0	66,371	0.00	3.22	797.00
47.00	3.22	0.00	0	0	66,371	0.00	3.22	797.00
48.00	3.22	0.00	0	0	66,371	0.00	3.22	797.00

POND B OUTFLOW

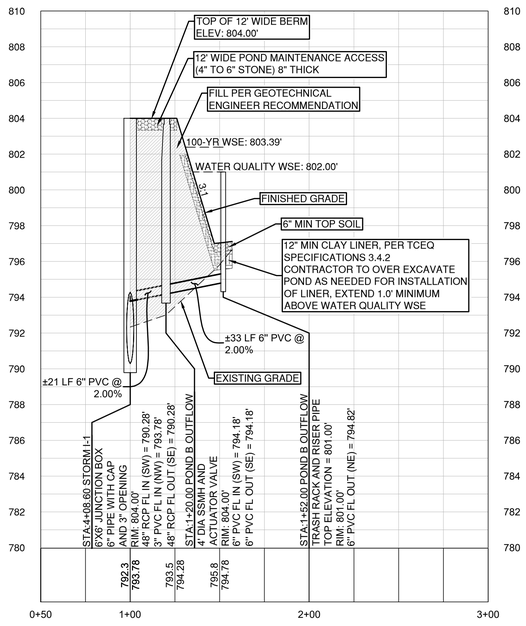

VERT. SCALE: 1" = 4'
HORZ. SCALE: 1" = 40'

4' 2' 0 VERT. SCALE

EXISTING GRADE - CENTERLINE

FINISHED GRADE - CENTERLINE

EXISTING GROUND 1000.1 997.10 PROPOSED FLOWLINE

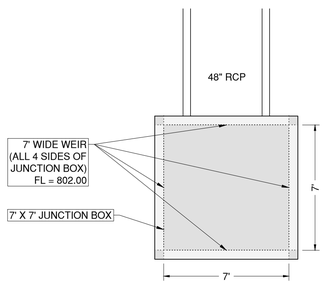

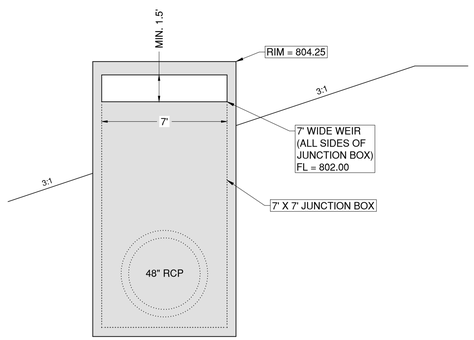

DATE | BY | REVISION | NO.

Know what's below. Call before you dig.

5508 HIGHWAY 290 WEST
SUITE 150
AUSTIN, TX 78735
512.872.6696
HRGREEN.COM

TBPE NO: 16384
TBPLS NO: 10194101

HRGreen®
DEVELOPMENT TX

STATE OF TEXAS
CHRISTINE N. CAMPBELL
142536
LICENSED PROFESSIONAL ENGINEER

07/15/2025

POND B SECTIONS

PARKSIDE ON THE RIVER SECTIONS 11, 12A & 15A CONSTRUCTION PLANS

GEORGETOWN, WILLIAMSON, TEXAS

DESIGNED BY: CC
DRAWN BY: MM
CHECKED BY: SN
APPROVED BY:

SHEET 84 OF 141

2025-XX-CON

P:\Blake Magee\Parkside Sections 11-15 & WOA II\Sections 11, 12A & 15A\03_ACAD\Planset\04052025\POND B.dwg, POND B SECTIONS, July 16, 2025, 12:01 PM, mateo.muhammad

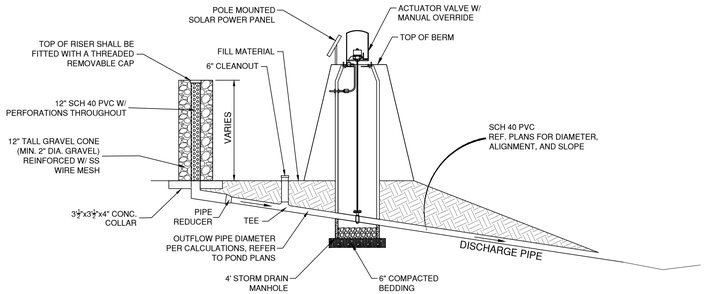

TRASH RACK AND ACTUATOR VALVE
N.T.S.

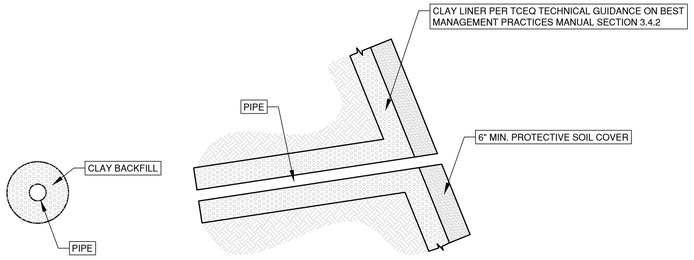

INTERBASIN PIPES DETAIL
N.T.S.

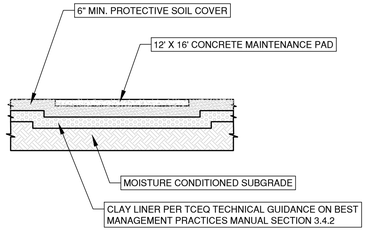

MAINTENANCE PAD INSTALLATION
N.T.S.

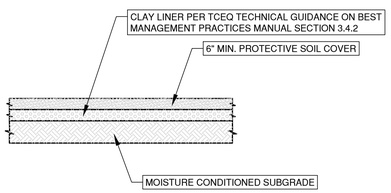

CLAY LINER INSTALLATION
N.T.S.

Table 3-6 Clay Liner Specifications (COA, 2004)

Property	Test Method	Unit	Specification
Permeability	ASTM D-2434	cm/sec	1×10^{-6}
Plasticity Index of Clay	ASTM D-423 & D-424	%	Not less than 15
Liquid Limit of Clay	ASTM D-2216	%	Not less than 30
Clay Particles Passing	ASTM D-422	%	Not less than 30
Clay Compaction	ASTM D-2216	%	95% of Standard Proctor Density

CLAY LINER SPECIFICATIONS PER TCEQ SPECIFICATIONS 3.4.2

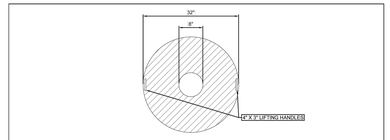

LID DETAIL
1" = 1'

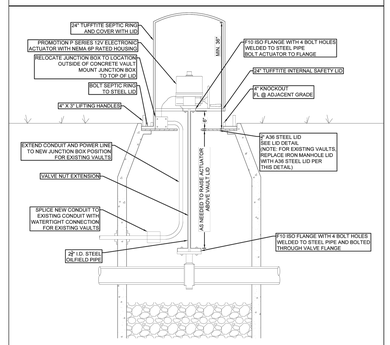

BATCH DETENTION ACTUATOR & VALVE DETAIL
1" = 1'

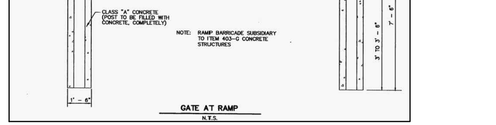

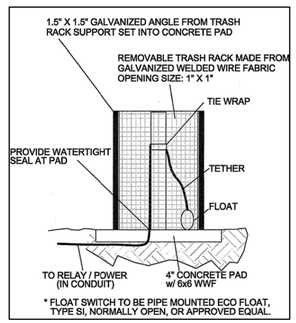

FLOAT SWITCH DETAIL

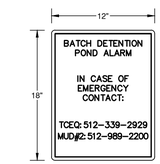

ALARM RESPONSE SIGN
N.T.S.

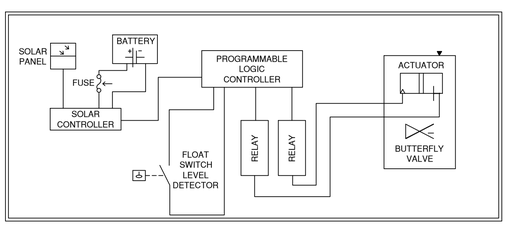

ACTUATOR VALVE POWER & CONTROLLER CIRCUIT BLOCK DIAGRAM

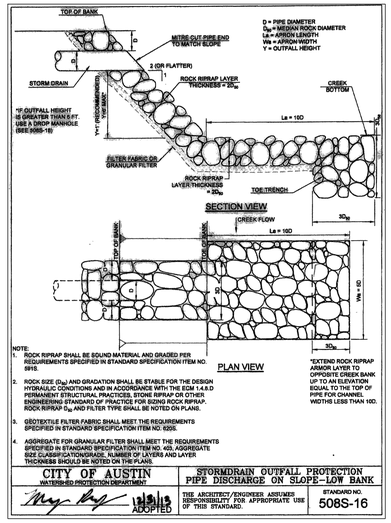

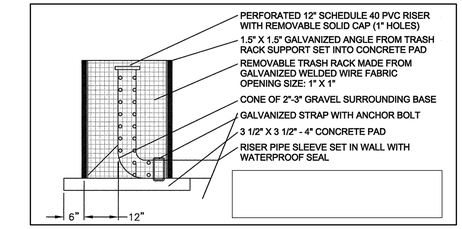

TRASH RACK / RISER PIPE DETAIL
N.T.S.

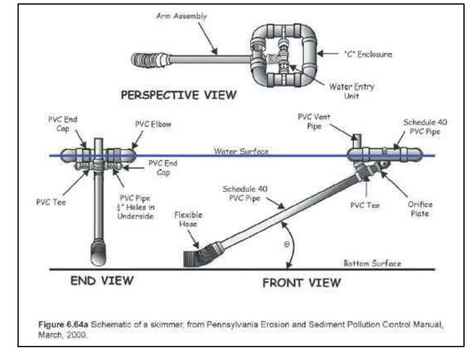

Figure 6.64a Schematic of a skimmer, from Pennsylvania Erosion and Sediment Pollution Control Manual, March, 2000.

DEWATERING SKIMMER
N.T.S.

NOTE: DISCHARGE WATER MUST BE FILTERED USING FILTER BAG OR SOCK. DISCHARGE SHALL ALSO BE DIRECTED TOWARD SILT FENCE FOR ADDITIONAL FILTERING PRIOR TO LEAVING THE SITE.

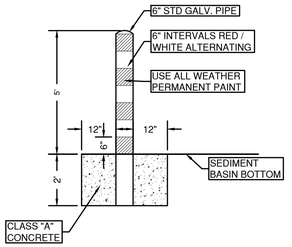

CONCRETE FILLED FIXED SEDIMENT MARKER FOR BATCH DETENTION POND
N.T.S.

NOTE:
1. BATCH DETENTION POND SHALL BE IN ACCORDANCE WITH THE TEXAS COMMISSION ON ENVIRONMENTAL QUALITY (TCEQ) RG-348 MANUAL (ADDENDUM)
2. THE BATCH DETENTION POND AND RISER PIPE / TRASH RACK WILL FUNCTION AS THE DEWATERING OUTLET AND SHALL BE BE INSTALLED AND FUNCTIONAL PRIOR TO ANY GENERAL GRADING AND UTILITY WORK.
3. SYSTEM SHALL BE 12 VDC WITH SOLAR CHARGED 12 VDC BATTERY. ALTERNATE ELECTRICAL DESIGN MAY ALSO BE UTILIZED IN LIEU OF SOLAR POWER WITH ENGINEERS APPROVAL.
4. ACTUATOR SHALL BE ELECTRONIC QUARTER-TURN WITH MANUAL OVERRIDE AND POSITION INDICATOR.
5. ACTUATOR SHALL BE "AVID 12V ACTUATOR, EPI-6" OR EQUIVALENT.
6. ACTUATOR VALVE TO BE SET AT "NORMALLY CLOSED" POSITION.
7. CONTROLLER SHALL BE SET TO OPEN VALVE 12 HOURS AFTER INITIAL RAINFALL DETECTION. VALVE TO REMAIN OPEN UNTIL 2 HRS FOLLOWING BASIN EMPTY SIGNAL.
8. LOGIC CONTROLLER SYSTEM SHALL HAVE TEST SEQUENCE TO DEAL WITH LOW BATTERY/POWER OUTAGES, ON/OFF/RESET SWITCH AND THE PROGRAMMING SHALL BE FIELD UPLOADABLE.
9. CONTROLLER SHALL BE "MORNINGSTAR SOLAR CONTROLLER, 12V, 20 AMP" OR EQUIVALENT.
10. ALL WIRING SHALL BE INSTALLED IN CONDUIT AND BURIED. CONTACT ENGINEER FOR ADDITIONAL CONTROLLER SCHEMATICS.
11. CONTRACTOR TO INSTALL LIBERTY ALARM MODEL ALM-2W OR EQUIVALENT AT A CONTROLLER PANEL.
12. ATTACH ALARM RESPONSE SIGN TO CONTROLLER POLE. REFERENCE ALARM RESPONSE SIGN TO RIGHT.
13. HAZARDOUS MATERIAL THREAT (HMT) OPERATION - THE BASIN'S OUTLET VALVE IS NORMALLY CLOSED AND WILL DETAIN A HAZARDOUS MATERIAL SPILL. HOWEVER, AFTER A SPILL OCCURS, THE MANUAL CONTROLS ON THE CONTROLLER OR THE ACTUATOR/VALVE ARE USED TO PREVENT THE VALVE FROM AUTOMATICALLY OPENING PRIOR TO REMOVAL OF THE HAZARDOUS MATERIAL. ALTHOUGH NOT REQUIRED BY THE EDWARDS RULES, THE HMT OPERATION CAN BE USED TO COMPLY WITH APPENDIX A OF RG-348. IF A SPILL DOES OCCUR IN THE BASIN, ALL COMPONENTS OF THE CONTROLLER MUST BE INSPECTED AND CHECKED FOR PROPER OPERATION WITHIN 7 DAYS.
14. POWER - THE POND CONTROL SYSTEM CONTROLLER AND ACTUATOR SHALL BE 12 VOLT POWERED OR 12 VOLT SOLAR POWERED WITH BACKUP BATTERY POWER TO RESPOND TO A LOSS OF POWER IN THE MIDDLE OF A CYCLE.
15. PARTS ENCLOSURE & ALARM SYSTEM - THE PARTS ENCLOSURE SHALL BE LOCKABLE. AN ALARM SYSTEM CLEARLY VISIBLE TO INDICATE SYSTEM MALFUNCTION.
16. TEMPERATURE/WEATHER - THE SYSTEM SHALL BE CAPABLE OF OPERATION FROM 0 TO 130 DEGREES FAHRENHEIT AND FROM 10 TO 90% HUMIDITY.
17. RELIABILITY - THE SYSTEM SHALL HAVE A MINIMUM RELIABILITY OF 40,000 HOURS (4.6 YEARS).

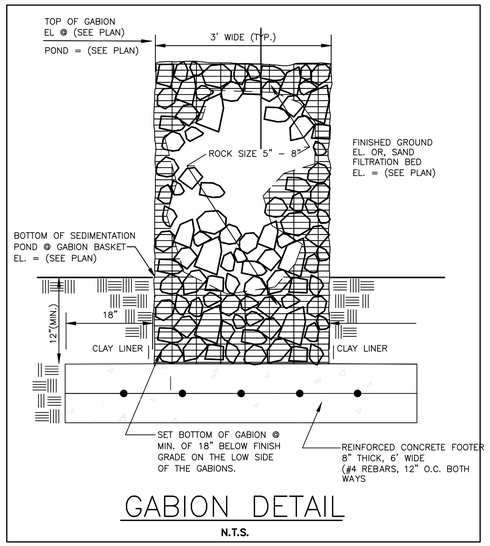

GABION DETAIL
N.T.S.

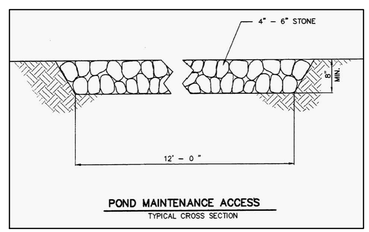

HRGreen
5508 HIGHWAY 290 WEST
SUITE 150
AUSTIN, TX 78735
512.872.6696
HRGREEN.COM
TBPE NO: 16384
TBPLS NO: 10194101

Know what's below. Call before you dig.

DEVELOPMENT TX

NO	REVISION	BY	DATE

STATE OF TEXAS
CHRISTINE N. CAMPBELL
142536
LICENSED PROFESSIONAL ENGINEER
07/15/2025

POND DETAILS

PARKSIDE ON THE RIVER
SECTIONS 11, 12A & 15A
CONSTRUCTION PLANS
GEORGETOWN, WILLIAMSON, TEXAS

DESIGNED BY: CC
DRAWN BY: MM
CHECKED BY: SN
APPROVED BY:

SHEET 85 OF 141

2025-XX-CON

P:\Blake Magee\Parkside Sections 11-15 & WOA S\Section 11, 12A & 15A\00_ACAD\Plans\sh2A\03522 POND B.dwg POND DETAILS, July 15, 2025, 12:01 PM, mateo.mohammad

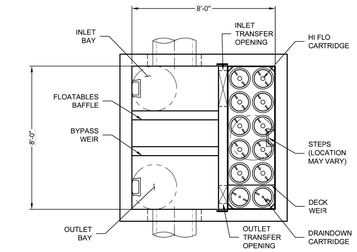

PLAN VIEW
(TOP SLAB NOT SHOWN FOR CLARITY)

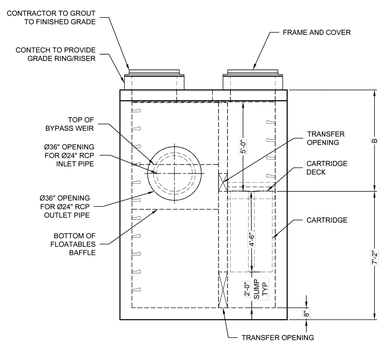

ELEVATION VIEW

RIM
ELEV. = 805.81'

TOP OF STRUCTURE
ELEV. = 804.65'

WEIR ELEV. =800.48'

INLET INV. ELEV. = 798.98'

OUTLET INV. ELEV. = 798.98'

STRUCTURE INV.
ELEV. = 792.48'

BOTTOM OF STRUCTURE
ELEV. = 791.81'

Jellyfish® Filter

THIS PRODUCT MAY BE PROTECTED BY ONE OR MORE OF THE FOLLOWING: U.S. PATENT NO. 8,287,728; 8,221,618; US 8,123,935; OTHER INTERNATIONAL PATENTS PENDING

JELLYFISH DESIGN NOTES

JELLYFISH TREATMENT CAPACITY IS A FUNCTION OF THE CARTRIDGE LENGTH AND THE NUMBER OF CARTRIDGES. THE STANDARD PEAK DIVERSION STYLE WITH PRECAST TOP SLAB IS SHOWN. ALTERNATE OFFLINE VAULT AND/OR SHALLOW ORIENTATIONS ARE AVAILABLE. PEAK CONVEYANCE CAPACITY TO BE DETERMINED BY ENGINEER OF RECORD

CARTRIDGE LENGTH	54"
OUTLET INVERT TO STRUCTURE INVERT (A)	6'-6"
FLOW RATE HI-FLO / DRAINDOWN (CFS) (PER CART)	0.178 / 0.089
MAX. TREATMENT (CFS)	1.96
DECK TO INSIDE TOP (MIN) (B)	5.00

FRAME AND COVER
(DIAMETER VARIES)
N.T.S.

SITE SPECIFIC DATA REQUIREMENTS

STRUCTURE ID						JF-01
WATER QUALITY FLOW RATE (cfs)						1.87
PEAK FLOW RATE (cfs)						33.1
RETURN PERIOD OF PEAK FLOW (yrs)						100
# OF CARTRIDGES REQUIRED (HF / DD)						10/2
CARTRIDGE LENGTH						54
PIPE DATA:	I.E.	MAT'L	DIA	SLOPE %	HGL	
INLET #1	798.98	RCP	24	*	*	
INLET #2	*	*	*	*	*	
OUTLET	798.98	RCP	24	*	*	
SEE GENERAL NOTES 6-7 FOR INLET AND OUTLET HYDRAULIC AND SIZING REQUIREMENTS.						
RIM ELEVATION						805.81
ANTI-FLOTATION BALLAST			WIDTH		HEIGHT	
			*		*	
NOTES/SPECIAL REQUIREMENTS: VAULT INCREASED TO 8'x8' TO ACCOMMODATE PIPE SIZES * PER ENGINEER OF RECORD						

GENERAL NOTES:
1. CONTECH TO PROVIDE ALL MATERIALS UNLESS NOTED OTHERWISE.
2. FOR SITE SPECIFIC DRAWINGS WITH DETAILED STRUCTURE DIMENSIONS AND WEIGHT, PLEASE CONTACT YOUR CONTECH ENGINEERED SOLUTIONS REPRESENTATIVE. www.ContechES.com
3. JELLYFISH WATER QUALITY STRUCTURE SHALL BE IN ACCORDANCE WITH ALL DESIGN DATA AND INFORMATION CONTAINED IN THIS DRAWING. CONTRACTOR TO CONFIRM STRUCTURE MEETS REQUIREMENTS OF PROJECT.
4. STRUCTURE SHALL MEET AASHTO HS-20 OR PER APPROVING JURISDICTION REQUIREMENTS, WHICHEVER IS MORE STRINGENT, ASSUMING EARTH COVER OF 0' - 10', AND GROUNDWATER ELEVATION AT, OR BELOW, THE OUTLET PIPE INVERT ELEVATION. ENGINEER OF RECORD TO CONFIRM ACTUAL GROUNDWATER ELEVATION. CASTINGS SHALL MEET AASHTO M306 LOAD RATING AND BE CAST WITH THE CONTECH LOGO.
5. STRUCTURE SHALL BE PRECAST CONCRETE CONFORMING TO ASTM C-857, ASTM C-918, AND AASHTO LOAD FACTOR DESIGN METHOD.
6. OUTLET PIPE INVERT IS EQUAL TO THE CARTRIDGE DECK ELEVATION.
7. THE OUTLET PIPE DIAMETER FOR NEW INSTALLATIONS IS RECOMMENDED TO BE ONE PIPE SIZE LARGER THAN THE INLET PIPE AT EQUAL OR GREATER SLOPE.
8. NO PRODUCT SUBSTITUTIONS SHALL BE ACCEPTED UNLESS SUBMITTED 10 DAYS PRIOR TO PROJECT BID DATE, OR AS DIRECTED BY THE ENGINEER OF RECORD.

INSTALLATION NOTES
A. ANY SUB-BASE, BACKFILL DEPTH, AND/OR ANTI-FLOTATION PROVISIONS ARE SITE-SPECIFIC DESIGN CONSIDERATIONS AND SHALL BE SPECIFIED BY ENGINEER OF RECORD.
B. CONTRACTOR TO PROVIDE EQUIPMENT WITH SUFFICIENT LIFTING AND REACH CAPACITY TO LIFT AND SET THE STRUCTURE.
C. CONTRACTOR WILL INSTALL AND LEVEL THE STRUCTURE, SEALING THE JOINTS, LINE ENTRY AND EXIT POINTS (NON-SHRINK GROUT WITH APPROVED WATERSTOP OR FLEXIBLE BOOT).
D. CARTRIDGE INSTALLATION, BY CONTECH, SHALL OCCUR ONLY AFTER SITE HAS BEEN STABILIZED AND THE JELLYFISH UNIT IS CLEAN AND FREE OF DEBRIS. CONTACT CONTECH TO COORDINATE CARTRIDGE INSTALLATION WITH SITE STABILIZATION.

CONTECH ENGINEERED SOLUTIONS LLC
www.ContechES.com
9025 Centre Pointe Dr., Suite 400, West Chester, OH 45069
800-338-1122 513-645-7000 513-645-7993 FAX

8' x 6' JELLYFISH - 835683- 10
PROJECT NAME: PARKSIDE ON THE RIVER
LOCATION: GEORGETOWN, TX
SITE DESIGNATION: JF-01

P:\Blake Magee\Parkside Sections 11-15 & WOA 5\Section 11, 12A & 15A\03_ACAD\Planset\240503\22 JELLYFISH.dwg, JELLYFISH-01, July 18, 2025, 12:01 PM, malik.muhammad

\\QUIKRETE.NET\CONTECH\IMR\LIN\PROJECTS\ACTIVE\835600\835683\835683-10-JELLYFISH\DRAWINGS\PROPOSAL\835683-10-JELLYFISH-01.DWG 6/4/2025 2:21 PM

NO.	REVISION	BY	DATE

811 Know what's below. Call before you dig.

5508 HIGHWAY 290 WEST
SUITE 150
AUSTIN, TX 78735
512.872.6696
HRGREEN.COM
TBPE NO: 16384
TBPLS NO: 10194101
HRGreen® DEVELOPMENT TX

STATE OF TEXAS
CHRISTINE N. CAMPBELL
142536
LICENSED PROFESSIONAL ENGINEER
07/15/2025

JELLYFISH-01

PARKSIDE ON THE RIVER
SECTIONS 11, 12A & 15A
CONSTRUCTION PLANS
GEORGETOWN, WILLIAMSON, TEXAS

DESIGNED BY: CC
DRAWN BY: MM
CHECKED BY: SN
APPROVED BY:

SHEET 86 OF 141

2025-XX-CON

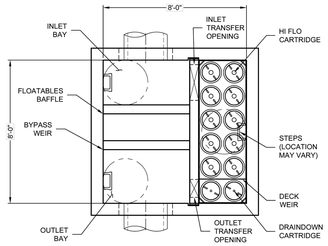

PLAN VIEW
(TOP SLAB NOT SHOWN FOR CLARITY)

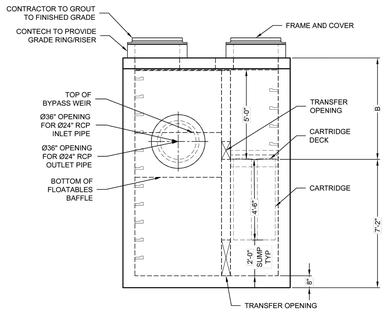

ELEVATION VIEW

RIM
ELEV. = 797.35'

TOP OF STRUCTURE
ELEV. = 796.19'

WEIR ELEV. =792.02'

INLET INV. ELEV. = 790.52'

OUTLET INV. ELEV. = 790.52'

STRUCTURE INV.
ELEV. = 784.02'

BOTTOM OF STRUCTURE
ELEV. = 783.35'

Jellyfish® Filter

THIS PRODUCT MAY BE PROTECTED BY ONE OR MORE OF THE FOLLOWING: U.S. PATENT NO. 8,287,728; 8,221,618; US 8,123,935; OTHER INTERNATIONAL PATENTS PENDING

JELLYFISH DESIGN NOTES

JELLYFISH TREATMENT CAPACITY IS A FUNCTION OF THE CARTRIDGE LENGTH AND THE NUMBER OF CARTRIDGES. THE STANDARD PEAK DIVERSION STYLE WITH PRECAST TOP SLAB IS SHOWN. ALTERNATE OFFLINE VAULT AND/OR SHALLOW ORIENTATIONS ARE AVAILABLE. PEAK CONVEYANCE CAPACITY TO BE DETERMINED BY ENGINEER OF RECORD

CARTRIDGE LENGTH	54"
OUTLET INVERT TO STRUCTURE INVERT (A)	6'-6"
FLOW RATE HI-FLO / DRAINDOWN (CFS) (PER CART)	0.178 / 0.089
MAX. TREATMENT (CFS)	1.96
DECK TO INSIDE TOP (MIN) (B)	5.00

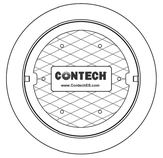

FRAME AND COVER
(DIAMETER VARIES)
N.T.S.

SITE SPECIFIC DATA REQUIREMENTS

STRUCTURE ID					JF-02
WATER QUALITY FLOW RATE (cfs)					1.79
PEAK FLOW RATE (cfs)					21.2
RETURN PERIOD OF PEAK FLOW (yrs)					100
# OF CARTRIDGES REQUIRED (HF / DD)					10/2
CARTRIDGE LENGTH					54
PIPE DATA:	I.E.	MAT'L	DIA	SLOPE %	HGL
INLET #1	790.52	RCP	24	*	*
INLET #2	*	*	*	*	*
OUTLET	790.52	RCP	24	*	*
SEE GENERAL NOTES 6-7 FOR INLET AND OUTLET HYDRAULIC AND SIZING REQUIREMENTS.					
RIM ELEVATION					797.35
ANTI-FLOTATION BALLAST			WIDTH		HEIGHT
			*		*
NOTES/SPECIAL REQUIREMENTS: VAULT INCREASED TO 8'x8' TO ACCOMMODATE PIPE SIZES * PER ENGINEER OF RECORD					

GENERAL NOTES:
1. CONTECH TO PROVIDE ALL MATERIALS UNLESS NOTED OTHERWISE.
2. FOR SITE SPECIFIC DRAWINGS WITH DETAILED STRUCTURE DIMENSIONS AND WEIGHT, PLEASE CONTACT YOUR CONTECH ENGINEERED SOLUTIONS REPRESENTATIVE. www.ContechES.com
3. JELLYFISH WATER QUALITY STRUCTURE SHALL BE IN ACCORDANCE WITH ALL DESIGN DATA AND INFORMATION CONTAINED IN THIS DRAWING. CONTRACTOR TO CONFIRM STRUCTURE MEETS REQUIREMENTS OF PROJECT.
4. STRUCTURE SHALL MEET AASHTO HS-20 OR PER APPROVING JURISDICTION REQUIREMENTS, WHICHEVER IS MORE STRINGENT, ASSUMING EARTH COVER OF 0' - 10', AND GROUNDWATER ELEVATION AT, OR BELOW, THE OUTLET PIPE INVERT ELEVATION. ENGINEER OF RECORD TO CONFIRM ACTUAL GROUNDWATER ELEVATION. CASTINGS SHALL MEET AASHTO M306 LOAD RATING AND BE CAST WITH THE CONTECH LOGO.
5. STRUCTURE SHALL BE PRECAST CONCRETE CONFORMING TO ASTM C-857, ASTM C-918, AND AASHTO LOAD FACTOR DESIGN METHOD.
6. OUTLET PIPE INVERT IS EQUAL TO THE CARTRIDGE DECK ELEVATION.
7. THE OUTLET PIPE DIAMETER FOR NEW INSTALLATIONS IS RECOMMENDED TO BE ONE PIPE SIZE LARGER THAN THE INLET PIPE AT EQUAL OR GREATER SLOPE.
8. NO PRODUCT SUBSTITUTIONS SHALL BE ACCEPTED UNLESS SUBMITTED 10 DAYS PRIOR TO PROJECT BID DATE, OR AS DIRECTED BY THE ENGINEER OF RECORD.

INSTALLATION NOTES
A. ANY SUB-BASE, BACKFILL DEPTH, AND/OR ANTI-FLOTATION PROVISIONS ARE SITE-SPECIFIC DESIGN CONSIDERATIONS AND SHALL BE SPECIFIED BY ENGINEER OF RECORD.
B. CONTRACTOR TO PROVIDE EQUIPMENT WITH SUFFICIENT LIFTING AND REACH CAPACITY TO LIFT AND SET THE STRUCTURE.
C. CONTRACTOR WILL INSTALL AND LEVEL THE STRUCTURE, SEALING THE JOINTS, LINE ENTRY AND EXIT POINTS (NON-SHRINK GROUT WITH APPROVED WATERSTOP OR FLEXIBLE BOOT).
D. CARTRIDGE INSTALLATION, BY CONTECH, SHALL OCCUR ONLY AFTER SITE HAS BEEN STABILIZED AND THE JELLYFISH UNIT IS CLEAN AND FREE OF DEBRIS. CONTACT CONTECH TO COORDINATE CARTRIDGE INSTALLATION WITH SITE STABILIZATION.

CONTECH ENGINEERED SOLUTIONS LLC
www.ContechES.com
9025 Centre Pointe Dr., Suite 400, West Chester, OH 45069
800-338-1122 513-645-7000 513-645-7993 FAX

8' x 6' JELLYFISH - 835683- 015
PROJECT NAME: PARKSIDE ON THE RIVER
LOCATION: GEORGETOWN, TX
SITE DESIGNATION: JF-02

I:\QUIKRETE.NET\CONTECH\MRSLINVPROJECTS\ACTIVE\835600\835683\835683-15-JELLYFISH\DRAWINGS\PROPOSAL\835683-15-JFP00004.RRO.DWG 6/4/2025 1:19 PM

P:\Blake Magee\Parkside Sections 11-15 & WOA 5\Section 11, 12A & 15A\03_ACAD\Parcel\a2d05232_JELLYFISH.dwg, JELLYFISH-02, July 18, 2025, 12:01 PM, makai.muhammad

NO.	REVISION	BY	DATE

811 Know what's below. Call before you dig.

5508 HIGHWAY 290 WEST
SUITE 150
AUSTIN, TX 78735
512.872.6696
HRGREEN.COM
TBPE NO: 16384
TBPLS NO: 10194101
HRGreen® DEVELOPMENT TX

STATE OF TEXAS
CHRISTINE N. CAMPBELL
142536
LICENSED PROFESSIONAL ENGINEER
07/15/2025

JELLYFISH-02

PARKSIDE ON THE RIVER
SECTIONS 11, 12A & 15A
CONSTRUCTION PLANS
GEORGETOWN, WILLIAMSON, TEXAS

DESIGNED BY: CC
DRAWN BY: MM
CHECKED BY: SN
APPROVED BY:

SHEET 87 OF 141

2025-XX-CON

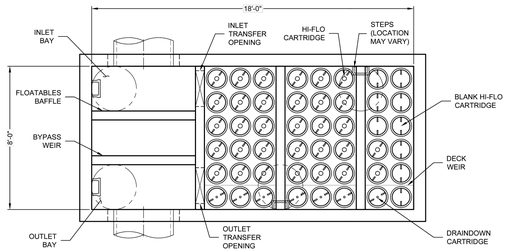

PLAN VIEW
(TOP SLAB NOT SHOWN FOR CLARITY)

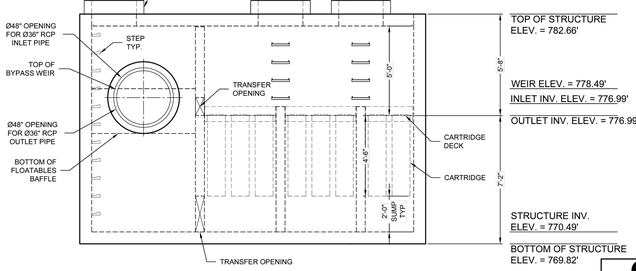

ELEVATION VIEW

JELLYFISH DESIGN NOTES

JELLYFISH TREATMENT CAPACITY IS A FUNCTION OF THE CARTRIDGE LENGTH AND THE NUMBER OF CARTRIDGES. THE STANDARD PEAK DIVERSION STYLE WITH PRECAST TOP SLAB IS SHOWN. ALTERNATE OFFLINE VAULT AND/OR SHALLOW ORIENTATIONS ARE AVAILABLE. PEAK CONVEYANCE CAPACITY TO BE DETERMINED BY ENGINEER OF RECORD.

CARTRIDGE SELECTION

CARTRIDGE LENGTH	54"
OUTLET INVERT TO STRUCTURE INVERT (A)	6'-8"
FLOW RATE HI-FLO / DRAINDOWN (CFS) (PER CART)	0.178 / 0.089
MAX. TREATMENT (CFS)	7.84
DECK TO INSIDE TOP (MIN) (B)	5.00

FRAME AND COVER
(DIAMETER VARIES)
N.T.S.

SITE SPECIFIC DATA REQUIREMENTS

STRUCTURE ID					JF-03
WATER QUALITY FLOW RATE (cfs)					6.18
PEAK FLOW RATE (cfs)					57.3
RETURN PERIOD OF PEAK FLOW (yrs)					100
# OF CARTRIDGES REQUIRED (HF / DD)					32/7
CARTRIDGE LENGTH					54
PIPE DATA:	I.E.	MAT'L	DIA	SLOPE %	HGL
INLET #1	776.99	RCP	36	*	*
INLET #2	*	*	*	*	*
OUTLET	776.99	RCP	36	*	*

SEE GENERAL NOTES 6-7 FOR INLET AND OUTLET HYDRAULIC AND SIZING REQUIREMENTS.

RIM ELEVATION	783.82

ANTI-FLOTATION BALLAST	WIDTH	HEIGHT
	*	*

NOTES/SPECIAL REQUIREMENTS:
VAULT INCREASED TO 8'x18' TO ACCOMMODATE PIPE SIZES
* PER ENGINEER OF RECORD

GENERAL NOTES:
1. CONTECH TO PROVIDE ALL MATERIALS UNLESS NOTED OTHERWISE.
2. FOR SITE SPECIFIC DRAWINGS WITH DETAILED STRUCTURE DIMENSIONS AND WEIGHT, PLEASE CONTACT YOUR CONTECH ENGINEERED SOLUTIONS REPRESENTATIVE. www.ContechES.com
3. JELLYFISH WATER QUALITY STRUCTURE SHALL BE IN ACCORDANCE WITH ALL DESIGN DATA AND INFORMATION CONTAINED IN THIS DRAWING. CONTRACTOR TO CONFIRM STRUCTURE MEETS REQUIREMENTS OF PROJECT.
4. STRUCTURE SHALL MEET AASHTO HS-20 OR PER APPROVING JURISDICTION REQUIREMENTS, WHICHEVER IS MORE STRINGENT, ASSUMING EARTH COVER OF 0' - 10', AND GROUNDWATER ELEVATION AT, OR BELOW, THE OUTLET PIPE INVERT ELEVATION. ENGINEER OF RECORD TO CONFIRM ACTUAL GROUNDWATER ELEVATION. CASTINGS SHALL MEET AASHTO M306 LOAD RATING AND BE CAST WITH THE CONTECH LOGO.
5. STRUCTURE SHALL BE PRECAST CONCRETE CONFORMING TO ASTM C-857, ASTM C-918, AND AASHTO LOAD FACTOR DESIGN METHOD.
6. OUTLET PIPE INVERT IS EQUAL TO THE CARTRIDGE DECK ELEVATION.
7. THE OUTLET PIPE DIAMETER FOR NEW INSTALLATIONS IS RECOMMENDED TO BE ONE PIPE SIZE LARGER THAN THE INLET PIPE AT EQUAL OR GREATER SLOPE.
8. NO PRODUCT SUBSTITUTIONS SHALL BE ACCEPTED UNLESS SUBMITTED 10 DAYS PRIOR TO PROJECT BID DATE, OR AS DIRECTED BY THE ENGINEER OF RECORD.

INSTALLATION NOTES
A. ANY SUB-BASE, BACKFILL DEPTH, AND/OR ANTI-FLOTATION PROVISIONS ARE SITE-SPECIFIC DESIGN CONSIDERATIONS AND SHALL BE SPECIFIED BY ENGINEER OF RECORD.
B. CONTRACTOR TO PROVIDE EQUIPMENT WITH SUFFICIENT LIFTING AND REACH CAPACITY TO LIFT AND SET THE STRUCTURE.
C. CONTRACTOR WILL INSTALL AND LEVEL THE STRUCTURE, SEALING THE JOINTS, LINE ENTRY AND EXIT POINTS (NON-SHRINK GROUT WITH APPROVED WATERSTOP OR FLEXIBLE BOOT).
D. CARTRIDGE INSTALLATION, BY CONTECH, SHALL OCCUR ONLY AFTER SITE HAS BEEN STABILIZED AND THE JELLYFISH UNIT IS CLEAN AND FREE OF DEBRIS. CONTACT CONTECH TO COORDINATE CARTRIDGE INSTALLATION WITH SITE STABILIZATION.

Jellyfish® Filter
THIS PRODUCT MAY BE PROTECTED BY ONE OR MORE OF THE FOLLOWING: U.S. PATENT NO. 8,287,726; 8,221,618; US 8,123,935; OTHER INTERNATIONAL PATENTS PENDING

CONTECH ENGINEERED SOLUTIONS LLC
www.ContechES.com
9100 Centre Pointe Dr., Suite 400, West Chester, OH 45069
800-338-1122 513-645-7000 513-645-7993 FAX

8' x 16' JELLYFISH - 835683 - 20
PARKSIDE ON THE RIVER
GEORGETOWN, TX
SITE DESIGNATION: JF-03

\\QUIKRETE.NET\CONTECH\MEDIA\PROJECT\ACTIVE\835600\835683\835683-20-JELLYFISH\DRAWINGS\PROPOSAL\835683-20-JELLYFISH.DWG, 6/6/2025 9:39 AM

P:\Blake Miguel\Parkside Sections 11-15 & 17\CAD Files\dwg\20250522_JELLYFISH.dwg, JELLYFISH-03, July 18, 2025, 12:01 PM, tmalan.muhammad

NO.	REVISION	BY	DATE

811 Know what's below. Call before you dig.

5508 HIGHWAY 290 WEST
SUITE 150
AUSTIN, TX 78735
512.872.6696
HRGREEN.COM
TBPE NO: 16384
TBPLS NO: 10194101

HRGreen® DEVELOPMENT TX

STATE OF TEXAS
CHRISTINE N. CAMPBELL
142536
LICENSED PROFESSIONAL ENGINEER
07/03/2025

JELLYFISH-03

PARKSIDE ON THE RIVER
SECTIONS 11, 12A & 15A
CONSTRUCTION PLANS
GEORGETOWN, WILLIAMSON, TEXAS

DESIGNED BY: CC
DRAWN BY: MM
CHECKED BY: SN
APPROVED BY:

SHEET 88 OF 141

2025-XX-CON

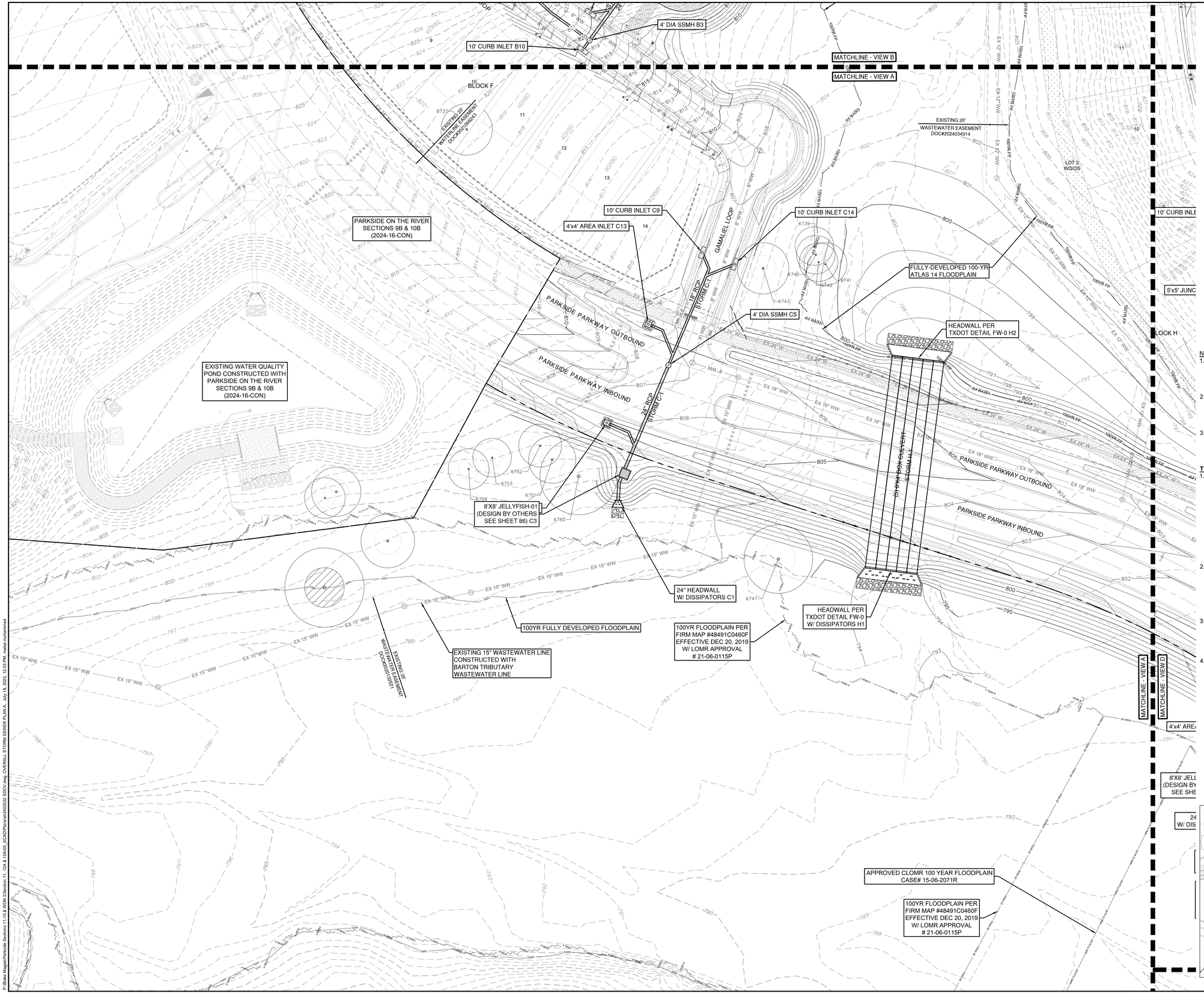

0 40' 80'

SCALE: 1" = 40'

LEGEND

- EXISTING MINOR CONTOUR
- EXISTING MAJOR CONTOUR
- PROPOSED MINOR CONTOUR
- PROPOSED MAJOR CONTOUR
- BOUNDARY
- EASEMENT
- FEMA FLOODWAY PER FIRM# 48491C0460F & LOMR# 21-06-0115P
- FEMA AE — 100YR ATLAS 14 FEMA ZONE AE FLOODPLAIN PER FIRM# 48491C0460F & LOMR# 21-06-0115P
- FEMA A — 100YR FEMA ZONE A FLOODPLAIN PER FIRM MAP# 48491C0460F
- 100YR CLOMR — 100YR CLOMR FLOODPLAIN CASE# 15-06-2071R
- FDFP — 100YR ATLAS 14 FULLY DEVELOPED FLOODPLAIN (STANTEC DRAINAGE STUDY, SHERVIN NOOSHIN, 3/25/19) APPROVED WITH PP# 2019-5-PP
- OHWM — ORDINARY HIGH WATER MARK PER ADAMS ENVIRONMENTAL
- PROPOSED STORM LINE
- FIRE HYDRANT
- WATER VALVE
- STORM SEWER MAHNOLE
- WASTEWATER MANHOLE
- CURB INLET
- TREES TO REMAIN HERITAGE

NOTE:

1. ALL PROPOSED STORM SEWER PIPE LINES SHALL BE CLASS III REINFORCED CONCRETE UNLESS NOTED OTHERWISE.
2. FILL SHALL BE PLACED ACCORDING TO THE GEOTECHNICAL ENGINEERS RECOMMENDATION AND CITY OF GEORGETOWN SPECIFICATIONS.
3. VEGETATE ALL DISTURBED AREAS WITHIN THE ROW AND OPEN SPACE LOT AREAS PER CITY OF GEORGETOWN SPECIFICATIONS.

TRENCH SAFETY NOTES:

1. IN ACCORDANCE WITH THE LAWS OF THE STATE OF TEXAS AND THE U.S. OCCUPATIONAL SAFETY AND HEALTH ADMINISTRATION REGULATIONS, ALL TRENCHES OVER 5 FEET IN DEPTH IN EITHER HARD AND COMPACT OR SOFT AND UNSTABLE SOIL SHALL BE SLOPED, SHORED, SHEETED, BRACED OR OTHERWISE SUPPORTED. FURTHERMORE, ALL TRENCHES LESS THAN 5 FEET IN DEPTH SHALL ALSO BE EFFECTIVELY PROTECTED WHEN HAZARDOUS GROUND MOVEMENT MAY BE EXPECTED. TRENCH SAFETY SYSTEMS TO BE UTILIZED FOR THIS PROJECT WILL BE PROVIDE BY THE CONTRACTOR.
2. IN ACCORDANCE WITH THE U.S. OCCUPATIONAL SAFETY AND HEALTH ADMINISTRATION REGULATIONS,WHEN PERSONS ARE IN TRENCHES 4-FEET DEEP OR MORE, ADEQUATE MEANS OF EXIT, SUCH AS A LADDER OR STEPS, MUST BE PROVIDED AND LOCATED SO AS TO REQUIRE NO MORE THAN 25 FEET OF LATERAL TRAVEL.
3. CONSTRUCTION SHALL NOT PROCEED UNTIL APPROPRIATE TRENCH SAFETY SYSTEM DETAILS, AS DESIGNED BY A PROFESSIONAL ENGINEER, ARE RETAINED AND COPIES SUBMITTED TO THE CITY OF GEORGETOWN.
4. DEEP EXCAVATIONS: ON EXCAVATIONS EXCEEDING 20 FEET IN DEPTH, TWO OR MORE MEANS OF EGRESS FROM THE EXCAVATION SHALL BE PROVIDED. THE CONTRACTOR SHALL CONSULT WITH A REGISTERED ENGINEER, EXPERIENCED IN TRENCH SAFETY SYSTEMS, REGARDING SPECIFIC MEANS AND METHODS EMPLOYED. CONTRACTOR SHALL PROVIDE A TRENCH SAFETY PLAN SEALED BY A REGISTERED PROFESSIONAL ENGINEER AS REQUIRED BY THE CITY OF GEORGETOWN.

NO	REVISION	BY	DATE

811 Know what's below. Call before you dig.

HRGreen DEVELOPMENT TX
5508 HIGHWAY 290 WEST
SUITE 150
AUSTIN, TX 78735
512.872.6696
HRGREEN.COM
TBPE NO: 16384
TBPLS NO: 10194101

STATE OF TEXAS
CHRISTINE N. CAMPBELL
142536
LICENSED PROFESSIONAL ENGINEER

07/03/2025

OVERALL STORM SEWER PLAN A

PARKSIDE ON THE RIVER SECTIONS 11, 12A & 15A CONSTRUCTION PLANS

GEORGETOWN, WILLIAMSON, TEXAS

DESIGNED BY: CC
DRAWN BY: MM
CHECKED BY: SN
APPROVED BY:

SHEET 89 OF 141

2025-XX-CON

P:\Blake Magee\Parkside Sections 11-15 S WON ES\Section 11, 12A & 15A\03_ACAD\Planset\240522 SDO\1.dwg, OVERALL STORM SEWER PLAN A, July 18, 2005, 12:03 PM, melvin.muhammad

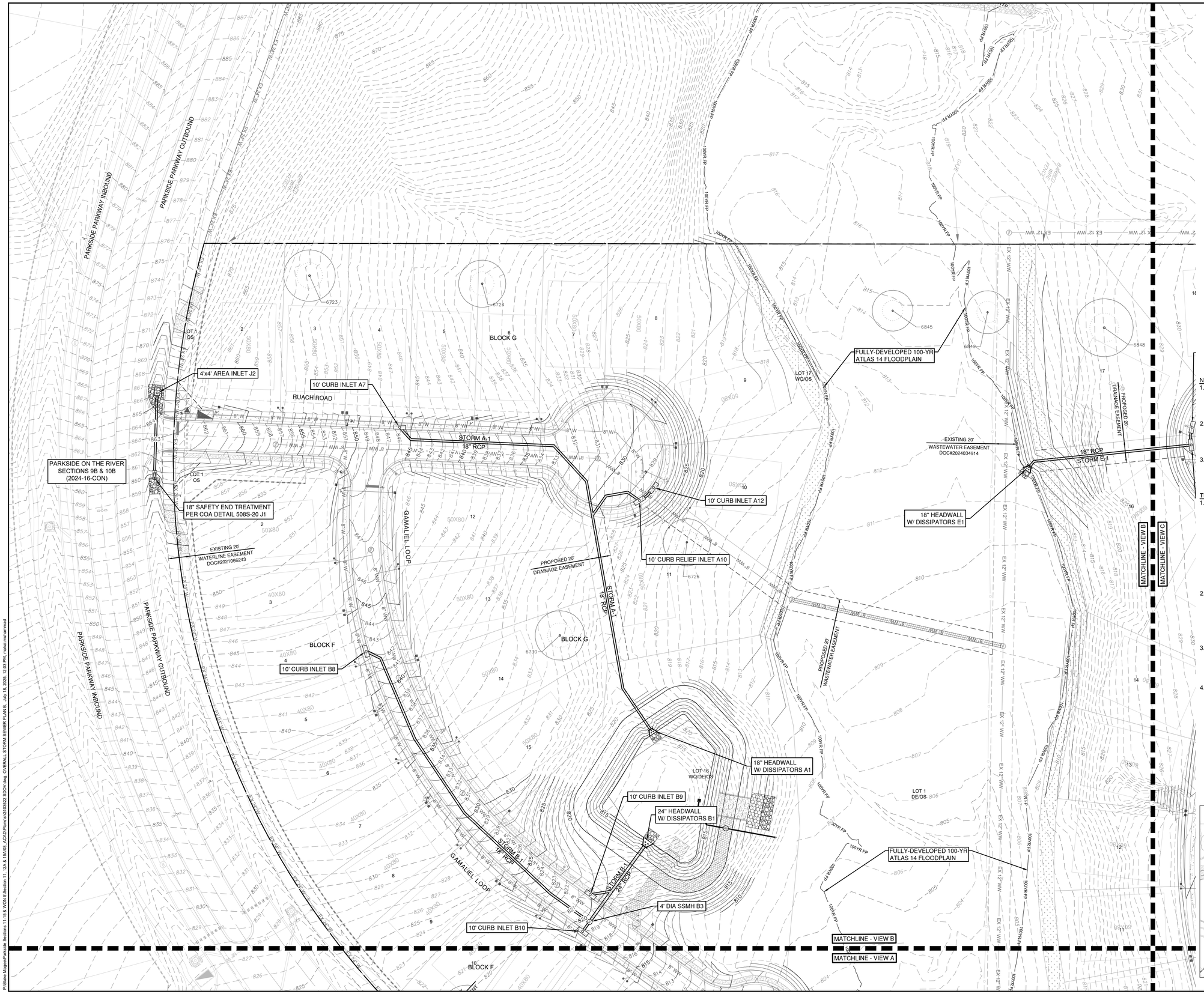

0 40' 80'

SCALE: 1" = 40'

LEGEND

- 834 — EXISTING MINOR CONTOUR
- 835 — EXISTING MAJOR CONTOUR
- 834 — PROPOSED MINOR CONTOUR
- 835 — PROPOSED MAJOR CONTOUR
- BOUNDARY
- EASEMENT
- FEMA FLOODWAY PER FIRM# 48491C0460F & LOMR# 21-06-0115P
- FEMA AE — 100YR ATLAS 14 FEMA ZONE AE FLOODPLAIN PER FIRM# 48491C0460F & LOMR# 21-06-0115P
- FEMA A — 100YR FEMA ZONE A FLOODPLAIN PER FIRM MAP# 48491C0460F
- 100YR CLOMR — 100YR CLOMR FLOODPLAIN CASE# 15-06-2071R
- FDFP — 100YR ATLAS 14 FULLY DEVELOPED FLOODPLAIN (STANTEC DRAINAGE STUDY, SHERVIN NOOSHIN, 3/25/19) APPROVED WITH PP# 2019-5-PP
- OHWM — ORDINARY HIGH WATER MARK PER ADAMS ENVIRONMENTAL
- PROPOSED STORM LINE
- FIRE HYDRANT
- WATER VALVE
- STORM SEWER MAHNOLE
- WASTEWATER MANHOLE
- CURB INLET
- TREES TO REMAIN HERITAGE
- TREES TO REMAIN NON HERITAGE

NOTE:

1. ALL PROPOSED STORM SEWER PIPE LINES SHALL BE CLASS III REINFORCED CONCRETE UNLESS NOTED OTHERWISE.
2. FILL SHALL BE PLACED ACCORDING TO THE GEOTECHNICAL ENGINEERS RECOMMENDATION AND CITY OF GEORGETOWN SPECIFICATIONS.
3. VEGETATE ALL DISTURBED AREAS WITHIN THE ROW AND OPEN SPACE LOT AREAS PER CITY OF GEORGETOWN SPECIFICATIONS.

TRENCH SAFETY NOTES:

1. IN ACCORDANCE WITH THE LAWS OF THE STATE OF TEXAS AND THE U.S. OCCUPATIONAL SAFETY AND HEALTH ADMINISTRATION REGULATIONS, ALL TRENCHES OVER 5 FEET IN DEPTH IN EITHER HARD AND COMPACT OR SOFT AND UNSTABLE SOIL SHALL BE SLOPED, SHORED, SHEETED, BRACED OR OTHERWISE SUPPORTED. FURTHERMORE, ALL TRENCHES LESS THAN 5 FEET IN DEPTH SHALL ALSO BE EFFECTIVELY PROTECTED WHEN HAZARDOUS GROUND MOVEMENT MAY BE EXPECTED. TRENCH SAFETY SYSTEMS TO BE UTILIZED FOR THIS PROJECT WILL BE PROVIDE BY THE CONTRACTOR.
2. IN ACCORDANCE WITH THE U.S. OCCUPATIONAL SAFETY AND HEALTH ADMINISTRATION REGULATIONS,WHEN PERSONS ARE IN TRENCHES 4-FEET DEEP OR MORE, ADEQUATE MEANS OF EXIT, SUCH AS A LADDER OR STEPS, MUST BE PROVIDED AND LOCATED SO AS TO REQUIRE NO MORE THAN 25 FEET OF LATERAL TRAVEL.
3. CONSTRUCTION SHALL NOT PROCEED UNTIL APPROPRIATE TRENCH SAFETY SYSTEM DETAILS, AS DESIGNED BY A PROFESSIONAL ENGINEER, ARE RETAINED AND COPIES SUBMITTED TO THE CITY OF GEORGETOWN.
4. DEEP EXCAVATIONS: ON EXCAVATIONS EXCEEDING 20 FEET IN DEPTH, TWO OR MORE MEANS OF EGRESS FROM THE EXCAVATION SHALL BE PROVIDED. THE CONTRACTOR SHALL CONSULT WITH A REGISTERED ENGINEER, EXPERIENCED IN TRENCH SAFETY SYSTEMS, REGARDING SPECIFIC MEANS AND METHODS EMPLOYED. CONTRACTOR SHALL PROVIDE A TRENCH SAFETY PLAN SEALED BY A REGISTERED PROFESSIONAL ENGINEER AS REQUIRED BY THE CITY OF GEORGETOWN.

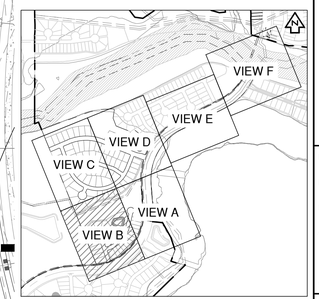

KEY MAP (N.T.S.)

NO	REVISION	BY	DATE

811 Know what's below. Call before you dig.

HRGreen
5508 HIGHWAY 290 WEST
SUITE 150
AUSTIN, TX 78735
512.872.6696
HRGREEN.COM
TBPE NO: 16384
TBPLS NO: 10194101

DEVELOPMENT TX

STATE OF TEXAS
CHRISTINE N. CAMPBELL
142536
LICENSED PROFESSIONAL ENGINEER

07/03/2025

OVERALL STORM SEWER PLAN B

PARKSIDE ON THE RIVER SECTIONS 11, 12A & 15A CONSTRUCTION PLANS GEORGETOWN, WILLIAMSON, TEXAS

DESIGNED BY: CC
DRAWN BY: MM
CHECKED BY: SN
APPROVED BY:

SHEET 90 OF 141

2025-XX-CON

P:\Blake Magee\Projects\Sections 11-15 & 19\GIS\Section 11, 12A & 15A\GIS_ACAD\Planset\24030202 SSOV.mxd, OVERALL STORM SEWER PLAN B, July 18, 2025, 12:03 PM, mekel muhammad

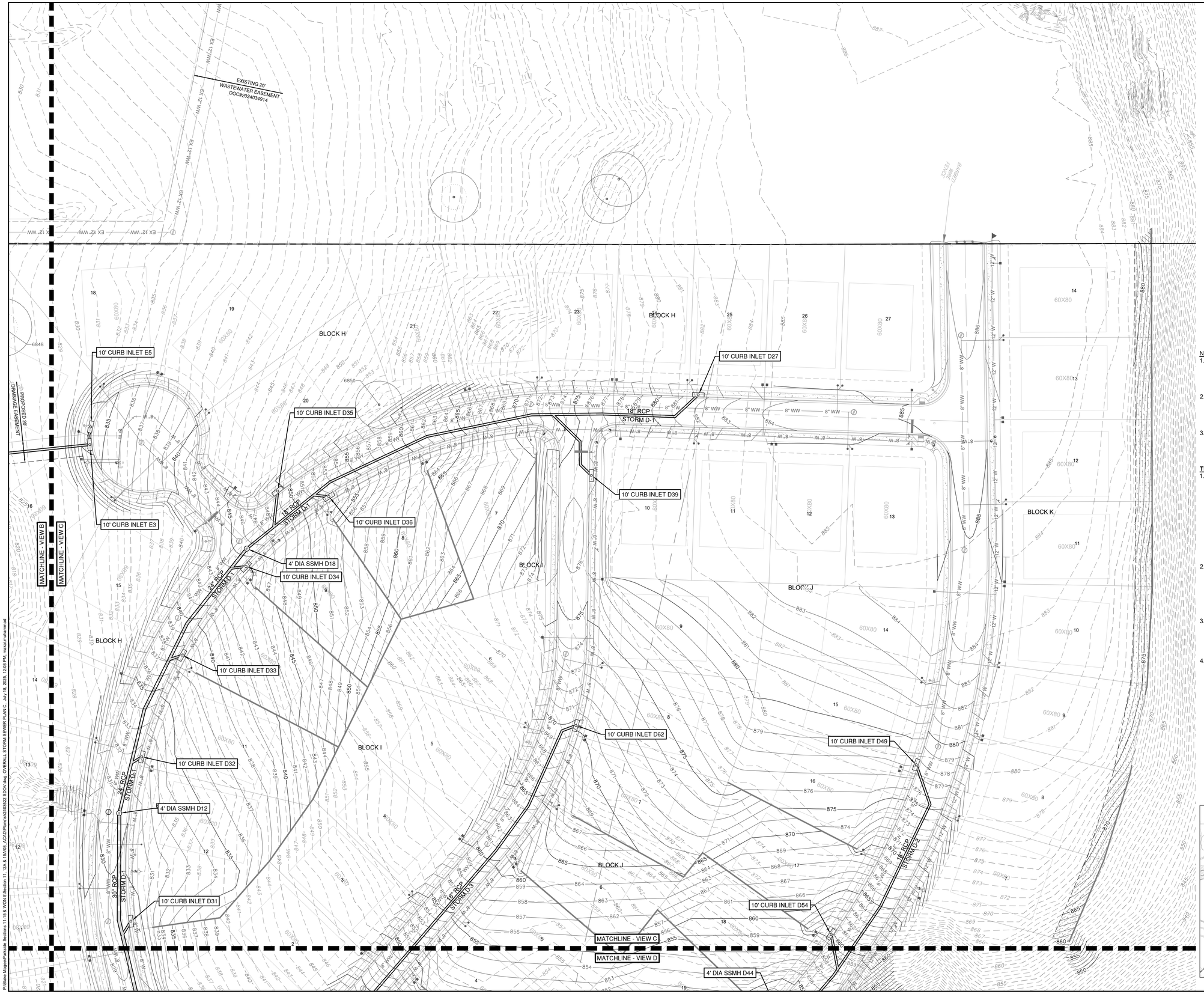

0 40' 80'

SCALE: 1" = 40'

LEGEND

- EXISTING MINOR CONTOUR
- EXISTING MAJOR CONTOUR
- PROPOSED MINOR CONTOUR
- PROPOSED MAJOR CONTOUR
- BOUNDARY
- EASEMENT
- FEMA FLOODWAY PER FIRM# 48491C0460F & LOMR# 21-06-0115P
- FEMA AE — 100YR ATLAS 14 FEMA ZONE AE FLOODPLAIN PER FIRM# 48491C0460F & LOMR# 21-06-0115P
- FEMA A — 100YR FEMA ZONE A FLOODPLAIN PER FIRM MAP# 48491C0460F
- 100YR CLOMR — 100YR CLOMR FLOODPLAIN CASE# 15-06-2071R
- FDFP — 100YR ATLAS 14 FULLY DEVELOPED FLOODPLAIN (STANTEC DRAINAGE STUDY, SHERVIN NOOSHIN, 3/25/19) APPROVED WITH PP# 2019-5-PP
- OHWM — ORDINARY HIGH WATER MARK PER ADAMS ENVIRONMENTAL
- PROPOSED STORM LINE
- FIRE HYDRANT
- WATER VALVE
- STORM SEWER MAHNOLE
- WASTEWATER MANHOLE
- CURB INLET
- TREES TO REMAIN HERITAGE
- TREES TO REMAIN STANDARD

NOTE:

1. ALL PROPOSED STORM SEWER PIPE LINES SHALL BE CLASS III REINFORCED CONCRETE UNLESS NOTED OTHERWISE.
2. FILL SHALL BE PLACED ACCORDING TO THE GEOTECHNICAL ENGINEERS RECOMMENDATION AND CITY OF GEORGETOWN SPECIFICATIONS.
3. VEGETATE ALL DISTURBED AREAS WITHIN THE ROW AND OPEN SPACE LOT AREAS PER CITY OF GEORGETOWN SPECIFICATIONS.

TRENCH SAFETY NOTES:

1. IN ACCORDANCE WITH THE LAWS OF THE STATE OF TEXAS AND THE U.S. OCCUPATIONAL SAFETY AND HEALTH ADMINISTRATION REGULATIONS, ALL TRENCHES OVER 5 FEET IN DEPTH IN EITHER HARD AND COMPACT OR SOFT AND UNSTABLE SOIL SHALL BE SLOPED, SHORED, SHEETED, BRACED OR OTHERWISE SUPPORTED. FURTHERMORE, ALL TRENCHES LESS THAN 5 FEET IN DEPTH SHALL ALSO BE EFFECTIVELY PROTECTED WHEN HAZARDOUS GROUND MOVEMENT MAY BE EXPECTED. TRENCH SAFETY SYSTEMS TO BE UTILIZED FOR THIS PROJECT WILL BE PROVIDE BY THE CONTRACTOR.
2. IN ACCORDANCE WITH THE U.S. OCCUPATIONAL SAFETY AND HEALTH ADMINISTRATION REGULATIONS,WHEN PERSONS ARE IN TRENCHES 4-FEET DEEP OR MORE, ADEQUATE MEANS OF EXIT, SUCH AS A LADDER OR STEPS, MUST BE PROVIDED AND LOCATED SO AS TO REQUIRE NO MORE THAN 25 FEET OF LATERAL TRAVEL.
3. CONSTRUCTION SHALL NOT PROCEED UNTIL APPROPRIATE TRENCH SAFETY SYSTEM DETAILS, AS DESIGNED BY A PROFESSIONAL ENGINEER, ARE RETAINED AND COPIES SUBMITTED TO THE CITY OF GEORGETOWN.
4. DEEP EXCAVATIONS: ON EXCAVATIONS EXCEEDING 20 FEET IN DEPTH, TWO OR MORE MEANS OF EGRESS FROM THE EXCAVATION SHALL BE PROVIDED. THE CONTRACTOR SHALL CONSULT WITH A REGISTERED ENGINEER, EXPERIENCED IN TRENCH SAFETY SYSTEMS, REGARDING SPECIFIC MEANS AND METHODS EMPLOYED. CONTRACTOR SHALL PROVIDE A TRENCH SAFETY PLAN SEALED BY A REGISTERED PROFESSIONAL ENGINEER AS REQUIRED BY THE CITY OF GEORGETOWN.

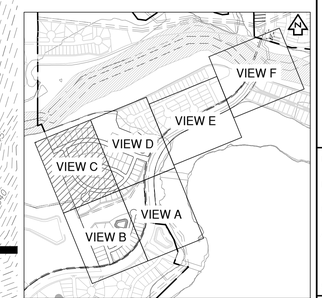

KEY MAP (N.T.S.)

NO	REVISION	BY	DATE

811 Know what's below. Call before you dig.

HRGreen® DEVELOPMENT TX
5508 HIGHWAY 290 WEST
SUITE 150
AUSTIN, TX 78735
512.872.6696
HRGREEN.COM
TBPE NO: 16384
TBPLS NO: 10194101

STATE OF TEXAS
CHRISTINE N. CAMPBELL
142536
LICENSED PROFESSIONAL ENGINEER

07/03/2025

OVERALL STORM SEWER PLAN C

PARKSIDE ON THE RIVER SECTIONS 11, 12A & 15A CONSTRUCTION PLANS

GEORGETOWN, WILLIAMSON, TEXAS

DESIGNED BY: CC
DRAWN BY: MM
CHECKED BY: SN
APPROVED BY:

SHEET 91 OF 141

2025-XX-CON

P:\Blake Magee\Parkside Sections 11-15 & WOA 5\Section 11, 12A & 15A\03_ACAD\Planset\240523 SDO\1.orig_OVERALL STORM SEWER PLAN C - July 18, 2005, 12:03 PM, melan.mohammad

10' CURB INLET D31
10' CURB INLET D54
MATCHLINE - VIEW C
MATCHLINE - VIEW D
4' DIA SSMH D44
10' CURB INLET D64
10' CURB INLET D53
10' CURB INLET D63
10' CURB INLET D30
10' CURB INLET D52
5'x5' JUNCTION BOX D7
10' CURB INLET D28
10' CURB INLET D51
10' CURB INLET D29
10' CURB INLET D50
6'x6' JUNCTION BOX D3
4'x4' AREA INLET F5
42" HEADWALL
W/ DISSIPATORS AND 4'
BLACK ALUMINUM FENCE D1
(SEE DETAIL ON SHEET 113)
7'X7' JUNCTION BOX I5
6'X6' JUNCTION BOX
6" PIPE WITH CAP
AND 3" OPENING I4
4'x4' AREA INLET F4
8'X8' JELLYFISH-02
(DESIGN BY OTHERS
SEE SHEET 87) F3
24" HEADWALL
W/ DISSIPATORS F1
APPROVED CLOMR
100 YEAR FLOODPLAIN
CASE# 15-06-2071R
100YR FLOODPLAIN PER
FIRM MAP #48491C0460F
EFFECTIVE DEC 20, 2019
W/ LOMR APPROVAL
21-06-0115P
100YR FULLY DEVELOPED FLOODPLAIN
48" HEADWALL
W/ DISSIPATORS AND 4'
BLACK ALUMINUM FENCE I1
(SEE DETAIL ON SHEET 113)
4'x4' AREA INLET G15
100YR FLOODPLAIN PER
FIRM MAP #48491C0460F
EFFECTIVE DEC 20, 2019
W/ LOMR APPROVAL
21-06-0115P
FUTURE PARKSIDE
SECTION 12B
EXISTING 35'
WASTEWATER EASEMENT
DOC#2020120541
EXISTING 20'
WATERLINE EASEMENT
DOC#2021066240
MATCHLINE - VIEW A
MATCHLINE - VIEW D
MATCHLINE - VIEW D
MATCHLINE - VIEW E
STORM D1
STORM D2
STORM D3
STORM D4
STORM D7
ELIEL WAY
TREASURE HOUSE WAY
MORNING SUNRISE CIRCLE
PARKSIDE PARKWAY INBOUND
PARKSIDE PARKWAY OUTBOUND
KADOSH WAY
BLOCK J
BLOCK K
LOCK H
LOT 6
DE/OS
LOT 3
OS
LOT 1
WQ/DE/OS
2713
2716
2718
2719
2720
2721
6774
6775
6777
6778

0 40' 80'
SCALE: 1" = 40'

LEGEND

- EXISTING MINOR CONTOUR
- EXISTING MAJOR CONTOUR
- PROPOSED MINOR CONTOUR
- PROPOSED MAJOR CONTOUR
- BOUNDARY
- EASEMENT
- FEMA FLOODWAY PER FIRM# 48491C0460F & LOMR# 21-06-0115P
- FEMA AE — 100YR ATLAS 14 FEMA ZONE AE FLOODPLAIN PER FIRM# 48491C0460F & LOMR# 21-06-0115P
- FEMA A — 100YR FEMA ZONE A FLOODPLAIN PER FIRM MAP# 48491C0460F
- 100YR CLOMR — 100YR CLOMR FLOODPLAIN CASE# 15-06-2071R
- FDFP — 100YR ATLAS 14 FULLY DEVELOPED FLOODPLAIN (STANTEC DRAINAGE STUDY, SHERVIN NOOSHIN, 3/25/19) APPROVED WITH PP# 2019-5-PP
- OHWM — ORDINARY HIGH WATER MARK PER ADAMS ENVIRONMENTAL
- PROPOSED STORM LINE
- FIRE HYDRANT
- WATER VALVE
- STORM SEWER MAHNOLE
- WASTEWATER MANHOLE
- CURB INLET
- TREES TO REMAIN
  HERITAGE
- STEEP SLOPE REMAIN UNDISTURBED

NOTE:

1. ALL PROPOSED STORM SEWER PIPE LINES SHALL BE CLASS III REINFORCED CONCRETE UNLESS NOTED OTHERWISE.
2. FILL SHALL BE PLACED ACCORDING TO THE GEOTECHNICAL ENGINEERS RECOMMENDATION AND CITY OF GEORGETOWN SPECIFICATIONS.
3. VEGETATE ALL DISTURBED AREAS WITHIN THE ROW AND OPEN SPACE LOT AREAS OVER CITY OF GEORGETOWN SPECIFICATIONS.

TRENCH SAFETY NOTES:

1. IN ACCORDANCE WITH THE LAWS OF THE STATE OF TEXAS AND THE U.S. OCCUPATIONAL SAFETY AND HEALTH ADMINISTRATION REGULATIONS, ALL TRENCHES OVER 5 FEET IN DEPTH IN EITHER HARD AND COMPACT OR SOFT AND UNSTABLE SOIL SHALL BE SLOPED, SHORED, SHEETED, BRACED OR OTHERWISE SUPPORTED. FURTHERMORE, ALL TRENCHES LESS THAN 5 FEET IN DEPTH SHALL ALSO BE EFFECTIVELY PROTECTED WHEN HAZARDOUS GROUND MOVEMENT MAY BE EXPECTED. TRENCH SAFETY SYSTEMS TO BE UTILIZED FOR THIS PROJECT WILL BE PROVIDE BY THE CONTRACTOR.
2. IN ACCORDANCE WITH THE U.S. OCCUPATIONAL SAFETY AND HEALTH ADMINISTRATION REGULATIONS,WHEN PERSONS ARE IN TRENCHES 4-FEET DEEP OR MORE, ADEQUATE MEANS OF EXIT, SUCH AS A LADDER OR STEPS, MUST BE PROVIDED AND LOCATED SO AS TO REQUIRE NO MORE THAN 25 FEET OF LATERAL TRAVEL.
3. CONSTRUCTION SHALL NOT PROCEED UNTIL APPROPRIATE TRENCH SAFETY SYSTEM DETAILS, AS DESIGNED BY A PROFESSIONAL ENGINEER, ARE RETAINED AND COPIES SUBMITTED TO THE CITY OF GEORGETOWN.
4. DEEP EXCAVATIONS: ON EXCAVATIONS EXCEEDING 20 FEET IN DEPTH, TWO OR MORE MEANS OF EGRESS FROM THE EXCAVATION SHALL BE PROVIDED. THE CONTRACTOR SHALL CONSULT WITH A REGISTERED ENGINEER, EXPERIENCED IN TRENCH SAFETY SYSTEMS, REGARDING SPECIFIC MEANS AND METHODS EMPLOYED. CONTRACTOR SHALL PROVIDE A TRENCH SAFETY PLAN SEALED BY A REGISTERED PROFESSIONAL ENGINEER AS REQUIRED BY THE CITY OF GEORGETOWN.

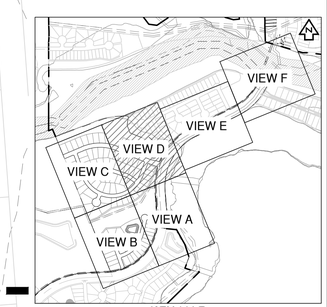

KEY MAP
(N.T.S.)

NO	REVISION	BY	DATE

811 Know what's below. Call before you dig.

HRGreen
DEVELOPMENT TX
5508 HIGHWAY 290 WEST
SUITE 150
AUSTIN, TX 78735
512.872.6696
HRGREEN.COM
TBPE NO: 16384
TBPLS NO: 10194101

STATE OF TEXAS
CHRISTINE N. CAMPBELL
142536
LICENSED
PROFESSIONAL ENGINEER
07/03/2025

OVERALL STORM SEWER PLAN D

PARKSIDE ON THE RIVER SECTIONS 11, 12A & 15A CONSTRUCTION PLANS

GEORGETOWN, WILLIAMSON, TEXAS

DESIGNED BY: CC
DRAWN BY: MM
CHECKED BY: SN
APPROVED BY:

SHEET 92 OF 141

2025-XX-CON

P:\Blake Magee\Parkside Sections 11\15 & VION 5\Section 11, 12A & 15A\03_ACAD\Planset\sht\20250220 SDCV.dwg, OVERALL STORM SEWER PLAN D, July 16, 2025, 12:54 PM, nakai.mohammad

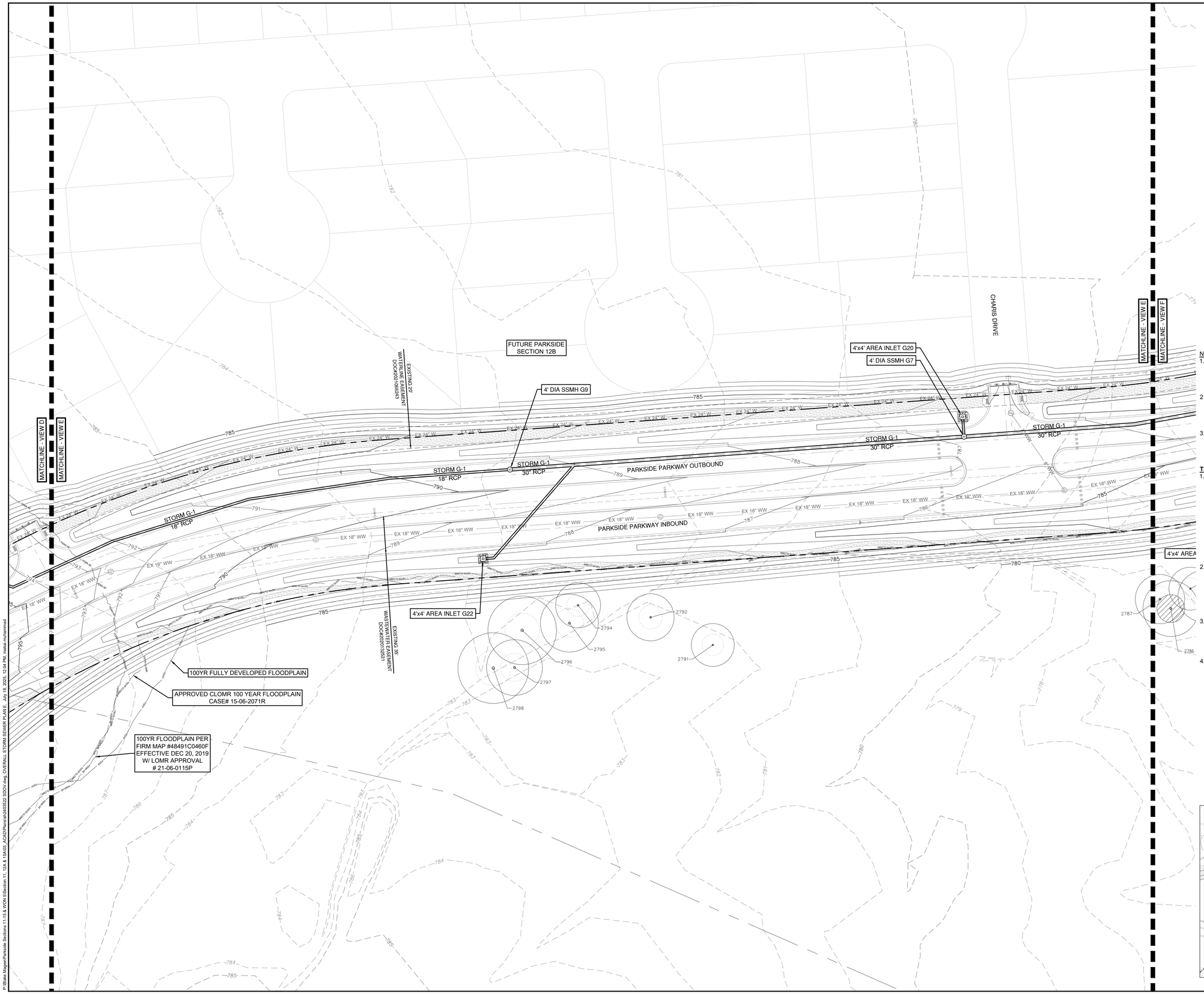

0 40' 80'

SCALE: 1" = 40'

LEGEND

- EXISTING MINOR CONTOUR
- EXISTING MAJOR CONTOUR
- PROPOSED MINOR CONTOUR
- PROPOSED MAJOR CONTOUR
- BOUNDARY
- EASEMENT
- FEMA FLOODWAY PER FIRM# 48491C0460F & LOMR# 21-06-0115P
- FEMA AE — 100YR ATLAS 14 FEMA ZONE AE FLOODPLAIN PER FIRM# 48491C0460F & LOMR# 21-06-0115P
- FEMA A — 100YR FEMA ZONE A FLOODPLAIN PER FIRM MAP# 48491C0460F
- 100YR CLOMR — 100YR CLOMR FLOODPLAIN CASE# 15-06-2071R
- FDFP — 100YR ATLAS 14 FULLY DEVELOPED FLOODPLAIN (STANTEC DRAINAGE STUDY, SHERVIN NOOSHIN, 3/25/19) APPROVED WITH PP# 2019-5-PP
- OHWM — ORDINARY HIGH WATER MARK PER ADAMS ENVIRONMENTAL
- PROPOSED STORM LINE
- FIRE HYDRANT
- WATER VALVE
- STORM SEWER MAHNOLE
- WASTEWATER MANHOLE
- CURB INLET
- TREES TO REMAIN HERITAGE

NOTE:

1. ALL PROPOSED STORM SEWER PIPE LINES SHALL BE CLASS III REINFORCED CONCRETE UNLESS NOTED OTHERWISE.
2. FILL SHALL BE PLACED ACCORDING TO THE GEOTECHNICAL ENGINEERS RECOMMENDATION AND CITY OF GEORGETOWN SPECIFICATIONS.
3. VEGETATE ALL DISTURBED AREAS WITHIN THE ROW AND OPEN SPACE LOT AREAS PER CITY OF GEORGETOWN SPECIFICATIONS.

TRENCH SAFETY NOTES:

1. IN ACCORDANCE WITH THE LAWS OF THE STATE OF TEXAS AND THE U.S. OCCUPATIONAL SAFETY AND HEALTH ADMINISTRATION REGULATIONS, ALL TRENCHES OVER 5 FEET IN DEPTH IN EITHER HARD AND COMPACT OR SOFT AND UNSTABLE SOIL SHALL BE SLOPED, SHORED, SHEETED, BRACED OR OTHERWISE SUPPORTED. FURTHERMORE, ALL TRENCHES LESS THAN 5 FEET IN DEPTH SHALL ALSO BE EFFECTIVELY PROTECTED WHEN HAZARDOUS GROUND MOVEMENT MAY BE EXPECTED. TRENCH SAFETY SYSTEMS TO BE UTILIZED FOR THIS PROJECT WILL BE PROVIDE BY THE CONTRACTOR.
2. IN ACCORDANCE WITH THE U.S. OCCUPATIONAL SAFETY AND HEALTH ADMINISTRATION REGULATIONS,WHEN PERSONS ARE IN TRENCHES 4-FEET DEEP OR MORE, ADEQUATE MEANS OF EXIT, SUCH AS A LADDER OR STEPS, MUST BE PROVIDED AND LOCATED SO AS TO REQUIRE NO MORE THAN 25 FEET OF LATERAL TRAVEL.
3. CONSTRUCTION SHALL NOT PROCEED UNTIL APPROPRIATE TRENCH SAFETY SYSTEM DETAILS, AS DESIGNED BY A PROFESSIONAL ENGINEER, ARE RETAINED AND COPIES SUBMITTED TO THE CITY OF GEORGETOWN.
4. DEEP EXCAVATIONS: ON EXCAVATIONS EXCEEDING 20 FEET IN DEPTH, TWO OR MORE MEANS OF EGRESS FROM THE EXCAVATION SHALL BE PROVIDED. THE CONTRACTOR SHALL CONSULT WITH A REGISTERED ENGINEER, EXPERIENCED IN TRENCH SAFETY SYSTEMS, REGARDING SPECIFIC MEANS AND METHODS EMPLOYED. CONTRACTOR SHALL PROVIDE A TRENCH SAFETY PLAN SEALED BY A REGISTERED PROFESSIONAL ENGINEER AS REQUIRED BY THE CITY OF GEORGETOWN.

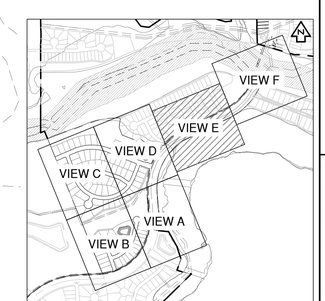

KEY MAP (N.T.S.)

NO	REVISION	BY	DATE

811 Know what's below. Call before you dig.

5508 HIGHWAY 290 WEST
SUITE 150
AUSTIN, TX 78735
512.872.6696
HRGREEN.COM

TBPE NO: 16384
TBPLS NO: 10194101

HRGreen®
DEVELOPMENT TX

STATE OF TEXAS
CHRISTINE N. CAMPBELL
142536
LICENSED PROFESSIONAL ENGINEER

07/05/2025

OVERALL STORM SEWER PLAN E

PARKSIDE ON THE RIVER SECTIONS 11, 12A & 15A CONSTRUCTION PLANS GEORGETOWN, WILLIAMSON, TEXAS

DESIGNED BY: CC
DRAWN BY: MM
CHECKED BY: SN
APPROVED BY:

SHEET 93 OF 141

2025-XX-CON

P:\Blake Magee\Parkside Sections 11-15 & WOA 15\Section 11, 12A & 15A\00_ACAD\Plans\sh\A00522.SSOV.dwg, OVERALL STORM SEWER PLAN E, July 19, 2025, 12:04 PM, mateo.muhammad

PARKSIDE ON THE RIVER SECTION 15B TO BE CONSTRUCTED CONCURRENTLY OR AFTER CONSTRUCTION OF PARKSIDE ON THE RIVER SECTIONS 11, 12A & 15A

EXISTING 100' WASTEWATER EASEMENT DOC#2017098157

EXISTING 100' WASTEWATER EASEMENT DOC#2007106940

EXISTING 100' WASTEWATER EASEMENT DOC#2007106941

EXISTING 100' WASTEWATER EASEMENT DOC#2007106942

FLOODWAY PER FIRM MAP #48491C0460F, EFFECTIVE DEC 20, 2019 W/ LOMR APPROVAL #21-06-0115P

APPROVED CLOMR 100 YEAR FLOODPLAIN CASE# 15-06-2071R

APPROVED CLOMR 100 YEAR FLOODPLAIN CASE# 15-06-2071R

100YR FULLY DEVELOPED FLOODPLAIN

FUTURE PARKSIDE SECTION 14A

TRANQUIL SERENITY WAY

MATCHLINE - VIEW E

MATCHLINE - VIEW F

4'x4' AREA INLET G19

5' DIA SSMH G5

STORM G-1 30" RCP

STORM G-1 36" RCP

4'x4' AREA INLET G17

8'X18' JELLYFISH-03 (DESIGN BY OTHERS SEE SHEET 88) G3

36" HEADWALL W/ DISSIPATORS AND 4' BLACK ALUMINUM FENCE G1 (SEE DETAIL ON SHEET 113)

0 40' 80'

SCALE: 1" = 40'

LEGEND

- 834 — EXISTING MINOR CONTOUR
- 835 — EXISTING MAJOR CONTOUR
- 834 — PROPOSED MINOR CONTOUR
- 835 — PROPOSED MAJOR CONTOUR
- BOUNDARY
- EASEMENT
- FEMA FLOODWAY PER FIRM# 48491C0460F & LOMR# 21-06-0115P
- FEMA AE — 100YR ATLAS 14 FEMA ZONE AE FLOODPLAIN PER FIRM# 48491C0460F & LOMR# 21-06-0115P
- FEMA A — 100YR FEMA ZONE A FLOODPLAIN PER FIRM MAP# 48491C0460F
- 100YR CLOMR — 100YR CLOMR FLOODPLAIN CASE# 15-06-2071R
- FDFP — 100YR ATLAS 14 FULLY DEVELOPED FLOODPLAIN (STANTEC DRAINAGE STUDY, SHERVIN NOOSHIN, 3/25/19) APPROVED WITH PP# 2019-5-PP
- OHWM — ORDINARY HIGH WATER MARK PER ADAMS ENVIRONMENTAL
- SD — PROPOSED STORM LINE
- FIRE HYDRANT
- WATER VALVE
- SD — STORM SEWER MAHNOLE
- WW — WASTEWATER MANHOLE
- CURB INLET
- TREES TO REMAIN HERITAGE
- TREES TO REMAIN OTHER

NOTE:

1. ALL PROPOSED STORM SEWER PIPE LINES SHALL BE CLASS III REINFORCED CONCRETE UNLESS NOTED OTHERWISE.
2. FILL SHALL BE PLACED ACCORDING TO THE GEOTECHNICAL ENGINEERS RECOMMENDATION AND CITY OF GEORGETOWN SPECIFICATIONS.
3. VEGETATE ALL DISTURBED AREAS WITHIN THE ROW AND OPEN SPACE LOT AREAS PER CITY OF GEORGETOWN SPECIFICATIONS.

TRENCH SAFETY NOTES:

1. IN ACCORDANCE WITH THE LAWS OF THE STATE OF TEXAS AND THE U.S. OCCUPATIONAL SAFETY AND HEALTH ADMINISTRATION REGULATIONS, ALL TRENCHES OVER 5 FEET IN DEPTH IN EITHER HARD AND COMPACT OR SOFT AND UNSTABLE SOIL SHALL BE SLOPED, SHORED, SHEETED, BRACED OR OTHERWISE SUPPORTED. FURTHERMORE, ALL TRENCHES LESS THAN 5 FEET IN DEPTH SHALL ALSO BE EFFECTIVELY PROTECTED WHEN HAZARDOUS GROUND MOVEMENT MAY BE EXPECTED. TRENCH SAFETY SYSTEMS TO BE UTILIZED FOR THIS PROJECT WILL BE PROVIDE BY THE CONTRACTOR.
2. IN ACCORDANCE WITH THE U.S. OCCUPATIONAL SAFETY AND HEALTH ADMINISTRATION REGULATIONS,WHEN PERSONS ARE IN TRENCHES 4-FEET DEEP OR MORE, ADEQUATE MEANS OF EXIT, SUCH AS A LADDER OR STEPS, MUST BE PROVIDED AND LOCATED SO AS TO REQUIRE NO MORE THAN 25 FEET OF LATERAL TRAVEL.
3. CONSTRUCTION SHALL NOT PROCEED UNTIL APPROPRIATE TRENCH SAFETY SYSTEM DETAILS, AS DESIGNED BY A PROFESSIONAL ENGINEER, ARE RETAINED AND COPIES SUBMITTED TO THE CITY OF GEORGETOWN.
4. DEEP EXCAVATIONS: ON EXCAVATIONS EXCEEDING 20 FEET IN DEPTH, TWO OR MORE MEANS OF EGRESS FROM THE EXCAVATION SHALL BE PROVIDED. THE CONTRACTOR SHALL CONSULT WITH A REGISTERED ENGINEER, EXPERIENCED IN TRENCH SAFETY SYSTEMS, REGARDING SPECIFIC MEANS AND METHODS EMPLOYED. CONTRACTOR SHALL PROVIDE A TRENCH SAFETY PLAN SEALED BY A REGISTERED PROFESSIONAL ENGINEER AS REQUIRED BY THE CITY OF GEORGETOWN.

KEY MAP (N.T.S.)

VIEW A, VIEW B, VIEW C, VIEW D, VIEW E, VIEW F, 100YR FD, FFE FP

NO	REVISION	BY	DATE

811 Know what's below. Call before you dig.

HRGreen®
5508 HIGHWAY 290 WEST
SUITE 150
AUSTIN, TX 78735
512.872.6696
HRGREEN.COM
TBPE NO: 16384
TBPLS NO: 10194101
DEVELOPMENT TX

STATE OF TEXAS
CHRISTINE N. CAMPBELL
142536
LICENSED PROFESSIONAL ENGINEER
07/03/2025

OVERALL STORM SEWER PLAN F

PARKSIDE ON THE RIVER
SECTIONS 11, 12A & 15A
CONSTRUCTION PLANS
GEORGETOWN, WILLIAMSON, TEXAS

DESIGNED BY: CC
DRAWN BY: MM
CHECKED BY: SN
APPROVED BY:

SHEET 94 OF 141

2025-XX-CON

P:\Base Maps\Parkside Sections 11-15 & WDN's\Section 11, 12A & 15A\03_ACAD\Planset\ADSO2_SDOV.dwg, OVERALL STORM SEWER PLAN F, July 18, 2025, 12:04 PM, malak.muhammad

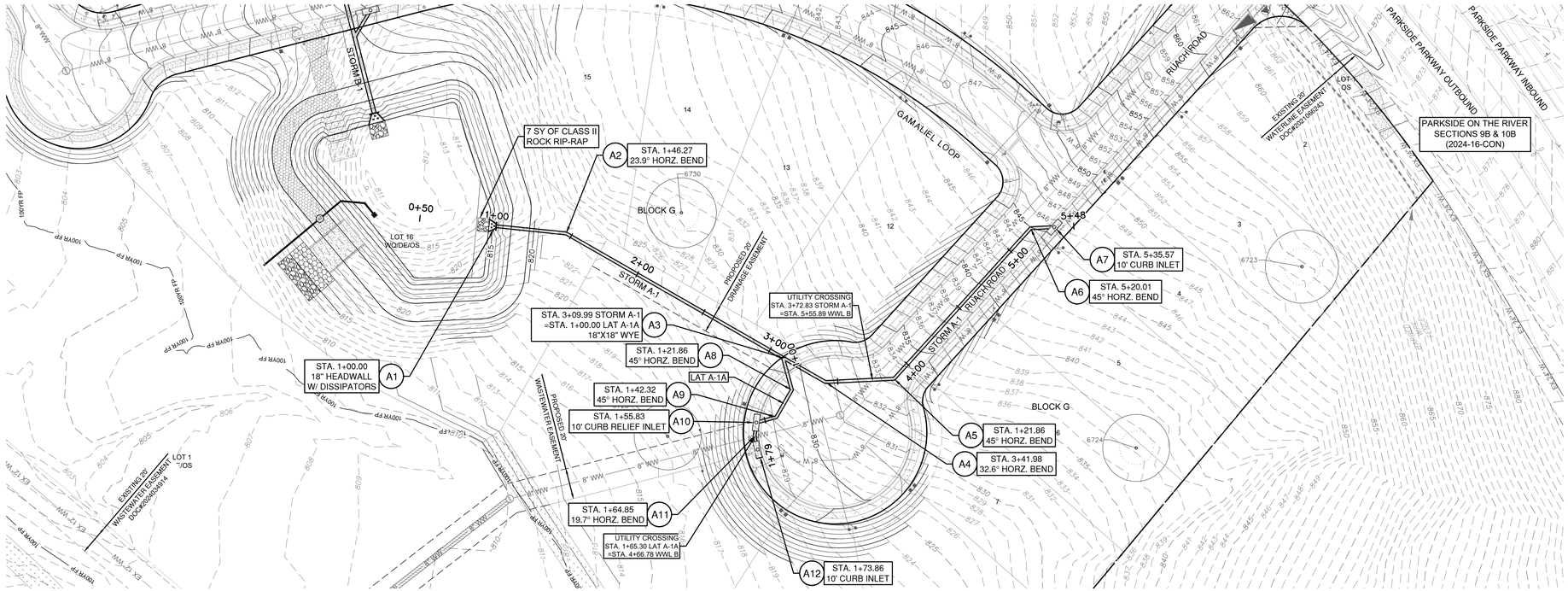

0 40' 80'

SCALE: 1" = 40'

LEGEND

- EXISTING MINOR CONTOUR
- EXISTING MAJOR CONTOUR
- PROPOSED MINOR CONTOUR
- PROPOSED MAJOR CONTOUR
- BOUNDARY
- EASEMENT
- FEMA FLOODWAY PER FIRM# 48491C0460F & LOMR# 21-06-0115P
- FEMA AE — 100YR ATLAS 14 FEMA ZONE AE FLOODPLAIN PER FIRM# 48491C0460F & LOMR# 21-06-0115P
- FEMA A — 100YR FEMA ZONE A FLOODPLAIN PER FIRM MAP# 48491C0460F
- 100YR CLOMR — 100YR CLOMR FLOODPLAIN CASE# 15-06-2071R
- FDFP — 100YR ATLAS 14 FULLY DEVELOPED FLOODPLAIN (STANTEC DRAINAGE STUDY, SHERVIN NOOSHIN, 3/25/19) APPROVED WITH PP# 2019-5-PP
- OHWM — ORDINARY HIGH WATER MARK PER ADAMS ENVIRONMENTAL
- SD — PROPOSED STORM LINE
- FIRE HYDRANT
- WATER VALVE
- SD — STORM SEWER MAHNOLE
- WW — WASTEWATER MANHOLE
- CURB INLET
- TREES TO REMAIN HERITAGE
- TREES TO REMAIN NON HERITAGE

VERT. SCALE: 1" = 4'
HORZ. SCALE: 1" = 40'

4' 2' 0 VERT. SCALE

EXISTING GRADE - CENTERLINE
FINISHED GRADE - CENTERLINE

EXISTING GROUND 1000.1 997.10 PROPOSED FLOWLINE

NOTE:

1. ALL PROPOSED STORM SEWER PIPE LINES SHALL BE CLASS III REINFORCED CONCRETE UNLESS NOTED OTHERWISE.
2. FILL SHALL BE PLACED ACCORDING TO THE GEOTECHNICAL ENGINEERS RECOMMENDATION AND CITY OF GEORGETOWN SPECIFICATIONS.
3. VEGETATE ALL DISTURBED AREAS WITHIN THE ROW AND OPEN SPACE LOT AREAS PER CITY OF GEORGETOWN SPECIFICATIONS.

TRENCH SAFETY NOTES:

1. IN ACCORDANCE WITH THE LAWS OF THE STATE OF TEXAS AND THE U.S. OCCUPATIONAL SAFETY AND HEALTH ADMINISTRATION REGULATIONS, ALL TRENCHES OVER 5 FEET IN DEPTH IN EITHER HARD AND COMPACT OR SOFT AND UNSTABLE SOIL SHALL BE SLOPED, SHORED, SHEETED, BRACED OR OTHERWISE SUPPORTED. FURTHERMORE, ALL TRENCHES LESS THAN 5 FEET IN DEPTH SHALL ALSO BE EFFECTIVELY PROTECTED WHEN HAZARDOUS GROUND MOVEMENT MAY BE EXPECTED. TRENCH SAFETY SYSTEMS TO BE UTILIZED FOR THIS PROJECT WILL BE PROVIDE BY THE CONTRACTOR.
2. IN ACCORDANCE WITH THE U.S. OCCUPATIONAL SAFETY AND HEALTH ADMINISTRATION REGULATIONS,WHEN PERSONS ARE IN TRENCHES 4-FEET DEEP OR MORE, ADEQUATE MEANS OF EXIT, SUCH AS A LADDER OR STEPS, MUST BE PROVIDED AND LOCATED SO AS TO REQUIRE NO MORE THAN 25 FEET OF LATERAL TRAVEL.
3. CONSTRUCTION SHALL NOT PROCEED UNTIL APPROPRIATE TRENCH SAFETY SYSTEM DETAILS, AS DESIGNED BY A PROFESSIONAL ENGINEER, ARE RETAINED AND COPIES SUBMITTED TO THE CITY OF GEORGETOWN.
4. DEEP EXCAVATIONS: ON EXCAVATIONS EXCEEDING 20 FEET IN DEPTH, TWO OR MORE MEANS OF EGRESS FROM THE EXCAVATION SHALL BE PROVIDED. THE CONTRACTOR SHALL CONSULT WITH A REGISTERED ENGINEER, EXPERIENCED IN TRENCH SAFETY SYSTEMS, REGARDING SPECIFIC MEANS AND METHODS EMPLOYED. CONTRACTOR SHALL PROVIDE A TRENCH SAFETY PLAN SEALED BY A REGISTERED PROFESSIONAL ENGINEER AS REQUIRED BY THE CITY OF GEORGETOWN.

STORM A-1

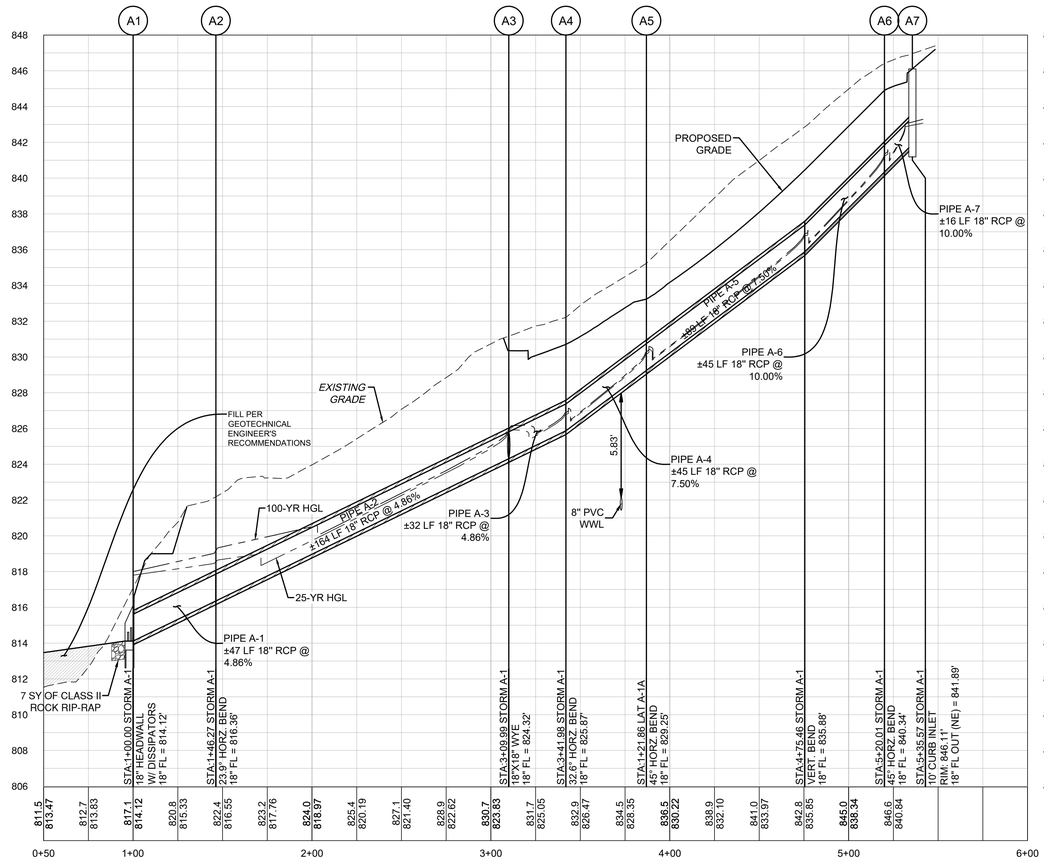

LAT A-1A

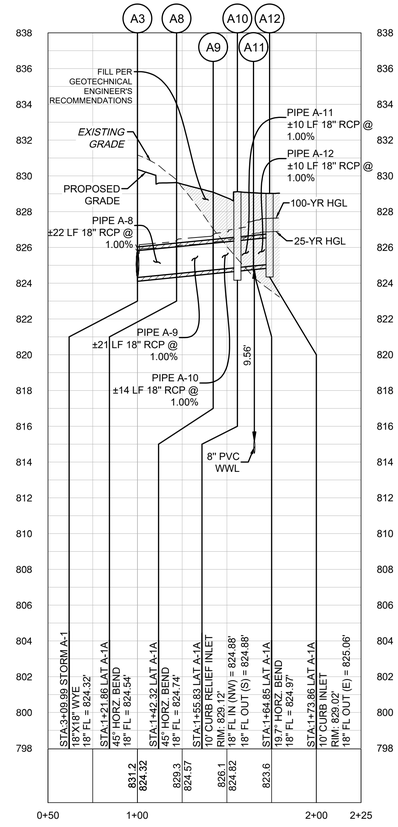

Pipe Label	Slope (%)	Q25 (cfs)	V25 (ft/s)	D25 (ft)	Q100 (cfs)	V100 (ft/s)	D100 (ft)
PIPE A-1	4.86%	12.48	7.06	3.68	15.63	8.84	3.88
PIPE A-2	4.86%	12.48	7.29	2.28	15.63	8.94	2.96
PIPE A-3	4.86%	5.16	3.87	1.60	6.52	4.49	1.84
PIPE A-4	7.50%	5.16	4.24	1.12	6.52	4.69	1.27
PIPE A-5	7.50%	5.16	4.14	1.18	6.52	4.59	1.34
PIPE A-6	10.00%	5.16	4.36	1.05	6.52	4.80	1.20
PIPE A-7	10.00%	5.16	4.14	1.18	6.52	4.59	1.34
PIPE A-8	1.00%	7.32	4.15	1.60	9.11	5.16	1.84
PIPE A-9	1.00%	7.32	4.15	1.58	9.11	5.16	1.94
PIPE A-10	1.00%	7.32	4.14	1.58	9.11	5.16	2.04
PIPE A-11	1.00%	5.81	3.29	1.85	7.26	4.11	2.53
PIPE A-12	1.00%	5.81	3.29	1.83	7.26	4.11	2.54

NO	REVISION	BY	DATE

811 Know what's below. Call before you dig.

HRGreen
DEVELOPMENT TX
5508 HIGHWAY 290 WEST
SUITE 150
AUSTIN, TX 78735
512.872.6696
HRGREEN.COM
TBPE NO: 16384
TBPLS NO: 10194101

STATE OF TEXAS
CHRISTINE N. CAMPBELL
142536
LICENSED PROFESSIONAL ENGINEER
07/15/2025

STORM A-1 & LATERALS PLAN & PROFILE

PARKSIDE ON THE RIVER SECTIONS 11, 12A & 15A CONSTRUCTION PLANS
GEORGETOWN, WILLIAMSON, TEXAS

DESIGNED BY: CC
DRAWN BY: MM
CHECKED BY: SN
APPROVED BY:

SHEET 95 OF 141

2025-XX-CON

P:\Blake Magee\Parkside Sections 11-15 & WCN 15\Section 11, 12A & 14\01_ACAD\Planview\340532.02\PP STORM A-1 & LATERALS PLAN & PROFILE July 16, 2025, 12:05 PM, malak.muhammad

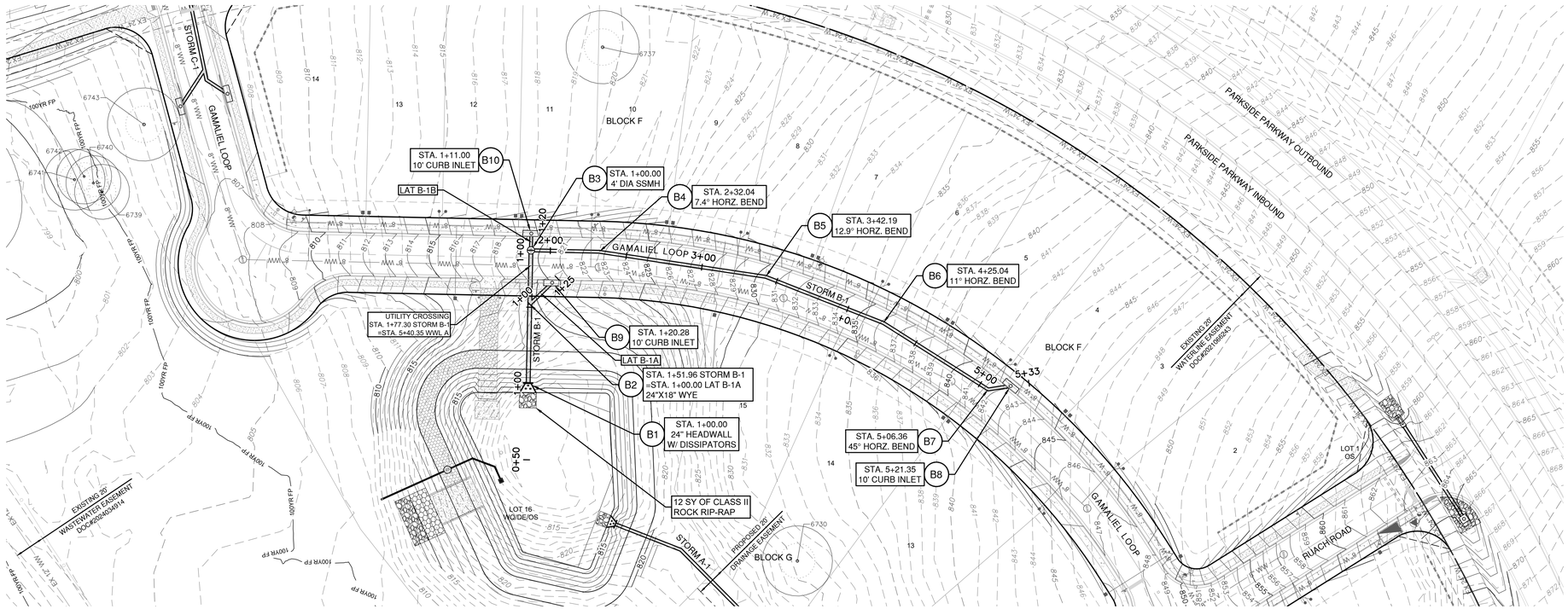

STORM B-1

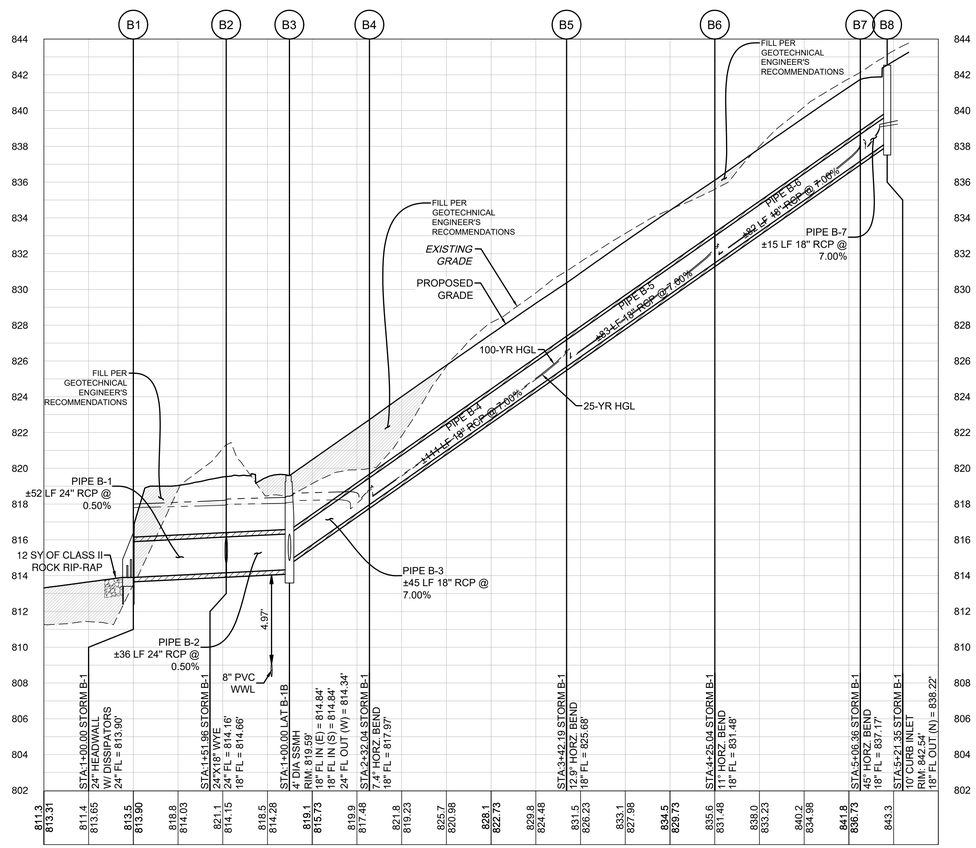

LAT B-1A

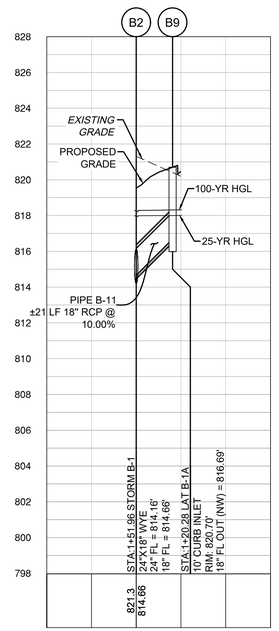

LAT B-1B

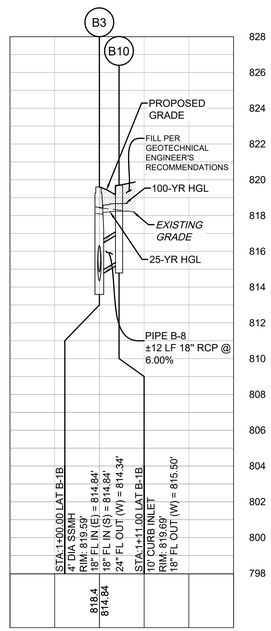

0 40' 80'

SCALE: 1" = 40'

LEGEND

- EXISTING MINOR CONTOUR
- EXISTING MAJOR CONTOUR
- PROPOSED MINOR CONTOUR
- PROPOSED MAJOR CONTOUR
- BOUNDARY
- EASEMENT
- FEMA FLOODWAY PER FIRM# 48491C0460F & LOMR# 21-06-0115P
- FEMA AE — 100YR ATLAS 14 FEMA ZONE AE FLOODPLAIN PER FIRM# 48491C0460F & LOMR# 21-06-0115P
- FEMA A — 100YR FEMA ZONE A FLOODPLAIN PER FIRM MAP# 48491C0460F
- 100YR CLOMR — 100YR CLOMR FLOODPLAIN CASE# 15-06-2071R
- FDFP — 100YR ATLAS 14 FULLY DEVELOPED FLOODPLAIN (STANTEC DRAINAGE STUDY, SHERVIN NOOSHIN, 3/25/19) APPROVED WITH PP# 2019-5-PP
- OHWM — ORDINARY HIGH WATER MARK PER ADAMS ENVIRONMENTAL
- PROPOSED STORM LINE
- FIRE HYDRANT
- WATER VALVE
- STORM SEWER MAHNOLE
- WASTEWATER MANHOLE
- CURB INLET
- TREES TO REMAIN HERITAGE
- TREES TO REMAIN NON HERITAGE

VERT. SCALE: 1" = 4'
HORZ. SCALE: 1" = 40'

4' 2' 0 VERT. SCALE

EXISTING GRADE - CENTERLINE
FINISHED GRADE - CENTERLINE

EXISTING GROUND 1000.1 / 997.10 PROPOSED FLOWLINE

NOTE:

1. ALL PROPOSED STORM SEWER PIPE LINES SHALL BE CLASS III REINFORCED CONCRETE UNLESS NOTED OTHERWISE.
2. FILL SHALL BE PLACED ACCORDING TO THE GEOTECHNICAL ENGINEERS RECOMMENDATION AND CITY OF GEORGETOWN SPECIFICATIONS.
3. VEGETATE ALL DISTURBED AREAS WITHIN THE ROW AND OPEN SPACE LOT AREAS PER CITY OF GEORGETOWN SPECIFICATIONS.

TRENCH SAFETY NOTES:

1. IN ACCORDANCE WITH THE LAWS OF THE STATE OF TEXAS AND THE U.S. OCCUPATIONAL SAFETY AND HEALTH ADMINISTRATION REGULATIONS, ALL TRENCHES OVER 5 FEET IN DEPTH IN EITHER HARD AND COMPACT OR SOFT AND UNSTABLE SOIL SHALL BE SLOPED, SHORED, SHEETED, BRACED OR OTHERWISE SUPPORTED. FURTHERMORE, ALL TRENCHES LESS THAN 5 FEET IN DEPTH SHALL ALSO BE EFFECTIVELY PROTECTED WHEN HAZARDOUS GROUND MOVEMENT MAY BE EXPECTED. TRENCH SAFETY SYSTEMS TO BE UTILIZED FOR THIS PROJECT WILL BE PROVIDE BY THE CONTRACTOR.
2. IN ACCORDANCE WITH THE U.S. OCCUPATIONAL SAFETY AND HEALTH ADMINISTRATION REGULATIONS,WHEN PERSONS ARE IN TRENCHES 4-FEET DEEP OR MORE, ADEQUATE MEANS OF EXIT, SUCH AS A LADDER OR STEPS, MUST BE PROVIDED AND LOCATED SO AS TO REQUIRE NO MORE THAN 25 FEET OF LATERAL TRAVEL.
3. CONSTRUCTION SHALL NOT PROCEED UNTIL APPROPRIATE TRENCH SAFETY SYSTEM DETAILS, AS DESIGNED BY A PROFESSIONAL ENGINEER, ARE RETAINED AND COPIES SUBMITTED TO THE CITY OF GEORGETOWN.
4. DEEP EXCAVATIONS: ON EXCAVATIONS EXCEEDING 20 FEET IN DEPTH, TWO OR MORE MEANS OF EGRESS FROM THE EXCAVATION SHALL BE PROVIDED. THE CONTRACTOR SHALL CONSULT WITH A REGISTERED ENGINEER, EXPERIENCED IN TRENCH SAFETY SYSTEMS, REGARDING SPECIFIC MEANS AND METHODS EMPLOYED. CONTRACTOR SHALL PROVIDE A TRENCH SAFETY PLAN SEALED BY A REGISTERED PROFESSIONAL ENGINEER AS REQUIRED BY THE CITY OF GEORGETOWN.

Pipe Label	Slope (%)	Q25 (cfs)	V25 (ft/s)	D25 (ft)	Q100 (cfs)	V100 (ft/s)	D100 (ft)
PIPE B-1	0.50%	11.49	3.66	3.90	14.24	4.53	4.10
PIPE B-2	0.50%	9.27	2.95	3.82	11.52	3.67	4.12
PIPE B-3	7.00%	4.25	3.45	3.36	5.32	3.95	3.77
PIPE B-4	7.00%	4.25	4.05	0.95	5.32	4.41	1.07
PIPE B-5	7.00%	4.25	4.05	0.95	5.32	4.41	1.07
PIPE B-6	7.00%	4.25	4.05	0.95	5.32	4.41	1.07
PIPE B-7	7.00%	4.25	3.84	1.07	5.32	4.19	1.20
PIPE B-8	6.00%	5.02	2.84	3.34	6.20	3.51	3.74
PIPE B-11	10.00%	2.22	1.31	3.32	2.72	1.54	3.62

NO	REVISION	BY	DATE

811 Know what's below. Call before you dig.

5508 HIGHWAY 290 WEST
SUITE 150
AUSTIN, TX 78735
512.872.6696
HRGREEN.COM

TBPE NO: 16384
TBPLS NO: 10194101

HRGreen®
DEVELOPMENT TX

STATE OF TEXAS
CHRISTINE N. CAMPBELL
142536
LICENSED PROFESSIONAL ENGINEER

07/03/2025

STORM B-1 & LATERALS PLAN & PROFILE

PARKSIDE ON THE RIVER SECTIONS 11, 12A & 15A CONSTRUCTION PLANS

GEORGETOWN, WILLIAMSON, TEXAS

DESIGNED BY: CC
DRAWN BY: MM
CHECKED BY: SN
APPROVED BY:

SHEET 96 OF 141

2025-XX-CON

P:\Blake.Magee\Parkside Sections 11-15 & WCN Election 11, 12A & 14A\03_ACAD\Planset\240522 SDPP STORM B-1 & LATERALS PLAN & PROFILE July 16, 2025, 12:07 PM, mekai.muhammad

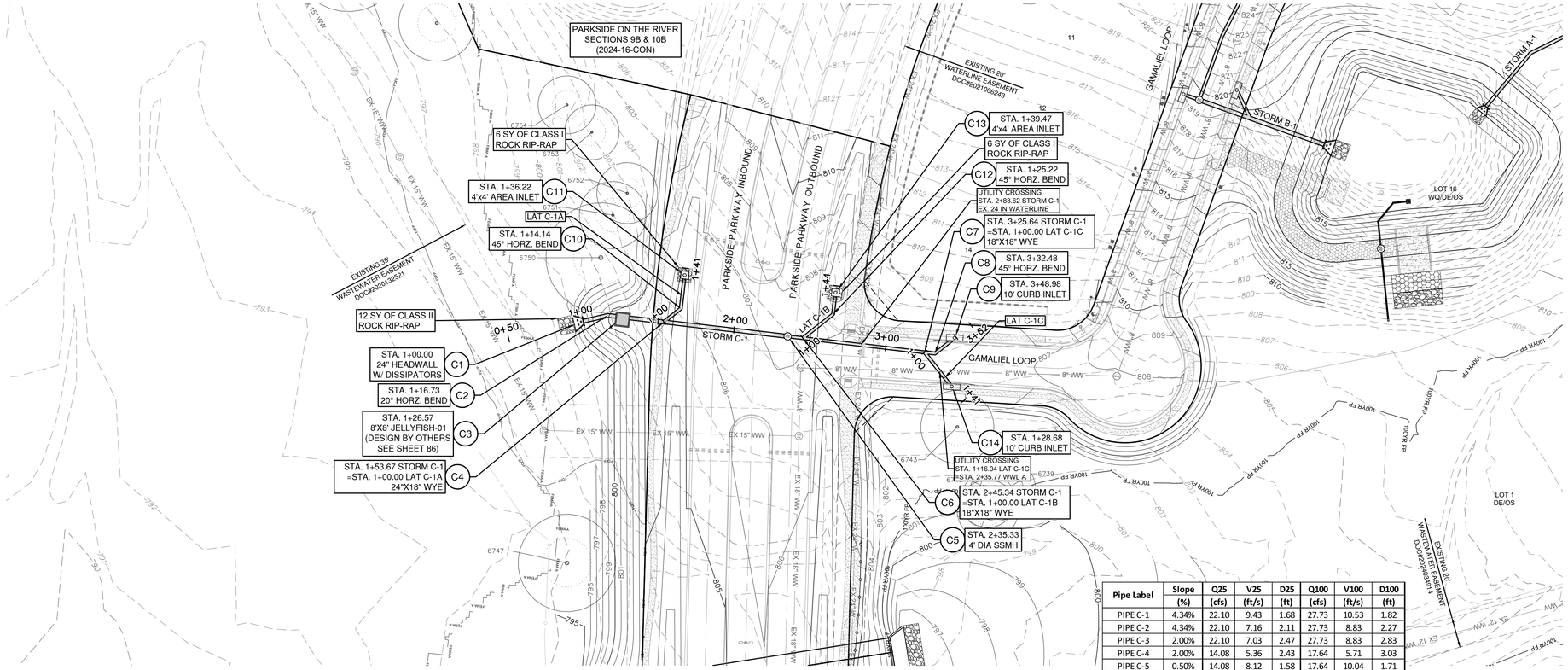

LEGEND

- EXISTING MINOR CONTOUR
- EXISTING MAJOR CONTOUR
- PROPOSED MINOR CONTOUR
- PROPOSED MAJOR CONTOUR
- BOUNDARY
- EASEMENT
- FEMA FLOODWAY PER FIRM# 48491C0460F & LOMR# 21-06-0115P
- 100YR ATLAS 14 FEMA ZONE AE FLOODPLAIN PER FIRM# 48491C0460F & LOMR# 21-06-0115P
- 100YR FEMA ZONE A FLOODPLAIN PER FIRM MAP# 48491C0460F
- 100YR CLOMR — 100YR CLOMR FLOODPLAIN CASE# 15-06-2071R
- FDFP — 100YR ATLAS 14 FULLY DEVELOPED FLOODPLAIN (STANTEC DRAINAGE STUDY, SHERVIN NOOSHIN, 3/25/19) APPROVED WITH PP# 2019-5-PP
- OHWM — ORDINARY HIGH WATER MARK PER ADAMS ENVIRONMENTAL
- PROPOSED STORM LINE
- FIRE HYDRANT
- WATER VALVE
- STORM SEWER MAHNOLE
- WASTEWATER MANHOLE
- CURB INLET
- TREES TO REMAIN HERITAGE
- TREES TO REMAIN NON HERITAGE

VERT. SCALE: 1" = 4'
HORZ. SCALE: 1" = 40'

EXISTING GRADE - CENTERLINE
FINISHED GRADE - CENTERLINE

4' 2' 0 VERT. SCALE

EXISTING GROUND 1000.1 997.10 PROPOSED FLOWLINE

Pipe Label	Slope (%)	Q25 (cfs)	V25 (ft/s)	D25 (ft)	Q100 (cfs)	V100 (ft/s)	D100 (ft)
PIPE C-1	4.34%	22.10	9.43	1.68	27.73	10.53	1.82
PIPE C-2	4.34%	22.10	7.16	2.11	27.73	8.83	2.27
PIPE C-3	2.00%	22.10	7.03	2.47	27.73	8.83	2.83
PIPE C-4	2.00%	14.08	5.36	2.43	17.64	5.71	3.03
PIPE C-5	0.50%	14.08	8.12	1.58	17.64	10.04	1.71
PIPE C-6	0.50%	5.31	3.00	1.89	6.55	3.71	2.18
PIPE C-7	0.50%	3.02	1.71	1.75	3.74	2.12	2.18
PIPE C-8	0.50%	3.02	1.71	1.74	3.74	2.12	2.18
PIPE C-9	3.33%	8.02	4.54	1.93	10.09	5.71	2.53
PIPE C-10	3.33%	8.02	5.17	1.66	10.09	5.71	2.38
PIPE C-11	2.00%	8.77	4.96	1.89	11.09	6.28	2.18
PIPE C-12	2.00%	8.77	4.96	1.70	11.09	6.28	2.18
PIPE C-13	0.75%	2.29	1.30	1.75	2.81	1.59	2.18

NOTE:

1. ALL PROPOSED STORM SEWER PIPE LINES SHALL BE CLASS III REINFORCED CONCRETE UNLESS NOTED OTHERWISE.
2. FILL SHALL BE PLACED ACCORDING TO THE GEOTECHNICAL ENGINEERS RECOMMENDATION AND CITY OF GEORGETOWN SPECIFICATIONS.
3. VEGETATE ALL DISTURBED AREAS WITHIN THE ROW AND OPEN SPACE LOT AREAS PER CITY OF GEORGETOWN SPECIFICATIONS.

TRENCH SAFETY NOTES:

1. IN ACCORDANCE WITH THE LAWS OF THE STATE OF TEXAS AND THE U.S. OCCUPATIONAL SAFETY AND HEALTH ADMINISTRATION REGULATIONS, ALL TRENCHES OVER 5 FEET IN DEPTH IN EITHER HARD AND COMPACT OR SOFT AND UNSTABLE SOIL SHALL BE SLOPED, SHORED, SHEETED, BRACED OR OTHERWISE SUPPORTED. FURTHERMORE, ALL TRENCHES LESS THAN 5 FEET IN DEPTH SHALL ALSO BE EFFECTIVELY PROTECTED WHEN HAZARDOUS GROUND MOVEMENT MAY BE EXPECTED. TRENCH SAFETY SYSTEMS TO BE UTILIZED FOR THIS PROJECT WILL BE PROVIDE BY THE CONTRACTOR.
2. IN ACCORDANCE WITH THE U.S. OCCUPATIONAL SAFETY AND HEALTH ADMINISTRATION REGULATIONS,WHEN PERSONS ARE IN TRENCHES 4-FEET DEEP OR MORE, ADEQUATE MEANS OF EXIT, SUCH AS A LADDER OR STEPS, MUST BE PROVIDED AND LOCATED SO AS TO REQUIRE NO MORE THAN 25 FEET OF LATERAL TRAVEL.
3. CONSTRUCTION SHALL NOT PROCEED UNTIL APPROPRIATE TRENCH SAFETY SYSTEM DETAILS, AS DESIGNED BY A PROFESSIONAL ENGINEER, ARE RETAINED AND COPIES SUBMITTED TO THE CITY OF GEORGETOWN.
4. DEEP EXCAVATIONS: ON EXCAVATIONS EXCEEDING 20 FEET IN DEPTH, TWO OR MORE MEANS OF EGRESS FROM THE EXCAVATION SHALL BE PROVIDED. THE CONTRACTOR SHALL CONSULT WITH A REGISTERED ENGINEER, EXPERIENCED IN TRENCH SAFETY SYSTEMS, REGARDING SPECIFIC MEANS AND METHODS EMPLOYED. CONTRACTOR SHALL PROVIDE A TRENCH SAFETY PLAN SEALED BY A REGISTERED PROFESSIONAL ENGINEER AS REQUIRED BY THE CITY OF GEORGETOWN.

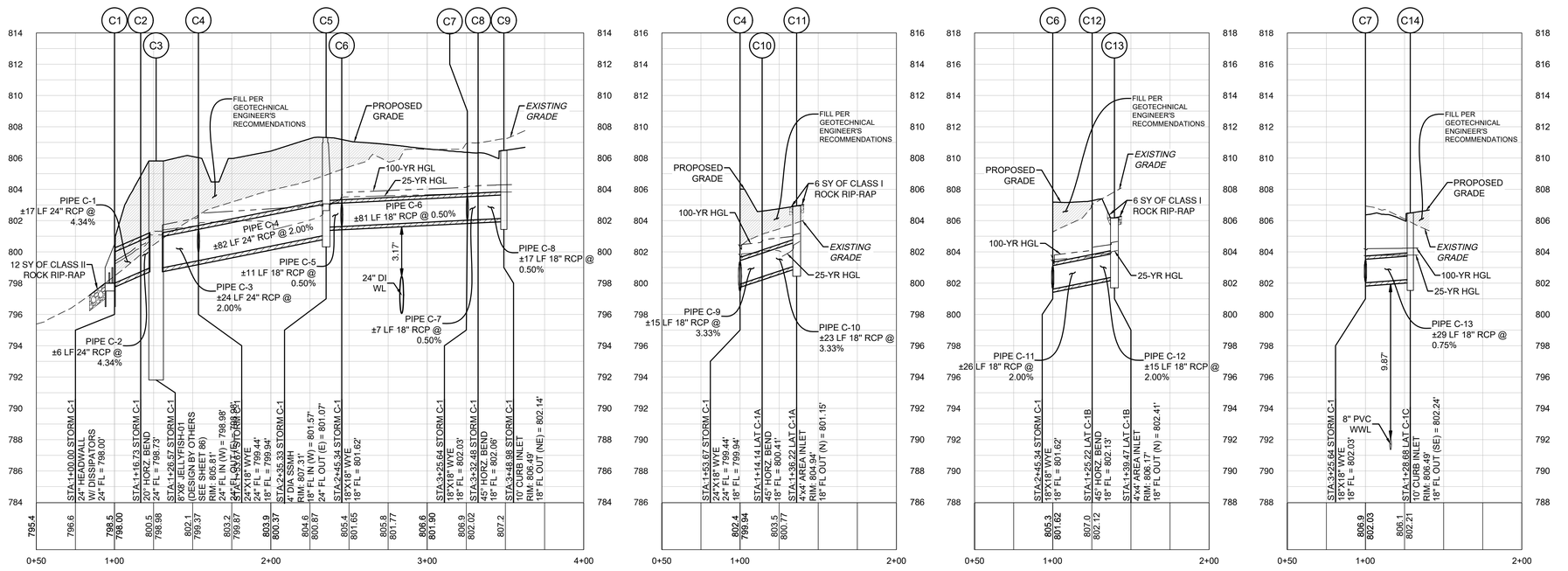

5508 HIGHWAY 290 WEST
SUITE 150
AUSTIN, TX 78735
512.872.6696
HRGREEN.COM

TBPE NO: 16384
TBPLS NO: 10194101

HRGreen®
DEVELOPMENT TX

STATE OF TEXAS
CHRISTINE N. CAMPBELL
142536
LICENSED PROFESSIONAL ENGINEER
07/03/2025

STORM C-1 PLAN & PROFILE

PARKSIDE ON THE RIVER
SECTIONS 11, 12A & 15A
CONSTRUCTION PLANS
GEORGETOWN, WILLIAMSON, TEXAS

DESIGNED BY: CC
DRAWN BY: MM
CHECKED BY: SN
APPROVED BY:

SHEET 97 OF 141

2025-XX-CON

NO | REVISION | BY | DATE

811 Know what's below. Call before you dig.

P:\Blue Mound\Parkside Sections 11-15 & WOA\1Section 11, 12A & 15A\03_ACAD\Plans\sh\400522.SDP STORM C-1.dwg, STORM C-1 PLAN & PROFILE, July 18, 2025, 12:09 PM, mdarshmuhammad

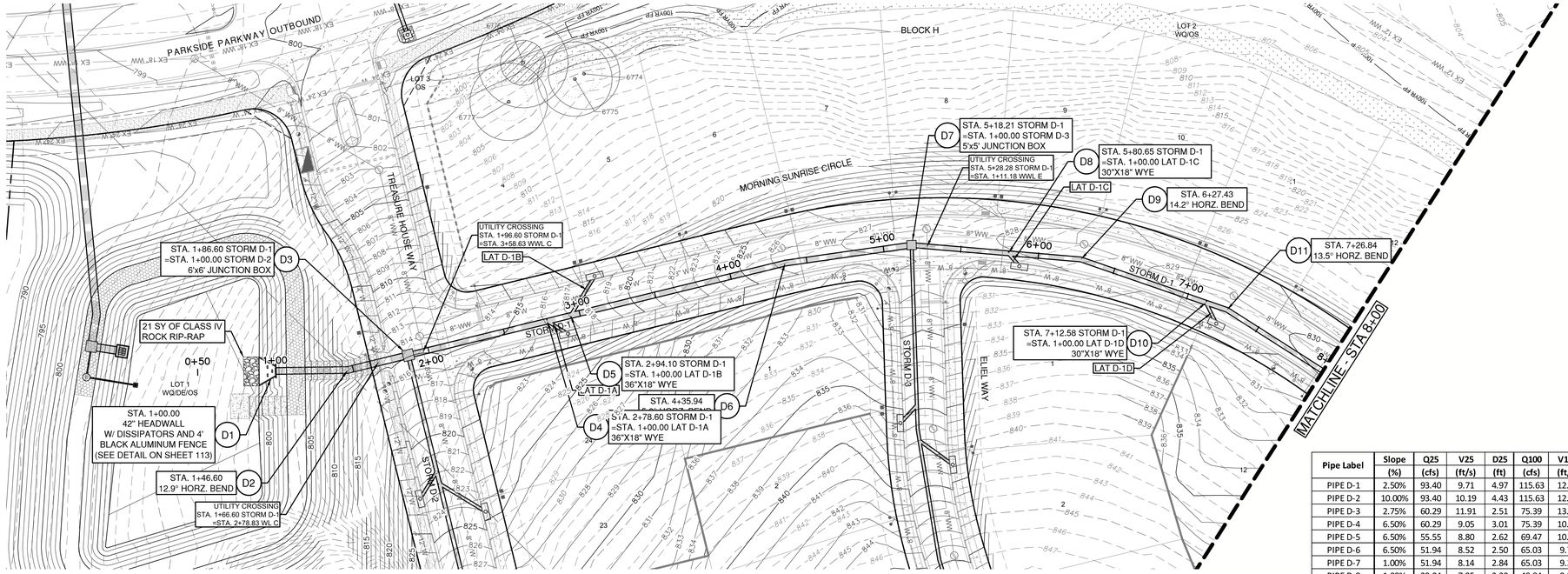

Pipe Label	Slope	Q25	V25	D25	Q100	V100	D100
	(%)	(cfs)	(ft/s)	(ft)	(cfs)	(ft/s)	(ft)
PIPE D-1	2.50%	93.40	9.71	4.97	115.63	12.02	5.27
PIPE D-2	10.00%	93.40	10.19	4.43	115.63	12.26	5.06
PIPE D-3	2.75%	60.29	11.91	2.51	75.39	13.13	2.72
PIPE D-4	6.50%	60.29	9.05	3.01	75.39	10.93	3.19
PIPE D-5	6.50%	55.55	8.80	2.62	69.47	10.21	2.92
PIPE D-6	6.50%	51.94	8.52	2.50	65.03	9.77	2.79
PIPE D-7	1.00%	51.94	8.14	2.84	65.03	9.20	3.07
PIPE D-8	1.00%	39.04	7.95	3.38	48.84	9.95	3.78
PIPE D-9	1.00%	36.15	7.36	3.44	45.22	9.21	4.06
PIPE D-10	1.00%	36.15	7.36	3.46	45.22	9.21	4.45
PIPE D-11	1.00%	30.87	6.29	3.43	38.59	7.86	4.69
PIPE D-12	1.00%	30.87	6.29	3.46	38.59	7.86	4.82

STORM D-1

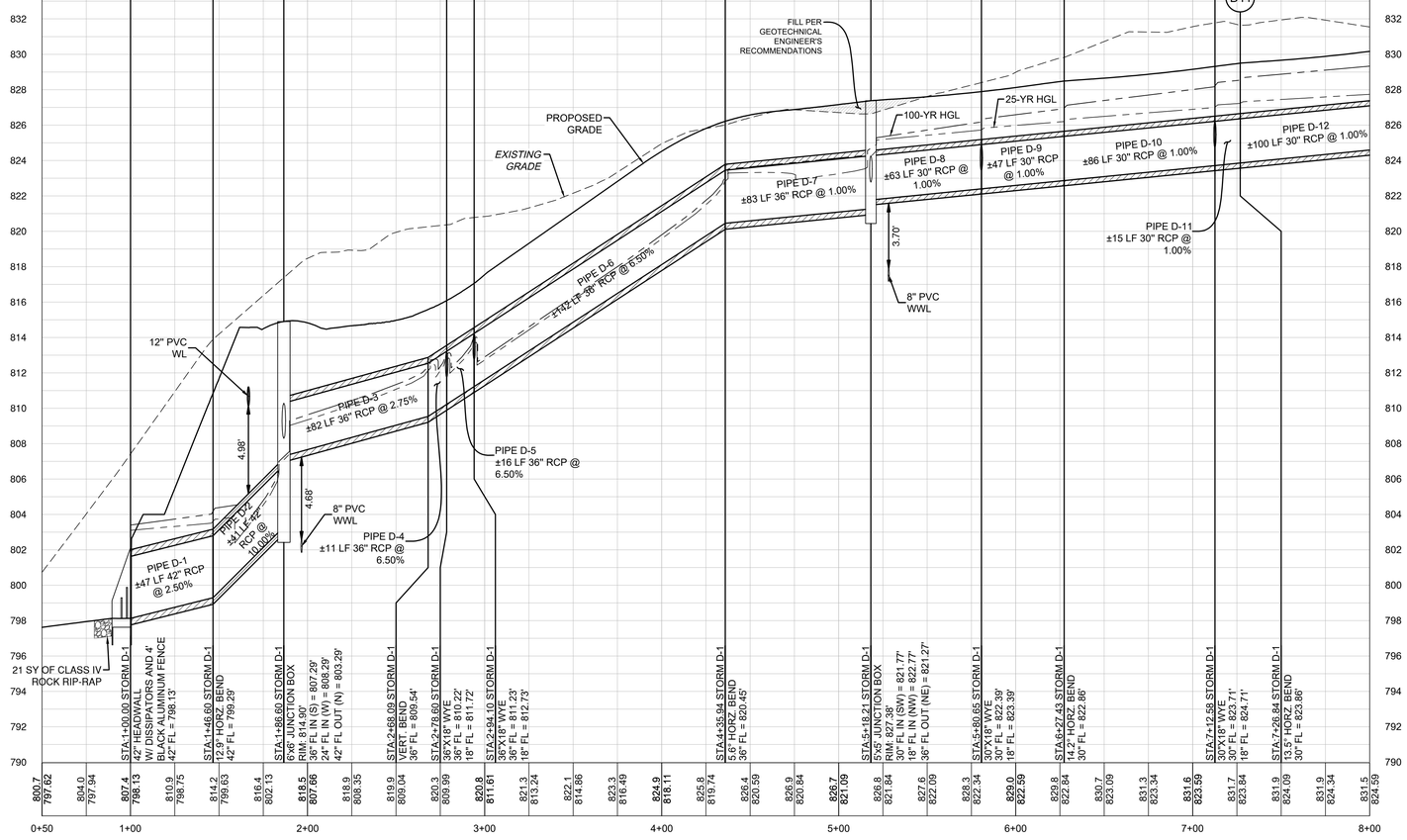

LEGEND

- EXISTING MINOR CONTOUR
- EXISTING MAJOR CONTOUR
- PROPOSED MINOR CONTOUR
- PROPOSED MAJOR CONTOUR
- BOUNDARY
- EASEMENT
- FEMA FLOODWAY PER FIRM# 48491C0460F & LOMR# 21-06-0115P
- FEMA AE — 100YR ATLAS 14 FEMA ZONE AE FLOODPLAIN PER FIRM# 48491C0460F & LOMR# 21-06-0115P
- FEMA A — 100YR FEMA ZONE A FLOODPLAIN PER FIRM MAP# 48491C0460F
- 100YR CLOMR — 100YR CLOMR FLOODPLAIN CASE# 15-06-2071R
- FDFP — 100YR ATLAS 14 FULLY DEVELOPED FLOODPLAIN (STANTEC DRAINAGE STUDY, SHERVIN NOOSHIN, 3/25/19) APPROVED WITH PP# 2019-5-PP
- OHWM — ORDINARY HIGH WATER MARK PER ADAMS ENVIRONMENTAL
- PROPOSED STORM LINE
- FIRE HYDRANT
- WATER VALVE
- STORM SEWER MAHNOLE
- WASTEWATER MANHOLE
- CURB INLET
- TREES TO REMAIN HERITAGE
- TREES TO REMAIN NON HERITAGE

VERT. SCALE: 1" = 4'
HORZ. SCALE: 1" = 40'

EXISTING GRADE - CENTERLINE
FINISHED GRADE - CENTERLINE

4' 2' 0 VERT. SCALE

EXISTING GROUND 1000.1 / 997.10 PROPOSED FLOWLINE

NOTE:

1. ALL PROPOSED STORM SEWER PIPE LINES SHALL BE CLASS III REINFORCED CONCRETE UNLESS NOTED OTHERWISE.
2. FILL SHALL BE PLACED ACCORDING TO THE GEOTECHNICAL ENGINEERS RECOMMENDATION AND CITY OF GEORGETOWN SPECIFICATIONS.
3. VEGETATE ALL DISTURBED AREAS WITHIN THE ROW AND OPEN SPACE LOT AREAS PER CITY OF GEORGETOWN SPECIFICATIONS.

TRENCH SAFETY NOTES:

1. IN ACCORDANCE WITH THE LAWS OF THE STATE OF TEXAS AND THE U.S. OCCUPATIONAL SAFETY AND HEALTH ADMINISTRATION REGULATIONS, ALL TRENCHES OVER 5 FEET IN DEPTH IN EITHER HARD AND COMPACT OR SOFT AND UNSTABLE SOIL SHALL BE SLOPED, SHORED, SHEETED, BRACED OR OTHERWISE SUPPORTED. FURTHERMORE, ALL TRENCHES LESS THAN 5 FEET IN DEPTH SHALL ALSO BE EFFECTIVELY PROTECTED WHEN HAZARDOUS GROUND MOVEMENT MAY BE EXPECTED. TRENCH SAFETY SYSTEMS TO BE UTILIZED FOR THIS PROJECT WILL BE PROVIDE BY THE CONTRACTOR.
2. IN ACCORDANCE WITH THE U.S. OCCUPATIONAL SAFETY AND HEALTH ADMINISTRATION REGULATIONS,WHEN PERSONS ARE IN TRENCHES 4-FEET DEEP OR MORE, ADEQUATE MEANS OF EXIT, SUCH AS A LADDER OR STEPS, MUST BE PROVIDED AND LOCATED SO AS TO REQUIRE NO MORE THAN 25 FEET OF LATERAL TRAVEL.
3. CONSTRUCTION SHALL NOT PROCEED UNTIL APPROPRIATE TRENCH SAFETY SYSTEM DETAILS, AS DESIGNED BY A PROFESSIONAL ENGINEER, ARE RETAINED AND COPIES SUBMITTED TO THE CITY OF GEORGETOWN.
4. DEEP EXCAVATIONS: ON EXCAVATIONS EXCEEDING 20 FEET IN DEPTH, TWO OR MORE MEANS OF EGRESS FROM THE EXCAVATION SHALL BE PROVIDED. THE CONTRACTOR SHALL CONSULT WITH A REGISTERED ENGINEER, EXPERIENCED IN TRENCH SAFETY SYSTEMS, REGARDING SPECIFIC MEANS AND METHODS EMPLOYED. CONTRACTOR SHALL PROVIDE A TRENCH SAFETY PLAN SEALED BY A REGISTERED PROFESSIONAL ENGINEER AS REQUIRED BY THE CITY OF GEORGETOWN.

NO	REVISION	BY	DATE

811 Know what's below. Call before you dig.

5508 HIGHWAY 290 WEST
SUITE 150
AUSTIN, TX 78735
512.872.6696
HRGREEN.COM

TBPE NO: 16384
TBPLS NO: 10194101

HRGreen®
DEVELOPMENT TX

STATE OF TEXAS
CHRISTINE N. CAMPBELL
142536
LICENSED PROFESSIONAL ENGINEER
07/03/2025

STORM D-1 PLAN & PROFILE
1+00 - 8+00

PARKSIDE ON THE RIVER
SECTIONS 11, 12A & 15A
CONSTRUCTION PLANS
GEORGETOWN, WILLIAMSON, TEXAS

DESIGNED BY: CC
DRAWN BY: MM
CHECKED BY: SN
APPROVED BY:

SHEET 98 OF 141

2025-XX-CON

P:\Blaise Maigan\Parkside Sections 11-15 & WOA\Sections 11, 12A & 15A\03_ACAD\Plans\sht\A00S202 SDPP STORM D-1 Avwg STORM D-1 PLAN & PROFILE 1+00 - 8+00, July 18, 2025, 12:09 PM, nwaiz muhammad

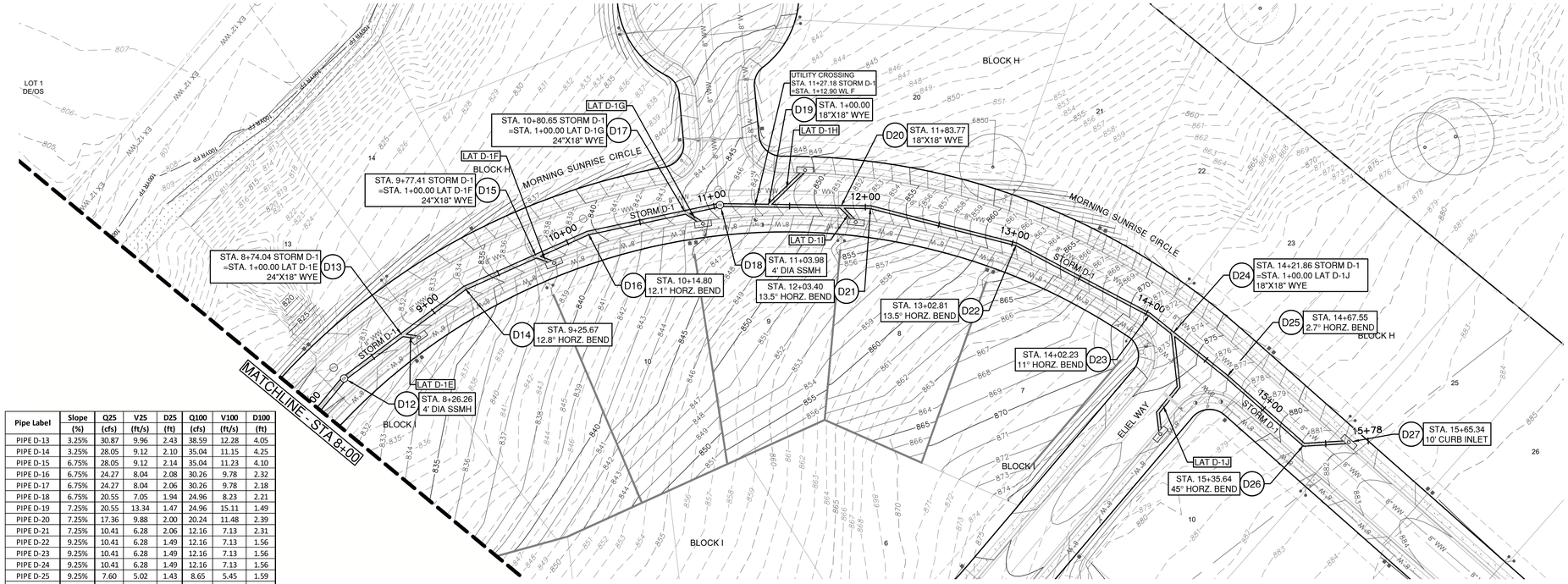

Pipe Label	Slope (%)	Q25 (cfs)	V25 (ft/s)	D25 (ft)	Q100 (cfs)	V100 (ft/s)	D100 (ft)
PIPE D-13	3.25%	30.87	9.96	2.43	38.59	12.28	4.05
PIPE D-14	3.25%	28.05	9.12	2.10	35.04	11.15	4.25
PIPE D-15	6.75%	28.05	9.12	2.14	35.04	11.23	4.10
PIPE D-16	6.75%	24.27	8.04	2.08	30.26	9.78	2.32
PIPE D-17	6.75%	24.27	8.04	2.06	30.26	9.78	2.18
PIPE D-18	6.75%	20.55	7.05	1.94	24.96	8.23	2.21
PIPE D-19	7.25%	20.55	13.34	1.47	24.96	15.11	1.49
PIPE D-20	7.25%	17.36	9.88	2.00	20.24	11.48	2.39
PIPE D-21	7.25%	10.41	6.28	2.06	12.16	7.13	2.31
PIPE D-22	9.25%	10.41	6.28	1.49	12.16	7.13	1.56
PIPE D-23	9.25%	10.41	6.28	1.49	12.16	7.13	1.56
PIPE D-24	9.25%	10.41	6.28	1.49	12.16	7.13	1.56
PIPE D-25	9.25%	7.60	5.02	1.43	8.65	5.45	1.59
PIPE D-26	5.25%	7.60	5.17	1.30	8.65	5.55	1.38
PIPE D-27	5.25%	7.60	5.00	1.45	8.65	5.45	1.53

STORM D-1

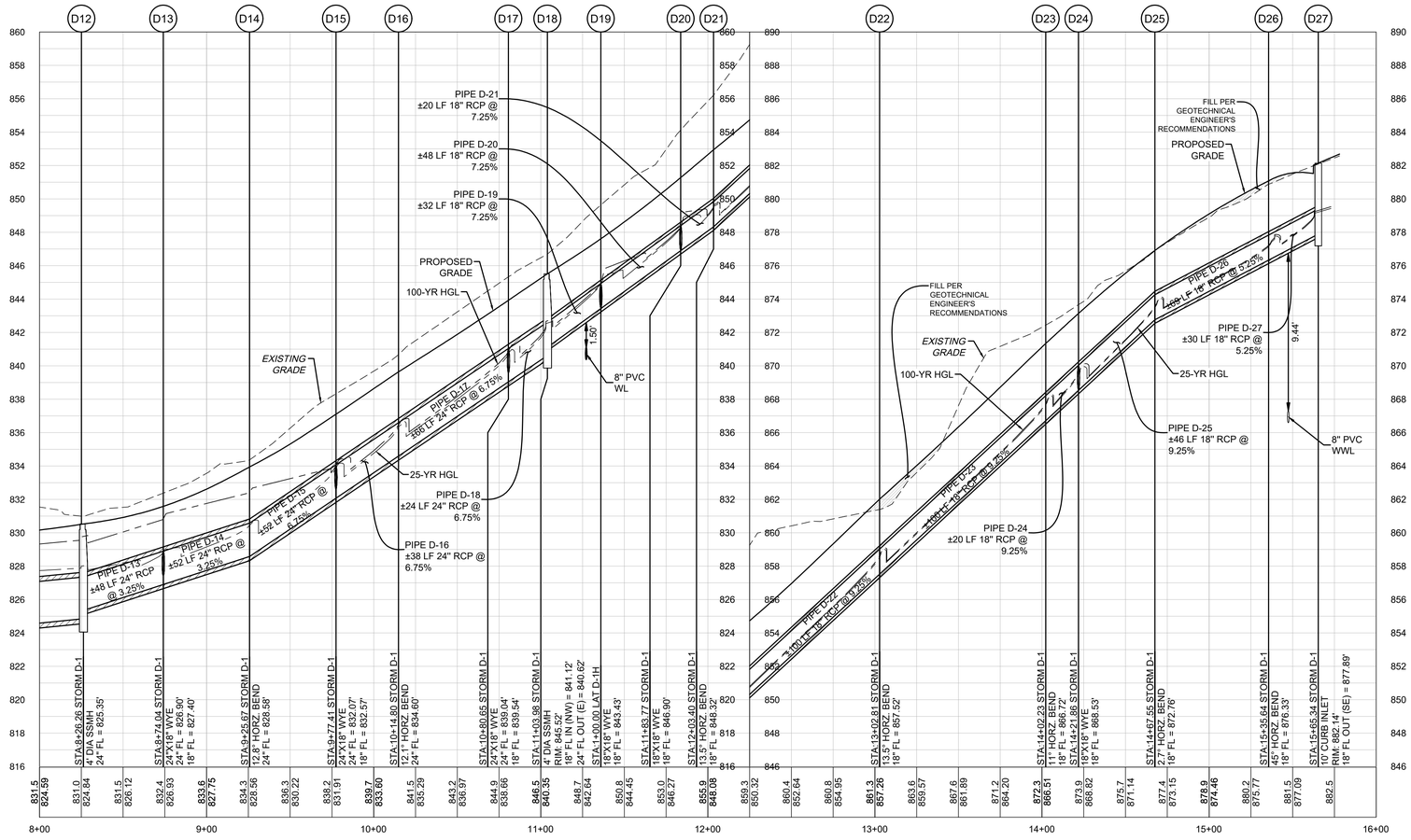

0 40' 80'

SCALE: 1" = 40'

LEGEND

- EXISTING MINOR CONTOUR
- EXISTING MAJOR CONTOUR
- PROPOSED MINOR CONTOUR
- PROPOSED MAJOR CONTOUR
- BOUNDARY
- EASEMENT
- FEMA FLOODWAY PER FIRM# 48491C0460F & LOMR# 21-06-0115P
- 100YR ATLAS 14 FEMA ZONE AE FLOODPLAIN PER FIRM# 48491C0460F & LOMR# 21-06-0115P
- 100YR FEMA ZONE A FLOODPLAIN PER FIRM MAP# 48491C0460F
- 100YR CLOMR FLOODPLAIN CASE# 15-06-2071R
- 100YR ATLAS 14 FULLY DEVELOPED FLOODPLAIN (STANTEC DRAINAGE STUDY, SHERVIN NOOSHIN, 3/25/19) APPROVED WITH PP# 2019-5-PP
- ORDINARY HIGH WATER MARK PER ADAMS ENVIRONMENTAL
- PROPOSED STORM LINE
- FIRE HYDRANT
- WATER VALVE
- STORM SEWER MAHNOLE
- WASTEWATER MANHOLE
- CURB INLET
- TREES TO REMAIN HERITAGE
- TREES TO REMAIN NON HERITAGE

VERT. SCALE: 1" = 4'
HORZ. SCALE: 1" = 40'

4' 2' 0 VERT. SCALE

EXISTING GRADE - CENTERLINE
FINISHED GRADE - CENTERLINE

EXISTING GROUND 1000.1 997.10 PROPOSED FLOWLINE

NOTE:

1. ALL PROPOSED STORM SEWER PIPE LINES SHALL BE CLASS III REINFORCED CONCRETE UNLESS NOTED OTHERWISE.
2. FILL SHALL BE PLACED ACCORDING TO THE GEOTECHNICAL ENGINEERS RECOMMENDATION AND CITY OF GEORGETOWN SPECIFICATIONS.
3. VEGETATE ALL DISTURBED AREAS WITHIN THE ROW AND OPEN SPACE LOT AREAS PER CITY OF GEORGETOWN SPECIFICATIONS.

TRENCH SAFETY NOTES:

1. IN ACCORDANCE WITH THE LAWS OF THE STATE OF TEXAS AND THE U.S. OCCUPATIONAL SAFETY AND HEALTH ADMINISTRATION REGULATIONS, ALL TRENCHES OVER 5 FEET IN DEPTH IN EITHER HARD AND COMPACT OR SOFT AND UNSTABLE SOIL SHALL BE SLOPED, SHORED, SHEETED, BRACED OR OTHERWISE SUPPORTED. FURTHERMORE, ALL TRENCHES LESS THAN 5 FEET IN DEPTH SHALL ALSO BE EFFECTIVELY PROTECTED WHEN HAZARDOUS GROUND MOVEMENT MAY BE EXPECTED. TRENCH SAFETY SYSTEMS TO BE UTILIZED FOR THIS PROJECT WILL BE PROVIDE BY THE CONTRACTOR.
2. IN ACCORDANCE WITH THE U.S. OCCUPATIONAL SAFETY AND HEALTH ADMINISTRATION REGULATIONS,WHEN PERSONS ARE IN TRENCHES 4-FEET DEEP OR MORE, ADEQUATE MEANS OF EXIT, SUCH AS A LADDER OR STEPS, MUST BE PROVIDED AND LOCATED SO AS TO REQUIRE NO MORE THAN 25 FEET OF LATERAL TRAVEL.
3. CONSTRUCTION SHALL NOT PROCEED UNTIL APPROPRIATE TRENCH SAFETY SYSTEM DETAILS, AS DESIGNED BY A PROFESSIONAL ENGINEER, ARE RETAINED AND COPIES SUBMITTED TO THE CITY OF GEORGETOWN.
4. DEEP EXCAVATIONS: ON EXCAVATIONS EXCEEDING 20 FEET IN DEPTH, TWO OR MORE MEANS OF EGRESS FROM THE EXCAVATION SHALL BE PROVIDED. THE CONTRACTOR SHALL CONSULT WITH A REGISTERED ENGINEER, EXPERIENCED IN TRENCH SAFETY SYSTEMS, REGARDING SPECIFIC MEANS AND METHODS EMPLOYED. CONTRACTOR SHALL PROVIDE A TRENCH SAFETY PLAN SEALED BY A REGISTERED PROFESSIONAL ENGINEER AS REQUIRED BY THE CITY OF GEORGETOWN.

NO	REVISION	BY	DATE

Know what's below. Call before you dig.

5508 HIGHWAY 290 WEST
SUITE 150
AUSTIN, TX 78735
512.872.6696
HRGREEN.COM
TBPE NO: 16384
TBPLS NO: 10194101

HRGreen®

DEVELOPMENT TX

STATE OF TEXAS
CHRISTINE N. CAMPBELL
142536
LICENSED PROFESSIONAL ENGINEER

07/03/2025

STORM D-1 PLAN & PROFILE 8+00 - END

PARKSIDE ON THE RIVER SECTIONS 11, 12A & 15A CONSTRUCTION PLANS GEORGETOWN, WILLIAMSON, TEXAS

DESIGNED BY: CC
DRAWN BY: MM
CHECKED BY: SN
APPROVED BY:

SHEET 99 OF 141

2025-XX-CON

P:\Blake Magee\Parkside Sections 11-15 & VCM\15Section 11, 12A & 15A\03_ACAD\Plans\sht\260322 SDPP STORM D-1 Prof.dwg, STORM D-1 PLAN & PROFILE 8+00 - END, July 18, 2025, 12:10 PM, malan.muhammad

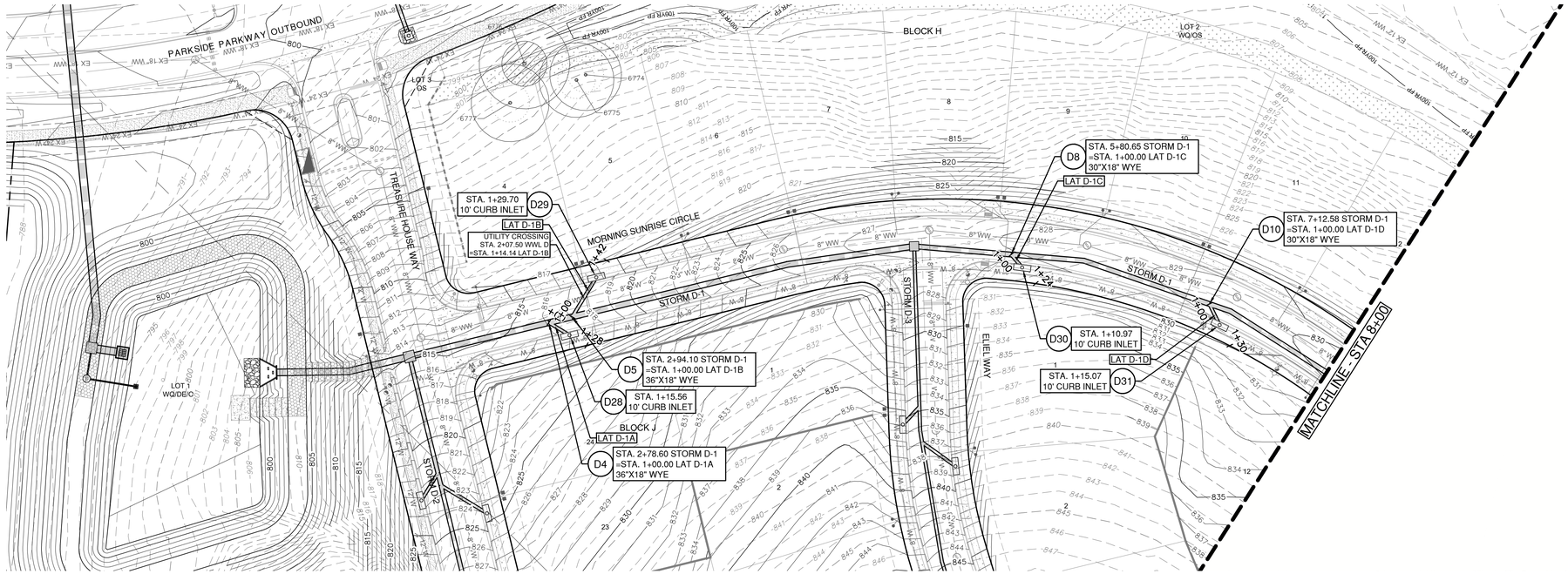

Pipe Label	Slope (%)	Q25 (cfs)	V25 (ft/s)	D25 (ft)	Q100 (cfs)	V100 (ft/s)	D100 (ft)
PIPE D-28	6.00%	4.74	4.02	1.12	5.92	4.25	1.42
PIPE D-29	5.75%	3.61	3.58	1.00	4.44	3.66	1.29
PIPE D-30	6.75%	2.89	1.64	2.44	3.62	2.05	2.96
PIPE D-31	5.00%	5.28	2.99	2.43	6.63	3.75	3.69

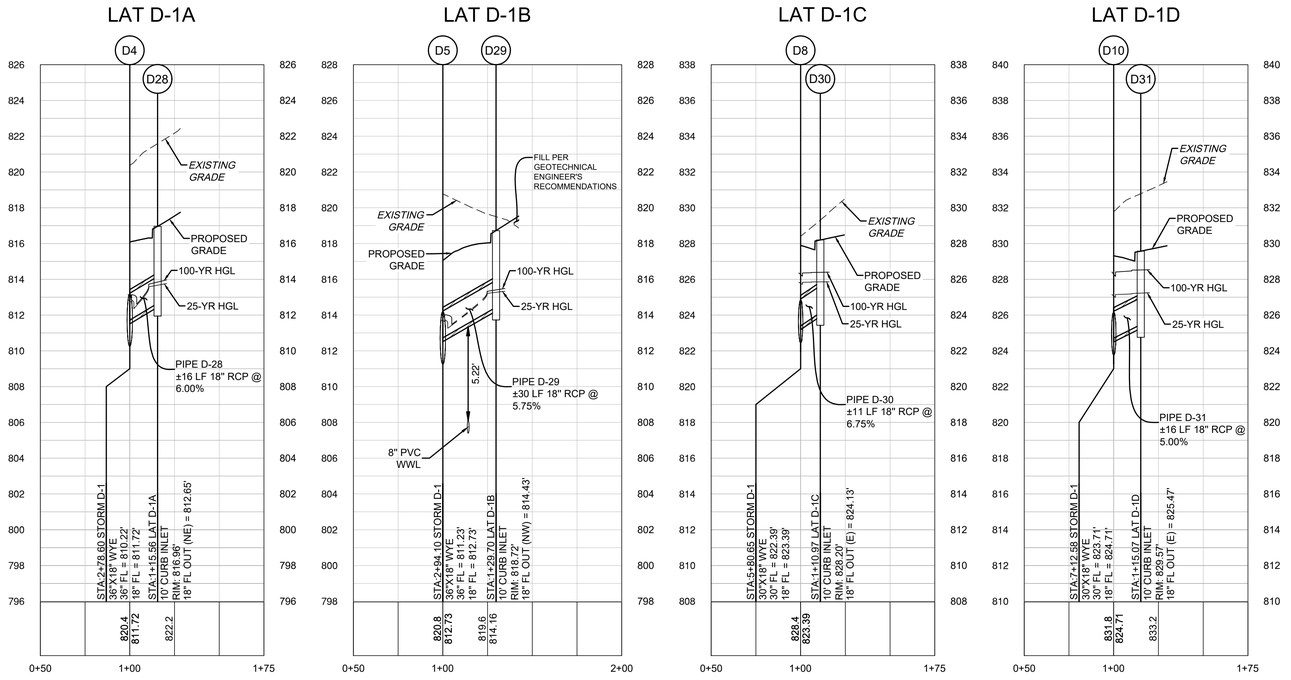

0 40' 80'

SCALE: 1" = 40'

LEGEND

- EXISTING MINOR CONTOUR
- EXISTING MAJOR CONTOUR
- PROPOSED MINOR CONTOUR
- PROPOSED MAJOR CONTOUR
- BOUNDARY
- EASEMENT
- FEMA FLOODWAY PER FIRM# 48491C0460F & LOMR# 21-06-0115P
- FEMA AE — 100YR ATLAS 14 FEMA ZONE AE FLOODPLAIN PER FIRM# 48491C0460F & LOMR# 21-06-0115P
- FEMA A — 100YR FEMA ZONE A FLOODPLAIN PER FIRM MAP# 48491C0460F
- 100YR CLOMR — 100YR CLOMR FLOODPLAIN CASE# 15-06-2071R
- FDFP — 100YR ATLAS 14 FULLY DEVELOPED FLOODPLAIN (STANTEC DRAINAGE STUDY, SHERVIN NOOSHIN, 3/25/19) APPROVED WITH PP# 2019-5-PP
- OHWM — ORDINARY HIGH WATER MARK PER ADAMS ENVIRONMENTAL
- PROPOSED STORM LINE
- FIRE HYDRANT
- WATER VALVE
- STORM SEWER MAHNOLE
- WASTEWATER MANHOLE
- CURB INLET
- TREES TO REMAIN HERITAGE
- TREES TO REMAIN NON HERITAGE

VERT. SCALE: 1" = 4'
HORZ. SCALE: 1" = 40'

EXISTING GRADE - CENTERLINE
FINISHED GRADE - CENTERLINE

4' 2' 0 VERT. SCALE

EXISTING GROUND 1000.1 / 997.10 PROPOSED FLOWLINE

NOTE:

1. ALL PROPOSED STORM SEWER PIPE LINES SHALL BE CLASS III REINFORCED CONCRETE UNLESS NOTED OTHERWISE.
2. FILL SHALL BE PLACED ACCORDING TO THE GEOTECHNICAL ENGINEERS RECOMMENDATION AND CITY OF GEORGETOWN SPECIFICATIONS.
3. VEGETATE ALL DISTURBED AREAS WITHIN THE ROW AND OPEN SPACE LOT AREAS PER CITY OF GEORGETOWN SPECIFICATIONS.

TRENCH SAFETY NOTES:

1. IN ACCORDANCE WITH THE LAWS OF THE STATE OF TEXAS AND THE U.S. OCCUPATIONAL SAFETY AND HEALTH ADMINISTRATION REGULATIONS, ALL TRENCHES OVER 5 FEET IN DEPTH IN EITHER HARD AND COMPACT OR SOFT AND UNSTABLE SOIL SHALL BE SLOPED, SHORED, SHEETED, BRACED OR OTHERWISE SUPPORTED. FURTHERMORE, ALL TRENCHES LESS THAN 5 FEET IN DEPTH SHALL ALSO BE EFFECTIVELY PROTECTED WHEN HAZARDOUS GROUND MOVEMENT MAY BE EXPECTED. TRENCH SAFETY SYSTEMS TO BE UTILIZED FOR THIS PROJECT WILL BE PROVIDE BY THE CONTRACTOR.
2. IN ACCORDANCE WITH THE U.S. OCCUPATIONAL SAFETY AND HEALTH ADMINISTRATION REGULATIONS,WHEN PERSONS ARE IN TRENCHES 4-FEET DEEP OR MORE, ADEQUATE MEANS OF EXIT, SUCH AS A LADDER OR STEPS, MUST BE PROVIDED AND LOCATED SO AS TO REQUIRE NO MORE THAN 25 FEET OF LATERAL TRAVEL.
3. CONSTRUCTION SHALL NOT PROCEED UNTIL APPROPRIATE TRENCH SAFETY SYSTEM DETAILS, AS DESIGNED BY A PROFESSIONAL ENGINEER, ARE RETAINED AND COPIES SUBMITTED TO THE CITY OF GEORGETOWN.
4. DEEP EXCAVATIONS: ON EXCAVATIONS EXCEEDING 20 FEET IN DEPTH, TWO OR MORE MEANS OF EGRESS FROM THE EXCAVATION SHALL BE PROVIDED. THE CONTRACTOR SHALL CONSULT WITH A REGISTERED ENGINEER, EXPERIENCED IN TRENCH SAFETY SYSTEMS, REGARDING SPECIFIC MEANS AND METHODS EMPLOYED. CONTRACTOR SHALL PROVIDE A TRENCH SAFETY PLAN SEALED BY A REGISTERED PROFESSIONAL ENGINEER AS REQUIRED BY THE CITY OF GEORGETOWN.

NO	REVISION	BY	DATE

Know what's below. Call before you dig.

HRGreen
DEVELOPMENT TX
5508 HIGHWAY 290 WEST
SUITE 150
AUSTIN, TX 78735
512.872.6696
HRGREEN.COM
TBPE NO: 16384
TBPLS NO: 10194101

STATE OF TEXAS
CHRISTINE N. CAMPBELL
142536
LICENSED PROFESSIONAL ENGINEER
07/15/2025

STORM D-1 LATERALS D-1A - D-1D

PARKSIDE ON THE RIVER
SECTIONS 11, 12A & 15A
CONSTRUCTION PLANS
GEORGETOWN, WILLIAMSON, TEXAS

DESIGNED BY: CC
DRAWN BY: MM
CHECKED BY: SN
APPROVED BY:

SHEET 100 OF 141

2025-XX-CON

P:\Blake Magee\Parkside Sections 11-15 & WOA 9\Sections 11, 12A & 15A\03_ACAD\Planset\20250523 SDP\ STORM D-1 LATS.dwg, STORM D-1 LATERALS D-1A - D-1D, July 16, 2025, 12:11 PM, mateo.muhammad

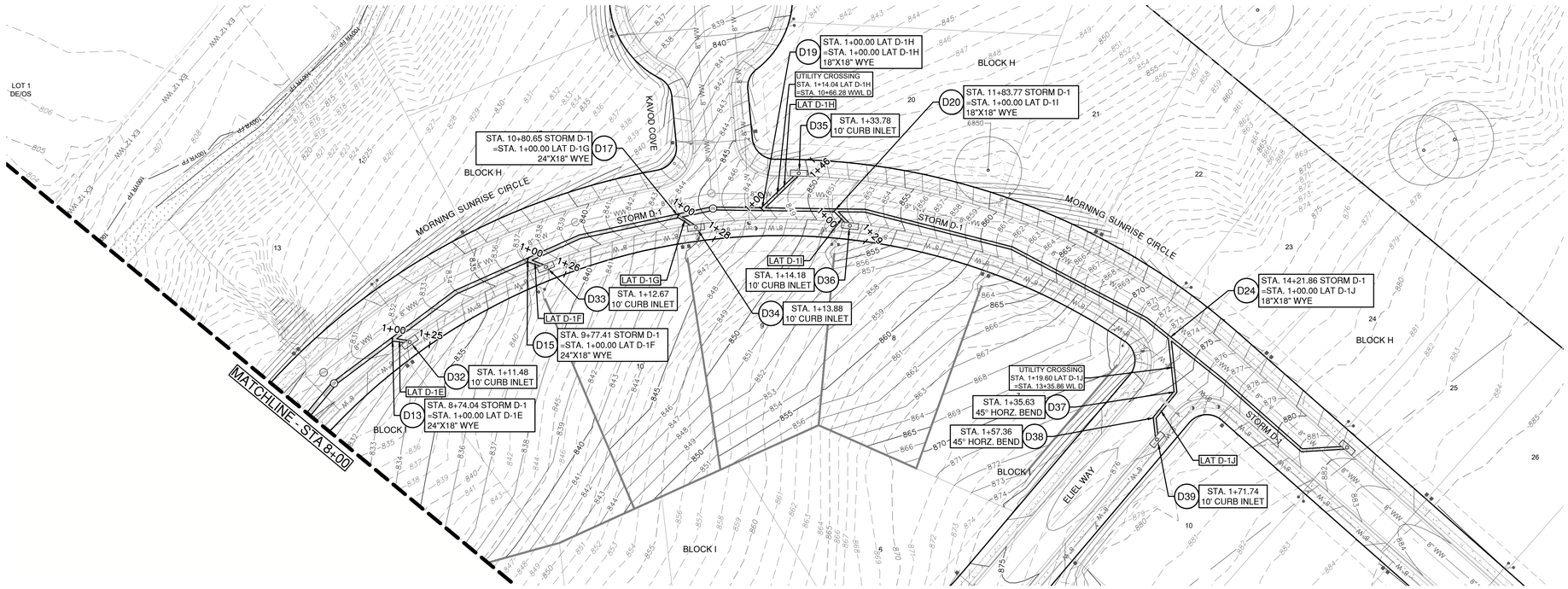

Pipe Label	Slope (%)	Q25 (cfs)	V25 (ft/s)	D25 (ft)	Q100 (cfs)	V100 (ft/s)	D100 (ft)
PIPE D-32	3.33%	2.82	1.72	1.60	3.55	2.01	3.75
PIPE D-33	8.75%	3.78	3.24	1.58	4.78	3.70	1.82
PIPE D-34	7.50%	3.72	3.22	1.44	5.30	3.94	1.71
PIPE D-35	5.25%	3.19	2.96	2.00	4.72	3.67	2.39
PIPE D-36	8.75%	6.95	4.68	2.06	8.08	5.19	2.31
PIPE D-37	4.50%	2.81	2.78	1.43	3.51	3.11	1.59
PIPE D-38	4.50%	2.81	3.33	0.85	3.51	3.58	0.96
PIPE D-39	4.50%	2.81	3.33	0.85	3.51	3.58	0.96

0 40' 80'

SCALE: 1" = 40'

LEGEND

- EXISTING MINOR CONTOUR
- EXISTING MAJOR CONTOUR
- PROPOSED MINOR CONTOUR
- PROPOSED MAJOR CONTOUR
- BOUNDARY
- EASEMENT
- FEMA FLOODWAY PER FIRM# 48491C0460F & LOMR# 21-06-0115P
- FEMA AE — 100YR ATLAS 14 FEMA ZONE AE FLOODPLAIN PER FIRM# 48491C0460F & LOMR# 21-06-0115P
- FEMA A — 100YR FEMA ZONE A FLOODPLAIN PER FIRM MAP# 48491C0460F
- 100YR CLOMR — 100YR CLOMR FLOODPLAIN CASE# 15-06-2071R
- FDFP — 100YR ATLAS 14 FULLY DEVELOPED FLOODPLAIN (STANTEC DRAINAGE STUDY, SHERVIN NOOSHIN, 3/25/19) APPROVED WITH PP# 2019-5-PP
- OHWM — ORDINARY HIGH WATER MARK PER ADAMS ENVIRONMENTAL
- PROPOSED STORM LINE
- FIRE HYDRANT
- WATER VALVE
- STORM SEWER MAHNOLE
- WASTEWATER MANHOLE
- CURB INLET
- TREES TO REMAIN HERITAGE
- TREES TO REMAIN NON HERITAGE

VERT. SCALE: 1" = 4'
HORZ. SCALE: 1" = 40'

EXISTING GRADE - CENTERLINE
FINISHED GRADE - CENTERLINE

4' 2' 0 VERT. SCALE

EXISTING GROUND 1000.1 997.10 PROPOSED FLOWLINE

NOTE:

1. ALL PROPOSED STORM SEWER PIPE LINES SHALL BE CLASS III REINFORCED CONCRETE UNLESS NOTED OTHERWISE.
2. FILL SHALL BE PLACED ACCORDING TO THE GEOTECHNICAL ENGINEERS RECOMMENDATION AND CITY OF GEORGETOWN SPECIFICATIONS.
3. VEGETATE ALL DISTURBED AREAS WITHIN THE ROW AND OPEN SPACE LOT AREAS PER CITY OF GEORGETOWN SPECIFICATIONS.

TRENCH SAFETY NOTES:

1. IN ACCORDANCE WITH THE LAWS OF THE STATE OF TEXAS AND THE U.S. OCCUPATIONAL SAFETY AND HEALTH ADMINISTRATION REGULATIONS, ALL TRENCHES OVER 5 FEET IN DEPTH IN EITHER HARD AND COMPACT OR SOFT AND UNSTABLE SOIL SHALL BE SLOPED, SHORED, SHEETED, BRACED OR OTHERWISE SUPPORTED. FURTHERMORE, ALL TRENCHES LESS THAN 5 FEET IN DEPTH SHALL ALSO BE EFFECTIVELY PROTECTED WHEN HAZARDOUS GROUND MOVEMENT MAY BE EXPECTED. TRENCH SAFETY SYSTEMS TO BE UTILIZED FOR THIS PROJECT WILL BE PROVIDE BY THE CONTRACTOR.
2. IN ACCORDANCE WITH THE U.S. OCCUPATIONAL SAFETY AND HEALTH ADMINISTRATION REGULATIONS,WHEN PERSONS ARE IN TRENCHES 4-FEET DEEP OR MORE, ADEQUATE MEANS OF EXIT, SUCH AS A LADDER OR STEPS, MUST BE PROVIDED AND LOCATED SO AS TO REQUIRE NO MORE THAN 25 FEET OF LATERAL TRAVEL.
3. CONSTRUCTION SHALL NOT PROCEED UNTIL APPROPRIATE TRENCH SAFETY SYSTEM DETAILS, AS DESIGNED BY A PROFESSIONAL ENGINEER, ARE RETAINED AND COPIES SUBMITTED TO THE CITY OF GEORGETOWN.
4. DEEP EXCAVATIONS: ON EXCAVATIONS EXCEEDING 20 FEET IN DEPTH, TWO OR MORE MEANS OF EGRESS FROM THE EXCAVATION SHALL BE PROVIDED. THE CONTRACTOR SHALL CONSULT WITH A REGISTERED ENGINEER, EXPERIENCED IN TRENCH SAFETY SYSTEMS, REGARDING SPECIFIC MEANS AND METHODS EMPLOYED. CONTRACTOR SHALL PROVIDE A TRENCH SAFETY PLAN SEALED BY A REGISTERED PROFESSIONAL ENGINEER AS REQUIRED BY THE CITY OF GEORGETOWN.

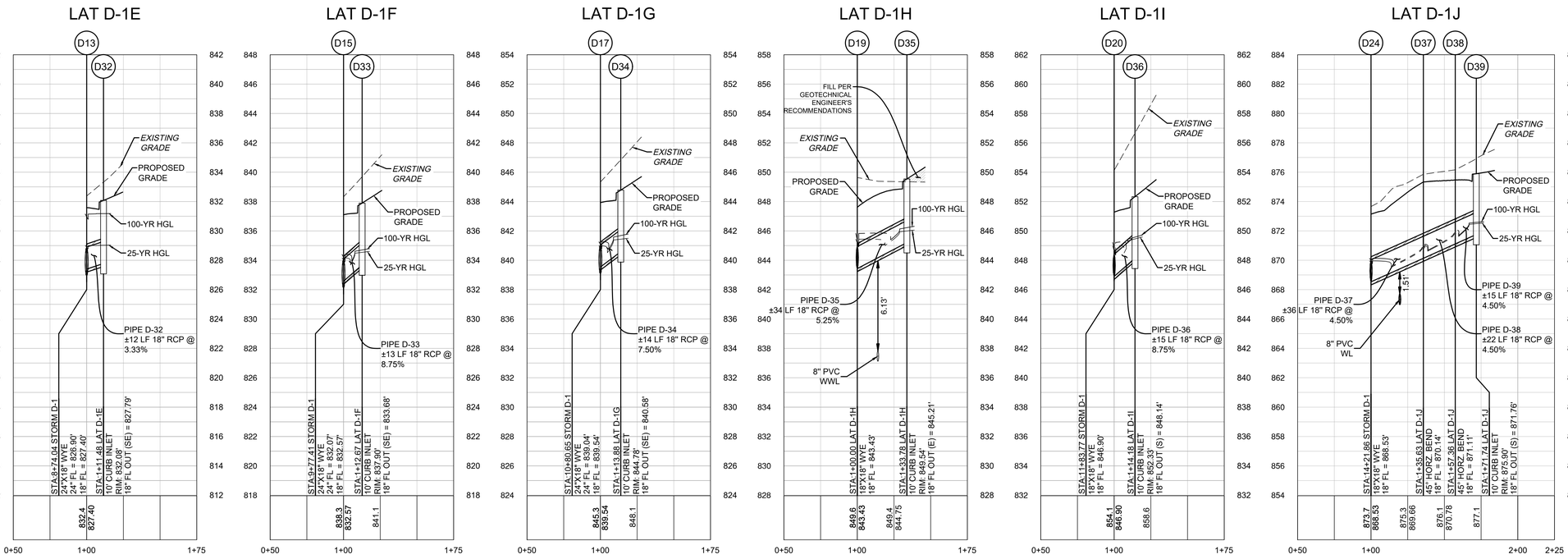

5508 HIGHWAY 290 WEST
SUITE 150
AUSTIN, TX 78735
512.872.6696
HRGREEN.COM

TBPE NO: 16384
TBPLS NO: 10194101

HRGreen®
DEVELOPMENT TX

811 Know what's below. Call before you dig.

NO	REVISION	BY	DATE

STATE OF TEXAS
CHRISTINE N. CAMPBELL
142536
LICENSED PROFESSIONAL ENGINEER

07/05/2025

STORM D-1 LATERALS D-1E - D-1J

PARKSIDE ON THE RIVER SECTIONS 11, 12A & 15A CONSTRUCTION PLANS

GEORGETOWN, WILLIAMSON, TEXAS

DESIGNED BY: CC
DRAWN BY: MM
CHECKED BY: SN
APPROVED BY:

SHEET 101 OF 141

2025-XX-CON

P:\Blake Magee\Parkside Sections 11-15 & HOA Sites\Sec 11, 12A & 15A\05_ACAD\Planset\20250523_SDPP STORM D-1 LATERALS D-1E, D-1J, July 09, 2025, 12:11 PM, mirak.muhammad

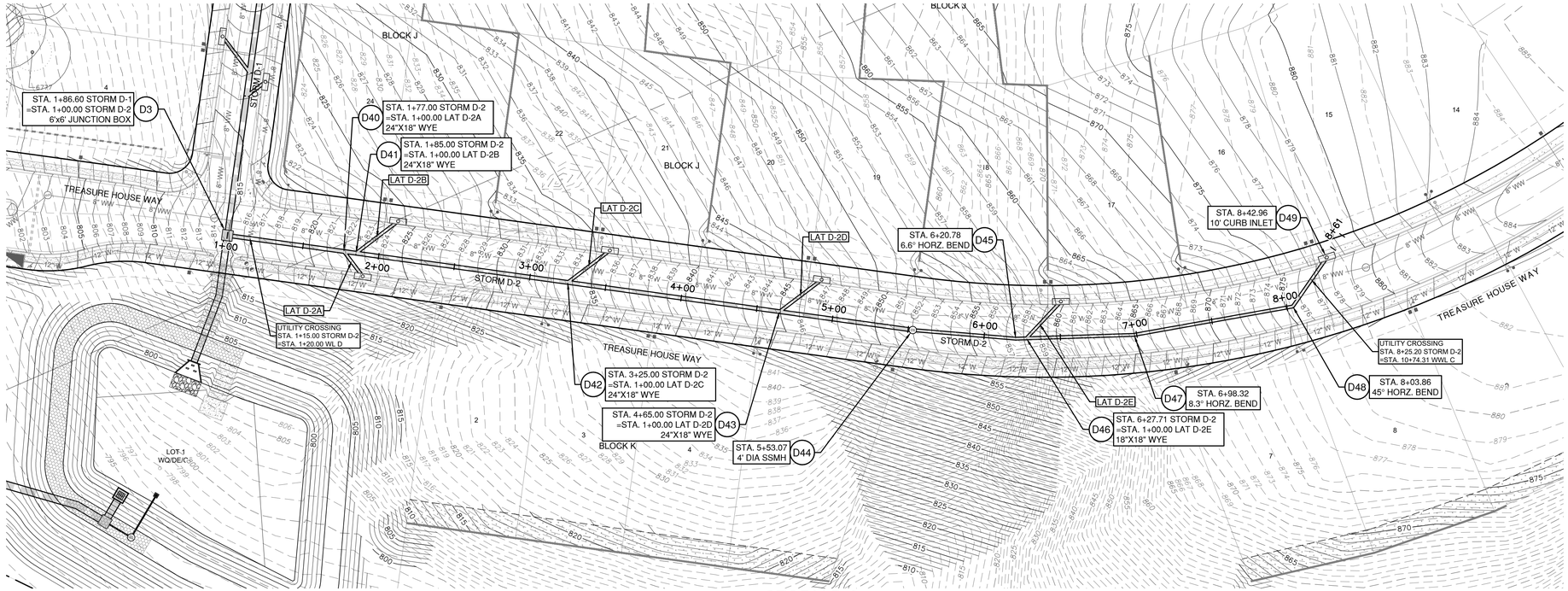

STORM D-2

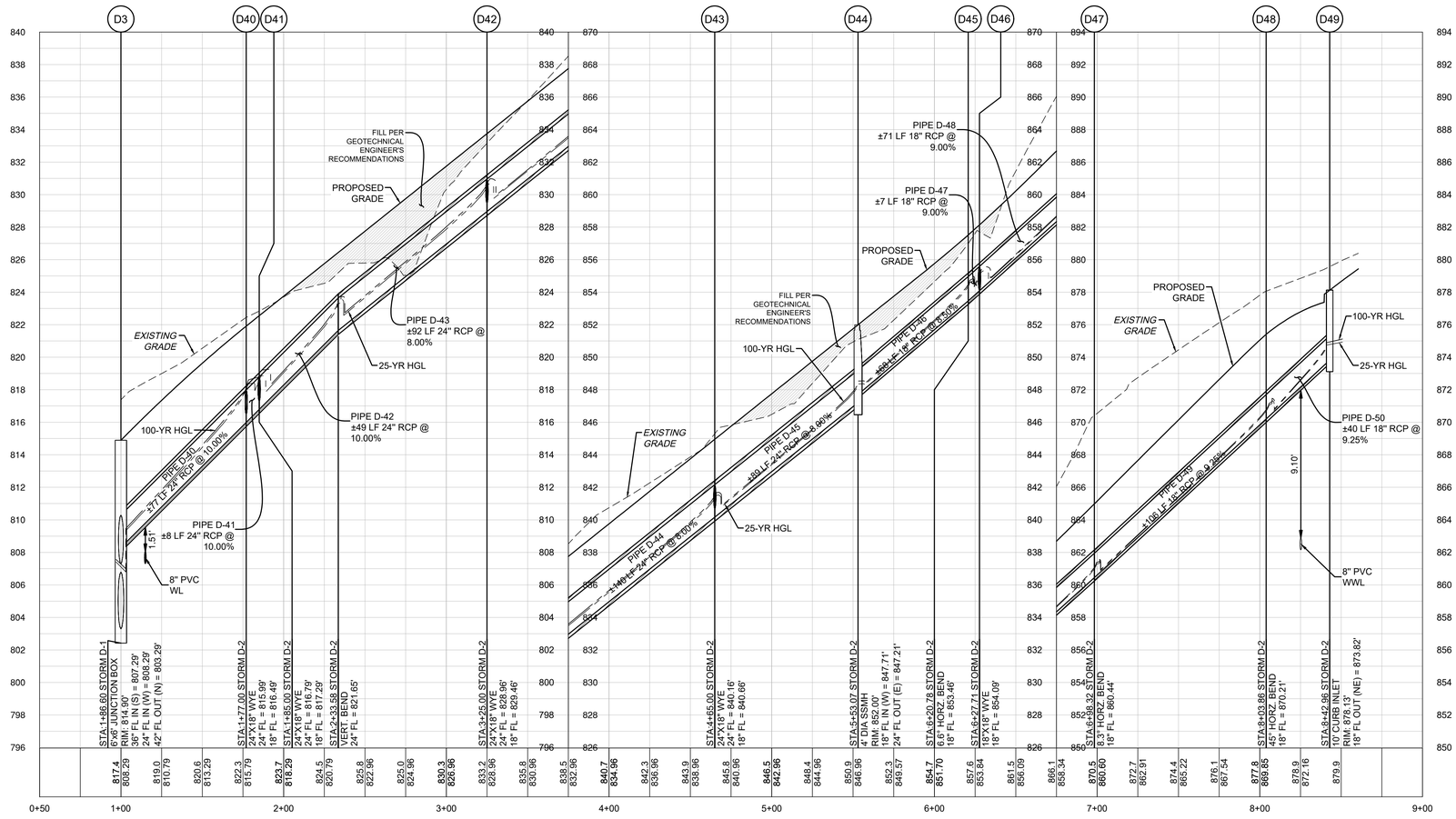

0 40' 80'

SCALE: 1" = 40'

LEGEND

- EXISTING MINOR CONTOUR
- EXISTING MAJOR CONTOUR
- PROPOSED MINOR CONTOUR
- PROPOSED MAJOR CONTOUR
- BOUNDARY
- EASEMENT
- FEMA FLOODWAY PER FIRM# 48491C0460F & LOMR# 21-06-0115P
- FEMA AE — 100YR ATLAS 14 FEMA ZONE AE FLOODPLAIN PER FIRM# 48491C0460F & LOMR# 21-06-0115P
- FEMA A — 100YR FEMA ZONE A FLOODPLAIN PER FIRM MAP# 48491C0460F
- 100YR CLOMR — 100YR CLOMR FLOODPLAIN CASE# 15-06-2071R
- FDFP — 100YR ATLAS 14 FULLY DEVELOPED FLOODPLAIN (STANTEC DRAINAGE STUDY, SHERVIN NOOSHIN, 3/25/19) APPROVED WITH PP# 2019-5-PP
- OHWM — ORDINARY HIGH WATER MARK PER ADAMS ENVIRONMENTAL
- PROPOSED STORM LINE
- FIRE HYDRANT
- WATER VALVE
- STORM SEWER MAHNOLE
- WASTEWATER MANHOLE
- CURB INLET
- TREES TO REMAIN HERITAGE
- TREES TO REMAIN NON HERITAGE

VERT. SCALE: 1" = 4'
HORZ. SCALE: 1" = 40'

4' 2' 0 VERT. SCALE

EXISTING GRADE - CENTERLINE
FINISHED GRADE - CENTERLINE

EXISTING GROUND 1000.1 997.10 PROPOSED FLOWLINE

NOTE:

1. ALL PROPOSED STORM SEWER PIPE LINES SHALL BE CLASS III REINFORCED CONCRETE UNLESS NOTED OTHERWISE.
2. FILL SHALL BE PLACED ACCORDING TO THE GEOTECHNICAL ENGINEERS RECOMMENDATION AND CITY OF GEORGETOWN SPECIFICATIONS.
3. VEGETATE ALL DISTURBED AREAS WITHIN THE ROW AND OPEN SPACE LOT AREAS PER CITY OF GEORGETOWN SPECIFICATIONS.

TRENCH SAFETY NOTES:

1. IN ACCORDANCE WITH THE LAWS OF THE STATE OF TEXAS AND THE U.S. OCCUPATIONAL SAFETY AND HEALTH ADMINISTRATION REGULATIONS, ALL TRENCHES OVER 5 FEET IN DEPTH IN EITHER HARD AND COMPACT OR SOFT AND UNSTABLE SOIL SHALL BE SLOPED, SHORED, SHEETED, BRACED OR OTHERWISE SUPPORTED. FURTHERMORE, ALL TRENCHES LESS THAN 5 FEET IN DEPTH SHALL ALSO BE EFFECTIVELY PROTECTED WHEN HAZARDOUS GROUND MOVEMENT MAY BE EXPECTED. TRENCH SAFETY SYSTEMS TO BE UTILIZED FOR THIS PROJECT WILL BE PROVIDE BY THE CONTRACTOR.
2. IN ACCORDANCE WITH THE U.S. OCCUPATIONAL SAFETY AND HEALTH ADMINISTRATION REGULATIONS,WHEN PERSONS ARE IN TRENCHES 4-FEET DEEP OR MORE, ADEQUATE MEANS OF EXIT, SUCH AS A LADDER OR STEPS, MUST BE PROVIDED AND LOCATED SO AS TO REQUIRE NO MORE THAN 25 FEET OF LATERAL TRAVEL.
3. CONSTRUCTION SHALL NOT PROCEED UNTIL APPROPRIATE TRENCH SAFETY SYSTEM DETAILS, AS DESIGNED BY A PROFESSIONAL ENGINEER, ARE RETAINED AND COPIES SUBMITTED TO THE CITY OF GEORGETOWN.
4. DEEP EXCAVATIONS: ON EXCAVATIONS EXCEEDING 20 FEET IN DEPTH, TWO OR MORE MEANS OF EGRESS FROM THE EXCAVATION SHALL BE PROVIDED. THE CONTRACTOR SHALL CONSULT WITH A REGISTERED ENGINEER, EXPERIENCED IN TRENCH SAFETY SYSTEMS, REGARDING SPECIFIC MEANS AND METHODS EMPLOYED. CONTRACTOR SHALL PROVIDE A TRENCH SAFETY PLAN SEALED BY A REGISTERED PROFESSIONAL ENGINEER AS REQUIRED BY THE CITY OF GEORGETOWN.

Pipe Label	Slope (%)	Q25 (cfs)	V25 (ft/s)	D25 (ft)	Q100 (cfs)	V100 (ft/s)	D100 (ft)
PIPE D-40	10.00%	33.11	15.47	1.90	40.24	16.96	1.95
PIPE D-41	10.00%	25.81	8.48	2.37	32.10	10.24	2.62
PIPE D-42	10.00%	19.77	6.82	2.07	24.61	8.14	2.42
PIPE D-43	8.00%	19.77	6.86	1.93	24.61	8.14	2.07
PIPE D-44	8.00%	13.70	5.45	1.74	17.08	6.12	2.02
PIPE D-45	8.00%	8.68	4.51	1.36	10.82	4.90	1.53
PIPE D-46	8.50%	8.68	10.34	1.14	10.82	11.07	1.26
PIPE D-47	9.00%	8.68	5.56	1.38	10.82	6.47	1.51
PIPE D-48	9.00%	4.70	3.81	1.26	5.84	4.18	1.49
PIPE D-49	9.25%	4.70	4.20	1.00	5.84	4.58	1.13
PIPE D-50	9.25%	4.70	3.98	1.13	5.84	4.36	1.27

NO	BY	DATE

811 Know what's below. Call before you dig.

5508 HIGHWAY 290 WEST
SUITE 150
AUSTIN, TX 78735
512.872.6696
HRGREEN.COM

TBPE NO: 16384
TBPLS NO: 10194101

HRGreen®
DEVELOPMENT TX

STATE OF TEXAS
CHRISTINE N. CAMPBELL
142536
LICENSED PROFESSIONAL ENGINEER

07/05/2025

STORM D-2 PLAN & PROFILE

PARKSIDE ON THE RIVER SECTIONS 11, 12A & 15A CONSTRUCTION PLANS GEORGETOWN, WILLIAMSON, TEXAS

DESIGNED BY: CC
DRAWN BY: MM
CHECKED BY: SN
APPROVED BY:

SHEET 102 OF 141

2025-XX-CON

P:\Blue Mound\Parkside Sections 11-15 & WOA S\Section 11, 12A & 15A\03_ACAD\Plans\sht\A003232 SDP\P STORM D-2.dwg, STORM D-2 PLAN & PROFILE, July 18, 2025, 12:12 PM, malal.muhammad

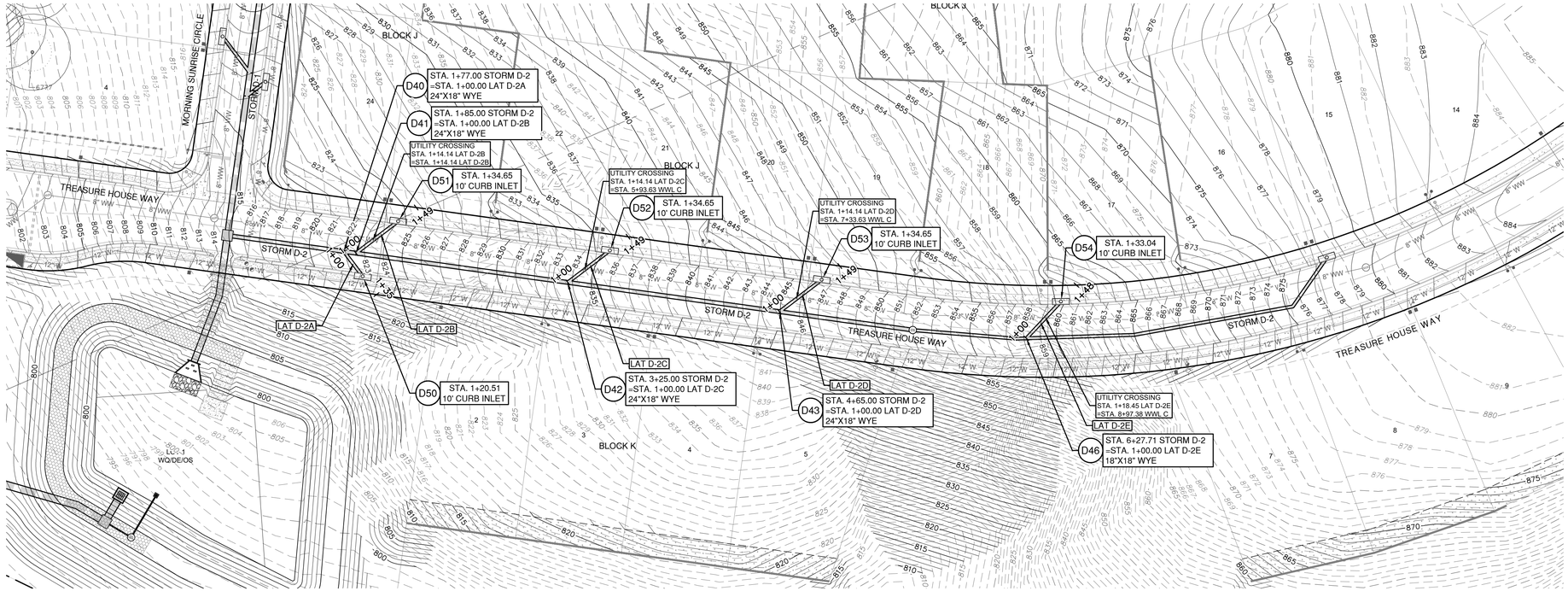

Pipe Label	Slope (%)	Q25 (cfs)	V25 (ft/s)	D25 (ft)	Q100 (cfs)	V100 (ft/s)	D100 (ft)
PIPE D-51	10.00%	7.30	4.84	1.87	8.14	5.22	2.12
PIPE D-52	8.75%	6.04	4.27	1.57	7.49	4.93	1.92
PIPE D-53	6.00%	6.07	4.51	1.24	7.53	4.94	1.52
PIPE D-54	6.00%	5.02	7.63	0.86	6.26	5.01	1.03
PIPE D-55	6.00%	3.98	3.45	1.26	4.98	3.79	1.49

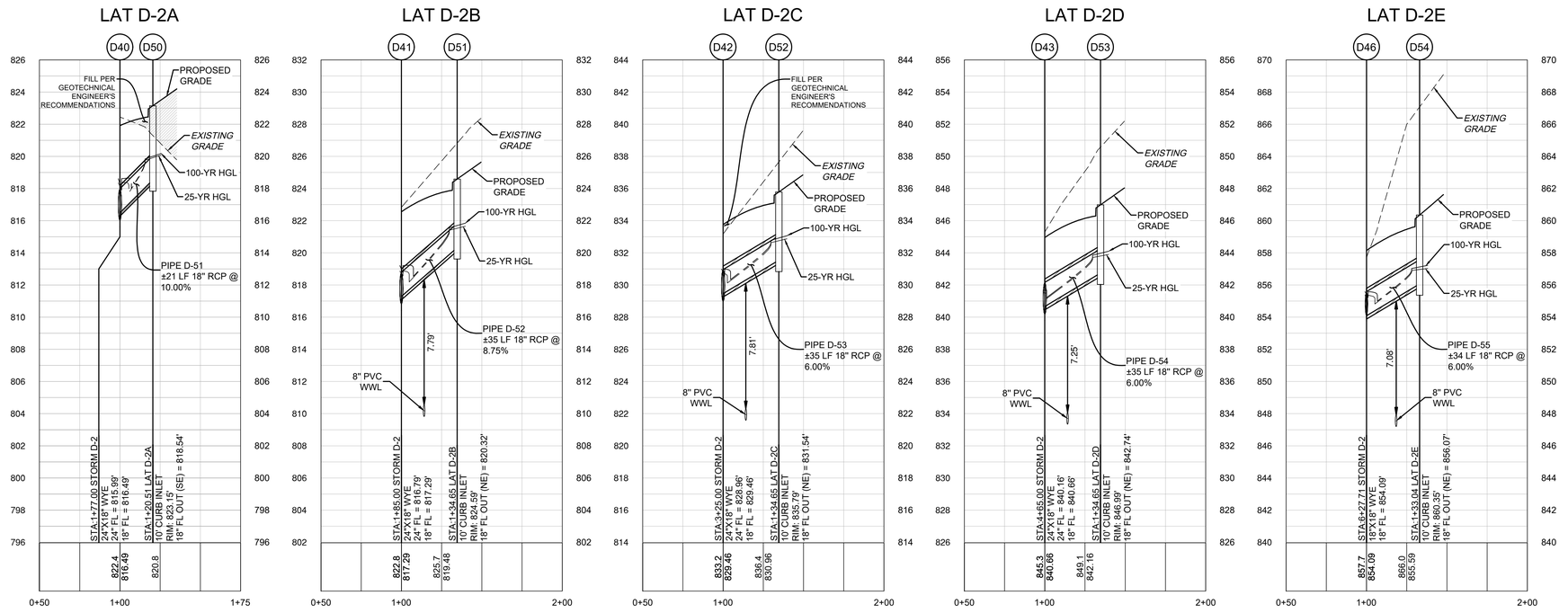

LEGEND

- EXISTING MINOR CONTOUR
- EXISTING MAJOR CONTOUR
- PROPOSED MINOR CONTOUR
- PROPOSED MAJOR CONTOUR
- BOUNDARY
- EASEMENT
- FEMA FLOODWAY PER FIRM# 48491C0460F & LOMR# 21-06-0115P
- FEMA AE — 100YR ATLAS 14 FEMA ZONE AE FLOODPLAIN PER FIRM# 48491C0460F & LOMR# 21-06-0115P
- FEMA A — 100YR FEMA ZONE A FLOODPLAIN PER FIRM MAP# 48491C0460F
- 100YR CLOMR — 100YR CLOMR FLOODPLAIN CASE# 15-06-2071R
- FDFP — 100YR ATLAS 14 FULLY DEVELOPED FLOODPLAIN (STANTEC DRAINAGE STUDY, SHERVIN NOOSHIN, 3/25/19) APPROVED WITH PP# 2019-5-PP
- OHWM — ORDINARY HIGH WATER MARK PER ADAMS ENVIRONMENTAL
- PROPOSED STORM LINE
- FIRE HYDRANT
- WATER VALVE
- STORM SEWER MAHNOLE
- WASTEWATER MANHOLE
- CURB INLET
- TREES TO REMAIN HERITAGE
- TREES TO REMAIN NON HERITAGE

VERT. SCALE: 1" = 4'
HORZ. SCALE: 1" = 40'

EXISTING GRADE - CENTERLINE
FINISHED GRADE - CENTERLINE

4'
2'
0
VERT. SCALE

EXISTING GROUND — 1000.1 / 997.10 — PROPOSED FLOWLINE

NOTE:

1. ALL PROPOSED STORM SEWER PIPE LINES SHALL BE CLASS III REINFORCED CONCRETE UNLESS NOTED OTHERWISE.
2. FILL SHALL BE PLACED ACCORDING TO THE GEOTECHNICAL ENGINEERS RECOMMENDATION AND CITY OF GEORGETOWN SPECIFICATIONS.
3. VEGETATE ALL DISTURBED AREAS WITHIN THE ROW AND OPEN SPACE LOT AREAS PER CITY OF GEORGETOWN SPECIFICATIONS.

TRENCH SAFETY NOTES:

1. IN ACCORDANCE WITH THE LAWS OF THE STATE OF TEXAS AND THE U.S. OCCUPATIONAL SAFETY AND HEALTH ADMINISTRATION REGULATIONS, ALL TRENCHES OVER 5 FEET IN DEPTH IN EITHER HARD AND COMPACT OR SOFT AND UNSTABLE SOIL SHALL BE SLOPED, SHORED, SHEETED, BRACED OR OTHERWISE SUPPORTED. FURTHERMORE, ALL TRENCHES LESS THAN 5 FEET IN DEPTH SHALL ALSO BE EFFECTIVELY PROTECTED WHEN HAZARDOUS GROUND MOVEMENT MAY BE EXPECTED. TRENCH SAFETY SYSTEMS TO BE UTILIZED FOR THIS PROJECT WILL BE PROVIDE BY THE CONTRACTOR.
2. IN ACCORDANCE WITH THE U.S. OCCUPATIONAL SAFETY AND HEALTH ADMINISTRATION REGULATIONS,WHEN PERSONS ARE IN TRENCHES 4-FEET DEEP OR MORE, ADEQUATE MEANS OF EXIT, SUCH AS A LADDER OR STEPS, MUST BE PROVIDED AND LOCATED SO AS TO REQUIRE NO MORE THAN 25 FEET OF LATERAL TRAVEL.
3. CONSTRUCTION SHALL NOT PROCEED UNTIL APPROPRIATE TRENCH SAFETY SYSTEM DETAILS, AS DESIGNED BY A PROFESSIONAL ENGINEER, ARE RETAINED AND COPIES SUBMITTED TO THE CITY OF GEORGETOWN.
4. DEEP EXCAVATIONS: ON EXCAVATIONS EXCEEDING 20 FEET IN DEPTH, TWO OR MORE MEANS OF EGRESS FROM THE EXCAVATION SHALL BE PROVIDED. THE CONTRACTOR SHALL CONSULT WITH A REGISTERED ENGINEER, EXPERIENCED IN TRENCH SAFETY SYSTEMS, REGARDING SPECIFIC MEANS AND METHODS EMPLOYED. CONTRACTOR SHALL PROVIDE A TRENCH SAFETY PLAN SEALED BY A REGISTERED PROFESSIONAL ENGINEER AS REQUIRED BY THE CITY OF GEORGETOWN.

NO	REVISION	BY	DATE

811 Know what's below. Call before you dig.

HRGreen
5508 HIGHWAY 290 WEST
SUITE 150
AUSTIN, TX 78735
512.872.6696
HRGREEN.COM
TBPE NO: 16384
TBPLS NO: 10194101
DEVELOPMENT TX

STATE OF TEXAS
CHRISTINE N. CAMPBELL
142536
LICENSED PROFESSIONAL ENGINEER

07/03/2025

STORM D-2 LATERALS D-2A - D-2E

PARKSIDE ON THE RIVER SECTIONS 11, 12A & 15A CONSTRUCTION PLANS

GEORGETOWN, WILLIAMSON, TEXAS

DESIGNED BY: CC
DRAWN BY: MM
CHECKED BY: SN
APPROVED BY:

SHEET 103 OF 141

2025-XX-CON

P:\Blake Magee\Parkside Sections 11-15 & WCN S\Section 11, 12A & 15A\03_ACAD\Planset\240522 SDPP STORM D-2 LATERALS.dwg, STORM D-2 LATERALS D-2A - D-2E, July 16, 2025, 12:14 PM, maria.muhammad

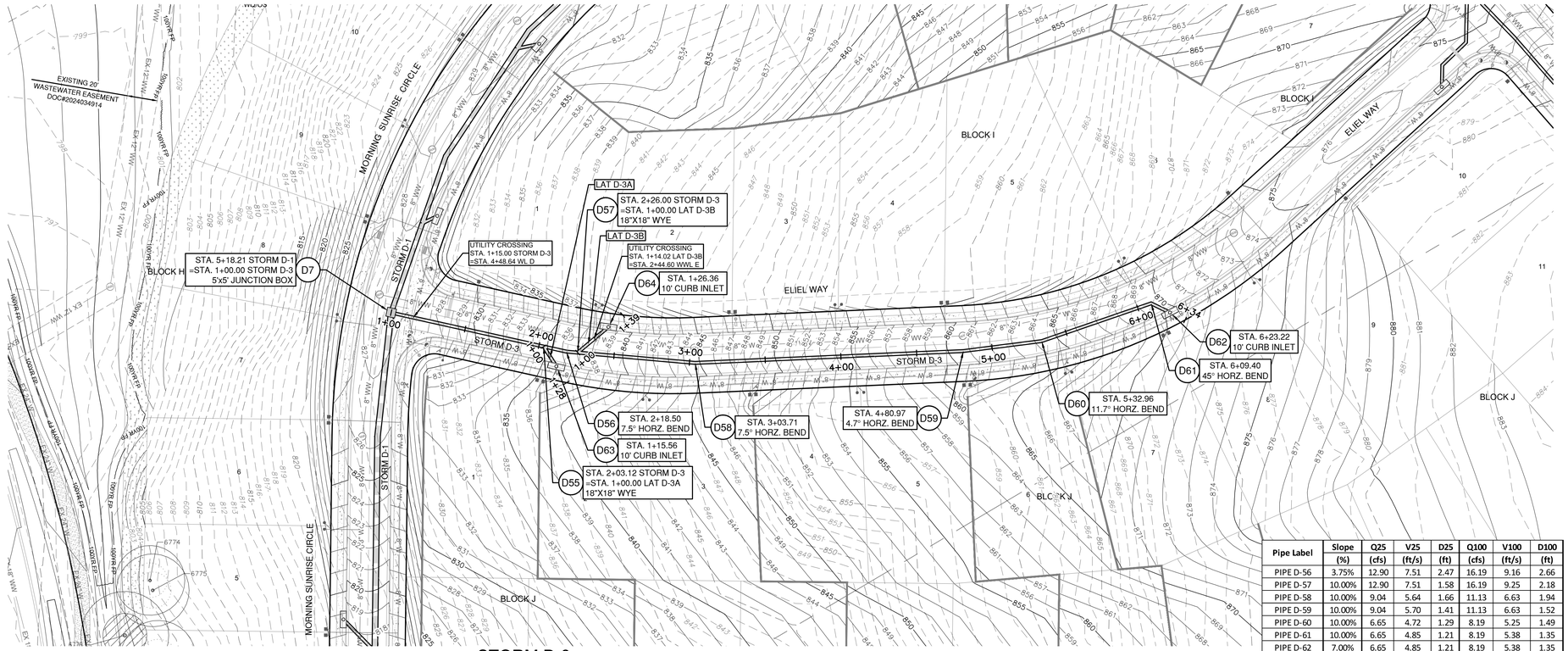

Pipe Label	Slope (%)	Q25 (cfs)	V25 (ft/s)	D25 (ft)	Q100 (cfs)	V100 (ft/s)	D100 (ft)
PIPE D-56	3.75%	12.90	7.51	2.47	16.19	9.16	2.66
PIPE D-57	10.00%	12.90	7.51	1.58	16.19	9.25	2.18
PIPE D-58	10.00%	9.04	5.64	1.66	11.13	6.63	1.94
PIPE D-59	10.00%	9.04	5.70	1.41	11.13	6.63	1.52
PIPE D-60	10.00%	6.65	4.72	1.29	8.19	5.25	1.49
PIPE D-61	10.00%	6.65	4.85	1.21	8.19	5.38	1.35
PIPE D-62	7.00%	6.65	4.85	1.21	8.19	5.38	1.35
PIPE D-63	7.00%	6.65	4.85	1.21	8.19	5.38	1.35
PIPE D-64	7.00%	6.65	4.85	1.21	8.19	5.38	1.35
PIPE D-65	7.00%	6.65	4.64	1.36	8.19	5.24	1.50
PIPE D-66	10.00%	3.86	3.27	1.66	5.06	3.83	1.94
PIPE D-67	8.75%	2.39	2.62	1.29	2.94	2.83	1.49

STORM D-3

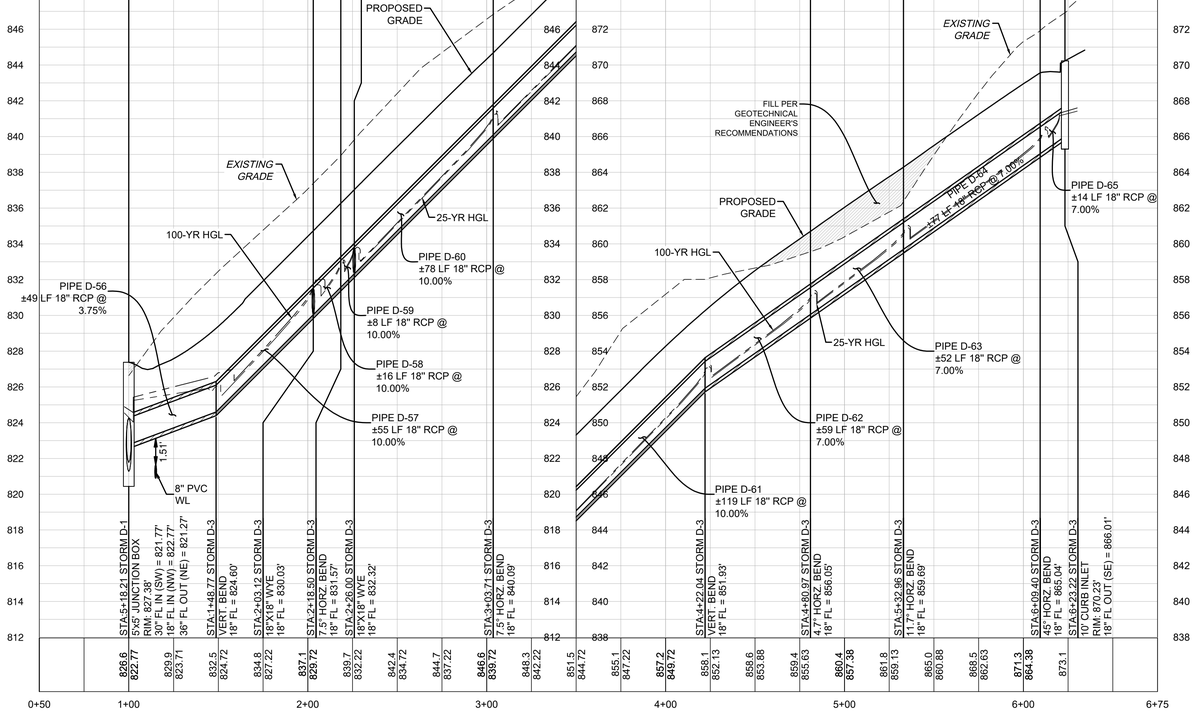

LAT D-3A

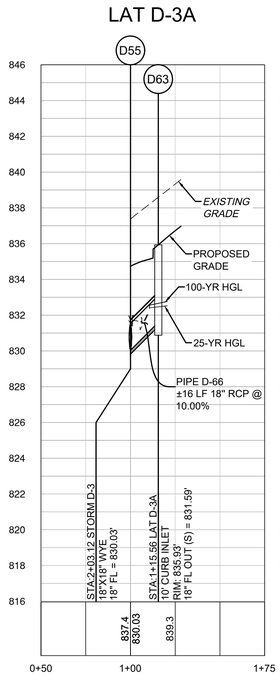

LAT D-3B

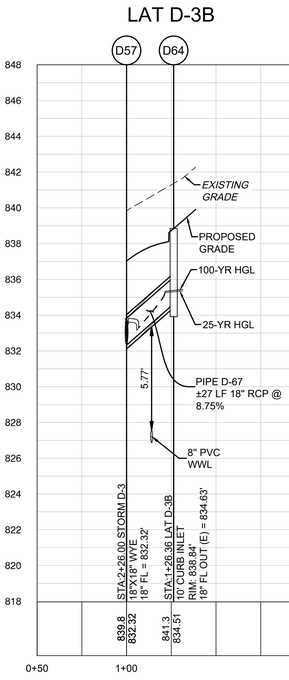

0 40' 80'

SCALE: 1" = 40'

LEGEND

- EXISTING MINOR CONTOUR
- EXISTING MAJOR CONTOUR
- PROPOSED MINOR CONTOUR
- PROPOSED MAJOR CONTOUR
- BOUNDARY
- EASEMENT
- FEMA FLOODWAY PER FIRM# 48491C0460F & LOMR# 21-06-0115P
- FEMA AE — 100YR ATLAS 14 FEMA ZONE AE FLOODPLAIN PER FIRM# 48491C0460F & LOMR# 21-06-0115P
- FEMA A — 100YR FEMA ZONE A FLOODPLAIN PER FIRM MAP# 48491C0460F
- 100YR CLOMR — 100YR CLOMR FLOODPLAIN CASE# 15-06-2071R
- FDFP — 100YR ATLAS 14 FULLY DEVELOPED FLOODPLAIN (STANTEC DRAINAGE STUDY, SHERVIN NOOSHIN, 3/25/19) APPROVED WITH PP# 2019-5-PP
- OHWM — ORDINARY HIGH WATER MARK PER ADAMS ENVIRONMENTAL
- PROPOSED STORM LINE
- FIRE HYDRANT
- WATER VALVE
- STORM SEWER MAHNOLE
- WASTEWATER MANHOLE
- CURB INLET
- TREES TO REMAIN HERITAGE
- TREES TO REMAIN NON HERITAGE

VERT. SCALE: 1" = 4'
HORZ. SCALE: 1" = 40'

4' 2' 0 VERT. SCALE

EXISTING GRADE - CENTERLINE
FINISHED GRADE - CENTERLINE

EXISTING GROUND 1000.1 997.10 PROPOSED FLOWLINE

NOTE:

1. ALL PROPOSED STORM SEWER PIPE LINES SHALL BE CLASS III REINFORCED CONCRETE UNLESS NOTED OTHERWISE.
2. FILL SHALL BE PLACED ACCORDING TO THE GEOTECHNICAL ENGINEERS RECOMMENDATION AND CITY OF GEORGETOWN SPECIFICATIONS.
3. VEGETATE ALL DISTURBED AREAS WITHIN THE ROW AND OPEN SPACE LOT AREAS PER CITY OF GEORGETOWN SPECIFICATIONS.

TRENCH SAFETY NOTES:

1. IN ACCORDANCE WITH THE LAWS OF THE STATE OF TEXAS AND THE U.S. OCCUPATIONAL SAFETY AND HEALTH ADMINISTRATION REGULATIONS, ALL TRENCHES OVER 5 FEET IN DEPTH IN EITHER HARD AND COMPACT OR SOFT AND UNSTABLE SOIL SHALL BE SLOPED, SHORED, SHEETED, BRACED OR OTHERWISE SUPPORTED. FURTHERMORE, ALL TRENCHES LESS THAN 5 FEET IN DEPTH SHALL ALSO BE EFFECTIVELY PROTECTED WHEN HAZARDOUS GROUND MOVEMENT MAY BE EXPECTED. TRENCH SAFETY SYSTEMS TO BE UTILIZED FOR THIS PROJECT WILL BE PROVIDE BY THE CONTRACTOR.
2. IN ACCORDANCE WITH THE U.S. OCCUPATIONAL SAFETY AND HEALTH ADMINISTRATION REGULATIONS,WHEN PERSONS ARE IN TRENCHES 4-FEET DEEP OR MORE, ADEQUATE MEANS OF EXIT, SUCH AS A LADDER OR STEPS, MUST BE PROVIDED AND LOCATED SO AS TO REQUIRE NO MORE THAN 25 FEET OF LATERAL TRAVEL.
3. CONSTRUCTION SHALL NOT PROCEED UNTIL APPROPRIATE TRENCH SAFETY SYSTEM DETAILS, AS DESIGNED BY A PROFESSIONAL ENGINEER, ARE RETAINED AND COPIES SUBMITTED TO THE CITY OF GEORGETOWN.
4. DEEP EXCAVATIONS: ON EXCAVATIONS EXCEEDING 20 FEET IN DEPTH, TWO OR MORE MEANS OF EGRESS FROM THE EXCAVATION SHALL BE PROVIDED. THE CONTRACTOR SHALL CONSULT WITH A REGISTERED ENGINEER, EXPERIENCED IN TRENCH SAFETY SYSTEMS, REGARDING SPECIFIC MEANS AND METHODS EMPLOYED. CONTRACTOR SHALL PROVIDE A TRENCH SAFETY PLAN SEALED BY A REGISTERED PROFESSIONAL ENGINEER AS REQUIRED BY THE CITY OF GEORGETOWN.

NO	REVISION	BY	DATE

811 Know what's below. Call before you dig.

HRGreen DEVELOPMENT TX
5508 HIGHWAY 290 WEST
SUITE 150
AUSTIN, TX 78735
512.872.6696
HRGREEN.COM
TBPE NO: 16384
TBPLS NO: 10194101

STATE OF TEXAS
CHRISTINE N. CAMPBELL
142536
LICENSED PROFESSIONAL ENGINEER
07/03/2025

STORM D-3 & LATERALS PLAN & PROFILE

PARKSIDE ON THE RIVER SECTIONS 11, 12A & 15A CONSTRUCTION PLANS

GEORGETOWN, WILLIAMSON, TEXAS

DESIGNED BY: CC
DRAWN BY: MM
CHECKED BY: SN
APPROVED BY:

SHEET 104 OF 141

2025-XX-CON

P:\Blake Magee\Parkside Sections 11-15 & WON ES\Section 11, 12A & 15A\03_ACAD\Planset\20250523 SDP\P STORM D-3.dwg, STORM D-3 & LATERALS PLAN & PROFILE, July 18, 2025, 12:15 PM, mekal.muhammad

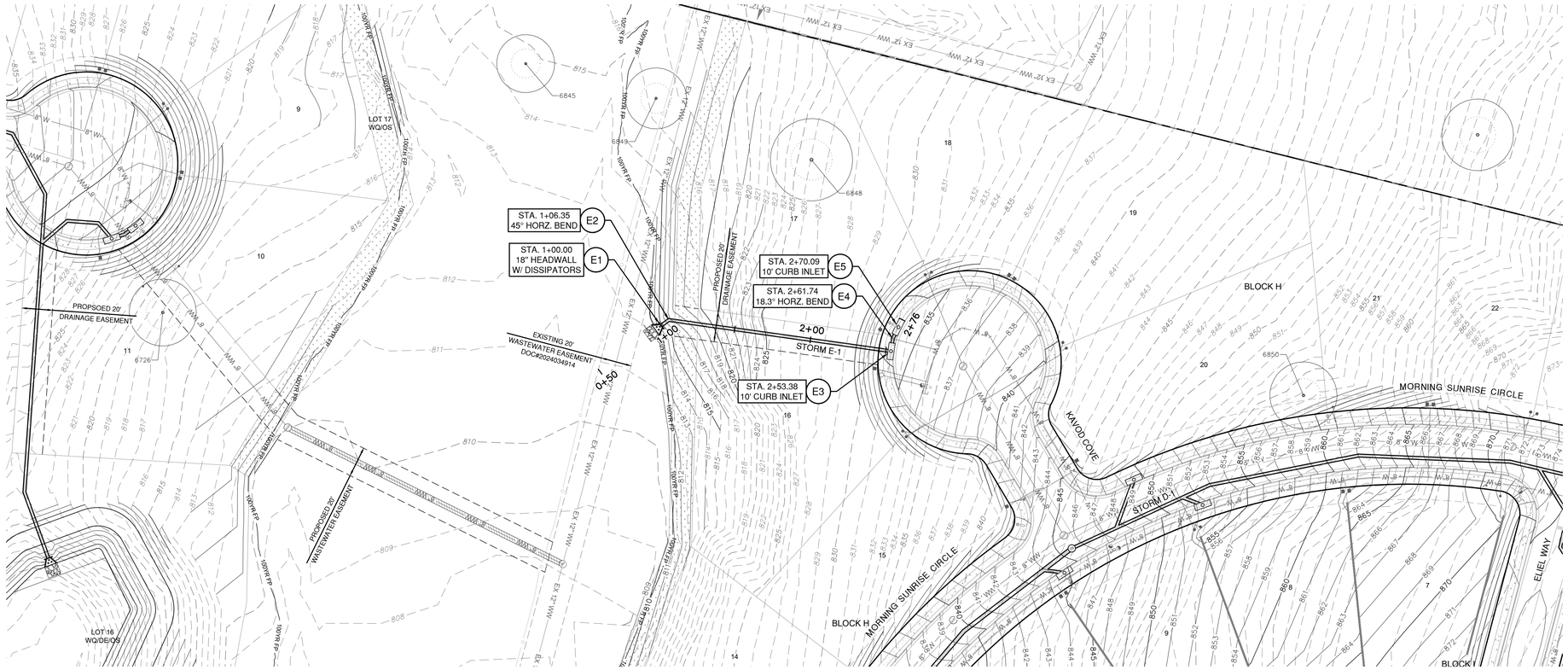

0 40' 80'

SCALE: 1" = 40'

LEGEND

- EXISTING MINOR CONTOUR
- EXISTING MAJOR CONTOUR
- PROPOSED MINOR CONTOUR
- PROPOSED MAJOR CONTOUR
- BOUNDARY
- EASEMENT
- FEMA FLOODWAY PER FIRM# 48491C0460F & LOMR# 21-06-0115P
- FEMA AE — 100YR ATLAS 14 FEMA ZONE AE FLOODPLAIN PER FIRM# 48491C0460F & LOMR# 21-06-0115P
- FEMA A — 100YR FEMA ZONE A FLOODPLAIN PER FIRM MAP# 48491C0460F
- 100YR CLOMR — 100YR CLOMR FLOODPLAIN CASE# 15-06-2071R
- FDFP — 100YR ATLAS 14 FULLY DEVELOPED FLOODPLAIN (STANTEC DRAINAGE STUDY, SHERVIN NOOSHIN, 3/25/19) APPROVED WITH PP# 2019-5-PP
- OHWM — ORDINARY HIGH WATER MARK PER ADAMS ENVIRONMENTAL
- PROPOSED STORM LINE
- FIRE HYDRANT
- WATER VALVE
- STORM SEWER MAHNOLE
- WASTEWATER MANHOLE
- CURB INLET
- TREES TO REMAIN HERITAGE
- TREES TO REMAIN NON HERITAGE

VERT. SCALE: 1" = 4'
HORZ. SCALE: 1" = 40'

EXISTING GRADE - CENTERLINE
FINISHED GRADE - CENTERLINE

4' 2' 0 VERT. SCALE

EXISTING GROUND 1000.1 / 997.10 PROPOSED FLOWLINE

Pipe Label	Slope	Q25	V25	D25	Q100	V100	D100
	(%)	(cfs)	(ft/s)	(ft)	(cfs)	(ft/s)	(ft)
PIPE E-1	10.00%	3.84	6.36	0.75	4.73	6.66	0.84
PIPE E-2	10.00%	3.84	3.70	1.01	4.73	3.99	1.13
PIPE E-3	10.00%	2.72	6.19	0.63	3.36	6.46	0.70
PIPE E-4	10.00%	2.72	3.39	0.79	3.36	3.63	0.89

STORM E-1

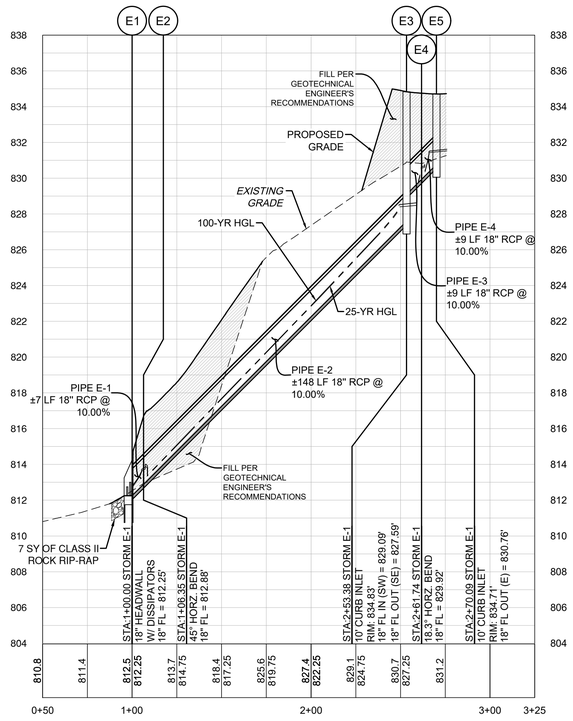

NOTE:

1. ALL PROPOSED STORM SEWER PIPE LINES SHALL BE CLASS III REINFORCED CONCRETE UNLESS NOTED OTHERWISE.
2. FILL SHALL BE PLACED ACCORDING TO THE GEOTECHNICAL ENGINEERS RECOMMENDATION AND CITY OF GEORGETOWN SPECIFICATIONS.
3. VEGETATE ALL DISTURBED AREAS WITHIN THE ROW AND OPEN SPACE LOT AREAS PER CITY OF GEORGETOWN SPECIFICATIONS.

TRENCH SAFETY NOTES:

1. IN ACCORDANCE WITH THE LAWS OF THE STATE OF TEXAS AND THE U.S. OCCUPATIONAL SAFETY AND HEALTH ADMINISTRATION REGULATIONS, ALL TRENCHES OVER 5 FEET IN DEPTH IN EITHER HARD AND COMPACT OR SOFT AND UNSTABLE SOIL SHALL BE SLOPED, SHORED, SHEETED, BRACED OR OTHERWISE SUPPORTED. FURTHERMORE, ALL TRENCHES LESS THAN 5 FEET IN DEPTH SHALL ALSO BE EFFECTIVELY PROTECTED WHEN HAZARDOUS GROUND MOVEMENT MAY BE EXPECTED. TRENCH SAFETY SYSTEMS TO BE UTILIZED FOR THIS PROJECT WILL BE PROVIDE BY THE CONTRACTOR.
2. IN ACCORDANCE WITH THE U.S. OCCUPATIONAL SAFETY AND HEALTH ADMINISTRATION REGULATIONS,WHEN PERSONS ARE IN TRENCHES 4-FEET DEEP OR MORE, ADEQUATE MEANS OF EXIT, SUCH AS A LADDER OR STEPS, MUST BE PROVIDED AND LOCATED SO AS TO REQUIRE NO MORE THAN 25 FEET OF LATERAL TRAVEL.
3. CONSTRUCTION SHALL NOT PROCEED UNTIL APPROPRIATE TRENCH SAFETY SYSTEM DETAILS, AS DESIGNED BY A PROFESSIONAL ENGINEER, ARE RETAINED AND COPIES SUBMITTED TO THE CITY OF GEORGETOWN.
4. DEEP EXCAVATIONS: ON EXCAVATIONS EXCEEDING 20 FEET IN DEPTH, TWO OR MORE MEANS OF EGRESS FROM THE EXCAVATION SHALL BE PROVIDED. THE CONTRACTOR SHALL CONSULT WITH A REGISTERED ENGINEER, EXPERIENCED IN TRENCH SAFETY SYSTEMS, REGARDING SPECIFIC MEANS AND METHODS EMPLOYED. CONTRACTOR SHALL PROVIDE A TRENCH SAFETY PLAN SEALED BY A REGISTERED PROFESSIONAL ENGINEER AS REQUIRED BY THE CITY OF GEORGETOWN.

NO	REVISION	BY	DATE

811 Know what's below. Call before you dig.

HRGreen
DEVELOPMENT TX
5508 HIGHWAY 290 WEST
SUITE 150
AUSTIN, TX 78735
512.872.6696
HRGREEN.COM
TBPE NO: 16384
TBPLS NO: 10194101

STATE OF TEXAS
CHRISTINE N. CAMPBELL
142536
LICENSED PROFESSIONAL ENGINEER
07/15/2025

STORM E-1 PLAN & PROFILE

PARKSIDE ON THE RIVER
SECTIONS 11, 12A & 15A
CONSTRUCTION PLANS
GEORGETOWN, WILLIAMSON, TEXAS

DESIGNED BY: CC
DRAWN BY: MM
CHECKED BY: SN
APPROVED BY:

SHEET 105 OF 141

2025-XX-CON

P:\Blake Magee\Parkside Sections 11-15 & WOA 5\Sections 11, 12A & 15A\03_ACAD\Plans\3d\08323 SDP\ STORM E-1 PLAN & PROFILE. July 18, 2025, 12:16 PM, rnabir.muhammad

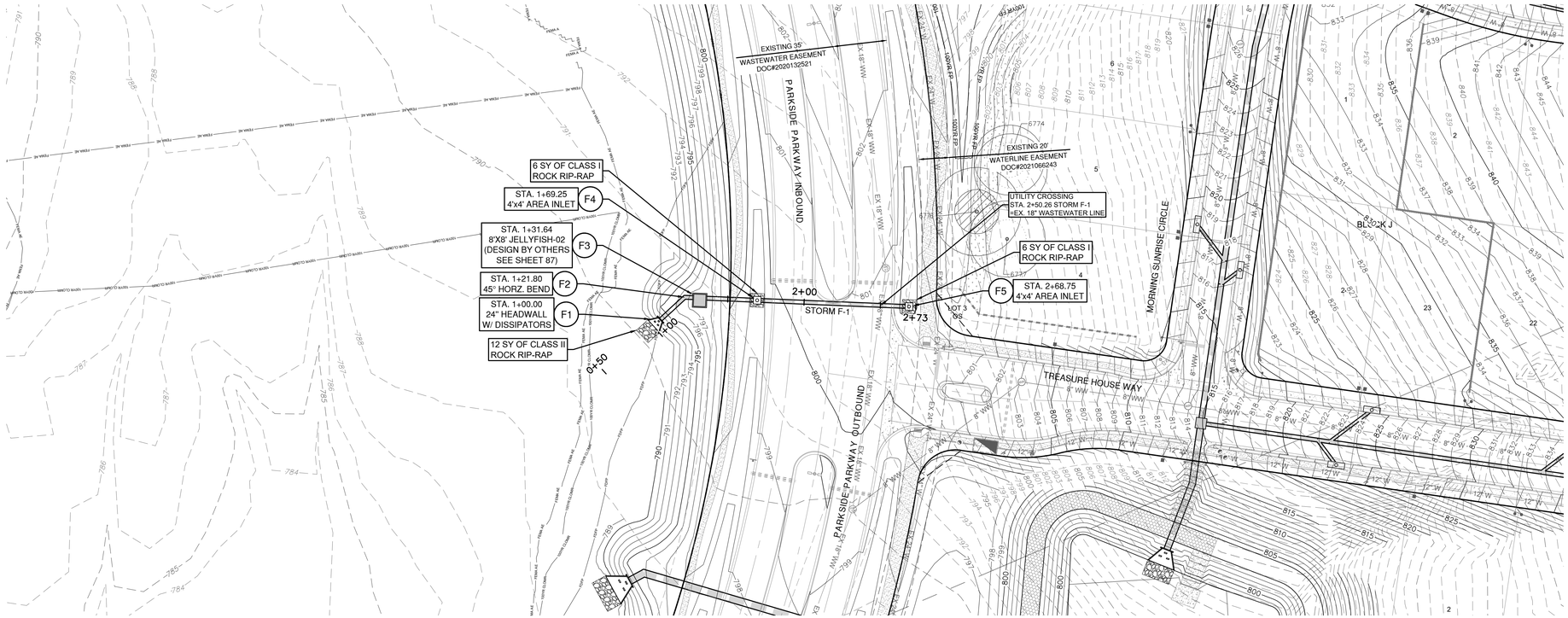

STORM F-1

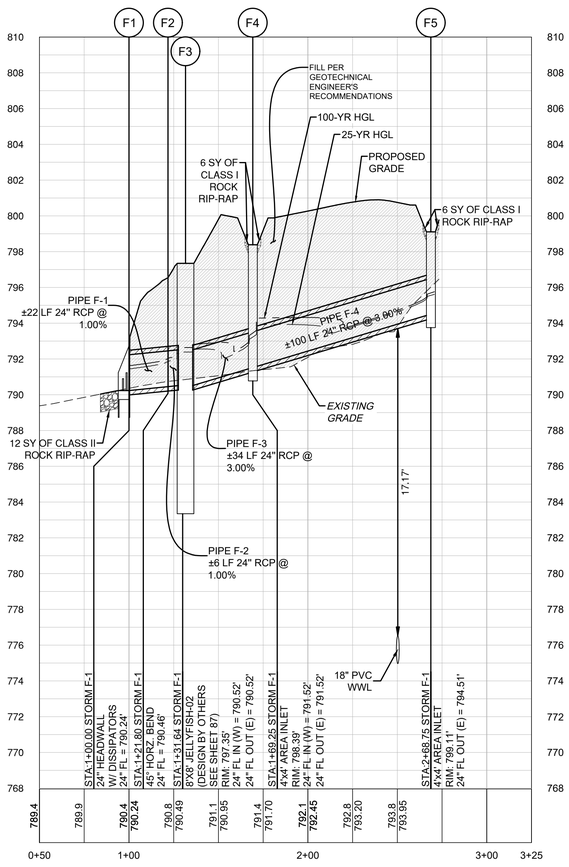

Pipe Label	Slope	Q25	V25	D25	Q100	V100	D100
	(%)	(cfs)	(ft/s)	(ft)	(cfs)	(ft/s)	(ft)
STORM F-1	1.00%	14.27	6.76	1.36	17.83	7.33	1.52
STORM F-2	1.00%	14.27	4.75	1.85	17.83	5.68	2.05
STORM F-3	3.00%	14.27	5.41	2.04	17.83	6.32	2.33
STORM F-4	3.00%	6.78	3.47	2.40	8.35	3.89	2.76

0 40' 80'

SCALE: 1" = 40'

LEGEND

- EXISTING MINOR CONTOUR
- EXISTING MAJOR CONTOUR
- PROPOSED MINOR CONTOUR
- PROPOSED MAJOR CONTOUR
- BOUNDARY
- EASEMENT
- FEMA FLOODWAY PER FIRM# 48491C0460F & LOMR# 21-06-0115P
- FEMA AE — 100YR ATLAS 14 FEMA ZONE AE FLOODPLAIN PER FIRM# 48491C0460F & LOMR# 21-06-0115P
- FEMA A — 100YR FEMA ZONE A FLOODPLAIN PER FIRM MAP# 48491C0460F
- 100YR CLOMR — 100YR CLOMR FLOODPLAIN CASE# 15-06-2071R
- FDFP — 100YR ATLAS 14 FULLY DEVELOPED FLOODPLAIN (STANTEC DRAINAGE STUDY, SHERVIN NOOSHIN, 3/25/19) APPROVED WITH PP# 2019-5-PP
- OHWM — ORDINARY HIGH WATER MARK PER ADAMS ENVIRONMENTAL
- SD — PROPOSED STORM LINE
- FIRE HYDRANT
- WATER VALVE
- SD — STORM SEWER MAHNOLE
- WW — WASTEWATER MANHOLE
- CURB INLET
- TREES TO REMAIN HERITAGE
- TREES TO REMAIN NON HERITAGE

VERT. SCALE: 1" = 4'
HORZ. SCALE: 1" = 40'

4' 2' 0 VERT. SCALE

EXISTING GRADE - CENTERLINE
FINISHED GRADE - CENTERLINE

EXISTING GROUND 1000.1 997.10 PROPOSED FLOWLINE

NOTE:

1. ALL PROPOSED STORM SEWER PIPE LINES SHALL BE CLASS III REINFORCED CONCRETE UNLESS NOTED OTHERWISE.
2. FILL SHALL BE PLACED ACCORDING TO THE GEOTECHNICAL ENGINEERS RECOMMENDATION AND CITY OF GEORGETOWN SPECIFICATIONS.
3. VEGETATE ALL DISTURBED AREAS WITHIN THE ROW AND OPEN SPACE LOT AREAS PER CITY OF GEORGETOWN SPECIFICATIONS.

TRENCH SAFETY NOTES:

1. IN ACCORDANCE WITH THE LAWS OF THE STATE OF TEXAS AND THE U.S. OCCUPATIONAL SAFETY AND HEALTH ADMINISTRATION REGULATIONS, ALL TRENCHES OVER 5 FEET IN DEPTH IN EITHER HARD AND COMPACT OR SOFT AND UNSTABLE SOIL SHALL BE SLOPED, SHORED, SHEETED, BRACED OR OTHERWISE SUPPORTED. FURTHERMORE, ALL TRENCHES LESS THAN 5 FEET IN DEPTH SHALL ALSO BE EFFECTIVELY PROTECTED WHEN HAZARDOUS GROUND MOVEMENT MAY BE EXPECTED. TRENCH SAFETY SYSTEMS TO BE UTILIZED FOR THIS PROJECT WILL BE PROVIDE BY THE CONTRACTOR.
2. IN ACCORDANCE WITH THE U.S. OCCUPATIONAL SAFETY AND HEALTH ADMINISTRATION REGULATIONS,WHEN PERSONS ARE IN TRENCHES 4-FEET DEEP OR MORE, ADEQUATE MEANS OF EXIT, SUCH AS A LADDER OR STEPS, MUST BE PROVIDED AND LOCATED SO AS TO REQUIRE NO MORE THAN 25 FEET OF LATERAL TRAVEL.
3. CONSTRUCTION SHALL NOT PROCEED UNTIL APPROPRIATE TRENCH SAFETY SYSTEM DETAILS, AS DESIGNED BY A PROFESSIONAL ENGINEER, ARE RETAINED AND COPIES SUBMITTED TO THE CITY OF GEORGETOWN.
4. DEEP EXCAVATIONS: ON EXCAVATIONS EXCEEDING 20 FEET IN DEPTH, TWO OR MORE MEANS OF EGRESS FROM THE EXCAVATION SHALL BE PROVIDED. THE CONTRACTOR SHALL CONSULT WITH A REGISTERED ENGINEER, EXPERIENCED IN TRENCH SAFETY SYSTEMS, REGARDING SPECIFIC MEANS AND METHODS EMPLOYED. CONTRACTOR SHALL PROVIDE A TRENCH SAFETY PLAN SEALED BY A REGISTERED PROFESSIONAL ENGINEER AS REQUIRED BY THE CITY OF GEORGETOWN.

NO	REVISION	BY	DATE

811 Know what's below. Call before you dig.

5508 HIGHWAY 290 WEST
SUITE 150
AUSTIN, TX 78735
512.872.6696
HRGREEN.COM

TBPE NO: 16384
TBPLS NO: 10194101

HRGreen® DEVELOPMENT TX

STATE OF TEXAS
CHRISTINE N. CAMPBELL
142536
LICENSED PROFESSIONAL ENGINEER

07/05/2023

STORM F-1 PLAN & PROFILE

PARKSIDE ON THE RIVER SECTIONS 11, 12A & 15A CONSTRUCTION PLANS GEORGETOWN, WILLIAMSON, TEXAS

DESIGNED BY: CC
DRAWN BY: MM
CHECKED BY: SN
APPROVED BY:

SHEET 106 OF 141

2025-XX-CON

P:\Blake Magee\Parkside Sections 11-15 & WCN E\Section 11, 12A & 14A\03_ACAD\Planset\240302 SDP\STORM F-1 PLAN & PROFILE. July 18, 2025, 12:17 PM, mdaci.muhammad

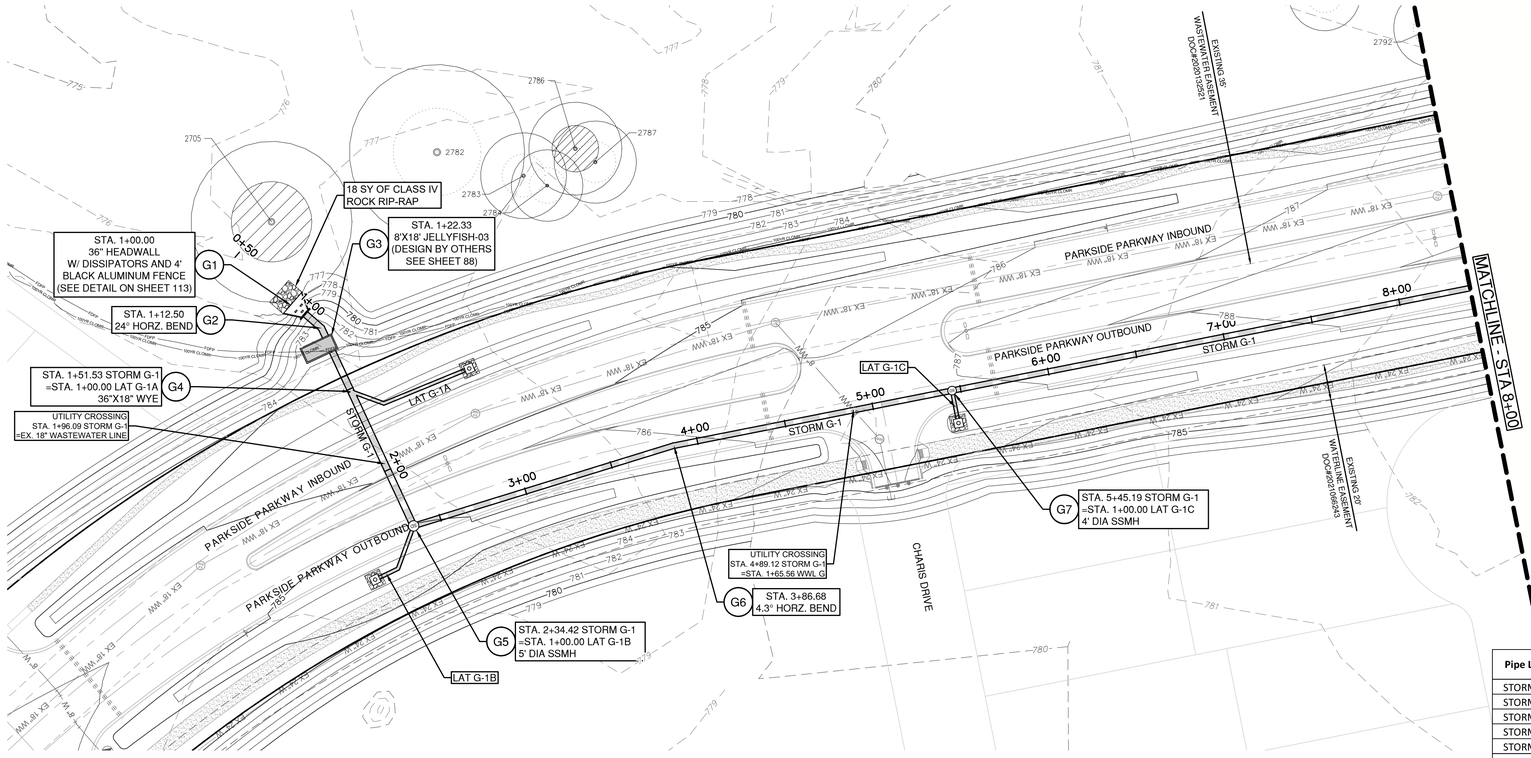

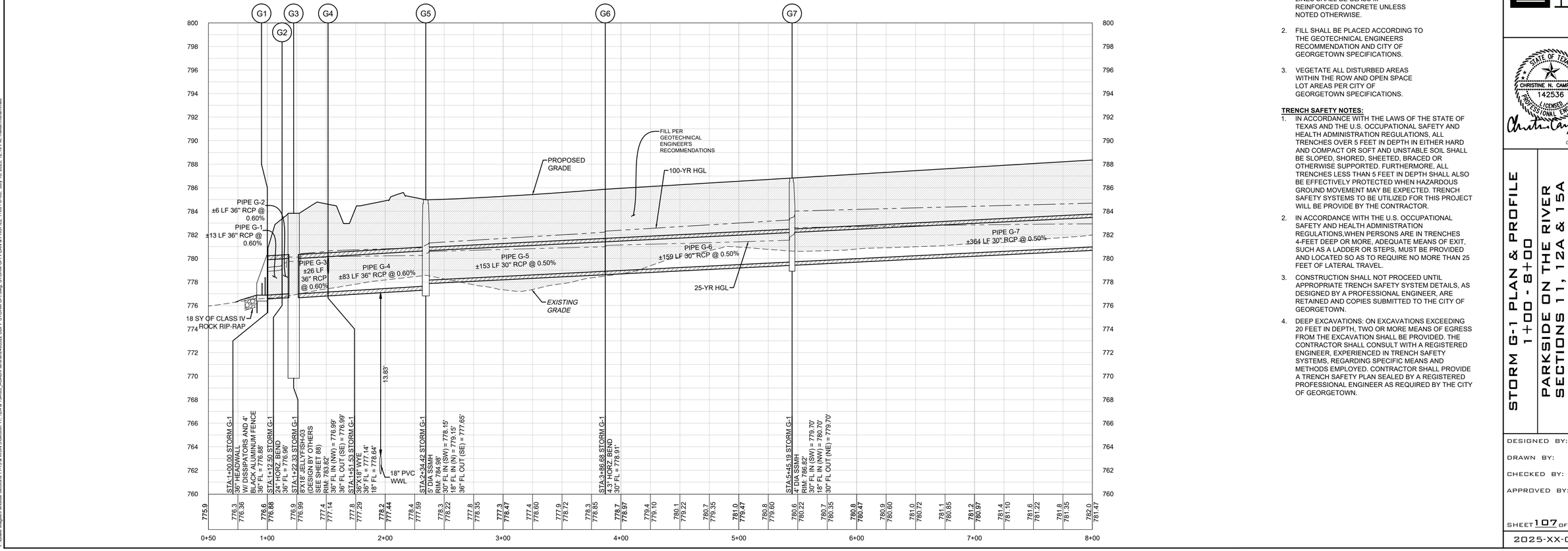

Pipe Label	Slope	Q25	V25	D25	Q100	V100	D100
	(%)	(cfs)	(ft/s)	(ft)	(cfs)	(ft/s)	(ft)
STORM G-1	0.60%	40.12	7.87	2.06	50.85	8.56	2.38
STORM G-2	0.60%	40.12	6.09	2.65	50.85	7.22	2.96
STORM G-3	0.60%	40.12	5.69	3.03	50.85	7.19	3.44
STORM G-4	0.60%	29.94	4.42	3.00	37.97	5.37	3.50
STORM G-5	0.50%	24.88	5.41	2.43	31.71	6.46	3.31
STORM G-6	0.50%	24.88	5.93	2.20	31.71	6.46	3.56
STORM G-7	0.50%	16.28	4.37	2.91	21.11	4.30	4.32

0 40' 80'

SCALE: 1" = 40'

LEGEND

- EXISTING MINOR CONTOUR
- EXISTING MAJOR CONTOUR
- PROPOSED MINOR CONTOUR
- PROPOSED MAJOR CONTOUR
- BOUNDARY
- EASEMENT
- FEMA FLOODWAY PER FIRM# 48491C0460F & LOMR# 21-06-0115P
- FEMA AE — 100YR ATLAS 14 FEMA ZONE AE FLOODPLAIN PER FIRM# 48491C0460F & LOMR# 21-06-0115P
- FEMA A — 100YR FEMA ZONE A FLOODPLAIN PER FIRM MAP# 48491C0460F
- 100YR CLOMR — 100YR CLOMR FLOODPLAIN CASE# 15-06-2071R
- FDFP — 100YR ATLAS 14 FULLY DEVELOPED FLOODPLAIN (STANTEC DRAINAGE STUDY, SHERVIN NOOSHIN, 3/25/19) APPROVED WITH PP# 2019-5-PP
- OHWM — ORDINARY HIGH WATER MARK PER ADAMS ENVIRONMENTAL
- PROPOSED STORM LINE
- FIRE HYDRANT
- WATER VALVE
- STORM SEWER MAHNOLE
- WASTEWATER MANHOLE
- CURB INLET
- TREES TO REMAIN HERITAGE
- TREES TO REMAIN NON HERITAGE

VERT. SCALE: 1" = 4'
HORZ. SCALE: 1" = 40'

EXISTING GRADE - CENTERLINE
FINISHED GRADE - CENTERLINE

4' 2' 0 VERT. SCALE

EXISTING GROUND 1000.1 997.10 PROPOSED FLOWLINE

NOTE:

1. ALL PROPOSED STORM SEWER PIPE LINES SHALL BE CLASS III REINFORCED CONCRETE UNLESS NOTED OTHERWISE.
2. FILL SHALL BE PLACED ACCORDING TO THE GEOTECHNICAL ENGINEERS RECOMMENDATION AND CITY OF GEORGETOWN SPECIFICATIONS.
3. VEGETATE ALL DISTURBED AREAS WITHIN THE ROW AND OPEN SPACE LOT AREAS PER CITY OF GEORGETOWN SPECIFICATIONS.

TRENCH SAFETY NOTES:

1. IN ACCORDANCE WITH THE LAWS OF THE STATE OF TEXAS AND THE U.S. OCCUPATIONAL SAFETY AND HEALTH ADMINISTRATION REGULATIONS, ALL TRENCHES OVER 5 FEET IN DEPTH IN EITHER HARD AND COMPACT OR SOFT AND UNSTABLE SOIL SHALL BE SLOPED, SHORED, SHEETED, BRACED OR OTHERWISE SUPPORTED. FURTHERMORE, ALL TRENCHES LESS THAN 5 FEET IN DEPTH SHALL ALSO BE EFFECTIVELY PROTECTED WHEN HAZARDOUS GROUND MOVEMENT MAY BE EXPECTED. TRENCH SAFETY SYSTEMS TO BE UTILIZED FOR THIS PROJECT WILL BE PROVIDE BY THE CONTRACTOR.
2. IN ACCORDANCE WITH THE U.S. OCCUPATIONAL SAFETY AND HEALTH ADMINISTRATION REGULATIONS,WHEN PERSONS ARE IN TRENCHES 4-FEET DEEP OR MORE, ADEQUATE MEANS OF EXIT, SUCH AS A LADDER OR STEPS, MUST BE PROVIDED AND LOCATED SO AS TO REQUIRE NO MORE THAN 25 FEET OF LATERAL TRAVEL.
3. CONSTRUCTION SHALL NOT PROCEED UNTIL APPROPRIATE TRENCH SAFETY SYSTEM DETAILS, AS DESIGNED BY A PROFESSIONAL ENGINEER, ARE RETAINED AND COPIES SUBMITTED TO THE CITY OF GEORGETOWN.
4. DEEP EXCAVATIONS: ON EXCAVATIONS EXCEEDING 20 FEET IN DEPTH, TWO OR MORE MEANS OF EGRESS FROM THE EXCAVATION SHALL BE PROVIDED. THE CONTRACTOR SHALL CONSULT WITH A REGISTERED ENGINEER, EXPERIENCED IN TRENCH SAFETY SYSTEMS, REGARDING SPECIFIC MEANS AND METHODS EMPLOYED. CONTRACTOR SHALL PROVIDE A TRENCH SAFETY PLAN SEALED BY A REGISTERED PROFESSIONAL ENGINEER AS REQUIRED BY THE CITY OF GEORGETOWN.

NO	REVISION	BY	DATE

811 Know what's below. Call before you dig.

5508 HIGHWAY 290 WEST
SUITE 150
AUSTIN, TX 78735
512.872.6696
HRGREEN.COM
TBPE NO: 16384
TBPLS NO: 10194101

HRGreen® DEVELOPMENT TX

STATE OF TEXAS
CHRISTINE N. CAMPBELL
142536
LICENSED ENGINEER
PROFESSIONAL ENGINEER
07/03/2025

STORM G-1 PLAN & PROFILE 1+00 - 8+00

PARKSIDE ON THE RIVER SECTIONS 11, 12A & 15A CONSTRUCTION PLANS GEORGETOWN, WILLIAMSON, TEXAS

DESIGNED BY: CC
DRAWN BY: MM
CHECKED BY: SN
APPROVED BY:

SHEET 107 OF 141

2025-XX-CON

P:\Blake Magee\Parkside Sections 11-15 & WCN ESection 11, 12A & 14A\03_ACAD\Planset\240502 EDP\ STORM G-1 PLAN & PROFILE 1+00, 8+00, July 18, 2025, 12:19 PM, nsalai-muhammad

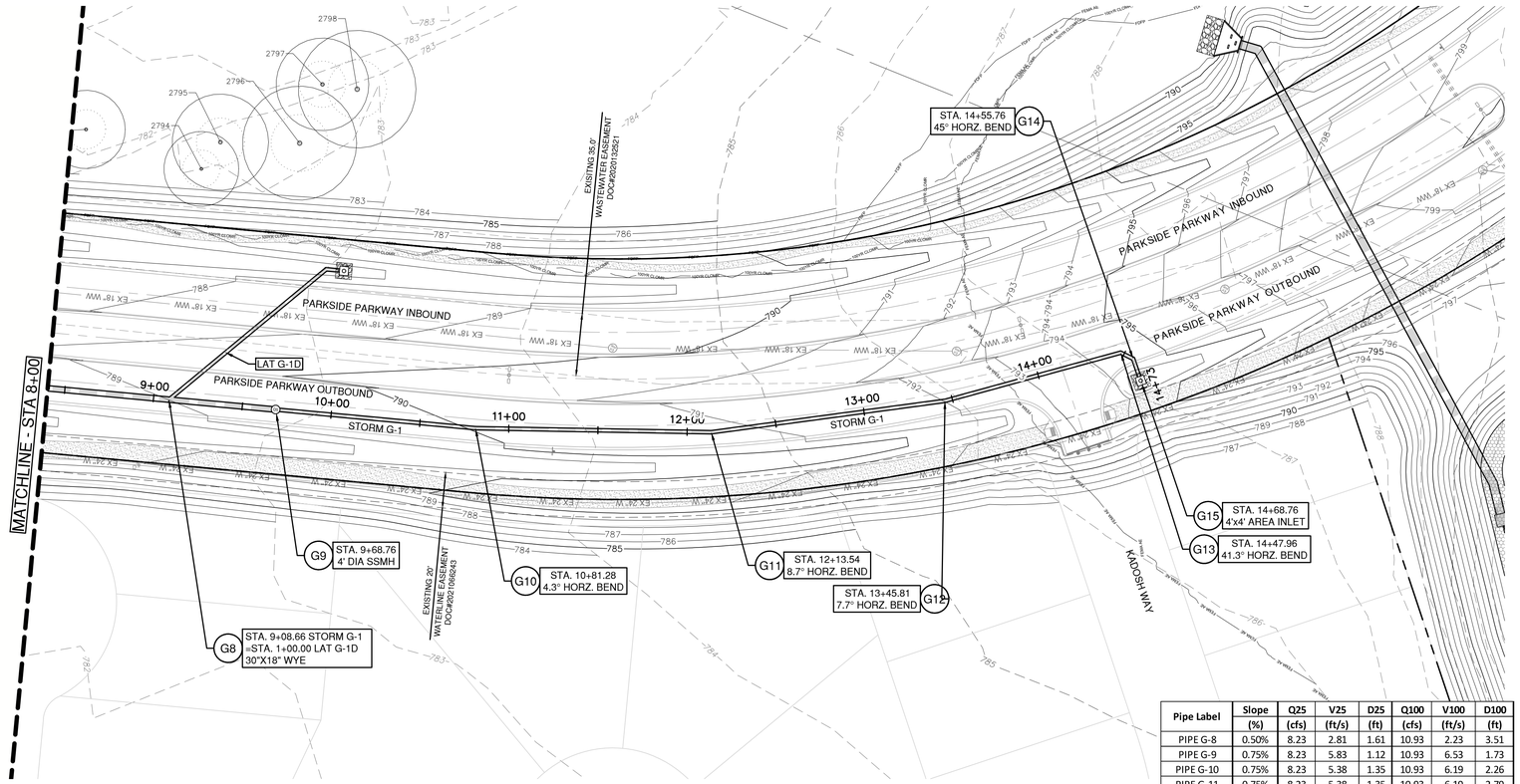

Pipe Label	Slope	Q25	V25	D25	Q100	V100	D100
	(%)	(cfs)	(ft/s)	(ft)	(cfs)	(ft/s)	(ft)
PIPE G-8	0.50%	8.23	2.81	1.61	10.93	2.23	3.51
PIPE G-9	0.75%	8.23	5.83	1.12	10.93	6.53	1.73
PIPE G-10	0.75%	8.23	5.38	1.35	10.93	6.19	2.26
PIPE G-11	0.75%	8.23	5.38	1.35	10.93	6.19	2.79
PIPE G-12	1.50%	8.23	5.39	1.35	10.93	6.19	2.88
PIPE G-13	1.50%	8.23	4.71	1.51	10.93	6.19	2.68
PIPE G-14	1.50%	8.23	4.70	1.56	10.93	6.19	2.86

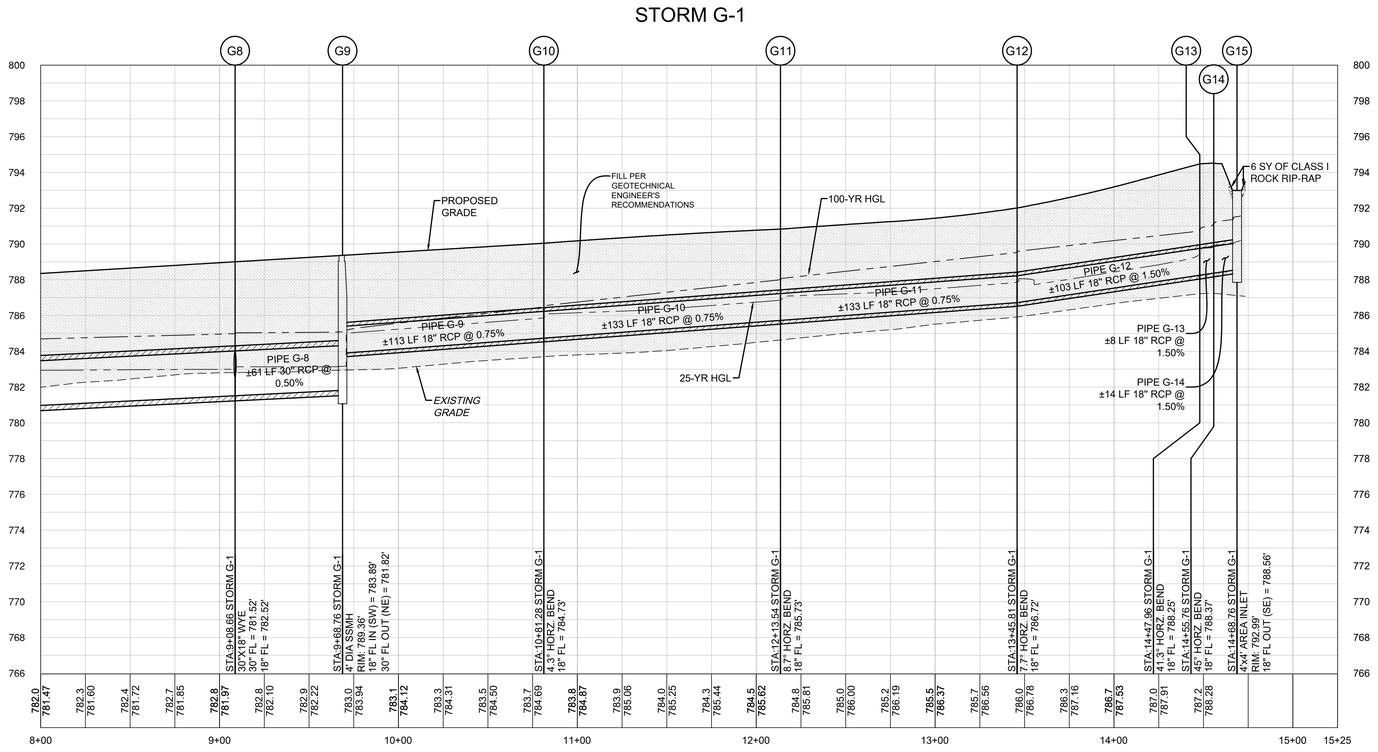

0 40' 80'

SCALE: 1" = 40'

LEGEND

- EXISTING MINOR CONTOUR
- EXISTING MAJOR CONTOUR
- PROPOSED MINOR CONTOUR
- PROPOSED MAJOR CONTOUR
- BOUNDARY
- EASEMENT
- FEMA FLOODWAY PER FIRM# 48491C0460F & LOMR# 21-06-0115P
- FEMA AE — 100YR ATLAS 14 FEMA ZONE AE FLOODPLAIN PER FIRM# 48491C0460F & LOMR# 21-06-0115P
- FEMA A — 100YR FEMA ZONE A FLOODPLAIN PER FIRM MAP# 48491C0460F
- 100YR CLOMR — 100YR CLOMR FLOODPLAIN CASE# 15-06-2071R
- FDFP — 100YR ATLAS 14 FULLY DEVELOPED FLOODPLAIN (STANTEC DRAINAGE STUDY, SHERVIN NOOSHIN, 3/25/19) APPROVED WITH P# 2019-5-PP
- OHWM — ORDINARY HIGH WATER MARK PER ADAMS ENVIRONMENTAL
- PROPOSED STORM LINE
- FIRE HYDRANT
- WATER VALVE
- STORM SEWER MAHNOLE
- WASTEWATER MANHOLE
- CURB INLET
- TREES TO REMAIN HERITAGE
- TREES TO REMAIN NON HERITAGE

VERT. SCALE: 1" = 4'
HORZ. SCALE: 1" = 40'

4' 2' 0 VERT. SCALE

EXISTING GRADE - CENTERLINE
FINISHED GRADE - CENTERLINE

EXISTING GROUND 1000.1 997.10 PROPOSED FLOWLINE

NOTE:

1. ALL PROPOSED STORM SEWER PIPE LINES SHALL BE CLASS III REINFORCED CONCRETE UNLESS NOTED OTHERWISE.
2. FILL SHALL BE PLACED ACCORDING TO THE GEOTECHNICAL ENGINEERS RECOMMENDATION AND CITY OF GEORGETOWN SPECIFICATIONS.
3. VEGETATE ALL DISTURBED AREAS WITHIN THE ROW AND OPEN SPACE LOT AREAS PER CITY OF GEORGETOWN SPECIFICATIONS.

TRENCH SAFETY NOTES:

1. IN ACCORDANCE WITH THE LAWS OF THE STATE OF TEXAS AND THE U.S. OCCUPATIONAL SAFETY AND HEALTH ADMINISTRATION REGULATIONS, ALL TRENCHES OVER 5 FEET IN DEPTH IN EITHER HARD AND COMPACT OR SOFT AND UNSTABLE SOIL SHALL BE SLOPED, SHORED, SHEETED, BRACED OR OTHERWISE SUPPORTED. FURTHERMORE, ALL TRENCHES LESS THAN 5 FEET IN DEPTH SHALL ALSO BE EFFECTIVELY PROTECTED WHEN HAZARDOUS GROUND MOVEMENT MAY BE EXPECTED. TRENCH SAFETY SYSTEMS TO BE UTILIZED FOR THIS PROJECT WILL BE PROVIDE BY THE CONTRACTOR.
2. IN ACCORDANCE WITH THE U.S. OCCUPATIONAL SAFETY AND HEALTH ADMINISTRATION REGULATIONS,WHEN PERSONS ARE IN TRENCHES 4-FEET DEEP OR MORE, ADEQUATE MEANS OF EXIT, SUCH AS A LADDER OR STEPS, MUST BE PROVIDED AND LOCATED SO AS TO REQUIRE NO MORE THAN 25 FEET OF LATERAL TRAVEL.
3. CONSTRUCTION SHALL NOT PROCEED UNTIL APPROPRIATE TRENCH SAFETY SYSTEM DETAILS, AS DESIGNED BY A PROFESSIONAL ENGINEER, ARE RETAINED AND COPIES SUBMITTED TO THE CITY OF GEORGETOWN.
4. DEEP EXCAVATIONS: ON EXCAVATIONS EXCEEDING 20 FEET IN DEPTH, TWO OR MORE MEANS OF EGRESS FROM THE EXCAVATION SHALL BE PROVIDED. THE CONTRACTOR SHALL CONSULT WITH A REGISTERED ENGINEER, EXPERIENCED IN TRENCH SAFETY SYSTEMS, REGARDING SPECIFIC MEANS AND METHODS EMPLOYED. CONTRACTOR SHALL PROVIDE A TRENCH SAFETY PLAN SEALED BY A REGISTERED PROFESSIONAL ENGINEER AS REQUIRED BY THE CITY OF GEORGETOWN.

NO	REVISION	BY	DATE

811 Know what's below. Call before you dig.

5508 HIGHWAY 290 WEST
SUITE 150
AUSTIN, TX 78735
512.872.6696
HRGREEN.COM

TBPE NO: 16384
TBPLS NO: 10194101

HRGreen® DEVELOPMENT TX

STATE OF TEXAS
CHRISTINE N. CAMPBELL
142536
LICENSED PROFESSIONAL ENGINEER

07/03/2025

STORM G-1 PLAN & PROFILE 8+00 - END

PARKSIDE ON THE RIVER SECTIONS 11, 12A & 15A CONSTRUCTION PLANS

GEORGETOWN, WILLIAMSON, TEXAS

DESIGNED BY: CC
DRAWN BY: MM
CHECKED BY: SN
APPROVED BY:

SHEET 108 OF 141

2025-XX-CON

P:\Blake.Magee\Parkside Sections 11-15 & WCN S\Section 11, 12A & 14\03_ACAD\Panels\340522.SDP* STORM G-1 Long_STORM G-1 PLAN & PROFILE 8+00 - END.dwg, July 18, 2025, 12:19 PM, mateo.muhammad

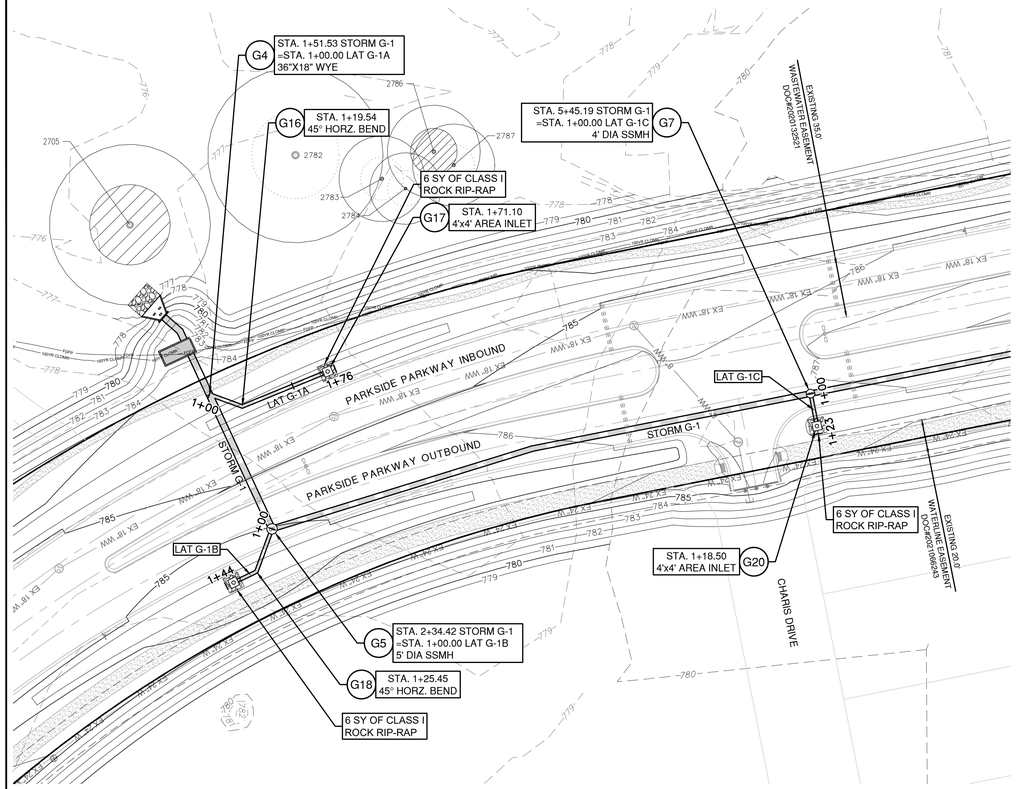

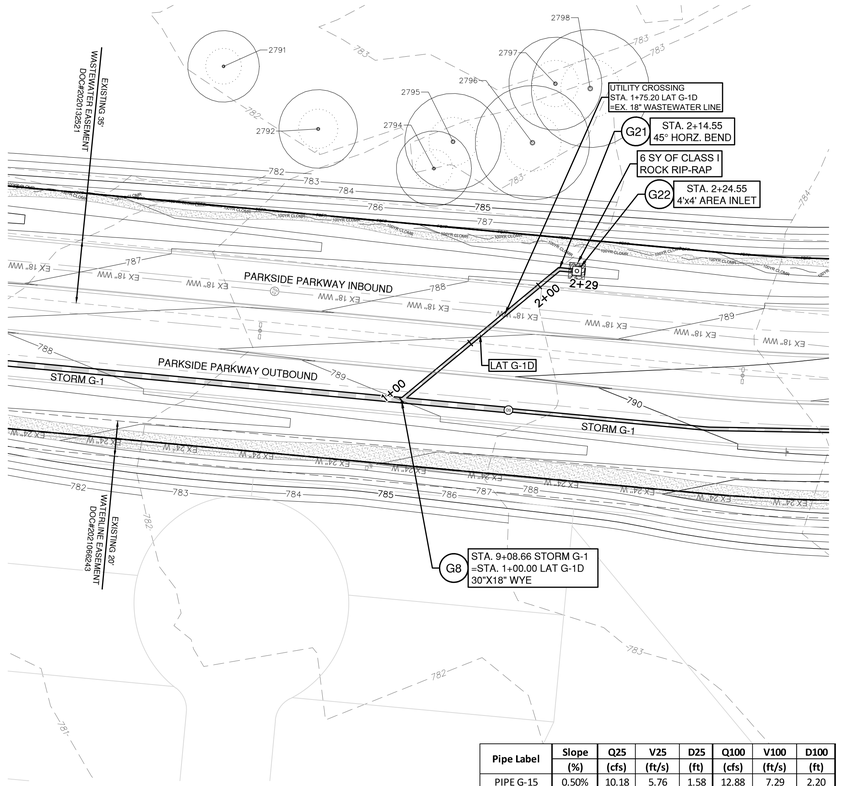

Pipe Label	Slope	Q25	V25	D25	Q100	V100	D100
	(%)	(cfs)	(ft/s)	(ft)	(cfs)	(ft/s)	(ft)
PIPE G-15	0.50%	10.18	5.76	1.58	12.88	7.29	2.20
PIPE G-16	0.50%	10.18	5.76	2.00	12.88	7.29	3.02
PIPE G-17	1.00%	5.06	2.91	1.59	6.26	3.54	2.43
PIPE G-18	1.00%	5.06	2.99	1.45	6.26	3.54	2.34
PIPE G-19	4.00%	8.60	5.43	1.79	10.60	6.00	3.15
PIPE G-20	0.50%	8.05	5.33	1.33	10.18	5.76	3.01
PIPE G-21	0.50%	8.05	4.56	1.52	10.18	5.76	3.25

0 40' 80'

SCALE: 1" = 40'

LEGEND

- 834 — EXISTING MINOR CONTOUR
- 835 — EXISTING MAJOR CONTOUR
- 834 — PROPOSED MINOR CONTOUR
- 835 — PROPOSED MAJOR CONTOUR
- BOUNDARY
- EASEMENT
- FEMA FLOODWAY PER FIRM# 48491C0460F & LOMR# 21-06-0115P
- FEMA AE — 100YR ATLAS 14 FEMA ZONE AE FLOODPLAIN PER FIRM# 48491C0460F & LOMR# 21-06-0115P
- FEMA A — 100YR FEMA ZONE A FLOODPLAIN PER FIRM MAP# 48491C0460F
- 100YR CLOMR — 100YR CLOMR FLOODPLAIN CASE# 15-06-2071R
- FDFP — 100YR ATLAS 14 FULLY DEVELOPED FLOODPLAIN (STANTEC DRAINAGE STUDY, SHERVIN NOOSHIN, 3/25/19) APPROVED WITH PP# 2019-5-PP
- OHWM — ORDINARY HIGH WATER MARK PER ADAMS ENVIRONMENTAL
- PROPOSED STORM LINE
- FIRE HYDRANT
- WATER VALVE
- STORM SEWER MAHNOLE
- WASTEWATER MANHOLE
- CURB INLET
- TREES TO REMAIN HERITAGE
- TREES TO REMAIN NON HERITAGE

VERT. SCALE: 1" = 4'
HORZ. SCALE: 1" = 40'

EXISTING GRADE - CENTERLINE
FINISHED GRADE - CENTERLINE

4' 2' 0 VERT. SCALE

EXISTING GROUND 1000.1 / 997.10 PROPOSED FLOWLINE

NOTE:

1. ALL PROPOSED STORM SEWER PIPE LINES SHALL BE CLASS III REINFORCED CONCRETE UNLESS NOTED OTHERWISE.
2. FILL SHALL BE PLACED ACCORDING TO THE GEOTECHNICAL ENGINEERS RECOMMENDATION AND CITY OF GEORGETOWN SPECIFICATIONS.
3. VEGETATE ALL DISTURBED AREAS WITHIN THE ROW AND OPEN SPACE LOT AREAS PER CITY OF GEORGETOWN SPECIFICATIONS.

TRENCH SAFETY NOTES:

1. IN ACCORDANCE WITH THE LAWS OF THE STATE OF TEXAS AND THE U.S. OCCUPATIONAL SAFETY AND HEALTH ADMINISTRATION REGULATIONS, ALL TRENCHES OVER 5 FEET IN DEPTH IN EITHER HARD AND COMPACT OR SOFT AND UNSTABLE SOIL SHALL BE SLOPED, SHORED, SHEETED, BRACED OR OTHERWISE SUPPORTED. FURTHERMORE, ALL TRENCHES LESS THAN 5 FEET IN DEPTH SHALL ALSO BE EFFECTIVELY PROTECTED WHEN HAZARDOUS GROUND MOVEMENT MAY BE EXPECTED. TRENCH SAFETY SYSTEMS TO BE UTILIZED FOR THIS PROJECT WILL BE PROVIDE BY THE CONTRACTOR.
2. IN ACCORDANCE WITH THE U.S. OCCUPATIONAL SAFETY AND HEALTH ADMINISTRATION REGULATIONS,WHEN PERSONS ARE IN TRENCHES 4-FEET DEEP OR MORE, ADEQUATE MEANS OF EXIT, SUCH AS A LADDER OR STEPS, MUST BE PROVIDED AND LOCATED SO AS TO REQUIRE NO MORE THAN 25 FEET OF LATERAL TRAVEL.
3. CONSTRUCTION SHALL NOT PROCEED UNTIL APPROPRIATE TRENCH SAFETY SYSTEM DETAILS, AS DESIGNED BY A PROFESSIONAL ENGINEER, ARE RETAINED AND COPIES SUBMITTED TO THE CITY OF GEORGETOWN.
4. DEEP EXCAVATIONS: ON EXCAVATIONS EXCEEDING 20 FEET IN DEPTH, TWO OR MORE MEANS OF EGRESS FROM THE EXCAVATION SHALL BE PROVIDED. THE CONTRACTOR SHALL CONSULT WITH A REGISTERED ENGINEER, EXPERIENCED IN TRENCH SAFETY SYSTEMS, REGARDING SPECIFIC MEANS AND METHODS EMPLOYED. CONTRACTOR SHALL PROVIDE A TRENCH SAFETY PLAN SEALED BY A REGISTERED PROFESSIONAL ENGINEER AS REQUIRED BY THE CITY OF GEORGETOWN.

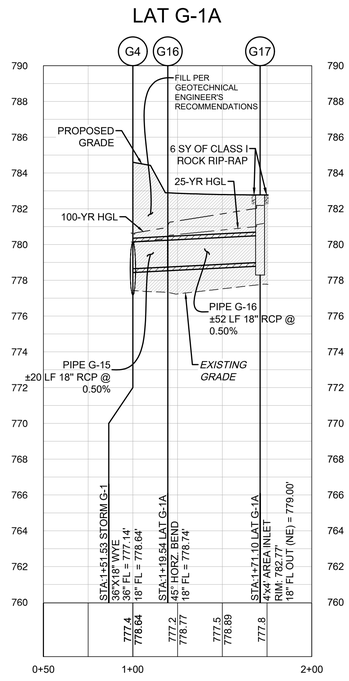

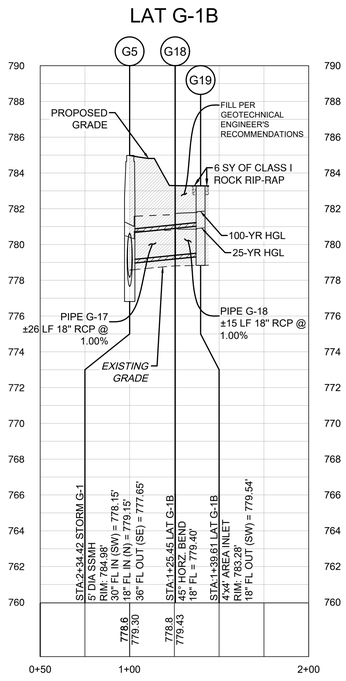

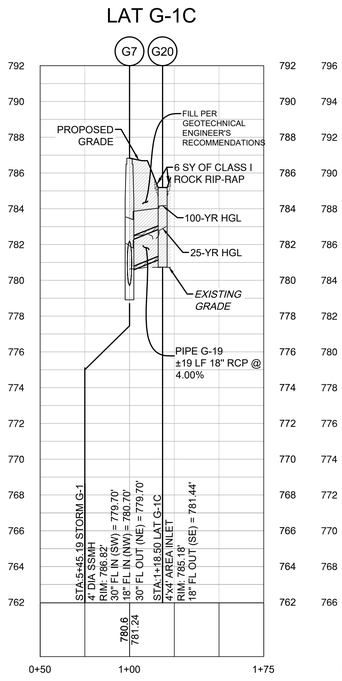

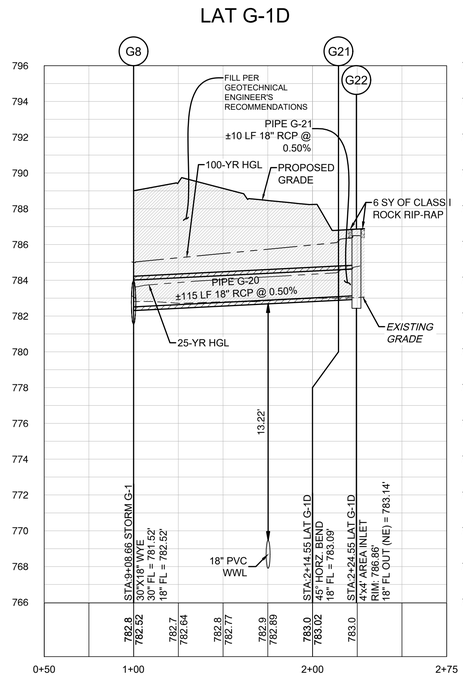

Know what's below. Call before you dig.

5508 HIGHWAY 290 WEST
SUITE 150
AUSTIN, TX 78735
512.872.6696
HRGREEN.COM
TBPE NO: 16384
TBPLS NO: 10194101

HRGreen®
DEVELOPMENT TX

STATE OF TEXAS
CHRISTINE N. CAMPBELL
142536
LICENSED PROFESSIONAL ENGINEER
07/03/2025

STORM G-1 LATERALS G-1A - G-1D

PARKSIDE ON THE RIVER
SECTIONS 11, 12A & 15A
CONSTRUCTION PLANS
GEORGETOWN, WILLIAMSON, TEXAS

DESIGNED BY: CC
DRAWN BY: MM
CHECKED BY: SN
APPROVED BY:

SHEET 109 OF 141

2025-XX-CON

NO | BY | DATE | REVISION

P:\Blake Magee\Parkside Sections 11-15 & WCN E\Section 11, 12A & 14A\03_ACAD\Planset\240322 ESPP STORM G-1 LATS.dwg, STORM G-1 PLAN & PROFILE 1+00, 9+60, July 18, 2025, 12:20 PM, rakai.muhammad

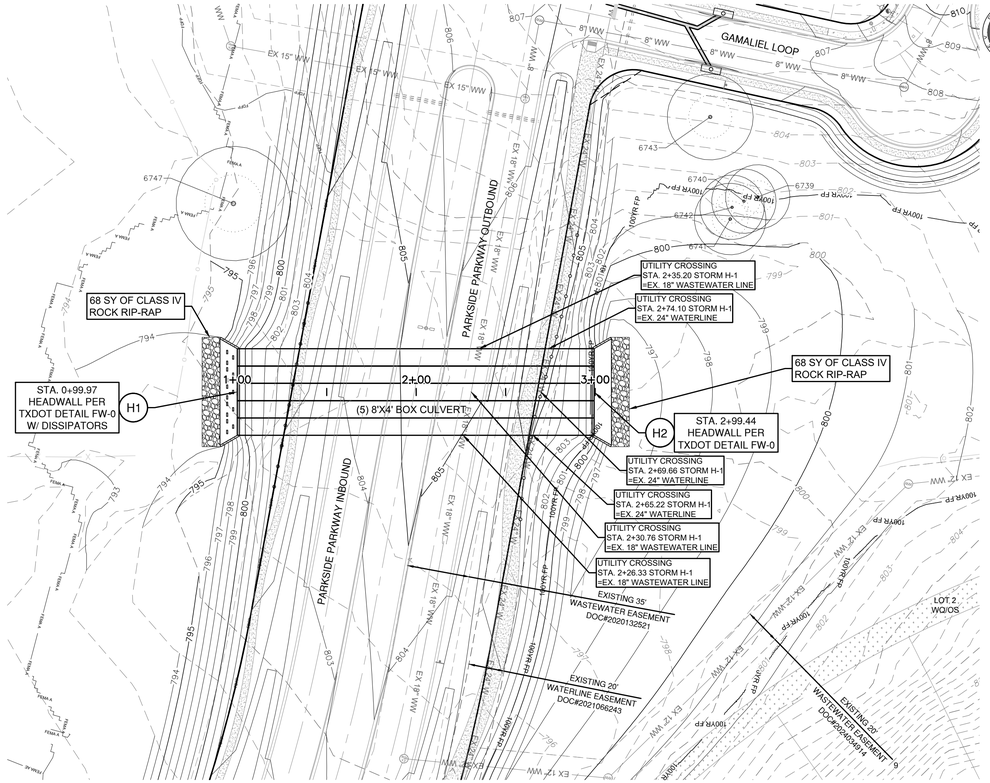

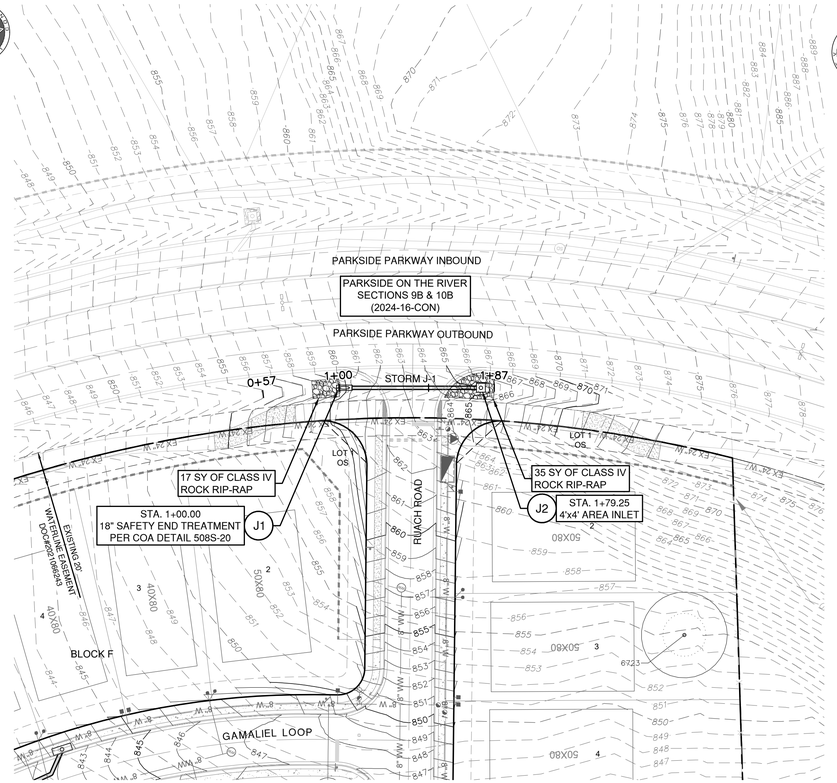

0 40' 80'

SCALE: 1" = 40'

LEGEND

- EXISTING MINOR CONTOUR
- EXISTING MAJOR CONTOUR
- PROPOSED MINOR CONTOUR
- PROPOSED MAJOR CONTOUR
- BOUNDARY
- EASEMENT
- FEMA FLOODWAY PER FIRM# 48491C0460F & LOMR# 21-06-0115P
- FEMA AE — 100YR ATLAS 14 FEMA ZONE AE FLOODPLAIN PER FIRM# 48491C0460F & LOMR# 21-06-0115P
- FEMA A — 100YR FEMA ZONE A FLOODPLAIN PER FIRM MAP# 48491C0460F
- 100YR CLOMR — 100YR CLOMR FLOODPLAIN CASE# 15-06-2071R
- FDFP — 100YR ATLAS 14 FULLY DEVELOPED FLOODPLAIN (STANTEC DRAINAGE STUDY, SHERVIN NOOSHIN, 3/25/19) APPROVED WITH PP# 2019-5-PP
- OHWM — ORDINARY HIGH WATER MARK PER ADAMS ENVIRONMENTAL
- PROPOSED STORM LINE
- FIRE HYDRANT
- WATER VALVE
- STORM SEWER MAHNOLE
- WASTEWATER MANHOLE
- CURB INLET
- TREES TO REMAIN HERITAGE
- TREES TO REMAIN NON HERITAGE

VERT. SCALE: 1" = 4'
HORZ. SCALE: 1" = 40'

4' 2' 0 VERT. SCALE

EXISTING GRADE - CENTERLINE
FINISHED GRADE - CENTERLINE

EXISTING GROUND 1000.1 997.10 PROPOSED FLOWLINE

NOTE:

1. ALL PROPOSED STORM SEWER PIPE LINES SHALL BE CLASS III REINFORCED CONCRETE UNLESS NOTED OTHERWISE.
2. FILL SHALL BE PLACED ACCORDING TO THE GEOTECHNICAL ENGINEERS RECOMMENDATION AND CITY OF GEORGETOWN SPECIFICATIONS.
3. VEGETATE ALL DISTURBED AREAS WITHIN THE ROW AND OPEN SPACE LOT AREAS PER CITY OF GEORGETOWN SPECIFICATIONS.

TRENCH SAFETY NOTES:

1. IN ACCORDANCE WITH THE LAWS OF THE STATE OF TEXAS AND THE U.S. OCCUPATIONAL SAFETY AND HEALTH ADMINISTRATION REGULATIONS, ALL TRENCHES OVER 5 FEET IN DEPTH IN EITHER HARD AND COMPACT OR SOFT AND UNSTABLE SOIL SHALL BE SLOPED, SHORED, SHEETED, BRACED OR OTHERWISE SUPPORTED. FURTHERMORE, ALL TRENCHES LESS THAN 5 FEET IN DEPTH SHALL ALSO BE EFFECTIVELY PROTECTED WHEN HAZARDOUS GROUND MOVEMENT MAY BE EXPECTED. TRENCH SAFETY SYSTEMS TO BE UTILIZED FOR THIS PROJECT WILL BE PROVIDE BY THE CONTRACTOR.
2. IN ACCORDANCE WITH THE U.S. OCCUPATIONAL SAFETY AND HEALTH ADMINISTRATION REGULATIONS,WHEN PERSONS ARE IN TRENCHES 4-FEET DEEP OR MORE, ADEQUATE MEANS OF EXIT, SUCH AS A LADDER OR STEPS, MUST BE PROVIDED AND LOCATED SO AS TO REQUIRE NO MORE THAN 25 FEET OF LATERAL TRAVEL.
3. CONSTRUCTION SHALL NOT PROCEED UNTIL APPROPRIATE TRENCH SAFETY SYSTEM DETAILS, AS DESIGNED BY A PROFESSIONAL ENGINEER, ARE RETAINED AND COPIES SUBMITTED TO THE CITY OF GEORGETOWN.
4. DEEP EXCAVATIONS: ON EXCAVATIONS EXCEEDING 20 FEET IN DEPTH, TWO OR MORE MEANS OF EGRESS FROM THE EXCAVATION SHALL BE PROVIDED. THE CONTRACTOR SHALL CONSULT WITH A REGISTERED ENGINEER, EXPERIENCED IN TRENCH SAFETY SYSTEMS, REGARDING SPECIFIC MEANS AND METHODS EMPLOYED. CONTRACTOR SHALL PROVIDE A TRENCH SAFETY PLAN SEALED BY A REGISTERED PROFESSIONAL ENGINEER AS REQUIRED BY THE CITY OF GEORGETOWN.

STORM H-1

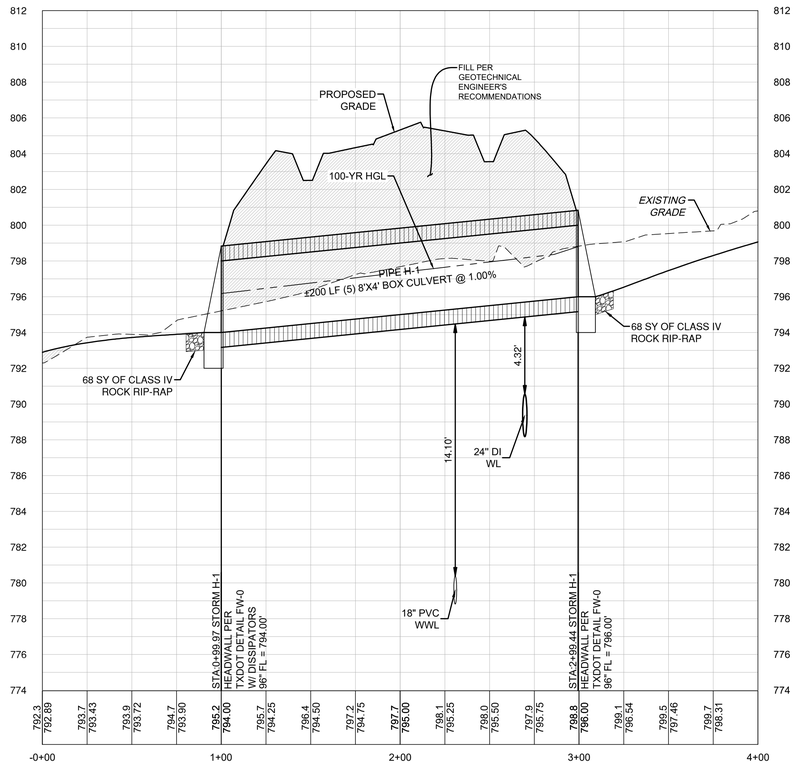

PIPE H-1
(5) 8' X 4' BOX CULVERTS
Q100 = 1,266.5 CFS V100 = 10.86 FT/S D100 = 2.80'
SLOPE = 1.00%

Pipe Label	Slope	Q25	V25	D25	Q100	V100	D100
	(%)	(cfs)	(ft/s)	(ft)	(cfs)	(ft/s)	(ft)
PIPE J-1	2.00%	6.22	6.61	0.96	7.78	7.10	1.08

STORM J-1

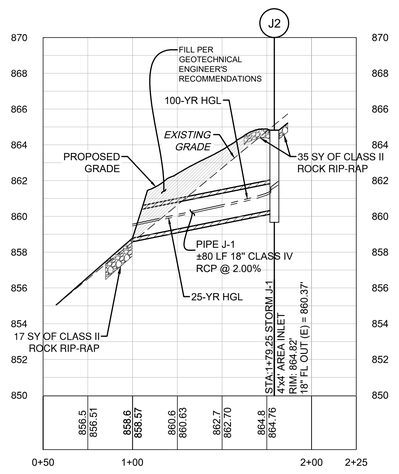

DATE	BY	REVISION	NO

811 Know what's below. Call before you dig.

5508 HIGHWAY 290 WEST
SUITE 150
AUSTIN, TX 78735
512.872.6696
HRGREEN.COM

TBPE NO: 16384
TBPLS NO: 10194101

HRGreen®
DEVELOPMENT TX

STATE OF TEXAS
CHRISTINE N. CAMPBELL
142536
LICENSED PROFESSIONAL ENGINEER

07/15/2025

STORM H-1 & STORM J-1 PLAN & PROFILE

PARKSIDE ON THE RIVER SECTIONS 11, 12A & 15A CONSTRUCTION PLANS

GEORGETOWN, WILLIAMSON, TEXAS

DESIGNED BY: CC
DRAWN BY: MM
CHECKED BY: SN
APPROVED BY:

SHEET 110 OF 141

2025-XX-CON

P:\Blake Magee\Parkside Sections 11-15 & WOA 5\Sections 11, 12A & 15A\03_ACAD\Planset\04052023 SDP\ STORM H-1 & STORM J-1 PLAN & PROFILE - July 16, 2025, 12:22 PM, makia.mohammad

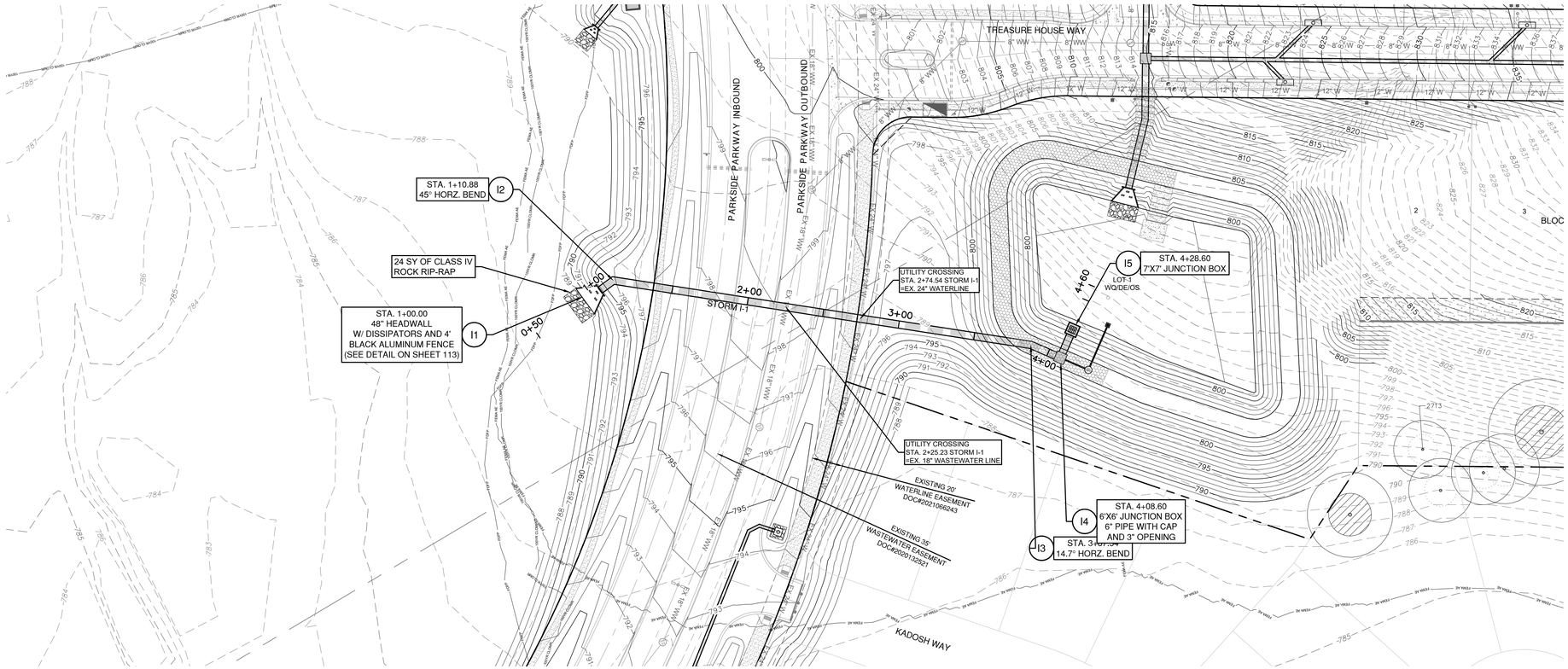

STORM I-1

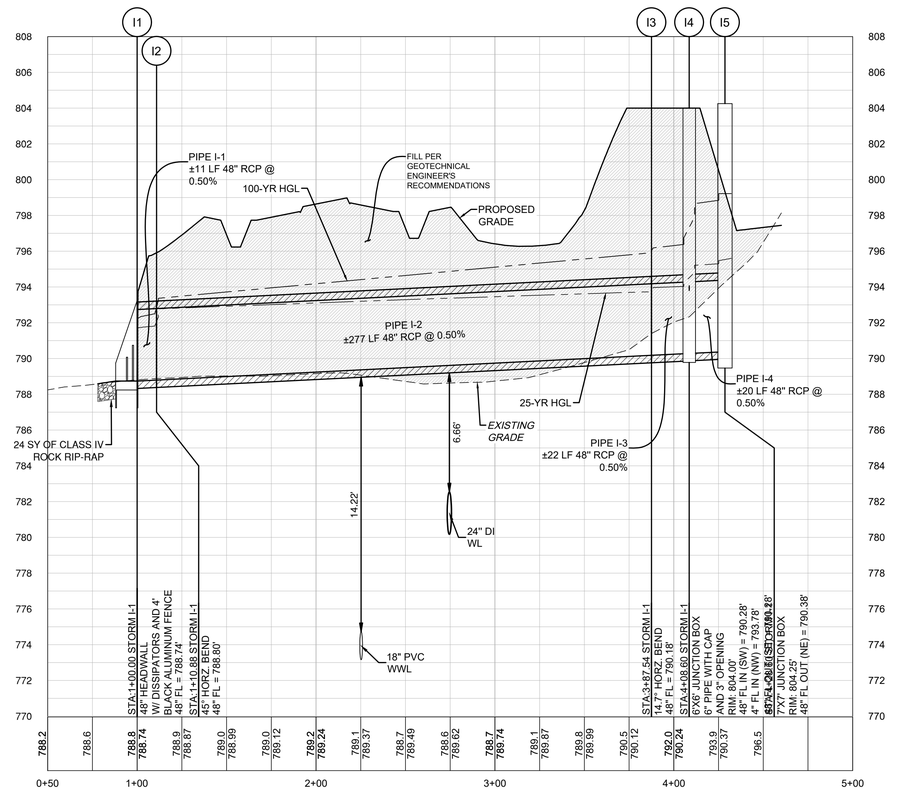

Pipe Label	Slope	Q25	V25	D25	Q100	V100	D100
	(%)	(cfs)	(ft/s)	(ft)	(cfs)	(ft/s)	(ft)
PIPE I-1	0.50%	94.79	9.43	3.02	137.55	11.58	3.70
PIPE I-2	0.50%	94.79	7.80	3.98	137.55	10.95	5.73
PIPE I-3	0.50%	94.79	7.73	3.79	137.55	10.95	6.09
PIPE I-4	0.50%	94.79	7.54	4.93	137.55	10.95	8.46

0 40' 80'

SCALE: 1" = 40'

LEGEND

- EXISTING MINOR CONTOUR
- EXISTING MAJOR CONTOUR
- PROPOSED MINOR CONTOUR
- PROPOSED MAJOR CONTOUR
- BOUNDARY
- EASEMENT
- FEMA FLOODWAY PER FIRM# 48491C0460F & LOMR# 21-06-0115P
- FEMA AE — 100YR ATLAS 14 FEMA ZONE AE FLOODPLAIN PER FIRM# 48491C0460F & LOMR# 21-06-0115P
- FEMA A — 100YR FEMA ZONE A FLOODPLAIN PER FIRM MAP# 48491C0460F
- 100YR CLOMR — 100YR CLOMR FLOODPLAIN CASE# 15-06-2071R
- FDFP — 100YR ATLAS 14 FULLY DEVELOPED FLOODPLAIN (STANTEC DRAINAGE STUDY, SHERVIN NOOSHIN, 3/25/19) APPROVED WITH PP# 2019-5-PP
- OHWM — ORDINARY HIGH WATER MARK PER ADAMS ENVIRONMENTAL
- PROPOSED STORM LINE
- FIRE HYDRANT
- WATER VALVE
- STORM SEWER MAHNOLE
- WASTEWATER MANHOLE
- CURB INLET
- TREES TO REMAIN HERITAGE
- TREES TO REMAIN NON HERITAGE

VERT. SCALE: 1" = 4'
HORZ. SCALE: 1" = 40'

EXISTING GRADE - CENTERLINE
FINISHED GRADE - CENTERLINE

4' 2' 0 VERT. SCALE

EXISTING GROUND 1000.1 997.10 PROPOSED FLOWLINE

NOTE:

1. ALL PROPOSED STORM SEWER PIPE LINES SHALL BE CLASS III REINFORCED CONCRETE UNLESS NOTED OTHERWISE.
2. FILL SHALL BE PLACED ACCORDING TO THE GEOTECHNICAL ENGINEERS RECOMMENDATION AND CITY OF GEORGETOWN SPECIFICATIONS.
3. VEGETATE ALL DISTURBED AREAS WITHIN THE ROW AND OPEN SPACE LOT AREAS PER CITY OF GEORGETOWN SPECIFICATIONS.

TRENCH SAFETY NOTES:

1. IN ACCORDANCE WITH THE LAWS OF THE STATE OF TEXAS AND THE U.S. OCCUPATIONAL SAFETY AND HEALTH ADMINISTRATION REGULATIONS, ALL TRENCHES OVER 5 FEET IN DEPTH IN EITHER HARD AND COMPACT OR SOFT AND UNSTABLE SOIL SHALL BE SLOPED, SHORED, SHEETED, BRACED OR OTHERWISE SUPPORTED. FURTHERMORE, ALL TRENCHES LESS THAN 5 FEET IN DEPTH SHALL ALSO BE EFFECTIVELY PROTECTED WHEN HAZARDOUS GROUND MOVEMENT MAY BE EXPECTED. TRENCH SAFETY SYSTEMS TO BE UTILIZED FOR THIS PROJECT WILL BE PROVIDE BY THE CONTRACTOR.
2. IN ACCORDANCE WITH THE U.S. OCCUPATIONAL SAFETY AND HEALTH ADMINISTRATION REGULATIONS,WHEN PERSONS ARE IN TRENCHES 4-FEET DEEP OR MORE, ADEQUATE MEANS OF EXIT, SUCH AS A LADDER OR STEPS, MUST BE PROVIDED AND LOCATED SO AS TO REQUIRE NO MORE THAN 25 FEET OF LATERAL TRAVEL.
3. CONSTRUCTION SHALL NOT PROCEED UNTIL APPROPRIATE TRENCH SAFETY SYSTEM DETAILS, AS DESIGNED BY A PROFESSIONAL ENGINEER, ARE RETAINED AND COPIES SUBMITTED TO THE CITY OF GEORGETOWN.
4. DEEP EXCAVATIONS: ON EXCAVATIONS EXCEEDING 20 FEET IN DEPTH, TWO OR MORE MEANS OF EGRESS FROM THE EXCAVATION SHALL BE PROVIDED. THE CONTRACTOR SHALL CONSULT WITH A REGISTERED ENGINEER, EXPERIENCED IN TRENCH SAFETY SYSTEMS, REGARDING SPECIFIC MEANS AND METHODS EMPLOYED. CONTRACTOR SHALL PROVIDE A TRENCH SAFETY PLAN SEALED BY A REGISTERED PROFESSIONAL ENGINEER AS REQUIRED BY THE CITY OF GEORGETOWN.

NO	REVISION	BY	DATE

811 Know what's below. Call before you dig.

5508 HIGHWAY 290 WEST
SUITE 150
AUSTIN, TX 78735
512.872.6696
HRGREEN.COM

TBPE NO: 16384
TBPLS NO: 10194101

HRGreen®
DEVELOPMENT TX

STATE OF TEXAS
CHRISTINE N. CAMPBELL
142536
LICENSED PROFESSIONAL ENGINEER

07/15/2025

STORM I-1 PLAN & PROFILE

PARKSIDE ON THE RIVER
SECTIONS 11, 12A & 15A
CONSTRUCTION PLANS
GEORGETOWN, WILLIAMSON, TEXAS

DESIGNED BY: CC
DRAWN BY: MM
CHECKED BY: SN
APPROVED BY:

SHEET 111 OF 141

2025-XX-CON

P:\Blake Magee\Parkside Sections 11-15 & WOA 5\Section 11, 12A & 15A\00_ACAD\Parkside\240302D SDPP STORM I-1.dwg, STORM I-1 PLAN & PROFILE, July 16, 2025, 12:23 PM, malia.muhammad

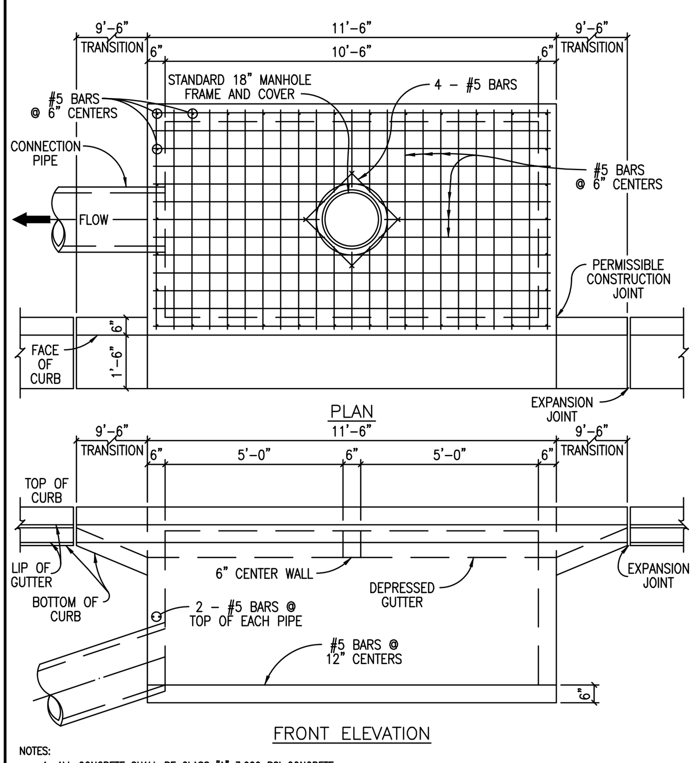

NOTES:
1. ALL CONCRETE SHALL BE CLASS "A" 3,000 PSI CONCRETE.
2. STORM SEWER PIPE MATERIAL TO BE R.C.P. (CLASS III) UNLESS OTHERWISE APPROVED BY THE CITY OF GEORGETOWN.

The Architect/Engineer assumes responsibility for appropriate use of this standard.

ADOPTED 6/21/2006
CITY OF GEORGETOWN CONSTRUCTION STANDARDS AND DETAILS
CURB INLET DETAIL
SD09
NTS 1/2003 MRS TRB

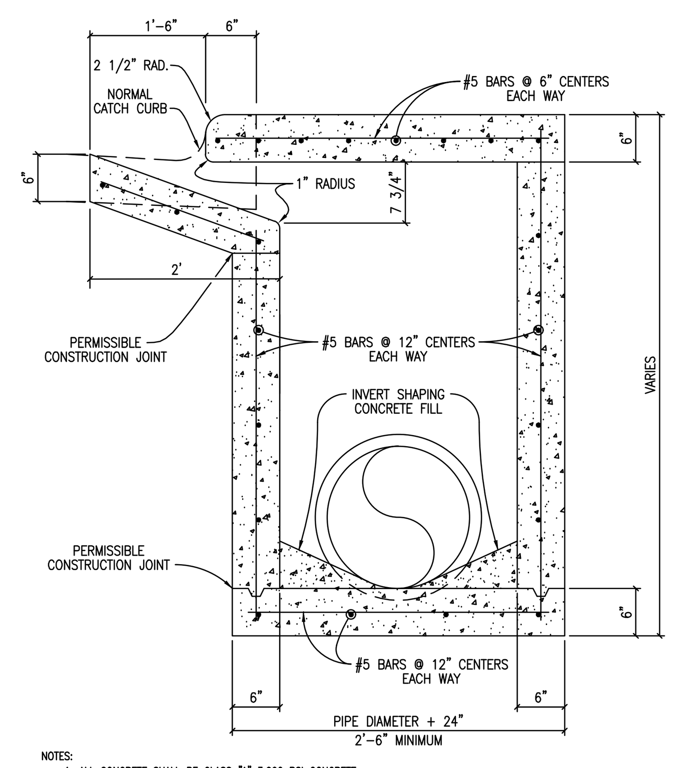

NOTES:
1. ALL CONCRETE SHALL BE CLASS "A" 3,000 PSI CONCRETE.
2. STORM SEWER PIPE MATERIAL TO BE R.C.P. (CLASS III) UNLESS OTHERWISE APPROVED BY THE CITY OF GEORGETOWN.

The Architect/Engineer assumes responsibility for appropriate use of this standard.

ADOPTED 6/21/2006
CITY OF GEORGETOWN CONSTRUCTION STANDARDS AND DETAILS
CURB DRAIN INLET TYPICAL SECTION
SD10
NTS 1/2003 MRS TRB

The Architect/Engineer assumes responsibility for appropriate use of this standard.

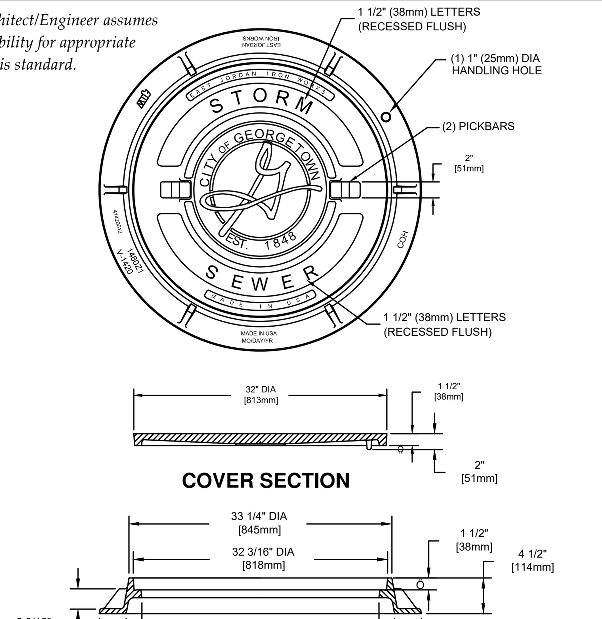

NOTES:
1. STANDARD STORM SEWER MANHOLE SET TO BE EAST JORDAN IRON WORKS, INC. CATALOG NO. 1480A V-1420\1480Z1, COVER TO BE STAMPED WITH "STORM SEWER".
2. STANDARD STORM SEWER MANHOLE SET TO BE HEAVY DUTY LOAD RATED.
3. FOR MORE DETAILED SPECIFICATIONS REFER TO EAST JORDAN IRON WORKS, INC. REFERENCE PRODUCT DRAWING 41420012 00148391.
4. FOR BOLTED STORM SEWER MANHOLE SET REFER TO DETAIL SD11A.

ADOPTED 6/21/2006
CITY OF GEORGETOWN CONSTRUCTION STANDARDS AND DETAILS
STANDARD STORM SEWER MANHOLE SET
SD11
NTS 1/2003 MRS TRB

The Architect/Engineer assumes responsibility for appropriate use of this standard.

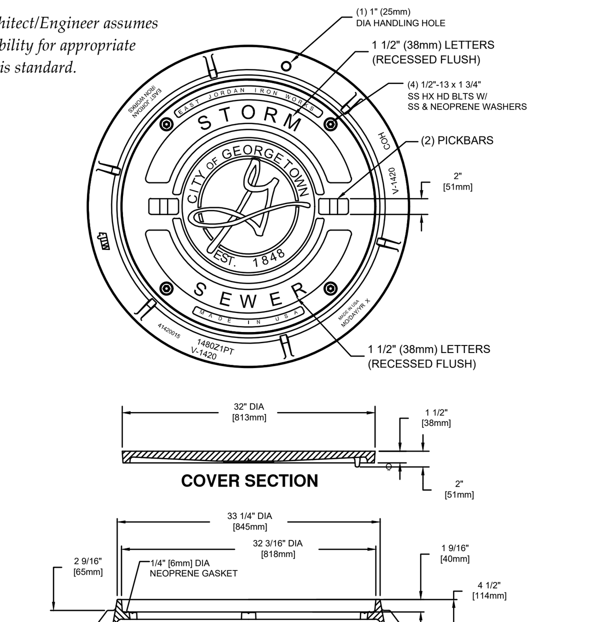

NOTES:
1. BOLTED STORM SEWER MANHOLE SET TO BE EAST JORDAN IRON WORKS, INC. CATALOG NO. 1480APT V-1420\1480Z1PT. COVER TO BE STAMPED WITH "STORM SEWER"
2. BOLTED STORM SEWER MANHOLE SET TO BE HEAVY DUTY LOAD RATED.
3. FOR MORE DETAILED SPECIFICATIONS REFER TO EAST JORDAN IRON WORKS, INC. REFERENCE PRODUCT DRAWING 00148393 41420015.
4. FOR STANDARD STORM SEWER MANHOLE SET REFER TO DETAIL SD11.

ADOPTED 6/21/2006
CITY OF GEORGETOWN CONSTRUCTION STANDARDS AND DETAILS
BOLTED STORM SEWER MANHOLE SET
SD11A
NTS 1/2006 MRS TRB

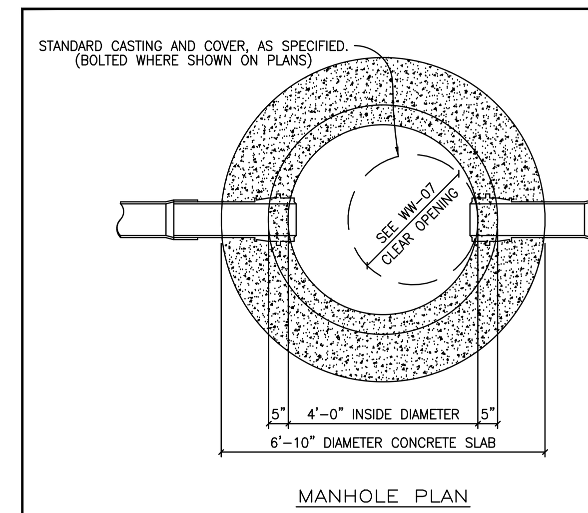

CITY OF GEORGETOWN NOTES:

MANHOLE DETAILS SHALL REFLECT THE CITY'S MINIMUM SPECIFICATIONS, AS STATED BELOW:

A. ALL MANHOLES SHALL BE 48" I.D., R.C.P., CLASS III, WITH RUBBER O-RING GASKET JOINTS CONFORMING TO ASTM C478, C433 AND C76.
B. ALL MANHOLES SHALL HAVE FRAME AND COVER, AS MANUFACTURED BY EAST JORDAN IRON WORKS (AS PER DETAIL # WW-07) OR APPROVED EQUIVALENT.
C. ALL MANHOLES SHALL BE CONCRETE WITH CAST IRON FRAME AND COVER.
D. ALL MANHOLES SHALL HAVE AN ECCENTRIC CONE.
E. MANHOLES MAY HAVE A FLAT LID, IF APPROVED BY CITY OF GEORGETOWN, BEING 12" THICK WITH A MINIMUM 30" OPENING, AS MANUFACTURED BY CALVERT CONCRETE OR APPROVED EQUAL M.F.G. CONFORMING TO ASTM C478, 5000 P.S.I. CONCRETE, TRAFFIC BEARING, AND O-RING JOINT CONFORMING TO ASTM C443.
F. INVERTS AND FLEXIBLE SEAL BOOTS, PER ASTM C-923, SHALL BE CAST INTO BASE SECTION.
G. MINIMUM DROP BETWEEN INVERTS SHALL BE ONE-TENTH OF A FOOT (0.1').
H. GRADE RINGS WITH AN I.D. TO MATCH FRAMES CLEAR OPENING WITH A MAXIMUM OF FIVE (5) GRADE RINGS ARE ALLOWED.

The Architect/Engineer assumes responsibility for appropriate use of this standard.

ADOPTED 6/21/2006
CITY OF GEORGETOWN CONSTRUCTION STANDARDS AND DETAILS
STANDARD STORM SEWER MANHOLE PLAN
SD12
NTS 1/2003 MRS TRB

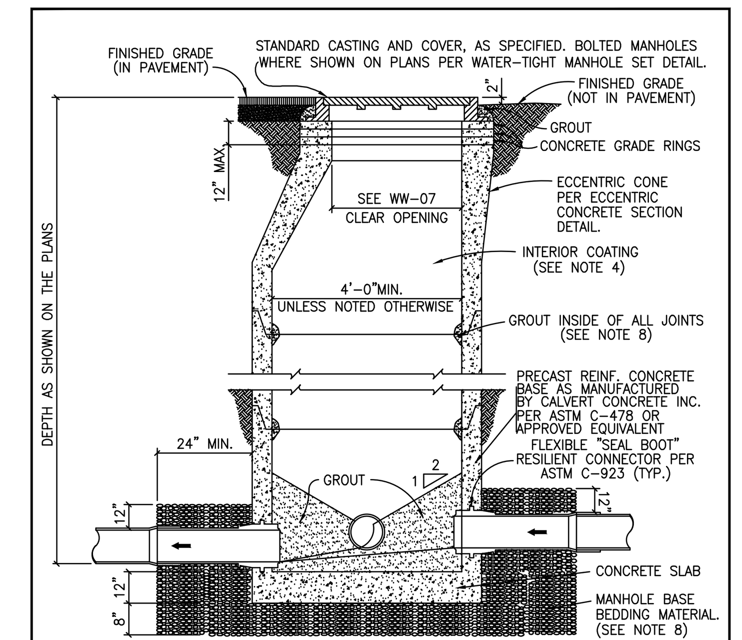

NOTES:
1. MANHOLES SHALL BE PRECAST ASTM C-478 BELL AND SPIGOT WITH PROFILE GASKET - SINGLE OFF-SET JOINTS.
2. SEE PLANS AND MANHOLE SCHEDULE, FOR MANHOLE SIZE, LOCATION, CONFIGURATION, TYPE OF TOP SECTION, VENTING REQUIREMENTS, PIPE SIZE AND TYPES.
3. SEE SPECIFICATIONS ON MATERIALS AND CONSTRUCTION.
4. AN 80 MIL COAT OF RAVEN LINING SYSTEMS, RAVEN 405 ULTRA HIGH BUILD EPOXY COATING, OR SPRAY WALL EPOXY COATING, OR APPROVED EQUAL, TO BE APPLIED TO ENTIRE INTERIOR OF EACH STORM SEWER MANHOLE AND UNDERSIDE OF FLAT TOPS.
5. ALL MANHOLE COVERS SHALL BE BOLTED AND GASKETTED WHEN MANHOLES ARE LOCATED OUT FROM PAVEMENT.
6. MANHOLES TO BE VENTED ARE IDENTIFIED ON MANHOLE SCHEDULE. REFERENCE MANHOLE VENT DETAIL.
7. MANHOLES ARE TO BE DESIGNED TO RESIST LATERAL AND VERTICAL SOIL FORCES RESULTING FROM MANHOLE DEPTH. ADDITIONALLY, MANHOLES LOCATED IN PAVEMENT TO BE DESIGNED FOR HS-20 TRAFFIC LOADS.
8. GROUT SHALL MEET THE REQUIREMENTS AS STATED BY THE COATING MANUFACTURER.
8. MANHOLE BASE BEDDING MATERIAL SPECS. FOR 3/4" WASHED GRAVEL: SIEVE SIZE 2", PERCENT (%) RETAINED 0; SIEVE SIZE 1 1/2", % RETAINED 0-10; SIEVE SIZE 1", % RETAINED 45-80; SIEVE SIZE 3/4", % RETAINED 85-100; SIEVE SIZE 3/8", % RETAINED 95-100

The Architect/Engineer assumes responsibility for appropriate use of this standard.

ADOPTED 6/21/2006
CITY OF GEORGETOWN CONSTRUCTION STANDARDS AND DETAILS
STANDARD STORM SEWER MANHOLE - SECTION
SD13
NTS 1/2003 MRS TRB

MINIMUM RIP-RAP QUANTITIES	
PIPE	SQ. YDS.
18"	6.2
24"	6.9
27"	7.8
30"	9.5
36"	10.4
42"	12.0
48"	14.3
54"	16.4

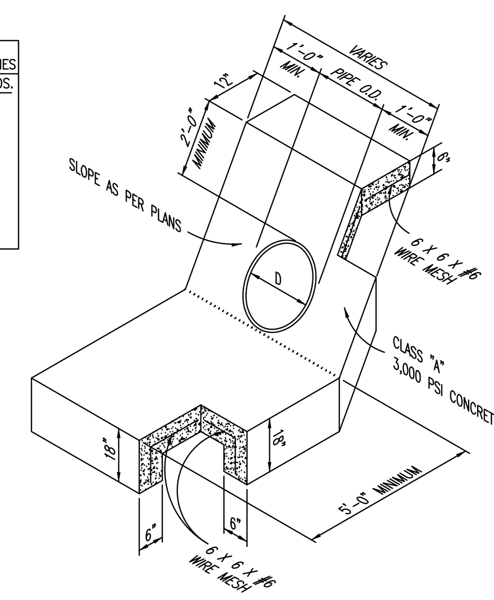

NOTES:
1. WHEN HEADWALLS AND WINGWALLS ARE REQUIRED, THEY SHALL CONFORM TO THE TEXAS DEPARTMENT OF TRANSPORTATION STANDARDS, OR AS DIRECTED BY THE CITY.
2. ENERGY DISSIPATERS SHALL BE REQUIRED IF PIPE VELOCITY IS GREATER THAN 5.0 F.P.S. OR AS DIRECTED BY THE CITY OF GEORGETOWN.
3. SUPPORT REINFORCING WIRE MESH REQUIRED AS SUPPORT FOR APPROACH SLAB AND SHALL BE SUPPORTED BY REBAR CHAIRS OR OTHER APPROVED METHODS.

The Architect/Engineer assumes responsibility for appropriate use of this standard.

ADOPTED 6/21/2006
CITY OF GEORGETOWN CONSTRUCTION STANDARDS AND DETAILS
TYPICAL CONCRETE RIP-RAP AT PIPE
SD19
NTS 1/2003 MRS TRB

The Architect/Engineer assumes responsibility for appropriate use of this standard.

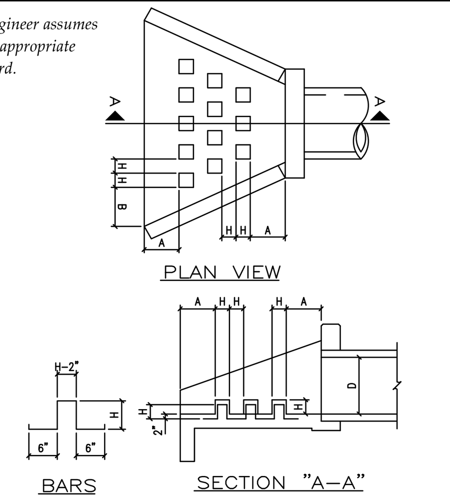

NOTES:
1. USE CLASS "A" CONCRETE, 3,000 PSI AT 28 DAYS, UNLESS NOTED.
2. REINFORCING STEEL - ASTM A615, GRADE 40, UNLESS NOTED.
3. LAP REINFORCING 30 BAR DIAMETERS MIN. AT SPLICES, UNLESS NOTED.
4. CHAMFER EXPOSED EDGES OF CONCRETE 3/4", UNLESS NOTED.
5. PLACE REINFORCING WITH THE CENTER OF THE OUTSIDE BARS 2 INCHES FROM THE SURFACE OF THE CONCRETE.

TABLE OF DIMENSIONS FOR ENERGY DISSIPATOR DETAIL

D PIPE DIAMETER (INCHES)	NUMBER OF ROWS OF DISSIPATORS	NUMBER OF DISSIPATORS IN FRONT ROW	H (INCHES)	A (INCHES)	B (INCHES)
12	1	3	4	4	9.1875
18	2	4	4 1/2	9 1/2	15.5625
24	2	5	6	14 3/4	16 1/2
30	3	6	7 1/2	12 1/2	14 3/8
36	3	6	9	16 1/4	18 5/16
42	3	6	10 1/2	20	22 1/4
48	3	6	12	23 3/4	26 1/4
54	3	6	13 1/2	27 1/2	27 3/4
60	3	6	15	31 1/4	31 5/8

ADOPTED 6/21/2006
CITY OF GEORGETOWN CONSTRUCTION STANDARDS AND DETAILS
ENERGY DISSIPATER DETAIL
SD20
NTS 1/2003 MRS TRB

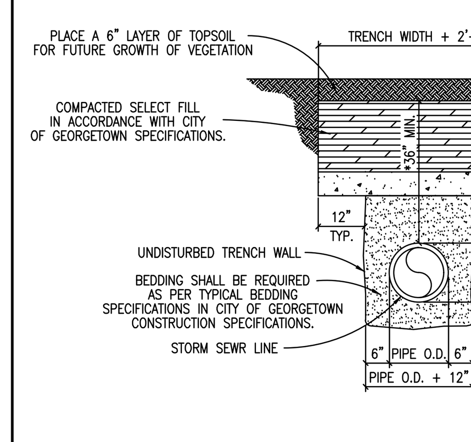

TRENCH WIDTHS
*PIPE LESS THAN 20" DIAMETER 1'-0" + PIPE O.D.
*20" DIAMETER PIPE AND LARGER 2'-0" + PIPE O.D.

The Architect/Engineer assumes responsibility for appropriate use of this standard.

ADOPTED 6/21/2006
CITY OF GEORGETOWN CONSTRUCTION STANDARDS AND DETAILS
CONCRETE TRANCH CAP DETAIL FOR STORM SEWER
SD39
NTS 1/2003 MRS TRB

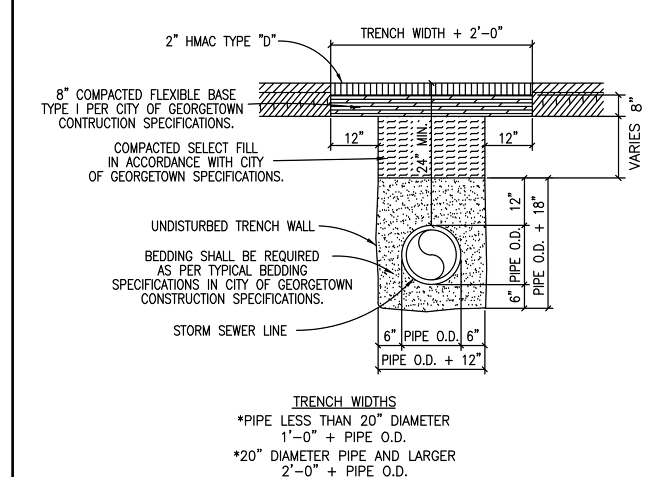

TRENCH WIDTHS
*PIPE LESS THAN 20" DIAMETER 1'-0" + PIPE O.D.
*20" DIAMETER PIPE AND LARGER 2'-0" + PIPE O.D.

NOTES:
1. REPLACED BASE MATERIAL OVER DITCH SHALL BE TWICE THE THICKNESS OF THE ORIGINAL BASE.
2. BASE MATERIAL SHALL BE IN LIFTS NOT TO EXCEED 6" AND EACH LIFT THOROUGHLY ROLLED OR TAMPED TO SPECIFIED MAXIMUM DENSITY.
3. ASPHALT CONCRETE PAVEMENT JOINTS SHALL BE MECHANICALLY SAWED.
4. SURFACE MATERIAL WILL BE CONSISTENT WITH THE EXISTING SURFACE.
5. DENSITY TESTS SHALL BE TAKEN IN ACCORDANCE WITH THE CITY OF GEORGETOWN CONSTRUCTION SPECIFICATIONS AND STANDARDS.
6. CONTRACTOR OR ENGINEER MAY USE FLOWABLE BACKFILL AS AN ALTERNATE BACKFILL MATERIAL (SEE C9 FLOWABLE BACKFILL FOR THE SPECIFICATION).

The Architect/Engineer assumes responsibility for appropriate use of this standard.

ADOPTED 6/21/2006
CITY OF GEORGETOWN CONSTRUCTION STANDARDS AND DETAILS
TRENCH, EMBEDMENT AND PAVEMENT REPLACEMENT DETAIL UNDER EXISTING ROADWAY FOR STORM SEWER
SD40
NTS 1/2003 MRS TRB

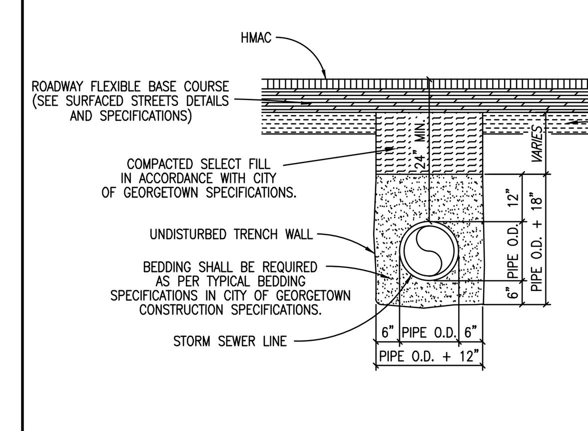

NOTES:
1. DENSITY TESTS SHALL BE TAKEN IN ACCORDANCE WITH THE CITY OF GEORGETOWN CONSTRUCTION SPECIFICATIONS AND STANDARDS.
2. CONTRACTOR OR ENGINEER MAY USE FLOWABLE BACKFILL AS AN ALTERNATE BACKFILL MATERIAL (SEE C9 FLOWABLE BACKFILL FOR THE SPECIFICATION).

TRENCH WIDTHS
*PIPE LESS THAN 20" DIAMETER 1'-0" + PIPE O.D.
*20" DIAMETER PIPE AND LARGER 2'-0" + PIPE O.D.

The Architect/Engineer assumes responsibility for appropriate use of this standard.

ADOPTED 6/21/2006
CITY OF GEORGETOWN CONSTRUCTION STANDARDS AND DETAILS
TRENCH AND EMBEDMENT DETAIL UNDER PROPOSED ROADWAY FOR STORM SEWER
SD41
NTS 1/2003 MRS TRB

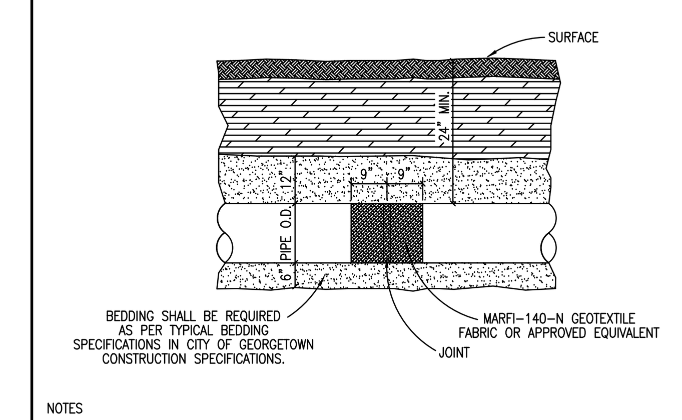

NOTES
1. PIPE SHALL BE REINFORCED CONCRETE PIPE CLASS III UNLESS THE DEPTH OF PIPE REQUIRES A STRONGER CLASS.
2. ALL FITTINGS AND WYES SHALL BE MANUFACTURED AND NOT CONSTRUCTED ON THE PROJECT WITHOUT PRIOR APPROVAL FROM THE CITY.
3. ALL JOINTS SHALL BE WRAPPED WITH MARF1-140-N GEOTEXTILE FABRIC OR APPROVED EQUIVALENT. EACH JOINT SHALL BE WRAPPED WITH 18" WIDE FABRIC CENTERED ON THE JOINT.

The Architect/Engineer assumes responsibility for appropriate use of this standard.

ADOPTED 6/21/2006
CITY OF GEORGETOWN CONSTRUCTION STANDARDS AND DETAILS
TRENCH AND EMBEDMENT DETAIL (PROFILE) FOR STORM SEWER
SD42
NTS 1/2003 MRS TRB

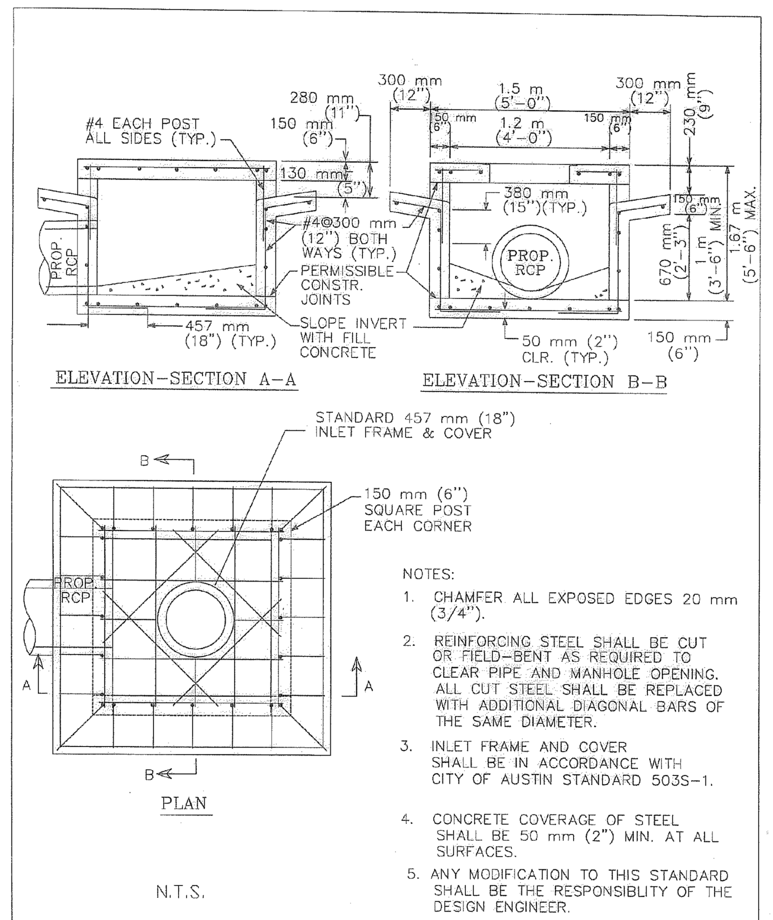

NOTES:
1. CHAMFER ALL EXPOSED EDGES 20 mm (3/4").
2. REINFORCING STEEL SHALL BE CUT OR FIELD-BENT AS REQUIRED TO CLEAR PIPE AND MANHOLE OPENING. ALL CUT STEEL SHALL BE REPLACED WITH ADDITIONAL DIAGONAL BARS OF THE SAME DIAMETER.
3. INLET FRAME AND COVER SHALL BE IN ACCORDANCE WITH CITY OF AUSTIN STANDARD 503S-1.
4. CONCRETE COVERAGE OF STEEL SHALL BE 50 mm (2") MIN. AT ALL SURFACES.
5. ANY MODIFICATION TO THIS STANDARD SHALL BE THE RESPONSIBLITY OF THE DESIGN ENGINEER.

CITY OF AUSTIN
WATERSHED PROTECTION DEPARTMENT
4-SIDED AREA INLET
3/8/2010 ADOPTED
THE ARCHITECT/ENGINEER ASSUMES RESPONSIBILITY FOR APPROPRIATE USE OF THIS STANDARD
STANDARD NO. 508S-9

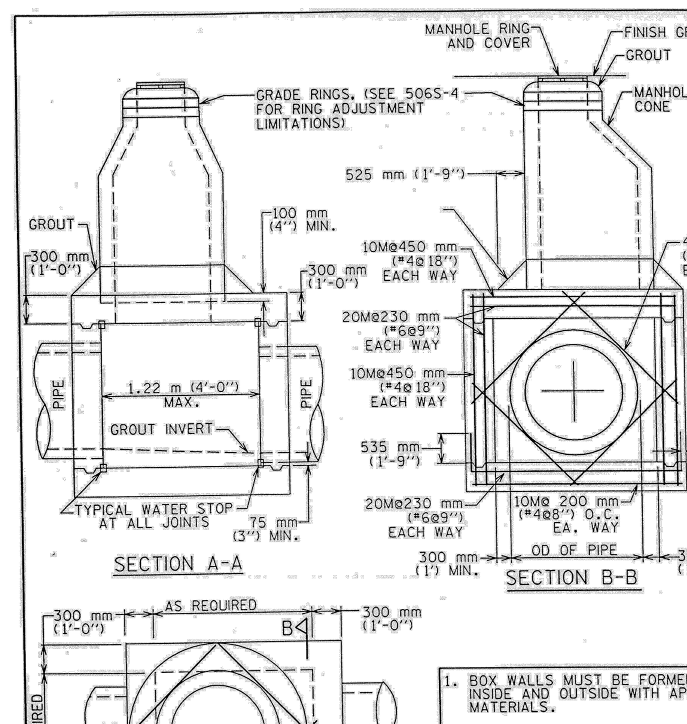

1. BOX WALLS MUST BE FORMED INSIDE AND OUTSIDE WITH APPROVED MATERIALS.
2. USE CLASS "A" CONCRETE.
3. TYPICAL CAST IN PLACE BOX FOR 760 mm (30") OR LARGER PIPE.
4. REINFORCING STEEL SHALL MEET ITEM 406, REINFORCING STEEL.

CITY OF AUSTIN
WATER AND WASTEWATER UTILITY
TYPICAL BOX MANHOLE 760 mm (30") & LARGER PIPE
2-17-04 ADOPTED
THE ARCHITECT/ENGINEER ASSUMES RESPONSIBILITY FOR APPROPRIATE USE OF THIS STANDARD.
STANDARD NO. 506S-5

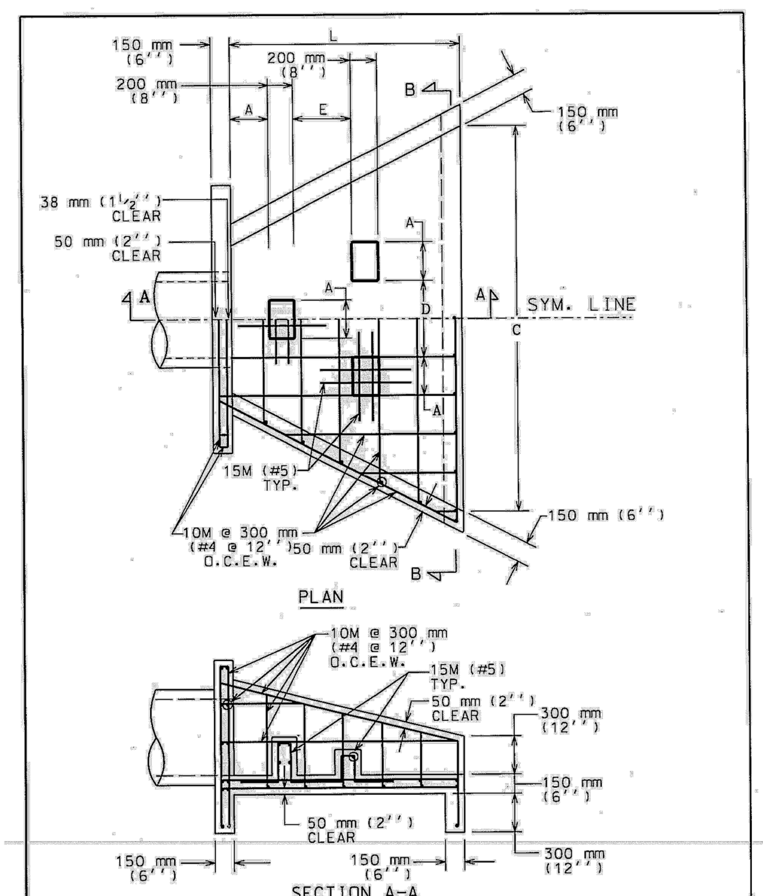

CITY OF AUSTIN
DEPARTMENT OF WATERSHED PROTECTION AND DEVELOPMENT REVIEW
STANDARD HEADWALL AND ENERGY DISSIPATORS
8/20/07 ADOPTED
THE ARCHITECT/ENGINEER ASSUMES RESPONSIBILITY FOR APPROPRIATE USE OF THIS STANDARD.
STANDARD NO. 508S-13
1 OF 2

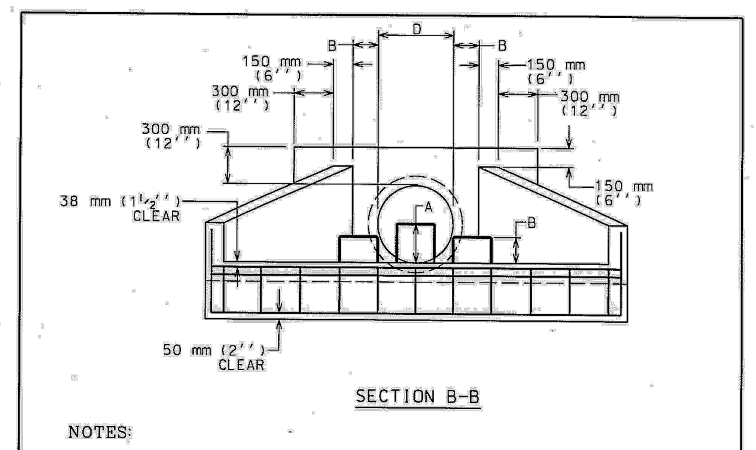

NOTES:
1. ALL CONCRETE SHALL BE TYPE "C" AS PER SPEC. 403S. CONCRETE FOR STURCTURES.
2. CHAMFER ALL EXTERNAL VISIBLE CORNERS.
3. DISSIPATOR BLOCKS REQUIRED ON DISCHARGE HEADWALLS ONLY.

D	457 mm (18'')	533 mm (21'')	610 mm (24'')	685 mm (27'')	765 mm (30'')	838 mm (33'')	914 mm (36'')	1.067 m (42'')	1.219 m (48'')	1.372 m (54'')	1.524 m (60'')
A	225 mm (9'')	250 mm (10'')	300 mm (12'')	350 mm (14'')	375 mm (15'')	400 mm (16'')	450 mm (18'')	525 mm (21'')	600 mm (24'')	675 mm (27'')	750 mm (30'')
B	150 mm (6'')	175 mm (7'')	200 mm (8'')	225 mm (9'')	250 mm (10'')	275 mm (11'')	300 mm (12'')	350 mm (14'')	400 mm (16'')	450 mm (18'')	500 mm (20'')
C	2.29 m (90'')	2.67 m (105'')	3.05 m (120'')	343 m (135'')	3.81 m (150'')	4.19 m (165'')	4.57 m (180'')	5.33 m (210'')	6.10 m (240'')	6.86 m (270'')	7.62 m (300'')
L	1.37 m (54'')	1.60 m (63'')	1.83 m (72'')	2.06 m (81'')	2.29 m (90'')	2.51 m (99'')	2.74 m (108'')	3.20 m (126'')	3.66 m (144'')	4.11 m (162'')	4.57 m (180'')
E	300 mm (12'')	350 mm (14'')	400 mm (16'')	450 mm (18'')	500 mm (20'')	550 mm (22'')	600 mm (24'')	700 mm (28'')	800m (32'')	900 mm (36'')	1000 mm (40'')

DIMENSIONS IN MILLIMETERS, METERS AND (INCHES).
DISCHARGE VELOCITIES GREATER THAN 3 METERS/SECOND (10 fps) REQUIRE ROCK OUTLET PROTECTION.

CITY OF AUSTIN
DEPARTMENT OF WATERSHED PROTECTION AND DEVELOPMENT REVIEW
STANDARD HEADWALL AND ENERGY DISSIPATORS
8/20/07 ADOPTED
THE ARCHITECT/ENGINEER ASSUMES RESPONSIBILITY FOR APPROPRIATE USE OF THIS STANDARD.
STANDARD NO. 508S-13
2 OF 2

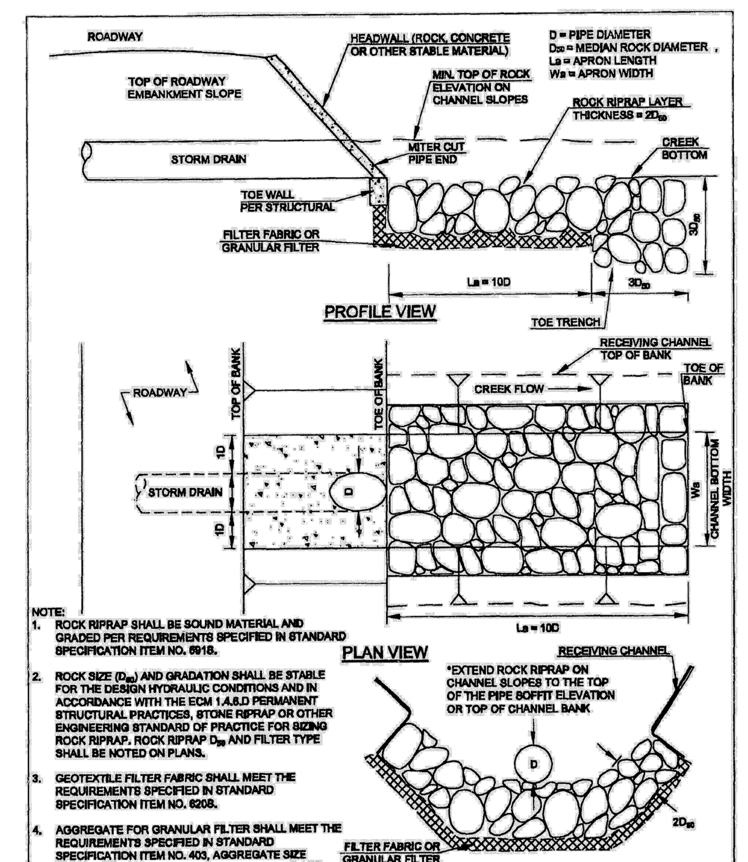

NOTE:
1. ROCK RIPRAP SHALL BE SOUND MATERIAL AND GRADED PER REQUIREMENTS SPECIFIED IN STANDARD SPECIFICATION ITEM NO. 591S.
2. ROCK SIZE (D_{50}) AND GRADATION SHALL BE STABLE FOR THE DESIGN HYDRAULIC CONDITIONS AND IN ACCORDANCE WITH THE ECM 1.4.6.D PERMANENT STRUCTURAL PRACTICES, STONE RIPRAP OR OTHER ENGINEERING STANDARD OF PRACTICE FOR SIZING ROCK RIPRAP. ROCK RIPRAP D_{50} AND FILTER TYPE SHALL BE NOTED ON PLANS.
3. GEOTEXTILE FILTER FABRIC SHALL MEET THE REQUIREMENTS SPECIFIED IN STANDARD SPECIFICATION ITEM NO. 620S.
4. AGGREGATE FOR GRANULAR FILTER SHALL MEET THE REQUIREMENTS SPECIFIED IN STANDARD SPECIFICATION ITEM NO. 403, AGGREGATE SIZE CLASSIFICATION/GRADE, NUMBER OF LAYERS AND LAYER THICKNESS SHOULD BE NOTED ON THE PLANS.

CITY OF AUSTIN
WATERSHED PROTECTION DEPARTMENT
STORMDRAIN OUTFALL PROTECTION CULVERT UNDER ROADWAY/INLINE
9/1/2011 ADOPTED
THE ARCHITECT/ENGINEER ASSUMES RESPONSIBILITY FOR APPROPRIATE USE OF THIS STANDARD.
STANDARD NO. 508S-20

RIP-RAP CLASSIFICATION SPECIFICATIONS

CLASS 1 RIP-RAP

No more than 10% of the stone will have a diameter greater than twelve (12) inches; no more than 50% of the stone will have a diameter less than ten (10) inches; and no more than 10% of the stone will have a diameter of less than six (6) inches. The thickness of the rip-rap liner will be no less than twelve (12) inches.

CLASS 2 RIP-RAP

No more than 10% of the stone will have a diameter greater than sixteen (16) inches; no more than 50% of the stone will have a diameter less than twelve (12) inches; and no more than 10% of the stone will have a diameter of less than six (6) inches. The thickness of the rip-rap liner will be no less than sixteen (16) inches.

CLASS 3 RIP-RAP

No more than 10% of the stone will have a diameter greater than twenty two (22) inches; no more than 50% of the stone will have a diameter less than sixteen (16) inches; and no more than 10% of the stone will have a diameter of less than eight (8) inches. The thickness of the rip-rap liner will be no less than twenty two (22) inches.

CLASS 4 RIP-RAP

No more than 10% of the stone will have a diameter greater than twenty seven (27) inches; no more than 50% of the stone will have a diameter less than twenty two (22) inches; and no more than 10% of the stone will have a diameter of less than ten (10) inches. The thickness of the rip-rap liner will be no less than twenty seven (27) inches.

CLASS 5 RIP-RAP

No more than 10% of the stone will have a diameter greater than thirty four (34) inches; no more than 50% of the stone will have a diameter less than twenty seven (27) inches; and no more than 10% of the stone will have a diameter of less than sixteen (16) inches. The thickness of the rip-rap liner will be no less than thirty four (34) inches.

NO.	REVISION	BY	DATE

Know what's below. Call before you dig.

5508 HIGHWAY 290 WEST
SUITE 150
AUSTIN, TX 78735
512.872.6696
HRGREEN.COM

TBPE NO: 16384
TBPLS NO: 10194101

HRGreen® DEVELOPMENT TX

STATE OF TEXAS
CHRISTINE N. CAMPBELL
142536
LICENSED PROFESSIONAL ENGINEER
07/03/2025

DRAINAGE DETAILS

PARKSIDE ON THE RIVER SECTIONS 11, 12A & 15A CONSTRUCTION PLANS
GEORGETOWN, WILLIAMSON, TEXAS

DESIGNED BY: CC
DRAWN BY: MM
CHECKED BY: SN
APPROVED BY: ____

SHEET 112 OF 141

2025-XX-CON

Plot Style: LandDev Global.ctb
Template: LDC_C3D2022.DWT
P:\Blake Magee\Parkside Sections 11-15 & WON 5\Section 11, 12A & 15A\03_ACAD\Plans\sh2403522 DTLS.dwg, DRAINAGE DETAILS, July 18, 2025, 12:24 PM, makai.muhammad

NOTE - GUARDRAIL SHALL BE PRIMED AND PAINTED BLACK

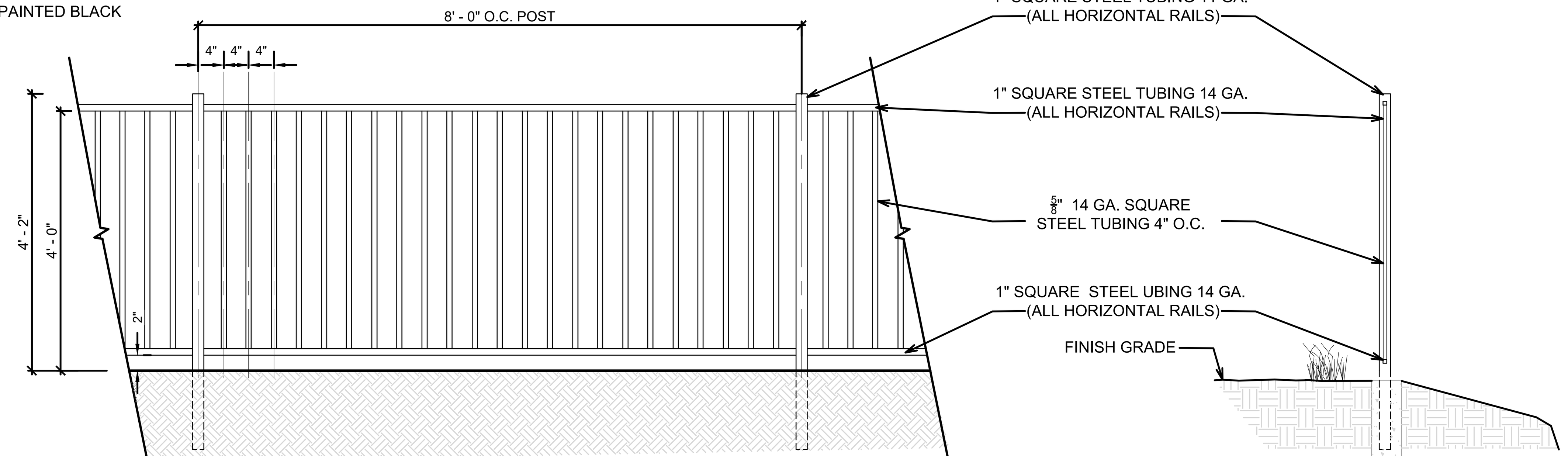

FALL PROTECTION FENCE

NTS

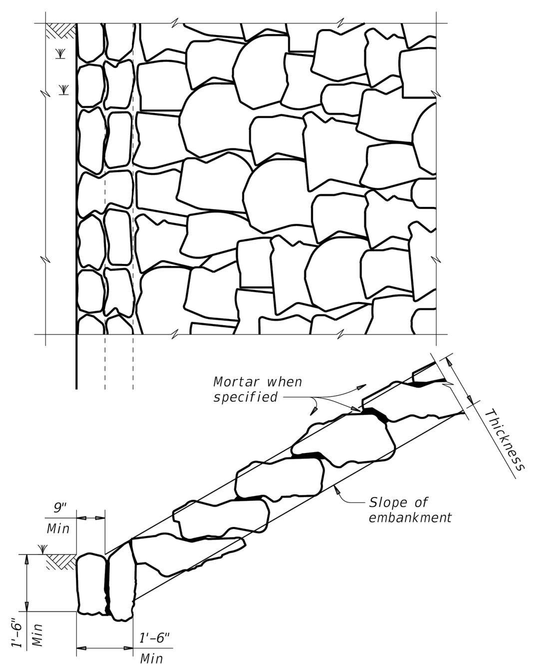

FIGURE 2 ~ TYPE F STONE RIPRAP

dry or mortared

SHEET 2 OF 2

Texas Department of Transportation | Bridge Division Standard

STONE RIPRAP

SRR

FILE: srrstde1-19.dgn	DN: AES	CK: JGD	DW: BWH	CK: AES
©TxDOT April 2019	CONT	SECT	JOB	HIGHWAY
REVISIONS	DIST	COUNTY		SHEET NO.

TYPE F STONE RIPRAP - MORTARED (TXDOT DETAIL - SRR)

N.T.S.

DISCLAIMER: The use of this standard is governed by the "Texas Engineering Practice Act". No warranty of any kind is made by TxDOT for any purpose whatsoever. TxDOT assumes no responsibility for the conversion of this standard to other formats or for incorrect results or damages resulting from its use.

TABLE OF DIMENSIONS AND REINFORCING STEEL (Wings for one structure end)

Maximum Wingwall Height Hw	W	X	Y	Z	Bars J1 Size	Bars J1 Spa	Bars J2 Size	Bars J2 Spa	Estimated Quantities (3) per ft of wing length (2~wings) Reinf (Lb/Ft)	Conc (CY/Ft)
2'-6"	2'-5"	1'-0"	9"	7"	#4	1'-0"	#4	1'-0"	33.73	0.248
3'-0"	2'-5"	1'-0"	9"	7"	#4	1'-0"	#4	1'-0"	37.07	0.261
3'-6"	2'-5"	1'-0"	9"	7"	#4	1'-0"	#4	1'-0"	37.74	0.273
4'-0"	2'-5"	1'-0"	9"	7"	#4	1'-0"	#4	1'-0"	38.41	0.285
4'-6"	3'-2"	1'-6"	1'-0"	7"	#4	1'-0"	#4	1'-0"	41.75	0.330
5'-0"	3'-2"	1'-6"	1'-0"	7"	#4	1'-0"	#4	1'-0"	45.09	0.343
5'-6"	3'-2"	1'-6"	1'-0"	7"	#4	1'-0"	#4	1'-0"	45.75	0.355
6'-0"	3'-2"	1'-6"	1'-0"	7"	#4	1'-0"	#4	1'-0"	46.42	0.367
7'-0"	3'-8"	1'-9"	1'-3"	7"	#4	1'-0"	#4	1'-0"	52.77	0.414
8'-0"	4'-2"	2'-0"	1'-6"	8"	#5	1'-0"	#4	1'-0"	60.19	0.486
9'-0"	4'-8"	2'-3"	1'-9"	8"	#4	6"	#4	6"	81.49	0.535
10'-0"	5'-2"	2'-6"	2'-0"	8"	#5	6"	#4	6"	97.25	0.584
11'-0"	5'-8"	2'-9"	2'-3"	8"	#6	6"	#5	6"	133.65	0.634
12'-0"	6'-2"	3'-0"	2'-6"	9"	#7	6"	#5	6"	162.29	0.721
13'-0"	6'-8"	3'-3"	2'-9"	11"	#7	6"	#5	6"	178.80	0.856
14'-0"	7'-2"	3'-6"	3'-0"	1'-0"	#8	6"	#5	6"	216.78	0.959
15'-0"	7'-8"	4'-0"	3'-0"	1'-1"	#9	6"	#6	6"	283.06	1.068
16'-0"	8'-2"	4'-6"	3'-0"	1'-3"	#9	6"	#6	6"	297.02	1.234

TABLE OF WINGWALL REINFORCING (2~wings)

Bar	Size	No.	Spa
D	#5	~	1'-0"
E	#4	~	1'-0"
F	#4	~	1'-0"
G	#6	4	~
M	#4	4	~
P	#4	~	1'-0"
R	#5	6	~
V	#4	~	1'-0"

TABLE OF ESTIMATED CULVERT TOEWALL QUANTITIES

Bar	Size	No.	Spa
L	#4	~	1'-6"
Q	#4	1	~
Reinf (Lb/Ft)			2.45
Conc (CY/Ft)			0.037

WING DIMENSION FORMULAS:

(All values are in feet.)

Hw = H + T + C − 0.250'
A = (Hw − 0.333') (SL)
B = (A) tangent (30°)
Lw = (A) ÷ cosine (30°)

For cast-in-place culverts:
Ltw = (N) (S) + (N + 1) (U)

For precast culverts:
Ltw = (N) (2U + S) + (N − 1) (0.5')

Total wingwall area (two wings ~ SF) = (Hw + 0.333') (Lw)

Hw = Height of wingwall
SL:1 = Side slope ratio (horizontal:1 vertical)
Lw = Length of wingwall
Ltw = Culvert toewall length
N = Number of culvert spans

See applicable box culvert standard sheet for H, S, T, and U values.

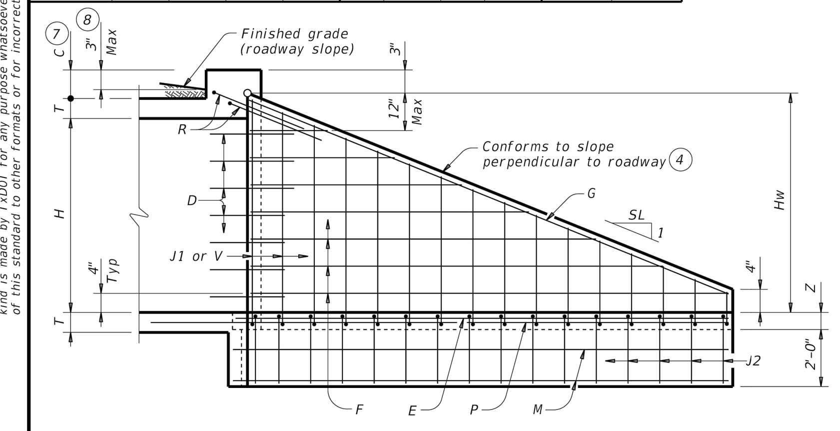

INSIDE ELEVATION

(Showing reinforcing. Culvert and culvert toewall reinforcing not shown for clarity.)

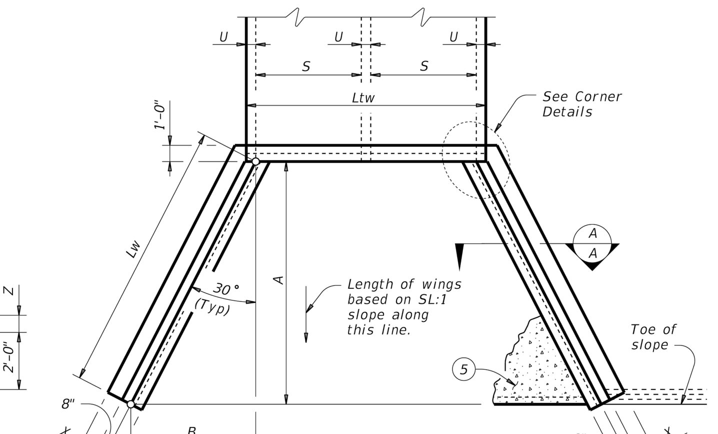

PLAN

(Showing dimensions.)

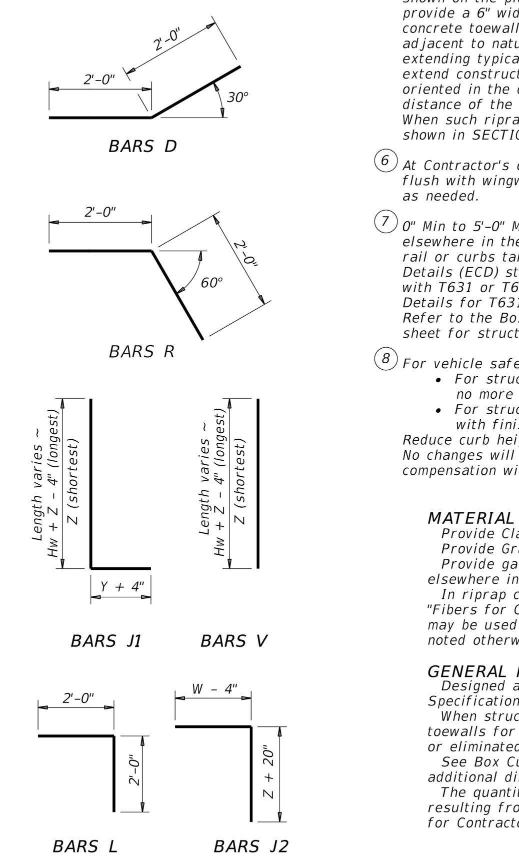

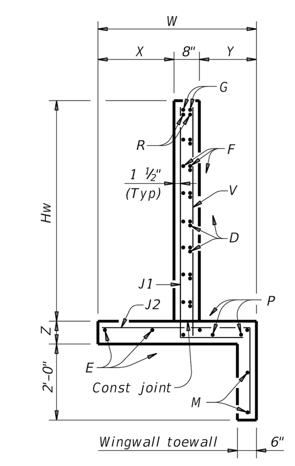

SECTION A-A

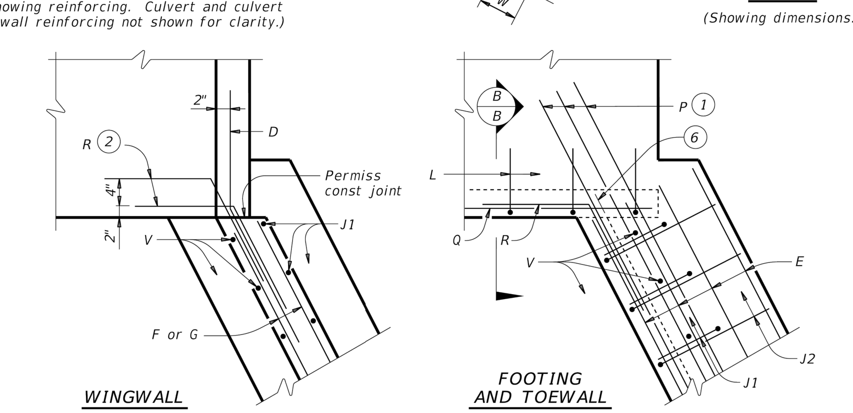

CORNER DETAILS

(Culvert and culvert toewall reinforcing not shown for clarity.)

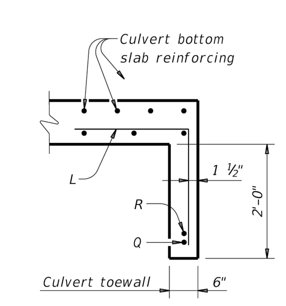

SECTION B-B (5)

(1) Extend Bars P 3'-0" minimum into bottom slab of box culvert.

(2) Adjust as necessary to maintain 1 1#2" clear cover and 4" minimum between bars.

(3) Quantities shown are based on an average wing height for two wings (one structure end). To determine total quantities for two wings, multiply the tabulated values by Lw.

(4) Recommended values of side slope are: 2:1, 3:1, 4:1, and 6:1.

(5) When shown elsewhere on the plans, construct 5" deep concrete riprap. Payment for riprap is as required by Item 432, "Riprap". Unless otherwise shown on the plans or directed by the Engineer, provide a 6" wide by 1'-6" deep reinforced concrete toewall along all edges of the riprap adjacent to natural ground; reinforce the toewall by extending typical riprap reinforcing into the toewall; and extend construction joints or grooved joints oriented in the direction of flow across the full distance of the riprap at intervals of approximately 20'. When such riprap is provided, the culvert toewall shown in SECTION B-B will not be required.

(6) At Contractor's option, culvert toewall may be ended flush with wingwall toewall. Adjust reinforcing as needed.

(7) 0" Min to 5'-0" Max. Estimated curb heights are shown elsewhere in the plans. For structures with pedestrian rail or curbs taller than 1'-0, refer to the Extended Curb Details (ECD) standard sheet. For structures with T631 or T631LS bridge rail, refer to the Mounting Details for T631 & T631LS Rails (T631-CM) standard sheet. Refer to the Box Culvert Rail Mounting Details (RAC) standard sheet for structures with bridge rail other than T631 or T631LS.

(8) For vehicle safety, the following requirements must be met:
- For structures without bridge rail, construct curbs no more than 3" above finished grade.
- For structures with bridge rail, construct curbs flush with finished grade.

Reduce curb heights, if necessary, to meet the above requirements. No changes will be made in quantities and no additional compensation will be allowed for this work.

MATERIAL NOTES:
Provide Class C concrete (f'c=3,600 psi).
Provide Grade 60 reinforcing steel.
Provide galvanized reinforcing steel if required elsewhere in the plans.
In riprap concrete synthetic fibers listed on the "Fibers for Concrete" Material Producer List (MPL) may be used in lieu of steel reinforcing unless noted otherwise.

GENERAL NOTES:
Designed according to AASHTO LRFD Bridge Design Specifications.
When structure is founded on solid rock, depth of toewalls for culverts and wingwalls may be reduced or eliminated as directed by the Engineer.
See Box Culvert Supplement (BCS) standard sheet for additional dimensions and information.
The quantities for concrete and reinforcing steel resulting from the formulas given on this sheet are for Contractor's information only.

Cover dimensions are clear dimensions, unless noted otherwise. Reinforcing dimensions are out-to-out of bars.

Texas Department of Transportation | Bridge Division Standard

CONCRETE WINGWALLS WITH FLARED WINGS FOR 0° SKEW BOX CULVERTS

FW-0

FILE: fw-0stde-20.dgn	DN: GAF	CK: CAT	DW: TxDOT	CK: TxDOT
©TxDOT February 2020	CONT	SECT	JOB	HIGHWAY
REVISIONS	DIST	COUNTY		SHEET NO.

DATE:
FILE:

DISCLAIMER: The use of this standard is governed by the "Texas Engineering Practice Act". No warranty of any kind is made by TxDOT for any purpose whatsoever. TxDOT assumes no responsibility for the conversion of this standard to other formats or for incorrect results or damages resulting from its use.

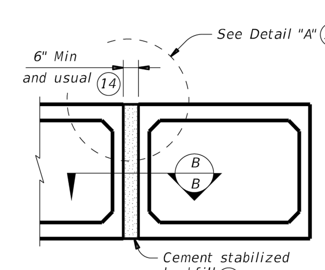

MULTIPLE UNIT PLACEMENT

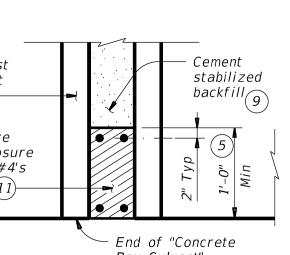

SECTION B-B

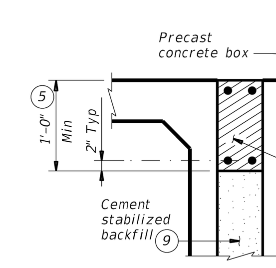

DETAIL "A" (13)

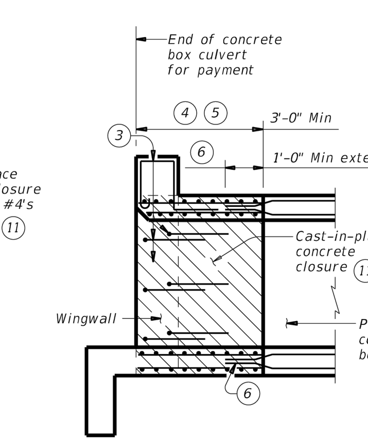

WINGWALL CONNECTION

(Also applies to safety end treatment.)

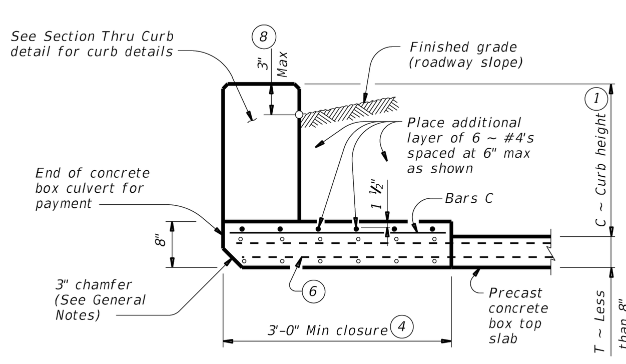

SECTION THRU TOP SLABS LESS THAN 8"

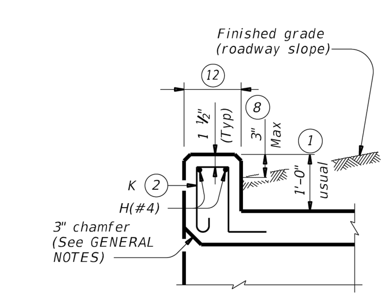

SECTION THRU CURB

QUANTITIES PER FOOT OF CURB (10)	
Reinforcing Steel	4.12 Lb
Concrete	0.037 CY

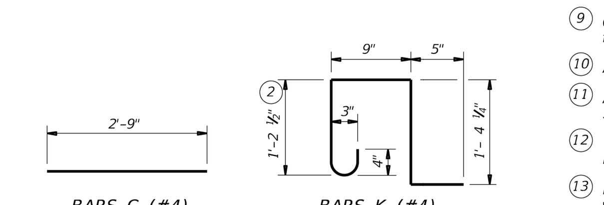

BARS C (#4)
(Spa = 1'-0" Max)

BARS K (#4)
(Spa = 1'-0" Max)
(Length = 4'-2")

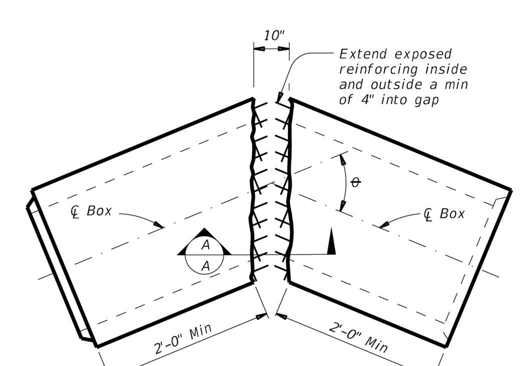

ANGLE DETAIL

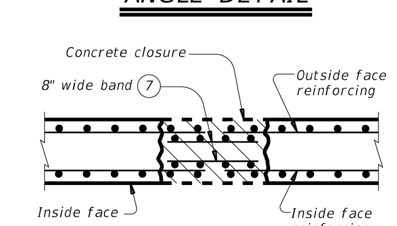

SECTION A-A

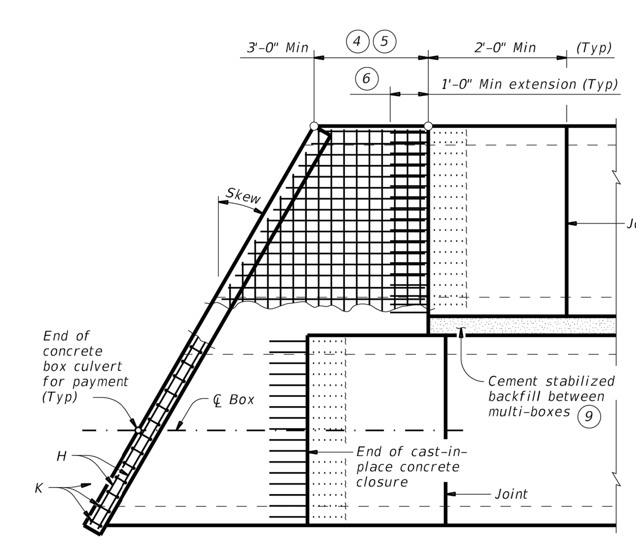

PLAN OF SKEWED ENDS

(Showing multi-box placement.)

(1) 0" Min to 5'-0" Max. Estimated curb heights are shown elsewhere in the plans. For structures with pedestrian rail, bicycle rail, or curbs taller than 1'-0, refer to the Extended Curb Details (ECD) standard sheet. For structures with T631 or T631LS bridge rail, refer to the Mounting Details for T631 & T631LS Rails (T631-CM) standard sheet. Refer to the Box Culvert Rail Mounting Details (RAC) standard sheet for structures with bridge rail other than T631 or T631LS.

(2) For curbs less than 1'-0" high, tilt Bars K or reduce bar height as necessary to maintain cover. For curbs less than 3" high, Bars K may be omitted.

(3) Extend curb, wingwall, or safety end treatment reinforcing into concrete closure. Bend or trim, as necessary, any reinforcing that does not fit into closure area.

(4) Provide a 3'-0" Min cast-in-place concrete closure. Break back boxes in the field or cast boxes short. Provide bands of reinforcing in the closure that are the same size and spacing as in the precast box section. Provide #4 longitudinal reinforcement spaced at 12 inches Max within the closure. Except where shown otherwise, construct the cast-in-place closure flush with the inside and outside faces of the precast box section.

(5) For multiple unit placements, adjust the length of the closure for the interior walls as necessary. Provide a 3'-0" Min cast-in-place closure in the top slab, bottom slab, and exterior wall. See Section B-B detail when interior walls are cast full length.

(6) Extend precast box reinforcing a minimum of 1'-0" into concrete closure (Typ).

(7) Place bands of reinforcing matching the inside and outside face reinforcing in the gaps of the top and bottom slabs. Place a band matching the outside face reinforcing of the wall in the gaps of the walls (placed in the outside face only). Tack weld the bands to the exposed reinforcing at each point of contact.

(8) For vehicle safety, the following requirements must be met:
- For structures without bridge rail, construct curbs no more than 3" above finished grade.
- For structures with bridge rail, construct curbs flush with finished grade.

Reduce curb heights, if necessary, to meet the above requirements. No changes will be made in quantities and no additional compensation will be allowed for this work.

(9) Cement stabilized backfill between boxes is considered part of the box culvert for payment.

(10) All curb concrete and reinforcing is considered part of the box culvert for payment.

(11) Any additional concrete and reinforcing required for the closures will be considered subsidiary to the box culvert for payment.

(12) 1'-0" typical. 2'-3" when the Box Culvert Rail Mounting Details (RAC) standard sheet is referred to elsewhere in the plans.

(13) For multiple unit placement with overlay, with 1 to 2 course surface treatment, or with the top slab as the final riding surface, provide wall closure as shown in Detail "A".

(14) This dimension may be increased with approval of the Engineer to allow the precast boxes to be tunneled or jacked in accordance with Item 476, "Jacking, Boring, or Tunneling Pipe or Box". No payment will be made for any additional material in the gap between adjacent boxes.

MATERIAL NOTES:
Provide Grade 60 reinforcing steel.
Provide ASTM A1064 welded wire reinforcement.
Provide Class C concrete (f'c = 3,600 psi) for the closures.
Provide cement stabilized backfill meeting the requirements of Item 400, "Excavation and Backfill for Structures."
Any additional concrete required for the closures will be considered subsidiary to the box culvert.

GENERAL NOTES:
Designed according to AASHTO LRFD Bridge Design Specifications.
Refer to the Single Box Culverts Precast (SCP) standard sheets for details and notes not shown.
Chamfer the bottom edge of the top slab closure 3 inches at culvert closure ends.

Cover dimensions are clear dimensions, unless noted otherwise. Reinforcing bars dimensions are out-to-out of bars.

HL93 LOADING

Texas Department of Transportation | Bridge Division Standard

BOX CULVERTS PRECAST MISCELLANEOUS DETAILS

SCP-MD

FILE: scpmdsts-20.dgn	DN: GAF	CK: LMW	DW: BWH/TxDOT	CK: GAF
©TxDOT February 2020	CONT	SECT	JOB	HIGHWAY
REVISIONS	DIST	COUNTY		SHEET NO.

DATE:
FILE:

NO.	REVISION	BY	DATE

811 Know what's below. Call before you dig.

HRGreen DEVELOPMENT TX

5508 HIGHWAY 290 WEST
SUITE 150
AUSTIN, TX 78735
512.872.6696
HRGREEN.COM

TBPE NO: 16384
TBPLS NO: 10194101

STATE OF TEXAS
CHRISTINE N. CAMPBELL
142536
LICENSED PROFESSIONAL ENGINEER

07/03/2025

DRAINAGE DETAILS

PARKSIDE ON THE RIVER
SECTIONS 11, 12A & 15A
CONSTRUCTION PLANS
GEORGETOWN, WILLIAMSON, TEXAS

DESIGNED BY: CC
DRAWN BY: MM
CHECKED BY: SN
APPROVED BY:

SHEET 113 OF 141

2025-XX-CON

Plot Style: LandDev Global.ctb
Template: LDC_C3D2022.DWT
P:\Blake Magee\Parkside Sections 11-15 & WON 5\Section 11, 12A & 15A\03_ACAD\Plans\sh2403522 DTLS.dwg, DRAINAGE DETAILS 2, July 18, 2025, 12:24 PM, makai.muhammad

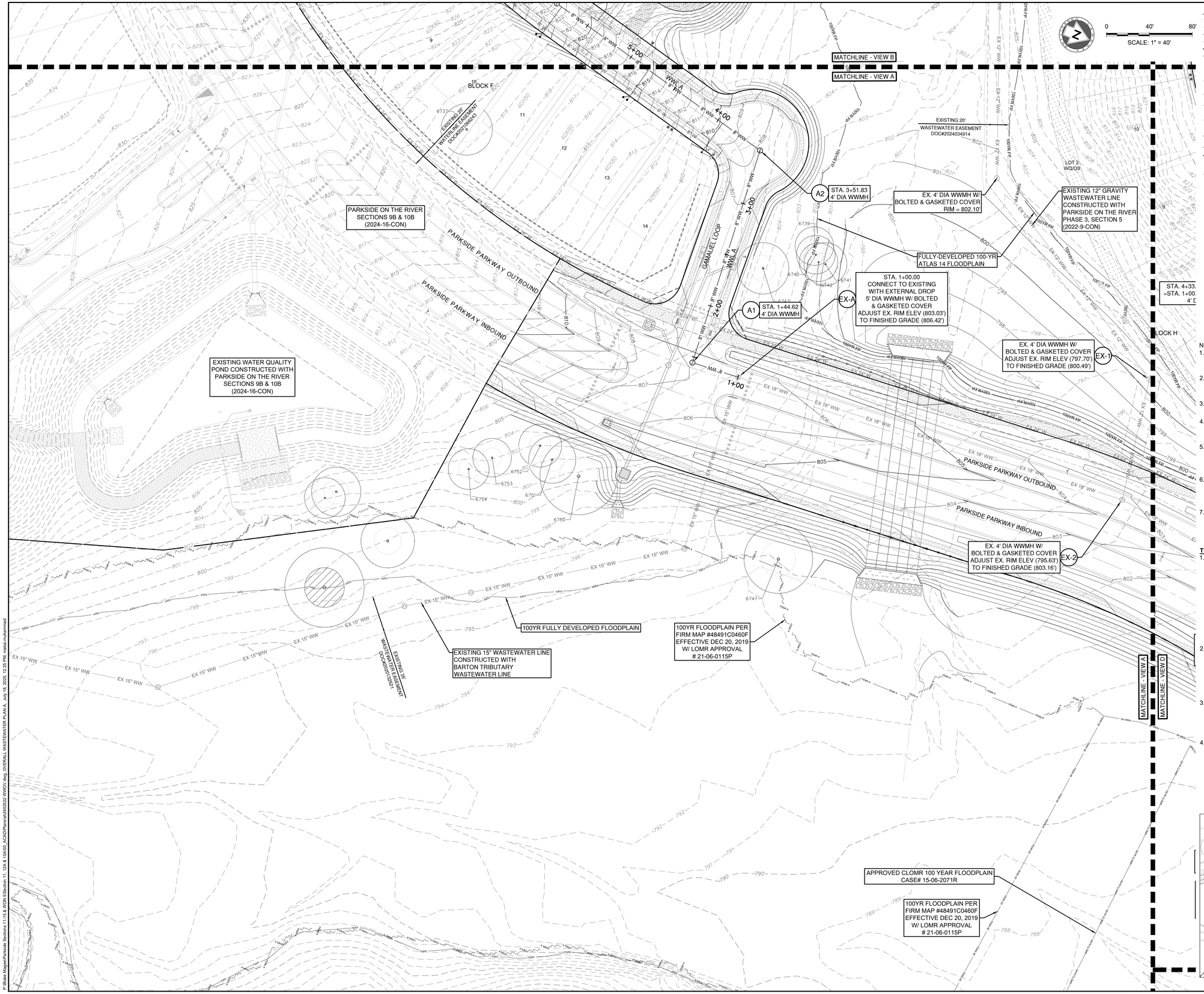

LEGEND

- EXISTING MINOR CONTOUR
- EXISTING MAJOR CONTOUR
- PROPOSED MINOR CONTOUR
- PROPOSED MAJOR CONTOUR
- BOUNDARY
- EASEMENT
- FEMA FLOODWAY PER FIRM# 48491C0460F & LOMR# 21-06-0115P
- FEMA AE — 100YR ATLAS 14 FEMA ZONE AE FLOODPLAIN PER FIRM# 48491C0460F & LOMR# 21-06-0115P
- FEMA A — 100YR FEMA ZONE A FLOODPLAIN PER FIRM MAP# 48491C0460F
- 100YR CLOMR — 100YR CLOMR FLOODPLAIN CASE# 15-06-2071R
- FDFP — 100YR ATLAS 14 FULLY DEVELOPED FLOODPLAIN (STANTEC DRAINAGE STUDY, SHERVIN NOOSHIN, 3/25/19) APPROVED WITH PP# 2019-5-PP
- OHWM — ORDINARY HIGH WATER MARK PER ADAMS ENVIRONMENTAL
- 2-4" SCH 40 PVC SLEEVE
- 8" WW — PROPOSED WASTEWATER LINE
- SD — PROPOSED STORM LINE
- 8" W — PROPOSED WATER LINE
- FIRE HYDRANT
- WATER VALVE
- STORM SEWER MAHNOLE
- WW — WASTEWATER MANHOLE
- CURB INLET
- PROPOSED SINGLE WASTEWATER SERVICE
- PROPOSED DOUBLE WASTEWATER SERVICE
- PROPOSED SINGLE WATER SERVICE
- PROPOSED DOUBLE WATER SERVICE
- TREES TO REMAIN HERITAGE
- TREES TO REMAIN NON HERITAGE

NOTES:

1. REFER TO THE WATER AND WASTEWATER DETAIL SHEET(S) FOR TYPE S AND TYPE D SERVICE CONNECTIONS.
2. UTILITIES ON THIS SITE TO BE BUILT PER THE APPROVED UTILITY ASSIGNMENT SHOWN ON THE WATER AND WASTEWATER DETAIL SHEET.
3. PORTIONS OF THIS SITE LIE WITHIN THE FEMA 100-YR FLOODPLAIN.
4. ALL PROPOSED GRAVITY WASTEWATER PIPES TO BE SDR-26 UNLESS OTHERWISE SPECIFIED ON THE PLANS.
5. UNLESS OTHERWISE NOTED, CONTRACTOR TO ENSURE WW SERVICES ARE SET TO MAXIMUM DEPTH (PER DETAIL WW13) FOR ALL LOTS IN ORDER TO PROVIDE SUFFICIENT DEPTH TO CONNECT SERVICE.
6. ALL MANHOLES TO BE COATED PER CITY OF GEORGETOWN SPECIFICATIONS. EXISTING MANHOLES WITH PROPOSED CONNECTIONS TO BE COATED.
7. IF THE HOME BUILDER CANNOT ACHIEVE THE MINIMUM FINISHED FLOOR ELEVATIONS SPECIFIED, THEN A WASTEWATER GRINDER PUMP SYSTEM MAY BE NEEDED TO CONNECT TO THE WASTEWATER MAIN.

TRENCH SAFETY NOTES:

1. IN ACCORDANCE WITH THE LAWS OF THE STATE OF TEXAS AND THE U.S. OCCUPATIONAL SAFETY AND HEALTH ADMINISTRATION REGULATIONS, ALL TRENCHES OVER 5 FEET IN DEPTH IN EITHER HARD AND COMPACT OR SOFT AND UNSTABLE SOIL SHALL BE SLOPED, SHORED, SHEETED, BRACED OR OTHERWISE SUPPORTED. FURTHERMORE, ALL TRENCHES LESS THAN 5 FEET IN DEPTH SHALL ALSO BE EFFECTIVELY PROTECTED WHEN HAZARDOUS GROUND MOVEMENT MAY BE EXPECTED. TRENCH SAFETY SYSTEMS TO BE UTILIZED FOR THIS PROJECT WILL BE PROVIDE BY THE CONTRACTOR.
2. IN ACCORDANCE WITH THE U.S. OCCUPATIONAL SAFETY AND HEALTH ADMINISTRATION REGULATIONS,WHEN PERSONS ARE IN TRENCHES 4-FEET DEEP OR MORE, ADEQUATE MEANS OF EXIT, SUCH AS A LADDER OR STEPS, MUST BE PROVIDED AND LOCATED SO AS TO REQUIRE NO MORE THAN 25 FEET OF LATERAL TRAVEL.
3. CONSTRUCTION SHALL NOT PROCEED UNTIL APPROPRIATE TRENCH SAFETY SYSTEM DETAILS, AS DESIGNED BY A PROFESSIONAL ENGINEER, ARE RETAINED AND COPIES SUBMITTED TO THE CITY OF GEORGETOWN.
4. DEEP EXCAVATIONS: ON EXCAVATIONS EXCEEDING 20 FEET IN DEPTH, TWO OR MORE MEANS OF EGRESS FROM THE EXCAVATION SHALL BE PROVIDED. THE CONTRACTOR SHALL CONSULT WITH A REGISTERED ENGINEER, EXPERIENCED IN TRENCH SAFETY SYSTEMS, REGARDING SPECIFIC MEANS AND METHODS EMPLOYED. CONTRACTOR SHALL PROVIDE A TRENCH SAFETY PLAN SEALED BY A REGISTERED PROFESSIONAL ENGINEER AS REQUIRED BY THE CITY OF GEORGETOWN.

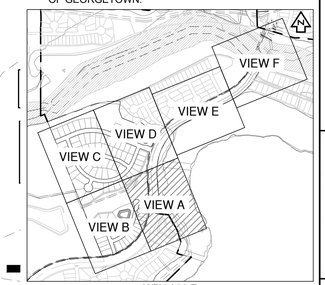

KEY MAP (N.T.S.)

NO	REVISION	BY	DATE

811 Know what's below. Call before you dig.

HRGreen DEVELOPMENT TX
5508 HIGHWAY 290 WEST
SUITE 150
AUSTIN, TX 78735
512.872.6696
HRGREEN.COM
TBPE NO: 16384
TBPLS NO: 10194101

STATE OF TEXAS — CHRISTINE N. CAMPBELL — 142536 — LICENSED PROFESSIONAL ENGINEER

07/15/2025

OVERALL WASTEWATER PLAN A

PARKSIDE ON THE RIVER SECTIONS 11, 12A & 15A CONSTRUCTION PLANS

GEORGETOWN, WILLIAMSON, TEXAS

DESIGNED BY: CC
DRAWN BY: MM
CHECKED BY: SN
APPROVED BY:

SHEET 114 OF 141

2025-XX-CON

P:\Blake Magee\Parkside Sections 11-15 & WCN ESection 11, 12A & 14A\03_ACAD\Planset\240522 WWOV.dwg OVERALL WASTEWATER PLAN A July 16, 2025, 12:25 PM, mkleinmahrmad

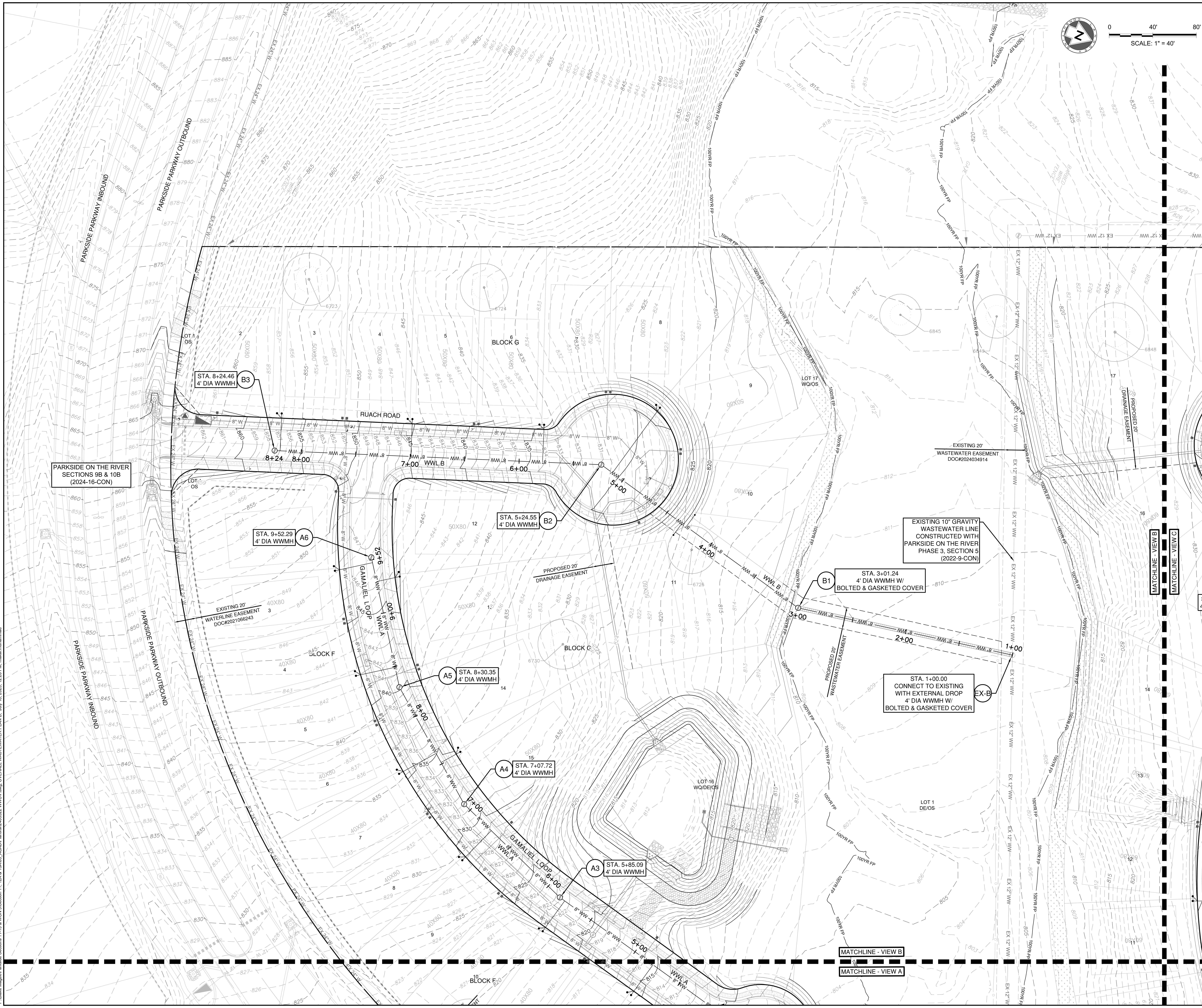

LEGEND

834	EXISTING MINOR CONTOUR
835	EXISTING MAJOR CONTOUR
834	PROPOSED MINOR CONTOUR
835	PROPOSED MAJOR CONTOUR
	BOUNDARY
	EASEMENT
	FEMA FLOODWAY PER FIRM# 48491C0460F & LOMR# 21-06-0115P
FEMA AE	100YR ATLAS 14 FEMA ZONE AE FLOODPLAIN PER FIRM# 48491C0460F & LOMR# 21-06-0115P
FEMA A	100YR FEMA ZONE A FLOODPLAIN PER FIRM MAP# 48491C0460F
100YR CLOMR	100YR CLOMR FLOODPLAIN CASE# 15-06-2071R
FDFP	100YR ATLAS 14 FULLY DEVELOPED FLOODPLAIN (STANTEC DRAINAGE STUDY, SHERVIN NOOSHIN, 3/25/19) APPROVED WITH PP# 2019-5-PP
OHWM	ORDINARY HIGH WATER MARK PER ADAMS ENVIRONMENTAL
	2-4" SCH 40 PVC SLEEVE
8" WW	PROPOSED WASTEWATER LINE
SD	PROPOSED STORM LINE
8" W	PROPOSED WATER LINE
	FIRE HYDRANT
	WATER VALVE
SD	STORM SEWER MAHNOLE
WW	WASTEWATER MANHOLE
	CURB INLET
	PROPOSED SINGLE WASTEWATER SERVICE
	PROPOSED DOUBLE WASTEWATER SERVICE
	PROPOSED SINGLE WATER SERVICE
	PROPOSED DOUBLE WATER SERVICE
	TREES TO REMAIN HERITAGE
	TREES TO REMAIN NON HERITAGE

NOTES:
1. REFER TO THE WATER AND WASTEWATER DETAIL SHEET(S) FOR TYPE S AND TYPE D SERVICE CONNECTIONS.
2. UTILITIES ON THIS SITE TO BE BUILT PER THE APPROVED UTILITY ASSIGNMENT SHOWN ON THE WATER AND WASTEWATER DETAIL SHEET.
3. PORTIONS OF THIS SITE LIE WITHIN THE FEMA 100-YR FLOODPLAIN.
4. ALL PROPOSED GRAVITY WASTEWATER PIPES TO BE SDR-26 UNLESS OTHERWISE SPECIFIED ON THE PLANS.
5. UNLESS OTHERWISE NOTED, CONTRACTOR TO ENSURE WW SERVICES ARE SET TO MAXIMUM DEPTH (PER DETAIL WW13) FOR ALL LOTS IN ORDER TO PROVIDE SUFFICIENT DEPTH TO CONNECT SERVICE.
6. ALL MANHOLES TO BE COATED PER CITY OF GEORGETOWN SPECIFICATIONS. EXISTING MANHOLES WITH PROPOSED CONNECTIONS TO BE COATED.
7. IF THE HOME BUILDER CANNOT ACHIEVE THE MINIMUM FINISHED FLOOR ELEVATIONS SPECIFIED, THEN A WASTEWATER GRINDER PUMP SYSTEM MAY BE NEEDED TO CONNECT TO THE WASTEWATER MAIN.

TRENCH SAFETY NOTES:
1. IN ACCORDANCE WITH THE LAWS OF THE STATE OF TEXAS AND THE U.S. OCCUPATIONAL SAFETY AND HEALTH ADMINISTRATION REGULATIONS, ALL TRENCHES OVER 5 FEET IN DEPTH IN EITHER HARD AND COMPACT OR SOFT AND UNSTABLE SOIL SHALL BE SLOPED, SHORED, SHEETED, BRACED OR OTHERWISE SUPPORTED. FURTHERMORE, ALL TRENCHES LESS THAN 5 FEET IN DEPTH SHALL ALSO BE EFFECTIVELY PROTECTED WHEN HAZARDOUS GROUND MOVEMENT MAY BE EXPECTED. TRENCH SAFETY SYSTEMS TO BE UTILIZED FOR THIS PROJECT WILL BE PROVIDE BY THE CONTRACTOR.
2. IN ACCORDANCE WITH THE U.S. OCCUPATIONAL SAFETY AND HEALTH ADMINISTRATION REGULATIONS,WHEN PERSONS ARE IN TRENCHES 4-FEET DEEP OR MORE, ADEQUATE MEANS OF EXIT, SUCH AS A LADDER OR STEPS, MUST BE PROVIDED AND LOCATED SO AS TO REQUIRE NO MORE THAN 25 FEET OF LATERAL TRAVEL.
3. CONSTRUCTION SHALL NOT PROCEED UNTIL APPROPRIATE TRENCH SAFETY SYSTEM DETAILS, AS DESIGNED BY A PROFESSIONAL ENGINEER, ARE RETAINED AND COPIES SUBMITTED TO THE CITY OF GEORGETOWN.
4. DEEP EXCAVATIONS: ON EXCAVATIONS EXCEEDING 20 FEET IN DEPTH, TWO OR MORE MEANS OF EGRESS FROM THE EXCAVATION SHALL BE PROVIDED. THE CONTRACTOR SHALL CONSULT WITH A REGISTERED ENGINEER, EXPERIENCED IN TRENCH SAFETY SYSTEMS, REGARDING SPECIFIC MEANS AND METHODS EMPLOYED. CONTRACTOR SHALL PROVIDE A TRENCH SAFETY PLAN SEALED BY A REGISTERED PROFESSIONAL ENGINEER AS REQUIRED BY THE CITY OF GEORGETOWN.

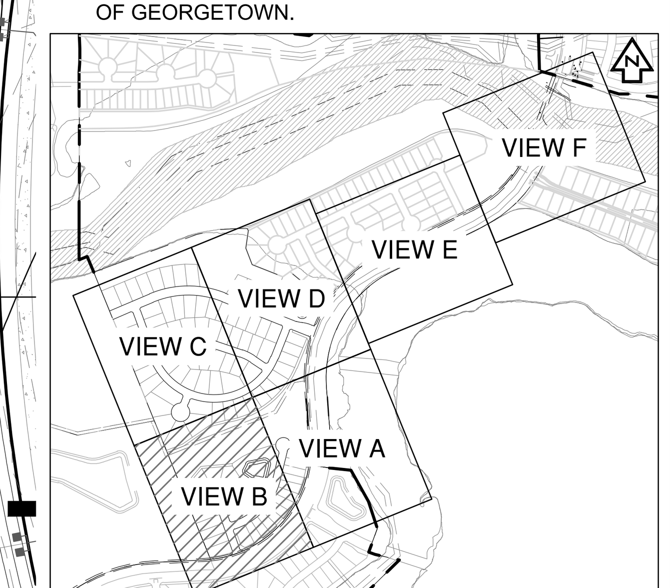

KEY MAP
(N.T.S.)

NO.	REVISION	BY	DATE

811 Know what's below. Call before you dig.

5508 HIGHWAY 290 WEST
SUITE 150
AUSTIN, TX 78735
512.872.6696
HRGREEN.COM
TBPE NO: 16384
TBPLS NO: 10194101
HRGreen® DEVELOPMENT TX

STATE OF TEXAS
CHRISTINE N. CAMPBELL
142536
LICENSED PROFESSIONAL ENGINEER
07/03/2025

OVERALL WASTEWATER PLAN B

PARKSIDE ON THE RIVER SECTIONS 11, 12A & 15A CONSTRUCTION PLANS GEORGETOWN, WILLIAMSON, TEXAS

DESIGNED BY: CC
DRAWN BY: MM
CHECKED BY: SN
APPROVED BY:

SHEET 115 OF 141

2025-XX-CON

P:\Blake Magee\Parkside Sections 11-15 & WON 5\Section 11, 12A & 15A\03_ACAD\Plans\sh2403522 WWOV.dwg, OVERALL WASTEWATER PLAN B, July 18, 2025, 12:26 PM, makai.muhammad

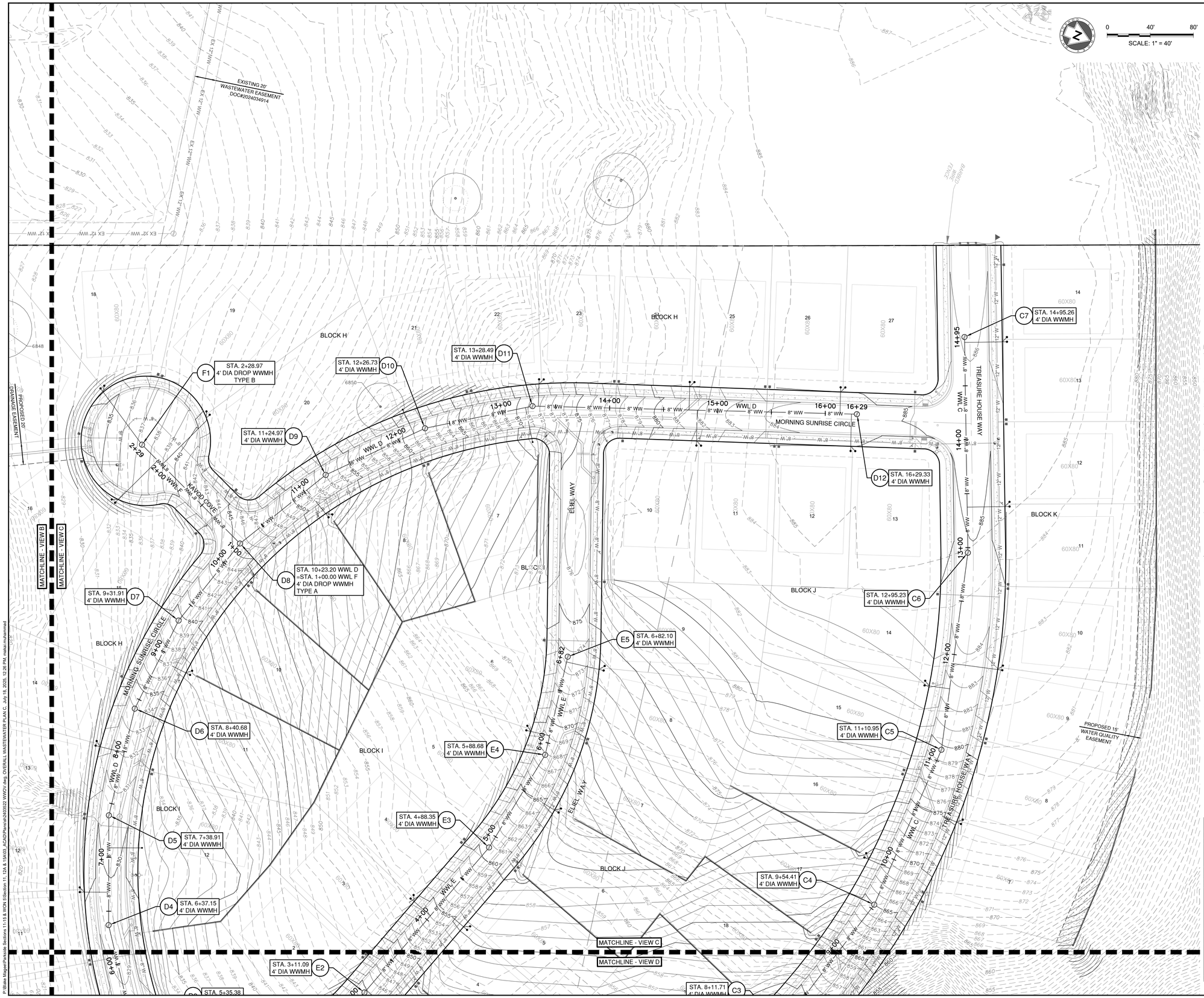

SCALE: 1" = 40'

LEGEND

- EXISTING MINOR CONTOUR
- EXISTING MAJOR CONTOUR
- PROPOSED MINOR CONTOUR
- PROPOSED MAJOR CONTOUR
- BOUNDARY
- EASEMENT
- FEMA FLOODWAY PER FIRM# 48491C0460F & LOMR# 21-06-0115P
- FEMA AE — 100YR ATLAS 14 FEMA ZONE AE FLOODPLAIN PER FIRM# 48491C0460F & LOMR# 21-06-0115P
- FEMA A — 100YR FEMA ZONE A FLOODPLAIN PER FIRM MAP# 48491C0460F
- 100YR CLOMR — 100YR CLOMR FLOODPLAIN CASE# 15-06-2071R
- FDFP — 100YR ATLAS 14 FULLY DEVELOPED FLOODPLAIN (STANTEC DRAINAGE STUDY, SHERVIN NOOSHIN, 3/25/19) APPROVED WITH PP# 2019-5-PP
- OHWM — ORDINARY HIGH WATER MARK PER ADAMS ENVIRONMENTAL
- 2-4" SCH 40 PVC SLEEVE
- 8" WW — PROPOSED WASTEWATER LINE
- SD — PROPOSED STORM LINE
- 8" W — PROPOSED WATER LINE
- FIRE HYDRANT
- WATER VALVE
- STORM SEWER MAHNOLE
- WW — WASTEWATER MANHOLE
- CURB INLET
- PROPOSED SINGLE WASTEWATER SERVICE
- PROPOSED DOUBLE WASTEWATER SERVICE
- PROPOSED SINGLE WATER SERVICE
- PROPOSED DOUBLE WATER SERVICE
- TREES TO REMAIN HERITAGE
- TREES TO REMAIN NON HERITAGE

NOTES:

1. REFER TO THE WATER AND WASTEWATER DETAIL SHEET(S) FOR TYPE S AND TYPE D SERVICE CONNECTIONS.
2. UTILITIES ON THIS SITE TO BE BUILT PER THE APPROVED UTILITY ASSIGNMENT SHOWN ON THE WATER AND WASTEWATER DETAIL SHEET.
3. PORTIONS OF THIS SITE LIE WITHIN THE FEMA 100-YR FLOODPLAIN.
4. ALL PROPOSED GRAVITY WASTEWATER PIPES TO BE SDR-26 UNLESS OTHERWISE SPECIFIED ON THE PLANS.
5. UNLESS OTHERWISE NOTED, CONTRACTOR TO ENSURE WW SERVICES ARE SET TO MAXIMUM DEPTH (PER DETAIL WW13) FOR ALL LOTS IN ORDER TO PROVIDE SUFFICIENT DEPTH TO CONNECT SERVICE.
6. ALL MANHOLES TO BE COATED PER CITY OF GEORGETOWN SPECIFICATIONS. EXISTING MANHOLES WITH PROPOSED CONNECTIONS TO BE COATED.
7. IF THE HOME BUILDER CANNOT ACHIEVE THE MINIMUM FINISHED FLOOR ELEVATIONS SPECIFIED, THEN A WASTEWATER GRINDER PUMP SYSTEM MAY BE NEEDED TO CONNECT TO THE WASTEWATER MAIN.

TRENCH SAFETY NOTES:

1. IN ACCORDANCE WITH THE LAWS OF THE STATE OF TEXAS AND THE U.S. OCCUPATIONAL SAFETY AND HEALTH ADMINISTRATION REGULATIONS, ALL TRENCHES OVER 5 FEET IN DEPTH IN EITHER HARD AND COMPACT OR SOFT AND UNSTABLE SOIL SHALL BE SLOPED, SHORED, SHEETED, BRACED OR OTHERWISE SUPPORTED. FURTHERMORE, ALL TRENCHES LESS THAN 5 FEET IN DEPTH SHALL ALSO BE EFFECTIVELY PROTECTED WHEN HAZARDOUS GROUND MOVEMENT MAY BE EXPECTED. TRENCH SAFETY SYSTEMS TO BE UTILIZED FOR THIS PROJECT WILL BE PROVIDE BY THE CONTRACTOR.
2. IN ACCORDANCE WITH THE U.S. OCCUPATIONAL SAFETY AND HEALTH ADMINISTRATION REGULATIONS,WHEN PERSONS ARE IN TRENCHES 4-FEET DEEP OR MORE, ADEQUATE MEANS OF EXIT, SUCH AS A LADDER OR STEPS, MUST BE PROVIDED AND LOCATED SO AS TO REQUIRE NO MORE THAN 25 FEET OF LATERAL TRAVEL.
3. CONSTRUCTION SHALL NOT PROCEED UNTIL APPROPRIATE TRENCH SAFETY SYSTEM DETAILS, AS DESIGNED BY A PROFESSIONAL ENGINEER, ARE RETAINED AND COPIES SUBMITTED TO THE CITY OF GEORGETOWN.
4. DEEP EXCAVATIONS: ON EXCAVATIONS EXCEEDING 20 FEET IN DEPTH, TWO OR MORE MEANS OF EGRESS FROM THE EXCAVATION SHALL BE PROVIDED. THE CONTRACTOR SHALL CONSULT WITH A REGISTERED ENGINEER, EXPERIENCED IN TRENCH SAFETY SYSTEMS, REGARDING SPECIFIC MEANS AND METHODS EMPLOYED. CONTRACTOR SHALL PROVIDE A TRENCH SAFETY PLAN SEALED BY A REGISTERED PROFESSIONAL ENGINEER AS REQUIRED BY THE CITY OF GEORGETOWN.

NO	REVISION	BY	DATE

811 Know what's below. Call before you dig.

5508 HIGHWAY 290 WEST
SUITE 150
AUSTIN, TX 78735
512.872.6696
HRGREEN.COM
TBPE NO: 16384
TBPLS NO: 10194101

HRGreen® DEVELOPMENT TX

STATE OF TEXAS
CHRISTINE N. CAMPBELL
142536
LICENSED PROFESSIONAL ENGINEER
07/05/2025

OVERALL WASTEWATER PLAN C

PARKSIDE ON THE RIVER SECTIONS 11, 12A & 15A CONSTRUCTION PLANS

GEORGETOWN, WILLIAMSON, TEXAS

DESIGNED BY: CC
DRAWN BY: MM
CHECKED BY: SN
APPROVED BY:

SHEET 116 OF 141

2025-XX-CON

P:\Blake Magee\Parkside Sections 11-15 & WGN EISection 11, 12A & 15A\03_ACAD\Planset\040523 WWOV.dwg, OVERALL WASTEWATER PLAN C, July 18, 2025, 12:26 PM, mstarr.mcdonnell

STA. 6+37.15
4' DIA WWMH
D4

STA. 3+11.09
4' DIA WWMH
E2

STA. 5+35.38
4' DIA WWMH
D3

STA. 2+28.50
4' DIA WWMH
E1

STA. 8+11.71
4' DIA WWMH
C3

STA. 4+33.62 WWL D
=STA. 1+00.00 WWL E
4' DIA WWMH
D2

STA. 3+39.35
4' DIA WWMH
D1

STA. 2+38.51
4' DIA DROP WWMH
TYPE A
C1

STA. 3+48.63 WWL C
=STA. 1+00.00 WWL D
4' DIA WWMH
C2

EX. 4' DIA WWMH W/
BOLTED & GASKETED COVER
ADJUST EX. RIM ELEV (794.65')
TO FINISHED GRADE (800.94')
EX-3

STA. 1+00.00
CONNECT TO EXISTING
4' DIA WWMH W/
BOLTED & GASKETED COVER
ADJUST EX. RIM ELEV (790.55')
TO FINISHED GRADE (799.45')
EX-C

EX. 4' DIA WWMH W/
BOLTED & GASKETED COVER
ADJUST EX. RIM ELEV (788.39')
TO FINISHED GRADE (796.61')
EX-4

APPROVED CLOMR
100 YEAR FLOODPLAIN
CASE# 15-06-2071R

100YR FLOODPLAIN PER
FIRM MAP #48491C0460F
EFFECTIVE DEC 20, 2019
W/ LOMR APPROVAL
21-06-0115P

100YR FULLY DEVELOPED FLOODPLAIN

100YR FLOODPLAIN PER
FIRM MAP #48491C0460F
EFFECTIVE DEC 20, 2019
W/ LOMR APPROVAL
21-06-0115P

FUTURE PARKSIDE
SECTION 12B

EXISTING 35'
WASTEWATER EASEMENT
DOC#2021095521

EXISTING 20'
WATERLINE EASEMENT
DOC#2021095243

PROPOSED 15'
WATER QUALITY
EASEMENT

MATCHLINE - VIEW A

MATCHLINE - VIEW C

MATCHLINE - VIEW D

MATCHLINE - VIEW E

BLOCK H

BLOCK J

BLOCK K

LOT 6
DE/OS

LOT 3
OS

LOT
WQ/DE/OS

TREASURE HOUSE WAY

MORNING SUNRISE CIRCLE

PARKSIDE PARKWAY OUTBOUND

PARKSIDE PARKWAY INBOUND

KADOSH WAY

WWL C

WWL D

WWL E

LEGEND

- EXISTING MINOR CONTOUR
- EXISTING MAJOR CONTOUR
- PROPOSED MINOR CONTOUR
- PROPOSED MAJOR CONTOUR
- BOUNDARY
- EASEMENT
- FEMA FLOODWAY PER FIRM# 48491C0460F & LOMR# 21-06-0115P
- FEMA AE — 100YR ATLAS 14 FEMA ZONE AE FLOODPLAIN PER FIRM# 48491C0460F & LOMR# 21-06-0115P
- FEMA A — 100YR FEMA ZONE A FLOODPLAIN PER FIRM MAP# 48491C0460F
- 100YR CLOMR — 100YR CLOMR FLOODPLAIN CASE# 15-06-2071R
- FDFP — 100YR ATLAS 14 FULLY DEVELOPED FLOODPLAIN (STANTEC DRAINAGE STUDY, SHERVIN NOOSHIN, 3/25/19) APPROVED WITH PP# 2019-5-PP
- OHWM — ORDINARY HIGH WATER MARK PER ADAMS ENVIRONMENTAL
- 2-4" SCH 40 PVC SLEEVE
- 8" WW — PROPOSED WASTEWATER LINE
- SD — PROPOSED STORM LINE
- 8" W — PROPOSED WATER LINE
- FIRE HYDRANT
- WATER VALVE
- SS — STORM SEWER MAHNOLE
- WW — WASTEWATER MANHOLE
- CURB INLET
- PROPOSED SINGLE WASTEWATER SERVICE
- PROPOSED DOUBLE WASTEWATER SERVICE
- PROPOSED SINGLE WATER SERVICE
- PROPOSED DOUBLE WATER SERVICE
- TREES TO REMAIN HERITAGE
- TREES TO REMAIN NON HERITAGE

SCALE: 1" = 40'

NOTES:

1. REFER TO THE WATER AND WASTEWATER DETAIL SHEET(S) FOR TYPE S AND TYPE D SERVICE CONNECTIONS.
2. UTILITIES ON THIS SITE TO BE BUILT PER THE APPROVED UTILITY ASSIGNMENT SHOWN ON THE WATER AND WASTEWATER DETAIL SHEET.
3. PORTIONS OF THIS SITE LIE WITHIN THE FEMA 100-YR FLOODPLAIN.
4. ALL PROPOSED GRAVITY WASTEWATER PIPES TO BE SDR-26 UNLESS OTHERWISE SPECIFIED ON THE PLANS.
5. UNLESS OTHERWISE NOTED, CONTRACTOR TO ENSURE WW SERVICES ARE SET TO MAXIMUM DEPTH (PER DETAIL WW13) FOR ALL LOTS IN ORDER TO PROVIDE SUFFICIENT DEPTH TO CONNECT SERVICE.
6. ALL MANHOLES TO BE COATED PER CITY OF GEORGETOWN SPECIFICATIONS. EXISTING MANHOLES WITH PROPOSED CONNECTIONS TO BE COATED.
7. IF THE HOME BUILDER CANNOT ACHIEVE THE MINIMUM FINISHED FLOOR ELEVATIONS SPECIFIED, THEN A WASTEWATER GRINDER PUMP SYSTEM MAY BE NEEDED TO CONNECT TO THE WASTEWATER MAIN.

TRENCH SAFETY NOTES:

1. IN ACCORDANCE WITH THE LAWS OF THE STATE OF TEXAS AND THE U.S. OCCUPATIONAL SAFETY AND HEALTH ADMINISTRATION REGULATIONS, ALL TRENCHES OVER 5 FEET IN DEPTH IN EITHER HARD AND COMPACT OR SOFT AND UNSTABLE SOIL SHALL BE SLOPED, SHORED, SHEETED, BRACED OR OTHERWISE SUPPORTED. FURTHERMORE, ALL TRENCHES LESS THAN 5 FEET IN DEPTH SHALL ALSO BE EFFECTIVELY PROTECTED WHEN HAZARDOUS GROUND MOVEMENT MAY BE EXPECTED. TRENCH SAFETY SYSTEMS TO BE UTILIZED FOR THIS PROJECT WILL BE PROVIDE BY THE CONTRACTOR.
2. IN ACCORDANCE WITH THE U.S. OCCUPATIONAL SAFETY AND HEALTH ADMINISTRATION REGULATIONS,WHEN PERSONS ARE IN TRENCHES 4-FEET DEEP OR MORE, ADEQUATE MEANS OF EXIT, SUCH AS A LADDER OR STEPS, MUST BE PROVIDED AND LOCATED SO AS TO REQUIRE NO MORE THAN 25 FEET OF LATERAL TRAVEL.
3. CONSTRUCTION SHALL NOT PROCEED UNTIL APPROPRIATE TRENCH SAFETY SYSTEM DETAILS, AS DESIGNED BY A PROFESSIONAL ENGINEER, ARE RETAINED AND COPIES SUBMITTED TO THE CITY OF GEORGETOWN.
4. DEEP EXCAVATIONS: ON EXCAVATIONS EXCEEDING 20 FEET IN DEPTH, TWO OR MORE MEANS OF EGRESS FROM THE EXCAVATION SHALL BE PROVIDED. THE CONTRACTOR SHALL CONSULT WITH A REGISTERED ENGINEER, EXPERIENCED IN TRENCH SAFETY SYSTEMS, REGARDING SPECIFIC MEANS AND METHODS EMPLOYED. CONTRACTOR SHALL PROVIDE A TRENCH SAFETY PLAN SEALED BY A REGISTERED PROFESSIONAL ENGINEER AS REQUIRED BY THE CITY OF GEORGETOWN.

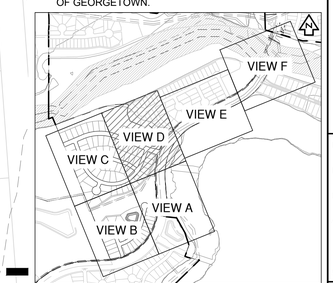

KEY MAP
(N.T.S.)

NO	REVISION	BY	DATE

811 Know what's below. Call before you dig.

HRGreen
DEVELOPMENT TX
5508 HIGHWAY 290 WEST
SUITE 150
AUSTIN, TX 78735
512.872.6696
HRGREEN.COM
TBPE NO: 16384
TBPLS NO: 10194101

STATE OF TEXAS
CHRISTINE N. CAMPBELL
142536
LICENSED PROFESSIONAL ENGINEER
07/15/2025

OVERALL WASTEWATER PLAN D

PARKSIDE ON THE RIVER SECTIONS 11, 12A & 15A CONSTRUCTION PLANS

GEORGETOWN, WILLIAMSON, TEXAS

DESIGNED BY: CC
DRAWN BY: MM
CHECKED BY: SN
APPROVED BY:

SHEET 117 OF 141

2025-XX-CON

P:\Ellen Magner\Parkside Sections 11-15 & WON 5\Section 11, 12A & 15A\03_ACAD\Parkside\240502 WWOV.dwg, OVERALL WASTEWATER PLAN D, July 16, 2025, 12:26 PM, melanie.mohammed

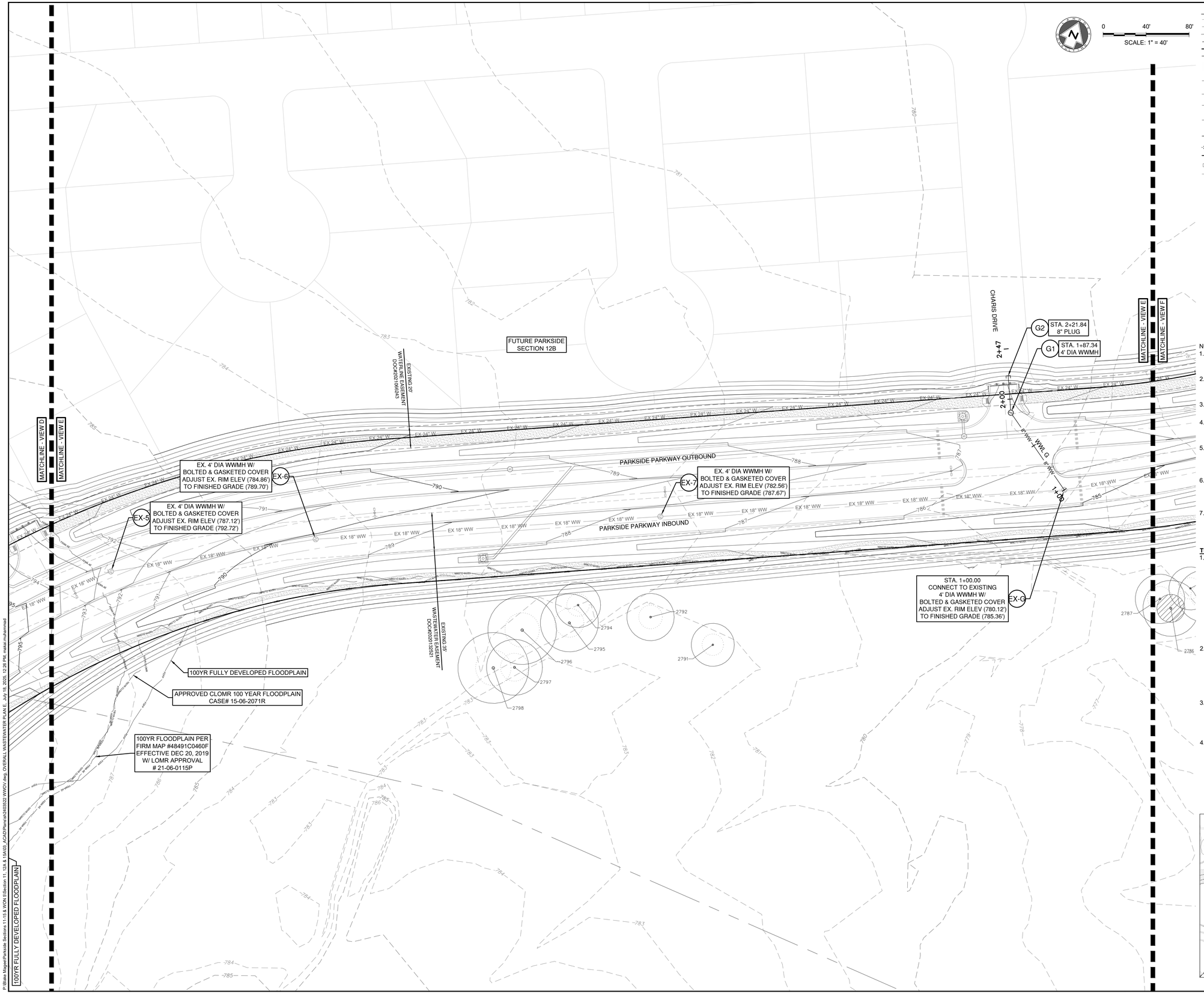

LEGEND

- EXISTING MINOR CONTOUR
- EXISTING MAJOR CONTOUR
- PROPOSED MINOR CONTOUR
- PROPOSED MAJOR CONTOUR
- BOUNDARY
- EASEMENT
- FEMA FLOODWAY PER FIRM# 48491C0460F & LOMR# 21-06-0115P
- FEMA AE — 100YR ATLAS 14 FEMA ZONE AE FLOODPLAIN PER FIRM# 48491C0460F & LOMR# 21-06-0115P
- FEMA A — 100YR FEMA ZONE A FLOODPLAIN PER FIRM MAP# 48491C0460F
- 100YR CLOMR — 100YR CLOMR FLOODPLAIN CASE# 15-06-2071R
- FDFP — 100YR ATLAS 14 FULLY DEVELOPED FLOODPLAIN (STANTEC DRAINAGE STUDY, SHERVIN NOOSHIN, 3/25/19) APPROVED WITH PP# 2019-5-PP
- OHWM — ORDINARY HIGH WATER MARK PER ADAMS ENVIRONMENTAL
- 2-4" SCH 40 PVC SLEEVE
- 8" WW — PROPOSED WASTEWATER LINE
- SD — PROPOSED STORM LINE
- 8" W — PROPOSED WATER LINE
- FIRE HYDRANT
- WATER VALVE
- SD — STORM SEWER MAHNOLE
- WW — WASTEWATER MANHOLE
- CURB INLET
- PROPOSED SINGLE WASTEWATER SERVICE
- PROPOSED DOUBLE WASTEWATER SERVICE
- PROPOSED SINGLE WATER SERVICE
- PROPOSED DOUBLE WATER SERVICE
- TREES TO REMAIN HERITAGE
- TREES TO REMAIN NON HERITAGE

NOTES:

1. REFER TO THE WATER AND WASTEWATER DETAIL SHEET(S) FOR TYPE S AND TYPE D SERVICE CONNECTIONS.
2. UTILITIES ON THIS SITE TO BE BUILT PER THE APPROVED UTILITY ASSIGNMENT SHOWN ON THE WATER AND WASTEWATER DETAIL SHEET.
3. PORTIONS OF THIS SITE LIE WITHIN THE FEMA 100-YR FLOODPLAIN.
4. ALL PROPOSED GRAVITY WASTEWATER PIPES TO BE SDR-26 UNLESS OTHERWISE SPECIFIED ON THE PLANS.
5. UNLESS OTHERWISE NOTED, CONTRACTOR TO ENSURE WW SERVICES ARE SET TO MAXIMUM DEPTH (PER DETAIL WW13) FOR ALL LOTS IN ORDER TO PROVIDE SUFFICIENT DEPTH TO CONNECT SERVICE.
6. ALL MANHOLES TO BE COATED PER CITY OF GEORGETOWN SPECIFICATIONS. EXISTING MANHOLES WITH PROPOSED CONNECTIONS TO BE COATED.
7. IF THE HOME BUILDER CANNOT ACHIEVE THE MINIMUM FINISHED FLOOR ELEVATIONS SPECIFIED, THEN A WASTEWATER GRINDER PUMP SYSTEM MAY BE NEEDED TO CONNECT TO THE WASTEWATER MAIN.

TRENCH SAFETY NOTES:

1. IN ACCORDANCE WITH THE LAWS OF THE STATE OF TEXAS AND THE U.S. OCCUPATIONAL SAFETY AND HEALTH ADMINISTRATION REGULATIONS, ALL TRENCHES OVER 5 FEET IN DEPTH IN EITHER HARD AND COMPACT OR SOFT AND UNSTABLE SOIL SHALL BE SLOPED, SHORED, SHEETED, BRACED OR OTHERWISE SUPPORTED. FURTHERMORE, ALL TRENCHES LESS THAN 5 FEET IN DEPTH SHALL ALSO BE EFFECTIVELY PROTECTED WHEN HAZARDOUS GROUND MOVEMENT MAY BE EXPECTED. TRENCH SAFETY SYSTEMS TO BE UTILIZED FOR THIS PROJECT WILL BE PROVIDE BY THE CONTRACTOR.
2. IN ACCORDANCE WITH THE U.S. OCCUPATIONAL SAFETY AND HEALTH ADMINISTRATION REGULATIONS,WHEN PERSONS ARE IN TRENCHES 4-FEET DEEP OR MORE, ADEQUATE MEANS OF EXIT, SUCH AS A LADDER OR STEPS, MUST BE PROVIDED AND LOCATED SO AS TO REQUIRE NO MORE THAN 25 FEET OF LATERAL TRAVEL.
3. CONSTRUCTION SHALL NOT PROCEED UNTIL APPROPRIATE TRENCH SAFETY SYSTEM DETAILS, AS DESIGNED BY A PROFESSIONAL ENGINEER, ARE RETAINED AND COPIES SUBMITTED TO THE CITY OF GEORGETOWN.
4. DEEP EXCAVATIONS: ON EXCAVATIONS EXCEEDING 20 FEET IN DEPTH, TWO OR MORE MEANS OF EGRESS FROM THE EXCAVATION SHALL BE PROVIDED. THE CONTRACTOR SHALL CONSULT WITH A REGISTERED ENGINEER, EXPERIENCED IN TRENCH SAFETY SYSTEMS, REGARDING SPECIFIC MEANS AND METHODS EMPLOYED. CONTRACTOR SHALL PROVIDE A TRENCH SAFETY PLAN SEALED BY A REGISTERED PROFESSIONAL ENGINEER AS REQUIRED BY THE CITY OF GEORGETOWN.

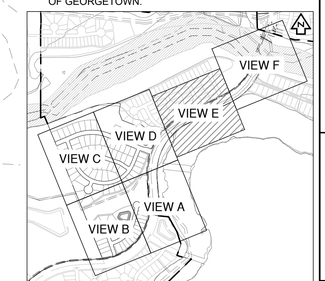

KEY MAP (N.T.S.)

NO	REVISION	BY	DATE

811 Know what's below. Call before you dig.

5508 HIGHWAY 290 WEST
SUITE 150
AUSTIN, TX 78735
512.872.6696
HRGREEN.COM

TBPE NO: 16384
TBPLS NO: 10194101

HRGreen®
DEVELOPMENT TX

STATE OF TEXAS
CHRISTINE N. CAMPBELL
142536
LICENSED PROFESSIONAL ENGINEER
07/15/2025

OVERALL WASTEWATER PLAN E

PARKSIDE ON THE RIVER SECTIONS 11, 12A & 15A CONSTRUCTION PLANS

GEORGETOWN, WILLIAMSON, TEXAS

DESIGNED BY: CC
DRAWN BY: MM
CHECKED BY: SN
APPROVED BY:

SHEET 118 OF 141

2025-XX-CON

P:\Blue Mage\Parkside Sections 11-15 & WOA\Sections 11, 12A & 15A\00_ACAD\Plans\sh2400522 WWOV.dwg, OVERALL WASTEWATER PLAN E, July 16, 2025, 12:28 PM, natalia.muhammed

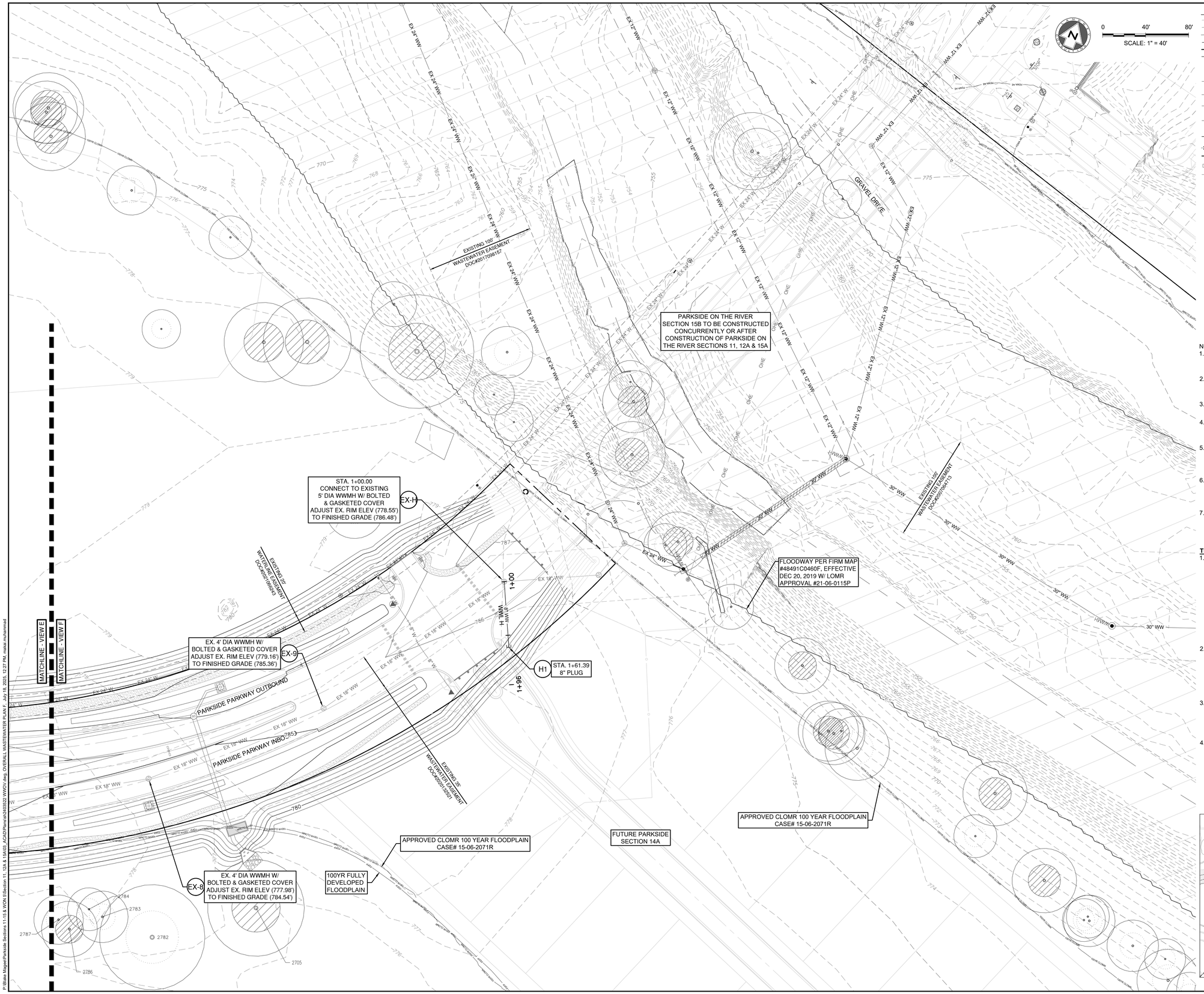

LEGEND

- EXISTING MINOR CONTOUR
- EXISTING MAJOR CONTOUR
- PROPOSED MINOR CONTOUR
- PROPOSED MAJOR CONTOUR
- BOUNDARY
- EASEMENT
- FEMA FLOODWAY PER FIRM# 48491C0460F & LOMR# 21-06-0115P
- FEMA AE — 100YR ATLAS 14 FEMA ZONE AE FLOODPLAIN PER FIRM# 48491C0460F & LOMR# 21-06-0115P
- FEMA A — 100YR FEMA ZONE A FLOODPLAIN PER FIRM MAP# 48491C0460F
- 100YR CLOMR — 100YR CLOMR FLOODPLAIN CASE# 15-06-2071R
- FDFP — 100YR ATLAS 14 FULLY DEVELOPED FLOODPLAIN (STANTEC DRAINAGE STUDY, SHERVIN NOOSHIN, 3/25/19) APPROVED WITH PP# 2019-5-PP
- OHWM — ORDINARY HIGH WATER MARK PER ADAMS ENVIRONMENTAL
- 2-4" SCH 40 PVC SLEEVE
- 8" WW — PROPOSED WASTEWATER LINE
- SD — PROPOSED STORM LINE
- 8" W — PROPOSED WATER LINE
- FIRE HYDRANT
- WATER VALVE
- STORM SEWER MAHNOLE
- WW — WASTEWATER MANHOLE
- CURB INLET
- PROPOSED SINGLE WASTEWATER SERVICE
- PROPOSED DOUBLE WASTEWATER SERVICE
- PROPOSED SINGLE WATER SERVICE
- PROPOSED DOUBLE WATER SERVICE
- TREES TO REMAIN HERITAGE
- TREES TO REMAIN NON HERITAGE

NOTES:

1. REFER TO THE WATER AND WASTEWATER DETAIL SHEET(S) FOR TYPE S AND TYPE D SERVICE CONNECTIONS.
2. UTILITIES ON THIS SITE TO BE BUILT PER THE APPROVED UTILITY ASSIGNMENT SHOWN ON THE WATER AND WASTEWATER DETAIL SHEET.
3. PORTIONS OF THIS SITE LIE WITHIN THE FEMA 100-YR FLOODPLAIN.
4. ALL PROPOSED GRAVITY WASTEWATER PIPES TO BE SDR-26 UNLESS OTHERWISE SPECIFIED ON THE PLANS.
5. UNLESS OTHERWISE NOTED, CONTRACTOR TO ENSURE WW SERVICES ARE SET TO MAXIMUM DEPTH (PER DETAIL WW13) FOR ALL LOTS IN ORDER TO PROVIDE SUFFICIENT DEPTH TO CONNECT SERVICE.
6. ALL MANHOLES TO BE COATED PER CITY OF GEORGETOWN SPECIFICATIONS. EXISTING MANHOLES WITH PROPOSED CONNECTIONS TO BE COATED.
7. IF THE HOME BUILDER CANNOT ACHIEVE THE MINIMUM FINISHED FLOOR ELEVATIONS SPECIFIED, THEN A WASTEWATER GRINDER PUMP SYSTEM MAY BE NEEDED TO CONNECT TO THE WASTEWATER MAIN.

TRENCH SAFETY NOTES:

1. IN ACCORDANCE WITH THE LAWS OF THE STATE OF TEXAS AND THE U.S. OCCUPATIONAL SAFETY AND HEALTH ADMINISTRATION REGULATIONS, ALL TRENCHES OVER 5 FEET IN DEPTH IN EITHER HARD AND COMPACT OR SOFT AND UNSTABLE SOIL SHALL BE SLOPED, SHORED, SHEETED, BRACED OR OTHERWISE SUPPORTED. FURTHERMORE, ALL TRENCHES LESS THAN 5 FEET IN DEPTH SHALL ALSO BE EFFECTIVELY PROTECTED WHEN HAZARDOUS GROUND MOVEMENT MAY BE EXPECTED. TRENCH SAFETY SYSTEMS TO BE UTILIZED FOR THIS PROJECT WILL BE PROVIDE BY THE CONTRACTOR.
2. IN ACCORDANCE WITH THE U.S. OCCUPATIONAL SAFETY AND HEALTH ADMINISTRATION REGULATIONS,WHEN PERSONS ARE IN TRENCHES 4-FEET DEEP OR MORE, ADEQUATE MEANS OF EXIT, SUCH AS A LADDER OR STEPS, MUST BE PROVIDED AND LOCATED SO AS TO REQUIRE NO MORE THAN 25 FEET OF LATERAL TRAVEL.
3. CONSTRUCTION SHALL NOT PROCEED UNTIL APPROPRIATE TRENCH SAFETY SYSTEM DETAILS, AS DESIGNED BY A PROFESSIONAL ENGINEER, ARE RETAINED AND COPIES SUBMITTED TO THE CITY OF GEORGETOWN.
4. DEEP EXCAVATIONS: ON EXCAVATIONS EXCEEDING 20 FEET IN DEPTH, TWO OR MORE MEANS OF EGRESS FROM THE EXCAVATION SHALL BE PROVIDED. THE CONTRACTOR SHALL CONSULT WITH A REGISTERED ENGINEER, EXPERIENCED IN TRENCH SAFETY SYSTEMS, REGARDING SPECIFIC MEANS AND METHODS EMPLOYED. CONTRACTOR SHALL PROVIDE A TRENCH SAFETY PLAN SEALED BY A REGISTERED PROFESSIONAL ENGINEER AS REQUIRED BY THE CITY OF GEORGETOWN.

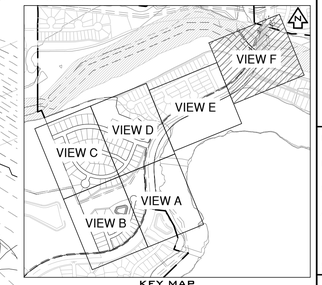

KEY MAP (N.T.S.)

NO	REVISION	BY	DATE

811 Know what's below. Call before you dig.

5508 HIGHWAY 290 WEST
SUITE 150
AUSTIN, TX 78735
512.872.6696
HRGREEN.COM

TBPE NO: 16384
TBPLS NO: 10194101

HRGreen®
DEVELOPMENT TX

STATE OF TEXAS
CHRISTINE N. CAMPBELL
142536
LICENSED PROFESSIONAL ENGINEER
07/15/2025

OVERALL WASTEWATER PLAN F

PARKSIDE ON THE RIVER SECTIONS 11, 12A & 15A CONSTRUCTION PLANS

GEORGETOWN, WILLIAMSON, TEXAS

DESIGNED BY: CC
DRAWN BY: MM
CHECKED BY: SN
APPROVED BY:

SHEET 119 OF 141

2025-XX-CON

P:\Blain Magee\Parkside Sections 11-15 & WOH S\Sections 11, 12A & 15\03_ACAD\Planset\240502\ WWOV.dwg, OVERALL WASTEWATER PLAN F, July 16, 2025, 12:27 PM, malia muhammad

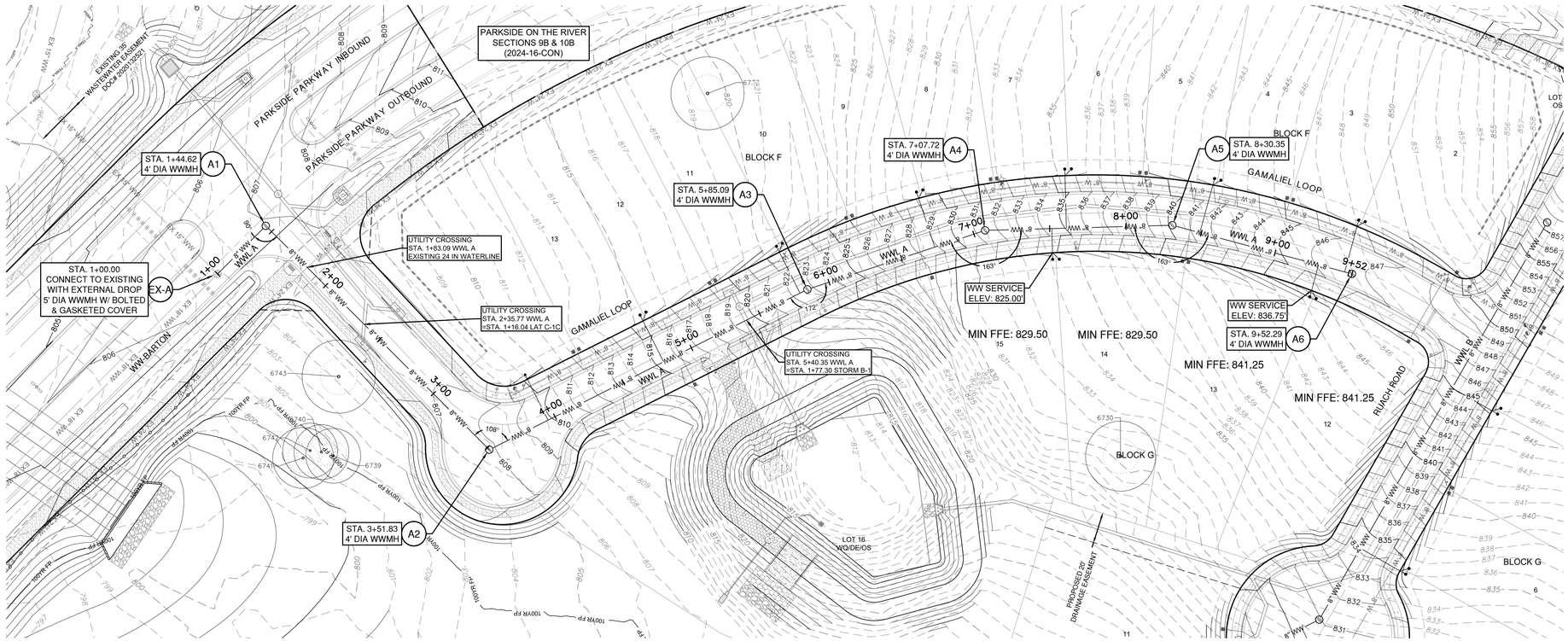

WWL A

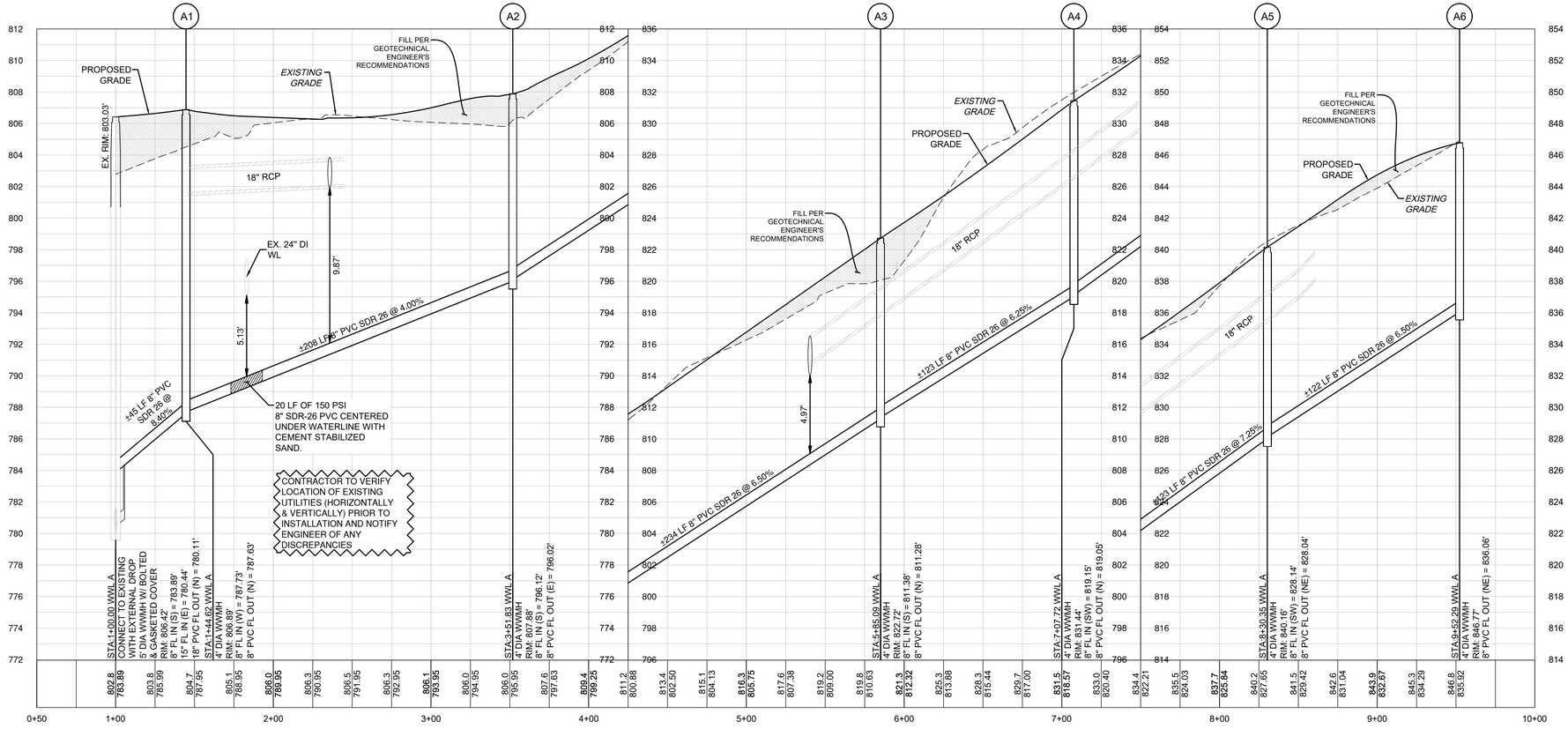

P:\Blkan Magar\Parkside Sections 11-15 & WOA 5\Sections 11, 12A & 15A\03_ACAD\Planset\04052023 WWP\ WWL A.dwg, WWL A PLAN & PROFILE, July 18, 2025, 12:29 PM, makai.muhammad

0 40' 80'
SCALE: 1" = 40'

LEGEND

- EXISTING MINOR CONTOUR
- EXISTING MAJOR CONTOUR
- PROPOSED MINOR CONTOUR
- PROPOSED MAJOR CONTOUR
- BOUNDARY
- EASEMENT
- FEMA FLOODWAY PER FIRM# 48491C0460F & LOMR# 21-06-0115P
- FEMA AE — 100YR ATLAS 14 FEMA ZONE AE FLOODPLAIN PER FIRM# 48491C0460F & LOMR# 21-06-0115P
- FEMA A — 100YR FEMA ZONE A FLOODPLAIN PER FIRM MAP# 48491C0460F
- 100YR CLOMR — 100YR CLOMR FLOODPLAIN CASE# 15-06-2071R
- FDFP — 100YR ATLAS 14 FULLY DEVELOPED FLOODPLAIN (STANTEC DRAINAGE STUDY, SHERVIN NOOSHIN, 3/25/19) APPROVED WITH PP# 2019-5-PP
- OHWM — ORDINARY HIGH WATER MARK PER ADAMS ENVIRONMENTAL
- 2-4" SCH 40 PVC SLEEVE
- 8" WW — PROPOSED WASTEWATER LINE
- SD — PROPOSED STORM LINE
- 8" W — PROPOSED WATER LINE
- FIRE HYDRANT
- WATER VALVE
- STORM SEWER MAHNOLE
- WW — WASTEWATER MANHOLE
- CURB INLET
- PROPOSED SINGLE WASTEWATER SERVICE
- PROPOSED DOUBLE WASTEWATER SERVICE
- PROPOSED SINGLE WATER SERVICE
- PROPOSED DOUBLE WATER SERVICE
- TREES TO REMAIN HERITAGE
- TREES TO REMAIN NON HERITAGE

VERT. SCALE: 1" = 4'
HORZ. SCALE: 1" = 40'

- EXISTING GRADE - CENTERLINE
- FINISHED GRADE - CENTERLINE

4' 2' 0 VERT. SCALE

EXISTING GROUND — 100.0 / 90.0 — PROPOSED FLOWLINE

NOTES:
1. REFER TO THE WATER AND WASTEWATER DETAIL SHEET(S) FOR TYPE S AND TYPE D SERVICE CONNECTIONS.
2. UTILITIES ON THIS SITE TO BE BUILT PER THE APPROVED UTILITY ASSIGNMENT SHOWN ON THE WATER AND WASTEWATER DETAIL SHEET.
3. PORTIONS OF THIS SITE LIE WITHIN THE FEMA 100-YR FLOODPLAIN.
4. ALL PROPOSED GRAVITY WASTEWATER PIPES TO BE SDR-26 UNLESS OTHERWISE SPECIFIED ON THE PLANS.
5. UNLESS OTHERWISE NOTED, CONTRACTOR TO ENSURE WW SERVICES ARE SET TO MAXIMUM DEPTH (PER DETAIL WW13) FOR ALL LOTS IN ORDER TO PROVIDE SUFFICIENT DEPTH TO CONNECT SERVICE.
6. ALL MANHOLES TO BE COATED PER CITY OF GEORGETOWN SPECIFICATIONS. EXISTING MANHOLES WITH PROPOSED CONNECTIONS TO BE COATED.
7. IF THE HOME BUILDER CANNOT ACHIEVE THE MINIMUM FINISHED FLOOR ELEVATIONS SPECIFIED, THEN A WASTEWATER GRINDER PUMP SYSTEM MAY BE NEEDED TO CONNECT TO THE WASTEWATER MAIN.

TRENCH SAFETY NOTES:
1. IN ACCORDANCE WITH THE LAWS OF THE STATE OF TEXAS AND THE U.S. OCCUPATIONAL SAFETY AND HEALTH ADMINISTRATION REGULATIONS, ALL TRENCHES OVER 5 FEET IN DEPTH IN EITHER HARD AND COMPACT OR SOFT AND UNSTABLE SOIL SHALL BE SLOPED, SHORED, SHEETED, BRACED OR OTHERWISE SUPPORTED. FURTHERMORE, ALL TRENCHES LESS THAN 5 FEET IN DEPTH SHALL ALSO BE EFFECTIVELY PROTECTED WHEN HAZARDOUS GROUND MOVEMENT MAY BE EXPECTED. TRENCH SAFETY SYSTEMS TO BE UTILIZED FOR THIS PROJECT WILL BE PROVIDE BY THE CONTRACTOR.
2. IN ACCORDANCE WITH THE U.S. OCCUPATIONAL SAFETY AND HEALTH ADMINISTRATION REGULATIONS,WHEN PERSONS ARE IN TRENCHES 4-FEET DEEP OR MORE, ADEQUATE MEANS OF EXIT, SUCH AS A LADDER OR STEPS, MUST BE PROVIDED AND LOCATED SO AS TO REQUIRE NO MORE THAN 25 FEET OF LATERAL TRAVEL.
3. CONSTRUCTION SHALL NOT PROCEED UNTIL APPROPRIATE TRENCH SAFETY SYSTEM DETAILS, AS DESIGNED BY A PROFESSIONAL ENGINEER, ARE RETAINED AND COPIES SUBMITTED TO THE CITY OF GEORGETOWN.
4. DEEP EXCAVATIONS: ON EXCAVATIONS EXCEEDING 20 FEET IN DEPTH, TWO OR MORE MEANS OF EGRESS FROM THE EXCAVATION SHALL BE PROVIDED. THE CONTRACTOR SHALL CONSULT WITH A REGISTERED ENGINEER, EXPERIENCED IN TRENCH SAFETY SYSTEMS, REGARDING SPECIFIC MEANS AND METHODS EMPLOYED. CONTRACTOR SHALL PROVIDE A TRENCH SAFETY PLAN SEALED BY A REGISTERED PROFESSIONAL ENGINEER AS REQUIRED BY THE CITY OF GEORGETOWN.

NO	REVISION	BY	DATE

Know what's below. Call before you dig.

HRGreen
DEVELOPMENT TX
5508 HIGHWAY 290 WEST
SUITE 150
AUSTIN, TX 78735
512.872.6696
HRGREEN.COM
TBPE NO: 16384
TBPLS NO: 10194101

STATE OF TEXAS
CHRISTINE N. CAMPBELL
142536
LICENSED PROFESSIONAL ENGINEER
07/15/2025

WWL A PLAN & PROFILE

PARKSIDE ON THE RIVER SECTIONS 11, 12A & 15A CONSTRUCTION PLANS

GEORGETOWN, WILLIAMSON, TEXAS

DESIGNED BY: CC
DRAWN BY: MM
CHECKED BY: SN
APPROVED BY:

SHEET 120 OF 141

2025-XX-CON

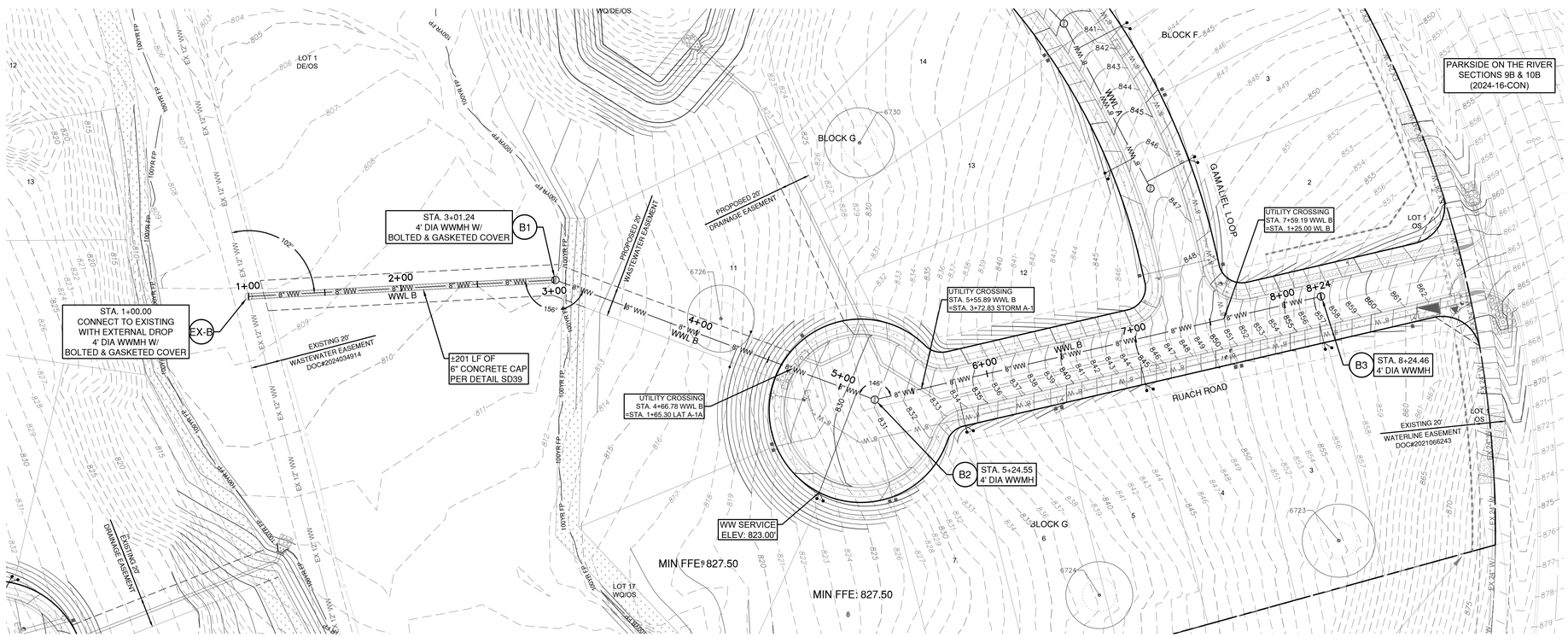

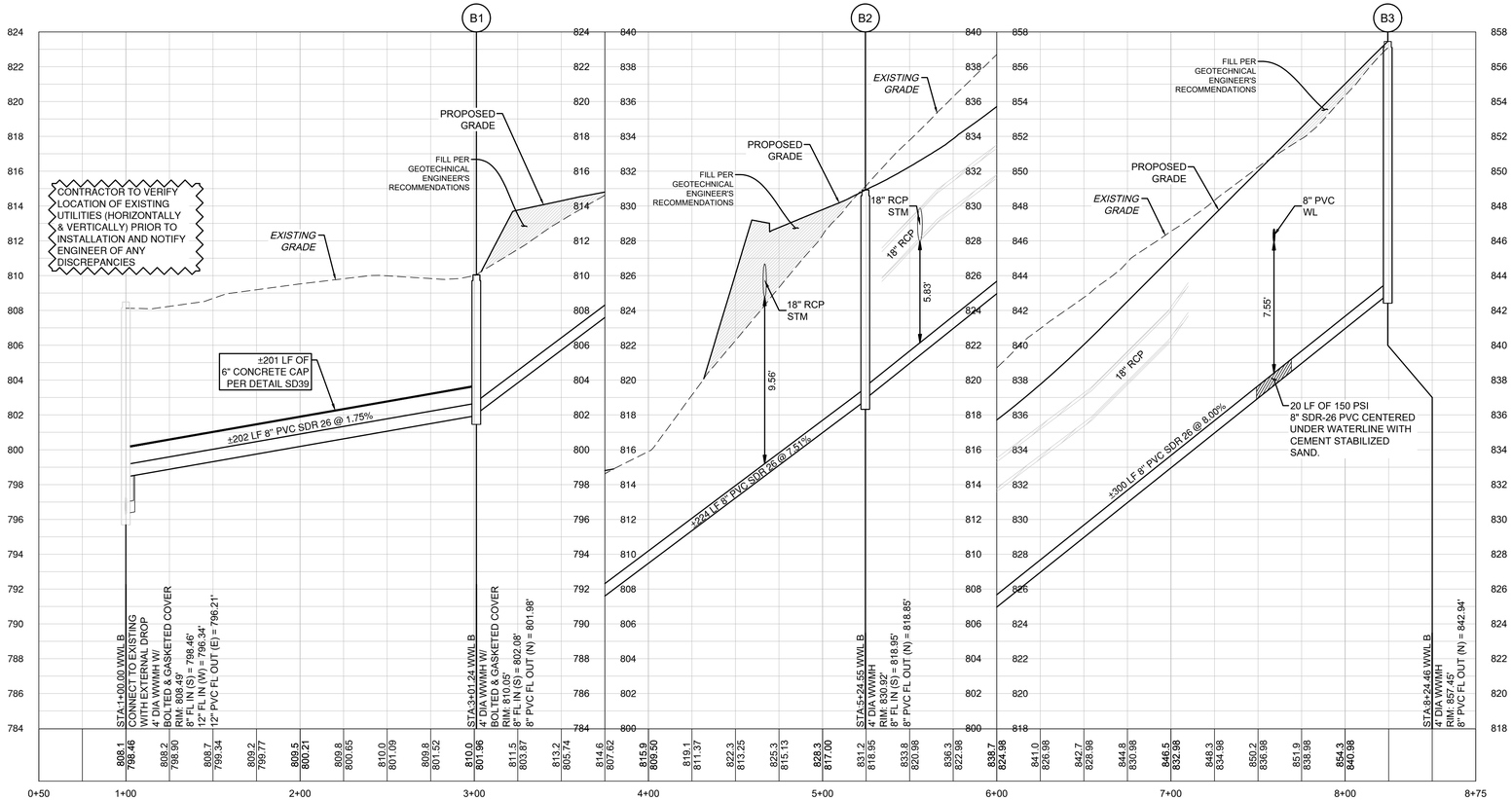

LEGEND

- EXISTING MINOR CONTOUR
- EXISTING MAJOR CONTOUR
- PROPOSED MINOR CONTOUR
- PROPOSED MAJOR CONTOUR
- BOUNDARY
- EASEMENT
- FEMA FLOODWAY PER FIRM# 48491C0460F & LOMR# 21-06-0115P
- FEMA AE — 100YR ATLAS 14 FEMA ZONE AE FLOODPLAIN PER FIRM# 48491C0460F & LOMR# 21-06-0115P
- FEMA A — 100YR FEMA ZONE A FLOODPLAIN PER FIRM MAP# 48491C0460F
- 100YR CLOMR — 100YR CLOMR FLOODPLAIN CASE# 15-06-2071R
- FDFP — 100YR ATLAS 14 FULLY DEVELOPED FLOODPLAIN (STANTEC DRAINAGE STUDY, SHERVIN NOOSHIN, 3/25/19) APPROVED WITH PP# 2019-5-PP
- OHWM — ORDINARY HIGH WATER MARK PER ADAMS ENVIRONMENTAL
- 2-4" SCH 40 PVC SLEEVE
- 8" WW — PROPOSED WASTEWATER LINE
- SD — PROPOSED STORM LINE
- 8" W — PROPOSED WATER LINE
- FIRE HYDRANT
- WATER VALVE
- SD — STORM SEWER MAHNOLE
- AW — WASTEWATER MANHOLE
- CURB INLET
- PROPOSED SINGLE WASTEWATER SERVICE
- PROPOSED DOUBLE WASTEWATER SERVICE
- PROPOSED SINGLE WATER SERVICE
- PROPOSED DOUBLE WATER SERVICE
- TREES TO REMAIN HERITAGE
- TREES TO REMAIN NON HERITAGE

VERT. SCALE: 1" = 4'
HORZ. SCALE: 1" = 40'

EXISTING GRADE - CENTERLINE
FINISHED GRADE - CENTERLINE

4'
2'
0
VERT. SCALE

EXISTING GROUND — 100.0 / 99.0 — PROPOSED FLOWLINE

NOTES:

1. REFER TO THE WATER AND WASTEWATER DETAIL SHEET(S) FOR TYPE S AND TYPE D SERVICE CONNECTIONS.
2. UTILITIES ON THIS SITE TO BE BUILT PER THE APPROVED UTILITY ASSIGNMENT SHOWN ON THE WATER AND WASTEWATER DETAIL SHEET.
3. PORTIONS OF THIS SITE LIE WITHIN THE FEMA 100-YR FLOODPLAIN.
4. ALL PROPOSED GRAVITY WASTEWATER PIPES TO BE SDR-26 UNLESS OTHERWISE SPECIFIED ON THE PLANS.
5. UNLESS OTHERWISE NOTED, CONTRACTOR TO ENSURE WW SERVICES ARE SET TO MAXIMUM DEPTH (PER DETAIL WW13) FOR ALL LOTS IN ORDER TO PROVIDE SUFFICIENT DEPTH TO CONNECT SERVICE.
6. ALL MANHOLES TO BE COATED PER CITY OF GEORGETOWN SPECIFICATIONS. EXISTING MANHOLES WITH PROPOSED CONNECTIONS TO BE COATED.
7. IF THE HOME BUILDER CANNOT ACHIEVE THE MINIMUM FINISHED FLOOR ELEVATIONS SPECIFIED, THEN A WASTEWATER GRINDER PUMP SYSTEM MAY BE NEEDED TO CONNECT TO THE WASTEWATER MAIN.

TRENCH SAFETY NOTES:

1. IN ACCORDANCE WITH THE LAWS OF THE STATE OF TEXAS AND THE U.S. OCCUPATIONAL SAFETY AND HEALTH ADMINISTRATION REGULATIONS, ALL TRENCHES OVER 5 FEET IN DEPTH IN EITHER HARD AND COMPACT OR SOFT AND UNSTABLE SOIL SHALL BE SLOPED, SHORED, SHEETED, BRACED OR OTHERWISE SUPPORTED. FURTHERMORE, ALL TRENCHES LESS THAN 5 FEET IN DEPTH SHALL ALSO BE EFFECTIVELY PROTECTED WHEN HAZARDOUS GROUND MOVEMENT MAY BE EXPECTED. TRENCH SAFETY SYSTEMS TO BE UTILIZED FOR THIS PROJECT WILL BE PROVIDE BY THE CONTRACTOR.
2. IN ACCORDANCE WITH THE U.S. OCCUPATIONAL SAFETY AND HEALTH ADMINISTRATION REGULATIONS,WHEN PERSONS ARE IN TRENCHES 4-FEET DEEP OR MORE, ADEQUATE MEANS OF EXIT, SUCH AS A LADDER OR STEPS, MUST BE PROVIDED AND LOCATED SO AS TO REQUIRE NO MORE THAN 25 FEET OF LATERAL TRAVEL.
3. CONSTRUCTION SHALL NOT PROCEED UNTIL APPROPRIATE TRENCH SAFETY SYSTEM DETAILS, AS DESIGNED BY A PROFESSIONAL ENGINEER, ARE RETAINED AND COPIES SUBMITTED TO THE CITY OF GEORGETOWN.
4. DEEP EXCAVATIONS: ON EXCAVATIONS EXCEEDING 20 FEET IN DEPTH, TWO OR MORE MEANS OF EGRESS FROM THE EXCAVATION SHALL BE PROVIDED. THE CONTRACTOR SHALL CONSULT WITH A REGISTERED ENGINEER, EXPERIENCED IN TRENCH SAFETY SYSTEMS, REGARDING SPECIFIC MEANS AND METHODS EMPLOYED. CONTRACTOR SHALL PROVIDE A TRENCH SAFETY PLAN SEALED BY A REGISTERED PROFESSIONAL ENGINEER AS REQUIRED BY THE CITY OF GEORGETOWN.

NO	REVISION	BY	DATE

811 Know what's below. Call before you dig.

5508 HIGHWAY 290 WEST
SUITE 150
AUSTIN, TX 78735
512.872.6696
HRGREEN.COM

TBPE NO: 16384
TBPLS NO: 10194101

HRGreen®
DEVELOPMENT TX

STATE OF TEXAS
CHRISTINE N. CAMPBELL
142536
LICENSED PROFESSIONAL ENGINEER
07/03/2025

WWL B PLAN & PROFILE

PARKSIDE ON THE RIVER SECTIONS 11, 12A & 15A CONSTRUCTION PLANS GEORGETOWN, WILLIAMSON, TEXAS

DESIGNED BY: CC
DRAWN BY: MM
CHECKED BY: SN
APPROVED BY:

SHEET 121 OF 141

2025-XX-CON

P:\Blue Mound\Parkside Sections 11-15 & WOA\Sheets\11, 12A & 15A\00_ACAD\Plans\sh2400522 WWP\WWL B deg WWL B PLAN & PROFILE, July 08, 2025, 12:29 PM, makai.muhammad

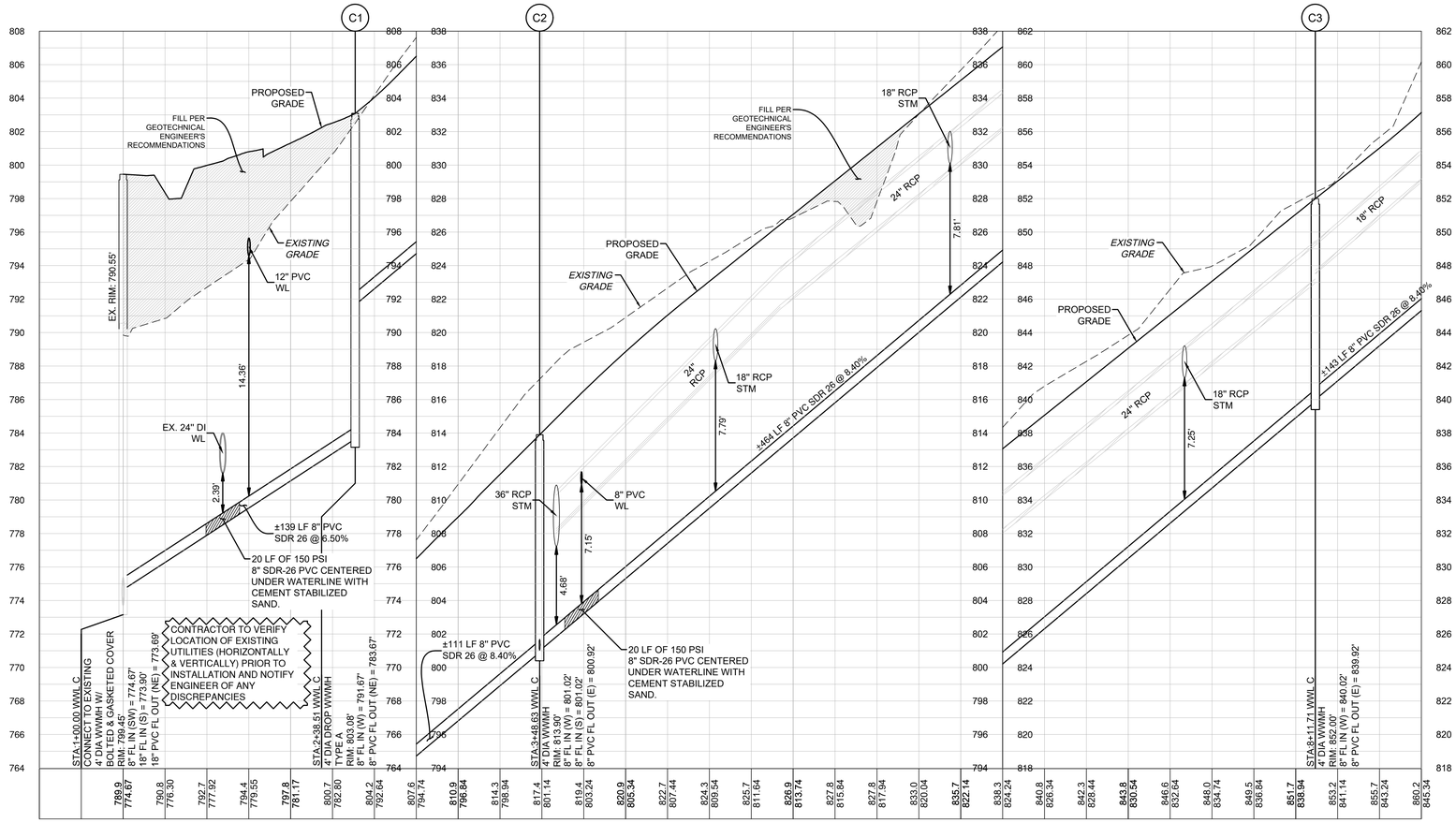

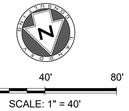

LEGEND

- EXISTING MINOR CONTOUR
- EXISTING MAJOR CONTOUR
- PROPOSED MINOR CONTOUR
- PROPOSED MAJOR CONTOUR
- BOUNDARY
- EASEMENT
- FEMA FLOODWAY PER FIRM# 48491C0460F & LOMR# 21-06-0115P
- FEMA AE — 100YR ATLAS 14 FEMA ZONE AE FLOODPLAIN PER FIRM# 48491C0460F & LOMR# 21-06-0115P
- FEMA A — 100YR FEMA ZONE A FLOODPLAIN PER FIRM MAP# 48491C0460F
- 100YR CLOMR — 100YR CLOMR FLOODPLAIN CASE# 15-06-2071R
- FDFP — 100YR ATLAS 14 FULLY DEVELOPED FLOODPLAIN (STANTEC DRAINAGE STUDY, SHERVIN NOOSHIN, 3/25/19) APPROVED WITH PP# 2019-5-PP
- OHWM — ORDINARY HIGH WATER MARK PER ADAMS ENVIRONMENTAL
- 2-4" SCH 40 PVC SLEEVE
- 8" WW — PROPOSED WASTEWATER LINE
- SD — PROPOSED STORM LINE
- 8" W — PROPOSED WATER LINE
- FIRE HYDRANT
- WATER VALVE
- SD — STORM SEWER MAHNOLE
- WW — WASTEWATER MANHOLE
- CURB INLET
- PROPOSED SINGLE WASTEWATER SERVICE
- PROPOSED DOUBLE WASTEWATER SERVICE
- PROPOSED SINGLE WATER SERVICE
- PROPOSED DOUBLE WATER SERVICE
- TREES TO REMAIN HERITAGE
- TREES TO REMAIN NON HERITAGE

VERT. SCALE: 1" = 4'
HORZ. SCALE: 1" = 40'

4' 2' 0 VERT. SCALE

EXISTING GRADE - CENTERLINE
FINISHED GRADE - CENTERLINE

EXISTING GROUND — 100.0 / 100.0 — PROPOSED FLOWLINE

NOTES:

1. REFER TO THE WATER AND WASTEWATER DETAIL SHEET(S) FOR TYPE S AND TYPE D SERVICE CONNECTIONS.
2. UTILITIES ON THIS SITE TO BE BUILT PER THE APPROVED UTILITY ASSIGNMENT SHOWN ON THE WATER AND WASTEWATER DETAIL SHEET.
3. PORTIONS OF THIS SITE LIE WITHIN THE FEMA 100-YR FLOODPLAIN.
4. ALL PROPOSED GRAVITY WASTEWATER PIPES TO BE SDR-26 UNLESS OTHERWISE SPECIFIED ON THE PLANS.
5. UNLESS OTHERWISE NOTED, CONTRACTOR TO ENSURE WW SERVICES ARE SET TO MAXIMUM DEPTH (PER DETAIL WW13) FOR ALL LOTS IN ORDER TO PROVIDE SUFFICIENT DEPTH TO CONNECT SERVICE.
6. ALL MANHOLES TO BE COATED PER CITY OF GEORGETOWN SPECIFICATIONS. EXISTING MANHOLES WITH PROPOSED CONNECTIONS TO BE COATED.
7. IF THE HOME BUILDER CANNOT ACHIEVE THE MINIMUM FINISHED FLOOR ELEVATIONS SPECIFIED, THEN A WASTEWATER GRINDER PUMP SYSTEM MAY BE NEEDED TO CONNECT TO THE WASTEWATER MAIN.

TRENCH SAFETY NOTES:

1. IN ACCORDANCE WITH THE LAWS OF THE STATE OF TEXAS AND THE U.S. OCCUPATIONAL SAFETY AND HEALTH ADMINISTRATION REGULATIONS, ALL TRENCHES OVER 5 FEET IN DEPTH IN EITHER HARD AND COMPACT OR SOFT AND UNSTABLE SOIL SHALL BE SLOPED, SHORED, SHEETED, BRACED OR OTHERWISE SUPPORTED. FURTHERMORE, ALL TRENCHES LESS THAN 5 FEET IN DEPTH SHALL ALSO BE EFFECTIVELY PROTECTED WHEN HAZARDOUS GROUND MOVEMENT MAY BE EXPECTED. TRENCH SAFETY SYSTEMS TO BE UTILIZED FOR THIS PROJECT WILL BE PROVIDE BY THE CONTRACTOR.
2. IN ACCORDANCE WITH THE U.S. OCCUPATIONAL SAFETY AND HEALTH ADMINISTRATION REGULATIONS,WHEN PERSONS ARE IN TRENCHES 4-FEET DEEP OR MORE, ADEQUATE MEANS OF EXIT, SUCH AS A LADDER OR STEPS, MUST BE PROVIDED AND LOCATED SO AS TO REQUIRE NO MORE THAN 25 FEET OF LATERAL TRAVEL.
3. CONSTRUCTION SHALL NOT PROCEED UNTIL APPROPRIATE TRENCH SAFETY SYSTEM DETAILS, AS DESIGNED BY A PROFESSIONAL ENGINEER, ARE RETAINED AND COPIES SUBMITTED TO THE CITY OF GEORGETOWN.
4. DEEP EXCAVATIONS: ON EXCAVATIONS EXCEEDING 20 FEET IN DEPTH, TWO OR MORE MEANS OF EGRESS FROM THE EXCAVATION SHALL BE PROVIDED. THE CONTRACTOR SHALL CONSULT WITH A REGISTERED ENGINEER, EXPERIENCED IN TRENCH SAFETY SYSTEMS, REGARDING SPECIFIC MEANS AND METHODS EMPLOYED. CONTRACTOR SHALL PROVIDE A TRENCH SAFETY PLAN SEALED BY A REGISTERED PROFESSIONAL ENGINEER AS REQUIRED BY THE CITY OF GEORGETOWN.

NO.	REVISION	BY	DATE

811 Know what's below. Call before you dig.

5508 HIGHWAY 290 WEST
SUITE 150
AUSTIN, TX 78735
512.872.6696
HRGREEN.COM

TBPE NO: 16384
TBPLS NO: 10194101

HRGreen® DEVELOPMENT TX

STATE OF TEXAS
CHRISTINE N. CAMPBELL
142536
LICENSED PROFESSIONAL ENGINEER
07/05/2025

WWL C PLAN & PROFILE 1+00 - 8+75

PARKSIDE ON THE RIVER SECTIONS 11, 12A & 15A CONSTRUCTION PLANS GEORGETOWN, WILLIAMSON, TEXAS

DESIGNED BY: CC
DRAWN BY: MM
CHECKED BY: SN
APPROVED BY:

SHEET 122 OF 141

2025-XX-CON

P:\Blake Magee\Parkside Sections 11-15 & 19\Civil\Sheets\240502 WWP WWL C.dwg, WWL C P+L PLAN & PROFILE 1+00 - 8+75, July 18, 2025, 12:31 PM, nabil.muhammed

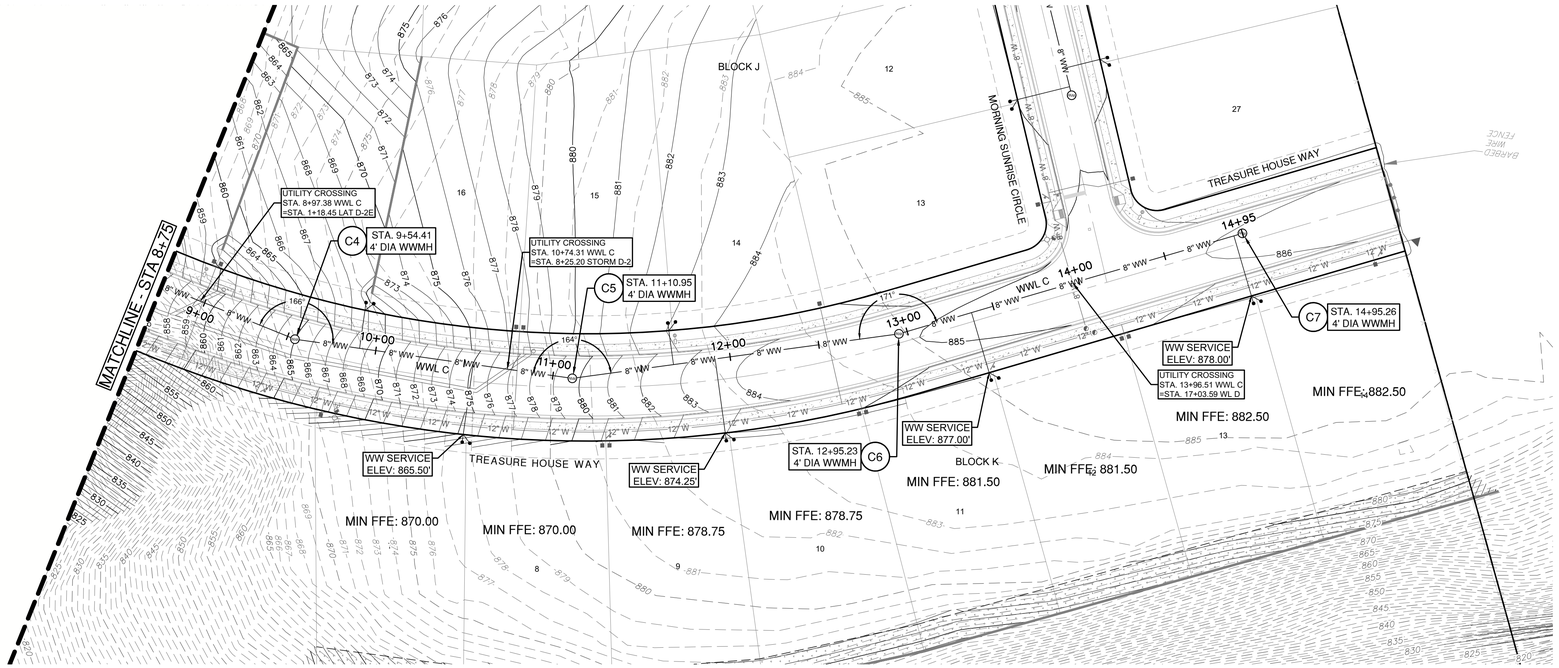

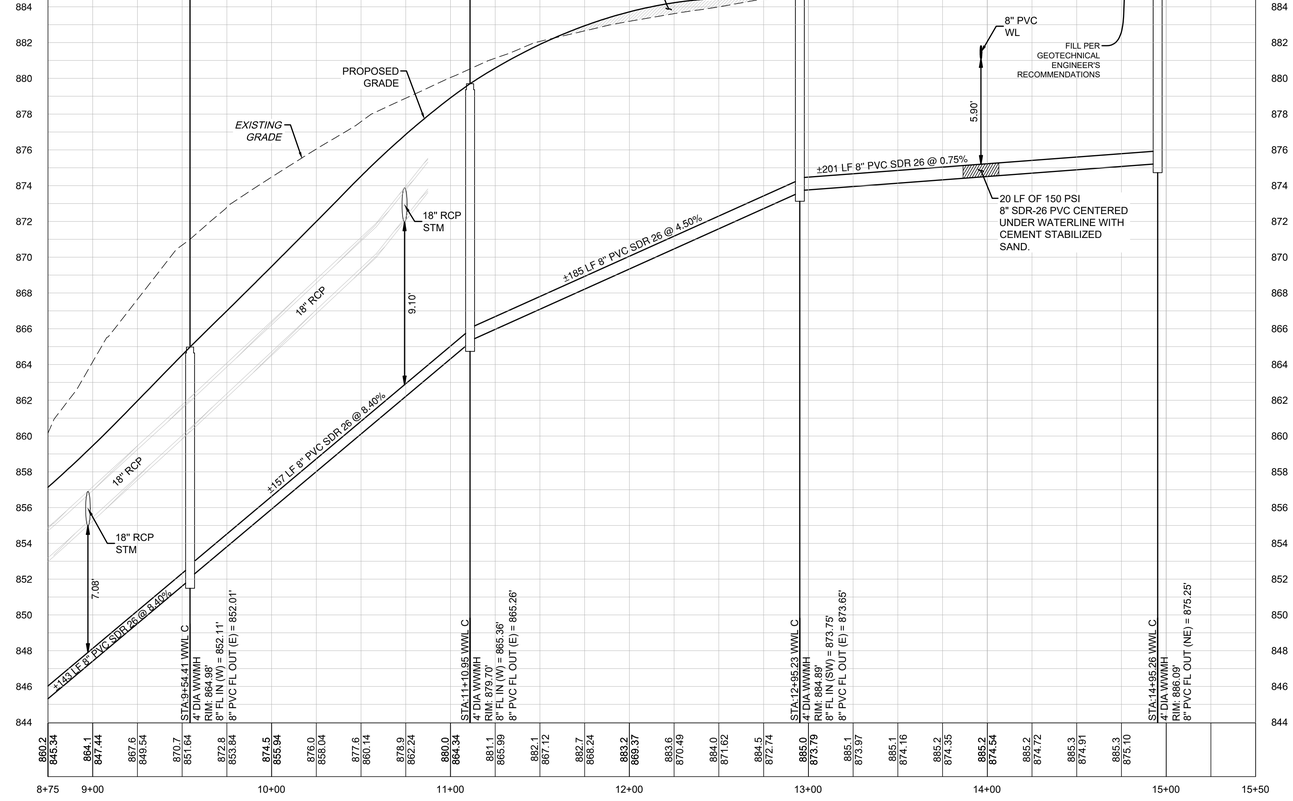

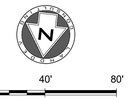

0 40' 80'

SCALE: 1" = 40'

LEGEND

- EXISTING MINOR CONTOUR
- EXISTING MAJOR CONTOUR
- PROPOSED MINOR CONTOUR
- PROPOSED MAJOR CONTOUR
- BOUNDARY
- EASEMENT
- FEMA FLOODWAY PER FIRM# 48491C0460F & LOMR# 21-06-0115P
- FEMA AE — 100YR ATLAS 14 FEMA ZONE AE FLOODPLAIN PER FIRM# 48491C0460F & LOMR# 21-06-0115P
- FEMA A — 100YR FEMA ZONE A FLOODPLAIN PER FIRM MAP# 48491C0460F
- 100YR CLOMR — 100YR CLOMR FLOODPLAIN CASE# 15-06-2071R
- FDFP — 100YR ATLAS 14 FULLY DEVELOPED FLOODPLAIN (STANTEC DRAINAGE STUDY, SHERVIN NOOSHIN, 3/25/19) APPROVED WITH PP# 2019-5-PP
- OHWM — ORDINARY HIGH WATER MARK PER ADAMS ENVIRONMENTAL
- 2-4" SCH 40 PVC SLEEVE
- 8" WW — PROPOSED WASTEWATER LINE
- SD — PROPOSED STORM LINE
- 8" W — PROPOSED WATER LINE
- FIRE HYDRANT
- WATER VALVE
- SD — STORM SEWER MAHNOLE
- WW — WASTEWATER MANHOLE
- CURB INLET
- PROPOSED SINGLE WASTEWATER SERVICE
- PROPOSED DOUBLE WASTEWATER SERVICE
- PROPOSED SINGLE WATER SERVICE
- PROPOSED DOUBLE WATER SERVICE
- TREES TO REMAIN HERITAGE
- TREES TO REMAIN NON HERITAGE

VERT. SCALE: 1" = 4'
HORZ. SCALE: 1" = 40'

4' 2' 0 VERT. SCALE

EXISTING GRADE - CENTERLINE
FINISHED GRADE - CENTERLINE

EXISTING GROUND — 1000.10 / 1005.10 — PROPOSED FLOWLINE

NOTES:

1. REFER TO THE WATER AND WASTEWATER DETAIL SHEET(S) FOR TYPE S AND TYPE D SERVICE CONNECTIONS.
2. UTILITIES ON THIS SITE TO BE BUILT PER THE APPROVED UTILITY ASSIGNMENT SHOWN ON THE WATER AND WASTEWATER DETAIL SHEET.
3. PORTIONS OF THIS SITE LIE WITHIN THE FEMA 100-YR FLOODPLAIN.
4. ALL PROPOSED GRAVITY WASTEWATER PIPES TO BE SDR-26 UNLESS OTHERWISE SPECIFIED ON THE PLANS.
5. UNLESS OTHERWISE NOTED, CONTRACTOR TO ENSURE WW SERVICES ARE SET TO MAXIMUM DEPTH (PER DETAIL WW13) FOR ALL LOTS IN ORDER TO PROVIDE SUFFICIENT DEPTH TO CONNECT SERVICE.
6. ALL MANHOLES TO BE COATED PER CITY OF GEORGETOWN SPECIFICATIONS. EXISTING MANHOLES WITH PROPOSED CONNECTIONS TO BE COATED.
7. IF THE HOME BUILDER CANNOT ACHIEVE THE MINIMUM FINISHED FLOOR ELEVATIONS SPECIFIED, THEN A WASTEWATER GRINDER PUMP SYSTEM MAY BE NEEDED TO CONNECT TO THE WASTEWATER MAIN.

TRENCH SAFETY NOTES:

1. IN ACCORDANCE WITH THE LAWS OF THE STATE OF TEXAS AND THE U.S. OCCUPATIONAL SAFETY AND HEALTH ADMINISTRATION REGULATIONS, ALL TRENCHES OVER 5 FEET IN DEPTH IN EITHER HARD AND COMPACT OR SOFT AND UNSTABLE SOIL SHALL BE SLOPED, SHORED, SHEETED, BRACED OR OTHERWISE SUPPORTED. FURTHERMORE, ALL TRENCHES LESS THAN 5 FEET IN DEPTH SHALL ALSO BE EFFECTIVELY PROTECTED WHEN HAZARDOUS GROUND MOVEMENT MAY BE EXPECTED. TRENCH SAFETY SYSTEMS TO BE UTILIZED FOR THIS PROJECT WILL BE PROVIDE BY THE CONTRACTOR.
2. IN ACCORDANCE WITH THE U.S. OCCUPATIONAL SAFETY AND HEALTH ADMINISTRATION REGULATIONS,WHEN PERSONS ARE IN TRENCHES 4-FEET DEEP OR MORE, ADEQUATE MEANS OF EXIT, SUCH AS A LADDER OR STEPS, MUST BE PROVIDED AND LOCATED SO AS TO REQUIRE NO MORE THAN 25 FEET OF LATERAL TRAVEL.
3. CONSTRUCTION SHALL NOT PROCEED UNTIL APPROPRIATE TRENCH SAFETY SYSTEM DETAILS, AS DESIGNED BY A PROFESSIONAL ENGINEER, ARE RETAINED AND COPIES SUBMITTED TO THE CITY OF GEORGETOWN.
4. DEEP EXCAVATIONS: ON EXCAVATIONS EXCEEDING 20 FEET IN DEPTH, TWO OR MORE MEANS OF EGRESS FROM THE EXCAVATION SHALL BE PROVIDED. THE CONTRACTOR SHALL CONSULT WITH A REGISTERED ENGINEER, EXPERIENCED IN TRENCH SAFETY SYSTEMS, REGARDING SPECIFIC MEANS AND METHODS EMPLOYED. CONTRACTOR SHALL PROVIDE A TRENCH SAFETY PLAN SEALED BY A REGISTERED PROFESSIONAL ENGINEER AS REQUIRED BY THE CITY OF GEORGETOWN.

NO.	REVISION	BY	DATE

Know what's below. Call before you dig.

5508 HIGHWAY 290 WEST
SUITE 150
AUSTIN, TX 78735
512.872.6696
HRGREEN.COM

TBPE NO: 16384
TBPLS NO: 10194101

HRGreen® DEVELOPMENT TX

STATE OF TEXAS
CHRISTINE N. CAMPBELL
142536
LICENSED PROFESSIONAL ENGINEER

07/03/2025

WWL C PLAN & PROFILE 8+75 - END

PARKSIDE ON THE RIVER SECTIONS 11, 12A & 15A CONSTRUCTION PLANS GEORGETOWN, WILLIAMSON, TEXAS

DESIGNED BY: CC
DRAWN BY: MM
CHECKED BY: SN
APPROVED BY:

SHEET 123 OF 141

2025-XX-CON

P:\Blake Magee\Parkside Sections 11-15 & WCN ES\Section 11, 12A & 15A\03_ACAD\Planset\240502 WWPP WWL C-reg WWL C PLAN & PROFILE 8+75 - END- July 18, 2025, 12:31 PM, malak.mahammad

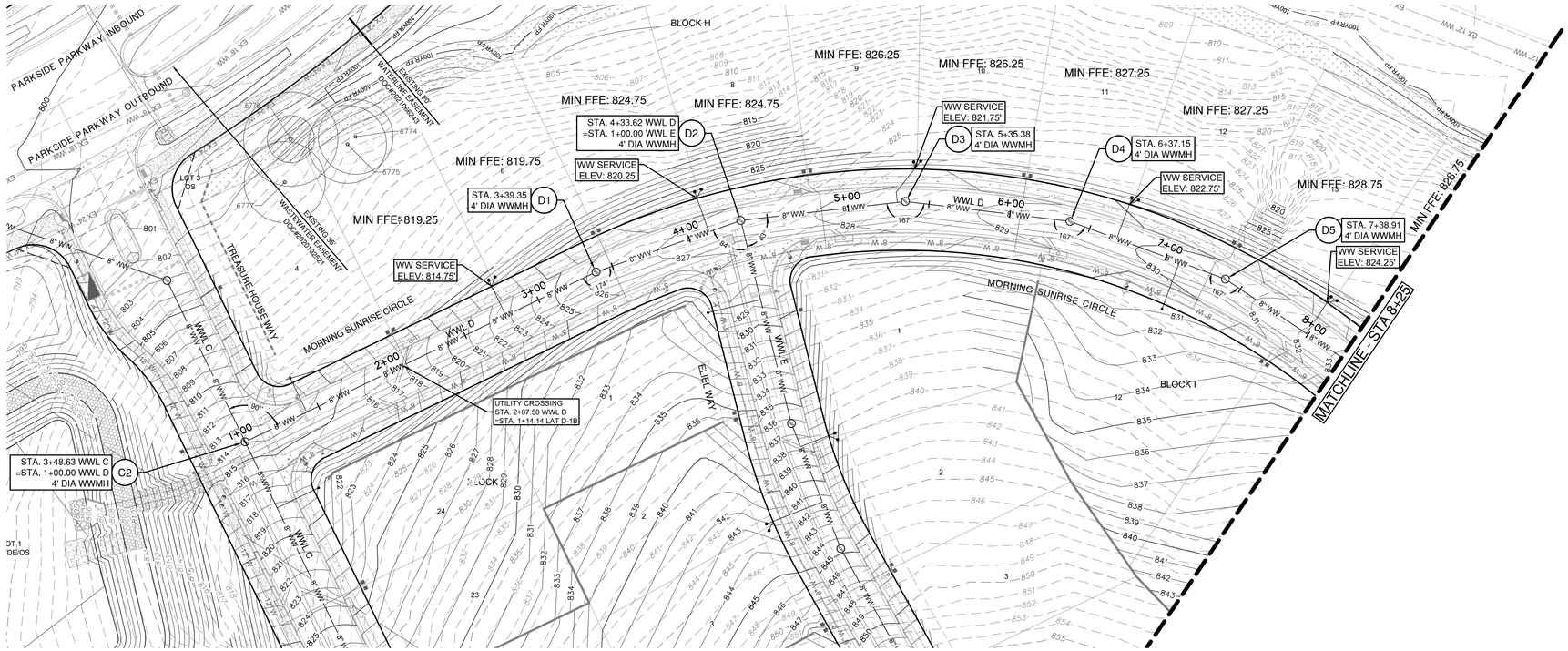

WWL D

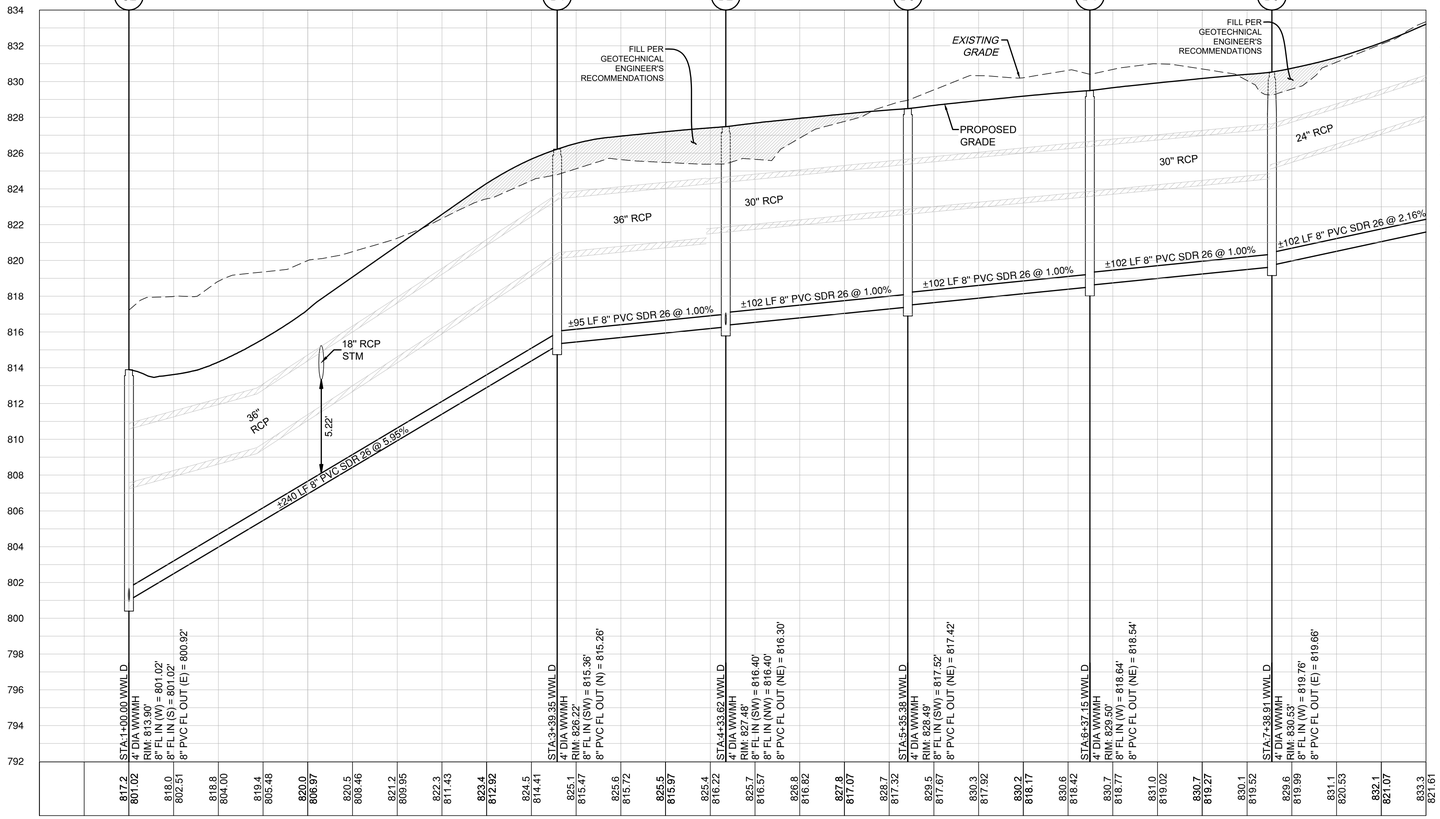

0 40' 80'

SCALE: 1" = 40'

LEGEND

- EXISTING MINOR CONTOUR
- EXISTING MAJOR CONTOUR
- PROPOSED MINOR CONTOUR
- PROPOSED MAJOR CONTOUR
- BOUNDARY
- EASEMENT
- FEMA FLOODWAY PER FIRM# 48491C0460F & LOMR# 21-06-0115P
- FEMA AE — 100YR ATLAS 14 FEMA ZONE AE FLOODPLAIN PER FIRM# 48491C0460F & LOMR# 21-06-0115P
- FEMA A — 100YR FEMA ZONE A FLOODPLAIN PER FIRM MAP# 48491C0460F
- 100YR CLOMR — 100YR CLOMR FLOODPLAIN CASE# 15-06-2071R
- FDFP — 100YR ATLAS 14 FULLY DEVELOPED FLOODPLAIN (STANTEC DRAINAGE STUDY, SHERVIN NOOSHIN, 3/25/19) APPROVED WITH PP# 2019-5-PP
- OHWM — ORDINARY HIGH WATER MARK PER ADAMS ENVIRONMENTAL
- 2-4" SCH 40 PVC SLEEVE
- 8" WW — PROPOSED WASTEWATER LINE
- SD — PROPOSED STORM LINE
- 8" W — PROPOSED WATER LINE
- FIRE HYDRANT
- WATER VALVE
- SD — STORM SEWER MAHNOLE
- WW — WASTEWATER MANHOLE
- CURB INLET
- PROPOSED SINGLE WASTEWATER SERVICE
- PROPOSED DOUBLE WASTEWATER SERVICE
- PROPOSED SINGLE WATER SERVICE
- PROPOSED DOUBLE WATER SERVICE
- TREES TO REMAIN HERITAGE
- TREES TO REMAIN NON HERITAGE

VERT. SCALE: 1" = 4'
HORZ. SCALE: 1" = 40'

4' 2' 0 VERT. SCALE

EXISTING GRADE - CENTERLINE
FINISHED GRADE - CENTERLINE

EXISTING GROUND — 100.0 / 99.0 — PROPOSED FLOWLINE

NOTES:

1. REFER TO THE WATER AND WASTEWATER DETAIL SHEET(S) FOR TYPE S AND TYPE D SERVICE CONNECTIONS.
2. UTILITIES ON THIS SITE TO BE BUILT PER THE APPROVED UTILITY ASSIGNMENT SHOWN ON THE WATER AND WASTEWATER DETAIL SHEET.
3. PORTIONS OF THIS SITE LIE WITHIN THE FEMA 100-YR FLOODPLAIN.
4. ALL PROPOSED GRAVITY WASTEWATER PIPES TO BE SDR-26 UNLESS OTHERWISE SPECIFIED ON THE PLANS.
5. UNLESS OTHERWISE NOTED, CONTRACTOR TO ENSURE WW SERVICES ARE SET TO MAXIMUM DEPTH (PER DETAIL WW13) FOR ALL LOTS IN ORDER TO PROVIDE SUFFICIENT DEPTH TO CONNECT SERVICE.
6. ALL MANHOLES TO BE COATED PER CITY OF GEORGETOWN SPECIFICATIONS. EXISTING MANHOLES WITH PROPOSED CONNECTIONS TO BE COATED.
7. IF THE HOME BUILDER CANNOT ACHIEVE THE MINIMUM FINISHED FLOOR ELEVATIONS SPECIFIED, THEN A WASTEWATER GRINDER PUMP SYSTEM MAY BE NEEDED TO CONNECT TO THE WASTEWATER MAIN.

TRENCH SAFETY NOTES:

1. IN ACCORDANCE WITH THE LAWS OF THE STATE OF TEXAS AND THE U.S. OCCUPATIONAL SAFETY AND HEALTH ADMINISTRATION REGULATIONS, ALL TRENCHES OVER 5 FEET IN DEPTH IN EITHER HARD AND COMPACT OR SOFT AND UNSTABLE SOIL SHALL BE SLOPED, SHORED, SHEETED, BRACED OR OTHERWISE SUPPORTED. FURTHERMORE, ALL TRENCHES LESS THAN 5 FEET IN DEPTH SHALL ALSO BE EFFECTIVELY PROTECTED WHEN HAZARDOUS GROUND MOVEMENT MAY BE EXPECTED. TRENCH SAFETY SYSTEMS TO BE UTILIZED FOR THIS PROJECT WILL BE PROVIDE BY THE CONTRACTOR.
2. IN ACCORDANCE WITH THE U.S. OCCUPATIONAL SAFETY AND HEALTH ADMINISTRATION REGULATIONS,WHEN PERSONS ARE IN TRENCHES 4-FEET DEEP OR MORE, ADEQUATE MEANS OF EXIT, SUCH AS A LADDER OR STEPS, MUST BE PROVIDED AND LOCATED SO AS TO REQUIRE NO MORE THAN 25 FEET OF LATERAL TRAVEL.
3. CONSTRUCTION SHALL NOT PROCEED UNTIL APPROPRIATE TRENCH SAFETY SYSTEM DETAILS, AS DESIGNED BY A PROFESSIONAL ENGINEER, ARE RETAINED AND COPIES SUBMITTED TO THE CITY OF GEORGETOWN.
4. DEEP EXCAVATIONS: ON EXCAVATIONS EXCEEDING 20 FEET IN DEPTH, TWO OR MORE MEANS OF EGRESS FROM THE EXCAVATION SHALL BE PROVIDED. THE CONTRACTOR SHALL CONSULT WITH A REGISTERED ENGINEER, EXPERIENCED IN TRENCH SAFETY SYSTEMS, REGARDING SPECIFIC MEANS AND METHODS EMPLOYED. CONTRACTOR SHALL PROVIDE A TRENCH SAFETY PLAN SEALED BY A REGISTERED PROFESSIONAL ENGINEER AS REQUIRED BY THE CITY OF GEORGETOWN.

NO.	REVISION	BY	DATE

811 Know what's below. Call before you dig.

5508 HIGHWAY 290 WEST
SUITE 150
AUSTIN, TX 78735
512.872.6696
HRGREEN.COM

TBPE NO: 16384
TBPLS NO: 10194101

HRGreen®
DEVELOPMENT TX

STATE OF TEXAS
CHRISTINE N. CAMPBELL
142536
LICENSED PROFESSIONAL ENGINEER
07/03/2025

WWL D PLAN & PROFILE 1+00 - 8+25

PARKSIDE ON THE RIVER SECTIONS 11, 12A & 15A CONSTRUCTION PLANS

GEORGETOWN, WILLIAMSON, TEXAS

DESIGNED BY: CC
DRAWN BY: MM
CHECKED BY: SN
APPROVED BY:

SHEET 124 OF 141

2025-XX-CON

P:\Blake Magee\Parkside Sections 11-15 & WOA S\Section 11, 12A & 15A\05_ACAD\Panels\24035522 WWPP WWL D.dwg, WWL D PLAN & PROFILE 1+00, 9+25, July 18, 2025, 12:32 PM, nabal.muhammad

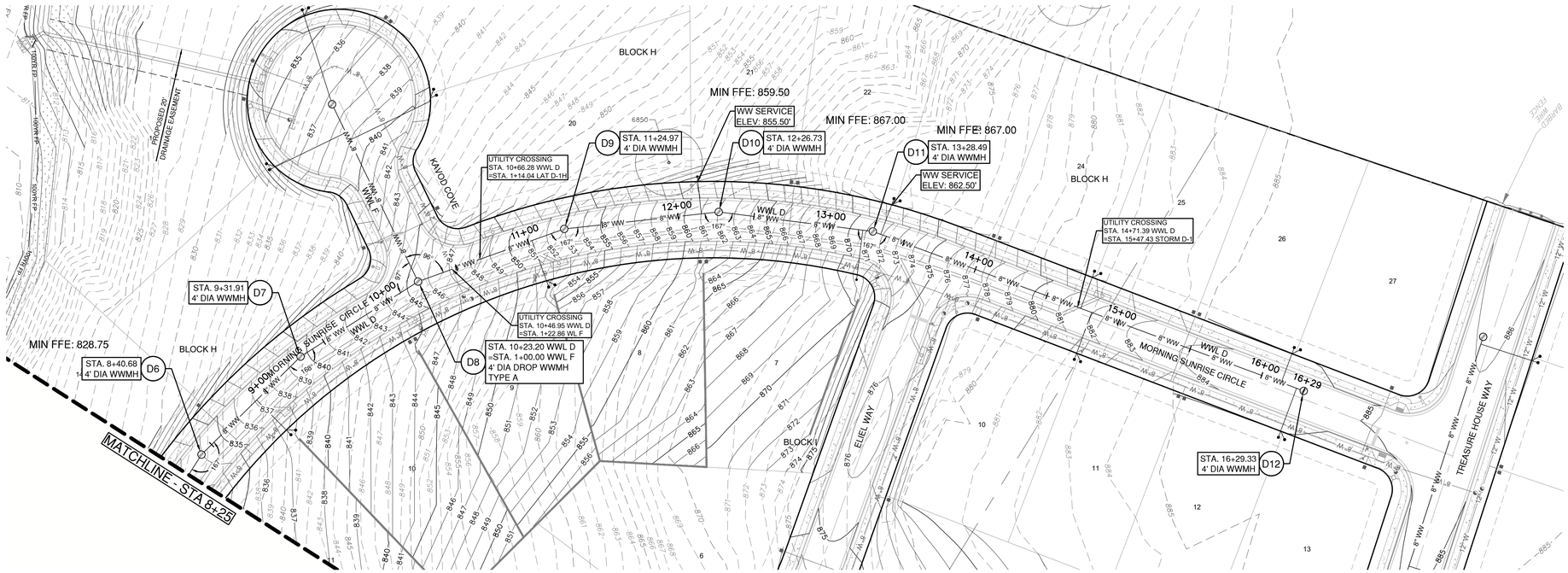

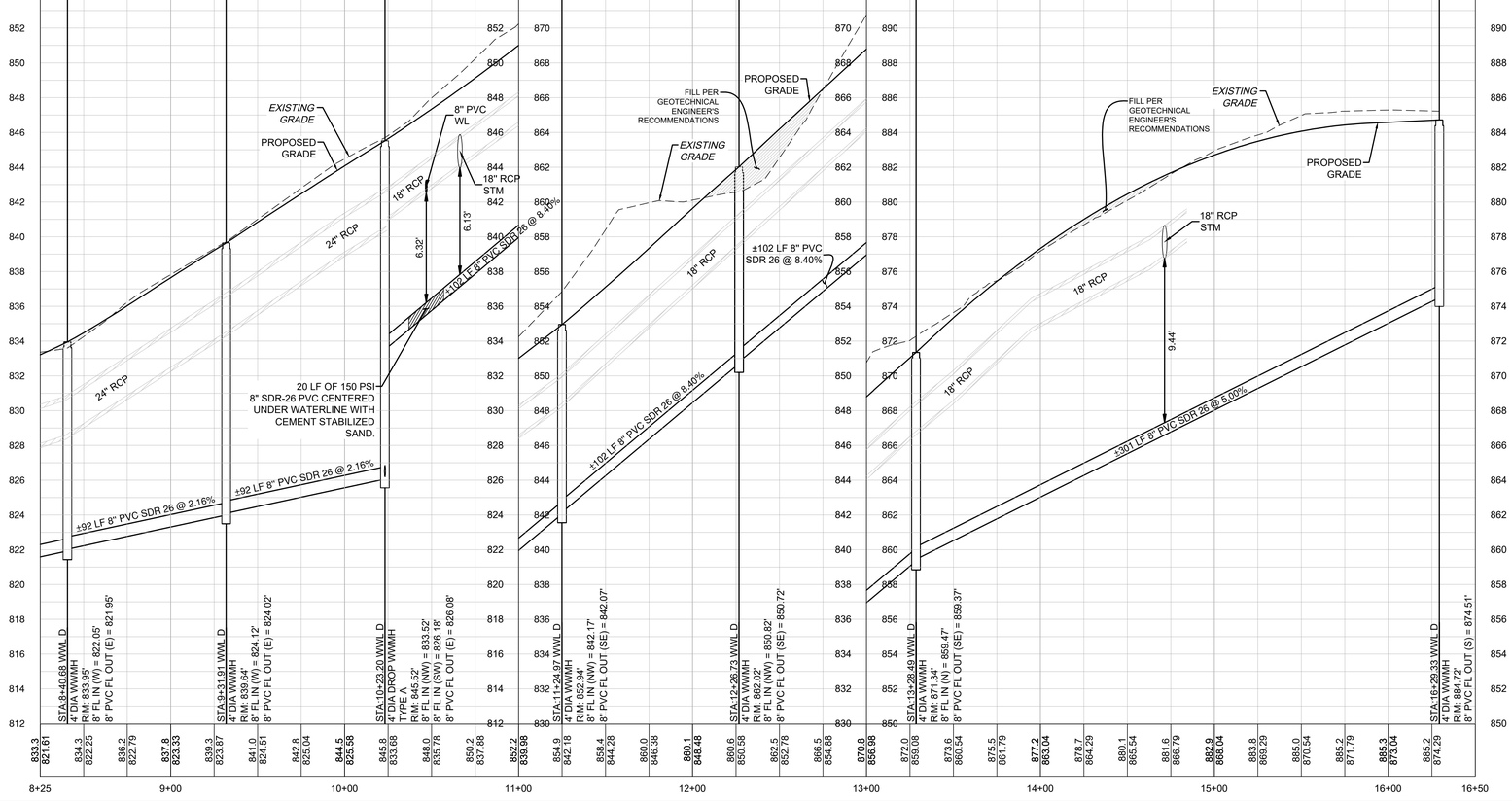

0 40' 80'

SCALE: 1" = 40'

LEGEND

- EXISTING MINOR CONTOUR
- EXISTING MAJOR CONTOUR
- PROPOSED MINOR CONTOUR
- PROPOSED MAJOR CONTOUR
- BOUNDARY
- EASEMENT
- FEMA FLOODWAY PER FIRM# 48491C0460F & LOMR# 21-06-0115P
- FEMA AE — 100YR ATLAS 14 FEMA ZONE AE FLOODPLAIN PER FIRM# 48491C0460F & LOMR# 21-06-0115P
- FEMA A — 100YR FEMA ZONE A FLOODPLAIN PER FIRM MAP# 48491C0460F
- 100YR CLOMR — 100YR CLOMR FLOODPLAIN CASE# 15-06-2071R
- FDFP — 100YR ATLAS 14 FULLY DEVELOPED FLOODPLAIN (STANTEC DRAINAGE STUDY, SHERVIN NOOSHIN, 3/25/19) APPROVED WITH PP# 2019-5-PP
- OHWM — ORDINARY HIGH WATER MARK PER ADAMS ENVIRONMENTAL
- 2-4" SCH 40 PVC SLEEVE
- 8" WW — PROPOSED WASTEWATER LINE
- SD — PROPOSED STORM LINE
- 8" W — PROPOSED WATER LINE
- FIRE HYDRANT
- WATER VALVE
- STORM SEWER MAHNOLE
- WW — WASTEWATER MANHOLE
- CURB INLET
- PROPOSED SINGLE WASTEWATER SERVICE
- PROPOSED DOUBLE WASTEWATER SERVICE
- PROPOSED SINGLE WATER SERVICE
- PROPOSED DOUBLE WATER SERVICE
- TREES TO REMAIN HERITAGE
- TREES TO REMAIN NON HERITAGE

VERT. SCALE: 1" = 4'
HORZ. SCALE: 1" = 40'

EXISTING GRADE - CENTERLINE
FINISHED GRADE - CENTERLINE

4' 2' 0 VERT. SCALE

EXISTING GROUND — 100.0 / 90.0 — PROPOSED FLOWLINE

NOTES:

1. REFER TO THE WATER AND WASTEWATER DETAIL SHEET(S) FOR TYPE S AND TYPE D SERVICE CONNECTIONS.
2. UTILITIES ON THIS SITE TO BE BUILT PER THE APPROVED UTILITY ASSIGNMENT SHOWN ON THE WATER AND WASTEWATER DETAIL SHEET.
3. PORTIONS OF THIS SITE LIE WITHIN THE FEMA 100-YR FLOODPLAIN.
4. ALL PROPOSED GRAVITY WASTEWATER PIPES TO BE SDR-26 UNLESS OTHERWISE SPECIFIED ON THE PLANS.
5. UNLESS OTHERWISE NOTED, CONTRACTOR TO ENSURE WW SERVICES ARE SET TO MAXIMUM DEPTH (PER DETAIL WW13) FOR ALL LOTS IN ORDER TO PROVIDE SUFFICIENT DEPTH TO CONNECT SERVICE.
6. ALL MANHOLES TO BE COATED PER CITY OF GEORGETOWN SPECIFICATIONS. EXISTING MANHOLES WITH PROPOSED CONNECTIONS TO BE COATED.
7. IF THE HOME BUILDER CANNOT ACHIEVE THE MINIMUM FINISHED FLOOR ELEVATIONS SPECIFIED, THEN A WASTEWATER GRINDER PUMP SYSTEM MAY BE NEEDED TO CONNECT TO THE WASTEWATER MAIN.

TRENCH SAFETY NOTES:

1. IN ACCORDANCE WITH THE LAWS OF THE STATE OF TEXAS AND THE U.S. OCCUPATIONAL SAFETY AND HEALTH ADMINISTRATION REGULATIONS, ALL TRENCHES OVER 5 FEET IN DEPTH IN EITHER HARD AND COMPACT OR SOFT AND UNSTABLE SOIL SHALL BE SLOPED, SHORED, SHEETED, BRACED OR OTHERWISE SUPPORTED. FURTHERMORE, ALL TRENCHES LESS THAN 5 FEET IN DEPTH SHALL ALSO BE EFFECTIVELY PROTECTED WHEN HAZARDOUS GROUND MOVEMENT MAY BE EXPECTED. TRENCH SAFETY SYSTEMS TO BE UTILIZED FOR THIS PROJECT WILL BE PROVIDE BY THE CONTRACTOR.
2. IN ACCORDANCE WITH THE U.S. OCCUPATIONAL SAFETY AND HEALTH ADMINISTRATION REGULATIONS,WHEN PERSONS ARE IN TRENCHES 4-FEET DEEP OR MORE, ADEQUATE MEANS OF EXIT, SUCH AS A LADDER OR STEPS, MUST BE PROVIDED AND LOCATED SO AS TO REQUIRE NO MORE THAN 25 FEET OF LATERAL TRAVEL.
3. CONSTRUCTION SHALL NOT PROCEED UNTIL APPROPRIATE TRENCH SAFETY SYSTEM DETAILS, AS DESIGNED BY A PROFESSIONAL ENGINEER, ARE RETAINED AND COPIES SUBMITTED TO THE CITY OF GEORGETOWN.
4. DEEP EXCAVATIONS: ON EXCAVATIONS EXCEEDING 20 FEET IN DEPTH, TWO OR MORE MEANS OF EGRESS FROM THE EXCAVATION SHALL BE PROVIDED. THE CONTRACTOR SHALL CONSULT WITH A REGISTERED ENGINEER, EXPERIENCED IN TRENCH SAFETY SYSTEMS, REGARDING SPECIFIC MEANS AND METHODS EMPLOYED. CONTRACTOR SHALL PROVIDE A TRENCH SAFETY PLAN SEALED BY A REGISTERED PROFESSIONAL ENGINEER AS REQUIRED BY THE CITY OF GEORGETOWN.

NO	REVISION	BY	DATE

811 Know what's below. Call before you dig.

5508 HIGHWAY 290 WEST
SUITE 150
AUSTIN, TX 78735
512.872.6696
HRGREEN.COM

TBPE NO: 16384
TBPLS NO: 10194101

HRGreen® DEVELOPMENT TX

STATE OF TEXAS
CHRISTINE N. CAMPBELL
142536
LICENSED PROFESSIONAL ENGINEER

07/15/2025

WWL D PLAN & PROFILE 8+25 - END

PARKSIDE ON THE RIVER SECTIONS 11, 12A & 15A CONSTRUCTION PLANS GEORGETOWN, WILLIAMSON, TEXAS

DESIGNED BY: CC
DRAWN BY: MM
CHECKED BY: SN
APPROVED BY:

SHEET 125 OF 141

2025-XX-CON

P:\Blake Magee\Parkside Sections 11-15 & WOA S\Section 11, 12A & 15A\00_ACAD\Plans\sh240522 WWPP WWL D.dwg, WWL D PLAN & PROFILE 8+25 - END, July 18, 2025, 12:33 PM, imalal.muhammad

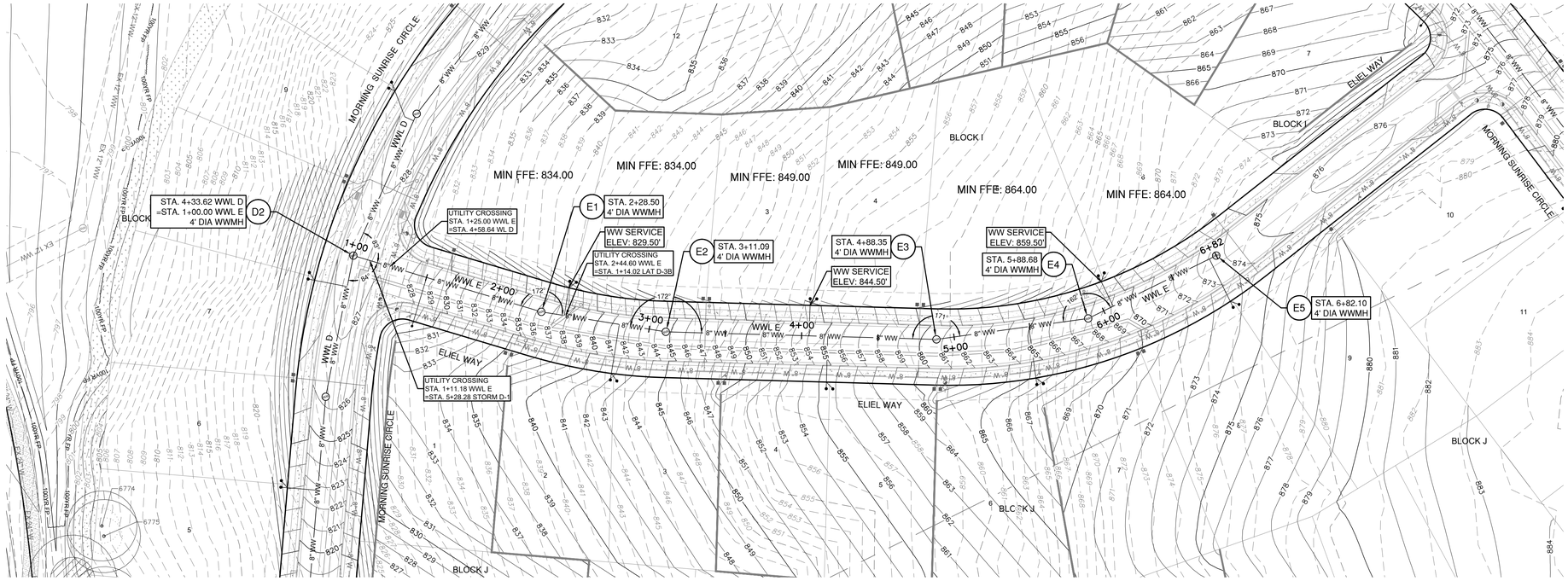

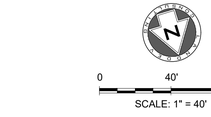

LEGEND

- EXISTING MINOR CONTOUR
- EXISTING MAJOR CONTOUR
- PROPOSED MINOR CONTOUR
- PROPOSED MAJOR CONTOUR
- BOUNDARY
- EASEMENT
- FEMA FLOODWAY PER FIRM# 48491C0460F & LOMR# 21-06-0115P
- FEMA AE — 100YR ATLAS 14 FEMA ZONE AE FLOODPLAIN PER FIRM# 48491C0460F & LOMR# 21-06-0115P
- FEMA A — 100YR FEMA ZONE A FLOODPLAIN PER FIRM MAP# 48491C0460F
- 100YR CLOMR — 100YR CLOMR FLOODPLAIN CASE# 15-06-2071R
- FDFP — 100YR ATLAS 14 FULLY DEVELOPED FLOODPLAIN (STANTEC DRAINAGE STUDY, SHERVIN NOOSHIN, 3/25/19) APPROVED WITH PP# 2019-5-PP
- OHWM — ORDINARY HIGH WATER MARK PER ADAMS ENVIRONMENTAL
- 2-4" SCH 40 PVC SLEEVE
- 8" WW — PROPOSED WASTEWATER LINE
- SD — PROPOSED STORM LINE
- 8" W — PROPOSED WATER LINE
- FIRE HYDRANT
- WATER VALVE
- SD — STORM SEWER MAHNOLE
- WW — WASTEWATER MANHOLE
- CURB INLET
- PROPOSED SINGLE WASTEWATER SERVICE
- PROPOSED DOUBLE WASTEWATER SERVICE
- PROPOSED SINGLE WATER SERVICE
- PROPOSED DOUBLE WATER SERVICE
- TREES TO REMAIN HERITAGE
- TREES TO REMAIN NON HERITAGE

WWL E

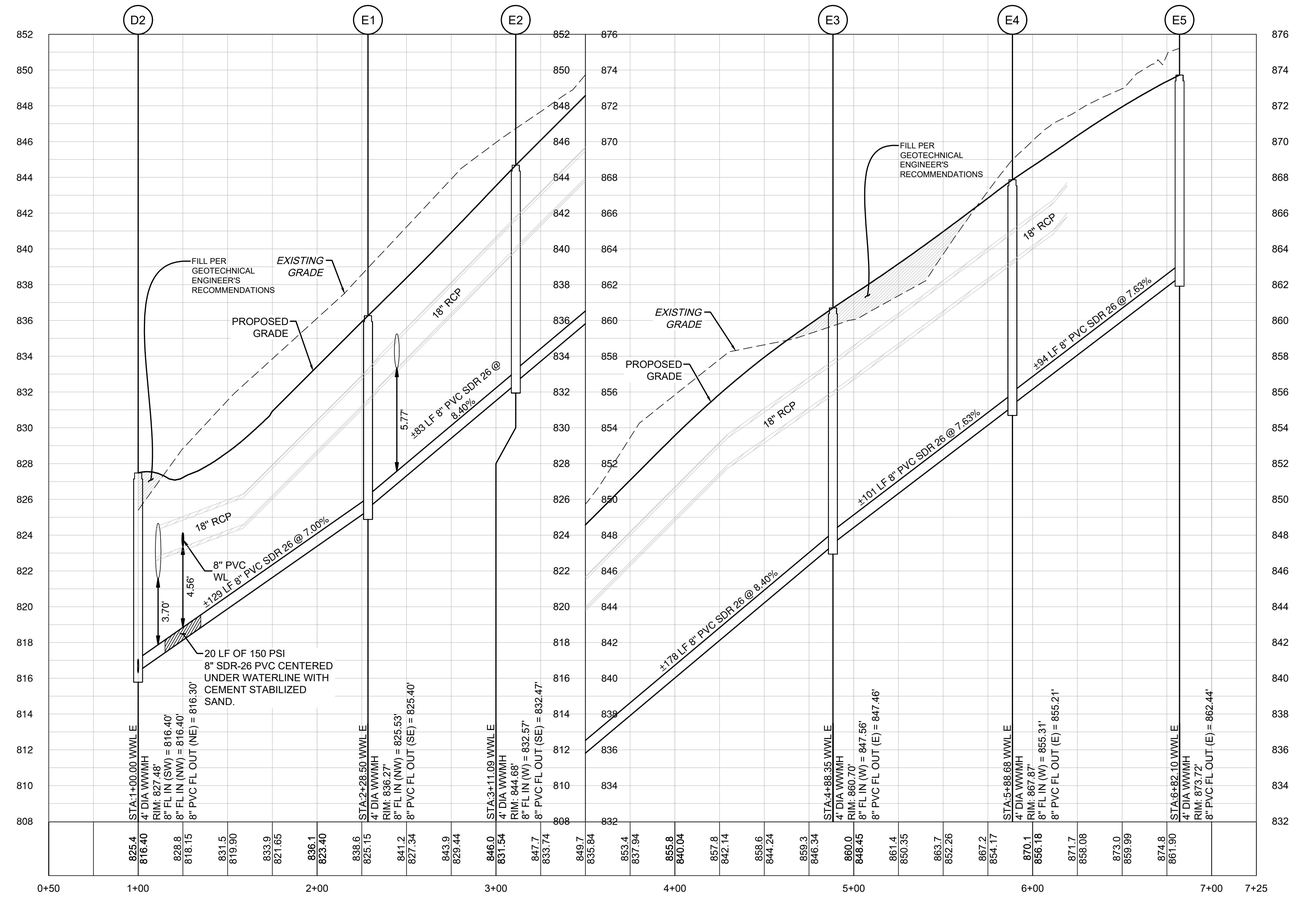

VERT. SCALE: 1" = 4'
HORZ. SCALE: 1" = 40'

4' 2' 0 VERT. SCALE

EXISTING GRADE - CENTERLINE
FINISHED GRADE - CENTERLINE

EXISTING GROUND — 100.1 / 99.0 — PROPOSED FLOWLINE

NOTES:

1. REFER TO THE WATER AND WASTEWATER DETAIL SHEET(S) FOR TYPE S AND TYPE D SERVICE CONNECTIONS.
2. UTILITIES ON THIS SITE TO BE BUILT PER THE APPROVED UTILITY ASSIGNMENT SHOWN ON THE WATER AND WASTEWATER DETAIL SHEET.
3. PORTIONS OF THIS SITE LIE WITHIN THE FEMA 100-YR FLOODPLAIN.
4. ALL PROPOSED GRAVITY WASTEWATER PIPES TO BE SDR-26 UNLESS OTHERWISE SPECIFIED ON THE PLANS.
5. UNLESS OTHERWISE NOTED, CONTRACTOR TO ENSURE WW SERVICES ARE SET TO MAXIMUM DEPTH (PER DETAIL WW13) FOR ALL LOTS IN ORDER TO PROVIDE SUFFICIENT DEPTH TO CONNECT SERVICE.
6. ALL MANHOLES TO BE COATED PER CITY OF GEORGETOWN SPECIFICATIONS. EXISTING MANHOLES WITH PROPOSED CONNECTIONS TO BE COATED.
7. IF THE HOME BUILDER CANNOT ACHIEVE THE MINIMUM FINISHED FLOOR ELEVATIONS SPECIFIED, THEN A WASTEWATER GRINDER PUMP SYSTEM MAY BE NEEDED TO CONNECT TO THE WASTEWATER MAIN.

TRENCH SAFETY NOTES:

1. IN ACCORDANCE WITH THE LAWS OF THE STATE OF TEXAS AND THE U.S. OCCUPATIONAL SAFETY AND HEALTH ADMINISTRATION REGULATIONS, ALL TRENCHES OVER 5 FEET IN DEPTH IN EITHER HARD AND COMPACT OR SOFT AND UNSTABLE SOIL SHALL BE SLOPED, SHORED, SHEETED, BRACED OR OTHERWISE SUPPORTED. FURTHERMORE, ALL TRENCHES LESS THAN 5 FEET IN DEPTH SHALL ALSO BE EFFECTIVELY PROTECTED WHEN HAZARDOUS GROUND MOVEMENT MAY BE EXPECTED. TRENCH SAFETY SYSTEMS TO BE UTILIZED FOR THIS PROJECT WILL BE PROVIDE BY THE CONTRACTOR.
2. IN ACCORDANCE WITH THE U.S. OCCUPATIONAL SAFETY AND HEALTH ADMINISTRATION REGULATIONS,WHEN PERSONS ARE IN TRENCHES 4-FEET DEEP OR MORE, ADEQUATE MEANS OF EXIT, SUCH AS A LADDER OR STEPS, MUST BE PROVIDED AND LOCATED SO AS TO REQUIRE NO MORE THAN 25 FEET OF LATERAL TRAVEL.
3. CONSTRUCTION SHALL NOT PROCEED UNTIL APPROPRIATE TRENCH SAFETY SYSTEM DETAILS, AS DESIGNED BY A PROFESSIONAL ENGINEER, ARE RETAINED AND COPIES SUBMITTED TO THE CITY OF GEORGETOWN.
4. DEEP EXCAVATIONS: ON EXCAVATIONS EXCEEDING 20 FEET IN DEPTH, TWO OR MORE MEANS OF EGRESS FROM THE EXCAVATION SHALL BE PROVIDED. THE CONTRACTOR SHALL CONSULT WITH A REGISTERED ENGINEER, EXPERIENCED IN TRENCH SAFETY SYSTEMS, REGARDING SPECIFIC MEANS AND METHODS EMPLOYED. CONTRACTOR SHALL PROVIDE A TRENCH SAFETY PLAN SEALED BY A REGISTERED PROFESSIONAL ENGINEER AS REQUIRED BY THE CITY OF GEORGETOWN.

NO.	REVISION	BY	DATE

811 Know what's below. Call before you dig.

5508 HIGHWAY 290 WEST
SUITE 150
AUSTIN, TX 78735
512.872.6696
HRGREEN.COM

TBPE NO: 16384
TBPLS NO: 10194101

HRGreen® DEVELOPMENT TX

STATE OF TEXAS
CHRISTINE N. CAMPBELL
142536
LICENSED PROFESSIONAL ENGINEER
07/15/2025

WWL E PLAN & PROFILE

PARKSIDE ON THE RIVER SECTIONS 11, 12A & 15A CONSTRUCTION PLANS

GEORGETOWN, WILLIAMSON, TEXAS

DESIGNED BY: CC
DRAWN BY: MM
CHECKED BY: SN
APPROVED BY:

SHEET 126 OF 141

2025-XX-CON

P:\Blake Magee\Parkside Sections 11-15 & WOH 2\Section 11, 12A & 15A\03_ACAD\Plans\04\08\25 WWP\ WWL E.dwg, WWL E PLAN & PROFILE, July 16, 2025, 12:34 PM, imalak.mohammad

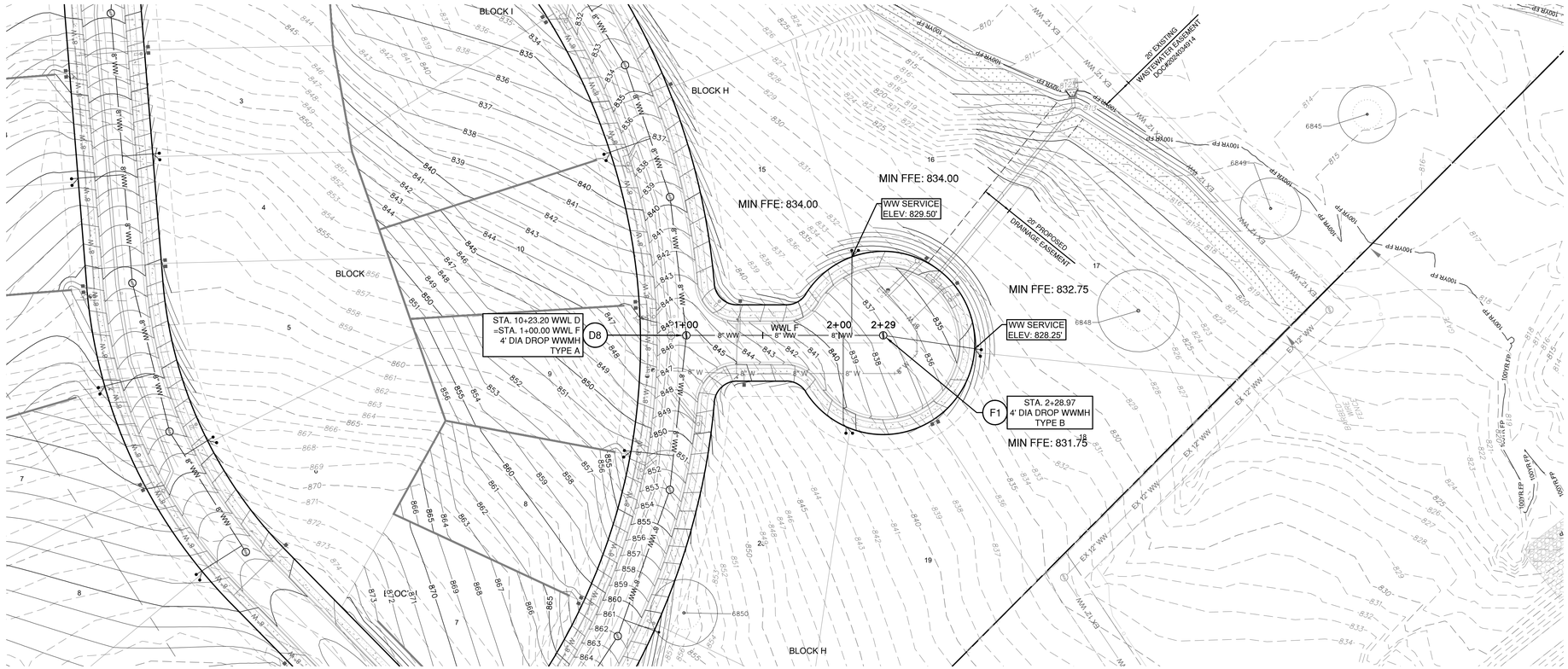

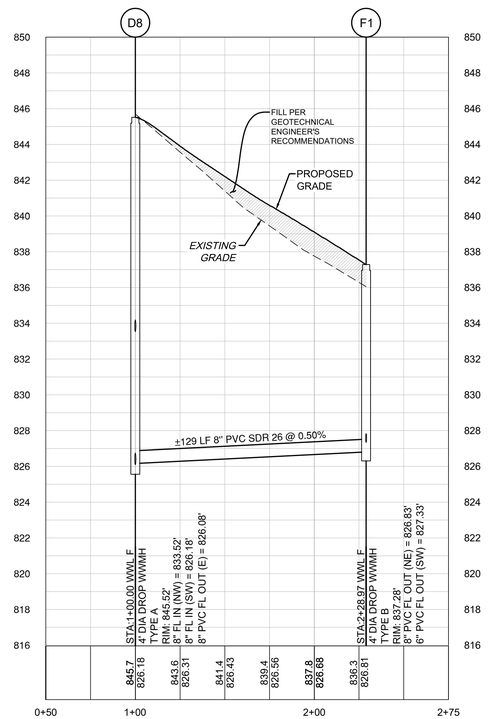

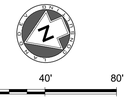

LEGEND

- EXISTING MINOR CONTOUR
- EXISTING MAJOR CONTOUR
- PROPOSED MINOR CONTOUR
- PROPOSED MAJOR CONTOUR
- BOUNDARY
- EASEMENT
- FEMA FLOODWAY PER FIRM# 48491C0460F & LOMR# 21-06-0115P
- FEMA AE — 100YR ATLAS 14 FEMA ZONE AE FLOODPLAIN PER FIRM# 48491C0460F & LOMR# 21-06-0115P
- FEMA A — 100YR FEMA ZONE A FLOODPLAIN PER FIRM MAP# 48491C0460F
- 100YR CLOMR — 100YR CLOMR FLOODPLAIN CASE# 15-06-2071R
- FDFP — 100YR ATLAS 14 FULLY DEVELOPED FLOODPLAIN (STANTEC DRAINAGE STUDY, SHERVIN NOOSHIN, 3/25/19) APPROVED WITH PP# 2019-5-PP
- OHWM — ORDINARY HIGH WATER MARK PER ADAMS ENVIRONMENTAL
- 2-4" SCH 40 PVC SLEEVE
- 8" WW — PROPOSED WASTEWATER LINE
- SD — PROPOSED STORM LINE
- 8" W — PROPOSED WATER LINE
- FIRE HYDRANT
- WATER VALVE
- SD — STORM SEWER MAHNOLE
- WW — WASTEWATER MANHOLE
- CURB INLET
- PROPOSED SINGLE WASTEWATER SERVICE
- PROPOSED DOUBLE WASTEWATER SERVICE
- PROPOSED SINGLE WATER SERVICE
- PROPOSED DOUBLE WATER SERVICE
- TREES TO REMAIN HERITAGE
- TREES TO REMAIN NON HERITAGE

VERT. SCALE: 1" = 4'
HORZ. SCALE: 1" = 40'

4'
2'
0
VERT. SCALE

EXISTING GRADE - CENTERLINE
FINISHED GRADE - CENTERLINE

EXISTING GROUND 1000.1 / 995.0 PROPOSED FLOWLINE

NOTES:

1. REFER TO THE WATER AND WASTEWATER DETAIL SHEET(S) FOR TYPE S AND TYPE D SERVICE CONNECTIONS.
2. UTILITIES ON THIS SITE TO BE BUILT PER THE APPROVED UTILITY ASSIGNMENT SHOWN ON THE WATER AND WASTEWATER DETAIL SHEET.
3. PORTIONS OF THIS SITE LIE WITHIN THE FEMA 100-YR FLOODPLAIN.
4. ALL PROPOSED GRAVITY WASTEWATER PIPES TO BE SDR-26 UNLESS OTHERWISE SPECIFIED ON THE PLANS.
5. UNLESS OTHERWISE NOTED, CONTRACTOR TO ENSURE WW SERVICES ARE SET TO MAXIMUM DEPTH (PER DETAIL WW13) FOR ALL LOTS IN ORDER TO PROVIDE SUFFICIENT DEPTH TO CONNECT SERVICE.
6. ALL MANHOLES TO BE COATED PER CITY OF GEORGETOWN SPECIFICATIONS. EXISTING MANHOLES WITH PROPOSED CONNECTIONS TO BE COATED.
7. IF THE HOME BUILDER CANNOT ACHIEVE THE MINIMUM FINISHED FLOOR ELEVATIONS SPECIFIED, THEN A WASTEWATER GRINDER PUMP SYSTEM MAY BE NEEDED TO CONNECT TO THE WASTEWATER MAIN.

TRENCH SAFETY NOTES:

1. IN ACCORDANCE WITH THE LAWS OF THE STATE OF TEXAS AND THE U.S. OCCUPATIONAL SAFETY AND HEALTH ADMINISTRATION REGULATIONS, ALL TRENCHES OVER 5 FEET IN DEPTH IN EITHER HARD AND COMPACT OR SOFT AND UNSTABLE SOIL SHALL BE SLOPED, SHORED, SHEETED, BRACED OR OTHERWISE SUPPORTED. FURTHERMORE, ALL TRENCHES LESS THAN 5 FEET IN DEPTH SHALL ALSO BE EFFECTIVELY PROTECTED WHEN HAZARDOUS GROUND MOVEMENT MAY BE EXPECTED. TRENCH SAFETY SYSTEMS TO BE UTILIZED FOR THIS PROJECT WILL BE PROVIDE BY THE CONTRACTOR.
2. IN ACCORDANCE WITH THE U.S. OCCUPATIONAL SAFETY AND HEALTH ADMINISTRATION REGULATIONS,WHEN PERSONS ARE IN TRENCHES 4-FEET DEEP OR MORE, ADEQUATE MEANS OF EXIT, SUCH AS A LADDER OR STEPS, MUST BE PROVIDED AND LOCATED SO AS TO REQUIRE NO MORE THAN 25 FEET OF LATERAL TRAVEL.
3. CONSTRUCTION SHALL NOT PROCEED UNTIL APPROPRIATE TRENCH SAFETY SYSTEM DETAILS, AS DESIGNED BY A PROFESSIONAL ENGINEER, ARE RETAINED AND COPIES SUBMITTED TO THE CITY OF GEORGETOWN.
4. DEEP EXCAVATIONS: ON EXCAVATIONS EXCEEDING 20 FEET IN DEPTH, TWO OR MORE MEANS OF EGRESS FROM THE EXCAVATION SHALL BE PROVIDED. THE CONTRACTOR SHALL CONSULT WITH A REGISTERED ENGINEER, EXPERIENCED IN TRENCH SAFETY SYSTEMS, REGARDING SPECIFIC MEANS AND METHODS EMPLOYED. CONTRACTOR SHALL PROVIDE A TRENCH SAFETY PLAN SEALED BY A REGISTERED PROFESSIONAL ENGINEER AS REQUIRED BY THE CITY OF GEORGETOWN.

NO	REVISION	BY	DATE

811 Know what's below. Call before you dig.

HRGreen
DEVELOPMENT TX
5508 HIGHWAY 290 WEST
SUITE 150
AUSTIN, TX 78735
512.872.6696
HRGREEN.COM
TBPE NO: 16384
TBPLS NO: 10194101

STATE OF TEXAS
CHRISTINE N. CAMPBELL
142536
LICENSED PROFESSIONAL ENGINEER
07/15/2025

WWL F PLAN & PROFILE

PARKSIDE ON THE RIVER SECTIONS 11, 12A & 15A CONSTRUCTION PLANS

GEORGETOWN, WILLIAMSON, TEXAS

DESIGNED BY: CC
DRAWN BY: MM
CHECKED BY: SN
APPROVED BY:

SHEET 127 OF 141

2025-XX-CON

P:\Blake Magee\Parkside Sections 11-15 & WOA 5\Sections 11, 12A & 15A\00_ACAD\Planset\040523 WWPP WWL F.dwg, WWL F PLAN & PROFILE, July 16, 2025, 12:25 PM, mallak.muhammad

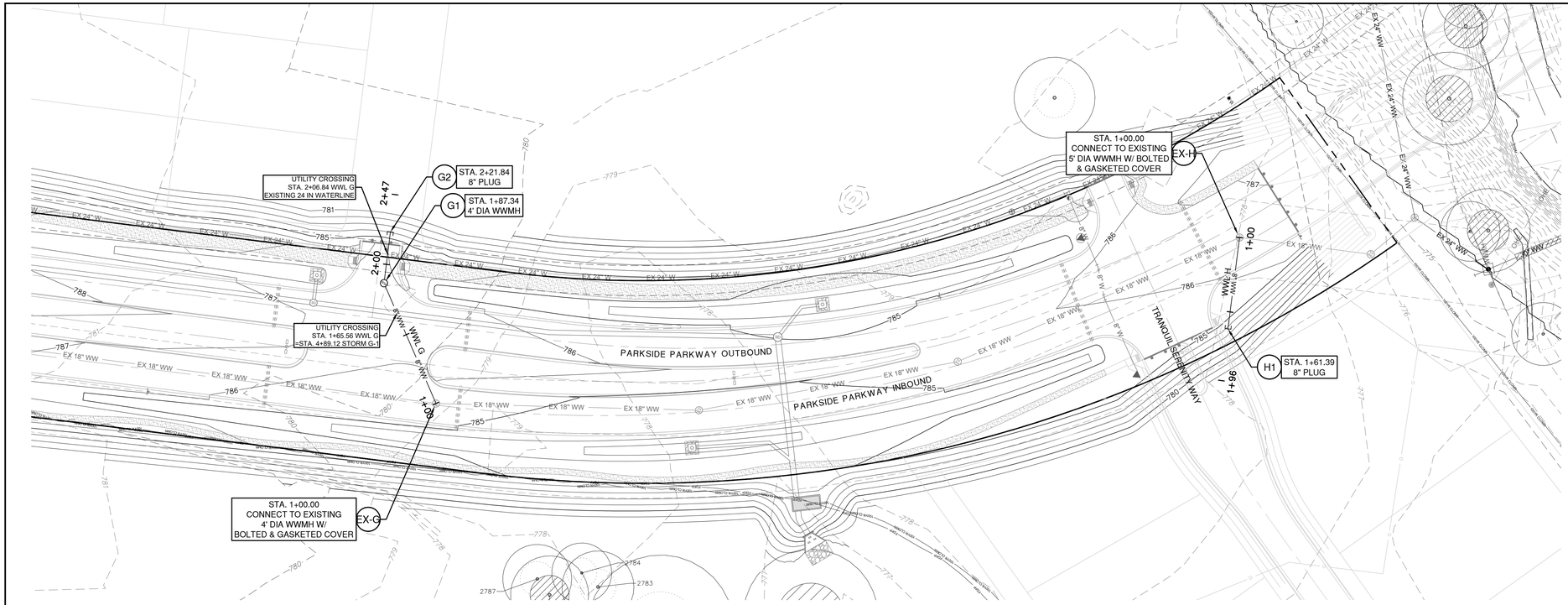

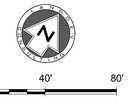

LEGEND

- EXISTING MINOR CONTOUR
- EXISTING MAJOR CONTOUR
- PROPOSED MINOR CONTOUR
- PROPOSED MAJOR CONTOUR
- BOUNDARY
- EASEMENT
- FEMA FLOODWAY PER FIRM# 48491C0460F & LOMR# 21-06-0115P
- FEMA AE — 100YR ATLAS 14 FEMA ZONE AE FLOODPLAIN PER FIRM# 48491C0460F & LOMR# 21-06-0115P
- FEMA A — 100YR FEMA ZONE A FLOODPLAIN PER FIRM MAP# 48491C0460F
- 100YR CLOMR — 100YR CLOMR FLOODPLAIN CASE# 15-06-2071R
- FDFP — 100YR ATLAS 14 FULLY DEVELOPED FLOODPLAIN (STANTEC DRAINAGE STUDY, SHERVIN NOOSHIN, 3/25/19) APPROVED WITH PP# 2019-5-PP
- OHWM — ORDINARY HIGH WATER MARK PER ADAMS ENVIRONMENTAL
- 2-4" SCH 40 PVC SLEEVE
- 8" WW — PROPOSED WASTEWATER LINE
- SD — PROPOSED STORM LINE
- 8" W — PROPOSED WATER LINE
- FIRE HYDRANT
- WATER VALVE
- SD — STORM SEWER MAHNOLE
- WW — WASTEWATER MANHOLE
- CURB INLET
- PROPOSED SINGLE WASTEWATER SERVICE
- PROPOSED DOUBLE WASTEWATER SERVICE
- PROPOSED SINGLE WATER SERVICE
- PROPOSED DOUBLE WATER SERVICE
- TREES TO REMAIN HERITAGE
- TREES TO REMAIN NON HERITAGE

WWL H

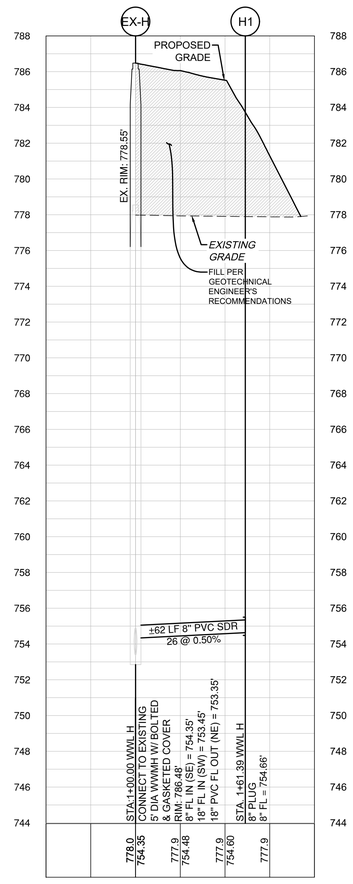

WWL G

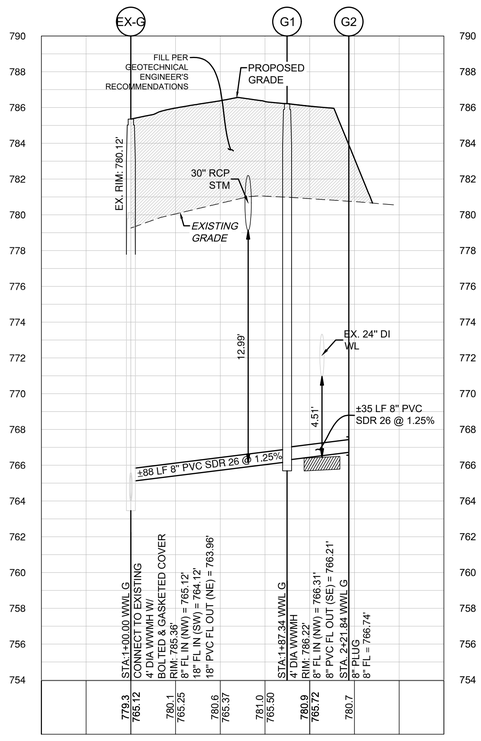

CONTRACTOR TO VERIFY LOCATION OF EXISTING UTILITIES (HORIZONTALLY & VERTICALLY) PRIOR TO INSTALLATION AND NOTIFY ENGINEER OF ANY DISCREPANCIES

VERT. SCALE: 1" = 4'
HORZ. SCALE: 1" = 40'

4'
2'
0
VERT. SCALE

EXISTING GRADE - CENTERLINE
FINISHED GRADE - CENTERLINE

EXISTING GROUND — 100% 10' 90% — PROPOSED FLOWLINE

NOTES:

1. REFER TO THE WATER AND WASTEWATER DETAIL SHEET(S) FOR TYPE S AND TYPE D SERVICE CONNECTIONS.
2. UTILITIES ON THIS SITE TO BE BUILT PER THE APPROVED UTILITY ASSIGNMENT SHOWN ON THE WATER AND WASTEWATER DETAIL SHEET.
3. PORTIONS OF THIS SITE LIE WITHIN THE FEMA 100-YR FLOODPLAIN.
4. ALL PROPOSED GRAVITY WASTEWATER PIPES TO BE SDR-26 UNLESS OTHERWISE SPECIFIED ON THE PLANS.
5. UNLESS OTHERWISE NOTED, CONTRACTOR TO ENSURE WW SERVICES ARE SET TO MAXIMUM DEPTH (PER DETAIL WW13) FOR ALL LOTS IN ORDER TO PROVIDE SUFFICIENT DEPTH TO CONNECT SERVICE.
6. ALL MANHOLES TO BE COATED PER CITY OF GEORGETOWN SPECIFICATIONS. EXISTING MANHOLES WITH PROPOSED CONNECTIONS TO BE COATED.
7. IF THE HOME BUILDER CANNOT ACHIEVE THE MINIMUM FINISHED FLOOR ELEVATIONS SPECIFIED, THEN A WASTEWATER GRINDER PUMP SYSTEM MAY BE NEEDED TO CONNECT TO THE WASTEWATER MAIN.

TRENCH SAFETY NOTES:

1. IN ACCORDANCE WITH THE LAWS OF THE STATE OF TEXAS AND THE U.S. OCCUPATIONAL SAFETY AND HEALTH ADMINISTRATION REGULATIONS, ALL TRENCHES OVER 5 FEET IN DEPTH IN EITHER HARD AND COMPACT OR SOFT AND UNSTABLE SOIL SHALL BE SLOPED, SHORED, SHEETED, BRACED OR OTHERWISE SUPPORTED. FURTHERMORE, ALL TRENCHES LESS THAN 5 FEET IN DEPTH SHALL ALSO BE EFFECTIVELY PROTECTED WHEN HAZARDOUS GROUND MOVEMENT MAY BE EXPECTED. TRENCH SAFETY SYSTEMS TO BE UTILIZED FOR THIS PROJECT WILL BE PROVIDE BY THE CONTRACTOR.
2. IN ACCORDANCE WITH THE U.S. OCCUPATIONAL SAFETY AND HEALTH ADMINISTRATION REGULATIONS,WHEN PERSONS ARE IN TRENCHES 4-FEET DEEP OR MORE, ADEQUATE MEANS OF EXIT, SUCH AS A LADDER OR STEPS, MUST BE PROVIDED AND LOCATED SO AS TO REQUIRE NO MORE THAN 25 FEET OF LATERAL TRAVEL.
3. CONSTRUCTION SHALL NOT PROCEED UNTIL APPROPRIATE TRENCH SAFETY SYSTEM DETAILS, AS DESIGNED BY A PROFESSIONAL ENGINEER, ARE RETAINED AND COPIES SUBMITTED TO THE CITY OF GEORGETOWN.
4. DEEP EXCAVATIONS: ON EXCAVATIONS EXCEEDING 20 FEET IN DEPTH, TWO OR MORE MEANS OF EGRESS FROM THE EXCAVATION SHALL BE PROVIDED. THE CONTRACTOR SHALL CONSULT WITH A REGISTERED ENGINEER, EXPERIENCED IN TRENCH SAFETY SYSTEMS, REGARDING SPECIFIC MEANS AND METHODS EMPLOYED. CONTRACTOR SHALL PROVIDE A TRENCH SAFETY PLAN SEALED BY A REGISTERED PROFESSIONAL ENGINEER AS REQUIRED BY THE CITY OF GEORGETOWN.

NO	REVISION	BY	DATE

811 Know what's below. Call before you dig.

5508 HIGHWAY 290 WEST
SUITE 150
AUSTIN, TX 78735
512.872.6696
HRGREEN.COM

TBPE NO: 16384
TBPLS NO: 10194101

HRGreen®
DEVELOPMENT TX

STATE OF TEXAS
CHRISTINE N. CAMPBELL
142536
LICENSED PROFESSIONAL ENGINEER
07/15/2025

WWL G & H PLAN & PROFILE

PARKSIDE ON THE RIVER SECTIONS 11, 12A & 15A CONSTRUCTION PLANS

GEORGETOWN, WILLIAMSON, TEXAS

DESIGNED BY: CC
DRAWN BY: MM
CHECKED BY: SN
APPROVED BY:

SHEET 128 OF 141

2025-XX-CON

P:\Blake Magee\Parkside Sections 11-15 & WOA 5\Sections 11, 12A & 15A\00_ACAD\Planset\240523 WWPP WWL G.dwg, WWL G & H PLAN & PROFILE, July 16, 2025, 12:39 PM, mallan.muhammad

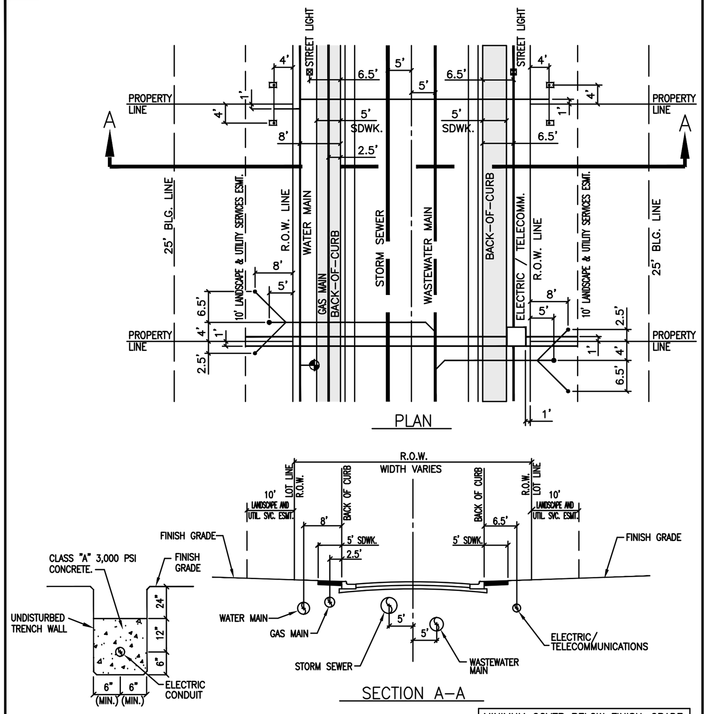

NOTE: WHEN CROSSING A WATER MAIN, THE ELECTRIC CONDUIT MUST BE ENCASED WITH 3,000 PSI RED CONCRETE FOR FIVE (5) FEET BOTH SIDES FROM THE CROSSING POINT.

ELECTRIC CONDUIT CONCRETE ENCASEMENT DETAIL

MINIMUM COVER BELOW FINISH–GRADE	
ALL UTILITIES UNDER ROADWAY – 36"	
ELECTRIC PRIMARY	36"
ELECTRIC SECONDARY	24"
WATER	36"
WASTEWATER	48"
STORM SEWER	36"
GAS	36"
TELECOMMUNICATIONS	36"

CLASSIFICATION	ROW	B–B	PVMT.
LOCAL STREET	50'	28'	24'
RESIDENTIAL STREET	65'	37'	33'
MAJOR COLLECTOR	73'	45'	41'

The Architect/Engineer assumes responsibility for appropriate use of this standard.

ADOPTED 6/21/2006
CITY OF GEORGETOWN CONSTRUCTION STANDARDS AND DETAILS
UTILITY ASSIGNMENTS FOR LOCAL STREETS, RESIDENTIAL COLLECTORS AND MAJOR COLLECTORS
WW01A — NTS — 1/2003 — MRS — TRB

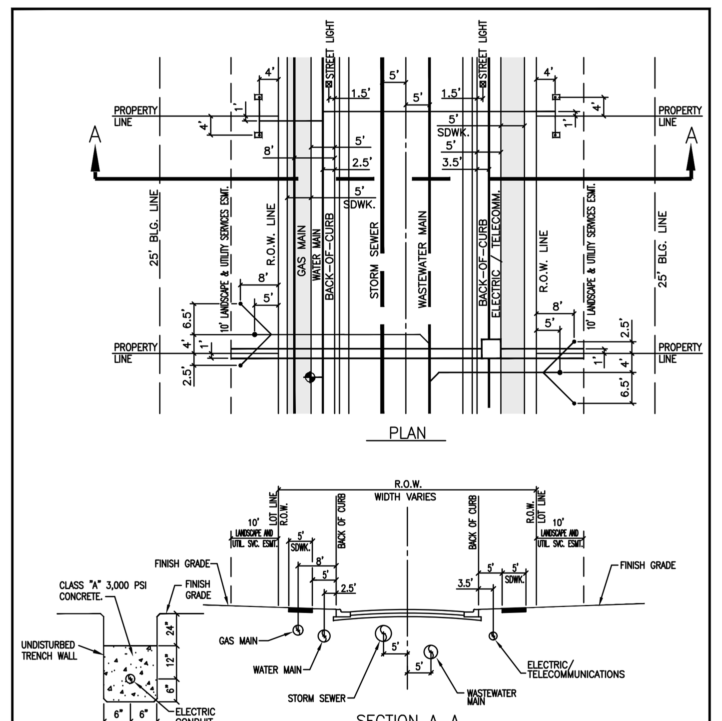

NOTE: WHEN CROSSING A WATER MAIN, THE ELECTRIC CONDUIT MUST BE ENCASED WITH 3,000 PSI RED CONCRETE FOR FIVE (5) FEET BOTH SIDES FROM THE CROSSING POINT.

ELECTRIC CONDUIT CONCRETE ENCASEMENT DETAIL

MINIMUM COVER BELOW FINISH–GRADE	
ALL UTILITIES UNDER ROADWAY – 36"	
ELECTRIC PRIMARY	36"
ELECTRIC SECONDARY	24"
WATER	36"
WASTEWATER	48"
STORM SEWER	36"
GAS	36"
TELECOMMUNICATIONS	36"

CLASSIFICATION	ROW	B–B	PVMT.
MINOR ARTERIAL	VARIES	80'	76'
MAJOR ARTERIAL	VARIES	110'	106'
——	——	——	——

The Architect/Engineer assumes responsibility for appropriate use of this standard.

ADOPTED 6/21/2006
CITY OF GEORGETOWN CONSTRUCTION STANDARDS AND DETAILS
UTILITY ASSIGNMENTS FOR MINOR ARTERIAL AND MAJOR ARTERIAL ROADWAYS
WW01B — NTS — 1/2003 — MRS — TRB

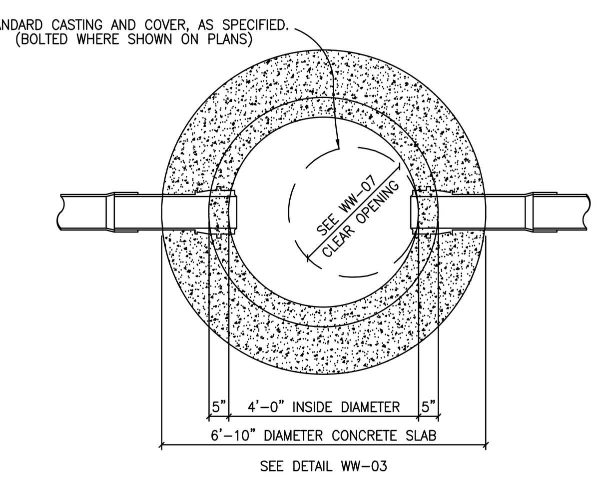

MANHOLE PLAN

CITY OF GEORGETOWN NOTES:

MANHOLE DETAILS SHALL REFLECT THE CITY'S MINIMUM SPECIFICATIONS, AS STATED BELOW:

A. ALL MANHOLES SHALL BE 48" I.D., R.C.P., CLASS III, WITH RUBBER PROFILE GASKET – SINGLE OFF–SET JOINT CONFORMING TO ASTM C478, C433 AND C76.
B. ALL MANHOLES SHALL HAVE FRAME AND COVER, AS MANUFACTURED BY EAST JORDAN IRON WORKS (AS PER DETAIL # WW–07) OR APPROVED EQUIVALENT.
C. ALL MANHOLES SHALL BE CONCRETE WITH CAST IRON FRAME AND COVER.
D. ALL MANHOLES SHALL HAVE AN ECCENTRIC CONE.
E. MANHOLES MAY HAVE A FLAT LID, IF APPROVED BY CITY OF GEORGETOWN, BEING 12" THICK WITH A MINIMUM 30" OPENING, AS MANUFACTURED BY HANSEN PIPE AND PRECAST OR APPROVED EQUAL M.F.G. CONFORMING TO ASTM C478, 5000 P.S.I. CONCRETE, TRAFFIC BEARING AND WITH PROFILE GASKET – SINGLE OFF–SET JOINT CONFORMING TO ASTM C443.
F. INVERTS AND FLEXIBLE SEAL BOOTS, PER ASTM C–923, SHALL BE CAST INTO BASE SECTION.
G. MINIMUM DROP BETWEEN INVERTS SHALL BE ONE–TENTH OF A FOOT (0.1').
H. GRADE RINGS WITH AN I.D. TO MATCH FRAMES CLEAR OPENING WITH A MAXIMUM ADJUSTMENT OF 12" ARE ALLOWED.

The Architect/Engineer assumes responsibility for appropriate use of this standard.

ADOPTED 6/21/2006
CITY OF GEORGETOWN CONSTRUCTION STANDARDS AND DETAILS
STANDARD MANHOLE – PLAN
WW02 — NTS — 1/2003 — MRS — TRB

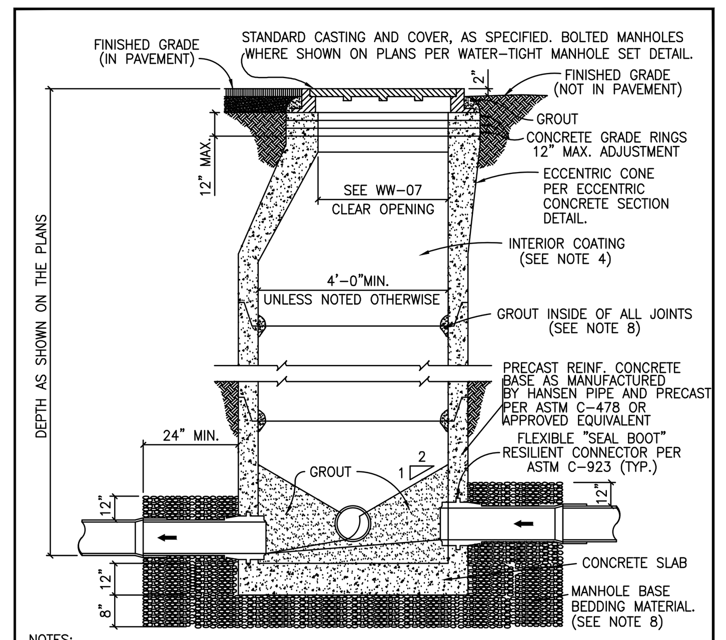

NOTES:

1. MANHOLES SHALL BE PRECAST ASTM C–478 BELL AND SPIGOT WITH PROFILE GASKET – SINGLE OFF–SET JOINTS.
2. SEE PLANS AND MANHOLE SCHEDULE, FOR MANHOLE SIZE, LOCATION, CONFIGURATION, TYPE OF TOP SECTION, VENTING REQUIREMENTS, PIPE SIZE AND TYPES.
3. SEE SPECIFICATIONS ON MATERIALS AND CONSTRUCTION.
4. AN 80 MIL. COAT OF RAVEN LINING SYSTEMS, RAVEN 405 ULTRA HIGH BUILD EPOXY COATING, OR SPRAY WALL EPOXY COATING, OR APPROVED EQUAL, TO BE APPLIED TO ENTIRE INTERIOR OF EACH WASTEWATER MANHOLE AND UNDERSIDE OF FLAT TOPS.
5. ALL MANHOLE COVERS SHALL BE BOLTED AND GASKETTED WHEN MANHOLES ARE LOCATED OUT FROM PAVEMENT.
6. MANHOLES TO BE VENTED ARE IDENTIFIED ON MANHOLE SCHEDULE. REFERENCE MANHOLE VENT DETAIL.
7. MANHOLES ARE TO BE DESIGNED TO RESIST LATERAL AND VERTICAL SOIL FORCES RESULTING FROM MANHOLE DEPTH. ADDITIONALLY, MANHOLES LOCATED IN PAVEMENT TO BE DESIGNED FOR HS–20 TRAFFIC LOADS.
8. GROUT SHALL MEET THE REQUIREMENTS AS STATED BY THE COATING MANUFACTURER.
9. MANHOLE BASE BEDDING MATERIAL SPECS. FOR 3/4" WASHED GRAVEL:
   SIEVE SIZE 2", PERCENT (%) RETAINED 0
   SIEVE SIZE 1 1/2", % RETAINED 0–10
   SIEVE SIZE 1", % RETAINED 45–80
   SIEVE SIZE 3/4", % RETAINED 85–100
   SIEVE SIZE 3/8", % RETAINED 95–100

The Architect/Engineer assumes responsibility for appropriate use of this standard.

ADOPTED 6/21/2006
CITY OF GEORGETOWN CONSTRUCTION STANDARDS AND DETAILS
STANDARD MANHOLE – SECTION
WW03 — NTS — 1/2003 — MRS — TRB

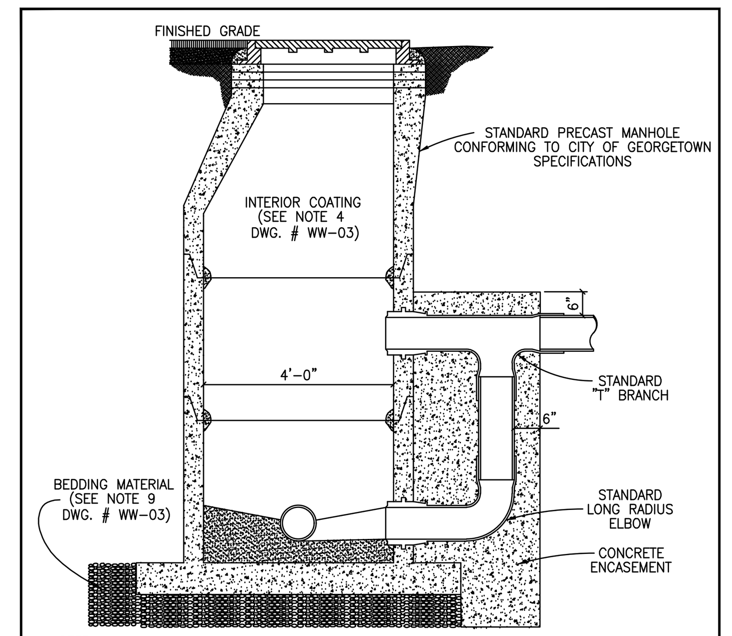

NOTES:

1. CONCRETE ENCASEMENT FOR DROP CONNECTION TO BE POURED INTEGRALLY WITH BOTH MANHOLE SLAB AND WALL.
2. DROP CONNECTIONS SHALL BE REQUIRED WHENEVER AN INFLUENT SEWER IS LOCATED TWO FEET (2') OR MORE ABOVE THE MAIN INVERT CHANNEL.
3. A FLOW CHANNEL SHALL BE CONSTRUCTED INSIDE MANHOLE TO DIRECT INFLUENT INTO FLOW STREAM.
4. WHEN P.V.C. IS USED IN SANITARY SEWER LINES, SOLVENT TYPE JOINT P.V.C. FITTINGS MAY BE UTILIZED IN THE DROP ASSEMBLY ONLY.
5. MINIMUM PIPE SIZE FOR DROP IS EIGHT INCHES (8").
6. SEE STANDARD MANHOLE DETAIL (DWG. # WW–03) FOR ADDITIONAL REQUIREMENTS.

The Architect/Engineer assumes responsibility for appropriate use of this standard.

ADOPTED 6/21/2006
CITY OF GEORGETOWN CONSTRUCTION STANDARDS AND DETAILS
DROP CONNECTION–PRECAST MANHOLE TYPE "A"
WW04 — NTS — 1/2003 — MRS — TRB

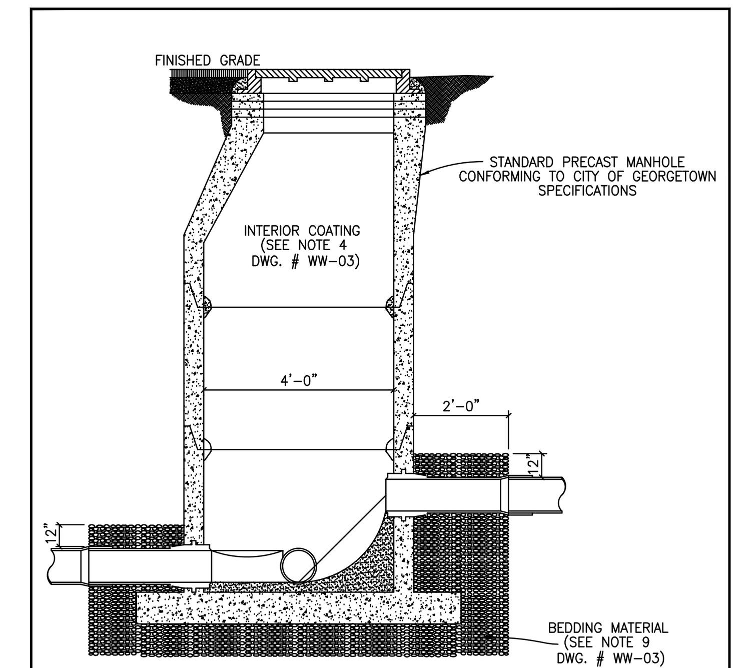

NOTES:

1. TO BE USED WHERE DROP IS SIX INCHES (6") TO TWO FEET (2'–0").
2. A FLOW CHANNEL SHALL BE CONSTRUCTED INSIDE MANHOLE TO DIRECT INFLUENT INTO FLOW STREAM.
3. CONSTRUCTION OF DROP SHALL PROVIDE AN OVERSIZED SLAB TO EXTEND UNDER THE DROP CONNECTION.
4. MINIMUM PIPE SIZE FOR DROP IS EIGHT INCHES (8").
5. SEE STANDARD MANHOLE DETAIL (DWG. # WW–03) FOR ADDITIONAL REQUIREMENTS.

The Architect/Engineer assumes responsibility for appropriate use of this standard.

ADOPTED 6/21/2006
CITY OF GEORGETOWN CONSTRUCTION STANDARDS AND DETAILS
DROP CONNECTION–PRECAST MANHOLE TYPE "B"
WW05 — NTS — 1/2003 — MRS — TRB

FLOW PATTERNS FOR INVERT CHANNELS

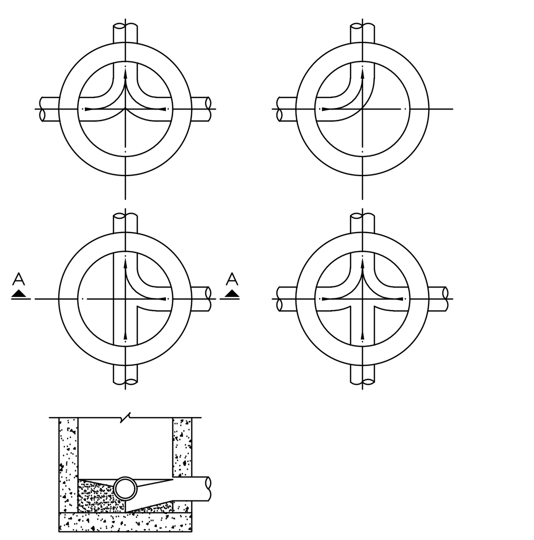

SECTION "A–A"

NOTES:

1. INVERT CHANNELS TO BE CONSTRUCTED FOR SMOOTH FLOW WITH NO OBSTRUCTIONS.
2. SPILLWAYS SHALL BE CONSTRUCTED BETWEEN PIPES WITH DIFFERENT INVERT ELEVATIONS PROVIDING FOR SMOOTH FLOW.
3. CHANNELS FOR FUTURE CONSTRUCTIONS (STUBS) SHALL BE CONSTRUCTED, FILLED WITH SAND, AND COVERED WITH 1" OF MORTAR.
4. SLOPE MANHOLE ITSELF WITH A 1:2 SLOPE FROM MANHOLE WALL TO CHANNEL.
5. INVERT SHALL BE A MINIMUM OF 1/2 THE DIAMETER OF THE LARGEST PIPE OR 4" DEEP.

The Architect/Engineer assumes responsibility for appropriate use of this standard.

ADOPTED 6/21/2006
CITY OF GEORGETOWN CONSTRUCTION STANDARDS AND DETAILS
FLOW PATTERNS FOR INVERT CHANNELS
WW06 — NTS — 1/2003 — MRS — TRB

The Architect/Engineer assumes responsibility for appropriate use of this standard.

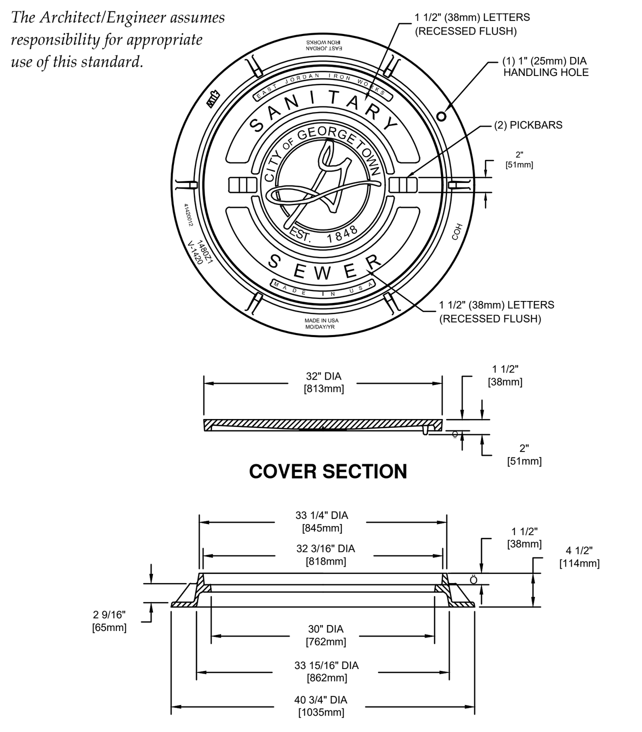

NOTES:

1. STANDARD WASTEWATER MANHOLE SET TO BE EAST JORDAN IRON WORKS, INC. CATALOG NO. 1480A V–1420/1480Z1, COVER TO BE STAMPED WITH "SANITARY SEWER".
2. STANDARD WASTEWATER MANHOLE SET TO BE HEAVY DUTY LOAD RATED.
3. FOR MORE DETAILED SPECIFICATIONS REFER TO EAST JORDAN IRON WORKS, INC. REFERENCE PRODUCT DRAWING 41420012 00148390.
4. FOR BOLTED WASTEWATER MANHOLE SET REFER TO DETAIL WW07A.

ADOPTED 6/21/2006
CITY OF GEORGETOWN CONSTRUCTION STANDARDS AND DETAILS
STANDARD WASTEWATER MANHOLE SET
WW07 — NTS — 1/2003 — MRS — TRB

The Architect/Engineer assumes responsibility for appropriate use of this standard.

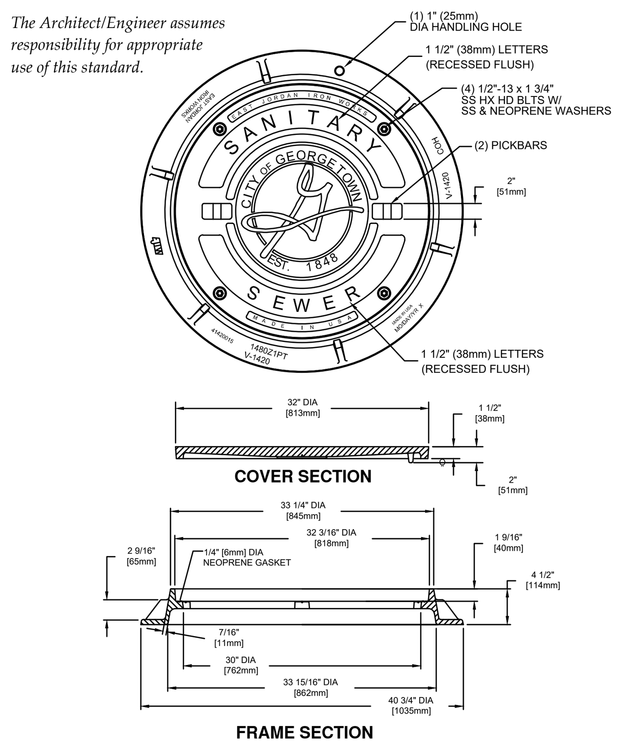

NOTES:

1. BOLTED WASTEWATER MANHOLE SET TO BE EAST JORDAN IRON WORKS, INC. CATALOG NO. 1480APT V–1420/1480Z1PT, COVER TO BE STAMPED WITH "SANITARY SEWER".
2. BOLTED WASTEWATER MANHOLE SET TO BE HEAVY DUTY LOAD RATED.
3. FOR MORE DETAILED SPECIFICATIONS REFER TO EAST JORDAN IRON WORKS, INC. REFERENCE PRODUCT DRAWING 00148392 41420015.
4. FOR STANDARD WASTEWATER MANHOLE SET REFER TO DETAIL WW07.

ADOPTED 6/21/2006
CITY OF GEORGETOWN CONSTRUCTION STANDARDS AND DETAILS
BOLTED WASTEWATER MANHOLE SET
WW07A — NTS — 1/2006 — MRS — TRB

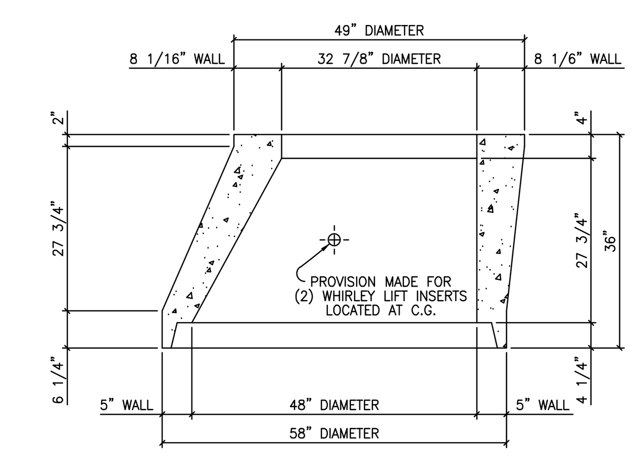

The Architect/Engineer assumes responsibility for appropriate use of this standard.

ADOPTED 6/21/2006
CITY OF GEORGETOWN CONSTRUCTION STANDARDS AND DETAILS
48"X5" TO 33"X8"X36" TALL ECCENTRIC CONCRETE SECTION
WW08 — NTS — 1/2003 — MRS — TRB

M.F.G. PER ASTM–C478
5000 P.S.I. CONCRETE
TRAFFIC BEARING
O–RING JOINT PER C443

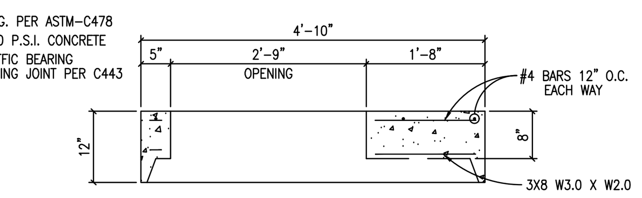

NOTES:

1. AVAILABLE WITH CAST IRON RING AND COVER CAST IN PLACE.
2. PERMITTED ONLY WITH WRITTEN APPROVAL FROM GEORGETOWN UTILITY SYSTEMS, CITY OF GEORGETOWN

The Architect/Engineer assumes responsibility for appropriate use of this standard.

ADOPTED 6/21/2006
CITY OF GEORGETOWN CONSTRUCTION STANDARDS AND DETAILS
48" MANHOLE FLAT LID
WW09 — NTS — 1/2003 — MRS — TRB

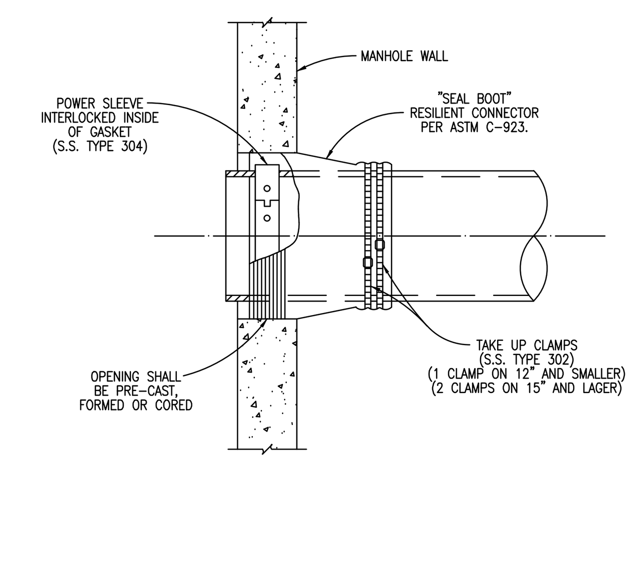

The Architect/Engineer assumes responsibility for appropriate use of this standard.

ADOPTED 6/21/2006
CITY OF GEORGETOWN CONSTRUCTION STANDARDS AND DETAILS
FLEXIBLE "SEAL BOOT" CONNECTOR
WW10 — NTS — 1/2003 — MRS — TRB

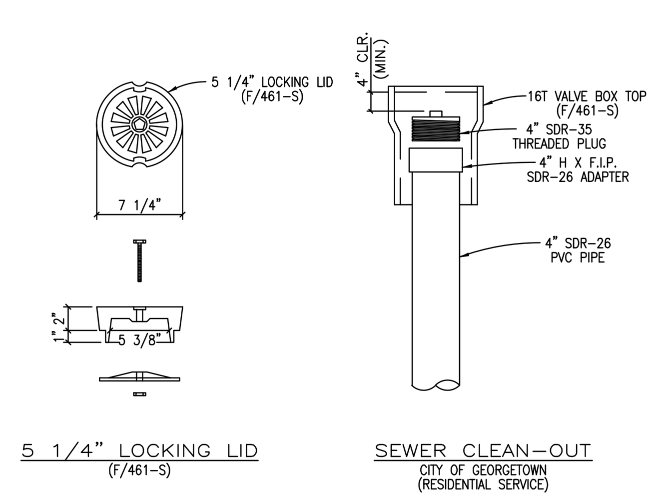

The Architect/Engineer assumes responsibility for appropriate use of this standard.

ADOPTED 6/21/2006
CITY OF GEORGETOWN CONSTRUCTION STANDARDS AND DETAILS
SEWER CLEAN–OUT DETAIL
WW12 — NTS — 1/2003 — MRS — TRB

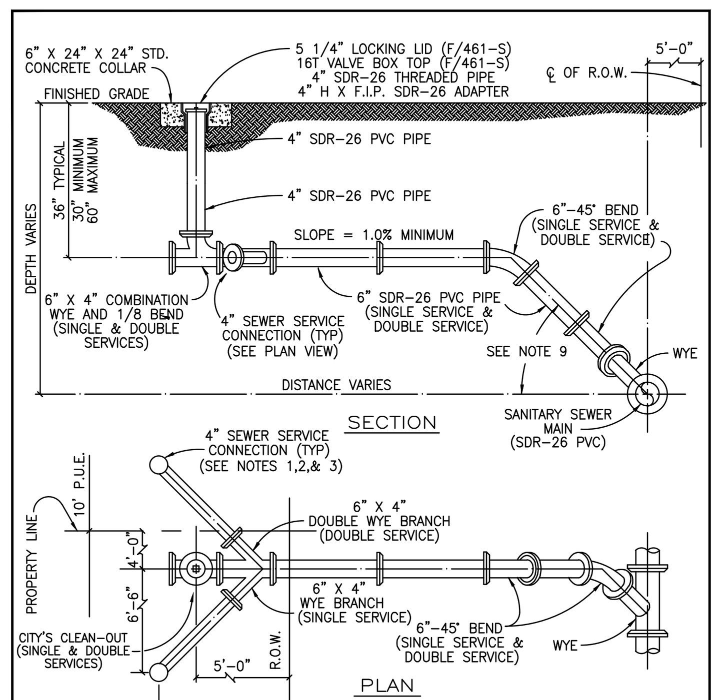

NOTES:

1. SERVICE CONNECTION RISERS SHALL TERMINATE 8' INSIDE THE PROPETY LINE.
2. THE END OF EACH SERVICE CONNECTION RISER SHALL BE EXTENDED 12" ABOVE FINISH GRADE.
3. EACH SERVICE CONNECTION SHALL BE PLUGGED WATER–TIGHT WITH AN APPROVED CAP OR PLUG.
4. FOR P.V.C. INSTALLATIONS, CONNECT TO EXISTING "BELL END" AND CONNECT OPPSITE END WITH P.V.C. TO P.V.C. KNOCK ON SLEEVE.
5. SOLIDLY TAMP BACKFILL AT LEAST ONE FOOT (1'–0") ABOVE TOP OF PIPE. SERVICES UNDER PAVED AREAS SHALL BE BACKFILLED TO THE SAME SPECIFICATIONS AS SHOWN ON PAVEMENT REPLACEMENT DETAIL.
6. CONTRACTOR SHALL MARK ON A CLEAN SET OF PLANS THE FINAL STATIONING OR DISTANCE AND DIRECTION FROM MANHOLE TO EACH SERVICE LATERAL AND GIVE TO ENGINEER FOR RECORD DRAWING PURPOSES.
7. ANY DEVIATION FROM THESE METHODS MUST BE APPROVED BY THE CITY OF GEORGETOWN ENGINEERING DEPARTMENT.
8. SERVICE LINE MATERIAL SHALL BE P.V.C., SDR–26.
9. SEWER SERVICE SLOPE TO BE 45° OFF CENTERLINE OF MAIN.

The Architect/Engineer assumes responsibility for appropriate use of this standard.

ADOPTED 6/21/2006
CITY OF GEORGETOWN CONSTRUCTION STANDARDS AND DETAILS
SEWER SERVICE CONNECTIONS
WW13 — NTS — 1/2003 — MRS — TRB

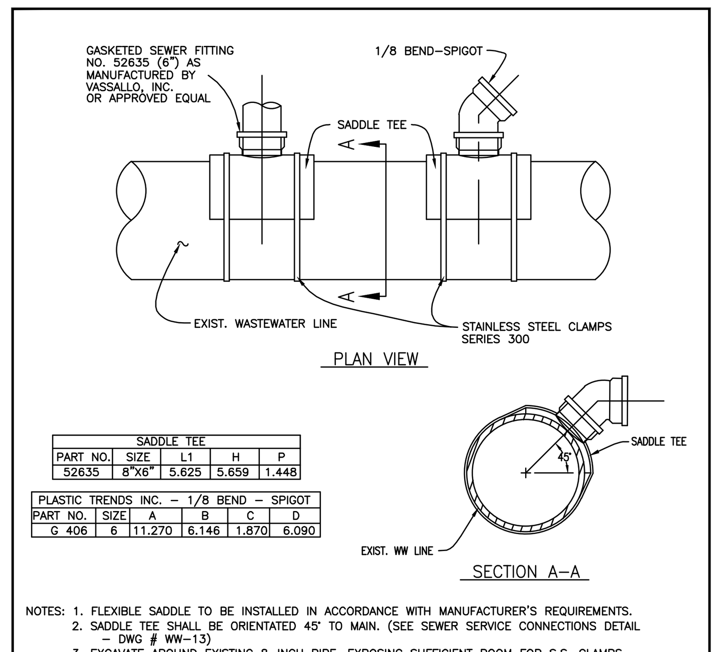

SADDLE TEE				
PART NO.	SIZE	L1	H	P
52635	8"X6"	5.625	5.659	1.448

PLASTIC TRENDS INC. – 1/8 BEND – SPIGOT					
PART NO.	SIZE	A	B	C	D
G 406	6	11.270	6.146	1.870	6.090

NOTES:

1. FLEXIBLE SADDLE TO BE INSTALLED IN ACCORDANCE WITH MANUFACTURER'S REQUIREMENTS.
2. SADDLE TEE SHALL BE ORIENTATED 45° TO MAIN. (SEE SEWER SERVICE CONNECTIONS DETAIL – DWG # WW–13)
3. EXCAVATE AROUND EXISTING 8–INCH PIPE, EXPOSING SUFFICIENT ROOM FOR S.S. CLAMPS.
4. THOROUGHLY CLEAN AND DRY THE MATING SURFACE WITH RAG OR PAPER TOWEL MAKE SURE THEY ARE FREE OF DUST AND MOISTURE.
5. MARK THE SIZE OF THE HOLE TO BE CUT USING THE GASKET SKIRT OR THE SADDLE ITSELF AS THE TEMPLATE.
6. SAW OUT THE SECTION OF THE PIPE WHERE THE SADDLE WILL BE LOCATED, WITH A SABER OR KEY HOLE SAW.
7. TEST TO MAKE SURE SADDLE FITS HOLE PROPERLY.
8. SERVICE PIPE SHALL NOT EXTEND MORE THAN ONE–HALF INCH INTO THE MAIN.
9. PLACE GASKET SKIRT AND SADDLE OVER OPENING AND TIGHTEN BAND CLAMPS EVENLY UNTIL SADDLE IS FIRMLY ATTACHED TO THE PIPE. APPLY PRESSURE ON THE SADDLE AGAINST THE PIPE WHILE TIGHTENING THE CLAMPS AS INDICATED ABOVE. DO NOT OVER TIGHTEN, DO NOT STRIP THREAD.
10. REPLACE THE BEDDING AND BACKFILL IN ACCORDANCE WITH THE TRENCH EMBEDMENT DETAIL.

The Architect/Engineer assumes responsibility for appropriate use of this standard.

ADOPTED 6/21/2006
CITY OF GEORGETOWN CONSTRUCTION STANDARDS AND DETAILS
GASKETED SEWER FITTING FOR SEWER SERVICE CONNECTIONS TO EXISTING MAINS
WW13A — NTS — 1/2003 — MRS — TRB

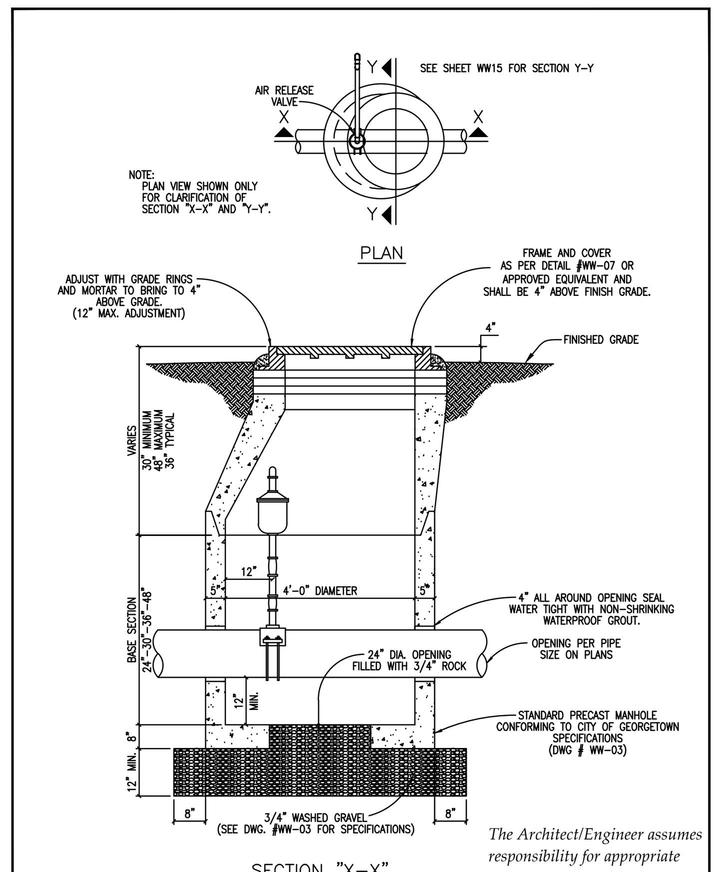

The Architect/Engineer assumes responsibility for appropriate use of this standard.

ADOPTED 6/21/2006
CITY OF GEORGETOWN CONSTRUCTION STANDARDS AND DETAILS
STANDARD AIR RELEASE VALVE FOR FORCE MAIN
WW14 — NTS — 1/2003 — MRS — TRB

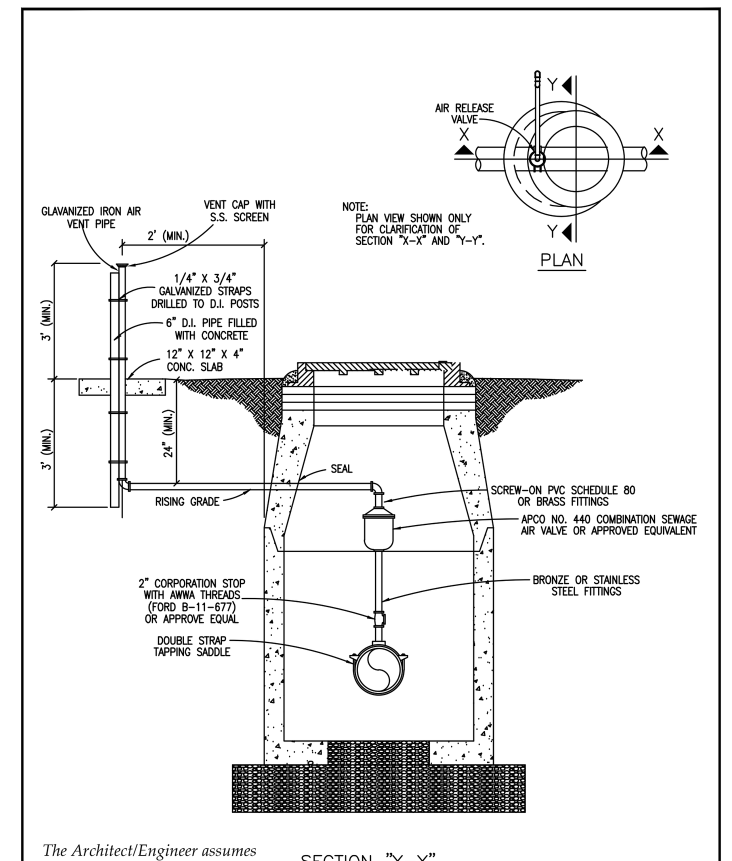

The Architect/Engineer assumes responsibility for appropriate use of this standard.

ADOPTED 6/21/2006
CITY OF GEORGETOWN CONSTRUCTION STANDARDS AND DETAILS
STANDARD AIR RELEASE VALVE FOR FORCE MAIN
WW15 — NTS — 1/2003 — MRS — TRB

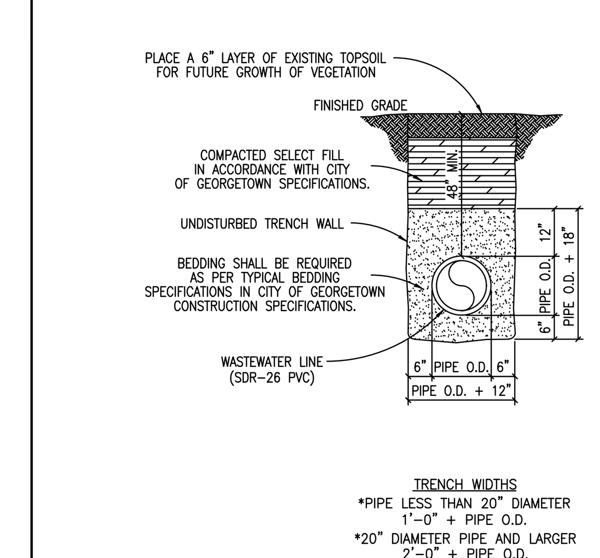

TRENCH WIDTHS
*PIPE LESS THAN 20" DIAMETER 1'–0" + PIPE O.D.
*20" DIAMETER PIPE AND LARGER 2'–0" + PIPE O.D.

The Architect/Engineer assumes responsibility for appropriate use of this standard.

ADOPTED 6/21/2006
CITY OF GEORGETOWN CONSTRUCTION STANDARDS AND DETAILS
TRENCH AND EMBEDMENT DETAIL UNDER NON–PAVED AREAS
WW16 — NTS — 1/2003 — MRS — TRB

NO.	REVISION	BY	DATE

Know what's below. Call before you dig.

5508 HIGHWAY 290 WEST
SUITE 150
AUSTIN, TX 78735
512.872.6696
HRGREEN.COM
TBPE NO: 16384
TBPLS NO: 10194101
HRGreen® DEVELOPMENT TX

STATE OF TEXAS — CHRISTINE N. CAMPBELL — 142536 — LICENSED PROFESSIONAL ENGINEER
07/03/2025

WASTEWATER DETAILS

PARKSIDE ON THE RIVER SECTIONS 11, 12A & 15A CONSTRUCTION PLANS GEORGETOWN, WILLIAMSON, TEXAS

DESIGNED BY: CC
DRAWN BY: MM
CHECKED BY: SN
APPROVED BY:

SHEET 129 OF 141

2025-XX-CON

Plot Style: LandDev Global.ctb
Template: LDC_C3D2022.DWT
P:\Blake Magee\Parkside Sections 11-15 & WON 5\Section 11, 12A & 15A\03_ACAD\Plans\sh2403522 DTLS.dwg, WASTEWATER DETAILS, July 18, 2025, 12:37 PM, makai.muhammad

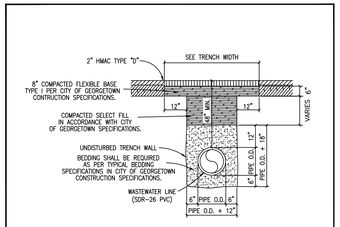

TRENCH WIDTHS
*PIPE LESS THAN 20" DIAMETER
1'-0" + PIPE O.D.
*20" DIAMETER PIPE AND LARGER
2'-0" + PIPE O.D.

NOTES:
1. REPLACED BASE MATERIAL OVER DITCH SHALL BE TWICE THE THICKNESS OF THE ORIGINAL BASE.
2. BASE MATERIAL SHALL BE PLACED IN MULTIPLE LIFTS NOT TO EXCEED 6", EACH LAYER SHALL BE THOROUGHLY ROLLED OR TAMPED TO SPECIFIED MAXIMUM DENSITY.
3. ASPHALT CONCRETE PAVEMENT JOINTS SHALL BE MECHANICALLY SAWED.
4. SURFACE MATERIAL WILL BE CONSISTENT WITH THE EXISTING SURFACE.
5. DENSITY TESTS SHALL BE TAKEN IN ACCORDANCE WITH THE CITY OF GEORGETOWN CONSTRUCTION SPECIFICATIONS AND STANDARDS.
6. CONTRACTOR OR ENGINEER MAY USE FLOWABLE BACKFILL AS AN ALTERNATE BACKFILL MATERIAL (SEE C9 FLOWABLE BACKFILL FOR THE SPECIFICATION).

The Architect/Engineer assumes responsibility for appropriate use of this standard.

CITY OF GEORGETOWN CONSTRUCTION STANDARDS AND DETAILS	DRAWING NO. / ADOPTED 6/21/2006
TRENCH AND EMBEDMENT AND PAVEMENT REPLACEMENT DETAIL UNDER EXISTING ROADWAY	WW17
SCALE: NTS	DATE: 1/2003
DRAWN BY: MRS	APPROVED BY: TRW

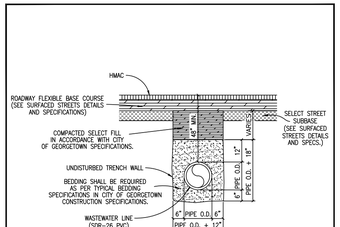

TRENCH WIDTHS
*PIPE LESS THAN 20" DIAMETER
1'-0" + PIPE O.D.
*20" DIAMETER PIPE AND LARGER
2'-0" + PIPE O.D.

NOTES:
1. DENSITY TESTS SHALL BE TAKEN IN ACCORDANCE WITH THE CITY OF GEORGETOWN CONSTRUCTION SPECIFICATIONS AND STANDARDS.
2. CONTRACTOR OR ENGINEER MAY USE FLOWABLE BACKFILL AS AN ALTERNATE BACKFILL MATERIAL (SEE C9 FLOWABLE BACKFILL FOR THE SPECIFICATION).

The Architect/Engineer assumes responsibility for appropriate use of this standard.

CITY OF GEORGETOWN CONSTRUCTION STANDARDS AND DETAILS	DRAWING NO. / ADOPTED 6/21/2006
TRENCH AND EMBEDMENT DETAIL UNDER PROPOSED ROADWAY	WW18
SCALE: NTS	DATE: 1/2003
DRAWN BY: MRS	APPROVED BY: TRW

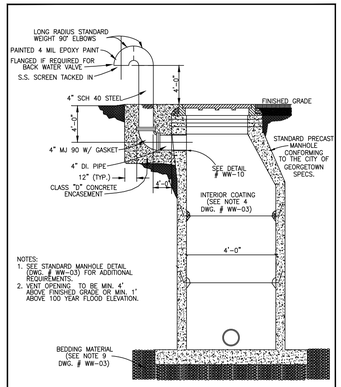

NOTES:
1. SEE STANDARD MANHOLE DETAIL (DWG. # WW-03) FOR ADDITIONAL REQUIREMENTS.
2. VENT OPENING TO BE MIN. 4' ABOVE FINISHED GRADE OR MIN. 1' ABOVE 100 YEAR FLOOD ELEVATION.

The Architect/Engineer assumes responsibility for appropriate use of this standard.

CITY OF GEORGETOWN CONSTRUCTION STANDARDS AND DETAILS	DRAWING NO. / ADOPTED 6/21/2006
TYPICAL MANHOLE WITH VENT	WW19
SCALE: NTS	DATE: 11/2003
DRAWN BY: MRS	APPROVED BY: TRW

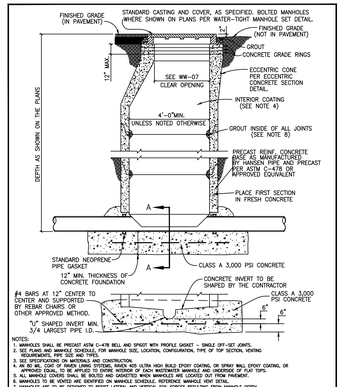

NOTES:
1. MANHOLES SHALL BE PRECAST ASTM C-478 BELL AND SPIGOT WITH PROFILE GASKET – SINGLE OFF-SET JOINTS.
2. SEE STANDARD MANHOLE DETAIL FOR MANHOLE SIZE, LOCATION, CONFIGURATION, TYPE OF TOP SECTION, VENTING REQUIREMENTS, PIPE SIZE AND TYPE.
3. SEE SPECIFICATIONS ON MATERIALS AND CONSTRUCTION.
4. AN MIL COAT OF RAVEN LINING SYSTEMS, RAVEN 405 ULTRA HIGH BUILD EPOXY COATING, OR SPRAY WALL EPOXY COATING, OR APPROVED EQUIVALENT SHALL BE APPLIED TO ALL WASTEWATER MANHOLE SURFACES, INCLUDING THE UNDERSIDE OF PLAC TOPS.
5. ALL MANHOLE COVERS SHALL BE BOLTED AND GASKETED WHEN MANHOLES ARE LOCATED OUT FROM PAVEMENT.
6. MANHOLES TO BE VENTED ARE IDENTIFIED ON MANHOLE SCHEDULE. REFERENCE MANHOLE VENT DETAIL.
7. MANHOLES ARE TO BE DESIGNED TO RESIST LATERAL AND VERTICAL SOIL FORCES RESULTING FROM MANHOLE DEPTH.
8. ALL JOINTS SHALL BE WATER TIGHT AND SHALL BE CAPABLE OF WITHSTANDING 10 PSI TRAFFIC LOADS.
9. GROUT SHALL MEET THE REQUIREMENTS AS STATED BY THE COATING MANUFACTURER.
10. MANHOLE BASE BENDING MATERIAL SPECS. FOR 3/4" BRAIDED GRAVEL:
SIDE SIZE 1", RADIUS (R) RETAINED @ SIDE SIZE 1 1/2", R RETAINED 0-15
SIDE SIZE 1", R RETAINED 45-60 SIDE SIZE 3/4", R RETAINED 85-100
SIDE SIZE 3/4", R RETAINED 90-100
11. ALL PVC PIPE SHALL BE REMOVED FROM INVERT.

The Architect/Engineer assumes responsibility for appropriate use of this standard.

CITY OF GEORGETOWN CONSTRUCTION STANDARDS AND DETAILS	DRAWING NO. / ADOPTED 6/21/2006
PRECAST MANHOLE ON CAST-IN-PLACE FOUNDATION	WW20
SCALE: NTS	DATE: 1/2006
DRAWN BY: MRS	APPROVED BY: TRW

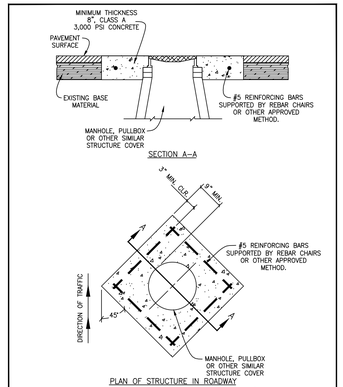

NOTE:
INSTALLATION OF THE CONCRETE CASTING IS REQUIRED FOR AND APPLIES TO ALL TYPES OF MANHOLES TO BE LOCATED IN THE ROADWAY.

The Architect/Engineer assumes responsibility for appropriate use of this standard.

CITY OF GEORGETOWN CONSTRUCTION STANDARDS AND DETAILS	DRAWING NO. / APPROVED 6/21/2006
CONCRETE CASTING MANHOLE DETAIL	WW21
SCALE: NTS	DATE: 1/2006
DRAWN BY: MRS	APPROVED BY: TRW

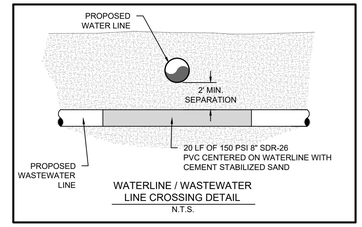

WATERLINE / WASTEWATER LINE CROSSING DETAIL
N.T.S.

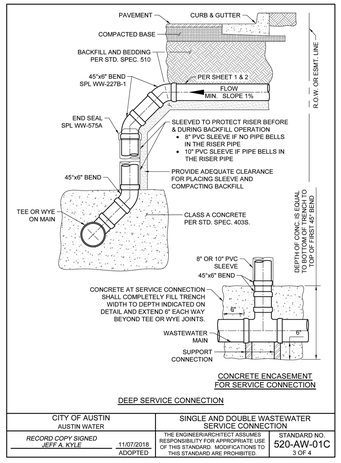

CONCRETE ENCASEMENT FOR SERVICE CONNECTION

DEEP SERVICE CONNECTION

CITY OF AUSTIN AUSTIN WATER	SINGLE AND DOUBLE WASTEWATER SERVICE CONNECTION	
RECORD COPY SIGNED JEFF A. KYLE 11/07/2018 ADOPTED	THE ENGINEER/ARCHITECT ASSUMES RESPONSIBILITY FOR APPROPRIATE USE OF THIS STANDARD. MODIFICATIONS TO THIS STANDARD ARE PROHIBITED.	STANDARD NO. 520-AW-01C 3 OF 4

NO.	REVISION	BY	DATE

811 Know what's below. Call before you dig.

HRGreen
DEVELOPMENT TX
5508 HIGHWAY 290 WEST
SUITE 150
AUSTIN, TX 78735
512.872.6696
HRGREEN.COM
TBPE NO: 16384
TBPLS NO: 10194101

STATE OF TEXAS
CHRISTINE N. CAMPBELL
142536
LICENSED PROFESSIONAL ENGINEER
07/15/2025

WASTEWATER DETAILS

PARKSIDE ON THE RIVER
SECTIONS 11, 12A & 15A
CONSTRUCTION PLANS
GEORGETOWN, WILLIAMSON, TEXAS

DESIGNED BY: CC
DRAWN BY: MM
CHECKED BY: SN
APPROVED BY:

SHEET 130 OF 141

2025-XX-CON

Plot Style: LandDev Global.ctb
Template LDC_C3D2022.DWT
P:\Bilfinger Heidelberg\Parkside Sections 11-15 & WOA 5\Section 11, 12A & 15A\03_ACAD\Plans\dp240522 DTLS.dwg, WASTEWATER DETAILS 2, July 16, 2025, 12:37 PM, mallal muhammad

MATCHLINE - VIEW C

MATCHLINE - VIEW A

MATCHLINE - VIEW B

MATCHLINE - VIEW A

LOT 1 WQ/OS

LOT 17 WQ/OS

LOT 1 DE/OS

LOT 16 WQ/DE/OS

EXISTING 20' WASTEWATER EASEMENT DOC#2024034914

PROPOSED 20' WASTEWATER EASEMENT

PROPOSED 20' DRAINAGE EASEMENT

STA. 5+60.50 WL A
8" DI CAP MJ

STA. 5+55.49 WL A
FIRE HYDRANT ASSEMBLY
8"X6" TEE

STA. 5+45.50 WL A
45° HORZ. BEND

STA. 5+09.04 WL A
45° HORZ. BEND

5+60

5+00

4+00

3+00

2+00

1+00

RUACH ROAD

BLOCK G

BLOCK F

STA. 8+17.55 WL B
8" DI CAP MJ

8+00 B+B

GAMALIEL LOOP

STA. 8+12.55 WL B
FIRE HYDRANT ASSEMBLY
8"X6" TEE

STA. 7+06.10 WL B
2" IRRIGATION SERVICE W/ BACKFLOW PREVENTER (METER TO BE 5/8"-2" ONCE DETERMINED BY LICENSED IRRIGATOR).

7+00

6+00

STA. 6+12.36 WL B
PT 445' RADIUS

STA. 4+65.76 WL B
FIRE HYDRANT ASSEMBLY
8"X6" TEE

STA. 1+47.80 WL B
FIRE HYDRANT ASSEMBLY
8"X6" TEE

STA. 1+72.76 WL B
PC 445' RADIUS

STA. 2+58.33 WL A
=STA. 1+00.00 WL B
8"X8" TEE
2 - 8" GATE VALVE

STA. 1+00.00 WL A
"WET TAP" TAPPING SLEEVE
1 - 8" GATE VALVE
CONNECT TO EXISTING
24" WATERLINE
CONTRACTOR TO VERIFY LOCATION (HORIZONTALLY AND VERTICALLY) PRIOR TO INSTALLATION AND NOTIFY ENGINEER OF ANY DISCREPANCIES.

STA. 1+26.46 WL A
6"X2" PRESSURE REDUCING VALVE IN 14'X7' VAULT PER DETAIL ON SHT 138

STA. 1+09.48 WL A
AIR RELEASE VALVE

UTILITY CROSSING
STA. 1+25.00 WL B
=STA. 7+59.19 WWL B

UTILITY CROSSING
EXISTING 24 IN WATERLINE
=STA. 2+65.22 STORM H-1

UTILITY CROSSING
EXISTING 24 IN WATERLINE
=STA. 2+69.66 STORM H-3

UTILITY CROSSING
EXISTING 24 IN WATERLINE
=STA. 2+74.10 STORM H-5

UTILITY CROSSING
EXISTING 24 IN WATERLINE
=STA. 2+83.62 STORM C-1

100YR FULLY DEVELOPED FLOODPLAIN

EXISTING 15" WASTEWATER LINE CONSTRUCTED WITH BARTON TRIBUTARY WASTEWATER LINE

EXISTING AIR RELEASE VALVE

EXISTING 24" GATE VALVE

EXISTING 24" WATERLINE CONSTRUCTED WITH PARKSIDE ON THE RIVER 24 IN. TRANSMISSION WATERLINE (2019-61-CON)

EXISTING 24" GATE VALVE

EXISTING 35' WASTEWATER EASEMENT DOC#2020132521

EXISTING WATER QUALITY POND CONSTRUCTED WITH PARKSIDE ON THE RIVER SECTIONS 9B & 10B (2024-16-CON)

PARKSIDE ON THE RIVER SECTIONS 9B & 10B (2024-16-CON)

100YR FLOODPLAIN PER FIRM MAP #48491C0460F EFFECTIVE DEC 20, 2019 W/ LOMR APPROVAL # 21-06-0115P

PARKSIDE PARKWAY OUTBOUND

PARKSIDE PARKWAY INBOUND

PARKSIDE PARKWAY OUTBOUND

PARKSIDE PARKWAY INBOUND

EXISTING 24" WATERLINE EASEMENT DOC#2021108943

0 40' 80'

SCALE: 1" = 40'

LEGEND

- 834 — EXISTING MINOR CONTOUR
- 835 — EXISTING MAJOR CONTOUR
- 834 — PROPOSED MINOR CONTOUR
- 835 — PROPOSED MAJOR CONTOUR
- BOUNDARY
- EASEMENT
- FEMA FLOODWAY PER FIRM# 48491C0460F & LOMR# 21-06-0115P
- FEMA AE — 100YR ATLAS 14 FEMA ZONE AE FLOODPLAIN PER FIRM# 48491C0460F & LOMR# 21-06-0115P
- FEMA A — 100YR FEMA ZONE A FLOODPLAIN PER FIRM MAP# 48491C0460F
- 100YR CLOMR — 100YR CLOMR FLOODPLAIN CASE# 15-06-2071R
- FDFP — 100YR ATLAS 14 FULLY DEVELOPED FLOODPLAIN (STANTEC DRAINAGE STUDY, SHERVIN NOOSHIN, 3/25/19) APPROVED WITH PP# 2019-5-PP
- OHWM — ORDINARY HIGH WATER MARK PER ADAMS ENVIRONMENTAL
- 8" WW — PROPOSED WASTEWATER LINE
- PROPOSED STORM LINE
- 8" W — PROPOSED WATER LINE
- FIRE HYDRANT
- WATER VALVE
- TEMP FLUSH VALVE
- AIR RELEASE VALVE
- STORM SEWER MAHNOLE
- WW — WASTEWATER MANHOLE
- CURB INLET
- PROPOSED SINGLE WASTEWATER SERVICE
- PROPOSED DOUBLE WASTEWATER SERVICE
- PROPOSED SINGLE WATER SERVICE
- PROPOSED DOUBLE WATER SERVICE
- TREES TO REMAIN - HERITAGE
- TREES TO REMAIN - NON-HERITAGE

NOTES:

1. ALL PROPOSED WATERLINES EXCEPT FIRE LEADS SHALL BE PVC C900 DR 18 PER CITY OF GEORGETOWN SPECIFICATIONS.
2. THRUST BLOCKING SHALL BE PROVIDED AT BENDS, PI'S, TEES & FITTINGS ACCORDING TO CITY OF GEORGETOWN.
3. ALL JOINT RESTRAINT SHALL BE IN ACCORDANCE TO CITY OF GEORGETOWN SPECIFICATION. REFER TO THE JOINT RESTRAINT TABLE ON SHEET 138.
4. ANY JOINT DEFLECTION VERTICAL OR HORIZONTAL SHALL BE WITHIN THE MANUFACTURES MAXIMUM ALLOWABLE JOINT DEFLECTION.
5. PORTIONS OF THIS PROPOSED DEVELOPMENT LIE WITHIN THE FEMA 100-YR FLOODPLAIN.
6. AT THE CONCLUSION OF CONSTRUCTION AND AS PART OF THE PROCESS FOR THE CITY TO ACCEPT THIS PHASE, THE FIRE HYDRANTS SHALL BE FLOWED AND TESTED. A COPY OF THE REPORT SHALL BE EMAILED INTO THE FIRE DEPARTMENT AND THE HYDRANTS SHALL BE PAINTED AND COLOR CODED.
7. CAUTION: IF PRESSURE REDUCING VALVES WERE INSTALLED IN THIS PHASING, THEY MUST BE SET PRIOR TO FIRE HYDRANT FLOW TESTING.
8. CONTRACTOR AND HOME BUILDER TO ENSURE GATE VALVES ARE ADJUSTED FOR FINISHED SIDEWALK AND PAVEMENT GRADES.
9. CONTRACTOR TO ENSURE ALL GATE VALVES ARE LOCATED OUTSIDE OF PROPOSED CURB AND GUTTER LOCATIONS.
10. HOME BUILDERS ARE EXPECTED TO INSTALL INDIVIDUAL PRESSURE REDUCING VALVES FOR ALL HOMES.

GEORGETOWN FIRE DEPARTMENT NOTES

1. 1,500 GPM FIRE FLOW SHALL BE PROVIDED FOR THIS PROJECT.
2. AT THE CONCLUSION OF CONSTRUCTION AND AS PART OF THE PROCESS FOR THE CITY TO ACCEPT THIS PHASE:
   - THE FIRE HYDRANTS SHALL BE FLOWED AND TESTED
   - A COPY OF THE REPORT SHALL BE EMAILED INTO THE FIRE DEPARTMENT
   - THE HYDRANTS SHALL BE PAINTED AND COLOR CODED.

*** CAUTION IF PRESSURE REDUCING VALVES WERE INSTALLED IN THIS PHASING THEY MUST BE SET PRIOR TO FIRE HYDRANT FLOW TESTING.

3. PER CITY ORDINANCE SEC. 13.15.120, HYDRANT FLOW CODING STANDARDS. PUBLIC HYDRANTS WILL HAVE THE BARRELS PAINTED SILVER, THE HYDRANTS WILL BE FLOW TESTED, AND THE BONNET PAINTED USING THE HYDRANT FLOW STANDARD IN PARAGRAPH C.

FLOW COLOR:
- GREATER THAN 1500 GPM BLUE
- 1000 TO 1500 GPM GREEN
- 500 - 999 GPM ORANGE
- LESS THAN 500 GPM RED
- NOT WORKING BLACK OR BAGGED

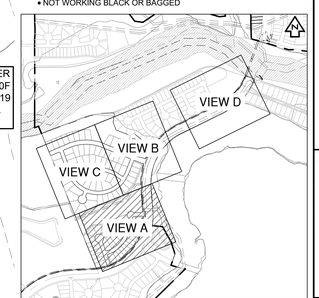

KEY MAP (N.T.S.)

NO	REVISION	BY	DATE

811 Know what's below. Call before you dig.

HRGreen DEVELOPMENT TX
5508 HIGHWAY 290 WEST
SUITE 150
AUSTIN, TX 78735
512.872.6696
HRGREEN.COM
TBPE NO: 16384
TBPLS NO: 10194101

STATE OF TEXAS
CHRISTINE N. CAMPBELL
142536
LICENSED PROFESSIONAL ENGINEER
07/05/2025

OVERALL WATER PLAN A

PARKSIDE ON THE RIVER SECTIONS 11, 12A & 15A CONSTRUCTION PLANS

GEORGETOWN, WILLIAMSON, TEXAS

DESIGNED BY: CC
DRAWN BY: MM
CHECKED BY: SN
APPROVED BY:

SHEET 131 OF 141

2025-XX-CON

P:\Blaze Maps\Parkside Sections 11-15 & WQ\Section 11, 12A & 15A\00_ACAD\Permit\ADS\2025\2 WTCV dwg, OVERALL WATER PLAN A, July 18, 2025, 12:38 PM, nalal.muhammad

STA. 8+06.39 WL C
0.7° VERT. DEFLECTION

STA. 2+92.40 WL E
PT 340' RADIUS

MATCHLINE - VIEW C

MATCHLINE - VIEW B

STA. 2+03.00 WL E
PC 340' RADIUS

STA. 1+33.55 WL E
PT 300' RADIUS

STA. 1+17.85 WL E
PC 300' RADIUS

STA. 4+82.70 WL D
FIRE HYDRANT ASSEMBLY
8"X6" TEE

STA. 4+32.29 WL D
=STA. 1+00.00 WL E
8"X8" TEE
2 - 8" GATE VALVE

UTILITY CROSSING
STA. 4+58.64 WL D
=STA. 1+25.00 WWL E

UTILITY CROSSING
STA. 4+48.64 WL D
=STA. 1+15.00 STORM D-3

20' EXISTING WASTEWATER EASEMENT DOC#2024034911

STA. 3+69.35 WL D
PC 408' RADIUS

STA. 7+31.90 WL C
PC 650' RADIUS

STA. 7+11.07 WL C
FIRE HYDRANT ASSEMBLY
12"X6" TEE

LOT 2 WOOS

LOT 6 DE/OS

BLOCK H

BLOCK J

BLOCK K

EJIEL WAY

MORNING SUNRISE CIRCLE

TREASURE HOUSE WAY

PROPOSED 15' WATER QUALITY EASEMENT

MATCHLINE - VIEW A

MATCHLINE - VIEW B

STA. 1+57.60 WL D
FIRE HYDRANT ASSEMBLY
8"X6" TEE

UTILITY CROSSING
STA. 1+30.00 WL D
=STA. 3+73.63 WWL C

UTILITY CROSSING
STA. 1+20.00 WL D
=STA. 1+15.00 STORM D-2

EXISTING 24" GATE VALVE

STA. 1+68.12 WL C
22.5° HORZ. BEND

STA. 1+21.04 WL C
12" GATE VALVE

STA. 2+93.83 WL C
=STA. 1+00.00 WL D
12"X6" TEE
1 - 12" GATE VALVE
1 - 8" GATE VALVE

UTILITY CROSSING
STA. 2+78.83 WL C
=STA. 1+66.60 STORM D-1

STA. 2+57.33 WL C
2" IRRIGATION SERVICE W/ BACKFLOW PREVENTER (METER TO BE 5/8"-2" ONCE DETERMINED BY LICENSED IRRIGATOR).

STA. 2+07.32 WL C
22.5° HORZ. BEND

STA. 1+87.72 WL C
2" IRRIGATION SERVICE W/ BACKFLOW PREVENTER (METER TO BE 5/8"-2" ONCE DETERMINED BY LICENSED IRRIGATOR).

LOT 1 WQ/DE/OS

STA. 1+38.25 WL C
8"X4" PRESSURE REDUCING VALVE IN 15'X8' VAULT PER DETAIL ON SHT 138

STA. 1+00.00 WL C
"WET TAP" TAPPING SLEEVE
1 - 12" GATE VALVE
CONNECT TO EXISTING 24" WATERLINE
CONTRACTOR TO VERIFY LOCATION (HORIZONTALLY AND VERTICALLY) PRIOR TO INSTALLATION AND NOTIFY ENGINEER OF ANY DISCREPANCIES.

UTILITY CROSSING
STA. 1+11.03 WL C
=STA. 1+75.09 WWL C

UTILITY CROSSING
EXISTING 24 IN WATERLINE
=STA. 1+59.48 WWL C

UTILITY CROSSING
EXISTING 24 IN WATERLINE
=STA. 2+74.54 STORM I-1

PARKSIDE PARKWAY OUTBOUND

PARKSIDE PARKWAY INBOUND

KADOSH WAY

FUTURE PARKSIDE SECTION 12B

EXISTING 15" WASTEWATER LINE CONSTRUCTED WITH BARTON TRIBUTARY WASTEWATER LINE

EXISTING 24" WATERLINE CONSTRUCTED WITH PARKSIDE ON THE RIVER 24 IN. TRANSMISSION WATERLINE (2019-61-CON)

36' EXISTING WASTEWATER EASEMENT DOC#2020012552

EXISTING 20' WATERLINE EASEMENT DOC#2021066243

100YR FLOODPLAIN PER FIRM MAP #48491C0460F EFFECTIVE DEC 20, 2019 W/ LOMR APPROVAL # 21-06-0115P

100YR FLOODPLAIN PER FIRM MAP #48491C0460F EFFECTIVE DEC 20, 2019 W/ LOMR APPROVAL # 21-06-0115P

100YR FULLY DEVELOPED FLOODPLAIN

APPROVED CLOMR 100 YEAR FLOODPLAIN CASE# 15-06-2071R

0 40' 80'

SCALE: 1" = 40'

LEGEND

- EXISTING MINOR CONTOUR
- EXISTING MAJOR CONTOUR
- PROPOSED MINOR CONTOUR
- PROPOSED MAJOR CONTOUR
- BOUNDARY
- EASEMENT
- FEMA FLOODWAY PER FIRM# 48491C0460F & LOMR# 21-06-0115P
- FEMA AE — 100YR ATLAS 14 FEMA ZONE AE FLOODPLAIN PER FIRM# 48491C0460F & LOMR# 21-06-0115P
- FEMA A — 100YR FEMA ZONE A FLOODPLAIN PER FIRM MAP# 48491C0460F
- 100YR CLOMR — 100YR CLOMR FLOODPLAIN CASE# 15-06-2071R
- FDFP — 100YR ATLAS 14 FULLY DEVELOPED FLOODPLAIN (STANTEC DRAINAGE STUDY, SHERVIN NOOSHIN, 3/25/19) APPROVED WITH PP# 2019-5-PP
- OHWM — ORDINARY HIGH WATER MARK PER ADAMS ENVIRONMENTAL
- 8" WW — PROPOSED WASTEWATER LINE
- PROPOSED STORM LINE
- 8" W — PROPOSED WATER LINE
- FIRE HYDRANT
- WATER VALVE
- TEMP FLUSH VALVE
- AIR RELEASE VALVE
- STORM SEWER MAHNOLE
- WASTEWATER MANHOLE
- CURB INLET
- PROPOSED SINGLE WASTEWATER SERVICE
- PROPOSED DOUBLE WASTEWATER SERVICE
- PROPOSED SINGLE WATER SERVICE
- PROPOSED DOUBLE WATER SERVICE
- TREES TO REMAIN - HERITAGE
- TREES TO REMAIN - NON-HERITAGE

NOTES:

1. ALL PROPOSED WATERLINES EXCEPT FIRE LEADS SHALL BE PVC C900 DR 18 PER CITY OF GEORGETOWN SPECIFICATIONS.
2. THRUST BLOCKING SHALL BE PROVIDED AT BENDS, P/S, TEES & FITTINGS ACCORDING TO CITY OF GEORGETOWN.
3. ALL JOINT RESTRAINT SHALL BE IN ACCORDANCE TO CITY OF GEORGETOWN SPECIFICATION. REFER TO THE JOINT RESTRAINT TABLE ON SHEET 138.
4. ANY JOINT DEFLECTION VERTICAL OR HORIZONTAL SHALL BE WITHIN THE MANUFACTURES MAXIMUM ALLOWABLE JOINT DEFLECTION.
5. PORTIONS OF THIS PROPOSED DEVELOPMENT LIE WITHIN THE FEMA 100-YR FLOODPLAIN.
6. AT THE CONCLUSION OF CONSTRUCTION AND AS PART OF THE PROCESS FOR THE CITY TO ACCEPT THIS PHASE, THE FIRE HYDRANTS SHALL BE FLOWED AND TESTED. A COPY OF THE REPORT SHALL BE EMAILED INTO THE FIRE DEPARTMENT AND THE HYDRANTS SHALL BE PAINTED AND COLOR CODED.
7. CAUTION: IF PRESSURE REDUCING VALVES WERE INSTALLED IN THIS PHASING, THEY MUST BE SET PRIOR TO FIRE HYDRANT FLOW TESTING.
8. CONTRACTOR AND HOME BUILDER TO ENSURE GATE VALVES ARE ADJUSTED FOR FINISHED SIDEWALK AND PAVEMENT GRADES.
9. CONTRACTOR TO ENSURE ALL GATE VALVES ARE LOCATED OUTSIDE OF PROPOSED CURB AND GUTTER LOCATIONS.
10. HOME BUILDERS ARE EXPECTED TO INSTALL INDIVIDUAL PRESSURE REDUCING VALVES FOR ALL HOMES.

GEORGETOWN FIRE DEPARTMENT NOTES

1. 1,500 GPM FIRE FLOW SHALL BE PROVIDED FOR THIS PROJECT.
2. AT THE CONCLUSION OF CONSTRUCTION AND AS PART OF THE PROCESS FOR THE CITY TO ACCEPT THIS PHASE:
   - THE FIRE HYDRANTS SHALL BE FLOWED AND TESTED
   - A COPY OF THE REPORT SHALL BE EMAILED INTO THE FIRE DEPARTMENT
   - THE HYDRANTS SHALL BE PAINTED AND COLOR CODED.

*** CAUTION :IF PRESSURE REDUCING VALVES WERE INSTALLED IN THIS PHASING THEY MUST BE SET PRIOR TO FIRE HYDRANT FLOW TESTING.

3. PER CITY ORDINANCE SEC. 13.15.120, HYDRANT FLOW CODING STANDARDS. PUBLIC HYDRANTS WILL HAVE THE BARRELS PAINTED SILVER. THE HYDRANTS WILL BE FLOW TESTED, AND THE BONNET PAINTED USING THE HYDRANT FLOW STANDARD IN PARAGRAPH C.
   FLOW COLOR:
   - GREATER THAN 1500 GPM BLUE
   - 1000 TO 1500 GPM GREEN
   - 500 - 999 GPM ORANGE
   - LESS THAN 500 GPM RED
   - NOT WORKING BLACK OR BAGGED

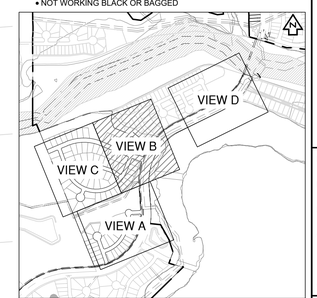

KEY MAP (N.T.S.)

NO	REVISION	BY	DATE

811 Know what's below. Call before you dig.

HRGreen
DEVELOPMENT TX
5508 HIGHWAY 290 WEST
SUITE 150
AUSTIN, TX 78735
512.872.6696
HRGREEN.COM
TBPE NO: 16384
TBPLS NO: 10194101

STATE OF TEXAS
CHRISTINE N. CAMPBELL
142536
LICENSED PROFESSIONAL ENGINEER
07/05/2025

OVERALL WATER PLAN B

PARKSIDE ON THE RIVER SECTIONS 11, 12A & 15A CONSTRUCTION PLANS

GEORGETOWN, WILLIAMSON, TEXAS

DESIGNED BY: CC
DRAWN BY: MM
CHECKED BY: SN
APPROVED BY:

SHEET 132 OF 141

2025-XX-CON

P:\Blake Magee\Parkside Sections 11-15 & WOW ESection 11, 12A & 15A\03_ACAD\Plans\sh\240552 VTCV.dwg, OVERALL WATER PLAN B, July 08, 2025, 12:39 PM, malan.muhammad

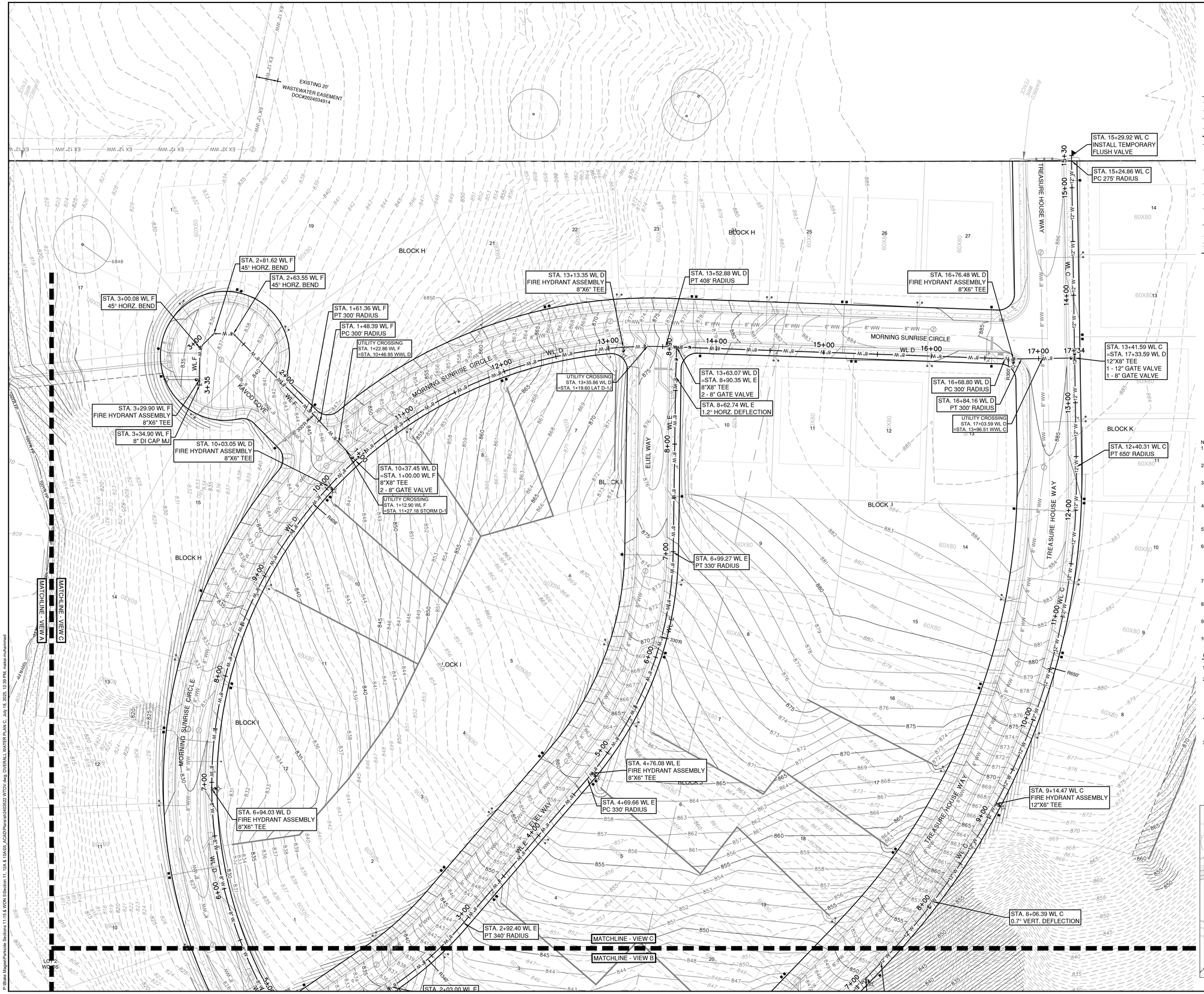

LEGEND

- EXISTING MINOR CONTOUR
- EXISTING MAJOR CONTOUR
- PROPOSED MINOR CONTOUR
- PROPOSED MAJOR CONTOUR
- BOUNDARY
- EASEMENT
- FEMA FLOODWAY PER FIRM# 48491C0460F & LOMR# 21-06-0115P
- FEMA AE — 100YR ATLAS 14 FEMA ZONE AE FLOODPLAIN PER FIRM# 48491C0460F & LOMR# 21-06-0115P
- FEMA A — 100YR FEMA ZONE A FLOODPLAIN PER FIRM MAP# 48491C0460F
- 100YR CLOMR — 100YR CLOMR FLOODPLAIN CASE# 15-06-2071R
- FDFP — 100YR ATLAS 14 FULLY DEVELOPED FLOODPLAIN (STANTEC DRAINAGE STUDY, SHERVIN NOOSHIN, 3/25/19) APPROVED WITH PP# 2019-5-PP
- OHWM — ORDINARY HIGH WATER MARK PER ADAMS ENVIRONMENTAL
- 8" WW — PROPOSED WASTEWATER LINE
- PROPOSED STORM LINE
- 8" W — PROPOSED WATER LINE
- FIRE HYDRANT
- WATER VALVE
- TEMP FLUSH VALVE
- AIR RELEASE VALVE
- STORM SEWER MAHNOLE
- WASTEWATER MANHOLE
- CURB INLET
- PROPOSED SINGLE WASTEWATER SERVICE
- PROPOSED DOUBLE WASTEWATER SERVICE
- PROPOSED SINGLE WATER SERVICE
- PROPOSED DOUBLE WATER SERVICE
- TREES TO REMAIN - HERITAGE
- TREES TO REMAIN - NON-HERITAGE

NOTES:

1. ALL PROPOSED WATERLINES EXCEPT FIRE LEADS SHALL BE PVC C900 DR 18 PER CITY OF GEORGETOWN SPECIFICATIONS.
2. THRUST BLOCKING SHALL BE PROVIDED AT BENDS, P/S, TEES & FITTINGS ACCORDING TO CITY OF GEORGETOWN.
3. ALL JOINT RESTRAINT SHALL BE IN ACCORDANCE TO CITY OF GEORGETOWN SPECIFICATION. REFER TO THE JOINT RESTRAINT TABLE ON SHEET 138.
4. ANY JOINT DEFLECTION VERTICAL OR HORIZONTAL SHALL BE WITHIN THE MANUFACTURES MAXIMUM ALLOWABLE JOINT DEFLECTION.
5. PORTIONS OF THIS PROPOSED DEVELOPMENT LIE WITHIN THE FEMA 100-YR FLOODPLAIN.
6. AT THE CONCLUSION OF CONSTRUCTION AND AS PART OF THE PROCESS FOR THE CITY TO ACCEPT THIS PHASE, THE FIRE HYDRANTS SHALL BE FLOWED AND TESTED. A COPY OF THE REPORT SHALL BE EMAILED INTO THE FIRE DEPARTMENT AND THE HYDRANTS SHALL BE PAINTED AND COLOR CODED.
7. CAUTION: IF PRESSURE REDUCING VALVES WERE INSTALLED IN THIS PHASING, THEY MUST BE SET PRIOR TO FIRE HYDRANT FLOW TESTING.
8. CONTRACTOR AND HOME BUILDER TO ENSURE GATE VALVES ARE ADJUSTED FOR FINISHED SIDEWALK AND PAVEMENT GRADES.
9. CONTRACTOR TO ENSURE ALL GATE VALVES ARE LOCATED OUTSIDE OF PROPOSED CURB AND GUTTER LOCATIONS.
10. HOME BUILDERS ARE EXPECTED TO INSTALL INDIVIDUAL PRESSURE REDUCING VALVES FOR ALL HOMES.

GEORGETOWN FIRE DEPARTMENT NOTES

1. 1,500 GPM FIRE FLOW SHALL BE PROVIDED FOR THIS PROJECT.
2. AT THE CONCLUSION OF CONSTRUCTION AND AS PART OF THE PROCESS FOR THE CITY TO ACCEPT THIS PHASE:
   - THE FIRE HYDRANTS SHALL BE FLOWED AND TESTED
   - A COPY OF THE REPORT SHALL BE EMAILED INTO THE FIRE DEPARTMENT
   - THE HYDRANTS SHALL BE PAINTED AND COLOR CODED.

*** CAUTION: IF PRESSURE REDUCING VALVES WERE INSTALLED IN THIS PHASING THEY MUST BE SET PRIOR TO FIRE HYDRANT FLOW TESTING.

3. PER CITY ORDINANCE SEC. 13.15.120, HYDRANT FLOW CODING STANDARDS. PUBLIC HYDRANTS WILL HAVE THE BARRELS PAINTED SILVER, THE HYDRANTS WILL BE FLOW TESTED, AND THE BONNET PAINTED USING THE HYDRANT FLOW STANDARD IN PARAGRAPH C.

FLOW COLOR:
- GREATER THAN 1500 GPM BLUE
- 1000 TO 1500 GPM GREEN
- 500 - 999 GPM ORANGE
- LESS THAN 500 GPM RED
- NOT WORKING BLACK OR BAGGED

NO.	REVISION	BY	DATE

811 Know what's below. Call before you dig.

5508 HIGHWAY 290 WEST
SUITE 150
AUSTIN, TX 78735
512.872.6696
HRGREEN.COM

TBPE NO: 16384
TBPLS NO: 10194101

HRGreen® DEVELOPMENT TX

STATE OF TEXAS
CHRISTINE N. CAMPBELL
142536
LICENSED PROFESSIONAL ENGINEER
07/03/2025

OVERALL WATER PLAN C

PARKSIDE ON THE RIVER SECTIONS 11, 12A & 15A CONSTRUCTION PLANS

GEORGETOWN, WILLIAMSON, TEXAS

DESIGNED BY: CC
DRAWN BY: MM
CHECKED BY: SN
APPROVED BY:

SHEET 133 OF 141

2025-XX-CON

P:\Blake Magee\Parkside Sections 11-15 & WSN S\Section 11, 12A & 15A\03_ACAD\Planset\sh020522 WTOV.dwg, OVERALL WATER PLAN C, July 16, 2025, 12:39 PM, mekai.muhammad

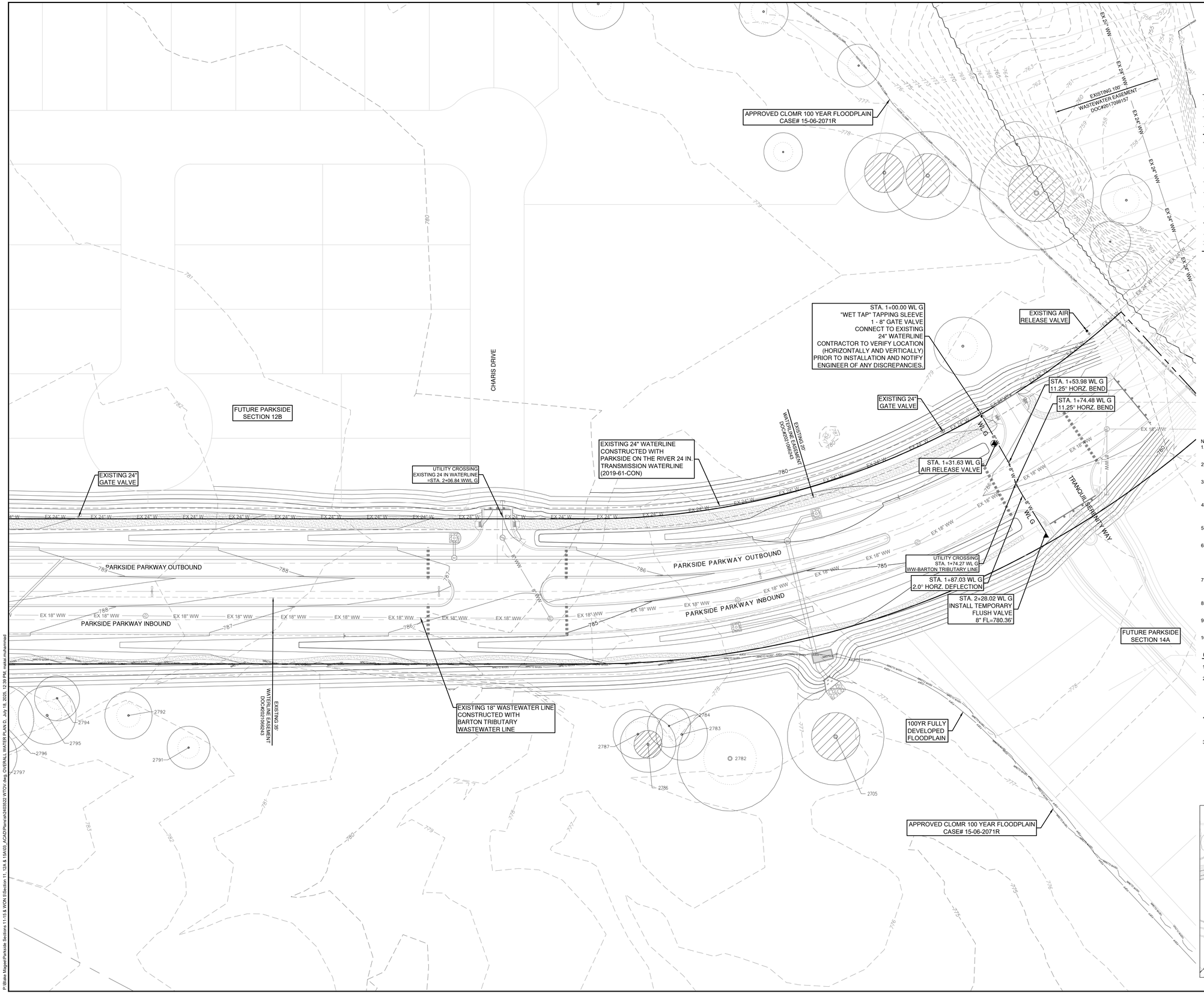

0 40' 80'

SCALE: 1" = 40'

LEGEND

- EXISTING MINOR CONTOUR
- EXISTING MAJOR CONTOUR
- PROPOSED MINOR CONTOUR
- PROPOSED MAJOR CONTOUR
- BOUNDARY
- EASEMENT
- FEMA FLOODWAY PER FIRM# 48491C0460F & LOMR# 21-06-0115P
- FEMA AE — 100YR ATLAS 14 FEMA ZONE AE FLOODPLAIN PER FIRM# 48491C0460F & LOMR# 21-06-0115P
- FEMA A — 100YR FEMA ZONE A FLOODPLAIN PER FIRM MAP# 48491C0460F
- 100YR CLOMR — 100YR CLOMR FLOODPLAIN CASE# 15-06-2071R
- FDFP — 100YR ATLAS 14 FULLY DEVELOPED FLOODPLAIN (STANTEC DRAINAGE STUDY, SHERVIN NOOSHIN, 3/25/19) APPROVED WITH PP# 2019-5-PP
- OHWM — ORDINARY HIGH WATER MARK PER ADAMS ENVIRONMENTAL
- 8" WW — PROPOSED WASTEWATER LINE
- PROPOSED STORM LINE
- 8" W — PROPOSED WATER LINE
- FIRE HYDRANT
- WATER VALVE
- TEMP FLUSH VALVE
- AIR RELEASE VALVE
- STORM SEWER MAHNOLE
- WASTEWATER MANHOLE
- CURB INLET
- PROPOSED SINGLE WASTEWATER SERVICE
- PROPOSED DOUBLE WASTEWATER SERVICE
- PROPOSED SINGLE WATER SERVICE
- PROPOSED DOUBLE WATER SERVICE
- TREES TO REMAIN - HERITAGE
- TREES TO REMAIN - NON-HERITAGE

NOTES:

1. ALL PROPOSED WATERLINES EXCEPT FIRE LEADS SHALL BE PVC C900 DR 18 PER CITY OF GEORGETOWN SPECIFICATIONS.
2. THRUST BLOCKING SHALL BE PROVIDED AT BENDS, P/S, TEES & FITTINGS ACCORDING TO CITY OF GEORGETOWN.
3. ALL JOINT RESTRAINT SHALL BE IN ACCORDANCE TO CITY OF GEORGETOWN SPECIFICATION. REFER TO THE JOINT RESTRAINT TABLE ON SHEET 138.
4. ANY JOINT DEFLECTION VERTICAL OR HORIZONTAL SHALL BE WITHIN THE MANUFACTURES MAXIMUM ALLOWABLE JOINT DEFLECTION.
5. PORTIONS OF THIS PROPOSED DEVELOPMENT LIE WITHIN THE FEMA 100-YR FLOODPLAIN.
6. AT THE CONCLUSION OF CONSTRUCTION AND AS PART OF THE PROCESS FOR THE CITY TO ACCEPT THIS PHASE, THE FIRE HYDRANTS SHALL BE FLOWED AND TESTED. A COPY OF THE REPORT SHALL BE EMAILED INTO THE FIRE DEPARTMENT AND THE HYDRANTS SHALL BE PAINTED AND COLOR CODED.
7. CAUTION: IF PRESSURE REDUCING VALVES WERE INSTALLED IN THIS PHASING, THEY MUST BE SET PRIOR TO FIRE HYDRANT FLOW TESTING.
8. CONTRACTOR AND HOME BUILDER TO ENSURE GATE VALVES ARE ADJUSTED FOR FINISHED SIDEWALK AND PAVEMENT GRADES.
9. CONTRACTOR TO ENSURE ALL GATE VALVES ARE LOCATED OUTSIDE OF PROPOSED CURB AND GUTTER LOCATIONS.
10. HOME BUILDERS ARE EXPECTED TO INSTALL INDIVIDUAL PRESSURE REDUCING VALVES FOR ALL HOMES.

GEORGETOWN FIRE DEPARTMENT NOTES

1. 1,500 GPM FIRE FLOW SHALL BE PROVIDED FOR THIS PROJECT.
2. AT THE CONCLUSION OF CONSTRUCTION AND AS PART OF THE PROCESS FOR THE CITY TO ACCEPT THIS PHASE:
   - THE FIRE HYDRANTS SHALL BE FLOWED AND TESTED
   - A COPY OF THE REPORT SHALL BE EMAILED INTO THE FIRE DEPARTMENT
   - THE HYDRANTS SHALL BE PAINTED AND COLOR CODED.

*** CAUTION :IF PRESSURE REDUCING VALVES WERE INSTALLED IN THIS PHASING THEY MUST BE SET PRIOR TO FIRE HYDRANT FLOW TESTING.

3. PER CITY ORDINANCE SEC. 13.15.120, HYDRANT FLOW CODING STANDARDS. PUBLIC HYDRANTS WILL HAVE THE BARRELS PAINTED SILVER, THE HYDRANTS WILL BE FLOW TESTED, AND THE BONNET PAINTED USING THE HYDRANT FLOW STANDARD IN PARAGRAPH C.

FLOW COLOR:
- GREATER THAN 1500 GPM BLUE
- 1000 TO 1500 GPM GREEN
- 500 - 999 GPM ORANGE
- LESS THAN 500 GPM RED
- NOT WORKING BLACK OR BAGGED

KEY MAP (N.T.S.)

NO	REVISION	BY	DATE

811 Know what's below. Call before you dig.

HRGreen®
DEVELOPMENT TX
5508 HIGHWAY 290 WEST
SUITE 150
AUSTIN, TX 78735
512.872.6696
HRGREEN.COM
TBPE NO: 16384
TBPLS NO: 10194101

STATE OF TEXAS
CHRISTINE N. CAMPBELL
142536
LICENSED PROFESSIONAL ENGINEER
07/03/2025

OVERALL WATER PLAN D

PARKSIDE ON THE RIVER SECTIONS 11, 12A & 15A CONSTRUCTION PLANS GEORGETOWN, WILLIAMSON, TEXAS

DESIGNED BY: CC
DRAWN BY: MM
CHECKED BY: SN
APPROVED BY:

SHEET 134 OF 141

2025-XX-CON

P:\Blake Manger\Parkside Sections 11-15 & WCN 6\Section 11, 12A & 15A\03_ACAD\Planset\20250222 WTGV.dwg, OVERALL WATER PLAN D, Jun 18, 2025, 12:39 PM, mmohammed

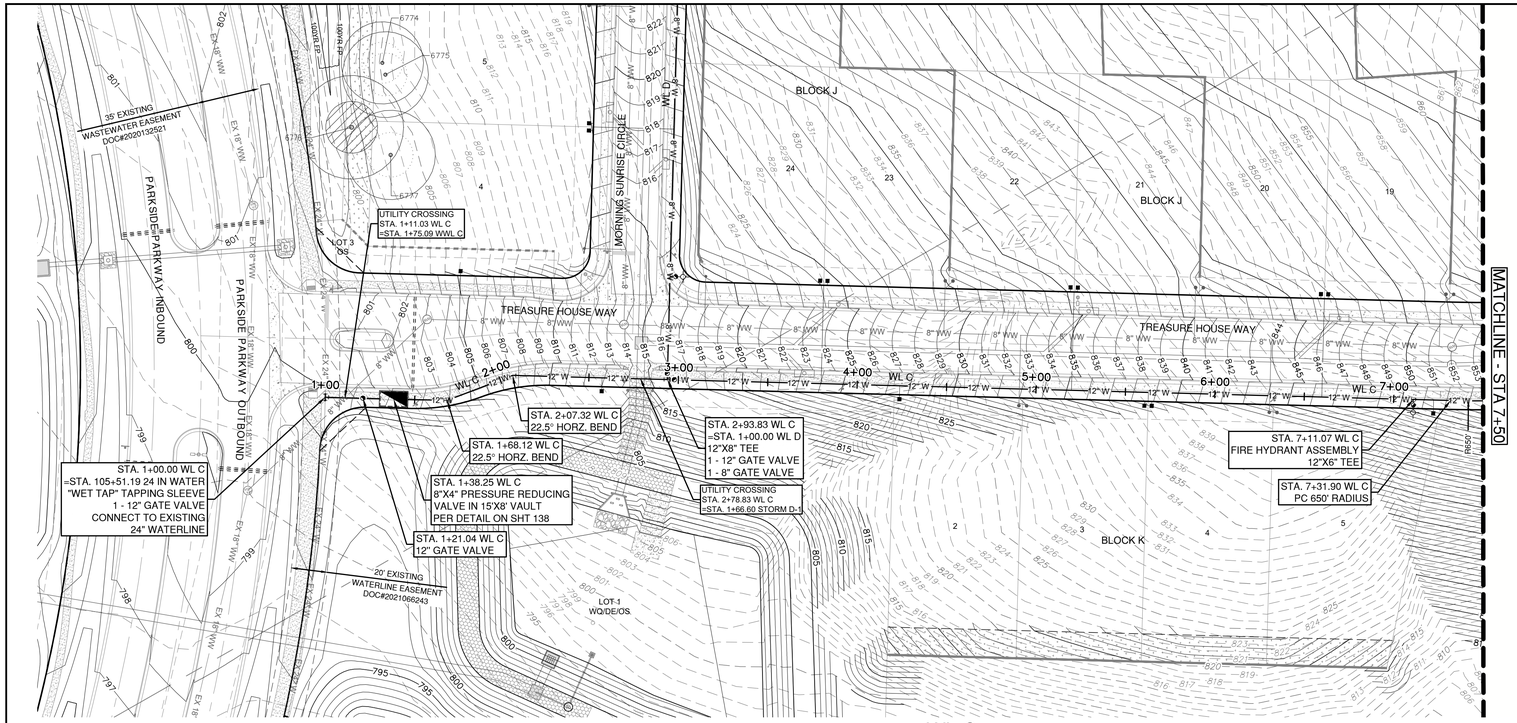

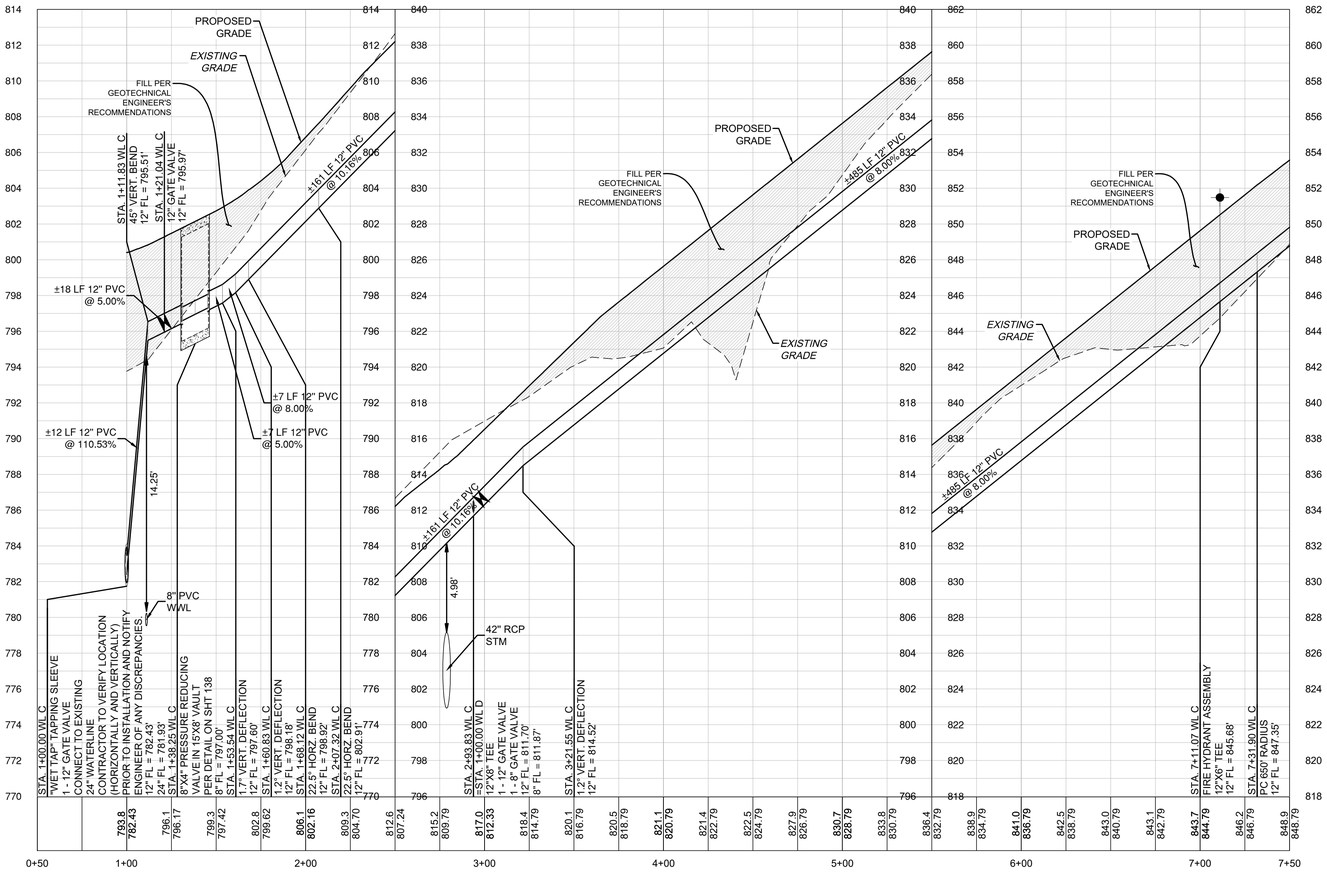

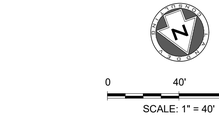

LEGEND

- EXISTING MINOR CONTOUR
- EXISTING MAJOR CONTOUR
- PROPOSED MINOR CONTOUR
- PROPOSED MAJOR CONTOUR
- BOUNDARY
- EASEMENT
- FEMA FLOODWAY PER FIRM# 48491C0460F & LOMR# 21-06-0115P
- FEMA AE — 100YR ATLAS 14 FEMA ZONE AE FLOODPLAIN PER FIRM# 48491C0460F & LOMR# 21-06-0115P
- FEMA A — 100YR FEMA ZONE A FLOODPLAIN PER FIRM MAP# 48491C0460F
- 100YR CLOMR — 100YR CLOMR FLOODPLAIN CASE# 15-06-2071R
- FDFP — 100YR ATLAS 14 FULLY DEVELOPED FLOODPLAIN (STANTEC DRAINAGE STUDY, SHERVIN NOOSHIN, 3/25/19) APPROVED WITH P# 2019-5-PP
- OHWM — ORDINARY HIGH WATER MARK PER ADAMS ENVIRONMENTAL
- PROPOSED WASTEWATER LINE
- PROPOSED STORM LINE
- PROPOSED WATER LINE
- FIRE HYDRANT
- WATER VALVE
- TEMP FLUSH VALVE
- AIR RELEASE VALVE
- STORM SEWER MAHNOLE
- WASTEWATER MANHOLE
- CURB INLET
- PROPOSED SINGLE WASTEWATER SERVICE
- PROPOSED DOUBLE WASTEWATER SERVICE
- PROPOSED SINGLE WATER SERVICE
- PROPOSED DOUBLE WATER SERVICE
- TREES TO REMAIN - HERITAGE
- TREES TO REMAIN - NON-HERITAGE

VERT. SCALE: 1" = 4'
HORZ. SCALE: 1" = 40'

- EXISTING GRADE - CENTERLINE
- FINISHED GRADE - CENTERLINE

4' 2' 0 VERT. SCALE

EXISTING GROUND — PROPOSED FLOWLINE

NOTES:

1. ALL PROPOSED WATERLINES EXCEPT FIRE LEADS SHALL BE PVC C900 DR 18 PER CITY OF GEORGETOWN SPECIFICATIONS.
2. THRUST BLOCKING SHALL BE PROVIDED AT BENDS, PI'S, TEES & FITTINGS ACCORDING TO CITY OF GEORGETOWN.
3. ALL JOINT RESTRAINT SHALL BE IN ACCORDANCE TO CITY OF GEORGETOWN SPECIFICATION. REFER TO THE JOINT RESTRAINT TABLE ON SHEET 138.
4. ANY JOINT DEFLECTION VERTICAL OR HORIZONTAL SHALL BE WITHIN THE MANUFACTURES MAXIMUM ALLOWABLE JOINT DEFLECTION.
5. PORTIONS OF THIS PROPOSED DEVELOPMENT LIE WITHIN THE FEMA 100-YR FLOODPLAIN.
6. AT THE CONCLUSION OF CONSTRUCTION AND AS PART OF THE PROCESS FOR THE CITY TO ACCEPT THIS PHASE, THE FIRE HYDRANTS SHALL BE FLOWED AND TESTED. A COPY OF THE REPORT SHALL BE EMAILED INTO THE FIRE DEPARTMENT AND THE HYDRANTS SHALL BE PAINTED AND COLOR CODED.
7. CAUTION: IF PRESSURE REDUCING VALVES WERE INSTALLED IN THIS PHASING, THEY MUST BE SET PRIOR TO FIRE HYDRANT FLOW TESTING.
8. CONTRACTOR AND HOME BUILDER TO ENSURE GATE VALVES ARE ADJUSTED FOR FINISHED SIDEWALK AND PAVEMENT GRADES.
9. CONTRACTOR TO ENSURE ALL GATE VALVES ARE LOCATED OUTSIDE OF PROPOSED CURB AND GUTTER LOCATIONS.
10. HOME BUILDERS ARE EXPECTED TO INSTALL INDIVIDUAL PRESSURE REDUCING VALVES FOR ALL HOMES.

NO.	REVISION	BY	DATE

Know what's below. Call before you dig.

HRGreen
DEVELOPMENT TX
5508 HIGHWAY 290 WEST
SUITE 150
AUSTIN, TX 78735
512.872.6696
HRGREEN.COM
TBPE NO: 16384
TBPLS NO: 10194101

STATE OF TEXAS
CHRISTINE N. CAMPBELL
142536
LICENSED PROFESSIONAL ENGINEER
07/03/2025

WL C PLAN & PROFILE 1+00 - 7+50

PARKSIDE ON THE RIVER SECTIONS 11, 12A & 15A CONSTRUCTION PLANS

GEORGETOWN, WILLIAMSON, TEXAS

DESIGNED BY: CC
DRAWN BY: MM
CHECKED BY: SN
APPROVED BY:

SHEET 135 OF 141

2025-XX-CON

P:\Blake Magee\Parkside Sections 11\15 & WDN S\Section 11, 12A & 15A\03_ACAD\Plans\sh2025322 WTPP WL C.dwg, WL C PLAN & PROFILE 1+00 - 7+50, July 08, 2025, 12:40 PM, malan.muhammad

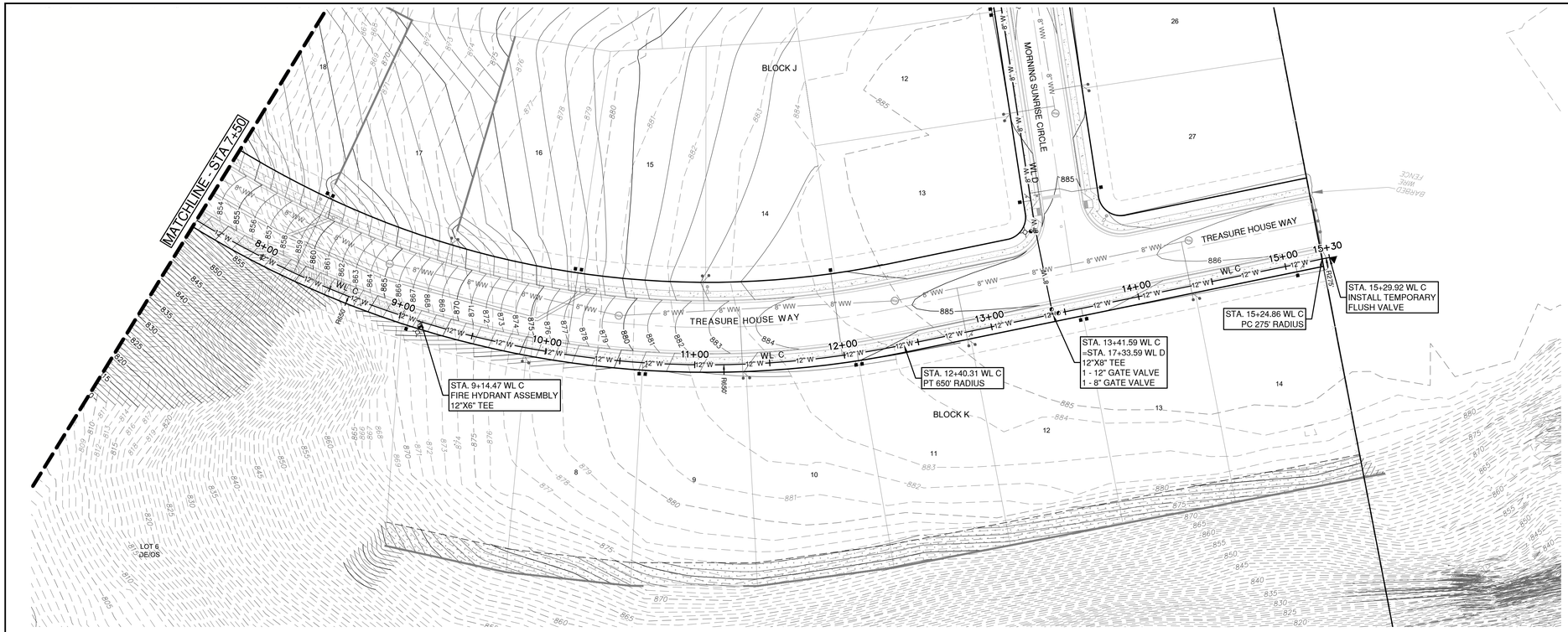

WL C

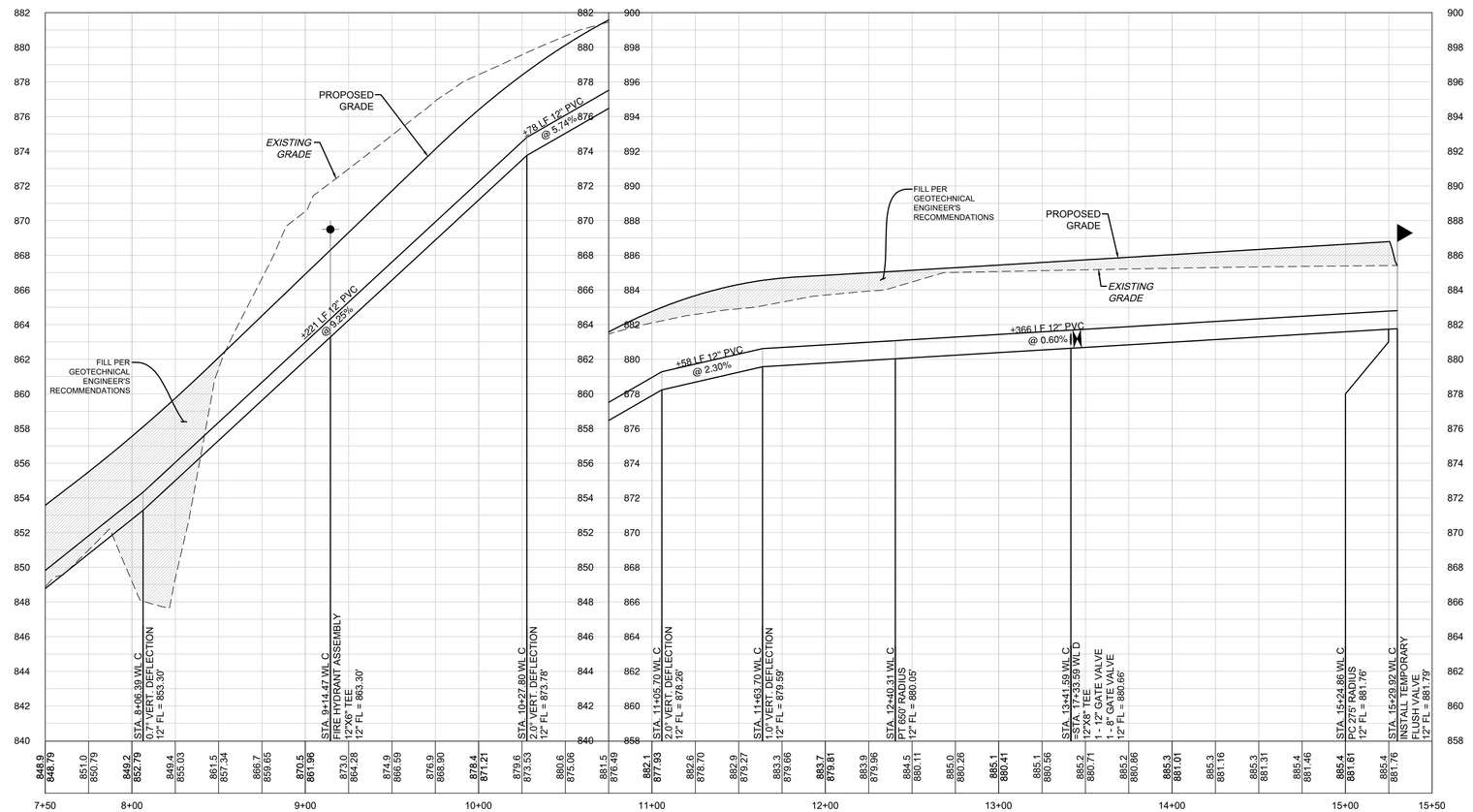

0 40' 80'

SCALE: 1" = 40'

LEGEND

- EXISTING MINOR CONTOUR
- EXISTING MAJOR CONTOUR
- PROPOSED MINOR CONTOUR
- PROPOSED MAJOR CONTOUR
- BOUNDARY
- EASEMENT
- FEMA FLOODWAY PER FIRM# 48491C0460F & LOMR# 21-06-0115P
- FEMA AE — 100YR ATLAS 14 FEMA ZONE AE FLOODPLAIN PER FIRM# 48491C0460F & LOMR# 21-06-0115P
- FEMA A — 100YR FEMA ZONE A FLOODPLAIN PER FIRM MAP# 48491C0460F
- 100YR CLOMR — 100YR CLOMR FLOODPLAIN CASE# 15-06-2071R
- FDFP — 100YR ATLAS 14 FULLY DEVELOPED FLOODPLAIN (STANTEC DRAINAGE STUDY, SHERVIN NOOSHIN, 3/25/19) APPROVED WITH PP# 2019-5-PP
- OHWM — ORDINARY HIGH WATER MARK PER ADAMS ENVIRONMENTAL
- 8" WW — PROPOSED WASTEWATER LINE
- PROPOSED STORM LINE
- 8" W — PROPOSED WATER LINE
- FIRE HYDRANT
- WATER VALVE
- TEMP FLUSH VALVE
- AIR RELEASE VALVE
- STORM SEWER MAHNOLE
- WASTEWATER MANHOLE
- CURB INLET
- PROPOSED SINGLE WASTEWATER SERVICE
- PROPOSED DOUBLE WASTEWATER SERVICE
- PROPOSED SINGLE WATER SERVICE
- PROPOSED DOUBLE WATER SERVICE
- TREES TO REMAIN - HERITAGE
- TREES TO REMAIN - NON-HERITAGE

VERT. SCALE: 1" = 4'
HORZ. SCALE: 1" = 40'

EXISTING GRADE - CENTERLINE
FINISHED GRADE - CENTERLINE

4' 2' 0 VERT. SCALE

EXISTING GROUND — 100YR 10 — 100YR 0.1 — PROPOSED FLOWLINE

NOTES:

1. ALL PROPOSED WATERLINES EXCEPT FIRE LEADS SHALL BE PVC C900 DR 18 PER CITY OF GEORGETOWN SPECIFICATIONS.
2. THRUST BLOCKING SHALL BE PROVIDED AT BENDS, PI'S, TEES & FITTINGS ACCORDING TO CITY OF GEORGETOWN.
3. ALL JOINT RESTRAINT SHALL BE IN ACCORDANCE TO CITY OF GEORGETOWN SPECIFICATION. REFER TO THE JOINT RESTRAINT TABLE ON SHEET 138.
4. ANY JOINT DEFLECTION VERTICAL OR HORIZONTAL SHALL BE WITHIN THE MANUFACTURES MAXIMUM ALLOWABLE JOINT DEFLECTION.
5. PORTIONS OF THIS PROPOSED DEVELOPMENT LIE WITHIN THE FEMA 100-YR FLOODPLAIN.
6. AT THE CONCLUSION OF CONSTRUCTION AND AS PART OF THE PROCESS FOR THE CITY TO ACCEPT THIS PHASE, THE FIRE HYDRANTS SHALL BE FLOWED AND TESTED. A COPY OF THE REPORT SHALL BE EMAILED INTO THE FIRE DEPARTMENT AND THE HYDRANTS SHALL BE PAINTED AND COLOR CODED.
7. CAUTION: IF PRESSURE REDUCING VALVES WERE INSTALLED IN THIS PHASING, THEY MUST BE SET PRIOR TO FIRE HYDRANT FLOW TESTING.
8. CONTRACTOR AND HOME BUILDER TO ENSURE GATE VALVES ARE ADJUSTED FOR FINISHED SIDEWALK AND PAVEMENT GRADES.
9. CONTRACTOR TO ENSURE ALL GATE VALVES ARE LOCATED OUTSIDE OF PROPOSED CURB AND GUTTER LOCATIONS.
10. HOME BUILDERS ARE EXPECTED TO INSTALL INDIVIDUAL PRESSURE REDUCING VALVES FOR ALL HOMES.

NO	REVISION	BY	DATE

811 Know what's below. Call before you dig.

5508 HIGHWAY 290 WEST
SUITE 150
AUSTIN, TX 78735
512.872.6696
HRGREEN.COM

TBPE NO: 16384
TBPLS NO: 10194101

HRGreen®
DEVELOPMENT TX

STATE OF TEXAS
CHRISTINE N. CAMPBELL
142536
LICENSED PROFESSIONAL ENGINEER
07/03/2025

WL C PLAN & PROFILE 7+50 - END

PARKSIDE ON THE RIVER SECTIONS 11, 12A & 15A CONSTRUCTION PLANS GEORGETOWN, WILLIAMSON, TEXAS

DESIGNED BY: CC
DRAWN BY: MM
CHECKED BY: SN
APPROVED BY:

SHEET 136 OF 141

2025-XX-CON

P:\Blake Magee\Parkside Sections 11-15 & WCA\15Section 11, 12A & 15A\03_ACAD\Plans\sht\A2635S2 WTPP WL C.dwg, WL C PLAN & PROFILE 7+50 - END, July 18, 2025, 12:40 PM, makai.muhammad

W02 – TRENCH AND EMBEDMENT DETAIL UNDER NON-PAVED AREAS

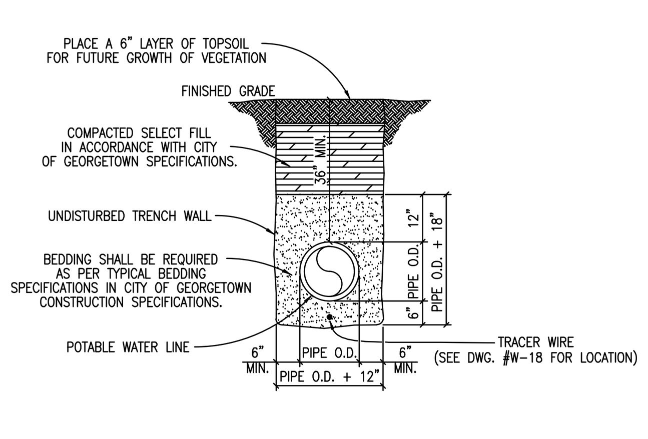

TRENCH WIDTHS
*PIPE LESS THAN 20" DIAMETER
1'-0" + PIPE O.D.
*20" DIAMETER PIPE AND LARGER
2'-0" + PIPE O.D.

The Architect/Engineer assumes responsibility for appropriate use of this standard.

ADOPTED 6/21/2006 | CITY OF GEORGETOWN CONSTRUCTION STANDARDS AND DETAILS | TRENCH AND EMBEDMENT DETAIL UNDER NON-PAVED AREAS | W02 | NTS | 1/2003 | MRS | TRB

W02A – CONCRETE TRENCH CAP DETAIL

* WHERE 36" MINIMUM COVER CAN NOT BE OBTAINED OR DUE TO POTENTIAL SURFACE LOADING THE CITY MAY REQUIRE A CAP TO BE INSTALLED.

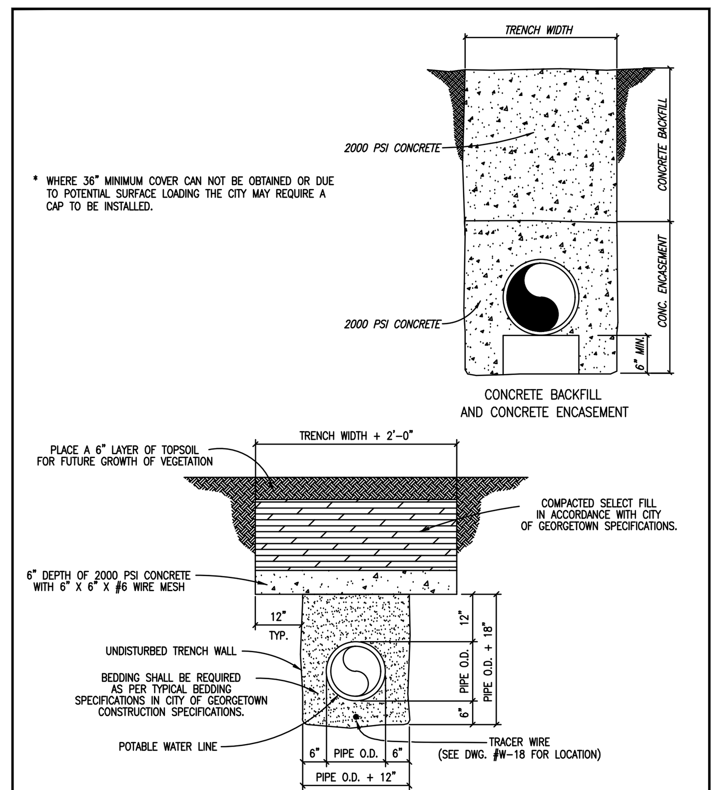

TRENCH WIDTHS
*PIPE LESS THAN 20" DIAMETER
1'-0" + PIPE O.D.
*20" DIAMETER PIPE AND LARGER
2'-0" + PIPE O.D.

The Architect/Engineer assumes responsibility for appropriate use of this standard.

ADOPTED 6/21/2006 | CITY OF GEORGETOWN CONSTRUCTION STANDARDS AND DETAILS | CONCRETE TRENCH CAP DETAIL | W02A | NTS | 1/2003 | MRS | TRB

W03 – TYPICAL WATER SERVICE–ELEVATION

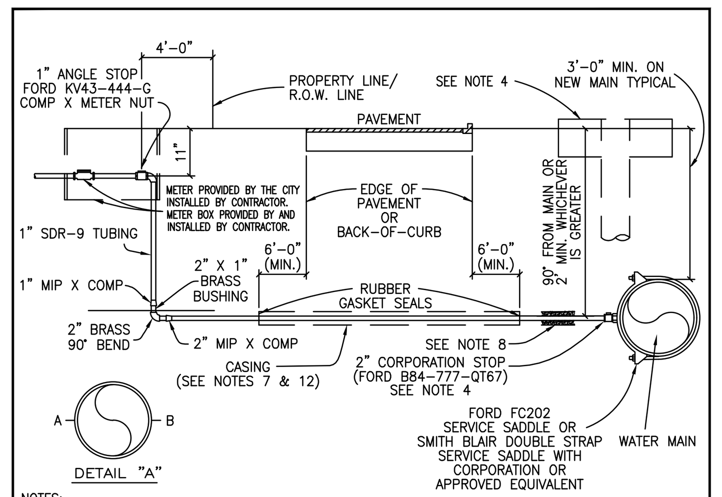

NOTES:
1. SUCCESSIVE TAPS INTO THE WATER MAIN SHALL BE SPACED A MINIMUM OF 18" OFFSET AND AT THE CENTERLINE AS SHOWN ON DETAIL "A".
2. WHERE NO SIDEWALK EXISTS, METER BOXES SHALL BE SET TO CONFORM TO FINISHED GRADE.
3. AUTHORIZED SERVICE LINE MATERIAL: POLYETHYLENE TUBING SHALL BE SDR-9. CLASS 200, SDR TUBING SHALL HAVE STAINLESS STEEL STIFFENERS.
4. ROTATE THE CORPORATION STOP SO THAT THE OPERATING NUT IS ACTUATED FROM THE VERTICAL POSITION RATHER THAN THE HORIZONTAL. SEE STD. RISER FOR CORP. STOP DETAIL, (DWG # W08).
5. SERVICE LINES SHALL BE CONTINUOUS FROM CORPORATION STOP TO CORPORATION STOP WITH NO FITTINGS IN BETWEEN.
6. SERVICE CASING SHALL NOT BE INSTALLED BY WATER JETTING UNDER ROADWAY.
7. CASING REQUIRED FOR ALL PAVEMENT CROSSINGS. 4" SDR-26 REQUIRED FOR OPEN-CUT. STEEL CASING PIPE REQUIRED FOR JACK AND BORE. LIMITS OF CASING SHOULD EXTEND SIX FEET BEYOND THE EDGE OF PAVEMENT OR BACK-OF-CURB.
8. BEDDING MATERIAL AS PER CITY OF GEORGETOWN CONSTRUCTION SPECIFICATIONS.
9. ANY VARIATIONS ON FITTINGS MUST BE APPROVED BY THE CITY ENGINEER.
10. METER BOX TO BE CAPABLE OF HOUSING ITRON AUTOMATIC METER READING DEVICE. USE DFW-PLASTICS, INC. PART NO. 1200.SBAMR OR APPROVED EQUAL.
11. ALL SERVICE LINES SHALL BE PLACED 90° PERPENDICULAR TO THE ROADWAY. SEE DETAIL W23.
12. CASING SHALL EXTEND OUT TO WITHIN 4' INSIDE OF THE R.O.W. LINE, ON BOTH SIDES.

The Architect/Engineer assumes responsibility for appropriate use of this standard.

ADOPTED 01/23/2013 | CITY OF GEORGETOWN CONSTRUCTION STANDARDS AND DETAILS | TYPICAL WATER SERVICE–ELEVATION | W03 | NTS | 1/2013 | – | MH

W04 – SINGLE WATER SERVICE PLAN

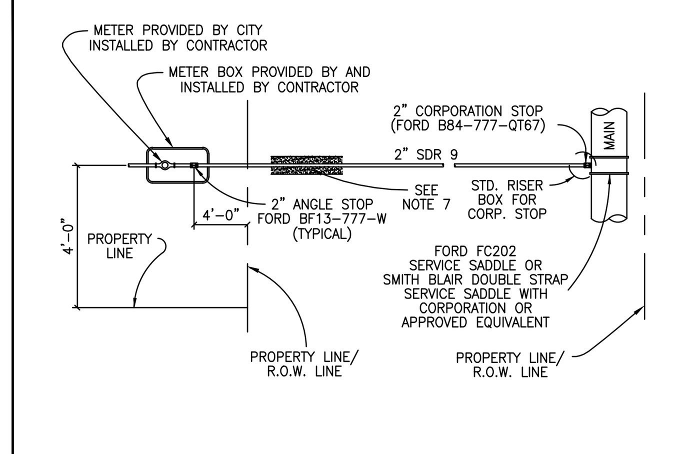

NOTES:
1. AUTHORIZED SERVICE LINE MATERIAL: POLYETHYLENE TUBING SHALL BE SDR-9. CLASS 200, SDR TUBING SHALL HAVE STAINLESS STEEL STIFFENERS.
2. ANGLE STOP SHALL BE 1" MINIMUM.
3. 1" ANGLE STOPS WITH 3/4" VALVES SHALL NOT BE PERMITTED.
4. MULTIPLE SERVICE/METER INSTALLATIONS OF MORE THAN 4 METERS PER SERVICE AND SERVICE LINES LARGER THAN 2" IN DIAMETER SHALL BE HANDLED ON AN INDIVIDUAL BASIS.
5. ANGLE STOPS 1 1/2" AND 2" IN SIZE SHALL BE PROVIDED WITH BOTH A LOCKING CAP AND METER FLANGE.
6. ANGLE STOPS SHALL BE INSTALLED 8" BELOW FINISHED GRADE AND MARKED WITH A 2" X 2" X 48" TREATED WOOD STAKE, PAINTED BLUE.
7. BEDDING MATERIAL AS PER CITY OF GEORGETOWN CONSTRUCTION SPECIFICATIONS.
8. CASING REQUIREMENTS FOR SERVICE LINES CROSSING ROADWAYS SEE DETAIL W-03 NOTE #7.
9. ANY VARIATIONS ON FITTINGS MUST BE APPROVED BY THE CITY ENGINEER.
10. ALL SERVICE LINES SHALL BE PLACED 90° PERPENDICULAR TO THE ROADWAY.

The Architect/Engineer assumes responsibility for appropriate use of this standard.

ADOPTED 01/23/2013 | CITY OF GEORGETOWN CONSTRUCTION STANDARDS AND DETAILS | SINGLE WATER SERVICE PLAN | W04 | NTS | 1/2013 | – | MH

W05 – DOUBLE WATER SERVICE PLAN

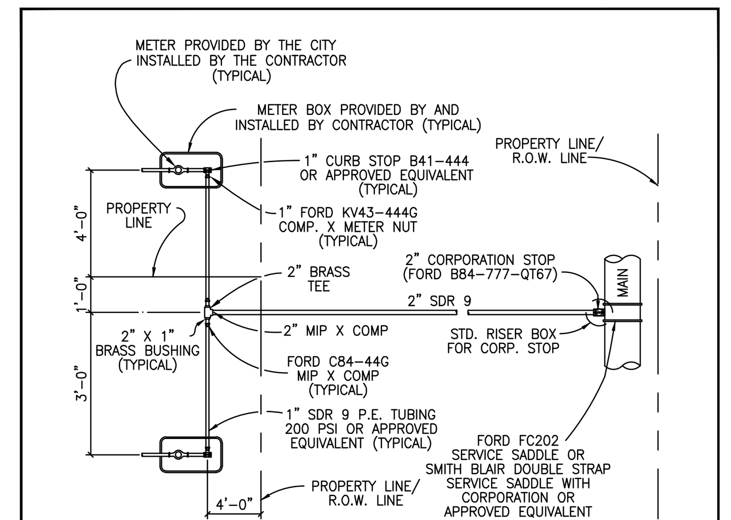

NOTES:
1. AUTHORIZED SERVICE LINE MATERIAL: POLYETHYLENE TUBING SHALL BE SDR-9. CLASS 200, SDR TUBING SHALL HAVE STAINLESS STEEL STIFFENERS.
2. ANGLE STOP SHALL BE 1" MINIMUM.
3. 1" ANGLE STOPS WITH 3/4" VALVES SHALL NOT BE PERMITTED.
4. MULTIPLE SERVICE/METER INSTALLATIONS OF MORE THAN 4 METERS PER SERVICE AND SERVICE LINES LARGER THAN 2" IN DIAMETER SHALL BE HANDLED ON AN INDIVIDUAL BASIS.
5. ANGLE STOPS 1 1/2" AND 2" IN SIZE SHALL BE PROVIDED WITH BOTH A LOCKING CAP AND METER FLANGE.
6. ANGLE STOPS SHALL BE INSTALLED 8" BELOW FINISHED GRADE AND MARKED WITH A 2" X 2" X 48" TREATED WOOD STAKE, PAINTED BLUE.
7. BEDDING MATERIAL AS PER CITY OF GEORGETOWN CONSTRUCTION SPECIFICATIONS.
8. CASING REQUIREMENTS FOR SERVICE LINES CROSSING ROADWAYS SEE DETAIL W-03 NOTE #7.
9. ANY VARIATIONS ON FITTINGS MUST BE APPROVED BY THE CITY ENGINEER.
10. ALL SERVICE LINES SHALL BE PLACED 90° PERPENDICULAR TO THE ROADWAY.

The Architect/Engineer assumes responsibility for appropriate use of this standard.

ADOPTED 01/23/2013 | CITY OF GEORGETOWN CONSTRUCTION STANDARDS AND DETAILS | DOUBLE WATER SERVICE PLAN | W05 | NTS | 1/2013 | – | MH

W06 – QUADRUPLE WATER SERVICE PLAN

The Architect/Engineer assumes responsibility for appropriate use of this standard.

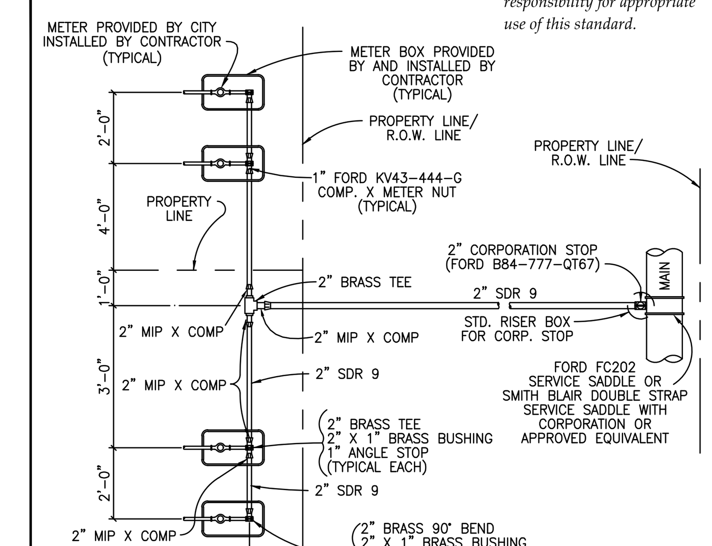

NOTES:
1. AUTHORIZED SERVICE LINE MATERIAL: POLYETHYLENE TUBING SHALL BE SDR-9. CLASS 200, SDR TUBING SHALL HAVE STAINLESS STEEL STIFFENERS.
2. ANGLE STOP SHALL BE 1" MINIMUM.
3. 1" ANGLE STOPS WITH 3/4" VALVES SHALL NOT BE PERMITTED.
4. MULTIPLE SERVICE/METER INSTALLATIONS OF MORE THAN 4 METERS PER SERVICE AND SERVICE LINES LARGER THAN 2" IN DIAMETER SHALL BE HANDLED ON AN INDIVIDUAL BASIS.
5. ANGLE STOPS 1 1/2" AND 2" IN SIZE SHALL BE PROVIDED WITH BOTH A LOCKING CAP AND METER FLANGE.
6. ANGLE STOPS SHALL BE INSTALLED 8" BELOW FINISHED GRADE AND MARKED WITH A 2" X 2" X 48" TREATED WOOD STAKE, PAINTED BLUE.
7. BEDDING MATERIAL AS PER CITY OF GEORGETOWN CONSTRUCTION SPECIFICATIONS.
8. CASING REQUIREMENTS FOR SERVICE LINES CROSSING ROADWAYS SEE DETAIL W-03 NOTE #7.
9. ANY VARIATIONS ON FITTINGS MUST BE APPROVED BY THE CITY ENGINEER.
10. ALL SERVICE LINES SHALL BE PLACED 90° PERPENDICULAR TO THE ROADWAY.

ADOPTED 01/23/2013 | CITY OF GEORGETOWN CONSTRUCTION STANDARDS AND DETAILS | QUADRUPLE WATER SERVICE PLAN | W06 | NTS | 1/2013 | – | MH

W07 – TYPICAL VALVE SETTING

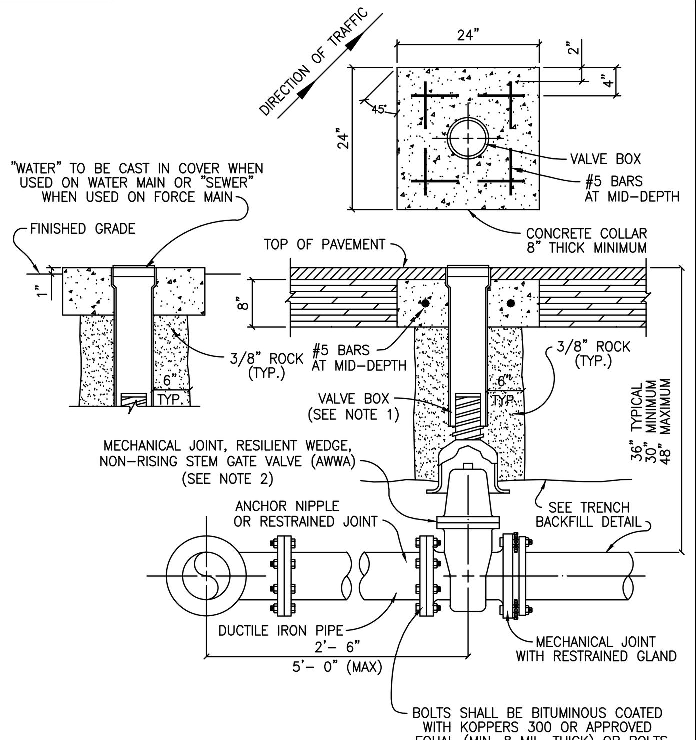

NOTES:
1. VALVE BOX SHALL BE 5 1/4" CAST IRON ADJUSTABLE HAVING AN ADJUSTABLE RANGE OF + OR – 6 INCHES FROM INSTALLED FINISH GRADE.
2. ACCEPTABLE GATE VALVES ARE:
   A. AMERICAN FLOW CONTROL – SERIES 2500
   B. MUELLER – 2360 SERIES
   C. CLOW

The Architect/Engineer assumes responsibility for appropriate use of this standard.

ADOPTED 6/21/2006 | CITY OF GEORGETOWN CONSTRUCTION STANDARDS AND DETAILS | TYPICAL VALVE SETTING | W07 | NTS | 1/2003 | MRS | TRB

W08 – STANDARD RISER BOX FOR CORPORATION STOP

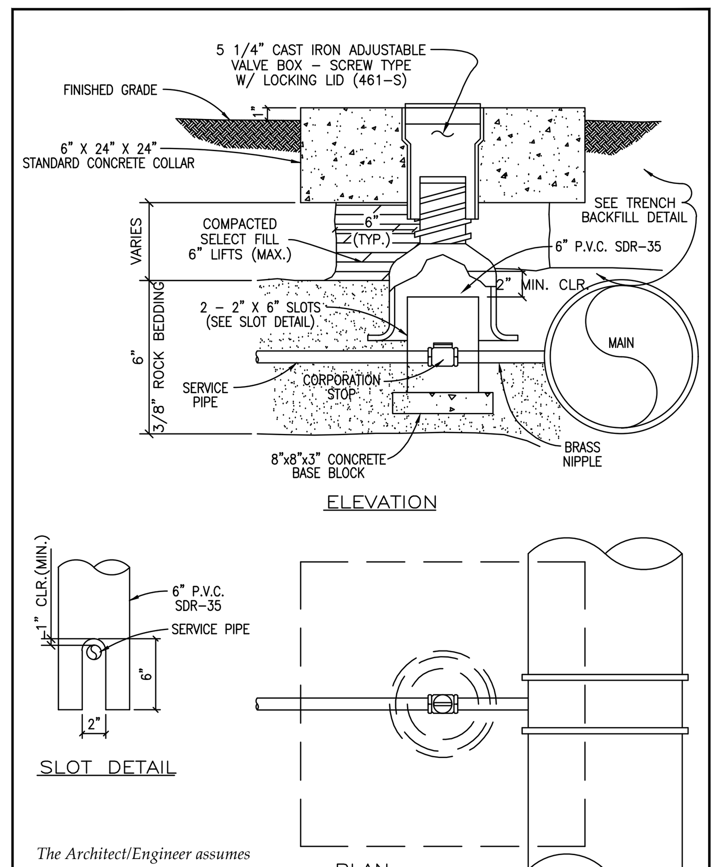

The Architect/Engineer assumes responsibility for appropriate use of this standard.

ADOPTED 6/21/2006 | CITY OF GEORGETOWN CONSTRUCTION STANDARDS AND DETAILS | STANDARD RISER BOX FOR CORPORATION STOP | W08 | NTS | 1/2003 | MRS | TRB

W-08C – AUTOMATIC FLUSHING VALVE

EXTERIOR VIEW

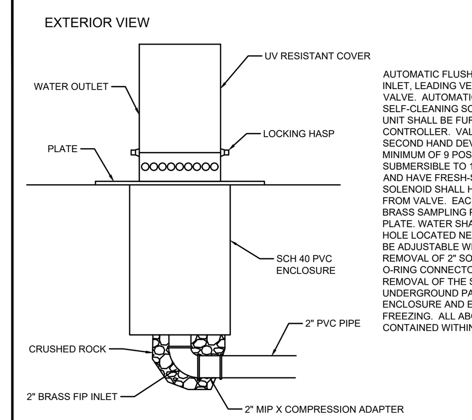

AUTOMATIC FLUSHING DEVICE SHALL HAVE A 2" BRASS FIP INLET, LEADING VERTICALLY INTO A 2" AUTOMATIC SOLENOID VALVE. AUTOMATIC SOLENOID VALVE SHALL HAVE INTERNAL, SELF-CLEANING SCREEN, AND HAVE A 220 PSI RATING. EACH UNIT SHALL BE FURNISHED WITH A STAND-ALONE VALVE CONTROLLER. VALVE CONTROLLER WILL NOT REQUIRE A SECOND HAND DEVICE FOR PROGRAMMING. MUST HAVE A MINIMUM OF 9 POSSIBLE FLUSHING CYCLE PER DAY, SHALL BE SUBMERSIBLE TO 12 FEET, OPERATE WITH A 9 VOLT BATTERY, AND HAVE FRESH-SEALED ELECTRICAL COMPONENTS. SOLENOID SHALL HAVE NO LOOSE PARTS WHEN REMOVED FROM VALVE. EACH UNIT SHALL HAVE A DOUBLE-VALVE. ALL BRASS SAMPLING POINT, AND A UV RESISTANT GROUND PLATE. WATER SHALL EXIT UNIT HORIZONTALLY THROUGH HOLE LOCATED NEAR GROUNDLINE AND WATER FLOW SHALL BE ADJUSTABLE WITHOUT ACCESSING 2" SOLENOID VALVE. REMOVAL OF 2" SOLENOID VALVE SHALL BE POSSIBLE VIA AN O-RING CONNECTOR LOCATED UNDER THE VALVE AFTER REMOVAL OF THE STAINLESS STEEL ACCESS PLATE. UNDERGROUND PARTS SHALL BE HOUSED IN A PVC ENCLOSURE AND EACH UNIT SHALL BE SELF-DRAINING, NON FREEZING. ALL ABOVE GROUND COMPONENTS SHALL BE CONTAINED WITHIN A UV RESISTANT LOCKING GOMES COVER.

The Architect/Engineer assumes responsibility for appropriate use of this standard.

INTERIOR VIEW

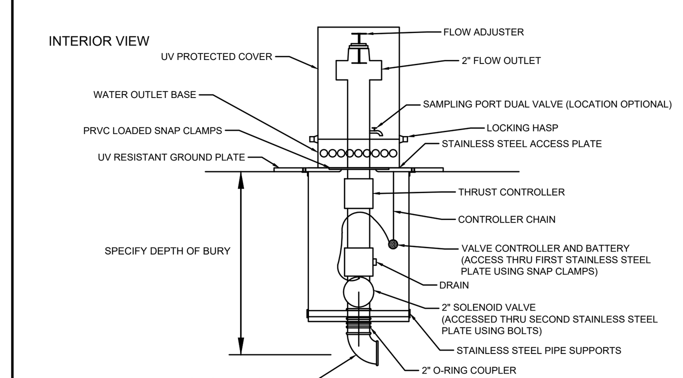

TRANSFERED FROM TCTSUD | CITY OF GEORGETOWN CONSTRUCTION STANDARDS AND DETAILS | AUTOMATIC FLUSHING VALVE | W–08C | NTS | 7/2015 | TP | –

W09 – STANDARD BLOW-OFF

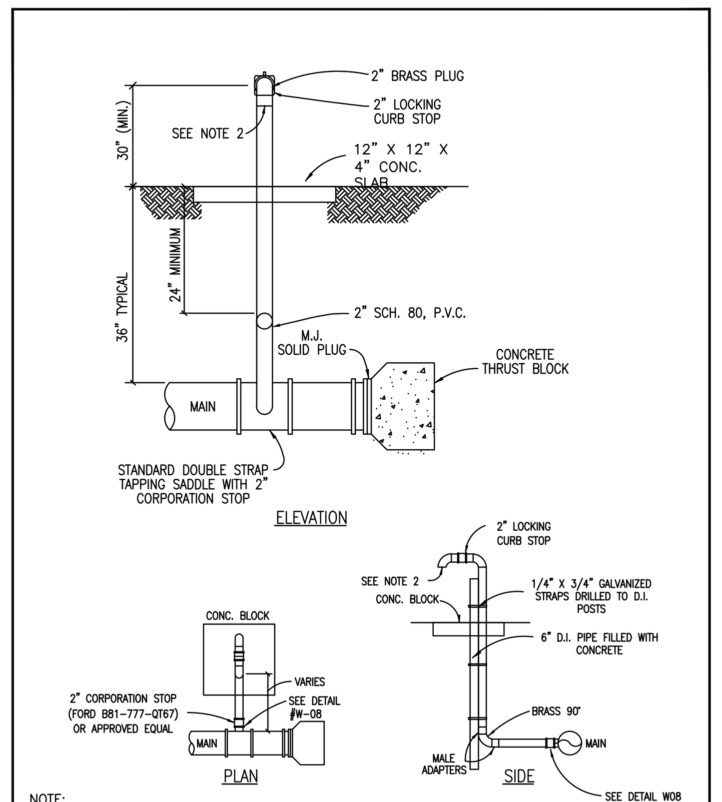

NOTE:
1. ATTACH FIRE HYDRANT CONNECTION AT THE END OF THE BLOW OFF VALVE.

The Architect/Engineer assumes responsibility for appropriate use of this standard.

ADOPTED 6/21/2006 | CITY OF GEORGETOWN CONSTRUCTION STANDARDS AND DETAILS | STANDARD BLOW-OFF | W09 | NTS | 1/2003 | MRS | TRB

W10 – TYPICAL FIRE HYDRANT INSTALLATION

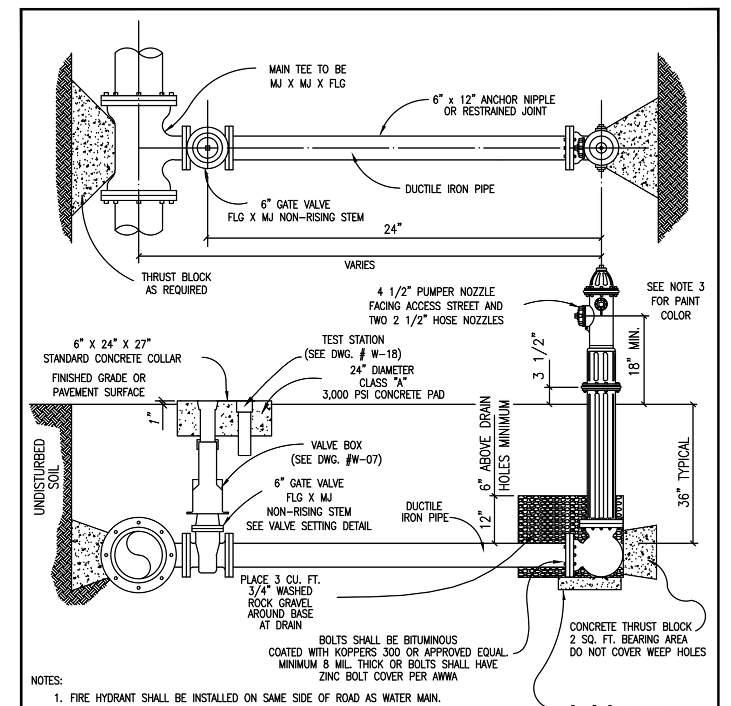

NOTES:
1. FIRE HYDRANT SHALL BE INSTALLED ON SAME SIDE OF ROAD AS WATER MAIN.
2. FIRE HYDRANT SHALL BE INSTALLED PLUMB AND TRUE.
3. ALL FIRE HYDRANT EXTERIORS SHALL BE FACTORY PRIMED AND PAINTED SILVER USING A HIGH GRADE ENAMEL.
4. HEEL AND THRUST BLOCKS TO REST IN UNDISTURBED SOIL.
5. THE ONLY FIRE HYDRANTS ACCEPTABLE ARE:
   A. KENNEDY – K81
   B. AMERICAN DARLING – B84B
   C. CLOW MEDALLION
6. DOUBLE BLUE REFLECTOR "HYE-LITES" BRAND, MANUFACTURED BY PAVEMENT MARKERS INC. TO BE INSTALLED AT CENTERLINE OF STREET PERPENDICULAR TO HYDRANT.
7. ALL METALLIC PIPES AND FITTINGS SHALL BE WRAPPED WITH 8 MILL. POLYETHELENE FILM.

The Architect/Engineer assumes responsibility for appropriate use of this standard.

ADOPTED 6/21/2006 | CITY OF GEORGETOWN CONSTRUCTION STANDARDS AND DETAILS | TYPICAL FIRE HYDRANT INSTALLATION | W10 | NTS | 1/2003 | MRS | TRB

W11 – TYPICAL THRUST BLOCKS FOR WATER AND FORCE MAIN

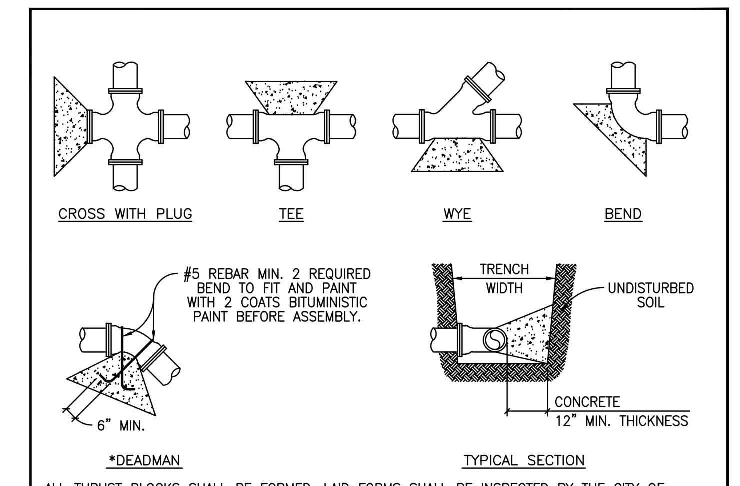

ALL THRUST BLOCKS SHALL BE FORMED. LAID FORMS SHALL BE INSPECTED BY THE CITY OF GEORGETOWN PRIOR TO THE POURING OF CONCRETE AND SHALL ALSO BE INSPECTED BY THE CITY OF GEORGETOWN PRIOR TO COVERING. TYPICAL LOCATIONS WHICH REQUIRE CONCRETE REACTION (THRUST) BLOCKS, FOR PRESSURE MAINS FOUR INCHES (4") AND GREATER. CONCRETE SHALL HAVE 2,500 P.S.I. MINIMUM STRENGTH AT TWENTY EIGHT (28) DAYS AND BEAR AGAINST UNDISTURBED STABLE SOILS, AREA OF CONTACT SHALL BE GOVERNED BY PIPE SIZE, MAXIMUM PRESSURE IN PIPE, AND BEARING CAPACITY OF SOIL. PROTECT FITTINGS, BOLTS, ETC. BY COVERING WITH VISQUEEN OR OTHER ACCEPTABLE MATERIAL. CONCRETE SHALL BE A MINIMUM OF TWELVE INCHES (12") THICK.

PIPE SIZE	THRUST BLOCK AREA REQUIRED	PIPE SIZE	THRUST BLOCK AREA REQUIRED	REMARKS
4"	2.0 SQ. FT.	18"	30.0 SQ. FT.	VALUES ARE FOR 90° BENDS, BASED ON 2000 P.S.F. SAFE BEARING LOAD AND PIPE PRESSURE OF 150 P.S.I. PLUS 33% SAFETY FACTOR FOR OTHER SOILS AND PRESSURES, THE AREA REQUIRED IS IN DIRECT PROPORTION.
6"	4.0 SQ. FT.	20"	37.0 SQ. FT.	
8"	6.6 SQ. FT.	24"	53.0 SQ. FT.	
10"	10.0 SQ. FT.	27"	80.0 SQ. FT.	
12"	14.0 SQ. FT.	30"	98.0 SQ. FT.	
14"	18.0 SQ. FT.	36"	127.0 SQ. FT.	
16"	24.0 SQ. FT.			

* THE ENGINEER OF RECORD SHALL CALCULATE THE SIZE OF THE DEADMAN REQUIRED AS WELL AS ANY INSTALLATION WHICH IS NOT COVERED BY THE ABOVE.

The Architect/Engineer assumes responsibility for appropriate use of this standard.

ADOPTED 6/21/2006 | CITY OF GEORGETOWN CONSTRUCTION STANDARDS AND DETAILS | TYPICAL THRUST BLOCKS FOR WATER AND FORCE MAIN | W11 | NTS | 1/2003 | MRS | TRB

W12 – STANDARD AIR RELEASE VALVE FOR WATER MAIN

The Architect/Engineer assumes responsibility for appropriate use of this standard.

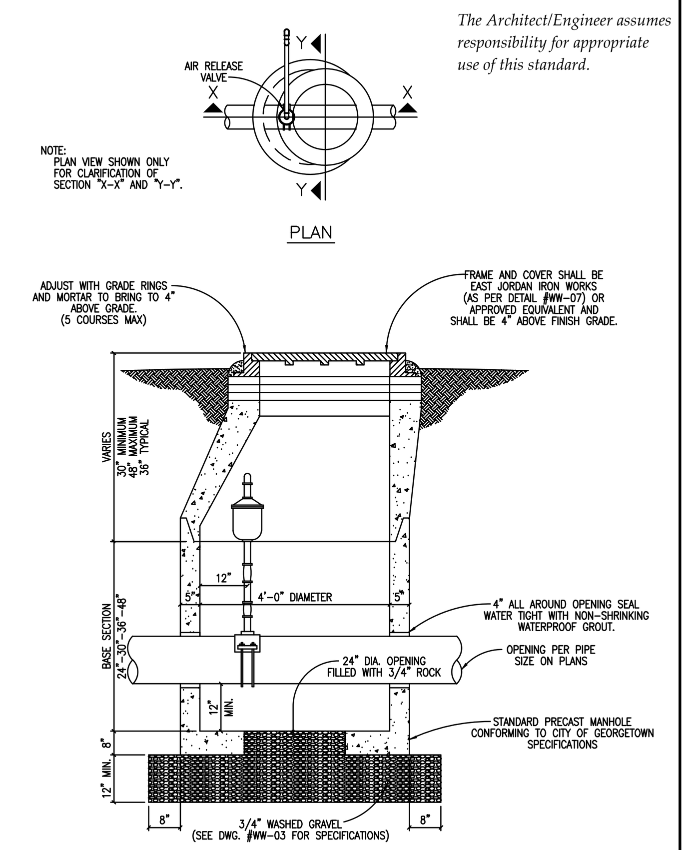

ADOPTED 6/21/2006 | CITY OF GEORGETOWN CONSTRUCTION STANDARDS AND DETAILS | STANDARD AIR RELEASE VALVE FOR WATER MAIN | W12 | NTS | 1/2003 | MRS | TRB

W13 – STANDARD AIR RELEASE VALVE FOR WATER MAIN

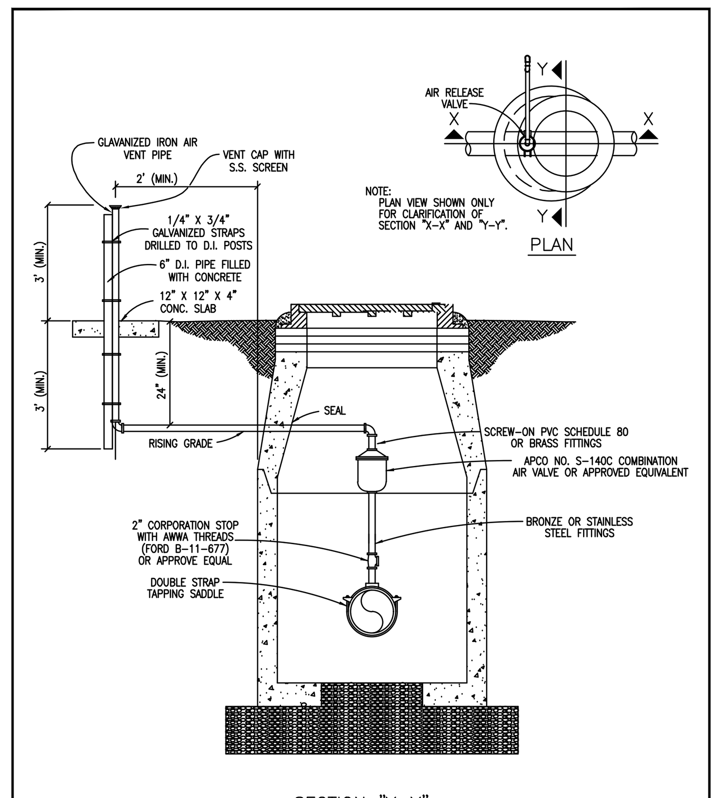

The Architect/Engineer assumes responsibility for appropriate use of this standard.

ADOPTED 6/21/2006 | CITY OF GEORGETOWN CONSTRUCTION STANDARDS AND DETAILS | STANDARD AIR RELEASE VALVE FOR WATER MAIN | W13 | NTS | 1/2003 | MRS | TRB

W14 – INSTALLATION OF P.V.C. PIPE THROUGH CASING

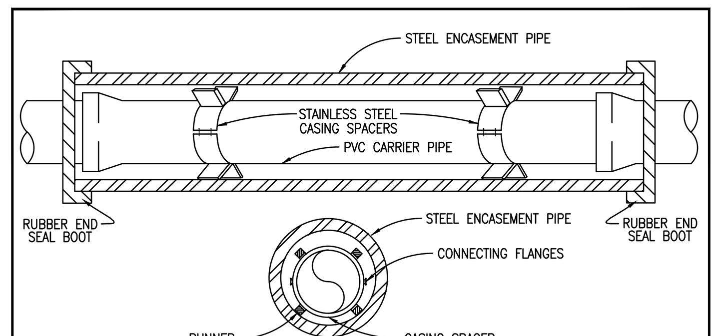

NOTES:
1. CASING SPACERS SHALL BE BOLT ON STYLE WITH A SHELL MADE IN TWO SECTIONS OF HEAVY T-304 STAINLESS STEEL. CONNECTING FLANGES SHALL BE RIBBED FOR EXTRA STRENGTH. CASING SPACERS SHALL BE MADE BY CASCADE WATERWORKS MFG. CO. OR APPROVED EQUAL.
2. CASING SPACERS SHALL HAVE RUNNERS MADE OF ULTRA HIGH MOLECULAR WEIGHT POLYMER, WITH A MINIMUM HEIGHT OF 2 INCHES.
3. DO NOT USE WEDGES BETWEEN TOP OF PVC CARRIER PIPE AND INSIDE OF CASING TO KEEP PVC FROM MOVING.
4. PRIOR TO INSERTING PVC CARRIER PIPE, ANY WATER SHOULD BE PUMPED OUT OF THE CASING PIPE SO THAT NO MORE THAN A FEW INCHES OF WATER REMAINS.
5. SPACERS WILL BE REQUIRED WITHIN AT LEAST 3 FEET FROM BOTH OPENINGS OF THE ENCASEMENT PIPE AND SPACED NO GREATER THAN 6 FEET THROUGHOUT THE ENCASEMENT PIPE.
6. ENCASEMENT PIPE SHALL BE SMOOTH STEEL 35,000 PSI YIELD STRENGTH WITH THICKNESS ACCORDING TO THE FOLLOWING TABLE:
7. WHEN CASING IS REQUIRED UNDER PAVEMENT WITHIN THE R.O.W., THE CASING SHALL EXTEND OUT TO WITHIN 4' INSIDE OF THE R.O.W. LINE, ON BOTH SIDES.
8. ALL JOINTS SHALL BE RESTRAINED ON PVC CARRIER PIPE.

PIPE SIZE–CARRIER (DIAMETER)	PIPE SIZE–CASING (DIAMETER)(MIN.)	MINIMUM PIPE THICKNESS (INCHES)	
6"	16"		
8"	18"	1/4	0.2500
10"	20"	5/16	0.3125
12" – 14"	24"	3/8	0.3750
16" – 18"	30"	7/16	0.4375
20"	36"	1/2	0.5000
24"	42"	1/2	0.5000
30"	48"	1/2	0.5000

The Architect/Engineer assumes responsibility for appropriate use of this standard.

ADOPTED 6/21/2006 | CITY OF GEORGETOWN CONSTRUCTION STANDARDS AND DETAILS | INSTALLATION OF P.V.C. PIPE THROUGH CASING | W14 | NTS | 1/2003 | MRS | TRB

W15 – CONCRETE ENCASEMENT DETAIL

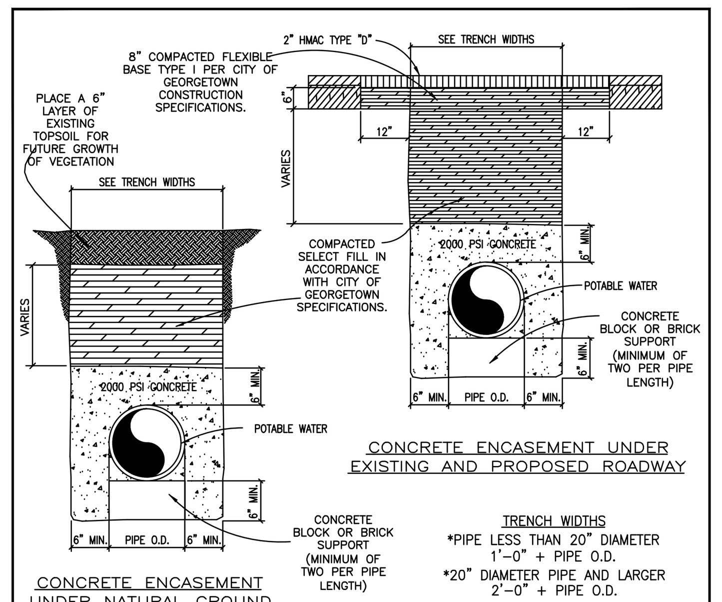

TRENCH WIDTHS
*PIPE LESS THAN 20" DIAMETER
1'-0" + PIPE O.D.
*20" DIAMETER PIPE AND LARGER
2'-0" + PIPE O.D.

NOTES:
1. ENCASEMENT TO BE CONSTRUCTED WHERE SEWER LINES PASS OVER OR UNDER A WATER MAIN WITH LESS THAN TWELVE INCHES (12") CLEAR DISTANCE.
2. AT CROSSINGS, ENCASEMENT SHALL EXTEND TEN FEET (10'-0") ON EITHER SIDE OF CROSSING.
3. BEGINNING AND ENDING OF ENCASEMENTS SHALL NOT BE MORE THAN SIX INCHES (6") FROM A PIPE JOINT.
4. WHERE WATER AND SEWER LINES PARALLEL WITH LESS THAN TEN FEET (10'-0") HORIZONTAL CLEAR DISTANCE, NO ENCASEMENT IS REQUIRED IF BOTH LINES ARE 150 PSI PRESSURE PIPE.
5. RAW WATER MAINS SHALL BE 150 PSI PRESSURE RATED WHEN PARALLELING POTABLE WATER MAINS WITH LESS THAN NINE FEET (9'-0") HORIZONTAL CLEARANCE.
6. WHERE MINIMUM COVER, THIRTY SIX INCHES (36") IS NOT AVAILABLE, ENCASEMENT WILL BE REQUIRED.
7. ALL CONCRETE ENCASEMENTS MUST BE FORMED AND INSPECTED BY THE CITY OF GEORGETOWN INSPECTOR PRIOR TO PLACING CONCRETE AND BACKFILLING.
8. CONTRACTOR OR ENGINEER MAY USE FLOWABLE BACKFILL AS AN ALTERNATE BACKFILL MATERIAL (SEE C9 FLOWABLE BACKFILL FOR THE SPECIFICATION).

The Architect/Engineer assumes responsibility for appropriate use of this standard.

ADOPTED 6/21/2006 | CITY OF GEORGETOWN CONSTRUCTION STANDARDS AND DETAILS | CONCRETE ENCASEMENT DETAIL | W15 | NTS | 1/2003 | MRS | TRB

W16 – CONCRETE ENCASEMENT DETAIL

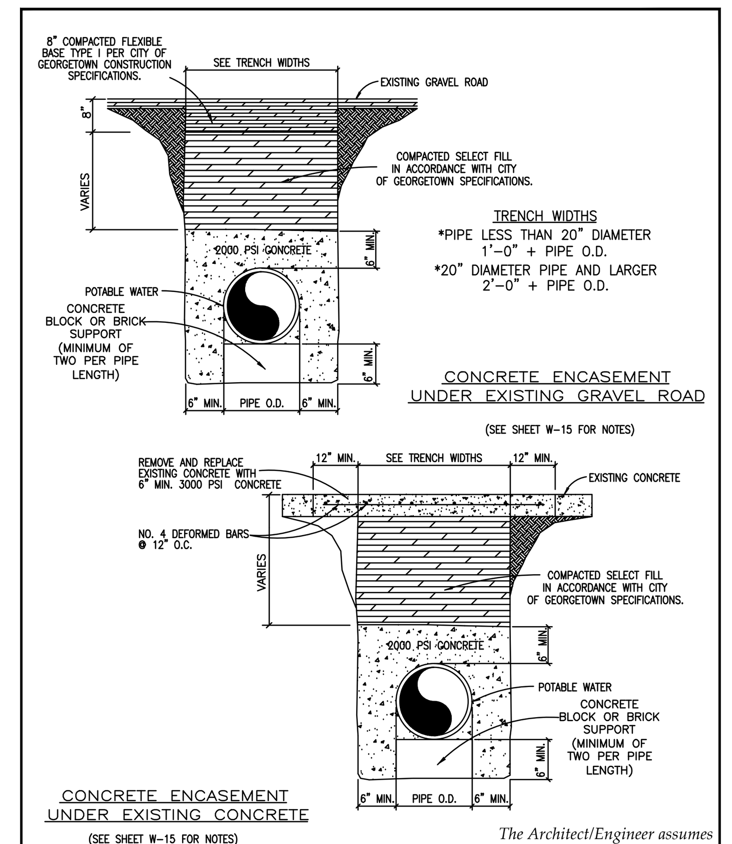

TRENCH WIDTHS
*PIPE LESS THAN 20" DIAMETER
1'-0" + PIPE O.D.
*20" DIAMETER PIPE AND LARGER
2'-0" + PIPE O.D.

The Architect/Engineer assumes responsibility for appropriate use of this standard.

ADOPTED 6/21/2006 | CITY OF GEORGETOWN CONSTRUCTION STANDARDS AND DETAILS | CONCRETE ENCASEMENT DETAIL | W16 | NTS | 1/2003 | MRS | TRB

W17 – TRENCH AND EMBEDMENT AND PAVEMENT REPLACEMENT DETAIL UNDER EXISTING ROADWAY

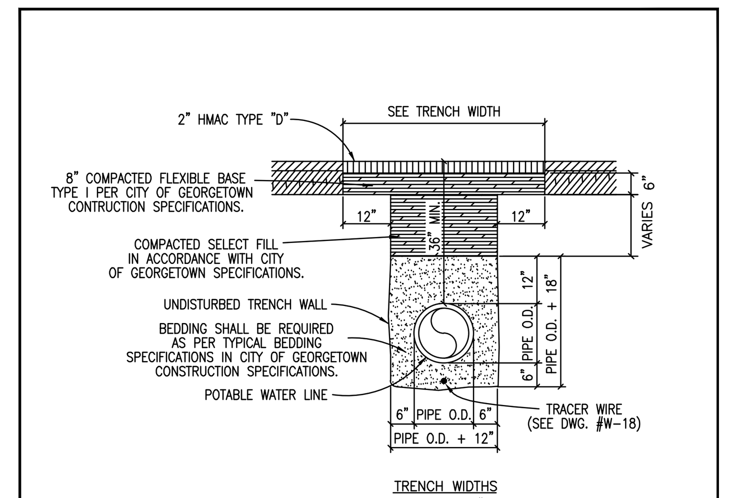

TRENCH WIDTHS
*PIPE LESS THAN 20" DIAMETER
1'-0" + PIPE O.D.
*20" DIAMETER PIPE AND LARGER
2'-0" + PIPE O.D.

NOTES:
1. REPLACED BASE MATERIAL OVER DITCH SHALL BE TWICE THE THICKNESS OF THE ORIGINAL BASE.
2. BASE MATERIAL SHALL BE IN LIFTS NOT TO EXCEED 6" AND EACH LIFT THOROUGHLY ROLLED OR TAMPED TO SPECIFIED MAXIMUM DENSITY.
3. ASPHALT CONCRETE PAVEMENT JOINTS SHALL BE MECHANICALLY SAWED.
4. SURFACE MATERIAL WILL BE CONSISTENT WITH THE EXISTING SURFACE.
5. DENSITY TESTS SHALL BE TAKEN IN ACCORDANCE WITH THE CITY OF GEORGETOWN CONSTRUCTION SPECIFICATIONS AND STANDARDS.
6. CONTRACTOR OR ENGINEER MAY USE FLOWABLE BACKFILL AS AN ALTERNATE BACKFILL MATERIAL (SEE C9 FLOWABLE BACKFILL FOR THE SPECIFICATION).

The Architect/Engineer assumes responsibility for appropriate use of this standard.

ADOPTED 6/21/2006 | CITY OF GEORGETOWN CONSTRUCTION STANDARDS AND DETAILS | TRENCH AND EMBEDMENT AND PAVEMENT REPLACEMENT DETAIL UNDER EXISTING ROADWAY | W17 | NTS | 1/2003 | MRS | TRB

NO.	REVISION	BY	DATE

Know what's below. Call before you dig.

5508 HIGHWAY 290 WEST
SUITE 150
AUSTIN, TX 78735
512.872.6696
HRGREEN.COM
TBPE NO: 16384
TBPLS NO: 10194101
HRGreen® DEVELOPMENT TX

STATE OF TEXAS — CHRISTINE N. CAMPBELL — 142536 — LICENSED PROFESSIONAL ENGINEER
07/03/2025

WATER DETAILS

PARKSIDE ON THE RIVER
SECTIONS 11, 12A & 15A
CONSTRUCTION PLANS
GEORGETOWN, WILLIAMSON, TEXAS

DESIGNED BY: CC
DRAWN BY: MM
CHECKED BY: SN
APPROVED BY:

SHEET 137 OF 141
2025-XX-CON

Plot Style: LandDev Global.ctb
Template: LDC_C3D2022.DWT
P:\Blake Magee\Parkside Sections 11-15 & WON 5\Section 11, 12A & 15A03_ACAD\Plans\sh2403522 DTLS.dwg, WATER DETAILS, July 18, 2025, 12:41 PM, makai.muhammad

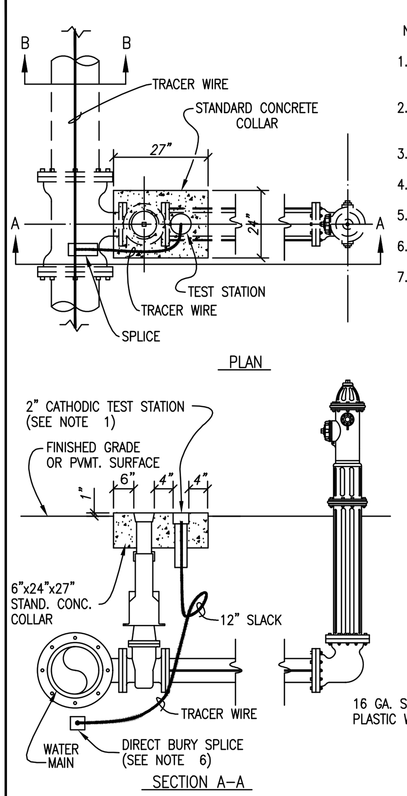

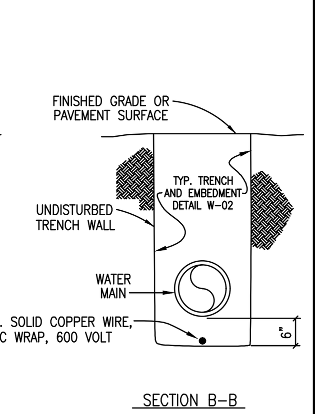

NOTES:

1. TEST STATION SHALL BE HANDLEY INDUSTRIES INC. – 2 INCH CATHODIC TEST STATIONS OR APPROVED EQUAL.
2. THE 15" ABS PLASTIC BOX SHALL BE A FLANGED TOP FOR INSTALLATION AT GROUND LEVEL.
3. ALL TERMINALS ARE TO BE MADE OF SOLID BRASS.
4. PLASTIC LIDS SHALL BE COLOR BLUE AND MARKED "WATER".
5. TEST TERMINALS ARE TO BE INCORPORATED WITH HANDLEY VALVE BOXES.
6. BURY SPLICE SHALL BE 3M DIRECT BURY SPLICE (DBR) OR APPROVED EQUAL.
7. TEST STATIONS SHALL BE INSTALLED AT EACH FIRE HYDRANT LOCATION.

The Architect/Engineer assumes responsibility for appropriate use of this standard.

GEORGETOWN TEXAS EST. 1848 Georgetown Utility Systems Your Community Owned Utility

CITY OF GEORGETOWN CONSTRUCTION STANDARDS AND DETAILS
TRACER WIRE INSTALLATION AND TEST STATION LOCATION

REVISION NOTE: ADOPTED 6/21/2006 | DRAWING NAME: W18 | SCALE: NTS | DATE: 1/2003 | DRAWN BY: MRS | APPROVED BY: TRB

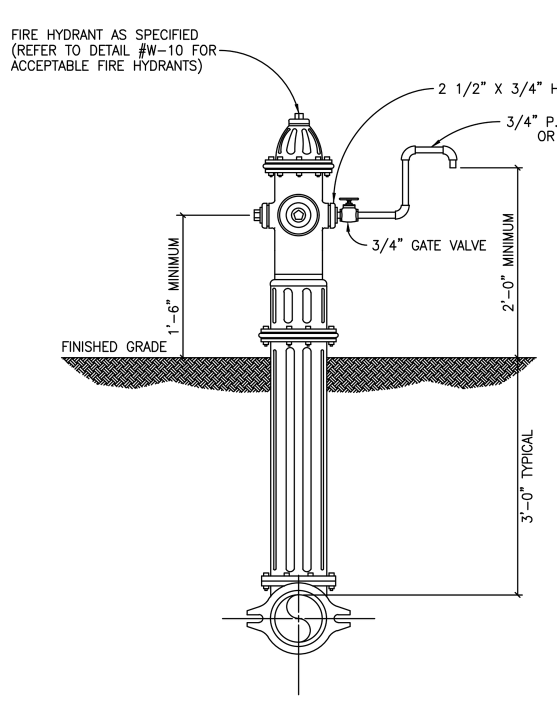

The Architect/Engineer assumes responsibility for appropriate use of this standard.

CITY OF GEORGETOWN CONSTRUCTION STANDARDS AND DETAILS
FIRE HYDRANT SAMPLING POINT

REVISION NOTE: ADOPTED 6/21/2006 | DRAWING NAME: W19 | SCALE: NTS | DATE: 1/2003 | DRAWN BY: MRS | APPROVED BY: TRB

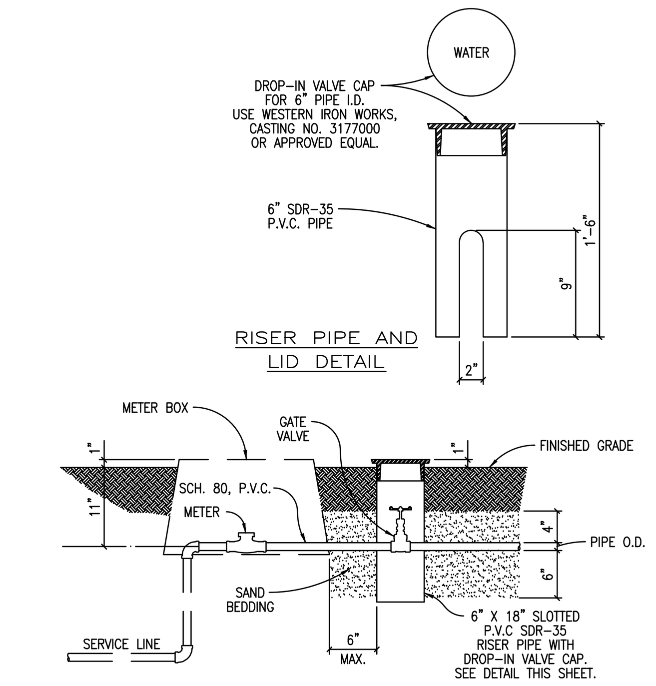

NOTES:

1. GATE VALVE SHALL BE A HAMMOND IB645, CLASS 125, BRONZE GATE, SCREWED BONNET, NON-RISING STEM, SOLID WEDGE DISC WITH THREADED ENDS OR APPROVED EQUAL.
2. DROP-IN VALVE CAP SHALL BE CAST WITH THE WORD "WATER" ON TOP.
3. USE SCHEDULE 80, M.I.P. ADAPTER AS REQUIRED.

The Architect/Engineer assumes responsibility for appropriate use of this standard.

CITY OF GEORGETOWN CONSTRUCTION STANDARDS AND DETAILS
CUSTOMER'S CUT-OFF

REVISION NOTE: ADOPTED 6/21/2006 | DRAWING NAME: W20 | SCALE: NTS | DATE: 1/2003 | DRAWN BY: MRS | APPROVED BY: TRB

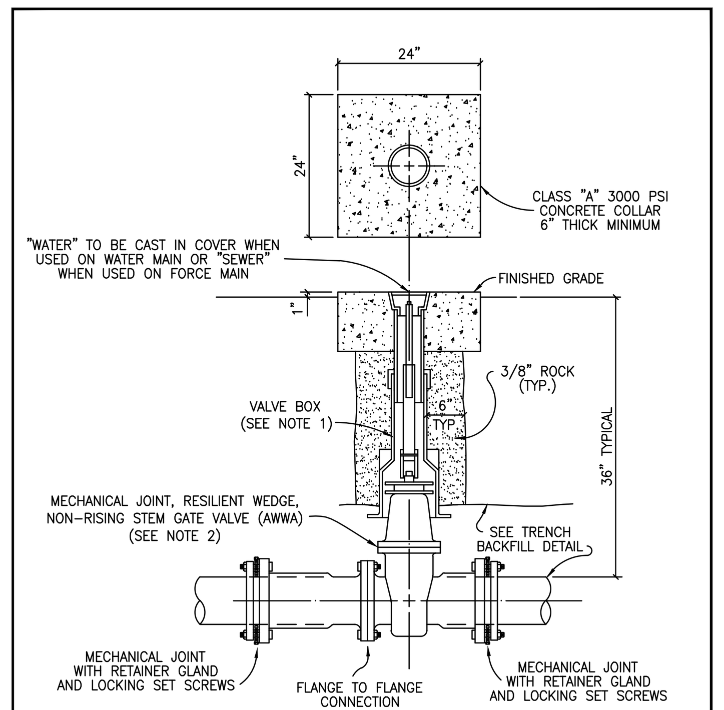

NOTES:

1. SEE VALVE SETTING DETAIL, DWG. #W-07.
2. ACCEPTABLE GATE VALVES ARE:
   A. MUELLER – 2360 SERIES
   B. CLOW

The Architect/Engineer assumes responsibility for appropriate use of this standard.

CITY OF GEORGETOWN CONSTRUCTION STANDARDS AND DETAILS
INLINE VALVE INSTALLATION

REVISION NOTE: ADOPTED 6/21/2006 | DRAWING NAME: W21 | SCALE: NTS | DATE: 1/2003 | DRAWN BY: MRS | APPROVED BY: TRB

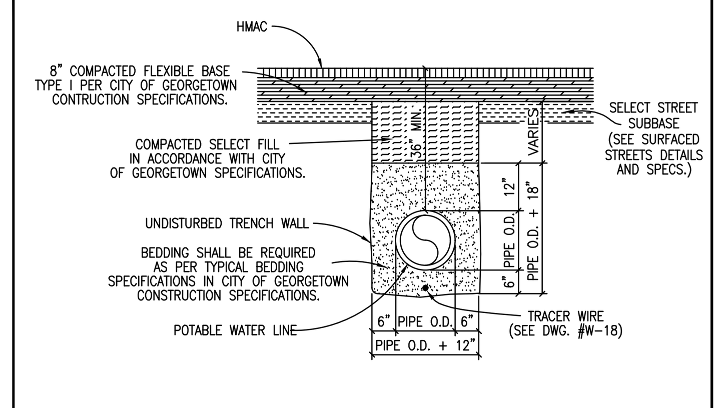

TRENCH WIDTHS
*PIPE LESS THAN 20" DIAMETER 1'-0" + PIPE O.D.
*20" DIAMETER PIPE AND LARGER 2'-0" + PIPE O.D.

NOTES:

1. DENSITY TESTS SHALL BE TAKEN IN ACCORDANCE WITH THE CITY OF GEORGETOWN CONSTRUCTION SPECIFICATIONS AND STANDARDS.
2. CONTRACTOR OR ENGINEER MAY USE FLOWABLE BACKFILL AS AN ALTERNATE BACKFILL MATERIAL (SEE C9 FLOWABLE BACKFILL FOR THE SPECIFICATION).

The Architect/Engineer assumes responsibility for appropriate use of this standard.

CITY OF GEORGETOWN CONSTRUCTION STANDARDS AND DETAILS
TRENCH AND EMBEDMENT DETAIL UNDER PROPOSED ROADWAY

REVISION NOTE: ADOPTED 6/21/2006 | DRAWING NAME: W22 | SCALE: NTS | DATE: 1/2003 | DRAWN BY: MRS | APPROVED BY: TRB

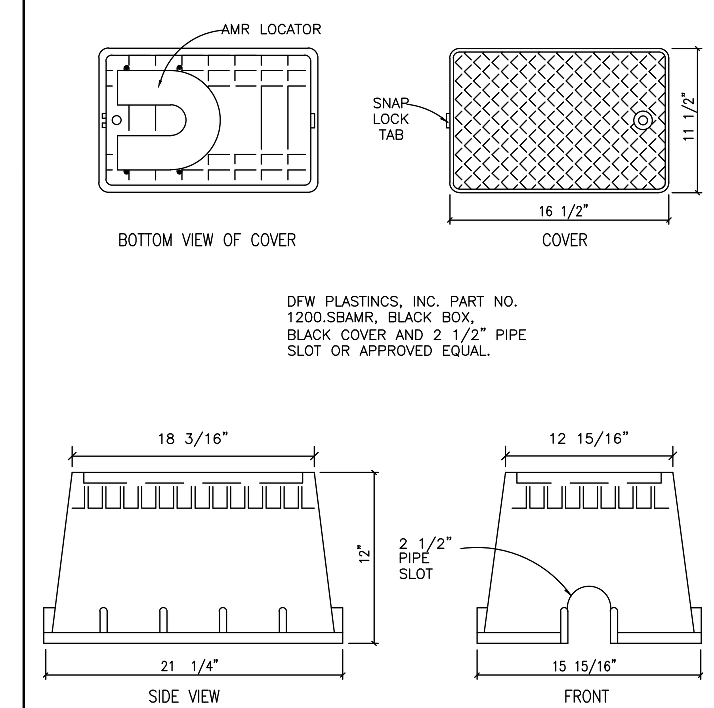

DFW PLASTINCS, INC. PART NO. 1200.SBAMR, BLACK BOX, BLACK COVER AND 2 1/2" PIPE SLOT OR APPROVED EQUAL.

The Architect/Engineer assumes responsibility for appropriate use of this standard.

CITY OF GEORGETOWN CONSTRUCTION STANDARDS AND DETAILS
METER BOX (NON-TRAFFIC AREAS)

REVISION NOTE: ADOPTED 6/21/2006 | DRAWING NAME: W23 | SCALE: NTS | DATE: 1/2003 | DRAWN BY: MRS | APPROVED BY: TRB

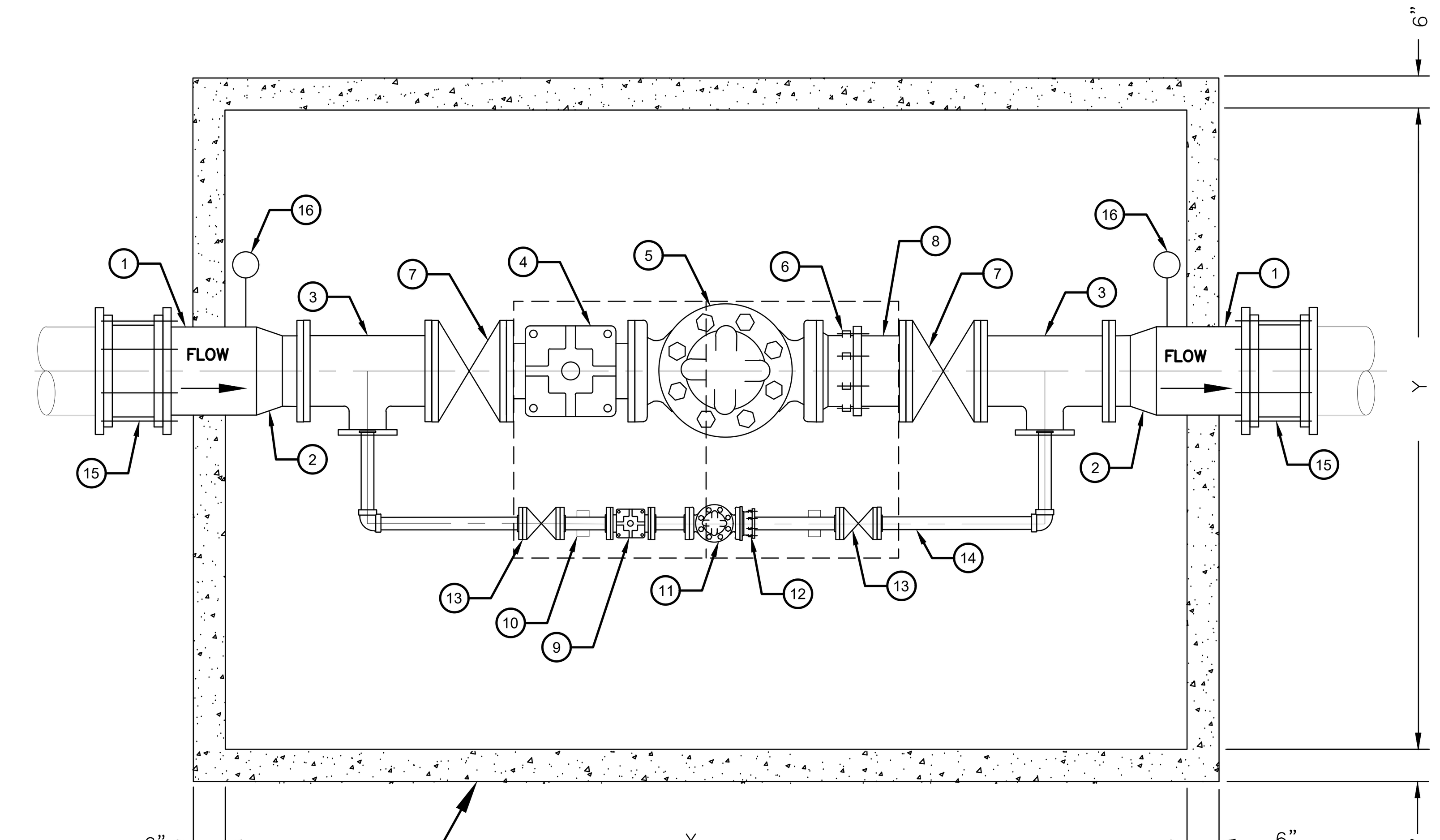

PLAN VIEW

CONCRETE VAULT

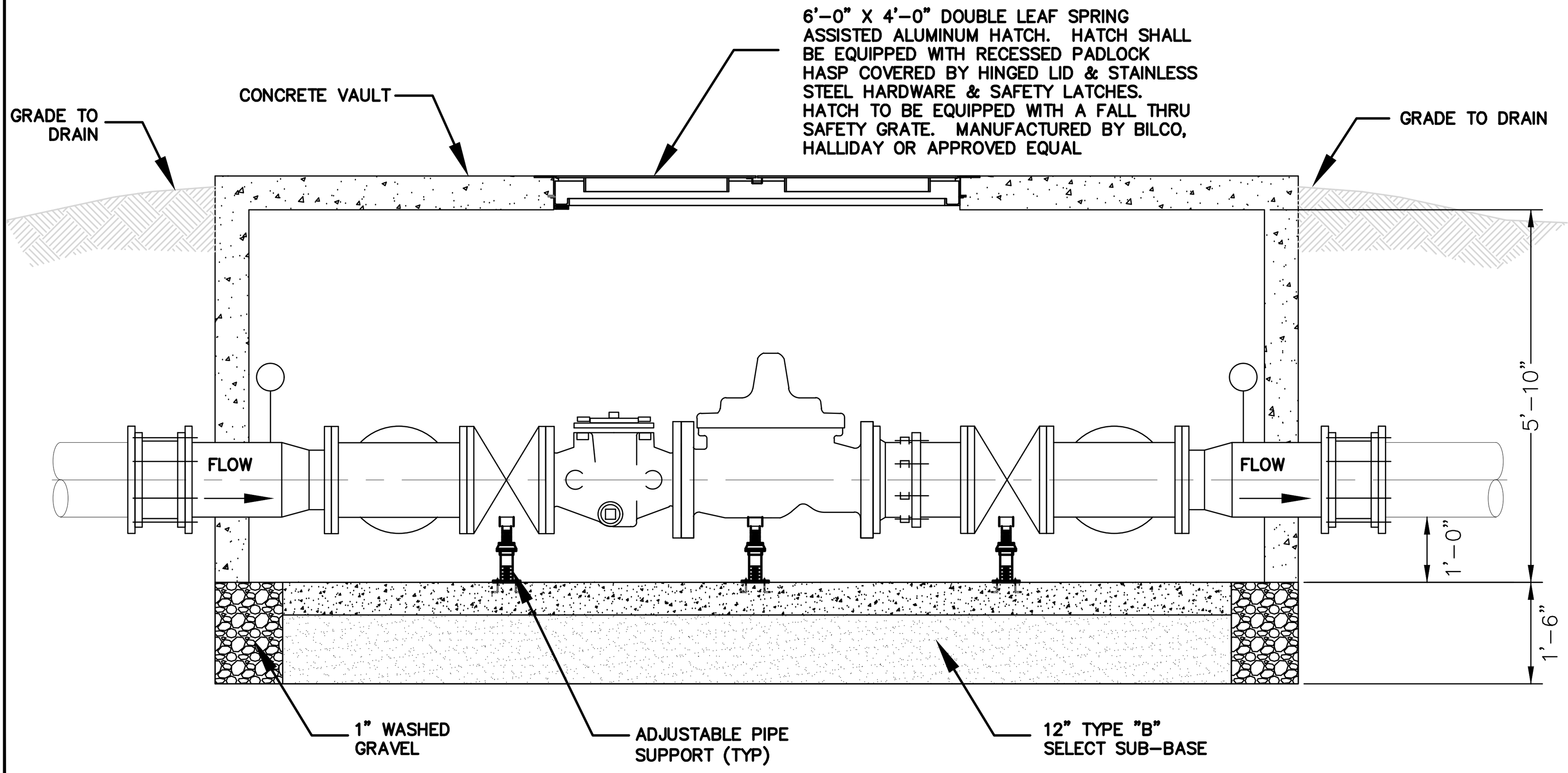

PROFILE VIEW

PRESSURE REDUCING VALVE DETAIL

N.T.S.

8" PRESSURE REDUCER VALVE ASSEMBLY – MATERIAL LIST VAULT SIZE: 15 FT X 8 FT	
1	12" D.I.
2	12"X8" REDUCER
3	8"X4" FLG TEE
4	8" STRAINER (CLA-VAL MODEL X-43H OR APPROVED EQUAL)
5	8" PRV (CLA-VAL MODEL 90-01 OR APPROVED EQUAL)
6	8" DRESSER DISMANTLING JOINT
7	8" D.I. FLANGED GATE VALVE
8	8" D.I.
9	4" STRAINER (CLA-VAL MODEL X-43H OR APPROVED EQUAL)
10	PIPE SUPPORT
11	4" PRV (CLA-VAL MODEL 90-48 OR APPROVED EQUAL)
12	4" DRESSER DISMANTLING JOINT
13	4" D.I. FLANGED GATE VALVE
14	4" SCH. 40 304 D.I. FLANGED
15	12" RESTRAINED TRANSITION COUPLING
16	PRESSURE GAUGE

6" PRESSURE REDUCER VALVE ASSEMBLY – MATERIAL LIST VAULT SIZE: 14 FT X 7 FT	
1	8" D.I.
2	8"X6" REDUCER
3	6"X2" FLG TEE
4	6" STRAINER (CLA-VAL MODEL X-43H OR APPROVED EQUAL)
5	6" PRV (CLA-VAL MODEL 90-01 OR APPROVED EQUAL)
6	6" DRESSER DISMANTLING JOINT
7	6" D.I. FLANGED GATE VALVE
8	6" D.I.
9	2" STRAINER (CLA-VAL MODEL X-43H OR APPROVED EQUAL)
10	PIPE SUPPORT
11	2" PRV (CLA-VAL MODEL 90-48 OR APPROVED EQUAL)
12	2" DRESSER DISMANTLING JOINT
13	2" D.I. FLANGED GATE VALVE
14	2" SCH. 40 304 D.I. FLANGED
15	8" RESTRAINED TRANSITION COUPLING
16	PRESSURE GAUGE

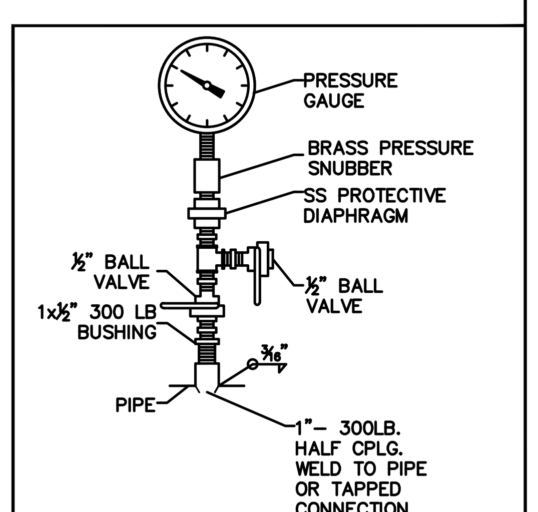

NOTES:
1. USE DIAPHRAGM SEALS AND VALVES FOR ALL CHEMICALS, SEWAGE, SLUDGE AND OTHER LIQUIDS CONTAINING SOLIDS.

PRESSURE GAUGE DETAIL

	WGT APPROX. LBS EACH					D	
PIPE SIZE	COMPLETE	SADDLE ONLY	A	B	C	MINIMUM	MAXIMUM
2 1/2	9.0	4.8	2 1/2	3 1/2	1 1/2	8	13
3	9.2	5.0	2 /12	3 3/4	1 1/2	8 1/4	13 1/4
3 1/2	9.4	5.2	2 1/2	4	1 1/2	8 1/2	13 1/2
4	15.0	7.6	3	4 1/4	2 1/2	9 1/4	14
5	16.7	8.3	3	4 7/8	2 1/2	10	14 3/4
6	17.7	10.3	3	5 1/2	2 1/2	10 1/2	15 1/4
8	20.2	12.8	3	6 7/8	2 1/2	11 3/4	16 1/2
10	25.2	17.8	3	8 1/2	2 1/2	13 1/2	18 1/4
12	29.0	21.6	3	9 15/16	2 1/2	15	19 3/4
14	40.2	38.0	4	10 15/16	3	16 1/4	20 3/4
16	53.2	42.0	4	12 3/8	3	17 3/4	22 1/4
18	70.8	51.0	6	13 7/8	3 1/2	19 1/2	24
20	104.8	85.0	6	15 3/8	3 1/2	21	25 1/2
24	137.0	110.0	6	17 15/16	4	23 3/4	28 1/2
30	170.0	150.0	6	21 5/16	4	27	31 1/2
32	181.0	161.1	6	22 1/2	4	28 1/8	32 3/4
36	249.0	229.0	6	24 1/4	4	30 1/4	34 3/4

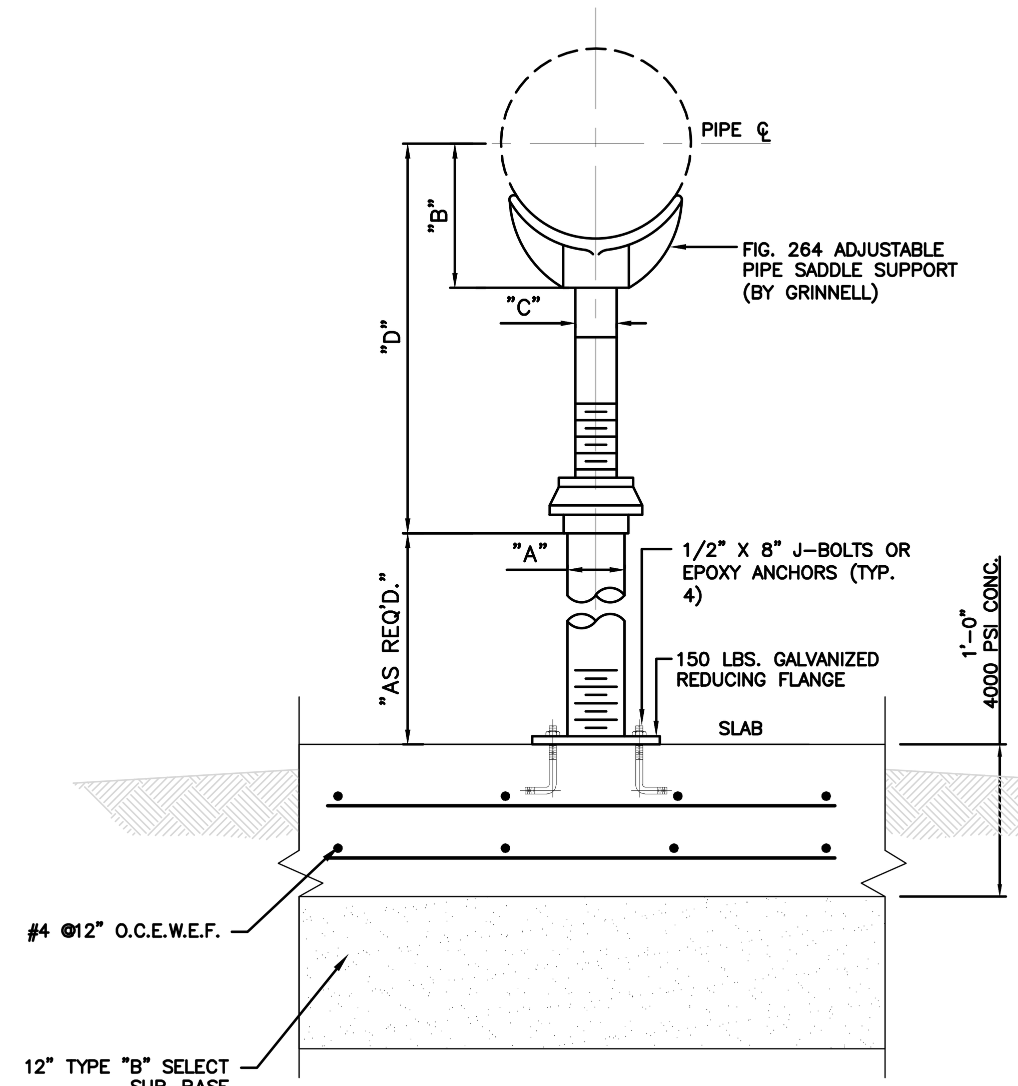

ADJUSTABLE PIPE SUPPORT DETAIL

N.T.S.

HATCH TO INCLUDE:

- AUTO-LOCK T-316 STAINLESS STEEL HOLD OPEN ARM WITH RELEASE HANDLE
- T-316 STAINLESS STEEL HINGES AND ATTACHING HARDWARE
- T-316 STAINLESS STEEL SLAM LOCK WITH REMOVABLE KEY
- STAINLESS STEEL COMPRESSION SPRING ASSIST
- BUILT-IN NEOPRENE CUSHION/GASKET
- NON-OZONE DEPLETING BITUMINOUS COATING
- DOUBLE LEAF CONSTRUCTION
- 300 LBS. PER SQ. FT. LOAD RATING (1464 KG. PER SQ. METER LOAD RATING)
- EXTRUDED ALUMINUM CHANNEL FRAME
- RECESSED LIFTING HANDLE
- LIFETIME GUARANTEE
- RETRO GATE FALL PROTECTION

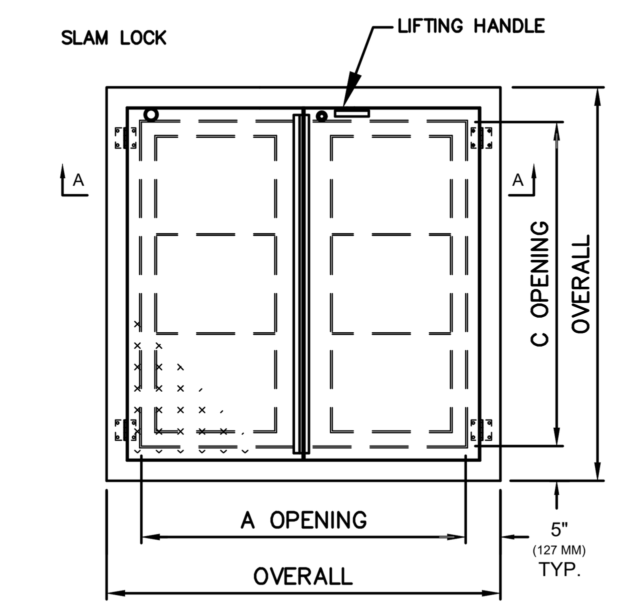

STANDARD SIZES				
QTY.	MODEL NO.	A DIM. INCHES (MM)	C DIM. INCHES (MM)	UNIT WT. LBS. (KG.)
	W2C4242	42 (1067)	42 (1067)	119 (54)
	W2C4842	48 (1219)	42 (1067)	130 (59)
	W2C4848	48 (1219)	48 (1219)	142 (64)
	W2C5442	54 (1372)	42 (1067)	141 (64)
	W2C5448	54 (1372)	48 (1219)	154 (70)
	W2C5454	54 (1372)	54 (1372)	166 (75)
	W2C6030	60 (1524)	30 (762)	122 (55)
	W2C6036	60 (1524)	36 (914)	135 (61)
	W2C6042	60 (1524)	42 (1067)	151 (68)
	W2C6048	60 (1524)	48 (1219)	165 (75)
	W2C6054	60 (1524)	54 (1372)	179 (81)
	W2C6060	60 (1524)	60 (1524)	195 (88)
	W2C6636	66 (1676)	36 (914)	145 (66)
	W2C6648	66 (1676)	48 (1219)	177 (80)
	W2C7236	72 (1829)	36 (914)	154 (70)
	W2C7242	72 (1829)	42 (1067)	173 (78)
	W2C7248	72 (1829)	48 (1219)	188 (85)
	W2C7254	72 (1829)	54 (1372)	204 (92)
	W2C7260	72 (1829)	60 (1524)	222 (101)

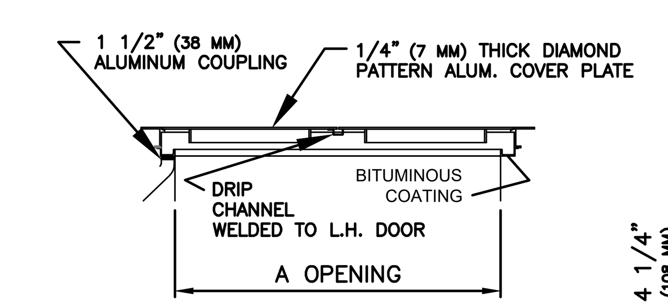

SECTION A–A

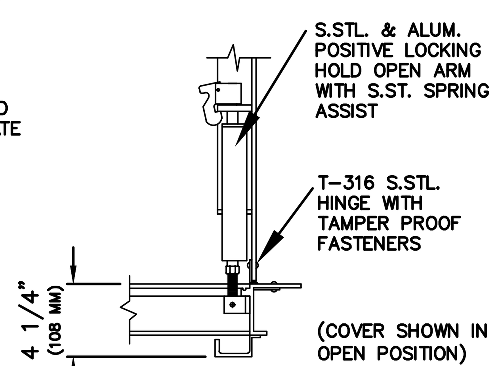

DETAIL

ALUMINUM HATCH DETAIL

N.T.S.

PVC C900 Joint Restraints			
Pipe Size	Fitting	Bend Angle	Restraint Length
8"	Horizontal Bend	11.25	4'
8"	Horizontal Bend	22.5	8'
8"	Horizontal Bend	45	16'
8"	Horizontal Bend	90	38'
8"	Vertical Bend	11.25	11'
8"	Vertical Bend	22.5	21'
8"	Vertical Bend	45	43'
8"	Gate Valve	-	103'
12"	Horizontal Bend	11.25	6'
12"	Horizontal Bend	22.5	11'
12"	Horizontal Bend	45	22'
12"	Horizontal Bend	90	53'
12"	Vertical Bend	11.25	15'
12"	Vertical Bend	22.5	30'
12"	Vertical Bend	45	61'
12"	Reducer (12" to 8")	-	78'
12"	Gate Valve	-	146'

* Assumes 4' bury depth, 200 psi test pressure, trench type of 5, safety factor of 2.0, and CH granular soil

NO.	REVISION	BY	DATE

811 Know what's below. Call before you dig.

5508 HIGHWAY 290 WEST
SUITE 150
AUSTIN, TX 78735
512.872.6696
HRGREEN.COM
TBPE NO: 16384
TBPLS NO: 10194101
HRGreen® DEVELOPMENT TX

STATE OF TEXAS CHRISTINE N. CAMPBELL 142536 LICENSED PROFESSIONAL ENGINEER
07/03/2025

WATER DETAILS

PARKSIDE ON THE RIVER SECTIONS 11, 12A & 15A CONSTRUCTION PLANS GEORGETOWN, WILLIAMSON, TEXAS

DESIGNED BY: CC
DRAWN BY: MM
CHECKED BY: SN
APPROVED BY:

SHEET 138 OF 141

2025-XX-CON

Plot Style: LandDev Global.ctb
Template: LDC_C3D2022.DWT
P:\Blake Magee\Parkside Sections 11-15 & WON 5\Section 11, 12A & 15A\03_ACAD\Plans\sh2403522 DTLS.dwg, WATER DETAILS 2, July 18, 2025, 12:41 PM, makai.muhammad