Texas Commission on Environmental Quality

Edwards Aquifer Application Cover Page

Our Review of Your Application

The Edwards Aquifer Program staff conducts an administrative and technical review of all applications. The turnaround time for administrative review can be up to 30 days as outlined in 30 TAC 213.4(e). Generally administrative completeness is determined during the intake meeting or within a few days of receipt. The turnaround time for technical review of an administratively complete Edwards Aquifer application is 90 days as outlined in 30 TAC 213.4(e). Please know that the review and approval time is directly impacted by the quality and completeness of the initial application that is received. In order to conduct a timely review, it is imperative that the information provided in an Edwards Aquifer application include final plans, be accurate, complete, and in compliance with 30 TAC 213.

Administrative Review

1. Edwards Aquifer applications must be deemed administratively complete before a technical review can begin. To be considered administratively complete, the application must contain completed forms and attachments, provide the requested information, and meet all the site plan requirements. The submitted application and plan sheets should be final plans. Please submit one full-size set of plan sheets with the original application, and half-size sets with the additional copies.

   To ensure that all applicable documents are included in the application, the program has developed tools to guide you and web pages to provide all forms, checklists, and guidance. Please visit the below website for assistance: http://www.tceq.texas.gov/field/eapp.

2. This Edwards Aquifer Application Cover Page form (certified by the applicant or agent) must be included in the application and brought to the administrative review meeting.

3. Administrative reviews are scheduled with program staff who will conduct the review. Applicants or their authorized agent should call the appropriate regional office, according to the county in which the project is located, to schedule a review. The average meeting time is one hour.

4. In the meeting, the application is examined for administrative completeness. Deficiencies will be noted by staff and emailed or faxed to the applicant and authorized agent at the end of the meeting, or shortly after. Administrative deficiencies will cause the application to be deemed incomplete and returned.

   An appointment should be made to resubmit the application. The application is re-examined to ensure all deficiencies are resolved. The application will only be deemed administratively complete when all administrative deficiencies are addressed.

5. If an application is received by mail, courier service, or otherwise submitted without a review meeting, the administrative review will be conducted within 30 days. The applicant and agent will be contacted with the results of the administrative review. If the application is found to be administratively incomplete, it can be retrieved from the regional office or returned by regular mail. If returned by mail, the regional office may require arrangements for return shipping.

6. If the geologic assessment was completed before October 1, 2004 and the site contains "possibly sensitive" features, the assessment must be updated in accordance with the *Instructions to Geologists* (TCEQ-0585 Instructions).

Technical Review

1. When an application is deemed administratively complete, the technical review period begins. The regional office will distribute copies of the application to the identified affected city, county, and groundwater conservation district whose jurisdiction includes the subject site. These entities and the public have 30 days to provide comments on the application to the regional office. All comments received are reviewed by TCEQ.

2. A site assessment is usually conducted as part of the technical review, to evaluate the geologic assessment and observe existing site conditions. The site must be accessible to our staff. The site boundaries should be

clearly marked, features identified in the geologic assessment should be flagged, roadways marked and the alignment of the Sewage Collection System and manholes should be staked at the time the application is submitted. If the site is not marked the application may be returned.

3. We evaluate the application for technical completeness and contact the applicant and agent via Notice of Deficiency (NOD) to request additional information and identify technical deficiencies. There are two deficiency response periods available to the applicant. There are 14 days to resolve deficiencies noted in the first NOD. If a second NOD is issued, there is an additional 14 days to resolve deficiencies. If the response to the second notice is not received, is incomplete or inadequate, or provides new information that is incomplete or inadequate, the application must be withdrawn or will be denied. Please note that because the technical review is underway, whether the application is withdrawn or denied **the application fee will be forfeited**.
4. The program has 90 calendar days to complete the technical review of the application. If the application is technically adequate, such that it complies with the Edwards Aquifer rules, and is protective of the Edwards Aquifer during and after construction, an approval letter will be issued. Construction or other regulated activity may not begin until an approval is issued.

Mid-Review Modifications

It is important to have final site plans prior to beginning the permitting process with TCEQ to avoid delays.

Occasionally, circumstances arise where you may have significant design and/or site plan changes after your Edwards Aquifer application has been deemed administratively complete by TCEQ. This is considered a "Mid-Review Modification". Mid-Review Modifications may require redistribution of an application that includes the proposed modifications for public comment.

If you are proposing a Mid-Review Modification, two options are available:

- If the technical review has begun your application can be denied/withdrawn, your fees will be forfeited, and the plan will have to be resubmitted.
- TCEQ can continue the technical review of the application as it was submitted, and a modification application can be submitted at a later time.

If the application is denied/withdrawn, the resubmitted application will be subject to the administrative and technical review processes and will be treated as a new application. The application will be redistributed to the affected jurisdictions.

Please contact the regional office if you have questions. If your project is located in Williamson, Travis, or Hays County, contact TCEQ's Austin Regional Office at 512-339-2929. If your project is in Comal, Bexar, Medina, Uvalde, or Kinney County, contact TCEQ's San Antonio Regional Office at 210-490-3096

Please fill out all required fields below and submit with your application.

1. Regulated Entity Name: Buda Sportsplex						**2. Regulated Entity No.: RN104986021**			
3. Customer Name: City of Buda						**4. Customer No.: CN600739866**			
5. Project Type: **(Please circle/check one)**	New		Modification			Extension		Exception	
6. Plan Type: **(Please circle/check one)**	WPAP	CZP	SCS	UST	AST	EXP	EXT	Technical Clarification	Optional Enhanced Measures
7. Land Use: **(Please circle/check one)**	Residential		Non-residential			**8. Site (acres):**		65.63 acres	
9. Application Fee:	$8,000		**10. Permanent BMP(s):**			Batch Detention Basin, Vegetative Filter Strip			
11. SCS (Linear Ft.):	N/A		**12. AST/UST (No. Tanks):**			N/A			
13. County:	Hays		**14. Watershed:**			Onion Creek			

Application Distribution

Instructions: Use the table below to determine the number of applications required. One original and one copy of the application, plus additional copies (as needed) for each affected incorporated city, county, and groundwater conservation district are required. Linear projects or large projects, which cross into multiple jurisdictions, can require additional copies. Refer to the "Texas Groundwater Conservation Districts within the EAPP Boundaries" map found at:

http://www.tceq.texas.gov/assets/public/compliance/field_ops/eapp/EAPP%20GWCD%20map.pdf

For more detailed boundaries, please contact the conservation district directly.

Austin Region			
County:	**Hays**	**Travis**	**Williamson**
Original (1 req.)	___	___	____
Region (1 req.)	___	___	____
County(ies)	___	___	____
Groundwater Conservation District(s)	_X_Edwards Aquifer Authority ___Barton Springs/ Edwards Aquifer ___Hays Trinity ___Plum Creek	___Barton Springs/ Edwards Aquifer	NA
City(ies) Jurisdiction	___Austin X_Buda ___Dripping Springs ___Kyle ___Mountain City ___San Marcos ___Wimberley ___Woodcreek	___Austin ___Bee Cave ___Pflugerville ___Rollingwood ___Round Rock ___Sunset Valley ___West Lake Hills	___Austin ___Cedar Park ___Florence ___ Georgetown ___Jerrell ___Leander ___Liberty Hill ___Pflugerville ___Round Rock

San Antonio Region					
County:	**Bexar**	**Comal**	**Kinney**	**Medina**	**Uvalde**
Original (1 req.)	___	___	___	___	___
Region (1 req.)	___	___	___	___	___
County(ies)	___	___	___	___	___
Groundwater Conservation District(s)	___ Edwards Aquifer Authority ___Trinity-Glen Rose	___Edwards Aquifer Authority	___Kinney	___EAA ___Medina	___EAA ___Uvalde
City(ies) Jurisdiction	___Castle Hills ___Fair Oaks Ranch ___Helotes ___Hill Country Village ___Hollywood Park ___San Antonio (SAWS) ___Shavano Park	___Bulverde ___Fair Oaks Ranch ___Garden Ridge ___New Braunfels ___Schertz	NA	___San Antonio ETJ (SAWS)	NA

I certify that to the best of my knowledge, that the application is complete and accurate. This application is hereby submitted to TCEQ for administrative review and technical review. Jordan T. Hurta, PE TX License No. 143332
Print Name of Customer/Authorized Agent 8/8/2025
Signature of Customer/Authorized Agent Date

FOR TCEQ INTERNAL USE ONLY				
Date(s)Reviewed:		Date Administratively Complete:		
Received From:		Correct Number of Copies:		
Received By:		Distribution Date:		
EAPP File Number:		Complex:		
Admin. Review(s) (No.):		No. AR Rounds:		
Delinquent Fees (Y/N):		Review Time Spent:		
Lat./Long. Verified:		SOS Customer Verification:		
Agent Authorization Complete/Notarized (Y/N):		Fee Check:	Payable to TCEQ (Y/N):	
Core Data Form Complete (Y/N):			Signed (Y/N):	
Core Data Form Incomplete Nos.:			Less than 90 days old (Y/N):	

WATER POLLUTION ABATEMENT PLAN (WPAP) REPORT

BUDA SPORTSPLEX
CITY OF BUDA
BUDA, TX
HAYS COUNTY

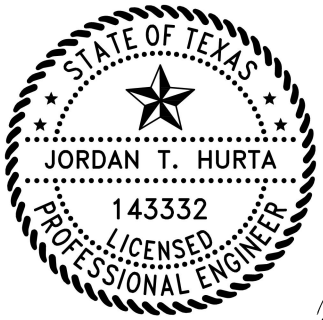

8/8/2025

Prepared by:

DCS
1101 S. Capital of Texas Highway, Building G-100
Austin, Texas 78746
Tel: (512) 614-6171
T.B.P.E. Firm No. F-13162

EDWARDS AQUIFER APPLICATION COVER PAGE (TCEQ-20705)

AGENT AUTHORIZATION FORM (TCEQ-0574)

APPLICATION FEE FORM (TCEQ-0574)

TCEQ CORE DATA FORM (TCEQ-10400)

GENERAL INFORMATION FORM (TCEQ-0587)

- ATTACHMENT A – ROAD MAP
- ATTACHMENT B – USGS/EDWARDS RECHARGE ZONE MAP
- ATTACHMENT C – PROJECT DESCRIPTION

GEOLOGICAL ASSESMENT FORM (TCEQ-0585)

- ATTACHMENT A – GEOLOGICAL ASSESMENT TABLE (TCEQ-0585-TABLE)
- ATTACHMENT B – STRATIGRAPHIC COLUMN
- ATTACHMENT C – SITE GEOLOGY
- ATTACHMENT D – SITE GEOLOGIC MAP(S)

MODIFICATION OR PREVIOUSLY APPROVED PLAN

- ATTACHMENT A – ORIGINAL APPROVAL LETTER AND APPROVED MODIFICATION LETTERS
- ATTACHMENT B – NARRATIVE OF PROPOSED MODIFICATION
- ATTACHMENT C – CURRENT SITE PLAN OF THE APPROVED PROJECT

WATER POLLUTION ABATEMENT PLAN APPLICATION FORM (TCEQ-0584)

- ATTACHMENT A – FACTORS AFFECTING SURFACE WATER QUALITY
- ATTACHMENT B – VOLUME AND CHARACTER OF STORMWATER

TEMPORARY STORM SECTION (TCEQ-0602)

- ATTACHMENT A – SPILL RESPONSE ACTIONS
- ATTACHMENT B – POTENTIAL SOURCES OF CONTAMINATION
- ATTACHMENT C – SEQUENCE OF MAJOR ACTIVITIES
- ATTACHMENT D – TEMPORARY BEST MANAGEMENT PRACTICES AND MEASURES
- ATTACHMENT F – STRUCTURAL PRACTICES

ATTACHMENT G – DRAINAGE AREA MAP

ATTACHMENT H – TEMPORARY SEDIMENT POND(S) PLAN AND CALCULATIONS

ATTACHMENT I – INSPECTION AND MAINTENANCE BMPS

ATTACHMENT J – SCHEDULE OF INTERIM AND PERMANENT SOIL STABILIZATION PRACTICES

PERMANENT STORMWATER SECTION (TCEQ-0600)

ATTACHMENT B – BEST MANAGEMENT PRACTICES FOR UPGRADIENT STORMWATER

ATTACHMENT C – BMPS FOR ON-SITE STORMWATER

ATTACHMENT F – CONSTRUCTION PLANS

ATTACHMENT G – INSPECTION, MAINTENCE, REPAIR, AND RETROFIT PLAN

Agent Authorization Form
For Required Signature
Edwards Aquifer Protection Program
Relating to 30 TAC Chapter 213
Effective June 1, 1999

I Micah Grau,
Print Name

City Manager,
Title - Owner/President/Other

of City of Buda,
Corporation/Partnership/Entity Name

have authorized Jordan T. Hurta, PE
Print Name of Agent/Engineer

of DCS Engineering, LLC
Print Name of Firm

to represent and act on the behalf of the above named Corporation, Partnership, or Entity for the purpose of preparing and submitting this plan application to the Texas Commission on Environmental Quality (TCEQ) for the review and approval consideration of regulated activities.

I also understand that:

1. The applicant is responsible for compliance with 30 Texas Administrative Code Chapter 213 and any condition of the TCEQ's approval letter. The TCEQ is authorized to assess administrative penalties of up to $10,000 per day per violation.

2. For those submitting an application who are not the property owner, but who have the right to control and possess the property, additional authorization is required from the owner.

3. Application fees are due and payable at the time the application is submitted. The application fee must be sent to the TCEQ cashier or to the appropriate regional office. The application will not be considered until the correct fee is received by the commission.

4. A notarized copy of the Agent Authorization Form must be provided for the person preparing the application, and this form must accompany the completed application.

5. No person shall commence any regulated activity on the Edwards Aquifer Recharge Zone, Contributing Zone or Transition Zone until the appropriate application for the activity has been filed with and approved by the Executive Director.

SIGNATURE PAGE:

Applicant's Signature

June 6, 2025
Date

THE STATE OF Texas §

County of Hays §

BEFORE ME, the undersigned authority, on this day personally appeared Micah Grau known to me to be the person whose name is subscribed to the foregoing instrument, and acknowledged to me that (s)he executed same for the purpose and consideration therein expressed.

GIVEN under my hand and seal of office on this 6th day of June, 2025.

CHRISTINA MICHELLE AGUILAR
Notary Public, State of Texas
Comm. Expires 02-27-2028
Notary ID 134783714

NOTARY PUBLIC

Christina Aguilar
Typed or Printed Name of Notary

MY COMMISSION EXPIRES: 02-27-2028

Application Fee Form

Texas Commission on Environmental Quality
Name of Proposed Regulated Entity: BUDA SPORTSPLEX
Regulated Entity Location: 310 BUDA SPORTSPLEX DR, BUDA TX 78610
Name of Customer: CITY OF BUDA
Contact Person: Anthony Host Phone: 512-394-2338
Customer Reference Number (if issued):CN 600739866
Regulated Entity Reference Number (if issued):RN 104986021

Austin Regional Office (3373)

☒ Hays ☐ Travis ☐ Williamson

San Antonio Regional Office (3362)

☐ Bexar ☐ Medina ☐ Uvalde
☐ Comal ☐ Kinney

Application fees must be paid by check, certified check, or money order, payable to the **Texas Commission on Environmental Quality**. Your canceled check will serve as your receipt. **This form must be submitted with your fee payment**. This payment is being submitted to:

☒ Austin Regional Office
☐ Mailed to: TCEQ - Cashier
Revenues Section
Mail Code 214
P.O. Box 13088
Austin, TX 78711-3088

☐ San Antonio Regional Office
☐ Overnight Delivery to: TCEQ - Cashier
12100 Park 35 Circle
Building A, 3rd Floor
Austin, TX 78753
(512)239-0357

Site Location (Check All That Apply):

☒ Recharge Zone ☐ Contributing Zone ☐ Transition Zone

Type of Plan	***Size***	***Fee Due***
Water Pollution Abatement Plan, Contributing Zone Plan: One Single Family Residential Dwelling	Acres	$
Water Pollution Abatement Plan, Contributing Zone Plan: Multiple Single Family Residential and Parks	Acres	$
Water Pollution Abatement Plan, Contributing Zone Plan: Non-residential	65.63 Acres	$ 8,000
Sewage Collection System	L.F.	$
Lift Stations without sewer lines	Acres	$
Underground or Aboveground Storage Tank Facility	Tanks	$
Piping System(s)(only)	Each	$
Exception	Each	$
Extension of Time	Each	$

Signature: 8/8/2025 Date: 8/8/2025

Application Fee Schedule

Texas Commission on Environmental Quality
Edwards Aquifer Protection Program 30 TAC Chapter 213 (effective 05/01/2008)

Water Pollution Abatement Plans and Modifications

Contributing Zone Plans and Modifications

Project	*Project Area in Acres*	*Fee*
One Single Family Residential Dwelling	< 5	$650
Multiple Single Family Residential and Parks	< 5 5 < 10 10 < 40 40 < 100 100 < 500 ≥ 500	$1,500 $3,000 $4,000 $6,500 $8,000 $10,000
Non-residential (Commercial, industrial, institutional, multi-family residential, schools, and other sites where regulated activities will occur)	< 1 1 < 5 5 < 10 10 < 40 40 < 100 ≥ 100	$3,000 $4,000 $5,000 $6,500 $8,000 $10,000

Organized Sewage Collection Systems and Modifications

Project	*Cost per Linear Foot*	*Minimum Fee-Maximum Fee*
Sewage Collection Systems	$0.50	$650 - $6,500

Underground and Aboveground Storage Tank System Facility Plans and Modifications

Project	*Cost per Tank or Piping System*	*Minimum Fee-Maximum Fee*
Underground and Aboveground Storage Tank Facility	$650	$650 - $6,500

Exception Requests

Project	*Fee*
Exception Request	$500

Extension of Time Requests

Project	*Fee*
Extension of Time Request	$150

TCEQ Use Only

TCEQ Core Data Form

For detailed instructions on completing this form, please read the Core Data Form Instructions or call 512-239-5175.

SECTION I: General Information

1. Reason for Submission (*If other is checked please describe in space provided.*)

☐ New Permit, Registration or Authorization (*Core Data Form should be submitted with the program application.*)

☐ Renewal *(Core Data Form should be submitted with the renewal form)*

☒ Other **Change in regulate entity ownership**

2. Customer Reference Number *(if issued)*	Follow this link to search for CN or RN numbers in Central Registry**	**3. Regulated Entity Reference Number** *(if issued)*
CN 600739866		**RN 104986021**

SECTION II: Customer Information

4. General Customer Information | **5. Effective Date for Customer Information Updates** (mm/dd/yyyy)

☐ New Customer ☒ Update to Customer Information ☐ Change in Regulated Entity Ownership
☐ Change in Legal Name (Verifiable with the Texas Secretary of State or Texas Comptroller of Public Accounts)

The Customer Name submitted here may be updated automatically based on what is current and active with the Texas Secretary of State (SOS) or Texas Comptroller of Public Accounts (CPA).

6. Customer Legal Name *(If an individual, print last name first: eg: Doe, John)*	*If new Customer, enter previous Customer below:*
CITY OF BUDA	CITY OF BUDA ECONOMIC DEVELOPMENT CORPORATION

7. TX SOS/CPA Filing Number	**8. TX State Tax ID** (11 digits)	**9. Federal Tax ID** (9 digits)	**10. DUNS Number** *(if applicable)*
MATCH INFO	MATCH INFO	MATCH INFO	N/A

11. Type of Customer:

☐ Corporation ☐ Individual Partnership: ☐ General ☐ Limited
Government: ☒ City ☐ County ☐ Federal ☐ Local ☐ State ☐ Other ☐ Sole Proprietorship ☐ Other:

12. Number of Employees

☐ 0-20 ☐ 21-100 ☐ 101-250 ☐ 251-500 ☒ 501 and higher

13. Independently Owned and Operated?

☐ **Yes** ☒ **No**

14. Customer Role (Proposed or Actual) – *as it relates to the Regulated Entity listed on this form. Please check one of the following*

☒ Owner ☐ Operator ☐ Owner & Operator
☐ Occupational Licensee ☐ Responsible Party ☐ VCP/BSA Applicant ☐ Other:

15. Mailing Address:	405 E. LOOP STREET, BUILDING 100						
	City	BUDA	**State**	TX	**ZIP**	78610	**ZIP + 4**

16. Country Mailing Information *(if outside USA)*	**17. E-Mail Address** *(if applicable)*
	anthony.host@budatx.gov

18. Telephone Number	**19. Extension or Code**	**20. Fax Number** *(if applicable)*

(512) 523-1015		( ) -

SECTION III: Regulated Entity Information

21. General Regulated Entity Information *(If 'New Regulated Entity" is selected, a new permit application is also required.)*

☐ New Regulated Entity ☐ Update to Regulated Entity Name ☐ Update to Regulated Entity Information

The Regulated Entity Name submitted may be updated, in order to meet TCEQ Core Data Standards (removal of organizational endings such as Inc, LP, or LLC).

22. Regulated Entity Name *(Enter name of the site where the regulated action is taking place.)*

BUDA SPORTSPLEX

23. Street Address of the Regulated Entity: ***(No PO Boxes)***	310 BUDA SPORTSPLEX DR							
	City	BUDA	**State**	TX	**ZIP**	78610	**ZIP + 4**	
24. County	HAYS							

If no Street Address is provided, fields 25-28 are required.

25. Description to Physical Location:	On intersection of N Famr to Market 1626 and FM 967. Along East side of Buda Sportsplex Dr.				
26. Nearest City			**State**	**Nearest ZIP Code**	
BUDA			TX	78610	

Latitude/Longitude are required and may be added/updated to meet TCEQ Core Data Standards. (Geocoding of the Physical Address may be used to supply coordinates where none have been provided or to gain accuracy).

27. Latitude (N) In Decimal:	30.102630		**28. Longitude (W) In Decimal:**	-97.879354	
Degrees	Minutes	Seconds	Degrees	Minutes	Seconds
30	6	9.468	-97	52	45.6744

29. Primary SIC Code (4 digits)	**30. Secondary SIC Code** (4 digits)	**31. Primary NAICS Code** (5 or 6 digits)	**32. Secondary NAICS Code** (5 or 6 digits)
7991			

33. What is the Primary Business of this entity? *(Do not repeat the SIC or NAICS description.)*

34. Mailing Address:	**405 E Loop Street, Building 100**							
	City	**BUDA**	**State**	**TX**	**ZIP**	**78610**	**ZIP + 4**	
35. E-Mail Address:	**anthonyhost@budatx.gov**							

36. Telephone Number	**37. Extension or Code**	**38. Fax Number** *(if applicable)*
(512) 523-1015		( ) -

39. TCEQ Programs and ID Numbers Check all Programs and write in the permits/registration numbers that will be affected by the updates submitted on this form. See the Core Data Form instructions for additional guidance.

☐ Dam Safety	☐ Districts	☒ Edwards Aquifer	☐ Emissions Inventory Air	☐ Industrial Hazardous Waste
☐ Municipal Solid Waste	☐ New Source Review Air	☐ OSSF	☐ Petroleum Storage Tank	☐ PWS
☐ Sludge	☐ Storm Water	☐ Title V Air	☐ Tires	☐ Used Oil
☐ Voluntary Cleanup	☒ Wastewater	☐ Wastewater Agriculture	☐ Water Rights	☐ Other:

SECTION IV: Preparer Information

40. Name:	Jordan T. Hurta	**41. Title:**	Design Manager

42. Telephone Number	**43. Ext./Code**	**44. Fax Number**	**45. E-Mail Address**
(512 **)** 614-6171		**( )** -	jhurta@dcs-engineering.com

SECTION V: Authorized Signature

46. By my signature below, I certify, to the best of my knowledge, that the information provided in this form is true and complete, and that I have signature authority to submit this form on behalf of the entity specified in Section II, Field 6 and/or as required for the updates to the ID numbers identified in field 39.

Company:	DCS Engineering	**Job Title:**	Design Manager	
Name *(In Print):*	Jordan T. Hurta		**Phone:**	**(** 512 **)** 614- **6171**
Signature:	8/8/2025		**Date:**	8/8/2025

General Information Form

Texas Commission on Environmental Quality

For Regulated Activities on the Edwards Aquifer Recharge and Transition Zones and Relating to 30 TAC §213.4(b) & §213.5(b)(2)(A), (B) Effective June 1, 1999

To ensure that the application is administratively complete, confirm that all fields in the form are complete, verify that all requested information is provided, consistently reference the same site and contact person in all forms in the application, and ensure forms are signed by the appropriate party.

Note: Including all the information requested in the form and attachments contributes to more streamlined technical reviews.

Signature

To the best of my knowledge, the responses to this form accurately reflect all information requested concerning the proposed regulated activities and methods to protect the Edwards Aquifer. This **General Information Form** is hereby submitted for TCEQ review. The application was prepared by:

Print Name of Customer/Agent: Jordan T. Hurta P.E.

Date: 8/8/2025

Signature of Customer/Agent:



Project Information

1. Regulated Entity Name: BUDA SPORTSPLEX
2. County: Hays
3. Stream Basin: Colorado River Basin
4. Groundwater Conservation District (If applicable): N/A
5. Edwards Aquifer Zone:

   ☒ Recharge Zone
   ☐ Transition Zone

6. Plan Type:

   ☒ WPAP
   ☐ SCS
   ☐ Modification
   ☐ AST
   ☐ UST
   ☐ Exception Request

7. Customer (Applicant):

   Contact Person: Anthony Host
   Entity: BUDA SPORTSPLEX
   Mailing Address: 405 E Loop Street, Building 100
   City, State: Buda, TX Zip: 78610
   Telephone: 512-394-2338 FAX: N/A
   Email Address: anthonyhost@budatx.gov

8. Agent/Representative (If any):

   Contact Person: Jordan T. Hurta
   Entity: DCS Engineering, LLC
   Mailing Address: 1101 S. Capital of Texas Hwy, Building G-100
   City, State: Austin, TX Zip: 78746
   Telephone: 512-614-6171 FAX: N/A
   Email Address: jhurta@dcs-engineering.com

9. Project Location:

   ☒ The project site is located inside the city limits of Buda.
   ☐ The project site is located outside the city limits but inside the ETJ (extra-territorial jurisdiction) of _____.
   ☐ The project site is not located within any city's limits or ETJ.

10. ☒ The location of the project site is described below. The description provides sufficient detail and clarity so that the TCEQ's Regional staff can easily locate the project and site boundaries for a field investigation.

    The property is located North West of the intersection at FM 1626 and FM 967. The property is along East side of Buda Sportsplex Dr. Property Located at 310 Buda Sportsplex Dr, Buda, TX 78610.

11. ☒ **Attachment A – Road Map**. A road map showing directions to and the location of the project site is attached. The project location and site boundaries are clearly shown on the map.

12. ☒ **Attachment B - USGS / Edwards Recharge Zone Map**. A copy of the official 7 ½ minute USGS Quadrangle Map (Scale: 1" = 2000') of the Edwards Recharge Zone is attached. The map(s) clearly show:

    ☒ Project site boundaries.
    ☒ USGS Quadrangle Name(s).
    ☒ Boundaries of the Recharge Zone (and Transition Zone, if applicable).
    ☒ Drainage path from the project site to the boundary of the Recharge Zone.

13. ☒ **The TCEQ must be able to inspect the project site or the application will be returned**. Sufficient survey staking is provided on the project to allow TCEQ regional staff to locate the boundaries and alignment of the regulated activities and the geologic or manmade features noted in the Geologic Assessment.

☒ Survey staking will be completed by this date: October 4, 2024

14. ☒ **Attachment C – Project Description**. Attached at the end of this form is a detailed narrative description of the proposed project. The project description is consistent throughout the application and contains, at a minimum, the following details:

    ☒ Area of the site
    ☒ Offsite areas
    ☒ Impervious cover
    ☒ Permanent BMP(s)
    ☒ Proposed site use
    ☒ Site history
    ☒ Previous development
    ☒ Area(s) to be demolished

15. Existing project site conditions are noted below:

    ☒ Existing commercial site
    ☐ Existing industrial site
    ☐ Existing residential site
    ☒ Existing paved and/or unpaved roads
    ☐ Undeveloped (Cleared)
    ☐ Undeveloped (Undisturbed/Uncleared)
    ☐ Other: _____

Prohibited Activities

16. ☒ I am aware that the following activities are prohibited on the Recharge Zone and are not proposed for this project:

    (1) Waste disposal wells regulated under 30 TAC Chapter 331 of this title (relating to Underground Injection Control);

    (2) New feedlot/concentrated animal feeding operations, as defined in 30 TAC §213.3;

    (3) Land disposal of Class I wastes, as defined in 30 TAC §335.1;

    (4) The use of sewage holding tanks as parts of organized collection systems; and

    (5) New municipal solid waste landfill facilities required to meet and comply with Type I standards which are defined in §330.41(b), (c), and (d) of this title (relating to Types of Municipal Solid Waste Facilities).

    (6) New municipal and industrial wastewater discharges into or adjacent to water in the state that would create additional pollutant loading.

17. ☒ I am aware that the following activities are prohibited on the Transition Zone and are not proposed for this project:

    (1) Waste disposal wells regulated under 30 TAC Chapter 331 (relating to Underground Injection Control);

(2) Land disposal of Class I wastes, as defined in 30 TAC §335.1; and

(3) New municipal solid waste landfill facilities required to meet and comply with Type I standards which are defined in §330.41 (b), (c), and (d) of this title.

Administrative Information

18. The fee for the plan(s) is based on:

- ☐ For a Water Pollution Abatement Plan or Modification, the total acreage of the site where regulated activities will occur.
- ☐ For an Organized Sewage Collection System Plan or Modification, the total linear footage of all collection system lines.
- ☐ For a UST Facility Plan or Modification or an AST Facility Plan or Modification, the total number of tanks or piping systems.
- ☐ A request for an exception to any substantive portion of the regulations related to the protection of water quality.
- ☐ A request for an extension to a previously approved plan.

19. ☒ Application fees are due and payable at the time the application is filed. If the correct fee is not submitted, the TCEQ is not required to consider the application until the correct fee is submitted. Both the fee and the Edwards Aquifer Fee Form have been sent to the Commission's:

- ☐ TCEQ cashier
- ☒ Austin Regional Office (for projects in Hays, Travis, and Williamson Counties)
- ☐ San Antonio Regional Office (for projects in Bexar, Comal, Kinney, Medina, and Uvalde Counties)

20. ☒ Submit one (1) original and one (1) copy of the application, plus additional copies as needed for each affected incorporated city, groundwater conservation district, and county in which the project will be located. The TCEQ will distribute the additional copies to these jurisdictions. The copies must be submitted to the appropriate regional office.

21. ☒ No person shall commence any regulated activity until the Edwards Aquifer Protection Plan(s) for the activity has been filed with and approved by the Executive Director.

WATER POLLUTION ABATEMENT PLAN ATTACHMENT A

ROAD & SITE LOCATION MAP



BUDA SPORTSPLEX

DATE: JUN 2025

SCALE: 1" = 400'

FIGURE: 1

WATER POLLUTION ABATEMENT PLAN ATTACHMENT B

USGS QUADRANGLE MAP

U.S. DEPARTMENT OF THE INTERIOR
U.S. GEOLOGICAL SURVEY

The National Map US Topo

MOUNTAIN CITY QUADRANGLE
TEXAS - HAYS COUNTY
7.5-MINUTE SERIES



Produced by the United States Geological Survey
North American Datum of 1983 (NAD83)
World Geodetic System of 1984 (WGS84). Projection and
1 000-meter grid:Universal Transverse Mercator, Zone 14R

This map is not a legal document. Boundaries may be generalized for this map scale. Private lands within government reservations may not be shown. Obtain permission before entering private lands.

Imagery.....NAIP, October 2016 - November 2016
Roads..... U.S. Census Bureau, 2015 - 2019
Names.....GNIS, 1979 - 2022
Hydrography.....National Hydrography Dataset, 2002 - 2018
Contours.....National Elevation Dataset, 2019
Boundaries.....Multiple sources; see metadata file 2019 - 2021

Wetlands.....FWS National Wetlands Inventory Not Available

MN
GN
0°32'
9 MILS
3°50'
68 MILS
UTM GRID AND 2019 MAGNETIC NORTH DECLINATION AT CENTER OF SHEET

U.S. National Grid
100,000-m Square ID
^DD
NU PU
Grid Zone Designation
14R

SCALE 1:24 000
1 0.5 0 KILOMETERS 1 2
1000 500 0 METERS 1000 2000
1 0.5 0 1
MILES
1000 0 1000 2000 3000 4000 5000 6000 7000 8000 9000 10000
FEET

CONTOUR INTERVAL 10 FEET
NORTH AMERICAN VERTICAL DATUM OF 1988

This map was produced to conform with the National Geospatial Program US Topo Product Standard.

TEXAS
QUADRANGLE LOCATION

1	2	3
4		5
6	7	8

ADJOINING QUADRANGLES
1 Dripping Springs
2 Signal Hill
3 Oak Hill
4 Driftwood
5 Buda
6 Wimberley
7 San Marcos North
8 Uhland

ROAD CLASSIFICATION
Expressway
Secondary Hwy
Ramp
Local Connector
Local Road
4WD
Interstate Route
US Route
State Route

MOUNTAIN CITY, TX
2022

NSN. 7643016397344
NGA REF NO. USGSX24K71001

WATER POLLUTION ABATEMENT PLAN ATTACHMENT C

PROJECT DESCRIPTION

Attachment C - Project Description

The project area consists of 65.63 acres within the Hays County parcel located at the 310 Buda Sportsplex Dr. The 65.63-acre site is currently developed. The overall parcel receives offsite flows from three sources. A middle school located to the west of the site drains towards the road of Buda Sportsplex Dr along with drainage from a residential area south FM 967. Drainage from neighborhood located west of the site and middle school contributes to the flow received. A third large drainage area to the Northwest drains to a creek that flows through the site. Only the offsite drainage areas 1 and 3 flow through the limits of construction.

The proposed improvements include the construction of four full-size softball fields, along with modifications to the existing fields. Additional amenities will include eight pickleball courts, four sand volleyball courts, designated RV parking spaces, food truck parking areas, and expanded parking throughout the site to support the anticipated increase in visitors. A batch detention basin and vegetative filter strips is also proposed to ensure compliance with applicable environmental regulations. Total impervious cover proposed with this project is 8.40 acres. There is 4.14 acres of existing impervious cover on site. The total impervious cover on site once this project is constructed will be 12.54 acres which is 19.11% of the total site area.

This site is located in the City of Buda in Hays County. Additionally, the site is located in the Edwards Aquifer Recharge Zone.

WATER POLLUTION ABATEMENT PLAN

GEOLOGICAL ASSESMENT FORM

Tolunay-Wong Engineers, Inc.

1002 34th Street North • Texas City, Texas 77590 • Phone: (409) 655-5291 • www.tweinc.com

February 6, 2025
TWE Project No: 25.15.017

Mr. Tony Host
Parks Director
City of Buda
405 E. Loop St
Buda, TX 78610

Ref: Geologic Assessment for Buda Sportsplex WPAP, Buda, TX 78610

Dear Mr. Host:

Tolunay-Wong Engineers, Inc. (TWE) is pleased to submit this geologic assessment of the Buda Sportsplex property (site) for submittal to the TCEQ in support of the water pollution abatement plan (WPAP).

On February 4, 2025 a TWE geologist completed the site assessment, mapping the geology. The TCEQ Geologic Assessment form is attached including the site specific geology narrative.

TWE is pleased to be of service on this project and can schedule the site visit at your convenience. If you need additional information, please contact me directly.

Sincerely,
Tolunay-Wong Engineers, Inc.



William J. Householder, P.G.
Senior Technical Advisor
Tolunay-Wong Engineers, Inc. (TWE)

Geologic Assessment

Texas Commission on Environmental Quality

For Regulated Activities on The Edwards Aquifer Recharge/transition Zones and Relating to 30 TAC §213.5(b)(3), Effective June 1, 1999

To ensure that the application is administratively complete, confirm that all fields in the form are complete, verify that all requested information is provided, consistently reference the same site and contact person in all forms in the application, and ensure forms are signed by the appropriate party.

Note: Including all the information requested in the form and attachments contributes to more streamlined technical reviews.

Signature

To the best of my knowledge, the responses to this form accurately reflect all information requested concerning the proposed regulated activities and methods to protect the Edwards Aquifer. My signature certifies that I am qualified as a geologist as defined by 30 TAC Chapter 213.

Print Name of Geologist: William J. Householder Telephone: 512-921-2453

Date: February 5, 2025 Fax: _____

Representing: Tolunay-Wong Engineers, Inc. (Name of Company and TBPG or TBPE registration number)

Signature of Geologist:

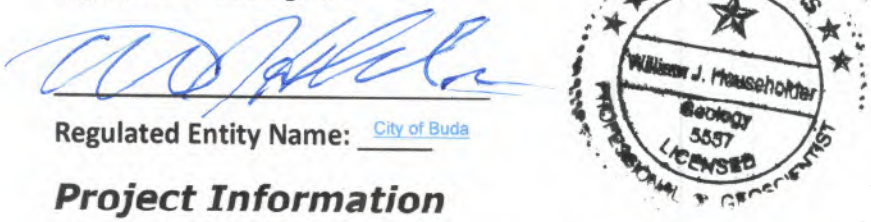

Regulated Entity Name: City of Buda

Project Information

1. Date(s) Geologic Assessment was performed: February 3, 2025
2. Type of Project:
   - [X] WPAP
   - [ ] SCS
   - [ ] AST
   - [ ] UST
3. Location of Project:
   - [X] Recharge Zone
   - [ ] Transition Zone
   - [X] Contributing Zone within the Transition Zone

4. [X] **Attachment A - Geologic Assessment Table**. Completed Geologic Assessment Table (Form TCEQ-0585-Table) is attached.

5. [X] Soil cover on the project site is summarized in the table below and uses the SCS Hydrologic Soil Groups* (Urban Hydrology for Small Watersheds, Technical Release No. 55, Appendix A, Soil Conservation Service, 1986). If there is more than one soil type on the project site, show each soil type on the site Geologic Map or a separate soils map.

Table 1 - Soil Units, Infiltration Characteristics and Thickness

Soil Name	Group*	Thickness(feet)
~~Doss~~ Silty Clay	C	~~2.5-5~~
Krum Clay	D	2.5-6

** Soil Group Definitions (Abbreviated)*

A. Soils having a high infiltration rate when thoroughly wetted.

B. Soils having a moderate infiltration rate when thoroughly wetted.

C. Soils having a slow infiltration rate when thoroughly wetted.

D. Soils having a very slow infiltration rate when thoroughly wetted.

6. [X] **Attachment B – Stratigraphic Column**. A stratigraphic column showing formations, members, and thicknesses is attached. The outcropping unit, if present, should be at the top of the stratigraphic column. Otherwise, the uppermost unit should be at the top of the stratigraphic column.

7. [X] **Attachment C – Site Geology**. A narrative description of the site specific geology including any features identified in the Geologic Assessment Table, a discussion of the potential for fluid movement to the Edwards Aquifer, stratigraphy, structure(s), and karst characteristics is attached.

8. [X] **Attachment D – Site Geologic Map(s)**. The Site Geologic Map must be the same scale as the applicant's Site Plan. The minimum scale is 1": 400'

   Applicant's Site Plan Scale: 1" = _____'
   Site Geologic Map Scale: 1" = 250 '
   Site Soils Map Scale (if more than 1 soil type): 1" = 350 '

9. Method of collecting positional data:

   [X] Global Positioning System (GPS) technology.
   [ ] Other method(s). Please describe method of data collection: _____

10. [X] The project site and boundaries are clearly shown and labeled on the Site Geologic Map.

11. [X] Surface geologic units are shown and labeled on the Site Geologic Map.

12. [X] Geologic or manmade features were discovered on the project site during the field investigation. They are shown and labeled on the Site Geologic Map and are described in the attached Geologic Assessment Table.

    [ ] Geologic or manmade features were not discovered on the project site during the field investigation.

13. [X] The Recharge Zone boundary is shown and labeled, if appropriate.

14. All known wells (test holes, water, oil, unplugged, capped and/or abandoned, etc.): If applicable, the information must agree with Item No. 20 of the WPAP Application Section.

    [ ] There are _____ (#) wells present on the project site and the locations are shown and labeled. (Check all of the following that apply.)
    - [ ] The wells are not in use and have been properly abandoned.
    - [ ] The wells are not in use and will be properly abandoned.
    - [ ] The wells are in use and comply with 16 TAC Chapter 76.

    [X] There are no wells or test holes of any kind known to exist on the project site.

Administrative Information

15. [X] Submit one (1) original and one (1) copy of the application, plus additional copies as needed for each affected incorporated city, groundwater conservation district, and county in which the project will be located. The TCEQ will distribute the additional copies to these jurisdictions. The copies must be submitted to the appropriate regional office.

GEOLOGIC ASSESSMENT TABLE

PROJECT NAME:

LOCATION			FEATURE CHARACTERISTICS											EVALUATION			PHYSICAL SETTING		
1A	1B *	1C*	2A	2B	3	4			5	5A	6	7	8A	8B	9	10		11		12
FEATURE ID	LATITUDE	LONGITUDE	FEATURE TYPE	POINTS	FORMATION	DIMENSIONS (FEET)			TREND (DEGREES)	DOM	DENSITY (NO/FT)	APERTURE (FEET)	INFILL	RELATIVE INFILTRATION RATE	TOTAL	SENSITIVITY		CATCHMENT AREA (ACRES)		TOPOGRAPHY
						X	Y	Z		10						<40	>40	<1.6	>1.6	
1	30.1003373	97.8764724	CD	5	K G T	6	6	0.3		0			F	15	20	20		X		STREAMBED
2	30.1028960	97.8785520	CD	5	KGT	20	200	0.3		0			F	15	20	20		X		STREAMBED
3	30.0995373	97.8764432	O	5	KGT	30	8	0.3		0			N	10	15	15		X		HILLSIDE
4	30.103192	97.878982	CD	5	KGT	20	100	0.3		0			F	15	20	20		X		STREAMBED
5	30.101639	97.878885	CD	5		300	100	5		0			X	25	30	30		X		RET POND
6	30.099834	97.876869	CD	5		1250	300	5		0			F	20	25	25			X	DRAINAGE

* DATUM:_____

2A TYPE	TYPE	2B POINTS
C	Cave	30
SC	Solution cavity	20
SF	Solution-enlarged fracture(s)	20
F	Fault	20
O	Other natural bedrock features	5
MB	Manmade feature in bedrock	30
SW	Swallow hole	30
SH	Sinkhole	20
CD	Non-karst closed depression	5
Z	Zone, clustered or aligned features	30

8A INFILLING	
N	None, exposed bedrock
C	Coarse - cobbles, breakdown, sand, gravel
O	Loose or soft mud or soil, organics, leaves, sticks, dark colors
F	Fines, compacted clay-rich sediment, soil profile, gray or red colors
V	Vegetation. Give details in narrative description
FS	Flowstone, cements, cave deposits
X	Other materials

12 TOPOGRAPHY
Cliff, Hilltop, Hillside, Drainage, Floodplain, Streambed

I have read, I understood, and I have followed the Texas Commission on Environmental Quality's Instructions to Geologists. The information presented here complies with that document and is a true representation of the conditions observed in the field. My signature certifies that I am qualified as a geologist as defined by 30 TAC Chapter 213.

_____ Date

Sheet _____ of _____

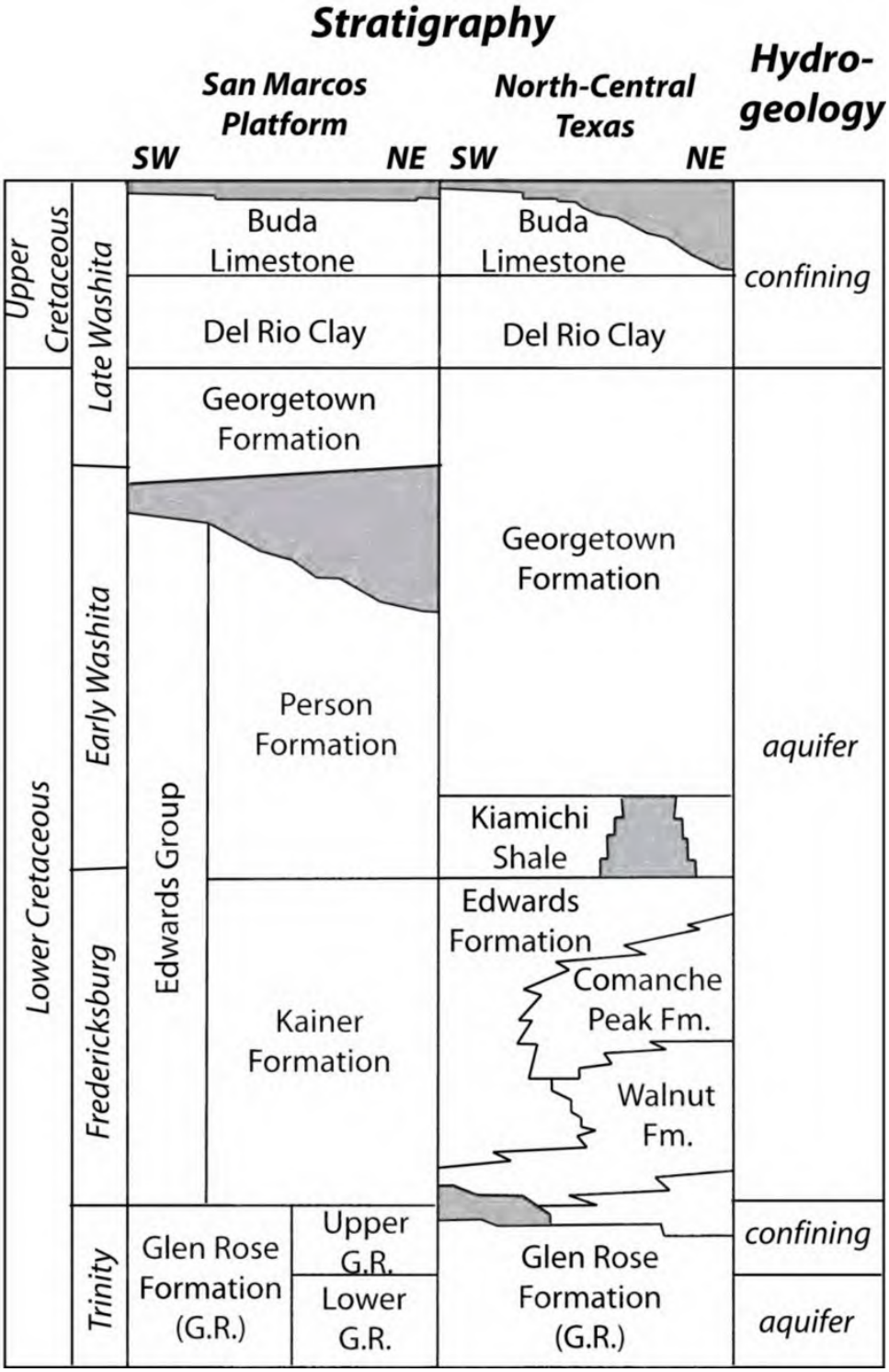
Stratigraphy
San Marcos Platform
North-Central Texas
Hydro-geology
SW
NE
SW
NE
Upper Cretaceous
Lower Cretaceous
Late Washita
Early Washita
Fredericksburg
Trinity
Edwards Group
Buda Limestone
Del Rio Clay
Georgetown Formation
Person Formation
Kainer Formation
Glen Rose Formation (G.R.)
Upper G.R.
Lower G.R.
Buda Limestone
Del Rio Clay
Georgetown Formation
Kiamichi Shale
Edwards Formation
Comanche Peak Fm.
Walnut Fm.
Glen Rose Formation (G.R.)
confining
aquifer
confining
aquifer

Buda Sportsplex Geologic Assessment
Sportsplex Rd. Buda, TX

Executive Summary

The Buda Sportsplex is an approximately 98-acre tract of land located on Buda Sportsplex Dr., near the intersection of FM 967 and FM 1626, west of the City of Buda, Hays County TX. The property is primarily within the boundaries of the Edwards Aquifer Recharge Zone, with the soccer fields in the northwest corner of the property located in the Contributing Zone within the Transition Zone, as defined by the TCEQ Edwards Aquifer Viewer (version 5.1), February 2025.

This Geologic Assessment meets the requirements of the Edwards Aquifer Rules [Title 30 Texas Administrative Code (TAC) Chapter 213] for the performance of a site investigation to determine the geologic nature of the site and possible sensitive geologic features that could require protection under a Water Pollution Abatement Plan.

The Sportsplex site is located within the watershed and floodplain of the ephemeral Garlic Creek. Soils on site are clayey to silty clay soils (Krum Clay, and Doss silty clay) in excess of 5 feet thick, with few rock outcrops across the site. Rock outcrops were observed in the upland drainage area to the west of Garlic Creek on the southern side of the site.

Outcrops observed on the property were limited to Buda formation observed on the upland terrace to the west of Garlic Creek along the southern edge of the property. A few small outcrops were observed (< 100 square feet) and photographed for inclusion in this report. Other than for landscaping, no significant formations were observed.

The site has been developed into a sports park with baseball and soccer fields, a playground and walking trails. A stormwater retention pond is located east and upland of Garlic Creek. Parking areas and surrounding fields drain to the retention pond. A drainage canal is built along the south edge of the property running to the east. The canal captures drainage from the surrounding area and directs it to Garlic Creek to the east of the site at FM1626. No other significant man made or geologic features were found.

Introduction

This geologic assessment is for the Buda Sportsplex, an approximately 98 acre property owned by the City of Buda that has been developed into a city sports park. The site contains baseball fields, soccer fields, hiking trails, a pavilion, a dog park and playground. The site is located at Buda Sportsplex Dr., near the intersection of FM 967 and FM 1626, west of the City of Buda, Hays County TX.

Figure 1 shows the site location.

A review of the Texas Commission in Environmental Quality (TCEQ) Edwards Aquifer Viewer (version 5.1), February 2025, shows the property is primarily within the boundaries of the Edwards Aquifer Recharge Zone, with the soccer fields in the northwest corner of the property located in the Contributing Zone within the Transition Zone.

Figure 2 shows the map generated by the TCEQ viewer with recharge and transition zones.

Purpose and Scope

The purpose of this geologic assessment is to comply with TCEQ requirements associated with a Water Pollution Abatement Plan update associated with the expansion of the fields at the sportsplex. The geologic assessment was completed to insure that the man made and geologic features on site would allow for water quality of the potential recharge zone to remain consistent with the Edwards Aquifer protection program.

The scope of the project includes a detailed field survey of the site by a qualified geologist, research of published geologic reports and an analysis of the findings with any recommendations.

Methodology

The geologic assessment was conducted following TCEQ-0585-Instructions (Rev. 10-01-04), Instructions to Geologists for Geologic Assessments on the Edwards Aquifer Recharge/Transition Zones. TWE completed the field effort on February 4, 2025.

The field survey consisted of walking transects across the property looking for geologic features. The creek and other drainage features were surveyed to their full extent on the site to note any additional features. The field effort was recorded using global positioning system (GPS) with a Columbus P-10 Pro HD GNSS Data Logger with an accuracy of 0.5 meters (19 inches).

Site Setting

The site consists of an approximately 98-acre tract developed into a sports park. The site has been developed into a sports park with baseball and soccer fields, a playground and walking trails. A stormwater retention pond is located east and upland of Garlic Creek. Parking areas and surrounding fields drain to the retention pond. A drainage canal is built along the south edge of the property running to the east. The canal captures drainage from the surrounding area and directs it to Garlic Creek to the east of the site at FM1626. The site slopes to the east/southeast to Garlic Creek with runoff being captured on the north side by a stormwater retention pond and on the south side by a drainage canal and larger natural drainage area. The soccer fields have been stepped to allow drainage to continue to Garlic Creek. The overall grading of the site allows for it to continue its slope towards Garlic Creek with runoff being captured by retention pond and slowed by vegetation in larger drainage areas.

Topography

Site topographic elevation ranges from 800 to 750 feet above sea level (FMSL), with the low points being in the Garlic Creek Channel. The site averages a shallow 1 to 3% slope to the east toward Garlic Creek. The site is principally covered with a thick layer of soil (clay to silty clay) that has been graded as needed for the sportsplex. The USGS Mountain City 7.5 minute quadrangle is presented as Figure 3.

Land Use

The site is currently developed as a sports park, with historical uses such as agricultural (farming or ranching). Overall, the site is a floodplain that slopes from west to east to Garlic Creek.

Figure 1 Site Map

Buda Sportsplex Geologic Assessment Features Map



Edwards Aquifer Viewer Custom Print

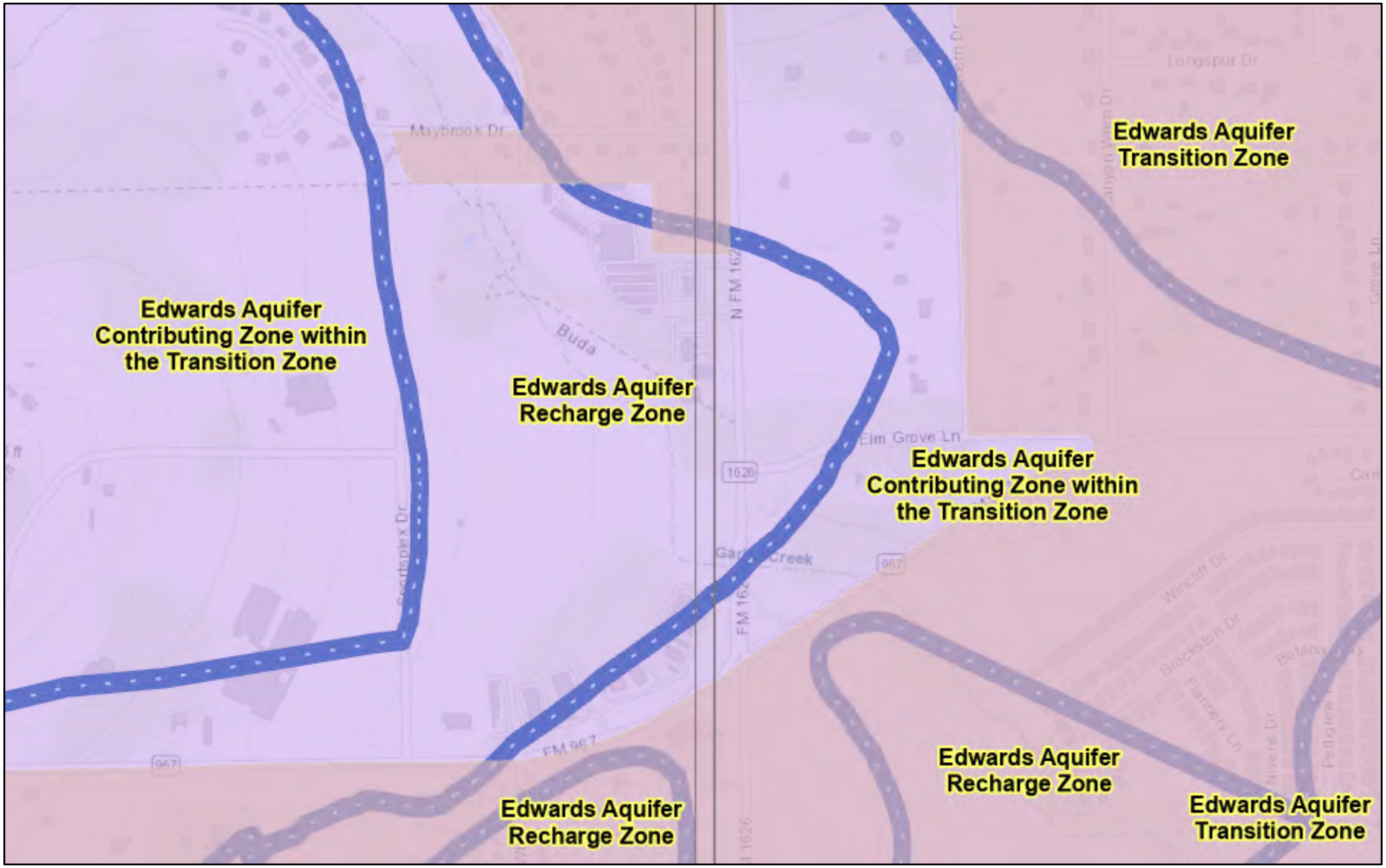

1/31/2025, 8:59:27 AM

1:9,028

0 0.05 0.1 0.2 mi

0 0.1 0.2 0.4 km

Edwards Aquifer Label

Edwards Aquifer Boundary

Edwards Aquifer Boundary central line

City/Place

Groundwater Conservation Districts

Barton Springs/Edwards Aquifer CD

TX Counties

7.5 Minute Quad Grid

TCEQ_EDWARDS_OFFICIAL_MAPS

TCEQ, Austin Community College, City of Austin, Texas Parks & Wildlife, Esri, HERE, Garmin, INCREMENT P, Intermap, USGS, METI/NASA, EPA,

Web AppBuilder for ArcGIS

TCEQ | Austin Community College, City of Austin, Texas Parks & Wildlife, Esri, HERE, Garmin, INCREMENT P, Intermap, USGS, METI/NASA, EPA, USDA |

U.S. DEPARTMENT OF THE INTERIOR
U.S. GEOLOGICAL SURVEY

The National Map
US Topo

MOUNTAIN CITY QUADRANGLE
TEXAS - HAYS COUNTY
7.5-MINUTE SERIES

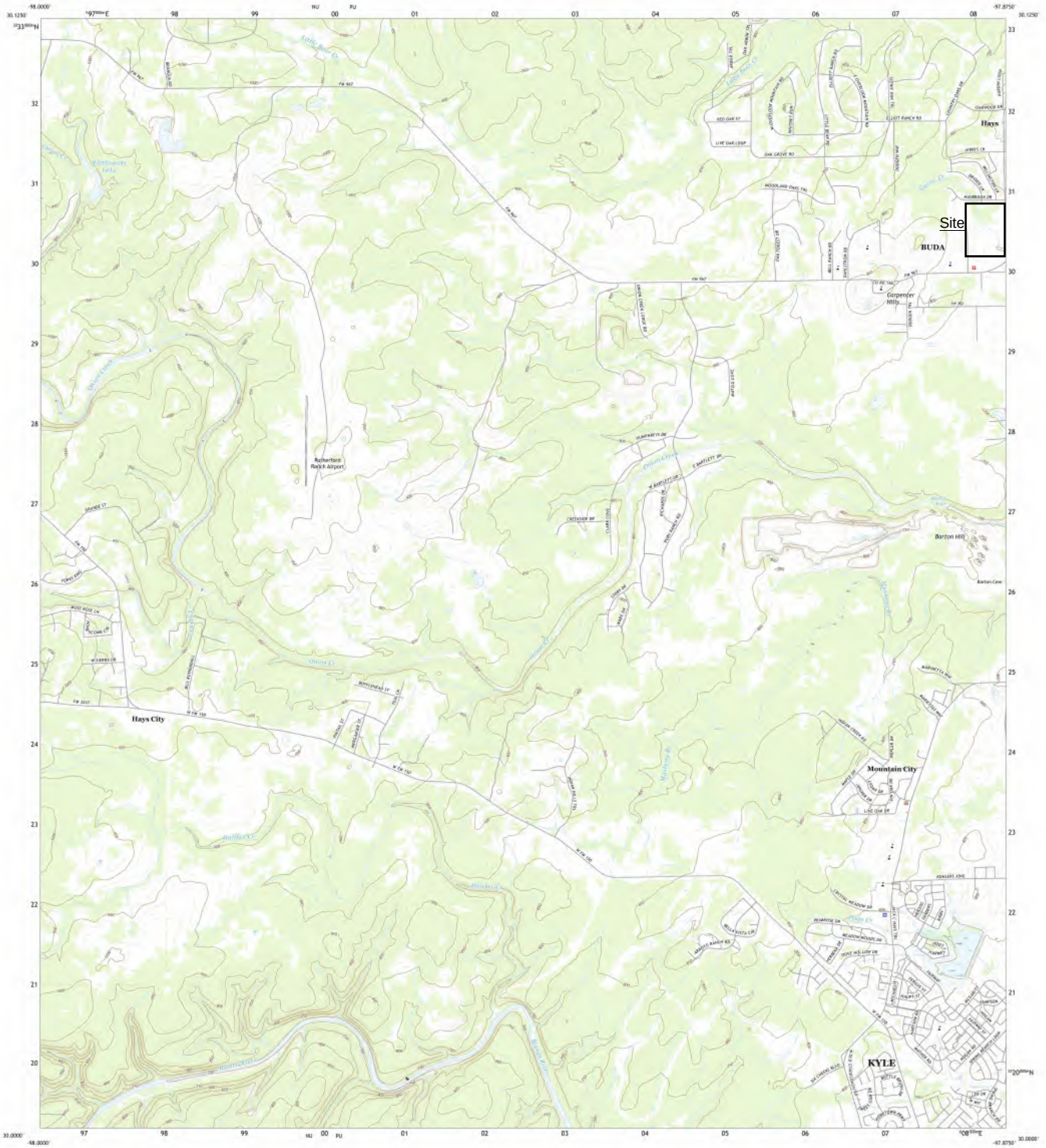

Produced by the United States Geological Survey
North American Datum of 1983 (NAD83)
World Geodetic System of 1984 (WGS84). Projection and
1 000-meter grid Universal Transverse Mercator, Zone 14N
This map is not a legal document. Boundaries may be
generalized for this map scale. Private lands within government
reservations may not be shown. Obtain permission before
entering private lands.

Imagery.....NAIP, October 2016 - November 2016
Roads.....U.S. Census Bureau, 2015 - 2019
Names.....GNIS, 1979 - 2022
Hydrography.....National Hydrography Dataset, 2002 - 2018
Contours.....National Elevation Dataset, 2019
Boundaries.....Multiple sources; see metadata file 2019 - 2021

Wetlands.....FWS National Wetlands Inventory Not Available

UTM GRID AND 2016 MAGNETIC NORTH DECLINATION AT CENTER OF SHEET

SCALE 1:24 000

KILOMETERS
METERS
MILES
FEET

CONTOUR INTERVAL 10 FEET
NORTH AMERICAN VERTICAL DATUM OF 1988

This map was produced to conform with the
National Geospatial Program US Topo Product Standard.

QUADRANGLE LOCATION

1	2	3
4		5
6	7	8

1 Dripping Springs
2 Signal Hill
3 Oak Hill
4 Driftwood
5 Buda
6 Wimberley
7 San Marcos North
8 Uhland

ADJOINING QUADRANGLES

ROAD CLASSIFICATION

Expressway
Secondary Hwy
Ramp
Local Connector
Local Road
4WD
Interstate Route
US Route
State Route

MOUNTAIN CITY, TX
2022

NATIONAL GEOLOGICAL SURVEY
NGA REF NO. USGS X24K71001

Soils

Soil information was taken from the USDA NRCS Web Soil Survey. The site contains Krum Clay (KrB) and Doss Silty Clay (DoC) both are well drained with low permeability. Clayey soils in alignment with the USDA descriptions were observed on site during the field study. The soils map along with description of soils is presented as Figure 4.

Hydrology/Recharge Potential

The Edwards Aquifer Recharge Zone Map from the TCEQ Edwards Aquifer Viewer website mapped the site primarily in the Edwards Aquifer Recharge zone, with the soccer fields in the Northwest corner being in the Edwards Aquifer Contributing Zone within the Transition Zone. While the map indicates the site to be within the recharge zone, the potential for recharge to occur is limited by the clay soils overlying the formation(s). Within Garlic Creek several areas were noted that could potentially contribute to recharge. While not clearly Karst features, they were locations where the water in the creek stopped and continued further downstream. The water in the creek was stagnant and most likely the result of rainfall a few days prior to the field work. The presence of water in the creek after a few days indicated the retention qualities of the clay soils found across the site.

In addition to the water observed in the creek, water was also observed in the retention pond indicating another potential recharge source. As a rule, the clay/silty clay soils at the site would act as an aquiclude or a confining or leaky confining layer. With no outcropping other than a small area of slightly dipping unfractured limestone (Buda formation), it can be inferred that the soils act as a confining layer more than a recharge zone. Observed features described above are included in site photographs.

Structural Geology

The property is located within the Balcones fault zone. The structure on the site consists of two mapped faults (mapped by the USGS 2018). The faults were identified previously by the United States Geological Survey (USGS). No evidence of faults was observed during the field portion of the geologic assessment. The USGS fault map is included as Figure 5.

Stratigraphy

Stratigraphy at the site below the upper clayey soil layer consists of the Buda Limestone, Del Rio Clay, Georgetown Formation, and Edwards group Limestone. The Buda limestone is more than 5 feet thick with regional thicknesses of 40 to 60 feet. The Del Rio clay is not apparent at the site, but the underlying Georgetown formation is evident in the creek bed. The Del Rio should be 40 to 50 feet thick regionally. The Georgetown formation is 40 to 70 feet thick regionally. No evidence of the Edwards group limestone was found at the site, but it should be 100 to 350 feet thick across the region. A stratigraphic column is presented as Figure 6.

Site Photos

Site photos with descriptions of the various features are presented after the findings and conclusions.

Findings and Conclusions

Based on the field survey and research for the site, the following items are noted:

- The site lies within the Edwards Aquifer Recharge zone and Contributing Zone within the Transition Zone per the TCEQ Edwards Aquifer viewer and was confirmed through the field assessment.
- Recharge potential at the site is limited due to the clayey soils observed sitewide with a thickness of 5 feet or greater.
- Sitewide potential recharge is limited to Garlic Creek along with the manmade stormwater retention pond and drainage canal.

Soil Map—Comal and Hays Counties, Texas
(Buda Sportsplex Soils Map)



Map Scale: 1:7,730 if printed on A landscape (11" x 8.5") sheet.

N

Meters
0 100 200 400 600

Feet
0 350 700 1400 2100

Map projection: Web Mercator Corner coordinates: WGS84 Edge tics: UTM Zone 14N WGS84

MAP LEGEND

Area of Interest (AOI)
- Area of Interest (AOI)

Soils
- Soil Map Unit Polygons
- Soil Map Unit Lines
- Soil Map Unit Points

Special Point Features
- Blowout
- Borrow Pit
- Clay Spot
- Closed Depression
- Gravel Pit
- Gravelly Spot
- Landfill
- Lava Flow
- Marsh or swamp
- Mine or Quarry
- Miscellaneous Water
- Perennial Water
- Rock Outcrop
- Saline Spot
- Sandy Spot
- Severely Eroded Spot
- Sinkhole
- Slide or Slip
- Sodic Spot
- Spoil Area
- Stony Spot
- Very Stony Spot
- Wet Spot
- Other
- Special Line Features

Water Features
- Streams and Canals

Transportation
- Rails
- Interstate Highways
- US Routes
- Major Roads
- Local Roads

Background
- Aerial Photography

MAP INFORMATION

The soil surveys that comprise your AOI were mapped at 1:20,000.

Warning: Soil Map may not be valid at this scale.

Enlargement of maps beyond the scale of mapping can cause misunderstanding of the detail of mapping and accuracy of soil line placement. The maps do not show the small areas of contrasting soils that could have been shown at a more detailed scale.

Please rely on the bar scale on each map sheet for map measurements.

Source of Map: Natural Resources Conservation Service
Web Soil Survey URL:
Coordinate System: Web Mercator (EPSG:3857)

Maps from the Web Soil Survey are based on the Web Mercator projection, which preserves direction and shape but distorts distance and area. A projection that preserves area, such as the Albers equal-area conic projection, should be used if more accurate calculations of distance or area are required.

This product is generated from the USDA-NRCS certified data as of the version date(s) listed below.

Soil Survey Area: Comal and Hays Counties, Texas
Survey Area Data: Version 21, Aug 30, 2024

Soil map units are labeled (as space allows) for map scales 1:50,000 or larger.

Date(s) aerial images were photographed: Data not available.

The orthophoto or other base map on which the soil lines were compiled and digitized probably differs from the background imagery displayed on these maps. As a result, some minor shifting of map unit boundaries may be evident.

Map Unit Legend

Map Unit Symbol	Map Unit Name	Acres in AOI	Percent of AOI
CrD	Comfort-Rock outcrop complex, 1 to 8 percent slopes	3.3	1.4%
DeB	Denton silty clay, 1 to 3 percent slopes	23.7	10.4%
DoC	Doss silty clay, moist, 1 to 5 percent slopes	124.8	54.6%
KrB	Krum clay, 1 to 3 percent slopes	70.1	30.6%
MEC	Medlin, warm-Eckrant association, 1 to 8 percent slopes	3.1	1.3%
MED	Medlin, warm-Eckrant association, 8 to 30 percent slopes	3.8	1.7%
Totals for Area of Interest		**228.7**	**100.0%**

U.S. Department of the Interior
U.S. Geological Survey

Scientific Investigations Map 3418
Pamphlet accompanies map

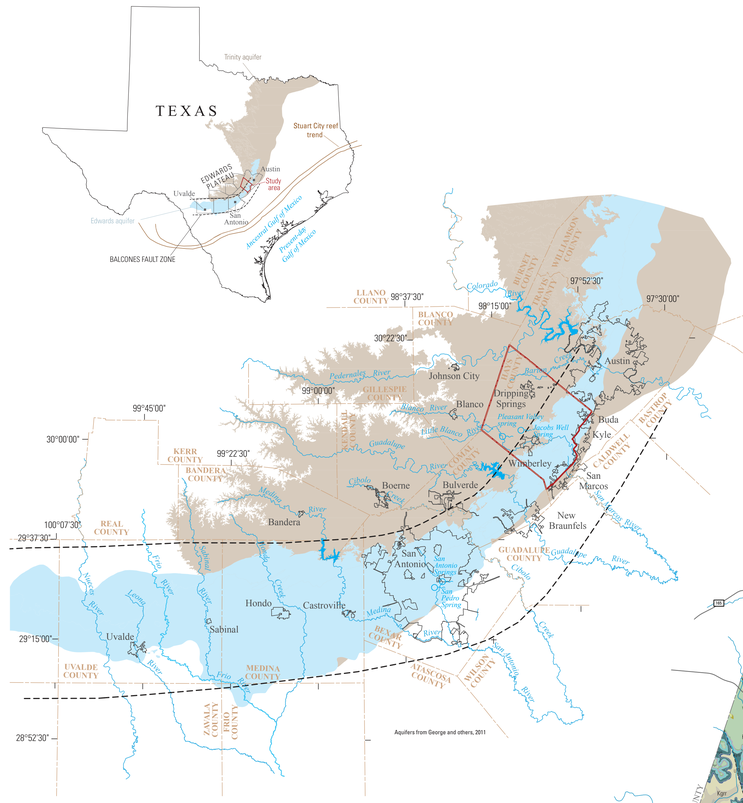

Base modified from U.S. Geological Survey digital data at 1:100,000 scale
Universal Transverse Mercator, zone 14
North American Datum of 1983

EXPLANATION

- Edwards aquifer
- Trinity aquifer
- Study area boundary
- Balcones fault zone
- Spring

0 5 10 15 20 MILES
0 5 10 15 20 KILOMETERS

Figure 1. Location of the study area relative to the State of Texas, Hays County, the outcrops of the Edwards and Trinity aquifers, and the Balcones fault zone.



Figure 3. Conglomerates within the Sycamore Sand at Hammetts Crossing, Travis County, Texas (photograph by Allan K. Clark, U.S. Geological Survey, February 27, 2018).



Figure 4. Bedding plane porosity that developed at the junction between the bedding plane and a fracture within the Cow Creek Limestone (Cow Creek hydrostratigraphic unit) at Hammetts Crossing, Travis County, Texas (photograph by Allan K. Clark, U.S. Geological Survey, February 27, 2018).



Figure 5. Marker bed known as the Loriolla Bed, found 80 feet below the contact of the Glen Rose Limestone and the Kainer Formation. The photograph was taken north of Farm to Market Road (FM) 195, approximately 1,500 feet west of the intersection of FM 220 and FM 195. The *Loriolla texana* fossils are identified by white arrows (photograph by Allan K. Clark, U.S. Geological Survey, June 15, 2017).



Figure 6. Jacobs Well Spring, which forms the headwaters of Cypress Creek north of Wimberley, Texas (photograph by Allan K. Clark, U.S. Geological Survey, February 27, 2018).

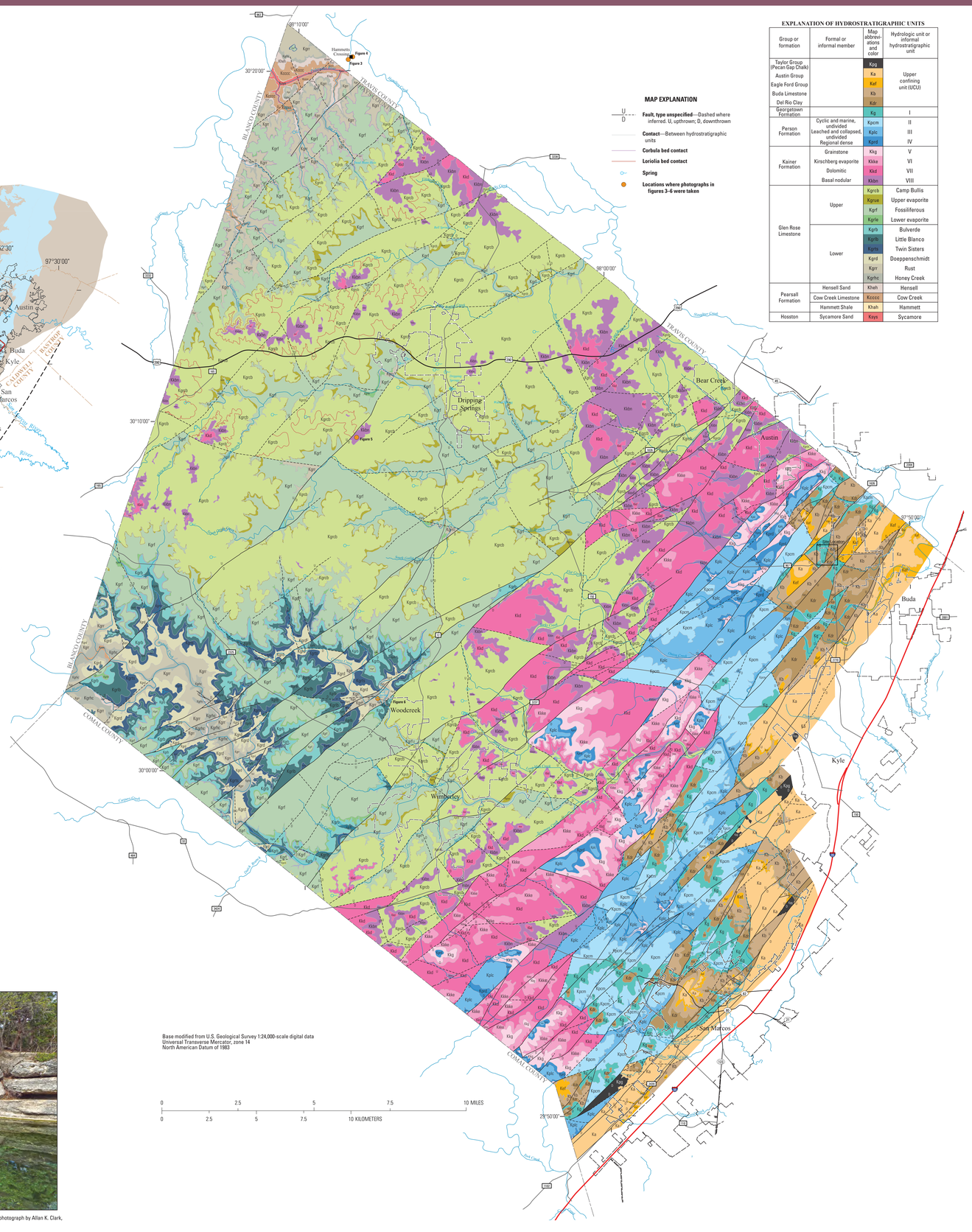

Base modified from U.S. Geological Survey 1:24,000-scale digital data
Universal Transverse Mercator, zone 14
North American Datum of 1983

0 2.5 5 7.5 10 MILES
0 2.5 5 7.5 10 KILOMETERS

MAP EXPLANATION

- U / D — Fault, type unspecified—Dashed where inferred. U, upthrown; D, downthrown
- Contact—Between hydrostratigraphic units
- Corbula bed contact
- Loriolla bed contact
- Spring
- Locations where photographs in figures 3–6 were taken

EXPLANATION OF HYDROSTRATIGRAPHIC UNITS

Group or formation	Formal or informal member	Map abbreviations and color	Hydrologic unit or informal hydrostratigraphic unit
Taylor Group (Pecan Gap Chalk)		Kpg	Upper confining unit (UCU)
Austin Group		Ka	
Eagle Ford Group		Kef	
Buda Limestone		Kb	
Del Rio Clay		Kdr	
Georgetown Formation		Kg	I
Person Formation	Cyclic and marine, undivided Leached and collapsed, undivided Regional dense	Kpcm Kplc Kprd	II III IV
Kainer Formation	Grainstone Kirschberg evaporite Dolomitic Basal nodular	Kkg Kkke Kkd Kkbn	V VI VII VIII
Glen Rose Limestone	Upper Lower	Kgrcb Kgrue Kgrl Kgrle Kgrb Kgrlb Kgrlc Kgrd Kgrr Kgrhc	Camp Bullis Upper evaporite Fossiliferous Lower evaporite Bulverde Little Blanco Twin Sisters Doeppenschmidt Rust Honey Creek
Pearsall Formation	Hensell Sand	Khsh	Hensell
	Cow Creek Limestone	Kcccc	Cow Creek
	Hammett Shale	Khah	Hammett
Hosston	Sycamore Sand	Kays	Sycamore

Figure 2. Summary of the geologic framework and hydrostratigraphy of the Edwards and Trinity aquifers within Hays County, Texas (modified from Clark and others, 2016a, b; Clark and Morris, 2017).

[Period, Epoch, Age, group, formation, members, and lithology modified from Hill (1891), Imlay (1945), Whitney (1952), Loco and Stricklin (1956), Stricklin and others (1971), Rose (1972), Stricklin and Smith (1973), Amsbury (1974), Inden (1974), Barnes (1976), Barker and Ardis (1996), Clark and others (2009, 2013, 2014), Warman and others (2010), Blome and Clark (2014), Hunt and others (2015), Rose (2015), and U.S. Geological Survey (2018); abbreviations modified from Barnes and Rose (1981) and Clark and others (2016a, b); *Orbitolina minuta* (Douglas, 1960), *Orbitolina texana* (Roemer, 1852), aquifers from Maclay and Small (1976) and Ashworth (1983); thickness from outcrop, Clark and others (2009, 2014), Warman and others (2010); hydrologic function modified from outcrop (Clark and others, 2009, 2013, 2014; Warman and others, 2010; Clark and Morris, 2015); porosity types modified from Choquette and Pray (1970). Fabric selective: IP, interparticle porosity; IC, intercrystalline porosity; SH, shelter porosity; MO, moldic porosity; BU, burrowed porosity; FE, fenestral; BP, bedding plane porosity. Not fabric selective: FR, fracture porosity; CH, channel porosity; BR, breccia; VUG, vug porosity; CV, cave porosity; BRBs, black rotund bodies; *no further subdivision]*

Geology						Hydrostratigraphy						
Period	Epoch	Group	Formation	Member (formal or informal)	Lithology	Map abbreviations and color	Hydrologic unit	Hydrostratigraphic unit (HSU)[1]	Thickness (outcrop in the study area, in feet)[2]	Hydrologic function	Porosity type	Field identification
Cretaceous	Late Cretaceous	Washita	Taylor	Pecan Gap Chalk	Marl, calcareous clay, blue in the subsurface weathers greenish yellow; fossils, large *Exogyra ponderosa*	Kpg	Upper confining unit in the Edwards aquifer	Pecan Gap	230–540	Confining	None	Yellow clay, blue clay in freshly dug exposure; large *Exogyra ponderosa*
			Austin	*	Massive, chalky, locally marly, mudstone, nodular wackestone, nodular bioturbated wackestone; *Gryphaea aucella, Inoceramus* sp., volcanic and terrigenous clastics, calcite	Ka		Austin	130–250	Aquifer locally where connected to the Edwards aquifer), confining	IP, MO, FR, BP, CH, CV	White, chalky limestone; *Gryphaea aucella, Inoceramus* sp.
			Eagle Ford	*	Brown, flaggy, sandy shale and argillaceous limestone; iron nodules; *Inoceramus* sp., shark teeth, fossil fragments; petroliferous odor	Kef		Eagle Ford	20–40	Confining	IP, FR, BP	Brownish-red sand, thin flagstones; petroliferous
			Buda (restricted)	*	Buff to light gray, dense nodular mudstone and wackestone, calcite-filled veins, bluish dendrites, iron nodules, iron staining; shell fragments	Kb		Buda	40–50	Confining	FR, BP, CV	Porcelaneous limestone, with calcite-filled veins, bluish dendrites
			Del Rio Clay	*	Fossiliferous blue-green to yellow-brown clay, packstone, iron nodules; *Ilymatogyra arietina*	Kdr		Del Rio	40–50	Confining	None	Clay, holds water, fossiliferous; *Ilymatogyra arietina*
		Edwards	Georgetown	*	Reddish-brown, gray to light tan shaley mudstone and wackestone, black dendrites, iron nodules, iron staining; *Pleisiturrilites brazoensis, Waconella waconensis*	Kg	Edwards aquifer	I	20–40	Confining	MO	Black dendrites, iron nodules and staining, *Pleisiturrilites brazoensis, Waconella waconensis*
			Person	Cyclic and marine, undivided (undivided)	Pelletal limestone, mudstone, miliolid grainstone, packstone, chert (beds and large nodules); caprinid, crossbedded	Kpcm		II	80–90	Aquifer	MO, BU, VUG, BP, FR, CV	Thin graded cycles; massive beds to relatively thin beds; crossbeds, caprinids
				Leached and collapsed (undivided)	Recrystallized limestone, mudstone, wackestone, packstone, grainstone; chert (beds and large nodules); iron-stained, stromatolitic, *Toucasia* sp., *Montastrea roemeriana*, oysters	Kplc		III	70–90	Aquifer	BU, VUG, FR, BP, BR, CV	Bioturbated iron-stained beds separated by massive limestone beds; stromatolitic limestone, *Montastrea roemeriana*
				Regional dense[3]	Dense, shaley, mudstone, wackestone, oyster-shell mudstone and wackestone, iron staining, chert	Kprd		IV	20	Confining	FR, CV	Wispy iron-oxide stains, thin bedded, often white in aerial photographs
			Kainer	Grainstone[3]	Miliolid, skeletal fragmented grainstone, mudstone, wackestone; chert (beds and nodules); crossbedded and ripple marked	Kkg		V	40–50	Aquifer	IP, BU, FR, BP, CV	Crossbedded, ripple marks, miliolid grainstone
				Kirschberg evaporite[3]	Highly altered crystalline limestone, chalky mudstone, occasional grainstone associated with tidal channels; chert (beds and nodules); coarse-grained spar, breccia and travertine, dissolution has removed all evaporites in the study area	Kkke		VI	40–50	Aquifer	IP, MO, VUG, FR, BR, CV	Boxwork porosity with neospar and travertine frame
				Dolomitic[3]	Chert (absent in lower 20 feet), dolomitic mudstone to grainstone	Kkd		VII	90–130	Aquifer	IP, IC, MO, BU, VUG, FR, BP, CV	Massively bedded light gray, *Toucasia* sp., abundant
				Basal nodular[3]	Shaley, nodular limestone, burrowed mudstone, wackestone, packstone, miliolid grainstone, dolomite, contains dark, spherical textural features locally known as black rotund bodies (BRBs); caprinid, *Ceratostreon* [*Exogyra*] *texana*, miliolid, gastropods; area transition to basal nodular containing oyster beds and shale	Kkbn		VIII	40–80	Aquifer (confining unit in areas without caves)	IP, MO, BU, BP, FR, CV	Massive, nodular and mottled limestone, BRBs, and orange wisps, *Ceratostreon texana*, seeps and springs, ferns growing near contact of underlying unit
			Glen Rose Limestone	Upper	Alternating beds of burrowed wackestone, packstone, miliolid grainstone, argillaceous limestone	Kgrcb	Upper zone of the Trinity aquifer	Camp Bullis	230	Confining	BU, BP, FR, CV (occasional)	Alternating beds of limestone and argillaceous limestone, fossils rare, stairstep topography
					Dissolved evaporites, highly altered crystalline limestone and chalky mudstone, breccia, boxwork voids	Kgrue		Upper evaporite	0–10	Aquifer	IP, MO, BU, BR	Weathers to an orangish red with a pebbly texture, often has less cake growth and thicker grasses, boxwork porosity, springs and seeps
					Alternating wackestone, packstone, miliolid grainstone, argillaceous limestone, mudstone, silty mudstone at base; *Hemiaster* sp., *Nerinea* sp., *Orbitolina minuta* (Douglas, 1960), *Paracyclo golobularia, Protocardia texana, Tapes decepta, Turritella* sp., gastropods, mollusks (section not subdivided into an upper and lower unit as in Bexar and Comal Counties)	Kgrf		Fossiliferous	90–130	Semiconfining	MO, BU, FR, CV	Limestone and argillaceous limestone, *Orbitolina minuta* (Douglas, 1960)
					Dissolved evaporites, highly altered crystalline limestone and chalky mudstone, breccia, boxwork voids; Corbula beds	Kgrle		Lower evaporite	10	Aquifer	IP, MO, BU, BR	Weathers to an orangish red with a pebbly texture, often has less cake growth and thicker grasses, boxwork porosity, *Corbula* sp., springs and seeps
				Lower	Wackestone, grainstone, argillaceous wackestone, shale, evaporites; monopleurid, *Toucasia* sp., *Macrastersp., Nerinea* sp., *Orbitolina texana* (Roemer, 1852), *Paracyclo golobularia, Salenia texana*, gastropods, pecten, and pelecypods	Kgrb	Middle zone of the Trinity aquifer	Bulverde	0–40	Semiconfining	MO, BR, BP, FR	*Salenia texana* bed immediately below Corbula bed, abundant fossils including *Paracyclo golobularia, Orbitolina texana* (Roemer, 1852), *Macrastersp., Nerinia* sp., pecten, gastropods, pelecypods
					Mudstone, wackestone, argillaceous wackestone, boundstone; caprinid, monopleurid, *Toucasia* sp., *Orbitolina texana* (Roemer, 1852), gastropods, pectens, pelecypods	Kgrlb		Little Blanco	0–40	Aquifer	MO, BU, BP, FR	Limestone beds thicker and more resistive to erosion than overlying and underlying units, *Orbitolina texana* (Roemer, 1852), patch reefs
					Argillaceous wackestone, shale; *Orbitolina texana* (Roemer, 1852), gastropods, pelecypods	Kgrlc		Twin Sisters	0–40	Semiconfining; confining shale beds	IP	Thick argillaceous beds, thin shale beds, *Orbitolina texana* (Roemer, 1852), contains ponds and seeps, often little vegetation, steeper slopes often with "badlands" type weathering, thinner in areas where patch reefs are present in the underlying Doeppenschmidt HSU
					Mudstone, wackestone, packstone, grainstone, boundstone, argillaceous wackestone and packstone, miliolid grainstone; caprinid, *Toucasia* sp.	Kgrd		Doeppenschmidt	0–80	Aquifer	IP, MO, BU, BP, FR, CV	*Orbitolina texana* (Roemer, 1852), limestone beds thicker and more resistive than overlying and underlying patch reefs formed on rudist, reefal talus
					Alternating beds of argillaceous wackestone, packstone; mudstone, wackestone, packstone, grainstone, miliolid grainstone; monopleurid, *Nerinia* sp., *Orbitolina texana* (Roemer, 1852), *Tylostoma* sp., and oysters, pectens, and pelecypods	Kgrr		Rust	40–90	Semiconfining	IP, FR, CV	Forms stairstep topography with soils, *Orbitolina texana* (Roemer, 1852)
					Wackestone, packstone, grainstone, boundstone, burrows; caprinids, miliolid, *Orbitolina texana* (Roemer, 1852), *Toucasia* sp., *Trigonia* sp., *Turritella* sp., various corals, pectens, shell fragments	Kgrhc		Honey Creek	20–60	Aquifer	IP, MO, BU, BP, FR, CH, CV	Thick beds of wackestone, packstone, grainstone; corals, caprinid, *Trigonia* sp., cliff forming; outcrop often contains large limestone float with large channel and moldic porosity, caves and springs
		Pearsall	Hensell Sand		Dolomitic limestone, claystone, siltstone, terrigeneous sand; conglomerate/breccia composed of red sandstone, at base of unit; oysters, quartz geodes	Khsh	Confining unit	Hensell	0–40	Aquifer	IP, MO, SH, CV	Quartz geodes, large oyster shells, reddish sandy soil with good grass growth, red sandstone conglomerate /breccia at base
			Cow Creek Limestone		Very fine-grained to fine-grained carbonate sand (grainstone), localized crossbedding; Areas of coral and rudist boastromes (boundstone) overlain by rippled, crossbedded grainstone	Kcccc		Cow Creek	40–80	Aquifer	IP, MO, BU, VUG, BP, FR, CH, CV	Carbonate sands, crossbedding near top, boastrome composed of corals and rudist, talus slopes
					Dolomitic mudstone, wackestone, packstone; oysters							
			Hammett Shale		Upper: claystone, with siltstone lenses, overlain by fossiliferous dolomitic limestone Lower: siltstone and dolomite	Khah		Hammett	20–50	Confining	None	Holds surface water; springs at contact with Cow Creek
		Hosston	Sycamore Sand		Sand, silt, clay, and conglomerate	Kays	Lower Trinity aquifer	Sycamore	50	Aquifer	IP, BP, FR, CV	Sand, silt, and conglomerate

[1]Informal.
[2]Thickness range based on field mapping in the study area.

Geologic Framework and Hydrostratigraphy of the Edwards and Trinity Aquifers Within Hays County, Texas

By

Allan K. Clark, Diana E. Pedraza, and Robert R. Morris

2018

Any use of trade, product, or firm names in this publication is for descriptive purposes only and does not imply endorsement by the U.S. Government.

For sale by U.S. Geological Survey, Information Services, Box 25286, Federal Center, Denver, CO 80225, 1-888-ASK-USGS

Digital files available at https://doi.org/10.3133/sim3418

Clark, A.K., Pedraza, D.E., and Morris, R.R., 2018, Geologic framework and hydrostratigraphy of the Edwards and Trinity aquifers within Hays County, Texas: U.S. Geological Survey Scientific Investigations Map 3418, 1 sheet, scale 1:24,000, pamphlet, https://doi.org/10.3133/sim3418.

ISSN 2329-1311 (print)
ISSN 2329-132X (online)
https://doi.org/10.3133/sim3418

I SBN 978- 1- 4113- 4262- 0

Printed on recycled paper

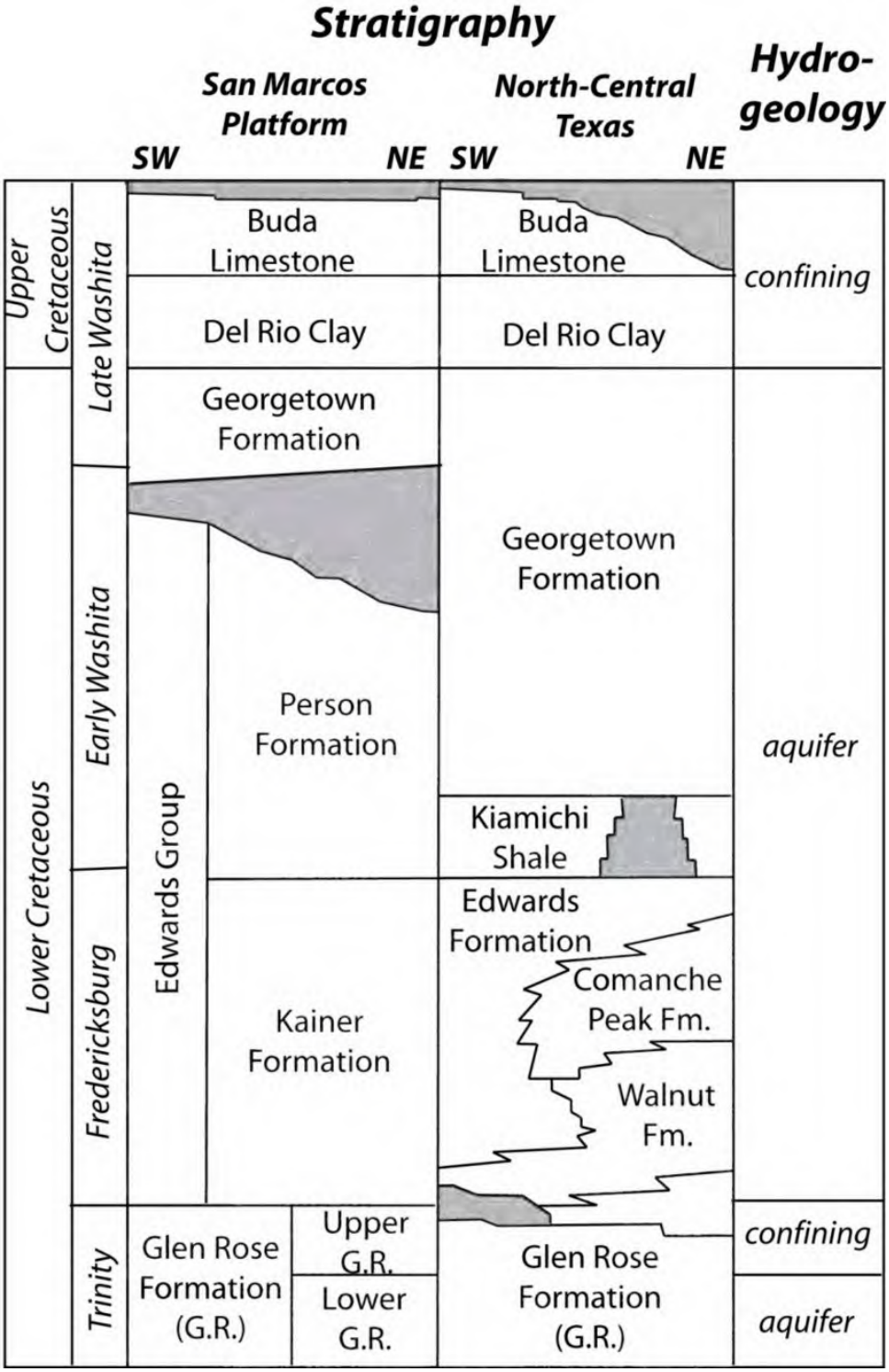
Stratigraphy
San Marcos Platform
North-Central Texas
Hydro-geology
SW
NE
SW
NE
Upper Cretaceous
Lower Cretaceous
Late Washita
Early Washita
Fredericksburg
Trinity
Edwards Group
Buda Limestone
Del Rio Clay
Georgetown Formation
Person Formation
Kainer Formation
Glen Rose Formation (G.R.)
Upper G.R.
Lower G.R.
Buda Limestone
Del Rio Clay
Georgetown Formation
Kiamichi Shale
Edwards Formation
Comanche Peak Fm.
Walnut Fm.
Glen Rose Formation (G.R.)
confining
aquifer
confining
aquifer

Site Photos



Outcropping of Buda Formation along Southeast side of site.



Outcropping of Buda Formation in drainage canal



Drainage canal looking east towards Garlic Creek



Outcropping of Buda Llimestone in drainage canal



Drainage canal intersecting Garlic Creek



Outcropping at the base of Garlic Creek at drainage canal intersection



View south across site



View east of stormwater retention pond



North end of Stormwater retention pond



View Northwest across soccer fields



View North across soccer fields showing stepped fields



Water in Garlic Creek



Water in Garlic Creek



Water in Garlic Creek



Land Bridge



Land bridge separating sections of creek



Land Bridge separating sections of creek



Relief and drainage of soccer fields





Outcropping of Buda formation





Buda Formation



Downslope drainage upland of Garlic Creek

Modification of a Previously Approved Plan

Texas Commission on Environmental Quality

for Regulated Activities on the Edwards Aquifer Recharge Zone and Transition Zone and Relating to 30 TAC 213.4(j), Effective June 1, 1999

To ensure that the application is administratively complete, confirm that all fields in the form are complete, verify that all requested information is provided, consistently reference the same site and contact person in all forms in the application, and ensure forms are signed by the appropriate party.

Note: Including all the information requested in the form and attachments contributes to more streamlined technical reviews.

Signature

To the best of my knowledge, the responses to this form accurately reflect all information requested concerning the proposed regulated activities and methods to protect the Edwards Aquifer. This request for a **Modification of a Previously Approved Plan** is hereby submitted for TCEQ review and executive director approval. The request was prepared by:

Print Name of Customer/Agent: Jordan T. Hurta, P.E.

Date: 8/8/2025

Signature of Customer/Agent:



Project Information

1. Current Regulated Entity Name: BUDA SPORTSPLEX
   Original Regulated Entity Name: BUDA SPORTSPLEX AND COMMERCIAL LOTS
   Regulated Entity Number(s) (RN): 104986021
   Edwards Aquifer Protection Program ID Number(s): 11001438
   ☒ The applicant has not changed and the Customer Number (CN) is: 600739866
   ☐ The applicant or Regulated Entity has changed. A new Core Data Form has been provided.

2. ☒ **Attachment A: Original Approval Letter and Approved Modification Letters**. A copy of the original approval letter and copies of any modification approval letters are attached.

3. A modification of a previously approved plan is requested for (check all that apply):
   - ☐ Physical or operational modification of any water pollution abatement structure(s) including but not limited to ponds, dams, berms, sewage treatment plants, and diversionary structures;
   - ☐ Change in the nature or character of the regulated activity from that which was originally approved or a change which would significantly impact the ability of the plan to prevent pollution of the Edwards Aquifer;
   - ☒ Development of land previously identified as undeveloped in the original water pollution abatement plan;
   - ☐ Physical modification of the approved organized sewage collection system;
   - ☐ Physical modification of the approved underground storage tank system;
   - ☐ Physical modification of the approved aboveground storage tank system.

4. ☒ Summary of Proposed Modifications (select plan type being modified). If the approved plan has been modified more than once, copy the appropriate table below, as necessary, and complete the information for each additional modification.

WPAP Modification Summary	***Approved Project***	***Proposed Modification***
Acres	65.63	65.63
Type of Development	Commercial	Commercial
Number of Residential Lots	N/A	N/A
Impervious Cover (acres)	4.48	12.54
Impervious Cover (%	6.83	19.11
Permanent BMPs	Batch Detention Pond	Batch Detention Pond
Other	Vegetative Filter Strip	Vegetative Filter Strip

SCS Modification Summary	***Approved Project***	***Proposed Modification***
Linear Feet	N/A	N/A
Pipe Diameter	N/A	N/A
Other	N/A	N/A

AST Modification Summary	***Approved Project***	***Proposed Modification***
Number of ASTs	N/A	N/A
Volume of ASTs	N/A	N/A
Other	N/A	N/A

UST Modification Summary	***Approved Project***	***Proposed Modification***
Number of USTs	N/A	N/A
Volume of USTs	N/A	N/A
Other	N/A	N/A

5. ☒ **Attachment B: Narrative of Proposed Modification**. A detailed narrative description of the nature of the proposed modification is attached. It discusses what was approved, including any previous modifications, and how this proposed modification will change the approved plan.

6. ☒ **Attachment C: Current Site Plan of the Approved Project**. A current site plan showing the existing site development (i.e., current site layout) at the time this application for modification is attached. A site plan detailing the changes proposed in the submitted modification is required elsewhere.
   - ☐ The approved construction has not commenced. The original approval letter and any subsequent modification approval letters are included as Attachment A to document that the approval has not expired.
   - ☐ The approved construction has commenced and has been completed. Attachment C illustrates that the site was constructed as approved.
   - ☐ The approved construction has commenced and has been completed. Attachment C illustrates that the site was **not** constructed as approved.
   - ☒ The approved construction has commenced and has **not** been completed. Attachment C illustrates that, thus far, the site was constructed as approved.
   - ☐ The approved construction has commenced and has **not** been completed. Attachment C illustrates that, thus far, the site was **not** constructed as approved.

7. ☐ The acreage of the approved plan has increased. A Geologic Assessment has been provided for the new acreage.
   ☒ Acreage has not been added to or removed from the approved plan.

8. ☒ Submit one (1) original and one (1) copy of the application, plus additional copies as needed for each affected incorporated city, groundwater conservation district, and county in which the project will be located. The TCEQ will distribute the additional copies to these jurisdictions. The copies must be submitted to the appropriate regional office.

WATER POLLUTION ABATEMENT PLAN ATTACHMENT A

ORIGINAL APPROVAL LETTER AND APPROVED MODIFICATION LETTERS

Kathleen Hartnett White, *Chairman*
Larry R. Soward, *Commissioner*
Glenn Shankle, *Executive Director*

TEXAS COMMISSION ON ENVIRONMENTAL QUALITY

Protecting Texas by Reducing and Preventing Pollution

January 18, 2007

Mr. Warren Ketteman
Executive Director
Buda Economic Development Corporation
P.O. Box 1650
Buda, TX 78610

Re: Edwards Aquifer, Hays County
NAME OF PROJECT: Buda Sportsplex; Northwest Corner of FM 967 and FM 1626; Buda, Texas
TYPE OF PLAN: Application for Approval of an Organized Sewage Collection System (SCS) Plan; 30 Texas Administrative Code (TAC) Chapter 213 and Chapter 317
Edwards Aquifer Protection Program File No. 06061603B

Dear Mr. Ketteman:

The Texas Commission on Environmental Quality (TCEQ) has completed its review of the organized sewage collection system plans and specifications for the referenced project submitted to this office by Cuatro Consultants, Ltd. on behalf of the Buda Economic Development Corporation on November 21, 2006. Final review of the SCS submittal was completed after additional material was received on January 11, 2007. As presented to the TCEQ, the construction documents were prepared by a Texas Licensed Professional Engineer to be in general compliance with the requirements of 30 TAC Chapter 213 and Chapter 317. Therefore, based on the Texas Licensed Professional Engineer's concurrence of compliance, the planning materials for construction of the proposed sewage collection system and pollution abatement measures are hereby approved subject to applicable state rules and the conditions in this letter. The applicant or a person affected may file with the chief clerk a motion for reconsideration of the executive director's final action on this Edwards Aquifer protection plan. A motion for reconsideration must be filed no later than 23 days after the date of this approval letter. *This approval expires two (2) years from the date of this letter unless, prior to the expiration date, more than 10 percent of construction has commenced, or an extension of time has been requested.*

A site investigation was conducted by a representative of the Austin Regional Office on September 27, 2006, to document the conditions at the site.

PROJECT DESCRIPTION

The proposed sewage collection system consists of 4,434 linear feet of 8-inch diameter SDR 26 PVC pipe, pipe for private service lateral stub outs, manholes, and appropriate appurtenances. The proposed sewage collection system will provide disposal service for commercial buildings.

The system will be connected to the existing City of Buda Wastewater Treatment Plant owned by the City of Buda for treatment and disposal. The project is located within the City of Buda and will conform with all applicable codes, ordinances, and requirements of the City of Buda.

SPECIAL CONDITIONS

I. Intentional discharges of sediment laden stormwater during construction are not allowed. If dewatering of excavated areas becomes necessary, the discharge will be filtered through appropriately selected temporary best management practices. These may include vegetative filter strips, sediment traps, rock berms, silt fence rings, etc.

II. This approval does not authorize the installation of temporary aboveground storage tanks on this project. If the contractor desires to install a temporary aboveground storage tank for use during construction, an application to modify this approval must be submitted and approved prior to installation. The application must include information related to tank location and spill containment. Refer to Standard Condition No. 3 below.

STANDARD CONDITIONS

1. Pursuant to Chapter 7 Subchapter C of the Texas Water Code, any violations of the requirements in 30 TAC Chapter 213 may result in administrative penalties.

Prior to Construction:

2. All contractors conducting regulated activities at the project location shall be provided a copy of this notice of approval. At least one complete copy of the approved SCS plan and this notice of approval shall be maintained at the project location until all regulated activities are completed.

3. Any modification to the activities described in the referenced SCS application following the date of approval may require the submittal of a plan to modify this approval, including the payment of appropriate fees and all information necessary for its review and approval.

4. The applicant must provide written notification of intent to commence construction. Notification must be submitted to the Austin Regional Office no later than 48 hours prior to commencement of the regulated activity. Written notification must include the date on which the regulated activity will commence, the name and file number of the approved organized sewage collection system plan, and the name of the prime contractor with the name and telephone number of the contact person. The executive director will use the notification to determine if the applicant is eligible for an extension.

5. Temporary erosion and sedimentation (E&S) controls, i.e., silt fences, rock berms, stabilized construction entrances, or other controls described in the approved application, must be installed prior to construction and maintained during construction. Temporary E&S controls may be removed when vegetation is established and the construction area is stabilized. The TCEQ may monitor stormwater discharges from the site to evaluate the adequacy of temporary E&S control measures. Additional controls may be necessary if excessive solids are being discharged from the site.

During Construction:

6. During the course of regulated activities related to this project, the applicant or his agent shall comply with all applicable provisions of 30 TAC Chapter 213 and Chapter 317. The applicant shall remain responsible for the provisions and conditions of this approval until such responsibility is legally transferred to another person or entity, upon which that person or entity shall assume responsibility for all provisions and conditions of this approval.

7. If sediment escapes the construction site, the sediment must be removed at a frequency sufficient to minimize offsite impacts to water quality (e.g., fugitive sediment in street being washed into surface streams or sensitive features by the next rain). Sediment must be removed from sediment traps or sedimentation ponds not later than when design capacity has been reduced by 50 percent. Litter, construction debris, and construction chemicals shall be prevented from becoming stormwater discharge pollutants.

8. If any geologic feature (caves, solution cavities, etc.) is discovered during construction, excavation, or installation of a sewer line, all regulated activities near the feature must be suspended immediately. The applicant or his agent must immediately notify the Austin Regional Office of the discovery of the feature. Regulated activities near the feature may not proceed until the executive director has reviewed and approved a plan proposed to protect the structural integrity of the pipe, the feature, and the aquifer from potentially adverse impacts to water quality. The plan must be sealed, signed, and dated by a Texas Licensed Professional Engineer.

9. The following records shall be maintained by the applicant and made available to the executive director upon request: the dates trenching activities occur, the dates when construction activities temporarily or permanently cease on a portion of the site, and the dates when stabilization measures are initiated and completed.

10. Stabilization measures shall be initiated within 14 days in portions of the site where construction activities have temporarily or permanently ceased, and construction activities will not resume within 21 days. When the initiation of stabilization measures by the 14th day is precluded by weather conditions, stabilization measures shall be initiated as soon as practicable. Where construction is initiated and abandoned, the site shall be returned to a condition such that the aquifer is protected from potential contamination.

11. No part of the system shall be used as a holding tank for a pump-and-haul operation.

After Completion of Construction:

12. Certification by a Texas Licensed Professional Engineer of the testing of sewage collection systems required by 30 TAC Chapter 213 and Chapter 317 shall be submitted to the Austin Regional Office within 30 days of test completion and prior to the new sewage collection system being put into service. The certification should include the project name as it appeared on the approved application, the file number, and two copies of a site plan sheet(s) indicating the wastewater lines that were tested and are being certified as complying with the appropriate regulations.

13. Every five years after the initial certification, the sewage collection system shall be retested. Any lines that fail the test must be repaired and retested. Certification that the system continues to meet the requirements of 30 TAC Chapter 213 and Chapter 317 shall be submitted to the Austin Regional Office. The certification should include the project name as it appeared on the approved application, the file number and two copies of a site plan sheet(s) indicating the wastewater lines that were tested and are being certified as complying with the appropriate regulations.

14. If ownership of this organized sewage collection system is legally transferred (e.g., developer to city or Municipal Utility District), the new owner(s) is required to comply with all terms of the approved Edwards Aquifer protection plan. If the new owner intends to commence any new regulated activity on the site, a new Edwards Aquifer protection plan that specifically addresses the new activity must be submitted to the executive director. Approval of the plan for the new regulated activity by the executive director is required prior to commencement of the new regulated activity.

15. This Edwards Aquifer protection plan approval or extension will expire and no extension will be granted if more than 50 percent of the total construction has not been completed within ten years from the initial approval of a plan. A new Edwards Aquifer protection plan must be submitted to the Austin Regional Office with the appropriate fees for review and approval by the executive director prior to commencing any additional regulated activities.

If you have any questions or require additional information, please contact Mr. Michael Daniels, P.E. of the Edwards Aquifer Protection Program of the Austin Regional Office at (512) 339-2929.

Sincerely,

Glenn Shankle
Executive Director
Texas Commission on Environmental Quality

GS/mjd

cc: Mr. Hugo Elizondo, P.E., Cuatro Consultants, LTD., Buda
Mr. John Trube, Mayor, City of Buda
Mr. Allen G. Walther, Director of Environmental Health, Hays County Environmental Health Department
Mr. Kirk Holland, P.G., General Manager, Barton Springs / Edwards Aquifer Conservation District
The Honorable Liz Sumter, County Judge, Hays County
Central Records, TCEQ Information Resources Division, Austin

Griffin Engineering Group, Inc.

11808 TEDFORD STREET
AUSTIN, TEXAS 78753
(512) 836-3113
(512) 836-3103 FAX
GENGINEERING@AUSTIN.RR.COM
FIRM REGISTRATION F -634

Civil Engineering
Site Analysis
Planning

RECEIVED
DEC 0 1 2014
TCEQ
AUSTIN - REGION 11

December 1, 2014

Mr. Boyd Guthrie
TCEQ Region 11
12100 Park 35 Circle
Austin, Texas 78753

RE: HAYS COMMUNITIES BRANCH YMCA
465 BUDA SPORTSPLEX DRIVE, BUDA, TEXAS

Dear Mr. Guthrie,

Per our discussion about development on part of the above site, please find enclosed the information about this project. The particulars of the project is as follows:

1. The initial Hays County YMCA project was approved in a WPAP submitted in 2006 for the Buda Sportsplex Project. Detention for the YMCA was provided on the YMCA site, however the water quality requirements were met off site in the Wet Pond A within the Buda Sportsplex project. The approved impervious cover level for the YMCA site was 25%. Some of the project was not constructed and is highlighted on the Original Land Use Plan sheet enclosed. This consisted of a future gym and some of the proposed parking.

2. Currently a new application is on file with the City of Buda for improvements to the YMCA site. This includes demolition of the existing basketball facility, addition of twenty one (21) parking spaces and a 13,180 square foot building addition. The impervious cover level for these improvements is 24.9% (a decrease from original improved amount of 25%).

For your information I have enclosed pertinent sheets from both the Buda Sportsplex project and the YMCA project. If you need additional information, please do not hesitate to contact me.

Sincerely,

Gregory Griffin, P.E.



EDAQ_Hays County_Buda Sportsplex Sections 1 and 2_CO_20141201_Field Change

This is a file update for a change from the associated Hays County YMCA impervious cover with a net decrease from the approved impervious cover.

RECEIVED
DEC 11 2014
TCEQ
CENTRAL FILE ROOM

Brooke Paup, *Chairwoman*
Bobby Janecka, *Commissioner*
Catarina R. Gonzales, *Commissioner*
Kelly Keel, *Executive Director*

TEXAS COMMISSION ON ENVIRONMENTAL QUALITY

Protecting Texas by Reducing and Preventing Pollution

May 2, 2025
Revised: May 9, 2025

Anthony Host
City of Buda
405 East Loop Street
Buda, Texas 78610-4003

Re: Modification of an Approved Water Pollution Abatement Plan (WPAP-MOD)
Buda Sportsplex; Located 310 Buda Sportsplex Drive; Buda, Hays County, Texas
Edwards Aquifer Protection Program ID: 11004363, Regulated Entity No. RN104986021

Dear Anthony Host:

The Texas Commission on Environmental Quality (TCEQ) has completed its review on the application for the above-referenced project submitted to the Edwards Aquifer Protection Program (EAPP) by Garza EMC on behalf of the applicant, City of Buda, on March 11, 2025. Final review of the application was completed after additional material was received on April 23, 2025 and April 30, 2025.

As presented to the TCEQ, the application was prepared in general compliance with the requirements of 30 Texas Administrative Codes (TAC) Chapter §213. The permanent best management practices (BMPs) and measures represented in the application were prepared by a Texas licensed professional engineer (PE). All construction plans and design information were sealed, signed, and dated by a Texas licensed PE. Therefore, the application for the construction of the proposed project and methods to protect the Edwards Aquifer are **approved,** subject to applicable state rules and the conditions in this letter.

This approval expires two years from the date of this letter, unless, prior to the expiration date, more than 10 percent of the construction has commenced on the project or an extension of time has been officially requested. This approval or extension will expire, and no extension will be granted if more than 50 percent of the project has not been completed within ten years from the date of this letter.

The applicant or a person affected may file with the chief clerk a motion for reconsideration of the executive director's final action on this Edwards Aquifer protection plan. A motion for reconsideration must be filed in accordance with 30 TAC §50.139.

BACKGROUND

The Buda Sportsplex Sections 1 and 2 WPAP approved by letter dated October 13, 2006 (EAPP ID No. 11-06061603A) included a wet basin to provide water quality treatment.

PROJECT DESCRIPTION

The proposed non-residential project will have an area of approximately 65.63 acres. The modification includes removal of a water fountain, dog park, gravel and portions of the parking lot and the construction of four baseball fields, batting cages, pickle ball courts, pro shop, sidewalk concession stands, maintenance shed, additional parking and associated utilities. The net increase in impervious cover will be 4.50 acres for a total of 7.63 acres (11.9 percent).

Project wastewater will be disposed of by conveyance to the existing City of Buda Wastewater Treatment Plant.

PERMANENT POLLUTION ABATEMENT MEASURES

To prevent the pollution of stormwater runoff originating on-site or upgradient of the site and potentially flowing across and off the site after construction, a new batch detention basin, 4 new engineered vegetative filter strips and an existing wet basin (EAPP ID No. 11-06061603A) designed using the TCEQ technical guidance, *RG-348, Complying with the Edwards Aquifer Rules: Technical Guidance on Best Management Practices,* will be constructed to treat stormwater runoff. The required total suspended solids (TSS) treatment for this project is 4,039 pounds of TSS generated from the impervious cover of 4.50 acres. The approved permanent BMP and measures meet the required 80 percent removal of the increased load in TSS caused by the project.

The permanent BMP shall be operational prior to occupancy or use of the proposed project. Inspection, maintenance, repair, and retrofit of the permanent BMP shall be in accordance with the approved application.

GEOLOGY

According to the Geologic Assessment (GA) included with the application, the surficial units of the site are the Georgetown Formation (Kg), and the Buda Limestone Formation (Kb). No sensitive geologic features were identified in the GA. The site assessment conducted on April 11, 2025, by TCEQ staff determined the site to be generally as described by the GA.

SPECIAL CONDITIONS

I. This modification is subject to all the special and standard conditions listed in the approval letters dated October 13, 2006 (EAPP ID No. 11-06061603A).

STANDARD CONDITIONS

1. The plan holder (applicant) must comply with all provisions of 30 TAC Chapter §213 and all technical specifications in the approved plan. The plan holder should also acquire and comply with additional and separate approvals, permits, registrations or authorizations from other TCEQ Programs (i.e., Stormwater, Water Rights, Dam Safety, Underground Injection Control) as required based on the specifics of the plan.

2. In addition to the rules of the Commission, the plan holder must also comply with state and local ordinances and regulations providing for the protection of water quality as applicable.

Prior to Commencement of Construction:

3. Within 60 days of receiving written approval of an Edwards Aquifer protection plan, the plan holder must submit to the EAPP proof of recordation of notice in the county deed records, with the volume and page number(s) of the county record. A description of the property boundaries shall be included in the deed recordation in the county deed records. TCEQ form, Deed Recordation Affidavit (TCEQ-0625), may be used.

4. The plan holder of any approved Edwards Aquifer protection plan must notify the EAPP and obtain approval from the executive director prior to initiating any modification to the activities described in the referenced application following the date of the approval.

5. The plan holder must provide written notification of intent to commence construction, replacement, or rehabilitation of the referenced project. Notification must be submitted to

the EAPP no later than 48 hours prior to commencement of the regulated activity. Notification must include the date on which the regulated activity will commence, the name of the approved plan and program ID number for the regulated activity, and the name of the prime contractor with the name and telephone number of the contact person.

6. Temporary erosion and sedimentation (E&S) controls as described in the referenced application, must be installed prior to construction, and maintained during construction. Temporary E&S controls may be removed when vegetation is established, and the construction area is stabilized. The TCEQ may monitor stormwater discharges from the site to evaluate the adequacy of temporary E&S control measures. Additional controls may be necessary if excessive solids are being discharged from the site.

7. All borings with depths greater than or equal to 20 feet must be plugged with non-shrink grout from the bottom of the hole to within three (3) feet of the surface. The remainder of the hole must be backfilled with cuttings from the boring or gravel. All borings less than 20 feet must be backfilled with cuttings from the boring. All borings must be backfilled or plugged within four (4) days of completion of the drilling operation.

During Construction:

8. This approval does not authorize the installation of temporary or permanent aboveground storage tanks on this project that will have a total storage capacity of five hundred gallons or more of static hydrocarbons or hazardous substances without prior approval of an Aboveground Storage Tank facility application.

9. If any sensitive feature is encountered during construction, replacement, or rehabilitation on this project, all regulated activities must be **immediately** suspended near it and notification must be made to TCEQ EAPP staff. Temporary BMPs must be installed and maintained to protect the feature from pollution and contamination. Regulated activities near the feature may not proceed until the executive director has reviewed and approved the methods proposed to protect the feature and the aquifer from potentially adverse impacts to water quality.

10. All water wells, including injection, dewatering, and monitoring wells shall be identified in the geologic assessment and must be in compliance with the requirements of the Texas Department of Licensing and Regulation 16 TAC Chapter §76 and all other locally applicable rules, as appropriate.

11. If sediment escapes the construction site, the sediment must be removed at a frequency sufficient to minimize offsite impacts to water quality (e.g., fugitive sediment in street being washed into surface streams or sensitive features by the next rain). Sediment must be removed from sediment traps or sedimentation ponds not later than when design capacity has been reduced by 50 percent. Litter, construction debris, and construction chemicals shall be prevented from becoming stormwater discharge pollutants.

12. Intentional discharges of sediment laden water are not allowed. If dewatering becomes necessary, the discharge must be filtered through appropriately selected BMPs.

13. The following records shall be maintained and made available to the executive director upon request: the dates when major grading activities occur, the dates when construction activities temporarily or permanently cease on a portion of the site, and the dates when stabilization measures are initiated.

14. Stabilization measures shall be initiated as soon as practicable in portions of the site where construction activities have temporarily or permanently ceased, and construction activities will not resume within 21 days. When the initiation of stabilization measures by the 14th

day is precluded by weather conditions, stabilization measures shall be initiated as soon as practicable.

After Completion of Construction:

15. Owners of permanent BMPs and temporary measures must ensure that the BMPs and measures are constructed and function as designed. A Texas licensed PE **must certify** in writing that the permanent BMPs or measures were constructed as designed. The certification letter must be submitted to the EAPP within 30 days of site completion.

16. The applicant shall be responsible for maintaining the permanent BMPs after construction until such time as the maintenance obligation is either assumed in writing by another entity having ownership or control of the property or the ownership of the property is transferred to the entity. A copy of the transfer of responsibility must be filed with the executive director through the EAPP within 30 days of the transfer. TCEQ form, Change in Responsibility for Maintenance on Permanent BMPs and Measures (TCEQ-10263), may be used.

The holder of the approved Edwards Aquifer protection plan is responsible for compliance with Chapter §213 and any condition of the approved plan through all phases of plan implementation. Failure to comply with any condition within this approval letter is a violation of Chapter §213 and is subject to administrative rule or orders and penalties as provided under §213.10 of this title (relating to Enforcement). Such violations may also be subject to civil penalties and injunction. Upon legal transfer of this property, the new owner is required to comply with all terms of the approved Edwards Aquifer protection plan.

This action is taken as delegated by the executive director of the Texas Commission on Environmental Quality. If you have any questions or require additional information, please contact Bob Castro, P.E. of the Edwards Aquifer Protection Program at 512-239-6992 or the regional office at 512-339-2929.

Sincerely,

Monica Reyes

Monica Reyes, Section Manager
Edwards Aquifer Protection Program
Texas Commission on Environmental Quality

MR/rbc

cc: Mauricio Silveyra, P.E., Garza EMC

WATER POLLUTION ABATEMENT PLAN ATTACHMENT B

NARRATIVE OF PROPPOSED MODIFICATION

Attachment B: Narrative of Proposed Modification

This narrative outlines the proposed modification to the existing development at 310 Buda Sportsplex Dr., which encompasses 65.63 acres of an outdoor sportsplex currently approved for various recreational facilities. Previously, the site was developed with amenities and infrastructure that effectively manages offsite drainage flows from adjacent properties.

The proposed modification seeks to enhance the facility by adding four softball fields, 554 surface parking spaces, concrete walkways, and additional concession stands, along with batting cages, dedicated pickleball courts, and sand volleyball courts.

These enhancements aim to improve visitor experience and accessibility, significantly expanding the recreational offerings available. Furthermore, the incorporation of one Batch Detention Pond and Vegetative Filter Strip will address water quality management, ensuring environmental sustainability in line with the site's designation within the Edwards Aquifer Recharge Zone. This modification builds upon the approved plan by increasing functionally while adhering to environmental standards.

WATER POLLUTION ABATEMENT PLAN ATTACHMENT C

CURRENT SITE PLAN OF THE APPROVAL PROJECT

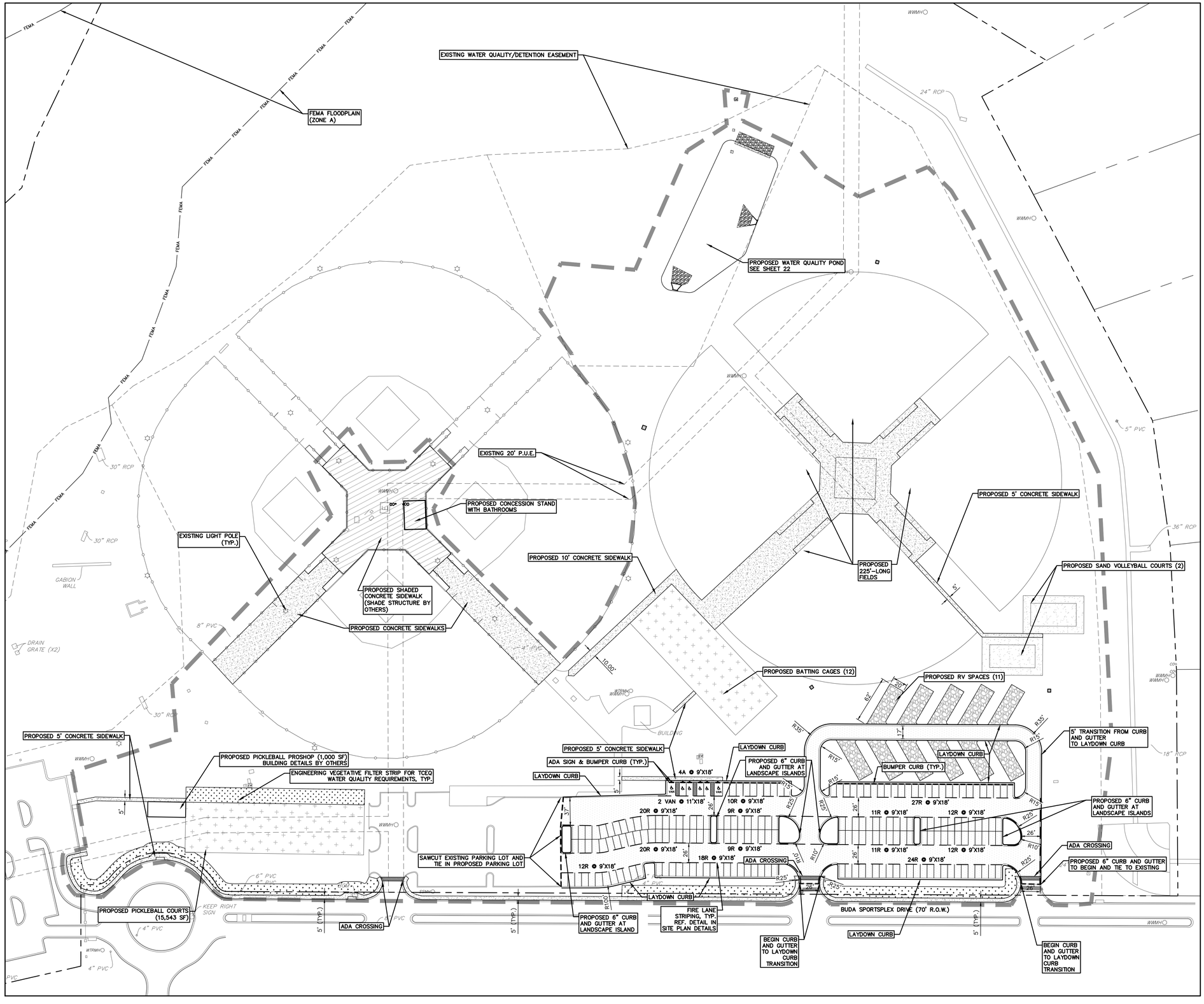

60 0 30 60 120

1" = 60'

LEGEND

EXISTING	PROPOSED	DESCRIPTION
		PROPERTY LINE / R.O.W. LINE
(###)		RECORD INFORMATION
		LIGHT POLE
		GROUND LIGHT
		POWER POLE
		DOWN GUY
WTRMH		WATER MANHOLE
		WATER LINE MARKER
CATV		UNDERGROUND CABLE MARKER
GASM		UNDERGROUND GAS LINE MARKER
UGTM		UNDERGROUND TELEPHONE MARKER
GASR		GAS RISER
TELR		TELEPHONE RISER
SPR		SPRINKLER CONTROL BOX
	SW	SWITCH GEAR & PAD
	T	TRANSFORMER (SIZE VARIES)
		FIRE HYDRANT
		WATER VALVE
		WATER METER
		WATER METER VAULT (SIZE VARIES)
		CABLE TV RISER
		ELECTRIC BOX
	EM	ELECTRIC METER
	GM	GAS METER
		GAS VALVE
TCB	TCB	TRAFFIC CONTROL BOX
TSP	TSP	TRAFFIC SIGNAL POST
		GRATE INLET
		CURB INLET (SIZE VARIES)
		GREASE TRAP (SIZE VARIES)
EMH		ELECTRIC MANHOLE (SIZE VARIES)
WWMH		WASTEWATER MANHOLE (SIZE VARIES)
SSMH		STORMSEWER MANHOLE (SIZE VARIES)
TMH	TMH	TELEPHONE MANHOLE (SIZE VARIES)
CO	CO	WASTEWATER CLEANOUT
X	X	WIRE FENCE
//	//	WOOD FENCE
		CHAIN LINK FENCE
	D	DUMPSTER
		CURB & GUTTER
		LAYDOWN/RIBBON CURB
		EDGE OF PAVEMENT
		FIRE LANE DESIGNATION
		HANDICAP ACCESS ROUTE
		CONCRETE SIDEWALKS
		WALL
		SIGN
		WHEELSTOP
		BOLLARD
	FFE	FINISH FLOOR ELEVATION
R @ 9.0'	R @ 9.0'	PARKING COUNT (REGULAR SPACES)
HC @ 9.0'	HC @ 9.0'	PARKING COUNT (HANDICAP SPACES)
P @ 9.0'	P @ 9.0'	PARKING COUNT (PARALLEL SPACES)
		HANDICAP SPACE
		BIKE PARKING
		BARRICADE
		LIMITS OF CONSTRUCTION

PAVING HATCH LEGEND

PROPOSED	DESCRIPTION
	ASPHALT PAVEMENT (SEE PAVEMENT DESIGN NOTES)
	CONCRETE SIDEWALK WITH SHADE STRUCTURE
	CONCRETE SIDEWALK (COA DTL. 432S-1)
	IMPERVIOUS GRAVEL PADS
	PERVIOUS SAND COURTS
	IMPERVIOUS ATHLETIC FACILITY PADS
	VEGETATIVE FILTER STRIPS

PAVEMENT DESIGN:

1. CONTRACTOR TO REFER TO GEOTECHNICAL RECOMMENDATIONS FOR PAVEMENT DESIGN, BY B2Z ENGINEERING, LLC, DATED DECEMBER 11, 2024.
2. CONTRACTOR IS ALSO RESPONSIBLE TO VERIFY THAT THE REPORT HAS NOT BEEN MODIFIED PRIOR TO CONSTRUCTION.
3. PAVEMENT CROSS SECTIONS SHALL BE AS FOLLOWS PER GEOTECHNICAL REPORT.
   - 3.1. FLEXIBLE PAVEMENT
     - 3.1.1. DENSE GRADED HOT-MIX ASPHALT SURFACE COURSE: 2.0 INCHES
     - 3.1.2. FLEXIBLE BASE (W/ PRIME COAT ATOP BASE): 8.0 INCHES
     - 3.1.3. STABILIZED SUBGRADE: 8.0 INCHES

NOTES:

1. THE CITY OF BUDA DOES NOT DESIGNATE PARKING REQUIREMENTS FOR PUBLIC PARKS OR PLAY FIELDS.
2. THE SITE IS ZONED R-2.
3. IMPERVIOUS COVER IS LIMITED TO 15% IN THE EDWARDS AQUIFER RECHARGE ZONE PER THE CITY OF BUDA UNIFIED DEVELOPMENT CODE. THE TOTAL IMPERVIOUS COVER ONSITE IS 9.55%.
4. FLOOR OR GROUND SURFACES ALONG ACCESSIBLE ROUTES MUST BE STABLE, FIRM AND SLIP RESISTANT (TAS 302.1).
5. THE RUNNING SLOPE ON ACCESSIBLE ROUTES MAY NOT EXCEED 1:20 UNLESS DESIGNED AS A RAMP (TAS 403.3).
6. THE MAXIMUM RUNNING SLOPE OF A RAMP IN NEW CONSTRUCTION IS 1:12 (TAS 405.2). THE MAXIMUM RISE FOR ANY RAMP RUN IS 30" (TAS 405.6).
7. ACCESSIBLE ROUTES AND RAMPS MUST HAVE A CROSS SLOPE NO GREATER THAN 1:48 (TAS 403.3/405.3).
8. SLOPES ON ACCESSIBLE PARKING SPACES AND ASSOCIATED ACCESS AISLES MAY NOT EXCEED 1:48 (TAS 502.4).
9. UNLESS OTHERWISE NOTED, ALL DIMENSION AREA MEASURED TO FACE OF CURB.
10. ALL PARKING CURB RADII ARE 3.0' AS MEASURED TO FACE OF CURB EXCEPT WHERE NOTED OTHERWISE.
11. UNLESS OTHERWISE NOTED, PARKING LOT CURB TO BE LAYDOWN CURB.

REVISION | NO. | DATE

garza
7708 Rialto Blvd., Suite 125
Austin, Texas 78735
Tel: (512) 298-2284 Fax (512) 298-2592
TBPE F-14658 TBPLS 10194693

Garza EMC, LLC © Copyright 2025

STATE OF TEXAS
MAURICIO SILVEYRA
142987
LICENSED PROFESSIONAL ENGINEER
01/17/2025

SITE AND PAVING PLAN

CITY OF BUDA SPORTSPLEX
310 BUDA SPORTSPLEX DRIVE

CITY OF BUDA

DRAWN BY: TD, MS
DESIGNED BY: TD, MS
QA / QC: BB
PROJECT NO.: 100758-00009

SHEET 09 OF 26

V:\100758-00009\Civil\00-CAD\100758-00009-SITE.dwg modified by tdemercado on Jan 16, 25 4:17 PM

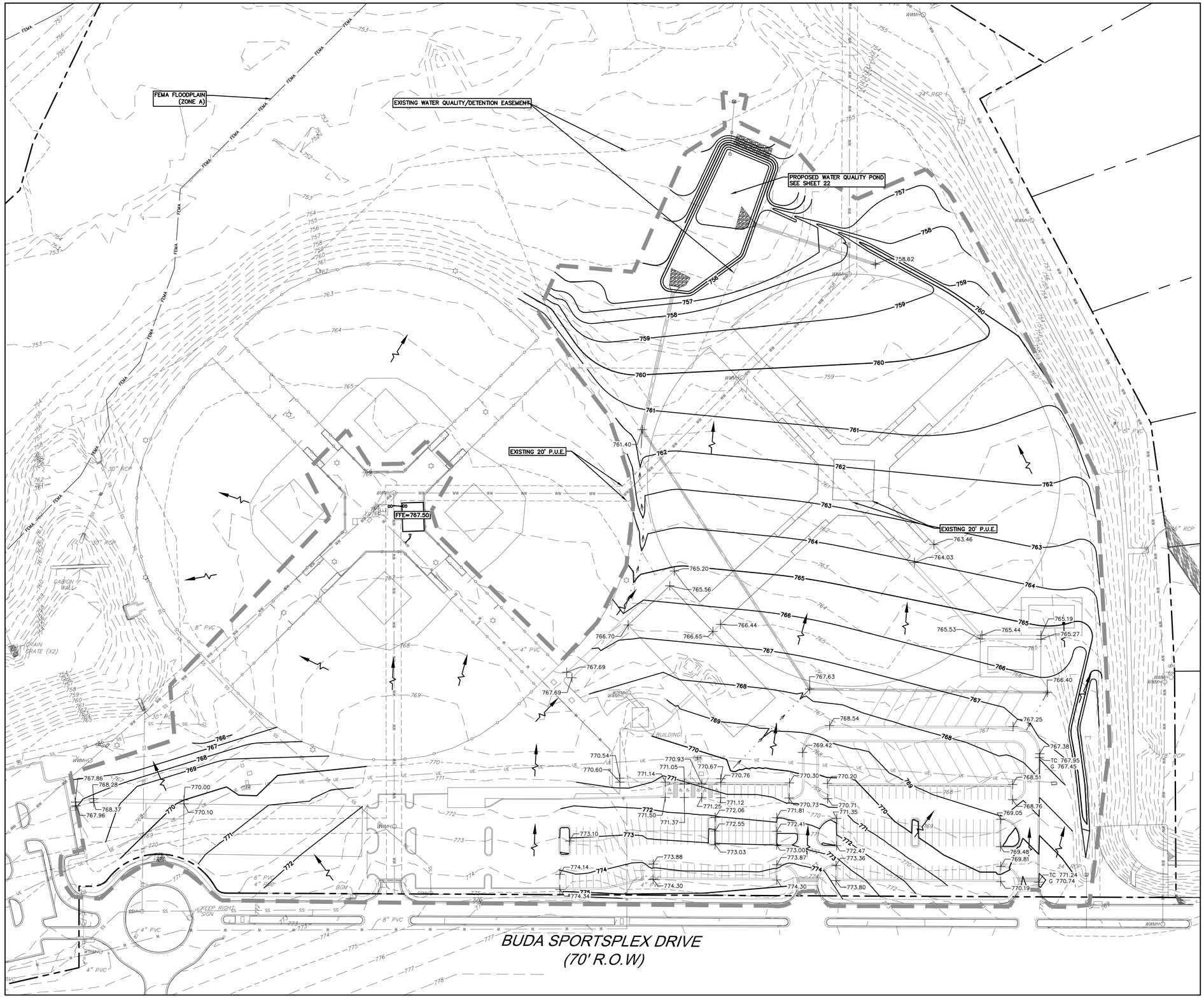

60 0 30 60 120
1" = 60'

LEGEND

EXISTING	PROPOSED	DESCRIPTION
		PROPERTY LINE / R.O.W. LINE
(XXXX)		RECORD INFORMATION
		LIGHT POLE
		GROUND LIGHT
		POWER POLE
		DOWN GUY
WTRMH		WATER MANHOLE
		WATER LINE MARKER
CMKR		UNDERGROUND CABLE MARKER
GMKR		UNDERGROUND GAS LINE MARKER
UGTM		UNDERGROUND TELEPHONE MARKER
GRSR		GAS RISER
TRSR		TELEPHONE RISER
SPC		SPRINKLER CONTROL BOX
	SW	SWITCH GEAR & PAD
	T	TRANSFORMER (SIZE VARIES)
		FIRE HYDRANT
		WATER VALVE
		WATER METER
		WATER METER VAULT (SIZE VARIES)
		CABLE TV RISER
		ELECTRIC BOX
		ELECTRIC METER
		GAS METER
		GAS VALVE
TCB	TCB	TRAFFIC CONTROL BOX
TSP	TSP	TRAFFIC SIGNAL POST
		GRATE INLET
		CURB INLET (SIZE VARIES)
		GREASE TRAP (SIZE VARIES)
EMH		ELECTRIC MANHOLE (SIZE VARIES)
WWMH		WASTEWATER MANHOLE (SIZE VARIES)
SSMH		STORMSEWER MANHOLE (SIZE VARIES)
TMH	TMH	TELEPHONE MANHOLE (SIZE VARIES)
CO	CO	WASTEWATER CLEANOUT
X	X	WIRE FENCE
//	//	WOOD FENCE
		CHAIN LINK FENCE
	D	DUMPSTER
		CURB & GUTTER
		EDGE OF PAVEMENT
		CONCRETE SIDEWALKS
		WALL
		LIMITS OF CONSTRUCTION
678	678	CONTOUR
SS		STORMSEWER LINE
W		WATER LINE
		FIRE LINE
WW		WASTEWATER LINE
G		GAS LINE
UE	UE	UNDERGROUND ELECTRIC LINE
OE	OE	OVERHEAD ELECTRIC LINE
OE	UT	UNDERGROUND TELEPHONE LINE
UC	UC	UNDERGROUND CABLE AND INTERNET
U-COMM	U-COMM	UNDERGROUND TELECOMMUNICATIONS
		HANDICAP ACCESS ROUTE
		SIGN
		WHEELSTOP
		BOLLARD
	FFE	FINISH FLOOR ELEVATION
		HANDICAP SPACE
		BIKE PARKING
		SWALE
		DIRECTION OF FLOW
1311		TREE TO BE SAVED
1311		HERITAGE / MATURE TREE
	HP	HIGH POINT
	TW	TOP OF WALL
	TC	TOP OF CURB
	G	GUTTER
701.33	701.33	SPOT ELEVATION

garza EMC
7708 Rialto Blvd., Suite 125
Austin, Texas 78735
Tel. (512) 298-3284 Fax (512) 298-2592
TBPE # F-14629

Garza EMC, LLC © Copyright 2025

NO.	DATE	REVISION

STATE OF TEXAS
MAURICIO SILVEYRA
142987
LICENSED PROFESSIONAL ENGINEER
01/17/2025

GRADING PLAN

CITY OF BUDA SPORTSPLEX
310 BUDA SPORTSPLEX DRIVE

CITY OF BUDA

DRAWN BY: TD, MS
DESIGNED BY: TD, MS
QA / QC: BB
PROJECT NO.: 100758-00009

SHEET
15
OF 26

V:\100758-00009\Civil\00-CAD\100758-00009-GRAD.dwg modified by tdemercado on Jan 10, 25 11:44 AM

Water Pollution Abatement Plan Application

Texas Commission on Environmental Quality

for Regulated Activities on the Edwards Aquifer Recharge Zone and Relating to 30 TAC §213.5(b), Effective June 1, 1999

To ensure that the application is administratively complete, confirm that all fields in the form are complete, verify that all requested information is provided, consistently reference the same site and contact person in all forms in the application, and ensure forms are signed by the appropriate party.

Note: Including all the information requested in the form and attachments contributes to more streamlined technical reviews.

Signature

To the best of my knowledge, the responses to this form accurately reflect all information requested concerning the proposed regulated activities and methods to protect the Edwards Aquifer. This **Water Pollution Abatement Plan Application Form** is hereby submitted for TCEQ review and Executive Director approval. The form was prepared by:

Print Name of Customer/Agent: Jordan T. Hurta

Date: 8/8/2025

Signature of Customer/Agent:

Jordan Hurta
8/8/2025

Regulated Entity Name: BUDA SPORTSPLEX

Regulated Entity Information

1. The type of project is:

   ☐ Residential: Number of Lots:_____
   ☐ Residential: Number of Living Unit Equivalents:_____
   ☒ Commercial
   ☐ Industrial
   ☐ Other:_____

2. Total site acreage (size of property):65.63

3. Estimated projected population:N/A

4. The amount and type of impervious cover expected after construction are shown below:

Table 1 - Impervious Cover Table

Impervious Cover of Proposed Project	Sq. Ft.	Sq. Ft./Acre	Acres
Structures/Rooftops	9,840	÷ 43,560 =	0.22
Parking	234,838	÷ 43,560 =	5.39
Other paved surfaces	232,988	÷ 43,560 =	5.35
Total Impervious Cover	546,242	÷ 43,560 =	12.54

Total Impervious Cover 12.54 **÷ Total Acreage** 65.63 **X 100 =** 19.11**% Impervious Cover**

5. ☒ **Attachment A - Factors Affecting Surface Water Quality**. A detailed description of all factors that could affect surface water and groundwater quality that addresses ultimate land use is attached.

6. ☒ Only inert materials as defined by 30 TAC §330.2 will be used as fill material.

For Road Projects Only

Complete questions 7 - 12 if this application is exclusively for a road project.

7. Type of project:

   ☐ TXDOT road project.
   ☐ County road or roads built to county specifications.
   ☐ City thoroughfare or roads to be dedicated to a municipality.
   ☐ Street or road providing access to private driveways.

8. Type of pavement or road surface to be used:

   ☐ Concrete
   ☐ Asphaltic concrete pavement
   ☐ Other: _____

9. Length of Right of Way (R.O.W.): _____ feet.

   Width of R.O.W.: _____ feet.
   L x W = _____ Ft^2 ÷ 43,560 Ft^2/Acre = _____ acres.

10. Length of pavement area: _____ feet.

    Width of pavement area: _____ feet.
    L x W = _____ Ft^2 ÷ 43,560 Ft^2/Acre = _____ acres.
    Pavement area _____ acres ÷ R.O.W. area _____ acres x 100 = _____% impervious cover.

11. ☐ A rest stop will be included in this project.

    ☐ A rest stop will not be included in this project.

12. ☐ Maintenance and repair of existing roadways that do not require approval from the TCEQ Executive Director. Modifications to existing roadways such as widening roads/adding shoulders totaling more than one-half (1/2) the width of one (1) existing lane require prior approval from the TCEQ.

Stormwater to be generated by the Proposed Project

13. ☒ **Attachment B - Volume and Character of Stormwater**. A detailed description of the volume (quantity) and character (quality) of the stormwater runoff which is expected to occur from the proposed project is attached. The estimates of stormwater runoff quality and quantity are based on the area and type of impervious cover. Include the runoff coefficient of the site for both pre-construction and post-construction conditions.

Wastewater to be generated by the Proposed Project

14. The character and volume of wastewater is shown below:

100% Domestic	_____Gallons/day
_____% Industrial	_____Gallons/day
_____% Commingled	_____Gallons/day

TOTAL gallons/day 34,560 (24 GPM)

15. Wastewater will be disposed of by:

☐ On-Site Sewage Facility (OSSF/Septic Tank):

☐ **Attachment C - Suitability Letter from Authorized Agent**. An on-site sewage facility will be used to treat and dispose of the wastewater from this site. The appropriate licensing authority's (authorized agent) written approval is attached. It states that the land is suitable for the use of private sewage facilities and will meet or exceed the requirements for on-site sewage facilities as specified under 30 TAC Chapter 285 relating to On-site Sewage Facilities.

☐ Each lot in this project/development is at least one (1) acre (43,560 square feet) in size. The system will be designed by a licensed professional engineer or registered sanitarian and installed by a licensed installer in compliance with 30 TAC Chapter 285.

☒ Sewage Collection System (Sewer Lines):

☒ Private service laterals from the wastewater generating facilities will be connected to an existing SCS.

☐ Private service laterals from the wastewater generating facilities will be connected to a proposed SCS.

☒ The SCS was previously submitted on January 11, 2007.

☐ The SCS was submitted with this application.

☐ The SCS will be submitted at a later date. The owner is aware that the SCS may not be installed prior to Executive Director approval.

☒ The sewage collection system will convey the wastewater to the City of Buda (name) Treatment Plant. The treatment facility is:

☒ Existing.
☐ Proposed.

16. ☒ All private service laterals will be inspected as required in 30 TAC §213.5.

Site Plan Requirements

Items 17 – 28 must be included on the Site Plan.

17. ☒ The Site Plan must have a minimum scale of 1" = 400'.

Site Plan Scale: 1" = 200'.

18. 100-year floodplain boundaries:

☒ Some part(s) of the project site is located within the 100-year floodplain. The floodplain is shown and labeled.
☐ No part of the project site is located within the 100-year floodplain.
The 100-year floodplain boundaries are based on the following specific (including date of material) sources(s): _____

19. ☒ The layout of the development is shown with existing and finished contours at appropriate, but not greater than ten-foot contour intervals. Lots, recreation centers, buildings, roads, open space, etc. are shown on the plan.

☐ The layout of the development is shown with existing contours at appropriate, but not greater than ten-foot intervals. Finished topographic contours will not differ from the existing topographic configuration and are not shown. Lots, recreation centers, buildings, roads, open space, etc. are shown on the site plan.

20. All known wells (oil, water, unplugged, capped and/or abandoned, test holes, etc.):

☐ There are _____ (#) wells present on the project site and the locations are shown and labeled. (Check all of the following that apply)

☐ The wells are not in use and have been properly abandoned.
☐ The wells are not in use and will be properly abandoned.
☐ The wells are in use and comply with 16 TAC §76.

☒ There are no wells or test holes of any kind known to exist on the project site.

21. Geologic or manmade features which are on the site:

☐ All sensitive geologic or manmade features identified in the Geologic Assessment are shown and labeled.
☒ No sensitive geologic or manmade features were identified in the Geologic Assessment.
☐ **Attachment D - Exception to the Required Geologic Assessment**. A request and justification for an exception to a portion of the Geologic Assessment is attached.

22. ☒ The drainage patterns and approximate slopes anticipated after major grading activities.

23. ☒ Areas of soil disturbance and areas which will not be disturbed.

24. ☒ Locations of major structural and nonstructural controls. These are the temporary and permanent best management practices.

25. ☒ Locations where soil stabilization practices are expected to occur.

26. ☒ Surface waters (including wetlands).

☐ N/A

27. ☐ Locations where stormwater discharges to surface water or sensitive features are to occur.

☐ There will be no discharges to surface water or sensitive features.

28. ☒ Legal boundaries of the site are shown.

Administrative Information

29. ☒ Submit one (1) original and one (1) copy of the application, plus additional copies as needed for each affected incorporated city, groundwater conservation district, and county in which the project will be located. The TCEQ will distribute the additional copies to these jurisdictions. The copies must be submitted to the appropriate regional office.

30. ☒ Any modification of this WPAP will require Executive Director approval, prior to construction, and may require submission of a revised application, with appropriate fees.

WATER POLLUTION ABATEMENT PLAN ATTACHMENT A

FACTORS AFFECTING SURFACE QUALITY

Attachment A: Factors Affecting Surface Water Quality

Factors affecting surface water quality include oils, grease, and other substances typically associated with driving areas. The surface runoff will be treated as required by TCEQ regulations for projects located over the Edwards Aquifer Recharge Zone.

The proposed development includes adding concrete and several courts and stands. The redevelopment of the Buda Sportsplex will increase the impervious cover of the site, therefore, increasing the peak flow runoff on the site. The proposed improvements provide 19.11% of impervious cover.

A Batch Detention Basin and Vegetative Filter Strips are being proposed to treat site runoff. The pond meets requirements for TCEQ water quality measures over the Edwards Aquifer Recharge Zone and the requirements of the City of Buda.

WATER POLLUTION ABATEMENT PLAN ATTACHMENT B

VOLUME AND CHARACTER OF STORMWATER

Attachment B: Volume and Character of Stormwater

A Batch Detention Basin with a volume of 205,389 cubic feet is proposed on site to treat the new impervious cover. Runoff will sheet flow across the site and be conveyed to the pond through the proposed storm sewer system. The proposed design features meet TCEQ's current requirements for BMP's located within the Edwards Aquifer Recharge Zone.

Reference the Drainage Area Maps included for additional information and complete calculations.

Temporary Stormwater Section

Texas Commission on Environmental Quality

for Regulated Activities on the Edwards Aquifer Recharge Zone and Relating to 30 TAC §213.5(b)(4)(A), (B), (D)(I) and (G); Effective June 1, 1999

To ensure that the application is administratively complete, confirm that all fields in the form are complete, verify that all requested information is provided, consistently reference the same site and contact person in all forms in the application, and ensure forms are signed by the appropriate party.

Note: Including all the information requested in the form and attachments contributes to more streamlined technical reviews.

Signature

To the best of my knowledge, the responses to this form accurately reflect all information requested concerning the proposed regulated activities and methods to protect the Edwards Aquifer. This **Temporary Stormwater Section** is hereby submitted for TCEQ review and executive director approval. The application was prepared by:

Print Name of Customer/Agent: Jordan T. Hurta

Date: 8/8/2025

Signature of Customer/Agent:

JH 8/8/2025

Regulated Entity Name: BUDA SPORTSPLEX

Project Information

Potential Sources of Contamination

Examples: Fuel storage and use, chemical storage and use, use of asphaltic products, construction vehicles tracking onto public roads, and existing solid waste.

1. Fuels for construction equipment and hazardous substances which will be used during construction:

   ☐ The following fuels and/or hazardous substances will be stored on the site: _____

   These fuels and/or hazardous substances will be stored in:

   ☐ Aboveground storage tanks with a cumulative storage capacity of less than 250 gallons will be stored on the site for less than one (1) year.

☐ Aboveground storage tanks with a cumulative storage capacity between 250 gallons and 499 gallons will be stored on the site for less than one (1) year.

☐ Aboveground storage tanks with a cumulative storage capacity of 500 gallons or more will be stored on the site. An Aboveground Storage Tank Facility Plan application must be submitted to the appropriate regional office of the TCEQ prior to moving the tanks onto the project.

☒ Fuels and hazardous substances will not be stored on the site.

2. ☒ **Attachment A - Spill Response Actions**. A site specific description of the measures to be taken to contain any spill of hydrocarbons or hazardous substances is attached.

3. ☒ Temporary aboveground storage tank systems of 250 gallons or more cumulative storage capacity must be located a minimum horizontal distance of 150 feet from any domestic, industrial, irrigation, or public water supply well, or other sensitive feature.

4. ☒ **Attachment B - Potential Sources of Contamination**. A description of any activities or processes which may be a potential source of contamination affecting surface water quality is attached.

Sequence of Construction

5. ☒ **Attachment C - Sequence of Major Activities**. A description of the sequence of major activities which will disturb soils for major portions of the site (grubbing, excavation, grading, utilities, and infrastructure installation) is attached.

   ☒ For each activity described, an estimate (in acres) of the total area of the site to be disturbed by each activity is given.

   ☒ For each activity described, include a description of appropriate temporary control measures and the general timing (or sequence) during the construction process that the measures will be implemented.

6. ☒ Name the receiving water(s) at or near the site which will be disturbed or which will receive discharges from disturbed areas of the project: Garlic Creek, existing pond

Temporary Best Management Practices (TBMPs)

Erosion control examples: tree protection, interceptor swales, level spreaders, outlet stabilization, blankets or matting, mulch, and sod. Sediment control examples: stabilized construction exit, silt fence, filter dikes, rock berms, buffer strips, sediment traps, and sediment basins. Please refer to the Technical Guidance Manual for guidelines and specifications. All structural BMPs must be shown on the site plan.

7. ☒ **Attachment D – Temporary Best Management Practices and Measures**. TBMPs and measures will prevent pollution of surface water, groundwater, and stormwater. The construction-phase BMPs for erosion and sediment controls have been designed to retain sediment on site to the extent practicable. The following information is attached:

☒ A description of how BMPs and measures will prevent pollution of surface water, groundwater or stormwater that originates upgradient from the site and flows across the site.

☒ A description of how BMPs and measures will prevent pollution of surface water or groundwater that originates on-site or flows off site, including pollution caused by contaminated stormwater runoff from the site.

☒ A description of how BMPs and measures will prevent pollutants from entering surface streams, sensitive features, or the aquifer.

☒ A description of how, to the maximum extent practicable, BMPs and measures will maintain flow to naturally-occurring sensitive features identified in either the geologic assessment, TCEQ inspections, or during excavation, blasting, or construction.

8. ☒ The temporary sealing of a naturally-occurring sensitive feature which accepts recharge to the Edwards Aquifer as a temporary pollution abatement measure during active construction should be avoided.

☐ **Attachment E - Request to Temporarily Seal a Feature**. A request to temporarily seal a feature is attached. The request includes justification as to why no reasonable and practicable alternative exists for each feature.

☒ There will be no temporary sealing of naturally-occurring sensitive features on the site.

9. ☒ **Attachment F - Structural Practices**. A description of the structural practices that will be used to divert flows away from exposed soils, to store flows, or to otherwise limit runoff discharge of pollutants from exposed areas of the site is attached. Placement of structural practices in floodplains has been avoided.

10. ☒ **Attachment G - Drainage Area Map**. A drainage area map supporting the following requirements is attached:

☒ For areas that will have more than 10 acres within a common drainage area disturbed at one time, a sediment basin will be provided.

☐ For areas that will have more than 10 acres within a common drainage area disturbed at one time, a smaller sediment basin and/or sediment trap(s) will be used.

☐ For areas that will have more than 10 acres within a common drainage area disturbed at one time, a sediment basin or other equivalent controls are not attainable, but other TBMPs and measures will be used in combination to protect down slope and side slope boundaries of the construction area.

☐ There are no areas greater than 10 acres within a common drainage area that will be disturbed at one time. A smaller sediment basin and/or sediment trap(s) will be used in combination with other erosion and sediment controls within each disturbed drainage area.

☐ There are no areas greater than 10 acres within a common drainage area that will be disturbed at one time. Erosion and sediment controls other than sediment basins or sediment traps within each disturbed drainage area will be used.

11. ☒ **Attachment H - Temporary Sediment Pond(s) Plans and Calculations**. Temporary sediment pond or basin construction plans and design calculations for a proposed temporary BMP or measure have been prepared by or under the direct supervision of a Texas Licensed Professional Engineer. All construction plans and design information must be signed, sealed, and dated by the Texas Licensed Professional Engineer. Construction plans for the proposed temporary BMPs and measures are attached.

☐ N/A

12. ☒ **Attachment I - Inspection and Maintenance for BMPs.** A plan for the inspection of each temporary BMP(s) and measure(s) and for their timely maintenance, repairs, and, if necessary, retrofit is attached. A description of the documentation procedures, recordkeeping practices, and inspection frequency are included in the plan and are specific to the site and/or BMP.

13. ☒ All control measures must be properly selected, installed, and maintained in accordance with the manufacturer's specifications and good engineering practices. If periodic inspections by the applicant or the executive director, or other information indicate a control has been used inappropriately, or incorrectly, the applicant must replace or modify the control for site situations.

14. ☒ If sediment escapes the construction site, off-site accumulations of sediment must be removed at a frequency sufficient to minimize offsite impacts to water quality (e.g., fugitive sediment in street being washed into surface streams or sensitive features by the next rain).

15. ☒ Sediment must be removed from sediment traps or sedimentation ponds not later than when design capacity has been reduced by 50%. A permanent stake will be provided that can indicate when the sediment occupies 50% of the basin volume.

16. ☒ Litter, construction debris, and construction chemicals exposed to stormwater shall be prevented from becoming a pollutant source for stormwater discharges (e.g., screening outfalls, picked up daily).

Soil Stabilization Practices

Examples: establishment of temporary vegetation, establishment of permanent vegetation, mulching, geotextiles, sod stabilization, vegetative buffer strips, protection of trees, or preservation of mature vegetation.

17. ☒ **Attachment J - Schedule of Interim and Permanent Soil Stabilization Practices**. A schedule of the interim and permanent soil stabilization practices for the site is attached.

18. ☒ Records must be kept at the site of the dates when major grading activities occur, the dates when construction activities temporarily or permanently cease on a portion of the site, and the dates when stabilization measures are initiated.

19. ☒ Stabilization practices must be initiated as soon as practicable where construction activities have temporarily or permanently ceased.

Administrative Information

20. ☒ All structural controls will be inspected and maintained according to the submitted and approved operation and maintenance plan for the project.

21. ☒ If any geologic or manmade features, such as caves, faults, sinkholes, etc., are discovered, all regulated activities near the feature will be immediately suspended. The appropriate TCEQ Regional Office shall be immediately notified. Regulated activities must cease and not continue until the TCEQ has reviewed and approved the methods proposed to protect the aquifer from any adverse impacts.

22. ☒ Silt fences, diversion berms, and other temporary erosion and sediment controls will be constructed and maintained as appropriate to prevent pollutants from entering sensitive features discovered during construction.

WATER POLLUTION ABATEMENT PLAN ATTACHMENT A

SPILL RESPONSE ACTIONS

Attachment A: Spill Response Actions

The owner shall be responsible for the adequate cleanup of any chemical spills during construction. The cleanup will be performed to TCEQ standards, RG-348, July 2005.

The contractor will notify TCEQ of any chemical spills as required and outlined in these standards at the phone numbers listed below.

1.4.16 Spill Prevention and Control

The objective of this sections is to describe measures to prevent or reduce the discharge of pollutants to drainage systems or watercourses from leaks and spills by reducing the chance for spills, stopping the source of spills, containing, and cleaning up spills, properly disposing of spill materials, and training employees. The following steps will help reduce the stormwater impacts of leaks and spills:

Education

1. Be aware that different materials pollute in different amounts. Make sure that each employee knows what a "significant spill" is for each material they use, and what is the appropriate response for "significant" and "insignificant" spills. Employees shall also be aware of when spill must be reported to the TCEQ. Information is available in 30 TAC 327.4 and 40 CFR 302.4.
2. Educate employees and subcontractors on potential dangers to humans and the environment from spills and leaks.
3. Hold regular meetings to discuss and reinforce appropriate disposal procedures (incorporate into regular safety meetings).
4. Establish a continuing education program to indoctrinate new employees.
5. Have contractor's superintendent or representative oversee and enforce proper spill prevention and control measures.

General Measures

1. To the extent that the work can be accomplished safety, spills of oil, petroleum products, substances listed under 40 CFR shall be contained and cleaned up immediately.
2. Store hazardous materials and waste in covered containers and protect from vandalism
3. Place a stockpile of spill cleanup materials where it will be readily accessible.
4. Train employees in spill prevention and cleanup.
5. Designate responsible individuals to oversee and enforce control measures.
6. Spill shall be covered and protected from stormwater runoff during rainfall to the extent that it doesn't compromise cleanup activities.
7. Do not bury or wash spills with water. 1-118
8. Store and dispose of used clean up materials, contaminated materials, and recovered spill material that is no longer suitable for the intended purpose in conformance with the provisions in applicable BMPs.

9. Do not allow water used for cleaning and decontamination to enter storm drains or watercourses. Collect and dispose of contaminated water in accordance with applicable regulations.
10. Contain water overflow or minor water spillage and do not allow it to discharge into drainage facilities or watercourses.
11. Place Material Safety Data Sheets (MSDS), as well as proper storage, cleanup, and spill reporting instructions for hazardous materials stored or used on the project site in an open, conspicuous, and accessible location.
12. Keep waste storage areas clean, well-organized, and equipped with ample cleanup supplies as appropriate for the materials being stored. Perimeter control, containment structures, covers, and liners, shall be repaired or replaced as needed to maintain proper function.

Cleanup

1. Clean up leaks and spills immediately
2. Use a rag for small spills on paved surfaces, a damp mop for the general cleanup, and absorbent material for larger spills. If the spilled material is hazardous, then the used cleanup materials are also hazardous and must be disposes of as hazardous waste.
3. Never hose down or bury dry material spills. Clean up as much of the material as possible and dispose of properly. See the waste management BMPs in this section for specific information.
4. If a spill does occur in the basin, all components of the controller must be inspected and checked for proper operation within 7 days.

Minor Spills

1. Minor spills typically involve small quantities of oil, gasoline, paint, etc. which can be controlled by the first responder at the discovery of the spill.
2. Use absorbent materials on small spills rather than hosing down or burying the spill.
3. Absorbent materials shall be promptly removed and disposed of properly.
4. Follow the practice below for a minor spill:
5. Contain the spread of the spill.
6. Recover spilled materials.
7. Clean the contaminated area and properly dispose of contaminated materials.

Semi-Significant Spills

Semi-significant spills still can be controlled by the first responder along with the aid of other personnel such as laborers and the foreman, etc. This response may require the cessation of all other activities.

Spill shall be cleaned up immediately:

1. Contain spread of the spill.
2. Notify the project foreman immediately.
3. If the spill occurs on paved or impermeable surfaces, clean up using "dry" methods (absorbent materials, cat litter and/or rags). Contain the spill by encircling with absorbent materials and do not let the spill spread widely.
4. If the spill occurs in dirt areas, immediately contain the spill by constructing and earthen dike. Dig up and properly dispose of contaminated soil.
5. If the spill occurs during rain, cover the spill with tarps or other material to prevent contaminating runoff.

Significant/Hazardous Spills

For significant or hazardous spills that are in reportable quantities:

1. Notify the TCEQ by telephone as soon as possible and within 24 hours at 512-339-2929 between 8 AM and 5 PM. After hours, contact the Environmental Release Hotline at 1-800-832-8224. It is the contractor's responsibility to have all emergency phone numbers at the construction site.
2. For spills of federal reportable quantities, in conformance with the requirements in 40 CFR parts 110,119, and 302, the contractor shall notify the National Response Center at (800) 424-8802.
3. Notification shall first be made by telephone and followed up with a written report.
4. The services of a spills contractor or a Haz-Mat team shall be obtained immediately. Construction personnel shall not attempt to clean up until the appropriate and qualified staff have arrived at the job site.
5. Other agencies which may need to be consulted include, but are not limited to, the City Police Department, County Sheriff Office, Fire Departments. Etc.

More information on spill rules and appropriate responses is available on the TCEQ website at: http://www.tceq.texas.gov/response/spills

WATER POLLUTION ABATEMENT PLAN ATTACHMENT B

POTENTIAL SOURCES OF CONTAMINATION

Attachment B: Potential Sources of Contamination

Asphalt products will be used on this project. After placement of asphalt, emulsion, or coatings, the applicant will be responsible for immediate cleanup should an unexpected rain occur. For the duration of the asphalt product curing time, the contractor should maintain standby personnel and equipment to contain any asphalt wash-off should unexpected rain occur.

Sediment and soil from disturbed areas are a potential source of contamination. During activities causing soil disturbance, temporary best management practices outlined in Attachment D.

Other potential sources of contamination include hydraulic fluid and dieses fuel from mechanical equipment, as well as paints and chemicals used on site. Any spills shall be handled according to the Spill Response Actions in the Attachment A.

WATER POLLUTION ABATEMENT PLAN ATTACHMENT C

SEQUENCE OF MAJOR ACTIVITIES

Attachment C: Sequence of Major Activities

1. Install erosion controls and tree protection per approved plans (47.05 acres)
2. Hold pre-construction meeting (N/A)
3. Begin grading and rough excavation for pond (4.71 acres)
4. Begin trenching and installing utilities for the site (0.48 acres)
5. Begin grading and rough excavation parking structures and building foundations (5.61 acres)
6. Begin construction of buildings and parking lots (5.61 acres)
7. Begin construction of hardscape and landscape areas (5.35 acres)
8. Complete pond construction (4.71 acres)
9. The contractor shall obtain Engineer's concurrence letter prior to step 10 (N/A)
10. Restore disturbed areas (47.05 acres)
11. Remove temporary erosion/sedimentation controls (47.05 acres)

WATER POLLUTION ABATEMENT PLAN ATTACHMENT D

TEMPORARY BEST MANAGEMENT PRACTICES AND MEASURES

Attachment D: Temporary Best Management Practices and Measures

Before construction begins, silt fences will be installed around the perimeter of the limits of construction, including “J Hooks” as needed, and on the downgradient side of the contractor staging and materials storage area. Prior to any other work, the batch detention pond will be rough cut, which will act as a temporary BMP during construction. When the basin is full, the overflow will sheet flow through fences downstream. The silt fencing and water quality area will be inspected weekly during construction, and after any rainfall.

Proposed BMPs and measures will prevent pollution of surface water or groundwater that originates on-site, by directing and filtering the runoff through the silt fence, and maintaining natural drainage patterns on the site, which direct runoff towards the proposed batch detention pond.

Proposed BMPs and measures will prevent pollutants from entering surface streams (Garlic Creek), sensitive features, or the aquifer, by filtering the runoff through the silt fence and diverting it to the batch detention pond prior to leaving the site and entering the adjacent creek.

There are no identified critical environmental features within property boundary.

WATER POLLUTION ABATEMENT PLAN ATTACHMENT F

STRUCTURAL PRACTICES

Attachment F: Structural Practices

Silt fences will be used to limit the runoff discharge of pollutants from exposed areas of the site, and the water quality area will be used as a sediment trap to store the onsite flows from exposed areas of the site.

WATER POLLUTION ABATEMENT PLAN ATTACHMENT G

DRAINAGE AREA MAP

Attachment G: Drainage Area Map

Existing and Proposed Drainage Area Maps are included in the Construction Document. The project site is 65.63 acres of developed land within which a portion will be redeveloped. There may be areas with more than 10 acres within a common drainage area that will be disturbed at one time; the proposed batch detention pond will be used as a temporary sediment basin to provided water quality treatment.

WATER POLLUTION ABATEMENT PLAN ATTACHMENT H

TEMPORARY SEDIMENT POND(S) PLANS AND CALCULATIONS

Attachment H: Temporary Sediment Pond(s) Plans and Calculations

The proposed batch detention pond is to be rough-cut to act as a temporary sediment pond as described in the Sequence of Construction. The developed drainage area to the said pond is approximately is 13.12 acres. The pond meets TCEQ's current BMPs regarding design over the Edwards Aquifer Recharge Zone. A total water quality volume of 55,579 cubic feet is required by TCEQ's BMPs. The proposed batch detention pond is sized to accommodate 71,659 cubic feet. The entire outlet system shall be protected from erosion and maintained throughout the course of construction until final site restoration is complete.

WATER POLLUTION ABATEMENT PLAN ATTACHMENT I

INSPECTION AND MAINTENANCE FOR BMPs

Attachment I: Inspection and Maintenance for BMPs

Implementation of site controls shall be performed by a qualified contractor experienced in the proper installation of such devices in accordance with manufacturers' specifications, and in keeping with recognized Best Management Practices (BMP's), and in keeping with TDPES regulations. Qualification of installing Contractor shall be reviewed with the Owner prior to entering a contract with them for services.

The Contractor shall inspect all BMP's at regular intervals as specified in the Storm Water Pollution Prevention Plan for this project.

Use standard Owner Inspection forms for each inspection.

Record all deficiencies of site controls and take immediate action to correct any deficiencies recorded.

Keep records of inspections current and on file, available for review by EPA, TCEQ, MS4 operator and Owner.

The silt fences and temporary controls must be inspected at weekly intervals and after significant rainfall events to ensure that they are functioning properly. The following BMP's must be maintained after a rainstorm:

The inlet protection must be checked for silt build up and when it is prohibiting the conveyance of water into the storm sewer, the silt must be removed.

The construction entrance shall be inspected after a rainstorm to make sure it is still in adequate condition and intact to support and function as designed.

The washout pits shall be monitored and cleaned after a storm to limit the pollution and run-off.

The silt fences around the stock piles need to be checked and cleaned after a rain storm to remove the silt deposits over 6 inches.

Repairs must be made immediately to the damages areas and when the silt accumulates in the controls to 6 inches it must be removed.

Inspection & Maintenance Checklist

ITEM	FREQUENCY	LOOK FOR	PERFORM ACTION
Inspection	Twice per year; after 2” of rainfall	General condition, trash, sediment, vegetation, drainage	Correct deficiencies per the following line items
Trash	With inspection or other maintenance	Trash, debris, floatables	Remove and properly dispose
Sediment	Once per year; when 6” has accumulated	Accumulated sediment at inlet and outlet of the pond and splitter box	Remove accumulated sediment and restore to initial condition
Erosion	As needed	Gullies, washouts, grade to drain, ponding	Restore to initial grade
Drawdown inlet, System piping, and outfalls	Once per year; as needed	Damage, clogging, lengthy drawdown	Repair any damage. Ensure the drawdown inlet and piping is free of debris. Clean out pipes as necessary.
Irrigation system and Pumps	3 times per year; 2 times during or following a rain event	Damage, clogging, poor condition, sediment buildup	Remove sediment build up in wet well. Replace pumps if not functioning.
General Condition	As needed	Damage, poor condition, function	Repair any damage and replace any non-functioning items. Check infrastructure and correct or monitor items in poor condition. Add maintenance and inspection as necessary for recurring deficiencies.

INSPECTION & MAINTENANCE CHECKLIST

WOC: _____ Inspection / Maintenance Date: _____

Event that triggered inspection / maintenance: _____

WET BASIN

Inspection Items

Y / N Trash and debris present in the pond and splitter box

_____ Maximum depth of sediment in the Sedimentation Filtration Pond

_____ Maximum depth of sediment in the Splitter Box

Y / N Erosion issues (gullies, washouts, grading, ponding) present

Y / N Structural integrity of walls, and other structural members

Y / N Rip-rap issues (wash out, migration)

Y / N Drawdown inlet damage, outfall structures

Y / N Drawdown or system piping clogging or drawdown > 72

Y / N Pumps functioning properly

Other items noted: _____

_____

_____

Action Items

Y / N Trash and debris removed

Y / N Sediment removed from Basin inlet, outlet and splitter box

Y / N Sediment removed from remainder of Basin

Y / N Repairs to walls, and other structural members

Y / N Drawdown inlet damage repaired

Y / N Drawdown device, outfall structure or system piping cleaned out

Other maintenance performed: _____

_____

_____

WATER POLLUTION ABATEMENT PLAN ATTACHMENT J

SCHEDULE OF INTERIM AND PERMANENT SOIL STABILIZATION PRACTICES

Attachment J: Schedule of Interim and Permanent Soil Stabilization Practices

Please see the General Notes Sheet in the Attached Construction Documents for a detail of the permanent soil stabilization practices.

Permanent Stormwater Section

Texas Commission on Environmental Quality

for Regulated Activities on the Edwards Aquifer Recharge Zone and Relating to 30 TAC §213.5(b)(4)(C), (D)(Ii), (E), and (5), Effective June 1, 1999

To ensure that the application is administratively complete, confirm that all fields in the form are complete, verify that all requested information is provided, consistently reference the same site and contact person in all forms in the application, and ensure forms are signed by the appropriate party.

Note: Including all the information requested in the form and attachments contributes to more streamlined technical reviews.

Signature

To the best of my knowledge, the responses to this form accurately reflect all information requested concerning the proposed regulated activities and methods to protect the Edwards Aquifer. This **Permanent Stormwater Section** is hereby submitted for TCEQ review and executive director approval. The application was prepared by:

Print Name of Customer/Agent: Jordan T. Hurta

Date: 8/8/2025

Signature of Customer/Agent

8/8/2025

Regulated Entity Name: BUDA SPORTSPLEX

Permanent Best Management Practices (BMPs)

Permanent best management practices and measures that will be used during and after construction is completed.

1. ☒ Permanent BMPs and measures must be implemented to control the discharge of pollution from regulated activities after the completion of construction.

   ☐ N/A

2. ☒ These practices and measures have been designed, and will be constructed, operated, and maintained to insure that 80% of the incremental increase in the annual mass loading of total suspended solids (TSS) from the site caused by the regulated activity is removed. These quantities have been calculated in accordance with technical guidance prepared or accepted by the executive director.

   ☒ The TCEQ Technical Guidance Manual (TGM) was used to design permanent BMPs and measures for this site.

☐ A technical guidance other than the TCEQ TGM was used to design permanent BMPs and measures for this site. The complete citation for the technical guidance that was used is: _____

☐ N/A

3. ☒ Owners must insure that permanent BMPs and measures are constructed and function as designed. A Texas Licensed Professional Engineer must certify in writing that the permanent BMPs or measures were constructed as designed. The certification letter must be submitted to the appropriate regional office within 30 days of site completion.

   ☐ N/A

4. Where a site is used for low density single-family residential development and has 20 % or less impervious cover, other permanent BMPs are not required. This exemption from permanent BMPs must be recorded in the county deed records, with a notice that if the percent impervious cover increases above 20% or land use changes, the exemption for the whole site as described in the property boundaries required by 30 TAC §213.4(g) (relating to Application Processing and Approval), may no longer apply and the property owner must notify the appropriate regional office of these changes.

   ☐ The site will be used for low density single-family residential development and has 20% or less impervious cover.
   ☐ The site will be used for low density single-family residential development but has more than 20% impervious cover.
   ☒ The site will not be used for low density single-family residential development.

5. The executive director may waive the requirement for other permanent BMPs for multi-family residential developments, schools, or small business sites where 20% or less impervious cover is used at the site. This exemption from permanent BMPs must be recorded in the county deed records, with a notice that if the percent impervious cover increases above 20% or land use changes, the exemption for the whole site as described in the property boundaries required by 30 TAC §213.4(g) (relating to Application Processing and Approval), may no longer apply and the property owner must notify the appropriate regional office of these changes.

   ☐ **Attachment A - 20% or Less Impervious Cover Waiver**. The site will be used for multi-family residential developments, schools, or small business sites and has 20% or less impervious cover. A request to waive the requirements for other permanent BMPs and measures is attached.
   ☐ The site will be used for multi-family residential developments, schools, or small business sites but has more than 20% impervious cover.
   ☒ The site will not be used for multi-family residential developments, schools, or small business sites.

6. ☒ **Attachment B - BMPs for Upgradient Stormwater**.

☐ A description of the BMPs and measures that will be used to prevent pollution of surface water, groundwater, or stormwater that originates upgradient from the site and flows across the site is attached.

☒ No surface water, groundwater or stormwater originates upgradient from the site and flows across the site, and an explanation is attached.

☐ Permanent BMPs or measures are not required to prevent pollution of surface water, groundwater, or stormwater that originates upgradient from the site and flows across the site, and an explanation is attached.

7. ☒ **Attachment C - BMPs for On-site Stormwater**.

☒ A description of the BMPs and measures that will be used to prevent pollution of surface water or groundwater that originates on-site or flows off the site, including pollution caused by contaminated stormwater runoff from the site is attached.

☐ Permanent BMPs or measures are not required to prevent pollution of surface water or groundwater that originates on-site or flows off the site, including pollution caused by contaminated stormwater runoff, and an explanation is attached.

8. ☐ **Attachment D - BMPs for Surface Streams**. A description of the BMPs and measures that prevent pollutants from entering surface streams, sensitive features, or the aquifer is attached. Each feature identified in the Geologic Assessment as sensitive has been addressed.

☒ N/A

9. ☒ The applicant understands that to the extent practicable, BMPs and measures must maintain flow to naturally occurring sensitive features identified in either the geologic assessment, executive director review, or during excavation, blasting, or construction.

☒ The permanent sealing of or diversion of flow from a naturally-occurring sensitive feature that accepts recharge to the Edwards Aquifer as a permanent pollution abatement measure has not been proposed.

☐ **Attachment E - Request to Seal Features**. A request to seal a naturally-occurring sensitive feature, that includes, for each feature, a justification as to why no reasonable and practicable alternative exists, is attached.

10. ☒ **Attachment F - Construction Plans**. All construction plans and design calculations for the proposed permanent BMP(s) and measures have been prepared by or under the direct supervision of a Texas Licensed Professional Engineer, and are signed, sealed, and dated. The plans are attached and, if applicable include:

☒ Design calculations (TSS removal calculations)
☒ TCEQ construction notes
☒ All geologic features
☒ All proposed structural BMP(s) plans and specifications

☐ N/A

11. ☒ **Attachment G - Inspection, Maintenance, Repair and Retrofit Plan**. A plan for the inspection, maintenance, repairs, and, if necessary, retrofit of the permanent BMPs and measures is attached. The plan includes all of the following:

    ☒ Prepared and certified by the engineer designing the permanent BMPs and measures
    ☒ Signed by the owner or responsible party
    ☒ Procedures for documenting inspections, maintenance, repairs, and, if necessary retrofit
    ☒ A discussion of record keeping procedures

    ☐ N/A

12. ☐ **Attachment H - Pilot-Scale Field Testing Plan**. Pilot studies for BMPs that are not recognized by the Executive Director require prior approval from the TCEQ. A plan for pilot-scale field testing is attached.

    ☒ N/A

13. ☐ **Attachment I -Measures for Minimizing Surface Stream Contamination**. A description of the measures that will be used to avoid or minimize surface stream contamination and changes in the way in which water enters a stream as a result of the construction and development is attached. The measures address increased stream flashing, the creation of stronger flows and in-stream velocities, and other in-stream effects caused by the regulated activity, which increase erosion that results in water quality degradation.

    ☒ N/A

Responsibility for Maintenance of Permanent BMP(s)

Responsibility for maintenance of best management practices and measures after construction is complete.

14. ☒ The applicant is responsible for maintaining the permanent BMPs after construction until such time as the maintenance obligation is either assumed in writing by another entity having ownership or control of the property (such as without limitation, an owner's association, a new property owner or lessee, a district, or municipality) or the ownership of the property is transferred to the entity. Such entity shall then be responsible for maintenance until another entity assumes such obligations in writing or ownership is transferred.

    ☐ N/A

15. ☐ A copy of the transfer of responsibility must be filed with the executive director at the appropriate regional office within 30 days of the transfer if the site is for use as a multiple single-family residential development, a multi-family residential development, or a non-residential development such as commercial, industrial, institutional, schools, and other sites where regulated activities occur.

    ☐ N/A

WATER POLLUTION ABATEMENT PLAN ATTACHMENT B

BEST MANAGEMENT PRACTICES FOR UPGRADIENT STORMWATER

Attachment B: Best Management Practices for Upgradient Stormwater

Surface water, groundwater, or stormwater originates upgradient from the site and does not flow across the project area. All upgradient flows towards Garlic Creek. The proposed development will not be affected by offsite drainage patterns. Reference the Drainage Area Maps provided in the Construction Documents.

WATER POLLUTION ABATEMENT PLAN ATTACHMENT C

BMPs FOR ON-SITE STORMWATER

Attachment C: BMPs for On-Site Stormwater

A batch detention pond and vegetative filter strips are proposed to treat the on-site stormwater runoff and to prevent pollution of surface water or groundwater that originates on-site or flows off the site. The basin meets TCEQ's current design requirements and TSS removal standards for BMPs over the Edwards Aquifer Recharge Zone. TSS calculations can be found below.

Texas Commission on Environmental Quality

TSS Removal Calculations 04-20-2009

Project Name: Buda Sportsplex
Date Prepared: 8/6/2025

Additional information is provided for cells with a red triangle in the upper right corner. Place the cursor over the cell.
Text shown in blue indicate location of instructions in the Technical Guidance Manual - RG-348.
Characters shown in red are data entry fields.
Characters shown in black (Bold) are calculated fields. Changes to these fields will remove the equations used in the spreadsheet.

1. The Required Load Reduction for the total project: Calculations from RG-348 Pages 3-27 to 3-30

Page 3-29 Equation 3.3: $L_M = 27.2(A_N \times P)$

where:

$L_{M\ TOTAL\ PROJECT}$ = Required TSS removal resulting from the proposed development = 80% of increased load
A_N = Net increase in impervious area for the project
P = Average annual precipitation, inches

Site Data: Determine Required Load Removal Based on the Entire Project

County =	Hays	
Total project area included in plan * =	20.15	acres
Predevelopment impervious area within the limits of the plan * =	0.00	acres
Total post-development impervious area within the limits of the plan* =	13.12	acres
Total post-development impervious cover fraction * =	0.65	
P =	33	inches
$L_{M\ TOTAL\ PROJECT}$ =	11773	lbs.

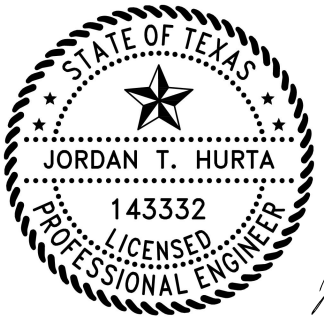

8/8/2025

*** The values entered in these fields should be for the total project area.**

Number of drainage basins / outfalls areas leaving the plan area = 1

2. Drainage Basin Parameters (This information should be provided for each basin):

Drainage Basin/Outfall Area No. = Pond 1

Total drainage basin/outfall area =	20.15	acres
Predevelopment impervious area within drainage basin/outfall area =	0.00	acres
Post-development impervious area within drainage basin/outfall area =	13.12	acres
Post-development impervious fraction within drainage basin/outfall area =	0.65	
$L_{M\ THIS\ BASIN}$ =	11773	lbs.

3. Indicate the proposed BMP Code for this basin.

Proposed BMP = **Batch Detention Basin**
Removal efficiency = 91 percent

Aqualogic Cartridge Filter
Bioretention
Batch Detention Basin
BaySeparator
Contech StormFilter
Constructed Wetland
Extended Detention
Grassy Swale
Retention / Irrigation
Sand Filter
Stormceptor
Vegetated Filter Strips
Vortechs
Wet Basin
Wet Vault

4. Calculate Maximum TSS Load Removed (L_R) for this Drainage Basin by the selected BMP Type.

RG-348 Page 3-33 Equation 3.7: L_R = (BMP efficiency) x P x (A_I x 34.6 + A_P x 0.54)

where:

A_C = Total On-Site drainage area in the BMP catchment area
A_I = Impervious area proposed in the BMP catchment area
A_P = Pervious area remaining in the BMP catchment area
L_R = TSS Load removed from this catchment area by the proposed BMP

A_C =	20.15	acres
A_I =	13.12	acres
A_P =	7.03	acres
L_R =	13742	lbs

5. Calculate Fraction of Annual Runoff to Treat the drainage basin / outfall area

Desired $L_{M\ THIS\ BASIN}$ = 11773 lbs.

F = 0.86

6. Calculate Capture Volume required by the BMP Type for this drainage basin / outfall area. Calculations from RG-348 Pages 3-34 to 3-36

Rainfall Depth =	**1.38**	inches
Post Development Runoff Coefficient =	**0.46**	
On-site Water Quality Volume =	**46466**	cubic feet

Calculations from RG-348 Pages 3-36 to 3-37

Off-site area draining to BMP =	**0.00**	acres
Off-site Impervious cover draining to BMP =	**0.00**	acres
Impervious fraction of off-site area =	**0**	
Off-site Runoff Coefficient =	**0.00**	
Off-site Water Quality Volume =	**0**	cubic feet
Storage for Sediment =	**9293**	
Total Capture Volume (required water quality volume(s) x 1.20) =	**55759**	cubic feet

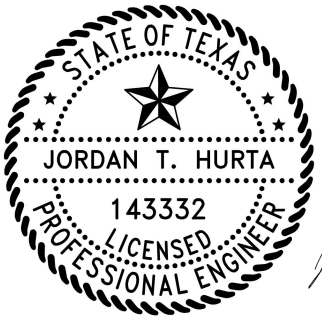

The following sections are used to calculate the required water quality volume(s) for the selected BMP.
The values for BMP Types not selected in cell C45 will show NA.

7. Retention/Irrigation System Designed as Required in RG-348 Pages 3-42 to 3-46

Required Water Quality Volume for retention basin =	**NA**	cubic feet	
Irrigation Area Calculations:			
Soil infiltration/permeability rate =	**0.1**	in/hr	**Enter determined permeability rate or assumed value of 0.1**
Irrigation area =	**NA**	square feet	
	NA	acres	

8. Extended Detention Basin System Designed as Required in RG-348 Pages 3-46 to 3-51

Required Water Quality Volume for extended detention basin =	**NA**	cubic feet	

9. Filter area for Sand Filters Designed as Required in RG-348 Pages 3-58 to 3-63

9A. Full Sedimentation and Filtration System

Water Quality Volume for sedimentation basin =	**NA**	cubic feet	
Minimum filter basin area =	**NA**	square feet	
Maximum sedimentation basin area =	**NA**	square feet	**For minimum water depth of 2 feet**
Minimum sedimentation basin area =	**NA**	square feet	**For maximum water depth of 8 feet**

9B. Partial Sedimentation and Filtration System

Water Quality Volume for combined basins =	**NA**	cubic feet	
Minimum filter basin area =	**NA**	square feet	
Maximum sedimentation basin area =	**NA**	square feet	**For minimum water depth of 2 feet**
Minimum sedimentation basin area =	**NA**	square feet	**For maximum water depth of 8 feet**

10. Bioretention System Designed as Required in RG-348 Pages 3-63 to 3-65

Required Water Quality Volume for Bioretention Basin =	**NA**	cubic feet	

11. Wet Basins Designed as Required in RG-348 Pages 3-66 to 3-71

Required capacity of Permanent Pool =	**NA**	cubic feet	**Permanent Pool Capacity is 1.20 times the WQV**
Required capacity at WQV Elevation =	**NA**	cubic feet	**Total Capacity should be the Permanent Pool Capacity plus a second WQV.**

12. Constructed Wetlands Designed as Required in RG-348 Pages 3-71 to 3-73

Required Water Quality Volume for Constructed Wetlands =	**NA**	cubic feet	

13. AquaLogic™ Cartridge System Designed as Required in RG-348 Pages 3-74 to 3-78

**** 2005 Technical Guidance Manual (RG-348) does not exempt the required 20% increase with maintenance contract with AquaLogic™.**

Required Sedimentation chamber capacity =	**NA**	cubic feet
Filter canisters (FCs) to treat WQV =	**NA**	cartridges
Filter basin area (RIA_F) =	**NA**	square feet

14. Stormwater Management StormFilter® by CONTECH

Required Water Quality Volume for Contech StormFilter System =	**NA**	cubic feet

THE SIZING REQUIREMENTS FOR THE FOLLOWING BMPs / LOAD REMOVALS ARE BASED UPON FLOW RATES - NOT CALCULATED WATER QUALITY VOLUMES

15. Grassy Swales Designed as Required in RG-348 Pages 3-51 to 3-54

Design parameters for the swale:

Drainage Area to be Treated by the Swale = A =	N/A	acres
Impervious Cover in Drainage Area =	N/A	acres
Rainfall intensity = i =	1.1	in/hr
Swale Slope =	N/A	ft/ft
Side Slope (z) =	N/A	
Design Water Depth = y =	N/A	ft
Weighted Runoff Coefficient = C =	#VALUE!	
A_{CS} = cross-sectional area of flow in Swale =	#VALUE!	sf
P_W = Wetted Perimeter =	#VALUE!	feet
R_H = hydraulic radius of flow cross-section = A_{CS}/P_W =	#VALUE!	feet
n = Manning's roughness coefficient =	0.2	

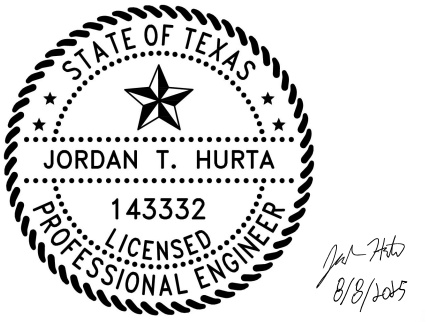

8/8/2025

15A. Using the Method Described in the RG-348

Manning's Equation: $Q = \frac{1.49}{n} A_{CS} R_H^{2/3} S^{0.5}$

$b = \frac{0.134 \times Q}{y^{1.67} S^{0.5}} - zy$ = #VALUE! feet

Q = CiA = #VALUE! cfs

To calculate the flow velocity in the swale:

V (Velocity of Flow in the swale) = Q/A_{CS} = #VALUE! ft/sec

To calculate the resulting swale length:

L = Minimum Swale Length = V (ft/sec) * 300 (sec) = #VALUE! feet

If any of the resulting values do not meet the design requirement set forth in RG-348, the design parameters must be modified and the solver rerun.

15B. Alternative Method using Excel Solver

Design Q = CiA = #VALUE! cfs

Manning's Equation Q = #VALUE! cfs Error 1 = #VALUE!
Swale Width= 6.00 ft

Instructions are provided to the right (green comments).

Flow Velocity #VALUE! ft/s
Minimum Length = #VALUE! ft

Instructions are provided to the right (blue comments).

Design Width = N/A ft
Design Discharge = #VALUE! cfs Error 2 = #VALUE!
Design Depth = 0.33 ft
Flow Velocity = #VALUE! cfs
Minimum Length = #VALUE! ft

If any of the resulting values do not meet the design requirement set forth in RG-348, the design parameters may be modified and the solver rerun.
If any of the resulting values still do not meet the design requirement set forth in RG-348, widening the swale bottom value may not be possible.

16. Vegetated Filter Strips Designed as Required in RG-348 Pages 3-55 to 3-57

There are no calculations required for determining the load or size of vegetative filter strips.
The 80% removal is provided when the contributing drainage area does not exceed 72 feet (direction of flow) and the sheet flow leaving the impervious cover is directed across 15 feet of engineered filter strips with maximum slope of 20% or across 50 feet of natural vegetation with a maximum slope of 10%. There can be a break in grade as long as no slope exceeds 20%.

If vegetative filter strips are proposed for an interim permanent BMP, they may be sized as described on Page 3-56 of RG-348.

17. Wet Vaults Designed as Required in RG-348 Pages 3-30 to 3-32 & 3-79

Required Load Removal Based upon Equation 3.3 = **NA** lbs

To solve for bottom width of the trapezoidal swale (b) using the Excel solver:
Excel can simultaneously solve the "Design Q" (C217) vs "Manning's Q" (C219) by varying the "Swale Width" (C220).
The required "Swale Width" occurs when the "Design Q" = "Manning's Q"

First, highlight Cell F219 (Error 1 value). The equation showing in the fx screen for Cell F219 should be "= C217-C219"
Then click on "Tools" and "Solver". The "Solver Parameters" screen pops up.
The value in the "Set Target cell" should be F219 "Error 1 ="
The value in the "By Changing Cells" should be C220 "Swale Width"
Click on solve.

The resulting "Swale Width" must be less than 10 feet to meet the requirements of the TGM.
If the resulting "Swale Width" exceeds 10 feet then the design parameters must be revised and the solver run again.

If there is not the option for "Solver" under "Tools"
Click on "Tools" and "Add Ins" and then check "Solver Add-in"
Then proceed as instructed above.

If you would like to increase the bottom width of the trapezoidal swale (b):
Excel can simultaneously solve the "Design Q" (C217) vs "Design Discharge" (C232) by varying the "Design Depth" (C233).
The required "Design Depth" for a 10-foot bottom width occurs when the "Design Q" (C217) = the "Design Discharge" (C232).

First set the desired bottom width in Cell C231.
Highlight Cell F232. The equation showing in the fx screen for Cell F232 should be "= C217-C232"

Click on "Tools" and "Solver". The "Solver Parameters" screen pops up.
The value in the "Set Target cell" should be F232 "Error 2"
The value in the "By Changing Cells" should be C233 "Design Depth"
Click on solve.

The resulting "Design Depth" must be equal to or less than 0.33 feet to meet the requirements of the TGM.
If the resulting "Design Depth" exceeds 0.33 feet then the design parameters must be revised and the solver run again.
First set the desired bottom width in Cell C231.
Highlight Cell F232. The equation showing in the fx screen for Cell F232 should be "= C217-C232"
Click on "Tools" and "Solver". The "Solver Parameters" screen pops up.
The value in the "Set Target cell" should be F232 "Error 2"
The value in the "By Changing Cells" should be C233 "Design Depth"
Click on solve.

The resulting "Design Depth" must be equal to or less than 0.33 feet to meet the requirements of the TGM.
If the resulting "Design Depth" exceeds 0.33 feet then the design parameters must be revised and the solver run again.

First calculate the load removal at 1.1 in/hour

RG-348 Page 3-30 Equation 3.4: $Q = CiA$

C = runoff coefficient for the drainage area = 0.48 **C = Runoff Coefficient = 0.546 (IC)^2 + 0.328 (IC) + 0.03**
i = design rainfall intensity = 1.1 in/hour
A = drainage area in acres = N/A acres

Q = flow rate in cubic feet per second = #VALUE! cubic feet/sec

RG-348 Page 3-31 Equation 3.5: $V_{OR} = Q/A$

Q = Runoff rate calculated above = #VALUE! cubic feet/sec
A = Water surface area in the wet vault = N/A square feet

V_{OR} = Overflow Rate = #VALUE! feet/sec

Percent TSS Removal from Figure 3-1 (RG-348 Page 3-31) = N/A percent

Load removed by Wet Vault = #VALUE! lbs

If a bypass occurs at a rainfall intensity of less than 1.1 in/hours
Calculate the efficiency reduction for the actual rainfall intensity rate

Actual Rainfall Intensity at which Wet Vault bypass Occurs = N/A in/hour

Fraction of rainfall treated from Figure 3-2 RG-348 Page 3-32 = N/A percent
Efficiency Reduction for Actual Rainfall Intensity = #VALUE! percent

Resultant TSS Load removed by Wet Vault = #VALUE! lbs

18. Permeable Concrete Designed as Required in RG-348 Pages 3-79 to 3-83

PERMEABLE CONCRETE MAY ONLY BE USED ON THE CONTRIBUTING ZONE

19. BMPs Installed in a Series Designed as Required in RG-348 Pages 3-32

Michael E. Barrett, Ph.D.. P.E. recommended that the coefficient for E_2 be changed from 0.5 to 0.65 on May 3, 2006

$E_{TOT} = [1 - ((1 - E_1) X (1 - 0.65E_2) x (1 - 0.25E_3))] X 100$ = #VALUE! percent NET EFFICIENCY OF THE BMPs IN THE SERIES

EFFICIENCY OF FIRST BMP IN THE SERIES = E_1 = N/A percent

EFFICIENCY OF THE SECOND BMP IN THE SERIES = E_2 = N/A percent

EFFICIENCY OF THE THIRD BMP IN THE SERIES = E_3 = N/A percent

THEREFORE, THE NET LOAD REMOVAL WOULD BE:
(A_I AND A_P VALUES ARE FROM SECTION 3 ABOVE)

$L_R = E_{TOT} X P X (A_I X 34.6 X A_P X0.54)$ = #VALUE! lbs

20. Stormceptor Designed as Required in RG-348 Pg. 11, Addendum

Required TSS Removal in BMP Drainage Area= **NA** lbs
Impervious Cover Overtreatment= N/A ac
TSS Removal for Uncaptured Area = #VALUE! lbs

BMP Sizing

Effective Area = NA EA
Calculated Model Size(s) = #N/A
Actual Model Size (if multiple values provided in Calculated
Model Size or if you are choosing a larger model size) = 0 Model Size

Surface Area = #N/A ft^2
Overflow Rate = #VALUE! V_{or}
Rounded Overflow Rate = #VALUE! V_{or}
BMP Efficiency % = #VALUE! %
L_R Value = #VALUE! lbs

TSS Load Credit = #VALUE! lbs

Is Sufficient Treatment Available? (TSS Credit $\geq$ TSS Uncapt.) #VALUE!

TSS Treatment by BMP (LM + TSS Uncapt.) = #VALUE!

21. Vortech — Designed as Required in RG-348 — Pg. 19, Addendum

Required TSS Removal in BMP Drainage Area=	**NA**	lbs
Impervious Cover Overtreatment=	N/A	ac
TSS Removal for Uncaptured Area =	#VALUE!	lbs
BMP Sizing		
Effective Area =	NA	EA
Calculated Model Size(s) =	#N/A	
Actual Model Size (if choosing larger model size) =	0	Pick Model Size
Surface Area =	#N/A	ft^2
Overflow Rate =	#VALUE!	V_{or}
Rounded Overflow Rate =	#VALUE!	V_{or}
BMP Efficiency % =	#VALUE!	%
L_R Value =	#VALUE!	lbs
TSS Load Credit =	#VALUE!	lbs
Is Sufficient Treatment Available? (TSS Credit $\geq$ TSS Uncapt.)	#VALUE!	
TSS Treatment by BMP (LM + TSS Uncapt.) =	#VALUE!	

22. Batch Detention Basin — Designed as Required in RG-348 — Pg. 28, Addendum

Required Water Quality Volume for batch detention basin =	**55759**	cubic feet

23. BaySeparator — Designed as Required in RG-348 — Pg. 35, Addendum

Required TSS Removal in BMP Drainage Area=	**NA**	lbs
Impervious Cover Overtreatment=	N/A	ac
TSS Removal for Uncaptured Area =	#VALUE!	lbs
BMP Sizing		
Effective Area =	NA	EA
Calculated Model Size(s) =	#N/A	
Actual Model Size (if multiple values provided in Calculated Model Size or if you are choosing a larger model size) =	0	Model Size
Surface Area =	#N/A	ft^2
Overflow Rate =	#VALUE!	V_{or}
Rounded Overflow Rate =	#VALUE!	V_{or}
BMP Efficiency % =	#VALUE!	%
L_R Value =	#VALUE!	lbs
TSS Load Credit =	#VALUE!	lbs
Is Sufficient Treatment Available? (TSS Credit $\geq$ TSS Uncapt.)	#VALUE!	
TSS Treatment by BMP (LM + TSS Uncapt.) =	#VALUE!	

WATER POLLUTION ABATEMENT PLAN ATTACHMENT F

CONSTRUCTION PLANS

Attachment F: Construction Plans

Construction Documents are included with this application. Design calculations for the proposed permanent BMPs and measures have been prepared by or under the direct supervision of a Texas Licensed Professional Engineer. Reference the Drainage Area Maps, Water Quality Design and Detail Sheets, and General Notes Sheet for all applicable information.

CONSTRUCTION PLANS FOR

BUDA SPORTSPLEX - PHASE I

LEGAL DESCRIPTION:

LOT 9, REPLAT OF BUDA SPORTSPLEX, SECTION 2, A SUBDIVISION IN HAYS COUNTY, TEXAS, ACCORDING TO THE MAP OR PLAT THEREOF RECORDED IN VOLUME 13, PAGE 86, OFFICIAL PUBLIC RECORDS OF HAYS COUNTY, TEXAS.

WATERSHED STATUS:

THIS PROJECT IS LOCATED IN THE ONION CREEK WATERSHED. THIS PROJECT IS LOCATED OVER THE EDWARDS AQUIFER RECHARGE ZONE.

ZONING:

R-2 – SUBURBAN RESIDENTIAL

ZONING:

A PORTION OF THIS SITE IS LOCATED WITHIN ZONE A_ OF THE 100-YEAR FLOODPLAIN PER FEDERAL EMERGENCY MANAGEMENT AGENCY, FLOOD INSURANCE RATE MAP PANEL NO. 48209C0260G, DATED JANUARY 17, 2025.

BudaTx breathe easy here™

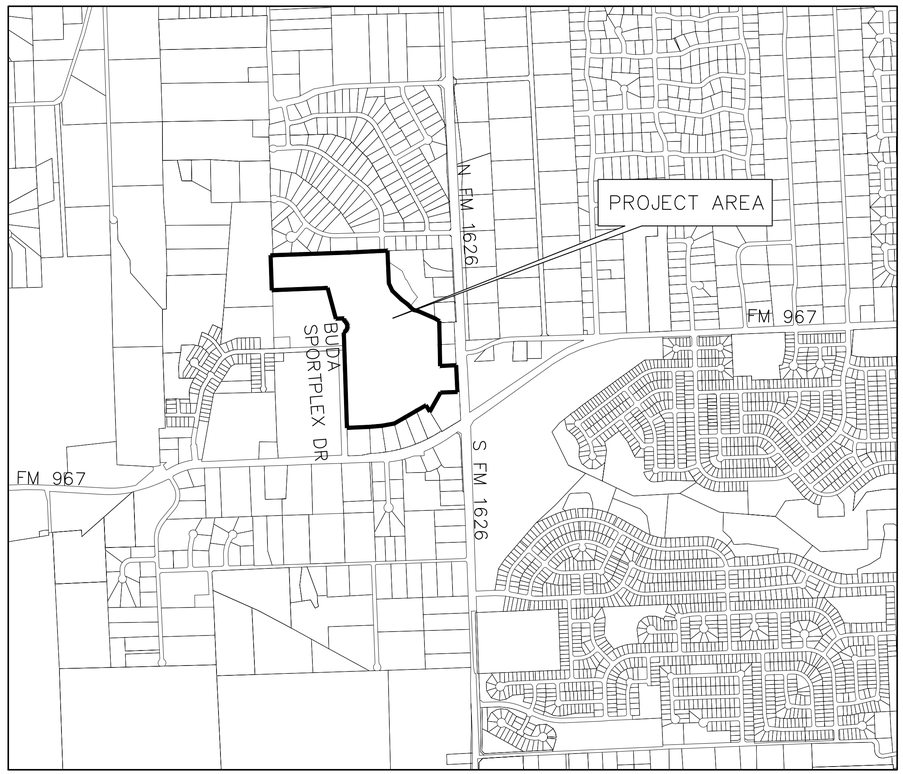

AUGUST 2025

SCALE 1": 1000'

CONTACTS	
OWNERS CITY OF BUDA 405 E. LOOP STREET, BLDG 100 BUDA, TEXAS 78610	WATER CITY OF BUDA 405 E. LOOP STREET, BLDG 100 BUDA, TEXAS 78610
ELECTRIC PEDERNALES ELECTRIC COMPANY 1810 RANCH TO MARKET RD 150W, KYLE, TX 78640	WASTEWATER CITY OF BUDA 405 E. LOOP STREET, BLDG 100 BUDA, TEXAS 78610
GAS CENTERPOINT ENERGY P.O. BOX 4981, HOUSTON, TX 77210-4981	SURVEYOR WATERLOO SURVEYORS P.O. BOX 160176 AUSTIN, TX 78716-0176 512-481-9602

1101 S. Capital of Texas Highway,
Building G-100
Austin, Texas 78746
Phone (512) 614-6171
T.B.P.E. FIRM NO. F-13162

STATE OF TEXAS
JORDAN T. HURTA
143332
LICENSED
PROFESSIONAL ENGINEER

8/4/2025

STATE OF TEXAS
DARREN C STROZEWSKI
87908
LICENSED
PROFESSIONAL ENGINEER

08/04/2025

REV. NO.	DATE	DESCRIPTION	APPROVED	PROJECT MANAGER:	PK
				DESIGNED BY:	PG/RM
				CHECKED BY:	DCS/JTH
				DRAWN BY:	PG/RM
				DCS PROJECT NO:	20101597

APPROVED FOR ACCEPTANCE:

CIYT OF BUDA FIRE DEPARTMENT, DATE

ALL RESPONSIBILITY FOR THE ADEQUACY OF THESE PLANS REMAINS WITH THE ENGINEER WHO PREPARED THEM. IN REVIEWING THESE PLANS, THE CITY OF BUDA MUST RELY UPON THE ADEQUACY OF THE WORK OF THE DESIGN ENGINEER.

CONSTRUCTION PLAN APPROVAL SHEET 1 OF 256
FILE NUMBER 2025-476 APPLICATION DATE 07/07/2025
APPROVED BY COMMISSION ON N/A UNDER THE CITY OF BUDA UNIFIED DEVELOPMENT CODE.

EXPIRATION DATE _____ CASE MANAGER V. ESCAMILLA

CITY ENGINEER, CITY OF BUDA
RELEASED FOR GENERAL COMPLIANCE: _____ ZONING N/A
Rev. 1 _____ Correction 1 _____
Rev. 2 _____ Correction 2 _____
Rev. 3 _____ Correction 3 _____

Final plat must be recorded by the Project Expiration Date, if applicable. Subsequent Site Plans which do not comply with the Code current at the time of filing, and all required Building Permits and/or a notice of construction (if a building permit is not required), must also be approved prior to the Project Expiration Date.

SITE DEVELOPMENT NUMBER 2025-476

EXTERNAL REFERENCES: DCS-1597-FINAL DCS-1597-EXIST DCS-1597-NEW WATERLOO SURVEY_FEB2025 DCS-1597-COMBINED EXIST IRRIGATION_SB AND ROWCS
FILENAME: Z:\Projects\1551-1599\20101597 - Buda - Sportsplex\510 - Re-bid Dwgs\500 - Final_Design\500 - Final_Design\51 - Drawings\Sheet Files\Construction Plans\000-01.dwg, LAST SAVED ON: Aug 07 2025 6:40pm, PLOTTED BY: RMALDONADO, ON: Aug 09 2025 1:35pm, CFG:

DRAWING INDEX

SERIES 000 – GENERAL

00G-01 COVER SHEET
00G-02 DRAWING INDEX
00G-03 DRAWING INDEX MAP
00G-04 GENERAL NOTES – SHEET NO. 1
00G-05 GENERAL NOTES – SHEET NO. 2
00G-06 ABBREVIATIONS
00G-07 SURVEY TREE LIST
00G-08 FINAL PLAT – SHEET NO. 1
00G-09 FINAL PLAT – SHEET NO. 2
00G-10 FINAL PLAT – SHEET NO. 3
00G-11 FINAL PLAT – SHEET NO. 4
00C-01 CIVIL – EROSION CONTROL DETAILS – SHEET NO. 1
00C-02 CIVIL – WATER DETAILS – SHEET NO. 1
00C-03 CIVIL – WATER DETAILS – SHEET NO. 2
00C-04 CIVIL – WATER DETAILS – SHEET NO. 3
00C-05 CIVIL – WASTEWATER DETAILS – SHEET NO. 1
00C-06 CIVIL – WASTEWATER DETAILS – SHEET NO. 2
00C-07 CIVIL – STORM SEWER AND DRAINAGE DETAILS – SHEET NO. 1
00C-08 CIVIL – STORM SEWER AND DRAINAGE DETAILS – SHEET NO. 2
00C-09 CIVIL – STORM SEWER AND DRAINAGE DETAILS – SHEET NO. 3
00C-10 CIVIL – STORM SEWER AND DRAINAGE DETAILS – SHEET NO. 4
00C-11 CIVIL – PAVEMENT DETAILS – SHEET NO. 1
00C-12 CIVIL – PAVEMENT DETAILS – SHEET NO. 2
00C-13 CIVIL – PAVEMENT DETAILS – SHEET NO. 3
00C-14 CIVIL – FENCING DETAILS – SHEET NO. 1
00C-15 CIVIL – FENCING DETAILS – SHEET NO. 2
00C-16 NOT USED
00C-17 CIVIL – MISCELLANEOUS DETAILS – SHEET NO. 2
00C-18 CIVIL – MISCELLANEOUS DETAILS – SHEET NO. 3
00C-19 CIVIL – MISCELLANEOUS DETAILS – SHEET NO. 4
00C-20 CIVIL – MISCELLANEOUS DETAILS – SHEET NO. 5
00C-21 CIVIL – MISCELLANEOUS DETAILS – SHEET NO. 6
00C-22 CIVIL – MISCELLANEOUS DETAILS – SHEET NO. 7
00C-23 CIVIL – MISCELLANEOUS DETAILS – SHEET NO. 8
00C-23A CIVIL – MISCELLANEOUS DETAILS – SHEET NO. 9
00C-24 CIVIL – TRAFFIC CONTROL PLAN – SHEET NO. 1
00C-25 CIVIL – TRAFFIC CONTROL PLAN – SHEET NO. 2
00C-26 CIVIL – TRAFFIC CONTROL DETAILS – SHEET NO. 1
00C-27 CIVIL – TRAFFIC CONTROL DETAILS – SHEET NO. 2
00C-28 CIVIL – TRAFFIC CONTROL DETAILS – SHEET NO. 3
00C-29 CIVIL – TRAFFIC CONTROL DETAILS – SHEET NO. 4
00C-30 CIVIL – TRAFFIC CONTROL DETAILS – SHEET NO. 5
00L-01 LANDSCAPE – PLANTING DETAILS
00L-02 LANDSCAPE – HARDSCAPE DETAILS
00L-03 LANDSCAPE – FURNISHING DETAILS
00L-04 LANDSCAPE – SIGNAGE DETAILS
00L-05 NOT USED
00L-06 NOT USED

SERIES 100 – SITE CIVIL

01X-01 CIVIL – OVERALL DEMOLITION PLAN
01X-02 NOT USED
01X-03 NOT USED
01X-04 NOT USED
01X-05 CIVIL – DEMOLITION PLAN – AREA NO. 5
01X-06 CIVIL – DEMOLITION PLAN – AREA NO. 7
01X-07 CIVIL – DEMOLITION PLAN – AREA NO. 8
01X-08 CIVIL – DEMOLITION PLAN – AREA NO. 10
01X-09 CIVIL – DEMOLITION PLAN – AREA NO. 11
01X-10 CIVIL – DEMOLITION PLAN – AREA NO. 13
01X-11 CIVIL – DEMOLITION PLAN – AREA NO. 14
01X-12 CIVIL – DEMOLITION PLAN – AREA NO. 16
01C-01 CIVIL – OVERALL EROSION CONTROL PLAN
01C-02 NOT USED
01C-03 NOT USED
01C-04 NOT USED
01C-05 CIVIL – EROSION CONTROL PLAN – AREA NO. 5
01C-06 CIVIL – EROSION CONTROL PLAN – AREA NO. 7
01C-07 CIVIL – EROSION CONTROL PLAN – AREA NO. 8
01C-08 CIVIL – EROSION CONTROL PLAN – AREA NO. 10
01C-09 CIVIL – EROSION CONTROL PLAN – AREA NO. 11
01C-10 CIVIL – EROSION CONTROL PLAN – AREA NO. 13
01C-11 CIVIL – EROSION CONTROL PLAN – AREA NO. 14
01C-12 NOT USED
01C-13 CIVIL – OVERALL SITE PLAN
01C-14 NOT USED
01C-15 NOT USED
01C-16 NOT USED
01C-17 CIVIL – SITE PLAN – AREA NO. 5
01C-18 CIVIL – SITE PLAN – AREA NO. 7
01C-19 CIVIL – SITE PLAN – AREA NO. 8
01C-20 CIVIL – SITE PLAN – AREA NO. 10
01C-21 CIVIL – SITE PLAN – AREA NO. 11
01C-22 CIVIL – SITE PLAN – AREA NO. 13
01C-23 CIVIL – SITE PLAN – AREA NO. 14
01C-24 CIVIL – SITE PLAN – AREA NO. 16
01C-25 CIVIL – OVERALL GRADING, PAVING, AND DRAINAGE PLAN
01C-26 NOT USED
01C-27 NOT USED
01C-28 NOT USED
01C-29 CIVIL – GRADING, PAVING, AND DRAINAGE PLAN – AREA NO. 5
01C-30 CIVIL – GRADING, PAVING, AND DRAINAGE PLAN – AREA NO. 7
01C-31 CIVIL – GRADING, PAVING, AND DRAINAGE PLAN – AREA NO. 8
01C-32 CIVIL – GRADING, PAVING, AND DRAINAGE PLAN – AREA NO. 10
01C-33 CIVIL – GRADING, PAVING, AND DRAINAGE PLAN – AREA NO. 11
01C-34 CIVIL – GRADING, PAVING, AND DRAINAGE PLAN – AREA NO. 13
01C-35 CIVIL – GRADING, PAVING, AND DRAINAGE PLAN – AREA NO. 14
01C-36 CIVIL – GRADING, PAVING, AND DRAINAGE PLAN – AREA NO. 16
01C-37 CIVIL – EXISTING DRAINAGE AREA MAP
01C-38 CIVIL – PROPOSED DRAINAGE AREA MAP
01C-39 CIVIL – PROPOSED SUB-DRAINAGE AREA MAP
01C-40 CIVIL – STORM SEWER CALCULATIONS
01C-41 CIVIL – WATER QUALITY POND PLAN
01C-42 CIVIL – WATER QUALITY POND CROSS SECTIONS
01C-43 CIVIL – WATER QUALITY POND DETAILS – SHEET NO. 1
01C-44 CIVIL – WATER QUALITY POND DETAILS – SHEET NO. 2
01C-44A NOT USED
01C-44B NOT USED
01C-45 CIVIL – OVERALL UTILITY PLAN
01C-46 NOT USED
01C-47 NOT USED
01C-48 NOT USED
01C-49 CIVIL – UTILITY PLAN – AREA NO. 5
01C-50 CIVIL – UTILITY PLAN – AREA NO. 7
01C-51 CIVIL – UTILITY PLAN – AREA NO. 8
01C-52 CIVIL – UTILITY PLAN – AREA NO. 10
01C-53 CIVIL – UTILITY PLAN – AREA NO. 11
01C-54 CIVIL – UTILITY PLAN – AREA NO. 13
01C-55 CIVIL – UTILITY PLAN – AREA NO. 14
01C-56 CIVIL – UTILITY PLAN – AREA NO. 16
01C-57 NOT USED
01C-58 CIVIL – WASTEWATER LINE B – PLAN & PROFILE
01C-59 CIVIL – FIRE PROTECTION PLAN – SHEET NO. 1
01C-60 CIVIL – FIRE PROTECTION PLAN – SHEET NO. 2
01C-61 CIVIL – FIRE PROTECTION PLAN – SHEET NO. 3
01SS-01 NOT USED
01SS-02 SALES SYSTEMS – AREA NO. 7
01SS-03 NOT USED
01SS-04 SALES SYSTEMS – AREA NO. 10
01SS-05 SALES SYSTEMS – AREA NO. 11
01SS-06 SALES SYSTEMS – AREA NO. 13
01SS-07 NOT USED
01SS-08 SALES SYSTEMS – DETAILS – SHEET NO. 1
01SS-09 NOT USED
01L-01 LANDSCAPING – GENERAL NOTES
01L-02 LANDSCAPING – OVERALL PLAN
01L-03 IRRIGATION – GENERAL NOTES
01L-04 IRRIGATION – OVERALL PLAN
01L-05 NOT USED
01L-06 NOT USED
01L-07 NOT USED
01L-08 NOT USED
01L-09 NOT USED
01L-10 NOT USED
01L-11 NOT USED
01L-12 NOT USED
01L-13 NOT USED
01L-14 NOT USED
01L-15 NOT USED
01L-16 IRRIGATION – AREA NO. 7B
01L-17 NOT USED
01L-18 IRRIGATION – AREA NO. 7D
01L-19 IRRIGATION – AREA NO. 8A
01L-20 IRRIGATION – AREA NO. 8B
01L-21 NOT USED
01L-22 IRRIGATION – AREA NO. 10A
01L-23 IRRIGATION – AREA NO. 10B
01L-24 NOT USED
01L-25 IRRIGATION – AREA NO. 10D
01L-26 IRRIGATION – AREA NO. 11A
01L-27 IRRIGATION – AREA NO. 11B
01L-28 IRRIGATION – AREA NO. 11C
01L-29 IRRIGATION – AREA NO. 11D
01L-30 IRRIGATION – AREA NO. 13A
01L-31 IRRIGATION – AREA NO. 13B
01L-32 NOT USED
01L-33 NOT USED
01L-34 IRRIGATION – AREA NO. 14A
01L-35 IRRIGATION – AREA NO. 14B
01L-36 NOT USED
01L-37 NOT USED
01L-38 NOT USED
01L-39 IRRIGATION – DETAILS – SHEET NO. 1
01L-40 IRRIGATION – DETAILS – SHEET NO. 2
01L-41 IRRIGATION – DETAILS – SHEET NO. 3
01L-42 IRRIGATION – DETAILS – SHEET NO. 4
1E-01 NOT USED
1E-02 FOUNTAIN PUMPS – ELECTRICAL – RISER
1E-03 NOT USED
1E-04 ELECTRICAL SITE PLAN – SOUTH END
1E-05 ELECTRICAL SITE PLAN – NORTH END
1E-06 ELECTRICAL SITE POWER – FLAG POLES
1E-07 ELECTRICAL SYMBOLS, ABBREVIATIONS AND SPECIFICATIONS

SERIES 200 – SOFTBALL FIELDS

02C-01 SOFTBALL FIELDS – GENERAL NOTES
02C-02 NORTH SOFTBALL FIELDS – SITE PLAN
02C-03 NORTH SOFTBALL FIELDS – HORIZONTAL CONTROL PLAN
02C-04 NORTH SOFTBALL FIELDS – SURFACING PLAN
02C-05 NORTH SOFTBALL FIELDS – GRADING PLAN
02C-06 NORTH SOFTBALL FIELDS – DRAINAGE PLAN
02C-07 SOUTH SOFTBALL FIELDS – SITE PLAN
02C-08 SOUTH SOFTBALL FIELDS – HORIZONTAL CONTROL PLAN
02C-09 SOUTH SOFTBALL FIELDS – SURFACING PLAN
02C-10 SOUTH SOFTBALL FIELDS – GRADING PLAN
02C-11 SOUTH SOFTBALL FIELDS – DRAINAGE PLAN
02C-12 SOFTBALL FIELDS – DETAILS – SHEET NO. 1
02C-13 SOFTBALL FIELDS – DETAILS – SHEET NO. 2
02C-14 SOFTBALL FIELDS – DETAILS – SHEET NO. 3
02C-15 SOFTBALL FIELDS – DETAILS – SHEET NO. 4
02C-16 NOT USED
02C-17 NOT USED
02S-01 STRUCTURAL – DUGOUT DETAILS – SHEET NO. 1
02S-02 STRUCTURAL – DUGOUT DETAILS – SHEET NO. 2
02S-01.0 SHADE STRUCTURE – STRUCTURAL – GENERAL NOTES
02L-01 NOT USED
02L-02 LANDSCAPING – LANDSCAPE PLAN B – AREA NO. 8
02L-03 NOT USED
02L-04 NOT USED
02L-05 LANDSCAPING – LANDSCAPE PLAN A – AREA NO. 11
02L-06 NOT USED
02L-07 LANDSCAPING – LANDSCAPE PLAN C – AREA NO. 11
02L-08 LANDSCAPING – LANDSCAPE PLAN D – AREA NO. 11
02L-09 LANDSCAPING – LANDSCAPE PLAN E – AREA NO. 11
02L-10 LANDSCAPING – LANDSCAPE PLAN F – AREA NO. 11
02L-11 LANDSCAPING – LANDSCAPE PLAN G – AREA NO. 11
02L-12 LANDSCAPING – LANDSCAPE SCHEDULES – AREA NO. 11
02L-13 LANDSCAPING – LANDSCAPE PLAN A – AREA NO. 14
02L-14 LANDSCAPING – LANDSCAPE PLAN B – AREA NO. 14
02L-15 LANDSCAPING – LANDSCAPE PLAN C – AREA NO. 14
02L-16 LANDSCAPING – LANDSCAPE SCHEDULES – AREA NO. 14
02L-17 IRRIGATION – SHEET NO. 1
02L-18 IRRIGATION – SHEET NO. 2
2E-01 ELECTRICAL SCOREBOARD POWER – SOUTH END
2E-02 ELECTRICAL SCOREBOARD POWER – NORTH END
2E-03 NOT USED
2E-04 NOT USED
2E-05 ELECTRICAL SITE LIGHTING PLAN – SOUTH END
2E-06 ELECTRICAL SITE LIGHTING PLAN – NORTH END
2E-07 ELECTRICAL SYMBOLS, ABBREVIATIONS AND SPECIFICATIONS

SERIES 300 – SOFTBALL CONCESSION STANDS

03L-01 LANDSCAPING – LANDSCAPE PLAN A – AREA NO. 10
03L-02 LANDSCAPING – LANDSCAPE PLAN B – AREA NO. 10
03L-03 LANDSCAPING – LANDSCAPE PLAN C – AREA NO. 10
03L-04 NOT USED
03L-05 LANDSCAPING – LANDSCAPE PLAN E – AREA NO. 10
03L-06 LANDSCAPING – LANDSCAPE PLAN F – AREA NO. 10
03L-07 LANDSCAPING – LANDSCAPE PLAN G – AREA NO. 10
03L-08 LANDSCAPING – LANDSCAPE PLAN H – AREA NO. 10
03L-09 LANDSCAPING – LANDSCAPE SCHEDULES – AREA NO. 10
03L-10 NOT USED
03L-11 LANDSCAPING – LANDSCAPE PLAN B – AREA NO. 16
03L-12 NOT USED
03A-01 SOFTBALL CONCESSIONS – 1ST FLOOR PLAN AND PLAN DETAILS
03A-02 SOFTBALL CONCESSIONS – 2ND FLOOR PLAN AND PLAN DETAILS
03A-03 SOFTBALL CONCESSIONS – REFLECTED CEILING PLANS
03A-04 SOFTBALL CONCESSIONS – ROOF PLAN AND PLAN DETAILS
03A-05 SOFTBALL CONCESSIONS – EXTERIOR ELEVATIONS
03A-06 SOFTBALL CONCESSIONS – EXTERIOR ELEVATIONS
03A-07 SOFTBALL CONCESSIONS – WALL SECTIONS
03A-08 SOFTBALL CONCESSIONS – ACCESSIBILITY STDS
03FS-01 SOFTBALL CONCESSION STANDS – FOOD SERVICE EQUIPMENT PLAN
03FS-02 SOFTBALL CONCESSION STANDS – FOOD SERVICE PLUMBING PLAN
03FS-03 SOFTBALL CONCESSION STANDS – FOOD SERVICE ELECTRICAL PLAN
03FS-04 SOFTBALL CONCESSION STANDS – FOOD SERVICE EQUIPMENT ELEVATIONS
03FS-05 NOT USED
FS-EQ1 FOOD SERVICE EQUIPMENT SELECTIONS FOR OVERALL PROJECT
FS-EQ2 FOOD SERVICE EQUIPMENT SELECTIONS FOR OVERALL PROJECT
FS-EQ3 NOT USED
FS-EQ4 NOT USED
03E-01 SOFTBALL CONCESSION STANDS – SOUTH ELECTRIC RISER
03E-02 NOT USED
03E-03 SOFTBALL CONCESSION STANDS – SOUTH POWER
03E-04 NOT USED
03E-05 SOFTBALL CONCESSION STANDS – SOUTH LIGHTING
03E-06 SOFTBALL NORTH & SOUTH CONCESSION TOWER – ELECTRICAL – LIGHTING
03E-07 SOFTBALL CONCESSION STANDS – SOUTH ELECTRIC LOADS
03E-07A NOT USED
03E-08 ELECTRICAL LOADS – SOUTH CONCESSION STANDS
03E-09 SOFTBALL NORTH & SOUTH CONCESSION TOWER – ELECTRICAL POWER
03E-10 NOT USED
03E-11 SOFTBALL CONCESSION STANDS – SOUTH ELECTRIC LOADS
03E-12 NOT USED
03E-13 SOFTBALL CONCESSION STANDS – ELECTRICAL SYMBOLS
03P-01 SOFTBALL CONCESSION STANDS – NORTH & SOUTH PLUMBING
03P-02 SOFTBALL CONCESSION STANDS – NORTH & SOUTH PLUMBING
03P-03 SOFTBALL CONCESSION STANDS – NORTH & SOUTH PLUMBING
03P-04 SOFTBALL CONCESSION STANDS – NORTH & SOUTH PLUMBING
3M-01 SOFTBALL CONCESSION STANDS – MECHANICAL SPECIFICATIONS
3M-02 SOFTBALL CONCESSION STANDS – MECHANICAL SCHEDULES
3M-03 SOFTBALL CONCESSION STANDS – SOUTH MECHANICAL
3M-04 NOT USED
3M-05 NOT USED
03M-06 NOT USED
03M-07 NOT USED
03M-08 NOT USED
03M-09 NOT USED
03M-10 NOT USED
03M-11 NOT USED
03M-12 NOT USED
03M-13 NOT USED
03M-14 NOT USED
03M-15 NOT USED
03M-16 NOT USED
03M-17 NOT USED
03M-18 NOT USED
03M-19 NOT USED
03M-20 NOT USED
03M-21 SOFTBALL CONCESSION STANDS – ECON-AIR HOOD
03M-22 SOFTBALL CONCESSION STANDS – ECON-AIR HOOD
03M-23 NOT USED
03M-24 SOFTBALL CONCESSION STANDS – ECON-AIR HOOD
03M-25 SOFTBALL CONCESSION STANDS – ECON-AIR HOOD
03M-26 SOFTBALL CONCESSION STANDS – ECON-AIR HOOD
03M-27 SOFTBALL CONCESSION STANDS – ECON-AIR HOOD
03M-28 NOT USED
03M-29 NOT USED
03M-30 SOFTBALL CONCESSION STANDS – ECON-AIR HOOD
03M-31 SOFTBALL CONCESSION STANDS – ECON-AIR HOOD
03M-32 SOFTBALL CONCESSION STANDS – ECON-AIR HOOD
03M-33 SOFTBALL CONCESSION STANDS – ECON-AIR HOOD
03S-01.0 SOFTBALL CONCESSION STANDS – STRUCTURAL – GENERAL NOTES
03S-01.1 SOFTBALL CONCESSION STANDS – STRUCTURAL – GENERAL NOTES
03S-02.0 SOFTBALL CONCESSION STANDS – STRUCTURAL – FOUNDATION PLAN
03S-02.1 SOFTBALL CONCESSION STANDS – STRUCTURAL – SECOND FLOOR FRAMING PLAN
03S-02.2 NOT USED
03S-02.3 SOFTBALL CONCESSION STANDS – STRUCTURAL – ROOF FRAMING PLAN SOUTH CONCESSION STAND
03S-03.0 SOFTBALL CONCESSION STANDS – STRUCTURAL – FOUNDATION DETAILS
03S-03.1 SOFTBALL CONCESSION STANDS – STRUCTURAL – FOUNDATION DETAILS
03S-04.0 SOFTBALL CONCESSION STANDS – STRUCTURAL – FRAMING DETAILS
03S-04.1 SOFTBALL CONCESSION STANDS – STRUCTURAL – FRAMING DETAILS
03S-05.0 SOFTBALL CONCESSION STANDS – STRUCTURAL – TYPICAL DETAILS
03S-05.1 SOFTBALL CONCESSION STANDS – STRUCTURAL – TYPICAL CMU DETAILS

SERIES 600 – MAINTENANCE BUILDING

06A-01 MAINTENANCE BUILDING – ARCHITECTURAL FLOOR PLAN
06A-02 MAINTENANCE BUILDING – ARCHITECTURAL ROOF PLAN
06A-03 MAINTENANCE BUILDING – ARCHITECTURAL ELEVATIONS
06A-04 MAINTENANCE BUILDING – ARCHITECTURAL DOORS AND OH DOORS
06A-05 MAINTENANCE BUILDING – ACCESSIBILITY STDS
06E-01 MAINTENANCE BUILDING – ELECTRICAL RISER
06E-02 MAINTENANCE BUILDING – ELECTRICAL LOADS
06E-03 MAINTENANCE BUILDING – ELECTRICAL POWER AND LIGHTING
06S-01.0 MAINTENANCE BUILDING – STRUCTURAL – GENERAL NOTES
06S-02.0 MAINTENANCE BUILDING – STRUCTURAL – FOUNDATION PLAN
06S-03.0 MAINTENANCE BUILDING – STRUCTURAL – FOUNDATION DETAILS
06S-04.0 MAINTENANCE BUILDING – STRUCTURAL – FRAMING DETAILS

SERIES 700 – RV PARKING

07L-01 LANDSCAPING – LANDSCAPE PLAN A – AREA NO. 13
07L-02 LANDSCAPING – LANDSCAPE PLAN B – AREA NO. 13
07L-03 NOT USED
07L-04 NOT USED
07L-05 NOT USED
07L-06 LANDSCAPING – LANDSCAPE PLAN E – AREA NO. 13

SERIES 800 – BATTING CAGES

08C-01 BATTING CAGES – NETTING PLAN
08C-02 BATTING CAGES – NETTING DETAILS
08A-01 BATTING CAGES – ARCHITECTURAL FLOOR PLAN
08A-02 BATTING CAGES – ARCHITECTURAL ROOF PLAN
08S-01.0 BATTING CAGES – STRUCTURAL – GENERAL NOTES
08S-02.0 BATTING CAGES – STRUCTURAL – FOUNDATION PLAN
08S-03.0 BATTING CAGES – STRUCTURAL – FOUNDATION DETAILS

SERIES 1600 – REFURBISHED TOILET FACILITIES

16A-01 REFURBISHED TOILET FACILITIES – BUILDING FLOOR PLAN
16A-02 REFURBISHED TOILET FACILITIES – REFLECTED CEILING PLAN ROOF PLAN
16A-03 EXISTING TOILET RENOVATION – ELEVATIONS
16A-04 REFURBISHED TOILET FACILITIES – ACCESSIBILITY STDS

SITE DEVELOPMENT NUMBER 2025-476

REV. NO.	DATE	DESCRIPTION

PROJECT MANAGER:	PK
DESIGNED BY:	PG/RM
CHECKED BY:	DCS/JTH
DRAWN BY:	PG/RM
DCS PROJECT NO:	20101597

DCS ENGINEERING, LLC
1101 S. CAPITAL OF TEXAS HIGHWAY, BUILDING G-100
AUSTIN, TX 78746

TEL: (512) 614-6171
T.B.P.E. FIRM NO. F-13162

BudaTx breathe easy here™

BUDA SPORTSPLEX - PHASE I

STATE OF TEXAS
JORDAN T. HURTA
143332
LICENSED PROFESSIONAL ENGINEER
8/4/2025

GENERAL

DRAWING INDEX

DATE: AUGUST 2025
SCALE: AS NOTED
DRAWING: 00G-02

FILENAME: Z:\Projects 1551-1599\20101597 - Buda - Sportsplex\510 - Re-bid Dwgs\500 - Final_Design\500 - Final_Design\5.1 - Drawings\Sheet Files\Construction Plans\000-02-BID.dwg, LAST SAVED ON: Aug 09 2025 2:43pm, PLOTTED BY: RMALDONADO, ON: Aug 11 2025 1:24pm, CFG:

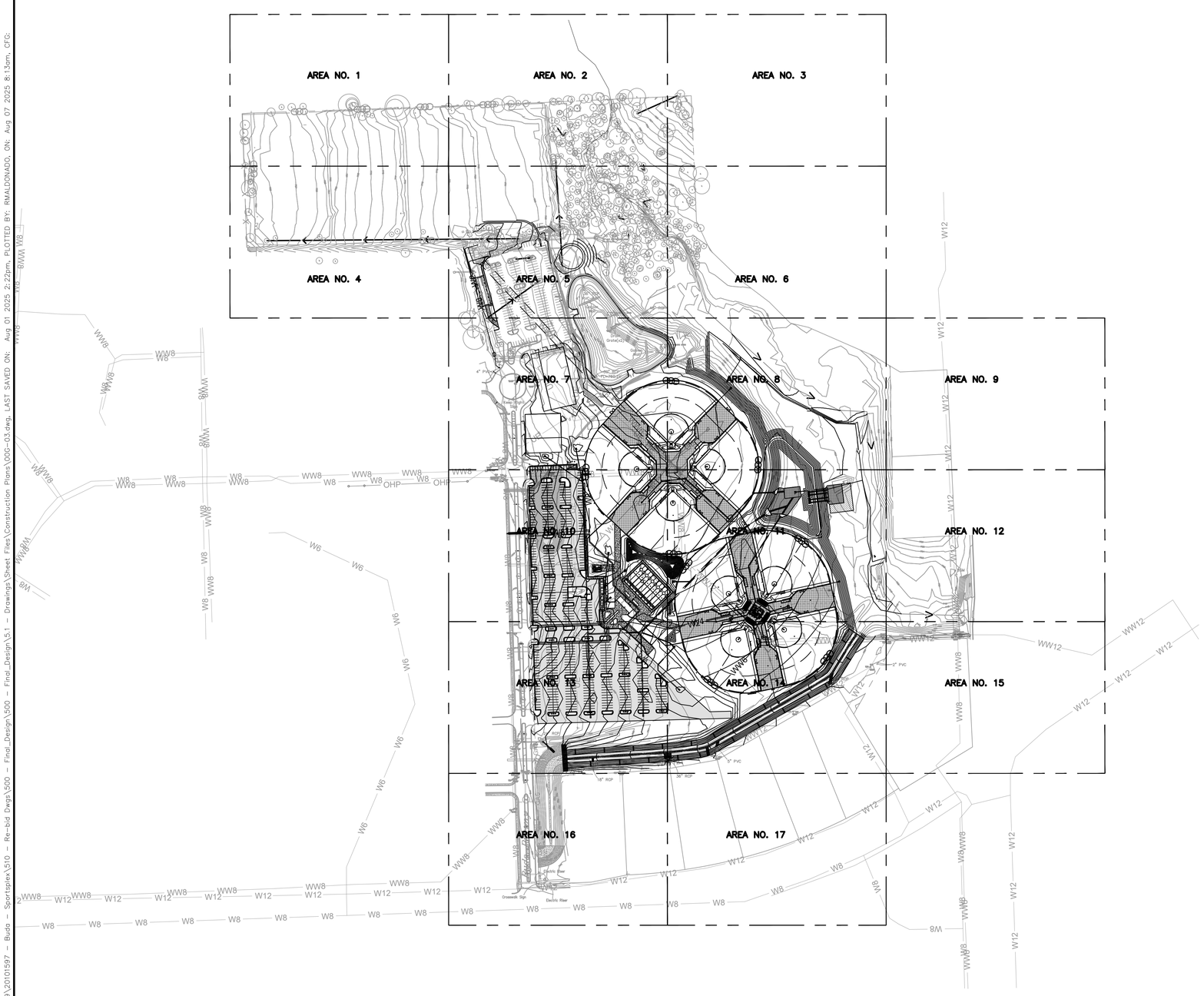

SITE DEVELOPMENT NUMBER 2025-476

REV. NO.	DATE	DESCRIPTION

PROJECT MANAGER:	PK
DESIGNED BY:	PG/RM
CHECKED BY:	DCS/JTH
DRAWN BY:	PG/RM
DCS PROJECT NO:	20101597

DCS ENGINEERING, LLC
1101 S. CAPITAL OF TEXAS HIGHWAY, BUILDING G-100
AUSTIN, TX 78746

TEL: (512) 614-6171
T.B.P.E. FIRM NO. F-13162

BudaTx breathe easy here℠

BUDA SPORTSPLEX - PHASE I

STATE OF TEXAS
JORDAN T. HURTA
143332
LICENSED PROFESSIONAL ENGINEER
8/4/2025

GENERAL

DRAWING INDEX MAP

DATE: AUGUST 2025

SCALE: 1" = 200'

DRAWING: 00G-03

FILENAME: Z:\Projects 1551-1599\20101597 - Buda - Sportsplex\510 - Re-bid Dwgs\500 - Final_Design\5.1 - Drawings\Sheet Files\Construction Plans\000-03.dwg, LAST SAVED ON: Aug 01 2025 2:22pm, PLOTTED BY: RMALDONADO, ON: Aug 07 2025 8:13am, CFG:

CITY OF BUDA GENERAL CONSTRUCTION NOTES

1. ALL RESPONSIBILITY FOR THE ADEQUACY OF THESE PLANS REMAINS WITH THE ENGINEER WHO PREPARED THEM. IN REVIEWING THESE PLANS, THE CITY OF BUDA MUST RELY ON THE ADEQUACY OF THE WORK OF THE DESIGN ENGINEER.
2. THESE PLANS, PREPARED BY THE CITY OF BUDA DO NOT EXTEND TO OR INCLUDE DESIGNS OR SYSTEMS PERTAINING TO THE SAFETY OF THE CONSTRUCTION CONTRACTOR OR ITS EMPLOYEES, AGENTS, OR REPRESENTATIVES IN THE PERFORMANCE OF THE WORK. THE SEAL OF THE REGISTERED ENGINEER(S) HEREON DOES NOT EXTEND TO ANY SUCH SAFETY SYSTEMS THAT MAY OR HEREAFTER BE INCORPORATED INTO THESE PLANS.
3. CONTRACTOR SHALL CONTACT THE CITY OF BUDA'S ENGINEER (512-312-0084) A MINIMUM OF TWO WORKING DAYS IN ADVANCE OF BLOCKING TRAFFIC LANES AND A MINIMUM OF SIX WORKING DAYS IN ADVANCE OF SCHEDULED DETOURING OF TRAFFIC LANES.
4. CONTRACTOR TO GIVE NOTICE TO ALL AUTHORIZED INSPECTORS, SUPERINTENDENTS, OR PERSONS IN CHARGE OF PRIVATE AND PUBLIC UTILITIES AFFECTED BY HIS OPERATIONS PRIOR TO COMMENCEMENT OF WORK. CONTRACTOR TO ASSURE HIMSELF THAT ALL CONSTRUCTION PERMITS HAVE BEEN OBTAINED PRIOR TO COMMENCEMENT OF WORK. REQUIRED PERMITS THAT CAN BE ISSUED TO CONTRACTOR TO BE OBTAINED AT HIS EXPENSE.
5. CONTRACTOR TO COORDINATE INTERRUPTIONS OF ALL UTILITIES AND SERVICES. ALL WORK TO BE IN ACCORDANCE WITH THE REQUIREMENTS OF THE APPLICABLE UTILITY COMPANY OR AGENCY INVOLVED.
6. CONTRACTOR TO LOCATE, PROTECT, AND MAINTAIN BENCHMARKS, MONUMENTS, CONTROL POINTS, AND PROJECT ENGINEERING REFERENCE POINT, REESTABLISH DISTURBED OR DESTROYED ITEMS BY REGISTERED PUBLIC LAND SURVEYOR IN THE STATE OF TEXAS, AT NO ADDITIONAL COST TO OWNER.
7. CONTRACTOR TO CONTROL DUST CAUSED BY THE WORK AND COMPLY WITH POLLUTION CONTROL REGULATIONS OF GOVERNING AUTHORITIES. DUST CONTROL SHALL BE ACHIEVED BY THE APPLICATION OF WATER BY AN APPROVED SPRINKLER IN AMOUNTS SUFFICIENT TO CONTROL THE DUST TO THE SATISFACTION OF THE ENGINEER (NO SEPARATE PAY).
8. BURNING IS NOT ALLOWED ON THIS PROJECT.
9. DEMOLITION PERMITS (IF NEEDED) ARE TO BE OBTAINED BY THE CONTRACTOR.
10. ACQUISITION OF RIGHT OF WAY AND/OR EASEMENT IS THE RESPONSIBILITY OF THE CITY OF BUDA.
11. THE CONTRACTOR IS TO OBTAIN PERMIT PRIOR TO PERFORMING ANY WORK IN THE PUBLIC RIGHT-OF-WAY.
12. CONTRACTOR SHALL REPAIR ALL STREET CROSSINGS, DRIVEWAYS AND DITCHES TO THEIR ORIGINAL CONDITION OR BETTER. STREET CROSSINGS SHALL BE REPAIRED WITHIN 10 WORKING DAYS AFTER CROSSING IS MADE, UNLESS PRIOR APPROVAL IS OBTAINED TO THE CONTRARY.
13. ALL DAMAGE CAUSED DIRECTLY OR INDIRECTLY TO THE STREET SURFACE OR SUBSURFACE OUTSIDE OF THE PAVEMENT CUT AREA SHALL BE REGARDED AS PART OF THE STREET CUT REPAIR. THIS INCLUDES ANY SCRAPES, GOUGES, CUTS, CRACKING, DEPRESSIONS AND/OR ANY OTHER DAMAGE CAUSED BY THE CONTRACTOR DURING THE EXECUTION OF THE WORK. THESE AREAS WILL BE INCLUDED IN THE TOTAL AREA OF REPAIR. THE AREAS OF REPAIR SHALL BE SAW CUT IN STRAIGHT, NEAT LINES PARALLEL TO THE UTILITY TRENCH. ALL REPAIRS SHALL BE AT THE CONTRACTOR'S EXPENSE AND SHALL MEET ALL CITY TESTING REQUIREMENTS AND SPECIFICATIONS.
14. ALL CONSTRUCTION OPERATIONS SHALL BE ACCOMPLISHED IN ACCORDANCE WITH APPLICABLE REGULATION OF THE UNITED STATES OCCUPATIONAL SAFETY AND HEALTH ADMINISTRATION. (OSHA STANDARDS MAY BE PURCHASED FROM THE GOVERNMENTS PRINTING OFFICE; INFORMATION AND RELATED REFERENCE MATERIALS MAY BE PURCHASED FROM OSHA, 611 EAST 6TH STREET, AUSTIN, TX.)
15. ALL SITE WORK MUST ALSO COMPLY WITH ENVIRONMENTAL REQUIREMENTS.
16. THROUGHOUT THE CONSTRUCTION, AND AT THE COMPLETION OF THE CONSTRUCTION, THE CONTRACTOR IS TO ENSURE THAT DRAINAGE OF STORM WATER RUNOFF IS NOT BLOCKED.
17. ALL EXCESS EXCAVATED MATERIAL AND SOIL IS TO BECOME PROPERTY OF CONTRACTOR AND TO BE REMOVED FROM SITE. (NO SEPARATE PAY.)
18. ALL CULVERTS REMOVED FROM CONSTRUCTION SHALL BE REPLACED TO ORIGINAL GRADE; ROAD DITCH SHALL BE GRADED TO PROVIDE FOR AN EVEN GRADE AND SECTION BETWEEN EXISTING CULVERTS. ALL CULVERTS SHALL BE CLEAN AND FREE OF DEBRIS DURING AND AFTER CONSTRUCTION.
19. THE CONTRACTOR IS SPECIFICALLY CAUTIONED THAT THE LOCATION AND/OR ELEVATION OF EXISTING UTILITIES AS SHOWN ON THESE PLANS IS BASED ON RECORDS OF THE CITY OF BUDA AND, WHERE POSSIBLE, MEASUREMENTS TAKEN IN THE FIELD. THE INFORMATION IS NOT TO BE RELIED ON AS BEING EXACT OR COMPLETE. THE CONTRACTOR MUST CALL THE APPROPRIATE UTILITY COMPANY AT LEAST 48 HOURS BEFORE ANY EXCAVATION TO REQUEST EXACT FIELD LOCATION OF UTILITIES. IT SHALL BE THE RESPONSIBILITY OF THE CONTRACTOR TO RELOCATE ALL EXISTING UTILITIES WHICH CONFLICT WITH THE PROPOSED IMPROVEMENTS SHOWN ON THE PLANS AND TO VERIFY THE EXACT LOCATION OF ALL EXISTING UTILITIES PRIOR TO THE COMMENCEMENT OF CONSTRUCTION ACTIVITIES.
20. THE CONTRACTOR SHALL BE RESPONSIBLE FOR ALL DAMAGE TO PRIVATE PROPERTY, WHICH OCCURRED AS A RESULT OF ANY PORTION OF THIS PROJECT. ANY DAMAGE TO PRIVATE PROPERTY SHALL BE REPAIRED TO EQUAL OR BETTER CONDITION. THE CONTRACTOR SHALL COORDINATE ALL REPAIRS TO PRIVATE PROPERTY WITH THE PROPERTY OWNER. CONTRACTOR SHALL PAY AND/OR SETTLE WITH PRIVATE PROPERTY OWNER FOR ALL COSTS RELATED TO ANY DAMAGE. THE CITY OF BUDA WILL NOT PROVIDE SEPARATE PAY FOR REPAIR OF ANY DAMAGES, REIMBURSEMENTS OR SETTLEMENTS.

CITY OF BUDA EROSION AND SEDIMENTATION CONTROL NOTES:

1. THE CONTRACTOR SHALL INSTALL EROSION/SEDIMENTATION CONTROLS AND TREE/NATURAL AREA PROTECTIVE FENCING PRIOR TO ANY SITE PREPARATION WORK (CLEARING, GRUBBING OR EXCAVATION).
2. THE PLACEMENT OF EROSION/SEDIMENTATION CONTROLS SHALL BE IN ACCORDANCE WITH THE CITY OF AUSTIN'S ENVIRONMENTAL CRITERIA MANUAL AS ADOPTED BY THE CITY OF BUDA.
3. IF TREES DO NOT EXIST WITHIN THE PROJECT LIMITS, TREE PROTECTION WILL NOT BE REQUIRED.
4. A PRE-CONSTRUCTION CONFERENCE SHALL BE HELD WITH THE CONTRACTOR, DESIGN ENGINEER/PERMIT APPLICANT AND INSPECTOR AFTER INSTALLATION OF THE EROSION/SEDIMENTATION CONTROLS AND TREE/NATURAL AREA PROTECTION MEASURES AND PRIOR TO BEGINNING ANY SITE PREPARATION WORK. THE CONTRACTOR SHALL NOTIFY THE CITY OF BUDA ENGINEERING DEPARTMENT, 312-0084, AT LEAST THREE DAYS PRIOR TO THE MEETING DATE.
5. ANY MAJOR VARIATION IN MATERIALS OR LOCATIONS OF CONTROLS OR FENCES FROM THOSE SHOWN ON THE APPROVED PLANS WILL REQUIRE A REVISION AND MUST BE APPROVED BY THE REVIEWING ENGINEER, ENVIRONMENTAL SPECIALIST OR CITY ARBORIST AS APPROPRIATE. MINOR CHANGES TO BE MADE AS FIELD REVISIONS TO THE PLAN MAY BE REQUIRED BY THE INSPECTOR DURING THE COURSE OF CONSTRUCTION TO CORRECT CONTROL INADEQUACIES.
6. THE CONTRACTOR IS REQUIRED TO INSPECT THE CONTROLS AND FENCES AT WEEKLY INTERVALS AND AFTER SIGNIFICANT RAINFALL EVENTS TO INSURE THAT THEY ARE FUNCTIONING PROPERLY. THE PERSON(S) RESPONSIBLE FOR THE MAINTENANCE OF CONTROLS AND FENCES SHALL IMMEDIATELY MAKE ANY NECESSARY REPAIRS TO DAMAGED AREAS. SILT ACCUMULATION AT CONTROLS MUST BE REMOVED WHEN THE DEPTH REACHED SIX (6) INCHES.

PERMANENT EROSION CONTROL:

ALL DISTURBED AREAS SHALL BE RESTORED AS NOTED BELOW. A MINIMUM OF FOUR INCHES OF TOPSOIL SHALL BE PLACED IN ALL DRAINAGE CHANNELS (EXCEPT ROCK) AND BETWEEN THE CURB AND RIGHT-OF-WAY LINE. THE SEEDING FOR PERMANENT EROSION CONTROL SHALL BE AS SPECIFIED IN THE CITY OF AUSTIN STANDARD SPECIFICATION 604S, AS ADOPTED BY THE CITY OF BUDA.

DUST CONTROL:

DUST CONTROL METHODS ARE REQUIRED AS PER CITY OF AUSTIN'S ENVIRONMENTAL CRITERIA MANUAL SECTION 1.4.5.D AS ADOPTED BY THE CITY OF BUDA.

CITY OF BUDA UTILITY CONSTRUCTION NOTES:

1. THE CITY STANDARD CONSTRUCTION SPECIFICATIONS CURRENT AT THE TIME OF BIDDING SHALL COVER MATERIAL AND METHODS USED TO DO THIS WORK.
2. CONTRACTOR MUST OBTAIN A STREET CUT PERMIT FROM THE CITY OF BUDA BEFOREBEGINNING CONSTRUCTION WITHIN THE RIGHT-OF-WAY OF A PUBLIC STREET OR ALLEY.
3. AT LEAST 48 HOURS BEFORE BEGINNING ANY WATER AND WASTEWATER CONSTRUCTION IN PUBLIC R.O.W. OR PUBLIC EASEMENT, THE CONTRACTOR SHALL NOTIFY THE CITY OF BUDA PUBLIC WORKS.
4. THE CONTRACTOR SHALL CONTACT THE AUSTIN AREA "ONE CALL" SYSTEM AT 1-800-344-8377 FOR EXISTING UTILITY LOCATIONS PRIOR TO ANY EXCAVATION IN ADVANCE OF CONSTRUCTION. THE CONTRACTOR SHALL VERIFY THE LOCATIONS OF ALL UTILITIES TO BE EXTENDED, TIED TO, OR ALTERED, OR SUBJECT TO DAMAGE/INCONVENIENCE BY THE CONSTRUCTION OPERATIONS. THE CITY OF BUDA WATER AND WASTEWATER MAINTENANCE RESPONSIBILITY ENDS AT R.O.W./EASEMENT LINES.
5. NO OTHER UTILITY SERVICE/APPURTENANCES SHALL BE PLACED NEAR THE PROPERTY LINE, OR OTHER ASSIGNED LOCATION DESIGNATED FOR WATER AND WASTEWATER UTILITY SERVICE THAT WOULD INTERFERE WITH THE WATER AND WASTEWATER SERVICES.
6. THE CITY SPECIFICATION ITEM 509S WILL BE REQUIRED AS A MINIMUM TRENCH SAFETY MEASURE.
7. ALL MATERIALS TESTS, INCLUDING SOIL DENSITY TESTS AND DETAILED SOIL ANALYSES, SHALL BE CONDUCTED BY AN INDEPENDENT LABORATORY AND FUNDED BY THE OWNER IN ACCORDANCE WITH CITY STANDARD SPECIFICATION ITEM 1804S.04.
8. PRESSURE TAPS SHALL BE IN ACCORDANCE WITH CITY STANDARD ITEM 510.3(24). THE CONTRACTOR SHALL PERFORM EXCAVATION ETC. AND SHALL FURNISH, INSTALL AND AIR TEST THE SLEEVE AND VALVE, WHEN CONTRACTORS MAKE THE TAP A CITY INSPECTOR MUST BE PRESENT AND 2 WORKING DAYS (MIN.) NOTICE MUST BE GIVEN. "SIZE ON SIZE" TAPS WILL NOT BE PERMITTED, UNLESS, IT HAS BEEN DEMONSTRATED THAT A MORE ACCEPTABLE CONNECTION WOULD INVOLVE CONSIDERABLE HARDSHIP TO THE UTILITY SYSTEM. ALL TAPS SHALL BE MADE BY USE OF AN APPROVED FULL CIRCLE-GASKETED CAST IRON OR DUCTILE IRON TAPPING SLEEVE. CONCRETE BLOCKING SHALL BE PLACED UNDER ALL TAP SLEEVES PRIOR TO MAKING THEPRESSURE TAP AND THE USE OF PRECAST BLOCKS MAY BE USED TO HOLD THE TAP IN ITS CORRECT POSITION PRIOR TO BLOCKING. THE BLOCKING BEHIND AND UNDER THE TAP SHALL HAVE A MINIMUM OF 24 HOURS CURING TIME BEFORE THE VALVE CAN BE RE-OPENED FOR SERVICE FROM THAT TAP.
9. THRUST RESTRAINT SHALL BE IN ACCORDANCE WITH CITY STANDARD SPECIFICATION ITEM 510.3(22).
10. ALL BRANCH CONNECTIONS SHALL HAVE THE VALVE BOLTED TO THE MAIN BY METHODS OF FLANGE OR SWIVEL TEES. FOSTER ADAPTORS MAY BE USED IN LIEU OF FLANGE OR SWIVEL TEES WHEN CALLED OUT ON THE PLANS BY THE DESIGN ENGINEER.
11. FIRE HYDRANTS SHALL BE SET IN ACCORDANCE WITH CITY STANDARD SPECIFICATION ITEM 511S.4. FIRE HYDRANTS SHALL BE PAINTED FLYNT ALUMINUM OR EQUAL.
12. WATER LINE TESTING AND STERILIZATION SHALL BE PERFORMED IN ACCORDANCE WITH CITY STANDARD SPECIFICATION ITEMS 510.3 (27)-(29). FORCE MAIN PRESSURE TESTING SHALL BE CONDUCTED AND FALL UNDER THE SPECIFICATIONS AS WATER LINES (PRESSURE PIPE) OR AT THE PRESSURE SHOWN ON THE APPROVED PLANS.
13. ALL MATERIAL USED ON THIS PROJECT MUST BE LISTED ON THE STANDARD PRODUCTS LISTING. ANY MATERIAL NOT LISTED HAS TO GO THROUGH THE CITY OF BUDA CITY ENGINEER FOR REVIEW AND APPROVAL PRIOR TO START OF PROJECT. TESTING AND EVALUATION OF PRODUCTS ARE REQUIRED BEFORE APPROVAL WILL BE GIVEN ANY CONSIDERATION.
14. WHEN WATER SERVICES ARE DAMAGED, THE SERVICE SHALL BE REPLACED FULL LENGTH WITH PIPE. NOTE: FULL LENGTH IS FROM BALL VALVE TO METER.
15. WHEN AN EXISTING WATERLINE SHUTOUT IS NECESSARY AND POSSIBLE, THE CONTRACTOR SHALL NOTIFY THE CONSTRUCTION INSPECTOR WHO WILL THEN NOTIFY THE CITY OF BUDA PUBLIC WORKS AND THE AFFECTED CUSTOMERS A MINIMUM OF EVENTY-TWO (72) HOURS IN ADVANCE.
16. THE CONTRACTOR SHALL NOTIFY THE CONSTRUCTION INSPECTOR SO THAT HE CAN NOTIFY THE CITY OF BUDA PUBLIC WORKS AT A MINIMUM OF 72 HOURS PRIOR TO RELOCATING ANY DOMESTIC OR FIRE DEMAND WATER METERS. THE CONTRACTOR SHALL CAREFULLY REMOVE ALL METERS AND METER BOXES THAT ARE INDICATED TO BE RELOCATED OR SALVAGED. THE CONTRACTOR SHALL INSTALL THE REMOVED METER OR CITY PROVIDED METER AT THE NEW LOCATION INDICATED ON THE CONSTRUCTION PLANS.
17. ALL MANHOLES IN UNPAVED AREAS PROVIDING DIRECT ACCESS TO A WASTEWATER LINE SHALL BE WATERTIGHT AND BEAR THE WORDING AND INSIGNIA FOR THE CITY OF BUDA.
18. THE CONTRACTOR SHALL VERIFY ALL VERTICAL AND HORIZONTAL LOCATIONS OF EXISTING UTILITIES PRIOR TO STARTING ONSITE UTILITY WORK.
19. ALL RESPONSIBILITY FOR THE ADEQUACY OF THESE PLANS REMAINS WITH THE ENGINEER WHO PREPARED THEM. APPROVAL OF THESE PLANS BY THE CITY OF BUDA DOES NOT REMOVE THESE RESPONSIBILITIES.
20. REVIEW BY THE CITY OF BUDA WATER UTILITY APPLIES ONLY TO FACILITIES WITHIN PUBLIC STREETS OR PUBLIC UTILITY EASEMENTS. ALL OTHER WATER AND WASTEWATER FACILITIES INSIDE PRIVATE PROPERTY ARE UNDER THE JURISDICTION OF BUILDING INSPECTION.

UNDERGROUND UTILITY LINES

1. ALL NEW TELECOMMUNICATION UTILITY LINES AND ALL NEW ELECTRIC UTILITY LATERAL AND SERVICE LINES AND WIRES SHALL BE PLACED UNDERGROUND, EXCEPT AS OTHERWISE HEREIN PROVIDED. ALL SUCH UTILITIES SHALL BE INSTALLED OUTSIDE OF THE CITY OF BUDA RIGHT OF WAY IN A PUBLIC UTILITY EASEMENT (P.U.E.) OR SPECIFIC USE EASEMENT.
2. WHERE ELECTRICAL SERVICE IS TO BE PLACED UNDERGROUND, ELECTRIC UTILITY SERVICE LINES FOR STREET OR SITE LIGHTING SHALL ALSO BE PLACED UNDERGROUND.
3. ALL ELECTRICAL, CABLE TELEVISION, AND TELEPHONE SUPPORT EQUIPMENT (TRANSFORMERS, AMPLIFIERS, SWITCHING DEVICES, ETC.) NECESSARY FOR UNDERGROUND INSTALLATIONS IN SUBDIVISIONS SHALL BE PAD MOUNTED OR PLACED UNDERGROUND IN A PUBLIC UTILITY EASEMENT RATHER THAN A RIGHT-OF-WAY.
4. NOTHING HEREIN SET FORTH SHALL PROHIBIT OR RESTRICT ANY UTILITY COMPANY FROM RECOVERING THE DIFFERENCE BETWEEN THE COST OF OVERHEAD FACILITIES AND UNDERGROUND FACILITIES. THE SUBDIVIDER SHALL BE REQUIRED TO REIMBURSE THE UTILITY COMPANY FOR SUCH COST DIFFERENTIAL.
5. EACH UTILITY COMPANY WHOSE FACILITIES ARE SUBJECT TO THE PROVISIONS OF THIS ORDINANCE SHALL DEVELOP POLICIES AND COST REIMBURSEMENT PROCEDURES WITH RESPECT TO THE INSTALLATIONS AND EXTENSION OF UNDERGROUND SERVICE.
6. NOTWITHSTANDING THE PROVISIONS OF THIS ORDINANCE, TEMPORARY CONSTRUCTION SERVICE MAY BE PROVIDED BY OVERHEAD UTILITY LINES AND FACILITIES WITHOUT OBTAINING A VARIANCE OR EXCEPTION FROM THE PROVISIONS HEREOF.
7. ALL UTILITY INSTALLATIONS REGULATED BY THE PROVISIONS SET FORTH HEREIN SHALL CONFORM WITH ALL CITY OF BUDA ORDINANCES AND REGULATIONS, AS WELL AS THE REGULATIONS AND SPECIFICATIONS OF THE APPLICABLE UTILITY COMPANIES.

GENERAL CONSTRUCTION NOTES:

1. THE ENGINEER ASSUMES NO RESPONSIBILITY FOR THE ACCURACY OF THE LOCATION OF UNDERGROUND UTILITIES. THE CONTRACTOR SHALL BE RESPONSIBLE FOR LOCATION AND AVOIDING ALL EXISTING UTILITIES BY CALLING THE 'ONE CALL' LOCATOR SERVICE AT (800) 344-8377 (DIG-TESS) OR (800) 245-4545 (TEXAS ONE CALL) AT LEAST 48 HOURS PRIOR TO CONSTRUCTION.
2. MANHOLE FRAMES, COVERS AND WATER VALVES WILL BE RAISED TO FINISHED GRADE AT THE OWNER'S EXPENSE BY A QUALIFIED CONTRACTOR WITH CITY INSPECTION. ALL UTILITY ADJUSTMENTS IN THE ROADWAY SHALL BE COMPLETED PRIOR TO FINAL PAVING CONSTRUCTION.
3. AT INTERSECTIONS WITH VALLEY DRAINAGE, THE CROWNS OF THE INTERSECTION STREETS WILL CULMINATE IN A DISTANCE OF 40' FROM THE INTERSECTION CURB LINE UNLESS OTHERWISE NOTED. INLETS ON THE INTERSECTING STREET SHALL NOT BE CONSTRUCTED WITHIN 40' OF THE VALLEY DRAINAGE.
4. CONTRACTOR SHALL PROVIDE A TRENCH SAFETY SYSTEM TO MEET, AS A MINIMUM, THE REQUIREMENTS OF OSHA SAFETY AND HEALTH REGULATION, PART 1926, SUBPART P AS PUBLISHED IN THE FEDERAL REGISTER, VOLUME 54, NO. 209, DATED OCTOBER 31, 1989.
5. WHEN SHOWN ON THE PLANS, CONTRACTOR SHALL MAINTAIN AT LEAST ONE LANE OF TRAFFIC IN EACH DIRECTION DURING WORKING HOURS OR PROVIDE DETOURS AROUND CONSTRUCTION SITE, AND USE UNIFORMED POLICE TO CONTROL TRAFFIC WHEN REQUIRED BY OWNER.
6. CONTRACTOR SHALL COVER OPEN EXCAVATIONS IN PUBLIC STREETS WITH ANCHORED STEEL PLATES DURING NONWORKING HOURS.
7. ADEQUATE DRAINAGE SHALL BE MAINTAINED AT ALL TIMES DURING CONSTRUCTION, AND ANY DRAINAGE DITCH OR STRUCTURE DISTURBED DURING CONSTRUCTION SHALL BE RESTORED TO THE SATISFACTION OF THE OWNING AUTHORITY. ALL CONSTRUCTION STORM RUNOFF SHALL COMPLY WITH THE NATIONAL POLLUTANT DISCHARGE ELIMINATION SYSTEM (NPDES) REQUIREMENTS.
8. CONDITION OF THE ROAD AND/OR RIGHT-OF-WAY, UPON COMPLETION OF JOB, SHALL BE AS GOOD AS OR BETTER THAN THE CONDITION PRIOR TO STARTING WORK.
9. ALIGNMENT, CENTERLINE CURVE DATA AND STATIONING TO BE VERIFIED BY ON-THE-GROUND SURVEY FROM PROJECT CONTROL POINTS AND ELEVATIONS OF ALL CONNECTIONS TO EXISTING FACILITIES TO BE CONFIRMED PRIOR TO WORK START. NO SEPARATE PAY. CONTRACTOR TO NOTIFY OWNER'S REPRESENTATIVE OF ANY DISCREPANCIES PRIOR TO CONSTRUCTION.
10. CONTRACTOR SHALL GIVE NOTICE TO ALL AUTHORIZED INSPECTORS, SUPERINTENDENTS, OR PERSONS IN CHARGE OF PRIVATE AND PUBLIC UTILITIES OR RAILROADS AFFECTED BY HIS OPERATIONS PRIOR TO COMMENCEMENT OF WORK.
11. CONTRACTOR SHALL ASSURE HIMSELF THAT ALL CONSTRUCTION PERMITS HAVE BEEN OBTAINED PRIOR TO COMMENCEMENT OF WORK. REQUIRED PERMITS THAT CAN BE ISSUED TO CONTRACTOR WILL BE OBTAINED AT HIS EXPENSE.
12. ANY REFERENCE TO CODES OR SPECIFICATIONS SHALL BE WITH RESPECT TO CURRENT EDITIONS OF THE SAME.
13. PRIOR TO CONSTRUCTION, CONTRACTOR TO UNCOVER AND VERIFY THE DEPTHS AND HORIZONTAL LOCATION OF EXISTING LINES AND UTILITIES TO BE EXTENDED, CONNECTED TO, OR CROSSED (BY THIS PROJECT).
14. THE FINISHED GRADE ELEVATIONS SHOWN ARE INTENDED TO PROVIDE DRAINAGE AWAY FROM THE PROPOSED STRUCTURES. MINOR FIELD CHANGES MAY BE NECESSARY TO PROVIDE ADEQUATE DRAINAGE. GRADE UNIFORMLY BETWEEN ELEVATIONS SHOWN TO PROVIDE DRAINAGE.
15. ADJUST MANHOLE COVERS, VALVE BOXES, ELECTRICAL MANHOLE, ETC. TO MATCH PROPOSED FINISHED GRADE. (NO SEPARATE PAY.)
16. MINIMUM CLEARANCE BETWEEN WATERLINES AND SEWER LINES IS 9 FEET MEASURED BETWEEN OUTSIDE OF PIPE DIAMETERS, OR APPROPRIATE MEASURES ARE THEN TAKEN TO MEET REQUIREMENTS OF TCEQ REGULATIONS.
17. LINE FLUSHING OR ANY ACTIVITY USING LARGE QUANTITIES OF WATER MUST BE SCHEDULED WITH THE WATER AND WASTEWATER SUPERINTENDENT OF THE CITY OF PFLUGERVILLE.
18. WATERLINES: DO NOT EXCEED 80% OF MANUFACTURER'S MAXIMUM PIPE JOINT DEFLECTION.

CONSTRUCTION SEQUENCE

THE FOLLOWING CONSTRUCTION SEQUENCE SHALL BE FOLLOWED BY THE CONTRACTOR:

1. THE SWP3 SITE NOTEBOOK MUST BE PREPARED AND COMPLETED NO LATER THAN THE TIME WHEN THE CONSTRUCTION SITE NOTICE IS REQUIRED TO BE POSTED OR NOTICE OF INTENT IS REQUIRED TO BE SUBMITTED TO TCEQ. CONTRACTOR SHALL SUBMIT SWP3 PLAN TO THE CITY OF BUDA A MINIMUM OF 72 HOURS BEFORE THE PRECONSTRUCTION MEETING AND PROVIDE THE NOTEBOOK FOR REVIEW AT THE PRECONSTRUCTION MEETING.
2. PRECONSTRUCTION MEETING WITH ALL APPLICABLE CITY OF BUDA DEPARTMENTS, OWNER, ENGINEER, AND OTHER REQUIRED ENTITIES.
3. INSTALLATION OF EROSION CONTROL MEASURES INCLUDING, BUT NOT LIMITED TO, STABILIZED CONSTRUCTION ENTRANCE AND SILT FENCING.
4. CLEAR AND GRUB PERMANENT OR TEMPORARY EASEMENTS.
5. CONSTRUCT STORM SEWER, DETENTION POND, AND OUTFALL STRUCTURE.
6. DETENTION POND WILL BE UTILIZED AS A TEMPORARY SEDIMENTATION BASIN OF THIS PROJECT. SKIMMER DEWATERING DEVICE WILL BE INSTALLED PER EROSION CONTROL SHEETS.
7. CONSTRUCT WATER LINES.
8. CONSTRUCT WASTEWATER LINES.
9. PRESSURE TEST AND DISINFECT WATER LINES.
10. CONNECT PROPOSED WATER LINE TO EXIST WATER LINE.
11. FINISH GRADING SITE PER GRADING PLANS, AND PAVING PLANS.
12. INSTALL REVEGETATION AND WATER AS REQUIRED BY CONTRACT DOCUMENTS.
13. CONDUCT SUBSTANTIAL COMPLETION WALK THROUGH WITH ENGINEER AND CITY INSPECTOR.
14. COMPLETE ENGINEER AND CITY CLOSE-OUT PROCEDURES INCLUDING CITY ENGINEERING DEPARTMENT.
15. CONDUCT FINAL WALK THROUGH.
16. PROJECT CLOSE-OUT AFTER REVEGETATION HAS BEEN ACHIEVED PER CITY REQUIREMENTS INCLUDING ISSUANCE OF WARRANTY BOND. REMOVE TEMPORARY EROSION CONTROLS, INCLUDING SKIMMER DEWATERING DEVICES, AND PLUG OPENING TO STRUCTURE AFTER THE POND AND ALL DISTURBED AREAS HAVE BEEN STABILIZED.

SITE DEVELOPMENT NUMBER 2025-476

REV. NO.	DATE	DESCRIPTION

PROJECT MANAGER:	PK
DESIGNED BY:	PG/RM
CHECKED BY:	DCS/JTH
DRAWN BY:	PG/RM
DCS PROJECT NO:	20101597

DCS ENGINEERING, LLC
1101 S. CAPITAL OF TEXAS HIGHWAY, BUILDING G-100
AUSTIN, TX 78746

TEL: (512) 614-6171
T.B.P.E. FIRM NO. F-13162

BudaTx breathe easy here™

BUDA SPORTSPLEX - PHASE I

STATE OF TEXAS
JORDAN T. HURTA
143332
LICENSED PROFESSIONAL ENGINEER
8/4/2025

GENERAL

GENERAL NOTES - SHEET NO. 1

DATE: AUGUST 2025

SCALE: AS NOTED

DRAWING: 00G-04

FILENAME: Z:\Projects 1551-1599\20101597 - Buda - Sportsplex\510 - Re-bid Dwgs\500 - Final_Design\500 - Final_Design\5.1 - Drawings\Sheet Files\Construction Plans\000-04.dwg, LAST SAVED ON: Aug 05 2025 1:26pm, PLOTTED BY: RMALDONADO, ON: Aug 07 2025 8:13am, CFG:

TREE PROTECTION NOTES:

1. ALL TREES NOT LOCATED WITHIN THE LIMITS OF CONSTRUCTION AND OUTSIDE OF DISTURBED AREAS SHALL BE PRESERVED.
2. ALL TREES SHOWN ON THIS PLAN TO BE RETAINED SHALL BE PROTECTED DURING CONSTRUCTION WITH FENCING.
3. TREE PROTECTION FENCES SHALL BE ERECTED ACCORDING TO CITY STANDARDS FOR TREE PROTECTION, INCLUDING TYPES OF FENCING AND SIGNAGE.
4. TREE PROTECTION FENCES SHALL BE INSTALLED PRIOR TO THE COMMENCEMENT OF ANY SITE PREPARATION WORK (CLEARING, GRUBBING, OR GRADING) AND SHALL BE MAINTAINED THROUGHOUT ALL PHASES OF THE CONSTRUCTION PROJECT.
5. EROSION AND SEDIMENTATION CONTROL BARRIERS SHALL BE INSTALLED OR MAINTAINED IN A MANNER WHICH DOES NOT RESULT IN TRENCHING OR SOIL BUILD-UP WITHIN TREE CRZ'S OR DRIPLINES.
6. TREE PROTECTION FENCES SHALL COMPLETELY SURROUND THE TREE OR CLUSTERS OF TREES AND BE PLACED AT THE OUTERMOST LIMITS OF THE TREE BRANCHES (DRIPLINE) OR CRZ, WHICHEVER IS GREATER; AND SHALL BE MAINTAINED THROUGHOUT THE CONSTRUCTION PROJECT IN ORDER TO PREVENT THE FOLLOWING:
   A. SOIL COMPACTION IN ROOT ZONE AREA RESULTING FROM VEHICULAR TRAFFIC OR STORAGE OF EQUIPMENT OR MATERIAL.
   B. ROOT ZONE DISTURBANCES DUE TO GRADE CHANGES (GREATER THAN 6 INCHES CUT OR FILL) OR TRENCHING NOT REVIEWED AND AUTHORIZED BY THE CITY ARBORIST OR ADMINISTRATOR.
   C. WOUNDS TO EXPOSED ROOTS, TRUNK, OR LIMBS BY MECHANICAL EQUIPMENT
   D. OTHER ACTIVITIES DETRIMENTAL TO TREES, SUCH AS CHEMICAL STORAGE, CONCRETE TRUCK CLEANING AND FIRES.
7. EXCEPTIONS TO INSTALLING TREE FENCES AT THE TREE DRIPLINES OR CRZ, WHICHEVER IS GREATER, MAY BE PERMITTED IN THE FOLLOWING CASES:
   A. WHERE THERE IS TO BE AN APPROVED GRADE CHANGE, IMPERMEABLE PAVING SURFACE, OR TREE WELL.
   B. WHERE PERMEABLE PAVING IS TO BE INSTALLED, ERECT THE FENCE AT THE OUTER LIMITS OF THE PERMEABLE PAVING AREA.
   C. WHERE TREES ARE CLOSE TO PROPOSED BUILDINGS, ERECT THE FENCE NO CLOSER THAN 6 FEET TO THE BUILDING.
   D. WHERE THERE ARE SEVERE SPACE CONSTRAINTS DUE TO TRACT SIZE, OR OTHER SPECIAL REQUIREMENTS, CONTACT THE CITY ARBORIST TO DISCUSS ALTERNATIVES.
8. WHERE ANY OF THE ABOVE EXCEPTIONS RESULT IN A FENCE THAT IS CLOSER THAN 5 FEET TO A TREE TRUNK, PROTECT THE TRUNK WITH STRAPPED-ON PLANKING TO A HEIGHT OF 8 FEET (OR TO THE LIMITS OF LOWER BRANCHING) IN ADDITION TO THE REDUCED FENCING PROVIDED.
9. WHERE ANY OF THE ABOVE EXCEPTIONS RESULT IN AREAS OF UNPROTECTED ROOT ZONES UNDER THE DRIPLINE OR CRZ, WHICHEVER IS GREATER, THOSE AREAS SHOULD BE COVERED WITH 6 INCHES OF ORGANIC MULCH TO MINIMIZE SOIL COMPACTION.
10. WHERE ANY OF THE ABOVE EXCEPTIONS RESULT IN DAMAGE TO THE FINE, WATER ABSORBING ROOTS, SUPPLEMENTAL WATERING SHALL BE REQUIRED:
    A. TREES SHALL BE WATERED ONCE EVERY TWO WEEKS DURING PERIODS OF HOT, DRY WEATHER.
    B. TREE CROWNS ARE TO BE SPRAYED WITH WATER PERIODICALLY TO REDUCE DUST ACCUMULATION ON LEAVES.
    C. A SIGNED WATERING CONTRACT SHALL BE REQUIRED.
11. PRIOR TO EXCAVATION OR GRADE CUTTING WITHIN TREE DRIPLINES, A CLEAN CUT SHALL BE MADE BETWEEN THE DISTURBED AND UNDISTURBED ROOT ZONES WITH A ROCK SAW OR SIMILAR EQUIPMENT TO MINIMIZE DAMAGE TO REMAINING ROOTS.
12. ALL GRADING WITHIN PROTECTED ROOT ZONE AREAS SHALL BE DONE BY HAND OR WITH SMALL EQUIPMENT TO MINIMIZE ROOT DAMAGE. PRIOR TO GRADING, RELOCATE PROTECTIVE FENCING TO 2 FEET BEHIND THE GRADE CHANGE AREA.
13. ANY ROOTS EXPOSED BY CONSTRUCTION ACTIVITY SHALL BE PRUNED FLUSH WITH THE SOIL. BACKFILL ROOT AREAS WITH GOOD QUALITY TOP SOIL. IF EXPOSED ROOT AREAS ARE NOT BACKFILLED WITHIN 2 DAYS, COVER THEM WITH ORGANIC MATERIAL IN A MANNER WHICH REDUCES SOIL TEMPERATURE AND MINIMIZES WATER LOSS DUE TO EVAPORATION.
14. WHEN INSTALLING CONCRETE ADJACENT TO THE ROOT ZONE OF A TREE, USE A PLASTIC VAPOR BARRIER BEHIND THE CONCRETE TO PROHIBIT LEACHING OF LIME INTO THE ROOT ZONE.
15. ANY TRENCHING SHALL BE AS FAR FROM EXISTING TREE TRUNKS AS POSSIBLE. TRENCH LINES SHALL NOT RUN WITHIN THE CRZ. BORING, TUNNELING OR OTHER TECHNIQUES MAY BE APPROVED BY THE CITY ARBORIST OR ADMINISTRATOR IF THERE IS NO ALTERNATIVE AVAILABLE.
16. NO LANDSCAPE TOPSOIL DRESSING GREATER THAN FOUR (4) INCHES SHALL BE PERMITTED WITHIN THE DRIPLINE OR CRZ, WHICHEVER IS GREATER, OF TREES. NO TOPSOIL IS PERMITTED ON ROOT FLARES OR WITHIN 6 INCHES OF TREE TRUNKS.
17. PRUNING TO PROVIDE CLEARANCE FOR STRUCTURES, VEHICULAR TRAFFIC AND CONSTRUCTION EQUIPMENT SHALL TAKE PLACE BEFORE CONSTRUCTION BEGINS. ALL PRUNING MUST BE DONE ACCORDING TO CITY STANDARDS AND AS OUTLINED IN LITERATURE PROVIDED BY THE INTERNATIONAL SOCIETY OF ARBORICULTURE (IS A PRUNING TECHNIQUES).
18. ALL OAK TREE CUTS, INTENTIONAL OR UNINTENTIONAL, SHALL BE PAINTED IMMEDIATELY (WITHIN 10 MINUTES). TREE PAINT MUST BE KEPT ON SITE AT ALL TIMES. ALL PRUNING OR CUTTING TOOLS MUST BE STERILIZED BETWEEN TREES TO PREVENT THE SPREAD OF DISEASE.
19. TREES APPROVED FOR REMOVAL SHALL BE REMOVED IN A MANNER WHICH DOES NOT IMPACT TREES TO BE PRESERVED. REFER TO THE CITY OF PFLUGERVILLE TREE TECHNICAL MANUAL FOR APPROPRIATE REMOVAL METHODS.
20. DEVIATIONS FROM THE ABOVE NOTES MAY BE CONSIDERED ORDINANCE VIOLATIONS IF THERE IS SUBSTANTIAL NONCOMPLIANCE OR IF A TREE SUSTAINS DAMAGE AS A RESULT.

DRAWING CROSS REFERENCE SYSTEM

1. DETAILS & SECTIONS

(A) DETAIL 1 IS SHOWN ON DRAWING 01M-02

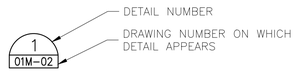

(B) DETAIL 4 IS SHOWN ON SAME SHEET



WATERLINE LEGEND:

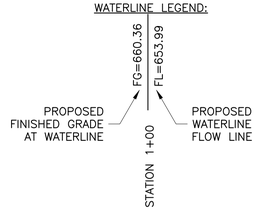

TEXT LEGEND

BASIN.....TEXT – EXISTING FACILITIES	LINE WEIGHT – EXISTING FACILITIES	BASIN.....TEXT – EXISTING CALL OUTS
BASIN.....TEXT – PROPOSED FACILITIES	LINE WEIGHT – PROPOSED FACILITIES	**BASIN.....**TEXT – PROPOSED CALL OUTS

TCEQ CONTRIBUTING ZONE PLAN GENERAL CONSTRUCTION NOTES:

1. A WRITTEN NOTICE OF CONSTRUCTION MUST BE SUBMITTED TO THE TCEQ REGIONAL OFFICE AT LEAST 48
HOURS PRIOR TO THE START OF ANY GROUND DISTURBANCE OR CONSTRUCTION ACTIVITIES. THIS NOTICE MUST
INCLUDE:
   – THE NAME OF THE APPROVED PROJECT;
   – THE ACTIVITY START DATE; AND
   – THE CONTACT INFORMATION OF THE PRIME CONTRACTOR.
2. ALL CONTRACTORS CONDUCTING REGULATED ACTIVITIES ASSOCIATED WITH THIS PROJECT SHOULD BE PROVIDED
WITH COMPLETE COPIES OF THE APPROVED CONTRIBUTING ZONE PLAN (CZP) AND THE TCEQ LETTER INDICATING THE SPECIFIC CONDITIONS OF ITS APPROVAL. DURING THE COURSE OF THESE REGULATED ACTIVITIES, THE CONTRACTOR(S) SHOULD KEEP COPIES OF THE APPROVED PLAN AND APPROVAL LETTER ONSITE.
3. NO HAZARDOUS SUBSTANCE STORAGE TANK SHALL BE INSTALLED WITHIN 150 FEET OF A WATER SUPPLY
SOURCE, DISTRIBUTION SYSTEM, WELL, OR SENSITIVE FEATURE.
4. PRIOR TO BEGINNING ANY CONSTRUCTION ACTIVITY, ALL TEMPORARY EROSION AND SEDIMENTATION (E&S)
CONTROL MEASURES MUST BE PROPERLY INSTALLED AND MAINTAINED IN ACCORDANCE WITH THE MANUFACTURERS SPECIFICATIONS. IF INSPECTIONS INDICATE A CONTROL HAS BEEN USED INAPPROPRIATELY, OR INCORRECTLY, THE APPLICANT MUST REPLACE OR MODIFY THE CONTROL FOR SITE SITUATIONS. THESE CONTROLS MUST REMAIN IN PLACE UNTIL THE DISTURBED AREAS HAVE BEEN PERMANENTLY STABILIZED.
5. ANY SEDIMENT THAT ESCAPES THE CONSTRUCTION SITE MUST BE COLLECTED AND PROPERLY DISPOSED OF
BEFORE THE NEXT RAIN EVENT TO ENSURE IT IS NOT WASHED INTO SURFACE STREAMS, SENSITIVE FEATURES,
ETC.
6. SEDIMENT MUST BE REMOVED FROM THE SEDIMENT TRAPS OR SEDIMENTATION BASINS WHEN IT OCCUPIES
50% OF THE BASIN'S DESIGN CAPACITY.
7. LITTER, CONSTRUCTION DEBRIS, AND CONSTRUCTION CHEMICALS EXPOSED TO STORMWATER SHALL BE PREVENTED FROM BEING DISCHARGED OFFSITE.
8. ALL EXCAVATED MATERIAL THAT WILL BE STORED ON-SITE MUST HAVE PROPER E&S CONTROLS.
9. IF PORTIONS OF THE SITE WILL HAVE A CEASE IN CONSTRUCTION ACTIVITY LASTING LONGER THAN 14 DAYS, SOIL
TCEQ-0592A (REV. JULY 15, 2015) PAGE 2 OF 2
STABILIZATION IN THOSE AREAS SHALL BE INITIATED AS SOON AS POSSIBLE PRIOR TO THE 14TH DAY OF INACTIVITY. IF ACTIVITY WILL RESUME PRIOR TO THE 21ST DAY, STABILIZATION MEASURES ARE NOT REQUIRED. IF
DROUGHT CONDITIONS OR INCLEMENT WEATHER PREVENT ACTION BY THE 14TH DAY, STABILIZATION MEASURES
SHALL BE INITIATED AS SOON AS POSSIBLE.
10. THE FOLLOWING RECORDS SHOULD BE MAINTAINED AND MADE AVAILABLE TO THE TCEQ UPON REQUEST:
   – THE DATES WHEN MAJOR GRADING ACTIVITIES OCCUR;
   – THE DATES WHEN CONSTRUCTION ACTIVITIES TEMPORARILY OR PERMANENTLY CEASE ON A PORTION OF THE SITE; AND
   – THE DATES WHEN STABILIZATION MEASURES ARE INITIATED.
11. THE HOLDER OF ANY APPROVED CZP MUST NOTIFY THE APPROPRIATE REGIONAL OFFICE IN WRITING AND
OBTAIN APPROVAL FROM THE EXECUTIVE DIRECTOR PRIOR TO INITIATING ANY OF THE FOLLOWING:
   A. ANY PHYSICAL OR OPERATIONAL MODIFICATION OF ANY BEST MANAGEMENT PRACTICES (BMPS) OR STRUCTURE(S), INCLUDING BUT NOT LIMITED TO TEMPORARY OR PERMANENT PONDS, DAMS, BERMS, SILT FENCES, AND DIVERSIONARY STRUCTURES;
   B. ANY CHANGE IN THE NATURE OR CHARACTER OF THE REGULATED ACTIVITY FROM THAT WHICH WAS
ORIGINALLY APPROVED;
   C. ANY CHANGE THAT WOULD SIGNIFICANTLY IMPACT THE ABILITY TO PREVENT POLLUTION OF THE EDWARDS AQUIFER; OR
   D. ANY DEVELOPMENT OF LAND PREVIOUSLY IDENTIFIED AS UNDEVELOPED IN THE APPROVED CONTRIBUTING ZONE PLAN.

AUSTIN REGIONAL OFFICE
12100 PARK 35 CIRCLE, BUILDING A
AUSTIN, TEXAS 78753-1808
PHONE: (512) 339-2929
FAX: (512) 339-3795

SAN ANTONIO REGIONAL OFFICE
14250 JUDSON ROAD
SAN ANTONIO, TEXAS 78233-4480
PHONE: (210) 490-3096
FAX: (210) 545-4329

SITE DEVELOPMENT NUMBER 2025-476

REV. NO.	DATE	DESCRIPTION		
			PROJECT MANAGER:	PK
			DESIGNED BY:	PG/RM
			CHECKED BY:	DCS/JTH
			DRAWN BY:	PG/RM
			DCS PROJECT NO:	20101597

DCS ENGINEERING, LLC
1101 S. CAPITAL OF TEXAS HIGHWAY, BUILDING G-100
AUSTIN, TX 78746

TEL: (512) 614-6171
T.B.P.E. FIRM NO. F-13162

BUDA SPORTSPLEX - PHASE I

STATE OF TEXAS · JORDAN T. HURTA · 143332 · LICENSED PROFESSIONAL ENGINEER · 8/4/2025

GENERAL

GENERAL NOTES - SHEET NO. 2

DATE: AUGUST 2025
SCALE: AS NOTED
DRAWING: 00G-05

FILENAME: Z:\Projects 1551-1599\20101597 - Buda - Sportsplex\510 - Re-bid Dwgs\500 - Final_Design\500 - Final_Design\5.1 - Drawings\Sheet Files\Construction Plans\000-05.dwg, LAST SAVED ON: Aug 01 2025 2:22pm, PLOTTED BY: RMALDONADO, ON: Aug 11 2025 3:01pm, CFG:

A/C	AIR CONDITIONING
A/E	ARCHITECT/ENGINEER
A	ARCHITECTURAL (DWG DISCIPLINE), AMP
AB	ANCHOR BOLT
ABC	AGGREGATE BASE COURSE
ABAN	ABANDON
AC	ALTERNATING CURRENT
ACK	ACKNOWLEDGE
ACP	ACOUSTIC CEILING PANEL, ASPHALTIC CONCRETE PAVEMENT
ACST	ACOUSTIC
AD	ADDENDUM, AREA DRAIN
ADDL	ADDITIONAL
ADH	ADHESIVE
ADJ	ADJUSTABLE, ADJACENT
AF	AMP FRAME, AMP FUSE
AFF	ABOVE FINISH FLOOR
AFG	ABOVE FINISH GRADE
AGGR	AGGREGATE
AI	AREA INLET
AIC	AMPS INTERRUPTING CAPACITY
ALIG	ALIGNMENT
ALUM	ALUMINUM
ALT	ALTERNATE, ALTITUDE
AM	ACOUSTICAL MATERIAL
AMB	AMBIENT
ANC	ANCHOR
AP	ACCESS PANEL
APRX	APPROXIMATE
APVD	APPROVED
ARCH	ARCHITECTURAL
ASSY	ASSEMBLY
AT	AMP TRIP
ATC	ACOUSTICAL TILE CEILING
ATM	ATMOSPHERE
AUTO	AUTOMATIC
AUX	AUXILIARY
AVE	AVENUE
AVG	AVERAGE
AWG	AMERICAN WIRE GAGE
AWT	ACOUSTICAL WALL TILE
B/B	BACK TO BACK
BAL	BALANCE
BBD	BULLETIN BOARD
BC	BASE CABINET, BOTTOM CHORD, BOLT CENTER, BOLT CIRCLE
BD	BOARD
BE	BOTH ENDS, BELL END
BF	BOTH FACES, BOTTOM FACE, BLIND FLANGE, BOARD FEET
BITUM	BITUMINOUS
BKG	BACKING
BL	BASE LINE
BLDG	BUILDING
BLK	BLOCK
BLKG	BLOCKING
BM	BENCHMARK, BEAM
BOC	BACK OF CURB
BOD	BOTTOM OF DUCT
BOG	BOTTOM OF GRILLE
BOL	BOTTOM OF LOUVER
BOP	BOTTOM OF PIPE
BOR	BOTTOM OF REGISTER
BOT	BOTTOM
BOU	BOTTOM OF UNIT
BP	BASE PLATE
BRG	BEARING
BRGP	BEARING PLATE
BRKT	BRACKET
BS	BOTH SIDES
BTU	BRITISH THERMAL UNIT
BTW	BETWEEN
BTWLD	BUTT WELD
BU	BELL UP, BUILT UP
BUR	BUILT-UP ROOFING
BV	BALL VALVE
BW	BOTH WAYS, BACKWASH (SLUDGE)
BWE	BACKWASH EFFLUENT
BWI	BACKWASH INFLUENT SUPPLY WATER
BWL	BACKWASH WATER LINE
BYP	BYPASS
C TO C	CENTER TO CENTER
C&G	CURB & GUTTER
C	CHANNEL SHAPE, CENTIGRADE, CONDUIT, CIVIL (DRAWING DISCIPLINE)
CAB	CABINET
CAP	CAPACITY
CAT	CATALOG
CAV	CAVITY
CB	CATCH BASIN
CCB	CONCRETE BLOCK
CCW	COUNTER CLOCKWISE
CDF	CONTROLLED DENSITY FILL
CE	CONCRETE EDGE, CLARIFIED EFFLUENT
CER	CERAMIC
CF	CUBIC FEET (FOOT)
CFL	COUNTER FLASHING
CHFR	CHAMFER
CHBD	CHALKBOARD
CHD	CHORD
CHH	COMMUNICATION HANDHOLE
CI	CURB INLET
CIP	CLEAN IN PLACE, CAST-IN-PLACE
CIPB	CONCRETE INTERLOCKING PAVER BALLAST
CIRC	CIRCULATION, CIRCULAR
CJ	CONSTRUCTION JOINT
CKT	CIRCUIT
CL	CENTERLINE, CLASS, CLOSE
CLG	CEILING
CLJ	CONTROL JOINT
CLKG	CAULKING
CLR	CLEAR
CMH	COMMUNICATION MANHOLE
CMU	CONCRETE MASONRY UNIT
CO	CLEAN OUT, CONCRETE OPENING
COL	COLUMN
COM	COMMON
COMB	COMBINATION
COMM	COMMUNICATION
COMP	COMPOSITION, COMPRESSIBLE, COMPOSITE
CONC	CONCENTRIC, CONCRETE
CONN	CONNECTION
CONST	CONSTRUCTION
CONT	CONTINUOUS
COOR	COORDINATE
CORR	CORROSIVE, CORRUGATED
CP	CHECKER PLATE, CONTROL POINT
CPLG	COUPLING
CPVC	POLYVINYL CHLORIDE
CRL	CORROSION RESISTANT LINING
CS	CHLORINE SOLUTION
CSC	COMPRESSION SLEEVE COUPLING
CSK	COUNTERSINK
CSS	CLINIC SERVICE SINK
CT	CERAMIC TILE
CTR	CENTER
CTRL	CONTROL
CVAC	CHLORINE VACUUM
CVT	CULVERT
CU	COPPER, CUBIC
CW	CLOCKWISE
CY	CUBIC YARD
d	PENNY (NAIL MEASURE)
D	DEEP, DIFFUSER
DB	DUCT BANK, DECIBEL, DRY BULB
DBA	DEFORMED BAR ANCHOR
DBL	DOUBLE
DC	DIRECT CURRENT
DEG	DEGREE
DEG C	DEGREE CENTIGRADE
DEG F	DEGREE FAHRENHEIT
DEMO	DEMOLITION
DEP	DEPRESSED
DEPT	DEPARTMENT
DET	DETAIL
DH	DISCHARGE HEADER
DI	DROP INLET, DUCTILE IRON
DIA	DIAMETER
DIAG	DIAGONAL, DIAGRAM
DIFF	DIFFERENTIAL, DIFFERENCE
DIM	DIMENSION
DISCH	DISCHARGE
DIST	DISTANCE, DISTRIBUTION
DIV	DIVISION
DL	DEAD LOAD
DMJ	DOUBLE MECHANICAL JOINT
DMPF	DAMP PROOFING
DN	DOWN
DO	DISSOLVED OXYGEN, DITTO
DP	DEPTH
DPDT	DOUBLE POLE, DOUBLE THROW
DPST	DOUBLE POLE, SINGLE THROW
DR	DRAIN
DS	DOWN SPOUT
DT	DOUBLE TEE, DRIP TRAP ASSEMBLY
DUP	DUPLICATE
DWG	DRAWING
DWL	DOWEL
DWR	DRAWER
E	EAST, ELECTRICAL (DWG DISCIPLINE)
EA	EACH, EXHAUST AIR
EC	ELECTRICAL CONTRACTOR
ECC	ECCENTRIC
ED	EQUIPMENT DRAIN
EDB	ELECTRICAL DUCT BANK
EE	EACH END
EF	EACH FACE
EFF	EFFLUENT, EFFICIENCY
EHH	ELECTRICAL HANDHOLE
EIFS	EXTERIOR INSULATION & FINISH SYSTEM
EJ	EXPANSION JOINT
EL	ELBOW, ELEVATION
ELEC	ELECTRICAL
EMBD	EMBEDDED
EMER	EMERGENCY
EMH	ELECTRICAL MANHOLE
ENCL	ENCLOSURE
ENGR	ENGINEER
ENTR	ENTRANCE
EOP	EDGE OF PAVEMENT
EQ	EQUAL
EQUIP	EQUIPMENT
EQUIV	EQUIVALENT
ES	EACH SIDE, EQUAL SPACE, EMERGENCY SHOWER
ESEW	EMERGENCY SHOWER AND EYE WASH
EST	ESTIMATE
EW	EACH WAY, EMERGENCY EYE/FACE WASH
EWC	ELECTRIC WATER COOLER
EWEF	EACH WAY, EACH FACE
EWTB	EACH WAY, TOP AND BOTTOM
EXC	EXCAVATION
EXH	EXHAUST
EXST	EXISTING
EXP	EXPANSION, EXPOSED
EXT	EXTERIOR, EXTERNAL, EXTENSION
F&B	FACE & BYPASS
F TO F	FACE TO FACE
FAB	FABRICATE
FB	FLOOR BEAM
FBD	FIBERBOARD
FBG	FIBERGLASS
FBM	BOARD FOOT MEASURE
FBO	FURNISHED BY OWNER
FC	FLUSHING CONNECTION, FERRIC CHLORIDE
FCA	FLANGED COUPLING ADAPTER
FD	FLOOR DRAIN
FDC	FLEXIBLE DUCT CONNECTION
FDTN	FOUNDATION
FDR	FEEDER
FE	FLANGED END
FEC	FIRE EXTINGUISHER CABINET
FES	FLARED END SECTION
FEXT	FIRE EXTINGUISHER
FF	FAR FACE, FACTORY FINISH, FLAT FACE
FG	FINISHED GRADE
FIG	FIGURE
FH	FIRE HYDRANT
FIN	FINISH
FJT	FLUSH JOINT
FL	FLOW, FLOW LINE
FLEX	FLEXIBLE
FLG	FLANGE
FLOR	FLUORESCENT
FLR	FLOOR
FLS	FLASHING, FLUSH
FO	FINISHED OPENING
FM	FORCE MAIN
FN	FENCE
FOB	FLAT ON BOTTOM
FOC	FACE OF CONCRETE, FACE OF CURB
FOF	FACE OF FINISH
FOM	FACE OF MASONRY
FOS	FACE OF STUDS
FOT	FLAT ON TOP
FPT	FEMALE PIPE THREAD
FR	FRAME
FRP	FIBERGLASS REINFORCED PLASTIC
FRTM	FIRE RETARDANT TREATED MATERIAL
FS	FLOOR SINK, FAR SIDE
FT	FEET, FOOT
FTG	FOOTING, FITTING
FTW	FILTER TO WASTE
FUR	FURRED, FURRING
FURN	FURNITURE, FURNISH
FUT	FUTURE
FV	FACE VELOCITY
FW	FIELD WELD, FIRE WALL, FINISHED WATER LINE
FWD	FORWARD
FWE	FURNISHED WITH EQUIPMENT
FXTR	FIXTURE
G	GRILLE, GROUND, GENERAL (DWG DISCIPLINE)
GA	GAGE (METAL THICKNESS)
GAL	GALLON
GALV	GALVANIZED
GB	GRAB BAR, GRADE BREAK
GC	GROOVED COUPLING
GD	GUARD
GEN	GENERAL
GFCI	GROUND FAULT CIRCUIT INTERRUPTER
GFMU	GROUND FACE MASONRY UNIT
GG	GUTTER GRADE
GJ	GROOVED JOINT
GL	GLASS
GLB	GLASS BLOCK
GND	GROUND
GP	GUY POLE
GR	GRADE
GRTG	GRATING
GSB	GYPSUM SHEATHING BOARD
GT	GREASE TRAP
GVL	GRAVEL
GWB	GYPSUM WALLBOARD
GYP	GYPSUM HARDBOARD
H	HIGH
HB	HOSE BIB
HBD	HARDBOARD
HC	HANDICAPPED, HOLLOW CORE, HORIZONTAL CURVE
HC	HORIZONTAL CENTERLINE
HDR	HEADER
HDW	HARDWARE
HEX	HEXAGONAL
HGR	HANGER
HH	HANDHOLE
HID	HIGH INTENSITY DISCHARGE
HM	HOLLOW METAL
HORIZ	HORIZONTAL
HP	HIGH POINT, HORSEPOWER
HPC	HORIZONTAL POINT OF CURVATURE
HPS	HIGH PRESSURE SODIUM
HPT	HORIZONTAL POINT OF TANGENCY
HR	HOSE REEL, HOUR
HS	HEADED STUD, HIGH STRENGTH
HSS	HOLLOW STRUCTURAL SHAPE
HT	HEIGHT
HTG	HEATING
HV	HIGH VOLTAGE
HVAC	HEATING, VENTILATION & AIR CONDITIONING
HWD	HARDWOOD
HWL	HIGH WATER LEVEL
HYD	HYDRAULIC
HZ	HERTZ, CYCLES PER SECOND
I	INSTRUMENTATION (DWG DISCIPLINE)
ID	INSIDE DIAMETER, INTERIOR DIMENSION
IE	INVERT ELEVATION
IF	INSIDE FACE
IH	INTAKE HOOD
IMP	IMPACT
IN	INCH
INC	INCLUDE, INCANDESCENT
INF	INFLUENT
INSTR	INSTRUMENTATION
INSUL	INSULATION
INT	INTERIOR, INTERSECTION
INTR	INTERMEDIATE, INTERIOR
INV	INVERT
IPS	IRON PIPE SIZE
IPT	INTERNAL PIPE THREAD
IR	INSIDE RADIUS
IRR	IRRIGATION
ISO	ISOMETRIC
JB	JUNCTION BOX
JCT	JUNCTION
JF	JOINT FILLER
JST	JOIST
JT	JOINT
K	KIP
KB	KNEE BRACE
KCMIL	THOUSAND CIRCULAR MILS
KD	KNOCK DOWN
KO	KNOCK OUT
KSI	KIPS PER SQUARE INCH
L	ANGLE, LENGTH, LAVATORY
LAD	LADDER
LAM	LAMINATE
LATL	LATERAL
LB	LAG BOLT, POUND
LCTB	LIQUID CHALK AND TACK BOARD
LDG	LANDING
LDR	LEADER
LE	LIFTING EYE
LF	LINEAR FOOT
LG	LONG
LH	LEFT HAND
LIN	LINEAR
LIQ	LIQUID
LLH	LONG LEG HORIZONTAL
LLV	LONG LEG VERTICAL
LMLU	LIQUID MARKER LECTURE UNIT
LNG	LONGITUDINAL
LOC	LOCATION
LP	LOW POINT
LPA	LOW PRESSURE AIR
LPS	LOW PRESSURE SODIUM
LR	LONG RADIUS
LT	LEFT
LTD	LIMITED
LTG	LIGHTING
LTL	LINTEL
LTNG	LIGHTNING
LV	LOW VOLTAGE
LVR	LOUVER
LW	LIGHTWEIGHT
LWC	LIGHTWEIGHT CONCRETE
LWL	LOW WATER LEVEL
M	MECHANICAL (DWG DISCIPLINE)
MA	MIXED AIR
MACH	MACHINED
MAINT	MAINTENANCE
MAN	MANUAL
MATL	MATERIAL
MAX	MAXIMUM
MB	MACHINE BOLT
MBR	MEMBER
MC	MECHANICAL CONTRACTOR, MECHANICAL COUPLING
MCB	METAL CORNER BEAD
MCJ	MASONRY CONTROL JOINT
MDMJ	MODIFIED DOUBLE MECHANICAL JOINT
MECH	MECHANICAL
MED	MEDIUM
MFR	MANUFACTURER
MH	MANHOLE, METAL HALIDE
MIN	MINIMUM
MIR	MIRROR
MISC	MISCELLANEOUS
MJ	MECHANICAL JOINT
ML	MIXED LIQUOR
MLO	MAIN LUGS ONLY
MMB	MEMBRANE
MO	MASONRY OPENING
MOD	MODULAR, MODIFY
MON	MONUMENT
MPT	MALE PIPE THREAD
MRGWB	MOISTURE RESISTANT GYPSUM WALLBOARD
MS	MOP SINK
MSL	MEAN SEA LEVEL
MT	MOUNT
MU	MASONRY UNIT
MULL	MULLION
MV	MEDIUM VOLTAGE
MW	MONITORING WELL
N	NORTH, NEUTRAL
NA	NOT APPLICABLE
NAT	NATURAL
NC	NORMALLY CLOSED
NEG	NEGATIVE
NF	NEAR FACE, NON-FUSED
NFV	NOT FIELD VERIFIED
NIC	NOT IN CONTRACT
NO	NORMALLY OPEN, NUMBER
NOM	NOMINAL
NPS	NOMINAL PIPE SIZE
NPW	NON-POTABLE WATER
NPT	NATIONAL PIPE THREAD
NS	NEAR SIDE
NTS	NOT TO SCALE
NWL	NORMAL WATER LEVEL
O TO O	OUT-TO-OUT
OA	OUTSIDE AIR, OVERALL
OC	ON CENTER
OCPD	OVER CURRENT PROTECTION DEVICE
OD	OUTSIDE DIAMETER
OED	OPEN END DUCT
OF	OUTSIDE FACE, OFFICE FURNISHING
OG	ORIGINAL GROUND
OH	OVERHEAD
OPNG	OPENING
OPP	OPPOSITE
OPT	OPTIONAL
OR	OUTSIDE RADIUS
ORD	OVERFLOW ROOF DRAIN
ORIG	ORIGINAL
OUT	OUTFALL
OVFL	OVERFLOW
OVHG	OVERHANG
OZ	OUNCE
P	PAINT, PROCESS (DWG DISCIPLINE)
PA	PUBLIC ADDRESS
PAR	PARALLEL, PARAPET
PB	PANIC BAR, PULL BOX
PBD	PARTICLE BOARD
PC	POINT OF CURVE, PIECE, PRECAST
PCC	POINT OF COMPOUND CURVATURE
PCF	POUNDS PER CUBIC FOOT
PCT	PERCENT
PE	PLAIN END
PED	PEDESTAL
PEN	PENETRATION
PERF	PERFORATED
PERM	PERMANENT
PERP	PERPENDICULAR
PF	POWER FACTOR
PFMU	PREFACED MASONRY UNIT
PFS	POLYMER FEED SOLUTION
PH	PHASE
PI	POINT OF INTERSECTION
PKG	PACKAGE
PL	PLATE, PROPERTY LINE
PLAS	PLASTER
PLAT	PLATFORM
PLBG	PLUMBING
PLF	POUNDS PER LINEAR FOOT
PNEU	PNEUMATIC
POL	POLISH
POS	POSITIVE, POSITION
PP	POLYPROPYLENE, POWER POLE
PRC	POINT OF REVERSE CURVATURE
PREF	PREFINISHED
PREFAB	PREFABRICATED
PRELIM	PRELIMINARY
PREP	PREPARE
PRES	PRESSURE
PRI	PRIMARY
PROP	PROPERTY
PROT	PROTECTION
PS	PIPE SUPPORT
PSF	POUNDS PER SQUARE FOOT
PSI	POUNDS PER SQUARE INCH
PSIA	POUNDS PER SQUARE INCH ABSOLUTE
PSIG	POUNDS PER SQUARE INCH GAGE
PST	PRESTRESSED
PT	POINT, POINT OF TANGENCY
PTN	PARTITION
PV	PLUG VALVE
PVC	POLYVINYL CHLORIDE
PVMT	PAVEMENT
PW	POTABLE WATER
PWD	PLYWOOD
PWJ	PLYWOOD WEB JOIST
PZ	PIEZOMETER
Q	RATE OF FLOW
QT	QUARRY TILE
QTR	QUARTER
QTY	QUANTITY
QUAL	QUALITY
R&R	REMOVE AND REPLACE
R&S	REMOVE AND SALVAGE
R	RADIUS, REGISTER, RISER
RA	RETURN AIR
RAS	RETURN ACTIVATED SLUDGE
RB	RESILIENT BASE, ROCK BERM
RCPT	RECEPTACLE
RD	ROOF DRAIN
REC	RECESS
RECD	RECEIVED
RECT	RECTANGULAR
RED	REDUCER
REF	REFERENCE
REINF	REINFORCING
REM	REMOVE
REQD	REQUIRED
RESIL	RESILIENT
RET	RETAINING, RETURN
REV	REVISION, REVERSE
RF	RESILIENT FLOORING
RFG	ROOFING
RFL	REFLECTED, REFLECTOR
RGH	ROUGH
RGS	RIGID GALVANIZED STEEL
RGS-PVC	PVC COATED RGS
RH	RELIEF HOOD, RIGHT HAND, RELATIVE HUMIDITY
RL	REQUIRED LAP
RLFA	RELIEF AIR
RND	ROUND
RNG	RUNNING
RO	ROUGH OPENING
ROW	RIGHT OF WAY
RPM	REVOLUTIONS PER MINUTE
RR	RAILROAD
RS	RAW SEWAGE
RSG	ROUND SLIDE GATE
RSP	ROCK SLOPE PROTECTION
RT	RIGHT
RVT	RESILIENT VINYL TILE
RW	RECLAIMED WATER LINE
RWL	RE-USE WATER LINE, RAW WATER LINE
RY	READY
S	SOUTH, SINK, STRUCTURAL (DWG)
SA	SUPPLY AIR
SAMU	SOUND ABSORBING MASONRY UNIT
SAN	SANITARY
SB	SPLASH BLOCK, SODIUM BISULFITE
SC	SOLID CORE, SCUM
SCH	SCHEDULE
SCHEM	SCHEMATIC
SCN	SCREEN
SE	STEEL/ALUMINUM EDGE
SEC	SECONDARY, SECONDS
SECT	SECTION
SEP	SEPARATE
SF	SQUARE FOOT
SG	SHEET GLASS, SEALANT GROOVE SLIDE GATE (SQUARE/RECTANGULAR)
SH	SUCTION HEADER
SHT	SHEET
SHTG	SHEATHING
SIL	SILENCE
SIM	SIMILAR
SL	SLUDGE LINE
SLTD	SLOTTED
SLV	SLEEVE
SMLS	SEAMLESS
SN	SUPERNATENT
SOG	SLAB ON GRADE
SP	SOUNDPROOF, STANDPIPE
SPA	SPACING
SPEC	SPECIFICATION
SPLY	SUPPLY
SPST	SINGLE POLE SINGLE THROW
SPT	SET POINT
SQ	SQUARE
SR	SHORT RADIUS
SS	SERVICE SINK
SST	STAINLESS STEEL
ST	STREET
STA	STATION
STD	STANDARD
STIF	STIFFENER
STIR	STIRRUP
STL	STEEL
STOR	STORAGE
STR	STRUCTURAL, STRAIGHT
SUB	SUBSTITUTE
SUC	SUCTION
SUSP	SUSPENDED
SW	SETTLED WATER
SWD	SIDEWATER DEPTH
SY	SQUARE YARD
SYM	SYMBOL
SYMM	SYMMETRICAL
SYN	SYNTHETIC
SYS	SYSTEM
T&B	TOP AND BOTTOM
T&G	TONGUE AND GROOVE
T	TILE, TREAD
TA	TOILET ACCESSORY, TEMPERED AIR
TAN	TANGENT
TBM	TEMPORARY BENCHMARK
TCE	TEMPORARY CONSTRUCTION EASEMENT
TEF	TROWELED EPOXY FLOORING
TEMP	TEMPORARY, TEMPERATURE
THD	THREAD
THK	THICK
THRESH	THRESHOLD
THRU	THROUGH
TL	TRANSMISSION LINE
TKBD	TACK BOARD
TOB	TOP OF BOLT, TOP OF BANK, TOP OF BEAM
TOC	TOP OF CURB, TOP OF CONCRETE
TOD	TOP OF DUCT
TOF	TOP OF FOOTING
TOG	TOP OF GRATING
TOL	TOLERANCE, TOP OF LEDGER
TOM	TOP OF MASONRY
TOP	TOP OF PLATE
TOPO	TOPOGRAPHY
TOS	TOP OF SLAB, TOP OF STEEL
TW	TOP OF WALL
TP	TOILET PARTITION, TELEPHONE POLE, TOE PLATE, TRAP PRIMER
TPD	TOILET PAPER DISPENSER
TPG	TOPPING
TR	TRANSOM
TRANS	TRANSITION
TRD	TRENCH DRAIN
TS	THICKENED SLUDGE
TYP	TYPICAL
U	URINAL
UG	UNDERGROUND
ULT	ULTIMATE
UNFN	UNFINISHED
UNO	UNLESS NOTED OTHERWISE
UTIL	UTILITY
V	VENT, VELOCITY, VOLT
VA	VOLT AMPERE
VAC	VACUUM
VAR	VARNISH, VARIABLE, VOLT AMPERES REACTIVE
VB	VAPOR BARRIER, VINYL BASE, VALVE BOX
VC	VERTICAL CURVE
VCT	VINYL COMPOSITION TILE, VERTICAL CENTERLINE
VEL	VELOCITY
VENT	VENTILATION
VERT	VERTICAL
VG	VERTICAL GRAIN
VIF	VERIFY IN FIELD
VIN	VINYL
VS	VERSES, VAPOR SEAL
VOL	VOLUME
VPC	VERTICAL POINT OF CURVATURE
VPI	VERTICAL POINT OF INTERSECTION
VPT	VERTICAL POINT OF TANGENCY
VTR	VENT THROUGH ROOF
VWC	VINYL WALL COVERING
W/	WITH
W/O	WITHOUT
W	WATT, WEST, WIDE, WINDOW, WIRE, WIDE FLANGE BEAM, POTABLE WATER LINE
WAS	WASTE ACTIVATED SLUDGE
WB	WOOD BASE
WC	WATER CLOSET, WATER COLUMN
WD	WOOD, WIDTH
WF	WIDE FLANGE, WASH FOUNTAIN
WG	WIRE GLASS, WATER GAGE, WEIR GATE
WH	WALL HYDRANT, WEEP HOLE
WI	WROUGHT IRON
WL	WATER LEVEL, POTABLE WATERLINE
WLD	WELDED
WM	WIRE MESH
WP	WATERPROOF, WORKING POINT
WTHP	WEATHERPROOF
WS	WATERSTOP, WATER SURFACE
WSCT	WAINSCOT
WT	WEIGHT, WATER TIGHT
WW	SANITARY SEWER
WWF	WELDED WIRE FABRIC
XP	EXPLOSION PROOF
XS	EXTRA STRONG
XXS	DOUBLE EXTRA STRONG
XSECT	CROSS SECTION
YH	YARD HYDRANT
YS	YIELD STRENGTH

GENERAL NOTES:

1. THESE ABBREVIATIONS APPLY TO THE ENTIRE SET OF CONTRACT DRAWINGS.
2. LISTING OF ABBREVIATIONS DOES NOT IMPLY ALL ABBREVIATIONS ARE USED IN THE CONTRACT DRAWINGS.
3. ABBREVIATIONS SHOWN ON THIS DRAWING INCLUDE VARIATIONS OF THE WORD. FOR EXAMPLE, "MOD" MAY MEAN MODIFY OR MODIFICATION; "INC" MAY MEAN INCLUDED OR INCLUDING; "REINF" MAY MEAN EITHER REINFORCE OR REINFORCING.
4. SCREENING OR SHADING OF WORK IS USED TO INDICATE EXISTING COMPONENTS OR TO DE-EMPHASIZE PROPOSED IMPROVEMENTS TO HIGHLIGHT SELECTED TRADE WORK. REFER TO CONTEXT OF EACH DRAWING FOR USAGE.

SITE DEVELOPMENT NUMBER 2025-476

REV. NO.	DATE	DESCRIPTION

PROJECT MANAGER:	PK
DESIGNED BY:	PG/RM
CHECKED BY:	DCS/JTH
DRAWN BY:	PG/RM
DCS PROJECT NO:	20101597

DCS ENGINEERING, LLC
1101 S. CAPITAL OF TEXAS HIGHWAY, BUILDING G-100
AUSTIN, TX 78746

TEL: (512) 614-6171
T.B.P.E. FIRM NO. F-13162

BudaTx breathe easy here™

BUDA SPORTSPLEX - PHASE I

STATE OF TEXAS
JORDAN T. HURTA
143332
LICENSED PROFESSIONAL ENGINEER
8/4/2025

GENERAL

ABBREVIATIONS

DATE: AUGUST 2025

SCALE: AS NOTED

DRAWING: 00G-06

FILENAME: Z:\Projects 1551-1599\20101597 - Buda - Sportsplex\510 - Re-bid Dwgs\500 - Final_Design\500 - Final_Design\5.1 - Drawings\Sheet Files\Construction Plans\000-06.dwg, LAST SAVED ON: Aug 01 2025 2:22pm, PLOTTED BY: RMALDONADO, ON: Aug 07 2025 8:13am, CFG:

Vol. 13 PS 86

PLAT OF

REPLAT OF BUDA SPORTSPLEX

SECTION 2
79.44 ACRES
CITY OF BUDA, TEXAS

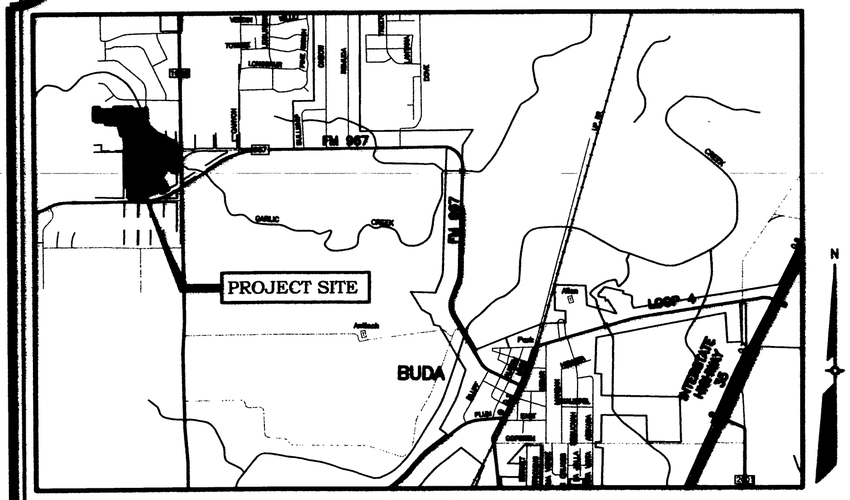

LOCATION MAP
SCALE: N.T.S.

0' 100' 200'
SCALE

LAND USE SUMMARY		
TOTAL ACREAGE	:	79.44 ACRES
TOTAL LOTS	:	9 LOTS

LEGEND

- DENOTES BENCHMARK (SEE NOTE)
- DENOTES 1/2" ST. SK. SET
- DENOTES 1/2" ST. SK. FND.
- DENOTES PK NAIL SET
- DENOTES PK NAIL FND.
- DENOTES COMPUTED POINT
- DENOTES DRILL HOLE SET
- DENOTES 60-D NAIL SET
- DENOTES 60-D NAIL FND
- D.E. DRAINAGE EASEMENT
- PROPERTY LINE OR R.O.W. LINE
- UTILITY OR DRAINAGE EASEMENTS
- PROPOSED SIDEWALK
- 0 DENOTES RECORD INFORMATION
- BEARING BASIS: TEXAS LAMBERT GRID, SOUTH CENTRAL ZONE, NAD 83
- ELEVATION BASIS: NVGD 1929 DATUM
- FFE FINISHED FLOOR ELEVATION
- RECHARGE/TRANSITION ZONE LINE
- APPROXIMATE GARLIC CREEK CENTER LINE

FLOODPLAIN LEGEND

- PROPERTY BOUNDARY / BUDA SPORTSPLEX
- FEMA 100 YR. FLOODPLAIN EFFECTIVE ZONE A
- ULTIMATE 100 YR. FLOODPLAIN (FULLY DEVELOPED CONDITION)

LINE TABLE

LINE	LENGTH	BEARING
L1	18.41	N02°05'54"W
L2	64.21	S76°46'15"E
L3	16.93	S02°44'38"E

CURVE TABLE

CURVE	ARC LENGTH	RADIUS	CHORD LENGTH	CHORD BEARING	DELTA
C1	15.88'	15.00'	15.15'	N28°27'00"E	60°40'16"
C2	167.68'	85.00'	141.79'	N02°16'12"E	113°01'52"
C3	22.75'	25.00'	21.98'	N28°10'19"W	52°08'50"
C4	14.51'	756.20'	14.51'	S19°06'14"W	1°05'58"
C5	171.57'	22858.31'	171.57'	S03°02'30"E	0°25'48"
C6	996.06'	1849.86'	984.07'	S72°20'41"W	30°51'04"
C7	207.95'	1839.86'	207.84'	N60°08'45"E	6°28'33"
C8	176.18'	1839.86'	176.11'	N66°07'38"E	5°29'12"
C9	201.97'	1839.86'	201.87'	N72°00'55"E	6°17'23"
C10	204.63'	1839.86'	204.52'	N78°20'46"E	6°22'20"
C11	200.64'	1839.86'	200.54'	N84°39'23"E	6°14'54"
C12	0.48'	1839.86'	0.48'	N87°47'17"E	0°00'53"

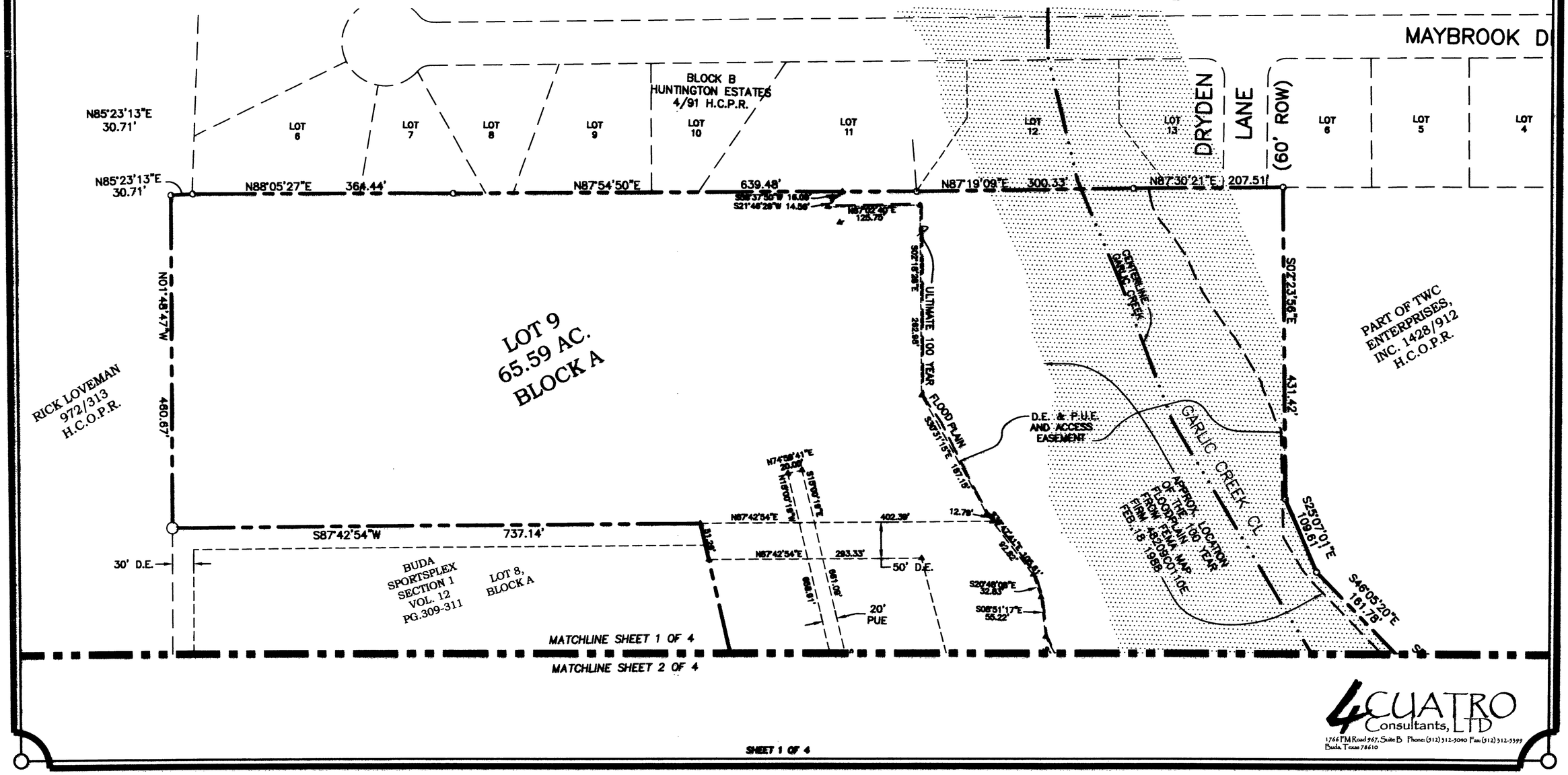

PHOTOGRAPHIC MYLAR

4CUATRO Consultants, LTD
1766 FM Road 967, Suite B Phone: (512) 312-5040 Fax: (512) 312-5399
Buda, Texas 78610

SHEET 1 OF 4

Vol. 13 Pg 87

PLAT OF

REPLAT OF BUDA SPORTSPLEX

SECTION 2
79.44 ACRES
CITY OF BUDA, TEXAS

FLOODPLAIN LEGEND

- PROPERTY BOUNDARY / BUDA SPORTSPLEX
- FEMA 100 YR. FLOODPLAIN EFFECTIVE ZONE A
- ULTIMATE 100 YR. FLOODPLAIN (FULLY DEVELOPED CONDITION)
- CHANNEL OR CREEK CENTERLINE

LEGEND

●	DENOTES BENCHMARK (SEE NOTE)
○	DENOTES 1/2" ST. SK. SET
●	DENOTES 1/2" ST. SK. FND.
▲	DENOTES PK NAIL SET
✦	DENOTES PK NAIL FND.
△	DENOTES COMPUTED POINT
●	DENOTES DRILL HOLE SET
○	DENOTES 60-D NAIL SET
●	DENOTES 60-D NAIL FND
D.E.	DRAINAGE EASEMENT
	PROPERTY LINE OR R.O.W. LINE
	UTILITY OR DRAINAGE EASEMENTS
	PROPOSED SIDEWALK
()	DENOTES RECORD INFORMATION
	BEARING BASIS: TEXAS LAMBERT GRID, SOUTH CENTRAL ZONE, NAD 83 ELEVATION BASIS: NVGD 1929 DATUM
FFE	FINISHED FLOOR ELEVATION
	RECHARGE/TRANSITION ZONE LINE
	APPROXIMATE GARLIC CREEK CENTER LINE

MATCHLINE SHEET 1 OF 4

MATCHLINE SHEET 2 OF 4

N15°00'19"W 424.94'

N87°54'06"E 107.38'

L1 C3 C2 R=85'

C1

N15°00'19"W 661.09'

S15°00'19"E 658.91'

20' PUE

S16°11'25"E 413.00'

S30°43'40"E 134.28'

S47°36'21"E 57.57'

S81°23'31"E 190.80'

S45°18'43"E 50.10'

S47°42'43"E 67.63'

WATER QUALITY/ DETENTION EASEMENT

S45°31'09"E 128.23'

N61°09'10"E 193.91'

S44°03'27"E 37.17'

N85°19'32"E 171.13'

CENTERLINE GARLIC CREEK

S52°47'01"E 109.37'

S44°57'11"E 101.89'

L2

S66°26'46"E 240.98'

S58°55'52"E 110.94'

89.77'

41.17'

LOT 1 CORNERSTONE WEST LOT 1 PHASE 1, SECTION 2 10/137 H.C.P.R.

APPROX. LOCATION OF THE 100 YEAR FLOODPLAIN FROM FEMA MAP FIRM 48209C0110E FEB. 18 1988

N87°15'22"E 190.31'

160.31'

30.00'

20.00'

PARKLAND
LOT 9
65.66 AC.
BLOCK A

LOT 11
1.33 ACRES
BLOCK A

FFE 757.80'

313.30'

S01°07'49"E

289.26'

20' PUE

S02°44'38"E 1196.38'

STATE HIGHWAY FM 1626 (120' ROW)

BUDA SPORTSPLEX SECTION 1 VOL. 12 PG. 309-311 LOT 8, BLOCK A

231.80'

N02°34'23"W 240.17'

S02°34'23"E 242.45'

N87°42'34"E 79.98'

20.00'

20' PUE AND ACCESS EASEMENT

N87°42'34"E 438.78'

S87°42'34"W 518.77'

D.E. & P.U.E. AND ACCESS EASEMENT

S47°24'E 188.10'

CENTERLINE GARLIC CREEK

N87°15'22"E 203.31'

30' R.O.W. DEDICATION

JOINT DRIVEWAY ESMT W/45' DRIVEWAY (60'X80')

LOT 10
1.34 ACRES
BLOCK A

FFE 757.40'

361.11'

723.35'

BUDA SPORTSPLEX SECTION 1 VOL. 12 PG. 309-311 LOT 7, BLOCK A

BUDA PARKWAY (70' ROW)

N01°53'07"W

REMAINDER OF HAYS CONSOLIDATED INDEPENDENT SCHOOL DISTRICT 452/398 H.C.R.P.R.

N01°59'39"W 300.34'

S01°59'39"E 312.18'

20' PUE

S05°51'36"E 102.38'

S65°40'20"W 300.27'

S04°36'05"E 185.86'

S01°53'07"E 158.56'

WATER QUALITY/ DETENTION EASEMENT

N46°55'39"W 210.99'

S46°55'39"E 408.51'

S88°14'32"E 427.15'

N43°45'54"E 231.06'

S43°45'54"W 231.30'

N46°55'39"W

ULTIMATE 100 YEAR FLOOD PLAIN

D.E. & P.U.E. AND ACCESS EASEMENT

S15°28'37"E 104.54'

S25°08'25"E 122.98'

N87°14'02"E 211.23'

824.65'

N87°15'22"E 125.28'

354.28'

R.O.W. DEDICATION

MATCHLINE SHEET 2 OF 4

MATCHLINE SHEET 3 OF 4

N
0' 100' 200'
SCALE

PHOTOGRAPHIC MYLAR

4CUATRO Consultants, LTD
1766 FM Road 967, Suite B Phone: (512) 312-5040 Fax: (512) 312-5999
Buda, Texas 78610

Vol. 13 Pg. 88

PLAT OF

REPLAT OF BUDA SPORTSPLEX

SECTION 2

79.44 ACRES

CITY OF BUDA, TEXAS

N

0' 100' 200'

SCALE

LEGEND	
●	DENOTES BENCHMARK (SEE NOTE)
○	DENOTES 1/2" ST. SK. SET
●	DENOTES 1/2" ST. SK. FND.
▲	DENOTES PK NAIL SET
▲	DENOTES PK NAIL FND.
▲	DENOTES COMPUTED POINT
●	DENOTES DRILL HOLE SET
○	DENOTES 60-D NAIL SET
●	DENOTES 60-D NAIL FND
D.E.	DRAINAGE EASEMENT
	PROPERTY LINE OR R.O.W. LINE

LEGEND	
	UTILITY OR DRAINAGE EASEMENTS
	PROPOSED SIDEWALK
()	DENOTES RECORD INFORMATION
	BEARING BASIS: TEXAS LAMBERT GRID, SOUTH CENTRAL ZONE, NAD 83 ELEVATION BASIS: NVGD 1929 DATUM
FFE	FINISHED FLOOR ELEVATION
	RECHARGE/TRANSITION ZONE LINE
	APPROXIMATE GARLIC CREEK CENTER LINE

MATCHLINE SHEET 2 OF 4

MATCHLINE SHEET 3 OF 4

PARKLAND
LOT 9
66.670 AC.
BLOCK A

BUDA PARKWAY (70' ROW)

STATE HIGHWAY FM 1626 (120' ROW)

LOT 1 CORNERSTONE WEST PHASE 2, SECTION 1 10/111 H.C.P.R.

REMAINDER OF HAYS CONSOLIDATED INDEPENDENT SCHOOL DISTRICT 452/398 H.C.R.P.R.

LOT 1 2.53 AC. BLOCK A

LOT 2 1.48 AC. BLOCK A

LOT 3 1.49 AC. BLOCK A

LOT 4 1.53 AC. BLOCK A

LOT 5 1.55 AC. BLOCK A

LOT 6 1.62 AC. BLOCK A

BETTY E. LINDSAY 1.923 AC. 267/818

PRIVATE WATER QUALITY DRAINAGE EASEMENT

D.E. & P.U.E. AND ACCESS EASEMENT

ULTIMATE 100 YEAR FLOOD PLAIN

TRANSITION ZONE

RECHARGE ZONE

JOINT DRIVEWAY ESMT W/45' DRIVEWAY (60'X80')

JOINT DRIVEWAY EASEMENT (30' X 80')

10' R.O.W. DEDICATON

STATE HIGHWAY FM 967

EULALAH LANE

MARLBORO COUNTRY

FLOODPLAIN LEGEND

PROPERTY BOUNDARY / BUDA SPORTSPLEX

FEMA 100 YR. FLOODPLAIN EFFECTIVE ZONE A

ULTIMATE 100 YR. FLOODPLAIN (FULLY DEVELOPED CONDITION)

PHOTOGRAPHIC MYLAR

4CUATRO Consultants, LTD
1766 FM Road 967, Suite B Phone: (512) 312-5040 Fax: (512) 312-5599
Buda, Texas 78610

Vol. 13 PG. 89

PLAT OF
REPLAT OF
BUDA SPORTSPLEX
SECTION 2
79.44 ACRES
CITY OF BUDA, TEXAS

STATE OF TEXAS
COUNTY OF HAYS

KNOW ALL MEN BY THESE PRESENTS, THAT THE CITY OF BUDA 4B CORPORATION, A TEXAS NONPROFIT CORPORATION, BEING THE OWNERS OF 78.328 ACRES OF LAND OUT OF THE PHILLIP J. ALLEN SURVEY NO. 5, HAYS COUNTY, TEXAS, CONVEYED BY DEED RECORDED IN VOLUME 2247, PAGE 723, OF THE OFFICIAL PUBLIC RECORDS OF HAYS COUNTY, TEXAS, AND 14.766 ACRES OF LAND OUT OF THE PHILLIP J. ALLEN SURVEY NO. 5, HAYS COUNTY, TEXAS, CONVEYED BY DEED RECORDED IN VOLUME 2247, PAGE 723, OF THE OFFICIAL PUBLIC RECORDS OF HAYS COUNTY, TEXAS, AND THE BUDA VOLUNTEER FIRE DEPARTMENT, BEING THE OWNERS OF 2.602 ACRES OF LAND OUT OF THE PHILLIP J. ALLEN SURVEY NO. 5, HAYS COUNTY, TEXAS, CONVEYED BY DEED RECORDED IN VOLUME 2247, PAGE 729, OF THE OFFICIAL PUBLIC RECORDS OF HAYS COUNTY, TEXAS, AND CORNERSTONE 1626, LTD., A TEXAS LIMITED PARTNERSHIP, BEING THE OWNERS OF 0.356 ACRES OF LAND OUT OF THE PHILLIP J. ALLEN SURVEY NO. 5, HAYS COUNTY, TEXAS, CONVEYED BY DEED RECORDED IN VOLUME 2310, PAGE 30, OF THE OFFICIAL PUBLIC RECORDS OF HAYS COUNTY, TEXAS, DO HEREBY SUBDIVIDE 79.44 ACRES OF LAND, TO BE KNOWN AS THE "REPLAT OF BUDA SPORTSPLEX, SECTION 2" IN ACCORDANCE WITH THE PLAT SHOWN HEREON, SUBJECT TO ANY AND ALL EASEMENTS OR RESTRICTIONS HERETOFORE GRANTED, AND DOES HEREBY DEDICATE TO THE PUBLIC THE USE OF THE STREETS AND EASEMENTS HEREON.

WITNESS MY HAND THIS 13th DAY OF March, 2006.

CITY OF BUDA 4B CORPORATION, A TEXAS NON-PROFIT CORPORATION
P.O. BOX 1650
BUDA, TEXAS 78610

Warren Ketteman
WARREN KETTEMAN, ITS EXECUTIVE DIRECTOR

BEFORE ME, A NOTARY PUBLIC IN AND FOR THE STATE OF TEXAS, ON THIS DAY PERSONALLY APPEARED WARREN KETTEMAN KNOWN TO BE THE PERSON WHOSE NAME IS SUBSCRIBED TO THE FOREGOING INSTRUMENT OF WRITING, AND HE ACKNOWLEDGED TO ME THAT HE EXECUTED THE SAME FOR THE PURPOSES AND CONSIDERATIONS THEREIN EXPRESSED AND IN THE CAPACITY THEREIN STATED.

GIVEN UNDER MY HAND AND SEAL OF OFFICE THIS 13th DAY OF March, 2006.

(SEAL)

Janet Shull
NOTARY PUBLIC'S SIGNATURE

WITNESS MY HAND THIS 13th DAY OF March, 2006.

BUDA VOLUNTEER FIRE DEPARTMENT
P.O. BOX 1159
BUDA, TEXAS 78610

Clay Huckaby
CLAY HUCKABY, ITS FIRE CHIEF

BEFORE ME, A NOTARY PUBLIC IN AND FOR THE STATE OF TEXAS, ON THIS DAY PERSONALLY APPEARED CLAY HUCKABY KNOWN TO BE THE PERSON WHOSE NAME IS SUBSCRIBED TO THE FOREGOING INSTRUMENT OF WRITING, AND HE ACKNOWLEDGED TO ME THAT HE EXECUTED THE SAME FOR THE PURPOSES AND CONSIDERATIONS THEREIN EXPRESSED AND IN THE CAPACITY THEREIN STATED.

GIVEN UNDER MY HAND AND SEAL OF OFFICE THIS 13th DAY OF March, 2006.

(SEAL) JANET SHULL MY COMMISSION EXPIRES February 9, 2008

Janet Shull
NOTARY PUBLIC'S SIGNATURE

WITNESS MY HAND THIS 13th DAY OF March, 2006.

CORNERSTONE 1626, LTD.
251 NORTH F.M. 1626, BUILDING 2, SUITE D
BUDA, TEXAS 78610

MICHAEL THAMES, ITS PRESIDENT

BEFORE ME, A NOTARY PUBLIC IN AND FOR THE STATE OF TEXAS, ON THIS DAY PERSONALLY APPEARED Michael Thames KNOWN TO BE THE PERSON WHOSE NAME IS SUBSCRIBED TO THE FOREGOING INSTRUMENT OF WRITING, AND HE ACKNOWLEDGED TO ME THAT HE EXECUTED THE SAME FOR THE PURPOSES AND CONSIDERATIONS THEREIN EXPRESSED AND IN THE CAPACITY THEREIN STATED.

GIVEN UNDER MY HAND AND SEAL OF OFFICE THIS 13th DAY OF March, 2006.

(SEAL) JANET SHULL MY COMMISSION EXPIRES February 9, 2008

Janet Shull
NOTARY PUBLIC'S SIGNATURE

PLAT NOTES:

1. ACCORDING TO THE NATIONAL FLOOD INSURANCE RATE MAP COMMUNITY PANEL NO. 48209C0260F, DATED SEPTEMBER 02, 2005, A PORTION OF THIS TRACT LIES WITHIN ZONE A, SPECIAL FLOOD HAZARD AREAS INUNDATED BY 100 YEAR FLOOD.
2. THIS SUBDIVISION IS WITHIN THE HAYS CONSOLIDATED INDEPENDENT SCHOOL DISTRICT BOUNDARIES.
3. THIS PROJECT LIES WITHIN THE CITY OF BUDA CITY LIMITS.
4. THE FOLLOWING PUBLIC UTILITY EASEMENTS ARE HEREBY DESIGNATED:

   FRONT – 15' P.U.E. REAR – 15' P.U.E.
   SIDE – 10' P.U.E.

5. THE FULLY DEVELOPED, CONCENTRATED STORM WATER RUNOFF FOR THE 100 YEAR STORM AND THE 100 YEAR REGULATORY FLOODPLAIN SHALL BE CONTAINED WITHIN DRAINAGE EASEMENTS.
6. THE PROJECT LIES PARTIALLY OVER THE EDWARD'S AQUIFER RECHARGE ZONE AND ALL CONSTRUCTION WITHIN THE RECHARGE ZONE SHALL COMPLY WITH APPLICABLE TCEQ REQUIREMENTS, CHAPTER 213.
7. THE PROVISIONS OF THE CITY OF BUDA UNIFIED DEVELOPMENT CODE SHALL GOVERN THIS PROJECT.
8. UTILITY PROVIDERS:
   WATER: CITY OF BUDA
   WASTEWATER: CITY OF BUDA
   ELECTRICITY: PEDERNALES ELECTRIC COMPANY
   TELEPHONE: VERIZON
9. SIDEWALKS:
   - FM 967: 6 FOOT NORTH SIDE
   - FM 1626: 6 FOOT WEST SIDE
10. ACCESS TO LOTS 2 THROUGH 6 SHALL HAVE JOINT USE DRIVEWAYS AS PERMITTED THROUGH TXDOT.
11. THIS PROJECT IS LOCATED IN THE GARLIC CREEK WATERSHED AND IS SUBJECT TO THE APPLICABLE SECTIONS OF THE BUDA WATER QUALITY PROTECTION ORDINANCE.
12. SETBACKS SHALL COMPLY WITH THE APPLICABLE ZONING DISTRICT REGULATIONS.
13. A SITE DEVELOPMENT PERMIT WILL BE REQUIRED PRIOR TO DEVELOPMENT ON ANY NONRESIDENTIAL LOT.
14. ALL DRAINAGE EASEMENTS ON PRIVATE PROPERTY SHALL BE MAINTAINED BY THE PROPERTY OWNER OR HIS/HER ASSIGNS.
15. PROPERTY OWNER SHALL PROVIDE FOR ACCESS TO DRAINAGE EASEMENTS AS MAY BE NECESSARY AND SHALL NOT PROHIBIT ACCESS BY THE CITY OF BUDA FOR INSPECTION OF SAID EASEMENTS.
16. NO FENCES OR OTHER OBSTRUCTIONS SHALL BE ALLOWED IN A DRAINAGE EASEMENT EXCEPT AS APPROVED BY THE CITY OF BUDA.
17. PRIVATE WATER QUALITY DRAINAGE EASEMENTS SHOWN AS PART OF LOTS 3, 4, 5, AND 6 SHALL BE FOR THE PURPOSE OF PROVIDING WATER QUALITY/DETENTION FACILITIES FOR COMMERCIAL LOTS 1, 2, 3, 4, 5, AND 6.
18. LOT 9 BLOCK A SHALL BE DEEDED TO THE CITY OF BUDA IN TANDUM WITH PLAT RECORDING.

SURVEYOR:
STATE OF TEXAS
COUNTY OF HAYS

I, THE UNDERSIGNED, A REGISTERED PROFESSIONAL LAND SURVEYOR IN THE STATE OF TEXAS, HEREBY CERTIFY THAT THIS PLAT IS TRUE AND CORRECT, THAT IT WAS PREPARED FROM AN ACTUAL SURVEY OF THE PROPERTY MADE UNDER MY SUPERVISION ON THE GROUND, AND THAT ALL NECESSARY SURVEY MONUMENTS ARE CORRECTLY SET OR FOUND AS SHOWN HEREIN.

3-9-06

GEORGE E. LUCAS,
REGISTERED PROFESSIONAL LAND SURVEYOR NO. 4160, STATE OF TEXAS
CUATRO CONSULTANTS, LTD.
1766 F.M. ROAD 967, SUITE B.
BUDA, TEXAS 78610

STATE OF TEXAS REGISTERED GEORGE E. LUCAS 4160 PROFESSIONAL LAND SURVEYOR

ENGINEER:
STATE OF TEXAS
COUNTY OF HAYS

I, THE UNDERSIGNED, A REGISTERED PROFESSIONAL ENGINEER IN THE STATE OF TEXAS, HEREBY CERTIFY THAT PROPER ENGINEERING CONSIDERATION HAS BEEN GIVEN THIS PLAT.

3/9/06

HUGO ELIZONDO, JR., REGISTERED PROFESSIONAL ENGINEER NO. 69781
CUATRO CONSULTANTS, LTD.
1766 F.M. ROAD 967, SUITE B.
BUDA, TEXAS 78610

STATE OF TEXAS HUGO ELIZONDO, JR. 69781 LICENSED PROFESSIONAL ENGINEER

CITY OF BUDA:
STATE OF TEXAS
COUNTY OF HAYS

I HEREBY CERTIFY THAT THE ABOVE FOREGOING PLAT OF BUDA SPORTSPLEX TO THE CITY OF BUDA, TEXAS, WAS APPROVED BY THE CITY COUNCIL OF THE CITY OF BUDA ON THE 21st DAY OF February 2006 SAID ADDITION SHALL BE SUBJECT TO ALL THE REQUIREMENTS OF THE UNIFORM DEVELOPMENT CODE OF THE CITY OF BUDA, TEXAS.

WITNESS MY HAND THE 13th DAY OF MARCH, 2006.

Robert Cameron
CITY SECRETARY

STATE OF TEXAS
COUNTY OF HAYS

I, LEE CARLISLE, COUNTY CLERK OF HAYS COUNTY, TEXAS, DO HEREBY CERTIFY THAT THE FOREGOING INSTRUMENT OF WRITING WITH ITS CERTIFICATE OF AUTHENTICATION WAS FILED FOR RECORD IN MY OFFICE ON THE 15th DAY OF March, A.D., 2006 AT 10:20 O'CLOCK A M., IN THE PLAT RECORDS OF HAYS COUNTY, TEXAS IN BOOK 13, PAGE 86-89. WITNESS MY HAND AND SEAL OF OFFICE THIS THE 15th DAY OF March A.D. 2006.

Lee Carlisle By Becky Hall
LEE CARLISLE
COUNTY CLERK
HAYS COUNTY, TEXAS

CUATRO Consultants, LTD
1766 FM Road 967, Suite B Phone: (512) 312-3040 Fax: (512) 312-3599
Buda, Texas 78610

PHOTOGRAPHIC MYLAR

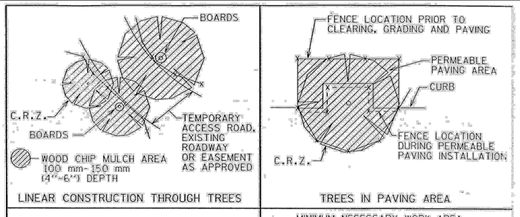

LINEAR CONSTRUCTION THROUGH TREES

TREES IN PAVING AREA

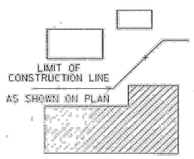

NATURAL AREAS

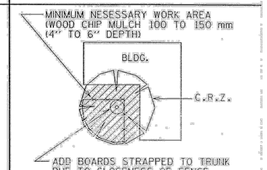

TREES NEAR CONSTRUCTION ACTIVITY

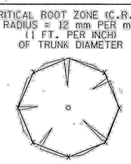

INDIVIDUAL TREE

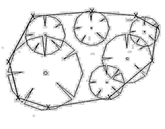

GROUP OF TREES

CITY OF AUSTIN WATERSHED PROTECTION DEPARTMENT	TREE PROTECTION FENCE LOCATIONS	
11/5/99 ADOPTED	THE ARCHITECT/ENGINEER ASSUMES RESPONSIBILITY FOR APPROPRIATE USE OF THIS STANDARD.	STANDARD NO. 610S-1

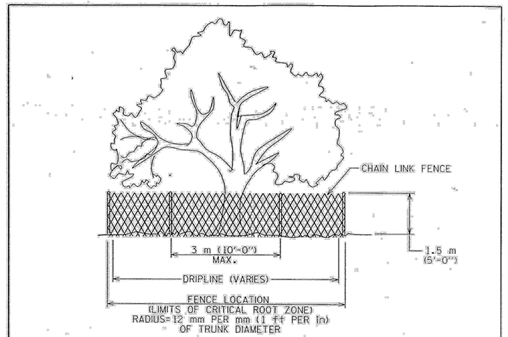

CITY OF AUSTIN WATERSHED PROTECTION DEPARTMENT	TREE PROPTECTION FENCE TYPE A - CHAIN LINK	
11/5/99 ADOPTED	THE ARCHITECT/ENGINEER ASSUMES RESPONSIBILITY FOR APPROPRIATE USE OF THIS STANDARD.	STANDARD NO. 610S-2

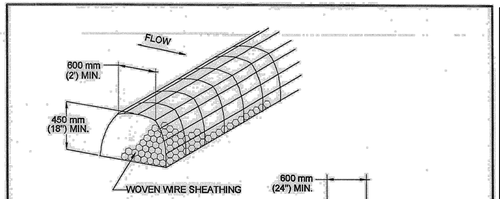

STANDARD SYMBOL FOR ROCK BERM (RB)

RB

NOTES:

1. USE ONLY OPEN GRADED ROCK 75 to 125 mm (3 to 5") DIAMETER FOR ALL CONDITIONS.
2. THE ROCK BERM SHALL BE SECURED WITH A WOVEN WIRE SHEATHING HAVING MAXIMUM 25 mm (1") OPENING AND MINIMUM WIRE DIAMETER OF 12.9 mm (20 GAUGE).
3. THE ROCK BERM SHALL BE INSPECTED DAILY OR AFTER EACH RAIN, AND THE STONE AND/OR FABRIC CORE-WOVEN SHEATHING SHALL BE REPLACED WHEN THE STRUCTURE CEASES TO FUNCTION AS INTENDED, DUE TO SEDIMENT ACCUMULATION AMONG THE ROCKS, WASHOUT, CONSTRUCTION TRAFFIC DAMAGE, ETC.
4. IF SEDIMENT REACHES A DEPTH EQUAL TO ONE-THIRD THE HEIGHT OF THE BERM OR 150 mm (6"), WHICHEVER IS LESS, THE SEDIMENT SHALL BE REMOVED AND DISPOSED OF ON AN APPROVED SITE AND IN A MANNER THAT WILL NOT CREATE A SEDIMENTION PROBLEM.
5. WHEN THE SITE IS COMPLETELY STABILIZED,THE BERM AND ACCUMULATED SEDIMENT SHALL BE REMOVED AND DISPOSED OF IN AN APPROVED MANNER.

CITY OF AUSTIN WATERSHED PROTECTION DEPARTMENT	ROCK BERM	
8/24/2010 ADOPTED	THE ARCHITECT/ENGINEER ASSUMES RESPONSIBILITY FOR APPROPRIATE USE OF THIS STANDARD.	STANDARD NO. 639S-1

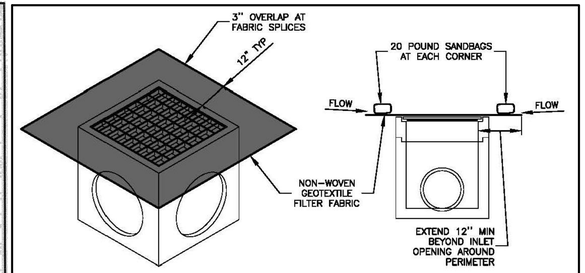

GRATE INLET PROTECTION DETAIL 1

N.T.S.

NOTES:

1. DAILY INSPECTION SHALL BE MADE BY THE CONTRACTOR AND SILT ACCUMULATION MUST BE REMOVED WHEN DEPTH REACHES 2".
2. CONTRACTOR SHALL MONITOR THE PERFORMANCE OF INLET PROTECTION DURING EACH RAINFALL EVENT AND IMMEDIATELY CLEAN THE INLET PROTECTION IF EXCESSIVE PONDING OCCURS.
3. INLET PROTECTIONS SHALL BE REMOVED AS SOON AS THE SOURCE OF SEDIMENT IS STABILIZED.

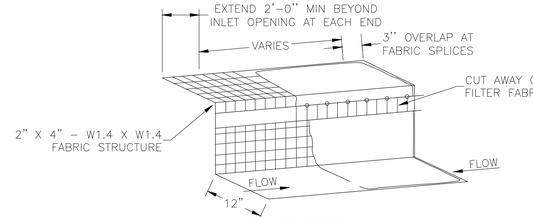

ISOMETRIC

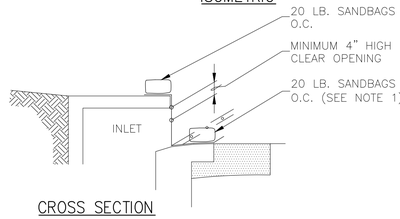

CROSS SECTION

INLET PROTECTION DETAIL 2

N.T.S.

NOTES:

1. WHERE MINIMUM CLEARANCES CAUSE TRAFFIC TO DRIVE IN THE GUTTER, THE CONTRACTOR MAY SUBSTITUTE A 1" X 4" BOARD SECURED WITH CONCRETE NAILS 3' O.C. NAILED INTO THE GUTTER IN LIEU OF SANDBAGS TO HOLD THE FILTER DIKE IN PLACE. UPON REMOVAL, CLEAN ANY DIRT/DEBRIS FROM NAILING LOCATIONS, APPLY CHEMICAL SANDING AGENT AND APPLY NON-SHRINK GROUT FLUSH WITH SURFACE OF GUTTER.
2. A SECTION OF FILTER FABRIC SHALL BE REMOVED AS SHOWN ON THIS DETAIL OR AS DIRECTED BY THE ENGINEER OR DESIGNATED REPRESENTATIVE. FABRIC MUST BE SECURED TO WIRE BACKING WITH CLIPS OR HOG RINGS AT THIS LOCATION.
3. DAILY INSPECTION SHALL BE MADE BY THE CONTRACTOR AND SILT ACCUMULATION MUST BE REMOVED WHEN DEPTH REACHES 2".
4. CONTRACTOR SHALL MONITOR THE PERFORMANCE OF INLET PROTECTION DURING EACH RAINFALL EVENT AND IMMEDIATELY REMOVE THE INLET PROTECTIONS IF THE STORM-WATER BEGINS TO OVERTOP THE CURB.
5. INLET PROTECTIONS SHALL BE REMOVED AS SOON AS THE SOURCE OF SEDIMENT IS STABILIZED.

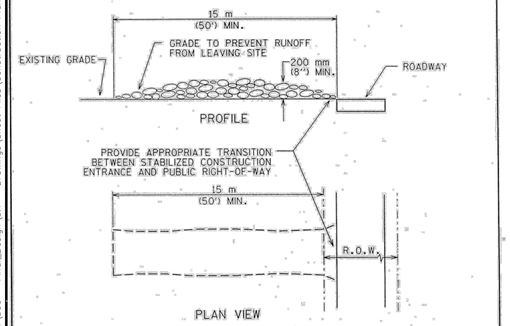

NOTES:

1. STONE SIZE: 75-125 mm (3-5") OPEN GRADED ROCK.
2. LENGTH: AS EFFECTIVE BUT NOT LESS THAN 15 m (50').
3. THICKNESS: NOT LESS THAN 200 mm (8").
4. WIDTH: NOT LESS THAN FULL WIDTH OF ALL POINTS OF INGRESS/EGRESS.
5. WASHING: WHEN NECESSARY, VEHICLE WHEELS SHALL BE CLEANED TO REMOVE SEDIMENT PRIOR TO ENTRANCE ONTO PUBLIC ROADWAY. WHEN WASHING IS REQUIRED, IT SHALL BE DONE ON AN AREA STABILIZED WITH CRUSHED STONE AND DRAINS INTO AN APPROVED TRAP OR SEDIMENT BASIN. ALL SEDIMENT SHALL BE PREVENTED FROM ENTERING ANY STORM DRAIN, DITCH OR WATERCOURSE USING APPROVED METHODS.
6. MAINTENANCE: THE ENTRANCE SHALL BE MAINTAINED IN A CONDITION THAT WILL PREVENT TRACKING OR FLOWING OF SEDIMENT ONTO PUBLIC ROADWAY. THIS MAY REQUIRE PERIODIC TOP DRESSING WITH ADDITIONAL STONE AS CONDITIONS DEMAND, AS WELL AS REPAIR AND CLEAN OUT OF ANY MEASURE DEVICES USED TO TRAP SEDIMENT. ALL SEDIMENTS THAT IS SPILLED, DROPPED, WASHED OR TRACKED ONTO PUBLIC ROADWAY MUST BE REMOVED IMMEDIATELY.
7. DRAINAGE: ENTRANCE MUST BE PROPERLY GRADED OR INCORPORATE A DRAINAGE SWALE TO PREVENT RUNOFF FROM LEAVING THE CONSTRUCTION SITE.

CITY OF AUSTIN WATERSHED PROTECTION DEPARTMENT	STABILIZED CONSTRUCTION ENTRANCE	
5/23/00 ADOPTED	THE ARCHITECT/ENGINEER ASSUMES RESPONSIBILITY FOR APPROPRIATE USE OF THIS STANDARD.	STANDARD NO. 641S-1

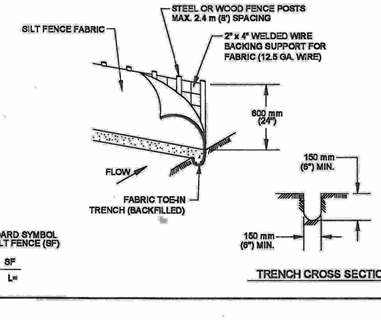

STANDARD SYMBOL FOR SILT FENCE (SF)

SF

L=

1. STEEL OR WOOD POSTS WHICH SUPPORT THE SILT FENCE SHALL BE INSTALLED ON A SLIGHT ANGLE TOWARD THE ANTICIPATED RUNOFF SOURCE. POST MUST BE EMBEDDED A MINIMUM OF 300 mm (12 INCHES). IF WOOD POSTS CANNOT ACHIEVE 300 mm (12 Inches) DEPTH, USE STEEL POSTS.
2. THE TOE OF THE SILT FENCE SHALL BE TRENCHED IN WITH A SPADE OR MECHANICAL TRENCHER, SO THAT THE DOWNSLOPE FACE OF THE TRENCH IS FLAT AND PERPENDICULAR TO THE LINE OF FLOW.
3. THE TRENCH MUST BE A MINIMUM OF 150 mm (6 Inches) DEEP AND 150 mm (6 Inches) WIDE TO ALLOW FOR THE SILT FENCE FABRIC TO BE LAID IN THE GROUND AND BACKFILLED WITH COMPACTED MATERIAL.
4. SILT FENCE FABRIC SHOULD BE SECURELY FASTENED TO EACH STEEL OR WOOD SUPPORT POST OR TO WOVEN WIRE , WHICH IS IN TURN ATTACHED TO THE STEEL OR WOOD FENCE POST.
5. INSPECTION SHALL BE MADE WEEKLY OR AFTER EACH RAINFALL EVENT AND REPAIR OR REPLACEMENT SHALL BE MADE PROMPTY AS NEEDED.
6. SILT FENCE SHALL BE REMOVED WHEN THE SITE IS COMPLETELY STABILIZED SO AS NOT TO BLOCK OR IMPEDE STORM FLOW OR DRAINAGE.
7. ACCUMULATED SILT SHALL BE REMOVED WHEN IT REACHES A DEPTH OF 150 mm (6 Inches). THE SILT SHALL BE DISPOSED OF ON AN APPROVED SITE AND IN SUCH A MANNER THAT WILL NOT CONTRIBUTE TO ADDITIONAL SILTATION.

CITY OF AUSTIN WATERSHED PROTECTION DEPARTMENT	SILT FENCE	
9/1/2011 ADOPTED	THE ARCHITECT/ENGINEER ASSUMES RESPONSIBILITY FOR APPROPRIATE USE OF THIS STANDARD.	STANDARD NO. 642S-1

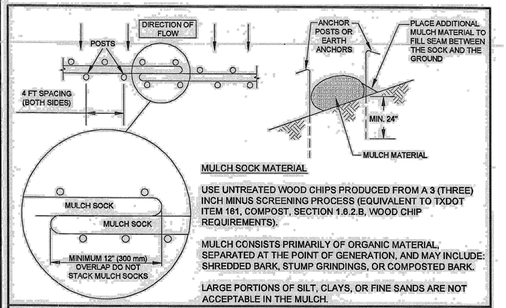

MULCH SOCK MATERIAL

USE UNTREATED WOOD CHIPS PRODUCED FROM A 3 (THREE) INCH MINUS SCREENING PROCESS (EQUIVALENT TO TXDOT ITEM 161, COMPOST, SECTION 1.6.2.B, WOOD CHIP REQUIREMENTS).

MULCH CONSISTS PRIMARILY OF ORGANIC MATERIAL, SEPARATED AT THE POINT OF GENERATION, AND MAY INCLUDE: SHREDDED BARK, STUMP GRINDINGS, OR COMPOSTED BARK.

LARGE PORTIONS OF SILT, CLAYS, OR FINE SANDS ARE NOT ACCEPTABLE IN THE MULCH.

NOTES:

1. STEEL OR WOOD POSTS WHICH SUPPORT THE MULCH SOCK SHALL BE INSTALLED ON A SLIGHT ANGLE TOWARD THE ANTICIPATED RUNOFF SOURCE. POST MUST BE EMBEDDED A MINIMUM OF 600mm (24 Inches). IF WOOD POSTS CANNOT ACHIEVE 600mm (24 Inches) DEPTH, USE STEEL POSTS. EARTH ANCHORS ARE ALSO ACCEPTABLE.
2. THE TOE OF THE MULCH SOCK SHALL BE PLACED SO THAT THE MULCH SOCK IS FLAT AND PERPENDICULAR TO THE LINE OF FLOW. IN ORDER TO PREVENT WATER FROM FLOWING BETWEEN THE JOINTS OF ADJACENT ENDS OFMULCH SOCKS, LAP THE ENDS OF ADJACENT MULCH SOCKS A MINIMUM OF 300mm (12 Inches).
3. MULCH MATERIAL MUST BE FREE OF REFUSE, PHYSICAL CONTAMINANTS, AND MATERIAL TOXIC TO PLANT GROWTH; IT IS NOT ACCEPTABLE FOR THE MULCH MATERIAL TO CONTAIN GROUND CONSTRUCTION DEBRIS, BIOSOLIDS, OR MANURE.
4. SOCK MATERIAL WILL BE 100% BIODEGRADABLE, PHOTODEGRADABLE, OR RECYCLABLE SUCH AS BURLAP, TWINE, UV PHOTOBIODEGRADABLE PLASTIC, POLYESTER, OR ANY OTHER ACCEPTABLE MATERIAL.
5. MULCH SOCKS SHOULD BE USED AT THE BASE OF SLOPES NO STEEPER THAN 2:1 AND SHOULD NOT EXCEED THE MAXIMUM SPACING CRITERIA PROVIDED IN CITY OF AUSTIN ENVIRONMENTAL CRITERIA MANUAL TABLE 1.4.5.F.1 FOR A GIVEN SLOPE CATEGORY.
6. ACCUMULATED SILT SHALL BE REMOVED WHEN IT REACHES A DEPTH OF 150mm (6 Inches). THE SILT SHALL BE DISPOSED OF ON AN APPROVED SITE AND IN SUCH A MANNER THAT WILL NOT CONTRIBUTE TO ADDITIONAL SILTATION.

CITY OF AUSTIN WATERSHED PROTECTION DEPARTMENT	MULCH SOCK	
08/24/2010 ADOPTED	THE ARCHITECT/ENGINEER ASSUMES RESPONSIBILITY FOR APPROPRIATE USE OF THIS STANDARD.	STANDARD NO. 648S-1

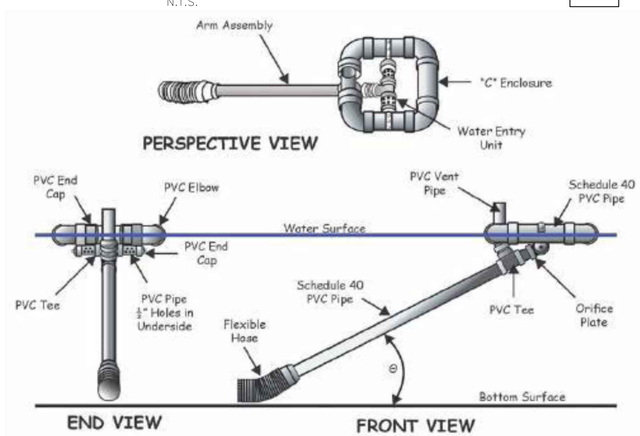

Figure 6.64a Schematic of a skimmer, from Pennsylvania Erosion and Sediment Pollution Control Manual, March, 2000.

DEWATERING SKIMMER 3

N.T.S.

SITE DEVELOPMENT NUMBER 2025-476

REV. NO.	DATE	DESCRIPTION

PROJECT MANAGER:	PK
DESIGNED BY:	PG/RM
CHECKED BY:	DCS/JTH
DRAWN BY:	PG/RM
DCS PROJECT NO:	20101597

DCS ENGINEERING, LLC
1101 S. CAPITAL OF TEXAS HIGHWAY, BUILDING G-100
AUSTIN, TX 78746

TEL: (512) 614-6171
T.B.P.E. FIRM NO. F-13162

BudaTx breathe easy here™

BUDA SPORTSPLEX - PHASE I

STATE OF TEXAS
JORDAN T. HURTA
143332
LICENSED PROFESSIONAL ENGINEER
8/4/2025

GENERAL

CIVIL - EROSION CONTROL DETAILS - SHEET NO. 1

DATE: AUGUST 2025

SCALE: AS NOTED

DRAWING: 00C-01

FILENAME: Z:\Projects 1551-1599\20101597 - Buda - Sportsplex\510 - Re-bid Dwgs\500 - Final_Design\500 - Final_Design\5.1 - Drawings\Sheet Files\Construction Plans\00C-01.dwg, LAST SAVED ON: Aug 04 2025 1:12pm, PLOTTED BY: RMALDONADO, ON: Aug 07 2025 8:03am, CFG:

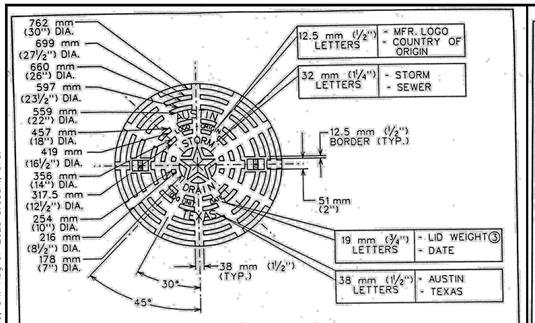

CITY OF AUSTIN DEPARTMENT OF WATERSHED PROTECTION AND DEVELOPMENT REVIEW	STORM DRAIN MANHOLE RING AND 813 mm (32") COVER	
George E. Ruwell 2/14/02 ADOPTED	THE ARCHITECT/ENGINEER ASSUMES RESPONSIBILITY FOR APPROPRIATE USE OF THIS STANDARD.	STANDARD NO. 503S-4S 1 OF 3

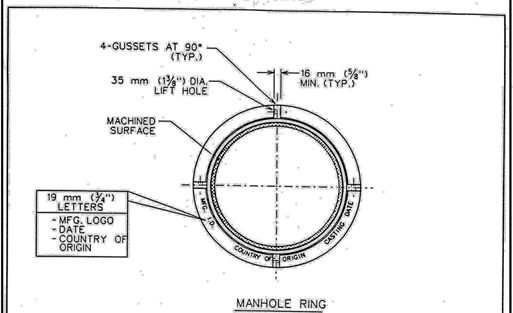

CITY OF AUSTIN DEPARTMENT OF WATERSHED PROTECTION AND DEVELOPMENT REVIEW	STORM DRAIN MANHOLE RING AND 813 mm (32") COVER	
George E. Ruwell 2/14/02 ADOPTED	THE ARCHITECT/ENGINEER ASSUMES RESPONSIBILITY FOR APPROPRIATE USE OF THIS STANDARD.	STANDARD NO. 503S-4S 2 OF 3

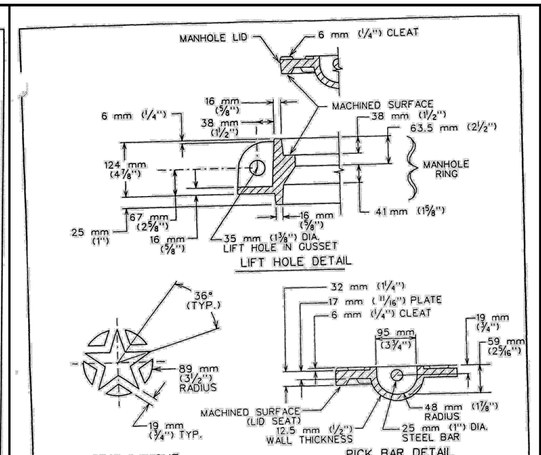

NOTES:
① ALL CORNERS AND EDGES SHALL HAVE A 1.5 mm (1/16") MINIMUM RADIUS.
② LIDS SHALL BE CAST WITH TWO 25 mm (1") DIA. STEEL PICK BARS.
③ LID WEIGHTS SHALL BE 935 N (210 LBS.) FOR CAST IRON OR 779 N (175 LBS.) FOR DUCTILE IRON. WEIGHT SHALL BE CAST ON BOTH TOP AND BOTTOM OF LID.
④ MANUFACTURER SHALL PROVIDE INDEPENDENT TESTING LABORATORY REPORT ON 25,000 POUND PROOF LOAD TEST CONDUCTED ACCORDING TO AASHTO M-306.
⑤ FILLETS SHALL BE 6 mm (¼") RADIUS UNLESS OTHERWISE SPECIFIED.
⑥ MANUFACTURER SHALL REMOVE EXCESS IRON AND MACHINE FINISH SEATING SURFACES TO NOTED DIMENSIONS.

CITY OF AUSTIN DEPARTMENT OF WATERSHED PROTECTION AND DEVELOPMENT REVIEW	STORM DRAIN MANHOLE RING AND 813 mm (32") COVER	
George E. Ruwell 2/14/02 ADOPTED	THE ARCHITECT/ENGINEER ASSUMES RESPONSIBILITY FOR APPROPRIATE USE OF THIS STANDARD.	STANDARD NO. 503S-4S 3 OF 3

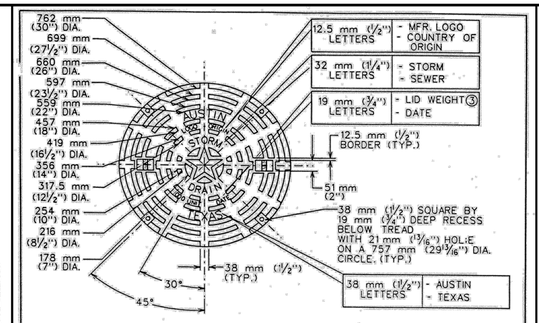

CITY OF AUSTIN DEPARTMENT OF WATERSHED PROTECTION AND DEVELOPMENT REVIEW	BOLTED STORM DRAIN MANHOLE RING AND 813 mm (32") COVER	
George E. Ruwell 2/14/02 ADOPTED	THE ARCHITECT/ENGINEER ASSUMES RESPONSIBILITY FOR APPROPRIATE USE OF THIS STANDARD.	STANDARD NO. 503S-5S 1 OF 3

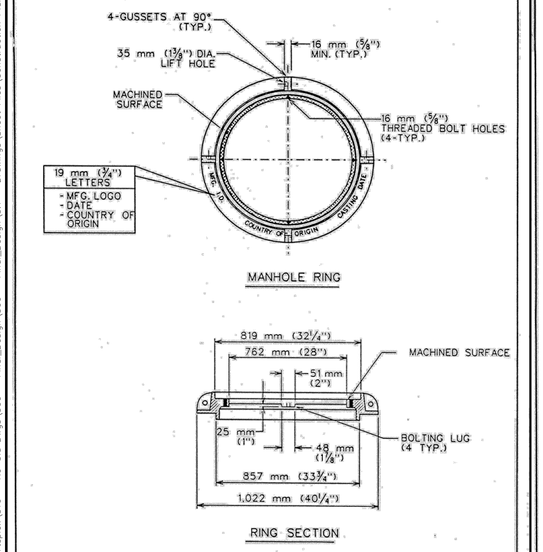

CITY OF AUSTIN DEPARTMENT OF WATERSHED PROTECTION AND DEVELOPMENT REVIEW	BOLTED STORM DRAIN MANHOLE RING AND 813 mm (32") COVER	
George E. Ruwell 2/14/02 ADOPTED	THE ARCHITECT/ENGINEER ASSUMES RESPONSIBILITY FOR APPROPRIATE USE OF THIS STANDARD.	STANDARD NO. 503S-5S 2 OF 3

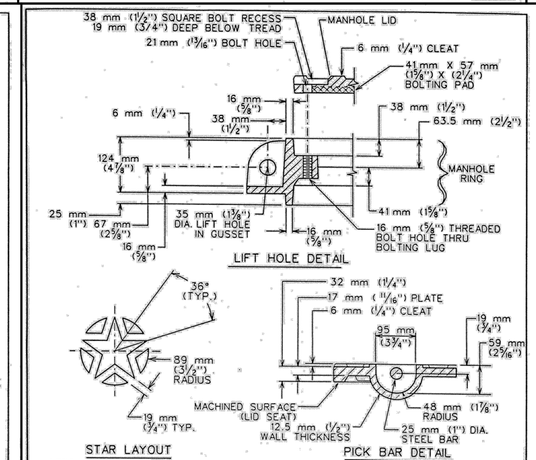

NOTES:
① ALL CORNERS AND EDGES SHALL HAVE A 1.5 mm (1/16") MINIMUM RADIUS.
② LIDS SHALL BE CAST WITH TWO 25 mm (1") DIA. STEEL PICK BARS.
③ LID WEIGHTS SHALL BE 935 N (210 LBS.) FOR CAST IRON OR 779 N (175 LBS.) FOR DUCTILE IRON. WEIGHT SHALL BE CAST ON BOTH TOP AND BOTTOM OF LID.
④ MANUFACTURER SHALL PROVIDE INDEPENDENT TESTING LABORATORY REPORT ON 25,000 POUND PROOF LOAD TEST CONDUCTED ACCORDING TO AASHTO M-306.
⑤ FILLETS SHALL BE 6 mm (¼") RADIUS UNLESS OTHERWISE SPECIFIED.
⑥ MANUFACTURER SHALL REMOVE EXCESS IRON AND MACHINE FINISH SEATING SURFACES TO NOTED DIMENSIONS.
⑦ BOLTS SHALL BE 16 mm X 44 mm (⅝" x 1¾" x 11 N.C.) STAINLESS STEEL HEX HEAD (TYPE 316).

CITY OF AUSTIN DEPARTMENT OF WATERSHED PROTECTION AND DEVELOPMENT REVIEW	BOLTED STORM DRAIN MANHOLE RING AND 813 mm (32") COVER	
George E. Ruwell 2/14/02 ADOPTED	THE ARCHITECT/ENGINEER ASSUMES RESPONSIBILITY FOR APPROPRIATE USE OF THIS STANDARD.	STANDARD NO. 503S-5S 3 OF 3

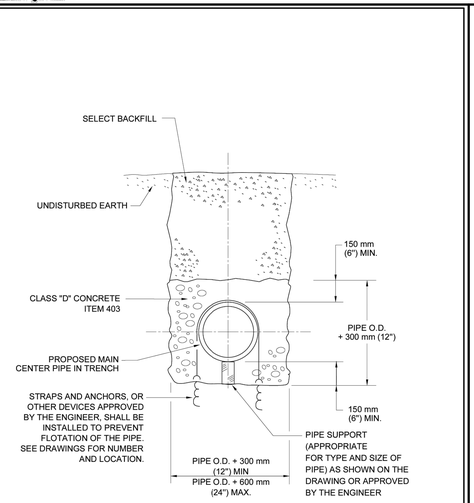

CITY OF AUSTIN WATER AND WASTEWATER UTILITY	CONCRETE ENCASEMENT	
RECORD COPY SIGNED BY KATHI L FLOWERS 08/18/00 ADOPTED	THE ENGINEER/ARCHITECT ASSUMES RESPONSIBILITY FOR APPROPRIATE USE OF THIS STANDARD. MODIFICATIONS TO THIS STANDARD ARE PROHIBITED.	STANDARD NO. 505S-1 1 OF 1

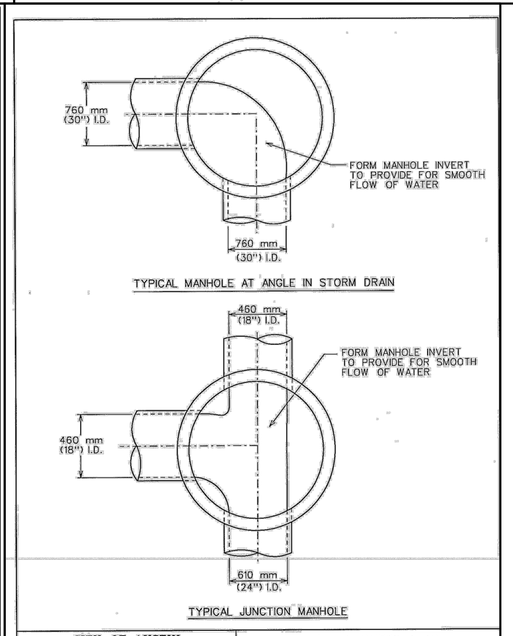

CITY OF AUSTIN DEPARTMENT OF WATERSHED PROTECTION AND DEVELOPMENT REVIEW	MANHOLE INVERT PLAN	
George E. Ruwell 2/14/02 ADOPTED	THE ARCHITECT/ENGINEER ASSUMES RESPONSIBILITY FOR APPROPRIATE USE OF THIS STANDARD.	STANDARD NO. 506S-1 1 OF 1

SITE DEVELOPMENT NUMBER 2025-476

REV. NO.	DATE	DESCRIPTION

PROJECT MANAGER:	PK
DESIGNED BY:	PG/RM
CHECKED BY:	DCS/JTH
DRAWN BY:	PG/RM
DCS PROJECT NO:	20101597

DCS ENGINEERING, LLC
1101 S. CAPITAL OF TEXAS HIGHWAY, BUILDING G-100
AUSTIN, TX 78746
TEL: (512) 614-6171
T.B.P.E. FIRM NO. F-13162

BudaTx breathe easy here™

BUDA SPORTSPLEX - PHASE I

STATE OF TEXAS
JORDAN T. HURTA
143332
LICENSED PROFESSIONAL ENGINEER
8/4/2025

GENERAL

CIVIL - STORM SEWER AND DRAINAGE DETAILS - SHEET NO. 1

DATE: AUGUST 2025
SCALE: AS NOTED
DRAWING: 00C-07

FILENAME: Z:\Projects 1551-1599\20101597 - Buda - Sportsplex\510 - Re-bid Dwgs\500 - Final_Design\500 - Final_Design\5.1 - Drawings\Sheet Files\Construction Plans\00C-07.dwg, LAST SAVED ON: Aug 01 2025 1:20pm, PLOTTED BY: RMALDONADO, ON: Aug 07 2025 8:05am, CFG:

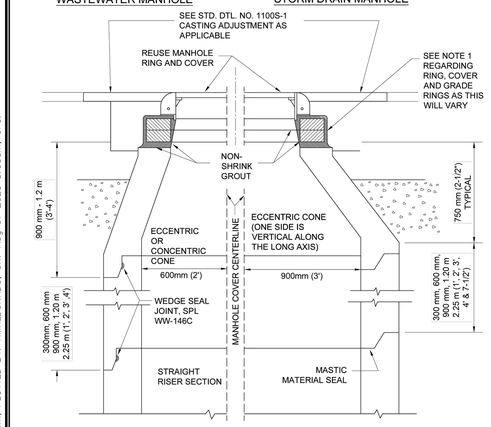

1. SEE "MINOR MANHOLE HEIGHT ADJUSTMENT" STANDARDS 506S-4 AND 506S-4A FOR ADDITIONAL INFORMATION.
2. MANHOLE SECTIONS TEMPORARILY REMOVED FOR ROADWAY CONSTRUCTION MAY BE REUSED ONLY WITH WRITTEN APPROVAL OF THE INSPECTOR. WEDGE SEALS SHALL NOT BE REUSED.
3. ANY COMBINATION OF REMOVING THE GRADE RINGS, AND/OR THE MANHOLE CONE, AND/OR THE STRAIGHT RISER SECTION OF THE MANHOLE SHALL BE ACCEPTABLE TO TEMPORARILY LOWER THE MANHOLE GRADE FOR RECONSTRUCTION.
4. WHILE THE MANHOLE IS TEMPORARILY LOWERED, A SHEET OF STEEL SUITABLE TO SUPPORT ALL IMPOSED LOADS SHALL BE USED TO COVER THE OPENING. STEEL SHALL BE PLACED SO THE SHEET WILL NOT MOVE UNDER ANY & ALL TRAFFIC CONDITIONS.
5. SUB-GRADE AND BASE MATERIALS SHALL BE COMPACTED TO 95% AND 100% DENSITIES, RESPECTIVELY, COMPACTION SHALL BE BY MECHANICAL TAMPING TO THE DENSITIES SPECIFIED, SEE STD. DTL. NO .1100S-1.

CITY OF AUSTIN AUSTIN WATER UTILITY		MAJOR MANHOLE ADJUSTMENT	
RECORD COPY SIGNED BY KATHI L FLOWERS	08/31/2011 ADOPTED	THE ENGINEER/ARCHITECT ASSUMES RESPONSIBILITY FOR APPROPRIATE USE OF THIS STANDARD. MODIFICATIONS TO THIS STANDARD ARE PROHIBITED.	STANDARD NO. 506S-2 1 OF 1

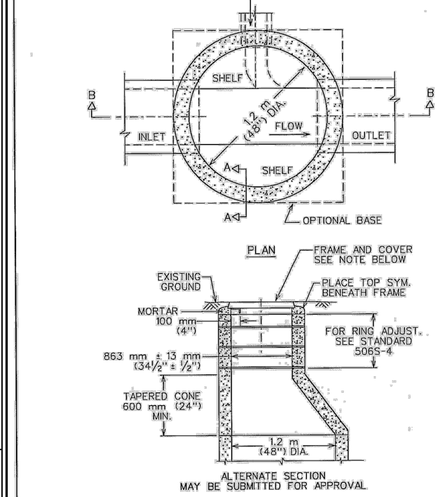

NOTE:
USE 800 mm (32") FRAME AND COVER.

MINIMUM MANHOLE DIA.	MINIMUM PIPE SIZE
1.2 m (4')	450 TO 600 mm (18 TO 24")
1.5 m (5')	750 mm TO 1.1 m (30 TO 42")
1.8 m (6')	1.2 TO 1.4 m (48 TO 54")
2.1 m (7')	1.5 TO 1.7 m (60 TO 66")

SIZE TO BE USED IS DEPENDENT ON DRAIN ANGLES.

CITY OF AUSTIN DEPARTMENT OF WATERSHED PROTECTION AND DEVELOPMENT REVIEW		PRE-CAST CONCRETE STORM DRAIN MANHOLE	
George E. Dowdy 2/19/98 ADOPTED		THE ARCHITECT/ENGINEER ASSUMES RESPONSIBILITY FOR APPROPRIATE USE OF THIS STANDARD.	STANDARD NO. 506S-3 1 OF 2

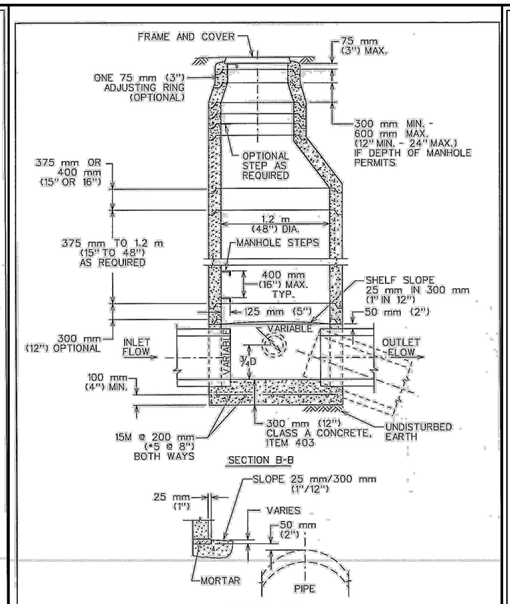

CITY OF AUSTIN DEPARTMENT OF WATERSHED PROTECTION AND DEVELOPMENT REVIEW		PRE-CAST CONCRETE STORM DRAIN MANHOLE	
George E. Dowdy 2/19/98 ADOPTED		THE ARCHITECT/ENGINEER ASSUMES RESPONSIBILITY FOR APPROPRIATE USE OF THIS STANDARD.	STANDARD NO. 506S-3 2 OF 2

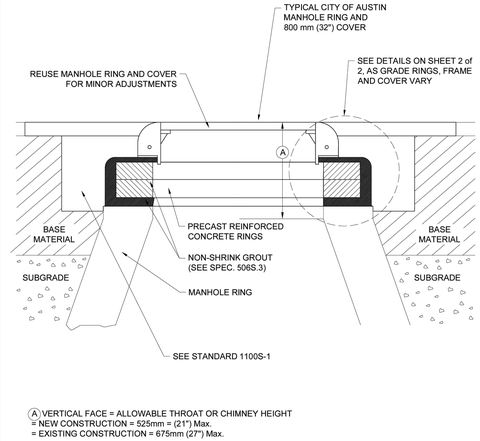

(A) VERTICAL FACE = ALLOWABLE THROAT OR CHIMNEY HEIGHT
= NEW CONSTRUCTION = 525mm = (21") Max.
= EXISTING CONSTRUCTION = 675mm (27") Max.

NOTES:

1. NON-SHRINK GROUT SHALL NOT EXCEED 25 mm (1") IN ANY DIMENSION.
2. SUB-GRADE AND BASE MATERIALS SHALL BE COMPACTED ACCORDING TO ITEMS 201S AND 210S, RESPECTIVELY, OF THE CITY OF AUSTIN STANDARD SPECIFICATIONS.
3. REFER TO STANDARD 1100S-1 FOR REPAIRS AROUND MANHOLES.
4. SEE STANDARD 506S-4A FOR HDPE RING INSTALLATION (FOR USE IN PAVED AREAS ONLY).

CITY OF AUSTIN AUSTIN WATER UTILITY		MINOR MANHOLE ADJUSTMENT & NEW MANHOLE CONSTRUCTION	
RECORD COPY SIGNED BY KATHI L FLOWERS	08/31/2011 ADOPTED	THE ENGINEER/ARCHITECT ASSUMES RESPONSIBILITY FOR APPROPRIATE USE OF THIS STANDARD. MODIFICATIONS TO THIS STANDARD ARE PROHIBITED.	STANDARD NO. 506S-4 1 OF 2

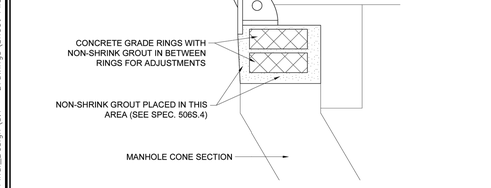

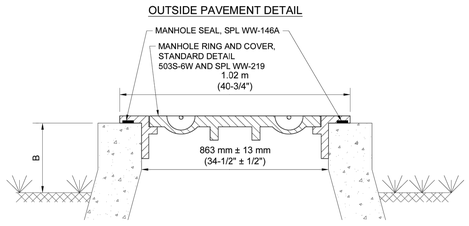

NOTES:

1. FOR USE IN UNPAVED AREAS ONLY.
2. WHEN USED WITHIN 100-YEAR FLOODPLAIN, SEE DTL. 506S-6 FOR ADDITIONAL M.H. REQUIREMENTS.
3. DIMENSION B=150-300 mm (6"-12") FOR M.H. LOCATED IN 100-YR FLOOD PLAN; B=50-300 mm (2"-12") FOR M.H. OUTSIDE 100-YR FLOOD PLAN.

CITY OF AUSTIN AUSTIN WATER UTILITY		MINOR MANHOLE ADJUSTMENT & NEW MANHOLE CONSTRUCTION	
RECORD COPY SIGNED BY KATHI L FLOWERS	08/31/2011 ADOPTED	THE ENGINEER/ARCHITECT ASSUMES RESPONSIBILITY FOR APPROPRIATE USE OF THIS STANDARD. MODIFICATIONS TO THIS STANDARD ARE PROHIBITED.	STANDARD NO. 506S-4 2 OF 2

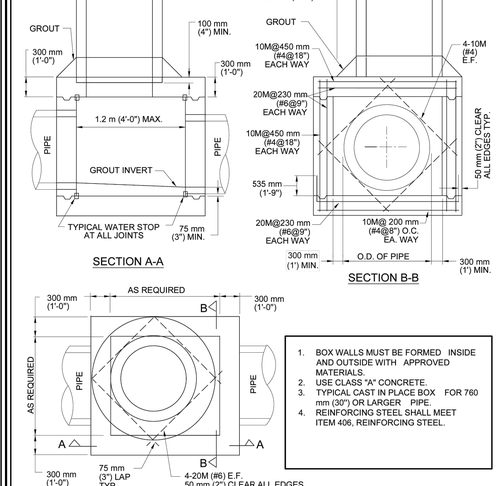

1. BOX WALLS MUST BE FORMED INSIDE AND OUTSIDE WITH APPROVED MATERIALS.
2. USE CLASS "A" CONCRETE.
3. TYPICAL CAST IN PLACE BOX FOR 760 mm (30") OR LARGER PIPE.
4. REINFORCING STEEL SHALL MEET ITEM 406, REINFORCING STEEL.

CITY OF AUSTIN WATER AND WASTEWATER UTILITY		TYPICAL BOX MANHOLE 760 mm (30") & LARGER PIPE	
RECORD COPY SIGNED BY KATHI F. PAYNE	2/17/00 ADOPTED	THE ENGINEER/ARCHITECT ASSUMES RESPONSIBILITY FOR APPROPRIATE USE OF THIS STANDARD. MODIFICATIONS TO THIS STANDARD ARE PROHIBITED.	STANDARD NO. 506S-5 1 OF 1

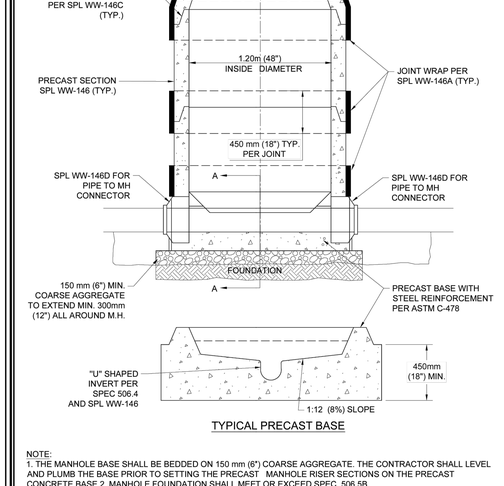

NOTE:
1. THE MANHOLE BASE SHALL BE BEDDED ON 150 mm (6") COARSE AGGREGATE. THE CONTRACTOR SHALL LEVEL AND PLUMB THE BASE PRIOR TO SETTING THE PRECAST MANHOLE RISER SECTIONS ON THE PRECAST CONCRETE BASE.2. MANHOLE FOUNDATION SHALL MEET OR EXCEED SPEC. 506.5B.

CITY OF AUSTIN AUSTIN WATER UTILITY		WATER TIGHT WASTEWATER MANHOLE ON PRECAST BASE	
RECORD COPY SIGNED KATHI L FLOWERS	08/31/2011 ADOPTED	THE ENGINEER/ARCHITECT ASSUMES RESPONSIBILITY FOR APPROPRIATE USE OF THIS STANDARD. MODIFICATIONS TO THIS STANDARD ARE PROHIBITED.	STANDARD NO. 506S-6 1 OF 1

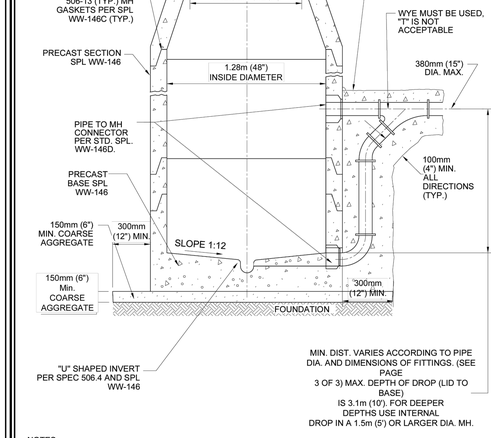

NOTES:

1. THE MANHOLE BASE SHALL BE BEDDED ON 150mm (6") COARSE AGGREGATE. THE CONTRACTOR SHALL LEVEL AND PLUMB THE BASE PRIOR TO SETTING THE PRECAST MANHOLE RISER SECTIONS ON THE PRECAST CONCRETE BASE.
2. MANHOLE FOUNDATION SHALL MEET OR EXCEED STD. SPEC 506.5B.

CITY OF AUSTIN AUSTIN WATER UTILITY		PRECAST MANHOLE WITH DROP INLET ON PRECAST BASE	
RECORD COPY SIGNED BY KATHI L FLOWERS	08/31/2011 ADOPTED	THE ENGINEER/ARCHITECT ASSUMES RESPONSIBILITY FOR APPROPRIATE USE OF THIS STANDARD. MODIFICATIONS TO THIS STANDARD ARE PROHIBITED.	STANDARD NO. 506S-8 1 OF 3

SITE DEVELOPMENT NUMBER 2025-476

REV. NO.	DATE	DESCRIPTION

PROJECT MANAGER:	PK
DESIGNED BY:	PG/RM
CHECKED BY:	DCS/JTH
DRAWN BY:	PG/RM
DCS PROJECT NO:	20101597

DCS ENGINEERING, LLC
1101 S. CAPITAL OF TEXAS HIGHWAY, BUILDING G-100
AUSTIN, TX 78746
TEL: (512) 614-6171
T.B.P.E. FIRM NO. F-13162

BudaTx breathe easy here™

BUDA SPORTSPLEX - PHASE I

STATE OF TEXAS
JORDAN T. HURTA
143332
LICENSED PROFESSIONAL ENGINEER
8/4/2025

GENERAL

CIVIL - STORM SEWER AND DRAINAGE DETAILS - SHEET NO. 2

DATE: AUGUST 2025
SCALE: AS NOTED
DRAWING: 00C-08

FILENAME: Z:\Projects 1551-1599\20101597 - Buda - Sportsplex\510 - Re-bid Dwgs\500 - Final_Design\500 - Final_Design\5.1 - Drawings\Sheet Files\00C-08.dwg, LAST SAVED ON: Aug 01 2025 1:20pm, PLOTTED BY: RMALDONADO, ON: Aug 07 2025 8:05am, CFG:

INVERT DETAIL

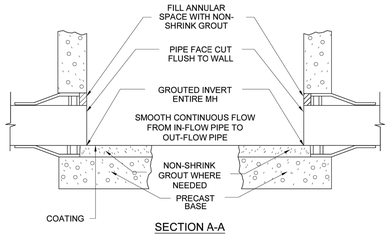

SECTION A-A

INVERT PLAN VIEW

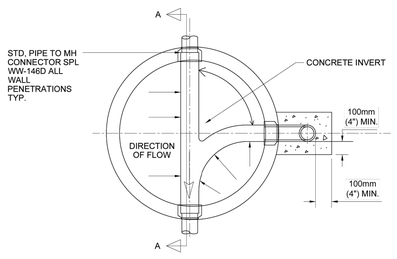

CITY OF AUSTIN AUSTIN WATER UTILITY		PRECAST MANHOLE WITH DROP INLET ON PRECAST BASE	
RECORD COPY SIGNED BY KATHI L FLOWERS	08/31/2011 ADOPTED	THE ENGINEER/ARCHITECT ASSUMES RESPONSIBILITY FOR APPROPRIATE USE OF THIS STANDARD. MODIFICATIONS TO THIS STANDARD ARE PROHIBITED.	STANDARD NO. 506S-8 2 OF 3

STANDARD DROP CONNECTIONS MINIMUM DIMENSIONS (FOR INFORMATION ONLY)

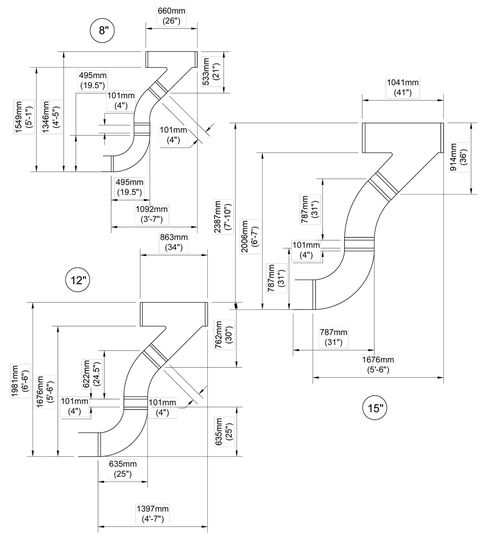

CITY OF AUSTIN AUSTIN WATER UTILITY		PRECAST MANHOLE WITH DROP INLET ON PRECAST BASE	
RECORD COPY SIGNED BY KATHI L FLOWERS	08/31/2011 ADOPTED	THE ENGINEER/ARCHITECT ASSUMES RESPONSIBILITY FOR APPROPRIATE USE OF THIS STANDARD. MODIFICATIONS TO THIS STANDARD ARE PROHIBITED.	STANDARD NO. 506S-8 3 OF 3

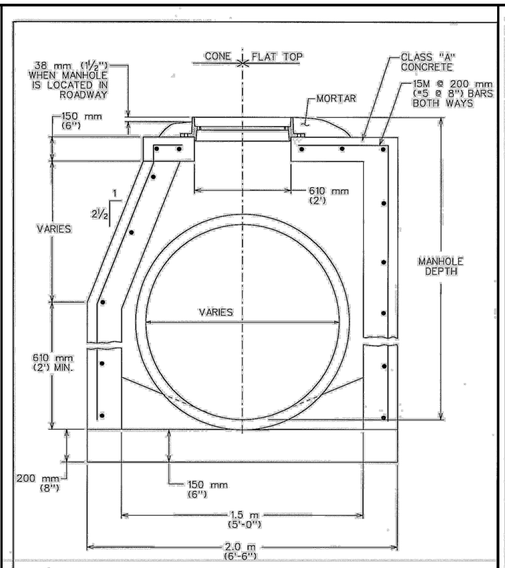

CITY OF AUSTIN DEPARTMENT OF WATERSHED PROTECTION AND DEVELOPMENT REVIEW		STORM DRAIN MANHOLE DETAIL	
George E. Rawlds 2/14/08	ADOPTED	THE ARCHITECT/ENGINEER ASSUMES RESPONSIBILITY FOR APPROPRIATE USE OF THIS STANDARD.	STANDARD NO. 506S-11

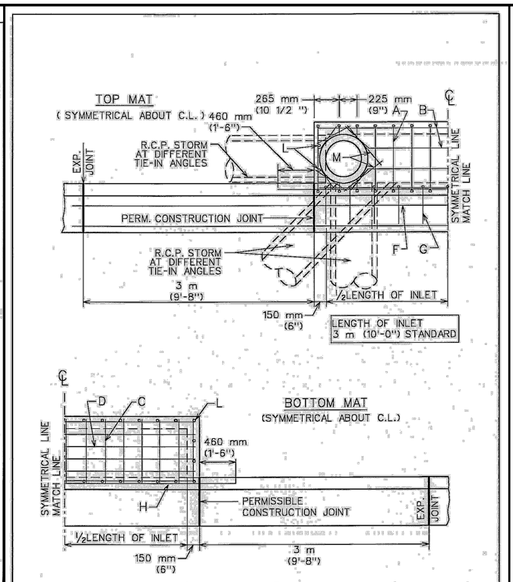

CITY OF AUSTIN DEPARTMENT OF PUBLIC WORKS.		TYPICAL DETAILS FOR CURB INLET	
Bill Gardner 12/9/08	ADOPTED	THE ARCHITECT/ENGINEER ASSUMES RESPONSIBILITY FOR APPROPRIATE USE OF THIS STANDARD.	STANDARD NO. 508S-3 1 OF 4

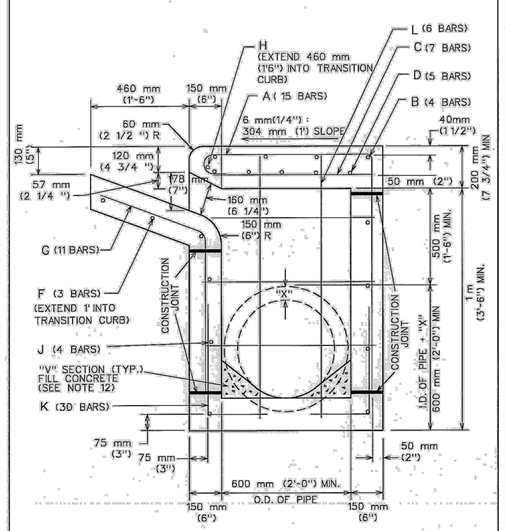

ELEVATION - SECTION

CITY OF AUSTIN DEPARTMENT OF PUBLIC WORKS		TYPICAL DETAILS FOR CURB INLET	
Bill Gardner 12/9/08	ADOPTED	THE ARCHITECT/ENGINEER ASSUMES RESPONSIBILITY FOR APPROPRIATE USE OF THIS STANDARD.	STANDARD NO. 508S-3 2 OF 4

TABLE OF QUANTITIES FOR 18" OUTLET PIPE REINFORCING STEEL QUANTITIES

BARS	SIZE	SPACING	NUMBER	LENGTH	WEIGHT
A	4	230mm (9")×	15	2 m (7'-0")	73
B	4	250 mm (10")	4	3.25 m (10'-8")	29
C	4	460 mm (18")	7	760 mm (2'-6")	12
D	6	150 mm (6")	5	3.25 m (10'-8")	80
E	4	300 mm (12")	6	760 mm (2'-6")	10
F	4	250 mm (10")	3	4 m (13'-0")	35
G	4	300 mm (12")	11	1.25 m (4'-3")	31
H	6	-	1	4.25 m (14'-0")	20
J	4	300 mm (12")	7	3.25 m (10'-8")	50
K	4	230 mm (9")×	30	800 mm (2'-7 1/2")	52
L	4	300 mm (12")×	6	1.3 m (4'-4")	17
M	4	-	4	500 mm (1'-8") AVG	4
TOTAL STEEL, LB.					413
TOTAL CONCRETE, C.Y.					4.06

× EXCEPT AS SHOWN ON PLAN

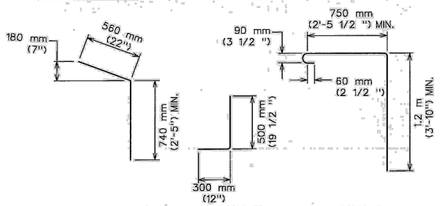

CITY OF AUSTIN DEPARTMENT OF PUBLIC WORKS		TYPICAL DETAILS FOR CURB INLET	
Bill Gardner 12/9/08	ADOPTED	THE ARCHITECT/ENGINEER ASSUMES RESPONSIBILITY FOR APPROPRIATE USE OF THIS STANDARD.	STANDARD NO. 508S-3 3 OF 4

NOTES:
1. ALL CONCRETE SHALL BE CLASS "A"
2. ALL REINFORCING STEEL SHALL BE GRADE 60
3. DIMENSIONS RELATING TO REINFORCING STEEL ARE TO CENTERS OF BARS.
4. VERTICAL STEEL MAY BE SPLICED (380 mm or 15" MIN. LAP) IN THE LOWER ONE-HALF OF ALL INLET WALLS.S. IN AREAS OF CONFLICT BETWEEN REINFORCING STEEL, PIPES AND MANHOLE FRAME, THE REINFORCEMENT SHALL BE BENT OR ADJUSTED TO CLEAR AS DIRECTED BY THE ENGINEER.
5. QUANTITIES SHOWN HEREON ARE FOR THE CONTRACTOR'S INFORMATION ONLY. PAYMENT WILL BE MADE FOR EACH INLET OF THE TYPE SPECIFIED, COMPLETE IN PLACE INCLUDING MANHOLE FRAME AND OVER.
7. CHAMFER ALL EXPOSED EDGES 20 mm (3/4 ").
8. MANHOLE FRAME AND COVER SHALL BE IN ACCORDANCE WITH CITY OF AUSTIN STANDARD 503S-1.
9. THE CONTRACTOR MAY PROPOSE ALTERNATE PROCEDURES FOR THE CONSTRUCTION OF INLETS, INCLUDING PRECAST UNITS. PLANS FOR SUCH PROPOSED ALTERNATES SHALL BE SUBMITTED TO THE ENGINEER FOR REVIEW AND APPROVAL BEFORE CONSTRUCTION.
10. ALL INLET WALLS SHALL BE FORMED EXCEPT WHERE THE NATURE OF THE SURROUNDING MATERIAL IS SUCH THAT IT CAN BE TRIMMED TO A SMOOTH VERTICAL FACE. WHEN INLET WALLS ARE PLACED TO NEAT EXCAVATION LINES THE WALL THICKNESS SHALL NOT EXCEED 10 INCHES.
11. PAYMENT FOR INLET AT THE CONTRACT PRICE SHALL INCLUDE THE TRANSITION CURB.
12. INVERT OF INLET SHALL BE SLOPED 1:20 WITH FILL CONCRETE, SHAPED AS "V" SECTION
13. NO SPLICING OF REINFORCING STEEL SHALL BE PERMITTED UNLESS OTHERWISE NOTED ON THE PLANS OR PERMITTED IN WRITING BY THE ENGINEER.

REFERENCES:
FOR EXPANSION JOINT DOWEL AND DOWEL LOCATION DETAILS SEE STD. 430S-3, "CURB EXPANSION JOINT DOWEL DETAIL".
FOR 18" MANHOLE FRAME AND COVER DETAILS SEE STD. 503S-1, "18" COVER AND FRAME".

CITY OF AUSTIN DEPARTMENT OF PUBLIC WORKS		TYPICAL DETAILS FOR CURB INLET	
Bill Gardner 12/9/08	ADOPTED	THE ARCHITECT/ENGINEER ASSUMES RESPONSIBILITY FOR APPROPRIATE USE OF THIS STANDARD.	STANDARD NO. 508S-3 4 OF 4

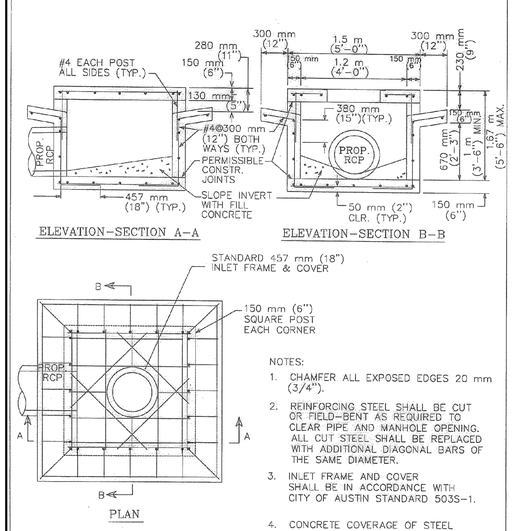

NOTES:
1. CHAMFER ALL EXPOSED EDGES 20 mm (3/4").
2. REINFORCING STEEL SHALL BE CUT OR FIELD-BENT AS REQUIRED TO CLEAR PIPE AND MANHOLE OPENING. ALL CUT STEEL SHALL BE REPLACED WITH ADDITIONAL DIAGONAL BARS OF THE SAME DIAMETER.
3. INLET FRAME AND COVER SHALL BE IN ACCORDANCE WITH CITY OF AUSTIN STANDARD 503S-1.
4. CONCRETE COVERAGE OF STEEL SHALL BE 50 mm (2") MIN. AT ALL SURFACES.
5. ANY MODIFICATION TO THIS STANDARD SHALL BE THE RESPONSIBILITY OF THE DESIGN ENGINEER.

CITY OF AUSTIN WATERSHED PROTECTION DEPARTMENT		4-SIDED AREA INLET	
Austin C. Rowe, P.E. 8/13/2010	ADOPTED	THE ARCHITECT/ENGINEER ASSUMES RESPONSIBILITY FOR APPROPRIATE USE OF THIS STANDARD	STANDARD NO. 508S-9

SITE DEVELOPMENT NUMBER 2025-476

REV. NO.	DATE	DESCRIPTION

PROJECT MANAGER:	PK
DESIGNED BY:	PG/RM
CHECKED BY:	DCS/JTH
DRAWN BY:	PG/RM
DCS PROJECT NO:	20101597

DCS ENGINEERING, LLC
1101 S. CAPITAL OF TEXAS HIGHWAY, BUILDING G-100
AUSTIN, TX 78746

TEL: (512) 614-6171
T.B.P.E. FIRM NO. F-13162

BudaTx breathe easy here™

BUDA SPORTSPLEX - PHASE I

STATE OF TEXAS
JORDAN T. HURTA
143332
LICENSED PROFESSIONAL ENGINEER
8/4/2025

GENERAL

CIVIL - STORM SEWER AND DRAINAGE DETAILS - SHEET NO. 3

DATE: AUGUST 2025
SCALE: AS NOTED
DRAWING: 00C-09

FILENAME: Z:\Projects 1551-1599\20101597 - Buda - Sportsplex\510 - Re-bid Dwgs\500 - Final_Design\500 - Final_Design\5.1 - Drawings\Sheet Files\Construction Plans\00C-09.dwg, LAST SAVED ON: Aug 01 2025 1:20pm, PLOTTED BY: RMALDONADO, ON: Aug 07 2025 8:05am, CFG:

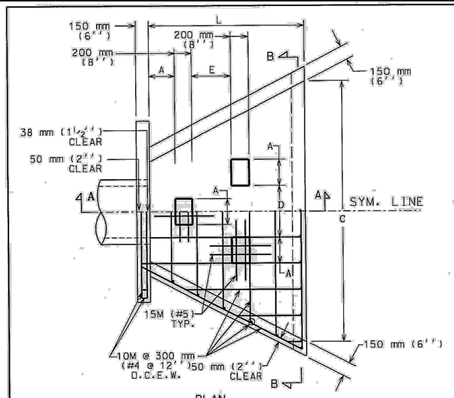

CITY OF AUSTIN DEPARTMENT OF WATERSHED PROTECTION AND DEVELOPMENT REVIEW	STANDARD HEADWALL AND ENERGY DISSIPATORS	
Bill Gardner 8/20/07 ADOPTED	THE ARCHITECT/ENGINEER ASSUMES RESPONSIBILITY FOR APPROPRIATE USE OF THIS STANDARD.	STANDARD NO. 508S-13 1 OF 2

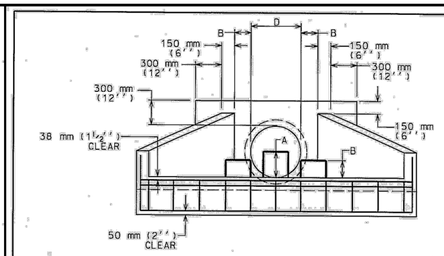

SECTION B-B

NOTES:
1. ALL CONCRETE SHALL BE TYPE "C" AS PER SPEC. 403S. CONCRETE FOR STURCTURES.
2. CHAMFER ALL EXTERNAL VISIBLE CORNERS.
3. DISSIPATOR BLOCKS REQUIRED ON DISCHARGE HEADWALLS ONLY.

D	457 mm (18")	533 mm (21")	610 mm (24")	685 mm (27")	765 mm (30")	838 mm (33")	914 mm (36")	1.067 m (42")	1.219 m (48")	1.372 m (54")	1.524 m (60")
A	225 mm (9")	250 mm (10")	300 mm (12")	350 mm (14")	375 mm (15")	400 mm (16")	450 mm (18")	525 mm (21")	600 mm (24")	675 mm (27")	750 mm (30")
B	150 mm (6")	175 mm (7")	200 mm (8")	225 mm (9")	250 mm (10")	275 mm (11")	300 mm (12")	350 mm (14")	400 mm (16")	450 mm (18")	500 mm (20")
C	2.29 m (90")	2.67 m (105")	3.05 m (120")	343 m (135")	3.81 m (150")	4.19 m (165")	4.57 m (180")	5.33 m (210")	6.10 m (240")	6.86 m (270")	7.62 m (300")
L	1.37 m (54")	1.60 m (63")	1.83 m (72")	2.06 m (81")	2.29 m (90")	2.51 m (99")	2.74 m (108")	3.20 m (126")	3.66 m (144")	4.11 m (162")	4.57 m (180")
E	300 mm (12")	350 mm (14")	400 mm (16")	450 mm (18")	500 mm (20")	550 mm (22")	600 mm (24")	700 mm (28")	800m (32")	900 mm (36")	1000 mm (40")

DIMENSIONS IN MILLIMETERS, METERS AND (INCHES).
DISCHARGE VELOCITIES GREATER THAN 3 METERS/SECOND (10 fps) REQUIRE ROCK OUTLET PROTECTION.

CITY OF AUSTIN DEPARTMENT OF WATERSHED PROTECTION AND DEVELOPMENT REVIEW	STANDARD HEADWALL AND ENERGY DISSIPATORS	
Bill Gardner 8/20/07 ADOPTED	THE ARCHITECT/ENGINEER ASSUMES RESPONSIBILITY FOR APPROPRIATE USE OF THIS STANDARD.	STANDARD NO. 508S-13 2 OF 2

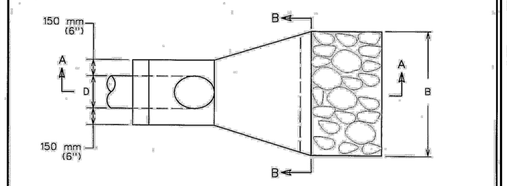

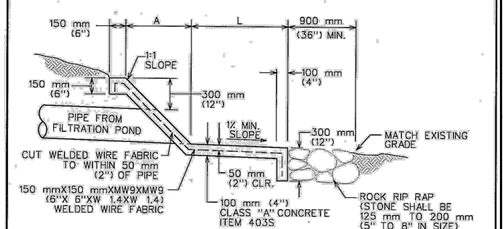

SECTION A - A

CITY OF AUSTIN DEPARTMENT OF WATERSHED PROTECTION AND DEVELOPMENT REVIEW	HEADWALL FOR FILTRATION PONDS W/OUTFALL PIPE 150 mm (6") TO 375 mm (15") DIA.	
George E. Rawald 3/15/05 ADOPTED	THE ARCHITECT/ENGINEER ASSUMES RESPONSIBILITY FOR APPROPRIATE USE OF THIS STANDARD.	STANDARD NO. 508S-15 1 OF 2

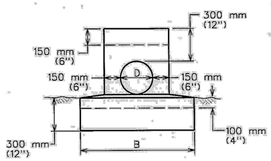

SECTION B - B

A	450 mm (18")	500 mm (20")	550 mm (22")	600 mm (24")	675 mm (27")
B	750 mm (30")	800 mm (32")	850 mm (34")	1.05 m (42")	1.27 m (51")
D	150 mm (6")	200 mm (8")	250 mm (10")	300 mm (12")	375 mm (15")
L	600 mm (24")	600 mm (24")	750 mm (30")	900 mm (36")	1.2 m (48")

CITY OF AUSTIN DEPARTMENT OF WATERSHED PROTECTION AND DEVELOPMENT REVIEW	HEADWALL FOR FILTRATION PONDS W/OUTFALL PIPE 150 mm (6") TO 375 mm (15") DIA.	
George E. Rawald 3/15/05 ADOPTED	THE ARCHITECT/ENGINEER ASSUMES RESPONSIBILITY FOR APPROPRIATE USE OF THIS STANDARD.	STANDARD NO. 508S-15 2 OF 2

SITE DEVELOPMENT NUMBER 2025-476

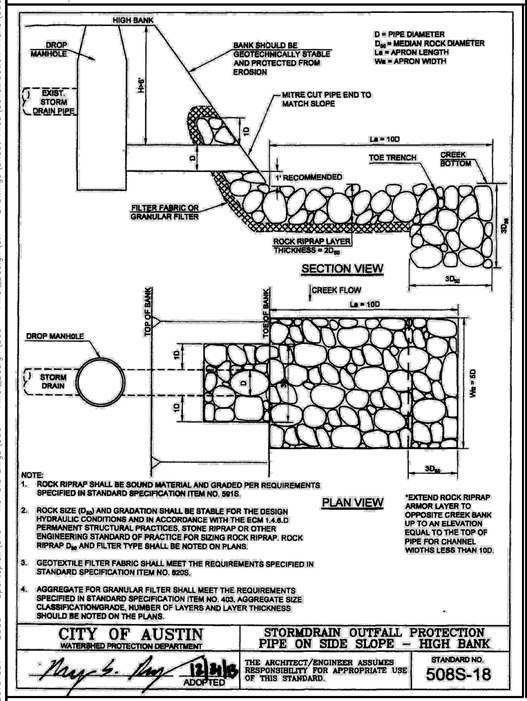

CITY OF AUSTIN WATERSHED PROTECTION DEPARTMENT	STORMDRAIN OUTFALL PROTECTION PIPE ON SIDE SLOPE - HIGH BANK	
12/9/16 ADOPTED	THE ARCHITECT/ENGINEER ASSUMES RESPONSIBILITY FOR APPROPRIATE USE OF THIS STANDARD.	STANDARD NO. 508S-18

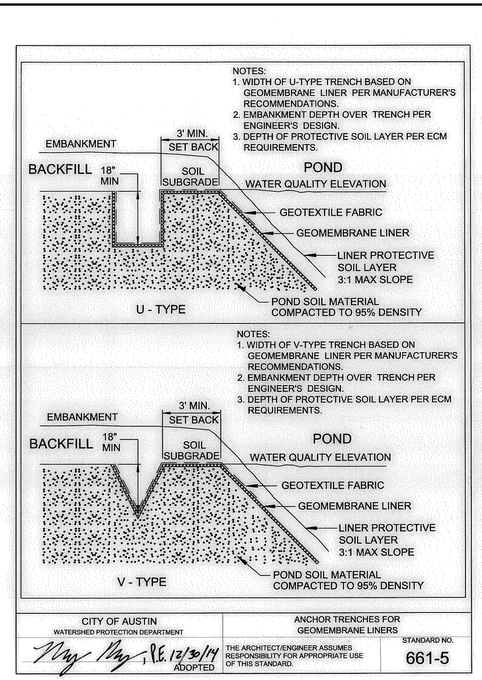

CITY OF AUSTIN WATERSHED PROTECTION DEPARTMENT	ANCHOR TRENCHES FOR GEOMEMBRANE LINERS	
12/30/14 ADOPTED	THE ARCHITECT/ENGINEER ASSUMES RESPONSIBILITY FOR APPROPRIATE USE OF THIS STANDARD.	STANDARD NO. 661-5

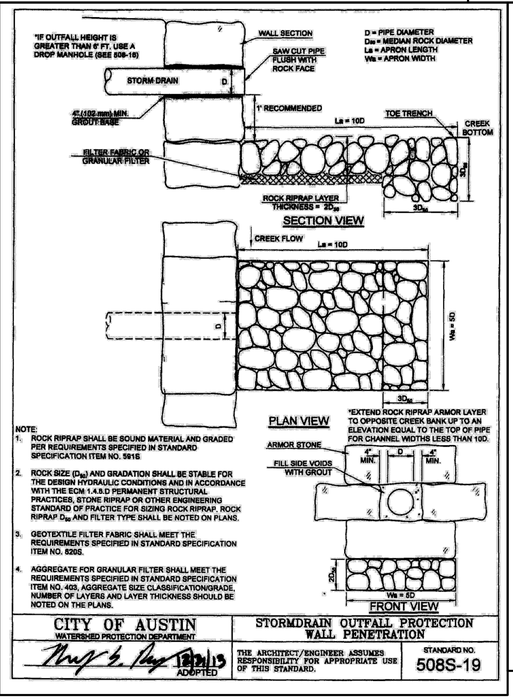

NOTE:
1. ROCK RIPRAP SHALL BE SOUND MATERIAL AND GRADED PER REQUIREMENTS SPECIFIED IN STANDARD SPECIFICATION ITEM NO. 591S.
2. ROCK SIZE (D_{50}) AND GRADATION SHALL BE STABLE FOR THE DESIGN HYDRAULIC CONDITIONS AND IN ACCORDANCE WITH THE ECM 1.4.6.D PERMANENT STRUCTURAL PRACTICES, STONE RIPRAP OR OTHER ENGINEERING STANDARD OF PRACTICE FOR SIZING ROCK RIPRAP. ROCK RIPRAP D_{50} AND FILTER TYPE SHALL BE NOTED ON PLANS.
3. GEOTEXTILE FILTER FABRIC SHALL MEET THE REQUIREMENTS SPECIFIED IN STANDARD SPECIFICATION ITEM NO. 620S.
4. AGGREGATE FOR GRANULAR FILTER SHALL MEET THE REQUIREMENTS SPECIFIED IN STANDARD SPECIFICATION ITEM NO. 403, AGGREGATE SIZE CLASSIFICATION/GRADE, NUMBER OF LAYERS AND LAYER THICKNESS SHOULD BE NOTED ON THE PLANS.

CITY OF AUSTIN WATERSHED PROTECTION DEPARTMENT	STORMDRAIN OUTFALL PROTECTION WALL PENETRATION	
12/2/15 ADOPTED	THE ARCHITECT/ENGINEER ASSUMES RESPONSIBILITY FOR APPROPRIATE USE OF THIS STANDARD.	STANDARD NO. 508S-19

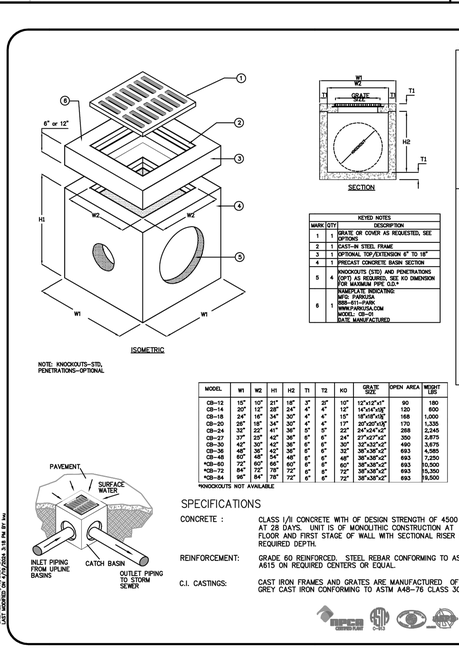

KEYED NOTES

MARK	QTY	DESCRIPTION
1	1	GRATE OR COVER AS REQUESTED, SEE OPTIONS
2	1	CAST-IN STEEL FRAME
3	1	OPTIONAL TOP/EXTENSION 6" TO 18"
4	1	PRECAST CONCRETE BASIN SECTION
5	4	KNOCKOUTS (STD) AND PENETRATIONS (OPT) AS REQUIRED, SEE KO DIMENSION FOR MAXIMUM PIPE O.D.*
6	1	NAMEPLATE INDICATING: MFG: PARKUSA 888-611-PARK WWW.PARKUSA.COM MODEL: CB-CI DATE MANUFACTURED

NOTE: KNOCKOUTS-STD, PENETRATIONS-OPTIONAL

MODEL	W1	W2	H1	H2	T1	T2	KO	GRATE SIZE	OPEN AREA	WEIGHT LBS
CB-12	15"	15"	21"	18"	3"	3"	10"	12"x12"x1"	90	160
CB-14	20"	13"	28"	24"	4"	4"	12"	14"x14"x1½"	120	800
CB-18	24"	16"	34"	30"	4"	4"	15"	18"x18"x1½"	168	1,000
CB-20	28"	18"	34"	30"	4"	4"	17"	20"x20"x1½"	170	1,335
CB-24	33"	23"	41"	36"	5"	5"	23"	24"x24"x2"	268	2,245
CB-27	37"	25"	42"	36"	6"	6"	24"	27"x27"x2"	350	2,875
CB-30	42"	26"	42"	36"	6"	6"	30"	32"x32"x2"	490	3,675
CB-36	48"	32"	42"	36"	6"	6"	32"	36"x36"x2"	693	4,585
CB-48	60"	44"	48"	36"	6"	6"	48"	36"x36"x2"	693	7,250
*CB-50	64"	72"	60"	36"	6"	6"	60"	36"x36"x2"	693	10,500
*CB-72	84"	72"	78"	72"	6"	6"	72"	36"x36"x2"	693	15,350
*CB-84	96"	84"	78"	72"	6"	6"	72"	36"x36"x2"	693	19,500

*KNOCKOUTS NOT AVAILABLE

SPECIFICATIONS

CONCRETE : CLASS I/II CONCRETE WITH OF DESIGN STRENGTH OF 4500 PSI AT 28 DAYS. UNIT IS OF MONOLITHIC CONSTRUCTION AT FLOOR AND FIRST STAGE OF WALL WITH SECTIONAL RISER TO REQUIRED DEPTH.

REINFORCEMENT: GRADE 60 REINFORCED. STEEL REBAR CONFORMING TO ASTM A615 ON REQUIRED CENTERS OR EQUAL.

C.I. CASTINGS: CAST IRON FRAMES AND GRATES ARE MANUFACTURED OF GREY CAST IRON CONFORMING TO ASTM A48-76 CLASS 30.

© ParkUSA. ALL RIGHTS RESERVED.

REV	DATE	BY	DESCRIPTION
A	.	.	.

PROJECT: .
CUSTOMER: .
ENGINEER: .
ORDER #: . PROJ #: .
DATE: . LOCATION: .

PARK USA A Northwest Pipe Company

CATCH BASIN
MODEL CB – 12" THRU 84"

PM	PC	DRN	ENG	DWG. NO.	REV.
.	.	.	.	CB-1	A
DATE .					

MARK: –
LINE: –
STA: –
SHEET: –
DATE: –

REV. NO.	DATE	DESCRIPTION

PROJECT MANAGER:	PK
DESIGNED BY:	PG/RM
CHECKED BY:	DCS/JTH
DRAWN BY:	PG/RM
DCS PROJECT NO:	20101597

DCS ENGINEERING, LLC
1101 S. CAPITAL OF TEXAS HIGHWAY, BUILDING G-100
AUSTIN, TX 78746
TEL: (512) 614-6171
T.B.P.E. FIRM NO. F-13162

BudaTx breathe easy here™

BUDA SPORTSPLEX - PHASE I

STATE OF TEXAS
JORDAN T. HURTA
143332
LICENSED PROFESSIONAL ENGINEER
8/4/2025

GENERAL

CIVIL - STORM SEWER AND DRAINAGE DETAILS - SHEET NO. 4

DATE: AUGUST 2025
SCALE: AS NOTED
DRAWING: 00C-10

PLOTTED ON 4/8/2024 3:15:16 PM BY AL Vela, G:\Users\AVela\Desktop\File Attachment Update\CB-1

FILENAME: Z:\Projects 1551-1599\20101597 - Buda - Sportsplex\510 - Re-bid Dwgs\500 - Final_Design\5.1 - Drawings\Sheet Files\Construction Plans\00C-10.dwg, LAST SAVED ON: Aug 01 2025 1:20pm, PLOTTED BY: RMALDONADO, ON: Aug 07 2025 8:05am, CFG:

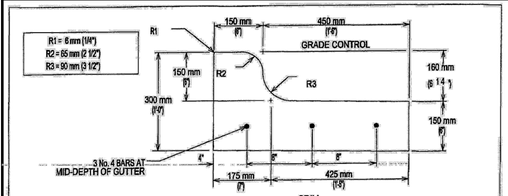

SPILL

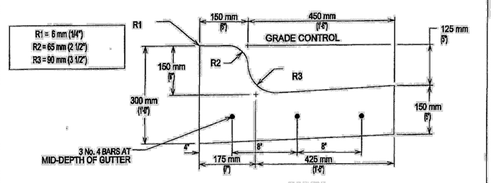

CATCH

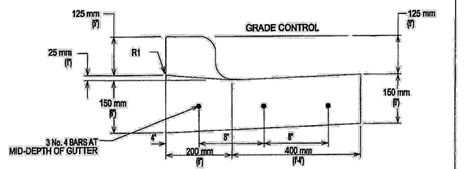

LAYDOWN CURB

CITY OF AUSTIN
DEPARTMENT OF PUBLIC WORKS

11/4/10
ADOPTED

THE ARCHITECT/ENGINEER ASSUMES RESPONSIBILITY FOR APPROPRIATE USE OF THIS STANDARD.

REINFORCED CURB AND GUTTER SECTION

STANDARD NO. 430S-2

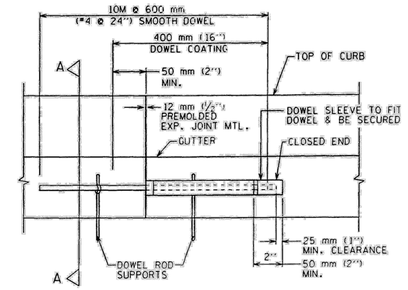

CURB EXPANSION JOINT DOWEL DETAIL

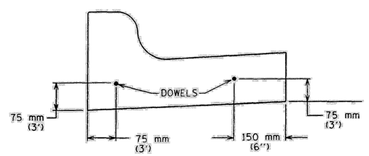

SECTION A-A

SEE STANDARD 430S-1 FOR TYPICAL CURB AND GUTTER SECTIONS.

CITY OF AUSTIN
DEPARTMENT OF PUBLIC WORKS AND TRANSPORTATION

Lena Rivera 9/29/09
ADOPTED

THE ARCHITECT/ENGINEER ASSUMES RESPONSIBILITY FOR APPROPRIATE USE OF THIS STANDARD.

CURB EXPANSION JOINT DOWEL DETAIL

STANDARD NO. 430S-3

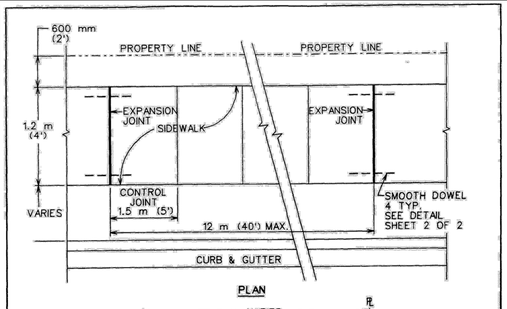

PLAN

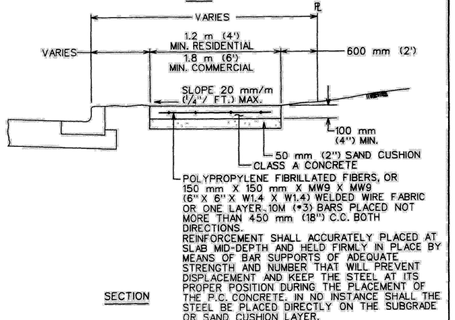

POLYPROPYLENE FIBRILLATED FIBERS, OR 150 mm X 150 mm X MW9 X MW9 (6" X 6" X W1.4 X W1.4) WELDED WIRE FABRIC OR ONE LAYER 10M (#3) BARS PLACED NOT MORE THAN 450 mm (18") C.C. BOTH DIRECTIONS.
REINFORCEMENT SHALL ACCURATELY PLACED AT SLAB MID-DEPTH AND HELD FIRMLY IN PLACE BY MEANS OF BAR SUPPORTS OF ADEQUATE STRENGTH AND NUMBER THAT WILL PREVENT DISPLACEMENT AND KEEP THE STEEL AT ITS PROPER POSITION DURING THE PLACEMENT OF THE P.C. CONCRETE. IN NO INSTANCE SHALL THE STEEL BE PLACED DIRECTLY ON THE SUBGRADE OR SAND CUSHION LAYER.

SECTION

CITY OF AUSTIN
DEPARTMENT OF PUBLIC WORKS

Bill Gardner 3/26/08
ADOPTED

THE ARCHITECT/ENGINEER ASSUMES RESPONSIBILITY FOR APPROPRIATE USE OF THIS STANDARD.

SIDEWALK

STANDARD NO. 432S-1
1 OF 3

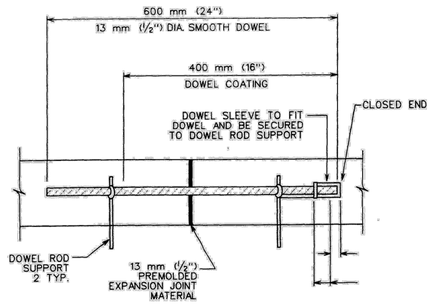

DOWEL DETAIL

CITY OF AUSTIN
DEPARTMENT OF PUBLIC WORKS

Bill Gardner 3/26/08
ADOPTED

THE ARCHITECT/ENGINEER ASSUMES RESPONSIBILITY FOR APPROPRIATE USE OF THIS STANDARD.

SIDEWALK

STANDARD NO. 432S-1
2 OF 3

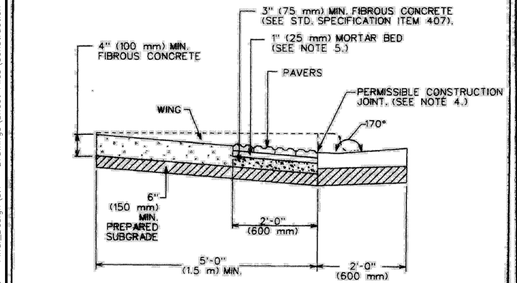

CROSS SECTION

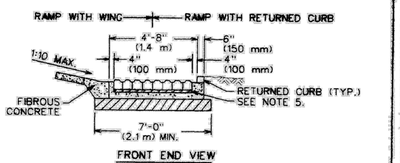

FRONT END VIEW

CITY OF AUSTIN
DEPARTMENT OF PUBLIC WORKS

6/21/07
ADOPTED

THE ARCHITECT/ENGINEER ASSUMES RESPONSIBILITY FOR APPROPRIATE USE OF THIS STANDARD.

DETECTABLE WARNING-PAVER (CITY PROPERTY/EASEMENTS)

STANDARD NO. 432S-2A
1 OF 2

GENERAL NOTES:

1. THIS STANDARD IS APPLICABLE FOR RAMP CONSTRUCTION ON CITY PROPERTY AND EASEMENT AREAS ONLY.
2. PAVERS ARE REQUIRED FOR ALL CURB RAMP INSTALLATIONS.
3. PAVERS WILL HAVE DETECTABLE WARNING THAT CONSISTS OF RAISED TRUNCATED DOMES WITH A DIAMETER OF 0.9" (23 mm), A NOMINAL HEIGHT OF 0.2" (5 mm) AND A NOMINAL CENTER TO CENTER SPACING OF 2.35" (60 mm) AND SHALL CONTRAST VISUALLY WITH ADJOINING SURFACES, EITHER LIGHT-ON-DARK OR DARK-ON-LIGHT (Re: ADAAG SECTION 4.29.2). MATERIAL USED TO PROVIDE CONTRAST SHALL BE AN INTEGRAL PART OF THE WALKING SURFACE. PAVER PATTERN SHALL BE BASKET WEAVE UNLESS DIRECTED OTHERWISE BY THE ENGINEER OR DESIGNATED REPRESENTATIVE.
4. TYPICAL SIDEWALK WIDTHS AND CURB RADII ARE SHOWN FOR ILLUSTRATION ONLY. REFER TO THE TRANSPORTATION CRITERIA MANUAL FOR SIDEWALK WIDTHS, CURB RADII AND CURB BASIS.
5. THE PERMISSIBLE CONSTRUCTION JOINT BETWEEN THE PAVERS AND THE ADJOINING SURFACE SHALL BE LIMITED TO 1/4" (6 mm) JOINT SIZE. GAPS LARGER THAN 1/4" (6 mm) MUST BE APPROVED BY THE ENGINEER OR DESIGNATED REPRESENTATIVE. ALL JOINTS BETWEEN BRICKS AND ADJOINING SURFACE SHALL BE MORTAR FILLED UNLESS DIRECTED OTHERWISE BY THE ENGINEER OR DESIGNATED REPRESENTATIVE.
6. MORTAR SHALL CONFORM TO STD. SPECIFICATION ITEM SECTION 403S.3.5. MORTAR AND GROUT. ALL OTHER CONCRETE SHALL CONFORM TO STD. SPECIFICATION ITEM 403S, CONCRETE FOR STRUCTURES, UNLESS OTHERWISE NOTED.
7. CURB RAMPS WITH RETURNED CURB MAY ONLY BE USED WHERE PEDESTRIANS WOULD NOT NORMALLY WALK DIAGONALLY ACROSS THE RAMP.

CITY OF AUSTIN
DEPARTMENT OF PUBLIC WORKS

6/21/07
ADOPTED

THE ARCHITECT/ENGINEER ASSUMES RESPONSIBILITY FOR APPROPRIATE USE OF THIS STANDARD.

DETECTABLE WARNING-PAVER (CITY PROPERTY/EASEMENTS)

STANDARD NO. 432S-2A
2 OF 2

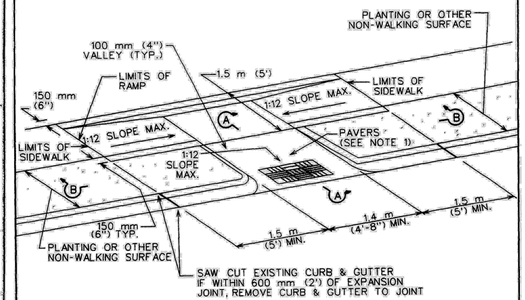

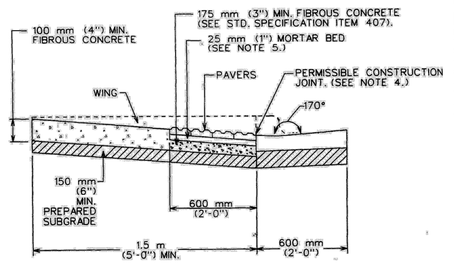

SECTION A-A

CITY OF AUSTIN
DEPARTMENT OF PUBLIC WORKS

3/13/06
ADOPTED

THE ARCHITECT/ENGINEER ASSUMES RESPONSIBILITY FOR APPROPRIATE USE OF THIS STANDARD.

COMBINED SIDEWALK CURB RAMP WITH PAVERS

STANDARD NO. 432S-3F
1 OF 2

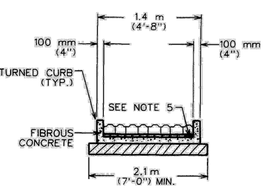

SECTION B-B

GENERAL NOTES:

1. THIS STANDARD IS APPLICABLE FOR RAMP CONSTRUCTION WITHIN RIGHT-OF-WAY OR EASEMENT ONLY.
2. PAVERS WILL HAVE DETECTABLE WARNING THAT CONSISTS OF RAISED TRUNCATED DOMES WITH A DIAMETER OF 23 mm (0.9"), A NOMINAL HEIGHT OF 5 mm (0.2") AND A NOMINAL CENTER TO CENTER SPACING OF 60 mm (2.35") AND SHALL CONTRAST VISUALLY WITH ADJOINING SURFACES, EITHER LIGHT-ON-DARK OR DARK-ON-LIGHT (Re: ADAAG SECTION 4.29.2). MATERIAL USED TO PROVIDE CONTRAST SHALL BE AN INTEGRAL PART OF THE WALKING SURFACE. A BASKET WEAVE PAVER PATTERN SHALL BE USED UNLESS DIRECTED BY THE ENGINEER OR DESIGNATED REPRESENTATIVE. PAVER PATTERN VARIES PER MANUFACTURER'S RECOMMENDATIONS. REFER TO STANDARD DETAIL 432S-5 FOR PAVER BASE PREPARATION DETAILS.
3. THE CURB, GUTTER AND RAMP SYSTEM SHALL BE CONFIGURED TO MAINTAIN ALL RUNOFF FROM A 25 YEAR FREQUENCY STORM WITHIN THE RIGHT-OF-WAY (DRAINAGE CRITERIA MANUAL SECTION 1.2.2.B).
4. TYPICAL SIDEWALK WIDTHS AND CURB RADII ARE SHOWN FOR ILLUSTRATION ONLY. REFER TO THE TRANSPORTATION CRITERIA MANUAL FOR SIDEWALK WIDTHS, CURB RADII AND CURB BASIC REQUIREMENTS.
5. THE PERMISSIBLE CONSTRUCTION JOINT BETWEEN THE PAVERS AND THE ADJOINING SURFACE SHALL BE LIMITED TO 6 mm (1/4") JOINT SIZE. GAPS LARGER THAN 6 mm (1/4") MUST BE APPROVED BY THE ENGINEER OR DESIGNATED REPRESENTATIVE. ALL JOINTS BETWEEN BRICKS AND ADJOINING SURFACE SHALL BE MORTAR FILLED UNLESS DIRECTED OTHERWISE BY THE ENGINEER OR DESIGNATED REPRESENTATIVE.
6. MORTAR SHALL CONFORM TO STD. SPECIFICATION ITEM SECTION 403S.3.5. MORTAR AND GROUT. ALL OTHER CONCRETE SHALL CONFORM TO STD. SPECIFICATION ITEM 403S, CONCRETE FOR STRUCTURES, UNLESS OTHERWISE NOTED.
7. CURB RAMPS WITH 100 mm (4") CONCRETE VALLEY MAY ONLY BE USED WHERE PEDESTRIANS WOULD NOT NORMALLY WALK DIAGONALLY ACROSS THE RAMP.

CITY OF AUSTIN
DEPARTMENT OF PUBLIC WORKS

3/13/06
ADOPTED

THE ARCHITECT/ENGINEER ASSUMES RESPONSIBILITY FOR APPROPRIATE USE OF THIS STANDARD.

COMBINED SIDEWALK CURB RAMP WITH PAVERS

STANDARD NO. 432S-3F
2 OF 2

SITE DEVELOPMENT NUMBER 2025-476

REV. NO.	DATE	DESCRIPTION

PROJECT MANAGER:	PK
DESIGNED BY:	PG/RM
CHECKED BY:	DCS/JTH
DRAWN BY:	PG/RM
DCS PROJECT NO:	20101597

DCS ENGINEERING, LLC
1101 S. CAPITAL OF TEXAS HIGHWAY, BUILDING G-100
AUSTIN, TX 78746

TEL: (512) 614-6171
T.B.P.E. FIRM NO. F-13162

BudaTx breathe easy here™

BUDA SPORTSPLEX - PHASE I

STATE OF TEXAS
JORDAN T. HURTA
143332
LICENSED PROFESSIONAL ENGINEER
8/4/2025

GENERAL

CIVIL - PAVEMENT DETAILS - SHEET NO. 1

DATE: AUGUST 2025

SCALE: AS NOTED

DRAWING: 00C-11

FILENAME: Z:\Projects 1551-1599\20101597 - Buda - Sportsplex\510 - Re-bid Dwgs\500 - Final_Design\500 - Final_Design\5.1 - Drawings\Sheet Files\Construction Plans\00C-11.dwg, LAST SAVED ON: Aug 01 2025 1:20pm, PLOTTED BY: RMALDONADO, ON: Aug 07 2025 8:06am, CFG:

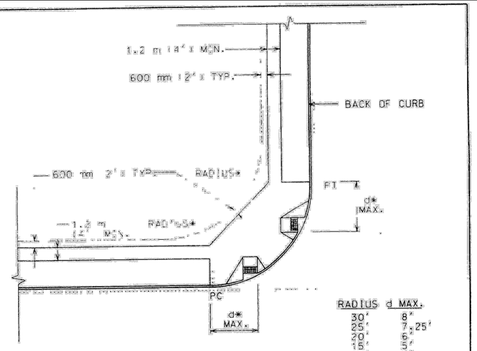

TYPICAL PLAN

RADIUS	d MAX.
30'	8"
25'	7.25'
20'	6"
15'	5"
10'	4"

NOTES:
1. THIS STANDARD IS APPLICABLE FOR RAMP CONSTRUCTION WITHIN RIGHT-OF-WAY OR EASEMENT ONLY.
2. CURB RAMPS WILL BE CONSTRUCTED PERPENDICULAR TO ROADWAY CENTERLINE AND SHALL ALIGN WITH THOSE LOCATED ACROSS THE ROADWAY.
3. THE CURB, GUTTER AND RAMP SYSTEM SHALL BE CONFIGURED TO MAINTAIN ALL RUNOFF FROM A 25 YEAR FREQUENCY STORM WITHIN THE RIGHT-OF-WAY (DRAINAGE CRITERIA MANUAL SECTION 1.2.2.B). WHEN THERE IS AN ELEVATION DIFFERENCE BETWEEN THE BOTTOM OF RAMPS (I.E. ELEVATION AT THE GUTTER) WITHIN A QUADRANT OF AN INTERSECTION, THE LOWER ELEVATION RAMP SHALL BE CONSTRUCTED WITH A PROVIDE RAMP SLOPE OF 1:12 IN ACCORDANCE WITH STANDARDS 432S-2, 432S-2A AND 432S-2B.
4. PRIORITY SHALL BE GIVEN TO THE INSTALLATION OF RAMPS IN CONFORMANCE WITH STANDARDS 432S-3 AND 432S-3A.
5. THIS STANDARD SHALL ONLY BE USED WHEN WALKABLE SURFACES ARE PRESENT ON BOTH SIDES OF A RAMP.
6. THIS STANDARD MAY BE USED IN SUBDIVISION APPLICATIONS AND OTHER INSTANCES WHERE STANDARDS 432S-3 AND 432S-3A CANNOT BE UTILIZED DUE TO SPACE LIMITATIONS.
7. SEE STANDARD 432S-2A FOR DETECTABLE WARNING-PAVER INSTALLATION.
8. SEE STANDARDS 432S-5 FOR RAMP TYPE DETAIL.

CITY OF AUSTIN DEPARTMENT OF PUBLIC WORKS	TYPE 1 RAMPS WITHIN PC/PT OF CURB AND GUTTER	
Bill Gardner 8/20/07 ADOPTED	THE ARCHITECT/ENGINEER ASSUMES RESPONSIBILITY FOR APPROPRIATE USE OF THIS STANDARD.	STANDARD NO. 432S-3H 3 OF 3

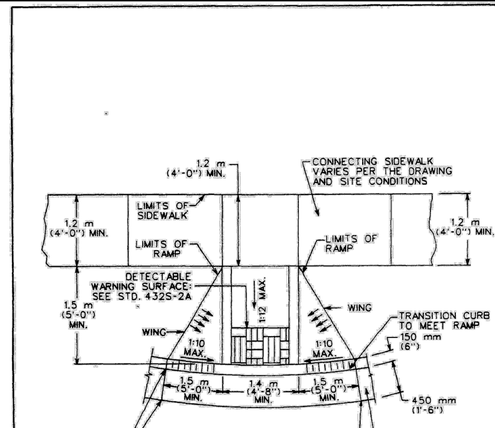

CITY OF AUSTIN DEPARTMENT OF PUBLIC WORKS	TYPE 1 SIDEWALK CURB RAMP	
Bill Gardner 9/14/05 ADOPTED	THE ARCHITECT/ENGINEER ASSUMES RESPONSIBILITY FOR APPROPRIATE USE OF THIS STANDARD.	STANDARD NO. 432S-5

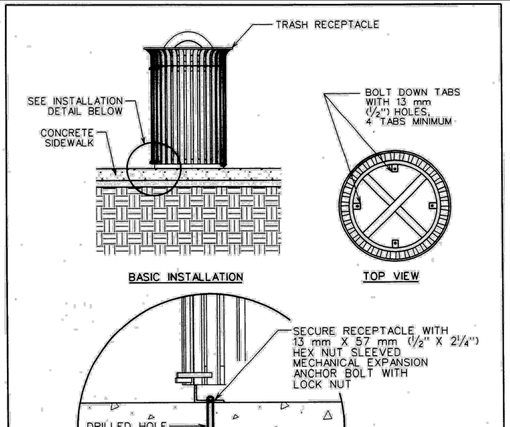

CITY OF AUSTIN DEPARTMENT OF PUBLIC WORKS	TRASH RECEPTACLE INSTALLATION IN CONCRETE SIDEWALK	
Bill Gardner 11/21/05 ADOPTED	THE ARCHITECT/ENGINEER ASSUMES RESPONSIBILITY FOR APPROPRIATE USE OF THIS STANDARD.	STANDARD NO. 432S-8B 1 OF 2

GENERAL NOTES:

1. FOR BUILDINGS WITH FRONTAGE ON MORE THAN ONE STREET, A TRASH RECPTACLE SHALL BE PLACED ON EACH FRONTAGE. TRASH RECEPTACLES SHALL BE LOCATED WITHIN 3.66 m (12') OF EITHER THE MAIN BUILDING ENTRY OR THE ENTRY TO THE PRIMARY LOCAL USE, OR BOTH.
2. TRASH RECEPTACLES SHALL EITHER BE PLACED ALONG THE CURB, WITH THE CENTER LINE OF THE RECEPTACLE ON LINE WITH THE TREES AND LIGHT POLES, OR SHALL BE LOCATED AT THE BUILDING ENTRY IN ALIGNMENT WITH THE STRUCTURAL BAY SYSTEM OF THE BUILDING. IF LOCATED AT THE ENTRY, THERE SHALL BE NO MORE THAN 300 mm (1') CLEARANCE BETWEEN THE RECEPTACLE AND THE BUILDING WALL.

CITY OF AUSTIN DEPARTMENT OF PUBLIC WORKS	TRASH RECEPTACLE INSTALLATION IN CONCRETE SIDEWALK	
Bill Gardner 11/21/05 ADOPTED	THE ARCHITECT/ENGINEER ASSUMES RESPONSIBILITY FOR APPROPRIATE USE OF THIS STANDARD.	STANDARD NO. 432S-8B 2 OF 2

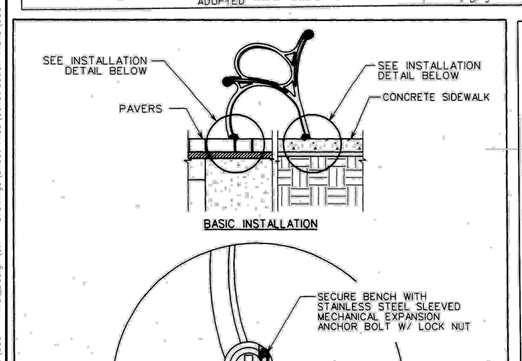

GENERAL NOTE:

BENCHES SHALL BE LOCATED WITHIN 7.32 m (24') OF EITHER THE MAIN BUILDING ENTRY OR THE ENTRY TO THE PRIMARY LOCAL USE. BENCHES SHALL BE PLACED EITHER PERPENDICULAR TO THE CURB WITH THE CENTER OF THE BENCH ON LINE WITH TREES AND LIGHT POLES AND FACING TOWARD THE BUILDING ENTRY, OR PARALLEL TO THE BUILDING AND WITHIN 150 mm (6") OF THE BUILDING WALL, FACING OUT TO THE STREET.

CITY OF AUSTIN DEPARTMENT OF PUBLIC WORKS	BENCH/CHAIR INSTALLATION IN SIDEWALKS	
Bill Gardner 11/21/05 ADOPTED	THE ARCHITECT/ENGINEER ASSUMES RESPONSIBILITY FOR APPROPRIATE USE OF THIS STANDARD.	STANDARD NO. 432S-9B

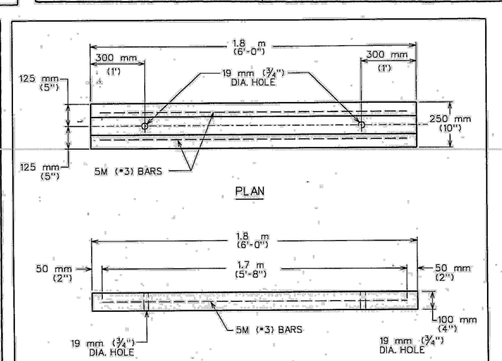

ALL CONCRETE SHALL BE CLASS "A" IN ACCORDANCE WITH ITEM 403S.

CITY OF AUSTIN DEPARTMENT OF PUBLIC WORKS	PARKING LOT BUMPER CURB	
Bill Gardner 3/15/05 APPROVED ADOPTED	THE ARCHITECT/ENGINEER ASSUMES RESPONSIBILITY FOR APPROPRIATE USE OF THIS STANDARD.	STANDARD NO. 439S-1

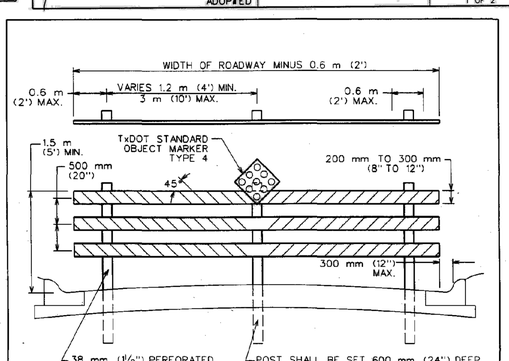

NOTES:
1. WIDTH OF RAIL SHALL BE A MINIMUM OF 200 mm (8") AND MAY BE UP TO A MAXIMUM OF 300 mm (12"), 25 mm (1") HOLLOW-PROFILE PLASTIC LUMBER WITH INTERNAL STIFFENERS.
2. RAILS SHALL BE FASTENED TO EACH TUBE WITH 50 mm (2") STEEL BOLTS WITH NUTS AND WASHERS ON EACH SIDE. BOLT THREADS SHALL BE PEENED.
3. THE RAILS SHALL HAVE 150 mm (6") WIDE REFLECTORIZED RED STRIPES OF TAPE PLACED ON 45 DEGREE SLOPES, DOWN AND TOWARD THE CENTER OF THE BARRICADE.
4. BARRICADES MAY BE CONSTRUCTED IN SECTIONS OR MAY BE CONTINUOUS ACROSS ROADWAY WIDTH. SPLICES ON CONTINUOUS RAIL BARRICADES SHALL BE AT POSTS AND SHALL HAVE A 600 mm (2') SPLICE BLOCK ON BACK SIDE OF THE SAME MATERIAL AS RAIL.
5. 450 mm (18") DIAMOND REFLECTORIZED RED PANEL OR 450 mm (18") DIAMOND RED OR BLACK PANEL WITH NINE-75 mm (3") DIAMETER RED REFLECTORS SYMMETRICALLY PLACED AT CENTER POSTS, A MINIMUM OF 1.2 m (4') ABOVE GROUND SHALL BE USED FOR END OF ROAD MARKERS AS PER TEXAS MANUAL on UNIFORM TRAFFIC CONTROL DEVICES (TMUTCD) SECTION 3C.04.

CITY OF AUSTIN DEPARTMENT OF PUBLIC WORKS	STREET-END BARRICADE	
Bill Gardner 3/12/09 ADOPTED	THE ARCHITECT/ENGINEER ASSUMES RESPONSIBILITY FOR APPROPRIATE USE OF THIS STANDARD.	STANDARD NO. 803S-1

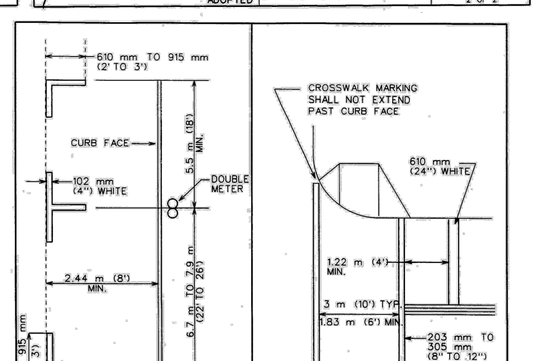

CITY OF AUSTIN DEPARTMENT OF PUBLIC WORKS	PARKING STALLS, CROSSWALK AND STOP BARS	
Bill Gardner 3/13/06 ADOPTED	THE ARCHITECT/ENGINEER ASSUMES RESPONSIBILITY FOR APPROPRIATE USE OF THIS STANDARD.	STANDARD NO. 804S-3 4 OF 5

SITE DEVELOPMENT NUMBER 2025-476

REV. NO.	DATE	DESCRIPTION

PROJECT MANAGER:	PK
DESIGNED BY:	PG/RM
CHECKED BY:	DCS/JTH
DRAWN BY:	PG/RM
DCS PROJECT NO:	20101597

DCS ENGINEERING, LLC
1101 S. CAPITAL OF TEXAS HIGHWAY, BUILDING G-100
AUSTIN, TX 78746
TEL: (512) 614-6171
T.B.P.E. FIRM NO. F-13162

BudaTx breathe easy here™

BUDA SPORTSPLEX - PHASE I

STATE OF TEXAS
JORDAN T. HURTA
143332
LICENSED PROFESSIONAL ENGINEER
8/4/2025

GENERAL

CIVIL - PAVEMENT DETAILS - SHEET NO. 2

DATE: AUGUST 2025
SCALE: AS NOTED
DRAWING: 00C-12

FILENAME: Z:\Projects 1551-1599\20101597 - Buda - Sportsplex\510 - Re-bid Dwgs\500 - Final_Design\500 - Final_Design\5.1 - Drawings\Sheet Files\Construction Plans\00C-12.dwg, LAST SAVED ON: Aug 01 2025 1:20pm, PLOTTED BY: RMALDONADO, ON: Aug 07 2025 8:06am, CFG:

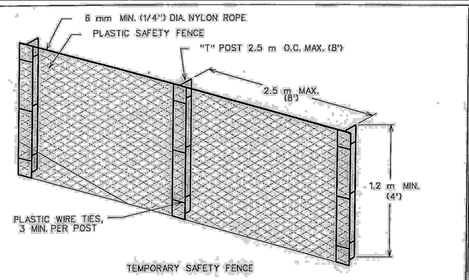

TEMPORARY SAFETY FENCE

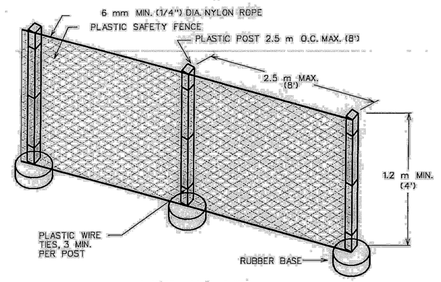

PORTABLE SAFETY FENCE

CITY OF AUSTIN DEPARTMENT OF PUBLIC WORKS		SAFETY FENCE	
	4/3/09 ADOPTED	THE ARCHITECT/ENGINEER ASSUMES RESPONSIBILITY FOR APPROPRIATE USE OF THIS STANDARD.	STANDARD NO. 804S-4 1 OF 9

1. SAFETY FENCE SHALL BE USED TO PROTECT ALL EXCAVATIONS IN THE RIGHT-OF-WAY.
2. SAFETY FENCES SHALL BE USED TO SEPARATE CONSTRUCTION ACTIVITIES FROM PEDESTRIAN.
3. ALL SAFETY FENCING SHALL BE PLASTIC, 1,200 mm (48") MINIMUM HEIGHT AND ORANGE IN COLOR.
4. SAFETY FENCE USED WITHIN THE ROADWAY SHALL BE REFLECTORIZED WITH A MINIMUM OF TWO (2) STRIPS OF RETROREFLECTIVE MATERIAL, A MINIMUM OF 25 mm (1") WIDE, THE LENGTH OF THE FENCE OR DELINEATED BY CHANNELIZING DEVICES.
5. SAFETY FENCE USED TO SEPARATE SIDEWALKS FROM CONSTRUCTION ACTIVITIES SHALL HAVE MINIMUM ENCROACHMENT TO THE SIDEWALK.
6. AS A MINIMUM SAFETY FENCING IS REQUIRED IN AREAS ADJACENT TO EXCAVATIONS GREATER THAN OR EQUAL TO 150 mm (6").
7. SAFETY FENCING SHALL BE PAID FOR UNDER ITEM 803S, "BARRICADES, SIGNS AND TRAFFIC HANDLING", PAY ITEM NO. 803S-SF.
8. PORTABLE SAFETY FENCE MOUNTS SHALL BE APPROVED BY THE TRANSPORTATION DIVISION PRIOR TO CONSTRUCTION.

CITY OF AUSTIN DEPARTMENT OF PUBLIC WORKS		SAFETY FENCE	
	4/3/09 ADOPTED	THE ARCHITECT/ENGINEER ASSUMES RESPONSIBILITY FOR APPROPRIATE USE OF THIS STANDARD.	STANDARD NO. 804S-4 2 OF 9

HANDRAIL NOTES:
1. HANDRAILS SHALL COMPLY WITH THE 2012 TEXAS ACCESSIBILITY STANDARDS, SECTION 505.
2. TOP OF GRIPPING SURFACE OF HANDRAILS SHALL BE 34" MINIMUM AND 38" MAXIMUM VERTICALLY ABOVE RAMP SURFACES.
3. HANDRAILS SHALL BE AT A CONSISTENT HEIGHT ABOVE RAMP SURFACES.
4. CLEARANCE BETWEEN HANDRAIL GRIPPING SURFACES AND ADJACENT SURFACES SHALL BE 1-1/2" MINIMUM.
5. A BARRIER SHALL BE PROVIDED THAT PREVENTS THE PASSAGE OF A 4" DIAMETER SPHERE, WHERE ANY PORTION OF THE SPHERE IS WITHIN 4" OF THE FINISHED FLOOR OR GROUND SURFACE OF RAMPS.
6. RAMP HANDRAILS SHALL EXTEND HORIZONTALLY ABOVE THE LANDING FOR 12" MINIMUM BEYOND THE TOP AND BOTTOM OF RAMP RUNS. EXTENSIONS SHALL RETURN TO A WALL, GUARD, OR THE LANDING SURFACE, OR SHALL BE CONTINUOUS TO THE HANDRAIL OF AN ADJACENT RAMP RUN.
7. ORNAMENTAL HANDRAIL TO BE DETERMINED BY OWNER.
8. PRIOR TO PAINTING, COMPONENTS SHALL BE DEGREASED USING A FULL SPRAY SYSTEM. HAND WIPED CLEANING IS NOT ACCEPTABLE. FOLLOWING DEGREASING, AND PRIOR TO PAINTING, COMPONENTS SHALL BE DRIED IN A BAKING OVEN.
9. HANDRAIL PAINT SHALL BE NON-TOXIC, LEAD-FREE, ELECTROSTATICALLY APPLIED POWDER COAT. LIQUID SPRAY OR DIP TYPE APPLICATION IS NOT ACCEPTABLE. THE PAINT SHALL BE BAKE CURED IN AN OVEN SYSTEM, NOT AIR-DRIED.
10. OBTAIN BOTH OWNER AND TxDOT APPROVAL OF HANDRAIL PAINT COLOR PRIOR TO PAINTING.

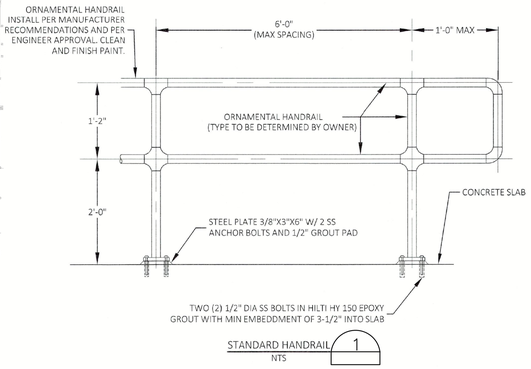

STANDARD HANDRAIL 1
NTS

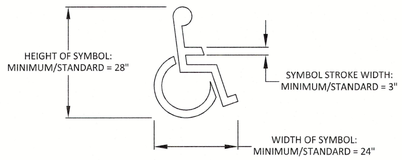

WHITE SYMBOL
DIMENSIONS PER TXMUTCD (2011 EDITION) FIGURE 3B-22

ADA ACCESSIBLE PAVEMENT MARKER 2A
NTS

PAVING NOTES:
1. PAVEMENT IN HANDICAP PARKING, ACCESS AISLES, AND SIDEWALK CROSS SLOPES SHALL NOT EXCEED 2.00% SLOPE IN ANY DIRECTION.
2. ALL HANDICAP RAMPS SHALL BE SLOPED AT 8.33% OR LESS.
3. CONCRETE PAVEMENT SHALL HAVE A BROOM FINISH SURFACE RUNNING PERPENDICULAR TO DIRECTION OF TRAFFIC.
4. CONCRETE SHALL BE CURED USING A LIQUID MEMBRANE–FORMING COMPOUND THAT IS UNIFORMLY SPRAYED ON ALL EXPOSED SURFACES.
5. PAVEMENT STRIPING SHALL BE WHITE WPT–12, LEAD FREE, IN ACCORDANCE WITH DMW–8200 OR APPROVED SURFACE PREPARATION, MATERIAL PLACEMENT, APPLICATION, AND PERFORMANCE PERIOD SHALL ADHERE TO TXDOT ITEM 666 OF THE 2004 SPECIFICATIONS.
6. PAVEMENT CONTRACTOR SHALL BE RESPONSIBLE FOR INSTALLING CURB INLET APRONS.

CONCRETE JOINT NOTES:
1. ALL CONCRETE SAW CUTTING SHALL BE INITIATED WHEN THE CONCRETE IS GREEN, WHICH WILL TYPICALLY BE 1 HOUR AFTER FINISHING IN WARM WEATHER. ALL SAW CUTTING SHALL BE COMPLETE WITHIN 8 HOURS OF CONCRETE PLACEMENT. THIS EARLY ENTRY SAW CUTTING OF JOINTS IS CRITICAL IN INITIATING SHRINKAGE CRACKING AT THE JOINT.
2. WHEN INTERSECTING CURVES, JOINTS SHALL TERMINATE RADIAL TO THE CURVE. THE RADIAL LINE SHALL EXTEND TWO (2) FEET MINIMUM FROM THE BACK OF CURB.
3. ALL JOINTS SHALL EXTEND THROUGH THE CURB.
4. THE LOCATION OF SAW CUT CONTROL JOINT CAN BE SUBSTITUTED WITH A DOWELED CONSTRUCTION JOINT. DOWELS SHALL BE SMOOTH BARS, SPACED AT 12 IN. o.c. WITH A DIAMETER OF 1/8 PAVEMENT THICKNESS AND GREASED ON ONE END TO PREVENT BOND. DOWELS SHOULD NOT BE INSTALLED WITHIN 12 IN. OF JOINT INTERSECTIONS.
5. ALL JOINTS SHALL BE SEALED USING SONOLASTIC SL 2 JOINT SEALER OR EQUIVALENT MULTI–COMPONENT SELF LEVELING POLYURETHANE SEALANT. JOINT SHALL BE CLEANED AND PRIMED PRIOR TO INSTALLING BACKER ROD AND SEALANT, FOLLOW MFT, RECOMMENDATIONS.
6. MAXIMUM JOINT SPACING SHALL BE 15FT FOR SAW CUT JOINTS AND 105 FEET FOR DOWELED CONTRACTION JOINTS.
7. POSITION PAVEMENT REINFORCEMENT ABOVE MID–DEPTH BUT BELOW SAW CUT DEPTH SEE PAVEMENT DETAIL.
8. PRIOR TO PLACING BACKER ROD AND JOINT SEALANT, JOINTS SHALL BE DRY AND BLOWN CLEAN WITH COMPRESSED AIR. APPLICATION OF JOINT SEALANT SHOULD BE THE PERFORMED AS CLOSE TO THE END OF THE PROJECT AS POSSIBLE WHEN CONCRETE IS FULLY CURED AND CONTRACTION JOINTS ARE COMPLETELY ACTIVATED.

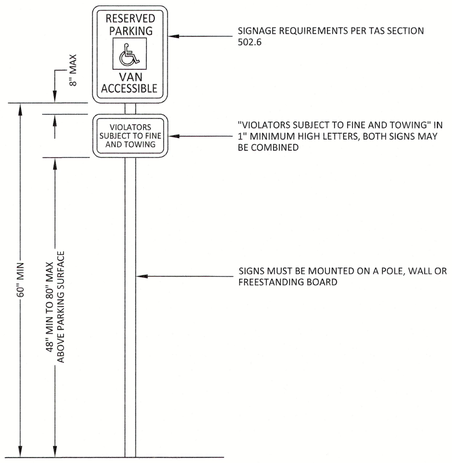

RESERVED PARKING TXMUTCD (2011 EDITION) SIGN R7-8
WITH VAN ACCESSIBLE TXMUTCD SIGN R7-8a MOUNTED BELOW (WHEN APPLICABLE)

ADA ACCESSIBLE PARKING SIGN AND POLE 2B
NTS

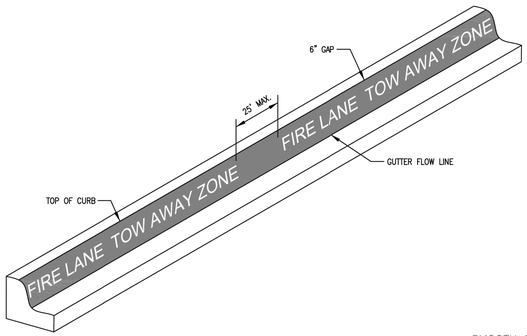

NOTES:
FIRE LANE STRIPING TO BE 6" WIDE RED PAINT WITH "FIRE LANE TOW AWAY ZONE" IN 4" TALL WHITE LETTERS. WORDING MAY NOT BE SPACED GREATER THAN 25' APART. STRIPING TO BE PAINTED ON THE FACE OF CURB WHEN PRESENT AND PAINTED FLAT ON THE PARKING SURFACE WHEN IT IS NOT.

FIRE LANE MARKING DETAIL 3
N.T.S.

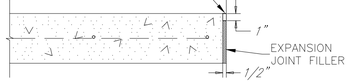

NOTE:
FUTURE EXTENSION OR JUNCTURE WITH EXISTING PAVEMENT OR FOUNDATION.

EXPANSION JOINT 4
N.T.S.

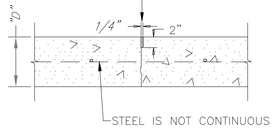

SAWCUT JOINT 5
N.T.S.

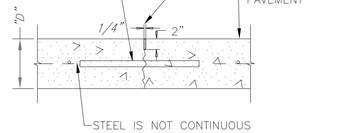

DOWELED CONTRACTION JOINT 6
N.T.S.

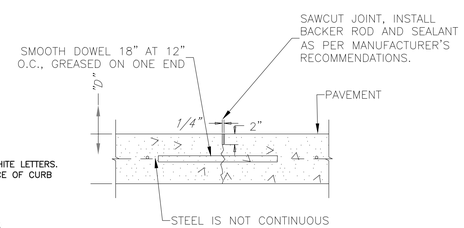

DOWELED CONSTRUCTION JOINT 7
N.T.S.

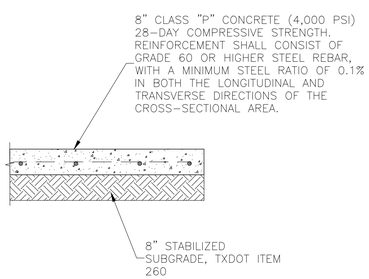

REINFORCED CONCRETE PAVEMENT PAVING SECTION 8
N.T.S.

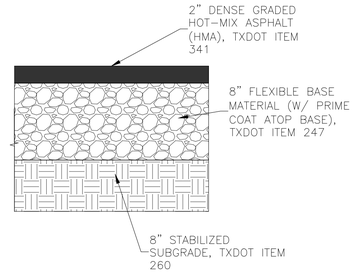

FLEXIBLE PAVEMENT SECTION 9
N.T.S.

SITE DEVELOPMENT NUMBER 2025–476

REV. NO.	DATE	DESCRIPTION	PROJECT MANAGER:	PK
			DESIGNED BY:	PG/RM
			CHECKED BY:	DCS/JTH
			DRAWN BY:	PG/RM
			DCS PROJECT NO:	20101597

DCS ENGINEERING, LLC
1101 S. CAPITAL OF TEXAS HIGHWAY, BUILDING G–100
AUSTIN, TX 78746
TEL: (512) 614–6171
T.B.P.E. FIRM NO. F–13162

BudaTx breathe easy here™

BUDA SPORTSPLEX - PHASE I

STATE OF TEXAS
JORDAN T. HURTA
143332
LICENSED PROFESSIONAL ENGINEER
8/4/2025

GENERAL

CIVIL - PAVEMENT DETAILS - SHEET NO. 3

DATE: AUGUST 2025
SCALE: AS NOTED
DRAWING: 00C-13

FILENAME: Z:\Projects 1551-1599\20101597 - Buda - Sportsplex\510 - Re-bid Dwgs\500 - Final_Design\500 - Final_Design\5.1 - Drawings\Sheet Files\Construction Plans\00C-13.dwg, LAST SAVED ON: Aug 01 2025 1:20pm, PLOTTED BY: RMALDONADO, ON: Aug 07 2025 8:06am, CFG:

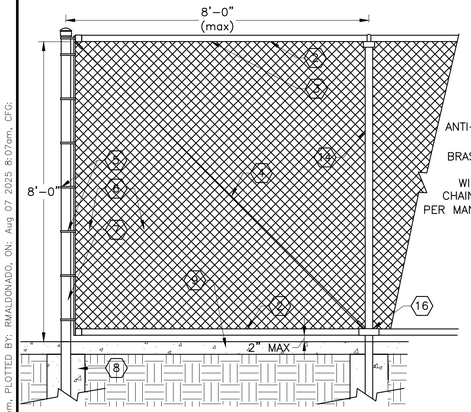

8' HEIGHT CHAINLINK FENCE 1
1/2" = 1'-0"

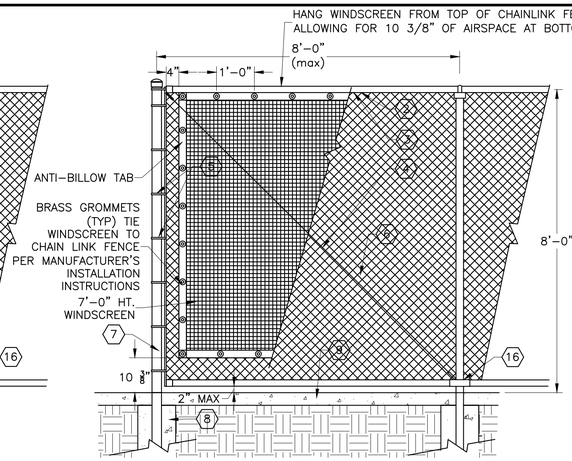

8' HEIGHT CHAINLINK FENCE WITH WINDSCREEN 2
1/2" = 1'-0"

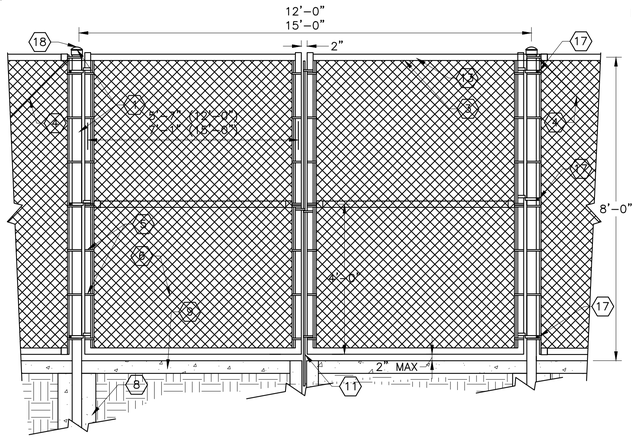

12' & 15' WIDE CHAINLINK DOUBLE-GATE 3
N.T.S.

NOTES:
1. THESE DETAILS SHOW DESIGN INTENT OF MATERIALS, FINISHES, AND APPROXIMATE DIMENSIONS ONLY.
2. REINFORCEMENT AND FOOTINGS TO BE PROVIDED BY STRUCTURAL AND/OR BY FENCE CONTRACTOR BASED ON RECOMMENDATIONS IN GEOTECH REPORT, MEETING ALL APPLICABLE CODES.
3. CONTRACTOR TO INSTALL FENCE AND GATES AS RECOMMENDED BY MANUFACTURER.
4. CONTRACTOR TO SUBMIT SHOP DRAWINGS FOR APPROVAL.
5. ALL GATES SHALL BE LOCKING OR HAVE THE CAPABILITY TO BE LOCKED.
6. ALL MATERIAL TO CONFORM TO FEDERAL SPEC RR-F-191G (1-15-74).
7. ALL FENCE COMPONENTS INCLUDING BUT NOT BE LIMITED TO POSTS, RAILS, CHAIN LINK MESH & HARDWARE, WINDSCREEN ETC. IN ACCORDANCE TO SECTION 02927.
8. NO ALUMINUM FENCE TIES SHALL BE PERMITTED.
9. INSTALL WINDSCREEN AT OUTFIELD PERIMETER FENCE OF ALL SOFTBALL FIELDS, AND AT THE NORTH, SOUTH & WEST FENCE OF THE SAND VOLLEYBALL AND PICKLEBALL COURTS.
10. REFERENCE DETAIL 3/02C-12 FOR PROTECTIVE FENCE CAP LOCATIONS AT SOFTBALL FIELDS.
11. INSTALL GATE KEEPER STOP TO ALL 4 FT WIDE MAIN ENTRY GATES AT ALL LOCATIONS.

KEY NOTES:

1. 3" O.D. GATE POST WITH CAP
2. 1 5/8" O.D. TOP AND BOTTOM RAIL
3. FENCE FABRIC TO HAVE A KNUCKLE AT TOP AND BARB AT BOTTOM
4. TENSION BAR AT ALL END POSTS, BENDS, AND IN LINE POSTS IN FENCE AS REQUIRED.
5. TENSION BANDS @ 14" O.C.
6. 2" SQUARE MESH, 9-GAUGE FABRIC
7. 3" O.D. POST AT ALL TERMINAL POST LOCATIONS AND BENDS.
8. CONCRETE FOOTING, PER DETAIL 8/00C-14
9. REFERENCE APPLICABLE SERIES FOR GRADE MATERIAL AT FENCING LOCATIONS
10. 180-DEGREE INDUSTRIAL SELF CLOSING GATE HINGE BY OZARK FENCE OR APPROVED EQUAL. (WWW.OZFENCE.STORE). REFERENCE APPLICABLE SERIES FOR SWING DIRECTION
11. CENTER DROP ROD ASSEMBLY
12. REFERENCE SALES SYSTEMS SHEETS FOR GATES WITH ACCESS CONTROL
13. 1 5/8" O.D. GATE FRAME
14. 2 1/2" O.D. IN LINE POSTS
15. PREMIUM BLACK COLOR RAIL PAD BY AK ATHLETIC EQUIPMENT, INC. WWW.AKATHLETICS.COM OR APPROVED EQUAL. INSTALL TO ALL 4 FT TALL FENCE AT PICKLEBALL COURTS.
16. LINE RAIL CLAMP
17. 180-DEGREE INDUSTRIAL GATE HINGE, HEAVY DUTY. REFERENCE APPLICABLE SERIES FOR SWING DIRECTION.
18. AT LOCATIONS WITH NETTING CONTRACTOR SHALL SET THE GATE POST 4" ABOVE THE GATE FRAME TO ACCOMMODATE NETTING CABLE, AS RECOMMENDED BY NET MANUFACTURER
19. 1 3/4" SQUARE MESH, 11-GAUGE FABRIC

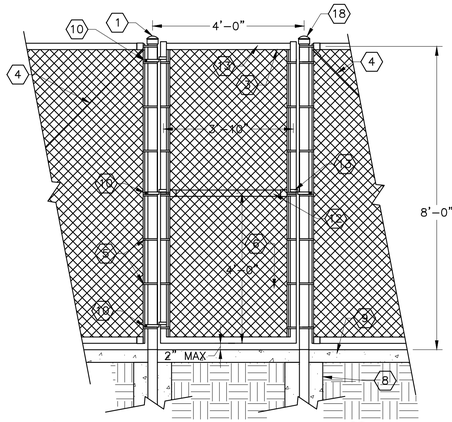

4' WIDE CHAINLINK GATE 4
1/2" = 1'-0"

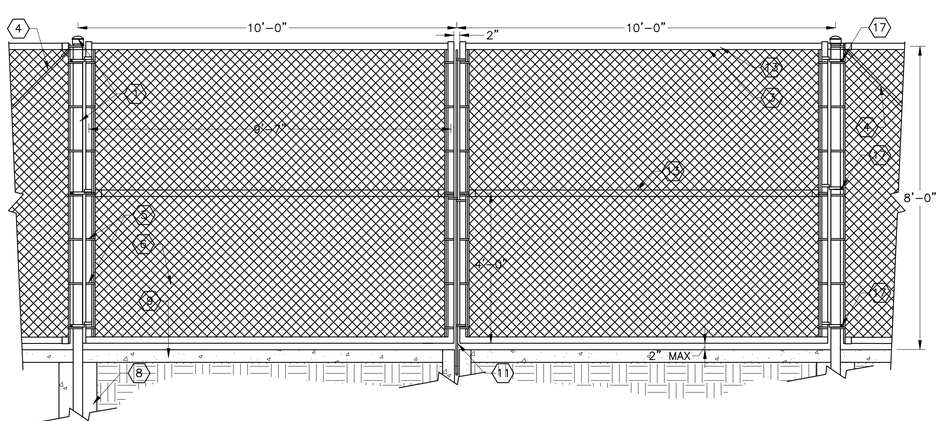

20' WIDE CHAINLINK DOUBLE-GATE 5
1/2" = 1'-0"

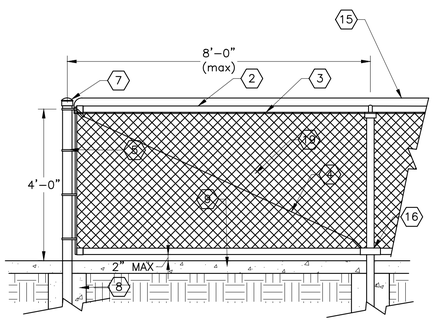

4' HEIGHT CHAINLINK FENCE 6
1/2" = 1'-0"

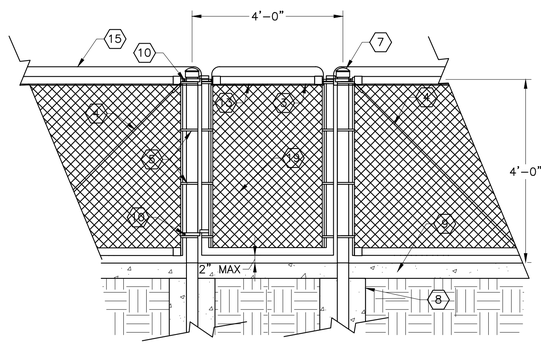

4' WIDE CHAINLINK GATE 7
1/2" = 1'-0"

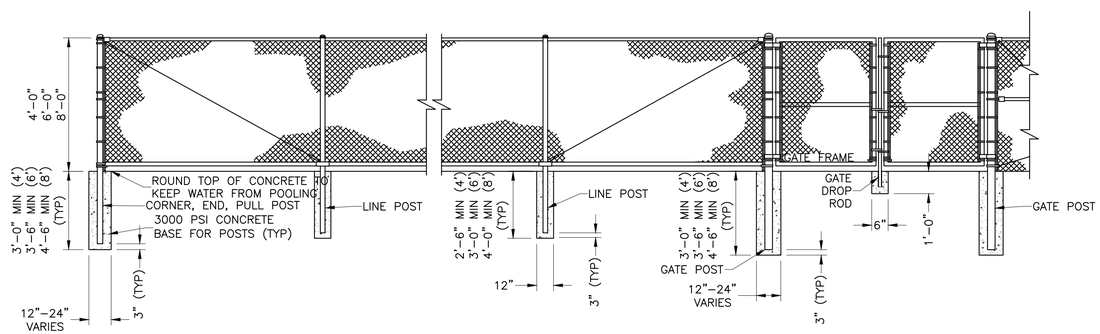

CHAINLINK FENCING POST CONCRETE FOUNDATION DIMENSIONS 8
N.T.S.

NOTES:
1. SPACE 12" WIDE DRAIN OPENINGS 20' O.C. ON THE DOWN STREAM SIDE OF FIELDS 3,4 AND 6. REFERENCE DETAIL 6/00C-15 FOR FIELD ID NUMBERING.
2. INSTALL 1/2" DOWELED EXP. JT., 40' O.C.

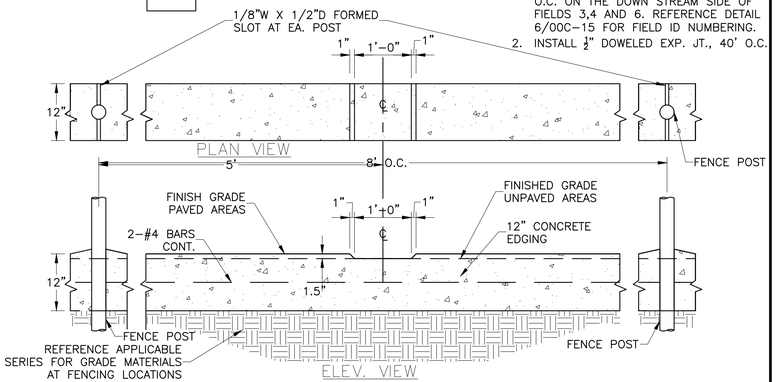

CONCRETE EDGING W/ DRAIN 9
N.T.S.

SITE DEVELOPMENT NUMBER 2025-476

REV. NO.	DATE	DESCRIPTION

PROJECT MANAGER:	PK
DESIGNED BY:	PG/RM
CHECKED BY:	DCS/JTH
DRAWN BY:	PG/RM
DCS PROJECT NO:	20101597

DCS ENGINEERING, LLC
1101 S. CAPITAL OF TEXAS HIGHWAY, BUILDING G-100
AUSTIN, TX 78746
TEL: (512) 614-6171
T.B.P.E. FIRM NO. F-13162

BudaTx breathe easy here™

BUDA SPORTSPLEX - PHASE I

STATE OF TEXAS
DARREN C STROZEWSKI
87908
LICENSED PROFESSIONAL ENGINEER
08/04/2025

GENERAL

CIVIL - FENCING DETAILS - SHEET NO. 1

DATE: JULY 2025
SCALE: AS NOTED
DRAWING: 00C-14

FILENAME: Z:\Projects 1551-1599\20101597 - Buda - Sportsplex\510 - Re-bid Dwgs\500 - Final_Design\500 - Final_Design\5.1 - Drawings\Sheet Files\Construction Plans\00C-14.dwg, LAST SAVED ON: Aug 01 2025 1:20pm, PLOTTED BY: RMALDONADO, ON: Aug 07 2025 8:07am, CFG:

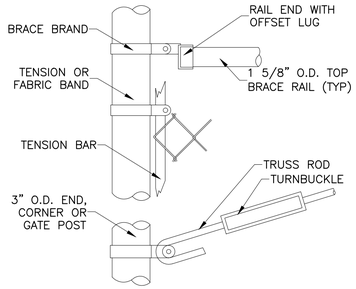

END, CORNER, OR GATE POST ELEVATION

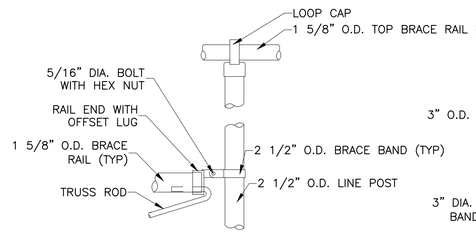

LINE POST ELEVATION

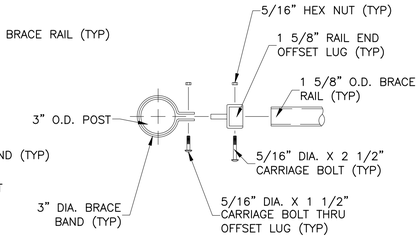

BRACE RAIL CONNECTION

TYPICAL CHAIN LINK FENCE DETAILS 1
N.T.S.

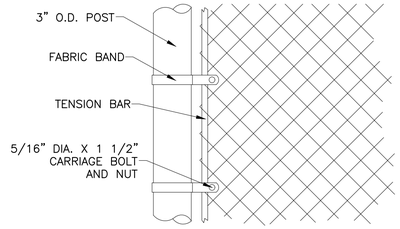

FABRIC CONNECTION

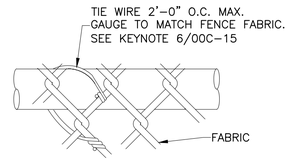

WIRE TIES FOR TOP RAIL OR BRACE RAIL

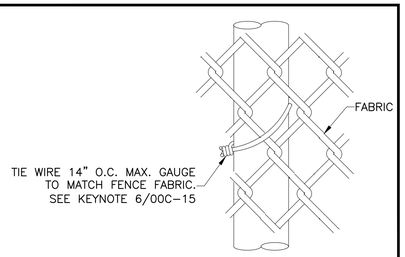

WIRE TIES FOR IN LINE POST

TYPICAL CHAIN LINK FENCE FASTENING DETAILS 2
N.T.S.

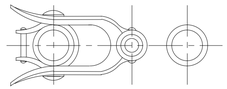

PLAN AT FORK

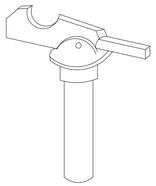

GATE KEEPER
(TO HOLD GATE OPEN)

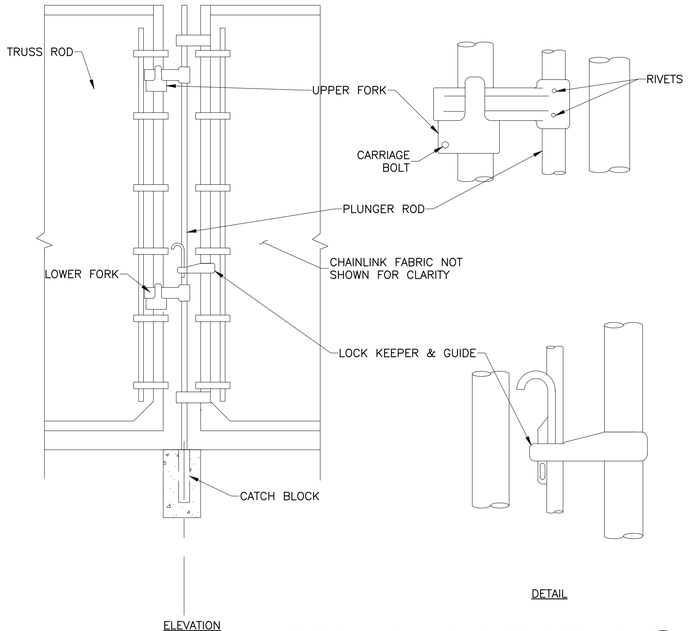

ELEVATION



DETAIL



PLAN AT LOCK KEEPER

CATCH BLOCK

TYPICAL SWING GATE DETAILS 3
N.T.S.

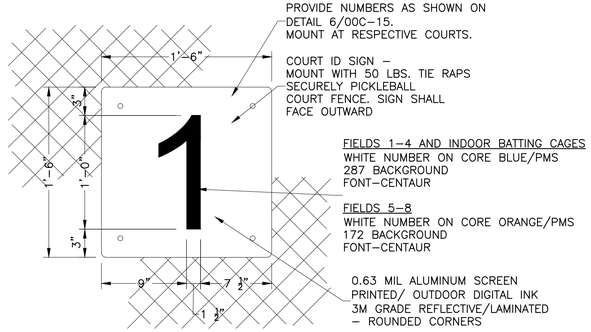

ID SIGNAGE 5
1 1/2" = 1'-0"

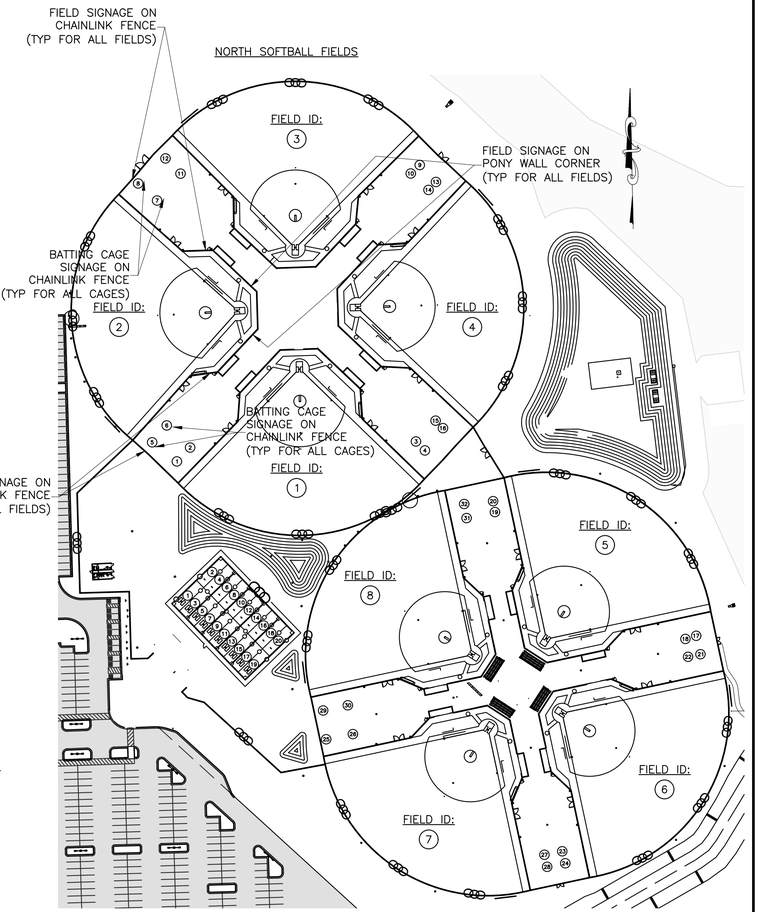

SOFTBALL FIELD AND BATTING CAGES ID NUMBERING 6
1" = 100'

SITE DEVELOPMENT NUMBER 2025-476

REV. NO.	DATE	DESCRIPTION

PROJECT MANAGER:	PK
DESIGNED BY:	PG/RM
CHECKED BY:	DCS/JTH
DRAWN BY:	PG/RM
DCS PROJECT NO:	20101597

DCS ENGINEERING, LLC
1101 S. CAPITAL OF TEXAS HIGHWAY, BUILDING G-100
AUSTIN, TX 78746

TEL: (512) 614-6171
T.B.P.E. FIRM NO. F-13162

BudaTx breathe easy here.

BUDA SPORTSPLEX - PHASE I

STATE OF TEXAS
DARREN C STROZEWSKI
87908
LICENSED PROFESSIONAL ENGINEER
08/04/2025

GENERAL

CIVIL - FENCING DETAILS - SHEET NO. 2

DATE: JULY 2025
SCALE: AS NOTED
DRAWING: 00C-15

FILENAME: Z:\Projects 1551-1599\20101597 - Buda - Sportsplex\510 - Re-bid Dwgs\500 - Final_Design\500 - Final_Design\5.1 - Drawings\Sheet Files\Construction Plans\00C-15.dwg, LAST SAVED ON: Aug 01 2025 1:20pm, PLOTTED BY: RMALDONADO, ON: Aug 07 2025 8.07am, CFC:

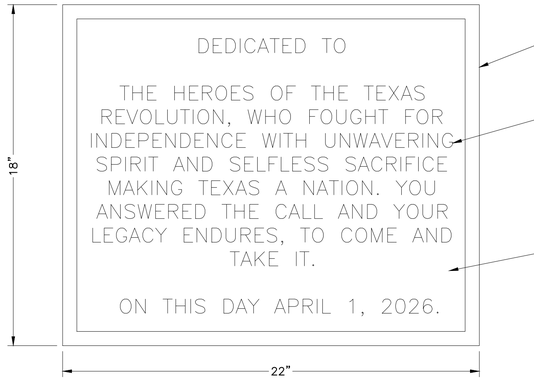

NOTES:

1. FINAL LAYOUT TO BE APPROVED. SUBMIT SHOP DRAWINGS PRIOR TO ORDERING.
2. ENSURE TEXT IS COMPLIANT WITH TAS 4.30.2 AND FINISHES COMPLIANT WITH TAS 4.30.5.
3. SUBJECT TO CHANGE. CONFIRM CONTENT WITH OWNER PRIOR TO FABRICATION.
4. MOUNT PLAQUE ON POST MOUNT AND INSTALL TOP OF PLAQUE 36" ABOVE FINISHED GROUND AT 45° ANGLE. ATTACH PLAQUE TO POST MOUNT AND INSTALL IN GROUND PER MANUFACTURER'S RECOMMENDATIONS. SHOP DRAWINGS SHALL INCLUDE MOUNTING AND FOUNDATION DETAILS.

TEXAS FLAG DEDICATION PLAQUE (1)
N.T.S.

KEY NOTES:

(1) HEIGHT OF PEDESTAL SHALL BE ADJUSTED TO ACHIEVE REQUIRED HEIGHT BASED ON TOPOGRAPHIC ELEVATIONS AND FENCE/NET OVERALL HEIGHT AT SAND VOLLEYBALL AND PICKLEBALL COURTS

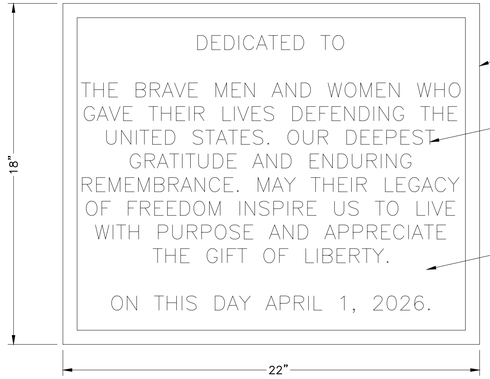

NOTES:

1. FINAL LAYOUT TO BE APPROVED. SUBMIT SHOP DRAWINGS PRIOR TO ORDERING.
2. ENSURE TEXT IS COMPLIANT WITH TAS 4.30.2 AND FINISHES COMPLIANT WITH TAS 4.30.5.
3. SUBJECT TO CHANGE. CONFIRM CONTENT WITH OWNER PRIOR TO FABRICATION.
4. MOUNT PLAQUE ON POST MOUNT AND INSTALL TOP OF PLAQUE 36" ABOVE FINISHED GROUND AT 45° ANGLE. ATTACH PLAQUE TO POST MOUNT AND INSTALL IN GROUND PER MANUFACTURER'S RECOMMENDATIONS. SHOP DRAWINGS SHALL INCLUDE MOUNTING AND FOUNDATION DETAILS.

UNITED STATES FLAG DEDICATION PLAQUE (2)
N.T.S.

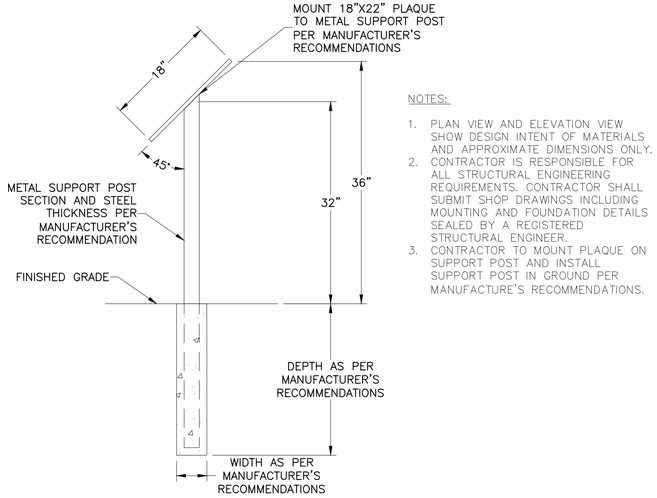

NOTES:

1. PLAN VIEW AND ELEVATION VIEW SHOW DESIGN INTENT OF MATERIALS AND APPROXIMATE DIMENSIONS ONLY.
2. CONTRACTOR IS RESPONSIBLE FOR ALL STRUCTURAL ENGINEERING REQUIREMENTS. CONTRACTOR SHALL SUBMIT SHOP DRAWINGS INCLUDING MOUNTING AND FOUNDATION DETAILS SEALED BY A REGISTERED STRUCTURAL ENGINEER.
3. CONTRACTOR TO MOUNT PLAQUE ON SUPPORT POST AND INSTALL SUPPORT POST IN GROUND PER MANUFACTURE'S RECOMMENDATIONS.

DEDICATION PLAQUE ELEVATION VIEW (3)
N.T.S.

SITE DEVELOPMENT NUMBER 2025-476

REV. NO.	DATE	DESCRIPTION		
			PROJECT MANAGER:	PK
			DESIGNED BY:	PG/RM
			CHECKED BY:	DCS/JTH
			DRAWN BY:	PG/RM
			DCS PROJECT NO:	20101597

DCS ENGINEERING, LLC
1101 S. CAPITAL OF TEXAS HIGHWAY, BUILDING G-100
AUSTIN, TX 78746
TEL: (512) 614-6171
T.B.P.E. FIRM NO. F-13162

BudaTx breathe easy here℠

BUDA SPORTSPLEX - PHASE I

STATE OF TEXAS
JORDAN T. HURTA
143332
LICENSED
PROFESSIONAL ENGINEER
8/4/2025

GENERAL

CIVIL - MISCELLANEOUS DETAILS - SHEET NO. 2

DATE: AUGUST 2025
SCALE: AS NOTED
DRAWING: 00C-17

FILENAME: Z:\Projects 1551-1599\20101597 - Buda - Sportsplex\510 - Re-bid Dwgs\500 - Final_Design\500 - Final_Design\5.1 - Drawings\Sheet Files\Construction Plans\00C-17.dwg, LAST SAVED ON: Aug 01 2025 1:20pm, PLOTTED BY: RMALDONADO, ON: Aug 07 2025 8:08am, CFG:

DISCLAIMER:
The use of this standard is governed by the "Texas Engineering Practice Act." No warranty of any kind is made by TxDOT for any purpose whatsoever. TxDOT assumes no responsibility for the conversion of this standard to other formats or for incorrect results or damages resulting from its use.

TABLE OF VARIABLE DIMENSIONS AND QUANTITIES FOR ONE HEADWALL (5)

Slope	Dia of Pipe (D)	Values for One Pipe W	X	Y	L	Reinf (Lbs)	Conc (CY) (1)	Values to be Added for Each Addt'l Pipe X and W	Reinf (Lbs)	Conc (CY) (1)
2:1	12"	7' – 7 ¾"	4' – 3"	2' – 10"	5' – 8"	119	0.9	2' – 5 ¾"	26	0.3
	15"	8' – 10 ½"	4' – 7 ¼"	3' – 4"	6' – 8"	135	1.1	3' – 0 ¾"	32	0.4
	18"	10' – 1 ¼"	4' – 11 ½"	3' – 10"	7' – 8"	167	1.3	3' – 9 ¼"	48	0.5
	21"	11' – 3 ¾"	5' – 3 ¾"	4' – 4"	8' – 8"	187	1.6	4' – 4 ¼"	54	0.6
	24"	12' – 6 ½"	5' – 8"	4' – 10"	9' – 8"	214	1.8	5' – 0 ¾"	67	0.8
	27"	13' – 9"	6' – 0 ¼"	5' – 4"	10' – 8"	231	2.1	5' – 6 ½"	73	0.9
	30"	14' – 11 ¾"	6' – 4 ½"	5' – 10"	11' – 8"	265	2.5	6' – 1 ½"	86	1.1
	33"	16' – 3"	6' – 9 ½"	6' – 4"	12' – 8"	292	2.8	6' – 7 ¼"	92	1.2
	36"	17' – 6 ¼"	7' – 2 ¼"	6' – 10"	13' – 8"	324	3.2	7' – 2 ¼"	107	1.4
	42"	20' – 1"	8' – 0 ¼"	7' – 10"	15' – 8"	391	4.0	8' – 3"	138	1.8
	48"	23' – 6"	8' – 10 ¼"	9' – 4"	18' – 8"	478	5.4	9' – 3 ¾"	167	2.4
	54"	26' – 0 ¾"	9' – 8"	10' – 4"	20' – 8"	561	6.4	10' – 7 ¼"	198	3.0
	60"	28' – 7 ½"	10' – 6"	11' – 4"	22' – 8"	632	7.5	11' – 8"	243	3.6
	66"	31' – 2 ¼"	11' – 3 ¾"	12' – 4"	24' – 8"	724	8.8	12' – 4 ½"	269	4.0
	72"	33' – 8 ¾"	12' – 1 ¾"	13' – 4"	26' – 8"	803	10.1	13' – 2 ½"	303	4.6
3:1	12"	10' – 1 ¼"	4' – 3"	4' – 3"	8' – 6"	158	1.3	2' – 5 ¾"	28	0.3
	15"	11' – 9 ¼"	4' – 7 ¼"	5' – 0"	10' – 0"	188	1.6	3' – 0 ¾"	37	0.5
	18"	13' – 5"	4' – 11 ½"	5' – 9"	11' – 6"	229	2.0	3' – 9 ¼"	55	0.6
	21"	15' – 0 ¾"	5' – 3 ¾"	6' – 6"	13' – 0"	260	2.4	4' – 4 ¼"	62	0.8
	24"	16' – 8 ¾"	5' – 8"	7' – 3"	14' – 6"	297	2.8	5' – 0 ¾"	77	1.0
	27"	18' – 4 ½"	6' – 0 ¼"	8' – 0"	16' – 0"	335	3.3	5' – 6 ½"	88	1.2
	30"	20' – 0 ¼"	6' – 4 ½"	8' – 9"	17' – 6"	383	3.9	6' – 1 ½"	103	1.4
	33"	21' – 8 ¾"	6' – 9 ½"	9' – 6"	19' – 0"	421	4.4	6' – 7 ¼"	111	1.6
	36"	23' – 5 ½"	7' – 2 ¼"	10' – 3"	20' – 6"	470	5.1	7' – 2 ¼"	126	1.9
	42"	26' – 10 ½"	8' – 0 ¼"	11' – 0"	23' – 6"	579	6.4	8' – 3"	168	2.4
	48"	31' – 7 ¼"	8' – 10 ¼"	14' – 9"	28' – 0"	722	8.7	9' – 3 ¾"	210	3.2
	54"	35' – 0 ¼"	9' – 8"	15' – 6"	31' – 0"	842	10.5	10' – 7 ¼"	249	4.0
	60"	38' – 5 ¼"	10' – 6"	17' – 0"	34' – 0"	966	12.4	11' – 8"	306	4.8
	66"	41' – 10 ¼"	11' – 3 ¾"	18' – 6"	37' – 0"	1,106	14.5	12' – 4 ½"	338	5.5
4:1	12"	12' – 6 ¾"	4' – 3"	5' – 8"	11' – 4"	207	1.7	2' – 5 ¾"	32	0.4
	15"	14' – 7 ¾"	4' – 7 ¼"	6' – 8"	13' – 4"	246	2.2	3' – 0 ¾"	43	0.6
	18"	16' – 8 ¾"	4' – 11 ½"	7' – 8"	15' – 4"	300	2.8	3' – 9 ¼"	61	0.8
	21"	18' – 9 ¾"	5' – 3 ¾"	8' – 8"	17' – 4"	349	3.4	4' – 4 ¼"	73	1.0
	24"	20' – 10 ¾"	5' – 8"	9' – 8"	19' – 4"	400	4.0	5' – 0 ¾"	90	1.3
	27"	23' – 0"	6' – 0 ¼"	10' – 8"	21' – 4"	451	4.8	5' – 6 ½"	103	1.5
	30"	25' – 1"	6' – 4 ½"	11' – 8"	23' – 4"	516	5.5	6' – 1 ½"	120	1.8
	33"	27' – 2 ¾"	6' – 9 ½"	12' – 8"	25' – 4"	580	6.4	6' – 7 ¼"	134	2.0
	36"	29' – 4 ½"	7' – 2 ¼"	13' – 8"	27' – 4"	639	7.3	7' – 2 ¼"	152	2.4
	42"	33' – 8"	8' – 0 ¼"	15' – 8"	31' – 4"	789	9.4	8' – 3"	198	3.0
	48"	39' – 8"	8' – 10 ¼"	18' – 8"	37' – 4"	1,001	12.8	9' – 3 ¾"	255	4.0
6:1	12"	17' – 5 ¾"	4' – 3"	8' – 6"	17' – 0"	299	2.9	2' – 5 ¾"	38	0.5
	15"	20' – 5"	4' – 7 ¼"	10' – 0"	20' – 0"	371	3.7	3' – 0 ¾"	51	0.8
	18"	23' – 4 ½"	4' – 11 ½"	11' – 6"	23' – 0"	449	4.7	3' – 9 ¼"	73	1.0
	21"	26' – 4"	5' – 3 ¾"	13' – 0"	26' – 0"	537	5.8	4' – 4 ¼"	89	1.3
	24"	29' – 3 ¼"	5' – 8"	14' – 6"	29' – 0"	611	7.0	5' – 0 ¾"	110	1.7
	27"	32' – 2 ¾"	6' – 0 ¼"	16' – 0"	32' – 0"	708	8.3	5' – 6 ½"	129	2.0
	30"	35' – 2 ¼"	6' – 4 ½"	17' – 6"	35' – 0"	807	9.7	6' – 1 ½"	150	2.4
	33"	38' – 2 ¼"	6' – 9 ½"	19' – 0"	38' – 0"	921	11.3	6' – 7 ¼"	170	2.8

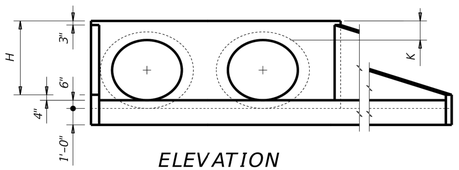

ELEVATION

(Showing dimensions.)

(1) Quantities shown are for concrete pipe and will increase slightly for metal pipe installations.

(2) For vehicle safety, construct curbs no more than 3" above finished grade. Reduce curb heights, if necessary, to meet these requirements. No changes will be made in quantities and no additional compensation will be allowed for this work.

(3) Provide a 1'-0" footing as shown where required to maintain 4" minimum cover for pipes.

(4) Dimensions shown are usual and maximum.

(5) Quantities shown are for one structure end only (one headwall).

(6) Min Length = $6" + 3" \times \left(\frac{12 \times H - 7}{12 \times L}\right)$

Max Length = $12 \times H - 3" \times \left(\frac{12 \times H - 7}{12 \times L}\right) - 1"$

(7) Lengths of wings based on SL:1 slope along this line.

TABLE OF (5) REINFORCING STEEL

Bar	Size	Spa	No.
A	#4	1' – 0"	~
B	#3	1' – 6"	~
CL & CS	#4	1' – 0"	~
D	#3	1' – 0"	~
E	#5	~	4
F	#5	~	~
G	#3	~	2
SL & SS	#4	~	6
VL & VS	#4	1' – 0"	~
WL & WS	#5	~	4

TABLE OF CONSTANT DIMENSIONS

Dia of Pipe (D)	G	K (4)	H
12"	0' – 9"	1' – 0"	2' – 0"
15"	0' – 11"	1' – 0"	2' – 3"
18"	1' – 2"	1' – 0"	2' – 6"
21"	1' – 4"	1' – 0"	2' – 9"
24"	1' – 7"	1' – 0"	3' – 0"
27"	1' – 8"	1' – 0"	3' – 3"
30"	1' – 10"	1' – 0"	3' – 6"
33"	1' – 11"	1' – 0"	3' – 9"
36"	2' – 1"	1' – 0"	4' – 0"
42"	2' – 4"	1' – 0"	4' – 6"
48"	2' – 7"	1' – 3"	5' – 3"
54"	3' – 0"	1' – 3"	5' – 9"
60"	3' – 3"	1' – 3"	6' – 3"
66"	3' – 3"	1' – 3"	6' – 9"
72"	3' – 4"	1' – 3"	7' – 3"

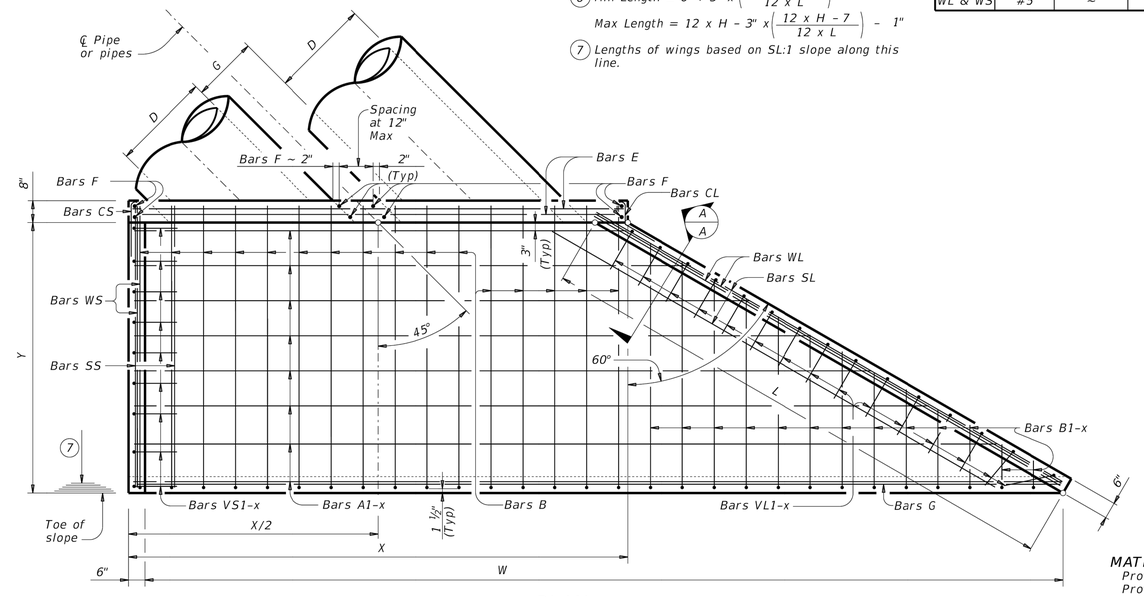

PLAN

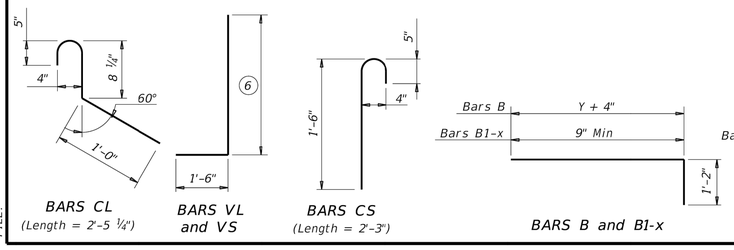

BARS CL (Length = 2'-5 ¼") | BARS VL and VS | BARS CS (Length = 2'-3") | BARS B and B1-x

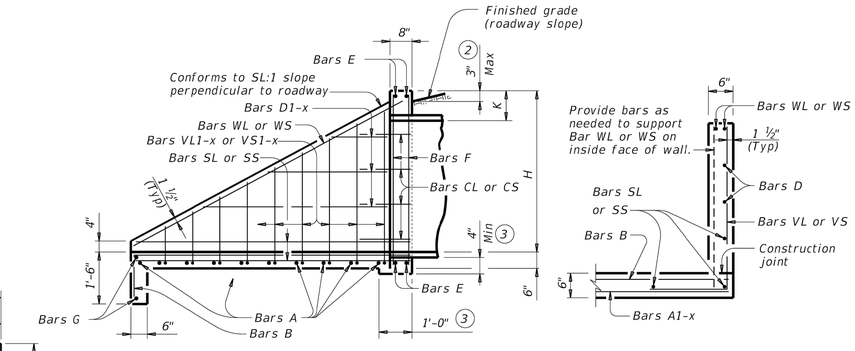

TYPICAL WING ELEVATION

SECTION A-A

MATERIAL NOTES:
Provide Grade 60 reinforcing steel.
Provide Class C concrete (f'c = 3,600 psi).

GENERAL NOTES:
Designed according to AASHTO LRFD Bridge Design Specifications.
Do not mount bridge rails of any type directly to these culvert headwalls.
This standard may not be used for wall heights, H, exceeding the values shown.

Cover dimensions are clear dimensions, unless noted otherwise. Reinforcing dimensions are out-to-out of bars.

Texas Department of Transportation | Bridge Division Standard

CONCRETE HEADWALLS WITH FLARED WINGS FOR 45° SKEW PIPE CULVERTS

CH-FW-45

FILE: CD-CH-FW45-20.dgn	DN: TxDOT	CK: TxDOT	DW: TxDOT	CK: TxDOT
©TxDOT February 2020	CONT	SECT	JOB	HIGHWAY
REVISIONS				
	DIST	COUNTY		SHEET NO.

DATE:
FILE:

SITE DEVELOPMENT NUMBER 2025-476

REV. NO.	DATE	DESCRIPTION

PROJECT MANAGER:	PK
DESIGNED BY:	PG/RM
CHECKED BY:	DCS/JTH
DRAWN BY:	PG/RM
DCS PROJECT NO:	20101597

DCS ENGINEERING, LLC
1101 S. CAPITAL OF TEXAS HIGHWAY, BUILDING G-100
AUSTIN, TX 78746
TEL: (512) 614-6171
T.B.P.E. FIRM NO. F-13162

BudaTx breathe easy here™

BUDA SPORTSPLEX - PHASE I

STATE OF TEXAS
JORDAN T. HURTA
143332
LICENSED PROFESSIONAL ENGINEER
8/4/2025

GENERAL

CIVIL - MISCELLANEOUS DETAILS - SHEET NO. 3

DATE: AUGUST 2025
SCALE: AS NOTED
DRAWING: 00C-18

FILENAME: Z:\Projects 1551-1599\20101597 – Buda – Sportsplex\510 – Re-bid Dwgs\500 – Final_Design\500 – Final_Design\5.1 – Drawings\Sheet Files\Construction Plans\00C-18.dwg, LAST SAVED ON: Aug 01 2025 1:20pm, PLOTTED BY: RMALDONADO, ON: Aug 07 2025 8:08am, CFG:

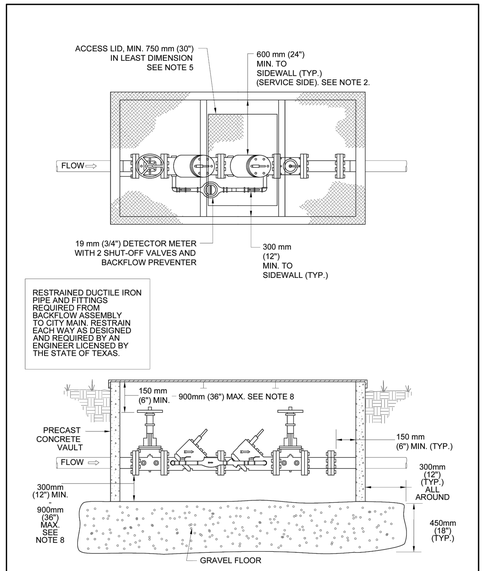

CITY OF AUSTIN WATER AND WASTEWATER UTILITY		STANDARD FIRE LINE INSTALLATION WITHOUT MASTER METER	
RECORD COPY SIGNED BY KATHI L FLOWERS	08/31/2011 ADOPTED	THE ENGINEER/ARCHITECT ASSUMES RESPONSIBILITY FOR APPROPRIATE USE OF THIS STANDARD. MODIFICATIONS TO THIS STANDARD ARE PROHIBITED.	STANDARD NO. 520S-19C 1 OF 2

NOTES:

1. ALL BACKFLOW PREVENTION ASSEMBLIES SHALL HAVE LAB AND FIELD APPROVAL FROM THE UNIVERSITY OF SOUTHERN CALIFORNIA FOUNDATION FOR CROSS CONNECTION CONTROL AND HYDRAULIC RESEARCH.
2. ALL TEST PORTS SHALL BE DIRECTED UPWARD AND PLUGGED. TEST PORTS ARE LOCATED ON SERVICE SIDE. PLUGS SHALL BE NON-FERROUS.
3. BACKFLOW PREVENTION ASSEMBLIES SHALL BE INSTALLED IN THE UPRIGHT HORIZONTAL POSITION, UNLESS OTHERWISE APPROVED. BACKFLOW PREVENTION ASSEMBLIES SHALL NOT BE ROTATED ON THEIR AXIS.
4. CLEARANCE SHALL BE AS INDICATED AND IN THE STANDARD CROSS CONNECTION ORDINANCES AND UCM.
5. ACCESS OPENING MUST BE LARGE ENOUGH TO REMOVE LARGEST PORTION OF BACKFLOW PREVENTER, BUT NOT LESS THAN 750 mm (30") IN LEAST DIMENSION.
6. TEST AND MAINTENANCE REPORT SHALL BE RECEIVED BY AUSTIN WATER UTILITY'S SPECIAL SERVICE DIVISION WITHIN 5 DAYS AFTER BEING INSTALLED.
7. VAULT SHALL NOT BE INSTALLED IN TRAFFIC AREA.
8. VAULT DEPTH MAY NOT EXCEED 1.8m (72"), BOTTOM OF LID TO TOP OF FLOOR.
9. HAND WHEELS SHALL BE HORIZONTALLY LOCATED WITHIN 300mm (12") OF ACCESS OPENING.
10. FOR ACCESS DOORS SEE SPL WW-614 OR APPROVED EQUAL (H20 LOADING REQUIRED).
11. FOR VAULT SEE SPL WW-298 OR APPROVED EQUAL (H20 LOADING REQUIRED).
12. VAULT PIPE WALL VOIDS SHALL BE SEALED WITH NON-SHRINK GROUT OR SEALANT PER SPL WW-146A OR APPROVED EQUAL.
13. THE TOP OF THE METER VAULT SHALL BE AT AN ELEVATION SUCH THAT THE SURROUNDING GROUND SLOPES AWAY FROM THE VAULT. ADDITIONAL DRAINAGE CONSIDERATION SUCH AS CONNECTION OF VAULT TO STORM SEWER, LATERAL DRAIN LINES FROM GRAVEL BED OR OTHER MEANS SHALL BE REQUIRED IF CONDITIONS CAUSE WATER TO COLLECT IN VAULT.

CITY OF AUSTIN WATER AND WASTEWATER UTILITY		STANDARD FIRE LINE INSTALLATION WITHOUT MASTER METER	
RECORD COPY SIGNED BY KATHI L FLOWERS	08/31/2011 ADOPTED	THE ENGINEER/ARCHITECT ASSUMES RESPONSIBILITY FOR APPROPRIATE USE OF THIS STANDARD. MODIFICATIONS TO THIS STANDARD ARE PROHIBITED.	STANDARD NO. 520S-19C 2 OF 2

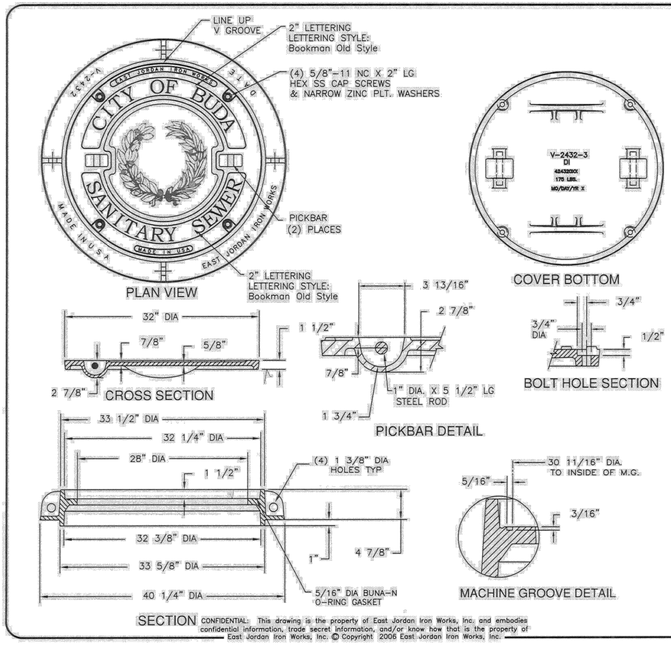

CONFIDENTIAL: This drawing is the property of East Jordan Iron Works, Inc. and embodies confidential information, trade secret information, and/or know how that is the property of East Jordan Iron Works, Inc. © Copyright 2006 East Jordan Iron Works, Inc.

EJIW EAST JORDAN IRON WORKS EST.1883
800-626-4653
www.ejiw.com
MADE IN USA

PRODUCT NUMBER	NCR07-0023E
CATALOG NUMBER	V-2432
	MANHOLE ASSEMBLY
LOAD RATING	HEAVY DUTY
COATING	UNDIPPED
ESTIMATED WEIGHT	COVER: 175 LBS FRAME: 225 LBS UNIT: 400 LBS
MATERIAL SPECIFICATION	COVER – DUCTILE IRON ASTM A536 FRAME – GRAY IRON ASTM A48 CL35B
OPEN AREA	N/A
√ DESIGNATES MACHINED SURFACE	
DRAWN GAD / DATE	01/09/08
LAST REVISED / DATE	
REFERENCE INFORMATION	42432010 424320XX

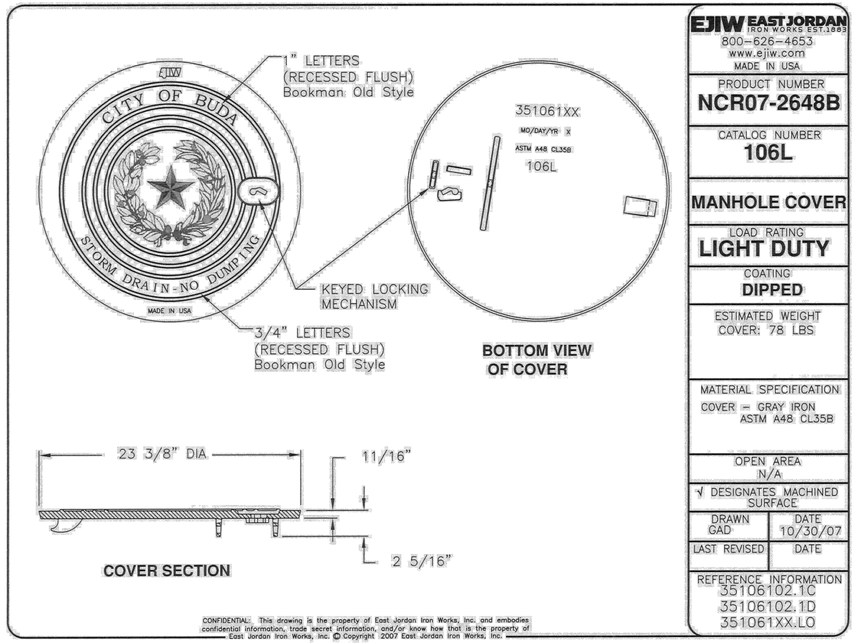

CONFIDENTIAL: This drawing is the property of East Jordan Iron Works, Inc. and embodies confidential information, trade secret information, and/or know how that is the property of East Jordan Iron Works, Inc. © Copyright 2007 East Jordan Iron Works, Inc.

EJIW EAST JORDAN IRON WORKS EST.1883
800-626-4653
www.ejiw.com
MADE IN USA

PRODUCT NUMBER	NCR07-2648B
CATALOG NUMBER	106L
	MANHOLE COVER
LOAD RATING	LIGHT DUTY
COATING	DIPPED
ESTIMATED WEIGHT	COVER: 78 LBS
MATERIAL SPECIFICATION	COVER – GRAY IRON ASTM A48 CL35B
OPEN AREA	N/A
√ DESIGNATES MACHINED SURFACE	
DRAWN GAD / DATE	10/30/07
LAST REVISED / DATE	
REFERENCE INFORMATION	35106102.1C 35106102.1D 351061XX.LO

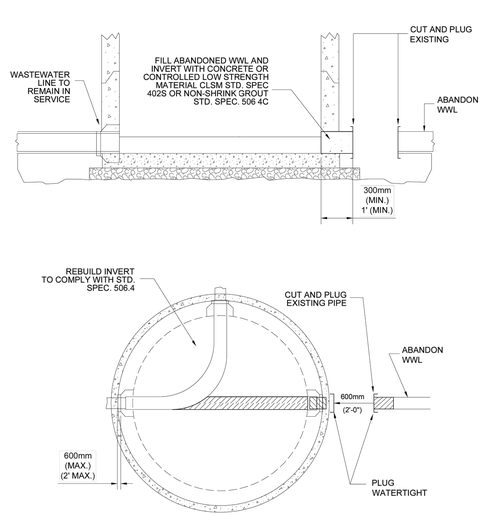

NOTES:

1. REPAIR DAMAGED ORGANIC LINING, SPL WW-511.
2. FINISH NON-SHRINK GROUT, CONCRETE AND/OR CLSM TO SMOOTH FINISH.
3. WATERTIGHT PLUG, SPL WW-227B OR FOR NON-PVC PIPE USE APPROPRIATE WATERTIGHT PLUG.

CITY OF AUSTIN AUSTIN WATER UTILITY		ABANDON LINE AT ACTIVE MANHOLE	
RECORD COPY SIGNED BY KATHI L FLOWERS	08/31/2011 ADOPTED	THE ENGINEER/ARCHITECT ASSUMES RESPONSIBILITY FOR APPROPRIATE USE OF THIS STANDARD. MODIFICATIONS TO THIS STANDARD ARE PROHIBITED.	STANDARD NO. 506S-15A 1 OF 1

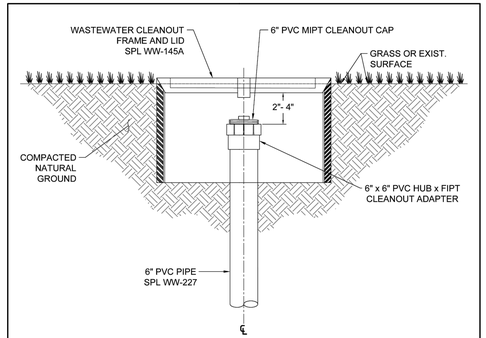

NOTE:

1. WASTEWATER CLEANOUT FRAME AND LID SHALL NOT BE PLACED IN PAVED AREAS, INCLUDING SIDEWALKS, DRIVEWAYS, OR PARKING LOTS, AND MUST BE LOCATED A MINIMUM OF 6" FROM ALL PAVED AREAS.

CITY OF AUSTIN AUSTIN WATER		WASTEWATER CLEANOUT FRAME AND LID	
JEFF A. KYLE	08/16/2019 ADOPTED	THE ENGINEER/ARCHITECT ASSUMES RESPONSIBILITY FOR APPROPRIATE USE OF THIS STANDARD. MODIFICATIONS TO THIS STANDARD ARE PROHIBITED.	STANDARD NO. 520-AW-03 1 OF 1

SITE DEVELOPMENT NUMBER 2025-476

REV. NO.	DATE	DESCRIPTION		
			PROJECT MANAGER:	PK
			DESIGNED BY:	PG/RM
			CHECKED BY:	DCS/JTH
			DRAWN BY:	PG/RM
			DCS PROJECT NO:	20101597

DCS ENGINEERING, LLC
1101 S. CAPITAL OF TEXAS HIGHWAY, BUILDING G-100
AUSTIN, TX 78746
TEL: (512) 614-6171
T.B.P.E. FIRM NO. F-13162

BudaTx breathe easy here™

BUDA SPORTSPLEX - PHASE I

STATE OF TEXAS
JORDAN T. HURTA
143332
LICENSED PROFESSIONAL ENGINEER
8/4/2025

GENERAL

CIVIL - MISCELLANEOUS DETAILS - SHEET NO. 4

DATE: AUGUST 2025
SCALE: AS NOTED
DRAWING: 00C-19

FILENAME: Z:\Projects 1551-1599\20101597 - Buda - Sportsplex\510 - Re-bid Dwgs\500 - Final_Design\500 - Final_Design\5.1 - Drawings\Sheet Files\Construction Plans\00C-19.dwg, LAST SAVED ON: Aug 01 2025 1:20pm, PLOTTED BY: RMALDONADO, ON: Aug 07 2025 8:08am, CFG:

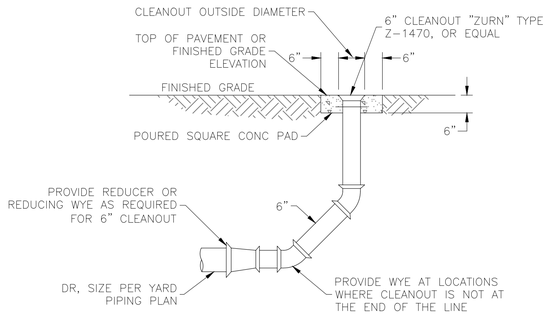

THREADED PLUG CLEANOUT DETAIL 1

N.T.S.

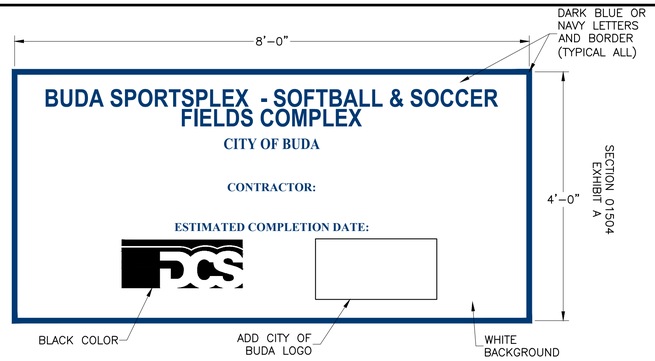

PROJECT SIGN DETAIL 2

N.T.S.

PIPE PENETRATION GROUT IN PLACE 4

N.T.S

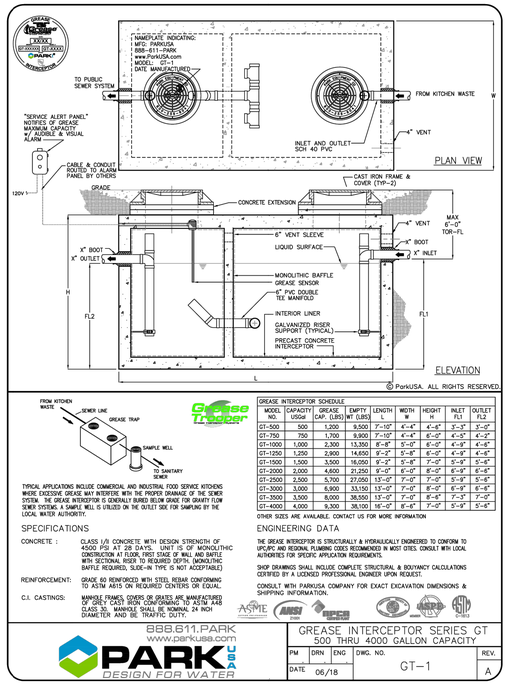

TYPICAL APPLICATIONS INCLUDE COMMERCIAL AND INDUSTRIAL FOOD SERVICE KITCHENS WHERE EXCESSIVE GREASE MAY INTERFERE WITH THE PROPER DRAINAGE OF THE SEWER SYSTEM. THE GREASE INTERCEPTOR IS GENERALLY BURIED BELOW GRADE FOR GRAVITY FLOW SEWER SYSTEMS. A SAMPLE WELL IS UTILIZED ON THE OUTLET SIDE FOR SAMPLING BY THE LOCAL WATER AUTHORITY.

GREASE INTERCEPTOR SCHEDULE

MODEL NO.	CAPACITY USGal	GREASE CAP. (LBS)	EMPTY WT (LBS)	LENGTH L	WIDTH W	HEIGHT H	INLET FL1	OUTLET FL2
GT-500	500	1,200	9,500	7'-10"	4'-4"	4'-4"	3'-3"	3'-0"
GT-750	750	1,700	9,900	7'-10"	4'-4"	6'-0"	4'-5"	4'-2"
GT-1000	1,000	2,300	13,350	8'-8"	5'-0"	6'-0"	4'-9"	4'-6"
GT-1250	1,250	2,900	14,650	9'-2"	5'-8"	6'-0"	4'-9"	4'-6"
GT-1500	1,500	3,500	16,050	9'-2"	5'-8"	7'-0"	5'-9"	5'-6"
GT-2000	2,000	4,600	21,250	9'-0"	6'-0"	8'-0"	6'-9"	6'-6"
GT-2500	2,500	5,700	27,050	13'-0"	7'-0"	7'-0"	5'-9"	5'-6"
GT-3000	3,000	6,900	33,150	13'-0"	7'-0"	8'-0"	6'-9"	6'-6"
GT-3500	3,500	8,000	38,550	13'-0"	7'-0"	8'-6"	7'-3"	7'-0"
GT-4000	4,000	9,300	38,100	16'-0"	8'-6"	7'-0"	5'-9"	5'-6"

OTHER SIZES ARE AVAILABLE. CONTACT US FOR MORE INFORMATION

SPECIFICATIONS

CONCRETE : CLASS 1/0 CONCRETE WITH DESIGN STRENGTH OF 4500 PSI AT 28 DAYS. UNIT IS OF MONOLITHIC CONSTRUCTION AT FLOOR, FIRST STAGE OF WALL AND BAFFLE WITH SECTIONAL RISER TO REQUIRED DEPTH. (MONOLITHIC BAFFLE REQUIRED, SLIDE-IN TYPE IS NOT ACCEPTABLE)

REINFORCEMENT: GRADE 60 REINFORCED WITH STEEL REBAR CONFORMING TO ASTM A615 ON REQUIRED CENTERS OR EQUAL.

C.I. CASTINGS: MANHOLE COVERS OR GRATES ARE MANUFACTURED OF GREY CAST IRON CONFORMING TO ASTM A48 CLASS 30. MANHOLE SHALL BE NOMINAL 24 INCH DIAMETER AND BE TRAFFIC DUTY.

ENGINEERING DATA

THE GREASE INTERCEPTOR IS STRUCTURALLY & HYDRAULICALLY ENGINEERED TO CONFORM TO UPC/IPC AND REGIONAL PLUMBING CODES RECOMMENDED IN MOST CITIES. CONSULT WITH LOCAL AUTHORITIES FOR SPECIFIC APPLICATION REQUIREMENTS.

SHOP DRAWINGS SHALL INCLUDE COMPLETE STRUCTURAL & BOUYANCY CALCULATIONS CERTIFIED BY A LICENSED PROFESSIONAL ENGINEER UPON REQUEST.

CONSULT WITH PARKUSA COMPANY FOR EXACT EXCAVATION DIMENSIONS & SHIPPING INFORMATION.

888.611.PARK
www.parkusa.com
PARK USA DESIGN FOR WATER

GREASE INTERCEPTOR SERIES GT
500 THRU 4000 GALLON CAPACITY

PM	DRN	ENG	DWG. NO.	REV.
DATE 06/18			GT-1	A

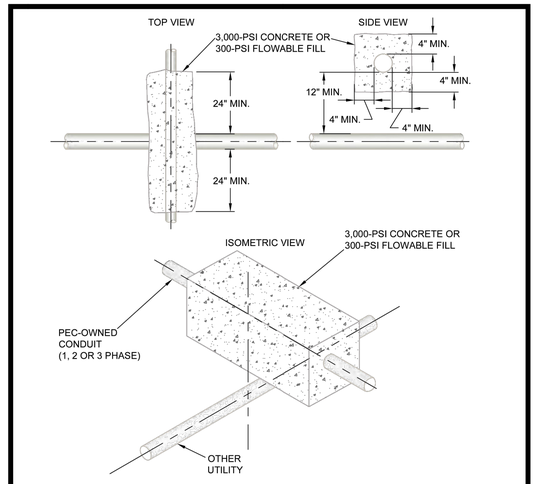

NOTES:
1. REFER TO APPROPRIATE DRAWINGS FOR CORRECT EMBEDMENT DEPTH.
2. 3,000-PSI CONCRETE OR 300-PSI FLOWABLE FILL TO BE A MINIMUM THICKNESS OF 4" AROUND CONDUIT.
3. THIS INSTALLATION APPLIES WHEREVER THE ELECTRICAL CONDUIT CROSSES ABOVE ANY OTHER CONDUIT.
4. IF ANOTHER UTILITY CROSSES OVER A PEC CONDUIT SYSTEM, THE OTHER UTILITY MUST COMPLY WITH NESC RULES 353B1 AND 353B2.

REV	DATE	REVISION	BY	CHK	SSS	APR	MMG
A	07/09/2020	ADD FLOWABLE FILL TO CONCRETE NOTES	RWC				

UNDERGROUND INSTALLATION SPECIFICATIONS

CONDUIT CROSSING DETAIL FOR PEC ABOVE OTHER UTILITIES

drawn:	approved:	date:	
RWC	MMG	07/09/2020	510-024

SITE DEVELOPMENT NUMBER 2025-476

REV. NO.	DATE	DESCRIPTION

PROJECT MANAGER:	PK
DESIGNED BY:	PG/RM
CHECKED BY:	DCS/JTH
DRAWN BY:	PG/RM
DCS PROJECT NO:	20101597

DCS ENGINEERING, LLC
1101 S. CAPITAL OF TEXAS HIGHWAY, BUILDING G-100
AUSTIN, TX 78746

TEL: (512) 614-6171
T.B.P.E. FIRM NO. F-13162

BudaTx breathe easy here™

BUDA SPORTSPLEX - PHASE I

STATE OF TEXAS
JORDAN T. HURTA
143332
LICENSED PROFESSIONAL ENGINEER
8/4/2025

GENERAL

CIVIL - MISCELLANEOUS DETAILS - SHEET NO. 5

DATE: AUGUST 2025

SCALE: AS NOTED

DRAWING: 00C-20

FILENAME: Z:\Projects 1551-1599\20101597 - Buda - Sportsplex\510 - Re-bid Dwgs\500 - Final_Design\500 - Final_Design\5.1 - Drawings\Sheet Files\Construction Plans\00C-20.dwg, LAST SAVED ON: Aug 01 2025 1:20pm, PLOTTED BY: RMALDONADO, ON: Aug 07 2025 8:08am, CFG:

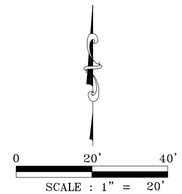

KEY NOTES:

1. (4) POND FOUNTAINS SHALL BE A 60 HZ 1 HP CROWN AND GEYSER PATTERN FROM THE AQUA MASTER FOUNTAINS MASTER SERIES OR APPROVED EQUAL
2. FOUNTAIN CONTROL PANEL SHALL BE OUTDOOR RATED, LOCKABLE, AND MOUNTED TO (2) 1/4" THICK STEEL U-CHANNELS.
3. FOUNTAIN SHALL BE ANCHORED TO CMU BLOCKS (4 EACH). FASTENERS, ANCHOR CONNECTORS, AND ANCHOR WIRE SHALL BE SERIES 300 STAINLESS STEEL.
4. CABLE FROM CONTROL PANEL TO FOUNTAIN MOTOR SHALL BE GAUGE #12 UL LISTED AND SPECIFICALLY DESIGNED FOR UNDERWATER USE.

NOTES:

1. NORTHERN POND FOUNTAINS SHALL BE DELIVERED TO THE CITY FOR STORAGE UNTIL EXISITING POND HAS BEEN MODIFIED (BY OTHERS) TO HOLD A MINIMUM OF 3 FEET OF WATER.

FOUNTAIN DATA					
QUANTITY	HORSEPOWER	VOLTAGE & PHASE	SPRAY HEIGHT (FT.)	SPRAY DIAMETER (FT.)	MINIMUM OPERATING DEPTH (FT.)
4	1	240/3	12	35	3

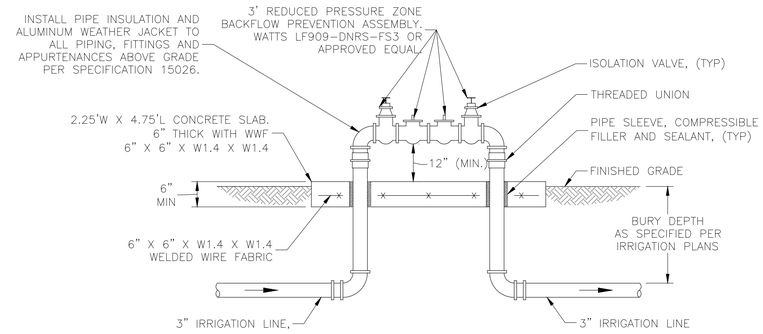

EXTERIOR BACKFLOW PREVENTER DETAIL 3
N.T.S.

SITE DEVELOPMENT NUMBER 2025-476

REV. NO.	DATE	DESCRIPTION

PROJECT MANAGER:	PK
DESIGNED BY:	PG/RM
CHECKED BY:	DCS/JTH
DRAWN BY:	PG/RM
DCS PROJECT NO:	20101597

DCS ENGINEERING, LLC
1101 S. CAPITAL OF TEXAS HIGHWAY, BUILDING G-100
AUSTIN, TX 78746

TEL: (512) 614-6171
T.B.P.E. FIRM NO. F-13162

BudaTx breathe easy here™

BUDA SPORTSPLEX - PHASE I

STATE OF TEXAS
JORDAN T. HURTA
143332
LICENSED PROFESSIONAL ENGINEER
8/4/2025

GENERAL

CIVIL - MISCELLANEOUS DETAILS - SHEET NO. 6

DATE: AUGUST 2025
SCALE: AS NOTED
DRAWING: 00C-21

FILENAME: Z:\Projects 1551-1599\20101597 - Buda - Sportsplex\510 - Re-bid Dwgs\500 - Final_Design\500 - Final_Design\5.1 - Drawings\Sheet Files\Construction Plans\00C-21.dwg, LAST SAVED ON: Aug 01 2025 1:20pm, PLOTTED BY: RMALDONADO, ON: Aug 07 2025 8:09am, CFG:

DISCLAIMER:
The use of this standard is governed by the "Texas Engineering Practice Act". No warranty of any kind is made by TxDOT for any purpose whatsoever. TxDOT assumes no responsibility for the conversion of this standard to other formats or for incorrect results or damages resulting from its use.

DATE:
FILE:

TYPE 1

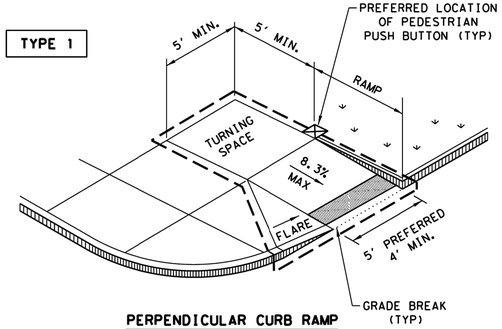

PERPENDICULAR CURB RAMP

TYPE 2

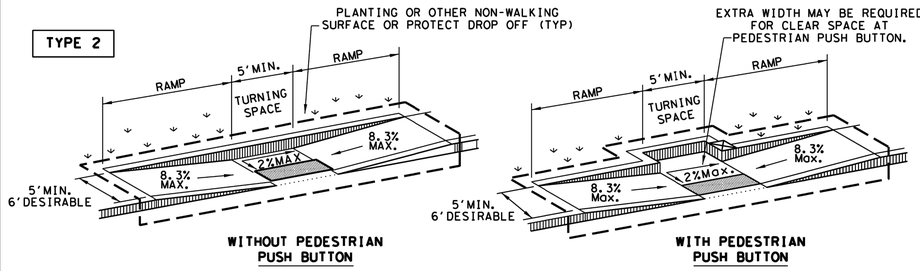

WITHOUT PEDESTRIAN PUSH BUTTON

WITH PEDESTRIAN PUSH BUTTON

PARALLEL CURB RAMP

TYPE 3

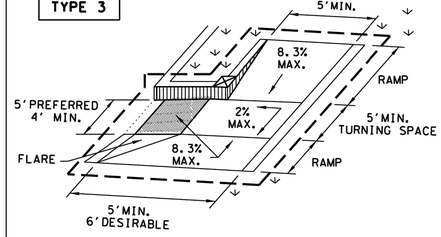

TYPE 6

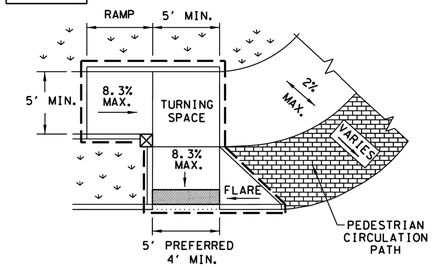

COMBINATION CURB RAMPS

TYPE 20

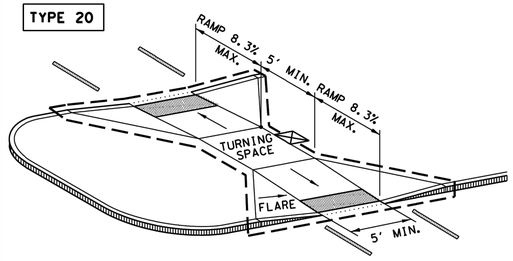

CURB RAMPS AT MEDIAN ISLANDS

TYPE 7
(SIDEWALK SET BACK FROM CURB)

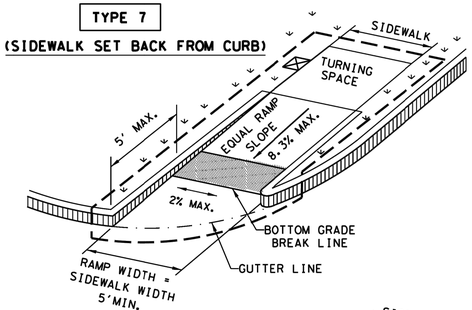

CROSS SLOPE NOT TO EXCEED 2% ON ANY PORTION OF RAMP, TURNING SPACE OR TRANSITION TO STREET.

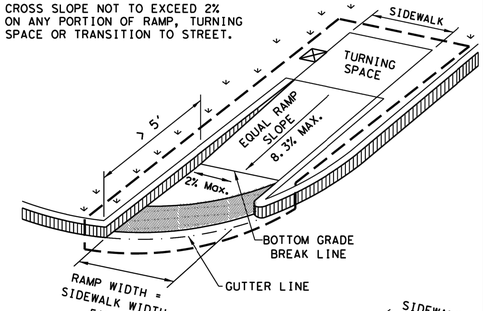

TYPE 10
(SIDEWALK ADJACENT TO CURB)

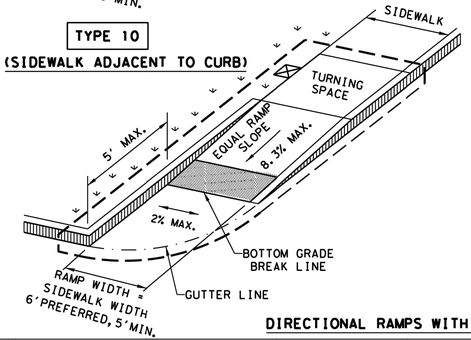

CROSS SLOPE NOT TO EXCEED 2% ON ANY PORTION OF RAMP, TURNING SPACE OR TRANSITION TO STREET.

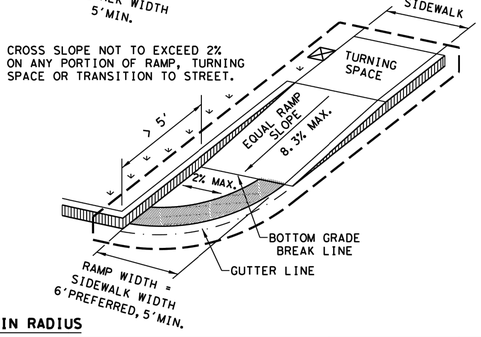

DIRECTIONAL RAMPS WITHIN RADIUS

TYPE 5

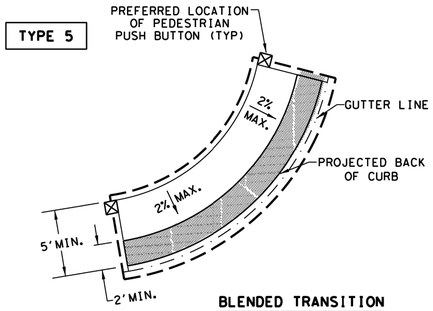

BLENDED TRANSITION
(FLUSH LANDING)

INSTALL DETECTABLE WARNING SURFACE AT EACH END OF THE CUT-THROUGH RAMP WITH A MINIMUM 2' USUAL SIDEWALK SURFACE BETWEEN. IF MEDIAN IS LESS THAN 6' WIDE, ELIMINATE DETECTABLE WARNING SURFACES.

TYPE 21

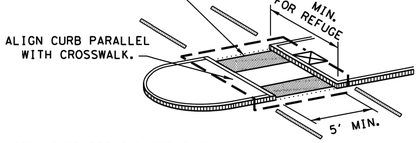

NOTE: CURB DETAILS ARE SHOWN ELSEWHERE IN THE PLANS.

TYPE 22

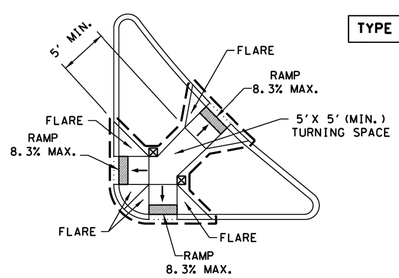

COMBINATION ISLAND RAMPS

BOTTOM GRADE BREAK OF CURB RAMP WILL NORMALLY BE AT GUTTER LINE. SURFACE SLOPES AT GRADE BREAKS SHALL BE FLUSH.

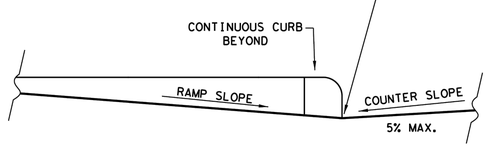

TYPICAL SECTION OF PERPENDICULAR CURB RAMP AT CONNECTION TO ROADWAY

NOTES / LEGEND:

SEE GENERAL NOTES ON SHEET 2 OF 4 FOR MORE INFORMATION.

DENOTES PLANTING OR NON-WALKING SURFACE NOT PART OF PEDESTRIAN CIRCULATION PATH.

DETECTABLE WARNING SURFACE

DENOTES PREFERRED LOCATION OF PEDESTRIAN PUSH BUTTON IF APPLICABLE.

GUTTER LINE

GRADE BREAK

RAMP LIMITS OF PAYMENT

SHEET 1 OF 4

Texas Department of Transportation — Design Division Standard

PEDESTRIAN FACILITIES CURB RAMPS

PED-18

FILE: ped18	DN: TxDOT	DW: VP	CK: KM	CK: PK & JG
© TxDOT: MARCH, 2002	CONT	SECT	JOB	HIGHWAY
REVISIONS				
REVISED 08,2005 REVISED 06,2012 REVISED 01,2018	DIST	COUNTY		SHEET NO.

SITE DEVELOPMENT NUMBER 2025-476

REV. NO.	DATE	DESCRIPTION

PROJECT MANAGER:	PK
DESIGNED BY:	PG/RM
CHECKED BY:	DCS/JTH
DRAWN BY:	PG/RM
DCS PROJECT NO:	20101597

DCS ENGINEERING, LLC
1101 S. CAPITAL OF TEXAS HIGHWAY, BUILDING G-100
AUSTIN, TX 78746
TEL: (512) 614-6171
T.B.P.E. FIRM NO. F-13162

BudaTx breathe easy here™

BUDA SPORTSPLEX - PHASE I

STATE OF TEXAS
JORDAN T. HURTA
143332
LICENSED PROFESSIONAL ENGINEER
8/4/2025

GENERAL

CIVIL - MISCELLANEOUS DETAILS - SHEET NO. 7

DATE: AUGUST 2025
SCALE: AS NOTED
DRAWING: 00C-22

FILENAME: Z:\Projects 1551-1599\20101597 - Buda - Sportsplex\510 - Re-bid Dwgs\500 - Final_Design\500 - Final_Design\501 - Drawings\Sheet Files\Construction Plans\00C-22.dwg, LAST SAVED ON: Aug 01 2025 1:20pm, PLOTTED BY: RMALDONADO, ON: Aug 07 2025 8:09am, CFG:

DISCLAIMER:
The use of this standard is governed by the "Texas Engineering Practice Act". No warranty of any kind is made by TxDOT for any purpose whatsoever. TxDOT assumes no responsibility for the conversion of this standard to other formats or for incorrect results or damages resulting from its use.

DATE:
FILE:

GENERAL NOTES

CURB RAMPS

1. Install a curb ramp or blended transition at each pedestrian street crossing.
2. All slopes shown are maximum allowable. Cross slopes of 1.5% and lesser running should be used. Adjust curb ramp length or grade of approach sidewalks as directed.
3. Maximum allowable cross slope on sidewalk and curb ramp surfaces is 2%.
4. The minimum sidewalk width is 5'. Where the sidewalk is adjacent to the back of curb, a 6' sidewalk width is desirable. Where a 5' sidewalk cannot be provided due to site constraints, sidewalk width may be reduced to 4' for short distances. 5'x 5' passing areas at intervals not to exceed 200' are required.
5. Turning Spaces shall be 5'x 5' minimum. Cross slope shall be maximum 2%.
6. Clear space at the bottom of curb ramps shall be a minimum of 4'x 4' wholly contained within the crosswalk and wholly outside the parallel vehicular travel path.
7. Provide flared sides where the pedestrian circulation path crosses the curb ramp. Flared sides shall be sloped at 10% maximum, measured parallel to the curb. Returned curbs may be used only where pedestrians would not normally walk across the ramp, either because the adjacent surface is planted, substantially obstructed, or otherwise protected.
8. Additional information on curb ramp location, design, light reflective value and texture may be found in the latest draft of the Proposed Guidelines for Pedestrian Facilities in the Public Right of Way (PROWAG) as published by the U.S. Architectural and Transportation Barriers Compliance Board (Access Board).
9. To serve as a pedestrian refuge area, the median should be a minimum of 6' wide, measured from back of curbs. Medians should be designed to provide accessible passage over or through them.
10. Small channelization islands, which do not provide a minimum 5'x 5' landing at the top of curb ramps, shall be cut through level with the surface of the street.
11. Crosswalk dimensions, crosswalk markings and stop bar locations shall be as shown elsewhere in the plans. At intersections where crosswalk markings are not required, curb ramps shall align with theoretical crosswalks unless otherwise directed.
12. Provide curb ramps to connect the pedestrian access route at each pedestrian street crossing. Handrails are not required on curb ramps.
13. Curb ramps and landings shall be constructed and paid for in accordance with Item 531 "Sidewalks".
14. Place concrete at a minimum depth of 5" for ramps, flares and landings, unless otherwise directed.
15. Furnish and install No. 3 reinforcing steel bars at 18" o.c. both ways, unless otherwise directed.
16. Provide a smooth transition where the curb ramps connect to the street.
17. Curbs shown on sheet 1 within the limits of payment are considered part of the curb ramp for payment, whether it is concrete curb, gutter, or combined curb and gutter.
18. Existing features that comply with applicable standards may remain in place unless otherwise shown on the plans.

DETECTABLE WARNING MATERIAL

19. Curb ramps must contain a detectable warning surface that consists of raised truncated domes complying with PROWAG. The surface must contrast visually with adjoining surfaces, including side flares. Furnish and install an approved cast-in-place dark brown or dark red detectable warning surface material adjacent to uncolored concrete, unless specified elsewhere in the plans.
20. Detectable Warning Materials must meet TxDOT Departmental Materials Specification DMS 4350 and be listed on the Material Producer List. Install products in accordance with manufacturer's specifications.
21. Detectable warning surfaces must be firm, stable and slip resistant.
22. Detectable warning surfaces shall be a minimum of 24 inches in depth in the direction of pedestrian travel, and extend the full width of the curb ramp or landing where the pedestrian access route enters the street.
23. Detectable warning surfaces shall be located so that the edge nearest the curb line is at the back of curb and neither end of that edge is greater than 5 feet from the back of curb. Detectable warning surfaces may be curved along the corner radius.
24. Shaded areas on Sheet 1 of 4 indicate the approximate location for the detectable warning surface for each curb ramp type.

DETECTABLE WARNING PAVERS (IF USED)

25. Furnish detectable warning paver units meeting all requirements of ASTM C-936, C-33. Lay in a two by two unit basket weave pattern or as directed.
26. Lay full-size units first followed by closure units consisting of at least 25 percent (25%) of a full unit. Cut detectable warning paver units using a power saw.

SIDEWALKS

27. Provide clear ground space at operable parts, including pedestrian push buttons. Operable parts shall be placed within unobstructed reach range specified in PROWAG section R406.
28. Place traffic signal or illumination poles, ground boxes, controller boxes, signs, drainage facilities and other items so as not to obstruct the pedestrian access route or clear ground space.
29. Street grades and cross slopes shall be as shown elsewhere in the plans.
30. Changes in level greater than 1/4 inch are not permitted.
31. The least possible grade should be used to maximize accessibility. The running slope of sidewalks and crosswalks within the public right of way may follow the grade of the parallel roadway. Where a continuous grade greater than five percent (5%) must be provided, handrails may be desirable to improve accessibility. Handrails may also be needed to protect pedestrians from potentially hazardous conditions. If provided, handrails shall comply with PROWAG R409.
32. Handrail extensions shall not protrude into the usable landing area or into intersecting pedestrian routes.
33. Driveways and turnouts shall be constructed and paid for in accordance with Item "Intersections, Driveways and Turnouts". Sidewalks shall be constructed and paid for in accordance with Item, "Sidewalks".
34. Sidewalk details are shown elsewhere in the plans.

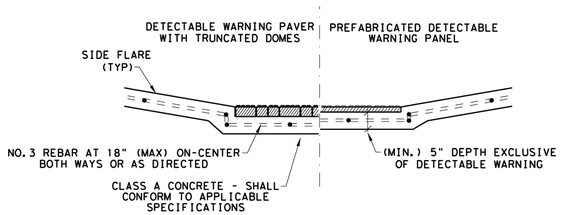

SECTION VIEW DETAIL
CURB RAMP AT DETECTIBLE WARNINGS

DETECTABLE WARNING SURFACE DETAILS

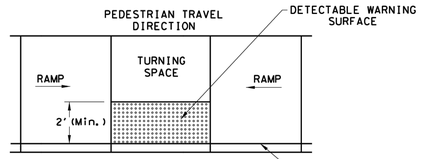

PARALLEL CURB RAMP
TYPICAL PLACEMENT OF DETECTABLE WARNING SURFACE ON LANDING AT STREET EDGE.

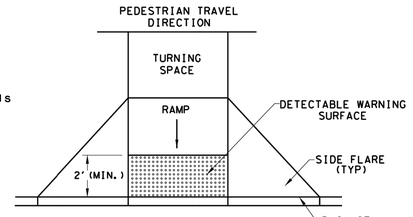

PERPENDICULAR CURB RAMP
TYPICAL PLACEMENT OF DETECTABLE WARNING SURFACE ON SLOPING RAMP RUN.

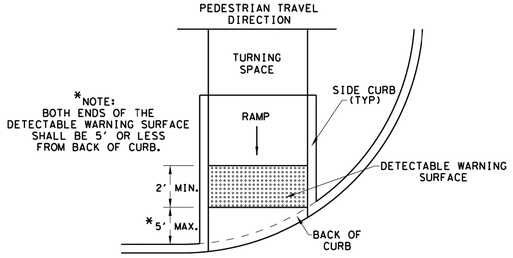

DIRECTIONAL CURB RAMP
TYPICAL PLACEMENT OF DETECTABLE WARNING SURFACE ON SLOPING RAMP RUN.

SHEET 2 OF 4

Texas Department of Transportation | Design Division Standard

PEDESTRIAN FACILITIES CURB RAMPS

PED-18

FILE: ped18	DN: TxDOT		DW: VP	CK: KM	CK: PK & JG
© TxDOT: MARCH, 2002	CONT	SECT	JOB		HIGHWAY
REVISIONS					
REVISED 08,2005 REVISED 06,2012 REVISED 01,2018	DIST	COUNTY			SHEET NO.

SITE DEVELOPMENT NUMBER 2025-476

REV. NO.	DATE	DESCRIPTION

PROJECT MANAGER:	PK
DESIGNED BY:	PG/RM
CHECKED BY:	DCS/JTH
DRAWN BY:	PG/RM
DCS PROJECT NO:	20101597

DCS ENGINEERING, LLC
1101 S. CAPITAL OF TEXAS HIGHWAY, BUILDING G-100
AUSTIN, TX 78746
TEL: (512) 614-6171
T.B.P.E. FIRM NO. F-13162

BudaTx breathe easy here™

BUDA SPORTSPLEX - PHASE I

STATE OF TEXAS
JORDAN T. HURTA
143332
LICENSED PROFESSIONAL ENGINEER
8/4/2025

GENERAL

CIVIL - MISCELLANEOUS DETAILS - SHEET NO. 8

DATE: AUGUST 2025
SCALE: AS NOTED
DRAWING: 00C-23

FILENAME: Z:\Projects 1551-1599\20101597 - Buda - Sportsplex\510 - Re-bid Dwgs\500 - Final_Design\500 - Final_Design\5.1 - Drawings\Sheet Files\Construction Plans\00C-23.dwg, LAST SAVED ON: Aug 01 2025 1:20pm, PLOTTED BY: RMALDONADO, ON: Aug 07 2025 8:09am, CFG:

DISCLAIMER:
The use of this standard is governed by the "Texas Engineering Practice Act." No warranty of any kind is made by TxDOT for any purpose whatsoever. TxDOT assumes no responsibility for the conversion of this standard to other formats or for incorrect results or damages resulting from its use.

TABLE OF VARIABLE DIMENSIONS AND QUANTITIES FOR ONE HEADWALL (5)

Slope	Dia of Pipe (D)	Values for One Pipe: W	X	Y	L	Reinf (Lbs)	Conc (CY) (1)	Values to be Added for Each Addt'l Pipe: X and W	Reinf (Lbs)	Conc (CY) (1)
2:1	12"	4' – 7 ½"	2' – 6"	2' – 10"	3' – 3 ¼"	88	0.6	1' – 9"	20	0.2
	15"	5' – 5 ¾"	2' – 9 ½"	3' – 4"	3' – 10 ¼"	103	0.7	2' – 2"	24	0.3
	18"	6' – 4 ½"	3' – 1"	3' – 10"	4' – 5"	124	0.9	2' – 8"	32	0.3
	21"	7' – 2 ¾"	3' – 4 ½"	4' – 4"	5' – 0"	143	1.1	3' – 1"	43	0.4
	24"	8' – 2 ½"	3' – 9 ½"	4' – 10"	5' – 7"	164	1.3	3' – 7"	50	0.5
	27"	9' – 1"	4' – 1"	5' – 4"	6' – 2"	179	1.5	3' – 11"	56	0.6
	30"	9' – 11 ½"	4' – 4 ½"	5' – 10"	6' – 8 ¾"	203	1.7	4' – 4"	65	0.8
	33"	10' – 10"	4' – 8"	6' – 4"	7' – 3 ¾"	224	2.0	4' – 8"	71	0.9
	36"	11' – 8 ¼"	4' – 11 ½"	6' – 10"	7' – 10 ¾"	249	2.2	5' – 1"	81	1.0
	42"	13' – 5 ¼"	5' – 6 ½"	7' – 10"	9' – 0 ½"	298	2.8	5' – 10"	97	1.3
	48"	15' – 9"	6' – 1 ½"	9' – 4"	10' – 9 ¼"	360	3.8	6' – 7"	117	1.7
	54"	17' – 5 ¾"	6' – 8 ½"	10' – 4"	11' – 11 ¼"	427	4.5	7' – 6"	151	2.1
	60"	19' – 2 ¾"	7' – 3 ½"	11' – 4"	13' – 1"	481	5.3	8' – 3"	174	2.5
	66"	20' – 11 ½"	7' – 10 ½"	12' – 4"	14' – 3"	544	6.2	8' – 9"	194	2.9
	72"	22' – 8 ½"	8' – 5 ½"	13' – 4"	15' – 4 ¾"	601	7.1	9' – 4"	213	3.3
3:1	12"	6' – 3"	2' – 6"	4' – 3"	4' – 11"	118	0.8	1' – 9"	22	0.2
	15"	7' – 5"	2' – 9 ½"	5' – 0"	5' – 9 ¼"	137	1.1	2' – 2"	28	0.3
	18"	8' – 6 ¾"	3' – 1"	5' – 9"	6' – 7 ¾"	170	1.3	2' – 8"	37	0.5
	21"	9' – 8 ¾"	3' – 4 ½"	6' – 6"	7' – 6"	195	1.6	3' – 1"	48	0.6
	24"	11' – 0"	3' – 9 ½"	7' – 3"	8' – 4 ½"	227	2.0	3' – 7"	58	0.7
	27"	12' – 2"	4' – 1"	8' – 0"	9' – 2 ¾"	251	2.3	3' – 11"	67	0.8
	30"	13' – 4"	4' – 4 ½"	8' – 9"	10' – 1 ¼"	293	2.7	4' – 4"	77	1.0
	33"	14' – 5 ¾"	4' – 8"	9' – 6"	10' – 11 ¾"	318	3.1	4' – 8"	84	1.2
	36"	15' – 7 ¾"	4' – 11 ½"	10' – 3"	11' – 10"	351	3.5	5' – 1"	96	1.4
	42"	17' – 11 ½"	5' – 6 ½"	11' – 9"	13' – 6 ¾"	432	4.5	5' – 10"	119	1.7
	48"	21' – 1 ¾"	6' – 1 ½"	14' – 0"	16' – 2"	537	6.1	6' – 7"	146	2.3
	54"	23' – 5 ½"	6' – 8 ½"	15' – 6"	17' – 10 ¾"	630	7.3	7' – 6"	186	2.9
	60"	25' – 9 ¼"	7' – 3 ½"	17' – 0"	19' – 7 ½"	719	8.7	8' – 3"	219	3.4
	66"	28' – 1"	7' – 10 ½"	18' – 6"	21' – 4 ¼"	811	10.1	8' – 9"	242	3.9
	72"	30' – 4 ¾"	8' – 5 ½"	20' – 0"	23' – 1 ¼"	924	11.7	9' – 4"	272	4.4
4:1	12"	7' – 10 ¾"	2' – 6"	5' – 8"	6' – 6 ½"	148	1.1	1' – 9"	24	0.3
	15"	9' – 4"	2' – 9 ½"	6' – 8"	7' – 8 ½"	181	1.5	2' – 2"	32	0.4
	18"	10' – 9 ½"	3' – 1"	7' – 8"	8' – 10 ¼"	221	1.9	2' – 8"	42	0.5
	21"	12' – 2 ¾"	3' – 4 ½"	8' – 8"	10' – 0"	260	2.3	3' – 1"	57	0.7
	24"	13' – 9 ½"	3' – 9 ½"	9' – 8"	11' – 2"	301	2.8	3' – 7"	67	0.9
	27"	15' – 3"	4' – 1"	10' – 8"	12' – 3 ¾"	334	3.3	3' – 11"	77	1.0
	30"	16' – 8 ¼"	4' – 4 ½"	11' – 8"	13' – 5 ¾"	385	3.8	4' – 4"	89	1.3
	33"	18' – 1 ¾"	4' – 8"	12' – 8"	14' – 7 ½"	425	4.5	4' – 8"	101	1.4
	36"	19' – 7"	4' – 11 ½"	13' – 8"	15' – 9 ¼"	472	5.1	5' – 1"	115	1.7
	42"	22' – 5 ¾"	5' – 6 ½"	15' – 8"	18' – 1"	583	6.5	5' – 10"	141	2.1
	48"	26' – 6 ¼"	6' – 1 ½"	18' – 8"	21' – 6 ¾"	730	8.9	6' – 7"	175	2.8
	54"	29' – 5"	6' – 8 ½"	20' – 8"	23' – 10 ¼"	875	10.7	7' – 6"	226	3.6
	60"	32' – 3 ¾"	7' – 3 ½"	22' – 8"	26' – 2"	996	12.7	8' – 3"	264	4.3
	66"	35' – 2 ½"	7' – 10 ½"	24' – 8"	28' – 5 ¾"	1,140	14.9	8' – 9"	300	4.9
	72"	38' – 1 ¼"	8' – 5 ½"	26' – 8"	30' – 9 ½"	1,297	17.3	9' – 4"	334	5.6
6:1	12"	11' – 2"	2' – 6"	8' – 6"	9' – 9 ¾"	224	1.9	1' – 9"	28	0.4
	15"	13' – 2 ¼"	2' – 9 ½"	10' – 0"	11' – 6 ½"	268	2.5	2' – 2"	37	0.5
	18"	15' – 2 ½"	3' – 1"	11' – 6"	13' – 3 ¼"	330	3.2	2' – 8"	50	0.7
	21"	17' – 2 ¾"	3' – 4 ½"	13' – 0"	15' – 0 ¼"	387	3.9	3' – 1"	69	0.9
	24"	19' – 4 ½"	3' – 9 ½"	14' – 6"	16' – 9"	453	4.8	3' – 7"	80	1.2
	27"	21' – 4 ¾"	4' – 1"	16' – 0"	18' – 5 ¾"	512	5.7	3' – 11"	96	1.4
	30"	23' – 5 ½"	4' – 4 ½"	17' – 6"	20' – 2 ½"	593	6.7	4' – 4"	110	1.7
	33"	25' – 5 ½"	4' – 8"	19' – 0"	21' – 11 ¼"	675	7.8	4' – 8"	127	2.0
	36"	27' – 5 ¾"	4' – 11 ½"	20' – 6"	23' – 8"	735	9.0	5' – 1"	144	2.3
	42"	31' – 6 ¼"	5' – 6 ½"	23' – 6"	27' – 1 ½"	922	11.5	5' – 10"	179	3.0
	48"	37' – 3 ½"	6' – 1 ½"	28' – 0"	32' – 4"	1,191	15.9	6' – 7"	231	4.0
	54"	41' – 4 ¼"	6' – 8 ½"	31' – 0"	35' – 9 ½"	1,424	19.2	7' – 6"	300	5.0
	60"	45' – 4 ¾"	7' – 3 ½"	34' – 0"	39' – 3"	1,631	22.9	8' – 3"	353	6.0

DATE:
FILE:

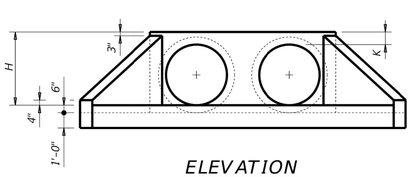

ELEVATION
(Showing dimensions.)

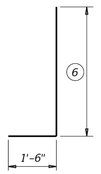

BARS V

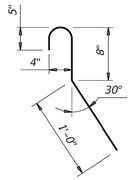

BARS CL
(Length = 2'-5")

TABLE OF REINFORCING STEEL (5)

Bar	Size	Spa	No.
A	#4	1' – 0"	~
B	#3	1' – 6"	~
C	#4	1' – 0"	~
D	#3	1' – 0"	~
E	#5	~	4
F	#5	~	~
G	#3	~	2
S	#4	~	6
V	#4	1' – 0"	~
W	#5	~	4

TABLE OF CONSTANT DIMENSIONS

Dia of Pipe (D)	G	K (4)	H
12"	0' – 9"	1' – 0"	2' – 0"
15"	0' – 11"	1' – 0"	2' – 3"
18"	1' – 2"	1' – 0"	2' – 6"
21"	1' – 4"	1' – 0"	2' – 9"
24"	1' – 7"	1' – 0"	3' – 0"
27"	1' – 8"	1' – 0"	3' – 3"
30"	1' – 10"	1' – 0"	3' – 6"
33"	1' – 11"	1' – 0"	3' – 9"
36"	2' – 1"	1' – 0"	4' – 0"
42"	2' – 4"	1' – 0"	4' – 6"
48"	2' – 7"	1' – 3"	5' – 3"
54"	3' – 0"	1' – 3"	5' – 9"
60"	3' – 3"	1' – 3"	6' – 3"
66"	3' – 3"	1' – 3"	6' – 9"
72"	3' – 4"	1' – 3"	7' – 3"

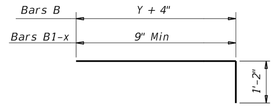

BARS B and B1-x

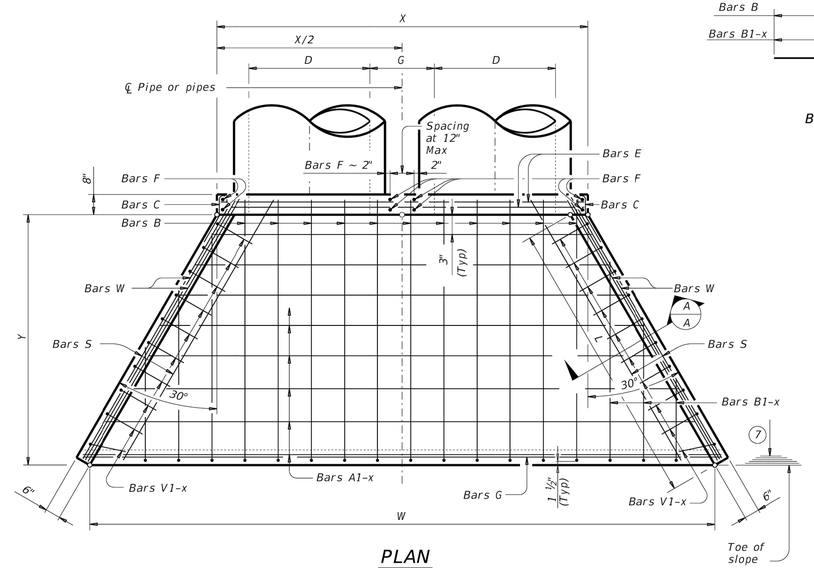

PLAN

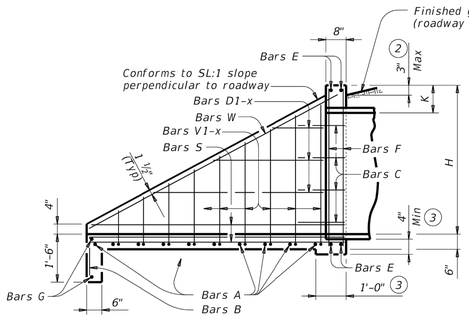

TYPICAL WING ELEVATION

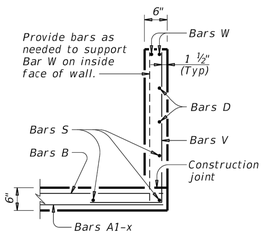

SECTION A-A

(1) Quantities shown are for concrete pipe and will increase slightly for metal pipe installations.

(2) For vehicle safety, construct curbs no more than 3" above finished grade. Reduce curb heights, if necessary, to meet these requirements. No changes will be made in quantities and no additional compensation will be allowed for this work.

(3) Provide a 1'-0" footing as shown where required to maintain 4" minimum cover for pipes.

(4) Dimensions shown are usual and maximum.

(5) Quantities shown are for one structure end only (one headwall).

(6) Min Length = 6" + 3" x $\left(\frac{12 \times H - 7}{12 \times L}\right)$

Max Length = 12 x H – 3" x $\left(\frac{12 \times H - 7}{12 \times L}\right)$ – 1"

(7) Lengths of wings based on SL:1 slope along this line.

MATERIAL NOTES:
Provide Grade 60 reinforcing steel.
Provide Class C concrete (f'c = 3,600 psi).

GENERAL NOTES:
Designed according to AASHTO LRFD Bridge Design Specifications.
Do not mount bridge rails of any type directly to these culvert headwalls.
This standard may not be used for wall heights, H, exceeding the values shown.

Cover dimensions are clear dimensions, unless noted otherwise. Reinforcing dimensions are out-to-out of bars.

Texas Department of Transportation | Bridge Division Standard

CONCRETE HEADWALLS WITH FLARED WINGS FOR 0° SKEW PIPE CULVERTS

CH-FW-0

FILE: CD-CH-FW0-20.dgn	DN: TxDOT	CK: TxDOT	DW: TxDOT	CK: TxDOT
©TxDOT February 2020	CONT	SECT	JOB	HIGHWAY
REVISIONS	DIST	COUNTY		SHEET NO.

SITE DEVELOPMENT NUMBER 2025-476

REV. NO.	DATE	DESCRIPTION

PROJECT MANAGER:	PK
DESIGNED BY:	PG/RM
CHECKED BY:	DCS/JTH
DRAWN BY:	PG/RM
DCS PROJECT NO:	20101597

DCS ENGINEERING, LLC
1101 S. CAPITAL OF TEXAS HIGHWAY, BUILDING G-100
AUSTIN, TX 78746
TEL: (512) 614-6171
T.B.P.E. FIRM NO. F-13162

BudaTx breathe easy here™

BUDA SPORTSPLEX - PHASE I

STATE OF TEXAS
JORDAN T. HURTA
143332
LICENSED PROFESSIONAL ENGINEER
8/4/2025

GENERAL

CIVIL - MISCELLANEOUS DETAILS - SHEET NO. 9

DATE: AUGUST 2025
SCALE: AS NOTED
DRAWING: 00C-23A

FILENAME: Z:\Projects 1551-1599\20101597 - Buda - Sportsplex\510 - Re-bid Dwgs\500 - Final_Design\500 - Final_Design\5.1 - Drawings\Sheet Files\Construction Plans\00C-23A.dwg, LAST SAVED ON: Aug 06 2025 7:09pm, PLOTTED BY: RMALDONADO, ON: Aug 07 2025 8:09am, CFG:



0 200 400

SCALE : 1" = 200'

NOTES:

1. TRAFFIC CONTROL SIGNAGE SHALL BE PROVIDED WHEN WORK IS OCCURRING WITHIN 50 FT OF ROADWAY.
2. ADVANCED WARNING SIGNS SHALL BE SPACED PER ADVANCED WARNING SIGN SPACING TABLE.
3. ALL TRAFFIC CONTROL SHALL CONFORM TO THE TEXAS MUTCD. WHENEVER TEXAS MUTCD AND CITY OF AUSTIN DETAILS CONFLICT, THE STRINGENT SHALL APPLY.
3. CONTRACTOR SHALL NOT PLACE ANY SIGNAGE WITHIN PRIVATE PROPERTY.
4. PAVEMENT RESTORATION SHALL BE PERFORMED IMMEDIATELY AFTER WATERLINE INSTALLATION AND BACKFILL.
5. EXIST SITE CONDITIONS SHOWN ON THIS DRAWING. REFER TO SERIES 100 FOR PROPOSED SITE CONDITIONS.

KEY NOTES:

(1) DURING CONSTRUCTION OF 8" WATERLINE CROSSING THE ROAD, CUTS WILL BE OPENED FOR ONE-HALF THE ROADWAY ONLY, WITH FLAGMEN ON BOTH SIDES OF THE WORK AREA. ALLOWING TWO-WAY TRAFFIC THROUGH THE OTHER HALF OF THE ROAD WITH ONE LANE IN EACH DIRECTION. THIS TYPE OF OPERATION WILL BE HELD TO A MINIMUM.

(2) ALL WORK IN THE ROW SHALL BE DONE DURING WEEKENDS AND/OR IN NON-SCHOOL DAYS.

(3) CONTRACTOR SHALL BACKFILL TRENCH OR PROVIDE TEMPORARY CHAINLINK FENCING TO PROTECT PUBLIC FROM OPEN TRENCHES AT THE END OF EACH DAY. INCLUDE COST FOR TEMPORARY FENCING WITH TRAFFIC CONTROL. NO SEPARATE PAY.

(4) CONTRACTOR IS RESPONSIBLE TO PROVIDE ADVANCE WARNING SIGNS AND BARRICADES TO RE-DIRECT TRAFFIC AS SPECIFIED IN THE TEXAS MANUAL ON UNIFORM TRAFFIC CONTROL DEVICES.

(5) TEMPORARY LANE CLOSURE, STREET DETOUR AND SHIFTING TRAFFIC SHALL BE PER TRAFFIC CONTROL DETAIL DRAWINGS.

ADVANCE WARNING SIGN SPACING	
POSTED SPEED (MPH)	SIGN SPACING "X" (FEET)
25	100
30	120
35	160
40	240
45	320
50	400
55*	500
60*	600
65*	700
70*	800
75*	900
80*	1000

*DISTANCE BETWEEN SIGNS SHOULD BE INCREASED TO HAVE 1500 FEET ADVANCE WARNING. (SEE SECTION 6C.04.07 OF THE TEXAS MANUAL ON UNIFORM TRAFFIC CONTROL DEVICES.)
**DISTANCE BETWEEN SIGNS SHOULD BE INCREASED TO HAVE 1/2 MILE OR MORE ADVANCE WARNING (SEE SECTION 6C.04.05 OF THE TEXAS MANUAL ON UNIFORM TRAFFIC CONTROL DEVICES.)

SITE DEVELOPMENT NUMBER 2025-476

REV. NO.	DATE	DESCRIPTION

PROJECT MANAGER:	PK
DESIGNED BY:	PG/RM
CHECKED BY:	DCS/JTH
DRAWN BY:	PG/RM
DCS PROJECT NO:	20101597

DCS ENGINEERING, LLC
1101 S. CAPITAL OF TEXAS HIGHWAY, BUILDING G-100
AUSTIN, TX 78746

TEL: (512) 614-6171
T.B.P.E. FIRM NO. F-13162

BudaTx breathe easy here™

BUDA SPORTSPLEX - PHASE I

STATE OF TEXAS
J. PATRICIO GALINDO RANGEL
154316
LICENSED PROFESSIONAL ENGINEER
08/04/25

GENERAL

CIVIL - TRAFFIC CONTROL PLAN - SHEET NO. 1

DATE: JULY 2025
SCALE: AS NOTED
DRAWING: 00C-24

FILENAME: Z:\Projects 1551-1599\20101597 - Buda - Sportsplex\510 - Re-bid Dwgs\500 - Final_Design\500 - Final_Design\5.1 - Drawings\Sheet Files\Construction Plans\00C-24.dwg, LAST SAVED ON: Aug 01 2025 1:20pm, PLOTTED BY: RMALDONADO, ON: Aug 07 2025 8:10am, CFG:



0 200 400

SCALE : 1" = 200'

NOTES:

1. TRAFFIC CONTROL SIGNAGE SHALL BE PROVIDED WHEN WORK IS OCCURRING WITHIN 50 FT OF ROADWAY.
2. ADVANCED WARNING SIGNS SHALL BE SPACED PER ADVANCED WARNING SIGN SPACING TABLE.
3. ALL TRAFFIC CONTROL SHALL CONFORM TO THE TEXAS MUTCD. WHENEVER TEXAS MUTCD AND CITY OF AUSTIN DETAILS CONFLICT, THE STRINGENT SHALL APPLY.
3. CONTRACTOR SHALL NOT PLACE ANY SIGNAGE WITHIN PRIVATE PROPERTY.
4. PAVEMENT RESTORATION SHALL BE PERFORMED IMMEDIATELY AFTER WATERLINE INSTALLATION AND BACKFILL.
5. EXIST SITE CONDITIONS SHOWN ON THIS DRAWING. REFER TO SERIES 100 FOR PROPOSED SITE CONDITIONS.

KEY NOTES:

1. DURING CONSTRUCTION OF 8" WATERLINE CROSSING THE ROAD, CUTS WILL BE OPENED FOR ONE-HALF THE ROADWAY ONLY, WITH FLAGMEN ON BOTH SIDES OF THE WORK AREA. ALLOWING TWO-WAY TRAFFIC THROUGH THE OTHER HALF OF THE ROAD WITH ONE LANE IN EACH DIRECTION. THIS TYPE OF OPERATION WILL BE HELD TO A MINIMUM.
2. ALL WORK IN THE ROW SHALL BE DONE DURING WEEKENDS AND/OR IN NON-SCHOOL DAYS.
3. CONTRACTOR SHALL BACKFILL TRENCH OR PROVIDE TEMPORARY CHAINLINK FENCING TO PROTECT PUBLIC FROM OPEN TRENCHES AT THE END OF EACH DAY. INCLUDE COST FOR TEMPORARY FENCING WITH TRAFFIC CONTROL. NO SEPARATE PAY.
4. CONTRACTOR IS RESPONSIBLE TO PROVIDE ADVANCE WARNING SIGNS AND BARRICADES TO RE-DIRECT TRAFFIC AS SPECIFIED IN THE TEXAS MANUAL ON UNIFORM TRAFFIC CONTROL DEVICES.
5. TEMPORARY LANE CLOSURE, STREET DETOUR AND SHIFTING TRAFFIC SHALL BE PER TRAFFIC CONTROL DETAIL DRAWINGS.

ADVANCE WARNING SIGN SPACING	
POSTED SPEED (MPH)	SIGN SPACING "X" (FEET)
25	100
30	120
35	160
40	240
45	320
50	400
55*	500
60*	600
65*	700
70*	800
75*	900
80*	1000

*DISTANCE BETWEEN SIGNS SHOULD BE INCREASED TO HAVE 1500 FEET ADVANCE WARNING. (SEE SECTION 6C.04.07 OF THE TEXAS MANUAL ON UNIFORM TRAFFIC CONTROL DEVICES.)
**DISTANCE BETWEEN SIGNS SHOULD BE INCREASED TO HAVE 1/2 MILE OR MORE ADVANCE WARNING (SEE SECTION 6C.04.05 OF THE TEXAS MANUAL ON UNIFORM TRAFFIC CONTROL DEVICES.)

SITE DEVELOPMENT NUMBER 2025-476

REV. NO.	DATE	DESCRIPTION

PROJECT MANAGER:	PK
DESIGNED BY:	PG/RM
CHECKED BY:	DCS/JTH
DRAWN BY:	PG/RM
DCS PROJECT NO:	20101597

DCS ENGINEERING, LLC
1101 S. CAPITAL OF TEXAS HIGHWAY, BUILDING G-100
AUSTIN, TX 78746

TEL: (512) 614-6171
T.B.P.E. FIRM NO. F-13162

BudaTx breathe easy here™

BUDA SPORTSPLEX - PHASE I

STATE OF TEXAS
J. PATRICIO GALINDO RANGEL
154316
LICENSED PROFESSIONAL ENGINEER
08/04/25

GENERAL

CIVIL - TRAFFIC CONTROL PLAN - SHEET NO. 2

DATE: JULY 2025
SCALE: AS NOTED
DRAWING: 00C-25

FILENAME: Z:\Projects 1551-1599\20101597 - Buda - Sportsplex\510 - Re-bid Dwgs\500 - Final_Design\500 - Final_Design\5.1 - Drawings\Sheet Files\Construction Plans\00C-25.dwg, LAST SAVED ON: Aug 01 2025 1:21pm, PLOTTED BY: RMALDONADO, ON: Aug 07 2025 8:11am, CFG:

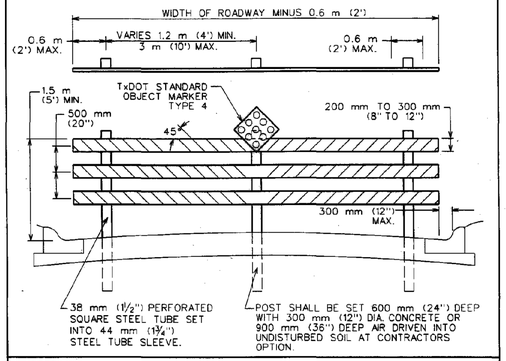

NOTES:

1. WIDTH OF RAIL SHALL BE A MINIMUM OF 200 mm (8") AND MAY BE UP TO A MAXIMUM OF 300 mm (12"). 25 mm (1") HOLLOW-PROFILE PLASTIC LUMBER WITH INTERNAL STIFFNERS.
2. RAILS SHALL BE FASTENED TO EACH TUBE WITH 50 mm (2") STEEL BOLTS WITH NUTS AND WASHERS ON EACH SIDE. BOLT THREADS SHALL BE PEENED.
3. THE RAILS SHALL HAVE 150 mm (6") WIDE REFLECTORIZED RED STRIPES OF TAPE PLACED ON 45 DEGREE SLOPES, DOWN AND TOWARD THE CENTER OF THE BARRICADE.
4. BARRICADES MAY BE CONSTRUCTED IN SECTIONS OR MAY BE CONTINUOUS ACROSS ROADWAY WIDTH. SPLICES ON CONTINUOUS RAIL BARRICADES SHALL BE AT POSTS AND SHALL HAVE A 600 mm (2') SPLICE BLOCK ON BACK SIDE OF THE SAME MATERIAL AS RAIL.
5. 450 mm (18") DIAMOND REFLECTORIZED RED PANEL OR 450 mm (18") DIAMOND RED OR BLACK PANEL WITH NINE-75 mm (3") DIAMETER RED REFLECTORS SYMMETRICALLY PLACED AT CENTER POSTS. A MINIMUM OF 1.2 m (4') ABOVE GROUND SHALL BE USED FOR END OF ROAD MARKERS AS PER TEXAS MANUAL on UNIFORM TRAFFIC CONTROL DEVICES (TMUTCD) SECTION 3C.04.

CITY OF AUSTIN, DEPARTMENT OF PUBLIC WORKS	STREET-END BARRICADE	
Bill Gardner 3/12/07 ADOPTED	THE ARCHITECT/ENGINEER ASSUMES RESPONSIBILITY FOR APPROPRIATE USE OF THIS STANDARD.	STANDARD NO. 803S-1

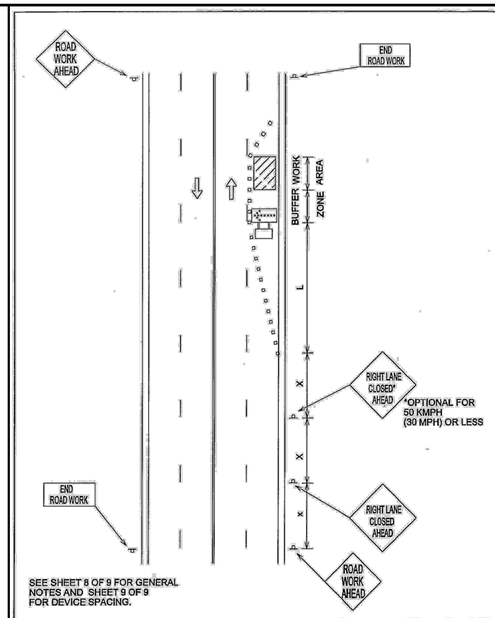

CITY OF AUSTIN, DEPARTMENT OF PUBLIC WORKS	ARTERIAL ONE LANE CLOSURE	
Kris Bunchard-Arroy 1/4/11 ADOPTED	THE ARCHITECT/ENGINEER ASSUMES RESPONSIBILITY FOR APPROPRIATE USE OF THIS STANDARD.	STANDARD NO. 804S-1 1 OF 9

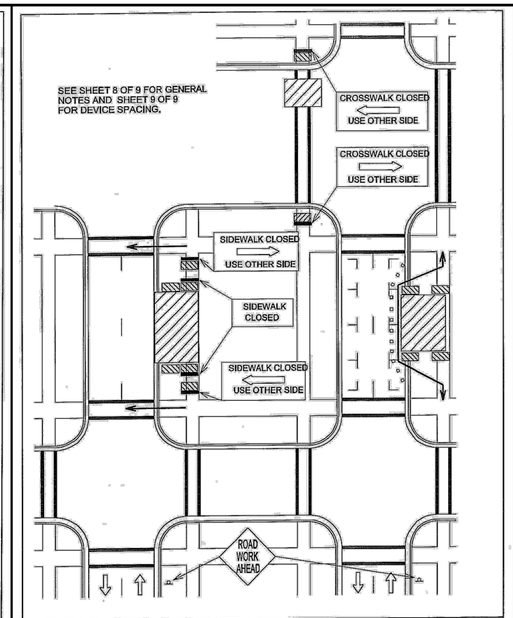

CITY OF AUSTIN, DEPARTMENT OF PUBLIC WORKS	BYPASS WALKWAY, SIDEWALK AND CROSSWALK CLOSURES	
Kris Bunchard-Arroy 1/4/11 ADOPTED	THE ARCHITECT/ENGINEER ASSUMES RESPONSIBILITY FOR APPROPRIATE USE OF THIS STANDARD.	STANDARD NO. 804S-1 4 OF 9

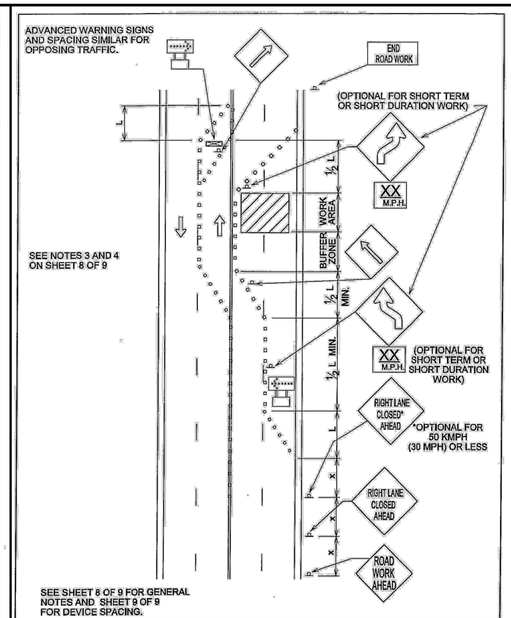

CITY OF AUSTIN, DEPARTMENT OF PUBLIC WORKS	TYPICAL TRAFFIC CONTROL PLAN FOR SHIFTING TRAFFIC	
Kris Bunchard-Arroy 1/4/11 ADOPTED	THE ARCHITECT/ENGINEER ASSUMES RESPONSIBILITY FOR APPROPRIATE USE OF THIS STANDARD.	STANDARD NO. 804S-1 6 OF 9

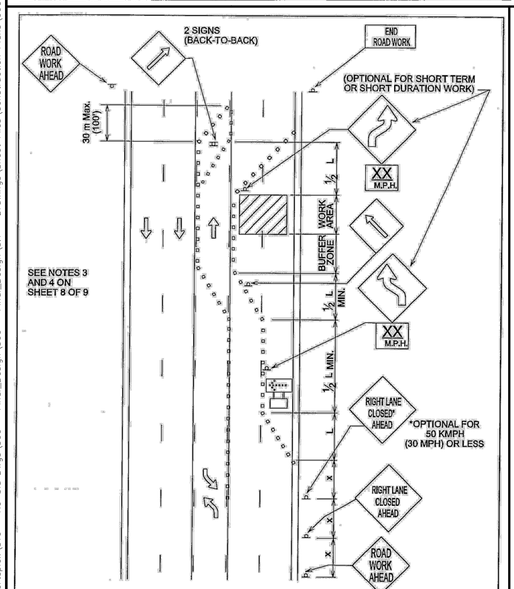

CITY OF AUSTIN, DEPARTMENT OF PUBLIC WORKS	TYPICAL TRAFFIC CONTROL PLAN FOR SHIFTING TRAFFIC	
Kris Bunchard-Arroy 1/4/11 ADOPTED	THE ARCHITECT/ENGINEER ASSUMES RESPONSIBILITY FOR APPROPRIATE USE OF THIS STANDARD.	STANDARD NO. 804S-1 7 OF 9

1. ALL SETUPS SHALL BE IN ACCORDANCE WITH THE CURRENT ADDITION OF THE TEXAS MANUAL ON UNIFORM TRAFFIC CONTROL DEVICES AND THE CITY OF AUSTIN TRANSPORTATION CRITERIA MANUAL.
2. TO DETERMINE APPROPRIATE DEVICES AND SIGN SIZES TO BE USED, REFER TO STANDARD 804S-5. SHEETS 5, 6 AND 7 OF 11.
3. FOR INTERMEDIATE-TERM SITUATIONS, WHEN IT IS NOT FEASIBLE TO REMOVE AND RESTORE PAVEMENT MARKINGS, THE CHANNELIZATION MUST BE MADE DOMINANT BY USING A VERY CLOSE DEVICE SPACING. THIS IS ESPECIALLY IMPORTANT IN LOCATIONS OF CONFLICTING INFORMATION, SUCH AS WHERE TRAFFIC IS DIRECTED OVER A DOUBLE YELLOW CENTERLINE. IN SUCH LOCATIONS, A MAXIMUM CHANNELIZING DEVICE SPACING OF 3 m (10') IS REQUIRED.
4. FOR LONG TERM STATIONARY WORK, ALL CONFLICTING PAVEMENT MARKINGS MUST BE REMOVED AND CENTERLINE STRIPING PROVIDED WHERE TWO WAY TRAFFIC IS IN ADJACENT LANES.
5. FOR TEMPORARY PAVEMENT MARKING REQUIREMENTS SEE STANDARD 804S-3.
6. FOR ONE-WAY AND MULTI-LANE ROADWAYS THE "LANE BLOCKED" SIGN MAY BE USED IN LIEU OF THE "LANE CLOSED AHEAD" SIGN. THE NUMBER OF DIGITS ON THE SIGN SHALL NOT BE GREATER THAN THE NUMBER OF LANES PRESENT ON THE ROADWAY. THE "X" SHALL BE PLACED UNDER THE NUMBER OF LANE(S) BLOCKED.
7. FOR FLAGGING OPERATION REQUIREMENTS SEE STANDARD 804S-2.
8. CONTRACTOR SHALL PROVIDE SIDEWALK CLOSURES, CROSSWALK CLOSURES OR WALKWAY BYPASS WHEREVER PEDESTRIAN MOVEMENTS ARE AFFECTED BY CONSTRUCTION ACTIVITIES. ALL SIDEWALKS AND CROSSWALKS SHALL BE ACCESSIBLE WHEN CONTRACTOR IS NOT WORKING UNLESS APPROVED BY THE TRANSPORTATION DIVISION.
9. FOR EXCAVATION PROTECTION AND SAFETY FENCE REQUIREMENTS SEE STANDARD 804S-4.
10. THE USE OF ARROW DISPLAYS ARE REQUIRED ON ALL LANE CLOSURES. THE CONTRACTOR SHALL PROVIDE ONE (1) STAND-BY UNIT IN GOOD WORKING CONDITION AT THE JOB SITE, READY FOR USE IF THE OPERATION REQUIRES 24-HOUR A DAY LANE CLOSURE SET-UPS.

CITY OF AUSTIN, DEPARTMENT OF PUBLIC WORKS	GENERAL NOTES	
Kris Bunchard-Arroy 1/4/11 ADOPTED	THE ARCHITECT/ENGINEER ASSUMES RESPONSIBILITY FOR APPROPRIATE USE OF THIS STANDARD.	STANDARD NO. 804S-1 8 OF 9

Typical Transition Lengths and Suggested Maximum Spacing of Devices

Speed KMPH	Posted Speed MPH	Formula	Minimum Desirable Taper Lengths (L) Meters (Feet) 3.0(10) Offset Meters (feet)	3.3(11) Offset Meters (feet)	3.6(12) Offset Meters (feet)	Suggested Max. Device Spacing On a taper Meters (feet)	On a tangent Meters (feet)	Suggested Sign Spacing Meters (Feet) "X" Dimension
50	30	L=WS²/60	45 (150)	50 (165)	55 (180)	9 (30)	15-20 (60-75)	40 (120)
55	35		65 (205)	70 (225)	75 (245)	10 (35)	25-25 (70-80)	50 (160)
65	40		80 (265)	90 (295)	100 (320)	12 (40)	25-30 (80-100)	75 (240)
70	45	L=WS	135 (450)	150 (495)	165 (540)	13 (45)	25-30 (80-110)	100 (320)
80	50		150 (500)	165 (550)	180 (600)	15 (50)	30-35 (100-125)	120 (400)
90	55		165 (550)	185 (605)	200 (660)	16 (55)	35-40 (110-140)	150 (500)
95	60		180 (600)	200 (660)	220 (720)	18 (60)	40-45 (120-150)	180 (600)
105	65		195 (650)	215 (715)	235 (780)	19 (65)	40-50 (130-165)	210 (700)
115	70		215 (700)	235 (770)	255 (840)	21 (70)	45-55 (140-175)	240 (800)

LEGEND
- Channelizing devices
- Trailer mounted flashing arrow board
- Flagger

CITY OF AUSTIN, DEPARTMENT OF PUBLIC WORKS	DEVICE SPACING	
Kris Bunchard-Arroy 1/4/11 ADOPTED	THE ARCHITECT/ENGINEER ASSUMES RESPONSIBILITY FOR APPROPRIATE USE OF THIS STANDARD.	STANDARD NO. 804S-1 9 OF 9

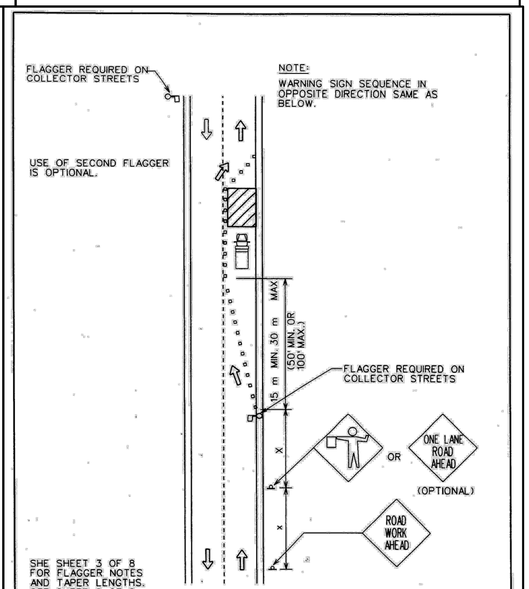

CITY OF AUSTIN, DEPARTMENT OF PUBLIC WORKS	COLLECTOR / RESIDENTIAL STREET FLAGGING OPERATIONS	
Bill Gardner 3/13/06 ADOPTED	THE ARCHITECT/ENGINEER ASSUMES RESPONSIBILITY FOR APPROPRIATE USE OF THIS STANDARD.	STANDARD NO. 804S-2 1 OF 8

SITE DEVELOPMENT NUMBER 2025-476

REV. NO.	DATE	DESCRIPTION

PROJECT MANAGER:	PK
DESIGNED BY:	PG/RM
CHECKED BY:	DCS/JTH
DRAWN BY:	PG/RM
DCS PROJECT NO:	20101597

DCS ENGINEERING, LLC
1101 S. CAPITAL OF TEXAS HIGHWAY, BUILDING G-100
AUSTIN, TX 78746

TEL: (512) 614-6171
T.B.P.E. FIRM NO. F-13162

BudaTx breathe easy here™

BUDA SPORTSPLEX - PHASE I

STATE OF TEXAS
I. PATRICIO CALIXTO RANGEL
154316
LICENSED PROFESSIONAL ENGINEER
08/04/25

GENERAL

CIVIL - TRAFFIC CONTROL DETAILS - SHEET NO. 1

DATE: JULY 2025
SCALE: AS NOTED
DRAWING: 00C-26

FILENAME: Z:\Projects 1551-1599\20101597 - Buda - Sportsplex\510 - Re-bid Dwgs\500 - Final_Design\500 - Final_Design\5.1 - Drawings\Sheet Files\Construction Plans\00C-26.dwg, LAST SAVED ON: Aug 01 2025 1:21pm, PLOTTED BY: RMALDONADO, ON: Aug 07 2025 8:11am, CFG:

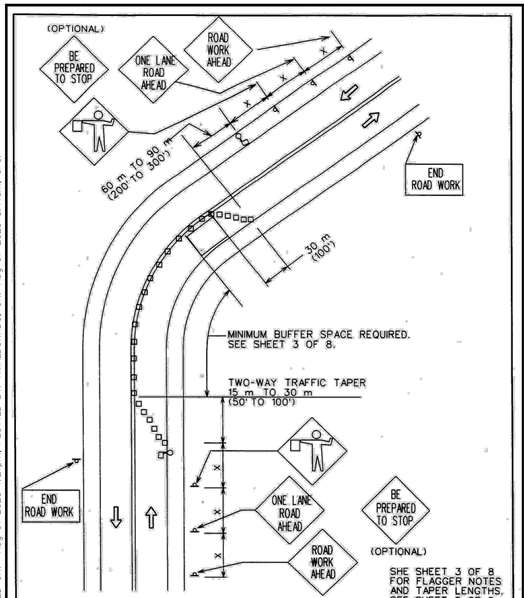

SHE SHEET 3 OF 8 FOR FLAGGER NOTES AND TAPER LENGTHS. SEE SHEET 8 OF 8 FOR DEVICE SPACING.

CITY OF AUSTIN DEPARTMENT OF PUBLIC WORKS	FLAGGER SETUP FOR 2 LANE ROADWAY	
Bill Gardner 3/13/06 ADOPTED	THE ARCHITECT/ENGINEER ASSUMES RESPONSIBILITY FOR APPROPRIATE USE OF THIS STANDARD.	STANDARD NO. 804S-2 2 OF 8

1. FOR DAYTIME WORK, THE FLAGGER SHALL WEAR AN APPROVED BRIGHTLY COLORED VEST. FOR NIGHTTIME WORK, THE VEST SHALL BE RETROFLECTIVE. THE RETRO-REFLECTIVE MATERIAL SHALL BE ORANGE, YELLOW, WHITE, SILVER, STRONG YELLOW-GREEN OR A FLOURESCENT VERSION OF THESE COLORS AND SHALL BE VISIBLE AT A MINIMUM DISTANCE OF 305 m (1,000').
2. FOR LOW-VOLUME APPLICATIONS, A SINGLE FLAGGER MAY BE ADEQUATE. WHERE ONE FLAGGER CAN BE USED, SUCH AS FOR SHORT WORK AREAS ON STRAIGHT ROADWAYS, THE FLAGGER MUST BE VISIBLE TO APPROACHING TRAFFIC FROM BOTH DIRECTIONS.
3. FLAGGERS SHALL USE ONLY STOP/SLOW PADDLE TO DIRECT TRAFFIC UNLESS WORKING IN A SIGNALIZED INTERSECTION WHERE DRIVERS MAY BE CONFUSED BY THE SIGN PADDLE. HAND SIGNAL MAY BE USED IN THESE SITUATIONS.
4. FLAGGERS SHALL ENSURE THAT ALL REQUIRED SIGNING IS IN PLACE PRIOR TO BEGINNING FLAGGING OPERATIONS.
5. FLAGGERS SHALL NOT PERFORM WORK THAT IS NOT RELATED TO FLAGGING WHILE ON DUTY.
6. FLAGGERS MAY CARRY AIR HORNS OR WHISTLES TO WARN WORKERS OF AN EMERGENCY CONDITION.
7. FLAGGERS SHALL BE REQUIRED TO USE TWO-WAY RADIOS WHEN OUT OF CLEAR VIEW OF EACH OTHER.
8. FLOODLIGHTS SHOULD BE PROVIDED TO MARK FLAGGER STATIONS AT NIGHT AS NEEDED.

TAPER LENGTHS

SPEED (kmph)	SPEED* (mph)	LENGTH (meters)	LENGTH (feet)
30	20	11	35
40	25	17	55
50	30	26	85
55	35	36	120
65	40	51	170
70	45	66	220
80	50	84	280
90	55	101	335
95	60	125	415
105	65	146	485

*POSTED SPEED

CITY OF AUSTIN DEPARTMENT OF PUBLIC WORKS	FLAGGER SETUP FOR 2 LANE ROADWAY	
Bill Gardner 3/13/06 ADOPTED	THE ARCHITECT/ENGINEER ASSUMES RESPONSIBILITY FOR APPROPRIATE USE OF THIS STANDARD.	STANDARD NO. 804S-2 3 OF 8

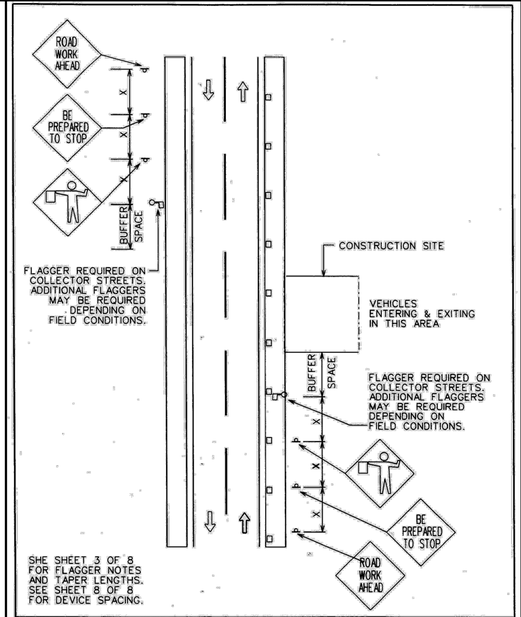

SHE SHEET 3 OF 8 FOR FLAGGER NOTES AND TAPER LENGTHS. SEE SHEET 8 OF 8 FOR DEVICE SPACING.

CITY OF AUSTIN DEPARTMENT OF PUBLIC WORKS	FLAGGER SETUP FOR VEHICLES ENTERING AND EXITING WORK SITE	
Bill Gardner 3/13/06 ADOPTED	THE ARCHITECT/ENGINEER ASSUMES RESPONSIBILITY FOR APPROPRIATE USE OF THIS STANDARD.	STANDARD NO. 804S-2 4 OF 8

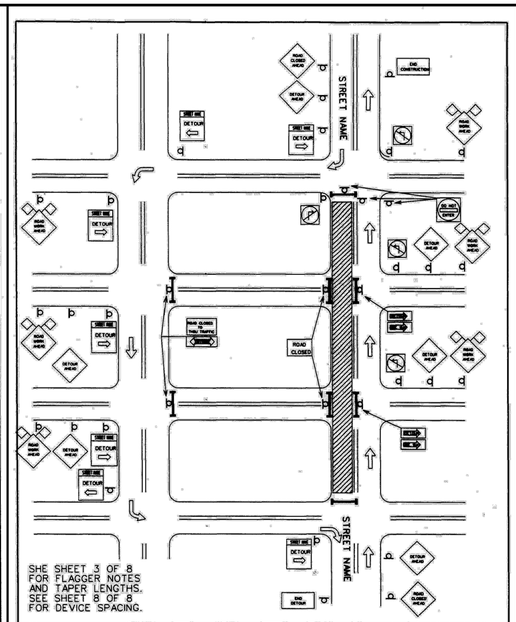

SHE SHEET 3 OF 8 FOR FLAGGER NOTES AND TAPER LENGTHS. SEE SHEET 8 OF 8 FOR DEVICE SPACING.

CITY OF AUSTIN DEPARTMENT OF PUBLIC WORKS	STREET DETOUR SINGLE DIRECTION	
Bill Gardner 3/13/06 ADOPTED	THE ARCHITECT/ENGINEER ASSUMES RESPONSIBILITY FOR APPROPRIATE USE OF THIS STANDARD.	STANDARD NO. 804S-2 5 OF 8

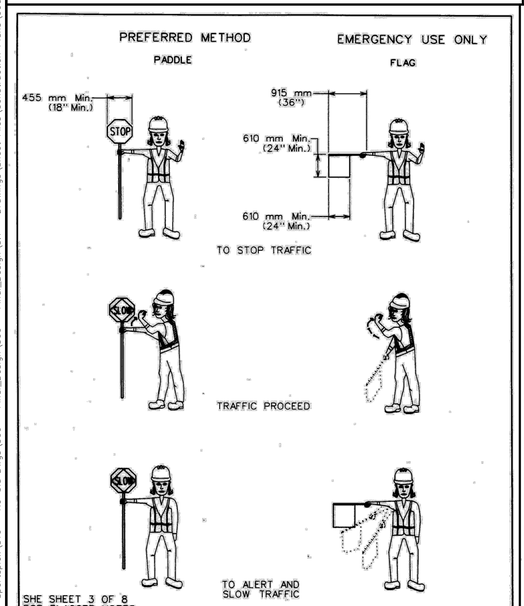

SHE SHEET 3 OF 8 FOR FLAGGER NOTES.

CITY OF AUSTIN DEPARTMENT OF PUBLIC WORKS	USE OF HAND SIGNALING DEVICES	
Bill Gardner 3/13/06 ADOPTED	THE ARCHITECT/ENGINEER ASSUMES RESPONSIBILITY FOR APPROPRIATE USE OF THIS STANDARD.	STANDARD NO. 804S-2 7 OF 8

Typical Transition Lengths and Suggested Maximum Spacing of Devices

Speed KMPH	Posted Speed MPH	Formula	Minimum Desirable Taper Lengths (L) Meters (Feet) 3.0(10) Offset Meters (feet)	3.3(11) Offset Meters (feet)	3.6(12) Offset Meters (feet)	Suggested Max. Device Spacing On a taper Meters (feet)	Suggested Sign Spacing Meters (Feet) On a tangent Meters (feet)	"X" Dimension
50	30	L=WS²/60	45 (150)	50 (165)	55 (180)	9 (30)	15-20 (60-75)	40 (120)
55	35		65 (205)	70 (225)	75 (245)	10 (35)	25-25 (70-90)	50 (160)
65	40		80 (265)	90 (295)	100 (320)	12 (40)	25-30 (80-100)	75 (240)
70	45	L=WS	135 (450)	150 (495)	165 (540)	13 (45)	25-30 (90-110)	100 (320)
80	50		150 (500)	165 (550)	180 (600)	15 (50)	30-35 (100-125)	120 (400)
90	55		165 (550)	185 (605)	200 (660)	16 (55)	35-40 (110-140)	150 (500)
95	60		180 (600)	200 (660)	220 (720)	18 (60)	40-45 (120-150)	180 (600)
105	65		195 (650)	215 (715)	235 (780)	19 (65)	40-50 (130-165)	210 (700)
115	70		215 (700)	235 (770)	255 (840)	21 (70)	45-55 (140-175)	240 (800)

LEGEND
- Channelizing devices
- Trailer mounted flashing arrow board
- Flagger

TRAFFIC DETOUR NOTES:
1. "STREET CLOSED" AND "STREET CLOSED TO THRU TRAFFIC" MAY BE USED IN PLACE OF "ROAD CLOSED" AND "ROAD CLOSED TO THRU TRAFFIC".
2. THE USE OF A STREET SIGN NAME NAME MOUNTED WITH THE M4-9 DETOUR SIGN** IS REQUIRED. THE STREET NAME PLATE SHOULD BE PLACED ABOVE THE DETOUR SIGN. THE PLATE MAY HAVE EITHER A WHITE-ON-GREEN OR A BLACK-ON-ORANGE LEGEND.
3. ADDITIONAL "DO NOT ENTER SIGNS" MAY BE DESIRABLE AT INTERSECTIONS WITH INTERVENING STREETS.
4. A M4-9 DETOUR SIGN** WITH AN ADVANCE TURN ARROW MAY BE USED IN ADVANCE OF A TURN. ON MULTI-LANE STREETS, SUCH SIGNS SHOULD BE USED.
5. M4-9 DETOUR SIGNS** MAY BE LOCATED ON THE FAR SIDE OF INTERSECTIONS.

** TEXAS MANUAL ON UNIFORM TRAFFIC CONTROL DEVICES

CITY OF AUSTIN DEPARTMENT OF PUBLIC WORKS	TYPICAL LENGTHS & SPACING OF DEVICES, LEGEND and GENERAL NOTES	
Bill Gardner 3/13/06 ADOPTED	THE ARCHITECT/ENGINEER ASSUMES RESPONSIBILITY FOR APPROPRIATE USE OF THIS STANDARD.	STANDARD NO. 804S-2 8 OF 8

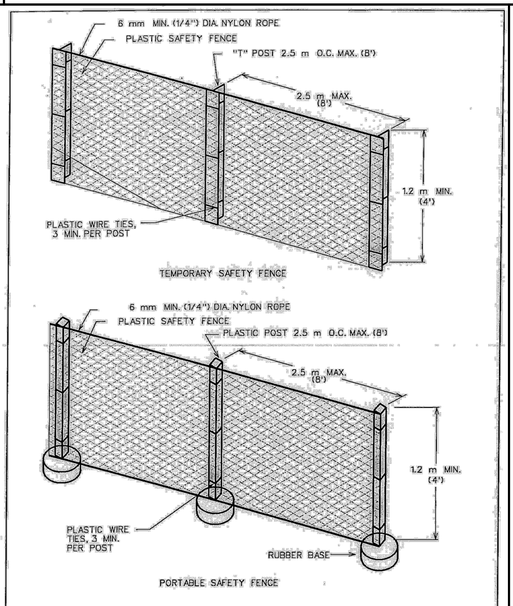

CITY OF AUSTIN DEPARTMENT OF PUBLIC WORKS	SAFETY FENCE	
4/3/05 ADOPTED	THE ARCHITECT/ENGINEER ASSUMES RESPONSIBILITY FOR APPROPRIATE USE OF THIS STANDARD.	STANDARD NO. 804S-4 1 OF 9

1. SAFETY FENCE SHALL BE USED TO PROTECT ALL EXCAVATIONS IN THE RIGHT-OF-WAY.
2. SAFETY FENCES SHALL BE USED TO SEPARATE CONSTRUCTION ACTIVITIES FROM PEDESTRIAN.
3. ALL SAFETY FENCING SHALL BE PLASTIC, 1,200 mm (48") MINIMUM HEIGHT AND ORANGE IN COLOR.
4. SAFETY FENCE USED WITHIN THE ROADWAY SHALL BE REFLECTORIZED WITH A MINIMUM OF TWO (2) STRIPS OF RETROREFLECTIVE MATERIAL, A MINIMUM OF 25 mm (1") WIDE, THE LENGTH OF THE FENCE OR DELINEATED BY CHANNELIZING DEVICES.
5. SAFETY FENCE USED TO SEPARATE SIDEWALKS FROM CONSTRUCTION ACTIVITIES SHALL HAVE MINIMUM ENCROACHMENT TO THE SIDEWALK.
6. AS A MINIMUM, SAFETY FENCING IS REQUIRED IN AREAS ADJACENT TO EXCAVATIONS GREATER THAN OR EQUAL TO 150 mm (6").
7. SAFETY FENCING SHALL BE PAID FOR UNDER ITEM 8035, "BARRICADES, SIGNS AND TRAFFIC HANDLING", PAY ITEM NO. 8035-SF.
8. PORTABLE SAFETY FENCE MOUNTS SHALL BE APPROVED BY THE TRANSPORTATION DIVISION PRIOR TO CONSTRUCTION.

CITY OF AUSTIN DEPARTMENT OF PUBLIC WORKS	SAFETY FENCE	
4/3/05 ADOPTED	THE ARCHITECT/ENGINEER ASSUMES RESPONSIBILITY FOR APPROPRIATE USE OF THIS STANDARD.	STANDARD NO. 804S-4 2 OF 9

SITE DEVELOPMENT NUMBER 2025-476

REV. NO.	DATE	DESCRIPTION

PROJECT MANAGER:	PK
DESIGNED BY:	PG/RM
CHECKED BY:	DCS/JTH
DRAWN BY:	PG/RM
DCS PROJECT NO:	20101597

DCS ENGINEERING, LLC
1101 S. CAPITAL OF TEXAS HIGHWAY, BUILDING G-100
AUSTIN, TX 78746
TEL: (512) 614-6171
T.B.P.E. FIRM NO. F-13162

BudaTx breathe easy here™

BUDA SPORTSPLEX - PHASE I

STATE OF TEXAS
J. PATRICIO GALINDO RANGEL
154316
LICENSED PROFESSIONAL ENGINEER
08/04/25

GENERAL

CIVIL - TRAFFIC CONTROL DETAILS - SHEET NO. 2

DATE: JULY 2025
SCALE: AS NOTED
DRAWING: 00C-27

FILENAME: Z:\Projects 1551-1599\20101597 - Buda - Sportsplex\510 - Re-bid Dwgs\500 - Final_Design\500 - Final_Design\5.1 - Drawings\Sheet Files\Construction Plans\00C-27.dwg, LAST SAVED ON: Aug 01 2025 1:21pm, PLOTTED BY: RMALDONADO, ON: Aug 07 2025 8:11am, CFG:

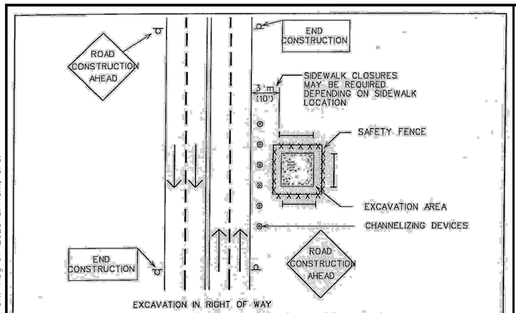

EXCAVATION IN RIGHT OF WAY

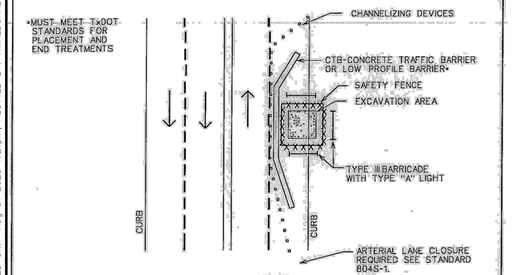

EXCAVATION IN ROADWAY

CITY OF AUSTIN DEPARTMENT OF PUBLIC WORKS	LARGE EXCAVATION	
ADOPTED 4/3/07	THE ARCHITECT/ENGINEER ASSUMES RESPONSIBILITY FOR APPROPRIATE USE OF THIS STANDARD.	STANDARD NO. 804S-4 3 OF 9

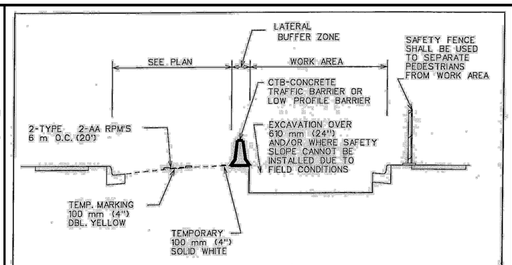

POSITIVE BARRIERS
TYPICAL CROSS SECTION

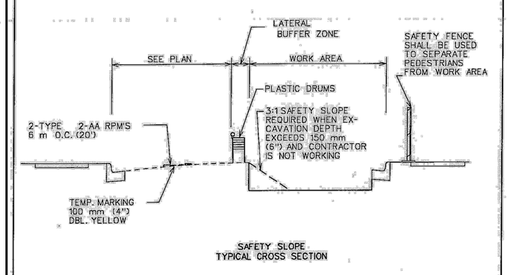

SAFETY SLOPE
TYPICAL CROSS SECTION

CITY OF AUSTIN DEPARTMENT OF PUBLIC WORKS	WORK AREA PROTECTION	
ADOPTED 4/3/07	THE ARCHITECT/ENGINEER ASSUMES RESPONSIBILITY FOR APPROPRIATE USE OF THIS STANDARD.	STANDARD NO. 804S-4 4 OF 9

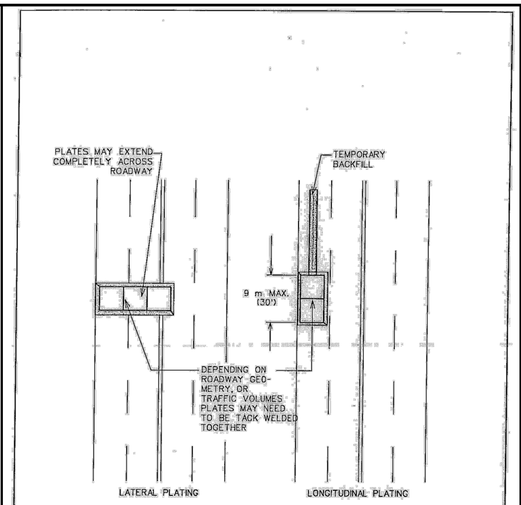

CITY OF AUSTIN DEPARTMENT OF PUBLIC WORKS	STEEL PLATING	
ADOPTED 4/3/07	THE ARCHITECT/ENGINEER ASSUMES RESPONSIBILITY FOR APPROPRIATE USE OF THIS STANDARD.	STANDARD NO. 804S-4 5 OF 9

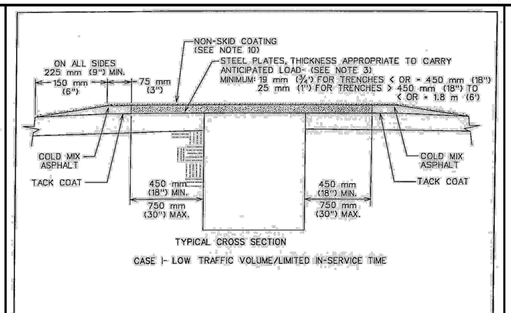

TYPICAL CROSS SECTION

CASE I- LOW TRAFFIC VOLUME/LIMITED IN-SERVICE TIME

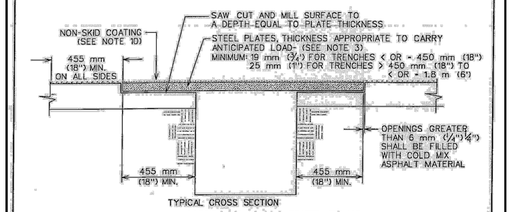

TYPICAL CROSS SECTION

CASE II- EXTENDED IN-SERVICE PLATING AND/OR HEAVILY-TRAFFICKED ROADS/STREETS (HMAC PAVEMENTS ONLY)

CITY OF AUSTIN DEPARTMENT OF PUBLIC WORKS	STEEL PLATING	
ADOPTED 4/3/09	THE ARCHITECT/ENGINEER ASSUMES RESPONSIBILITY FOR APPROPRIATE USE OF THIS STANDARD.	STANDARD NO. 804S-4 6 OF 9

NOTES:

1. WHERE TRAFFIC MUST CROSS TRENCHES, THE CONTRACTOR SHALL PROVIDE SUITABLE BRIDGES.
2. THE USE OF STEEL PLATES SHALL BE APPROVED BY THE RIGHT OF WAY MANAGEMENT DIVISION OF WATERSHED PROTECTION AND DEVLOPMENT DEPARTMENT PRIOR TO INITIATION OF CONSTRUCTION.
3. THE THICKNESS OF PLATES FOR TRENCH WIDTHS EXCEEDING 1.8 m (6') SHALL BE ESTABLISHED IN AN ANALYSIS COMPLETED BY A LICENSED PROFESSIONAL ENGINEER, REGISTERED IN THE STATE OF TEXAS. THE ANALYSIS SHALL BE BASED ON HS-20 TRAFFIC LOADING WITH A MAXIMUM PLATE DEFLECTION OF 50 mm (½") WHEN EXPERIENCING SAID LOADING. FOR SITUATIONS WHERE MULTIPLE LAYERS OF PLATES (OR STACKED PLATES) ARE TO BE EMPLOYED, THE SEAMS (IE. THE INTERFACE BETWEEN PLACED SIDE-BY-SIDE) OF THE UPPER LAYER SHALL BE PLACED PERPENDICULAR TO THE SEAMS OF THE UNDERLYING PLATES.
4. WHEN APPROVED, THE TYPE OF PLATE INSTALLATION SHALL BE BASED ON THE ANTICIPATED LENGTH OF TIME THE PLATE WILL BE IN SERVICE:
   CASE I: A CASE I INSTALLATION SHALL APPLY FOR NO LONGER THAN A 2 WEEK PERIOD.
   CASE II: A CASE II INSTALLATION SHALL APPLY FOR NO LONGER THAN 2 WEEK PERIOD.
5. THE TOPSIDE OF THE STEEL PLATE SHALL BE FLAT AND FREE OF ANY CLIPS, CHAINS, ATTACHMENTS, WELDMENTS OR SURFACE IRREGULARITIES.
6. PLATES WITH A PERMANENT DISPLACEMENT (I.E. DISPLACEMENT ANYWHERE ON THE SURFACE OF THE PLATE WITH RESPECT TO A PLANE FORMED BY THE OUTSIDE EDGES) THAT EXCEEDS 12 mm (½") SHALL NOT BE USED FOR PLATING PURPOSES. PLATES THAT DEVELOP A PERMANENT DISPLACEMENT EXCEEDING 12 mm (½") DURING SERVICE SHALL BE REMOVED AND REPLACED.
7. THE PLATES SHALL BE PROVIDED WITH APPROPRIATE NUMBER OF KEYHOLE SLOTS OR CIRCULAR HOLES FOR HANDLING, LIFTING, INSTALLATION AND REMOVAL PURPOSES.
8. THE CONTRACTOR SHOULD AVOID USING A LONG SERIES OF PLATES THAT RUN PARALLEL TO VEHICULAR TRAFFIC WHEELS PATHS.
9. ADDITIONAL METHODS OF SECURING PLATES MAY BE REQUIRED DEPENDING ON FIELD CONDITIONS.
10. FOR PLATES 1.8 M (6') OR GREATER IN DIRECTION OF TRAFFIC, A NON-SKID COATING SHOULD BE APPLIED TO THE ENTIRE SURFACE AREA OF ALL PLATES, AS WELL AS ADJACENT AREAS. THE NON-SKID COATING SHALL BE TCA (TEXTURED COATING OF AMERIGA, INC.) STRATA-GRIP DECK COATING SYSTEM: SLIPFIX, INC. SRS (SLIP RESISTANCE PROTECTION SURFACE) OR AN EQUIVALENT PRODUCT APPROVED BY THE ENGINEER OR DESIGNATED REPRESENTATIVE.

CITY OF AUSTIN DEPARTMENT OF PUBLIC WORKS	STEEL PLATING	
ADOPTED 4/3/07	THE ARCHITECT/ENGINEER ASSUMES RESPONSIBILITY FOR APPROPRIATE USE OF THIS STANDARD.	STANDARD NO. 804S-4 7 OF 9

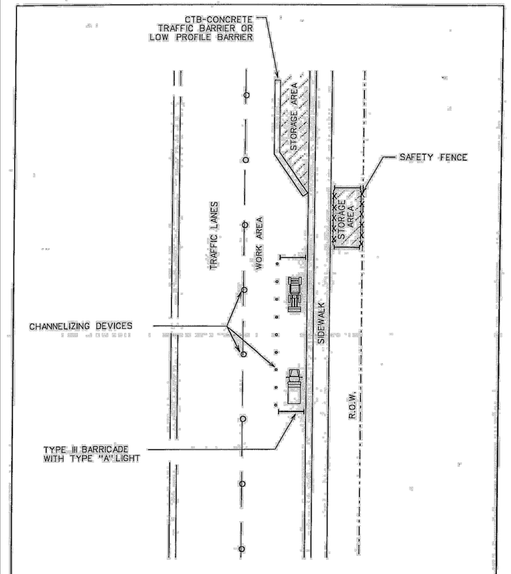

CITY OF AUSTIN DEPARTMENT OF PUBLIC WORKS	MATERIAL AND EQUIPMENT STORAGE	
ADOPTED 4/3/07	THE ARCHITECT/ENGINEER ASSUMES RESPONSIBILITY FOR APPROPRIATE USE OF THIS STANDARD.	STANDARD NO. 804S-4 8 OF 9

1. STORAGE OF EQUIPMENT AND MATERIALS SHALL BE RESTRICTED TO LOCATIONS WHERE DRIVER SIGHT DISTANCES TO TRAFFIC, PEDESTRIANS, BUSINESSES AND SIDE STREET INTERSECTIONS ARE NOT OBSTRUCTED OR WHERE AN UNSIGHTLY APPEARANCE, AS DETERMINED BY THE ENGINEER, WILL NOT EXIST.
2. EQUIPMENT MUST BE PARKED AS FAR AWAY FROM THE TRAVELWAYS AS PRACTICAL.
3. TOTAL AREA USED FOR EQUIPMENT STORAGE SHALL BE KEPT TO A MINIMUM.
4. ALL MATERIALS STORED IN THE RIGHT-OF-WAY MUST BE MAINTAINED IN A NEAT AND ORGANIZED MANNER.
5. MATERIALS STORED MAY NOT BE MORE THAN 915 mm (36") IN HEIGHT.
6. ALL MATERIALS STORED MUST BE USED WITHIN THREE (3) DAYS.

CITY OF AUSTIN DEPARTMENT OF PUBLIC WORKS	MATERIAL AND EQUIPMENT STORAGE	
ADOPTED 4/3/07	THE ARCHITECT/ENGINEER ASSUMES RESPONSIBILITY FOR APPROPRIATE USE OF THIS STANDARD.	STANDARD NO. 804S-4 9 OF 9

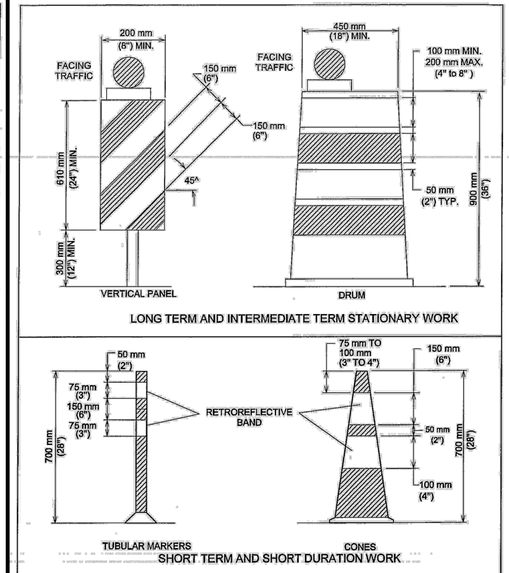

SEE STANDARD 804S-5
SHEET 12 OF 13 AND SHEET 13 OF 13
FOR GENERAL NOTES AND DEVICE SPACING.

CITY OF AUSTIN DEPARTMENT OF PUBLIC WORKS	CHANNELIZING DEVICES	
ADOPTED 11/4/10	THE ARCHITECT/ENGINEER ASSUMES RESPONSIBILITY FOR APPROPRIATE USE OF THIS STANDARD.	STANDARD NO. 804S-5 1 OF 13

SITE DEVELOPMENT NUMBER 2025-476

REV. NO.	DATE	DESCRIPTION

PROJECT MANAGER:	PK
DESIGNED BY:	PG/RM
CHECKED BY:	DCS/JTH
DRAWN BY:	PG/RM
DCS PROJECT NO:	20101597

DCS ENGINEERING, LLC
1101 S. CAPITAL OF TEXAS HIGHWAY, BUILDING G-100
AUSTIN, TX 78746

TEL: (512) 614-6171
T.B.P.E. FIRM NO. F-13162

BUDA SPORTSPLEX - PHASE I

STATE OF TEXAS
J. PATRICIO GALINDO RANGEL
154316
LICENSED PROFESSIONAL ENGINEER
08/04/25

GENERAL

CIVIL - TRAFFIC CONTROL DETAILS - SHEET NO. 3

DATE: JULY 2025

SCALE: AS NOTED

DRAWING: 00C-28

FILENAME: Z:\Projects 1551-1599\20101597 - Buda - Sportsplex\510 - Re-bid Dwgs\500 - Final_Design\500 - Final_Design\5.1 - Drawings\Sheet Files\Construction Plans\00C-28.dwg, LAST SAVED ON: Aug 01 2025 1:21pm, PLOTTED BY: RMALDONADO, ON: Aug 07 2025 8:11am, CFG:

CHANNELIZING DEVICES

1. ALL CHANNELIZING DEVICES SHALL HAVE WARNING LIGHTS OR LARGE REFLECTORS WHEN USED AT NIGHT. FLASHING WARNING LIGHTS MAY BE PLACED ON CHANNELIZING DEVICES USED SINGULARLY OR IN GROUPS TO MARK A SPOT CONDITION. WARNING LIGHTS ON CHANNELIZING DEVICES USED IN A SERIES SHALL BE STEADY-BURN. CHANNELIZING DEVICES IN TAPERS AT NIGHT SHALL HAVE TYPE C WARNING LIGHTS.
2. THE RETROREFLECTIVE MATERIAL USED ON CHANNELIZING DEVICES SHALL HAVE A SMOOTH, SEALED OUTER SURFACE.
3. THE NAME AND TELEPHONE NUMBER OF THE AGENCY, CONTRACTOR OR SUPPLIER SHALL BE SHOWN ON THE NON-RETROREFLECTIVE SURFACE OF ALL CHANNELIZING DEVICES. THE LETTERS AND NUMBERS SHALL BE A NON-RETROREFLECTIVE COLOR AND NOT OVER 50 mm (2") IN HEIGHT.
4. PARTICULAR ATTENTION SHOULD BE GIVEN TO ASSURE THAT CHANNELIZING DEVICES ARE MAINTAINED AND KEPT CLEAN, VISIBLE AND PROPERLY POSITIONED AT ALL TIMES. DEVICES SHALL BE REPLACED THAT ARE DAMAGED AND HAVE LOST A SIGNIFICANT AMOUNT OF THEIR RETROREFLECTIVITY AND EFFECTIVENESS.

CONES

CONES SHALL PREDOMINANTLY BE ORANGE, FLUORESCENT RED-ORANGE, OR FLUORESCENT YELLOW-ORANGE IN COLOR, NOT LESS THAN 70 mm (28") IN HEIGHT, AND SHALL BE MADE OF A MATERIAL THAT CAN BE STRUCK WITHOUT DAMAGING VEHICLES ON IMPACT. FOR NIGHT TIME USE, CONES SHALL BE RETROREFLECTIVE OR EQUIPPED WITH LIGHTING DEVICES FOR MAXIMUM VISIBILITY. RETROREFLECTION OF CONES SHALL BE PROVIDED BY A WHITE BAND 150 mm (6") WIDE, NO MORE THAN 75 TO 100 mm (3 TO 4") FROM THE TOP OF THE CONE, AND AN ADDITIONAL 100 mm (4") WHITE BAND A MINIMUM OF 50 mm (2") BELOW THE 150 mm (6") BAND. TRAFFIC CONES ARE NORMALLY USED FOR SHORT-TERM STATIONARY AND SHORT DURATION WORK. HOWEVER, CONES MAY BE USED FOR INTERMEDIATE-TERM STATIONARY WORK AT NIGHT, IF THE SITE IS CONTINUOUSLY MANNED.

TUBULAR MARKERS

TUBULAR MARKERS SHALL PREDOMINANTLY BE ORANGE IN COLOR, NOT LESS THAN 700 mm (28") IN HEIGHT, A MINIMUM 50 mm (2") WIDE WHEN FACING TRAFFIC AND MADE OF A MATERIAL THAT CAN BE STRUCK WITHOUT DAMAGING VEHICLES. FOR NIGHT TIME USE, TUBULAR MARKERS SHALL BE RETROREFLECTIVE PROVIDED BY TWO (2) 75 mm (3") WIDE WHITE BANDS PLACED A MAXIMUM OF 50 mm (2") FROM THE TOP, WITH A MAXIMUM OF 150 mm (6") BETWEEN BANDS. TUBULAR MARKERS ARE NORMALLY USED FOR SHORT-TERM STATIONARY AND SHORT DURATION WORK, HOWEVER, TUBULAR MARKERS MAY BE USED FOR INTERMEDIATE-TERM STATIONARY WORK AT NIGHT, IF THE SITE IS CONTINUOUSLY MANNED.

VERTICAL PANELS

VERTICAL PANELS SHALL BE 200 TO 300 mm (8 TO 12") WIDE AND AT LEAST 600 mm (24") IN HEIGHT. THEY SHALL HAVE ORANGE AND WHITE STRIPES, AND BE RETROREFLECTIVE. PANEL STRIPE WIDTHS SHALL BE 150 mm (6") EXCEPT WHERE PANEL HEIGHTS ARE LESS THAN 900 mm (36"), WHEN 100 mm (4") STRIPES MAY BE USED. IF USED FOR TWO-WAY TRAFFIC, BACK-TO-BACK PANELS SHALL BE USED.

DRUMS

1. DRUMS USED FOR TRAFFIC WARNING OR CHANNELIZATION SHALL BE CONSTRUCTED OF LIGHT-WEIGHT FLEXIBLE AND DEFORMABLE MATERIALS AND BE A MINIMUM OF 900 mm (36") IN HEIGHT, AND HAVE AT LEAST 450 mm (18") MINIMUM WIDTH, REGARDLESS OF ORIENTATION. STEEL DRUMS SHALL NOT BE USED. THE MARKINGS ON DRUMS SHALL BE HORIZONTAL, CIRCUMFERENTIAL, ALTERNATING ORANGE AND WHITE RETROREFLECTIVE STRIPES 100 TO 200 mm (4 TO 8") WIDE. EACH DRUM SHALL HAVE A MINIMUM OF TWO (2) ORANGE AND TWO (2) WHITE STRIPES. ANY NON-RETROREFLECTIVE SPACES BETWEEN THE HORIZONTAL ORANGE AND WHITE STRIPES, SHALL NOT EXCEED 50 mm (2") WIDE. DRUMS SHALL HAVE CLOSED TOPS THAT WILL NOT ALLOW COLLECTION OF ROADWORK OR OTHER DEBRIS.
2. DRUMS SHOULD NOT BE WEIGHTED WITH SAND, WATER OR ANY MATERIAL TO AN EXTENT THAT WOULD MAKE THE HAZARDOUS TO MOTORISTS, PEDESTRIANS OR WORKERS. WHEN THEY ARE USED IN REGIONS SUSCEPTIBLE TO FREEZING, THEY SHOULD HAVE DRAINAGE HOLES IN THE BOTTOM SO WATER WILL NOT ACCUMULATE AND FREEZE,CAUSING A HAZARD IF STRUCK BY A MOTORIST. BALLAST SHALL NOT BE PLACED ON TOP OF THE DRUM.

CITY OF AUSTIN — DEPARTMENT OF PUBLIC WORKS
CHANNELIZING DEVICES
ADOPTED 1/4/10
THE ARCHITECT/ENGINEER ASSUMES RESPONSIBILITY FOR APPROPRIATE USE OF THIS STANDARD.
STANDARD NO. 804S-5 2 OF 13

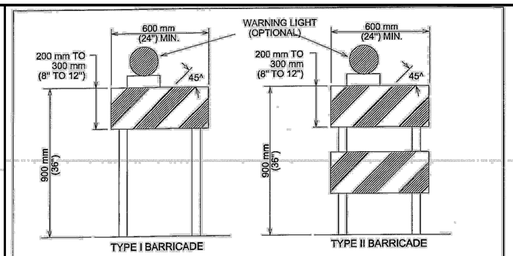

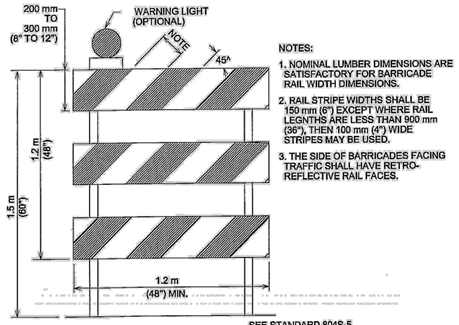

NOTES:
1. NOMINAL LUMBER DIMENSIONS ARE SATISFACTORY FOR BARRICADE RAIL WIDTH DIMENSIONS.
2. RAIL STRIPE WIDTHS SHALL BE 150 mm (6") EXCEPT WHERE RAIL LEGNTHS ARE LESS THAN 900 mm (36"), THEN 100 mm (4") WIDE STRIPES MAY BE USED.
3. THE SIDE OF BARRICADES FACING TRAFFIC SHALL HAVE RETRO-REFLECTIVE RAIL FACES.

SEE STANDARD 804S-5
SHEET 12 OF 13 AND SHEET 13 OF 13
FOR GENERAL NOTES AND DEVICE SPACING.

CITY OF AUSTIN — DEPARTMENT OF PUBLIC WORKS
BARRICADES
ADOPTED 1/4/10
THE ARCHITECT/ENGINEER ASSUMES RESPONSIBILITY FOR APPROPRIATE USE OF THIS STANDARD.
STANDARD NO. 804S-5 3 OF 13

BARRICADES

1. BARRICADES SHALL BE OF THREE TYPES: TYPE I, TYPE II OR TYPE III.
2. STRIPES ON BARRICADE RAILS SHALL BE ALTERNATING ORANGE AND WHITE RETRO-REFLECTIVE STRIPES (SLOPING DOWNWARD AT AN ANGLE OF 45 DEGREES IN THE DIRECTION TRAFFIC IS TO PASS). THE STRIPES SHALL BE 150 mm (6") WIDE, EXCEPT WHERE RAIL LENGTHS ARE LESS THAN 900 mm (36"), WHEN 100 mm (4") WIDE STRIPES MAY BE USED.
3. WHERE A BARRICADE EXTENDS ENTIRELY ACROSS A ROADWAY, THE SURFACE STRIPES SHOULD SLOPE DOWNWARD IN THE DIRECTION TOWARD WHICH TRAFFIC MUST TURN. WHERE BOTH RIGHT AND LEFT TURNS ARE PROVIDED, THE STRIPES MAY SLOPE DOWN-WARD IN BOTH DIRECTIONS FROM THE CENTER OF THE BARRICADE OR BARRICADES. WHERE NO TURNS ARE INTENDED, THE STRIPES SHOULD SLOPE DOWNWARD TOWARD THE CENTER OF THE BARRICADE OR BARRICADES.
4. BARRICADE RAILS SHOULD BE SUPPORTED IN A MANNER THAT WILL ALLOW THEM TO BE SEEN BY THE MOTORIST AND PROVIDE A STABLE SUPPORT NOT EASILY BLOWN OVER BY THE WIND OR TRAFFIC. FOR TYPE I BARRICADES, THE SUPPORT MAY INCLUDE OTHER UNSTRIPED HORIZONTAL PANELS NECESSARY TO PROVIDE STABILITY.
5. BARRICADES ARE LOCATED ADJACENT TO TRAFFIC AND ARE THEREFORE SUBJECT TO IMPACT WITH ERRANT VEHICLES. BECAUSE OF THEIR VULNERABLE POSITION AND THE HAZARD THEY COULD CREATE, THEY SHOULD BE CONSTRUCTED OF LIGHTWEIGHT MATERIALS AND HAVE NO RIGID STAY BRACING FOR A-FRAME DESIGNS. ALL BARRICADE SYSTEMS SHOULD BE CRASHWORTHY.
6. ON HIGH-SPEED EXPRESSWAYS OR IN OTHER SITUATION WHERE BARRICADES MAY BE SUSCEPTIBLE TO OVERTURING IN THE WIND, SANDBAGS SHOULD BE USED FOR BALLASTING. SANDBAGS MAY BE PLACED ON PARTS OF THE FRAME OR STAYS TO PROVIDE THE REQUIRED BALLAST BUT SHALL NOT BE PLACED ON TOP OF ANY STRAIGHT RAIL. BARRICADES SHALL NOT BE BALLASTED BY HEAVY OBJECTS SUCH AS ROCKS OR CHUNKS OF CONCRETE.

CITY OF AUSTIN — DEPARTMENT OF PUBLIC WORKS
BARRICADES
ADOPTED 1/4/10
THE ARCHITECT/ENGINEER ASSUMES RESPONSIBILITY FOR APPROPRIATE USE OF THIS STANDARD.
STANDARD NO. 804S-5 4 OF 13

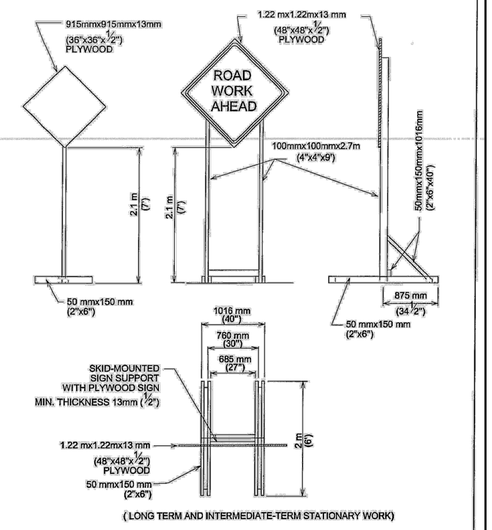

(LONG TERM AND INTERMEDIATE-TERM STATIONARY WORK)

TEMPORARY SIGN SUPPORT

SEE STANDARD 804S-5
SHEET 12 OF 13 AND SHEET 13 OF 13
FOR GENERAL NOTES AND DEVICE SPACING.

CITY OF AUSTIN — DEPARTMENT OF PUBLIC WORKS
TRAFFIC CONTROL SIGNS
ADOPTED 1/4/10
THE ARCHITECT/ENGINEER ASSUMES RESPONSIBILITY FOR APPROPRIATE USE OF THIS STANDARD.
STANDARD NO. 804S-5 5 OF 13

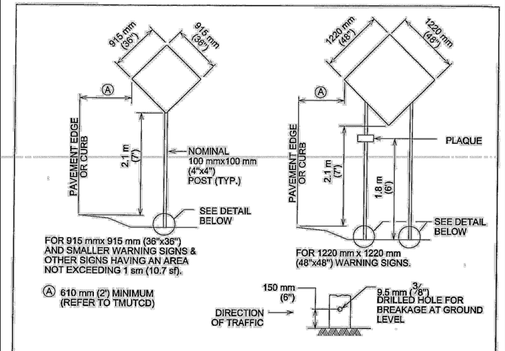

WOOD POST SIGN SUPPORT USED AS FIXED SIGN SUPPORTS

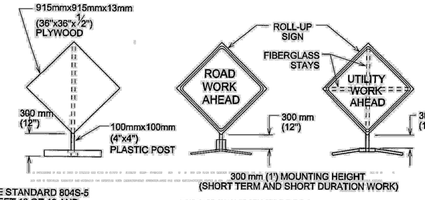

PORTABLE SIGN SUPPORT

SEE STANDARD 804S-5
SHEET 12 OF 13 AND
SHEET 13 OF 13 FOR
GENERAL NOTES AND DEVICE SPACING.

CITY OF AUSTIN — DEPARTMENT OF PUBLIC WORKS
TRAFFIC CONTROL SIGNS
ADOPTED 1/4/10
THE ARCHITECT/ENGINEER ASSUMES RESPONSIBILITY FOR APPROPRIATE USE OF THIS STANDARD.
STANDARD NO. 804S-5 6 OF 13

1. WARNING SIGNS SHALL BE ORANGE, FLUORESCENT RED-ORANGE OR FLUORESCENT YELLOW-ORANGE IN COLOR. THE FLUORESCENT VERSIONS OF ORANGE PROVIDE HIGHER CONSPICUITY THAN STANDARD ORANGE, ESPECIALLY DURING TWILIGHT. ALL SIGNS USED AT NIGHT SHALL BE EITHER RETRORE-FLECTIVE, WITH A MATERIAL THAT HAS A SMOOTH, SEALED OUTER SURFACE, OR ILLUMINATED TO SHOW SIMILAR SHAPE AND COLOR BOTH DAY AND NIGHT. SIGN ILLUMINATION MAY BE EITHER IN-TERNAL OR EXTERNAL. ROADWAY LIGHTING DOES NOT MEET THE REQUIREMENTS FOR SIGN ILLUMINATION.
2. TYPE A FLASHING WARNING LIGHTS MAY BE USED IN CONJUNCTION WITH SIGNS AT NIGHT. STANDARD ORANGE FLAGS MAY BE USED FOR DAY TIME OPERATIONS. HOWEVER, NEITHER LIGHTS NOR FLAGS MAY BLOCK THE SIGN LEGEND.
3. SIGNS SHOULD BE LOCATED ON THE RIGHT-HAND SIDE OF THE ROADWAY. WHEN SPECIAL EMPHASIS IS NEEDED, SIGNS MAY BE PLACED ON BOTH THE LEFT AND RIGHT SIDES OF ROADWAY. SIGNS SHALL BE PLACED ON BOTH THE LEFT AND RIGHT SIDES OF ONE-WAY OR DIVIDED ROADWAYS. SIGNS USED FOR LONG-TERM STATIONARY AND INTERMEDIATE-TERM STATIONARY WORK SHALL BE MOUNTED AT A HEIGHT OF AT LEAST 2.1 m (7'), MEASURED FROM THE BOTTOM OF THE SIGN. THE HEIGHT TO THE BOTTOM OF A SECONDARY SIGN MOUNTED BELOW ANOTHER SIGN MAY BE 0.3 m (1') LESS THAN THE APPROPRIATE HEIGHT ABOVE.
4. SIGNS MAY BE MOUNTED ON PORTABLE SUPPORTS FOR SHORT-TERM, SHORT DURATION, MOBILE CON-DITIONS AND EMERGENCIES. SIGNS MOUNTED ON PORTABLE SUPPORTS SHALL BE AT A HEIGHT OF AT LEAST 0.3 m (1'), MEASURED FROM THE BOTTOM OF THE SIGN.
5. ALL SIGN SYSTEMS SHOULD BE CRASHWORTHY. NO SIGN MOUNTS SHALL BLOCK OR IMPEDE SIDEALKS UNLESS NO OTHER OPTION IS AVAILABLE. ONLY SANDBAGS SHOULD BE USED FOR BALLASTING SIGN MOUNTS.

TABLE VI-3 TYPICAL CONSTRUCTION WARNING SIGN SIZE AND SPACING

Roadway Class/ fication	Posted Speed	Sign Spacing ☆	Long-term Stationary Or Intermediate-term Stationary Approaching Warning Signs CW20 Series And CW22-1 Sign		Short-term Stationary Or Short Duration Approach Warning Signs CW22 Series		Other Warning Signs
			Standard	Minimum[1]	Standard	Minimum[1]	Standard
Conven.	KPH (MPH)	meter (feet)	mm (inches)	mm (inches)	mm (inches)	mm (inches)	mm (inches)
	50 (30)	40 (120)	1220x1220 (48x48)	915x915 (36x36)			
	55 (35)	60 (160)			915x915 (36x36)		915x915 (36x36)
	60 (40)	70 (240)					
	70 (45)	100 (320)		Use Standard Size		Use Standard Size	
	80 (50)	120 (400)					
	90 (55)	150 [2] (500)					
	100 (60)	180 [2] (600)			1220x1220 (48x48)		1220x1220 (48x48)
	105 (65)	210 [2] (700)					
	115 (70)	240 [2] (800)					
Exp. or Fwy	☆☆	☆☆ [3]	↓	↓	↓	↓	↓

☆ MINIMUM DISTANCE FROM WORK TO 1st ADVANCE WARNING SIGN AND/OR DISTANCE BETWEEN EACH ADDITIONAL SIGN.
☆☆ FOR TYPICAL SIGN SPACINGS ON EXPRESSWAYS AND FREEWAYS, REFER TO THE CURRENT ADDITION OF TMUTCD.
☆☆☆ SMALLER SIGN SIZES MAY BE USED WHERE SIGN DESIGNS HAVE NOT BEEN INCLUDED IN THE "STANDARD HIGHWAY SIGNS DESIGN MANUAL".

1. SPECIAL OR LARGER SIZE SIGNS MAY BE USED AS NECESSARY.
2. DISTANCE BETWEEN SIGNS SHOULD BE INCREASED AS REQUIRED TO HAVE 450 m (1500') OR MORE ADVANCE WARNING.
3. DISTANCE BETWEEN SIGNS SHOULD BE INCREASED AS REQUIRED TO HAVE A 0.8 km (½ MILE) OR MORE ADVANCE WARNING.
4. FOR USE ONLY ON SECONDARY ROADS OR CITY STREETS WHERE SPEEDS ARE LOW.

CITY OF AUSTIN — DEPARTMENT OF PUBLIC WORKS
TRAFFIC CONTROL SIGNS
ADOPTED 1/4/10
THE ARCHITECT/ENGINEER ASSUMES RESPONSIBILITY FOR APPROPRIATE USE OF THIS STANDARD.
STANDARD NO. 804S-5 7 OF 13

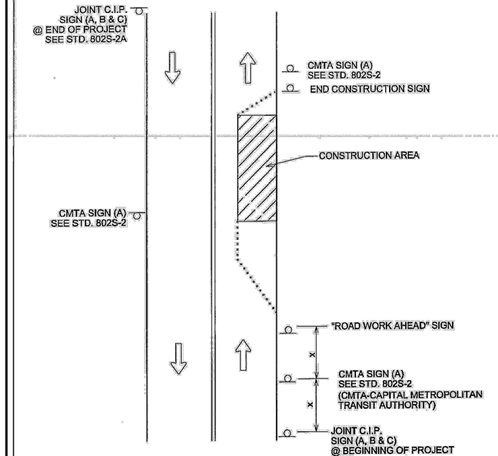

NOTES:
1. OTHER REQUIRED SIGNS NOT SHOWN FOR CLARITY.
2. "X" DISTANCES SAME AS STANDARD TABLE SHOWN ON SHEET 13 OF 13.

SEE STANDARD 804S-5
SHEET 12 OF 13 AND SHEET 13 OF 13
FOR GENERAL NOTES AND DEVICE SPACING.

CITY OF AUSTIN — DEPARTMENT OF PUBLIC WORKS
TYPICAL CMTA/C.I.P. SIGN LOCATIONS
ADOPTED 1/4/10
THE ARCHITECT/ENGINEER ASSUMES RESPONSIBILITY FOR APPROPRIATE USE OF THIS STANDARD.
STANDARD NO. 804S-5 8 OF 13

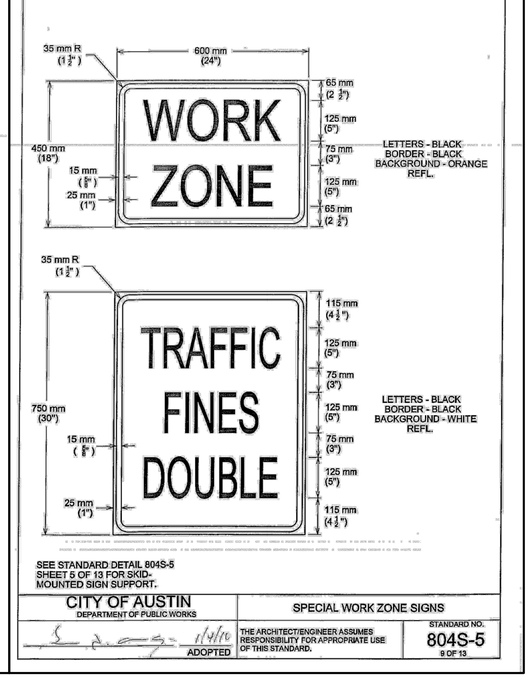

SEE STANDARD DETAIL 804S-5
SHEET 5 OF 13 FOR SKID-
MOUNTED SIGN SUPPORT.

CITY OF AUSTIN — DEPARTMENT OF PUBLIC WORKS
SPECIAL WORK ZONE SIGNS
ADOPTED 1/4/10
THE ARCHITECT/ENGINEER ASSUMES RESPONSIBILITY FOR APPROPRIATE USE OF THIS STANDARD.
STANDARD NO. 804S-5 9 OF 13

SITE DEVELOPMENT NUMBER 2025-476

REV. NO.	DATE	DESCRIPTION

PROJECT MANAGER:	PK
DESIGNED BY:	PG/RM
CHECKED BY:	DCS/JTH
DRAWN BY:	PG/RM
DCS PROJECT NO:	20101597

DCS ENGINEERING, LLC
1101 S. CAPITAL OF TEXAS HIGHWAY, BUILDING G-100
AUSTIN, TX 78746
TEL: (512) 614-6171
T.B.P.E. FIRM NO. F-13162

BudaTx breathe easy here™

BUDA SPORTSPLEX - PHASE I

STATE OF TEXAS — J. PATRICIO GALINDO RANGEL — 154316 — LICENSED PROFESSIONAL ENGINEER
08/04/25

GENERAL

CIVIL - TRAFFIC CONTROL DETAILS - SHEET NO. 4

DATE: JULY 2025
SCALE: AS NOTED
DRAWING: 00C-29

FILENAME: Z:\Projects 1551-1599\20101597 - Buda - Sportsplex\510 - Re-bid Dwgs\500 - Final_Design\500 - Final_Design\5.1 - Drawings\Sheet Files\Construction Plans\00C-29.dwg, LAST SAVED ON: Aug 01 2025 1:21pm, PLOTTED BY: RMALDONADO, ON: Aug 07 2025 8:12am, CFG:

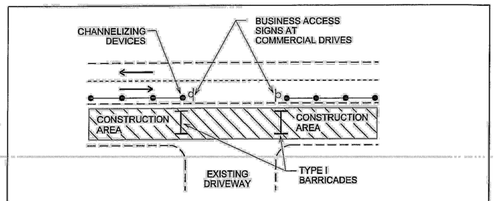

DRIVEWAY ACCESS BARRICADE DETAIL

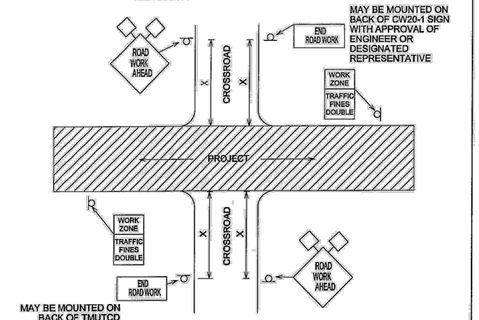

CROSSROAD SIGNING AND BARRICADING

SEE STANDARD 804S-5 SHEET 12 OF 13 AND SHEET 13 OF 13 FOR GENERAL NOTES AND DEVICE SPACING.

CITY OF AUSTIN DEPARTMENT OF PUBLIC WORKS	SIGNING AND BARRICADING CROSSROAD & DRIVEWAY	
1/4/10 ADOPTED	THE ARCHITECT/ENGINEER ASSUMES RESPONSIBILITY FOR APPROPRIATE USE OF THIS STANDARD.	STANDARD NO. 804S-5 11 OF 13

1. ALL TRAFFIC CONTROL DEVICES, SIGNS, BARRICADES AND WARNING SIGNS SHALL BE FURNISHED, PLACED, CONSTRUCTED AND MAINTAINED IN THE APPROPRIATE TYPES AND SIZES AND FLAGGER OPERATIONS EXECUTED IN ACCORDANCE WITH THE CURRENT EDITION OF THE TEXAS MANUAL ON UNIFORM CONTROL DEVICES (TMUTCD), THE CITY OF AUSTIN STANDARD SPECIFICATIONS SERIES 800 AND THE CITY OF AUSTIN TRANSPORTATION CRITERIA MANUAL, OR AS DIRECTED BY THE ENGINEER OR DESIGNATED REPRESENTATIVE. IF A CONFLICT ARISES THEN THE CITY OF AUSTIN TRANSPORTATION CRITERIA MANUAL SHALL CONTROL UNLESS OTHERWISE INSTRUCTED BY THE ENGINEER OR DESIGNATED REPRESENTATIVE.
2. THE CONTRACTOR SHALL NOTIFY THE TRANSPORTATION DIVISION OF THE DEPARTMENT OF PUBLIC WORKS AT 974-7024 NO LATER THAN THE MONDAY OF THE WEEK DURING WHICH THE CONTRACTOR INTENDS TO SET UP BARRICADES TO START CONSTRUCTION.
3. PROPOSED CONSTRUCTION TRAFFIC MOVEMENTS MAY REQUIRE EXISTING SIGNAL HEADS TO BE RELOCATED. THE CITY OF AUSTIN WILL REVIEW SIGNAL HEAD LOCATIONS DURING CONSTRUCTION AND PERFORM THE REQUIRED ADJUSTMENTS. THE CONTRACTOR SHALL CONTACT THE TRANSPORTATION DIVISION OF THE DEPARTMENT OF PUBLIC WORKS AT 974-7024, THREE (3) DAYS PRIOR TO PLACMENT ANY TRAFFIC CONTROLS WHICH MAY REQUIRE SIGNAL HEAD ADJUSTMENTS/RELOCATION.
4. THE CONTRACTOR SHALL PROVIDE ONE (1) FULL-TIME OFF-DUTY, UNIFORMED AUSTIN POLICE DEPARTMENT CERTIFIED PEACE OFFICER AND ONE (1) VEHICLE OF THE TYPE APPROVED BY THE ENGINEER OR DESIGNATED REPRESENTATIVE FOR TEMPORARY LANE CLOSURES WHEN UNDERSEALING, MILLING, PAVING AND WHEN WORKING IN INTERSECTIONS AS PART OF THE TRAFFIC CONTROL OPERATIONS. THE PEACE OFFICER SHALL BE ABLE TO SHOW PROOF OF CERTIFICATION BY THE TEXAS COMMISSION ON LAW ENFORCEMENT OFFICER STANDARDS.
5. THE CONTRACTOR SHALL NOTIFY ALL OTHER GOVERNMENTAL AGENCIES WHOSE RIGHTS-OF-WAY ARE AFFECTED BY HIS WORK ACTIVITIES. THE CONTRACTOR SHALL PROVIDE ANY ADDITIONAL TRAFFIC CONTROL DEVICES THAT THEY MAY NEED.
6. THE CONTRACTOR SHALL MAINTAIN ONE (1) DUST-FREE LANE OF TRAFFIC IN EACH DIRECTION AT ALL TIMES, UNLESS OTHERWISE NOTED IN THE DRAWINGS OR APPROVED THE ENGINEER OR DESIGNATED REPRESENTATIVE.
7. THERE SHALL BE A MINIMUM OF THREE (3) METERS (10 FEET) CLEAR WIDTH FOR EACH LANE OF TRAFFIC IN CHANNELIZED AREAS, UNLESS OTHERWISE NOTED ON THE DRAWINGS OR APPROVED BY THE ENGINEER OR DESIGNATED REPRESENTATIVE.
8. THE CONTRACTOR SHALL MAINTAIN DRIVEWAY ACCESS AT ALL TIMES. IF ACCESS CANNOT BE MAINTAINED, THE CONTRACTOR WITH THE APPROVAL OF THE ENGINEER OR DESIGNATED REPRESENTATIVE SHALL PROVIDE AT LEAST 24 HOUR WRITTEN NOTICE OF LIMITED ACCESS TO AFFECTED PROPERTY OWNERS. THE CONTRACTOR SHALL PROVIDE BUSINESS ACCESS SIGNS AS NEEDED TO NFORM DRIVERS OF THE LOCATIONS OF ALL DRIVEWAYS.
9. TEMPORARY LANE CLOSURES IN THE CENTRAL BUSINESS DISTRICT (CBD) OR ON ARTERIAL STREETS SHALL NOT BE PERMITTED DURING THE HOURS OF 7 AM TO 9 AM AND 4 PM TO 6PM MONDAY THROUGH FRIDAY UNLESS PRIOR APPROVAL HAS BEEN OBTAINED FROM THE TRANSPORTATION DIVISION.
10. TRAFFIC CONTROL SHOWN ON STANDARD DETAILS IS TYPICAL. ADDITIONAL SIGNING AND/OR BARRICADING, AS WELL AS TEMPORARY PAVEMENT MARKINGS AND OBLITERATION/RESTORATION OF EXISTING PAVEMENT MARKINGS, MAY BE REQUIRED DEPENDING ON FIELD CONDITIONS. FIELD ADJUSTMENTS TO TRAFFIC CONTROLS WILL NOT BE PAID FOR DIRECTLY, BUT WILL BE CONSIDERED SUBSIDIARY TO ITEM NO. 803S "BARRICADES, SIGNS AND TRAFFIC HANDLING".
11. THE CONTRACTOR SHALL DESIGNATE A COMPETENT PERSON FOR TRAFFIC CONTROL. THE COMPETENT PERSON SHALL MAKE INSPECTIONS OF THE TRAFFIC CONTROL DEVICES AT LEAST TWO (2) TIMES A DAY (ONCE AT THE BEGINNING OF THE DAY AND ONCE AT THE END OF THE DAY), INCLUDING NON-WORKING DAYS, ENSURING THAT ALL DEVICES ARE IN THEIR PROPER PLACE AND ARE IN WORKING ORDER.
12. ALL DEVICES SHALL BE MADE USING MATERIALS LISTED ON THE TxDOT APPROVED PRODUCTS LIST.

CITY OF AUSTIN DEPARTMENT OF PUBLIC WORKS	GENERAL TRAFFIC CONTROL NOTES	
1/4/10 ADOPTED	THE ARCHITECT/ENGINEER ASSUMES RESPONSIBILITY FOR APPROPRIATE USE OF THIS STANDARD.	STANDARD NO. 804S-5 12 OF 13

13. ALL PERSONS WORKING WITHIN THE RIGHT-OF-WAY SHALL WEAR A BRIGHTLY COLORED SAFETY VEST. FOR NIGHTTIME WORK THE VEST SHALL BE RETROREFLECTIVE.
14. WHEN AN INTERSECTION IS CLOSED FOR CONSTRUCTION, THE CONTRACTOR SHALL PROCEED WITH CONSTRUCTION IN SUCH A MANNER THAT THE CLOSURE TIME IS MINIMIZED.
15. THE CONTRACTOR SHALL NOTIFY THE CAPITAL METRO DISPATCHER AT 385-4295 ONE (1) WEEK PRIOR TO LANE CLOSURES ADJACENT TO BUS STOPS.

DURATION OF WORK

WORK DURATION IS A MAJOR FACTOR IN DETERMINING THE NUMBER AND TYPES OF DEVICES USED IN TEMPORARY TRAFFIC ZONES. THE FIVE (5) CATEGORIES OF WORK DURATION AND THEIR TIME AT A LOCATION ARE AS FOLLOWS:

- LONG-TERM STATIONARY-WORK THAT OCCUPIES A LOCATION FOR MORE THAN 3 DAYS.
- INTERMEDIATE-TERM STATIONARY-WORK THAT OCCUPIES A LOCATION FROM OVERNIGHT TO 3 DAYS.
- SHORT-TERM STATIONARY-DAYTIME WORK THAT OCCUPIES A LOCATION FROM 1 TO 12 HOURS.
- SHORT-DURATION WORK THAT OCCUPIES A LOCATION UP TO 1 HOUR.
- MOBILE-WORK THAT MOVES INTERMITTENTLY OR CONTINUOUSLY.

Typical Transition Lengths and Suggested Maximum Spacing of Devices

Posted Speed KPH (MPH)	Formula	Minimum Desirable Taper Lengths (L) Meters (Feet) 3.0(10) Offset Meters (feet)	3.3(11) Offset Meters (feet)	3.6(12) Offset Meters (feet)	Suggested Max. Device Spacing On a taper Meters (feet)	On a tangent Meters (feet)	Suggested Sign Spacing Meters (Feet) "X" Dimension
50 (30)	L=WS²/60	45 (150)	50 (165)	55 (180)	9 (30)	15-20 (60-75)	40 (120)
55 (35)		65 (205)	70 (225)	75 (245)	10 (35)	25-25 (70-90)	50 (160)
65 (40)		80 (265)	90 (295)	100 (320)	12 (40)	25-30 (80-100)	75 (240)
70 (45)	L=WS	135 (450)	(495)	165 (540)	13 (45)	25-30 (90-110)	100 (320)
80 (50)		150 (500)	165 (550)	180 (600)	15 (50)	30-35 (100-125)	120 (400)
90 (55)		165 (550)	185 (605)	200 (660)	16 (55)	35-40 (110-140)	150 (500)
100 (60)		180 (600)	200 (660)	220 (720)	18 (60)	40-45 (120-150)	180 (600)
105 (65)		195 (650)	215 (715)	235 (780)	19 (65)	40-50 (130-165)	210 (700)
115 (70)		215 (700)	235 (770)	255 (840)	21 (70)	45-55 (140-175)	240 (800)

CITY OF AUSTIN DEPARTMENT OF PUBLIC WORKS	GENERAL TRAFFIC CONTROL NOTES	
1/4/10 ADOPTED	THE ARCHITECT/ENGINEER ASSUMES RESPONSIBILITY FOR APPROPRIATE USE OF THIS STANDARD.	STANDARD NO. 804S-5 13 OF 13

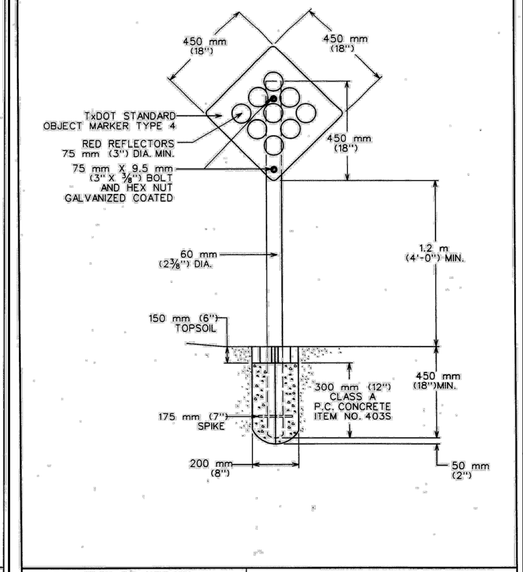

CITY OF AUSTIN DEPARTMENT OF PUBLIC WORKS	STANDARD STREET-END MARKERS	
3/13/06 ADOPTED	THE ARCHITECT/ENGINEER ASSUMES RESPONSIBILITY FOR APPROPRIATE USE OF THIS STANDARD.	STANDARD NO. 824S-1

SITE DEVELOPMENT NUMBER 2025-476

REV. NO.	DATE	DESCRIPTION		
			PROJECT MANAGER:	PK
			DESIGNED BY:	PG/RM
			CHECKED BY:	DCS/JTH
			DRAWN BY:	PG/RM
			DCS PROJECT NO:	20101597

DCS ENGINEERING, LLC
1101 S. CAPITAL OF TEXAS HIGHWAY, BUILDING G-100
AUSTIN, TX 78746

TEL: (512) 614-6171
T.B.P.E. FIRM NO. F-13162

BudaTx breathe easy here™

BUDA SPORTSPLEX - PHASE I

STATE OF TEXAS
J. PATRICIO GALINDO RANGEL
154316
LICENSED PROFESSIONAL ENGINEER
08/04/25

GENERAL

CIVIL - TRAFFIC CONTROL DETAILS - SHEET NO. 5

DATE: JULY 2025
SCALE: AS NOTED
DRAWING: 00C-30

FILENAME: Z:\Projects 1551-1599\20101597 - Buda - Sportsplex\510 - Re-bid Dwgs\500 - Final_Design\500 - Final_Design\5.1 - Drawings\Sheet Files\Construction Plans\00C-30.dwg, LAST SAVED ON: Aug 01 2025 1:21pm, PLOTTED BY: RMALDONADO, ON: Aug 07 2025 8:12am, CFG:

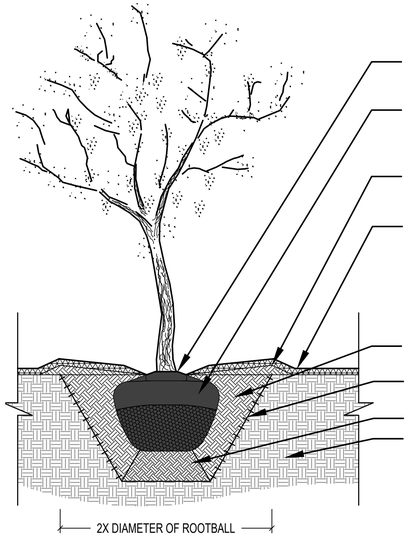

SET CROWN OF ROOT BALL 2IN. HIGHER THAN FINISH GRADE. TRUNK FLARE MUST BE VISIBLE. DO NOT COVER THE TOP OF ROOT BALL WITH SOIL OR MULCH.

IF B&B, REMOVE ALL TWINE, ROPE, AND BURLAP FROM TOP HALF OF ROOTBALL. COMPLETELY REMOVE ALL WIRE. IF CONTAINER, REMOVE PLANT FROM CONTAINER AND GENTLY COMB OUT ROOTS. ALL ROOT BOUND/GIRDLED SPECIMENS WILL BE REJECTED BY THE LANDSCAPE ARCHITECT.

3IN. HIGH EARTH SAUCER AT EDGE OF PLANT PIT, TAPER TO 0IN. AT ROOT FLARE. COVER EARTH SAUCER WITH MULCH.

3IN. MULCH. DO NOT PLACE MULCH IN CONTACT WITH TREE TRUNK. MAINTAIN WEED-FREE FOR A MIN. OF 2 YEARS AFTER PLANTING.

BACKFILL WITH PLANTING SOIL AROUND ROOTBALL BASE IN 3-4IN. LIFTS. TAMP AND WATER BETWEEN LIFTS.

ROUGHEN OR SCARIFY SURFACE OF PLANTING SOIL TO PREVENT CREATING HORIZON BETWEEN EXISTING AND BACKFILL SOILS.

COMPACTED SOIL PEDESTAL BELOW ROOTBALL TO 90% DRY DENSITY.

UNDISTURBED OR COMPACTED SUBGRADE

TREE PLANTING NOTES

1. ALL PLANT MATERIALS SHALL BE IN ACCORDANCE WITH THE AMERICAN STANDARD FOR NURSERY STOCK (ANSI Z60 1-2004).
2. LIFT AND SET THE TREE BY ROOTBALL ONLY. DO NOT LIFT USING THE TREE TRUNK.
3. CLEANLY PRUNE ALL ROOT ENDS. DO NOT ALLOW ROOTS TO DRY OUT DURING INSTALLATION PROCESS. SOAK ROOTS OVERNIGHT BEFORE PLANTING.
4. STAKE TREES ONLY UPON APPROVAL OF LANDSCAPE ARCHITECT.
5. DO NOT HEAVILY PRUNE TREE AT PLANTING. ONLY PRUNE BROKEN OR DEAD BRANCHES.
6. ORIENT TREES TO HAVE SIMILAR SOLAR ASPECT AS NURSERY, OR AS DIRECTED BY LANDSCAPE ARCHITECT. TAGS ARE TO BE PLACED ON THE NORTH SIDE AT NURSERY.
7. INSTALL TREES SIMULTANEOUSLY WITH INSTALLATION OF PLANTING SOIL MIX. DO NOT CREATE PLANTING PITS.
8. WATER THOROUGHLY FOLLOWING PLANTING.

1 TREE PLANTING DETAIL
SCALE = 1/2" = 1'-0"

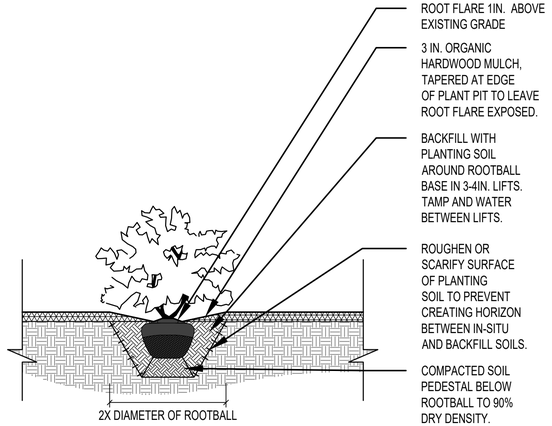

ROOT FLARE 1IN. ABOVE EXISTING GRADE

3 IN. ORGANIC HARDWOOD MULCH, TAPERED AT EDGE OF PLANT PIT TO LEAVE ROOT FLARE EXPOSED.

BACKFILL WITH PLANTING SOIL AROUND ROOTBALL BASE IN 3-4IN. LIFTS. TAMP AND WATER BETWEEN LIFTS.

ROUGHEN OR SCARIFY SURFACE OF PLANTING SOIL TO PREVENT CREATING HORIZON BETWEEN IN-SITU AND BACKFILL SOILS.

COMPACTED SOIL PEDESTAL BELOW ROOTBALL TO 90% DRY DENSITY.

SHRUB PLANTING NOTES

1. ALL PLANT MATERIAL SHALL BE IN ACCORDANCE WITH THE AMERICAN STANDARD FOR NURSERY STOCK (ANSI Z60 1-2204).
2. CLEANLY PRUNE ALL ROOT ENDS. DO NOT ALLOW ROOTS TO DRY OUT DURING INSTALLATION PROCESS. SOAK ROOTS OVERNIGHT BEFORE PLANTING.
3. IF B&B, REMOVE ALL TWINE, ROPE, AND BURLAP FROM TOP HALF OF ROOTBALL. COMPLETELY REMOVE ALL WIRE. IF CONTAINER, REMOVE PLANT FROM CONTAINER AND GENTLY COMB OUT ROOTS.
4. DO NOT HEAVILY PRUNE SHRUB AT PLANTING. ONLY PRUNE BROKEN OR DEAD BRANCHES.
5. INSTALL SHRUBS SIMULTANEOUSLY WITH INSTALLATION OF PLANTING SOIL MIX. DO NOT CREATE PLANTING PITS.
6. WATER THOROUGHLY FOLLOWING PLANTING.

2 SHRUB & PERENNIAL PLANTING DETAIL
SCALE = 1/2" = 1'-0"

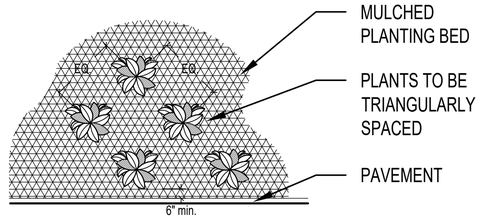

MULCHED PLANTING BED

PLANTS TO BE TRIANGULARLY SPACED

PAVEMENT

NOTES:
1.) SEE PLANTING PLAN FOR SPECIES, SIZE, AND SPACING DIMENSION.
2.) SMALL ROOTS (¼" OR LESS) THAT GROW AROUND, UP, OR DOWN THE ROOT BALL PERIPHERY ARE CONSIDERED A NORMAL CONDITION IN CONTAINER PRODUCTION AND ARE ACCEPTABLE HOWEVER THEY SHOULD BE ELIMINATED AT THE TIME OF PLANTING. ROOTS ON THE PERIPHERY CAN BE REMOVED AT THE TIME OF PLANTING. (SEE ROOT BALL SHAVING CONTAINER DETAIL).
3.) SETTLE SOIL AROUND ROOT BALL OF EACH PLANT PRIOR TO MULCHING.

3 TYPICAL TRIANGULAR PLANT SPACING DETAIL
SCALE = 3/4" = 1'-0"

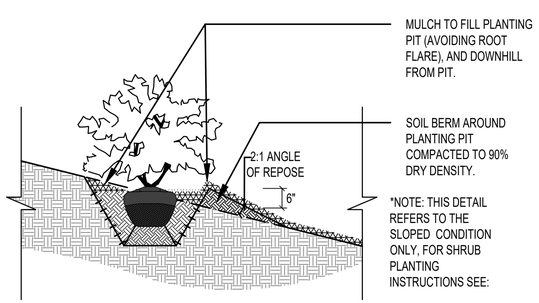

MULCH TO FILL PLANTING PIT (AVOIDING ROOT FLARE), AND DOWNHILL FROM PIT.

SOIL BERM AROUND PLANTING PIT COMPACTED TO 90% DRY DENSITY.

*NOTE: THIS DETAIL REFERS TO THE SLOPED CONDITION ONLY, FOR SHRUB PLANTING INSTRUCTIONS SEE:

4 PLANTING ON SLOPE
SCALE = 1/2" = 1'-0"

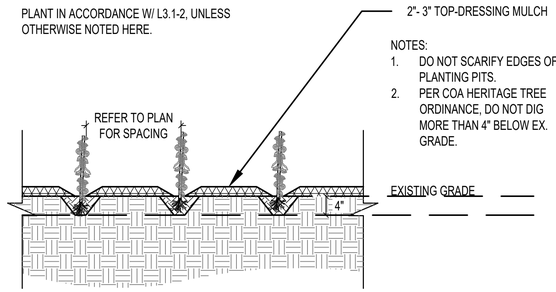

2"- 3" TOP-DRESSING MULCH

NOTES:
1. DO NOT SCARIFY EDGES OF PLANTING PITS.
2. PER COA HERITAGE TREE ORDINANCE, DO NOT DIG MORE THAN 4" BELOW EX. GRADE.

5 PLANTING IN THE 1/2 CRITICAL ROOT ZONE
SCALE = 3/4" = 1'-0"

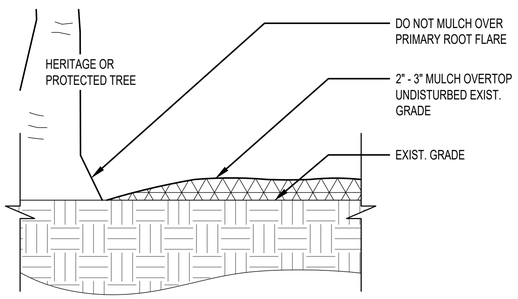

DO NOT MULCH OVER PRIMARY ROOT FLARE

2" - 3" MULCH OVERTOP UNDISTURBED EXIST. GRADE

EXIST. GRADE

6 MULCH IN EXISTING TREE CRITICAL ROOT ZONE
SCALE = 1 1/2" = 1'-0"

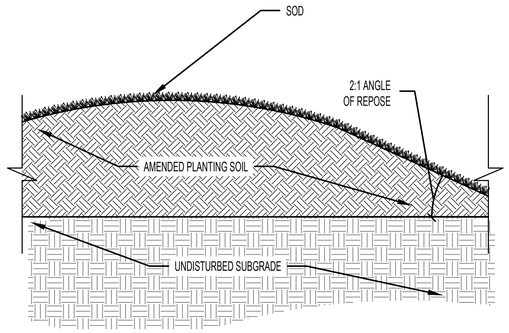

7 BERM
SCALE = 3/4" = 1'-0"

LIONHEART
1023 Springdale Road, Suite 6E, Austin, TX 78721
O: 512.520.4488
WWW.LIONHEARTPLACES.COM

REV. NO.	DATE	DESCRIPTION

PROJECT MANAGER:	BL
DESIGNED BY:	JO
CHECKED BY:	JO/BL
DRAWN BY:	MS/AB
DCS PROJECT NO:	20101597

DCS ENGINEERING, LLC
1101 S. CAPITAL OF TEXAS HIGHWAY, BUILDING G-100
AUSTIN, TX 78746

TEL: (512) 614-6171
T.B.P.E. FIRM NO. F-13162

BudaTx breathe easy here.

BUDA SPORTSPLEX - PHASE 1

REGISTERED LANDSCAPE ARCHITECT · BRANDON LEE · STATE OF TEXAS

GENERAL

LANDSCAPE - PLANTING DETAILS

DATE: AUGUST 2025

SCALE:

DRAWING: 00L-01

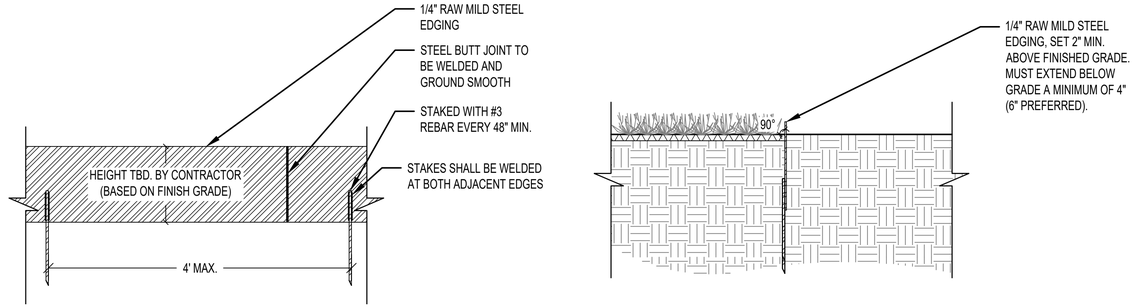

1 1/4" RAW MILD STEEL EDGING
SCALE = 1" = 1'-0"

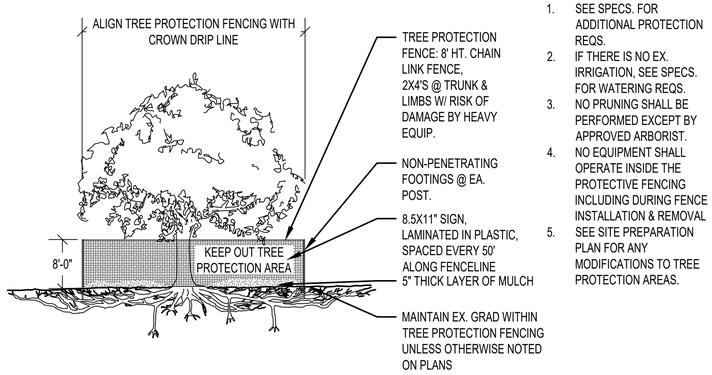

NOTES:
1. SEE SPECS. FOR ADDITIONAL PROTECTION REQS.
2. IF THERE IS NO EX. IRRIGATION, SEE SPECS. FOR WATERING REQS.
3. NO PRUNING SHALL BE PERFORMED EXCEPT BY APPROVED ARBORIST.
4. NO EQUIPMENT SHALL OPERATE INSIDE THE PROTECTIVE FENCING INCLUDING DURING FENCE INSTALLATION & REMOVAL
5. SEE SITE PREPARATION PLAN FOR ANY MODIFICATIONS TO TREE PROTECTION AREAS.

5 TREE PROTECTION FENCING
SCALE = 1/2" = 1'-0"

LIONHEART
1023 Springdale Road, Suite 6E, Austin, TX 78721
O: 512.520.4488
WWW.LIONHEARTPLACES.COM

REV. NO.	DATE	DESCRIPTION

PROJECT MANAGER:	BL
DESIGNED BY:	JO
CHECKED BY:	JO/BL
DRAWN BY:	MS/AB
DCS PROJECT NO:	20101597

DCS ENGINEERING, LLC
1101 S. CAPITAL OF TEXAS HIGHWAY, BUILDING G-100
AUSTIN, TX 78746

TEL: (512) 614-6171
T.B.P.E. FIRM NO. F-13162

BudaTx breathe easy here.

BUDA SPORTSPLEX - PHASE 1

REGISTERED LANDSCAPE ARCHITECT
JOSHUA ORTEGA
2476
STATE OF TEXAS

GENERAL

LANDSCAPE - HARDSCAPE DETAILS

DATE: AUGUST 2025
SCALE:
DRAWING: 00L-02

ANOVA FURNISHINGS; ANOVAFURNISHINGS.COM

L1369 - STREETSIDE 6' CONTOUR BENCH
COLOR: BLACK

NOTES:
1. INSTALLATION TO BE COMPLETED IN ACCORDANCE WITH MANUFACTURER'S SPECIFICATIONS.
2. DO NOT SCALE DRAWING.
3. THIS DRAWING IS INTENDED FOR USE BY ARCHITECTS, ENGINEERS, CONTRACTORS, CONSULTANTS AND DESIGN PROFESSIONALS FOR PLANNING PURPOSES ONLY. THIS DRAWING MAY NOT BE USED FOR CONSTRUCTION.
4. ALL INFORMATION CONTAINED HEREIN WAS CURRENT AT THE TIME OF DEVELOPMENT BUT MUST BE REVIEWED AND APPROVED BY THE PRODUCT MANUFACTURER TO BE CONSIDERED ACCURATE.
5. CONTRACTOR'S NOTE: FOR PRODUCT AND COMPANY INFORMATION VISIT www.CADdetails.com/info AND ENTER REFERENCE NUMBER

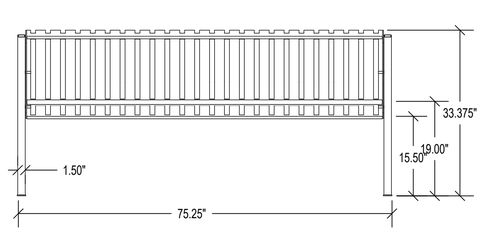

FRONT ELEVATION

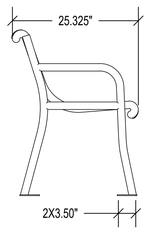

SIDE ELEVATION

1 BENCH DETAIL - ANOVA; "6' CONTOUR BENCH", IN COLOR BLACK
SCALE = 3/4" = 1'-0"

DuMor, inc.

157-32SHFL W/ CVB-30-25BT - RECEPTACLE
COLOR: BLACK

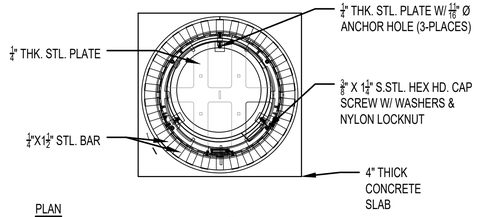

PLAN

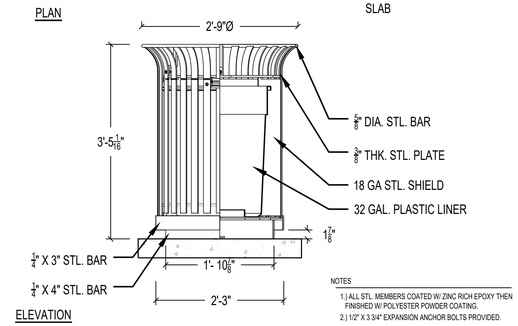

ELEVATION

NOTES
1.) ALL STL. MEMBERS COATED W/ ZINC RICH EPOXY THEN FINISHED W/ POLYESTER POWDER COATING.
2.) 1/2" X 3 3/4" EXPANSION ANCHOR BOLTS PROVIDED.

2 TRASH RECEPTACLE - DUMOR; RECEPTACLE 157 - STANDARD IN COLOR BLACK
SCALE = 3/4" = 1'-0"

DuMor, inc.

299-60-1HS - ADA PICNIC TABLE	COLOR: BLACK

NOTES:
1.) ALL STL. MEMBERS COATED W/ ZINC RICH EPOXY THEN FINISHED W/ POLYESTER POWDER COATING.
2.) 1/2" X 3 3/4" EXPANSION ANCHOR BOLTS PROVIDED FOR S-2.
3.) INSTALL/ASSEMBLE PER MANUFACTURERS INSTRUCTIONS

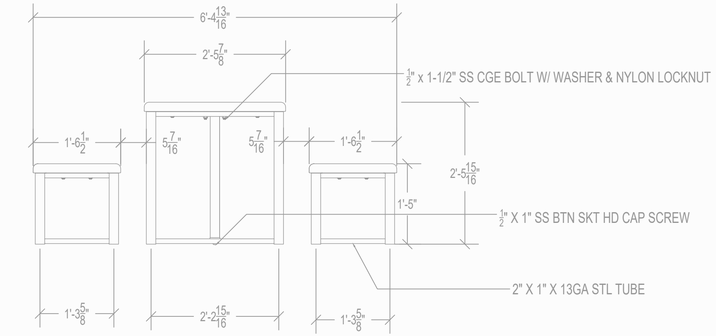

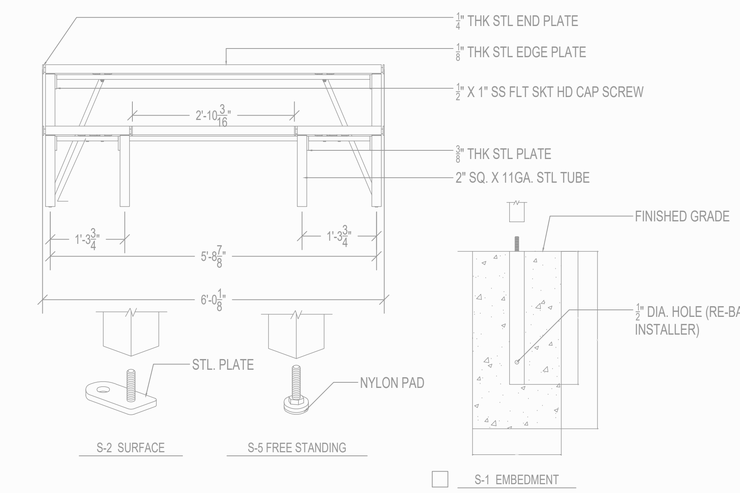

3 ADA PICNIC TABLE - DuMor; "299-60-1HS ADA" (S-1 EMBEDMENT), IN COLOR BLACK
SCALE = 3/4" = 1'-0"

DuMor, inc.

299-60-HS - PICNIC TABLE	COLOR: BLACK

NOTES:
1.) ALL STL. MEMBERS COATED W/ ZINC RICH EPOXY THEN FINISHED W/ POLYESTER POWDER COATING.
2.) 1/2" X 3 3/4" EXPANSION ANCHOR BOLTS PROVIDED FOR S-2.
3.) INSTALL/ASSEMBLE PER MANUFACTURERS INSTRUCTIONS

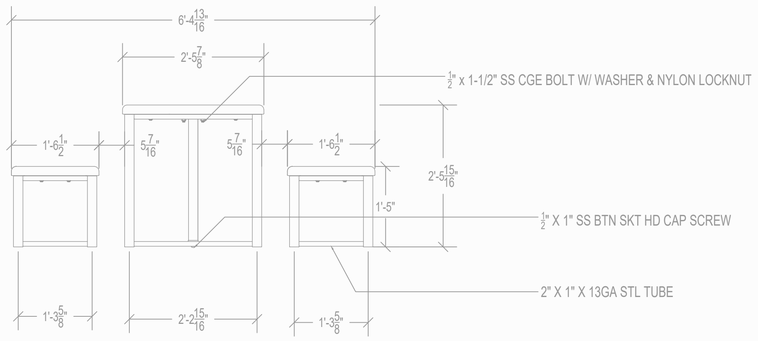

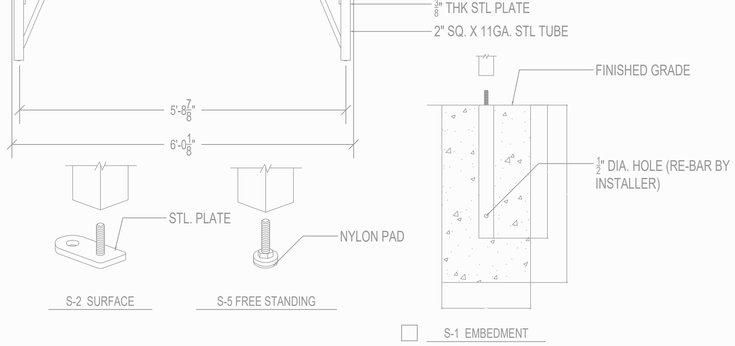

4 PICNIC TABLE - DuMor; "299-60-HS" (S-1 EMBEDMENT), IN COLOR BLACK
SCALE = 3/4" = 1'-0"

LIONHEART
1023 Springdale Road, Suite 6E, Austin, TX 78721
O: 512.520.4488
WWW.LIONHEARTPLACES.COM

REV. NO.	DATE	DESCRIPTION

PROJECT MANAGER:	BL
DESIGNED BY:	JO
CHECKED BY:	JO/BL
DRAWN BY:	MS/AB
DCS PROJECT NO:	20101597

DCS ENGINEERING, LLC
1101 S. CAPITAL OF TEXAS HIGHWAY, BUILDING G-100
AUSTIN, TX 78746

TEL: (512) 614-6171
T.B.P.E. FIRM NO. F-13162

BudaTx breathe easy here.

BUDA SPORTSPLEX - PHASE 1

REGISTERED LANDSCAPE ARCHITECT — STATE OF TEXAS

GENERAL

LANDSCAPE - FURNISHING DETAILS

DATE: AUGUST 2025
SCALE:
DRAWING: 00L-03

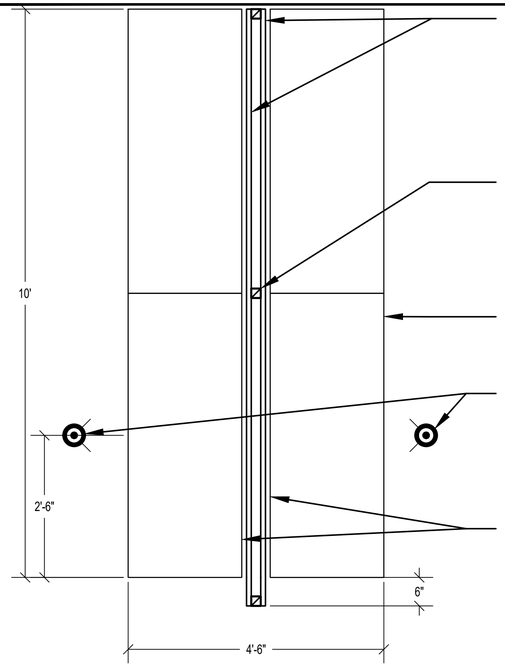

(2) 1" RAW MILD STEEL PLATE EMBEDDED INTO LIMESTONE QUARRY BLOCK; GRAFFITI AND UV RESISTANT EXTERIOR GRADE TOP COAT & FINISH TO BE DETERMINED BY OWNER

2"x2" GALVANIZED SQUARE STEEL TUBE POST, PAINT TO MATCH STEEL PLATE

SLOPE TOP OF STONE SUCH THAT WATER DRAINS AWAY FROM SIGN

(2) LED LIGHT FIXTURES; BEGA LED IN-GROUND LUMINAIRES (84084K3) LED); CONTRACTOR TO LOCATE LIGHT FIXTURE FOR OPTIMAL ILLUMINATION OF LETTERING

(2) LED STRIP LIGHT (FX LUMINAIRE; SRP-10W), COORDINATE WITH MEP

NOTE:
DRAWINGS REPRESENT DESIGN INTENT ONLY. FINAL SHOP DRAWINGS BY OTHERS. STRUCTURAL REQUIREMENTS BY OTHERS. PROVIDE SHOP DRAWINGS TO LANDSCAPE ARCHITECT FOR REVIEW PRIOR TO INSTALLATION. SIGN CAN BE LIT PER CLIENT PREFERENCE.

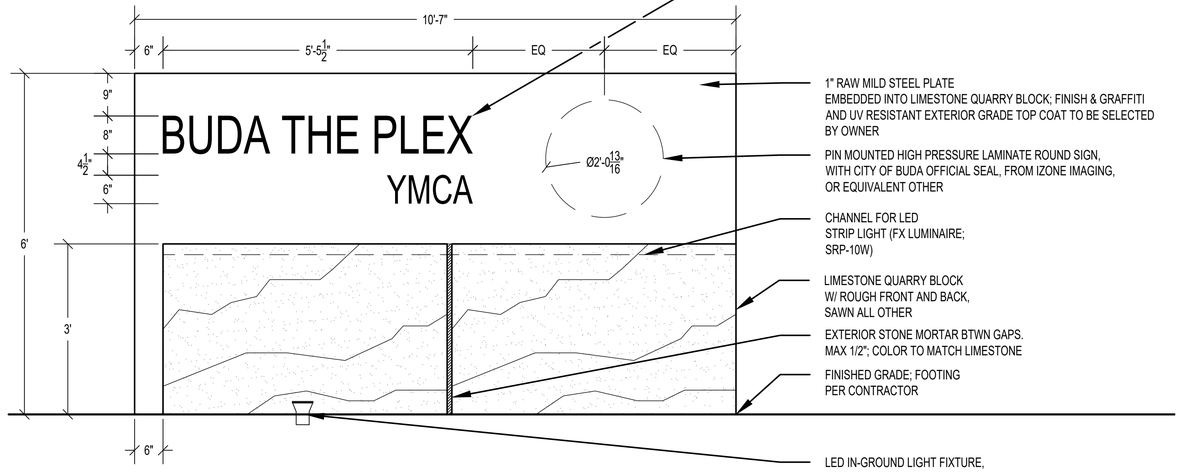

PIN MOUNTED STAINLESS STEEL LETTERING; FONT: "HELVETICA NOW"; VERIFY FONT SIZING W/ OWNERS PRIOR TO INSTALL ON 1" STEEL PLATE. ADD PENETROL TO ALL RAW MILD STEEL 3 MONTHS AFTER INSTALL.

1" RAW MILD STEEL PLATE EMBEDDED INTO LIMESTONE QUARRY BLOCK; FINISH & GRAFFITI AND UV RESISTANT EXTERIOR GRADE TOP COAT TO BE SELECTED BY OWNER

PIN MOUNTED HIGH PRESSURE LAMINATE ROUND SIGN, WITH CITY OF BUDA OFFICIAL SEAL, FROM IZONE IMAGING, OR EQUIVALENT OTHER

CHANNEL FOR LED STRIP LIGHT (FX LUMINAIRE; SRP-10W)

LIMESTONE QUARRY BLOCK W/ ROUGH FRONT AND BACK, SAWN ALL OTHER

EXTERIOR STONE MORTAR BTWN GAPS. MAX 1/2"; COLOR TO MATCH LIMESTONE

FINISHED GRADE; FOOTING PER CONTRACTOR

LED IN-GROUND LIGHT FIXTURE, COORDINATE WITH MEP

1 MONUMENT SIGN - BUDA SPORTSPLEX DRIVE
SCALE = 3/4"=1'-0"

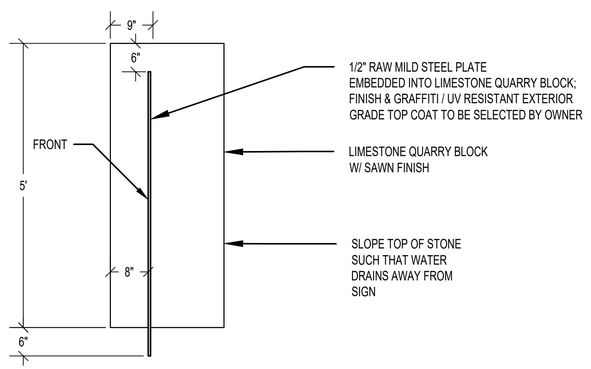

1/2" RAW MILD STEEL PLATE EMBEDDED INTO LIMESTONE QUARRY BLOCK; FINISH & GRAFFITI / UV RESISTANT EXTERIOR GRADE TOP COAT TO BE SELECTED BY OWNER

LIMESTONE QUARRY BLOCK W/ SAWN FINISH

SLOPE TOP OF STONE SUCH THAT WATER DRAINS AWAY FROM SIGN

2 DIRECTIONAL SIGNAGE - PLAN VIEW
SCALE = 3/4"=1'-0"

NOTE:
DRAWINGS REPRESENT DESIGN INTENT ONLY. FINAL SHOP DRAWINGS BY OTHERS. STRUCTURAL REQUIREMENTS BY OTHERS. PROVIDE SHOP DRAWINGS TO LANDSCAPE ARCHITECT FOR REVIEW PRIOR TO INSTALLATION. SIGNS CAN BE LIT PER CLIENT PREFERENCE

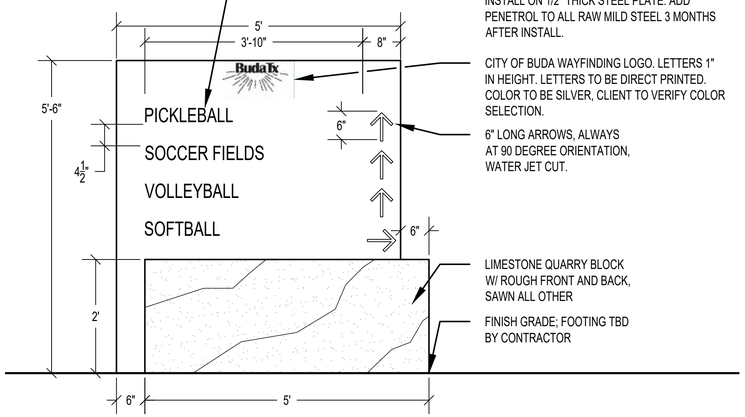

3" TALL LETTERS TO BE DIRECT PRINTED. COLOR TO MATCH ENTRY MONUMENT LETTERING.; VERIFY FONT SIZING W/ OWNERS PRIOR TO INSTALL ON 1/2" THICK STEEL PLATE. ADD PENETROL TO ALL RAW MILD STEEL 3 MONTHS AFTER INSTALL.

CITY OF BUDA WAYFINDING LOGO. LETTERS 1" IN HEIGHT. LETTERS TO BE DIRECT PRINTED. COLOR TO BE SILVER, CLIENT TO VERIFY COLOR SELECTION.

6" LONG ARROWS, ALWAYS AT 90 DEGREE ORIENTATION, WATER JET CUT.

LIMESTONE QUARRY BLOCK W/ ROUGH FRONT AND BACK, SAWN ALL OTHER

FINISH GRADE; FOOTING TBD BY CONTRACTOR

3 DIRECTIONAL SIGN - "A"
SCALE = 3/4"=1'-0"

DIRECTIONAL SIGNAGE ON SIGN B

BATTING CAGES

SOFTBALL FIELDS 1 - 4

SOFTBALL FIELDS 5 - 8

LIONHEART
1023 Springdale Road, Suite 6E, Austin, TX 78721
O: 512.520.4488
WWW.LIONHEARTPLACES.COM

REV. NO.	DATE	DESCRIPTION

PROJECT MANAGER:	BL
DESIGNED BY:	JO
CHECKED BY:	JO/BL
DRAWN BY:	MS/AB
DCS PROJECT NO:	20101597

DCS ENGINEERING, LLC
1101 S. CAPITAL OF TEXAS HIGHWAY, BUILDING G-100
AUSTIN, TX 78746

TEL: (512) 614-6171
T.B.P.E. FIRM NO. F-13162

BUDA SPORTSPLEX - PHASE 1

REGISTERED LANDSCAPE ARCHITECT · STATE OF TEXAS

GENERAL

LANDSCAPE - SIGNAGE DETAILS

DATE: AUGUST 2025

SCALE:

DRAWING: 00L-04

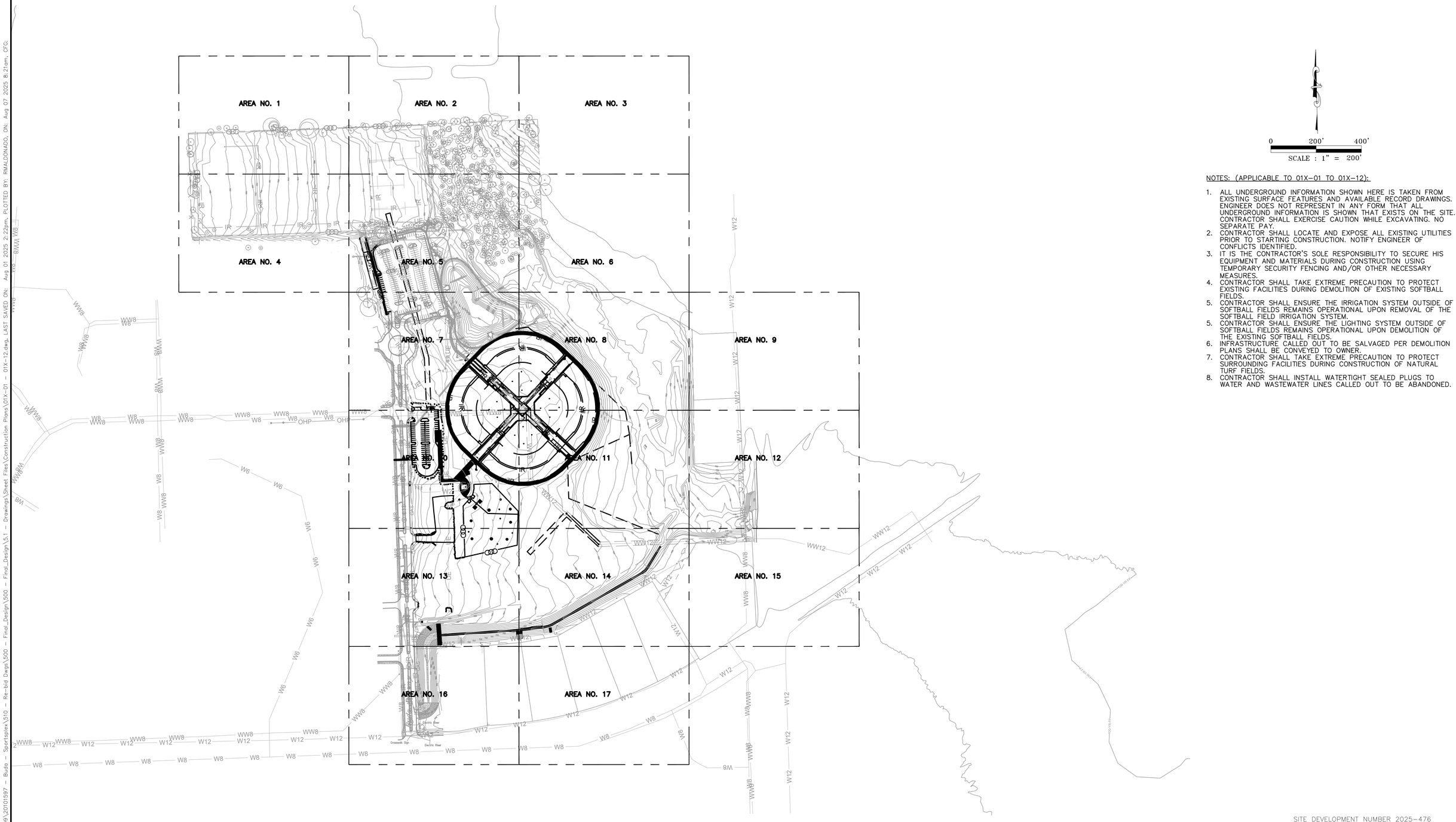

NOTES: (APPLICABLE TO 01X–01 TO 01X–12):

1. ALL UNDERGROUND INFORMATION SHOWN HERE IS TAKEN FROM EXISTING SURFACE FEATURES AND AVAILABLE RECORD DRAWINGS. ENGINEER DOES NOT REPRESENT IN ANY FORM THAT ALL UNDERGROUND INFORMATION IS SHOWN THAT EXISTS ON THE SITE. CONTRACTOR SHALL EXERCISE CAUTION WHILE EXCAVATING. NO SEPARATE PAY.
2. CONTRACTOR SHALL LOCATE AND EXPOSE ALL EXISTING UTILITIES PRIOR TO STARTING CONSTRUCTION. NOTIFY ENGINEER OF CONFLICTS IDENTIFIED.
3. IT IS THE CONTRACTOR'S SOLE RESPONSIBILITY TO SECURE HIS EQUIPMENT AND MATERIALS DURING CONSTRUCTION USING TEMPORARY SECURITY FENCING AND/OR OTHER NECESSARY MEASURES.
4. CONTRACTOR SHALL TAKE EXTREME PRECAUTION TO PROTECT EXISTING FACILITIES DURING DEMOLITION OF EXISTING SOFTBALL FIELDS.
5. CONTRACTOR SHALL ENSURE THE IRRIGATION SYSTEM OUTSIDE OF SOFTBALL FIELDS REMAINS OPERATIONAL UPON REMOVAL OF THE SOFTBALL FIELD IRRIGATION SYSTEM.
5. CONTRACTOR SHALL ENSURE THE LIGHTING SYSTEM OUTSIDE OF SOFTBALL FIELDS REMAINS OPERATIONAL UPON DEMOLITION OF THE EXISTING SOFTBALL FIELDS.
6. INFRASTRUCTURE CALLED OUT TO BE SALVAGED PER DEMOLITION PLANS SHALL BE CONVEYED TO OWNER.
7. CONTRACTOR SHALL TAKE EXTREME PRECAUTION TO PROTECT SURROUNDING FACILITIES DURING CONSTRUCTION OF NATURAL TURF FIELDS.
8. CONTRACTOR SHALL INSTALL WATERTIGHT SEALED PLUGS TO WATER AND WASTEWATER LINES CALLED OUT TO BE ABANDONED.

SITE DEVELOPMENT NUMBER 2025–476

REV. NO.	DATE	DESCRIPTION

PROJECT MANAGER:	PK
DESIGNED BY:	PG/RM
CHECKED BY:	DCS/JTH
DRAWN BY:	PG/RM
DCS PROJECT NO:	20101597

DCS ENGINEERING, LLC
1101 S. CAPITAL OF TEXAS HIGHWAY, BUILDING G–100
AUSTIN, TX 78746

TEL: (512) 614–6171
T.B.P.E. FIRM NO. F–13162

BudaTx breathe easy here™

BUDA SPORTSPLEX - PHASE I

STATE OF TEXAS
J. PATRICIO GALINDO RANGEL
154316
LICENSED
PROFESSIONAL ENGINEER
08/04/25.

SITE CIVIL

CIVIL - OVERALL DEMOLITION PLAN

DATE: JULY 2025

SCALE: 1" = 200'

DRAWING: 01X-01

FILENAME: Z:\Projects 1551-1599\20101597 - Buda - Sportsplex\510 - Re-bid Dwgs\500 - Final_Design\500 - Final_Design\5.1 - Drawings\Sheet Files\Construction Plans\01X-01 - 01X-12.dwg, LAST SAVED ON: Aug 01 2025 2:22pm, PLOTTED BY: RMALDONADO, ON: Aug 07 2025 8:21am, CFG:

FILENAME: Z:\Projects 1551-1599\20101597 - Buda - Sportsplex\510 - Re-bid Dwgs\500 - Final_Design\500 - Final_Design\5.1 - Drawings\Sheet Files\Construction Plans\01X-01 - 01X-12.dwg, LAST SAVED ON: Aug 01 2025 2:22pm, PLOTTED BY: RMALDONADO, ON: Aug 07 2025 8:21am, CFG:

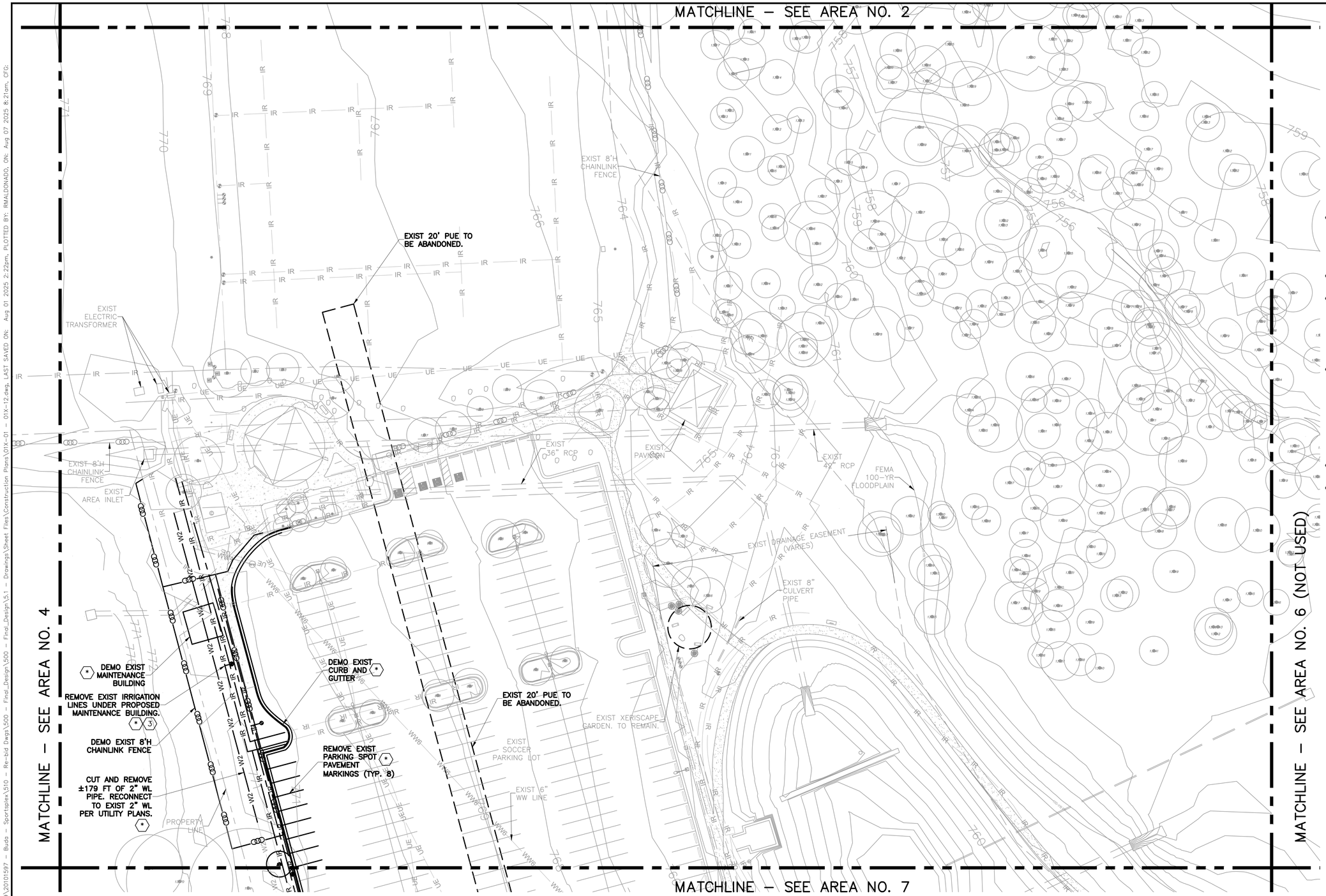

KEY NOTES:

1. ALL SEWER PIPES CALLED TO BE ABANDONED, OR THAT IS CURRENTLY ABANDONED AND WILL REMAIN ABANDONED, SHALL BE FLOWABLE FILLED. PRIOR TO FLOWABLE FILLING, REMOVE ANY GRIT/DEPOSITION IN SEWER PIPES. FLOWABLE FILL SHALL BE 300 PSI CONCRETE (MIN).
2. REFER TO IRRIGATION PLANS FOR LOCATION OF NEW IRRIGATION CONTROLLER.
3. REMOVE EXISTING IRRIGATION LINES UNDER PROPOSED MAINTENANCE BUILDING. CONTRACTOR SHALL REFER TO IRRIGATION PLANS FOR PROPOSED IRRIGATION SYSTEM AND IRRIGATION MAIN RELOCATION. CONTRACTOR IS RESPONSIBLE TO ENSURE EXIST IRRIGATION SERVICE LINES TIED TO PIPES BEING DEMOLISHED ARE RECONNECTED PER IRRIGATION PLANS TO NEW IRRIGATION MAIN. NO SEPARATE PAY.
4. CONTRACTOR SHALL REFER TO IRRIGATION PLANS FOR EXIST IRRIGATION INFRASTRUCTURE CALLED TO REMAIN, INCLUDING BUT NOT LIMITED TO PIPING, FITTINGS, WIRING, APPURTENANCES, VALVES W/BOX, AND WIRE BOXES. CONTRACTOR SHALL PROTECT INFRASTRUCTURE TO REMAIN AND RECONNECT PER IRRIGATION PLANS. EXISTING IRRIGATION PIPING NOT CALLED OUT IN IRRIGATION PLANS TO REMAIN SHALL BE CUT, PLUGGED AND ABANDONED IN PLACE. EXISTING IRRIGATION APPURTENANCES AND BOXES NOT CALLED OUT IN IRRIGATION PLANS TO REMAIN SHALL BE REMOVED.
5. INFRASTRUCTURE CALLED OUT TO BE SALVAGED PER DEMOLITION PLANS SHALL BE CONVEYED TO OWNER.
- * ALTERNATE BID ITEM

SITE DEVELOPMENT NUMBER 2025-476

REV. NO.	DATE	DESCRIPTION

PROJECT MANAGER:	PK
DESIGNED BY:	PG/RM
CHECKED BY:	DCS/JTH
DRAWN BY:	PG/RM
DCS PROJECT NO:	20101597

DCS ENGINEERING, LLC
1101 S. CAPITAL OF TEXAS HIGHWAY, BUILDING G-100
AUSTIN, TX 78746
TEL: (512) 614-6171
T.B.P.E. FIRM NO. F-13162

BudaTx breathe easy here.™

BUDA SPORTSPLEX - PHASE I

STATE OF TEXAS
J. PATRICIO GALINDO RANGEL
154316
LICENSED PROFESSIONAL ENGINEER
08/04/25.

SITE CIVIL

CIVIL - DEMOLITION PLAN - AREA NO. 5

DATE: JULY 2025
SCALE: 1" = 30'
DRAWING: 01X-05

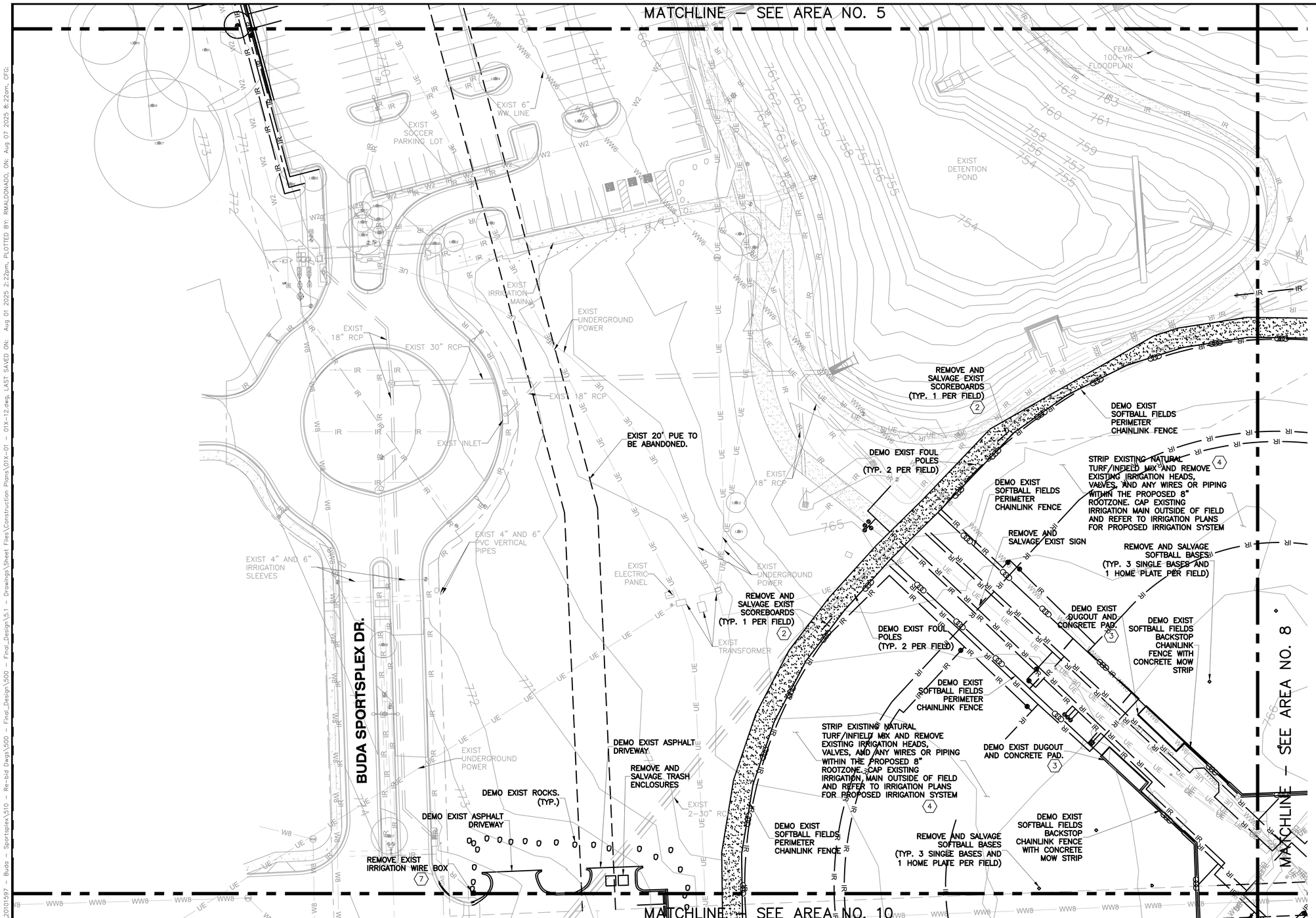

0 30' 60'

SCALE : 1" = 30'

KEY NOTES:

1. ALL SEWER PIPES CALLED TO BE ABANDONED, OR THAT IS CURRENTLY ABANDONED AND WILL REMAIN ABANDONED, SHALL BE FLOWABLE FILLED. PRIOR TO FLOWABLE FILLING, REMOVE ANY GRIT/DEPOSITION IN SEWER PIPES. FLOWABLE FILL SHALL BE 300 PSI CONCRETE (MIN).
2. CONTRACTOR SHALL PULL EXIST UNDERGROUND ELECTRIC CONDUIT APPROXIMATELY 30 FT TO CONNECT NEW SCOREBOARD LOCATION. REFER TO CIVIL SHEETS FOR NEW SCOREBOARDS LOCATIONS.
3. SALVAGE EXIST BENCH WITHIN DUGOUT AND CONVEY TO OWNER.
4. CONTRACTOR SHALL TAKE CAUTION AND PROTECTIVE REQUIREMENTS AS NEEDED TO PROTECT, SALVAGE AND REINSTALL EXIST INFIELD MIX PER PROPOSED SOFTBALL SURFACING CONDITIONS SHOWN IN SERIES 200. REINSTALLED INFIELD MIX SHALL COMPLY WITH INFIELD MIX SOIL GRADATION PER SPECIFICATIONS AND BE FREE OF ANY DEBRIS, ORGANIC MATERIAL, AND ANY MATERIALS GENERATED FROM CONSTRUCTION CROSS CONTAMINATION. NO SEPARATE PAY.
5. REFER TO LANDSCAPE ARCHITECTURAL SHEETS FOR DEMOLITION OF EXIST TREES ALONG BUDA SPORTSPLEX DRIVE MEDIAN.
6. ONLY IRRIGATION PIPING, FITTINGS AND APPURTENANCES SHALL BE DEMO. DOMESTIC POTABLE 2" WATERLINE, POTABLE WATER METER, VALVES, FITTINGS AND APPURTENANCES TO REMAIN. REFER TO UTILITY PLANS FOR NEW IRRIGATION METER AND BACKFLOW PREVENTER. REFER TO IRRIGATION PLANS FOR NEW IRRIGATION MAIN CONNECTION TO EXIST IRRIGATION LINES.
7. REFER TO IRRIGATION PLANS FOR PROPOSED IRRIGATION SYSTEM. REMOVE AND ABANDON EXIST IRRIGATION WIRE BOXES THAT ARE NOT CALLED OUT AS PROPOSED CONDITIONS AND/OR EXISTING TO REMAIN IN IRRIGATION PLANS. (TYP.)
8. CONTRACTOR SHALL REFER TO IRRIGATION PLANS FOR EXIST IRRIGATION INFRASTRUCTURE CALLED TO REMAIN, INCLUDING BUT NOT LIMITED TO PIPING, FITTINGS, WIRING, APPURTENANCES, VALVES W/BOX, AND WIRE BOXES. CONTRACTOR SHALL PROTECT INFRASTRUCTURE TO REMAIN AND RECONNECT PER IRRIGATION PLANS. EXISTING IRRIGATION PIPING NOT CALLED OUT IN IRRIGATION PLANS TO REMAIN SHALL BE CUT, PLUGGED AND ABANDONED IN PLACE. EXISTING IRRIGATION APPURTENANCES AND BOXES NOT CALLED OUT IN IRRIGATION PLANS TO REMAIN SHALL BE REMOVED.
9. INFRASTRUCTURE CALLED OUT TO BE SALVAGED PER DEMOLITION PLANS SHALL BE CONVEYED TO OWNER.

SITE DEVELOPMENT NUMBER 2025-476

REV. NO.	DATE	DESCRIPTION

PROJECT MANAGER:	PK
DESIGNED BY:	PG/RM
CHECKED BY:	DCS/JTH
DRAWN BY:	PG/RM
DCS PROJECT NO:	20101597

DCS ENGINEERING, LLC
1101 S. CAPITAL OF TEXAS HIGHWAY, BUILDING G-100
AUSTIN, TX 78746

TEL: (512) 614-6171
T.B.P.E. FIRM NO. F-13162

BudaTx breathe easy here™

BUDA SPORTSPLEX - PHASE I

STATE OF TEXAS
J. PATRICIO CALINDO RANGEL
154316
LICENSED PROFESSIONAL ENGINEER
08/04/25

SITE CIVIL

CIVIL - DEMOLITION PLAN - AREA NO. 7

DATE:	JULY 2025
SCALE:	1" = 30'
DRAWING:	01X-06

FILENAME: Z:\Projects 1551-1599\20101597 - Buda - Sportsplex\510 - Re-bid Dwgs\500 - Final_Design\500 - Final_Design\5.1 - Drawings\Sheet Files\Construction Plans\01X-01 - 01X-12.dwg, LAST SAVED ON: Aug 01 2025 2:22pm, PLOTTED BY: RMALDONADO, ON: Aug 07 2025 8:22am, CFG:

FILENAME: Z:\Projects 1551-1599\20101597 - Buda - Sportsplex\510 - Re-bid Dwgs\500 - Final_Design\500 - Final_Design\5.1 - Drawings\Sheet Files\Construction Plans\01X-01 - 01X-12.dwg, LAST SAVED ON: Aug 01 2025 2:22pm, PLOTTED BY: RMALDONADO, ON: Aug 07 2025 8:22am, CFG:

MATCHLINE – SEE AREA NO. 6 (NOT USED)

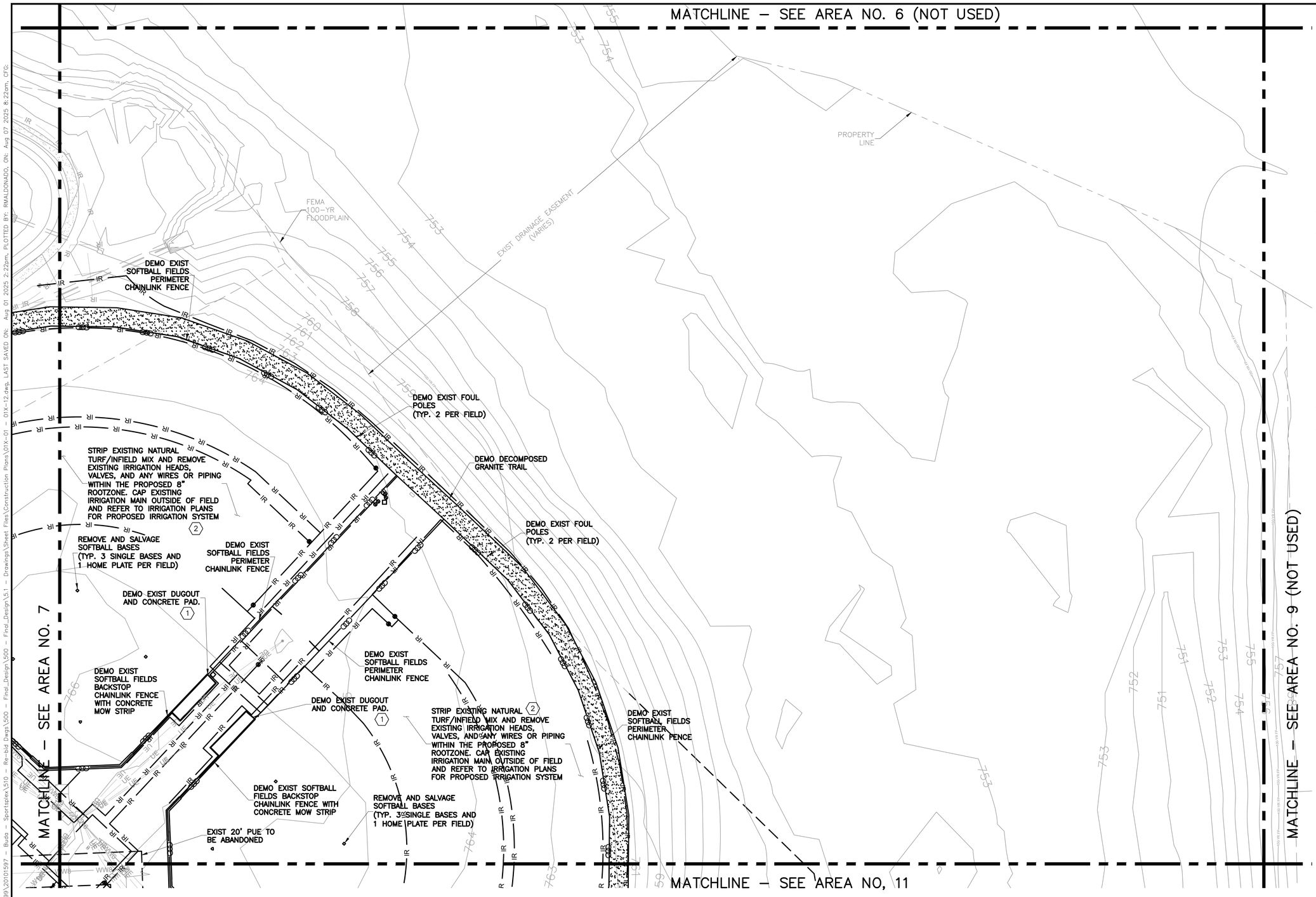

0 30' 60'

SCALE : 1" = 30'

KEY NOTES:

1. NOT USED.
2. CONTRACTOR SHALL TAKE CAUTION AND PROTECTIVE REQUIREMENTS AS NEEDED TO PROTECT, SALVAGE AND REINSTALL EXIST INFIELD MIX PER PROPOSED SOFTBALL SURFACING CONDITIONS SHOWN IN SERIES 200. REINSTALLED INFIELD MIX SHALL COMPLY WITH INFIELD MIX SOIL GRADATION PER SPECIFICATIONS AND BE FREE OF ANY DEBRIS, ORGANIC MATERIAL, AND ANY MATERIALS GENERATED FROM CONSTRUCTION CROSS CONTAMINATION. NO SEPARATE PAY.
3. CONTRACTOR SHALL REFER TO IRRIGATION PLANS FOR EXIST IRRIGATION INFRASTRUCTURE CALLED TO REMAIN, INCLUDING BUT NOT LIMITED TO PIPING, FITTINGS, WIRING, APPURTENANCES, VALVES W/BOX, AND WIRE BOXES. CONTRACTOR SHALL PROTECT INFRASTRUCTURE TO REMAIN AND RECONNECT PER IRRIGATION PLANS. EXISTING IRRIGATION PIPING NOT CALLED OUT IN IRRIGATION PLANS TO REMAIN SHALL BE CUT, PLUGGED AND ABANDONED IN PLACE. EXISTING IRRIGATION APPURTENANCES AND BOXES NOT CALLED OUT IN IRRIGATION PLANS TO REMAIN SHALL BE REMOVED.
4. INFRASTRUCTURE CALLED OUT TO BE SALVAGED PER DEMOLITION PLANS SHALL BE CONVEYED TO OWNER.
5. NOT USED.

SITE DEVELOPMENT NUMBER 2025-476

REV. NO.	DATE	DESCRIPTION

PROJECT MANAGER:	PK
DESIGNED BY:	PG/RM
CHECKED BY:	DCS/JTH
DRAWN BY:	PG/RM
DCS PROJECT NO:	20101597

DCS ENGINEERING, LLC
1101 S. CAPITAL OF TEXAS HIGHWAY, BUILDING G-100
AUSTIN, TX 78746

TEL: (512) 614-6171
T.B.P.E. FIRM NO. F-13162

BudaTx breathe easy here™

BUDA SPORTSPLEX - PHASE I

STATE OF TEXAS
J. PATRICIO GALINDO RANGEL
154316
LICENSED PROFESSIONAL ENGINEER
08/04/25

SITE CIVIL

CIVIL - DEMOLITION PLAN - AREA NO. 8

DATE: JULY 2025

SCALE: 1" = 30'

DRAWING: 01X-07

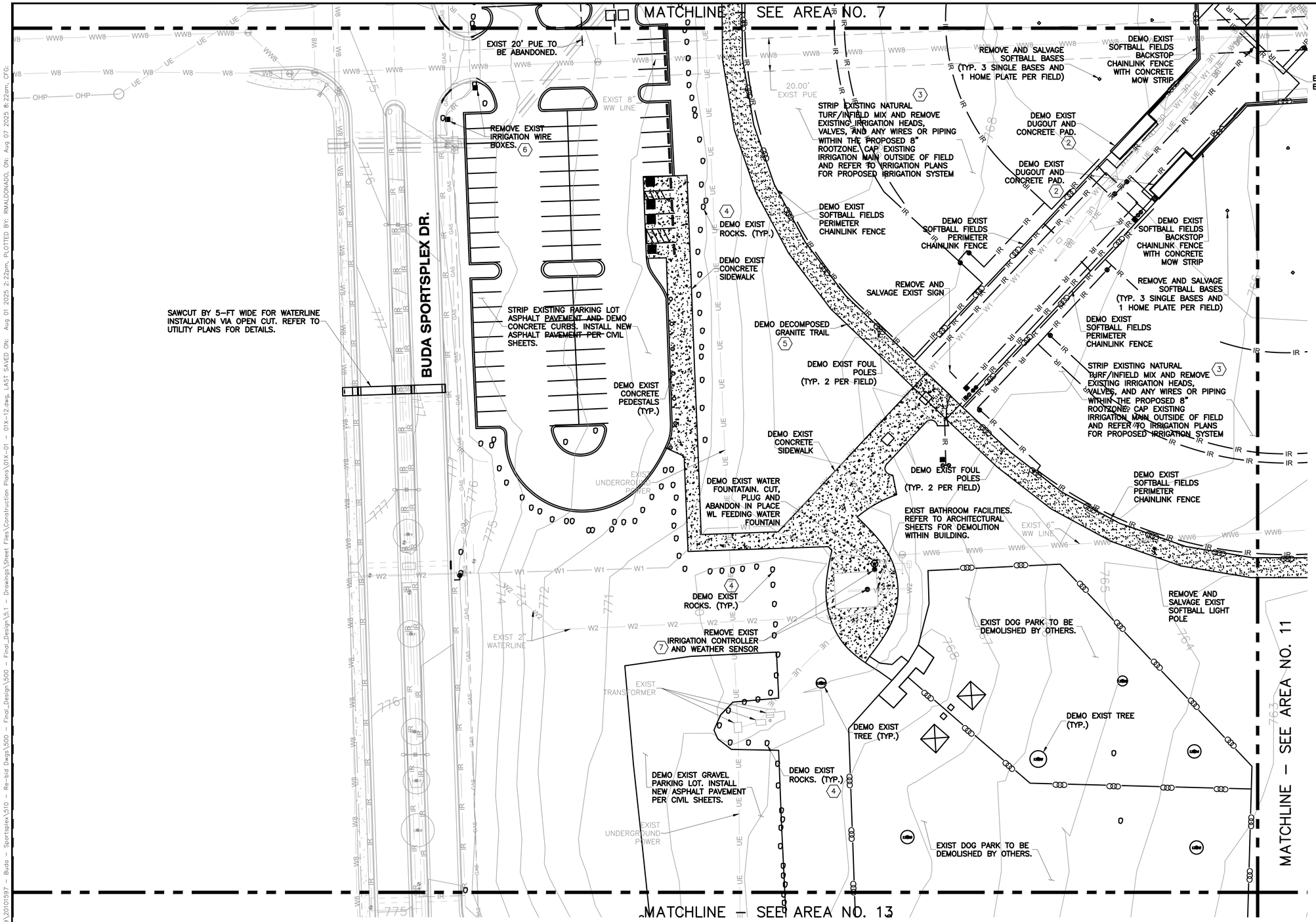

KEY NOTES:

1. NOT USED.
2. NOT USED.
3. CONTRACTOR SHALL TAKE CAUTION AND PROTECTIVE REQUIREMENTS AS NEEDED TO PROTECT, SALVAGE AND REINSTALL EXIST INFIELD MIX PER PROPOSED SOFTBALL SURFACING CONDITIONS SHOWN IN SERIES 200. REINSTALLED INFIELD MIX SHALL COMPLY WITH INFIELD MIX SOIL GRADATION PER SPECIFICATIONS AND BE FREE OF ANY DEBRIS, ORGANIC MATERIAL, AND ANY MATERIALS GENERATED FROM CONSTRUCTION CROSS CONTAMINATION. NO SEPARATE PAY.
4. EXIST ROCKS/BOULDERS SHOWN TO BE DEMO SHALL BE REUSED AS FILL MATERIAL IN THE PROJECT. CONTRACTOR MAY ELECT TO USE THEM IN THE PROPOSED BERM EAST OF THE SOUTH FIELDS. REFER TO GRADING PLANS FOR PROPOSED GRADES. (TYP. APPLICABLE TO ALL ROCKS/BOULDERS CALLED TO BE DEMOLISHED PER PLANS 01X-01 THROUGH 01X-12)
5. EXIST DECOMPOSED GRANITE MATERIAL SHOWN TO BE DEMO SHALL BE REUSED AS FILL MATERIAL IN THE PROJECT. CONTRACTOR MAY ELECT TO USE MATERIAL IN THE PROPOSED BERM EAST OF THE SOUTH FIELDS. REFER TO GRADING PLANS FOR PROPOSED GRADES. (TYP. APPLICABLE TO DECOMPOSED GRANITE MATERIAL CALLED TO BE DEMOLISHED PER PLANS 01X-01 THROUGH 01X-12)
6. REFER TO IRRIGATION PLANS FOR PROPOSED IRRIGATION SYSTEM. REMOVE AND ABANDON EXIST IRRIGATION WIRE BOXES THAT ARE NOT CALLED OUT AS PROPOSED CONDITIONS AND/OR EXISTING TO REMAIN IN IRRIGATION PLANS. (TYP.)
7. REFER TO IRRIGATION PLANS FOR LOCATION OF NEW IRRIGATION CONTROLLER AND WEATHER SENSOR.
8. CONTRACTOR SHALL REFER TO IRRIGATION PLANS FOR EXIST IRRIGATION INFRASTRUCTURE CALLED TO REMAIN, INCLUDING BUT NOT LIMITED TO PIPING, FITTINGS, WIRING, APPURTENANCES, VALVES W/BOX, AND WIRE BOXES. CONTRACTOR SHALL PROTECT INFRASTRUCTURE TO REMAIN AND RECONNECT PER IRRIGATION PLANS. EXISTING IRRIGATION PIPING NOT CALLED OUT IN IRRIGATION PLANS TO REMAIN SHALL BE CUT, PLUGGED AND ABANDONED IN PLACE. EXISTING IRRIGATION APPURTENANCES AND BOXES NOT CALLED OUT IN IRRIGATION PLANS TO REMAIN SHALL BE REMOVED.
9. INFRASTRUCTURE CALLED OUT TO BE SALVAGED PER DEMOLITION PLANS SHALL BE CONVEYED TO OWNER.
10. NOT USED.

SITE DEVELOPMENT NUMBER 2025-476

REV. NO.	DATE	DESCRIPTION

PROJECT MANAGER:	PK
DESIGNED BY:	PG/RM
CHECKED BY:	DCS/JTH
DRAWN BY:	PG/RM
DCS PROJECT NO:	20101597

DCS ENGINEERING, LLC
1101 S. CAPITAL OF TEXAS HIGHWAY, BUILDING G-100
AUSTIN, TX 78746
TEL: (512) 614-6171
T.B.P.E. FIRM NO. F-13162

BudaTx breathe easy here™

BUDA SPORTSPLEX - PHASE I

STATE OF TEXAS
J. PATRICIO GALINDO RANGEL
154316
LICENSED PROFESSIONAL ENGINEER
08/04/25

SITE CIVIL

CIVIL - DEMOLITION PLAN - AREA NO. 10

DATE: JULY 2025
SCALE: 1" = 30'
DRAWING: 01X-08

FILENAME: Z:\Projects 1551-1599\20101597 - Buda - Sportsplex\510 - Re-bid Dwgs\500 - Final_Design\500 - Final_Design\5.1 - Drawings\Sheet Files\Construction Plans\01X-01 - 01X-12.dwg, LAST SAVED ON: Aug 01 2025 2:22pm, PLOTTED BY: RMALDONADO, ON: Aug 07 2025 8:22am, CFG:

MATCHLINE – SEE AREA NO. 8

EXIST 20' PUE TO BE ABANDONED.

REMOVE AND SALVAGE SOFTBALL BASES (TYP. 3 SINGLE BASES AND 1 HOME PLATE PER FIELD)

STRIP EXISTING NATURAL TURF/INFIELD MIX AND REMOVE EXISTING IRRIGATION HEADS, VALVES, AND ANY WIRES OR PIPING WITHIN THE PROPOSED 8" ROOTZONE. CAP EXISTING IRRIGATION MAIN OUTSIDE OF FIELD AND REFER TO IRRIGATION PLANS FOR PROPOSED IRRIGATION SYSTEM (6)

DEMO EXIST SOFTBALL FIELDS PERIMETER CHAINLINK FENCE

DEMO EXIST DUGOUT AND CONCRETE PAD. (5)

DEMO DECOMPOSED GRANITE TRAIL

EXIST DRAINAGE EASEMENT TO BE AMENDED. REFER TO UTILITY PLANS FOR PROPOSED DRAINAGE EASEMENT.

FEMA 100-YR FLOODPLAIN

REMOVE AND SALVAGE EXIST BLEACHERS

DEMO EXIST SOFTBALL FIELDS BACKSTOP CHAINLINK FENCE WITH CONCRETE MOW STRIP

DEMO EXIST SOFTBALL FIELDS PERIMETER CHAINLINK FENCE

REMOVE AND SALVAGE EXIST SCOREBOARDS (4) (TYP. 1 PER FIELD)

REMOVE AND SALVAGE SOFTBALL BASES (TYP. 3 SINGLE BASES AND 1 HOME PLATE PER FIELD)

DEMO EXIST SOFTBALL FIELDS PERIMETER CHAINLINK FENCE

DEMO EXIST FOUL POLES (TYP. 2 PER FIELD)

STRIP EXISTING NATURAL TURF/INFIELD MIX AND REMOVE EXISTING IRRIGATION HEADS, VALVES, AND ANY WIRES OR PIPING WITHIN THE PROPOSED 8" ROOTZONE. CAP EXISTING IRRIGATION MAIN OUTSIDE OF FIELD AND REFER TO IRRIGATION PLANS FOR PROPOSED IRRIGATION SYSTEM (6)

EXIST 8" WW LINE

DEMO EXIST FOUL POLES (TYP. 2 PER FIELD)

REMOVE AND SALVAGE EXIST SCOREBOARDS (4) (TYP. 1 PER FIELD)

EXIST WATER QUALITY POND EASEMENT TO BE ABANDONED.

EXIST 6" WW LINE

DEMO EXIST SOFTBALL FIELDS PERIMETER CHAINLINK FENCE

REMOVE AND SALVAGE EXIST SOFTBALL LIGHT POLE

DEMO DECOMPOSED GRANITE TRAIL

EXIST DRAINAGE EASEMENT (VARIES)

20.00' EXIST PUE

EXIST 8" WW LINE

REMOVE EXIST WWMH. RECONNECT WW LINES PER UTILITY PLANS.

CUT, AND REMOVE 197 LF OF 12" WW LINE. RELOCATE WW LINE PER UTILITY PLANS.

EXIST 20' PUE TO BE ABANDONED.

MATCHLINE – SEE AREA NO. 10

MATCHLINE – SEE AREA NO. 12 (NOT USED)

MATCHLINE – SEE AREA NO. 14

0 30' 60'

SCALE : 1" = 30'

KEY NOTES:

1. REMOVE AND LEGALLY DISPOSE OF ALL PIPING AND CONCRETE MANHOLE DEBRIS TO BE DEMOLISHED.
2. NOT USED.
3. ALL SEWER PIPES CALLED TO BE ABANDONED, OR THAT IS CURRENTLY ABANDONED AND WILL REMAIN ABANDONED, SHALL BE FLOWABLE FILLED. PRIOR TO FLOWABLE FILLING, REMOVE ANY GRIT/DEPOSITION IN SEWER PIPES. FLOWABLE FILL SHALL BE 300 PSI CONCRETE (MIN).
4. CONTRACTOR SHALL PULL EXIST UNDERGROUND ELECTRIC CONDUIT APPROXIMATELY 30 FT TO CONNECT NEW SCOREBOARD LOCATION. REFER TO CIVIL SHEETS FOR NEW SCOREBOARDS LOCATIONS.
5. NOT USED.
6. CONTRACTOR SHALL TAKE CAUTION AND PROTECTIVE REQUIREMENTS AS NEEDED TO PROTECT, SALVAGE AND REINSTALL EXIST INFIELD MIX PER PROPOSED SOFTBALL SURFACING CONDITIONS SHOWN IN SERIES 200. REINSTALLED INFIELD MIX SHALL COMPLY WITH INFIELD MIX SOIL GRADATION PER SPECIFICATIONS AND BE FREE OF ANY DEBRIS, ORGANIC MATERIAL, AND ANY MATERIALS GENERATED FROM CONSTRUCTION CROSS CONTAMINATION. NO SEPARATE PAY.
7. CONTRACTOR SHALL REFER TO IRRIGATION PLANS FOR EXIST IRRIGATION INFRASTRUCTURE CALLED TO REMAIN, INCLUDING BUT NOT LIMITED TO PIPING, FITTINGS, WIRING, APPURTENANCES, VALVES W/BOX, AND WIRE BOXES. CONTRACTOR SHALL PROTECT INFRASTRUCTURE TO REMAIN AND RECONNECT PER IRRIGATION PLANS. EXISTING IRRIGATION PIPING NOT CALLED OUT IN IRRIGATION PLANS TO REMAIN SHALL BE CUT, PLUGGED AND ABANDONED IN PLACE. EXISTING IRRIGATION APPURTENANCES AND BOXES NOT CALLED OUT IN IRRIGATION PLANS TO REMAIN SHALL BE REMOVED.
8. INFRASTRUCTURE CALLED OUT TO BE SALVAGED PER DEMOLITION PLANS SHALL BE CONVEYED TO OWNER.
9. NOT USED.

SITE DEVELOPMENT NUMBER 2025-476

REV. NO.	DATE	DESCRIPTION

PROJECT MANAGER:	PK
DESIGNED BY:	PG/RM
CHECKED BY:	DCS/JTH
DRAWN BY:	PG/RM
DCS PROJECT NO:	20101597

DCS ENGINEERING, LLC
1101 S. CAPITAL OF TEXAS HIGHWAY, BUILDING G-100
AUSTIN, TX 78746

TEL: (512) 614-6171
T.B.P.E. FIRM NO. F-13162

BudaTx breathe easy here™

BUDA SPORTSPLEX - PHASE I

STATE OF TEXAS
I. PATRICIO GALINDO BANGEL
154316
LICENSED PROFESSIONAL ENGINEER
08/04/25.

SITE CIVIL

CIVIL - DEMOLITION PLAN - AREA NO. 11

DATE: JULY 2025

SCALE: 1" = 30'

DRAWING: 01X-09

FILENAME: Z:\Projects 1551-1599\20101597 - Buda - Sportsplex\510 - Re-bid Dwgs\500 - Final_Design\500 - Final_Design\51 - Drawings\Sheet Files\Construction Plans\01X-12.dwg, LAST SAVED ON: Aug 01 2025 2:22pm, PLOTTED BY: RWALDONADO, ON: Aug 07 2025 8:22am, CFG:

FILENAME: Z:\Projects 1551-1599\20101597 - Buda - Sportsplex\510 - Re-bid Dwgs\500 - Final_Design\5.1 - Drawings\Sheet Files\Construction Plans\01X-01 - 01X-12.dwg, LAST SAVED ON: Aug 01 2025 2:22pm, PLOTTED BY: RWALDONADO, ON: Aug 07 2025 8:22am, CFG:

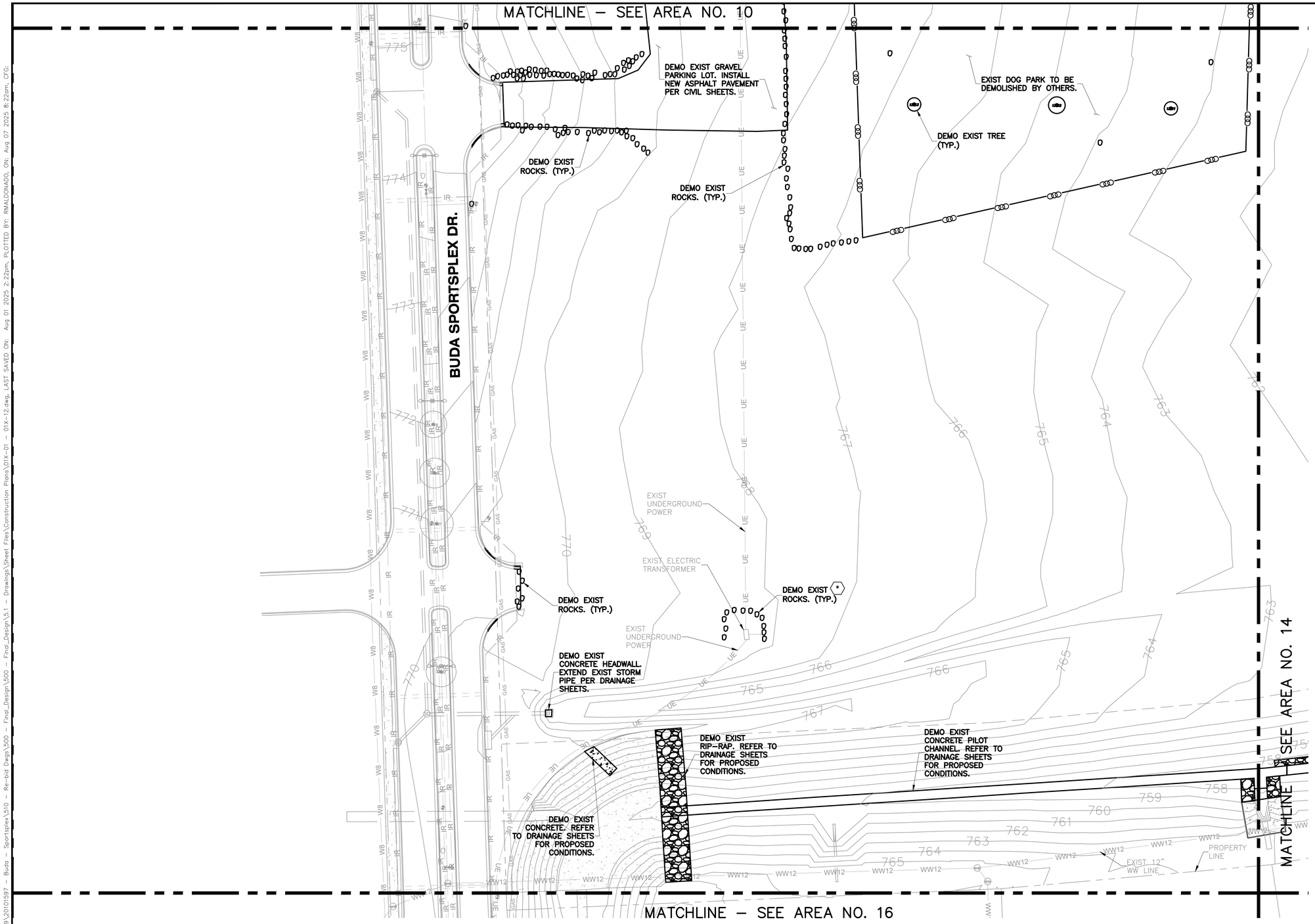

0 30' 60'

SCALE : 1" = 30'

KEY NOTES:

1. NOT USED.
2. CONTRACTOR SHALL REFER TO IRRIGATION PLANS FOR EXIST IRRIGATION INFRASTRUCTURE CALLED TO REMAIN, INCLUDING BUT NOT LIMITED TO PIPING, FITTINGS, WIRING, APPURTENANCES, VALVES W/BOX, AND WIRE BOXES. CONTRACTOR SHALL PROTECT INFRASTRUCTURE TO REMAIN AND RECONNECT PER IRRIGATION PLANS. EXISTING IRRIGATION PIPING NOT CALLED OUT IN IRRIGATION PLANS TO REMAIN SHALL BE CUT, PLUGGED AND ABANDONED IN PLACE. EXISTING IRRIGATION APPURTENANCES AND BOXES NOT CALLED OUT IN IRRIGATION PLANS TO REMAIN SHALL BE REMOVED.
3. INFRASTRUCTURE CALLED OUT TO BE SALVAGED PER DEMOLITION PLANS SHALL BE CONVEYED TO OWNER.
- * ALTERNATE BID ITEM

SITE DEVELOPMENT NUMBER 2025-476

REV. NO.	DATE	DESCRIPTION

PROJECT MANAGER:	PK
DESIGNED BY:	PG/RM
CHECKED BY:	DCS/JTH
DRAWN BY:	PG/RM
DCS PROJECT NO:	20101597

DCS ENGINEERING, LLC
1101 S. CAPITAL OF TEXAS HIGHWAY, BUILDING G-100
AUSTIN, TX 78746

TEL: (512) 614-6171
T.B.P.E. FIRM NO. F-13162

BudaTx breathe easy here™

BUDA SPORTSPLEX - PHASE I

STATE OF TEXAS
J. PATRICIO GALINDO RANGEL
154316
LICENSED PROFESSIONAL ENGINEER
08/04/25

SITE CIVIL

CIVIL - DEMOLITION PLAN - AREA NO. 13

DATE: JULY 2025

SCALE: 1" = 30'

DRAWING: 01X-10

MATCHLINE – SEE AREA NO. 11

CUT, AND REMOVE 197 LF OF 12" WW LINE. RELOCATE WW LINE PER UTILITY PLANS.

EXIST 20' PUE TO BE ABANDONED.

EXIST 20' PUE TO BE ABANDONED.

REMOVE EXIST WWMH. RECONNECT WW LINES PER UTILITY PLANS.

EXIST WATER QUALITY POND EASEMENT TO BE ABANDONED.

20.00' EXIST PUE

FEMA 100-YR FLOODPLAIN

EXIST 12" WATERLINE

DEMO EXIST CONCRETE PILOT CHANNEL. REFER TO DRAINAGE SHEETS FOR PROPOSED CONDITIONS.

PROPERTY LINE

EXIST 12" WW LINE

DEMO EXIST RIP-RAP. REFER TO DRAINAGE SHEETS FOR PROPOSED CONDITIONS.

MATCHLINE – SEE AREA NO. 13

MATCHLINE – SEE AREA NO. 15 (NOT USED)

MATCHLINE – SEE SHEET AREA NO. 17 (NOT USED)

0 30' 60'

SCALE : 1" = 30'

KEY NOTES:

1. CONTRACTOR SHALL REFER TO IRRIGATION PLANS FOR EXIST IRRIGATION INFRASTRUCTURE CALLED TO REMAIN, INCLUDING BUT NOT LIMITED TO PIPING, FITTINGS, WIRING, APPURTENANCES, VALVES W/BOX, AND WIRE BOXES. CONTRACTOR SHALL PROTECT INFRASTRUCTURE TO REMAIN AND RECONNECT PER IRRIGATION PLANS. EXISTING IRRIGATION PIPING NOT CALLED OUT IN IRRIGATION PLANS TO REMAIN SHALL BE CUT, PLUGGED AND ABANDONED IN PLACE. EXISTING IRRIGATION APPURTENANCES AND BOXES NOT CALLED OUT IN IRRIGATION PLANS TO REMAIN SHALL BE REMOVED.
2. INFRASTRUCTURE CALLED OUT TO BE SALVAGED PER DEMOLITION PLANS SHALL BE CONVEYED TO OWNER.

SITE DEVELOPMENT NUMBER 2025-476

REV. NO.	DATE	DESCRIPTION

PROJECT MANAGER:	PK
DESIGNED BY:	PG/RM
CHECKED BY:	DCS/JTH
DRAWN BY:	PG/RM
DCS PROJECT NO:	20101597

DCS ENGINEERING, LLC
1101 S. CAPITAL OF TEXAS HIGHWAY, BUILDING G-100
AUSTIN, TX 78746

TEL: (512) 614-6171
T.B.P.E. FIRM NO. F-13162

BudaTx breathe easy here™

BUDA SPORTSPLEX - PHASE I

STATE OF TEXAS
J. PATRICIO GALINDO RANGEL
154316
LICENSED
PROFESSIONAL ENGINEER
08/04/25.

SITE CIVIL

CIVIL - DEMOLITION PLAN - AREA NO. 14

DATE: JULY 2025

SCALE: 1" = 30'

DRAWING: 01X-11

FILENAME: Z:\Projects 1551-1599\20101597 - Buda - Sportsplex\510 - Re-bid Dwgs\500 - Final_Design\500 - Final_Design\5.1 - Drawings\Sheet Files\Construction Plans\01X-01 - 01X-12.dwg, LAST SAVED ON: Aug 01 2025 2:22pm, PLOTTED BY: RMALDONADO, ON: Aug 07 2025 8:22am, CFG:

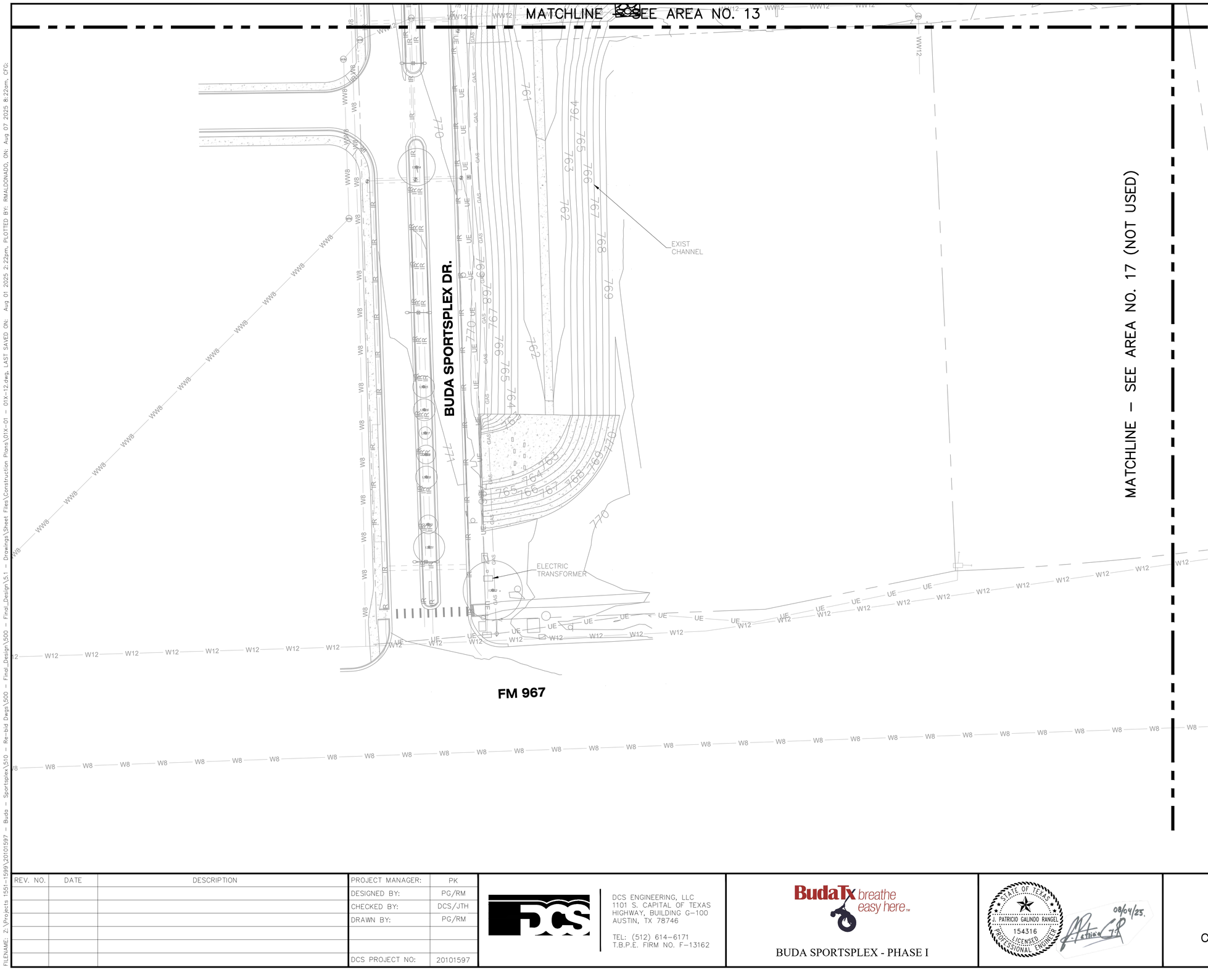

KEY NOTES:

1. REFER TO LANDSCAPE ARCHITECTURAL SHEETS FOR DEMOLITION OF EXIST TREES ALONG BUDA SPORTSPLEX DRIVE MEDIAN.
2. CONTRACTOR SHALL REFER TO IRRIGATION PLANS FOR EXIST IRRIGATION INFRASTRUCTURE CALLED TO REMAIN, INCLUDING BUT NOT LIMITED TO PIPING, FITTINGS, WIRING, APPURTENANCES, VALVES W/BOX, AND WIRE BOXES. CONTRACTOR SHALL PROTECT INFRASTRUCTURE TO REMAIN AND RECONNECT PER IRRIGATION PLANS. EXISTING IRRIGATION PIPING NOT CALLED OUT IN IRRIGATION PLANS TO REMAIN SHALL BE CUT, PLUGGED AND ABANDONED IN PLACE. EXISTING IRRIGATION APPURTENANCES AND BOXES NOT CALLED OUT IN IRRIGATION PLANS TO REMAIN SHALL BE REMOVED.

SITE DEVELOPMENT NUMBER 2025-476

REV. NO.	DATE	DESCRIPTION

PROJECT MANAGER:	PK
DESIGNED BY:	PG/RM
CHECKED BY:	DCS/JTH
DRAWN BY:	PG/RM
DCS PROJECT NO:	20101597

DCS ENGINEERING, LLC
1101 S. CAPITAL OF TEXAS HIGHWAY, BUILDING G-100
AUSTIN, TX 78746

TEL: (512) 614-6171
T.B.P.E. FIRM NO. F-13162

BudaTx breathe easy here™

BUDA SPORTSPLEX - PHASE I

STATE OF TEXAS
J. PATRICIO GALINDO RANGEL
154316
LICENSED PROFESSIONAL ENGINEER
08/04/25

SITE CIVIL

CIVIL - DEMOLITION PLAN - AREA NO. 16

DATE: JULY 2025
SCALE: 1" = 30'
DRAWING: 01X-12

FILENAME: Z:\Projects 1551-1599\20101597 - Buda - Sportsplex\510 - Re-bid Dwgs\500 - Final_Design\500 - Final_Design\5.1 - Drawings\Sheet Files\Construction Plans\01X-01 - 01X-12.dwg, LAST SAVED ON: Aug 01 2025 2:22pm, PLOTTED BY: RMALDONADO, ON: Aug 07 2025 8:22am, CFG:



0 200' 400'

SCALE : 1" = 200'

LEGEND:

- LOC — LIMIT OF CONSTRUCTION
- SF — SILT FENCE
- SFJ — SILT FENCE WITH J–HOOKS
- HYDROMULCH SEEDING
- STABILIZED CONSTRUCTION ENTRANCE
- STORMWATER RUNOFF DIRECTION
- MULCH SOCK

EROSION CONTROL NOTES:

1. THE LOCATION OF THE CONCRETE WASHOUTS WILL BE DETERMINED ONCE CONSTRUCTION HAS BEGUN AND WILL BE PROPERLY NOTATED ON THE SITE MAP AT THAT TIME.
2. ALL REQUIRED NOTICES AND PERMITS MUST BE PLACED IN A HIGHLY VISIBLE LOCATION ONSITE BEFORE THE COMMENCEMENT OF CONSTRUCTION.
3. ALL EROSION AND SEDIMENTATION CONTROLS (ESC) MUST BE INSTALLED PRIOR TO ANY DISTURBANCE TO THE PROJECT SITE.
4. INSTALL SILT FENCE ACCORDINGLY FOR RUN–ON DIVERSION OR OFFSITE SEDIMENT CONTROL DEPENDING ON UP OR DOWN SLOPE, FACING POST SIDE ON THE DOWN GRADIENT SIDE.
5. ALL ESC USED ONSITE MUST BE REGULARLY MONITORED AND MAINTAINED AS NEEDED.
6. MUD AND OR DIRT TRACKED INTO THE ROADWAY MUST BE IMMEDIATELY REMOVED UPON DISCOVERY.
7. EXCESS MATERIALS THAT WILL BE TRANSPORTED TO AN OFFSITE LOCATION MUST HAVE THAT LOCATION CLEARED BY CITY INSPECTOR.
8. LOOSE TRASH AND DEBRIS MUST BE DISPOSED OF PROPERLY ONSITE.
9. CONTRACTOR SHALL MAINTAIN AND UTILIZE DUST CONTROL FOR THE DURATION OF THE PROJECT. DUST CONTROL METHODS ARE REQUIRED AS PER CITY OF AUSTIN'S ENVIRONMENTAL CRITERIA MANUAL SECTION 1.4.5.D AS ADOPTED BY THE CITY OF BUDA.
10. THE STABILIZED CONSTRUCTION ENTRANCE SHALL BE MAINTAINED IN A CONDITION THAT PREVENTS TRACKING ONTO THE PUBLIC ROADWAY ON AN ONGOING/REGULAR BASIS.
11. INITIATE TEMPORARY STABILIZATION WHEN CONSTRUCTION CEASES IN A DISTURBED AREA FOR 14 DAYS.
12. CITY INSPECTOR MAY REQUEST ADDITIONAL CONTROLS BE INSTALLED ONSITE AS NEEDED.
13. CONTRACTOR MUST REMOVE SEDIMENT FROM ALL STORM SEWER INLET BOXES, LINES, PIPES AND CULVERTS BEFORE CONDITIONAL/FINAL ACCEPTANCE CAN OBTAINED.
14. PERMITTEE SHALL INSPECT ALL INLET PROTECTION DEVICES AS PART OF THE WEEKLY SWP3 REPORT, UPON RECEIVING A FORECAST CALLING FOR A RAIN EVENT FOR AN EXTENDED PERIOD, MODIFICATION OF INLET PROTECTION SHOULD BE MADE TO PREVENT FLOODING OR PONDING OF WATER IF TRAFFIC OR PROPERTY CONCERNS ARISE.
15. ANY DE–WATERING OPERATIONS MUST BE APPROVED BY THE CITY ENVIRONMENTAL INSPECTOR BEFORE DE–WATERING OCCURS. THE DE–WATERING METHOD MUST MINIMIZE THE DISCHARGE OF SUSPENDED SEDIMENTS TO THE GREATEST EXTENT FEASIBLE.
16. CONTRACTOR SHALL REFER TO SHEETS 01C–02 THROUGH 01C–12 FOR DETAILED LOCATIONS OF EROSION CONTROL.

RESTORATION NOTES:

1. INITIATE PERMANENT STABILIZATION IMMEDIATELY ONCE WORK HAS CEASED AND FINAL GRADE HAS BEEN ACHIEVED IN ANY GIVEN AREA.
2. THE FINAL STABILIZATION/REVEGETATION EFFORTS SHALL BE IN ACCORDANCE WITH THE APPROVED RESTORATION PLAN DETAILS AND SPECIFICATIONS.
3. ALL 3:1 SLOPES OR STEEPER REQUIRE SOIL RETENTION BLANKET (SRB).
4. THE CONTRACTOR IS RESPONSIBLE FOR PROVIDING ADEQUATE WATERING/IRRIGATION TO ACHIEVE THE PERMANENT STABILIZATION REQUIREMENTS IN ALL DISTURBED/REVEGETATED AREAS BEFORE FINAL ACCEPTANCE FOR THIS PROJECT CAN BE OBTAINED.
5. ALL DISTURBED/BARE AREAS WILL REQUIRE PERMANENT STABILIZATION BEFORE FINAL ACCEPTANCE CAN BE ACHIEVED. AVOID DISTURBING AREAS OF THE PROJECT THAT ARE NOT NECESSARY FOR CONSTRUCTION.
6. ALL DISTURBED AREAS MUST MEET THE REQUIREMENT FOR PERMANENT STABILIZATION.
7. THE NOTICE OF TERMINATION (NOT) FOR THIS PROJECT SHALL NOT BE SUBMITTED UNTIL THE CITY ENVIRONMENTAL INSPECTOR APPROVES CLEARANCE.

SITE DEVELOPMENT NUMBER 2025–476

REV. NO.	DATE	DESCRIPTION

PROJECT MANAGER:	PK
DESIGNED BY:	PG/RM
CHECKED BY:	DCS/JTH
DRAWN BY:	PG/RM
DCS PROJECT NO:	20101597

DCS ENGINEERING, LLC
1101 S. CAPITAL OF TEXAS HIGHWAY, BUILDING G–100
AUSTIN, TX 78746

TEL: (512) 614–6171
T.B.P.E. FIRM NO. F–13162

BudaTx breathe easy here™

BUDA SPORTSPLEX - PHASE I

STATE OF TEXAS
JORDAN T. HURTA
143332
LICENSED PROFESSIONAL ENGINEER
8/4/2025

SITE CIVIL

CIVIL - OVERALL EROSION CONTROL PLAN

DATE: AUGUST 2025

SCALE: 1" = 200'

DRAWING: 01C-01

FILENAME: Z:\Projects 1551-1599\20101597 - Buda - Sportsplex\510 - Re-bid Dwgs\500 - Final_Design\500 - Final_Design\5.1 - Drawings\Sheet Files\Construction Plans\01C-01 - 01C-12.dwg, LAST SAVED ON: Aug 06 2025 7:04pm, PLOTTED BY: RMALDONADO, ON: Aug 07 2025 8:14am, CFG:

MATCHLINE – SEE AREA NO. 2

MATCHLINE – SEE AREA NO. 4

MATCHLINE – SEE AREA NO. 6 (NOT USED)

MATCHLINE – SEE AREA NO. 7

EXIST ELECTRIC TRANSFORMER

25.00' PROP DRAINAGE EASEMENT

EXIST 8'H CHAINLINK FENCE

PROVIDE INLET PROTECTION

SILT FENCE

LIMIT OF CONSTRUCTION

PROPERTY LINE

EXIST 36" RCP

EXIST PAVILION

EXIST 42" RCP

FEMA 100-YR FLOODPLAIN

PROVIDE GRATE INLET PROTECTION PER DTL 01 SHT 00C-01

EXIST DRAINAGE EASEMENT (VARIES)

20.00' PROP PUE

EXIST SOCCER PARKING LOT

EXIST 6" WW LINE

0 30' 60'

SCALE : 1" = 30'

EXISTING LEGEND

- EXIST PROPERTY LINE
- EXIST CHAINLINK FENCE
- EXIST IRRIGATION LINE
- EXIST 100-YR FLOODPLAIN
- EXIST WASTEWATER LINE
- EXIST WATER LINE
- EXIST UNDERGROUND ELECTRIC LINE
- EXIST RCP
- EXIST TREE

PROPOSED LEGEND

- PROP CONTOUR
- SF — SILT FENCE
- LOC — LIMIT OF CONSTRUCTION
- DSK — DEWATERING SKIMMER PER DTL 3 SHT 00C-01
- STABILIZED CONSTRUCTION ENTRANCE PER DTL 641S-1
- CONCRETE TRUCK WASHOUT AREA
- CONSTRUCTION STAGING AREA
- STORM WATER FLOW DIRECTION
- MULCH SOCK
- TREE PROTECTION FENCE PER DTL 610S-1 & 610S-2

KEY NOTES:

(*) ALTERNATE BID ITEM

SITE DEVELOPMENT NUMBER 2025-476

REV. NO.	DATE	DESCRIPTION

PROJECT MANAGER:	PK
DESIGNED BY:	PG/RM
CHECKED BY:	DCS/JTH
DRAWN BY:	PG/RM
DCS PROJECT NO:	20101597

DCS ENGINEERING, LLC
1101 S. CAPITAL OF TEXAS HIGHWAY, BUILDING G-100
AUSTIN, TX 78746

TEL: (512) 614-6171
T.B.P.E. FIRM NO. F-13162

BudaTx breathe easy here™

BUDA SPORTSPLEX - PHASE I

STATE OF TEXAS
JORDAN T. HURTA
143332
LICENSED PROFESSIONAL ENGINEER
8/4/2025

SITE CIVIL

CIVIL - EROSION CONTROL PLAN - AREA NO. 5

DATE: AUGUST 2025

SCALE: 1" = 30'

DRAWING: 01C-05

FILENAME: Z:\Projects 1551-1599\20101597 - Buda - Sportsplex\510 - Re-bid Dwgs\500 - Final_Design\500 - Final_Design\5.1 - Drawings\Sheet Files\Construction Plans\01C-01 - 01C-12.dwg, LAST SAVED ON: Aug 06 2025 7:04pm, PLOTTED BY: RMALDONADO, ON: Aug 07 2025 8:14am, CFG:

MATCHLINE – SEE AREA NO. 5

MATCHLINE – SEE AREA NO. 10

MATCHLINE – SEE AREA NO. 8

BUDA SPORTSPLEX DR.

SILT FENCE

LIMIT OF CONSTRUCTION

PROVIDE INLET PROTECTION PER DTL 02 SHT 00C–01

MULCH SOCK

PROVIDE GRATE INLET PROTECTION PER DTL 01 SHT 00C–01

EXIST 6" WW LINE

20.00' PROP PUE

EXIST DETENTION POND

FEMA 100–YR FLOODPLAIN

0 30' 60'

SCALE : 1" = 30'

EXISTING LEGEND

- EXIST PROPERTY LINE
- EXIST CHAINLINK FENCE
- EXIST IRRIGATION LINE
- EXIST 100–YR FLOODPLAIN
- EXIST WASTEWATER LINE
- EXIST WATER LINE
- EXIST UNDERGROUND ELECTRIC LINE
- EXIST RCP
- EXIST TREE

PROPOSED LEGEND

- PROP CONTOUR
- SF — SILT FENCE
- LOC — LIMIT OF CONSTRUCTION
- DSK — DEWATERING SKIMMER PER DTL 3 SHT 00C–01
- STABILIZED CONSTRUCTION ENTRANCE PER DTL 641S–1
- CONCRETE TRUCK WASHOUT AREA
- CONSTRUCTION STAGING AREA
- STORM WATER FLOW DIRECTION
- MULCH SOCK
- TREE PROTECTION FENCE PER DTL 610S–1 & 610S–2

KEY NOTES:

ALTERNATE BID ITEM

SITE DEVELOPMENT NUMBER 2025–476

REV. NO.	DATE	DESCRIPTION

PROJECT MANAGER:	PK
DESIGNED BY:	PG/RM
CHECKED BY:	DCS/JTH
DRAWN BY:	PG/RM
DCS PROJECT NO:	20101597

DCS ENGINEERING, LLC
1101 S. CAPITAL OF TEXAS HIGHWAY, BUILDING G–100
AUSTIN, TX 78746

TEL: (512) 614–6171
T.B.P.E. FIRM NO. F–13162

BudaTx breathe easy here™

BUDA SPORTSPLEX - PHASE I

STATE OF TEXAS
JORDAN T. HURTA
143332
LICENSED PROFESSIONAL ENGINEER
8/4/2025

SITE CIVIL

CIVIL - EROSION CONTROL PLAN - AREA NO. 7

DATE: AUGUST 2025

SCALE: 1" = 30'

DRAWING: 01C-06

FILENAME: Z:\Projects 1551–1599\20101597 – Buda – Sportsplex\510 – Re–bid Dwgs\500 – Final_Design\500 – Final_Design\5.1 – Drawings\Sheet Files\Construction Plans\01C–01 – 01C–12.dwg, LAST SAVED ON: Aug 06 2025 7:04pm, PLOTTED BY: RMALDONADO, ON: Aug 07 2025 8:14am, CFG:

MATCHLINE – SEE AREA NO. 6 (NOT USED)

LIMIT OF CONSTRUCTION

SILT FENCE

70 LF ROCK BERM

28 LF ROCK BERM

FEMA 100-YR FLOODPLAIN

EXIST DRAINAGE EASEMENT (VARIES)

PROPERTY LINE

EXIST SOFTBALL FIELDS

EXIST SOFTBALL FIELDS

MATCHLINE – SEE AREA NO. 7

MATCHLINE – SEE AREA NO. 9 (NOT USED)

MATCHLINE – SEE AREA NO. 11

0 30' 60'

SCALE : 1" = 30'

EXISTING LEGEND

- EXIST PROPERTY LINE
- EXIST CHAINLINK FENCE
- EXIST IRRIGATION LINE
- EXIST 100-YR FLOODPLAIN
- EXIST WASTEWATER LINE
- EXIST WATER LINE
- EXIST UNDERGROUND ELECTRIC LINE
- EXIST RCP
- EXIST TREE

PROPOSED LEGEND

- PROP CONTOUR
- SF — SILT FENCE
- LOC — LIMIT OF CONSTRUCTION
- DSK — DEWATERING SKIMMER PER DTL 3 SHT 00C-01
- STABILIZED CONSTRUCTION ENTRANCE PER DTL 641S-1
- CONCRETE TRUCK WASHOUT AREA
- CONSTRUCTION STAGING AREA
- STORM WATER FLOW DIRECTION
- MULCH SOCK
- TREE PROTECTION FENCE PER DTL 610S-1 & 610S-2

SITE DEVELOPMENT NUMBER 2025-476

REV. NO.	DATE	DESCRIPTION

PROJECT MANAGER:	PK
DESIGNED BY:	PG/RM
CHECKED BY:	DCS/JTH
DRAWN BY:	PG/RM
DCS PROJECT NO:	20101597

DCS ENGINEERING, LLC
1101 S. CAPITAL OF TEXAS HIGHWAY, BUILDING G-100
AUSTIN, TX 78746

TEL: (512) 614-6171
T.B.P.E. FIRM NO. F-13162

BudaTx breathe easy here™

BUDA SPORTSPLEX - PHASE I

STATE OF TEXAS
JORDAN T. HURTA
143332
LICENSED PROFESSIONAL ENGINEER
8/4/2025

SITE CIVIL

CIVIL - EROSION CONTROL PLAN - AREA NO. 8

DATE: AUGUST 2025

SCALE: 1" = 30'

DRAWING: 01C-07

FILENAME: Z:\Projects\551-1599\20101597 - Buda - Sportsplex\510 - Re-bid Dwgs\500 - Final_Design\500 - Final_Design\5.1 - Drawings\Sheet Files\Construction Plans\01C-01 - 01C-12.dwg, LAST SAVED ON: Aug 06 2025 7:04pm, PLOTTED BY: RMALDONADO, ON: Aug 07 2025 8:14am, CFG:



0 30' 60'

SCALE : 1" = 30'

EXISTING LEGEND

- EXIST PROPERTY LINE
- EXIST CHAINLINK FENCE
- EXIST IRRIGATION LINE
- EXIST 100-YR FLOODPLAIN
- EXIST WASTEWATER LINE
- EXIST WATER LINE
- EXIST UNDERGROUND ELECTRIC LINE
- EXIST RCP
- EXIST TREE

PROPOSED LEGEND

- PROP CONTOUR
- SF — SILT FENCE
- LOC — LIMIT OF CONSTRUCTION
- DSK — DEWATERING SKIMMER PER DTL 3 SHT 00C-01
- STABILIZED CONSTRUCTION ENTRANCE PER DTL 641S-1
- CONCRETE TRUCK WASHOUT AREA
- CONSTRUCTION STAGING AREA
- STORM WATER FLOW DIRECTION
- MULCH SOCK
- TREE PROTECTION FENCE PER DTL 610S-1 & 610S-2

SITE DEVELOPMENT NUMBER 2025-476

REV. NO.	DATE	DESCRIPTION

PROJECT MANAGER:	PK
DESIGNED BY:	PG/RM
CHECKED BY:	DCS/JTH
DRAWN BY:	PG/RM
DCS PROJECT NO:	20101597

DCS ENGINEERING, LLC
1101 S. CAPITAL OF TEXAS HIGHWAY, BUILDING G-100
AUSTIN, TX 78746

TEL: (512) 614-6171
T.B.P.E. FIRM NO. F-13162

BudaTx breathe easy here™

BUDA SPORTSPLEX - PHASE I

STATE OF TEXAS
JORDAN T. HURTA
143332
LICENSED PROFESSIONAL ENGINEER
8/4/2025

SITE CIVIL

CIVIL - EROSION CONTROL PLAN - AREA NO. 10

DATE: AUGUST 2025

SCALE: 1" = 30'

DRAWING: 01C-08

FILENAME: Z:\Projects 1551-1599\20101597 - Buda - Sportsplex\510 - Re-bid Dwgs\500 - Final_Design\500 - Final_Design\5.1 - Drawings\Sheet Files\Construction Plans\01C-01 - 01C-12.dwg, LAST SAVED ON: Aug 06 2025 7:04pm, PLOTTED BY: RMALDONADO, ON: Aug 07 2025 8:14am, CFG:

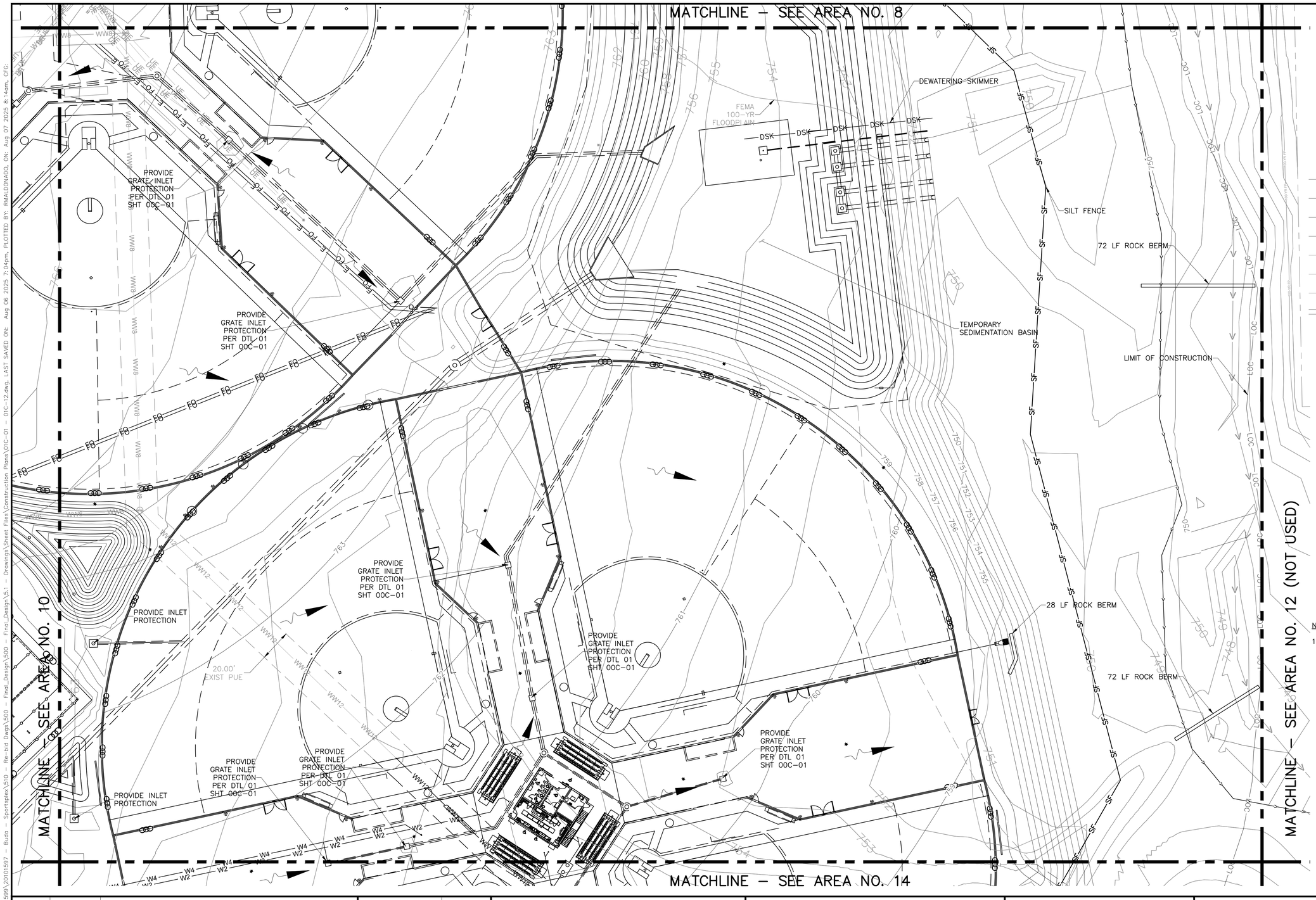

EXISTING LEGEND

- EXIST PROPERTY LINE
- EXIST CHAINLINK FENCE
- IR — IR — EXIST IRRIGATION LINE
- 100-YR FP — EXIST 100-YR FLOODPLAIN
- WW6 — EXIST WASTEWATER LINE
- W2 — W2 — EXIST WATER LINE
- UE — UE — EXIST UNDERGROUND ELECTRIC LINE
- EXIST RCP
- EXIST TREE

PROPOSED LEGEND

- PROP CONTOUR
- SF — SILT FENCE
- LOC — LIMIT OF CONSTRUCTION
- DSK — DEWATERING SKIMMER PER DTL 3 SHT 00C-01
- STABILIZED CONSTRUCTION ENTRANCE PER DTL 641S-1
- CONCRETE TRUCK WASHOUT AREA
- CONSTRUCTION STAGING AREA
- STORM WATER FLOW DIRECTION
- MULCH SOCK
- TREE PROTECTION FENCE PER DTL 610S-1 & 610S-2

NOTES:

1. DETENTION POND WILL BE UTILIZED AS A TEMPORARY SEDIMENTATION BASIN OF THIS PROJECT. SKIMMER DEWATERING DEVICE SHALL BE USED TO DRAW DOWN THE TEMPORARY SEDIMENTATION BASIN IN 72 HOURS OF EACH STORM EVENT. REMOVE TEMPORARY EROSION CONTROLS SHALL BE REMOVED UPON THE COMPLETION OF THE PROJECT, INCLUDING SKIMMER DEWATERING DEVICES, AND PLUG OPENING TO STRUCTURE AFTER THE POND AND ALL DISTURBED AREAS HAVE BEEN STABILIZED.

SITE DEVELOPMENT NUMBER 2025-476

REV. NO.	DATE	DESCRIPTION

PROJECT MANAGER:	PK
DESIGNED BY:	PG/RM
CHECKED BY:	DCS/JTH
DRAWN BY:	PG/RM
DCS PROJECT NO:	20101597

DCS ENGINEERING, LLC
1101 S. CAPITAL OF TEXAS HIGHWAY, BUILDING G-100
AUSTIN, TX 78746

TEL: (512) 614-6171
T.B.P.E. FIRM NO. F-13162

BudaTx breathe easy here™

BUDA SPORTSPLEX - PHASE I

STATE OF TEXAS
JORDAN T. HURTA
143332
LICENSED PROFESSIONAL ENGINEER
8/4/2025

SITE CIVIL

CIVIL - EROSION CONTROL PLAN - AREA NO. 11

DATE: AUGUST 2025

SCALE: 1" = 30'

DRAWING: 01C-09

FILENAME: Z:\Projects 1551-1599\20101597 - Buda - Sportsplex\510 - Re-bid Dwgs\500 - Final_Design\5.1 - Drawings\Sheet Files\Construction Plans\01C-01 - 01C-12.dwg, LAST SAVED ON: Aug 06 2025 7:04pm, PLOTTED BY: RMALDONADO, ON: Aug 07 2025 8:14am, CFG:

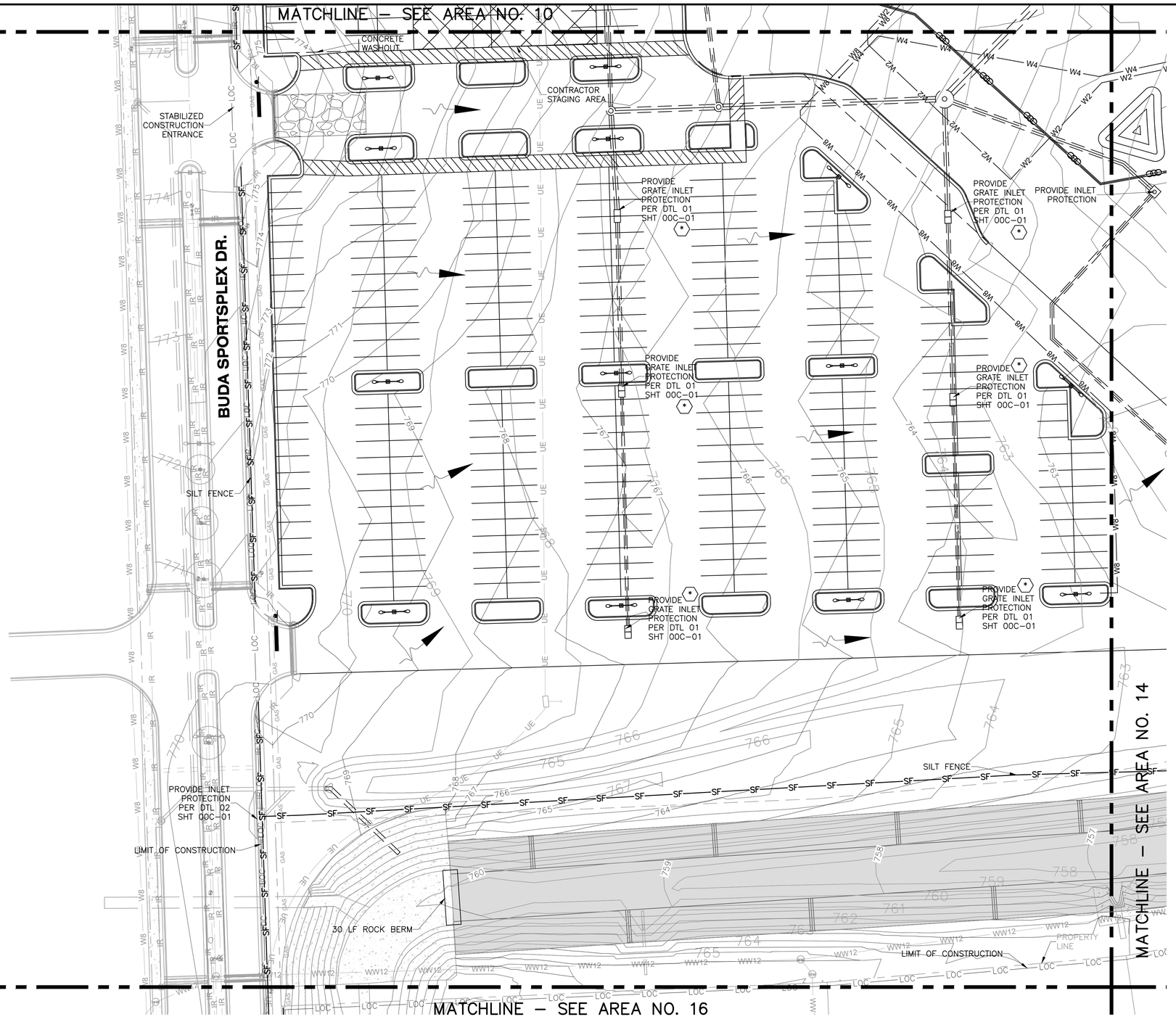

0 30' 60'

SCALE : 1" = 30'

EXISTING LEGEND

- EXIST PROPERTY LINE
- EXIST CHAINLINK FENCE
- EXIST IRRIGATION LINE
- EXIST 100–YR FLOODPLAIN
- EXIST WASTEWATER LINE
- EXIST WATER LINE
- EXIST UNDERGROUND ELECTRIC LINE
- EXIST RCP
- EXIST TREE

PROPOSED LEGEND

- PROP CONTOUR
- SILT FENCE
- LIMIT OF CONSTRUCTION
- DEWATERING SKIMMER PER DTL 3 SHT 00C–01
- STABILIZED CONSTRUCTION ENTRANCE PER DTL 641S–1
- CONCRETE TRUCK WASHOUT AREA
- CONSTRUCTION STAGING AREA
- STORM WATER FLOW DIRECTION
- MULCH SOCK
- TREE PROTECTION FENCE PER DTL 610S–1 & 610S–2

KEY NOTES:

(*) ALTERNATE BID ITEM

SITE DEVELOPMENT NUMBER 2025–476

REV. NO.	DATE	DESCRIPTION

PROJECT MANAGER:	PK
DESIGNED BY:	PG/RM
CHECKED BY:	DCS/JTH
DRAWN BY:	PG/RM
DCS PROJECT NO:	20101597

DCS ENGINEERING, LLC
1101 S. CAPITAL OF TEXAS HIGHWAY, BUILDING G–100
AUSTIN, TX 78746
TEL: (512) 614–6171
T.B.P.E. FIRM NO. F–13162

BudaTx breathe easy here™

BUDA SPORTSPLEX - PHASE I

STATE OF TEXAS
JORDAN T. HURTA
143332
LICENSED PROFESSIONAL ENGINEER
8/4/2025

SITE CIVIL

CIVIL - EROSION CONTROL PLAN - AREA NO. 13

DATE: AUGUST 2025

SCALE: 1" = 30'

DRAWING: 01C-10

FILENAME: Z:\Projects 1551-1599\20101597 - Buda - Sportsplex\510 - Re-bid Dwgs\500 - Final_Design\500 - Final_Design\5.1 - Drawings\Sheet Files\Construction Plans\01C-01 - 01C-12.dwg, LAST SAVED ON: Aug 06 2025 7:04pm, PLOTTED BY: RMALDONADO, ON: Aug 07 2025 8:14am, CFG:

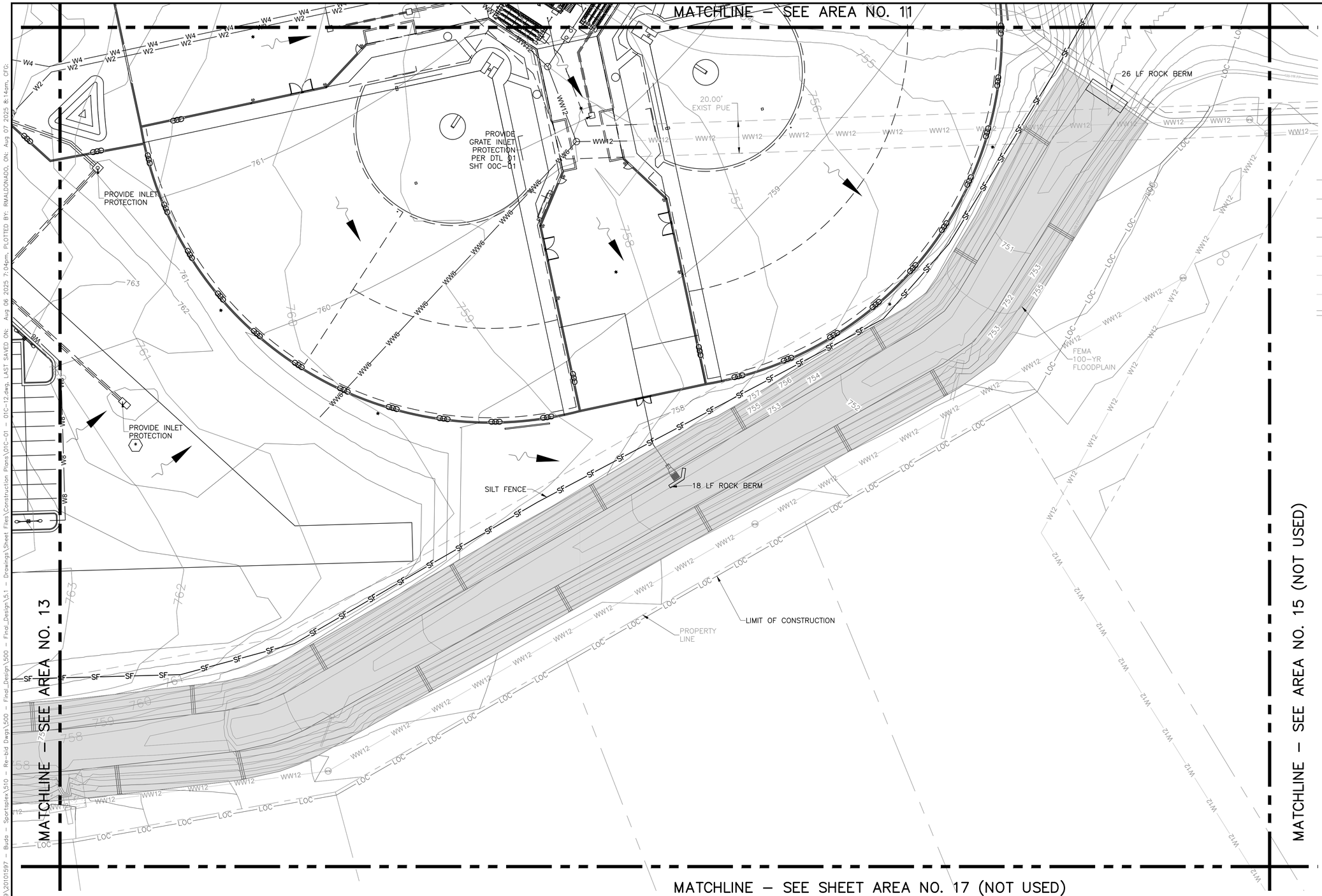

SITE DEVELOPMENT NUMBER 2025–476

REV. NO.	DATE	DESCRIPTION

PROJECT MANAGER:	PK
DESIGNED BY:	PG/RM
CHECKED BY:	DCS/JTH
DRAWN BY:	PG/RM
DCS PROJECT NO:	20101597

DCS ENGINEERING, LLC
1101 S. CAPITAL OF TEXAS HIGHWAY, BUILDING G–100
AUSTIN, TX 78746

TEL: (512) 614–6171
T.B.P.E. FIRM NO. F–13162

BudaTx breathe easy here™

BUDA SPORTSPLEX - PHASE I

STATE OF TEXAS
JORDAN T. HURTA
143332
LICENSED PROFESSIONAL ENGINEER
8/4/2025

SITE CIVIL

CIVIL - EROSION CONTROL PLAN - AREA NO. 14

DATE: AUGUST 2025

SCALE: 1" = 30'

DRAWING: 01C-11

FILENAME: Z:\Projects 1551–1599\20101597 – Buda – Sportsplex\510 – Re–bid Dwgs\500 – Final_Design\5.1 – Drawings\Sheet Files\Construction Plans\01C–01 – 01C–12.dwg, LAST SAVED ON: Aug 06 2025 7:04pm, PLOTTED BY: RMALDONADO, ON: Aug 07 2025 8:14am, CFG:

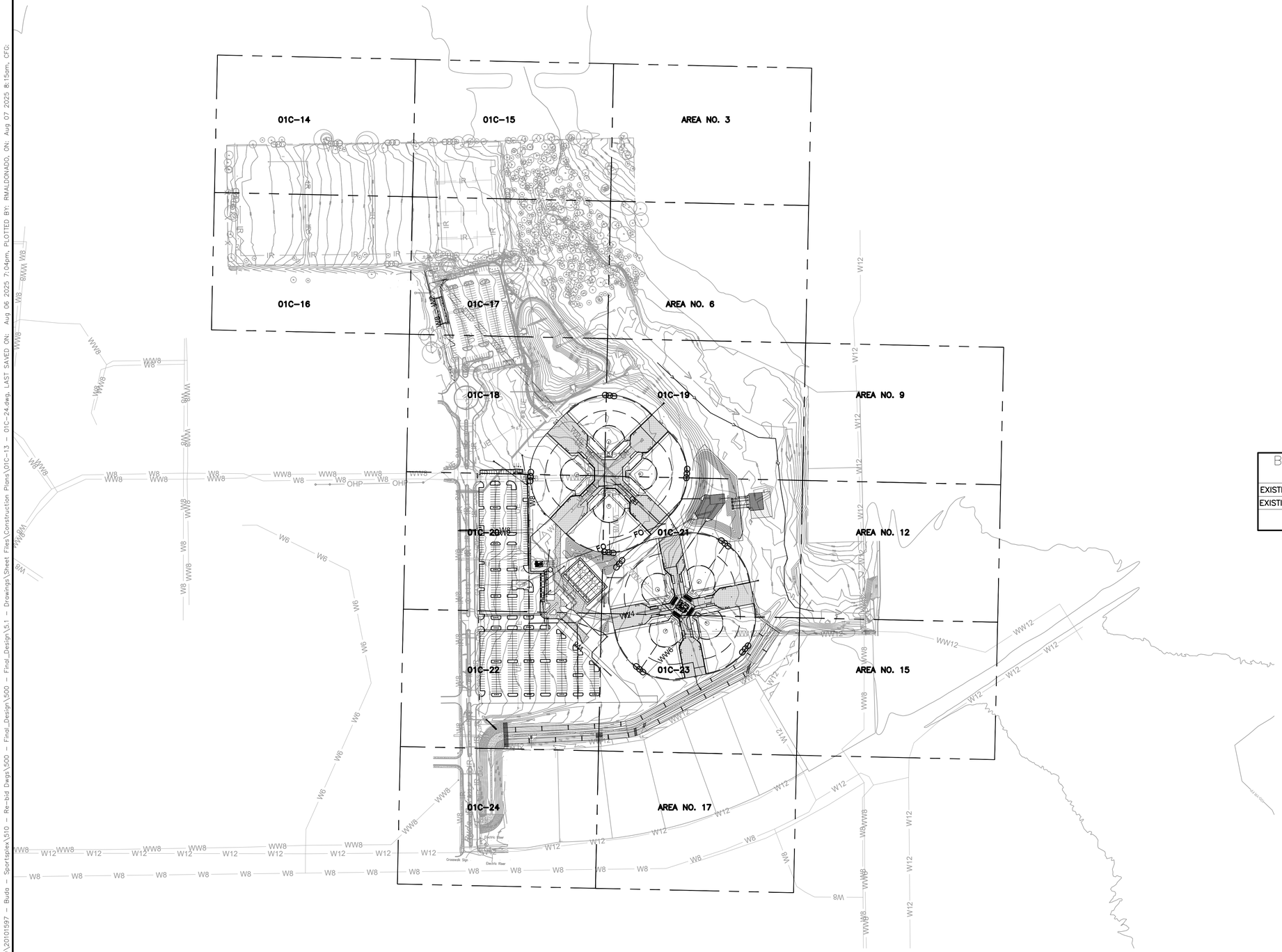

NOTES:

1. CONTRACTOR SHALL REDIRECT OR SEQUENCE HIS WORK SUCH THAT OFF-SITE AND ON-SITE STORMWATER IS ROUTED AROUND PROPOSED WORK AS REQUIRED.
2. ALL UNDERGROUND INFORMATION SHOWN HERE IS TAKEN FROM EXISTING SURFACE FEATURES AND AVAILABLE RECORD DRAWINGS. ENGINEER DOES NOT REPRESENT IN ANY FORM THAT ALL UNDERGROUND INFORMATION IS SHOWN THAT EXISTS ON THE SITE. CONTRACTOR SHALL EXERCISE CAUTION WHILE EXCAVATING. NO SEPARATE PAY.
3. CONTRACTOR SHALL LOCATE EXIST ELECTRICAL DUCT BANKS AND EXPOSE ALL EXIST PIPING PRIOR TO STARTING CONSTRUCTION. NOTIFY ENGINEER OF CONFLICTS IDENTIFIED.
4. IT IS THE CONTRACTOR'S SOLE RESPONSIBILITY TO SECURE HIS EQUIPMENT AND MATERIALS DURING CONSTRUCTION USING TEMPORARY SECURITY FENCING AND/OR OTHER NECESSARY MEASURES.
5. PROTECT EXISTING TREES TO REMAIN FROM DAMAGE BY CONSTRUCTION ACTIVITIES.
6. SLOPE FINISHED GRADE AWAY FROM SLABS, SIDEWALKS, AND PAVING AT 4:1 SLOPES (MAX) TO NATURAL GROUND UNLESS OTHERWISE SPECIFIED ON THE PLANS.
7. ALL DIMENSIONS ARE MEASURED PARALLEL OR PERPENDICULAR TO EXISTING OR PROPOSED FACILITIES.
8. CONTRACTOR SHALL ADJUST FINISHED GRADE ELEVATIONS TO ACHIEVE DRAINAGE PLAN, AS APPROVED BY ENGINEER.
9. RESTORE ALL SWALES DISTURBED BY CONSTRUCTION ACTIVITIES TO DRAIN UPON COMPLETION OF WORK.
10. INSTALL 4" OF TOP SOIL OBTAINED FROM ON-SITE IN AREAS TO BE GRADED DUE TO CONSTRUCTION ACTIVITIES.

BUDA SPORTSPLEX – SOFTBALL & SOCCER FIELDS COMPLEX			
EXISTING ZONING	R-2	PROPOSED ZONING	R-2
EXISTING USE	PARK	PROPOSED USE	PARK
		SITE AREA	65.53 ACRES | 2,858,938 SF

BUILDING	FLOOR AREA
SOFTBALL-NORTH CONCESSION STAND	1,310 S.F.

SITE DEVELOPMENT NUMBER 2025-476

REV. NO.	DATE	DESCRIPTION

PROJECT MANAGER:	PK
DESIGNED BY:	PG/RM
CHECKED BY:	DCS/JTH
DRAWN BY:	PG/RM
DCS PROJECT NO:	20101597

DCS ENGINEERING, LLC
1101 S. CAPITAL OF TEXAS HIGHWAY, BUILDING G-100
AUSTIN, TX 78746

TEL: (512) 614-6171
T.B.P.E. FIRM NO. F-13162

BudaTx breathe easy here™

BUDA SPORTSPLEX - PHASE I

STATE OF TEXAS
J. PATRICIO GALINDO RANGEL
154316
LICENSED PROFESSIONAL ENGINEER
08/04/25

SITE CIVIL

CIVIL - OVERALL SITE PLAN

DATE: JULY 2025

SCALE: 1" = 200'

DRAWING: 01C-13

FILENAME: Z:\Projects 1551-1599\20101597 - Buda - Sportsplex\510 - Re-bid Dwgs\500 - Final_Design\500 - Final_Design\51 - Drawings\Sheet Files\Construction Plans\01C-13 - 01C-24.dwg, LAST SAVED ON: Aug 06 2025 7:04pm, PLOTTED BY: RMALDONADO, ON: Aug 07 2025 8:15am, CFG:

MATCHLINE – SEE AREA NO. 2

MATCHLINE – SEE AREA NO. 4

MATCHLINE – SEE AREA NO. 6 (NOT USED)

MATCHLINE – SEE AREA NO. 7

EXIST ELECTRIC TRANSFORMER

EXIST 8'H CHAINLINK FENCE

EXIST AREA INLET

EXIST 8'H CHAINLINK FENCE

PROP MAINTENANCE BUILDING. REFER TO SERIES 600 FOR DETAILS.

N=10009478.34
E=3072267.83

20.00' (TYP.)' PROP PUE

PROP 6" CURB

N=10009381.74
E=3072293.70

12.00' PROP CONCRETE DRIVEWAY

PROPERTY LINE

EXIST 36" RCP

EXIST PAVILION

EXIST 42" RCP

FEMA 100-YR FLOODPLAIN

EXIST DRAINAGE EASEMENT (VARIES)

EXIST SOCCER PARKING LOT

EXIST 6" WW LINE

0 30' 60'

SCALE : 1" = 30'

KEY NOTES:

(*) ALTERNATE BID ITEM

BUDA SPORTSPLEX –PHASE I – PARKING DATA	
TYPE	PARKING PROVIDED
ACCESSIBLE	20
REGULAR	829
TOTAL PARKING	849
BICYCLE PARKING	4

BUDA SPORTSPLEX –PHASE II – PARKING DATA	
TYPE	PARKING PROVIDED
RESIDENTIAL VEHICLE PARKING	17
BICYCLE PARKING	15

SITE DEVELOPMENT NUMBER 2025-476

REV. NO.	DATE	DESCRIPTION

PROJECT MANAGER:	PK
DESIGNED BY:	PG/RM
CHECKED BY:	DCS/JTH
DRAWN BY:	PG/RM
DCS PROJECT NO:	20101597

DCS ENGINEERING, LLC
1101 S. CAPITAL OF TEXAS HIGHWAY, BUILDING G-100
AUSTIN, TX 78746

TEL: (512) 614-6171
T.B.P.E. FIRM NO. F-13162

BudaTx breathe easy here™

BUDA SPORTSPLEX - PHASE I

STATE OF TEXAS
J. PATRICIO GALINDO RANGEL
154316
LICENSED PROFESSIONAL ENGINEER
08/04/25

SITE CIVIL

CIVIL - SITE PLAN - AREA NO. 5

DATE: JULY 2025

SCALE: 1" = 30'

DRAWING: 01C-17

FILENAME: Z:\Projects 1551-1599\20101597 - Buda - Sportsplex\510 - Re-bid Dwgs\500 - Final_Design\500 - Final_Design\5.1 - Drawings\Sheet Files\Construction Plans\01C-13 - 01C-24.dwg, LAST SAVED ON: Aug 06 2025 7:04pm, PLOTTED BY: RMALDONADO, ON: Aug 07 2025 8:15am, CFG:

FILENAME: Z:\Projects 1551-1599\20101597 - Buda - Sportsplex\510 - Re-bid Dwgs\500 - Final_Design\500 - Final_Design\5.1 - Drawings\Sheet Files\Construction Plans\01C-13 - 01C-24.dwg, LAST SAVED ON: Aug 06 2025 7:04pm, PLOTTED BY: RMALDONADO, ON: Aug 07 2025 8:15am, CFG:

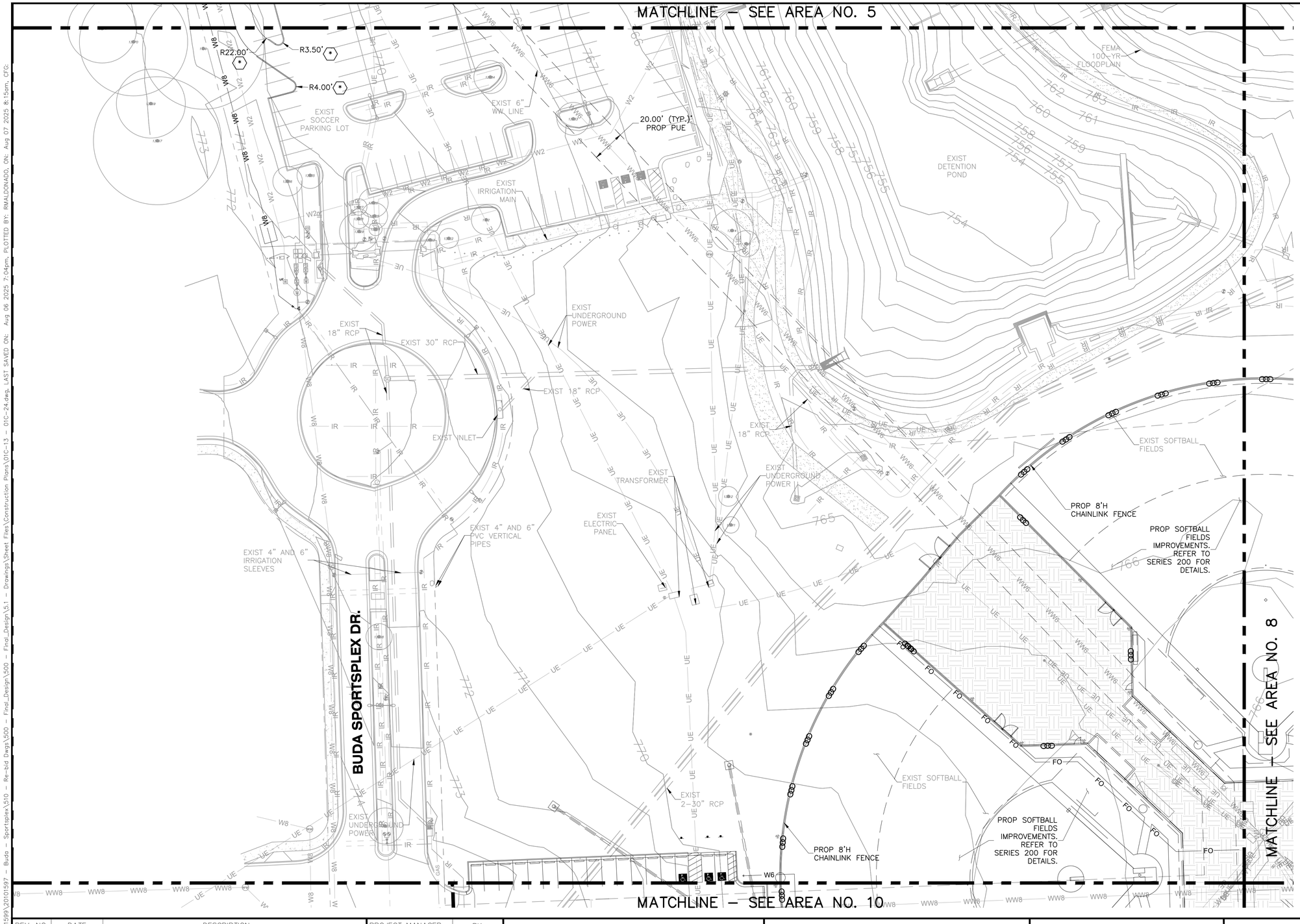

0 30' 60'

SCALE : 1" = 30'

KEY NOTES:

⬡* ALTERNATE BID ITEM

BUDA SPORTSPLEX –PHASE I – PARKING DATA	
TYPE	PARKING PROVIDED
ACCESSIBLE	20
REGULAR	829
TOTAL PARKING	849
BICYCLE PARKING	4

BUDA SPORTSPLEX –PHASE II – PARKING DATA	
TYPE	PARKING PROVIDED
RESIDENTIAL VEHICLE PARKING	17
BICYCLE PARKING	15

SITE DEVELOPMENT NUMBER 2025-476

REV. NO.	DATE	DESCRIPTION

PROJECT MANAGER:	PK
DESIGNED BY:	PG/RM
CHECKED BY:	DCS/JTH
DRAWN BY:	PG/RM
DCS PROJECT NO:	20101597

DCS ENGINEERING, LLC
1101 S. CAPITAL OF TEXAS HIGHWAY, BUILDING G-100
AUSTIN, TX 78746

TEL: (512) 614-6171
T.B.P.E. FIRM NO. F-13162

BudaTx breathe easy here™

BUDA SPORTSPLEX - PHASE I

STATE OF TEXAS
J. PATRICIO GALINDO RANGEL
154316
LICENSED PROFESSIONAL ENGINEER
08/04/25

SITE CIVIL

CIVIL - SITE PLAN - AREA NO. 7

DATE:	JULY 2025
SCALE:	1" = 30'
DRAWING:	01C-18

MATCHLINE – SEE AREA NO. 6 (NOT USED)

PROPERTY LINE

EXIST DRAINAGE EASEMENT (VARIES)

FEMA 100-YR FLOODPLAIN

PROP 8'H CHAINLINK FENCE

EXIST SOFTBALL FIELDS

PROP SOFTBALL FIELDS IMPROVEMENTS. REFER TO SERIES 200 FOR DETAILS.

PROP 8'H CHAINLINK FENCE

PROP SOFTBALL FIELDS IMPROVEMENTS. REFER TO SERIES 200 FOR DETAILS.

EXIST SOFTBALL FIELDS

PROP WATER QUALITY POND. REFER TO SERIES 100 FOR DETAILS.

MATCHLINE – SEE AREA NO. 7

MATCHLINE – SEE AREA NO. 9 (NOT USED)

MATCHLINE – SEE AREA NO, 11

0 30' 60'

SCALE : 1" = 30"

SITE DEVELOPMENT NUMBER 2025-476

REV. NO.	DATE	DESCRIPTION

PROJECT MANAGER:	PK
DESIGNED BY:	PG/RM
CHECKED BY:	DCS/JTH
DRAWN BY:	PG/RM
DCS PROJECT NO:	20101597

DCS ENGINEERING, LLC
1101 S. CAPITAL OF TEXAS HIGHWAY, BUILDING G-100
AUSTIN, TX 78746

TEL: (512) 614-6171
T.B.P.E. FIRM NO. F-13162

BudaTx breathe easy here™

BUDA SPORTSPLEX - PHASE I

STATE OF TEXAS
J. PATRICIO GALINDO RANGEL
154316
LICENSED
PROFESSIONAL ENGINEER
08/04/25.

SITE CIVIL

CIVIL - SITE PLAN - AREA NO. 8

DATE: JULY 2025

SCALE: 1" = 30'

DRAWING: 01C-19

FILENAME: Z:\Projects 1551-1599\20101597 - Buda - Sportsplex\510 - Re-bid Dwgs\500 - Final_Design\500 - Final_Design\5.1 - Drawings\Sheet Files\Construction Plans\01C-24.dwg, LAST SAVED ON: Aug 06 2025 7:04pm, PLOTTED BY: RMALDONADO, ON: Aug 07 2025 8:15am, CFG:

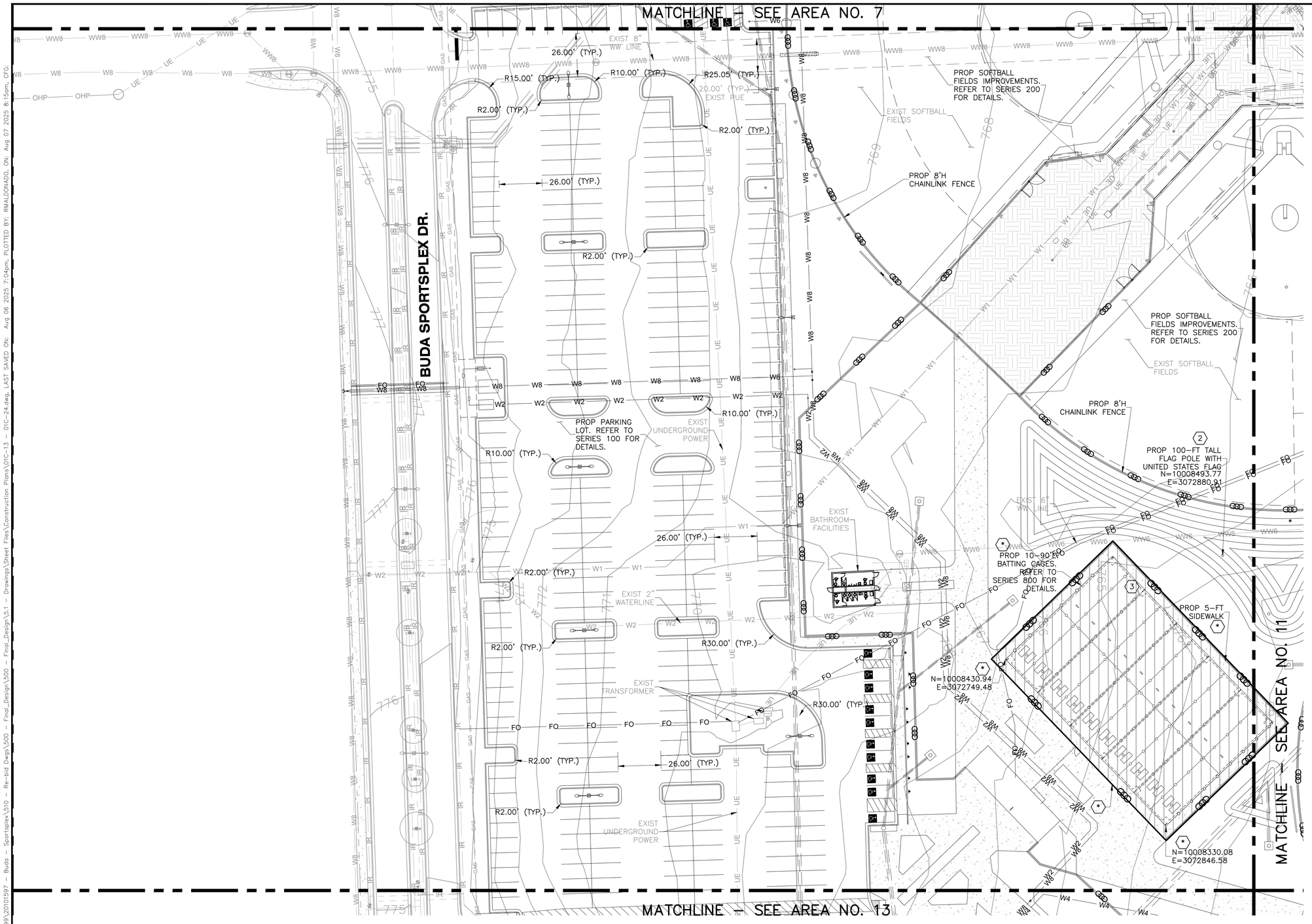

0 30' 60'

SCALE : 1" = 30'

KEY NOTES:

1. NOT USED.
2. FURNISH AND INSTALL 20'X38' UNITED STATES/TEXAS NYLON REINFORCED FLAG ON 100-FT TALL FLAG POLE. FLAGS SHALL INCLUDE STITCHING REINFORCEMENTS, PLATTED STEEL ROPE THIMBLES, GROMMET REINFORCEMENT, AND CORNERS REINFORCEMENT. CONTRACTOR SHALL INSTALL FLAG AND FLAG POLE PER MANUFACTURER'S RECOMMENDATIONS. REFER TO ELECTRICAL SHEETS FOR INSTALLATION OF FLAG POLE LIGHTING.
3. NOT USED.

LEGEND

ALTERNATE BID ITEM (*)

BUDA SPORTSPLEX –PHASE I – PARKING DATA	
TYPE	PARKING PROVIDED
ACCESSIBLE	20
REGULAR	829
TOTAL PARKING	849
BICYCLE PARKING	4

BUDA SPORTSPLEX –PHASE II – PARKING DATA	
TYPE	PARKING PROVIDED
RESIDENTIAL VEHICLE PARKING	17
BICYCLE PARKING	15

SITE DEVELOPMENT NUMBER 2025-476

REV. NO.	DATE	DESCRIPTION

PROJECT MANAGER:	PK
DESIGNED BY:	PG/RM
CHECKED BY:	DCS/JTH
DRAWN BY:	PG/RM
DCS PROJECT NO:	20101597

DCS ENGINEERING, LLC
1101 S. CAPITAL OF TEXAS HIGHWAY, BUILDING G-100
AUSTIN, TX 78746

TEL: (512) 614-6171
T.B.P.E. FIRM NO. F-13162

BudaTx breathe easy here™

BUDA SPORTSPLEX - PHASE I

STATE OF TEXAS
J. PATRICIO GALINDO RANGEL
154316
LICENSED PROFESSIONAL ENGINEER
08/04/25

SITE CIVIL

CIVIL - SITE PLAN - AREA NO. 10

DATE: JULY 2025

SCALE: 1" = 30'

DRAWING: 01C-20

FILENAME: Z:\Projects 1551-1599\20101597 - Buda - Sportsplex\510 - Re-bid Dwgs\500 - Final_Design\500 - Final_Design\5.1 - Drawings\Sheet Files\Construction Plans\01C-13 - 01C-24.dwg, LAST SAVED ON: Aug 06 2025 7:04pm, PLOTTED BY: RMALDONADO, ON: Aug 07 2025 8:15am, CFG:

MATCHLINE – SEE AREA NO. 8

MATCHLINE – SEE AREA NO. 10

MATCHLINE – SEE AREA NO. 12 (NOT USED)

MATCHLINE – SEE AREA NO. 14

PROP SOFTBALL FIELDS IMPROVEMENTS. REFER TO SERIES 200 FOR DETAILS.

EXIST SOFTBALL FIELDS

FEMA 100-YR FLOODPLAIN

PROP WATER QUALITY POND. REFER TO SERIES 100 FOR DETAILS.

PROP SOFTBALL FIELDS IMPROVEMENTS. REFER TO SERIES 200 FOR DETAILS.

EXIST SOFTBALL FIELDS

EXIST 8" WW LINE

PROP SOFTBALL FIELDS. REFER TO SERIES 200 FOR DETAILS.

PROP SOFTBALL CONCESSION STAND. REFER TO SERIES 300 FOR DETAILS.

PROP 100-FT TALL FLAG POLE WITH TEXAS FLAG
N=10008458.45
E=3072908.79

EXIST 8" WW LINE

20.00' (TYP.)' EXIST PUE

EXIST 8" WW LINE

FUTURE 6-FT WIDE TRAIL

0 30' 60'

SCALE : 1" = 30'

KEY NOTES:

1. FURNISH AND INSTALL 20'X38' UNITED STATES/TEXAS NYLON REINFORCED FLAG ON 100-FT TALL FLAG POLE. FLAGS SHALL INCLUDE STITCHING REINFORCEMENTS, PLATTED STEEL ROPE THIMBLES, GROMMET REINFORCEMENT, AND CORNERS REINFORCEMENT. CONTRACTOR SHALL INSTALL FLAG AND FLAG POLE PER MANUFACTURER'S RECOMMENDATIONS. REFER TO ELECTRICAL SHEETS FOR INSTALLATION OF FLAG POLE LIGHTING.
2. NOT USED.

SITE DEVELOPMENT NUMBER 2025-476

REV. NO.	DATE	DESCRIPTION

PROJECT MANAGER:	PK
DESIGNED BY:	PG/RM
CHECKED BY:	DCS/JTH
DRAWN BY:	PG/RM
DCS PROJECT NO:	20101597

DCS ENGINEERING, LLC
1101 S. CAPITAL OF TEXAS HIGHWAY, BUILDING G-100
AUSTIN, TX 78746

TEL: (512) 614-6171
T.B.P.E. FIRM NO. F-13162

BudaTx breathe easy here.

BUDA SPORTSPLEX - PHASE I

STATE OF TEXAS
J. PATRICIO GALINDO RANGEL
154316
LICENSED PROFESSIONAL ENGINEER
08/04/25.

SITE CIVIL

CIVIL - SITE PLAN - AREA NO. 11

DATE: JULY 2025

SCALE: 1" = 30'

DRAWING: 01C-21

FILENAME: Z:\Projects 1551-1599\20101597 - Buda - Sportsplex\510 - Re-bid Dwgs\500 - Final_Design\500 - Final_Design\5.1 - Drawings\Sheet Files\Construction Plans\01C-13 - 01C-24.dwg, LAST SAVED ON: Aug 06 2025 7:04pm, PLOTTED BY: RMALDONADO, ON: Aug 07 2025 8:15am, CFG:

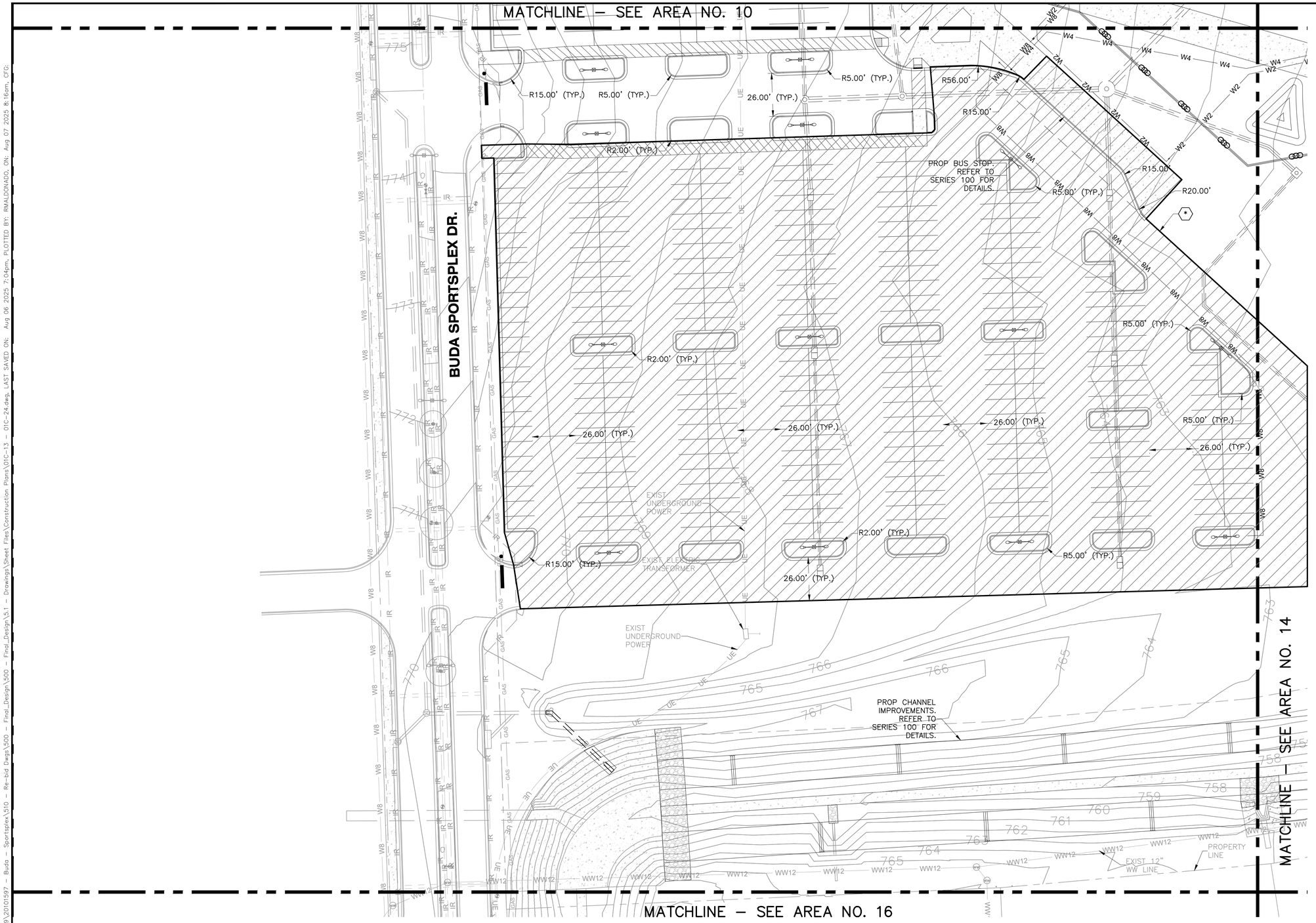

0 30' 60'

SCALE : 1" = 30'

LEGEND

ALTERNATE BID ITEM

BUDA SPORTSPLEX –PHASE I – PARKING DATA

TYPE	PARKING PROVIDED
ACCESSIBLE	20
REGULAR	829
TOTAL PARKING	849
BICYCLE PARKING	4

BUDA SPORTSPLEX –PHASE II – PARKING DATA

TYPE	PARKING PROVIDED
ELECTRIC VEHICLE PARKING	2
RESIDENTIAL VEHICLE PARKING	17
BICYCLE PARKING	15

SITE DEVELOPMENT NUMBER 2025-476

REV. NO.	DATE	DESCRIPTION

PROJECT MANAGER:	PK
DESIGNED BY:	PG/RM
CHECKED BY:	DCS/JTH
DRAWN BY:	PG/RM
DCS PROJECT NO:	20101597

DCS ENGINEERING, LLC
1101 S. CAPITAL OF TEXAS HIGHWAY, BUILDING G-100
AUSTIN, TX 78746

TEL: (512) 614-6171
T.B.P.E. FIRM NO. F-13162

BudaTx breathe easy here™

BUDA SPORTSPLEX - PHASE I

STATE OF TEXAS
J. PATRICIO GALINDO RANGEL
154316
LICENSED PROFESSIONAL ENGINEER
08/04/25

SITE CIVIL

CIVIL - SITE PLAN - AREA NO. 13

DATE: JULY 2025

SCALE: 1" = 30'

DRAWING: 01C-22

FILENAME: Z:\Projects 1551-1599\20101597 - Buda - Sportsplex\510 - Re-bid Dwgs\500 - Final_Design\500 - Final_Design\5.1 - Drawings\Sheet Files\Construction Plans\01C-13 - 01C-24.dwg, LAST SAVED ON: Aug 06 2025 7:04pm, PLOTTED BY: RMALDONADO, ON: Aug 07 2025 8:16am, CFG:

MATCHLINE – SEE AREA NO. 11

PROP SOFTBALL FIELDS. REFER TO SERIES 200 FOR DETAILS.

PROP SOFTBALL FIELDS. REFER TO SERIES 200 FOR DETAILS.

20.00' (TYP.)' EXIST PUE

FUTURE RECLAIMED WL

FUTURE 6-FT WIDE TRAIL

FEMA 100-YR FLOODPLAIN

EXIST 12" WATERLINE

24.00'

PROP CHANNEL IMPROVEMENTS. REFER TO SERIES 100 FOR DETAILS.

PROPERTY LINE

EXIST 12" WW LINE

MATCHLINE – SEE AREA NO. 13

MATCHLINE – SEE AREA NO. 15 (NOT USED)

MATCHLINE – SEE SHEET AREA NO. 17 (NOT USED)

0 30' 60'

SCALE : 1" = 30'

LEGEND

ALTERNATE BID ITEM

BUDA SPORTSPLEX –PHASE I – PARKING DATA

TYPE	PARKING PROVIDED
ACCESSIBLE	20
REGULAR	829
TOTAL PARKING	849
BICYCLE PARKING	4

BUDA SPORTSPLEX –PHASE II – PARKING DATA

TYPE	PARKING PROVIDED
ELECTRIC VEHICLE PARKING	2
RESIDENTIAL VEHICLE PARKING	17
BICYCLE PARKING	15

SITE DEVELOPMENT NUMBER 2025-476

REV. NO.	DATE	DESCRIPTION

PROJECT MANAGER:	PK
DESIGNED BY:	PG/RM
CHECKED BY:	DCS/JTH
DRAWN BY:	PG/RM
DCS PROJECT NO:	20101597

DCS ENGINEERING, LLC
1101 S. CAPITAL OF TEXAS HIGHWAY, BUILDING G-100
AUSTIN, TX 78746

TEL: (512) 614-6171
T.B.P.E. FIRM NO. F-13162

BudaTx breathe easy here™

BUDA SPORTSPLEX - PHASE I

STATE OF TEXAS
J. PATRICIO GALINDO RANGEL
154316
LICENSED
PROFESSIONAL ENGINEER
08/04/25.

SITE CIVIL

CIVIL - SITE PLAN - AREA NO. 14

DATE: JULY 2025

SCALE: 1" = 30'

DRAWING: 01C-23

FILENAME: Z:\Projects 1551-1599\20101597 - Buda - Sportsplex\510 - Re-bid Dwgs\500 - Final_Design\500 - Final_Design\5.1 - Drawings\Sheet Files\Construction Plans\01C-13 - 01C-24.dwg, LAST SAVED ON: Aug 06 2025 7:04pm, PLOTTED BY: RMALDONADO, ON: Aug 07 2025 8:16am, CFG:

MATCHLINE – SEE AREA NO. 13

MATCHLINE – SEE AREA NO. 17 (NOT USED)

BUDA SPORTSPLEX DR.

FM 967

EXIST CHANNEL

ELECTRIC TRANSFORMER

0 30' 60'

SCALE : 1" = 30'

SITE DEVELOPMENT NUMBER 2025-476

REV. NO.	DATE	DESCRIPTION

PROJECT MANAGER:	PK
DESIGNED BY:	PG/RM
CHECKED BY:	DCS/JTH
DRAWN BY:	PG/RM
DCS PROJECT NO:	20101597

DCS ENGINEERING, LLC
1101 S. CAPITAL OF TEXAS HIGHWAY, BUILDING G-100
AUSTIN, TX 78746

TEL: (512) 614-6171
T.B.P.E. FIRM NO. F-13162

BudaTx breathe easy here™

BUDA SPORTSPLEX - PHASE I

STATE OF TEXAS
J. PATRICIO GALINDO RANGEL
154316
LICENSED PROFESSIONAL ENGINEER
08/04/25

SITE CIVIL

CIVIL - SITE PLAN - AREA NO. 16

DATE: JULY 2025

SCALE: 1" = 30'

DRAWING: 01C-24

FILENAME: Z:\Projects 1551-1599\20101597 - Buda - Sportsplex\510 - Re-bid Dwgs\500 - Final_Design\500 - Final_Design\5.1 - Drawings\Sheet Files\Construction Plans\01C-13 - 01C-24.dwg, LAST SAVED ON: Aug 06 2025 7:04pm, PLOTTED BY: RMALDONADO, ON: Aug 07 2025 8:16am, CFG:

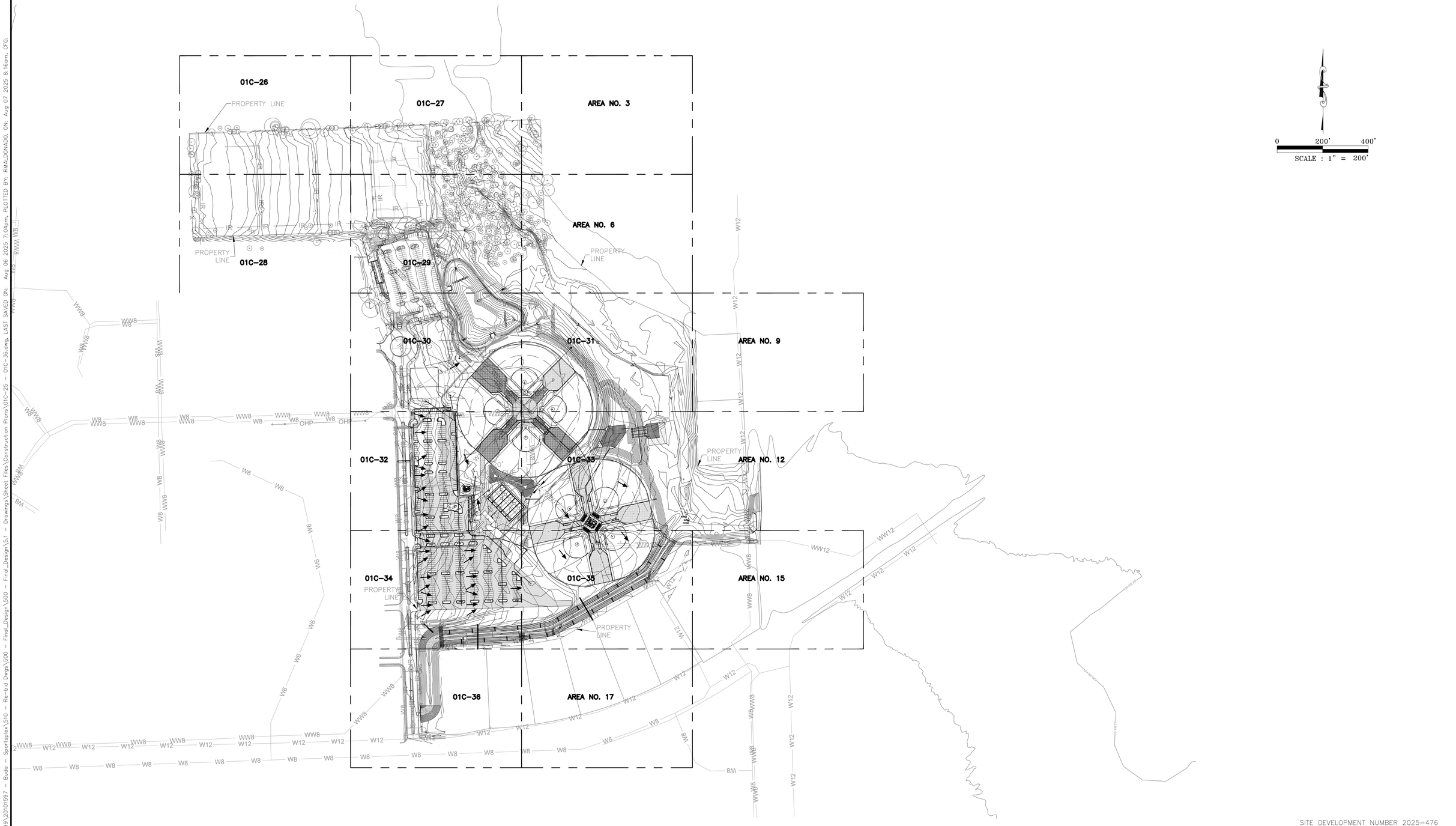

SITE DEVELOPMENT NUMBER 2025-476

REV. NO.	DATE	DESCRIPTION

PROJECT MANAGER:	PK
DESIGNED BY:	PG/RM
CHECKED BY:	DCS/JTH
DRAWN BY:	PG/RM
DCS PROJECT NO:	20101597

DCS ENGINEERING, LLC
1101 S. CAPITAL OF TEXAS HIGHWAY, BUILDING G-100
AUSTIN, TX 78746

TEL: (512) 614-6171
T.B.P.E. FIRM NO. F-13162

BudaTx breathe easy here™

BUDA SPORTSPLEX - PHASE I

STATE OF TEXAS
JORDAN T. HURTA
143332
LICENSED PROFESSIONAL ENGINEER
8/4/2025

SITE CIVIL

CIVIL - OVERALL GRADING, PAVING, AND DRAINAGE PLAN

DATE: AUGUST 2025

SCALE: 1" = 200'

DRAWING: 01C-25

FILENAME: Z:\Projects 1551-1599\20101597 - Buda - Sportsplex\510 - Re-bid Dwgs\500 - Final_Design\500 - Final_Design\5.1 - Drawings\Sheet Files\Construction Plans\01C-25 - 01C-36.dwg, LAST SAVED ON: Aug 06 2025 7:04pm, PLOTTED BY: RMALDONADO, ON: Aug 07 2025 8:16am, CFG:

FILENAME: Z:\Projects 1551-1599\20101597 - Buda - Sportsplex\510 - Re-bid Dwgs\500 - Final_Design\500 - Final_Design\51 - Drawings\Sheet Files\Construction Plans\01C-36.dwg, LAST SAVED ON: Aug 06 2025 7:04pm, PLOTTED BY: RMALDONADO, ON: Aug 07 2025 8:16am, CFG:

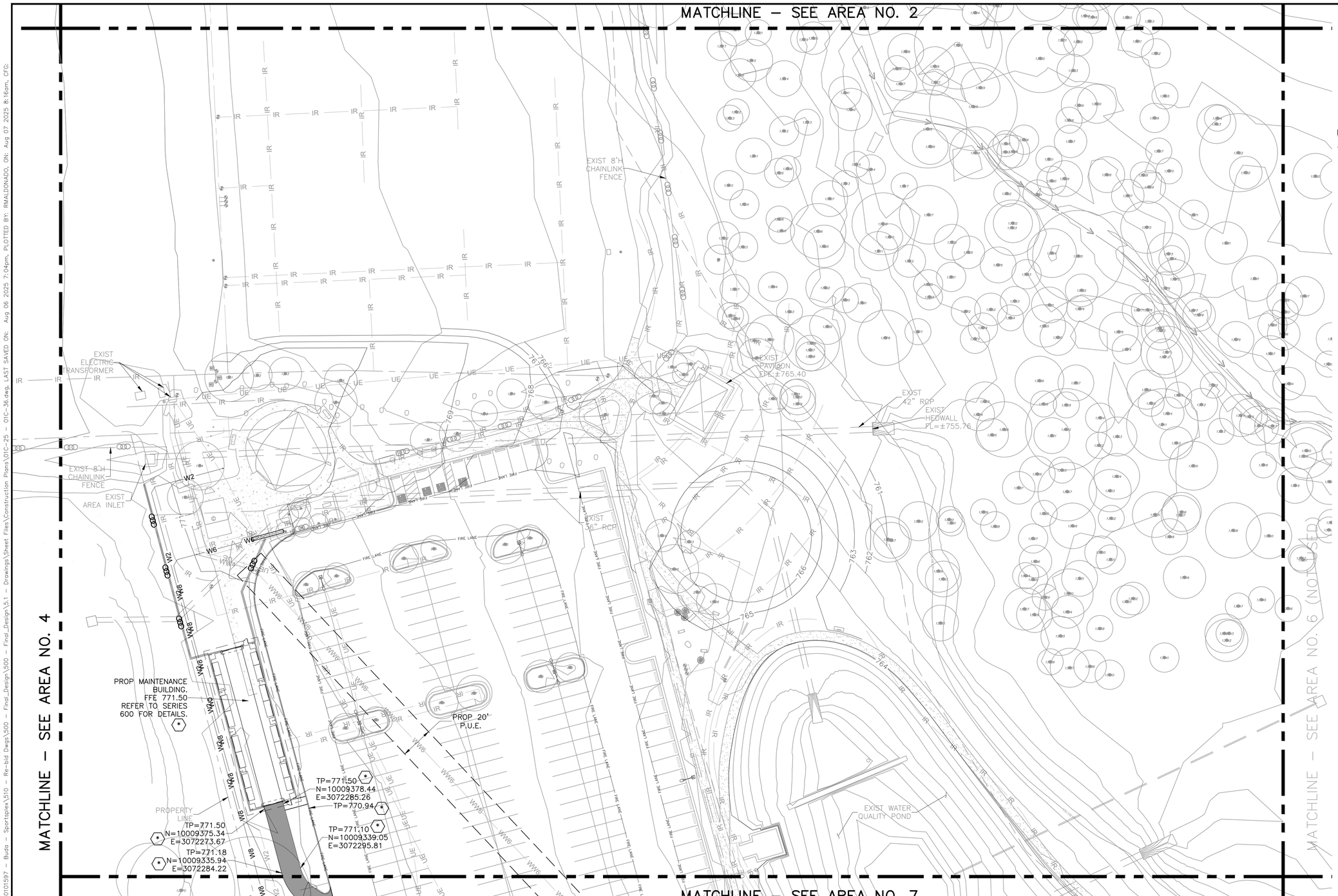

0 30' 60'

SCALE : 1" = 30'

NOTES:

1. PER GEOTECHNICAL RECOMMENDATIONS, FOR REINFORCED CONCRETE PAVEMENT THE TRANSVERSE AND LONGITUDINAL CONTRACTION JOINTS SHALL BE SPACED AT A MAXIMUM 15 FEET, SAW CUT TO A DEPTH OF TWO (2) INCHES. ALL JOINTS MUST BE SEALED. (*)

KEY NOTES:

(1) CONSTRUCTION OF SIDEWALKS SHALL OCCUR AS DIRECTED BY THE FOLLOWING GUIDELINES:
A) ALL WALKS SHALL HAVE A MAX CROSS SLOPE OF 2% IN THE DIRECTION OF THE DOWNHILL SIDE.
B) THE LONGITUDINAL SLOPE OF THE WALKS/TRAILS SHALL BE NO GREATER THAN 5%.
C) ALL GRADES SHALL BE FINISHED TO A SMOOTH, FLOWING CONTOUR, MAINTAINING EXIST FLOW PATTERNS UNLESS DIRECTED OTHERWISE.

(*) ALTERNATE BID ITEM

PAVING LEGEND

- CONCRETE PAVEMENT PER DTL 08 SHT 00C–13
- CONTRACTOR TO MILL AND OVERLAY EXISTING PAVEMENT
- HEAVY DUTY ASPHALT PAVEMENT PER DTL 09 SHT 00C–13
- PROPOSED CONCRETE SIDEWALK PER DTL 432S–1 SHT 00C–11
- PROPOSED 8" CONCRETE PATH PER DTL 08 SHT 00C–13
- PROPOSED DECOMPOSED GRANITE TRAIL
- RE–VEGETATE PER COA SPECIFICATION 609S

LEGEND

FIRE LANE — FIRE LANE MARKING PER DTL 03 SHT 00C–13

SIGNS		
(1)	STOP SIGN	(R1–1)
(2)	PEDESTRIAN CROSSING SIGN	(W11–2)
(3)	DIAGONAL ARROW SIGN	(W16–7P)
(4)	"AHEAD" SIGN	(W16–9P)
(5)	ADA RESERVED PARKING SIGN	(R7–8T)

SITE DEVELOPMENT NUMBER 2025–476

REV. NO.	DATE	DESCRIPTION

PROJECT MANAGER:	PK
DESIGNED BY:	PG/RM
CHECKED BY:	DCS/JTH
DRAWN BY:	PG/RM
DCS PROJECT NO:	20101597

DCS ENGINEERING, LLC
1101 S. CAPITAL OF TEXAS HIGHWAY, BUILDING G–100
AUSTIN, TX 78746

TEL: (512) 614–6171
T.B.P.E. FIRM NO. F–13162

BudaTx breathe easy here™

BUDA SPORTSPLEX - PHASE I

STATE OF TEXAS
JORDAN T. HURTA
143332
LICENSED PROFESSIONAL ENGINEER
8/4/2025

SITE CIVIL

CIVIL - GRADING, PAVING, AND DRAINAGE PLAN - AREA NO. 5

DATE: AUGUST 2025

SCALE: 1" = 30'

DRAWING: 01C-29

FILENAME: Z:\Projects 1551-1599\20101597 - Buda - Sportsplex\510 - Re-bid Dwgs\500 - Final_Design\500 - Final_Design\5.1 - Drawings\Sheet Files\Construction Plans\01C-36.dwg, LAST SAVED ON: Aug 06 2025 7:04pm, PLOTTED BY: RMALDONADO, ON: Aug 07 2025 8:16am, CFG:

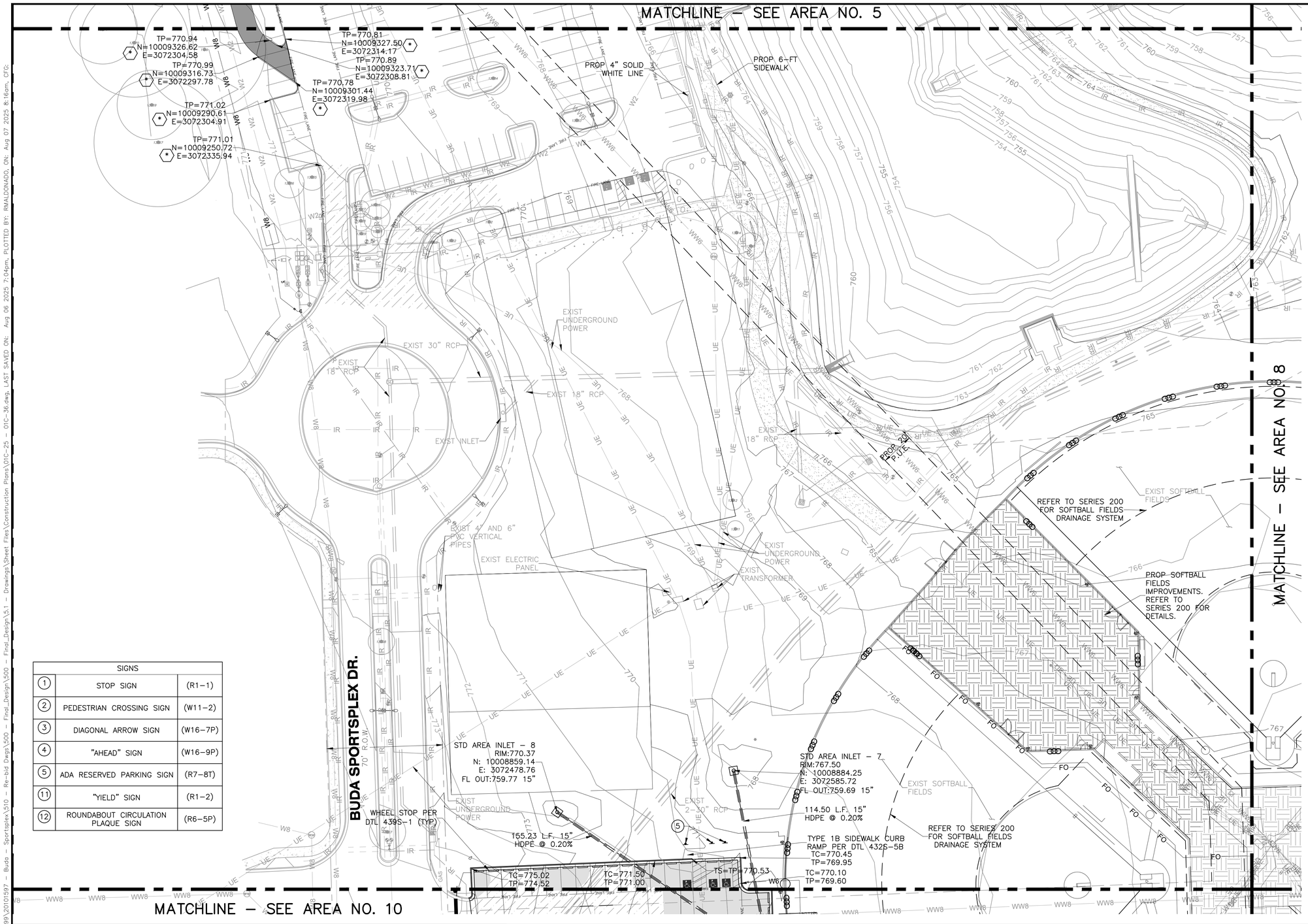

SIGNS		
1	STOP SIGN	(R1-1)
2	PEDESTRIAN CROSSING SIGN	(W11-2)
3	DIAGONAL ARROW SIGN	(W16-7P)
4	"AHEAD" SIGN	(W16-9P)
5	ADA RESERVED PARKING SIGN	(R7-8T)
11	"YIELD" SIGN	(R1-2)
12	ROUNDABOUT CIRCULATION PLAQUE SIGN	(R6-5P)

0 30' 60'

SCALE : 1" = 30'

NOTES:

1. WHERE NATURAL SOD AND CONCRETE ARE ADJACENT, SOD FINISHED GROUND ELEVATION SHALL BE 1.5" BELOW TOP OF CONCRETE. REFER TO SOFTBALL FIELDS PLANS FOR TURF ELEVATIONS.
2. PER GEOTECHNICAL RECOMMENDATIONS, FOR REINFORCED CONCRETE PAVEMENT THE TRANSVERSE AND LONGITUDINAL CONTRACTION JOINTS SHALL BE SPACED AT A MAXIMUM 15 FEET, SAW CUT TO A DEPTH OF TWO (2) INCHES. ALL JOINTS MUST BE SEALED.

KEY NOTES:

(1) CONSTRUCTION OF SIDEWALKS SHALL OCCUR AS DIRECTED BY THE FOLLOWING GUIDELINES:
A) ALL WALKS SHALL HAVE A MAX CROSS SLOPE OF 2% IN THE DIRECTION OF THE DOWNHILL SIDE.
B) THE LONGITUDINAL SLOPE OF THE WALKS/TRAILS SHALL BE NO GREATER THAN 5%.
C) ALL GRADES SHALL BE FINISHED TO A SMOOTH, FLOWING CONTOUR, MAINTAINING EXIST FLOW PATTERNS UNLESS DIRECTED OTHERWISE.

(*) ALTERNATE BID ITEM

PAVING LEGEND

- CONCRETE PAVEMENT PER DTL 08 SHT 00C-13
- CONTRACTOR TO MILL AND OVERLAY EXISTING PAVEMENT
- HEAVY DUTY ASPHALT PAVEMENT PER DTL 09 SHT 00C-13
- PROPOSED CONCRETE SIDEWALK PER DTL 432S-1 SHT 00C-11
- PROPOSED 8" CONCRETE PATH PER DTL 08 SHT 00C-13
- PROPOSED DECOMPOSED GRANITE TRAIL
- RE-VEGETATE PER COA SPECIFICATION 609S

LEGEND

FIRE LANE — FIRE LANE MARKING PER DTL 03 SHT 00C-13

SITE DEVELOPMENT NUMBER 2025-476

REV. NO.	DATE	DESCRIPTION

PROJECT MANAGER:	PK
DESIGNED BY:	PG/RM
CHECKED BY:	DCS/JTH
DRAWN BY:	PG/RM
DCS PROJECT NO:	20101597

DCS ENGINEERING, LLC
1101 S. CAPITAL OF TEXAS HIGHWAY, BUILDING G-100
AUSTIN, TX 78746

TEL: (512) 614-6171
T.B.P.E. FIRM NO. F-13162

BudaTx breathe easy here™

BUDA SPORTSPLEX - PHASE I

STATE OF TEXAS
JORDAN T. HURTA
143332
LICENSED PROFESSIONAL ENGINEER
8/4/2025

SITE CIVIL

CIVIL - GRADING, PAVING, AND DRAINAGE PLAN - AREA NO. 7

DATE: AUGUST 2025

SCALE: 1" = 30'

DRAWING: 01C-30

FILENAME: Z:\Projects 1551-1599\20101597 - Buda - Sportsplex\310 - Re-bid Dwgs\500 - Final_Design\5.1 - Drawings\Sheet Files\Construction Plans\01C-25 - 01C-36.dwg, LAST SAVED ON: Aug 06 2025 7:04pm, PLOTTED BY: RMALDONADO, ON: Aug 07 2025 8:17am, CFG:

MATCHLINE – SEE AREA NO. 6 (NOT USED)

MATCHLINE – SEE AREA NO. 7

MATCHLINE – SEE AREA NO. 9 (NOT USED)

MATCHLINE – SEE AREA NO. 11

FG=754.00
N=10009284.78
E=3073038.32

FG=755.00
N=10009272.63
E=3073034.82

FG=756.00
N=10009260.40
E=3073031.04

FG=759.00
N=10009194.12
E=3072971.55

FG=758.00
N=10009196.06
E=3072976.44

FG=757.00
N=10009195.93
E=3072983.95

FG=762.00
N=10009188.80
E=3072908.97

FG=760.00
N=10009188.19
E=3072968.57

FG=761.00
N=10009177.85
E=3072966.40

FG=762.00
N=10009167.52
E=3072964.22

FG=753.00
N=10009279.98
E=3073120.72

FG=754.00

FG=752.07

PROPERTY LINE

EXIST DRAINAGE EASEMENT (VARIES)

FEMA 100-YR FLOODPLAIN

HEADWALL PER STD DTL 508S-15
FL=756.65
N=10009088.44
E=3073113.68

FG=753.00
N=10009084.17
E=3073351.35

FG=753.00

FG=751.38

FG=754.00
N=10009016.43
E=3073494.62

FG=753.00
N=10009012.45
E=3073575.54

FG=752.00
N=10009004.88
E=3073586.28

FG=751.00
N=10008981.82
E=3073589.33

FG=754.97

FG=750.87

FG=751.09

FG=750.70

EXIST SOFTBALL FIELDS

REFER TO SERIES 200 FOR SOFTBALL FIELDS DRAINAGE SYSTEM

TS=766.56

TS=766.32

PROP 8'H CHAINLINK FENCE

PROP SOFTBALL FIELDS IMPROVEMENTS. REFER TO SERIES 200 FOR DETAILS.

PROP WATER QUALITY POND. REFER TO SHEET 01C-41 FOR DETAILS.

74.99 L.F. 12" HDPE @ 0.49%

FO

0 30' 60'

SCALE : 1" = 30"

NOTES:

1. WHERE NATURAL SOD AND CONCRETE ARE ADJACENT, SOD FINISHED GROUND ELEVATION SHALL BE 1.5" BELOW TOP OF CONCRETE. REFER TO SOFTBALL FIELDS PLANS FOR TURF ELEVATIONS.

LEGEND

GRADE TO DRAIN UNIFORMLY (SLOPE BACK TO NATURAL GROUND AT 4:1 TO MATCH EXIST GRADE WHERE REQUIRED)

PROPOSED CUT AREA

KEY NOTES:

1 REFER TO LANDSCAPE ARCHITECT SHEETS FOR TRAIL EDGING.

PAVING LEGEND

CONCRETE PAVEMENT PER DTL 08 SHT 00C-13

CONTRACTOR TO MILL AND OVERLAY EXISTING PAVEMENT

HEAVY DUTY ASPHALT PAVEMENT PER DTL 09 SHT 00C-13

PROPOSED CONCRETE SIDEWALK PER DTL 432S-1 SHT 00C-11

PROPOSED 8" CONCRETE PATH PER DTL 08 SHT 00C-13

PROPOSED DECOMPOSED GRANITE TRAIL

RE-VEGETATE PER COA SPECIFICATION 609S

LEGEND

FIRE LANE — FIRE LANE MARKING PER DTL 03 SHT 00C-13

SITE DEVELOPMENT NUMBER 2025-476

REV. NO.	DATE	DESCRIPTION

PROJECT MANAGER:	PK
DESIGNED BY:	PG/RM
CHECKED BY:	DCS/JTH
DRAWN BY:	PG/RM
DCS PROJECT NO:	20101597

DCS ENGINEERING, LLC
1101 S. CAPITAL OF TEXAS HIGHWAY, BUILDING G-100
AUSTIN, TX 78746

TEL: (512) 614-6171
T.B.P.E. FIRM NO. F-13162

BudaTx breathe easy here™

BUDA SPORTSPLEX - PHASE I

STATE OF TEXAS
JORDAN T. HURTA
143332
LICENSED PROFESSIONAL ENGINEER
8/4/2025

SITE CIVIL

CIVIL - GRADING, PAVING, AND DRAINAGE PLAN - AREA NO. 8

DATE: AUGUST 2025

SCALE: 1" = 30'

DRAWING: 01C-31

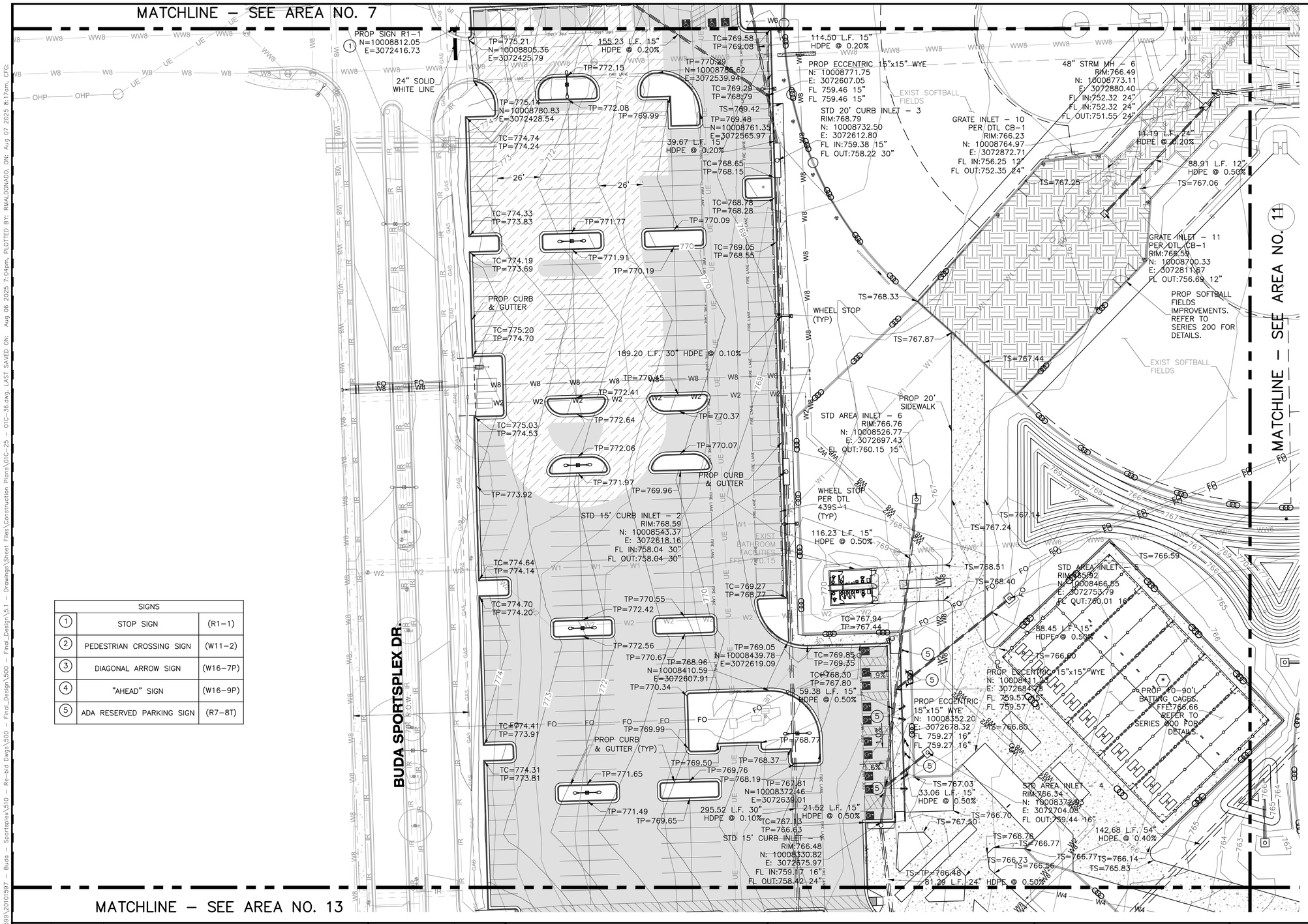

SIGNS		
1	STOP SIGN	(R1-1)
2	PEDESTRIAN CROSSING SIGN	(W11-2)
3	DIAGONAL ARROW SIGN	(W16-7P)
4	"AHEAD" SIGN	(W16-9P)
5	ADA RESERVED PARKING SIGN	(R7-8T)

NOTES:

1. WHERE NATURAL SOD AND CONCRETE ARE ADJACENT, SOD FINISHED GROUND ELEVATION SHALL BE 1.5" BELOW TOP OF CONCRETE. REFER TO SOFTBALL FIELDS PLANS FOR TURF ELEVATIONS.

KEY NOTES:

(1) CONSTRUCTION OF SIDEWALKS SHALL OCCUR AS DIRECTED BY THE FOLLOWING GUIDELINES:
A) ALL WALKS SHALL HAVE A MAX CROSS SLOPE OF 2% IN THE DIRECTION OF THE DOWNHILL SIDE.
B) THE LONGITUDINAL SLOPE OF THE WALKS/TRAILS SHALL BE NO GREATER THAN 5%.
C) ALL GRADES SHALL BE FINISHED TO A SMOOTH, FLOWING CONTOUR, MAINTAINING EXIST FLOW PATTERNS UNLESS DIRECTED OTHERWISE.

(*) ALTERNATE BID ITEM

PAVING LEGEND

- CONCRETE PAVEMENT PER DTL 08 SHT 00C-13
- CONTRACTOR TO MILL AND OVERLAY EXISTING PAVEMENT
- HEAVY DUTY ASPHALT PAVEMENT PER DTL 09 SHT 00C-13
- PROPOSED CONCRETE SIDEWALK PER DTL 432S-1 SHT 00C-11
- PROPOSED 8" CONCRETE PATH PER DTL 08 SHT 00C-13
- PROPOSED DECOMPOSED GRANITE TRAIL
- RE-VEGETATE PER COA SPECIFICATION 609S

LEGEND

- FIRE LANE MARKING PER DTL 03 SHT 00C-13

SITE DEVELOPMENT NUMBER 2025-476

REV. NO.	DATE	DESCRIPTION

PROJECT MANAGER:	PK
DESIGNED BY:	PG/RM
CHECKED BY:	DCS/JTH
DRAWN BY:	PG/RM
DCS PROJECT NO:	20101597

DCS ENGINEERING, LLC
1101 S. CAPITAL OF TEXAS HIGHWAY, BUILDING G-100
AUSTIN, TX 78746

TEL: (512) 614-6171
T.B.P.E. FIRM NO. F-13162

BudaTx breathe easy here™

BUDA SPORTSPLEX - PHASE I

STATE OF TEXAS
JORDAN T. HURTA
143332
LICENSED PROFESSIONAL ENGINEER
8/4/2025

SITE CIVIL

CIVIL - GRADING, PAVING, AND DRAINAGE PLAN - AREA NO. 10

DATE: AUGUST 2025

SCALE: 1" = 30'

DRAWING: 01C-32

FILENAME: Z:\Projects 1551-1599\20101597 - Buda - Sportsplex\510 - Re-bid Dwgs\500 - Final_Design\500 - Final_Design\5.1 - Drawings\Sheet Files\Construction Plans\01C-25 - 01C-36.dwg, LAST SAVED ON: Aug 06 2025 7:04pm, PLOTTED BY: RMALDONADO, ON: Aug 07 2025 8:17am, CFG:

FILENAME: Z:\Projects 1551-1599\20101597 - Buda - Sportsplex\510 - Re-bid Dwgs\500 - Final_Design\500 - Final_Design\5.1 - Drawings\Sheet Files\Construction Plans\01C-25 - 01C-36.dwg, LAST SAVED ON: Aug 06 2025 7:04pm, PLOTTED BY: RMALDONADO, ON: Aug 07 2025 8:17am, CFG:

MATCHLINE – SEE AREA NO. 8

MATCHLINE – SEE AREA NO. 10

MATCHLINE – SEE AREA NO. 14

80.78 L.F. 24" HDPE @ 0.20%

TS=765.51

TS=765.55

48" STRM MH – 5
RIM:766.22
N: 10008782.35
E: 3072960.65
FL IN:751.30 24"
FL IN:755.29 12"
FL OUT:751.39 24"

59.97 L.F. 24" HDPE @ 0.20%

GRATE INLET – 9
PER DTL CB–1
RIM:765.05
N: 10008742.39
E: 3073005.35
FL IN:751.27 24"
FL OUT:751.27 30"

EXIST SOFTBALL FIELDS

GRATE INLET – 8
PER DTL CB–1
RIM:762.96
N: 10008641.86
E: 3073112.80
FL IN:751.15 30"
FL OUT:751.15 30"

72" STRM MH – 1
RIM:762.62
N: 10008601.52
E: 3073146.75
FL IN:753.50 54"
FL OUT:752.16 54"

20'-0" EXIST PUE

REFER TO SERIES 200 FOR SOFTBALL FIELDS DRAINAGE SYSTEM

TS=765.16

147.14 L.F. 30" HDPE @ 0.08%

PROP SOFTBALL FIELDS PROP 11.25° 30" BEND
N: 10008732.47
E: 3073197.57
FL 751.05 30"

PROP SOFTBALL FIELDS. PROP IMPROVEMENTS. REFER TO SERIES 200 FOR DETAILS.

TS=765.15

124.08 L.F. 30" HDPE @ 0.08%

CONCRETE HEADWALL W/ FLARED WINGS PER DTL CH–FW–45 HW–2
N: 10008734.67
E: 3073263.80
FL IN:751.00 30"
66.26 L.F. 30" HDPE @ 0.08%

FEMA 100–YR– FLOODPLAIN

PROP WATER QUALITY POND. REFER TO SHEET 01C–41 FOR DETAILS.

N=10008757.88
E=3073448.79

FG=750.00
FG=750.86

N=10008763.86
E=3073498.43

REFER TO SHEET 01C–41 FOR PROP OUTFALL DETAILS.

FG=749.99
N=10008706.51
E=3073461.19

±3,340 SF OF 12" RIP RAP @ 18" DEPTH

N=10008693.16
E=3073456.58

N=10008699.14
E=3073506.22

FG=749.81
FG=750.03

VEGETATIVE FILTER STRIP. REFER TO SHT 01C–41 FOR DETAILS

FG=749.99
N=10008651.32
E=3073461.93

6' DECOMPOSED GRANITE TRAIL 1

FG=749.69
FG=750.03

FG=750.00
N=10008509.46
E=3073647.52

FG=749.55
FG=750.00

FG=749.00
N=10008493.96
E=3073641.38

FG=749.47
FG=751.10

FG=749.28
FG=749

FG=749.16
FG=749.12

FG=749.99

FG=749.06

FG=748.88
N=10008317.40
E=3073703.70

FUTURE POINT OF CONNECTION PER CITY'S TRAIL MASTER PLAN
N=10008377.67
E=3073476.21

FUTURE TRAIL PER TRAIL MASTER PLAN

HEADWALL PER STD DTL 508S–15
FL=756.62
N=10008427.72
E=3073486.70

0.30 L.F. 54" HDPE @ 0.40%

CONCRETE HEADWALL PER DTL CH–FW–0 HW–1
N: 10008657.94
E: 3073233.28
FL IN:751.75 54"

CONCRETE HEADWALL W/ FLARED WINGS PER DTL CH–FW–45 HW–3
N: 10008649.25
E: 3073286.91
FL IN:751.75 30"

198.89 L.F. 30" HDPE @ 0.50%

PROP 30" 45° BEND
N: 10008482.31
E: 3073178.80
FL 752.74 30"

GRATE INLET – 14
PER DTL CB–1
RIM:761.48
N: 10008476.66
E: 3073180.01
FL IN:752.77 30"
FL OUT:752.77 30"

PROP SOFTBALL FIELDS. REFER TO SERIES 200 FOR DETAILS.

REFER TO SERIES 200 FOR SOFTBALL FIELDS DRAINAGE SYSTEM

241.41 L.F. 54" HDPE @ 0.40%

5.78 L.F. 30" HDPE @ 0.50%

STD AREA INLET – 1
RIM:762.44
N: 10008427.67
E: 3072920.95
FL OUT:757.73 18"

PROP 54"X18" ECCENTRIC WYE
N: 10008428.60
E: 3072978.30
FL 754.45 54"
FL 757.45 18"

TS=761.96

84.34 L.F. 30" HDPE @ 0.39%

TS=761.74
GRATE INLET – 15
PER DTL CB–1
RIM:761.35
N: 10008393.69
E: 3073195.17
FL IN:753.60 24"
FL OUT:753.10 30"

35.31 L.F. 24" HDPE @ 0.80%

PROP SOFTBALL FIELDS. REFER TO SERIES 200 FOR DETAILS.

PROP SOFTBALL CONCESSION STAND. FFE 761.67' REFER TO SERIES 300 FOR DETAILS

57.36 L.F. 18" HDPE @ 0.49%

TS=762.09
TS=761.86

48" STRM MH – 7
RIM:761.59
N: 10008359.14
E: 3073202.45
FL IN:754.63 18"
FL IN:754.63 15"
FL OUT:753.88 24"

PROP 18" 45° BEND
N: 10008312.67
E: 3073172.35
FL 754.90 18"

100.41 L.F. 54" HDPE @ 0.40%

56.76 L.F. 18" HDPE @ 0.50%

PROP 54"X18" ECCENTRIC WYE
N: 10008356.67
E: 3072908.23
FL 754.84 54"
FL 757.84 18"

38.51 L.F. 18" HDPE @ 0.51%

GRATE INLET – 16
PER DTL CB–1
RIM:761.09
N: 10008300.79
E: 3073116.85
FL IN:755.44 15"
FL OUT:755.19 18"

TS=761.53

55.37 L.F. 18" HDPE @ 0.50%

TS=761.34

TS=761.53

62.58 L.F. 10" HDPE @ 0.50%

TS=761.07

TS=760.36

TS=759.80
TS=759.73

GRATE INLET – 18
PER DTL CB–1
RIM:760.08
N: 10008343.03
E: 3073314.33
FL OUT:755.61 10"

TS=760.22

61.77 L.F. 15" HDPE @ 0.40%

STD AREA INLET – 2
RIM:761.60
N: 10008318.16
E: 3072908.64
FL OUT:758.04 18"

49.81 L.F. 15" HDPE @ 0.50%

GRATE INLET – 17
PER DTL CB–1
RIM:761.29
N: 10008290.38
E: 3073068.15
FL OUT:755.68 15"

TS=761.74

48" STRM MH – 8
RIM:761.37
N: 10008325.50
E: 3073254.25
FL IN:755.30 10"
FL IN:755.13 12"
FL OUT:754.88 15"

TS=761.48
FG=760.52

59.63 L.F. 12" HDPE @ 0.50%

TS=761.75

TS=761.16

TS=761.16

SCALE : 1" = 30'

NOTES:

1. WHERE NATURAL SOD AND CONCRETE ARE ADJACENT, SOD FINISHED GROUND ELEVATION SHALL BE 1.5" BELOW TOP OF CONCRETE. REFER TO SOFTBALL FIELDS PLANS FOR TURF ELEVATIONS.

LEGEND

GRADE TO DRAIN UNIFORMLY (SLOPE BACK TO NATURAL GROUND AT 4:1 TO MATCH EXIST GRADE WHERE REQUIRED)

PROPOSED CUT AREA

PAVING LEGEND

- CONCRETE PAVEMENT PER DTL 08 SHT 00C–13
- CONTRACTOR TO MILL AND OVERLAY EXISTING PAVEMENT
- HEAVY DUTY ASPHALT PAVEMENT PER DTL 09 SHT 00C–13
- PROPOSED CONCRETE SIDEWALK PER DTL 432S–1 SHT 00C–11
- PROPOSED 8" CONCRETE PATH PER DTL 08 SHT 00C–13
- PROPOSED DECOMPOSED GRANITE TRAIL
- RE–VEGETATE PER COA SPECIFICATION 609S

LEGEND

FIRE LANE — FIRE LANE MARKING PER DTL 03 SHT 00C–13

SITE DEVELOPMENT NUMBER 2025–476

REV. NO.	DATE	DESCRIPTION

PROJECT MANAGER:	PK
DESIGNED BY:	PG/RM
CHECKED BY:	DCS/JTH
DRAWN BY:	PG/RM
DCS PROJECT NO:	20101597

DCS ENGINEERING, LLC
1101 S. CAPITAL OF TEXAS HIGHWAY, BUILDING G–100
AUSTIN, TX 78746

TEL: (512) 614–6171
T.B.P.E. FIRM NO. F–13162

BudaTx breathe easy here.™

BUDA SPORTSPLEX - PHASE I

STATE OF TEXAS
JORDAN T. HURTA
143332
LICENSED PROFESSIONAL ENGINEER
8/4/2025

SITE CIVIL

CIVIL - GRADING, PAVING, AND DRAINAGE PLAN - AREA NO. 11

DATE: AUGUST 2025

SCALE: 1" = 30'

DRAWING: 01C-33

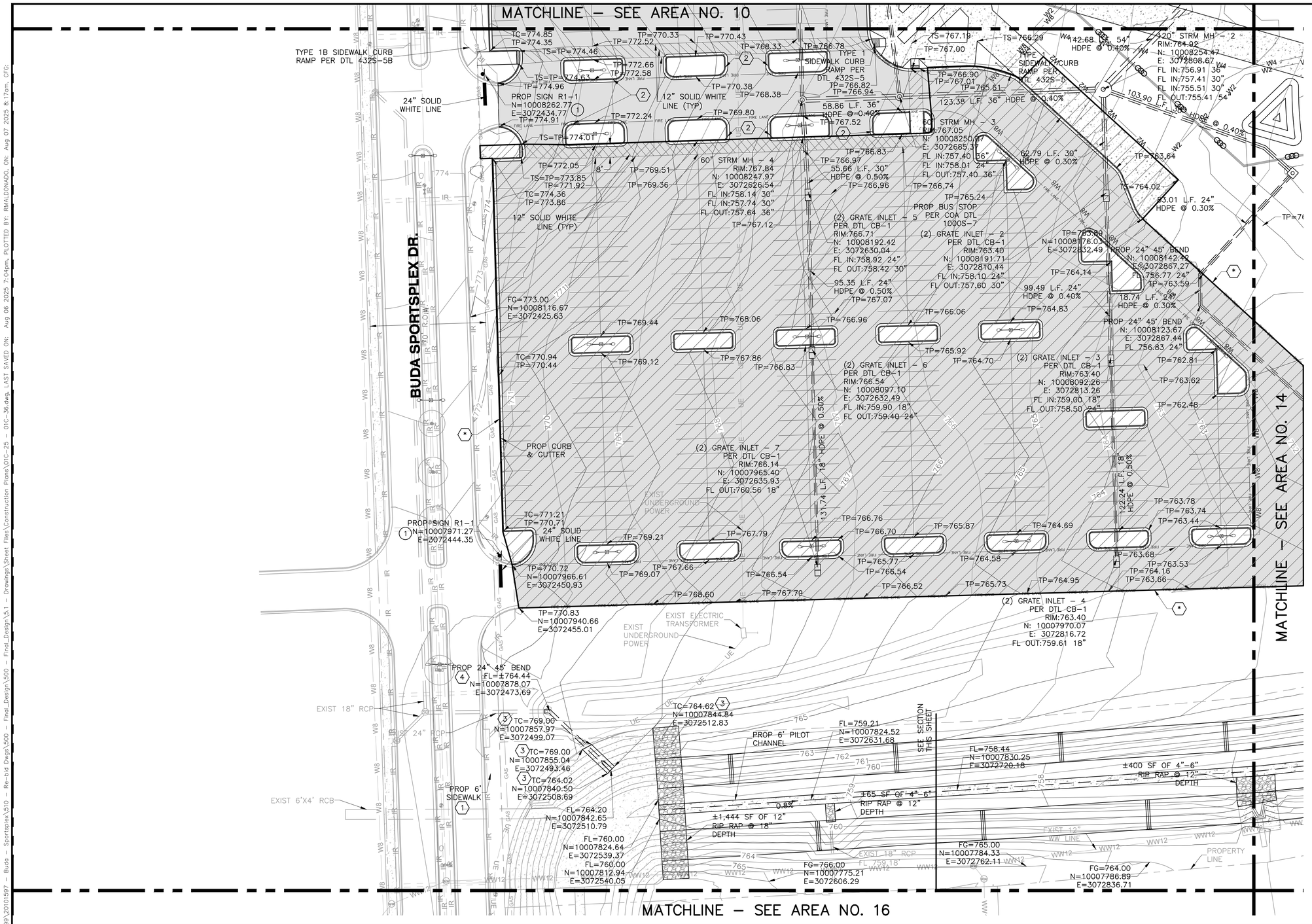

0 30' 60'

SCALE : 1" = 30'

KEY NOTES:

1. CONSTRUCTION OF SIDEWALKS SHALL OCCUR AS DIRECTED BY THE FOLLOWING GUIDELINES:
   A) ALL WALKS SHALL HAVE A MAX CROSS SLOPE OF 2% IN THE DIRECTION OF THE DOWNHILL SIDE.
   B) THE LONGITUDINAL SLOPE OF THE WALKS/TRAILS SHALL BE NO GREATER THAN 5%.
   C) ALL GRADES SHALL BE FINISHED TO A SMOOTH, FLOWING CONTOUR, MAINTAINING EXIST FLOW PATTERNS UNLESS DIRECTED OTHERWISE.
2. PROVIDE GEOTEXTILE FABRIC AND CRUSHED LIMESTONE BASE IN MEDIANS. CONTRACTOR SHALL REFER TO LANDSCAPE SHEETS FOR PLANTING DETAILS AND AGGREGATE SIZE.
3. 4" DEPTH (MIN) CLASS "A" 3,000 PSI CONCRETE REINFORCED WITH POLYPROPYLENE FIBRILLATED FIBERS, 6" X 6" NO. 6 WELDED WIRE FABRIC, OR ONE LAYER OF #3 BARS PLACED NOT MORE THAN 18" O.C.E.W. REINFORCEMENT SHALL BE ACCURATELY PLACED AT SLAB MID–DEPTH AND HELD FIRMLY IN PLACE BY MEANS OF BAR SUPPORTS OF ADEQUATE STRENGTH AND NUMBER THAT WILL PREVENT DISPLACEMENT AND KEEP STEEL AT ITS PROPER POSITION DURING PLACEMENT OF P.C. CONCRETE. IN NO INSTANCE SHALL THE STEEL BE PLACED DIRECTLY ON THE SUBGRADE OR SAND CUSHION.
4. CONTRACTOR SHALL REMOVE EXIST 24" RCP AS REQUIRED TO THE NEAREST PIPE JOINT TO INSTALL PROPOSED BEND. CONTRACTOR SHALL FIELD VERIFY FLOWLINE AND ALIGNMENT PRIOR TO CONNECTION.

PAVING LEGEND

- CONCRETE PAVEMENT PER DTL 08 SHT 00C–13
- CONTRACTOR TO MILL AND OVERLAY EXISTING PAVEMENT
- HEAVY DUTY ASPHALT PAVEMENT PER DTL 09 SHT 00C–13
- PROPOSED CONCRETE SIDEWALK PER DTL 432S–1 SHT 00C–11
- PROPOSED 8" CONCRETE PATH PER DTL 08 SHT 00C–13
- PROPOSED DECOMPOSED GRANITE TRAIL
- RE–VEGETATE PER COA SPECIFICATION 609S

LEGEND

- FIRE LANE MARKING PER DTL 03 SHT 00C–13
- ALTERNATE BID ITEM (*)

SIGNS		
1	STOP SIGN	(R1–1)
2	PEDESTRIAN CROSSING SIGN	(W11–2)
3	DIAGONAL ARROW SIGN	(W16–7P)
4	"AHEAD" SIGN	(W16–9P)
5	ADA RESERVED PARKING SIGN	(R7–8T)

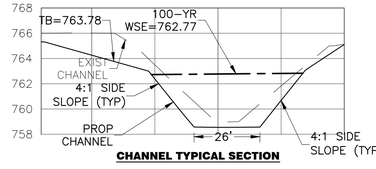

CHANNEL TYPICAL SECTION

SITE DEVELOPMENT NUMBER 2025–476

REV. NO.	DATE	DESCRIPTION

PROJECT MANAGER:	PK
DESIGNED BY:	PG/RM
CHECKED BY:	DCS/JTH
DRAWN BY:	PG/RM
DCS PROJECT NO:	20101597

DCS ENGINEERING, LLC
1101 S. CAPITAL OF TEXAS HIGHWAY, BUILDING G–100
AUSTIN, TX 78746

TEL: (512) 614–6171
T.B.P.E. FIRM NO. F–13162

BudaTx breathe easy here™

BUDA SPORTSPLEX - PHASE I

STATE OF TEXAS
JORDAN T. HURTA
143332
LICENSED PROFESSIONAL ENGINEER
8/4/2025

SITE CIVIL

CIVIL - GRADING, PAVING, AND DRAINAGE PLAN - AREA NO. 13

DATE: AUGUST 2025

SCALE: 1" = 30'

DRAWING: 01C–34

FILENAME: Z:\Projects 1551–1599\20101597 – Buda – Sportsplex\510 – Re–bid Dwgs\500 – Final_Design\500 – Final_Design\5.1 – Drawings\Sheet Files\Construction Plans\01C–25 – 01C–36.dwg, LAST SAVED ON: Aug 06 2025 7:04pm, PLOTTED BY: RMALDONADO, ON: Aug 07 2025 8:17am, CFG:

MATCHLINE – SEE AREA NO. 11

MATCHLINE – SEE AREA NO. 13

MATCHLINE – SEE AREA NO. 15 (NOT USED)

MATCHLINE – SEE SHEET AREA NO. 17 (NOT USED)

TS=761.57

TS=762.21

TS=761.06

TS=761.07
FG=760.45

59.63 L.F. 12" HDPE @ 0.50%
PROP 12" 45° BEND
N: 10008275.45
E: 3073221.82
TS=FG=760.77
FL 755.43 12"

REFER TO SERIES 200 FOR SOFTBALL FIELDS DRAINAGE SYSTEM

TB=754.36
N=10008225.75
E=3073499.84

FUTURE TRAIL PER TRAIL MASTER PLAN

FG=751.00
N=10008251.29
E=3073569.05

FG=752.00
N=10008248.45
E=3073573.55

FG=753.00
N=10008246.59
E=3073578.71

FG=754.00
N=10008241.60
E=3073581.44

EXIST 8" WATERLINE

PROP 30" 22.5° BEND
N: 10008219.12
E: 3072906.37
FL 755.93 30"

39.77 L.F. 12" HDPE @ 0.50%

22.84 L.F. 30" HDPE @ 0.40%

TS=760.47

GRATE INLET – 19
PER DTL CB–1
RIM:760.01
N: 10008236.55
E: 3073230.13
FL OUT:755.63 12"
TS=760.08

TS=760.03

TB=755.43
N=10008174.14
E=3073468.46

20.00' EXIST PUE

TB=755.86
N=10008134.61
E=3073444.44

FG=755.00
N=10008241.67
E=3073613.39

FG=750.12
N=10008248.50
E=3073549.96
FL=750.49
N=10008210.21
E=3073524.04

STD AREA INLET – 3
RIM:760.90
N: 10008203.72
E: 3072923.24
FL IN:756.52 24"
FL OUT:756.02 30"

83.01 L.F. 24" HDPE @ 0.30%

TP=763.12

PROP SOFTBALL FIELDS. REFER TO SERIES 200 FOR DETAILS.

TB=755.96
N=10008126.21
E=3073438.11

PROP SOFTBALL FIELDS. REFER TO SERIES 200 FOR DETAILS.

REFER TO SERIES 200 FOR SOFTBALL FIELDS DRAINAGE SYSTEM

TB=756.50
N=10008095.05
E=3073387.29

TB=756.10
N=10008117.09
E=3073425.51

FL=751.33
N=10008118.45
E=3073468.26

TP=762.71

TP=762.64

97.05 L.F. 24" HDPE @ 0.30%

1 – 12"x12" TEE
FL=754.25
N=10008113.29
E=3073250.76

61 L.F. 15" STRM HDPE @ 1.00%

FEMA 100–YR FLOODPLAIN

±280 SF OF 4"–6" RIP RAP @ 12" DEPTH

FG=756.00
N=10008066.18
E=3073505.37

EXIST 12" WATERLINE

TP=761.28

TP=761.55

TP=761.39

(2) GRATE INLET 1
PER DTL CB–1
RIM:760.80
N: 10008058.24
E: 3072939.12
FL OUT:757.12 24"

TS=758.52

1 – 15" 22.5° BEND
FL=753.64
N=10008034.24
E=3073268.09

19 L.F. 15" STRM HDPE @ 1.00%

FL=751.44
N=10008105.46
E=3073458.46

EXIST 24" RCP
FL 752.40'

TP=761.92

HEADWALL PER STD DTL 508S–15
FL=753.45
N=10008017.17
E=3073278.48

FL=752.19
N=10008047.61
E=3073362.47

FL=751.58
N=10008092.93
E=3073441.16

TP=762.36

TP=762.18

SEE SECTION THIS SHEET

SLOPE (TYP) 4:1

0.7%

FG=757.00
N=10007999.95
E=3073390.34

PROP RV PARKING. REFER TO SERIES 700 FOR DETAILS.

TP=762.42

TP=763.44

TP=763.23

TP=763.02

TP=762.36

TP=762.55

FL=753.41
N=10007956.67
E=3073204.12

FG=758.00
N=10007932.63
E=3073273.39

PROPERTY LINE

EXIST WW LINE

FG=758.54
N=10007897.45
E=3073212.29

FL=754.86
N=10007865.74
E=3073044.93

PROP 6' PILOT CHANNEL
FG=759.00
N=10007867.59
E=3073160.42

±105 SF OF 4"–6" RIP RAP @ 12" DEPTH

EXIST 5" PVC
FL 754.45'

EXIST 36" RCP
FL 758.27'

0.9%

±400 SF OF 4"–6" RIP RAP @ 12" DEPTH

FL=755.18
N=10007861.90
E=3073036.34

FL=755.87
N=10007854.33
E=3073007.92

FL=755.40
N=10007858.74
E=3073027.62

FG=760.00
N=10007822.37
E=3073058.05

±230 SF OF 4"–6" RIP RAP @ 12" DEPTH

FL=756.85
N=10007842.15
E=3072904.08

FG=762.00
N=10007805.30
E=3072951.56

FG=761.00
N=10007814.60
E=3073009.57

FG=763.00
N=10007798.53
E=3072909.34

0 30' 60'

SCALE : 1" = 30'

NOTES:

1. WHERE NATURAL SOD AND CONCRETE ARE ADJACENT, SOD FINISHED GROUND ELEVATION SHALL BE 1.5" BELOW TOP OF CONCRETE. REFER TO SOFTBALL FIELDS PLANS FOR TURF ELEVATIONS.

PAVING LEGEND

- CONCRETE PAVEMENT PER DTL 08 SHT 00C–13
- CONTRACTOR TO MILL AND OVERLAY EXISTING PAVEMENT
- HEAVY DUTY ASPHALT PAVEMENT PER DTL 09 SHT 00C–13
- PROPOSED CONCRETE SIDEWALK PER DTL 432S–1 SHT 00C–11
- PROPOSED 8" CONCRETE PATH PER DTL 08 SHT 00C–13
- PROPOSED DECOMPOSED GRANITE TRAIL
- RE–VEGETATE PER COA SPECIFICATION 609S

LEGEND

- FIRE LANE MARKING PER DTL 03 SHT 00C–13
- ALTERNATE BID ITEM (*)

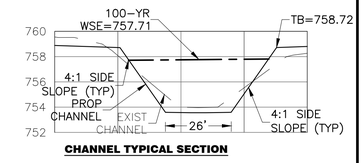

CHANNEL TYPICAL SECTION

SITE DEVELOPMENT NUMBER 2025–476

REV. NO.	DATE	DESCRIPTION

PROJECT MANAGER:	PK
DESIGNED BY:	PG/RM
CHECKED BY:	DCS/JTH
DRAWN BY:	PG/RM
DCS PROJECT NO:	20101597

DCS ENGINEERING, LLC
1101 S. CAPITAL OF TEXAS HIGHWAY, BUILDING G–100
AUSTIN, TX 78746
TEL: (512) 614–6171
T.B.P.E. FIRM NO. F–13162

BudaTx breathe easy here™

BUDA SPORTSPLEX - PHASE I

STATE OF TEXAS
JORDAN T. HURTA
143332
LICENSED PROFESSIONAL ENGINEER
8/4/2025

SITE CIVIL

CIVIL - GRADING, PAVING, AND DRAINAGE PLAN - AREA NO. 14

DATE: AUGUST 2025

SCALE: 1" = 30'

DRAWING: 01C–35

FILENAME: Z:\Projects 1551–1599\20101597 – Buda – Sportsplex\510 – Re–bid Dwgs\500 – Final_Design\500 – Final_Design\5.1 – Drawings\Sheet Files\Construction Plans\01C–25 – 01C–36.dwg, LAST SAVED ON: Aug 06 2025 7:04pm, PLOTTED BY: RMALDONADO, ON: Aug 07 2025 8:17am, CFG:

FILENAME: Z:\Projects 1551-1599\20101597 - Buda - Sportsplex\510 - Re-bid Dwgs\500 - Final_Design\5.1 - Drawings\Sheet Files\Construction Plans\01C-36.dwg, LAST SAVED ON: Aug 06 2025 7:04pm, PLOTTED BY: RMALDONADO, ON: Aug 07 2025 8:18am, CFG:

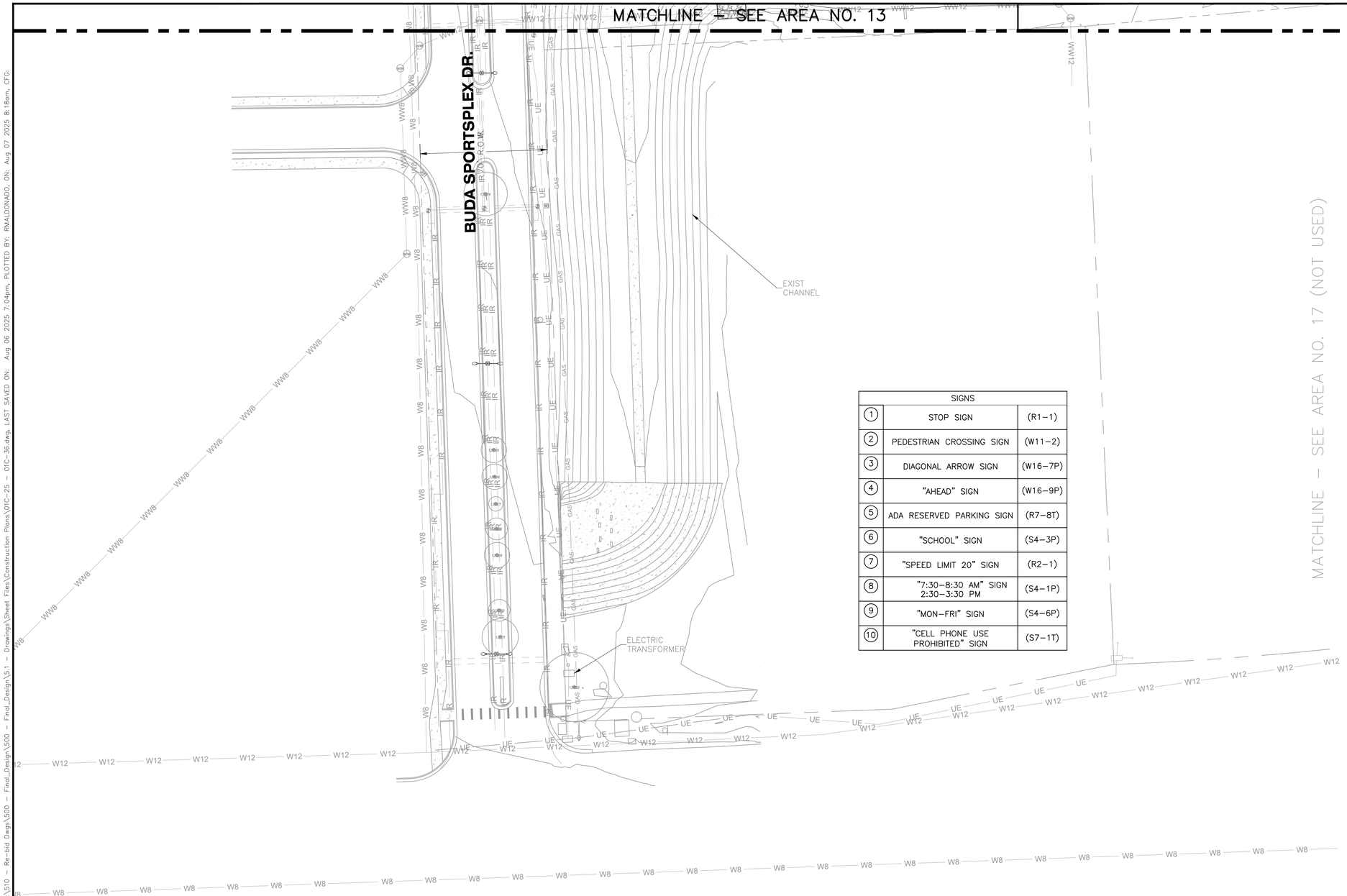

SIGNS		
1	STOP SIGN	(R1-1)
2	PEDESTRIAN CROSSING SIGN	(W11-2)
3	DIAGONAL ARROW SIGN	(W16-7P)
4	"AHEAD" SIGN	(W16-9P)
5	ADA RESERVED PARKING SIGN	(R7-8T)
6	"SCHOOL" SIGN	(S4-3P)
7	"SPEED LIMIT 20" SIGN	(R2-1)
8	"7:30-8:30 AM" SIGN 2:30-3:30 PM	(S4-1P)
9	"MON-FRI" SIGN	(S4-6P)
10	"CELL PHONE USE PROHIBITED" SIGN	(S7-1T)

MATCHLINE - SEE AREA NO. 17 (NOT USED)

0 30' 60'

SCALE : 1" = 30'

KEY NOTES:

1. CONSTRUCTION OF SIDEWALKS SHALL OCCUR AS DIRECTED BY THE FOLLOWING GUIDELINES:
   A) ALL WALKS SHALL HAVE A MAX CROSS SLOPE OF 2% IN THE DIRECTION OF THE DOWNHILL SIDE.
   B) THE LONGITUDINAL SLOPE OF THE WALKS/TRAILS SHALL BE NO GREATER THAN 5%.
   C) ALL GRADES SHALL BE FINISHED TO A SMOOTH, FLOWING CONTOUR, MAINTAINING EXIST FLOW PATTERNS UNLESS DIRECTED OTHERWISE.

PAVING LEGEND

- CONCRETE PAVEMENT PER DTL 08 SHT 00C-13
- CONTRACTOR TO MILL AND OVERLAY EXISTING PAVEMENT
- HEAVY DUTY ASPHALT PAVEMENT PER DTL 09 SHT 00C-13
- PROPOSED CONCRETE SIDEWALK PER DTL 432S-1 SHT 00C-11
- PROPOSED 8" CONCRETE PATH PER DTL 08 SHT 00C-13
- PROPOSED DECOMPOSED GRANITE TRAIL
- RE-VEGETATE PER COA SPECIFICATION 609S

LEGEND

FIRE LANE — FIRE LANE MARKING PER DTL 03 SHT 00C-13

SITE DEVELOPMENT NUMBER 2025-476

REV. NO.	DATE	DESCRIPTION

PROJECT MANAGER:	PK
DESIGNED BY:	PG/RM
CHECKED BY:	DCS/JTH
DRAWN BY:	PG/RM
DCS PROJECT NO:	20101597

DCS ENGINEERING, LLC
1101 S. CAPITAL OF TEXAS HIGHWAY, BUILDING G-100
AUSTIN, TX 78746

TEL: (512) 614-6171
T.B.P.E. FIRM NO. F-13162

BudaTx breathe easy here™

BUDA SPORTSPLEX - PHASE I

STATE OF TEXAS
JORDAN T. HURTA
143332
LICENSED PROFESSIONAL ENGINEER
8/4/2025

SITE CIVIL

CIVIL - GRADING, PAVING, AND DRAINAGE PLAN - AREA NO. 16

DATE: AUGUST 2025

SCALE: 1" = 30'

DRAWING: 01C-36



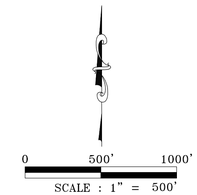

DRAINAGE AREAS

DRAINAGE AREA — XX / XX.XX — ACREAGE

FLOW ARROW

NOTES:

1. SEE SHEET 01C-40 FOR STORM SEWER CALCULATIONS.
2. A PORTION OF THIS SITE IS LOCATED WITHIN ZONE A OF THE 100-YR FLOODPLAIN PER FEDERAL EMERGENCY MANAGEMENT AGENCY, FLOOD INSURANCE RATE MAP PANEL NO. 48209C0260G, DATED JANUARY 17, 2025.
3. NATIONAL OCEANIC AND ATMOSPHERIC ADMINISTRATION (NOAA) ATLAS 14 RAINFALL DATA WAS USED FOR ALL DRAINAGE CALCULATIONS.
4. FLOW CALCULATIONS HAVE BEEN DEVELOPED USING THE CITY OF AUSTIN DRAINAGE CRITERIA MANUAL. THE NRCS METHOD HAS BEEN USED TO CALCULATE FLOWS FOR DETENTION POND DESIGN.
5. THE CURVE NUMBER (CN) FOR OFFSITE AREAS IS CONSIDERED TO BE 78, AS THESE AREAS ARE DETAINED TO PRE-DEVELOPED CONDITIONS. THE CURVE NUMBER FOR THE UNDEVELOPED CONDITION IS SELECTED BASED ON COA DRAINAGE CRITERIA MANUAL (DCM) SECTION 2.5.2, ASSUMING A COVER TYPE OF MEADOW-CONTINUOUS GRASS WITH SOIL TYPE D

POINT OF INTEREST
PEAK FLOW RATES
100 YR FLOW = 5,414.62 CFS
25 YR FLOW = 3,782.25 CFS

HEC-1 HYDROLOGIC SUMMARY

AREA NAME	DA-1	OF-1	OF-2	OF-3	OF-4	OF-5	OF-6	OF-7
DRAINAGE AREA (ac)	78.16	117.62	15.73	33.92	10.63	25.09	13.96	698.2
Tc (min)	26.75	32.07	11.97	13.05	13.50	15.60	14.45	49.83
CURVE NUMBER (CN)	78	78	78	78	78	78	78	78
100 YR CALCULATED FLOW (CFS)	525.07	716.86	152.43	317.44	98.22	217.07	124.85	3262.68
25 YR CALCULATED FLOW (CFS)	369.64	502.28	107.58	224.26	69.33	153.05	88.21	2267.90

SITE DEVELOPMENT NUMBER 2025-476

REV. NO.	DATE	DESCRIPTION

PROJECT MANAGER:	PK
DESIGNED BY:	PG/RM
CHECKED BY:	DCS/JTH
DRAWN BY:	PG/RM
DCS PROJECT NO:	20101597

DCS ENGINEERING, LLC
1101 S. CAPITAL OF TEXAS HIGHWAY, BUILDING G-100
AUSTIN, TX 78746

TEL: (512) 614-6171
T.B.P.E. FIRM NO. F-13162

BudaTx breathe easy here™

BUDA SPORTSPLEX - PHASE I

STATE OF TEXAS
JORDAN T. HURTA
143332
LICENSED PROFESSIONAL ENGINEER
8/4/2025

SITE CIVIL

CIVIL - EXISTING DRAINAGE AREA MAP

DATE: AUGUST 2025

SCALE: 1" = 500'

DRAWING: 01C-37

FILENAME: Z:\Projects 1551-1599\20101597 - Buda - Sportsplex\510 - Re-bid Dwgs\500 - Final_Design\500 - Final_Design\5.1 - Drawings\Sheet Files\Construction Plans\01C-37.dwg, LAST SAVED ON: Aug 01 2025 2:22pm, PLOTTED BY: RMALDONADO, ON: Aug 07 2025 8:18am, CFG:



0 500' 1000'

SCALE : 1" = 500'

DRAINAGE AREAS

DRAINAGE AREA — XX

ACREAGE — XX.XX

FLOW ARROW

EXIST FLOW
100 YR FLOW = 140.28 CFS
25 YR FLOW = 102.68 CFS
PROP FLOW AFTER DETENTION
100 YR FLOW = 137.89 CFS
25 YR FLOW = 90.37 CFS

POINT OF INTEREST
PEAK FLOW RATES
100 YR FLOW = 5,403.7 CFS
25 YR FLOW = 3,776.16 CFS

NOTES:

1. SEE SHEET 01C-40 FOR STORM SEWER CALCULATIONS.
2. A PORTION OF THIS SITE IS LOCATED WITHIN ZONE A OF THE 100-YR FLOODPLAIN PER FEDERAL EMERGENCY MANAGEMENT AGENCY, FLOOD INSURANCE RATE MAP PANEL NO. 48209C0260G, DATED JANUARY 17, 2025.
3. NATIONAL OCEANIC AND ATMOSPHERIC ADMINISTRATION (NOAA) ATLAS 14 RAINFALL DATA WAS USED FOR ALL DRAINAGE CALCULATIONS.
4. FLOW CALCULATIONS HAVE BEEN DEVELOPED USING THE CITY OF AUSTIN DRAINAGE CRITERIA MANUAL. THE NRCS METHOD HAS BEEN USED TO CALCULATE FLOWS FOR DETENTION POND DESIGN.
5. THE CURVE NUMBER (CN) FOR OFFSITE AREAS IS CONSIDERED TO BE 78, AS THESE AREAS ARE DETAINED TO PRE-DEVELOPED CONDITIONS. THE CURVE NUMBER FOR THE UNDEVELOPED CONDITION IS SELECTED BASED ON COA DRAINAGE CRITERIA MANUAL (DCM) SECTION 2.5.2, ASSUMING A COVER TYPE OF MEADOW-CONTINUOUS GRASS WITH SOIL TYPE D

HEC-1 HYDROLOGIC SUMMARY

AREA NAME	DA-1	DA-2	OF-1	OF-2	OF-3	OF-4	OF-5	OF-6	OF-7
DRAINAGE AREA (ac)	46.79	31.36	117.62	15.73	33.92	10.63	25.09	13.96	698.2
Tc (min)	19.92	9.00	32.07	11.97	13.05	13.50	15.60	14.45	49.83
CURVE NUMBER (CN)	82	87	78	78	78	78	78	78	78
100 YR CALCULATED FLOW (CFS)	377.37	363.48	716.86	152.43	317.44	98.22	217.07	124.85	3262.68
25 YR CALCULATED FLOW (CFS)	272.74	269.78	502.28	107.58	224.26	69.33	153.05	88.21	2267.90

SITE DEVELOPMENT NUMBER 2025-476

REV. NO.	DATE	DESCRIPTION

PROJECT MANAGER:	PK
DESIGNED BY:	PG/RM
CHECKED BY:	DCS/JTH
DRAWN BY:	PG/RM
DCS PROJECT NO:	20101597

DCS ENGINEERING, LLC
1101 S. CAPITAL OF TEXAS HIGHWAY, BUILDING G-100
AUSTIN, TX 78746

TEL: (512) 614-6171
T.B.P.E. FIRM NO. F-13162

BudaTx breathe easy here.

BUDA SPORTSPLEX - PHASE I

STATE OF TEXAS
JORDAN T. HURTA
143332
LICENSED PROFESSIONAL ENGINEER
8/4/2025

SITE CIVIL

CIVIL - PROPOSED DRAINAGE AREA MAP

DATE: AUGUST 2025

SCALE: 1" = 500'

DRAWING: 01C-38

FILENAME: Z:\Projects 1551-1599\20101597 - Buda - Sportsplex\510 - Re-bid Dwgs\500 - Final_Design\500 - Final_Design\5.1 - Drawings\Sheet Files\Construction Plans\01C-38.dwg, LAST SAVED ON: Aug 01 2025 2:22pm, PLOTTED BY: RMALDONADO, ON: Aug 07 2025 8:18am, CFG:

FILENAME: Z:\Projects 1551-1599\20101597 - Buda - Sportsplex\510 - Re-bid Dwgs\500 - Final_Design\500 - Final_Design\5.1 - Drawings\Sheet Files\01C-39.dwg, LAST SAVED ON: Aug 01 2025 2:22pm, PLOTTED BY: RMALDONADO, ON: Aug 07 2025 8:18am, CFG:

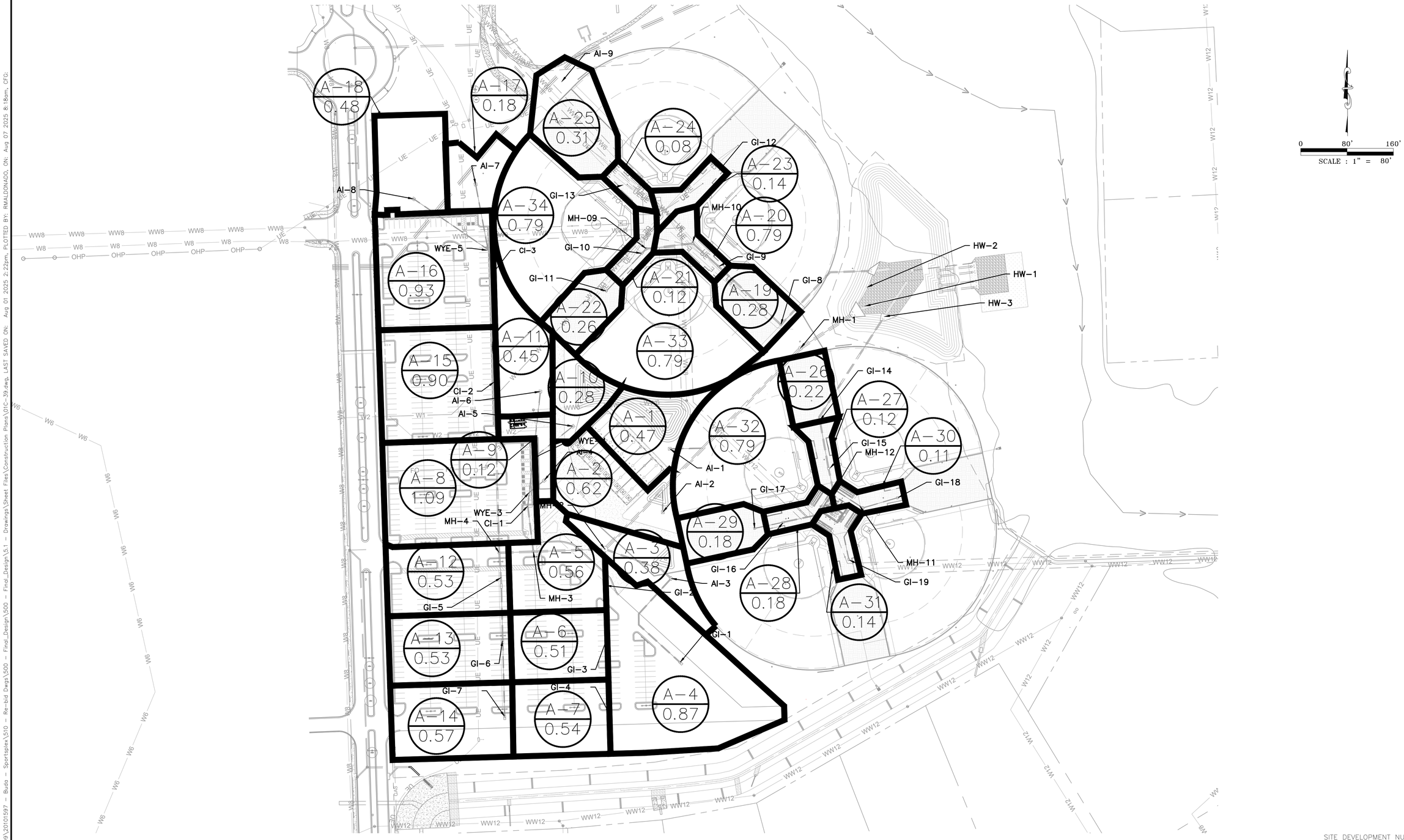

SITE DEVELOPMENT NUMBER 2025-476

REV. NO.	DATE	DESCRIPTION

PROJECT MANAGER:	PK
DESIGNED BY:	PG/RM
CHECKED BY:	DCS/JTH
DRAWN BY:	PG/RM
DCS PROJECT NO:	20101597

DCS ENGINEERING, LLC
1101 S. CAPITAL OF TEXAS HIGHWAY, BUILDING G-100
AUSTIN, TX 78746

TEL: (512) 614-6171
T.B.P.E. FIRM NO. F-13162

BudaTx breathe easy here™

BUDA SPORTSPLEX - PHASE I

STATE OF TEXAS
JORDAN T. HURTA
143332
LICENSED PROFESSIONAL ENGINEER
8/4/2025

SITE CIVIL

CIVIL - PROPOSED
SUB-DRAINAGE AREA MAP

DATE: AUGUST 2025

SCALE: 1" = 200'

DRAWING: 01C-39

PARKING LOT STORM SEWER

100-yr intensity = a/(t+b)^c	
a100=	76.9
b100=	6.726
c100=	0.655

										Trunk Line Design												
Drainage Area	Inlet/MH From	Inlet/MH To	Area (acres)	Total Area (acres)	Time Conc. (min)	Runoff "C"	Intensity "I" (in/hr)	Q (cfs)	Q Total (cfs)	Manning "n"	Length (ft)	Pipe Diam. (in)	Grade (ft/ft)	Full Flow Velocity (fps)	Full Flow Capacity (cfs)	Actual Velocity (out)	Junction/ MH loss (start) (ft)	Hydraulic Grade Line (start) (ft)	Upstream Flowline (ft)	Downstream Flowline (ft)	Pipe Crown (start) (ft)	Top of MH/Inlet Elevation (start) (ft)
A-18	AI-8	WYE-5	0.48	0.48	5	0.89	15.33	6.55		0.012	155.15	15	0.002	2.56	3.14	5.32	0.09	767.51	759.87	759.56	761.12	770.37
A-17	AI-7	WYE-5	0.18	0.66	5	0.49	15.33	1.35		0.012	115.58	15	0.002	2.56	3.14	1.1	0	766.09	759.79	759.56	761.04	767.5
	WYE-5	CI-3		0.66					7.90	0.012	43.52	15	0.002	2.56	3.14	5.98	0.07	766.04	759.56	759.47	760.81	768.71
A-16	CI-3	CI-2	0.93	1.59	5	0.92	15.33	13.12	21.02	0.012	184.2	30	0.001	2.87	14.09	3.98	0.05	765.56	758.22	758.04	760.72	768.74
A-15	CI-2	MH-4	0.9	2.49	5	0.94	15.33	12.97	33.99	0.012	295.52	30	0.001	2.87	14.09	6.13	0.12	764.6	758.04	757.74	760.54	768.59
A-14	GI-7	GI-6	0.57	0.57	5	0.85	15.33	7.43		0.012	132	18	0.005	4.57	8.07	4.2	0.05	765.12	759.65	758.99	761.15	766.42
A-13	GI-6	GI-5	0.53	1.1	5	0.95	15.33	7.72	15.15	0.012	108.02	24	0.005	5.53	17.38	4.71	0.07	764.33	758.49	757.95	760.49	766.54
A-12	GI-5	MH-4	0.53	1.63	5	0.94	15.33	7.64	22.78	0.012	42.91	30	0.005	6.42	31.5	4.46	0.06	763.76	757.45	757.24	759.95	766.65
	MH-4	MH-3		4.12					56.77	0.012	58.86	36	0.004	6.48	45.82	6.92	0.65	763.03	757.24	757.01	760.24	767.79
A-11	AI-6	WYE-4	0.45	0.45	5	0.49	15.33	3.38		0.012	116.23	15	0.005	4.04	4.96	2.75	0.02	764.43	760.15	759.57	761.4	766.76
A-10	AI-5	WYE-4	0.28	0.28	5	0.49	15.33	2.10		0.012	88.45	15	0.005	4.04	4.96	2.72	0.02	764.51	760.01	759.57	761.26	765.92
	WYE-4	WYE-3		0.73					5.48	0.012	59.38	15	0.005	4.04	4.96	4.37	0.09	764.21	759.57	759.27	760.82	767.67
A-9	AI-4	WYE-3	0.12	0.12	5	0.49	15.33	0.90		0.012	33.06	15	0.005	4.04	4.96	0.71	0	763.68	759.44	759.27	760.69	766.34
	WYE-3	CI-1		0.85					6.38	0.012	21.52	15	0.005	4.04	4.96	4.96	0.08	763.68	759.27	759.17	760.52	766.63
A-8	CI-1	MH-3	1.09	1.94	5	0.93	15.33	15.54	21.92	0.012	81.29	24	0.005	5.53	17.38	6.68	0.14	762.86	758.42	758.01	760.42	766.48
	MH-3	MH-2		6.06					78.70	0.012	123.38	36	0.004	6.48	45.82	9.57	0.59	761.13	757.01	756.52	760.01	766.92
A-7	GI-4	GI-3	0.54	0.54	5	0.91	15.33	7.53		0.012	131.78	18	0.005	4.57	8.07	4.33	0.06	761.66	759.23	758.57	760.73	763.4
A-6	GI-3	GI-2	0.51	1.05	5	0.96	15.33	7.51	15.04	0.012	89.95	24	0.004	4.95	15.54	4.7	0.07	760.85	758.07	757.71	760.07	763.52
A-5	GI-2	MH-2	0.56	1.61	5	0.94	15.33	8.07	23.11	0.012	62.79	30	0.003	4.97	24.4	4.54	0.06	760.34	757.21	757.02	759.71	763.4
A-4	GI-1	AI-3	0.87	0.87	5	0.93	15.33	12.40		0.012	198.8	24	0.003	4.28	13.46	3.98	0.05	760.83	756.73	756.13	758.73	760.8
A-3	AI-3	MH-2	0.38	1.25	5	0.49	15.33	2.85	15.26	0.012	126.74	30	0.003	4.97	24.4	3.04	0.08	760.45	755.63	755.12	758.13	760.9
	MH-2	WYE-2		8.92					117.06	0.012	143.12	54	0.004	8.49	135.1	6.37	0.4	759.67	755.02	754.45	759.52	764.92
A-2	AI-2	WYE-2	0.62	0.62	5	0.87	15.33	8.27		0.012	39.14	18	0.005	4.57	8.07	4.78	0.07	759.24	758.04	757.84	759.54	761.6
	WYE-2	WYE-1		9.54					125.33	0.012	99.22	54	0.004	8.49	135.1	6.65	0.07	759.04	754.84	754.45	759.34	766
A-1	AI-1	WYE-1	0.47	0.47	5	0.64	15.33	4.61		0.012	56.3	18	0.005	4.57	8.07	2.8	0.02	758.8	757.73	757.45	759.23	762.44
	WYE-1	MH-1		10.01					129.94	0.012	237.83	54	0.004	8.49	135.1	6.8	0.02	758.67	754.45	753.5	758.95	763.11
	MH-1	HW-1		10.01					129.94	0.012	137.27	54	0.004	8.49	135.1	6.62	0.5	757.72	749.55	749	754.05	762.65

NORTH SOFTBALL FIELD STORM SEWER

										Trunk Line Design												
Drainage Area	Inlet/MH From	Inlet/MH To	Area (acres)	Total Area (acres)	Time Conc. (min)	Runoff "C"	Intensity "I" (in/hr)	Q (cfs)	Q Total (cfs)	Manning "n"	Length (ft)	Pipe Diam. (in)	Grade (ft/ft)	Full Flow Velocity (fps)	Full Flow Capacity (cfs)	Actual Velocity (out)	Junction/ MH loss (start) (ft)	Hydraulic Grade Line (start) (ft)	Upstream Flowline (ft)	Downstream Flowline (ft)	Pipe Crown (start) (ft)	Top of MH/Inlet Elevation (start) (ft)
A-25	AI-9	GI-13	0.31	0.31	5	0.96	15.33	4.56		0.012	210.94	18	0.005	4.57	8.07	2.62	0.31	764.77	754.13	753.07	755.63	765.26
A-24	GI-13	MH-6	0.08	0.39	5	0.96	15.33	1.18	5.74	0.012	122.99	24	0.002	3.5	10.99	1.76	0.05	764.47	752.57	752.32	754.57	766.47
A-22	GI-11	GI-10	0.26	0.26	5	0.96	15.33	3.83		0.012	88.91	12	0.005	3.48	2.74	4.99	0.65	765.24	756.69	756.25	757.69	766.46
A-21 & A-34	GI-10	MH-6	1.22	1.48	5	0.65	15.33	12.16	15.98	0.012	11.19	24	0.002	3.5	10.99	5.86	0.06	764.19	752.35	752.32	754.35	766.1
	MH-6	MH-5		1.87					21.72	0.012	80.97	24	0.002	3.5	10.99	6.99	0.47	763.21	751.32	751.16	753.32	766.36
A-23	GI-12	MH-5	0.14	0.14	5	0.96	15.33	2.06		0.012	142.55	12	0.005	3.48	2.74	2.61	0.3	763.44	756	755.29	757	765.72
	MH-5	GI-9		2.01					23.78	0.012	61.3	24	0.002	3.5	10.99	7.53	0.68	761.81	751.16	751.04	753.16	766.09
A-20	GI-9	GI-8	0.17	2.18	5	0.96	15.33	2.50	26.28	0.012	147.14	24	0.002	3.5	10.99	8.18	1.49	760.4	751.04	750.75	753.04	764.92
A-19 & A-33	GI-8	HW-2	1.38	3.56	5	0.79	15.33	16.71	43.00	0.012	175.38	30	0.01	9.08	44.55	7.72	1.05	758.05	749.88	749	752.38	762.83

SOUTH SOFTBALL FIELD STORM SEWER

										Trunk Line Design												
Drainage Area	Inlet/MH From	Inlet/MH To	Area (acres)	Total Area (acres)	Time Conc. (min)	Runoff "C"	Intensity "I" (in/hr)	Q (cfs)	Q Total (cfs)	Manning "n"	Length (ft)	Pipe Diam. (in)	Grade (ft/ft)	Full Flow Velocity (fps)	Full Flow Capacity (cfs)	Actual Velocity (out)	Junction/ MH loss (start) (ft)	Hydraulic Grade Line (start) (ft)	Upstream Flowline (ft)	Downstream Flowline (ft)	Pipe Crown (start) (ft)	Top of MH/Inlet Elevation (start) (ft)
A-31	GI-19	MH-8	0.14	0.14	5	0.96	15.33	2.06		0.012	102.09	12	0.005	3.48	2.74	2.59	0.34	759.14	752.92	752.41	753.92	759.88
A-30	GI-18	MH-8	0.11	0.11	5	0.95	15.33	1.60		0.012	66.98	10	0.005	3.09	1.68	2.91	0.22	759.01	752.91	752.58	753.74	759.95
	MH-8	MH-7		0.25					3.66	0.012	51.57	15	0.005	4.04	4.96	2.82	0.13	758.65	752.16	751.91	753.41	761.24
A-29	GI-17	GI-16	0.18	0.18	5	0.96	15.33	2.65		0.012	49.81	15	0.005	4.04	4.96	2.21	0.12	758.97	753.43	753.19	754.68	761.16
A-28	GI-16	MH-7	0.18	0.36	5	0.96	15.33	2.65	5.30	0.012	105.81	18	0.005	4.57	8.07	2.97	0.22	758.74	752.94	752.41	754.44	760.96
	MH-7	GI-15		0.61					8.96	0.012	37.32	24	0.008	6.82	21.42	2.7	0.02	758.42	751.16	750.87	753.16	761.46
A-27	GI-15	GI-14	0.12	0.73	5	0.92	15.33	1.69	10.65	0.012	84.94	30	0.004	5.74	28.18	3.2	0.17	758.27	750.37	750.08	752.87	761.22
A-26 & A-32	GI-14	HW-3	1.32	2.05	5	0.79	15.33	15.99	26.64	0.012	214.79	30	0.005	6.42	31.5	4.34	0.58	757.58	750.08	749	752.58	761.35

INLET CALCULATIONS

Grate Inlet										
DA	Inlet	Qi (cfs)	Sx	d2 (ft)	d (ft)	% clog	W	A (sf)	A_{eff} (sf)	Q_{eff} (cfs)	# Grate Inlet
DA-4	GI-1	12.51	0.01	0.75	0.73	0.5	3.17	4.8	2.4	11.1	2
DA-5	GI-2	8.14	0.01	0.24	0.22	0.5	3.17	4.8	2.4	6.1	2
DA-6	GI-3	7.53	0.01	0.22	0.20	0.5	3.17	4.8	2.4	5.8	2
DA-7	GI-4	7.65	0.01	0.22	0.20	0.5	3.17	4.8	2.4	5.8	2
DA-12	GI-5	7.74	0.01	0.24	0.22	0.5	3.17	4.8	2.4	6.1	2
DA-13	GI-6	7.8	0.01	0.24	0.22	0.5	3.17	4.8	2.4	6.1	2
DA-14	GI-7	7.43	0.01	0.22	0.20	0.5	3.17	4.8	2.4	5.8	2
DA-19	GI-8	4.1	0.01	0.14	0.12	0.5	3.17	4.8	2.4	4.6	1
DA-20	GI-9	2.5	0.01	0.1	0.08	0.5	3.17	4.8	2.4	3.8	1
DA-21	GI-10	1.73	0.01	0.34	0.32	0.5	3.17	4.8	2.4	7.4	1
DA-22	GI-11	3.92	0.01	0.46	0.44	0.5	3.17	4.8	2.4	8.6	1
DA-23	GI-12	2.05	0.01	0.17	0.15	0.5	3.17	4.8	2.4	5.1	1
DA-24	GI-13	1.25	0.01	0.23	0.21	0.5	3.17	4.8	2.4	6.0	1
DA-26	GI-14	3.21	0.01	0.42	0.40	0.5	3.17	4.8	2.4	8.2	1
DA-27	GI-15	1.73	0.01	0.18	0.16	0.5	3.17	4.8	2.4	5.2	1
DA-28	GI-16	2.71	0.01	0.06	0.04	0.5	3.17	4.8	2.4	2.7	1
DA-29	GI-17	2.71	0.01	0.07	0.05	0.5	3.17	4.8	2.4	3.0	1
DA-30	GI-18	1.59	0.01	0.14	0.12	0.5	3.17	4.8	2.4	4.6	1
DA-31	GI-19	2.03	0.01	0.1	0.08	0.5	3.17	4.8	2.4	3.8	1

Area Inlet															
Drainage Area	Inlet #	Q 100 yr (cfs)	Q Passes (cfs)	Q Total (cfs)	a (in)	Yo (ft)	Qa/La	La (ft)	Length (ft) 16' min.	L/La	a/Yo	Q/Qa	Q (cfs)	Q pass (cfs)	Pass to Inlet #
DA-1	AI-1	4.66	0.00	4.66	5.00	0.04	0.51	9.23	16	1.73	10.42	1.00	4.66	0.00	-
DA-2	AI-2	8.37	0.00	8.37	5.00	0.38	0.84	10.00	16	1.60	1.10	1.00	8.37	0.00	-
DA-3	AI-3	2.87	0.00	2.87	5.00	0.4	0.86	3.34	16	4.79	1.04	1.00	2.87	0.00	-
DA-9	AI-4	0.87	0.00	0.87	5.00	0.1	0.56	1.56	16	10.27	4.17	1.00	0.87	0.00	-
DA-10	AI-5	2.14	0.00	2.14	5.00	0.25	0.70	3.05	16	5.25	1.67	1.00	2.14	0.00	-
DA-11	AI-6	3.38	0.00	3.38	5.00	0.06	0.52	6.47	16	2.47	6.94	1.00	3.38	0.00	-
DA-17	AI-7	1.35	0.00	1.35	5.00	0.08	0.54	2.50	16	6.41	5.21	1.00	1.35	0.00	-
DA-18	AI-8	6.53	0.00	6.53	5.00	1.21	1.89	3.46	16	4.62	0.34	1.00	6.53	0.00	-
DA-25	AI-9	4.63	0.00	4.63	5.00	0.1	0.56	8.29	16	1.93	4.17	1.00	4.63	0.00	-

Curb Inlet															
Drainage Area	Inlet #	Q 100 yr (cfs)	Q Passes (cfs)	Q Total (cfs)	a (in)	Yo (ft)	Qa/La	La (ft)	Length (ft) 10' min.	L/La	a/Yo	Q/Qa	Q (cfs)	Q pass (cfs)	Pass to Inlet #
DA-8	AI-1	15.66	0.00	15.66	5.00	0.5	0.97	16.15	20	1.24	0.83	1.00	15.66	0.00	-
DA-15	AI-2	13.05	0.00	13.05	5.00	0.5	0.97	13.46	15	1.11	0.83	1.00	13.05	0.00	-
DA-16	AI-3	13.22	0.00	13.22	5.00	0.5	0.97	13.64	15	1.10	0.83	1.00	13.22	0.00	-

NOTES:

1. CALCULATIONS HAVE BEEN DEVELOPED USING THE CITY OF AUSTIN DRAINAGE CRITERIA MANUAL. THE RATIONAL METHOD HAS BEEN USED TO CALCULATE FLOWS, AND MANNING EQUATION FOR PIPES FLOWING FULL HAS BEEN USED TO CALCULATE VELOCITIES.
2. BENTLEY SYSTEMS CIVILSTORM SOFTWARE HAS BEEN USED TO OBTAIN THE RESULTS SHOWN IN THE TABLE.
3. THE "TIME OF CONCENTRATION" (TC) IS CALCULATED ASSUMING PER THE METHOD OUTLINED IN THE CITY OF AUSTIN CRITERIA MANUAL (DCM). THE MINIMUM TC IS 5 MINUTES. THE MANNING'S ROUGHNESS COEFFICIENTS USED IN THE TC CALCULATIONS ARE AS PROVIDED IN THE DCM.
4. NATIONAL OCEANIC AND ATMOSPHERIC ADMINISTRATION (NOAA) ATLAS 14 RAINFALL DATA WAS USED FOR ALL DRAINAGE CALCULATIONS.

SITE DEVELOPMENT NUMBER 2025-476

REV. NO.	DATE	DESCRIPTION

PROJECT MANAGER:	PK
DESIGNED BY:	PG/RM
CHECKED BY:	DCS/JTH
DRAWN BY:	PG/RM
DCS PROJECT NO:	20101597

DCS ENGINEERING, LLC
1101 S. CAPITAL OF TEXAS HIGHWAY, BUILDING G-100
AUSTIN, TX 78746

TEL: (512) 614-6171
T.B.P.E. FIRM NO. F-13162

BudaTx breathe easy here™

BUDA SPORTSPLEX - PHASE I

STATE OF TEXAS
JORDAN T. HURTA
143332
LICENSED PROFESSIONAL ENGINEER
8/4/2025

SITE CIVIL

CIVIL - STORM SEWER CALCULATIONS

DATE: AUGUST 2025
SCALE: AS NOTED
DRAWING: 01C-40

FILENAME: Z:\Projects 1551-1599\20101597 - Buda - Sportsplex\510 - Re-bid Dwgs\500 - Final_Design\500 - Final_Design\5.1 - Drawings\Sheet Files\Construction Plans\01C-40.dwg, LAST SAVED ON: Aug 01 2025 2:23pm, PLOTTED BY: RMALDONADO, ON: Aug 08 2025 11:07am, CFG:

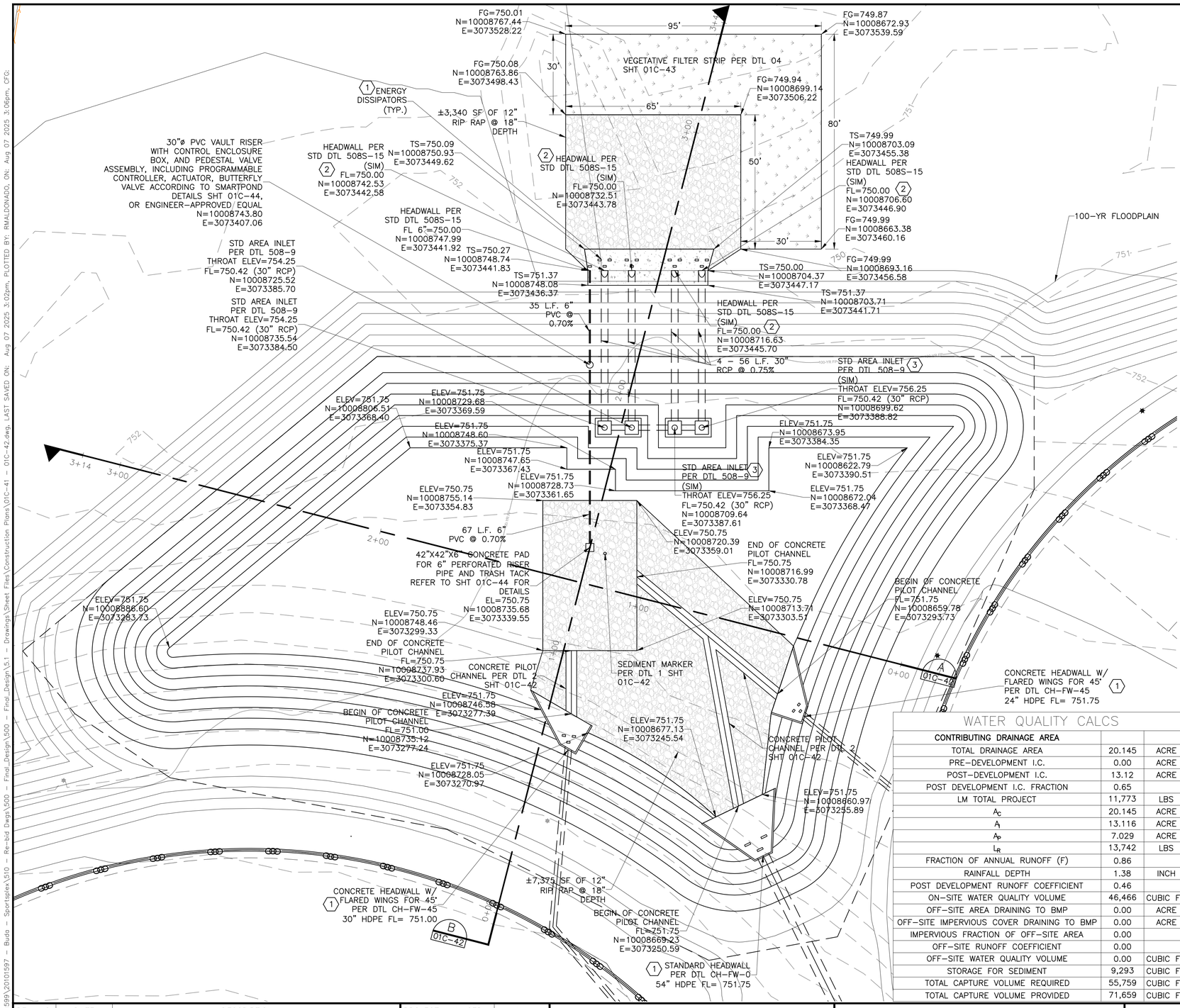

0 20' 40'

SCALE : 1" = 20'

KEY NOTES:

1. INSTALL ENERGY DISSIPATORS CENTERED ON PIPE, DISSIPATORS SHALL BE 1'-4 1/4" FROM END OF PIPE. 9"HX9"WX9"D AT 1.5' O.C.E.W. PROVIDE (2) #4 DOWELS FOR EACH DISSIPATOR INTO THE FOUNDATION.
2. SIMILAR CONSTRUCTION AS SHOWN IN DETAIL 508S-15. REVISED DIMENSIONS, A=42", B=108", D=30", AND L=96".
3. SIMILAR CONSTRUCTION AS SHOWN IN DETAIL 508S-9. REVISED DIMENSIONS, THROAT HEIGHT=12".

IMPERVIOUS COVER CALCULATIONS

ZONE	SITE AREA IN ZONE (SF)	EXISTING IMPERVIOUS (SF)	EXISTING % IMPERVIOUS IN ZONE	ULTIMATELY PROPOSED IMPERVIOUS (AC)	ULTIMATELY PROPOSED % IMPERVIOUS IN ZONE
RECHARGE	55.98	3.65	6.52	11.67	20.85
CONTRIBUTING	9.65	0.49	5.08	0.87	9.02
TOTAL SITE AREA	65.63	4.14	6.31	12.54	19.11

DETENTION POND ELEVATION-VOLUME-FLOW

STORM EVENT	WSEL	VOLUME (CF)	INFLOW (CFS)	OUTFLOW (CFS)
25-YR	756.15	133,200	171.45	90.43
100-YR	756.71	153,603	225.95	138.89

DETENTION POND STORAGE

ELEVATION	AREA (SF)	AREA (AC)	STORAGE INCREMENTALS (CF)	STORAGE CUMULATIVE (CF)	STORAGE CUMULATIVE (AC-FT)
750.75	1225	0.06	0	0	0
751.75	18,677	0.09	9,951	9,951	0.23
752	21,509	0.50	5,023	14,974	0.34
753	24,478	0.57	22,994	37,968	0.87
754	27,964	0.64	26,221	64,189	1.47
754.25	28993	0.67	7,470	71,659	1.65
755	31,798	0.73	22,411	94,070	2.16
756	35,455	0.81	33,627	127,696	2.93
757	38,822	0.89	37,138	164,834	3.78
758	42,289	0.97	40,555	205,389	4.72

WATER QUALITY CALCS

CONTRIBUTING DRAINAGE AREA		
TOTAL DRAINAGE AREA	20.145	ACRE
PRE-DEVELOPMENT I.C.	0.00	ACRE
POST-DEVELOPMENT I.C.	13.12	ACRE
POST DEVELOPMENT I.C. FRACTION	0.65	
LM TOTAL PROJECT	11,773	LBS
A_C	20.145	ACRE
A_I	13.116	ACRE
A_P	7.029	ACRE
L_R	13,742	LBS
FRACTION OF ANNUAL RUNOFF (F)	0.86	
RAINFALL DEPTH	1.38	INCH
POST DEVELOPMENT RUNOFF COEFFICIENT	0.46	
ON-SITE WATER QUALITY VOLUME	46,466	CUBIC FT.
OFF-SITE AREA DRAINING TO BMP	0.00	ACRE
OFF-SITE IMPERVIOUS COVER DRAINING TO BMP	0.00	ACRE
IMPERVIOUS FRACTION OF OFF-SITE AREA	0.00	
OFF-SITE RUNOFF COEFFICIENT	0.00	
OFF-SITE WATER QUALITY VOLUME	0.00	CUBIC FT.
STORAGE FOR SEDIMENT	9,293	CUBIC FT.
TOTAL CAPTURE VOLUME REQUIRED	55,759	CUBIC FT.
TOTAL CAPTURE VOLUME PROVIDED	71,659	CUBIC FT.

WQV OUTLET RATING CURVE

WSEL	FLOWRATE (CFS)	AVG FLOWRATE (CFS)	INC. VOLUME (CF)	INC. DRAW TIME (HR)	CUM. DRAW TIME (HR)
751	0	0	0	0	0
752	0.95	0.24	14,209	16.70	16.70
753	1.34	0.67	22,994	9.55	26.25
754	1.64	1.23	26,221	5.93	32.18
754.25	1.70	1.38	7,470	1.50	33.68

SITE DEVELOPMENT NUMBER 2025-476

REV. NO.	DATE	DESCRIPTION

PROJECT MANAGER:	PK
DESIGNED BY:	PG/RM
CHECKED BY:	DCS/JTH
DRAWN BY:	PG/RM
DCS PROJECT NO:	20101597

DCS ENGINEERING, LLC
1101 S. CAPITAL OF TEXAS HIGHWAY, BUILDING G-100
AUSTIN, TX 78746
TEL: (512) 614-6171
T.B.P.E. FIRM NO. F-13162

BudaTx breathe easy here™

BUDA SPORTSPLEX - PHASE I

STATE OF TEXAS
JORDAN T. HURTA
143332
LICENSED PROFESSIONAL ENGINEER
8/4/2025

SITE CIVIL

CIVIL - WATER QUALITY POND PLAN

DATE: AUGUST 2025

SCALE: AS NOTED

DRAWING: 01C-41

FILENAME: Z:\Projects 1551-1599\20101597 - Buda - Sportsplex\510 - Re-bid Dwgs\500 - Final_Design\500 - Final_Design\5.1 - Drawings\Sheet Files\Construction Plans\01C-41 - 01C-42.dwg, LAST SAVED ON: Aug 07 2025 3:02pm, PLOTTED BY: RMALDONADO, ON: Aug 07 2025 3:06pm, CFG:

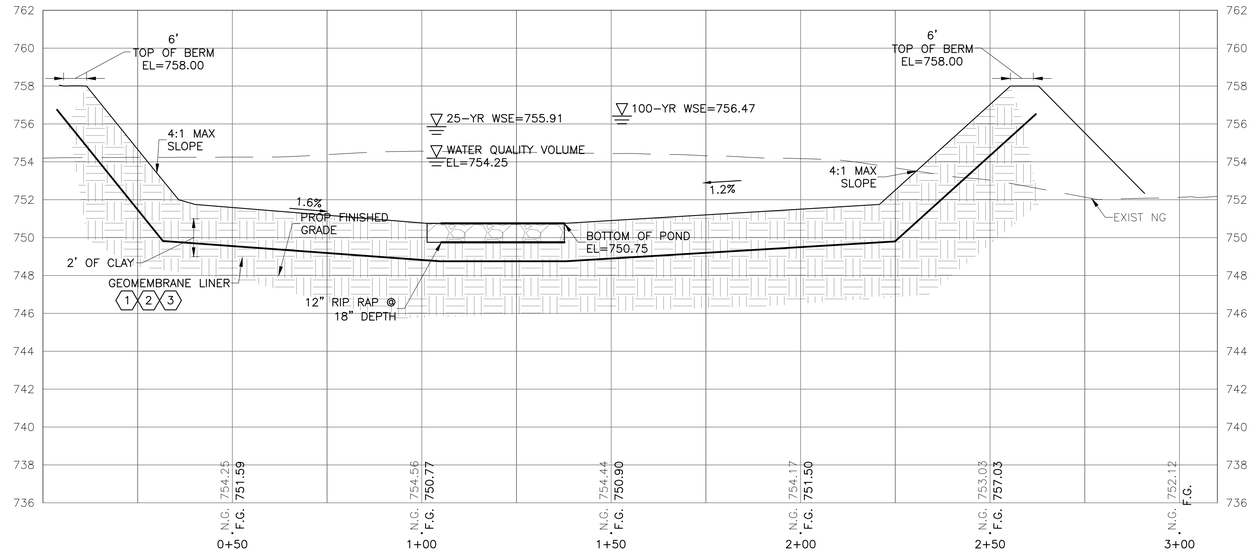

DETENTION POND SECTION A

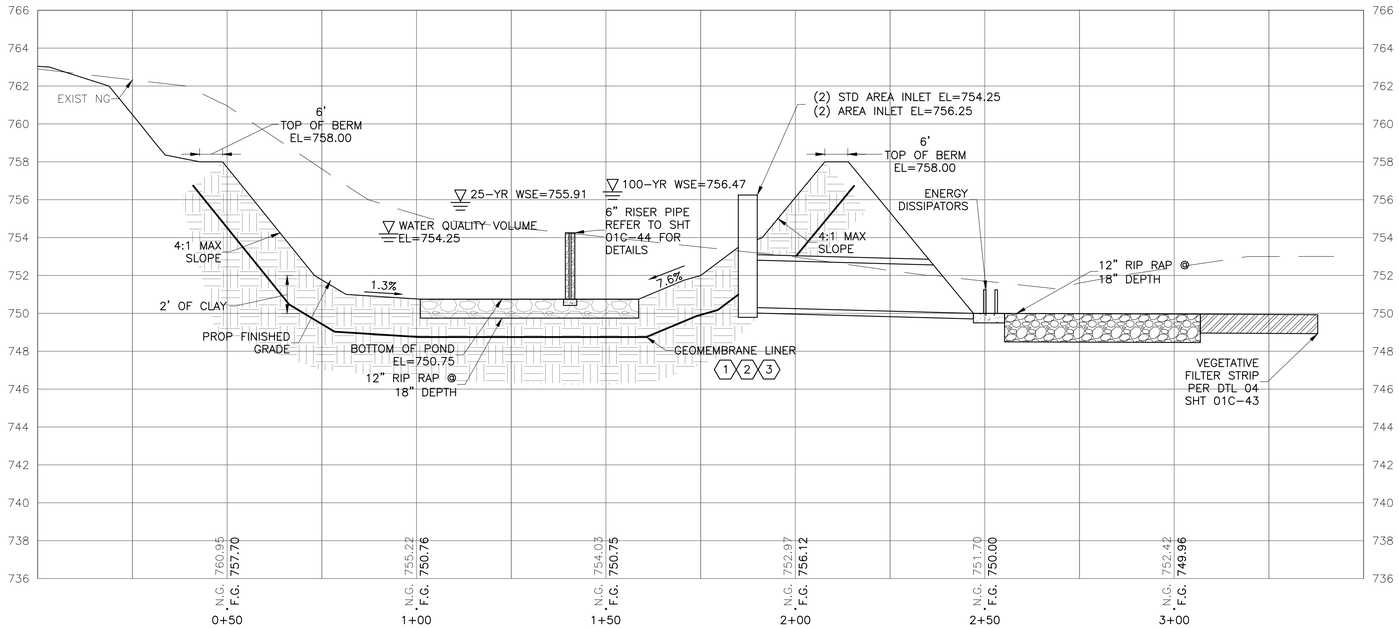

DETENTION POND SECTION B

KEY NOTES:

1. GEOMEMBRANE LINER MUST HAVE A MINIMUM THICKNESS OF THIRTY (30) MILS AND BE ULTRAVIOLET RESISTANT. A SUITABLE GEOTEXTILE FABRIC SHALL BE PLACED ON TOP AND BOTTOM OF THE MEMBRANE FOR PUNCTURE PROTECTION IF ANY PARTICLES GREATER THAN 0.375 INCH ARE PRESENT IN THE COVER SOIL OR SUBGRADE SURFACE, RESPECTIVELY. GEOTEXTILE MATERIAL MUST HAVE A MINIMUM UNIT WEIGHT OF 8 OZ/SQ.YD., A MINIMUM PUNCTURE STRENGTH OF 125 LBS, A MINIMUM MULLEN BURST STRENGTH OF 400 PSI, AND A MINIMUM TENSILE STRENGTH OF 200 LBS.
2. THE GROUND SURFACE WITHIN POND FOOTPRINT, ANCHOR TRENCHES, AND BENEATH EMBANKMENTS WILL REQUIRE PREPARATION PRIOR START OF CONSTRUCTION. ALL TREES, STUMPS, ROOTS, BRUSH, AND AT LEAST 6 INCHES OF SURFICIAL SOILS MUST BE GRUBBED AND REMOVED FROM POND AREAS.
3. ANCHOR TRENCHES FOR GEOMEMBRANE LINER SHALL BE CONSTRUCTED IN ACCORDANCE WITH COA STD DTL 661-5, SHT 00C-10.

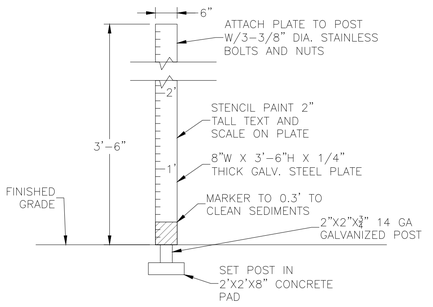

SEDIMENT DEPTH MARKER 1
N.T.S.

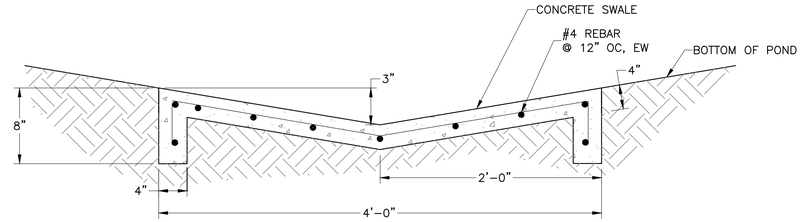

PILOT CHANNEL DETAIL 2
N.T.S.

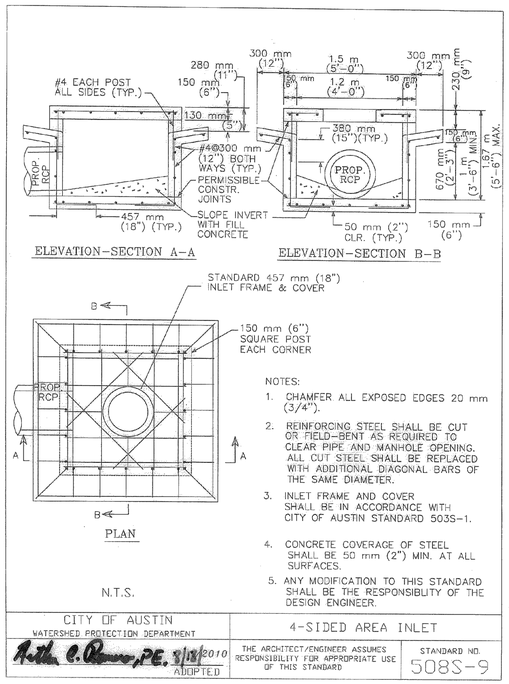

SITE DEVELOPMENT NUMBER 2025-476

REV. NO.	DATE	DESCRIPTION

PROJECT MANAGER:	PK
DESIGNED BY:	PG/RM
CHECKED BY:	DCS/JTH
DRAWN BY:	PG/RM
DCS PROJECT NO:	20101597

DCS ENGINEERING, LLC
1101 S. CAPITAL OF TEXAS
HIGHWAY, BUILDING G-100
AUSTIN, TX 78746

TEL: (512) 614-6171
T.B.P.E. FIRM NO. F-13162

BudaTx breathe easy here™

BUDA SPORTSPLEX - PHASE I

STATE OF TEXAS
JORDAN T. HURTA
143332
LICENSED
PROFESSIONAL ENGINEER
8/4/2025

SITE CIVIL

CIVIL - WATER QUALITY POND
CROSS SECTIONS

DATE: AUGUST 2025
SCALE: AS NOTED
DRAWING: 01C-42

FILENAME: C:\Users\RMALDO~1\AppData\Local\Temp\AcPublish_74212\01C-41 - 01C-42.dwg, LAST SAVED ON: Aug 07 2025 3:02pm, PLOTTED BY: RMALDONADO, ON: Aug 07 2025 3:05pm, CFG:

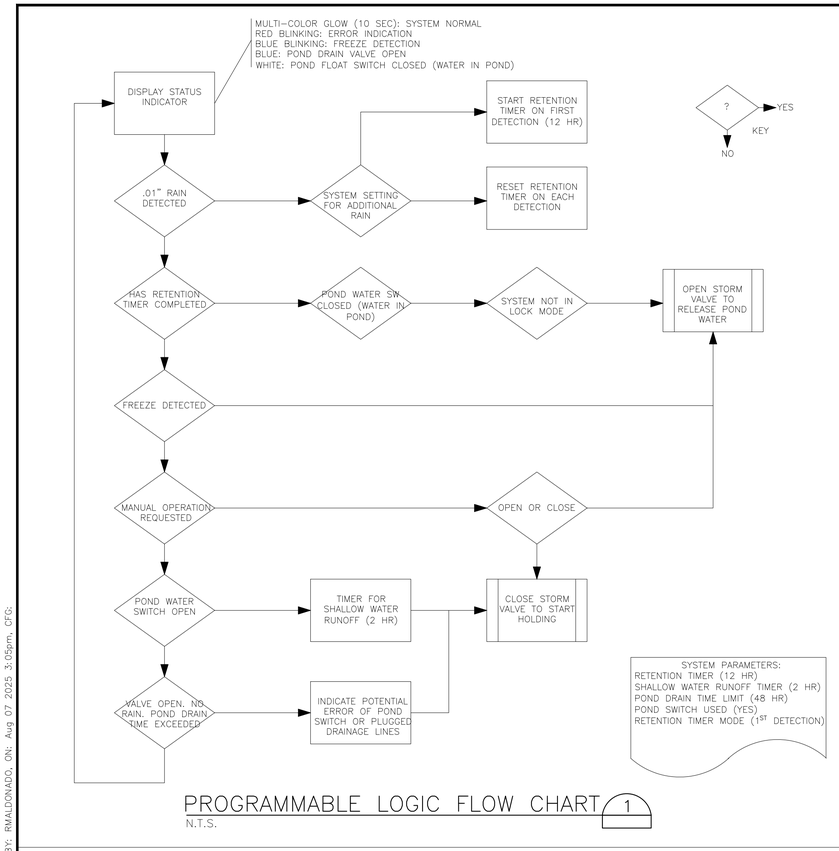

PROGRAMMABLE LOGIC FLOW CHART 1

N.T.S.

LV600 SERIES LEVEL SWITCHES

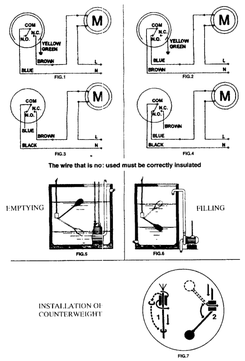

The regulators are homologated in compliance with **CEI EN 607.i0** standards and thereby comply with the fundamental requisites of Directive **93/68/EEC**
The appliance combined with a pump connected by a flexible cable,permits the regulation of the level of the liquid in which it is immersed.

INSTALLATION
To ensure it e efficient function of the appliance it is necessary to fix the electric cable inside the tank or well as illustrated in figures no.5 and no.6.
The length of the cable between the fixture point of the same and the regulator body, determines the total extension of the float and the consequent distances between the pump stopping and starting level. It is also necessary to check that the float is not obstructed during its travel.
During installation,joins to the level regulator cable must not be n-made under any circumstances.
An eventual cable join section must never be immersed in water.
If the float is used in filling mode, the system must be fitted with an adequate overflow device.

COUNTERWEIGHT INSTALLATION IF PRESENT IN THE RETAIL PACKAGING
For correct counterweight installation refer to the following procedure as illustrated in figure no.7.

1.Insert the cable into the counterweight,from the conic part,turning it.This will result in the detachment of the plastic ring inserted in the mouth (if necessary, and detachment by using a screwdriver).Place the ring at the point of the cable where the co.unterweight is to be fixed.

2.Fix the co.unterweight on the ring using moderate pressure and turning it.
The counterweight is is only provided on request.

ELECTRICAL CONNECTIONS
The regulator may be used for filling or emptying according to the connections made between the terminals of the microswitch and the cable.
For correct **product installation** refer to wiring diagrams in figures no.1-2-3-4.
Always disconnect the power supply from the main power panel before undertaking any operations on the float.

NOTE
When making the connections described above ensure that the maximim motor power does not exceed the values indicated on the level regulator.
The power supply cable is an integral\ part of the appliance. Shou.ld the cable be found to be damaged the appliance is to be replaced.Repairs to the cable itself are not possible.
The earth wire of yellow/green colour must be connected to a.s.itable earth terminal and the section dimension must not be less than 1 mm². The eventual le minal used must be effectively protected against accidental slackening.

ELECTRICAL FEATURES

MAXIMUM OPERATIONAL TEMPERATURE	50 °C
PROTECTION GRADE	IP68 (teste.t by IMQ at a depth of 1m for a period of 7 days at water temp. of 50 °C)
MACS RELIABILITY TEST	The applian ces pass an immersion test at depth of 10 m at a temperature of 50 °C for a period of 7 days.
FEATURES OF AUTOMATIC ACTION	1B (micro-cisconnections in operation)

CAUTION! CAUTION! CAUTION!

Level switches are manufactured to the highest quality specifications. However, due to their economical construction, they should be used only for applications where, in the event of product failure, the risk of damage to equipment or personnel would be minimized. In the case of level switches, one or two back-up switches should also be used to ensure that failure of any one switch will be mitigated by the back-up level switch(s). The user should periodically inspect the product's performance in the actual application. Use of the products beyond the recommended capabilities and lifespan is specifically not recommended.

CAUTION! CAUTION! CAUTION!

Before installation check your local electrical codes. To avoid personal injury when servicing your equipme nt be sure that power is disconnected from both the equipment and the float switch.

Warning: To reduce the risk of electrical shock connect only to a properly grounded, grounding type receptacle.

Warning: Risk of electrical shock. This switch has not been investigated for use in swimming pool areas.

M-1338

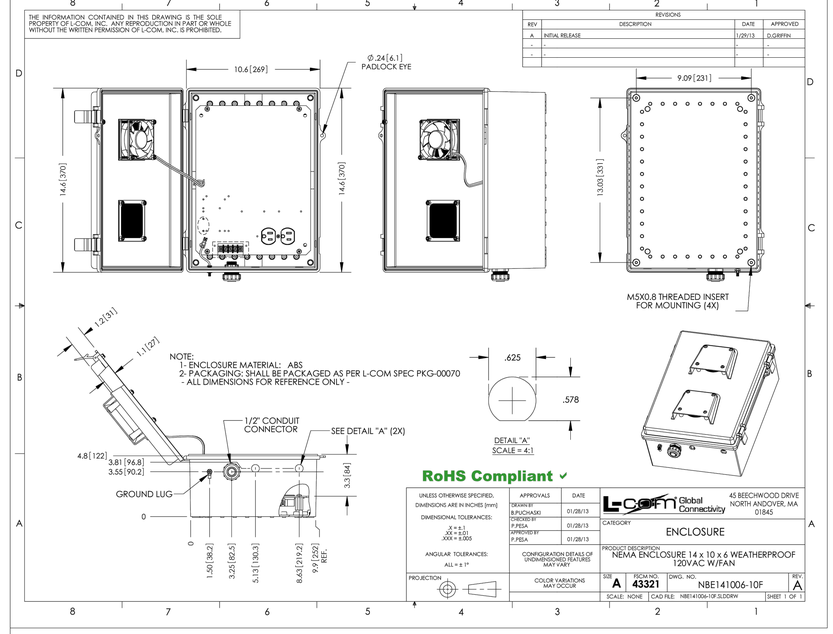

OUTLET CROSS SECTION DETAIL 3

N.T.S.

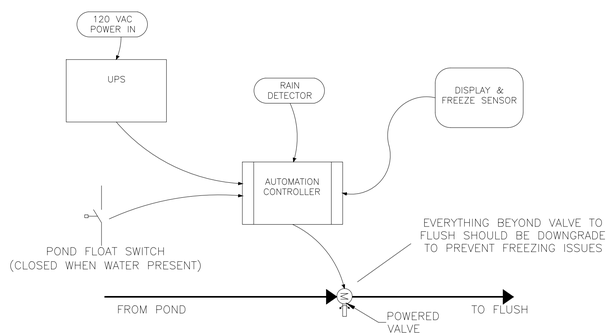

BATCH DETENTION POND LOGIC 4

N.T.S.

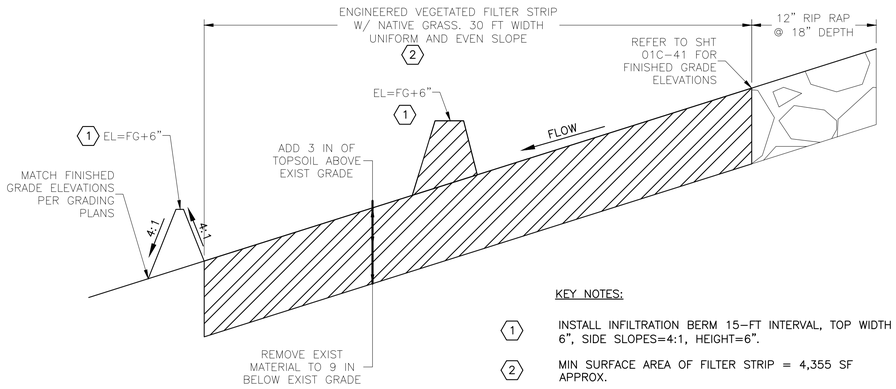

KEY NOTES:

1. INSTALL INFILTRATION BERM 15-FT INTERVAL, TOP WIDTH 6", SIDE SLOPES=4:1, HEIGHT=6".
2. MIN SURFACE AREA OF FILTER STRIP = 4,355 SF APPROX.

NOTES:

1. PERIODIC INSPECTION AND REQUIRED MAINTENANCE SHALL BE PROVIDED.
2. THE FILTER AREA, AFTER FINAL GRADING, SHOULD HAVE A UNIFORM AND EVEN SLOPE. THE FILTER AREA MUST BE FREE OF GULLIES, RILLS AND FLOW CONCENTRATIONS.
3. THE TOPSOIL MUST BE FREE OF STONES, STUMPS, ROOTS OR OTHER SIMILAR OBJECTS LARGER THAN ONE (1) INCH.
4. INFILTRATION BERM SIDE SLOPES SHOULD BE NO STEEPER THAN 3:1.

VEGETATIVE FILTER STRIP TYPICAL CROSS SECTION 4

N.T.S.

SITE DEVELOPMENT NUMBER 2025-476

REV. NO.	DATE	DESCRIPTION

PROJECT MANAGER:	PK
DESIGNED BY:	PG/RM
CHECKED BY:	DCS/JTH
DRAWN BY:	PG/RM
DCS PROJECT NO:	20101597

DCS ENGINEERING, LLC
1101 S. CAPITAL OF TEXAS HIGHWAY, BUILDING G-100
AUSTIN, TX 78746
TEL: (512) 614-6171
T.B.P.E. FIRM NO. F-13162

BudaTx breathe easy here™

BUDA SPORTSPLEX - PHASE I

STATE OF TEXAS
JORDAN T. HURTA
143332
LICENSED
PROFESSIONAL ENGINEER
8/4/2025

SITE CIVIL

CIVIL - WATER QUALITY POND DETAILS - SHEET NO. 1

DATE: AUGUST 2025
SCALE: AS NOTED
DRAWING: 01C-43

FILENAME: C:\Users\RMALDO~1\AppData\Local\Temp\AcPublish_74212\01C-41 - 01C-42.dwg, LAST SAVED ON: Aug 07 2025 3:02pm, PLOTTED BY: RMALDONADO, ON: Aug 07 2025 3:05pm, CFG:

smartPOND™ VAULT VALVE CONFIGURED IN DETENTION EMBANKMENT

ELEVATIONS & DEPTHS		
A	WATER QUALITY BATCH SURFACE ELEVATION (WSE)	XXX.XX'
B	WATER QUALITY BATCH VOLUME (WQ_B) DEPTH (FEET)	X.XX'
C	POND FLOOR ELEVATION (FEET)	XXX.XX'
D	XX-YR WATER SURFACE ELEVATION (FEET)	XXX.XX'
E	RIM, TOP OF BERM (TOB) ELEVATION (FEET)	XXX.XX'
F	DISCHARGE PIPE INVERT ELEVATION (FEET)	XXX.XX'
G	RIM TO DISCHARGE PIPE INVERT (FEET)	XX.XX"
H	TOTAL DEPTH OF VAULT (FEET)	XX.XX"

DISCHARGE RATE AND DETENTION SETTING	
ALLOWABLE DISCHARGE RATE ($Q_{ALLOWABLE}$)	X.XX-FT³/S (XX.X-GPM)
REQUIRED DETENTION VOLUME	X.XX-FT³
DETENTION VOLUME PROVIDED	X.XX-FT³/S
REQUIRED WATER QUALITY BATCH DETENTION TIME	12-HOURS

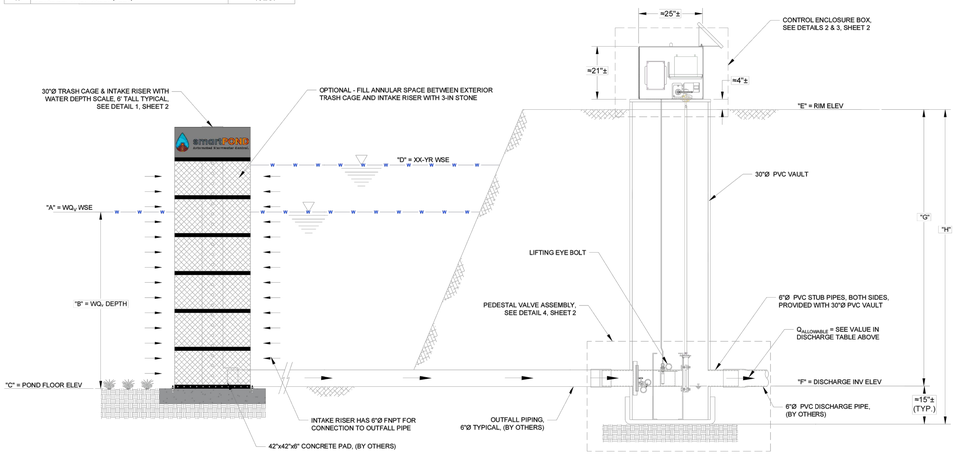

NOTE: ENGINEER OF RECORD TO REVIEW, APPROVE AND ENDORSE FINAL SITE SPECIFIC DESIGN.

PROJECT: PROJECT NAME, CITY, STATE

MODEL: **VAULT VALVE** FOR BATCH DETENTION

smartPOND Automated Stormwater Control

FOR ADDITIONAL INFORMATION CONTACT: CONVERGENT WATER TECHNOLOGIES 1-800-711-5428 www.convergentwater.com

CONVERGENT WATER TECHNOLOGIES

REVISION NO. 0 | DATE 10/19/2023 | SHEET NO. 1

DETAIL 1 - TRASH CAGE & INTAKE RISER

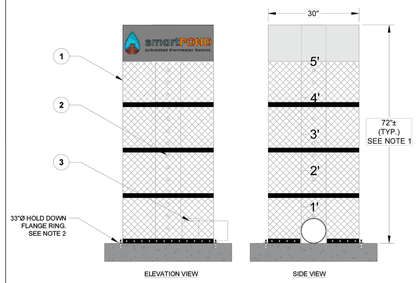

TRASH CAGE & INTAKE RISER NOTES:
1. DESIGN HEIGHT OF INTAKE TRASH CAGE AND INTAKE RISER TO MATCH REQUIRED DETENTION DEPTHS.
2. USE 4X, ⅜"Ø X 3.5" SS WEDGE ANCHOR BOLTS TO CONNECT OUTFALL ASSEMBLY TO CONCRETE PAD, 2.5" MINIMUM EMBEDMENT.

TRASH CAGE WITH INTAKE RISER - PARTS LIST	
ITEM	COMPONENT DESCRIPTION
1	30"Ø CAGE WITH 1.5" GALVANIZED MESH SCREEN
2	8" SQUARE PERFORATED TUBING WITH 1"Ø PERFORATIONS, SPACED 4" ON CENTERS WITH WATER DEPTH SCALE
3	6"Ø FNPTS PROVIDED AT BOTTOM DISCHARGE OF INTAKE RISER

DETAIL 2 - PROGRAMMABLE LOGIC FLOW CHART, VAULT VALVE OPERATION FOR DETENTION AND/OR WATER QUALITY

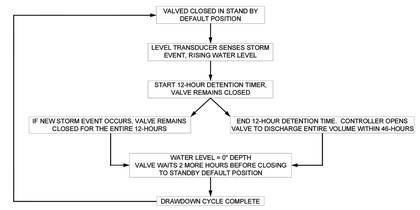

DETAIL 3 - CONTROL ENCLOSURE BOX

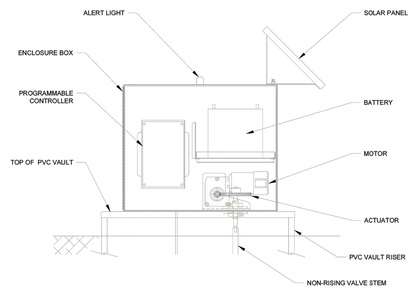

DETAIL 4 - PEDESTAL VALVE ASSEMBLY

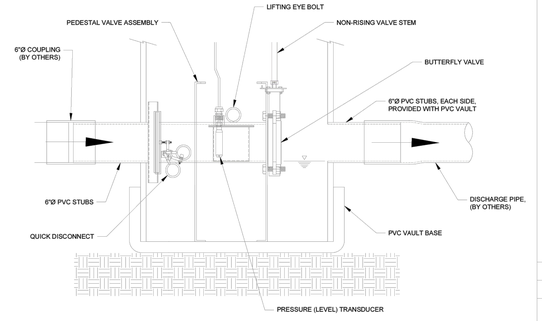

smartPOND Automated Stormwater Control

FOR ADDITIONAL INFORMATION CONTACT: CONVERGENT WATER TECHNOLOGIES 1-800-711-5428 www.convergentwater.com

CONVERGENT WATER TECHNOLOGIES

smartPOND™ VAULT VALVE VAULT VALVE DETAILS

REVISION NO. 0 | DATE 10/19/2023 | SHEET NO. 2

smartPOND VAULT VALVE SPECIFICATIONS

CONTINUOUSLY MONITORED AUTOMATED STORMWATER SYSTEM (C-MASS), WITH PROGRAM CONTROLLED VAULT VALVE

1. **CONTINUOUSLY MONITORED AUTOMATED STORMWATER SYSTEM (C-MASS) DEVICE**: THE CONTINUOUSLY MONITORED AUTOMATED STORMWATER SYSTEM (C-MASS), SHOWN ON THE PLANS AS THE VAULT ASSEMBLY SHALL BE A smartPOND™ VAULT VALVE PROVIDED BY:

   CONVERGENT WATER TECHNOLOGIES
   800.711.5428
   WWW.CONVERGENTWATER.COM

   THE smartPOND™ VAULT VALVE SHALL SHALL PROVIDE FOR ACTIVE MANAGEMENT OF DETAINED STORMWATER VOLUME AND / OR ITS ALLOWABLE DISCHARGE RATE. THE smartPOND™ VAULT VALVE SHALL BE PROGRAMMABLE TO DETAIN A SPECIFIED VOLUME OF STORMWATER FOR A SPECIFIED REQUIRED PERIOD OF TIME AND / OR PROGRAMMED TO CONTROL THE OUTFLOW RATE TO MATCH THE MAXIMUM ALLOWABLE DISCHARGE RATE OR BOTH OF THESE OPERATIONS SIMULTANEOUSLY. THE smartPOND™ VAULT VALVE MAXIMIZES THE DETENTION TO PROMOTE THE SETTLEMENT OF SOLIDS BEFORE AUTOMATICALLY DEWATERING THE DETENTION POND COMPLETELY. FOR STORMWATER RETENTION SYSTEMS, THE SYSTEM SHALL BE PROGRAMMED TO MANAGE THE REQUIRED RETENTION VOLUME WHILE MAINTAINING A SPECIFIED AMOUNT OF CAPACITY FOR FLOOD STORAGE OR OTHER USE.

   THE FOLLOWING SPECIFICATIONS DESCRIBE THE COMPONENTS, GENERAL FUNCTIONS, AND APPLICATIONS OF A CONTINUOUSLY MONITORED AUTOMATED STORMWATER SYSTEM (C-MASS), USING THE PROGRAMMED smartPOND™ VAULT VALVE.

   THIS smartPOND™ VAULT VALVE SHALL FUNCTION AS AN ELECTRONICALLY CONTROLLED, SOLAR POWERED STORMWATER MANAGEMENT DEVICE, PROVIDING PRECISION STORMWATER VOLUME MANAGEMENT CAPABILITIES AND REAL-TIME DATA. USING SENSORS, SOLAR POWER, AN ELECTRONIC ACTUATOR, AND AN INTERNET-BASED CONTROL INTERFACE. THE smartPOND™ VAULT VALVE CONNECTS TO A SPECIALIZED PERFORATED INTAKE RISER INSIDE THE STORMWATER IMPOUNDMENT AREA TO ENABLE PRECISE CONTROL OF RECORD DETAINED OR RETAINED STORMWATER CONTROL VOLUMES AND ALLOWABLE DISCHARGE RATES AUTOMATICALLY OR IN REAL TIME. THE smartPOND™ ASSEMBLY CAN BE CONFIGURED ABOVE GROUND OR BELOW IN SMALL MANHOLE OR VAULT STRUCTURE.

   1.1 PRE-PROGRAMMED VAULT VALVE CONTROL: THE VAULT VALVE SHALL BE PRE-PROGRAMMED TO EXECUTE COMMANDS BASED ON STORM EVENTS, REQUIRED CONTROL VOLUMES, ALLOWABLE DISCHARGE RATES. AND DETENTION TIME.

   1.1.1 BATCH DETENTION FUNCTION FOR STORMWATER QUALITY: THE smartPOND™ VAULT VALVE MAY BE PROGRAMMED TO PROVIDE BATCH DETENTION TO ACHIEVE STORMWATER QUALITY EFFLUENT GOAL OF 80% OR MORE REMOVAL OF TOTAL SUSPENDED SOLID (TSS) REMOVAL BY HOLDING THE WATER QUALITY VOLUME (WQ_B) FOR SETTLEMENT TREATMENT, FOR A REQUIRED PERIOD OF TIME. HOLDING TIMES ARE TYPICALLY SET FORTH IN STORMWATER MANAGEMENT REGULATIONS AS 12, 24 OR 48-HOURS.

   1.2 REAL-TIME MONITORING (OPTIONAL): THE smartPOND™ SHALL COME WITH TELEMETRY THAT SHALL ENABLE REAL-TIME REMOTE MONITORING & VALVE OPERATION CAPACITIES THROUGH A SECURE WEB-BASED USER INTERFACE. THIS INTERFACE ENABLES COMMANDS TO BE SENT TO THE VAULT VALVE TO CHANGE THE VALVES POSITION TO CONTROL DISCHARGE RATE AND POND DEPTH. THROUGH THIS SECURE WEB-BASED USER INTERFACE THE DETENTION POND'S STORAGE-STAGE AND DISCHARGE RATE CAN BE MONITORED IN REAL-TIME. THE SECURE WEB-BASED USER INTERFACE SHALL ALSO ENABLE A USER TO:

   - CONTROL THE VAULT VALVE, EITHER OPEN OR CLOSE.
   - DETERMINE THE WATER SURFACE ELEVATION (WSE) OR POND DEPTH.
   - DETERMINE IF TRASH OR DEBRIS IS SURROUNDING THE TRASH CAGE AND INTAKE RISER.
   - RECEIVE MAINTENANCE ALERTS SUCH AS: LOW BATTERY, VAULT VALVE FAILURE, ETC.
   - MAINTAIN SPECIFIED WATER SURFACE LEVEL.

   THIS SECURE WEB-BASED USER INTERFACE SHALL PROVIDE LIVE AND HISTORICAL DATA AND PROVIDE THE ALERTS LISTED IN SECTION 4. IT WILL ALSO ENABLE COMMANDS TO BE SENT TO THE VAULT VALVE TO CHANGE THE VALVES POSITION TO CONTROL DISCHARGE RATE AND POND DEPTH.

   A COMPLETE SET OF INSTRUCTIONS FOR ACCESSING AND USING THIS SECURE WEB-BASED INTERFACE FOR LONG-TERM OPERATIONS SHALL BE PROVIDED IN THE CONSTRUCTION SUBMITTALS AND COPY OF THESE INSTRUCTION SHALL BE PLACED IN THE ENCLOSURE BOX.

2. **COMPONENTS**: THE smartPOND™ VAULT VALVE MAY BE IMPLEMENTED EITHER ABOVE OR BELOW GROUND, AND IS COMPRISED OF THE FOLLOWING COMPONENTS:

   2.1 HARDWARE AND CONFIGURATION:

   THE STANDARD smartPOND™ VAULT VALVE SYSTEM CONSISTS OF A LOWER AND UPPER COMPONENT. THE LOWER COMPONENT IS THE PEDESTAL VALVE ASSEMBLY WITH 6"Ø PIPE SPOOL AND 6"Ø ACTUATED VAULT VALVE AND PRESSURE TRANSDUCER HOUSING. THIS LOWER PEDESTAL SHALL HAVE A QUICK DISCONNECT SYSTEM ENABLING THE PEDESTAL VALVE ASSEMBLY TO BE DISCONNECTED FROM THE SURFACE AND HOISTED UP USING THE LIFTING EYE-BOLT ON TOP OF THE PEDESTAL VALVE ASSEMBLY.

   THE SECOND, UPPER COMPONENT IS THE LOCKABLE STEEL WEATHERPROOF ENCLOSURE BOX WITH A SOLAR PANEL AND ALERT LIGHT MOUNTED ON ITS TOP. THIS ENCLOSURE BOX HOUSES THE PROGRAMMABLE CONTROLLER INSIDE A NEMA-3R BOX, BATTERY, ELECTRIC MOTOR, ACTUATOR GEARING AND AN EXTENDABLE NON-RISING VALVE STEM BETWEEN THE ACTUATOR AND THE 6"Ø VAULT VALVE.

   THE ENCLOSURE BOX SHALL BE BOLTED TO THE TOP OF THE VAULT WITH ¼"Ø * STAINLESS STEEL (SS) BOLT, NUTS AND WASHERS. USE ¼"Ø, 3.5" LONG STAINLESS STEEL (SS) WEDGE ANCHORS IF VAULT'S TOP IS A CONCRETE PAD.

   THIS ENCLOSURE BOX MAY BE INSTALLED WITHIN THE UNDERGROUND STRUCTURE AS LONG AS ACCESS TO THE ENTIRE VAULT ASSEMBLY IS ENSURED WITH A PROPERLY SIZED STRUCTURE. IN SUCH AN UNDERGROUND DEPLOYMENT CONFIGURATION, THE ENCLOSURE BOX SHOULD BE MOUNTED ABOVE THE MAXIMUM WATER SURFACE ELEVATION (WSE), OF THE DETENTION/DRAINAGE SYSTEM ION. THIS DEPLOYMENT CONFIGURATION STILL REQUIRES THE SOLAR PANEL TO BE LOCATED ABOVE GROUND.

   THE LOWER PEDESTAL VALVE ASSEMBLY IS INSTALLED IN A MANHOLE OR VAULT AS NEEDED. AN EXTENDED NON-RISING VALVE STEM, AKA: "DRIVE SHAFT" CONNECTS THE UNDERGROUND VAULT VALVE TO THE ACTUATOR IN THE ABOVE GROUND ENCLOSURE BOX.

   THE OUTFALL PIPE FROM THE DETENTION SYSTEM CONNECTS TO THE 6"Ø PVC INLET STUB PVC VAULT.

   2.2 OTHER ELECTRONICS SPECIFICATIONS:

   - MOTOR - OPERATES ON 12-VOLTS AND HAS TWO WIRES CONNECTING TO THE MOTOR CONTROLLER BOARD.
   - BATTERY - THIS IS A GEL BATTERY THAT PROVIDES 12-VOLTS, 30 AMP/HOUR OF POWER TO THE VAULT VALVE ASSEMBLY.
   - SOLAR PANEL - PROVIDES 15-WATT CHARGING TO THE 12-VOLT GEL BATTERY.
   - SOLAR CHARGE CONTROLLER - REGULATES THE VOLTAGE AND CURRENT DELIVERED TO THE GEL BATTERY.

   SENSORS:

   - PRESSURE TRANSDUCER - A SENSOR CAPABLE OF STAYING SUBMERSED IN WATER INDEFINITELY AND IS MOUNTED IN CENTER PIPE SPOOL OF THE LOWER PEDESTAL COMPONENT.
   - VAULT VALVE POSITION SENSOR - DETERMINES THE POSITION OF THE OUTFALL VALVE.

   OPTIONAL SENSORS & HARDWARE:

   - CELL DATA MODEM - REQUIRED FOR REAL TIME CONTROL AND ALERTS.
   - HYDROCARBON SENSOR - THIS OPTIONAL SENSOR MAY BE FITTED TO THE smartPOND™ VAULT VALVE TO PERFORM SPECIFIC FUNCTIONS BASED ON THE PRESENCE OF HYDROCARBON CONTAMINATION.

3. **ADDITIONAL COMPONENTS LIST**:

   3.1 INTAKE RISER: THIS SHALL BE A PERFORATED STEEL RISER CONNECTED TO THE 6"Ø VAULT PIPE WITHIN THE POND AREA. THIS INTAKE RISER SHALL BE ANY SQUARE STEEL WITH FOUR (4X) 1"Ø HOLES AT 90-DEGREES EACH, EVERY 4 VERTICAL INCHES. THE DISCHARGE OF THIS INTAKE TUBING SHALL HAVE FEMALE NATIONAL PIPE THREADS (FNPT) TO MATCH THE 6"Ø SCHEDULE 40 PVC VAULT PIPE.

   3.2 TRASH CAGE: THE TRASH CAGE ATTACHES TO THE PERFORATED RISER WITH A COUPLING AND CALDER PIN PROVIDED WITH THE THE SYSTEM. THE TRASH CAGE SHALL BE COMPRISED OF STEEL BANDING AND A 1.5" X 1.5" MESH TO PREVENT FLOATABLE'S AND OTHER CONTAMINANTS FROM ENTERING AND CLOGGING THE PERFORATED RISER. THE TRASH CAGE WILL SIT 0.5" ABOVE THE BOTTOM OF THE IMPOUNDMENT TO ALLOW THE LAST 0.5" OUT OF THE IMPOUNDMENT.

   3.3 VAULT VALVE STEM EXTENSION: THE NON-RISING STEM, AKA: "DRIVE SHAFT" OF THE smartPOND™ SYSTEM MAY BE EXTENDED TO ANY LENGTH NECESSARY FOR DEPLOYMENT CONFIGURATIONS INSTANCES WHERE THE VAULT VALVE WILL BE IN AN UNDERGROUND VAULT OR MANHOLE. THE VAULT VALVE STEM WILL CONNECT THE VAULT VALVE TO TO THE ABOVE GROUND CONTROLS.

4. **ALERTS**: THE smartPOND™ VAULT VALVE WILL INDICATE THE FOLLOWING ALERTS BY ILLUMINATING AN EXTERIORLY VISIBLE RED LIGHT ON TOP OF THE ENCLOSURE BOX:

   - LOW BATTERY
   - LOSS OF FUNCTION
   - VAULT VALVE MALFUNCTION
   - HYDROCARBON CONTAMINATION (OPTIONAL)

6. **MAINTENANCE & OPERATION SUBMITTAL**: AN OPERATION AND MAINTENANCE MANUAL SHALL BE PROVIDED. REVIEWED AND APPROVED DURING THE CONSTRUCTION SUBMITTAL PROCESS AND SHALL INCLUDE AT A MINIMUM: GREASING AND LUBRICATION ITEMS AND CYCLE FOR THE ACTUATOR, MOTOR AND VALVE; INSPECTION AND MAINTENANCE OF THE SOLAR PANEL, GEL BATTERY TRASH CAGE AND INTAKE RISER; AND PROCEDURES FOR VALVE OPERATION IN CASE OF TOTAL ELECTRONIC OR MOTOR FAILURE.

7. **SHIPPING AND HANDLING STORAGE**: THE smartPOND™ VAULT VALVE IS SHIPPED IN A NEAR-FULLY ASSEMBLED CONFIGURATION AND SHOULD BE STORED LIKEWISE. THE SYSTEMS ARE TRANSPORTED AND STORED ON PALLETS AND MUST REMAIN SECURED VIA STRAPS OR STEEL BANDS TO SAID PALLET AT ALL TIMES. THE SOLAR PANEL IS NOT INSTALLED AT TIMES OF TRANSPORT OR STORAGE AND SHOULD NOT BE INSTALLED UNTIL THE UNIT IS READY TO BEGIN OPERATION. THE BATTERY MAY BE STORED INSIDE THE ELECTRONICS BOX AND IF REMOVED, SHOULD NEVER BE STORED ON A CONCRETE SURFACE.

8. **INSTALLATION**: INSTALL THE smartPOND™ VAULT ASSEMBLY FIRST WITHOUT THE SOLAR PANEL. MOUNT SOLAR PANEL WITH THE CONNECTION BOLTS PROVIDED AFTER THE ASSEMBLY IS ANCHORED TO THE CONCRETE PAD USING THE ANCHOR BOLTS CALLED OUT ON THE PLANS. AS BOLTS SHOULD BE REMOVED DURING THE INSTALLATION PROCESS. THERE ARE SEVERAL WAYS TO INSTALL THE smartPOND™ VAULT VALVE WITH THE KEY BEING STRUCTURED SUPPORT.

   8.1 BELOW GROUND INSTALLATIONS: THE UPPER COMPONENT CONSISTING OF THE ENCLOSURE BOX AND ALL ITS INTERNALS SHOULD BE FASTENED TO THE VAULT TOP OR TO THE SURFACE OF A CONCRETE PAD POURED OVER THE VAULT TOP. FOR VAULT INSTALLATIONS, SEE DESIGN DETAILS FOR STANDARD VAULT DESIGN.

9. **SAFETY INFORMATION AND WARNINGS**:

   - ALWAYS KEEP HANDS CLEAR OF THE VAULT VALVE AND MOTOR WHEN UNIT IS IN OPERATION.
   - TURN THE POWER SWITCH OFF WHEN DOING ANY ELECTRICAL WORK.
   - DO NOT ENTER THE WATER WHEN THE DEVICE IS ACTIVELY DRAINING WATER.
   - ALWAYS USE PROPER PERSONAL PROTECTION EQUIPMENT (PPE), AND CONFINED SPACE PROTOCOL WHEN SERVICING A VAULT VALVE BENEATH GROUND.

10. **PRODUCTS**: THE MANUFACTURER SHALL BE AN ESTABLISHED STORMWATER COMPANY THAT HAS AT LEAST FIVE (5X) INSTALLATIONS OF C-MASS DEVICES THAT HAVE BEEN IN USE AND FUNCTIONAL FOR FIVE (5X) OR MORE YEARS.

11. **QUALITY ASSURANCE AND PERFORMANCE SPECIFICATIONS**: THE QUALITY OF ALL SYSTEM COMPONENTS AND ALL OTHER APPURTENANCES AND THEIR ASSEMBLY PROCESS SHALL BE SUBJECT TO INSPECTION UPON DELIVERY OF THE SYSTEM TO THE WORK SITE. INSTALLATION IS TO BE PERFORMED ONLY BY SKILLED WORK PEOPLE WITH SATISFACTORY RECORD OF PERFORMANCE ON EARTHWORKS, PIPE, WELDING, CHAMBER, OR POND/LANDFILL CONSTRUCTION PROJECTS OF COMPARABLE SIZE AND QUALITY.

smartPOND Automated Stormwater Control

FOR ADDITIONAL INFORMATION CONTACT: CONVERGENT WATER TECHNOLOGIES 1-800-711-5428 www.convergentwater.com

CONVERGENT WATER TECHNOLOGIES

smartPOND™ VAULT VALVE SPECIFICATIONS

REVISION NO. 0 | DATE 10/19/2023 | SHEET NO. 3

REV. NO.	DATE	DESCRIPTION

PROJECT MANAGER:	PK
DESIGNED BY:	PG/RM
CHECKED BY:	DCS/JTH
DRAWN BY:	PG/RM
DCS PROJECT NO:	20101597

DCS ENGINEERING, LLC
1101 S. CAPITAL OF TEXAS HIGHWAY, BUILDING G-100
AUSTIN, TX 78746
TEL: (512) 614-6171
T.B.P.E. FIRM NO. F-13162

BudaTx breathe easy here™

BUDA SPORTSPLEX - PHASE I

STATE OF TEXAS · JORDAN T. HURTA · 143332 · LICENSED PROFESSIONAL ENGINEER

8/4/2025

SITE CIVIL

CIVIL - WATER QUALITY POND DETAILS - SHEET NO. 2

DATE: AUGUST 2025

SCALE: AS NOTED

DRAWING: 01C-44

FILENAME: C:\Users\RMALDO>1\AppData\Local\Temp\AcPublish_7421\2\01C-41 - 01C-42.dwg, LAST SAVED ON: Aug 07 2025 3:02pm, PLOTTED BY: RMALDONADO, ON: Aug 07 2025 3:05pm, CFG:

FILENAME: Z:\Projects 1551-1599\20101597 - Buda - Sportsplex\510 - Re-bid Dwgs\500 - Final_Design\5.1 - Drawings\Sheet Files\Construction Plans\01SS-01 - 01SS-07.dwg, LAST SAVED ON: Aug 11 2025 1:13pm, PLOTTED BY: RMALDONADO, ON: Aug 11 2025 1:21pm, CFG:

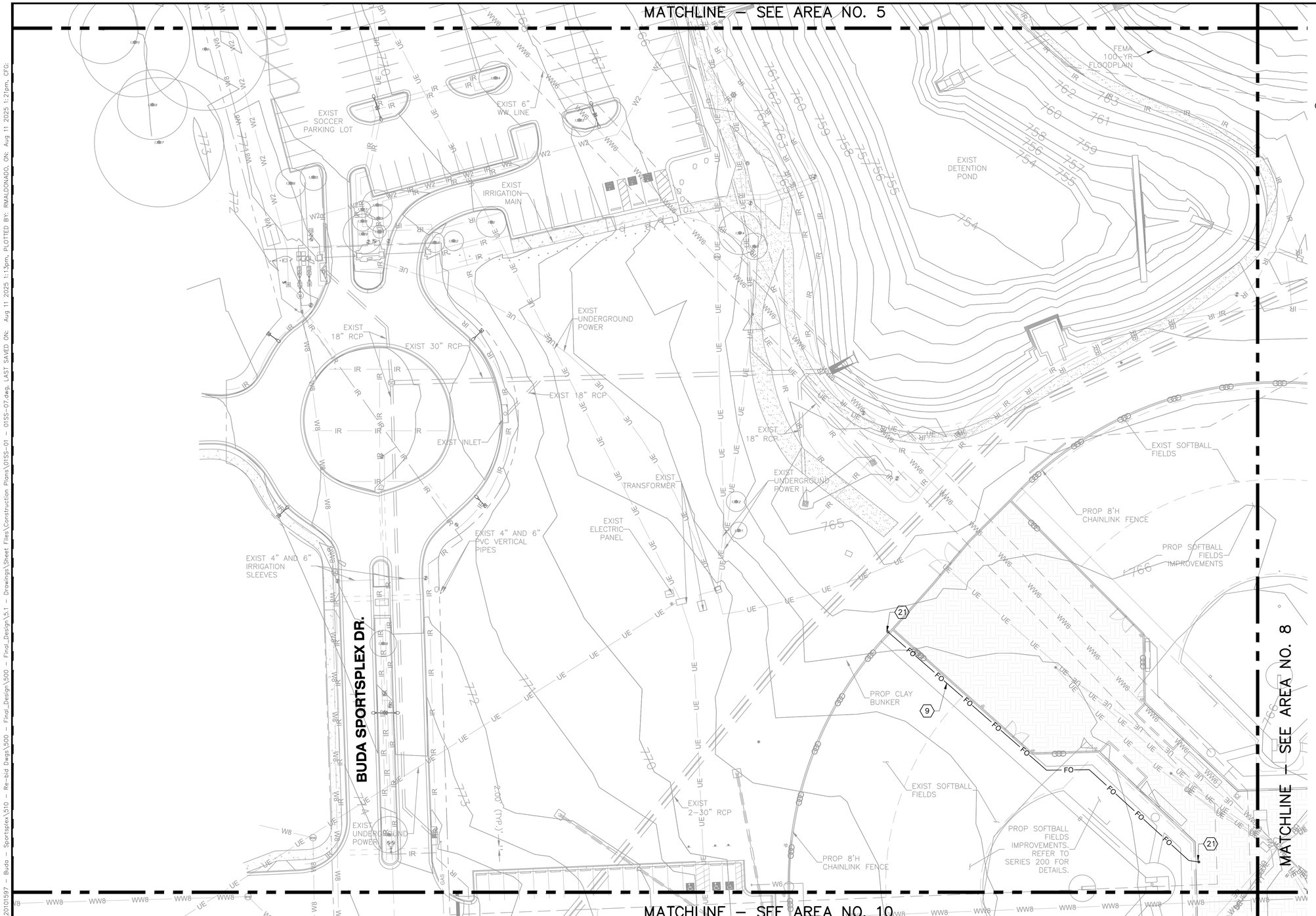

0 30' 60'

SCALE : 1" = 30'

KEY NOTES:

1. NOT USED.
2. CONTRACTOR SHALL INSTALL MECHANICAL LOCK ACCESS CONTROL (2). WHEN BATTING CAGE AROUND SOFTBALL FIELDS OR RV SPOT ARE RENTED. PIN FOR MECHANICAL LOCK SHALL BE SENT TO CUSTOMER THROUGH COURTRESERVE SYSTEM. SEE SHEET 01SS-08 FOR MECHANICAL LOCK GATE ACCESS.
3. NOT USED.
4. NOT USED.
5. NOT USED.
6. CONDUIT FOR POWER AND DATA SHALL BE SCHEDULE 80 PVC CONDUIT WITH PULL STRINGS AND PLUGS. CONDUIT SHALL BE INSTALLED BY THE CONTRACTOR A MINIMUM OF 12" BELOW FINISHED GRADE.
7. CONDUIT FOR CAT 7 SHALL BE OUTDOOR RATED, 1" DIAMETER PVC SCHEDULE 80 WITH PULL STRINGS AND PLUGS. CONTRACTOR SHALL INSTALL CONDUIT A MINIMUM OF 12" BELOW FINISHED GRADE.
8. NOT USED.
9. CONDUIT FOR FIBER OPTIC SHALL BE OUTDOOR RATED, 1.5" DIAMETER PVC SCHEDULE 80 WITH PULL STRINGS AND PLUGS. CONTRACTOR SHALL INSTALL CONDUIT A MINIMUM OF 12" BELOW FINISHED GRADE.
10. NOT USED.
11. NOT USED.
12. NOT USED.
13. NOT USED.
14. CONTRACTOR SHALL INSTALL OUTDOOR RATED 1.5" DIAMETER SCHEDULE 80 PVC CONDUIT WITH PULL STRINGS AND WITH PLUGS TO ACCOMMODATE THE INSTALLATION OF A FUTURE SPECTRUM FIBER OPTIC LINE. CONTRACTOR SHALL INSTALL CONDUIT A MINIMUM OF 12" BELOW FINISHED GRADE.
15. NOT USED.
16. NOT USED.
17. NOT USED.
18. (2) 1.5" PVC SCHEDULE 80 SLEEVES WITH PULL STRINGS AND PLUGS. CONTRACTOR SHALL INSTALL CONDUIT A MINIMUM OF 12" BELOW FINISHED GRADE.
19. NOT USED.
20. 1" PVC SCHEDULE 80 SLEEVES WITH PULL STRINGS AND PLUGS. CONTRACTOR SHALL INSTALL CONDUIT A MINIMUM OF 12" BELOW FINISHED GRADE.
21. 12"X12" PULL BOX CONCRETE WITH METAL COVER.

NOTES:

1. PROPOSED LINEWORK SHOWN IN GRAYSCALE FOR CLARITY.
2. BUDA SPORTSPLEX SHALL BE SET UP AS THE NAME OF THE ORGANIZATION WITH COURTRESERVE. UPON REGISTRATION, MEMBER SHALL RECEIVE A UNIQUE PIN ASSIGNMENT.
3. ALL CONDUIT SHALL BE DIRECT BURIED WITH 18" SEPARATION DISTANCE (MINIMUM) WHEN PLACED PARALLEL TO ELECTRIC CONDUIT.

SITE DEVELOPMENT NUMBER 2025-476

REV. NO.	DATE	DESCRIPTION

PROJECT MANAGER:	PK
DESIGNED BY:	PG/RM
CHECKED BY:	DCS/JTH
DRAWN BY:	PG/RM
DCS PROJECT NO:	20101597

DCS ENGINEERING, LLC
1101 S. CAPITAL OF TEXAS HIGHWAY, BUILDING G-100
AUSTIN, TX 78746

TEL: (512) 614-6171
T.B.P.E. FIRM NO. F-13162

BudaTx breathe easy here™

BUDA SPORTSPLEX - PHASE I

STATE OF TEXAS
DARREN C STROZEWSKI
87908
LICENSED PROFESSIONAL ENGINEER
08/04/2025

SITE CIVIL

SALES SYSTEMS - AREA NO. 7

DATE: JULY 2025

SCALE: 1" = 30'

DRAWING: 1SS-02

MATCHLINE – SEE AREA NO. 7

BUDA SPORTSPLEX DR.

EXIST 8" WW LINE

20.00' (TYP.) EXIST RUE

PROP SOFTBALL FIELDS IMPROVEMENTS.

EXIST SOFTBALL FIELDS

PROP 8'H CHAINLINK FENCE

PROP PARKING LOT

EXIST UNDERGROUND POWER

EXIST BATHROOM FACILITIES

EXIST 2" WATERLINE

EXIST TRANSFORMER

EXIST UNDERGROUND POWER

REFER TO ELECTRIC SHEETS FOR ELECTRIC CONDUITS

EXIST 6" WW LINE

WW6 PROP 10'-90'L BATTING CAGES. REFER TO SERIES 800 FOR DETAILS.

PROP 5-FT SIDEWALK

MATCHLINE – SEE AREA NO. 11

MATCHLINE – SEE AREA NO. 13

0 30' 60'

SCALE : 1" = 30'

KEY NOTES:

1. NOT USED.
2. CONTRACTOR SHALL INSTALL MECHANICAL LOCK ACCESS CONTROL (2). WHEN BATTING CAGE AROUND SOFTBALL FIELDS OR RV SPOT ARE RENTED. PIN FOR MECHANICAL LOCK SHALL BE SENT TO CUSTOMER THROUGH COURTRESERVE SYSTEM. SEE SHEET 01SS–08 FOR MECHANICAL LOCK GATE ACCESS.
3. NOT USED.
4. NOT USED.
5. NOT USED.
6. CONDUIT FOR POWER AND DATA SHALL BE SCHEDULE 80 PVC CONDUIT WITH PULL STRINGS AND PLUGS. CONDUIT SHALL BE INSTALLED BY THE CONTRACTOR A MINIMUM OF 12" BELOW FINISHED GRADE.
7. CONDUIT FOR CAT 7 SHALL BE OUTDOOR RATED, 1" DIAMETER PVC SCHEDULE 80 WITH PULL STRINGS AND PLUGS. CONTRACTOR SHALL INSTALL CONDUIT A MINIMUM OF 12" BELOW FINISHED GRADE.
8. NOT USED.
9. CONDUIT FOR FIBER OPTIC SHALL BE OUTDOOR RATED, 1.5" DIAMETER PVC SCHEDULE 80 WITH PULL STRINGS AND PLUGS. CONTRACTOR SHALL INSTALL CONDUIT A MINIMUM OF 12" BELOW FINISHED GRADE.
10. NOT USED.
11. NOT USED.
12. NOT USED.
13. NOT USED.
14. CONTRACTOR SHALL INSTALL OUTDOOR RATED 1.5" DIAMETER SCHEDULE 80 PVC CONDUIT WITH PULL STRINGS AND WITH PLUGS TO ACCOMMODATE THE INSTALLATION OF A FUTURE SPECTRUM FIBER OPTIC LINE. CONTRACTOR SHALL INSTALL CONDUIT A MINIMUM OF 12" BELOW FINISHED GRADE.
15. NOT USED.
16. NOT USED.
17. NOT USED.
18. (2) 1.5" PVC SCHEDULE 80 SLEEVES WITH PULL STRINGS AND PLUGS. CONTRACTOR SHALL INSTALL CONDUIT A MINIMUM OF 12" BELOW FINISHED GRADE.
19. NOT USED.
20. 1" PVC SCHEDULE 80 SLEEVES WITH PULL STRINGS AND PLUGS. CONTRACTOR SHALL INSTALL CONDUIT A MINIMUM OF 12" BELOW FINISHED GRADE.
21. 12"X12" PULL BOX CONCRETE WITH METAL COVER.

NOTES:

1. PROPOSED LINEWORK SHOWN IN GRAYSCALE FOR CLARITY.
2. BUDA SPORTSPLEX SHALL BE SET UP AS THE NAME OF THE ORGANIZATION WITH COURTRESERVE. UPON REGISTRATION, MEMBER SHALL RECEIVE A UNIQUE PIN ASSIGNMENT.
3. ALL CONDUIT SHALL BE DIRECT BURIED WITH 18" SEPARATION DISTANCE (MINIMUM) WHEN PLACED PARALLEL TO ELECTRIC CONDUIT.

SITE DEVELOPMENT NUMBER 2025–476

REV. NO.	DATE	DESCRIPTION

PROJECT MANAGER:	PK
DESIGNED BY:	PG/RM
CHECKED BY:	DCS/JTH
DRAWN BY:	PG/RM
DCS PROJECT NO:	20101597

DCS ENGINEERING, LLC
1101 S. CAPITAL OF TEXAS HIGHWAY, BUILDING G–100
AUSTIN, TX 78746

TEL: (512) 614–6171
T.B.P.E. FIRM NO. F–13162

BudaTx breathe easy here.™

BUDA SPORTSPLEX - PHASE I

STATE OF TEXAS
DARREN C STROZEWSKI
87908
LICENSED
PROFESSIONAL ENGINEER
08/04/2025

SITE CIVIL

SALES SYSTEMS - AREA NO. 10

DATE: JULY 2025

SCALE: 1" = 30'

DRAWING: 01SS-04

FILENAME: Z:\Projects 1551–1599\20101597 – Buda – Sportsplex\510 – Re–bid Dwgs\500 – Final_Design\500 – Final_Design\5.1 – Drawings\Sheet Files\Construction Plans\01SS–01 – 01SS–07.dwg, LAST SAVED ON: Aug 11 2025 1:13pm, PLOTTED BY: RMALDONADO, ON: Aug 11 2025 1:21pm, CFG:

MATCHLINE – SEE AREA NO. 8

MATCHLINE – SEE AREA NO. 10

MATCHLINE – SEE AREA NO. 12 (NOT USED)

MATCHLINE – SEE AREA NO. 14

PROP SOFTBALL FIELDS IMPROVEMENTS. REFER TO SERIES 200 FOR DETAILS.

EXIST SOFTBALL FIELDS

PROP WET POND. REFER TO SERIES 100 FOR DETAILS.

FEMA 100-YR FLOODPLAIN

PROP SOFTBALL FIELDS IMPROVEMENTS

EXIST SOFTBALL FIELDS

EXIST 8" WW LINE

REFER TO ELECTRIC SHEETS FOR ELECTRIC CONDUITS

PROP IRRIGATION PUMP STATION.

PROP SOFTBALL FIELDS.

PROP SOFTBALL CONCESSION STAND

20.00' (TYP.)' EXIST PUE

0 30' 60'

SCALE : 1" = 30'

NOTES:

1. BUDA SPORTSPLEX SHALL BE SET UP AS THE NAME OF THE ORGANIZATION WITH COURTRESERVE. UPON REGISTRATION, MEMBER SHALL RECEIVE A UNIQUE PIN ASSIGNMENT.

KEY NOTES:

1. NOT USED.
2. CONTRACTOR SHALL INSTALL MECHANICAL LOCK ACCESS CONTROL (2). WHEN BATTING CAGE AROUND SOFTBALL FIELDS OR RV SPOT ARE RENTED. PIN FOR MECHANICAL LOCK SHALL BE SENT TO CUSTOMER THROUGH COURTRESERVE SYSTEM. SEE SHEET 01SS-08 FOR MECHANICAL LOCK GATE ACCESS.
3. NOT USED.
4. NOT USED.
5. NOT USED.
6. CONDUIT FOR POWER AND DATA SHALL BE SCHEDULE 80 PVC CONDUIT WITH PULL STRINGS AND PLUGS. CONDUIT SHALL BE INSTALLED BY THE CONTRACTOR A MINIMUM OF 12" BELOW FINISHED GRADE.
7. CONDUIT FOR CAT 7 SHALL BE OUTDOOR RATED, 1" DIAMETER PVC SCHEDULE 80 WITH PULL STRINGS AND PLUGS. CONTRACTOR SHALL INSTALL CONDUIT A MINIMUM OF 12" BELOW FINISHED GRADE.
8. NOT USED.
9. CONDUIT FOR FIBER OPTIC SHALL BE OUTDOOR RATED, 1.5" DIAMETER PVC SCHEDULE 80 WITH PULL STRINGS AND PLUGS. CONTRACTOR SHALL INSTALL CONDUIT A MINIMUM OF 12" BELOW FINISHED GRADE.
10. NOT USED.
11. NOT USED.
12. NOT USED.
13. NOT USED.
14. CONTRACTOR SHALL INSTALL OUTDOOR RATED 1.5" DIAMETER SCHEDULE 80 PVC CONDUIT WITH PULL STRINGS AND WITH PLUGS TO ACCOMMODATE THE INSTALLATION OF A FUTURE SPECTRUM FIBER OPTIC LINE. CONTRACTOR SHALL INSTALL CONDUIT A MINIMUM OF 12" BELOW FINISHED GRADE.
15. NOT USED.
16. NOT USED.
17. NOT USED.
18. (2) 1.5" PVC SCHEDULE 80 SLEEVES WITH PULL STRINGS AND PLUGS. CONTRACTOR SHALL INSTALL CONDUIT A MINIMUM OF 12" BELOW FINISHED GRADE.
19. NOT USED.
20. 1" PVC SCHEDULE 80 SLEEVES WITH PULL STRINGS AND PLUGS. CONTRACTOR SHALL INSTALL CONDUIT A MINIMUM OF 12" BELOW FINISHED GRADE.
21. 12"X12" PULL BOX CONCRETE WITH METAL COVER.

NOTES:

1. PROPOSED LINEWORK SHOWN IN GRAYSCALE FOR CLARITY.
2. BUDA SPORTSPLEX SHALL BE SET UP AS THE NAME OF THE ORGANIZATION WITH COURTRESERVE. UPON REGISTRATION, MEMBER SHALL RECEIVE A UNIQUE PIN ASSIGNMENT.
3. ALL CONDUIT SHALL BE DIRECT BURIED WITH 18" SEPARATION DISTANCE (MINIMUM) WHEN PLACED PARALLEL TO ELECTRIC CONDUIT.

SITE DEVELOPMENT NUMBER 2025-476

REV. NO.	DATE	DESCRIPTION

PROJECT MANAGER:	PK
DESIGNED BY:	PG/RM
CHECKED BY:	DCS/JTH
DRAWN BY:	PG/RM
DCS PROJECT NO:	20101597

DCS ENGINEERING, LLC
1101 S. CAPITAL OF TEXAS HIGHWAY, BUILDING G-100
AUSTIN, TX 78746

TEL: (512) 614-6171
T.B.P.E. FIRM NO. F-13162

BudaTx breathe easy here™

BUDA SPORTSPLEX - PHASE I

STATE OF TEXAS
DARREN C STROZEWSKI
87908
LICENSED PROFESSIONAL ENGINEER
08/04/2025

SITE CIVIL

SALES SYSTEMS - AREA NO. 11

DATE: JULY 2025

SCALE: 1" = 30'

DRAWING: 01SS-05

FILENAME: Z:\Projects 1551-1599\20101597 - Buda - Sportsplex\510 - Re-bid Dwgs\500 - Final_Design\5.1 - Drawings\Sheet Files\Construction Plans\01SS-01 - 01SS-07.dwg, LAST SAVED ON: Aug 11 2025 1:13pm, PLOTTED BY: RMALDONADO, ON: Aug 11 2025 1:21pm, CFG:

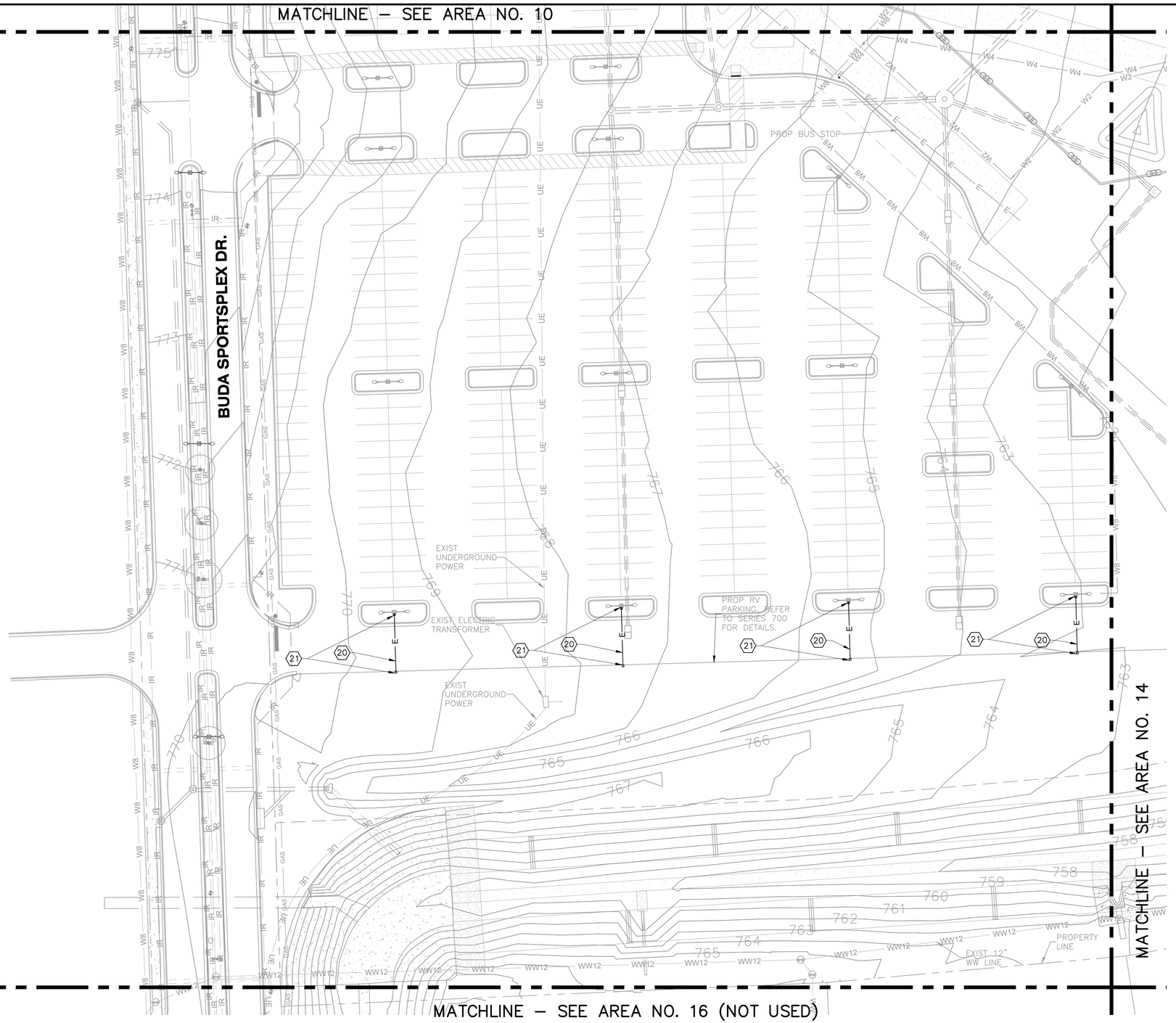

0 30' 60'

SCALE : 1" = 30'

NOTES:

1. BUDA SPORTSPLEX SHALL BE SET UP AS THE NAME OF THE ORGANIZATION WITH COURTRESERVE. UPON REGISTRATION, MEMBER SHALL RECEIVE A UNIQUE PIN ASSIGNMENT.

KEY NOTES:

1. NOT USED.
2. CONTRACTOR SHALL INSTALL MECHANICAL LOCK ACCESS CONTROL (2). WHEN BATTING CAGE AROUND SOFTBALL FIELDS OR RV SPOT ARE RENTED. PIN FOR MECHANICAL LOCK SHALL BE SENT TO CUSTOMER THROUGH COURTRESERVE SYSTEM. SEE SHEET 01SS–08 FOR MECHANICAL LOCK GATE ACCESS.
3. NOT USED.
4. NOT USED.
5. NOT USED.
6. CONDUIT FOR POWER AND DATA SHALL BE SCHEDULE 80 PVC CONDUIT WITH PULL STRINGS AND PLUGS. CONDUIT SHALL BE INSTALLED BY THE CONTRACTOR A MINIMUM OF 12" BELOW FINISHED GRADE.
7. CONDUIT FOR CAT 7 SHALL BE OUTDOOR RATED, 1" DIAMETER PVC SCHEDULE 80 WITH PULL STRINGS AND PLUGS. CONTRACTOR SHALL INSTALL CONDUIT A MINIMUM OF 12" BELOW FINISHED GRADE.
8. NOT USED.
9. CONDUIT FOR FIBER OPTIC SHALL BE OUTDOOR RATED, 1.5" DIAMETER PVC SCHEDULE 80 WITH PULL STRINGS AND PLUGS. CONTRACTOR SHALL INSTALL CONDUIT A MINIMUM OF 12" BELOW FINISHED GRADE.
10. NOT USED.
11. NOT USED.
12. NOT USED.
13. NOT USED.
14. CONTRACTOR SHALL INSTALL OUTDOOR RATED 1.5" DIAMETER SCHEDULE 80 PVC CONDUIT WITH PULL STRINGS AND WITH PLUGS TO ACCOMMODATE THE INSTALLATION OF A FUTURE SPECTRUM FIBER OPTIC LINE. CONTRACTOR SHALL INSTALL CONDUIT A MINIMUM OF 12" BELOW FINISHED GRADE.
15. NOT USED.
16. NOT USED.
17. NOT USED.
18. (2) 1.5" PVC SCHEDULE 80 SLEEVES WITH PULL STRINGS AND PLUGS. CONTRACTOR SHALL INSTALL CONDUIT A MINIMUM OF 12" BELOW FINISHED GRADE.
19. NOT USED.
20. 1" PVC SCHEDULE 80 SLEEVES WITH PULL STRINGS AND PLUGS. CONTRACTOR SHALL INSTALL CONDUIT A MINIMUM OF 12" BELOW FINISHED GRADE.
21. 12"X12" PULL BOX CONCRETE WITH METAL COVER.

NOTES:

1. PROPOSED LINEWORK SHOWN IN GRAYSCALE FOR CLARITY.
2. BUDA SPORTSPLEX SHALL BE SET UP AS THE NAME OF THE ORGANIZATION WITH COURTRESERVE. UPON REGISTRATION, MEMBER SHALL RECEIVE A UNIQUE PIN ASSIGNMENT.
3. ALL CONDUIT SHALL BE DIRECT BURIED WITH 18" SEPARATION DISTANCE (MINIMUM) WHEN PLACED PARALLEL TO ELECTRIC CONDUIT.

SITE DEVELOPMENT NUMBER 2025–476

REV. NO.	DATE	DESCRIPTION

PROJECT MANAGER:	PK
DESIGNED BY:	PG/RM
CHECKED BY:	DCS/JTH
DRAWN BY:	PG/RM
DCS PROJECT NO:	20101597

DCS ENGINEERING, LLC
1101 S. CAPITAL OF TEXAS HIGHWAY, BUILDING G–100
AUSTIN, TX 78746

TEL: (512) 614–6171
T.B.P.E. FIRM NO. F–13162

BudaTx breathe easy here™

BUDA SPORTSPLEX - PHASE I

STATE OF TEXAS
DARREN C STROZEWSKI
87908
LICENSED PROFESSIONAL ENGINEER
08/04/2025

SITE CIVIL

SALES SYSTEMS - AREA NO. 13

DATE: JULY 2025

SCALE: 1" = 30'

DRAWING: 01SS-06

FILENAME: Z:\Projects 1551-1599\20101597 - Buda - Sportsplex\510 - Re-bid Dwgs\500 - Final_Design\500 - Final_Design\5.1 - Drawings\Sheet Files\Construction Plans\01SS-01 - 01SS-07.dwg, LAST SAVED ON: Aug 11 2025 1:13pm, PLOTTED BY: RMALDONADO, ON: Aug 11 2025 1:27pm, CFG:

KEY NOTES:

1. NOT USED.
2. NOT USED.
3. NOT USED.
4. PANIC BAR SHIELD 24" WIDTH FROM LOCKEYUSA OR APPROVED EQUAL. CONTRACTOR SHALL INSTALL PANIC BAR SHIELD PER MANUFACTURER'S RECOMMENDATIONS.
5. NOT USED.
6. MECHANICAL LOCK SHALL BE SUMO GL2 LOCK FROM LOCKEYUSA OR APPROVED EQUAL. SUMO GL2LINX ADAPTER OR APPROVED EQUAL SHALL BE USED TO MOUNT LOCK ON CHAIN LINK FENCE. CONTRACTOR SHALL INSTALL MECHANICAL LOCK AND CHAIN LINK ADAPTER PER MANUFACTURER'S RECOMMENDATIONS. MASTER KEY SHALL BE OBTAINED FROM MANUFACTURER FOR ALL MECHANICAL LOCKS ON SHEETS 01SS-01 THROUGH 01SS-07. MECHANICAL LOCK CODES SHALL BE SET IN SEQUENTIAL ORDER AND SUBMITTED TO ENGINEER WITH CORRESPONDING LOCATIONS.
7. 6"X 16" PLASTIC SIGN. FINAL LAYOUT TO BE APPROVED. SUBMIT SHOP DRAWINGS PRIOR TO ORDERING. SUBJECT TO CHANGE. CONFIRM CONTENT WITH OWNER PRIOR TO FABRICATION. MOUNT SIGN TO CHAIN LINK FENCE WITH WEATHER RESISTANCE FENCE TIES ON ALL 4 CORNERS OF SIGN. SEE DETAIL 4 FOR SIGN TEXT AND IMAGES.

NOTES:

1. GATE SWINGS FOR ELECTRONIC ACCESS AND MECHANICAL ACCESS SHALL MATCH THE ONES SHOWN ON SHEETS 01SS-01 THROUGHT 01SS-07.

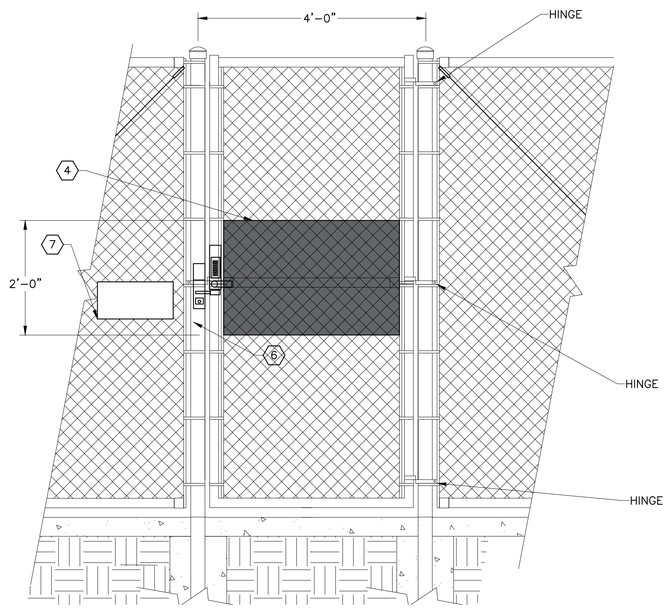

GATE WITH MECHANICAL ACCESS CONTROL 3
N.T.S



ONLINE RESERVATION SIGN 4
N.T.S

SITE DEVELOPMENT NUMBER 2025-476

REV. NO.	DATE	DESCRIPTION		
			PROJECT MANAGER:	PK
			DESIGNED BY:	PG/RM
			CHECKED BY:	DCS/JTH
			DRAWN BY:	PG/RM
			DCS PROJECT NO:	20101597

DCS ENGINEERING, LLC
1101 S. CAPITAL OF TEXAS HIGHWAY, BUILDING G-100
AUSTIN, TX 78746

TEL: (512) 614-6171
T.B.P.E. FIRM NO. F-13162

BudaTx breathe easy here.

BUDA SPORTSPLEX - PHASE I

STATE OF TEXAS
DARREN C STROZEWSKI
87908
LICENSED PROFESSIONAL ENGINEER
08/04/2025

SITE CIVIL

SALES SYSTEMS - DETAILS - SHEET NO. 1

DATE: JULY 2025
SCALE: AS NOTED
DRAWING: 01SS-08

FILENAME: Z:\Projects 1551-1599\20101597 - Buda - Sportsplex\510 - Re-bid Dwgs\500 - Final_Design\500 - Final_Design\5.1 - Drawings\Sheet Files\Construction Plans\01SS-08.dwg, LAST SAVED ON: Aug 01 2025 2:23pm, PLOTTED BY: RMALDONADO, ON: Aug 07 2025 8:21am, CFG:

GENERAL NOTES:

1. CONTRACTOR TO LOCATE AND PROTECT ALL UTILITIES, SEPTIC SYSTEMS, AND STRUCTURES PRIOR TO AND DURING CONSTRUCTION AND REPAIR/REPLACE ANY ELEMENT DAMAGED DURING CONSTRUCTION.
2. CONTRACTOR TO NOTIFY OWNER/ARCHITECT AND LANDSCAPE ARCHITECT OF ANY DISCREPANCIES OR ERROR BETWEEN PLAN AND SITE CONDITIONS PRIOR TO COMMENCEMENT OF WORK.
3. ALL MATERIAL SAMPLES TO BE APPROVED BY OWNER & LANDSCAPE ARCH. PRIOR TO CONSTRUCTION.
4. STAKE LOCATION OF WALLS, PLANTER BEDS, AND OTHER SITE ELEMENTS FOR APPROVAL BY ARCH. & LANDSCAPE ARCH. BEFORE STARTING CONSTRUCTION.
5. PRE-CONSTRUCTION MEETING TO BE HELD PRIOR TO START OF LANDSCAPE CONSTRUCTION.
6. ALL AREAS DISTURBED BY CONSTRUCTION OUTSIDE OF PROJECT AREA TO BE TILLED TO 24" DEPTH. REMOVE ROCKS GREATER THAN 3" AND ANY CONSTRUCTION DEBRIS. MIX NEW TOPSOIL WITH EXISTING TO ACHIEVE SOIL PER SPECIFICATIONS.
7. CONTRACTOR TO INSPECT & SERVICE EXISTING DRAINAGE SYSTEM AS NEEDED.
8. IRRIGATION TO BE DESIGN/BUILD BY CONTRACTOR.

PLANTING NOTES:

1. ALL PLANT BEDS TO BE MULCHED TO A MINIMUM DEPTH OF 3" WITH MULCHED COMPOST UNLESS OTHERWISE NOTED ON DRAWINGS OR SPECIFICATIONS.
2. ALL PLANT MATERIAL SHALL CONFORM TO THE SIZES GIVEN IN THE PLANT LIST AND SHALL BE NURSERY GROWN IN ACCORDANCE WITH THE "AMERICAN STANDARD FOR NURSERY STOCK." ALL ROOT BOUND/GIRDLED PLANT MATERIAL WILL BE REJECTED BY THE LANDSCAPE ARCHITECT. SELECT SPECIMENS W/HEALTHY CANOPY, ROOTS, AND HABIT.
3. ALL PLANTING SHALL BE IN ACCORDANCE WITH STANDARD AMERICAN ASSOCIATION OF NURSERYMEN PROCEDURES AND SPECIFICATIONS.
4. CONTRACTOR SHALL VERIFY THE CORRECT LOCATION OF ALL UNDERGROUND UTILITIES IN THE FIELD PRIOR TO THE INSTALLATION OF ANY PLANT MATERIALS.
5. PLANT MATERIALS LOCATION TO BE STAKED IN THE FIELD AND APPROVED BY THE LANDSCAPE ARCHITECT PRIOR TO PLANTING.
6. CONTRACTOR TO OBTAIN APPROVAL FROM THE LANDSCAPE ARCHITECT BEFORE MAKING ANY SUBSTITUTIONS OR CHANGES.
7. QUANTITIES SHOWN ON THE PLANT LIST ARE FOR THE CONTRACTOR'S CONVENIENCE ONLY AND ARE NOT GUARANTEED TO BE ACCURATE. IN THE EVENT OF DISCREPANCY BETWEEN QUANTITIES SHOWN ON THE PLAN AND QUANTITIES SHOWN ON THE PLANT LIST, THE QUANTITIES ON THE PLAN SHALL APPLY.

IRRIGATION NOTES:

1. LIONHEART ASSUMES THE LANDSCAPE CONTRACTOR WILL DESIGN AND INSTALL AN IRRIGATION SYSTEM PER REQUIREMENTS OF THE STATE OF TEXAS AND THE CITY OF BUDA SECTION. WE ALSO ASSUME THE SYSTEM WILL INVOLVE THE FOLLOWING REQUIREMENTS:
   - A. THE IRRIGATION SYSTEM MUST PROVIDE A MOISTURE LEVEL ADEQUATE TO SUSTAIN GROWTH OF THE PLANT MATERIALS;
   - B. THE IRRIGATION SYSTEM DOES NOT INCLUDE SPRAY IRRIGATION ON AREAS LESS THAN TEN (10) FEET WIDE (SUCH AS MEDIANS, BUFFER STRIPS, AND PARKING LOT ISLANDS);
   - C. CIRCUIT REMOTE CONTROL VALVES HAVE ADJUSTABLE FLOW CONTROLS;
   - D. SERVICEABLE IN-HEAD CHECK VALVES AREA ADJACENT TO PAVED AREAS WHERE ELEVATION DIFFERENCES MAY CAUSE LOW HEAD DRAINAGE;
   - E. A MASTER VALVE INSTALLED ON THE DISCHARGE SIDE OF THE BACKFLOW PREVENTER;
   - F. ABOVE- GROUND IRRIGATION EMISSION ABOVE-GROUND IRRIGATION EMISSION DEVICES ARE SET BACK AT LEAST SIX(6) INCHES FROM IMPERVIOUS SURFACES;
   - G. AN AUTOMATIC RAIN SHUT-OFF DEVICE SHUTS OFF THE IRRIGATION SYSTEM AUTOMATICALLY AFTER MORE THAN A ONE-HALF INCH (½") RAINFALL; AND
   - H. NEWLY PLANTED TREES SHALL HAVE PERMANENT IRRIGATION CONSISTING OF DRIP OR BUBBLERS.
2. THE IRRIGATION INSTALLER SHALL DEVELOP AND PROVIDE AN AS-BUILT DESIGN PLAN TO THE CITY AT THE TIME THE FINAL IRRIGATION INSPECTION IS PERFORMED;
3. THE IRRIGATION INSTALLER SHALL ALSO PROVIDE EXHIBITS TO BE PERMANENTLY INSTALLED INSIDE OR ATTACHED TO THE IRRIGATION CONTROLLER, INCLUDING:
   - A. A LAMINATED COPY OF THE WATER BUDGET CONTAINING ZONE NUMBERS, PRECIPITATION RATE, GALLONS PER MINUTE AND THE LOCATION OF THE ISOLATION VALVE; AND AN AS BUILT PLAN.

LEGEND

- 2"-4" WASHED RIVER GRAVEL
- FLAGSTONE
- DECOMPOSED GRANITE
- SOD
- LIMESTONE PANCAKE BOULDERS
- ¼" RAW MILD STEEL EDGING
- MAINTENANCE FENCE
- EXISTING TREE TO REMAIN

FURNISHINGS SCHEDULE

SYMBOL	DESCRIPTION	QTY	MANUFACTURER AND ITEM #	REF. #
	BENCH	18	ANOVA.; L1369 - STREETSIDE CONTOUR BENCH	1/00L-03
	TRASH RECEPTACLE	26	DUMOR; RECEPTACLE 157-32-25 BT	2/00L-03

LIONHEART
1023 Springdale Road, Suite 6E, Austin, TX 78721
O: 512.520.4488
WWW.LIONHEARTPLACES.COM

REV. NO.	DATE	DESCRIPTION

PROJECT MANAGER:	BL
DESIGNED BY:	JO
CHECKED BY:	JO/BL
DRAWN BY:	MS/AB
DCS PROJECT NO:	20101597

DCS ENGINEERING, LLC
1101 S. CAPITAL OF TEXAS HIGHWAY, BUILDING G-100
AUSTIN, TX 78746
TEL: (512) 614-6171
T.B.P.E. FIRM NO. F-13162

BUDA SPORTSPLEX - PHASE 1

REGISTERED LANDSCAPE ARCHITECT — STATE OF TEXAS

SITE CIVIL

LANDSCAPING - GENERAL NOTES

DATE: AUGUST 2025
SCALE:
DRAWING: 01L-01

SOFTBALL FIELDS CONSTRUCTION NOTES:

1. ALL UNDERGROUND INFORMATION SHOWN HERE IS TAKEN FROM EXISTING SURFACE FEATURES AND AVAILABLE RECORD DRAWINGS. ENGINEER DOES NOT REPRESENT IN ANY FORM THAT ALL UNDERGROUND INFORMATION IS SHOWN THAT EXISTS ON THE SITE. CONTRACTOR SHALL EXERCISE CAUTION WHILE EXCAVATING. NO SEPARATE PAY.
2. CONTRACTOR SHALL LOCATE AND EXPOSE ALL EXISTING UTILITIES PRIOR TO STARTING CONSTRUCTION. NOTIFY ENGINEER OF CONFLICTS IDENTIFIED.
3. CONTRACTOR SHALL TAKE EXTREME PRECAUTION TO PROTECT EXISTING FACILITIES DURING DEMOLITION OF EXISTING SOFTBALL FIELDS.
4. CONTRACTOR SHALL ENSURE THE IRRIGATION SYSTEM OUTSIDE OF SOFTBALL FIELDS REMAINS OPERATIONAL UPON REMOVAL OF THE SOFTBALL FIELD IRRIGATION SYSTEM.
5. CONTRACTOR SHALL ENSURE THE LIGHTING SYSTEM OUTSIDE OF SOFTBALL FIELDS REMAINS OPERATIONAL UPON DEMOLITION OF THE EXISTING SOFTBALL FIELDS.
6. CONTRACTOR SHALL TAKE EXTREME PRECAUTION TO PROTECT SURROUNDING FACILITIES DURING CONSTRUCTION OF NATURAL TURF FIELDS.
7. INFIELD/OUTFIELD EDGE WHERE TURF AND INFIELD MIX MEET SHALL BE STRAIGHT AND EVEN WITH NO IRREGULARITIES TO ENSURE HIGH PERFORMANCE PLAYABILITY WITHOUT UNFORESEEN TRIPPING HAZARD.
8. ALL LINES ON THE PLAYING FIELD MUST BE 2–4 INCHES IN WIDTH AND BE MARKED WITH CHALK OR MATERIAL THAT IS NOT INJURIOUS OR IRRITATING TO EYES OR SKIN. LIME OR CAUSTIC MATERIAL OF ANY KIND IS PROHIBITED.
9. SOFTBALL INFIELD IS A SQUARE. FIRST AND THIRD BASE FIT WITHIN THE SQUARE WITH THE BACK CORNER OF THE BASE AT THE CORNER OF THE SQUARE. SECOND BASE IS MEASURED TO THE CENTER OF THE BASE AT THE INTERSECTION OF THE TWO LINES FORMING THE SQUARE. REFER TO PLANS FOR DETAILS.

FENCING:
1. ALL SWING GATES PROPOSED ALONG THE PERIMETER OF THE SOFTBALL FIELDS SHALL OPEN OUTSIDE OF THE FIELD AND SHALL HAVE STOPS INSTALLED TO PREVENT GATES FROM SWINGING INTO FIELD.
2. REFER TO FENCING PLANS FOR CHANILINK FENCE, WINDSCREEN, AND SWING GATES DETAILS. REFER TO SOFTBALL PLANS FOR NETTING SYSTEM DETAILS.

DRAINAGE:
1. SUBDRAIN LINES SHALL BE PERFORATED HDPE PIPE. REFER TO PLANS FOR DETAILS.
2. CONTRACTOR SHALL PROVIDE ALL NECESSARY FITTINGS FOR ALL PIPE CONNECTIONS. NO SEPARATE PAY.
3. ALL SUBDRAIN CONNECTIONS SHALL BE MADE UTILIZING MANUFACTURER APPROVED FITTINGS.

IRRIGATION:
1. REFER TO IRRIGATION PLANS FOR PROPOSED CONDITIONS, NOTES AND DETAILS.

MISCELLANEOUS:
1. ALL EQUIPMENT INSTALLED AS PART OF THE SOFTBALL PLANS SHALL BE FREE OF SHARP EDGES, CORNERS, AND/OR EXTREMELY ROUGH SURFACES.

SITE DEVELOPMENT NUMBER 2025-476

FILENAME: Z:\Projects 1551-1599\20101597 - Buda - Sportsplex\510 - Re-bid Dwgs\500 - Final_Design\500 - Final_Design\5.1 - Drawings\Sheet Files\Construction Plans\02C-01 - 02C-02.dwg, LAST SAVED ON: Aug 01 2025 2:43pm, PLOTTED BY: RMALDONADO, ON: Aug 07 2025 8:03am, CFG:

REV. NO.	DATE	DESCRIPTION

PROJECT MANAGER:	PK
DESIGNED BY:	PG/RM
CHECKED BY:	DCS/JTH
DRAWN BY:	PG/RM
DCS PROJECT NO:	20101597

DCS ENGINEERING, LLC
1101 S. CAPITAL OF TEXAS HIGHWAY, BUILDING G-100
AUSTIN, TX 78746

TEL: (512) 614-6171
T.B.P.E. FIRM NO. F-13162

BudaTx breathe easy here™

BUDA SPORTSPLEX - PHASE I

STATE OF TEXAS
J. PATRICIO GALINDO RANGEL
154316
LICENSED PROFESSIONAL ENGINEER
08/04/25

SOFTBALL FIELDS

SOFTBALL FIELDS - GENERAL NOTES

DATE: JULY 2025

SCALE: AS NOTED

DRAWING: 02C-01

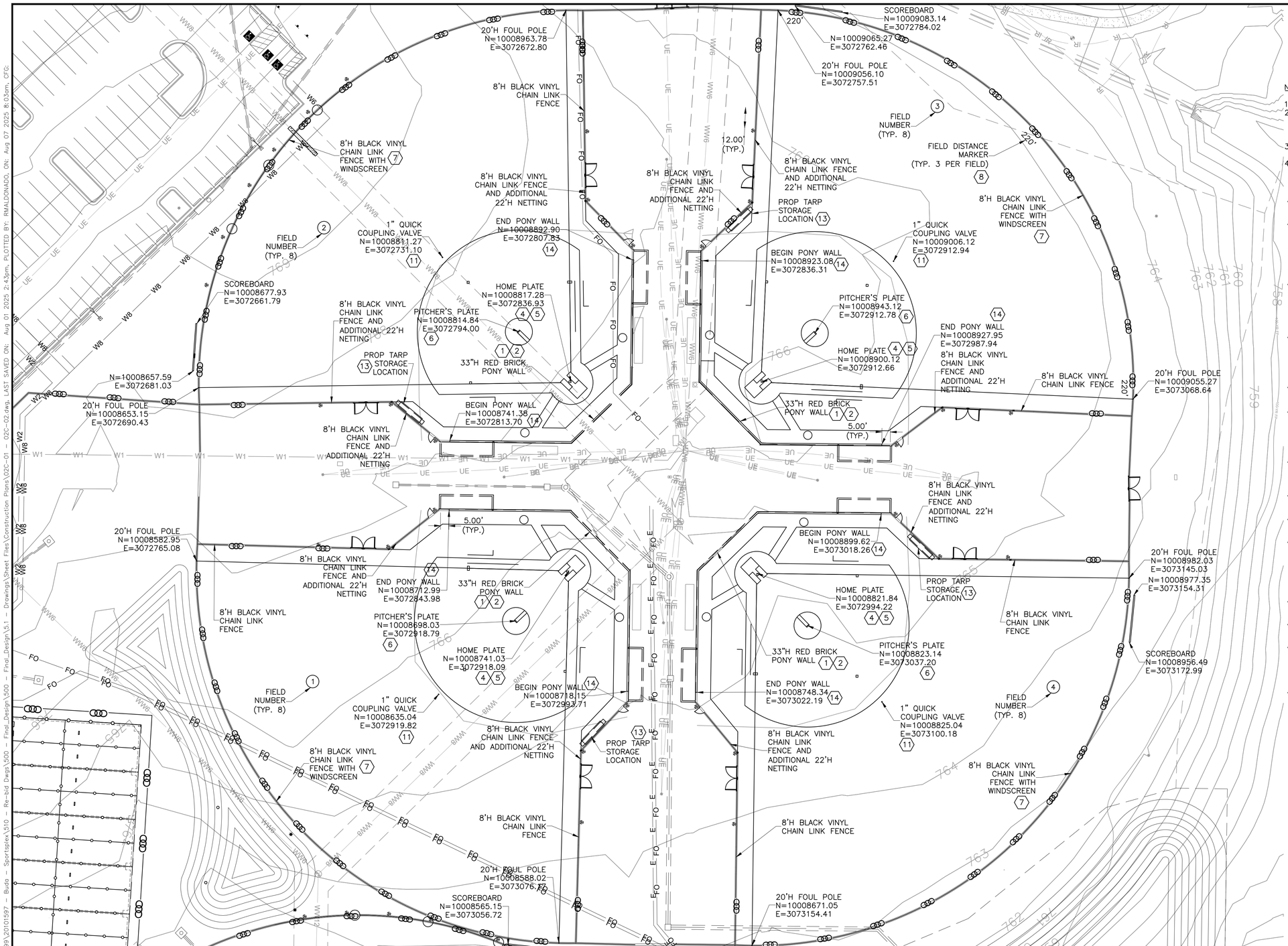

NOTES:

1. REFER TO SHEET 02C-13 FOR INFIELD LAYOUT DETAILS.
2. REFER TO SERIES 000 FENCING DETAILS FOR CHAINLINK FENCE, WINDSCREEN, MANGATE, AND MAINTENANCE SWING GATES DETAILS. ALL SWING GATES SHALL OPEN OUTSIDE OF THE FIELD AND SHALL HAVE STOPS INSTALLED TO PREVENT GATES FROM SWINGING INTO FIELD.
3. REFER TO SERIES 200 SOFTBALL FIELD DETAILS FOR FOUL POLE, SCOREBOARD, AND NETTING SYSTEM DETAILS.
4. PROPOSED DRAINAGE SUBDRAINS ARE NOT SHOWN ON THIS SHEET FOR CLARITY. REFER TO SHEET 02C-06.

KEY NOTES:

(1) INSTALL 33"H RED BRICK WALL PER STRUCTURAL PLANS.

(2) FURNISH AND INSTALL WALL MOUNTED 3" THICK 1580 POLYURETHANE IMPACT FOAM WITH 19.OZ PREMIUM OUTDOOR VINYL COVERING BACKSTOP PADDING. BASEZONE® FIELD WALL PADDING BY SPORTSFIELD SPECIALITIES OR APPROVED EQUAL. COLOR: BLUE PMS 287. CONTRACTOR SHALL MOUNT BACKSTOP PADDING TO PONY WALL BEHIND HOME PLATE PER MANUFACTURER'S RECOMMENDATIONS WITH Z-CLIP WALL ATTACHMENTS.

(3) FURNISH AND INSTALL RAWLINGS HOLLYWOOD IMPACT KWIK-RELEASE DOUBLE FIRST BASE & SINGLE SET OF 3 (VARSITY RESISTANCE LEVEL) OR APPROVED EQUAL, INCLUDING 6" STANCHION AND GROUND ANCHOR. CONTRACTOR SHALL INSTALL AND ANCHOR BASES PER MANUFACTURER'S RECOMMENDATIONS. REFER TO SHEET 02C-13, DETAIL 5 FOR BASES LOCATION.

(4) FURNISH AND INSTALL RAWLINGS HOLLYWOOD PRO STYLE HOME PLATE OR APPROVED EQUAL, INCLUDING STANCHION AND GROUND ANCHOR FOR PERMANENT INSTALLATION. CONTRACTOR SHALL INSTALL AND ANCHOR BASES PER MANUFACTURER'S RECOMMENDATIONS. REFER TO SHEET 02C-13, DETAIL 5 FOR HOME PLATE LOCATION.

(5) INSTALL 3/8" SURVEY ROD 6" BELOW FINISHED GROUND AND CENTERED AT THE APEX OF HOME PLATE TO BE SET AS A PERMANENT MARKER.

(6) FURNISH AND INSTALL RAWLINGS HOLLYWOOD 4-SIDED PITCHING RUBBER WITH INTERIOR ALUMINUM TUBE OR APPROVED EQUAL. CONTRACTOR SHALL INSTALL PITCHING RUBBER PER MANUFACTURER'S RECOMMENDATIONS. PITCHER'S PLATE SHALL BE FIXED TO THE GROUND AND TOP OF THE PLATE SHALL BE LEVELED WITH THE FINISHED GROUND.

(7) INSTALL SAFETY 4.5"ø CORRUGATED PLASTIC FENCE TOP CAP ON OUTFIELD FENCE. COLOR: YELLOW. RICHARDSON ATHLETICS ITEM NO. FC250 OR APPROVED EQUAL. OWNER WILL CONVEY MATERIAL TO BE INSTALLED IN NORTH FIELDS.

(8) FURNISH AND INSTALL FIELD DISTANCE MARKER AT FOUL POLES AND CENTER OF OUTFIELD FENCE PER DETAIL 6 SHEET 02C-13.

(9) NOT USED.

(10) FURNISH AND STORE 8 - 1"ø 100' LONG BALLFIELD HEAVY DUTY HIGH PRESSURE IRRIGATION HOSE. KOCHEK IRKBH SERIES ULTRALITE HIGH PRESSURE IRRIGATION HOSE OR APPROVED EQUAL; AND 36 SENTINEL PADDED 7'X7' L SCREENS WITH WHEEL KIT; BEACON ATHLETICS PRODUCT NO. 135-200-003-BKW OR APPROVED EQUAL. COLOR: BLACK. COORDINATE WITH OWNER FOR STORAGE LOCATION.

(11) REFER TO IRRIGATION PLANS FOR DETAILS.

(12) NOT USED.

(13) FURNISH 8-110'X110' 18 OZ. HEAVY COATED VINYL WITH HEAT-SEALED SEAMS AND DOUBLE SEWN REINFORCED PERIMETER SOFTBALL FIELD TARPS. BUCK TERRELL 18 OZ. FIELD COVERS OR APPROVED EQUAL; AND 8-28" HDPE 20-FT LONG FIELDS TARP ROLLERS. (TYP. 1 PER FIELD. 8 TOTAL)

(14) PONY WALL WITHIN THE DUGOUT LIMITS SHALL BE 42"H. BEYOND THE DUGOUT LIMITS, ALONG THE SIDELINE AND BACKSTOP, PONY WALL SHALL BE 33"H. REFER TO SHEETS 02S-01 AND 02S-02 FOR DUGOUT AND PONY WALL DETAILS.

SITE DEVELOPMENT NUMBER 2025-476

REV. NO.	DATE	DESCRIPTION

PROJECT MANAGER:	PK
DESIGNED BY:	PG/RM
CHECKED BY:	DCS/JTH
DRAWN BY:	PG/RM
DCS PROJECT NO:	20101597

DCS ENGINEERING, LLC
1101 S. CAPITAL OF TEXAS HIGHWAY, BUILDING G-100
AUSTIN, TX 78746

TEL: (512) 614-6171
T.B.P.E. FIRM NO. F-13162

BudaTx breathe easy here™

BUDA SPORTSPLEX - PHASE I

STATE OF TEXAS
I. PATRICIO CALINDO BANGIL
154316
LICENSED PROFESSIONAL ENGINEER
08/04/25.

SOFTBALL FIELDS

NORTH SOFTBALL FIELDS - SITE PLAN

DATE: JULY 2025

SCALE: 1" = 30'

DRAWING: 02C-02

FILENAME: Z:\Projects 1551-1599\20101597 - Buda - Sportsplex\510 - Re-bid Dwgs\500 - Final_Design\500 - Final_Design\5.1 - Drawings\Sheet Files\Construction Plans\02C-01 - 02C-02.dwg, LAST SAVED ON: Aug 01 2025 2:43pm, PLOTTED BY: RMALDONADO, ON: Aug 07 2025 8:03am, CFG:

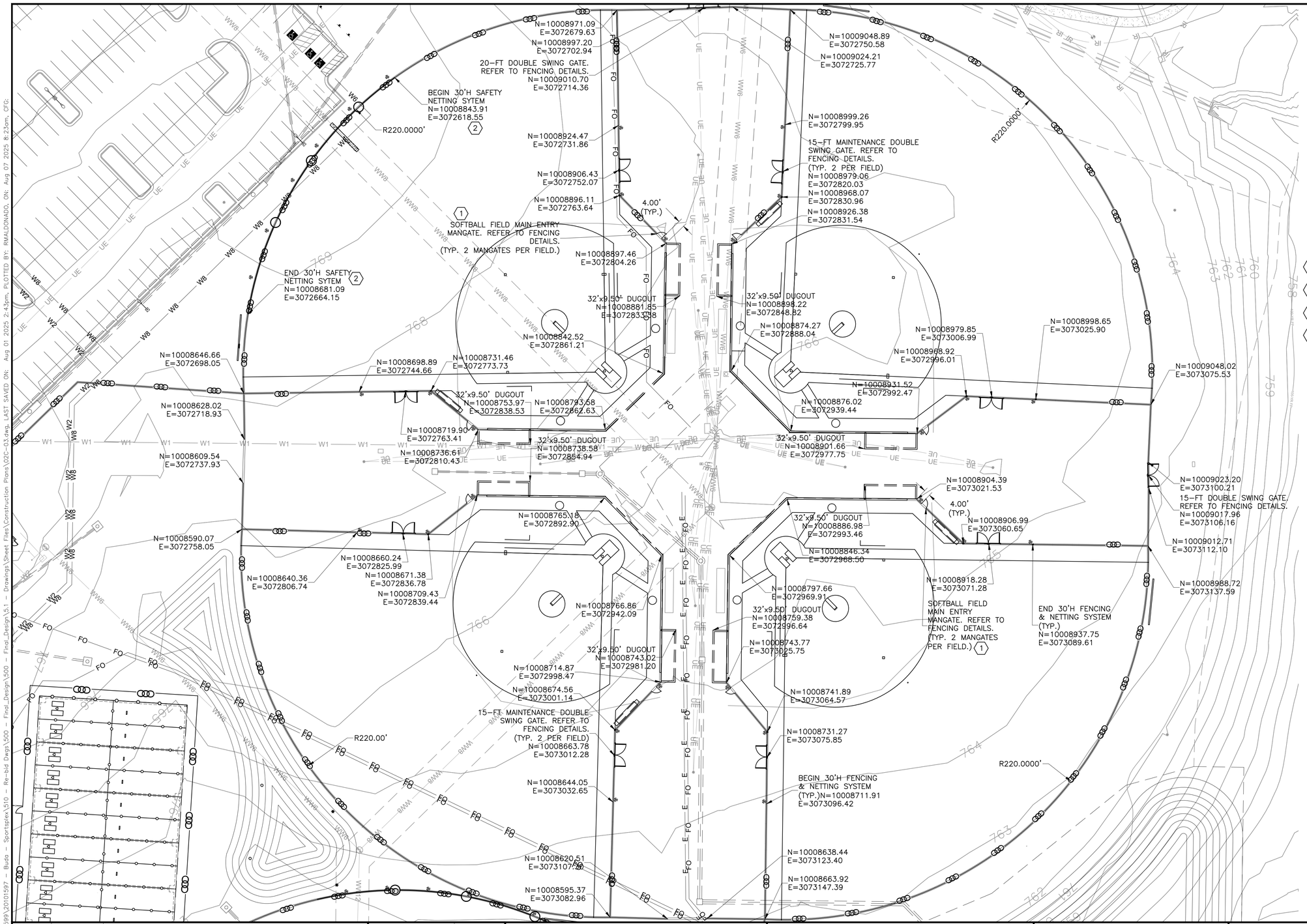

NOTES:

1. REFER TO SHEET 02C-13 FOR INFIELD LAYOUT DETAILS.
2. REFER TO SERIES 000 FENCING DETAILS FOR CHAINLINK FENCE, WINDSCREEN, MANGATE, AND MAINTENANCE SWING GATES DETAILS. ALL SWING GATES SHALL OPEN OUTSIDE OF THE FIELD AND SHALL HAVE STOPS INSTALLED TO PREVENT GATES FROM SWINGING INTO FIELD.
3. REFER TO SERIES 200 SOFTBALL FIELD DETAILS FOR FOUL POLE, SCOREBOARD, AND NETTING SYSTEM DETAILS.
4. PROPOSED DRAINAGE SUBDRAINS ARE NOT SHOWN ON THIS SHEET FOR CLARITY. REFER TO SHEET 02C-06.

KEY NOTES:

1. REFER TO SERIES 100 SALE SYSTEMS SHEETS FOR GATE ACCESS CONTROL DETAILS.
2. REFER TO SHEET 02C-14 FOR SAFETY NETTING SYSTEM ON OUTFIELD FENCE DETAILS.
3. NOT USED.
4. NOT USED.

SITE DEVELOPMENT NUMBER 2025-476

REV. NO.	DATE	DESCRIPTION

PROJECT MANAGER:	PK
DESIGNED BY:	PG/RM
CHECKED BY:	DCS/JTH
DRAWN BY:	PG/RM
DCS PROJECT NO:	20101597

DCS ENGINEERING, LLC
1101 S. CAPITAL OF TEXAS HIGHWAY, BUILDING G-100
AUSTIN, TX 78746

TEL: (512) 614-6171
T.B.P.E. FIRM NO. F-13162

BudaTx breathe easy here™

BUDA SPORTSPLEX - PHASE I

STATE OF TEXAS
J. PATRICIO GALINDO RANGEL
154316
LICENSED PROFESSIONAL ENGINEER
08/04/25.

SOFTBALL FIELDS

NORTH SOFTBALL FIELDS - HORIZONTAL CONTROL PLAN

DATE: JULY 2025

SCALE: 1" = 30'

DRAWING: 02C-03

FILENAME: Z:\Projects 1551-1599\20101597 - Buda - Sportsplex\510 - Re-bid Dwgs\500 - Final_Design\500 - Final_Design\5.1 - Drawings\Sheet Files\Construction Plans\02C-03.dwg, LAST SAVED ON: Aug 01 2025 2:43pm, PLOTTED BY: RMALDONADO, ON: Aug 07 2025 8:23am, CFG:

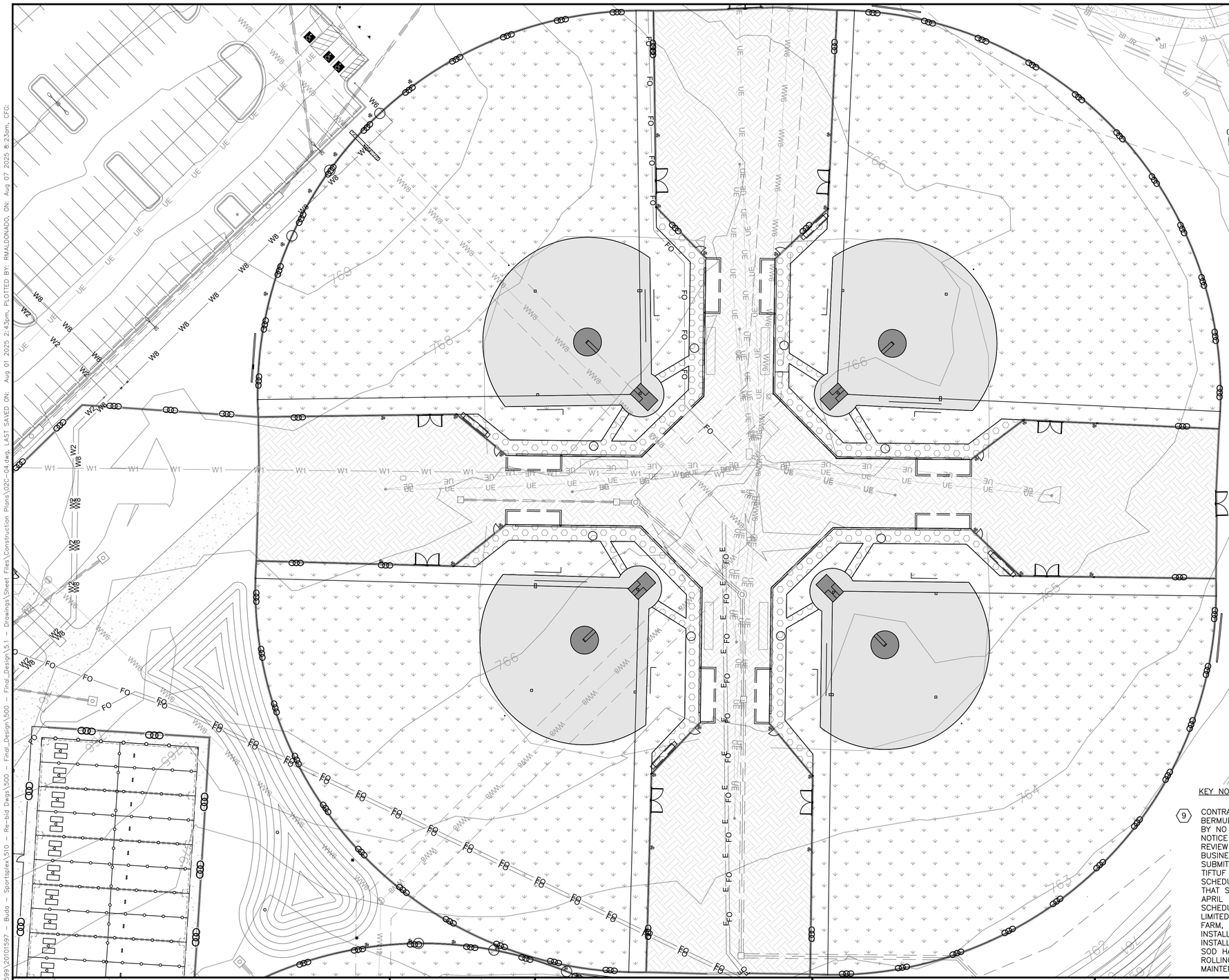

NOTES:

1. WHERE NATURAL SOD AND CONCRETE ARE ADJACENT, SOD FINISHED GROUND ELEVATION SHALL BE 1.5" BELOW TOP OF CONCRETE. REFER TO GRADING PLANS FOR TOP OF PAVEMENT ELEVATIONS IN PROPOSED CONCRETE SIDEWALK.
2. PROPOSED DRAINAGE SUBDRAINS ARE NOT SHOWN ON THIS SHEET FOR CLARITY. REFER TO SHEET 02C-06.
3. BLEACHERS AND CONCESSION STAND ARE NOT SHOWN ON THIS VIEW FOR CLARITY.

LEGEND:

PROPOSED ATHLETIC NATURAL TURF. TIFTUF BERMUDA BIG ROLL SOLID SOD WITH 8" ROOT ZONE. REFER TO DETAIL 2 SHEET 02C-13 FOR TURF AND ROOTZONE DETAILS. (1) (2) (3) (4) (7) (9)

EXIST INFIELD MIX TO REMAIN. (5)

PROPOSED MOUND CLAY. REFER TO DETAIL 8 SHEET 02C-13. (6)

PROPOSED WARNING TRACK MIX. REFER TO DETAIL 1 SHEET 02C-13. (8)

RE-VEGETATE PER COA SPECIFICATION 609S

KEY NOTES:

(1) TURF CONTRACTOR IS RESPONSIBLE TO ACTIVELY MANAGE INSTALLATION OF TIF-TUF BERMUDA SOD, INCLUDING SITE PREPARATION, ROOT ZONE INSTALLATION, SOD HARVESTING & INSTALLATION, ROLLING, WATERING AND GROW-IN & MAINTENANCE PERIOD SO THAT SOFTBALL FIELDS ARE PLAYABLE BY APRIL 1ST, 2026. TURF CONTRACTOR IS RESPONSIBLE TO COORDINATE TURF INSTALLATION WITH OTHER CONTRACTORS WORKING AT THE PROJECT SITE.

(2) TURF CONTRACTOR SHALL PERSONALLY OVERSEED TIF-TUF BERMUDA SOD WITH PERENNIAL RYEGRASS AT SOD FARM IN OCTOBER 2025 FOR SOD TO BE READY TO HARVEST BY FEBRUARY 2, 2026. SOD SHALL BE HARVESTED NOT MORE THAN 18 TO 24 HOURS PRIOR TO INSTALLATION. DATES SHOWN HEREIN ARE RECOMMENDATIONS TO CONTRACTOR. TURF CONTRACTOR IS RESPONSIBLE TO CONFIRM/MODIFY THESE DATES ON THE INSTALLATION SCHEDULE TO BE SUBMITTED AS PART OF THE SOD SUBMITTAL.

(3) SOD TO BE INSTALLED SHALL BE NURSERY GROWN SAND BASED CERTIFIED TIF-TUF BERMUDA SOD. THE SAND-BASED SOIL SHALL HAVE A MINIMUM OF 90% SAND AND A MAXIMUM 10% OF COMBINED CLAY AND SILT AS DEFINED BY THE U.S.D.A SOIL CLASSIFICATION SYSTEM. TIF-TUF SOD SHALL BE INSTALLED IN 42"WX50'L ROLLS.

(4) TIF-TUF BERMUDA SOD SHALL BE FURNISHED AND INSTALLED ACCORDING TO "NATURAL TURF FOR ATHLETIC FIELDS (TIF-TUF)" AND "NATURAL TURF INSTALLATION FOR ATHLETIC FIELDS (TIF-TUF)" SPECIFICATIONS AND DETAILS 2 & 3, SHEET 02C-13. REFER TO SPECIFICATION BOOK.

(5) CONTRACTOR SHALL TAKE CAUTION AND PROTECTIVE REQUIREMENTS AS NEEDED TO PROTECT, SALVAGE AND REINSTALL EXIST INFIELD MIX. INFIELD MIX SHALL BE TESTED TO COMPLY WITH INFIELD MIX SOIL GRADATION PER "INFIELD FOR SOFTBALL FIELDS" SPECIFICATION. INFIELD MIX SHALL BE FREE OF ANY DEBRIS, ORGANIC MATERIAL, AND ANY MATERIALS GENERATED FROM CONSTRUCTION CROSS CONTAMINATION. CONTRACTOR MAY ELECT TO CONDITION EXIST INFIELD MIX TO MEET SOIL GRADATION PER SPECIFICATIONS. IF EXIST INFIELD MIX IS CONTAMINATED AND/OR DOES NOT MEET REQUIREMENTS PER SPECIFICATION, CONTRACTOR SHALL FURNISH AND INSTALL NEW INFIELD MIX AT NO ADDITIONAL COST PER SPECIFICATIONS AND DETAIL 7, SHEET 02C-13.

(6) MOUND CLAY SHALL BE FURNISHED AND INSTALLED ACCORDING TO "SOFTBALL MOUND CLAY" SPECIFICATION AND DETAIL 8, SHEET 02C-13. REFER TO SPECIFICATION BOOK.

(7) ROOT ZONE MIX SHALL BE FURNISHED AND INSTALLED ACCORDING TO "NATURAL TURF ROOT ZONE FOR ATHLETIC FIELDS - TOP SOIL" AND "NATURAL TURF ROOT ZONE FOR ATHLETIC FIELDS - 90% SAND BASED" SPECIFICATIONS AND DETAILS 2 & 3, SHEET 02C-13. REFER TO SPECIFICATION BOOK.

(8) WARNING TRACK MIX SHALL BE FURNISHED AND INSTALLED ACCORDING TO "SOFTBALL WARNING TRACK" SPECIFICATION AND DETAIL 1, SHEET 02C-13. REFER TO SPECIFICATION BOOK. CONTRACTOR SHALL INCLUDE IN SUBMITTAL SAMPLE OF CRUSHED BRICK WARNING TRACK MIX AND A SAMPLE OF BRICK ALTERNATIVES TO BE USED IN THE PONY WALL FOR ENGINEER'S APPROVAL.

KEY NOTES (CONTINUATION):

(9) CONTRACTOR SHALL DELIVER TIFTUF BERMUDA SOD SUBMITTAL TO ENGINEER BY NO LATER THAN 2 WEEKS AFTER NOTICE TO PROCEED. ENGINEER WILL REVIEW AND RESPOND WITHIN 3 BUSINESS DAYS OF SUBMITTAL. SOD SUBMITTAL SHALL INCLUDE RECOMMENDED TIFTUF BERMUDA SOD INSTALLATION SCHEDULE WITH SPECIFIC DATES SO THAT SOFTBALL FIELDS ARE PLAYABLE BY APRIL 1ST, 2026. INSTALLATION SCHEDULE SHALL INCLUDE BUT NOT BE LIMITED TO OVERSEEDING PERIOD AT SOD FARM, SITE PREPARATION, IRRIGATION INSTALLATION, SUB-DRAINAGE SYSTEM INSTALLATION, ROOT ZONE INSTALLATION, SOD HARVESTING & INSTALLATION, ROLLING, WATERING AND GROW-IN & MAINTENANCE PERIOD.

SITE DEVELOPMENT NUMBER 2025-476

REV. NO.	DATE	DESCRIPTION

PROJECT MANAGER:	PK
DESIGNED BY:	PG/RM
CHECKED BY:	DCS/JTH
DRAWN BY:	PG/RM
DCS PROJECT NO:	20101597

DCS ENGINEERING, LLC
1101 S. CAPITAL OF TEXAS HIGHWAY, BUILDING G-100
AUSTIN, TX 78746

TEL: (512) 614-6171
T.B.P.E. FIRM NO. F-13162

BudaTx breathe easy here™

BUDA SPORTSPLEX - PHASE I

STATE OF TEXAS
J. PATRICIO GALINDO RANGEL
154316
LICENSED PROFESSIONAL ENGINEER
08/04/25.

SOFTBALL FIELDS

NORTH SOFTBALL FIELDS - SURFACING PLAN

DATE: JULY 2025

SCALE: 1" = 30'

DRAWING: 02C-04

FILENAME: Z:\Projects 1551-1599\20101597 - Buda - Sportsplex\510 - Re-bid Dwgs\500 - Final_Design\500 - Final_Design\5.1 - Drawings\Sheet Files\Construction Plans\02C-04.dwg, LAST SAVED ON: Aug 01 2025 2:43pm, PLOTTED BY: RMALDONADO, ON: Aug 07 2025 8:23am, CFG:

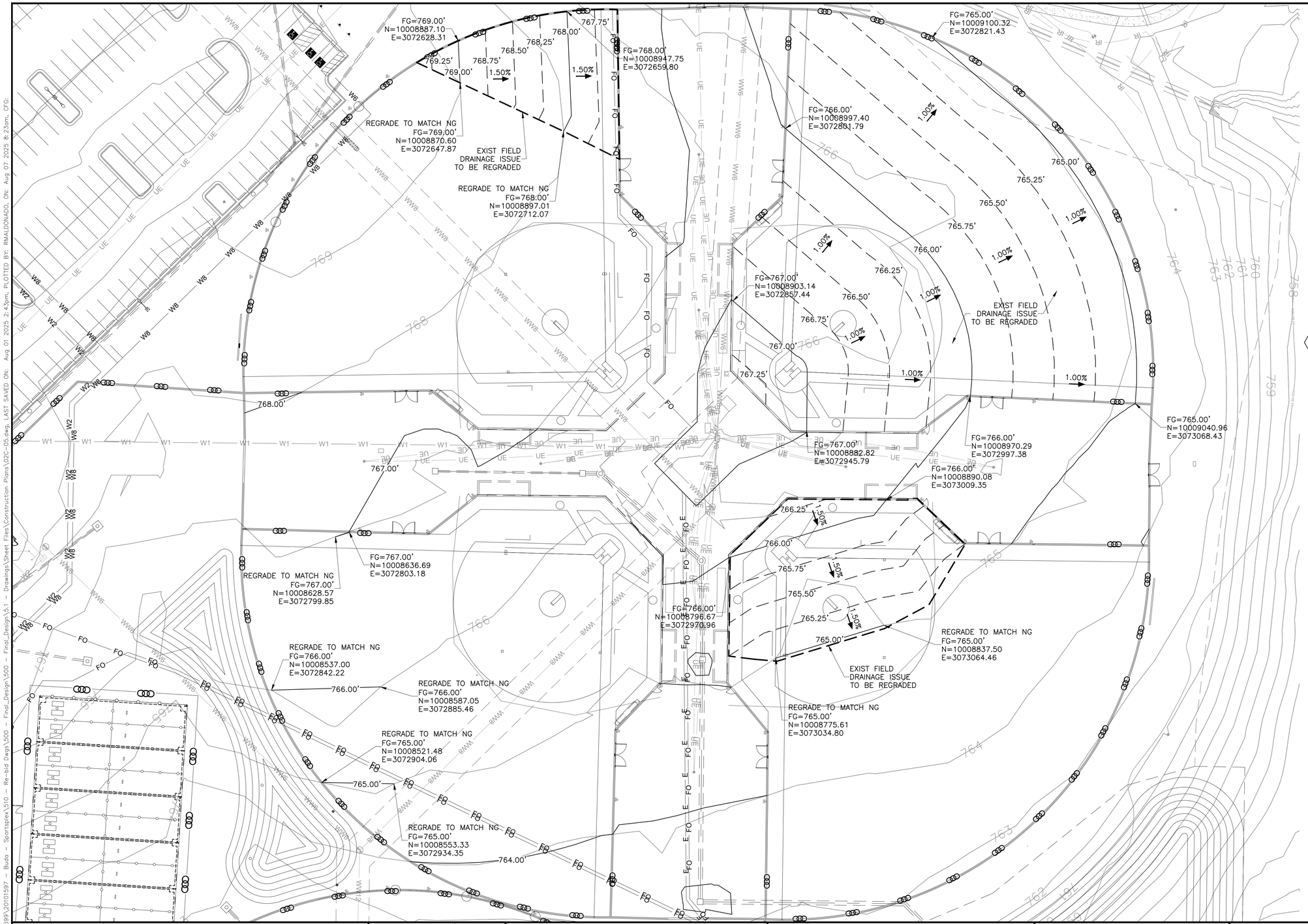

NOTES:

1. WHERE NATURAL SOD AND CONCRETE ARE ADJACENT, SOD FINISHED GROUND ELEVATION SHALL BE 1.5" BELOW TOP OF CONCRETE. REFER TO GRADING PLANS FOR TOP OF PAVEMENT ELEVATIONS IN PROPOSED CONCRETE SIDEWALK.
2. CONTRACTOR SHALL PROVIDE ALL NECESSARY FITTINGS FOR ALL PIPE CONNECTIONS.
3. SUBDRAIN LINES SHALL BE HDPE PERFORATED PIPE. REFER TO SHEET 02C-13.
4. PROPOSED DRAINAGE SUBDRAINS ARE NOT SHOWN ON THIS SHEET FOR CLARITY. REFER TO SHEET 02C-06.

KEY NOTES:

(1) REFER TO SERIES 100 GRADING AND DRAINAGE PLANS FOR PROPOSED GRADES OF CONCRETE SLAB ADJACENT TO FIELDS. FIELD NATURAL TURF SHALL BE 1.5" BELOW TOP OF CONCRETE SLAB ELEVATIONS.

SITE DEVELOPMENT NUMBER 2025-476

REV. NO.	DATE	DESCRIPTION

PROJECT MANAGER:	PK
DESIGNED BY:	PG/RM
CHECKED BY:	DCS/JTH
DRAWN BY:	PG/RM
DCS PROJECT NO:	20101597

DCS ENGINEERING, LLC
1101 S. CAPITAL OF TEXAS HIGHWAY, BUILDING G-100
AUSTIN, TX 78746

TEL: (512) 614-6171
T.B.P.E. FIRM NO. F-13162

BudaTx breathe easy here™

BUDA SPORTSPLEX - PHASE I

STATE OF TEXAS
L. PATRICIO GALINDO RANGEL
154316
LICENSED
PROFESSIONAL ENGINEER
08/04/25.

SOFTBALL FIELDS

NORTH SOFTBALL FIELDS - GRADING PLAN

DATE: JULY 2025

SCALE: 1" = 30'

DRAWING: 02C-05

FILENAME: Z:\Projects 1551-1599\20101597 - Buda - Sportsplex\510 - Re-bid Dwgs\500 - Final_Design\500 - Final_Design\51 - Drawings\Sheet Files\Construction Plans\02C-05.dwg, LAST SAVED ON: Aug 01 2025 2:43pm, PLOTTED BY: RMALDONADO, ON: Aug 07 2025 8:23am, CFG:

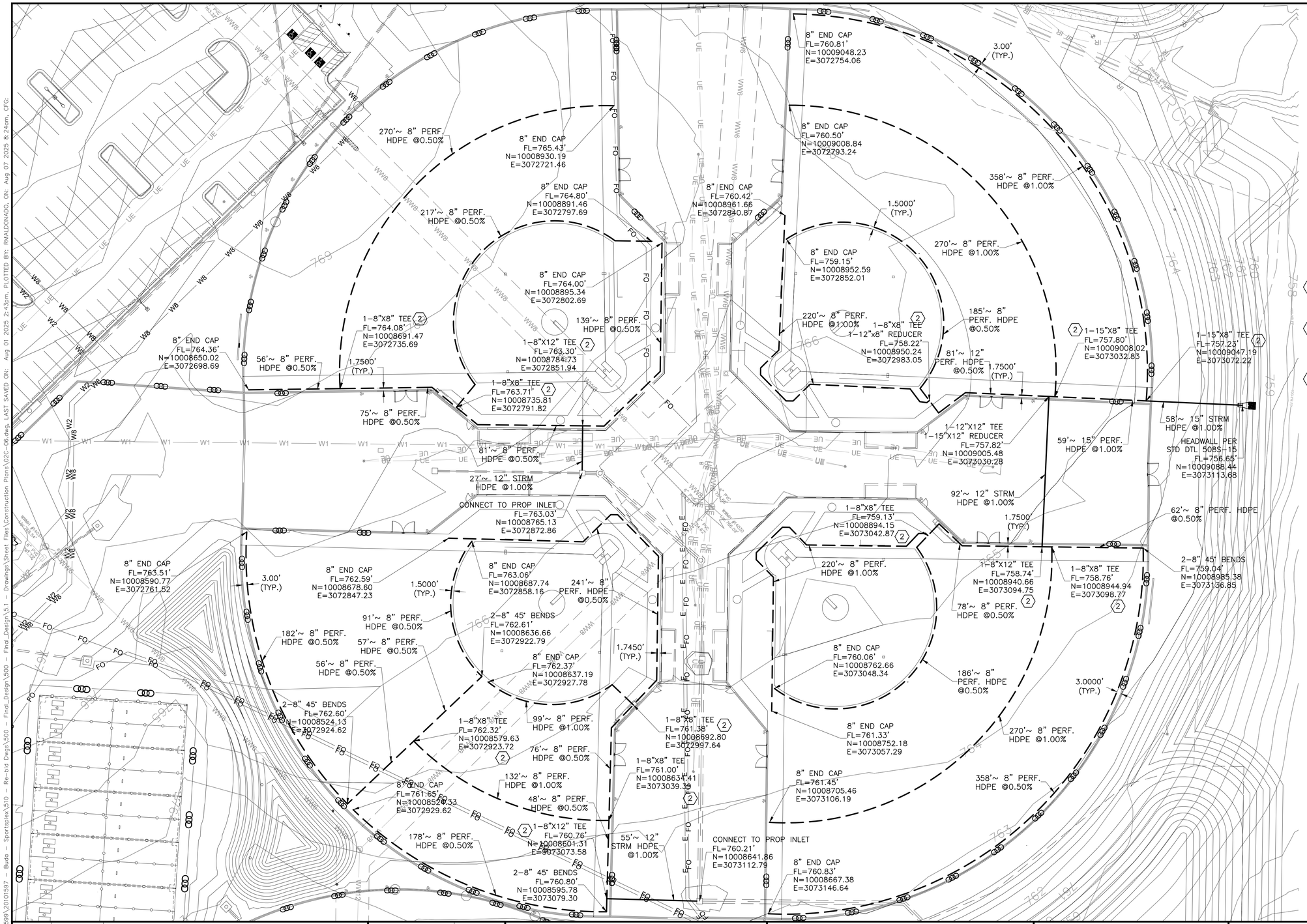

NOTES:

1. WHERE NATURAL SOD AND CONCRETE ARE ADJACENT, SOD FINISHED GROUND ELEVATION SHALL BE 1.5" BELOW TOP OF CONCRETE. REFER TO GRADING PLANS FOR TOP OF PAVEMENT ELEVATIONS IN PROPOSED CONCRETE SIDEWALK.
2. CONTRACTOR SHALL PROVIDE ALL NECESSARY FITTINGS FOR ALL PIPE CONNECTIONS.
3. SUBDRAIN LINES SHALL BE HDPE PERFORATED PIPE. REFER TO SHEET 02C-13.
4. ALL SUBDRAIN CONNECTIONS SHALL BE MADE UTILIZING MANUFACTURER APPROVED FITTINGS.

KEY NOTES:

(1) SUB-DRAIN SYSTEM BELOW NATURAL TURF SHALL BE FURNISHED AND INSTALLED ACCORDING TO "SUB-DRAINAGE SYSTEM FOR NATURAL TURF ATHLETIC FIELDS" SPECIFICATION AND DETAIL 3, SHEET 02C-13. REFER TO SPECIFICATION BOOK.

(2) CONTRACTOR SHALL USE STANDARD MANUFACTURED TEES AND ROTATE THEM AS NEEDED TO CONNECT PROPOSED PERFORATED HDPE SUBDRAINS PER PLANS.

(3) SUB-DRAIN SYSTEM BELOW WARNING TRACK MIX SHALL BE FURNISHED AND INSTALLED ACCORDING TO "SUB-DRAINAGE SYSTEM FOR NATURAL TURF ATHLETIC FIELDS" SPECIFICATION AND DETAIL 1, SHEET 02C-13. REFER TO SPECIFICATION BOOK.

SITE DEVELOPMENT NUMBER 2025-476

REV. NO.	DATE	DESCRIPTION

PROJECT MANAGER:	PK
DESIGNED BY:	PG/RM
CHECKED BY:	DCS/JTH
DRAWN BY:	PG/RM
DCS PROJECT NO:	20101597

DCS ENGINEERING, LLC
1101 S. CAPITAL OF TEXAS HIGHWAY, BUILDING G-100
AUSTIN, TX 78746
TEL: (512) 614-6171
T.B.P.E. FIRM NO. F-13162

BUDA SPORTSPLEX - PHASE I

STATE OF TEXAS
J. PATRICIO GALINDO RANGEL
154316
LICENSED PROFESSIONAL ENGINEER
08/04/25.

SOFTBALL FIELDS

NORTH SOFTBALL FIELDS - DRAINAGE PLAN

DATE: JULY 2025
SCALE: 1" = 30'
DRAWING: 02C-06

FILENAME: Z:\Projects\1551-1599\20101597 - Buda - Sportsplex\510 - Re-bid Dwgs\500 - Final_Design\500 - Final_Design\5.1 - Drawings\Sheet Files\Construction Plans\02C-06.dwg, LAST SAVED ON: Aug 01 2025 2:43pm, PLOTTED BY: RMALDONADO, ON: Aug 07 2025 8:24am, CFG:

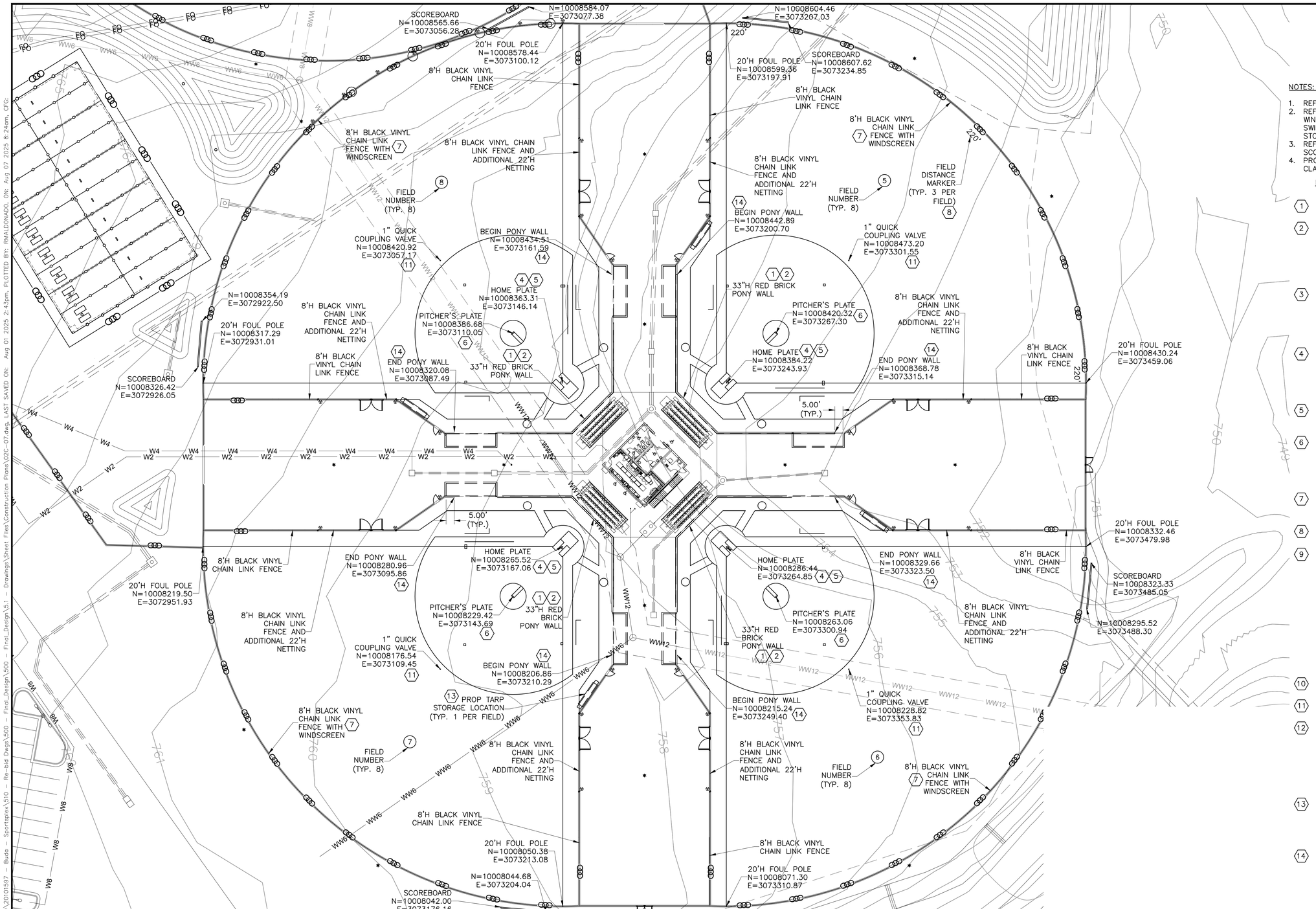

NOTES:

1. REFER TO SHEET 02C-13 FOR INFIELD LAYOUT DETAILS.
2. REFER TO SERIES 000 FENCING DETAILS FOR CHAINLINK FENCE, WINDSCREEN, MANGATE, AND MAINTENANCE SWING GATES DETAILS. ALL SWING GATES SHALL OPEN OUTSIDE OF THE FIELD AND SHALL HAVE STOPS INSTALLED TO PREVENT GATES FROM SWINGING INTO FIELD.
3. REFER TO SERIES 200 SOFTBALL FIELD DETAILS FOR FOUL POLE, SCOREBOARD, AND NETTING SYSTEM DETAILS.
4. PROPOSED DRAINAGE SUBDRAINS ARE NOT SHOWN ON THIS SHEET FOR CLARITY. REFER TO SHEET 02C-11.

KEY NOTES:

(1) INSTALL 33"H RED BRICK WALL PER STRUCTURAL PLANS.

(2) FURNISH AND INSTALL WALL MOUNTED 3" THICK 1580 POLYURETHANE IMPACT FOAM WITH 19.OZ PREMIUM OUTDOOR VINYL COVERING BACKSTOP PADDING. BASEZONE® FIELD WALL PADDING BY SPORTSFIELD SPECIALITIES OR APPROVED EQUAL. COLOR: BLUE PMS 287. CONTRACTOR SHALL MOUNT BACKSTOP PADDING TO PONY WALL BEHIND HOME PLATE PER MANUFACTURER'S RECOMMENDATIONS WITH Z-CLIP WALL ATTACHMENTS.

(3) FURNISH AND INSTALL RAWLINGS HOLLYWOOD IMPACT KWIK-RELEASE DOUBLE FIRST BASE & SINGLE SET OF 3 (VARSITY RESISTANCE LEVEL) OR APPROVED EQUAL, INCLUDING 6" STANCHION AND GROUND ANCHOR. CONTRACTOR SHALL INSTALL AND ANCHOR BASES PER MANUFACTURER'S RECOMMENDATIONS. REFER TO SHEET 02C-13, DETAIL 5 FOR BASES LOCATION.

(4) FURNISH AND INSTALL RAWLINGS HOLLYWOOD PRO STYLE HOME PLATE OR APPROVED EQUAL, INCLUDING STANCHION AND GROUND ANCHOR FOR PERMANENT INSTALLATION. CONTRACTOR SHALL INSTALL AND ANCHOR BASES PER MANUFACTURER'S RECOMMENDATIONS. REFER TO SHEET 02C-13, DETAIL 5 FOR HOME PLATE LOCATION.

(5) INSTALL 3/8" SURVEY ROD 6" BELOW FINISHED GROUND AND CENTERED AT THE APEX OF HOME PLATE TO BE SET AS A PERMANENT MARKER.

(6) FURNISH AND INSTALL RAWLINGS HOLLYWOOD 4-SIDED PITCHING RUBBER WITH INTERIOR ALUMINUM TUBE OR APPROVED EQUAL. CONTRACTOR SHALL INSTALL PITCHING RUBBER PER MANUFACTURER'S RECOMMENDATIONS. PITCHER'S PLATE SHALL BE FIXED TO THE GROUND AND TOP OF THE PLATE SHALL BE LEVELED WITH THE FINISHED GROUND.

(7) INSTALL SAFETY 4.5"ø CORRUGATED PLASTIC FENCE TOP CAP ON OUTFIELD FENCE. COLOR: YELLOW. RICHARDSON ATHLETICS ITEM NO. FC250 OR APPROVED EQUAL.

(8) FURNISH AND INSTALL FIELD DISTANCE MARKER AT FOUL POLES AND CENTER OF OUTFIELD FENCE PER DETAIL 6 SHEET 02C-13.

(9) FURNISH AND INSTALL ASTROTURF IN BULLPEN AND BATTING CAGE CONCRETE PAD. FOLLOW MANUFACTURER'S RECOMMENDATIONS FOR INSTALLATION OF ASTROTURF ON CONCRETE PAD. ASTROTURF SHALL INCLUDE HOME PLATE AND PITCHER'S PLATE SURFACE MARKINGS AS SHOWN IN PLANS. HOME PLATE AND PITCHER'S PLATE MARKINGS SHALL HAVE SAME DIMENSIONS AS STANDARD HOME PLATE AND PITCHER'S PLATE BEING INSTALLED IN THE SOFTBALL FIELDS; AND BE SEPARATED AT REGULATION DISTANCE OF 43-FT. NEXT TO EACH PITCHER'S PLATE (ON THE RIGHT SIDE OF THE PLATE FACING HOME PLATE) INCLUDE A 6"X6" SURFACE MARKING TO READ "43-FT" TO SPECIFY PITCHING DISTANCE. ASTROTURF COLOR: GREEN; ASTROTURF SURFACE MARKINGS COLOR: WHITE. (TYP. 2 BULLPENS AND 2 BATTING CAGES PER FIELD). ASTROTURF SHALL BE PT PRO 90, MANUFACTURED BY ON DECK SPORTS OR APPROVED EQUAL.

(10) NOT USED.

(11) REFER TO IRRIGATION PLANS FOR DETAILS.

(12) FURNISH AND INSTALL 3" THICK 1580 POLYURETHANE IMPACT FOAM WITH 19.OZ PREMIUM OUTDOOR VINYL COVERING BACKSTOP PADDING. BASEZONE® FIELD WALL PADDING BY SPORTSFIELD SPECIALITIES OR APPROVED EQUAL. COLOR: BLUE PMS 287. PADDING SHALL BE 8'H AND COVER ENTIRE BULLPEN WIDTH. CONTRACTOR SHALL MOUNT BACKSTOP PADDING ON BULLPEN'S BACKSTOP CHAINLINK FENCE PER MANUFACTURER'S RECOMMENDATIONS.

(13) FURNISH 8-110'X110' 18 OZ. HEAVY COATED VINYL WITH HEAT-SEALED SEAMS AND DOUBLE SEWN REINFORCED PERIMETER SOFTBALL FIELD TARPS. BUCK TERRELL 18 OZ. FIELD COVERS OR APPROVED EQUAL; AND 8-28" HDPE 20-FT LONG FIELDS TARP ROLLERS. (TYP. 1 PER FIELD. 8 TOTAL)

(14) PONY WALL WITHIN THE DUGOUT LIMITS SHALL BE 42"H. BEYOND THE DUGOUT LIMITS, ALONG THE SIDELINE AND BACKSTOP, PONY WALL SHALL BE 33"H. REFER TO SHEETS 02S-01 AND 02S-02 FOR DUGOUT AND PONY WALL DETAILS.

SITE DEVELOPMENT NUMBER 2025-476

REV. NO.	DATE	DESCRIPTION

PROJECT MANAGER:	PK
DESIGNED BY:	PG/RM
CHECKED BY:	DCS/JTH
DRAWN BY:	PG/RM
DCS PROJECT NO:	20101597

DCS ENGINEERING, LLC
1101 S. CAPITAL OF TEXAS HIGHWAY, BUILDING G-100
AUSTIN, TX 78746

TEL: (512) 614-6171
T.B.P.E. FIRM NO. F-13162

BudaTx breathe easy here™

BUDA SPORTSPLEX - PHASE I

STATE OF TEXAS
J. PATRICIO CALINDO RANGEL
154316
LICENSED PROFESSIONAL ENGINEER
08/04/25

SOFTBALL FIELDS

SOUTH SOFTBALL FIELDS - SITE PLAN

DATE: JULY 2025

SCALE: 1" = 30'

DRAWING: 02C-07

FILENAME: Z:\Projects 1551-1599\20101597 - Buda - Sportsplex\510 - Re-bid Dwgs\500 - Final_Design\5.1 - Drawings\Sheet Files\Construction Plans\02C-07.dwg, LAST SAVED ON: Aug 01 2025 2:43pm, PLOTTED BY: RMALDONADO, ON: Aug 07 2025 8:24am, CFG:

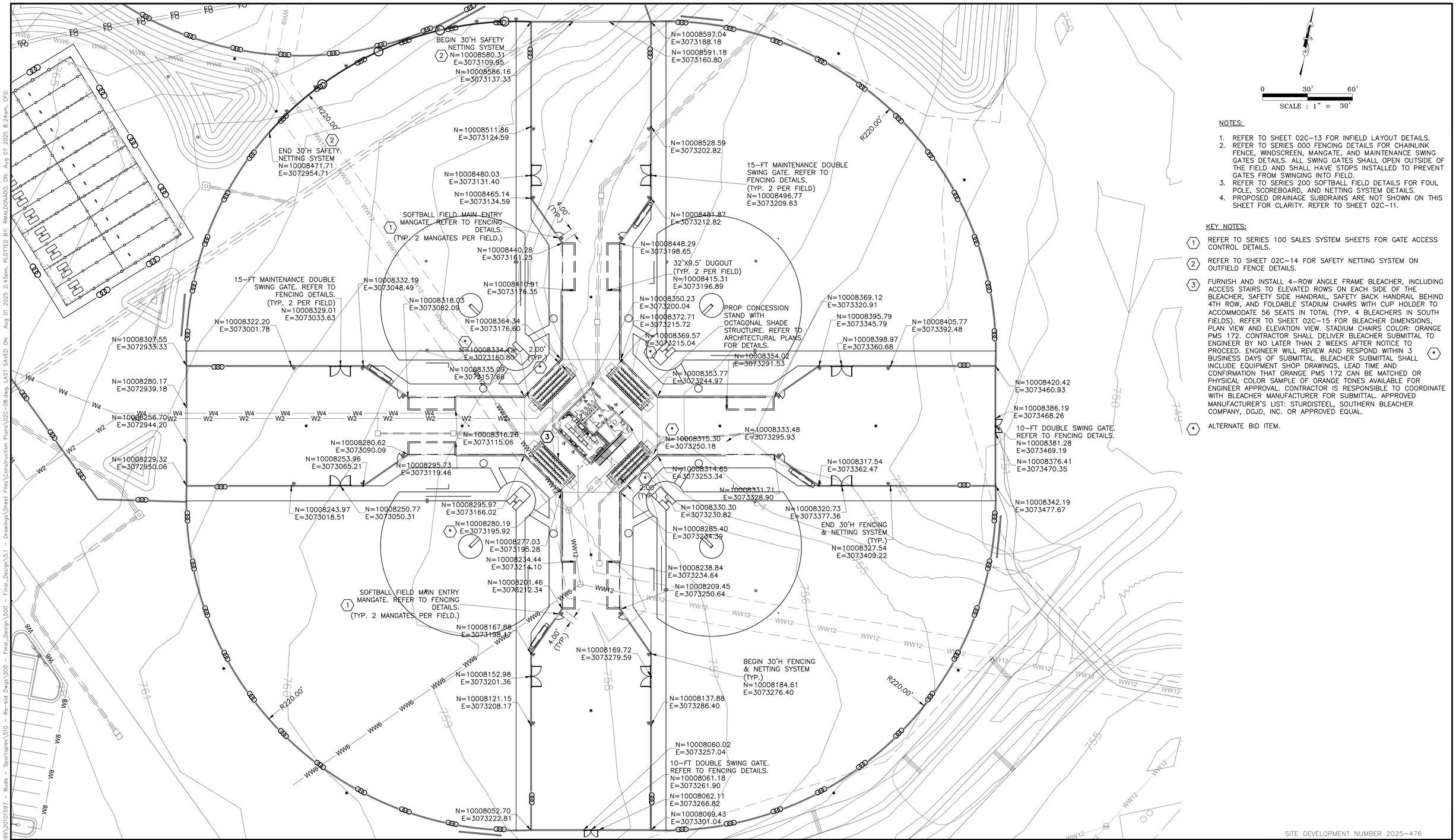

NOTES:

1. REFER TO SHEET 02C-13 FOR INFIELD LAYOUT DETAILS.
2. REFER TO SERIES 000 FENCING DETAILS FOR CHAINLINK FENCE, WINDSCREEN, MANGATE, AND MAINTENANCE SWING GATES DETAILS. ALL SWING GATES SHALL OPEN OUTSIDE OF THE FIELD AND SHALL HAVE STOPS INSTALLED TO PREVENT GATES FROM SWINGING INTO FIELD.
3. REFER TO SERIES 200 SOFTBALL FIELD DETAILS FOR FOUL POLE, SCOREBOARD, AND NETTING SYSTEM DETAILS.
4. PROPOSED DRAINAGE SUBDRAINS ARE NOT SHOWN ON THIS SHEET FOR CLARITY. REFER TO SHEET 02C-11.

KEY NOTES:

(1) REFER TO SERIES 100 SALES SYSTEM SHEETS FOR GATE ACCESS CONTROL DETAILS.

(2) REFER TO SHEET 02C-14 FOR SAFETY NETTING SYSTEM ON OUTFIELD FENCE DETAILS.

(3) FURNISH AND INSTALL 4-ROW ANGLE FRAME BLEACHER, INCLUDING ACCESS STAIRS TO ELEVATED ROWS ON EACH SIDE OF THE BLEACHER, SAFETY SIDE HANDRAIL, SAFETY BACK HANDRAIL BEHIND 4TH ROW, AND FOLDABLE STADIUM CHAIRS WITH CUP HOLDER TO ACCOMMODATE 56 SEATS IN TOTAL (TYP. 4 BLEACHERS IN SOUTH FIELDS). REFER TO SHEET 02C-15 FOR BLEACHER DIMENSIONS, PLAN VIEW AND ELEVATION VIEW. STADIUM CHAIRS COLOR: ORANGE PMS 172. CONTRACTOR SHALL DELIVER BLEACHER SUBMITTAL TO ENGINEER BY NO LATER THAN 2 WEEKS AFTER NOTICE TO PROCEED. ENGINEER WILL REVIEW AND RESPOND WITHIN 3 BUSINESS DAYS OF SUBMITTAL. BLEACHER SUBMITTAL SHALL INCLUDE EQUIPMENT SHOP DRAWINGS, LEAD TIME AND CONFIRMATION THAT ORANGE PMS 172 CAN BE MATCHED OR PHYSICAL COLOR SAMPLE OF ORANGE TONES AVAILABLE FOR ENGINEER APPROVAL. CONTRACTOR IS RESPONSIBLE TO COORDINATE WITH BLEACHER MANUFACTURER FOR SUBMITTAL. APPROVED MANUFACTURER'S LIST: STURDISTEEL, SOUTHERN BLEACHER COMPANY, DGJD, INC. OR APPROVED EQUAL.

(*) ALTERNATE BID ITEM.

SITE DEVELOPMENT NUMBER 2025-476

REV. NO.	DATE	DESCRIPTION

PROJECT MANAGER:	PK
DESIGNED BY:	PG/RM
CHECKED BY:	DCS/JTH
DRAWN BY:	PG/RM
DCS PROJECT NO:	20101597

DCS ENGINEERING, LLC
1101 S. CAPITAL OF TEXAS HIGHWAY, BUILDING G-100
AUSTIN, TX 78746

TEL: (512) 614-6171
T.B.P.E. FIRM NO. F-13162

BudaTx breathe easy here.™

BUDA SPORTSPLEX - PHASE I

STATE OF TEXAS
J. PATRICIO GALINDO RANGEL
154316
LICENSED PROFESSIONAL ENGINEER
08/04/25.

SOFTBALL FIELDS

SOUTH SOFTBALL FIELDS - HORIZONTAL CONTROL PLAN

DATE: JULY 2025

SCALE: 1" = 30'

DRAWING: 02C-08

FILENAME: Z:\Projects 1551-1599\20101597 - Buda - Sportsplex\510 - Re-bid Dwgs\500 - Final_Design\500 - Final_Design\5.1 - Drawings\Sheet Files\02C-08.dwg, LAST SAVED ON: Aug 01 2025 2:43pm, PLOTTED BY: RMALDONADO, ON: Aug 07 2025 8:24am, CFG:

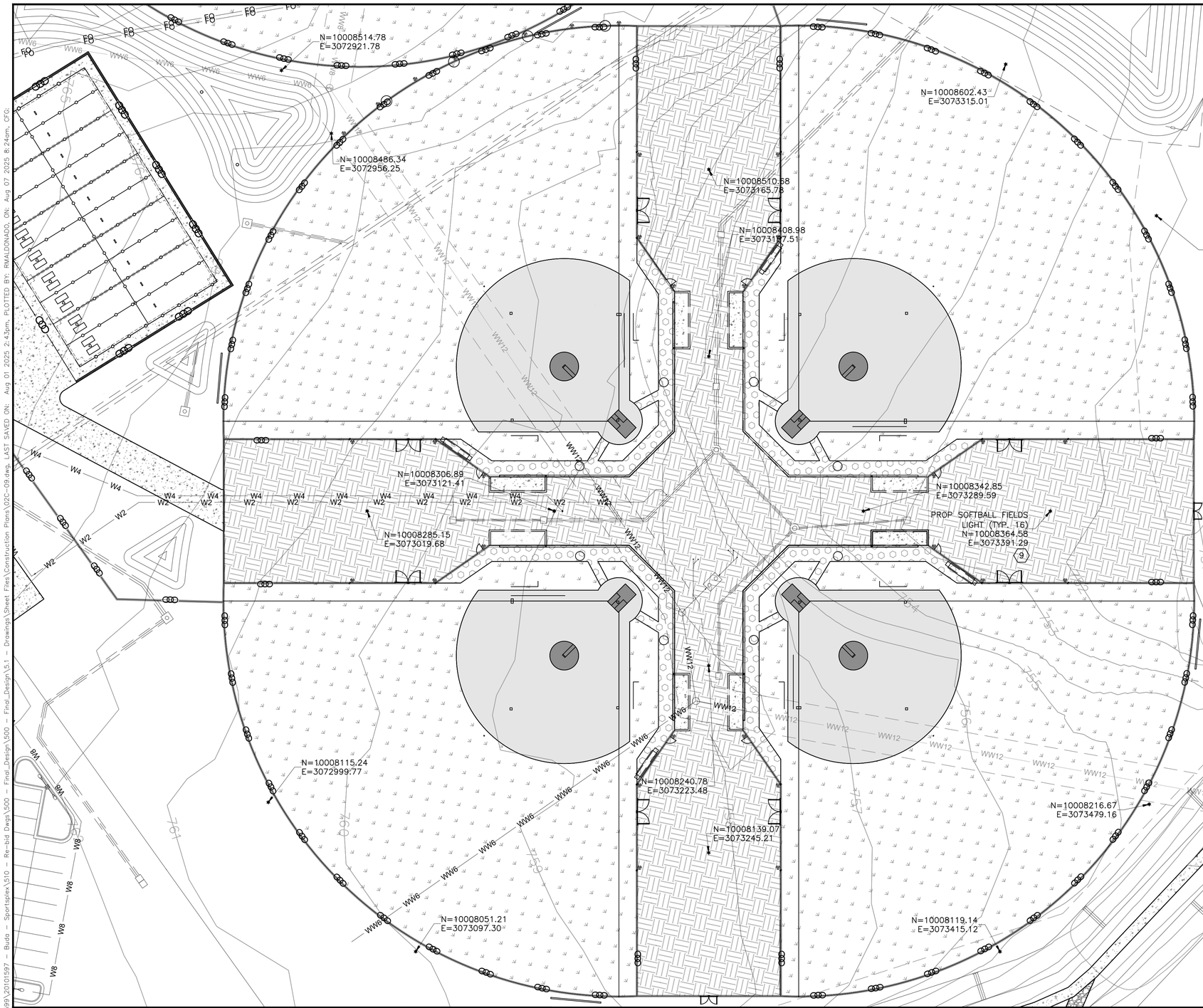

NOTES:

1. WHERE NATURAL SOD AND CONCRETE ARE ADJACENT, SOD FINISHED GROUND ELEVATION SHALL BE 1.5" BELOW TOP OF CONCRETE. REFER TO GRADING PLANS FOR TOP OF PAVEMENT ELEVATIONS IN PROPOSED CONCRETE SIDEWALK.
2. PROPOSED DRAINAGE SUBDRAINS ARE NOT SHOWN ON THIS SHEET FOR CLARITY. REFER TO SHEET 02C-11.
3. BLEACHERS AND CONCESSION STAND ARE NOT SHOWN ON THIS VIEW FOR CLARITY.

LEGEND:

- PROPOSED ATHLETIC NATURAL TURF. TIFTUF BERMUDA BIG ROLL SOLID SOD WITH 8" ROOT ZONE. REFER TO DETAIL 2 SHEET 02C-13 FOR TURF AND ROOTZONE DETAILS. (1) (2) (3) (4) (7) (10)
- PROPOSED INFIELD MIX. REFER TO DETAIL 7 SHEET 02C-13. (5)
- PROPOSED MOUND CLAY. REFER TO DETAIL 8 SHEET 02C-13. (6)
- PROPOSED WARNING TRACK MIX. REFER TO DETAIL 1 SHEET 02C-13. (8)
- RE-VEGETATE PER COA SPECIFICATION 609S

KEY NOTES:

(1) TURF CONTRACTOR IS RESPONSIBLE TO ACTIVELY MANAGE INSTALLATION OF TIF-TUF BERMUDA SOD, INCLUDING SITE PREPARATION, ROOT ZONE INSTALLATION, SOD HARVESTING & INSTALLATION, ROLLING, WATERING AND GROW-IN & MAINTENANCE PERIOD SO THAT SOFTBALL FIELDS ARE PLAYABLE BY APRIL 1ST, 2026. TURF CONTRACTOR IS RESPONSIBLE TO COORDINATE TURF INSTALLATION WITH OTHER CONTRACTORS WORKING AT THE PROJECT SITE.

(2) TURF CONTRACTOR SHALL PERSONALLY OVERSEED TIF-TUF BERMUDA SOD WITH PERENNIAL RYEGRASS AT SOD FARM IN OCTOBER 2025 FOR SOD TO BE READY TO HARVEST BY FEBRUARY 2, 2026. SOD SHALL BE HARVESTED NOT MORE THAN 18 TO 24 HOURS PRIOR TO INSTALLATION. DATES SHOWN HEREIN ARE RECOMMENDATIONS TO CONTRACTOR. TURF CONTRACTOR IS RESPONSIBLE TO CONFIRM/MODIFY THESE DATES ON THE SOD INSTALLATION SCHEDULE TO BE SUBMITTED AS PART OF THE SOD SUBMITTAL.

(3) SOD TO BE INSTALLED SHALL BE NURSERY GROWN SAND BASED CERTIFIED TIF-TUF BERMUDA SOD. THE SAND-BASED SOIL SHALL HAVE A MINIMUM OF 90% SAND AND A MAXIMUM 10% OF COMBINED CLAY AND SILT AS DEFINED BY THE U.S.D.A SOIL CLASSIFICATION SYSTEM. TIF-TUF SOD SHALL BE INSTALLED IN 42"WX50'L ROLLS.

(4) TIF-TUF BERMUDA SOD SHALL BE FURNISHED AND INSTALLED ACCORDING TO "NATURAL TURF FOR ATHLETIC FIELDS (TIF-TUF)" AND "NATURAL TURF INSTALLATION FOR ATHLETIC FIELDS (TIF-TUF)" SPECIFICATIONS AND DETAILS 2 & 3, SHEET 02C-13. REFER TO SPECIFICATION BOOK.

(5) INFIELD MIX SHALL BE FURNISHED AND INSTALLED ACCORDING TO "INFIELD FOR SOFTBALL FIELDS" SPECIFICATION AND DETAIL 7, SHEET 02C-13. REFER TO SPECIFICATION BOOK.

(6) MOUND CLAY SHALL BE FURNISHED AND INSTALLED ACCORDING TO "SOFTBALL MOUND CLAY" SPECIFICATION AND DETAIL 8, SHEET 02C-13. REFER TO SPECIFICATION BOOK.

(7) ROOT ZONE MIX SHALL BE FURNISHED AND INSTALLED ACCORDING TO "NATURAL TURF ROOT ZONE FOR ATHLETIC FIELDS – TOP SOIL" AND "NATURAL TURF ROOT ZONE FOR ATHLETIC FIELDS – 90% SAND BASED" SPECIFICATIONS AND DETAILS 2 & 3, SHEET 02C-13. REFER TO SPECIFICATION BOOK.

(8) WARNING TRACK MIX SHALL BE FURNISHED AND INSTALLED ACCORDING TO "SOFTBALL WARNING TRACK" SPECIFICATION AND DETAIL 1, SHEET 02C-13. REFER TO SPECIFICATION BOOK. CONTRACTOR SHALL INCLUDE IN SUBMITTAL SAMPLE OF CRUSHED BRICK WARNING TRACK MIX AND A SAMPLE OF BRICK ALTERNATIVES TO BE USED IN THE PONY WALL FOR ENGINEER'S APPROVAL.

(9) PROPOSED SOFTBALL LIGHTS SHALL BE FURNISHED AND INSTALLED BY OWNER. CONTRACTOR SHALL INSTALL UNDERGROUND ELECTRIC AND CONDUIT PER ELECTRIC PLANS ON NEW LIGHT LOCATIONS. THIS PLAN SHEET ONLY SHOWS THE NEW LOCATIONS OF SOFTBALL LIGHTS. REFER TO ELECTRIC PLANS FOR CONSTRUCTION OF UNDERGROUND ELECTRIC CONDUIT.

(10) CONTRACTOR SHALL DELIVER TIFTUF BERMUDA SOD SUBMITTAL TO ENGINEER BY NO LATER THAN 2 WEEKS AFTER NOTICE TO PROCEED. ENGINEER WILL REVIEW AND RESPOND WITHIN 3 BUSINESS DAYS OF SUBMITTAL. SOD SUBMITTAL SHALL INCLUDE RECOMMENDED TIFTUF BERMUDA SOD INSTALLATION SCHEDULE WITH SPECIFIC DATES SO THAT SOFTBALL FIELDS ARE PLAYABLE BY APRIL 1ST, 2026. INSTALLATION SCHEDULE SHALL INCLUDE BUT NOT BE LIMITED TO OVERSEEDING PERIOD AT SOD FARM, SITE PREPARATION, IRRIGATION INSTALLATION, SUB-DRAINAGE SYSTEM INSTALLATION, ROOT ZONE INSTALLATION, SOD HARVESTING & INSTALLATION, ROLLING, WATERING AND GROW-IN & MAINTENANCE PERIOD.

SITE DEVELOPMENT NUMBER 2025-476

REV. NO.	DATE	DESCRIPTION

PROJECT MANAGER:	PK
DESIGNED BY:	PG/RM
CHECKED BY:	DCS/JTH
DRAWN BY:	PG/RM
DCS PROJECT NO:	20101597

DCS ENGINEERING, LLC
1101 S. CAPITAL OF TEXAS HIGHWAY, BUILDING G-100
AUSTIN, TX 78746

TEL: (512) 614-6171
T.B.P.E. FIRM NO. F-13162

BudaTx breathe easy here™

BUDA SPORTSPLEX - PHASE I

STATE OF TEXAS
I. PATRICIO CALIXTO RANGEL
154316
LICENSED PROFESSIONAL ENGINEER
08/04/25

SOFTBALL FIELDS

SOUTH SOFTBALL FIELDS - SURFACING PLAN

DATE: JULY 2025

SCALE: 1" = 30'

DRAWING: 02C-09

FILENAME: Z:\Projects 1551-1599\20101597 - Buda - Sportsplex\510 - Re-bid Dwgs\500 - Final_Design\500 - Final_Design\5.1 - Drawings\Sheet Files\Construction Plans\02C-09.dwg, LAST SAVED ON: Aug 01 2025 2:43pm, PLOTTED BY: RMALDONADO, ON: Aug 07 2025 8:24am, CFG:

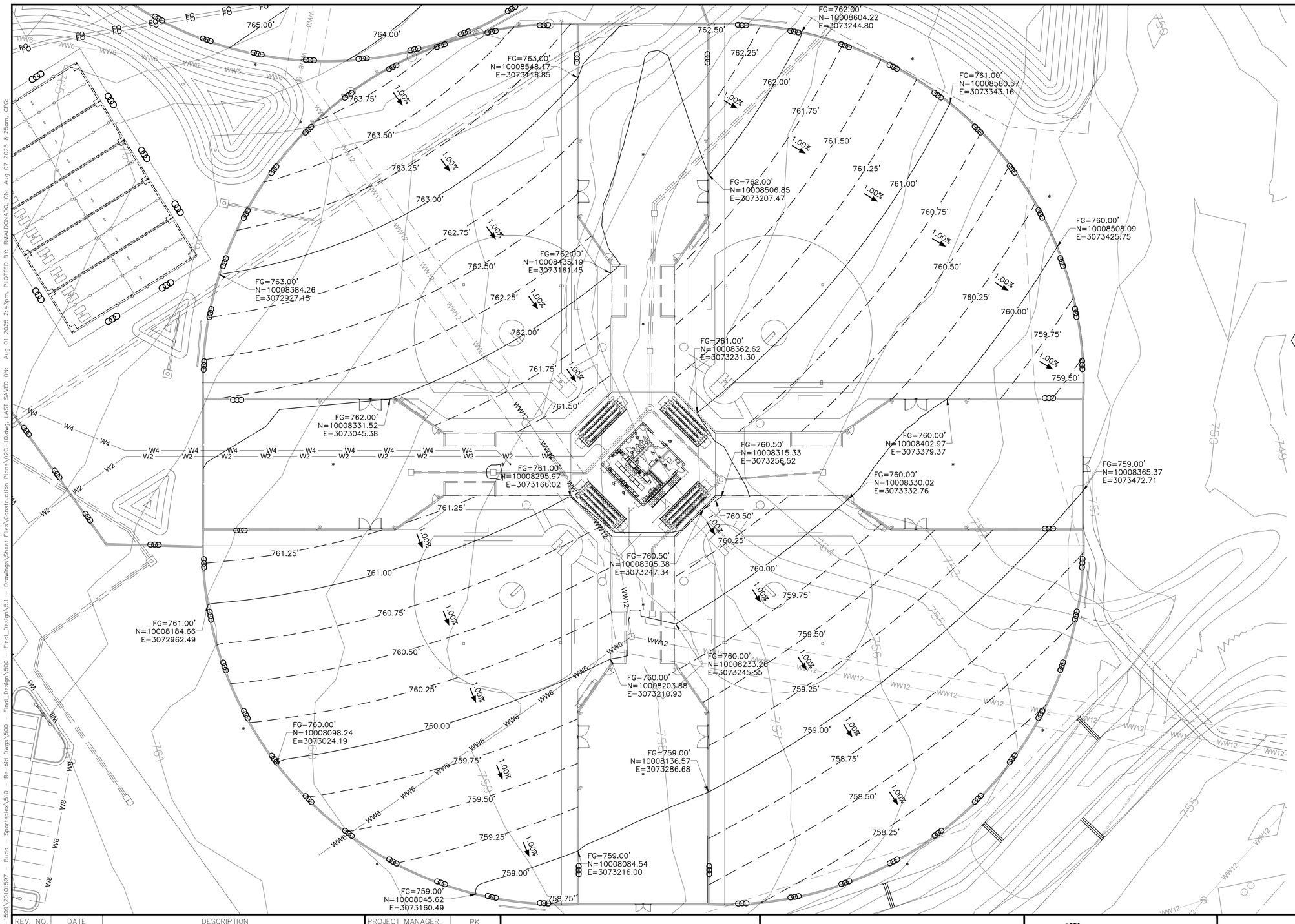

0 30' 60'

SCALE : 1" = 30'

NOTES:

1. WHERE NATURAL SOD AND CONCRETE ARE ADJACENT, SOD FINISHED GROUND ELEVATION SHALL BE 1.5" BELOW TOP OF CONCRETE. REFER TO GRADING PLANS FOR TOP OF PAVEMENT ELEVATIONS IN PROPOSED CONCRETE SIDEWALK.
2. CONTRACTOR SHALL PROVIDE ALL NECESSARY FITTINGS FOR ALL PIPE CONNECTIONS.
3. SUBDRAIN LINES SHALL BE HDPE PERFORATED PIPE. REFER TO SHEET 02C-13.
4. PROPOSED DRAINAGE SUBDRAINS ARE NOT SHOWN ON THIS SHEET FOR CLARITY. REFER TO SHEET 02C-11.

KEY NOTES:

(1) REFER TO SERIES 100 GRADING AND DRAINAGE PLANS FOR PROPOSED GRADES OF CONCRETE SLAB ADJACENT TO FIELDS. FIELD NATURAL TURF SHALL BE 1.5" BELOW TOP OF CONCRETE SLAB ELEVATIONS.

SITE DEVELOPMENT NUMBER 2025-476

REV. NO.	DATE	DESCRIPTION

PROJECT MANAGER:	PK
DESIGNED BY:	PG/RM
CHECKED BY:	DCS/JTH
DRAWN BY:	PG/RM
DCS PROJECT NO:	20101597

DCS ENGINEERING, LLC
1101 S. CAPITAL OF TEXAS HIGHWAY, BUILDING G-100
AUSTIN, TX 78746

TEL: (512) 614-6171
T.B.P.E. FIRM NO. F-13162

BudaTx breathe easy here™

BUDA SPORTSPLEX - PHASE I

STATE OF TEXAS
J. PATRICIO GALINDO RANGEL
154316
LICENSED PROFESSIONAL ENGINEER
08/04/25

SOFTBALL FIELDS

SOUTH SOFTBALL FIELDS - GRADING PLAN

DATE: JULY 2025

SCALE: 1" = 30'

DRAWING: 02C-10

FILENAME: Z:\Projects 1551-1599\20101597 - Buda - Sportsplex\510 - Re-bid Dwgs\500 - Final_Design\500 - Final_Design\5.1 - Drawings\Sheet Files\Construction Plans\02C-10.dwg, LAST SAVED ON: Aug 01 2025 2:43pm, PLOTTED BY: RMALDONADO, ON: Aug 07 2025 8:25am, CFG:

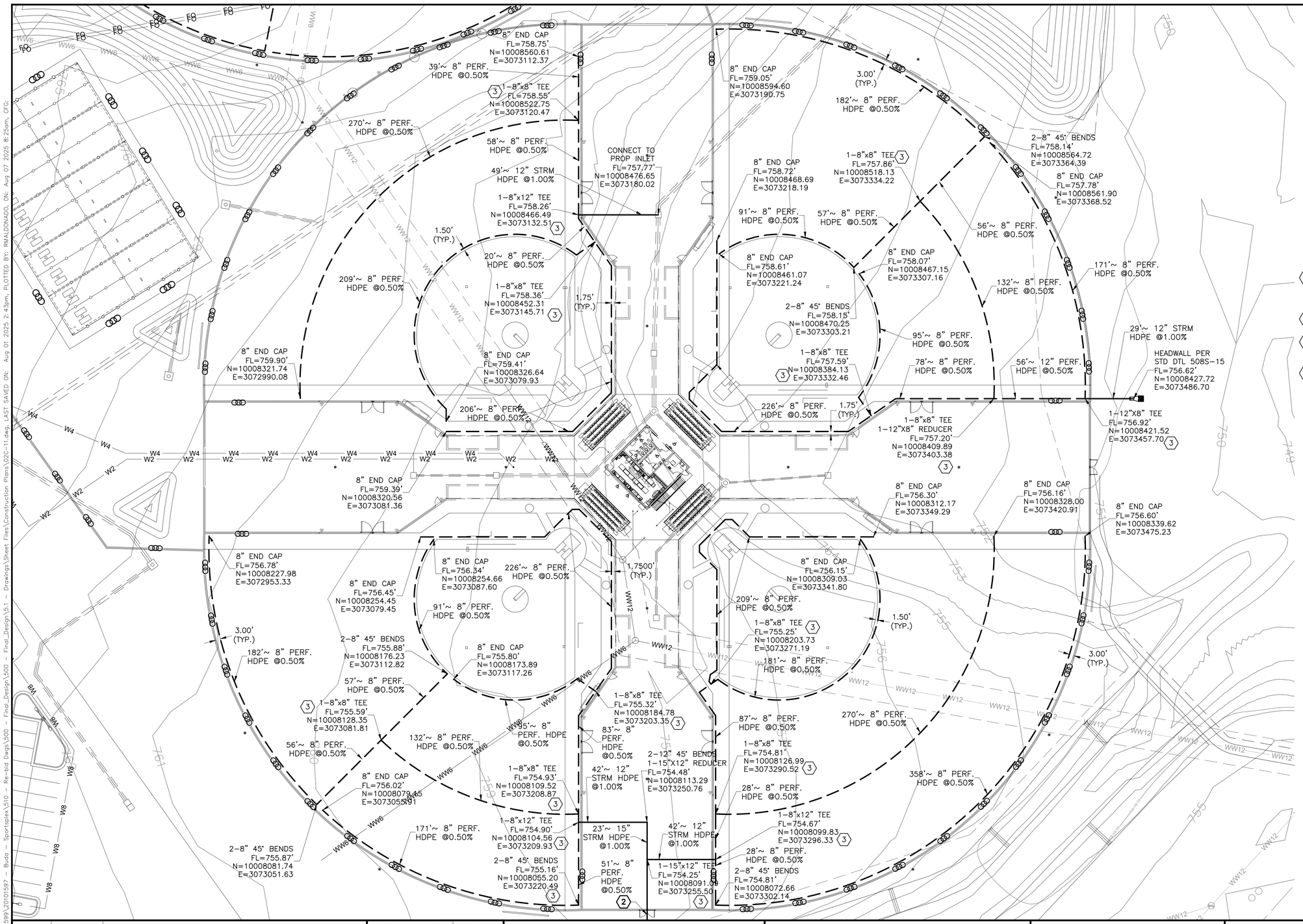

NOTES:

1. WHERE NATURAL SOD AND CONCRETE ARE ADJACENT, SOD FINISHED GROUND ELEVATION SHALL BE 1.5" BELOW TOP OF CONCRETE. REFER TO GRADING PLANS FOR TOP OF PAVEMENT ELEVATIONS IN PROPOSED CONCRETE SIDEWALK.
2. CONTRACTOR SHALL PROVIDE ALL NECESSARY FITTINGS FOR ALL PIPE CONNECTIONS.
3. SUBDRAIN LINES SHALL BE HDPE PERFORATED PIPE. REFER TO SHEET 02C-13.
4. ALL SUBDRAIN CONNECTIONS SHALL BE MADE UTILIZING MANUFACTURER APPROVED FITTINGS.

KEY NOTES:

(1) SUB-DRAIN SYSTEM BELOW NATURAL TURF SHALL BE FURNISHED AND INSTALLED ACCORDING TO "SUB-DRAINAGE SYSTEM FOR NATURAL TURF ATHLETIC FIELDS" SPECIFICATION AND DETAIL 3, SHEET 02C-13. REFER TO SPECIFICATION BOOK.

(2) REFER TO SHEET 01C-35 FOR CONSTRUCTION OF STORM PIPE AND DISCHARGE LOCATION.

(3) CONTRACTOR SHALL USE STANDARD MANUFACTURED TEES AND ROTATE THEM AS NEEDED TO CONNECT PROPOSED PERFORATED HDPE SUBDRAINS PER PLANS.

(4) SUB-DRAIN SYSTEM BELOW WARNING TRACK MIX SHALL BE FURNISHED AND INSTALLED ACCORDING TO "SUB-DRAINAGE SYSTEM FOR NATURAL TURF ATHLETIC FIELDS" SPECIFICATION AND DETAIL 1, SHEET 02C-13. REFER TO SPECIFICATION BOOK.

SITE DEVELOPMENT NUMBER 2025-476

REV. NO.	DATE	DESCRIPTION

PROJECT MANAGER:	PK
DESIGNED BY:	PG/RM
CHECKED BY:	DCS/JTH
DRAWN BY:	PG/RM
DCS PROJECT NO:	20101597

DCS ENGINEERING, LLC
1101 S. CAPITAL OF TEXAS HIGHWAY, BUILDING G-100
AUSTIN, TX 78746

TEL: (512) 614-6171
T.B.P.E. FIRM NO. F-13162

BUDA SPORTSPLEX - PHASE I

STATE OF TEXAS
J. PATRICIO GALINDO RANGEL
154316
LICENSED PROFESSIONAL ENGINEER
08/04/25

SOFTBALL FIELDS

SOUTH SOFTBALL FIELDS - DRAINAGE PLAN

DATE: JULY 2025
SCALE: 1" = 30'
DRAWING: 02C-11

FILENAME: Z:\Projects 1551-1599\20101597 - Buda - Sportsplex\510 - Re-bid Dwgs\500 - Final_Design\500 - Final_Design\5.1 - Drawings\Sheet Files\Construction Plans\02C-11.dwg, LAST SAVED ON: Aug 01 2025 2:43pm, PLOTTED BY: RMALDONADO, ON: Aug 07 2025 8:25am, CFG:

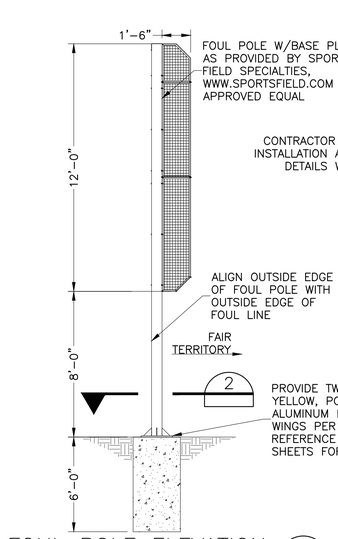

FOUL POLE ELEVATION 1
N.T.S.

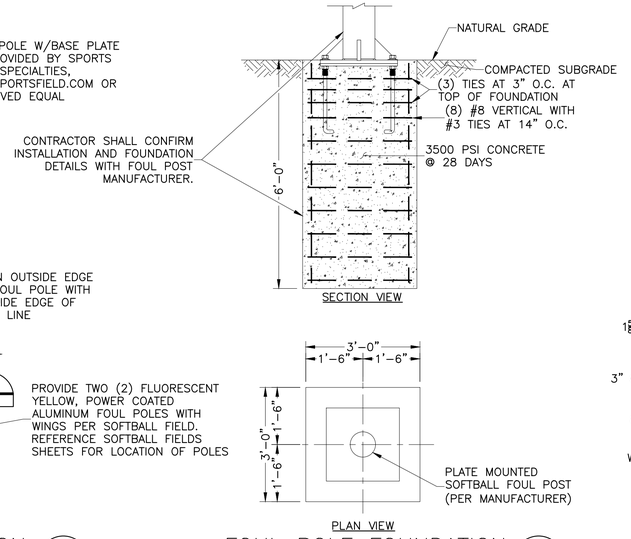

FOUL POLE FOUNDATION 2
N.T.S.

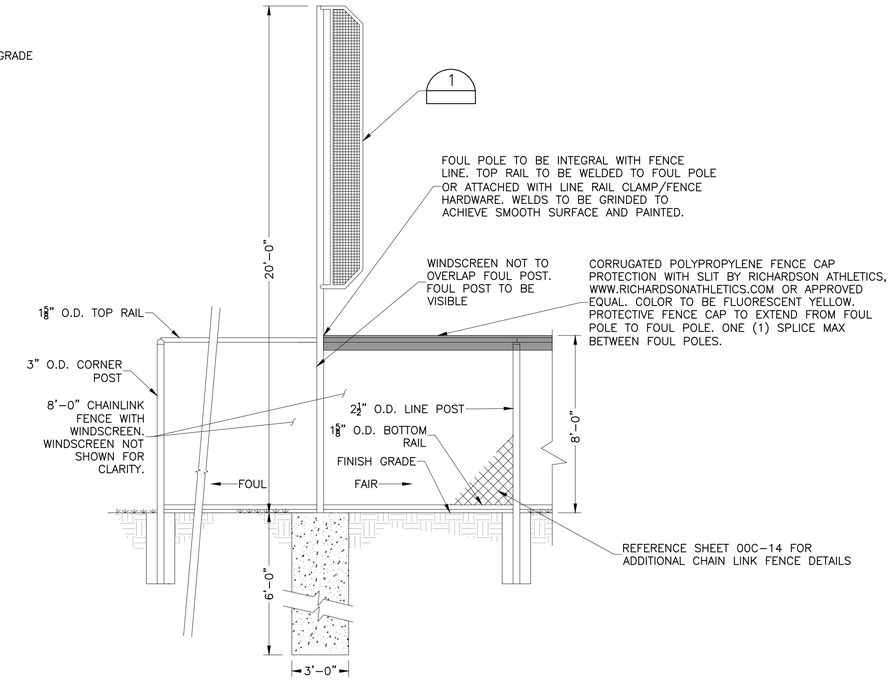

FOUL POLE & OUTFIELD FENCE CONNECTION 3
N.T.S.

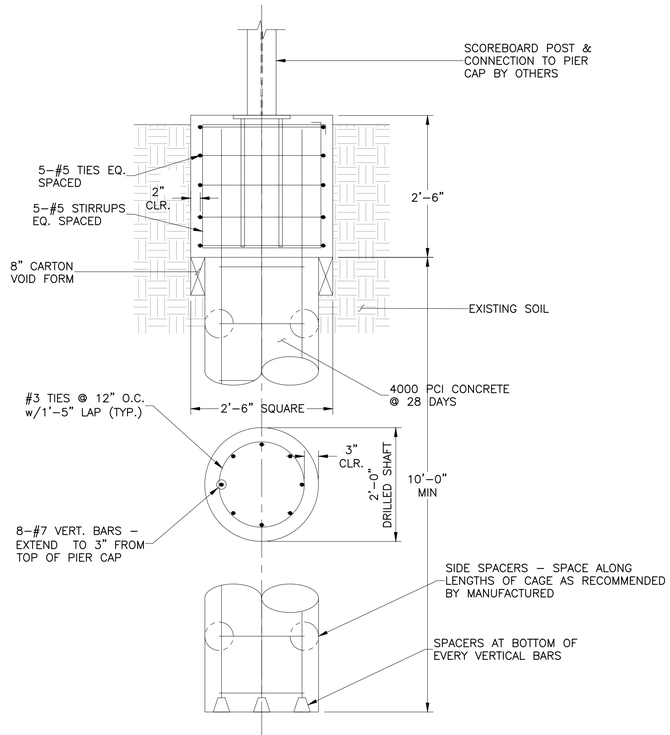

SOFTBALL SCOREBOARD FOUNDATION SECTION 5
3/4"=1'-0"

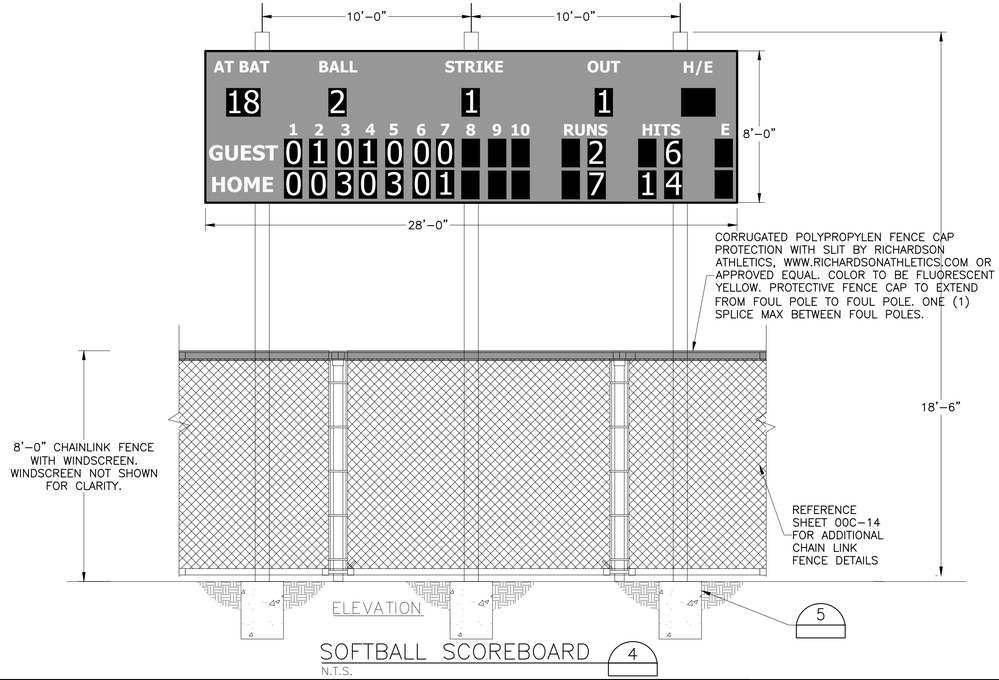

SOFTBALL SCOREBOARD 4
N.T.S.

NOTES:

1. THIS DETAIL SHOWS DESIGN INTENT OF MATERIALS, FINISHES AND APPROXIMATE DIMENSIONS ONLY.
2. SCOREBOARDS AT THE EXISTING SOFTBALL FIELDS TO BE SALVAGED AND DELIVERED AT AREA DESIGNATED BY THE CITY. REFERENCE SOFTBALL FIELDS ELECTRICAL SHEETS FOR ADDITIONAL INFORMATION.
3. SCOREBOARD SHALL BE VARSITY SCOREBOARDS/MODEL 3328 OR APPROVED EQUAL, EQUIPPED WITH WIRELESS REMOTE CONTROL AND LCD CONTROLLER CARRYING CASE. SCOREBOARD BACKGROUND COLOR SHALL BE CORE BLUE/PMS 287.
4. CONTRACTOR TO PROVIDE SHOP DRAWINGS FOR APPROVAL.
5. SCOREBOARD STRUCTURAL SUPPORT POSTS TO BE PAINTED BLACK.

SITE DEVELOPMENT NUMBER 2025-476

REV. NO.	DATE	DESCRIPTION

PROJECT MANAGER:	PK
DESIGNED BY:	PG/RM
CHECKED BY:	DCS/JTH
DRAWN BY:	PG/RM
DCS PROJECT NO:	20101597

DCS ENGINEERING, LLC
1101 S. CAPITAL OF TEXAS HIGHWAY, BUILDING G-100
AUSTIN, TX 78746

TEL: (512) 614-6171
T.B.P.E. FIRM NO. F-13162

BudaTx breathe easy here™

BUDA SPORTSPLEX - PHASE I

STATE OF TEXAS
DARREN C STROZEWSKI
87908
LICENSED PROFESSIONAL ENGINEER
08/04/2025

SOFTBALL FIELDS

SOFTBALL FIELDS - DETAILS - SHEET NO. 1

DATE: JULY 2025
SCALE: AS NOTED
DRAWING: 02C-12

FILENAME: Z:\Projects 1551-1599\20101597 - Buda - Sportsplex\510 - Re-bid Dwgs\500 - Final_Design\500 - Final_Design\5.1 - Drawings\Sheet Files\Construction Plans\02C-12.dwg, LAST SAVED ON: Aug 01 2025 2:43pm, PLOTTED BY: RMALDONADO, ON: Aug 07 2025 8:25am, CFG:

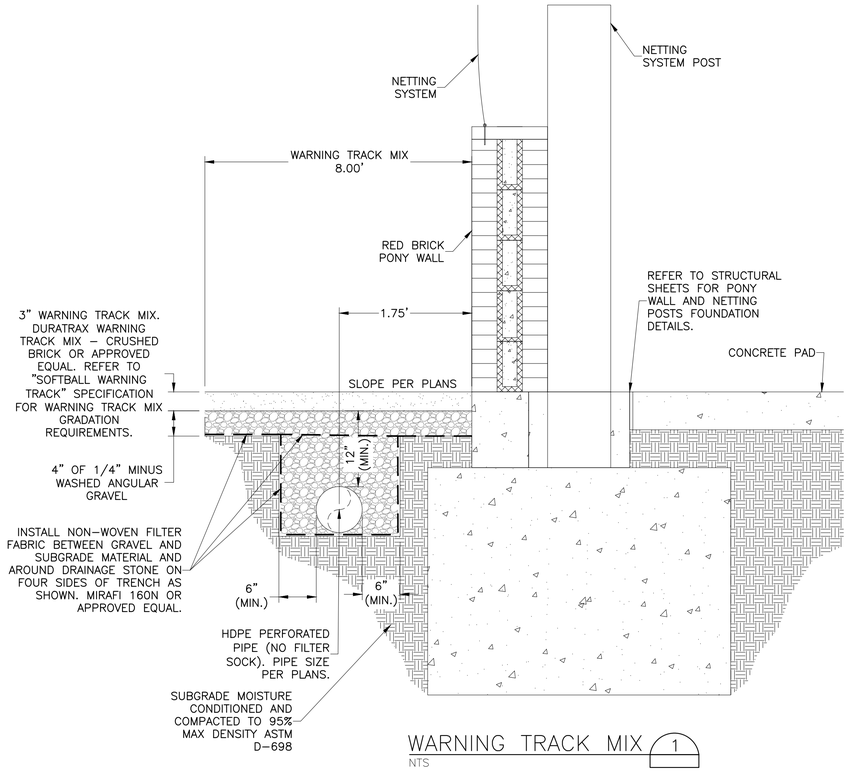

WARNING TRACK MIX 1
NTS

NOTES:
1. SAND ROOTZONE TO BE TOPSOIL MIX HAVING 90% SAND AND 10% SILT/CLAY. REFER TO SPECIFICATIONS

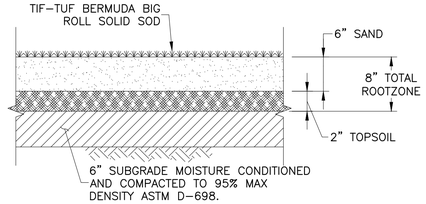

NATURAL TURF SECTION 2
NTS

NOTE:
1. SUBDRAIN TRENCH WALL CUTS SHALL BE CLEAN AND STRAIGHT.
2. THE 3/8" WASHED PEA GRAVEL SHALL BE TESTED TO CONFIRM COMPATIBILITY WITH THE ROOTZONE SAND TO ENSURE BRIDGING AT THE GRAVEL–SAND INTERFACE.

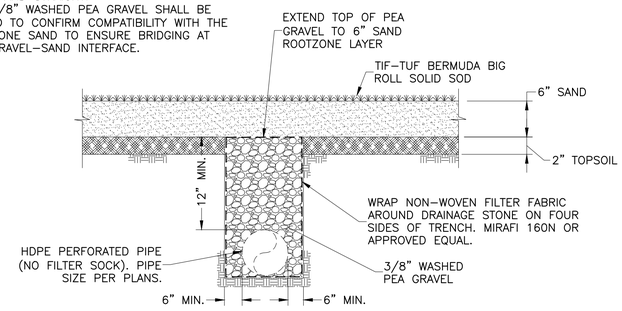

NATURAL TURF FIELD SUBDRAIN 3
NTS

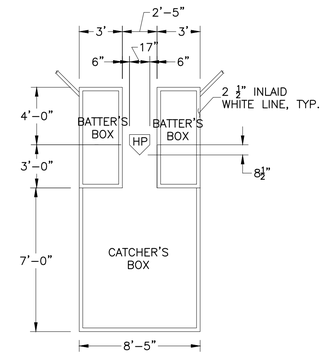

SOFTBALL BATTER'S AND CATCHER'S BOX 4
NTS



NOTES:
1. SIDELINES DIMENSIONS FROM BASE LINE TO PONY WALL VARIES PER FIELD. REFER TO PLANS FOR DETAILS.
2. ALL LINES ON THE PLAYING FIELD MUST BE 2–4 INCHES IN WIDTH AND BE MARKED WITH CHALK OR MATERIAL THAT IS NOT INJURIOUS OR IRRITATING TO EYES OR SKIN. LIME OR CAUSTIC MATERIAL OF ANY KIND IS PROHIBITED.
3. REFER TO DETAIL 4 ON THIS SHEET FOR BATTER'S BOX AND CATCHER'S BOX DIMENSIONS.

NOTES:
1. LOCATION OF OUTFIELD MARKERS ARE AS FOLLOWS: 1' INSIDE FIELD OF PLAY FROM FOUL POLE ALONG BACK OF FENCE. CENTER OF OUTFIELD WALL MARKERS SHALL BE 1' BELOW TOP OF OUTFIELD FENCE.

OUTFIELD FENCE NUMBERING MARKINGS 6
NTS

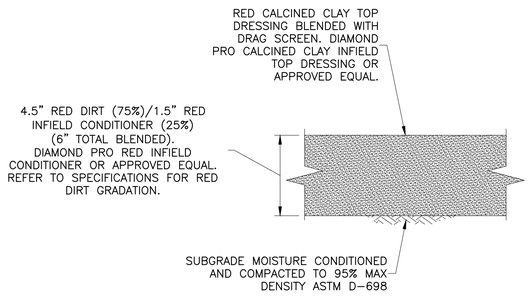

INFIELD MIX 7
NTS

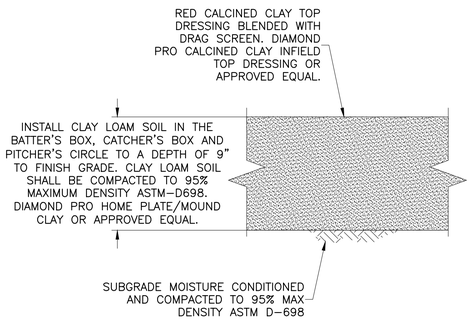

MOUND CLAY 8
NTS

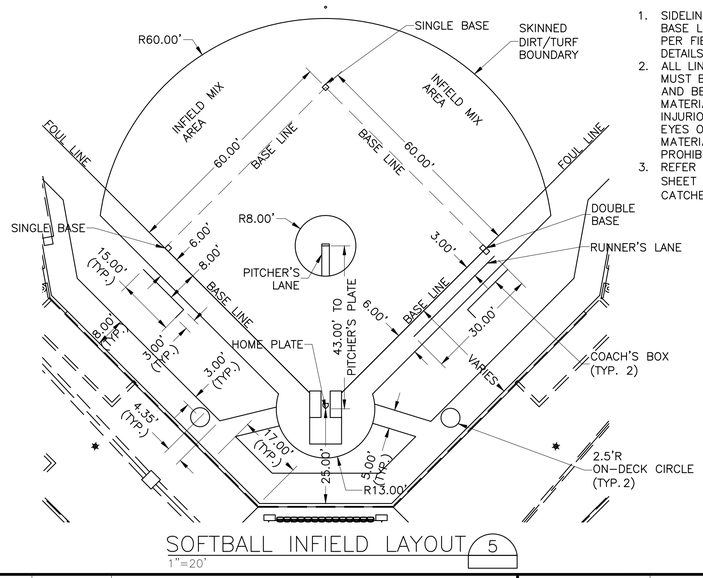

SOFTBALL INFIELD LAYOUT 5
1"=20'

SITE DEVELOPMENT NUMBER 2025–476

REV. NO.	DATE	DESCRIPTION

PROJECT MANAGER:	PK
DESIGNED BY:	PG/RM
CHECKED BY:	DCS/JTH
DRAWN BY:	PG/RM
DCS PROJECT NO:	20101597

DCS ENGINEERING, LLC
1101 S. CAPITAL OF TEXAS HIGHWAY, BUILDING G–100
AUSTIN, TX 78746
TEL: (512) 614–6171
T.B.P.E. FIRM NO. F–13162

BudaTx breathe easy here℠

BUDA SPORTSPLEX - PHASE I

STATE OF TEXAS
J. PATRICIO GALINDO RANGEL
154316
LICENSED PROFESSIONAL ENGINEER
08/04/25.

SOFTBALL FIELDS

SOFTBALL FIELDS - DETAILS - SHEET NO. 2

DATE: JULY 2025
SCALE: AS NOTED
DRAWING: 02C-13

FILENAME: Z:\Projects 1551–1599\20101597 – Buda – Sportsplex\510 – Re–bid Dwgs\500 – Final_Design\500 – Final_Design\5.1 – Drawings\Sheet Files\Construction Plans\02C–13.dwg, LAST SAVED ON: Aug 01 2025 2:43pm, PLOTTED BY: RMALDONADO, ON: Aug 07 2025 8:26am, CFG:

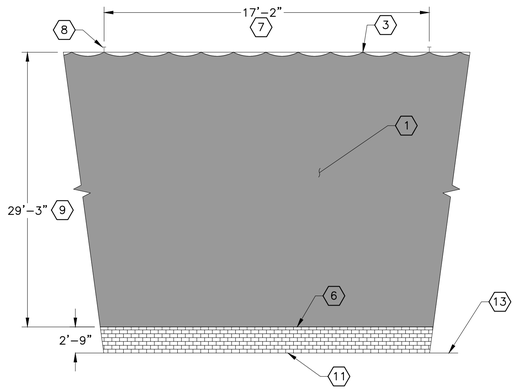

TYPICAL BACKSTOP NETTING ELEVATION 1
1/8"=1'-0"

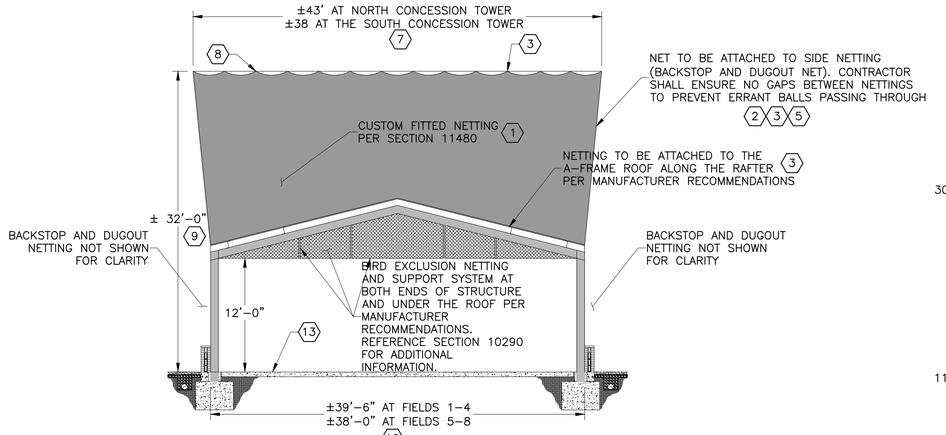

TYPICAL SHADE STRUCTURES ROOF NETTING ELEVATION 2
1/8"=1'-0"

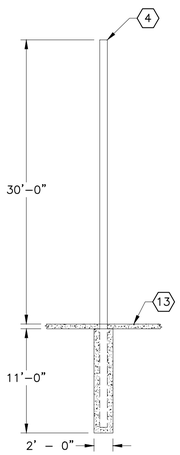

SOFTBALL NET POLE FOUNDATION 3
1/8"=1'-0"

NOTES:

1. THESE DETAILS SHOW DESIGN INTENT OF MATERIALS, FINISHES, AND APPROXIMATE DIMENSIONS ONLY.
2. REFERENCE SOFTBALL FIELDS SHEETS FOR NET POLE LOCATIONS.
3. CONTRACTOR TO INSTALL SPORTS NETTING, BIRD NETTING, AND FENCING AS RECOMMENDED BY MANUFACTURER(S).
4. BACKSTOP AND DUGOUT NETTING EXTENDS FROM ONE NETTING POST ADJACENT TO THE BULL PEN/OUTDOOR BATTING CAGE TO THE OTHER, AT EACH SOFTBALL FIELD.
5. REFERENCE SOFTBALL FIELDS CIVIL SHEETS FOR OUTFIELD FENCE LOCATIONS WITH NETTING; BETWEEN SOFTBALL FIELDS NO. 1 AND 8, AND AT SOFTBALL FIELD NO. 2.
6. REFERENCE SHEET 13C-04 FOR ADDITIONAL FENCING/NETTING INFORMATION.
7. BIRD EXCLUSION NETTING AND SUPPORT SYSTEM SHALL BE INSTALLED AT BOTH ENDS OF STRUCTURE AND UNDER THE ROOF PER MANUFACTURER RECOMMENDATIONS. REFERENCE SECTION 10290 FOR ADDITIONAL INFORMATION.

KEY NOTES:

1. #36 GAUGE KNOTTED NYLON PER SECTION 11480
2. TIE VERTICAL SEAM BETWEEN PANELS TOGETHER W/ TIE WRAPS THROUGH GROMMET @ 12" O.C.
3. CABLE TIE NETTING TO CABLE W/ 2" ZINC SNAP HOOKS THROUGH GROMMETS @ 12" O.C. W/ QUICK SNAP CARABINER/STEEL HOGRINGS PER SECTION 11480
4. 9 5/8" O.D. NETTING POST PER SECTION 11480, DIRECTLY EMBEDDED IN 3000 PSI CONCRETE
5. CABLE DOWN SUPPORT. ATTACH W/ QUICK SNAP CARABNER/STEEL HOGRINGS
6. 1/2" O.D. X 16" LONG EYE BOLT, DRILL AND EPOXY SET INTO 12" WIDE PONYWALL. SET EYE BOLTS EVERY 2' O.C. REFERENCE SHEETS 02S-02 AND 02S-03 FOR ADDITIONAL INFORMATION
7. NETTING TO BE SUSPENDED BY ROOF STRUCTURAL BEAMS PER MANUFACTURER'S RECOMMENDATION. DISTANCE TO BE FIELD VERIFIED. REFERENCE SOFTBALL CONCESSION STANDS STRUCTURAL SHEETS FOR ADDITIONAL INFORMATION
8. NETTING TO BE ATTACHED TO SOFTBALL CONCESSION STANDS ROOF PER MANUFACTURER'S RECOMMENDATIONS. DIMENSIONS TO BE FIELD VERIFIED.
9. HEIGHT OF NETTING TO BE FIELD VERIFIED. REFERENCE SOFTBALL CONCESSION STANDS STRUCTURAL SHEETS FOR ADDITIONAL INFORMATION
10. THE BOTTOM OF THE NETTING SHALL BE CUSTOM FITTED TO OVERLAP THE TOP OF CHAINLINK FENCE
11. FOUNDATION NOT SHOWN FOR CLARITY. REFERENCE SHEETS 02S-01 AND 02S-02 FOR ADDITIONAL INFORMATION
12. CABLE SUPPORT PER SECTION 11480 WITH WELDED 1/2" O.D. X 12" LONG EYE BOLT TO OFFSET NETTING. ATTACH W/ QUICK SNAP CARABINER/STEEL HOGRINGS TYP. PER MANUFACTURER'S RECOMMENDATION
13. REFERENCE SITE CIVIL SHEETS FOR TOP OF CONCRETE ELEVATIONS
14. SHADE STRUCTURE AND DUGOUT SHOWN FOR CLARITY
15. REFERENCE SHEET 00C-14 FOR ADDITIONAL FENCING DETAILS
16. CONTRACTOR SHALL ENSURE NO CONFLICT BETWEEN THE PONY WALLS LOCATION AND THE SHADE STRUCTURE'S MAIN FRAME WIDTH. SOFTBALL FIELDS DIMENSIONS SHALL GOVERN

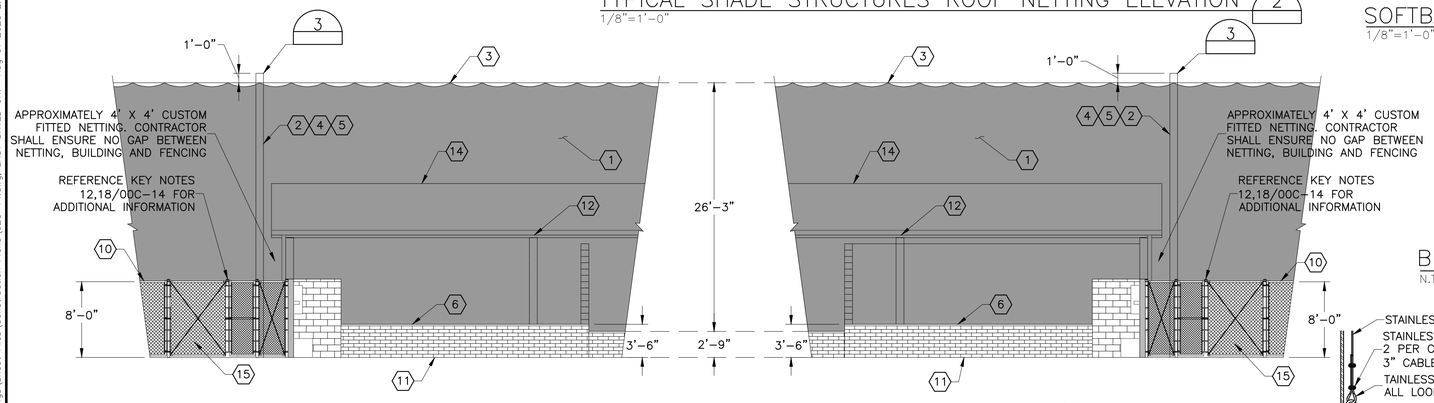

TYPICAL BACKSTOP AND DUGOUT NETTING ELEVATION 4
1/8"=1'-0"

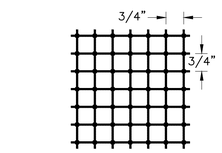

BIRD NETTING SQUARE MESH 5
N.T.S.

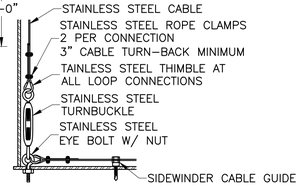

SUPPORT CABLE CONNECTIONS

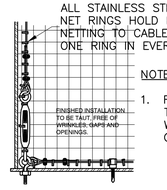

NOTES:

1. FINISHED INSTALLATION TO BE TAUT,FREE OF WRINKLES,GAPS AND OPENINGS.

NET TO CABLE CONNECTIONS

BIRD NETTING TYPICAL CONNECTIONS 6
N.T.S.

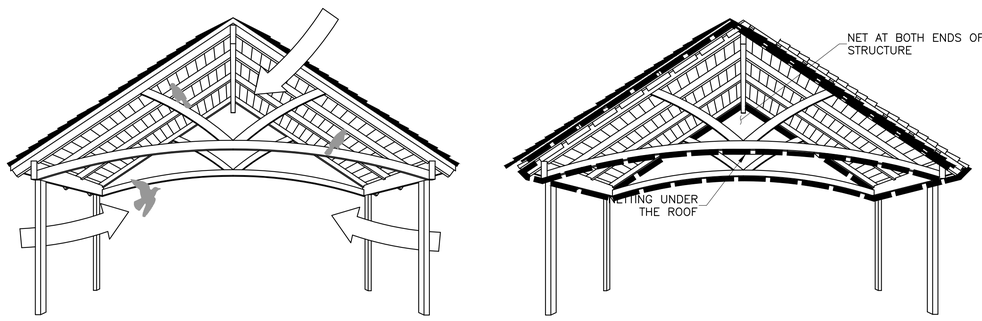

NOTES:

1. IDENTIFY ALL THE PROBLEM AREAS AND THE BIRD SPECIES. FIND ALL THE ROUTES THAT THE BIRDS USE TO GET INTO AND OUT OF THE AREA.
2. USE FRAMES TO FASTEN BIRD NETTING AROUND THE PERIMETER OF OPENINGS.
3. USE COMMON LUMBER TO HELP FASTEN NETTING TO HELP FASTEN NETTING TO STEEL.

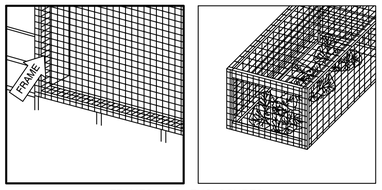

FRAMES AND ENCLOSURES

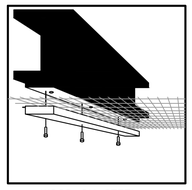

WOOD ON STEEL

BIRD NETTING TYPICAL INSTALLATION METHODS 7
N.T.S.

SITE DEVELOPMENT NUMBER 2025-476

REV. NO.	DATE	DESCRIPTION

PROJECT MANAGER:	PK
DESIGNED BY:	PG/RM
CHECKED BY:	DCS/JTH
DRAWN BY:	PG/RM
DCS PROJECT NO:	20101597

DCS ENGINEERING, LLC
1101 S. CAPITAL OF TEXAS HIGHWAY, BUILDING G-100
AUSTIN, TX 78746

TEL: (512) 614-6171
T.B.P.E. FIRM NO. F-13162

BudaTx breathe easy here™

BUDA SPORTSPLEX - PHASE I

STATE OF TEXAS
DARREN C STROZEWSKI
87908
LICENSED PROFESSIONAL ENGINEER
08/04/2025

SOFTBALL FIELDS

SOFTBALL FIELDS - DETAILS - SHEET NO. 3

DATE: JULY 2025
SCALE: AS NOTED
DRAWING: 02C-14

FILENAME: Z:\Projects 1551-1599\20101597 - Buda - Sportsplex\510 - Re-bid Dwgs\500 - Final_Design\500 - Final_Design\5.1 - Drawings\Sheet Files\Construction Plans\02C-14.dwg, LAST SAVED ON: Aug 01 2025 2:43pm, PLOTTED BY: RMALDONADO, ON: Aug 07 2025 8:26am, CFG:

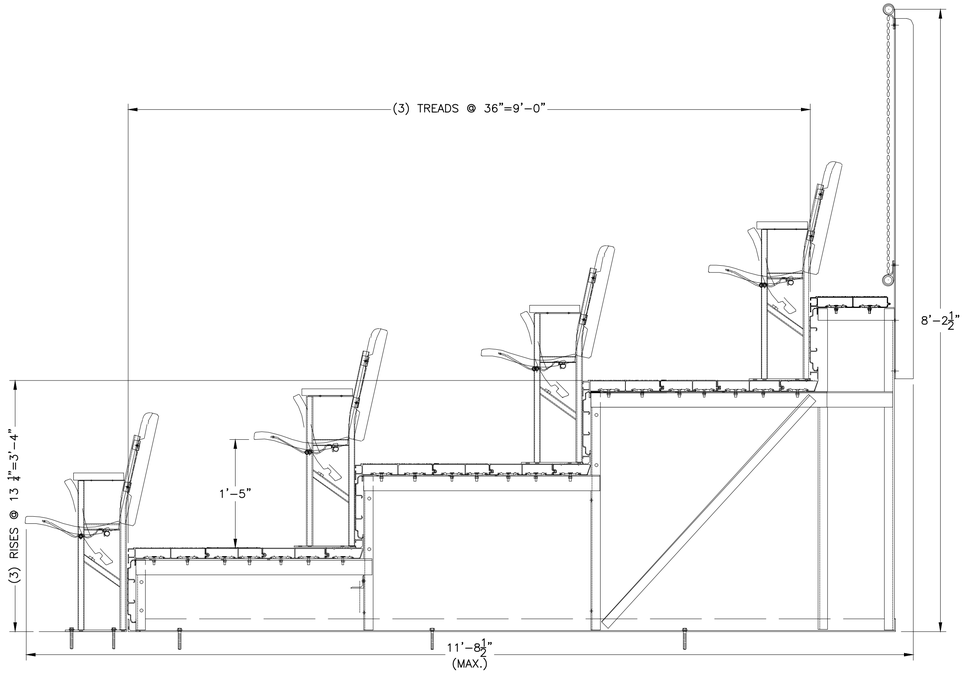

BLEACHERS SIDE ELEVATION VIEW 1

1"=1'-0"

NOTES:

1. REFER TO SPECIFICATION SECTION 13207 FOR SOFTBALL NON-ELEVATED ANGLE-FRAME BLEACHERS WITH STADIUM CHAIRS.

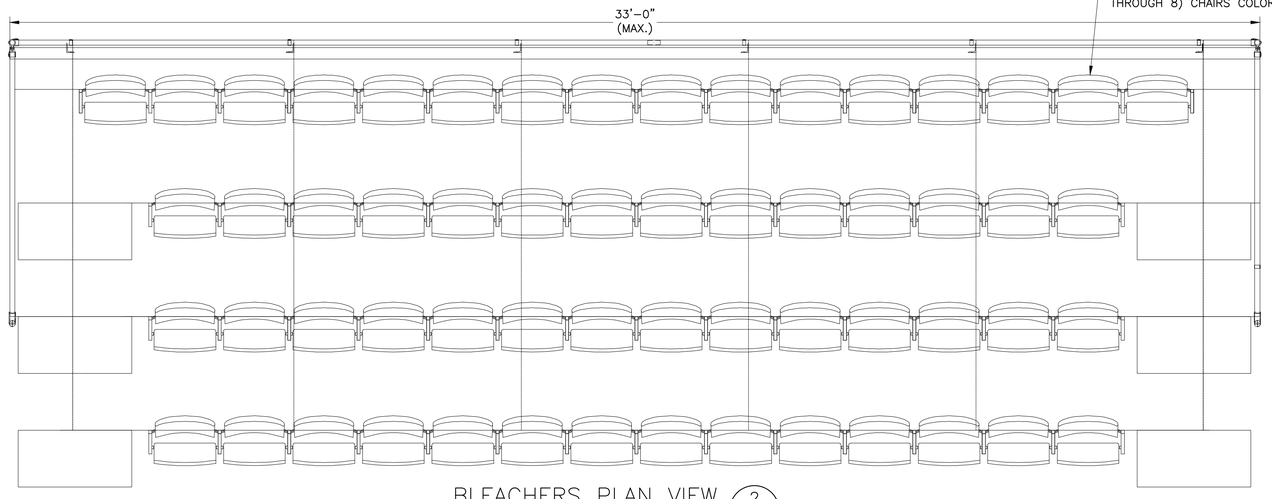

BLEACHERS PLAN VIEW 2

1/2"=1'-0"

SITE DEVELOPMENT NUMBER 2025-476

REV. NO.	DATE	DESCRIPTION

PROJECT MANAGER:	PK
DESIGNED BY:	PG/RM
CHECKED BY:	DCS/JTH
DRAWN BY:	PG/RM
DCS PROJECT NO:	20101597

DCS ENGINEERING, LLC
1101 S. CAPITAL OF TEXAS HIGHWAY, BUILDING G-100
AUSTIN, TX 78746

TEL: (512) 614-6171
T.B.P.E. FIRM NO. F-13162

BudaTx breathe easy here™

BUDA SPORTSPLEX - PHASE I

STATE OF TEXAS
J. PATRICIO GALINDO RANGEL
154316
LICENSED PROFESSIONAL ENGINEER
08/04/25.

SOFTBALL FIELDS

SOFTBALL FIELDS - DETAILS -
SHEET NO. 4

DATE: JULY 2025

SCALE: AS NOTED

DRAWING: 02C-15

FILENAME: Z:\Projects 1551-1599\20101597 - Buda - Sportsplex\510 - Re-bid Dwgs\500 - Final_Design\500 - Final_Design\5.1 - Drawings\Sheet Files\Construction Plans\02C-15.dwg, LAST SAVED ON: Aug 01 2025 2:43pm, PLOTTED BY: RMALDONADO, ON: Aug 07 2025 8:26am, CFG:

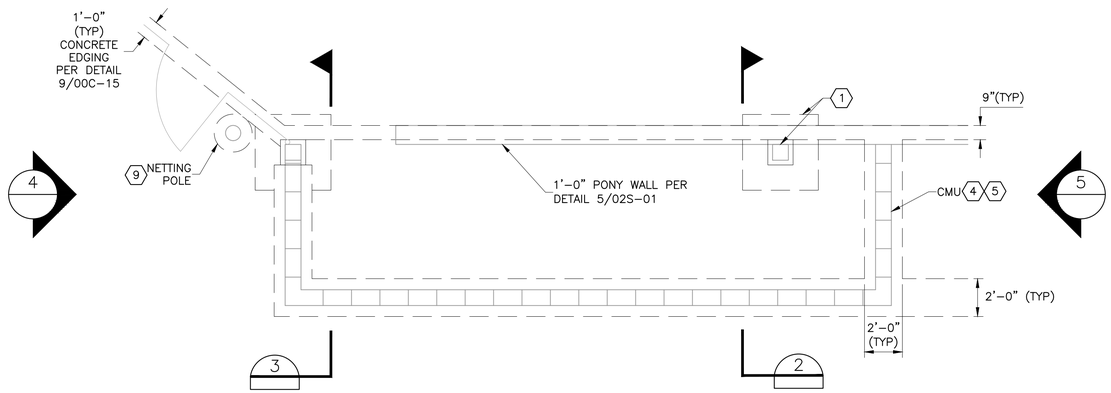

DUGOUT – FOUNDATION PLAN 1

1/4"=1'-0"

NOTES:

1. REFERENCE SOFTBALL FIELDS CIVIL SHEETS FOR LOCATION OF DUGOUTS.
2. CONTRACTOR SHALL CONFIRM LOCATION OF UNDERGROUND UTILITIES BEFORE CONSTRUCTION WORK STARTS.

KEY NOTES:

1. REFERENCE SOFTBALL CONCESSION STANDS STRUCTURAL SHEETS FOR ADDITIONAL INFORMATION
2. NOT USED.
3. WELDED ½" O.D. X 12" LONG EYE BOLT PER MANUFACTURER RECOMMENDATIONS
4. SPLIT FACE CMU. REFERENCE SHEET 00S–04 FOR CMU WALL REINFORCEMENT. REFERENCE TO TABLE ON 02S–02 FOR EXTERIOR COLOR. FINISH PER SPECIFICATIONS
5. CMU WALL: 10" SPLIT FACE –16"X8"10" NOM TYP –REINFORCE PER STRUCTURAL SPECIFICATIONS –FINISH PER SPECIFICATIONS
6. REFERENCE SHEET 02C–13 FOR ADDITIONAL SUBGRADE AND DRAINAGE INFORMATION
7. REFERENCE DETAIL 3/02S–02 FOR DUGOUT EQUIPMENT ADDITIONAL INFORMATION
8. 3" O.D FENCE POST TO BE ATTACHED TO STEEL COLUMN AND CAST INSIDE THE 12" DEEP ISOLATION SLEEVE
9. REFERENCE SHEET 02C–14 FOR ADDITIONAL NETTING INFORMATION
10. NOT USED.
11. REFERENCE SITE CIVIL SHEETS FOR TOP OF CONCRETE ELEVATIONS
12. REFERENCE SHEET 00C–13 FOR EXPANSION JOINT AND EXPANSION JOINT SPACING ADDITIONAL INFORMATION
13. ½" O.D. X 16" LONG EYE BOLT, DRILL AND EPOXY SET INTO 12" WIDE PONYWALL. SET EYE BOLTS EVERY 2' O.C.
14. ROOF OF PROPOSED DUGOUT STRUCTURES WILL BE PROVIDED AND INSTALLED BY OTHERS

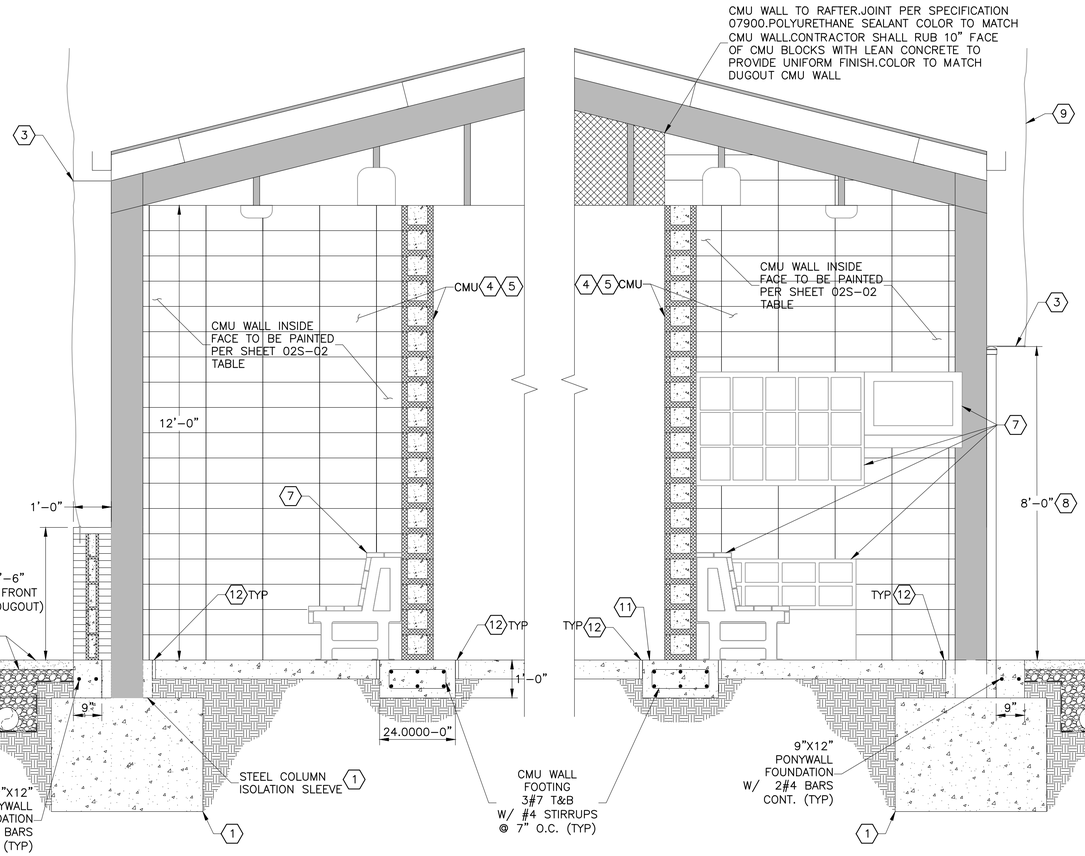

DUGOUT – SECTION 2

1/2"=1'-0"

DUGOUT – SECTION 3

1/2"=1'-0"

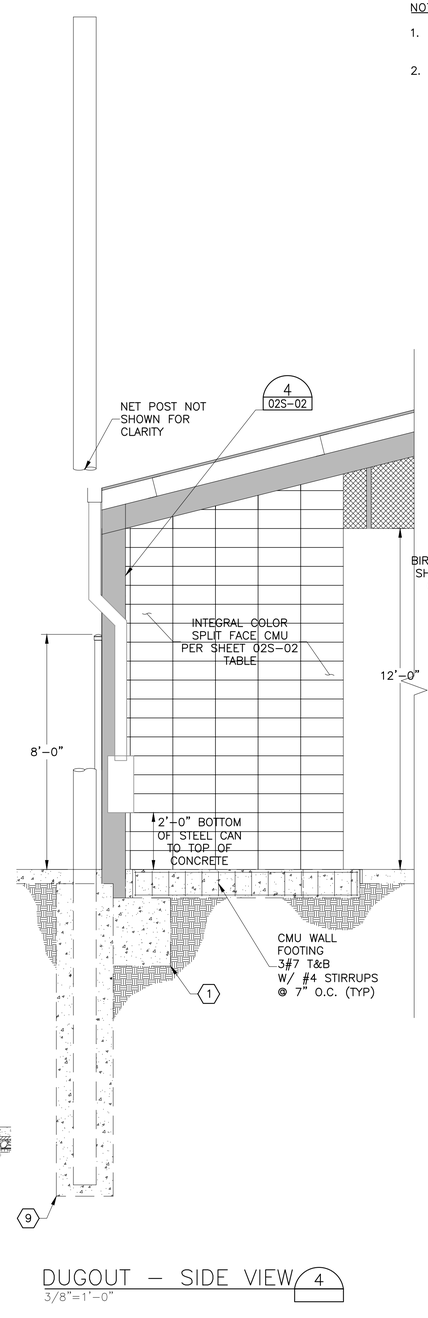

DUGOUT – SIDE VIEW 4

3/8"=1'-0"

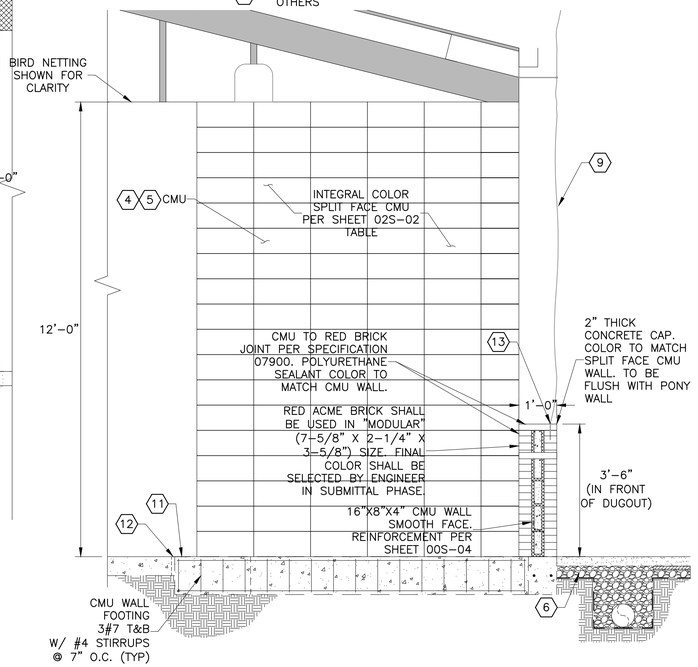

DUGOUT – SIDE VIEW 5

1/2"=1'-0"

ALL RESPONSIBILITY FOR THE ADEQUACY OF THESE PLANS REMAINS WITH THE ENGINEER WHO PREPARED THEM. IN REVIEWING THESE PLANS, THE CITY OF BUDA MUST RELY UPON THE ADEQUACY OF THE WORK OF THE DESIGN ENGINEER.

SITE DEVELOPMENT NUMBER 2025–476

REV. NO.	DATE	DESCRIPTION

PROJECT MANAGER:	PK
DESIGNED BY:	PG/RM
CHECKED BY:	DCS/JTH
DRAWN BY:	PG/RM
DCS PROJECT NO:	20101597

DCS ENGINEERING, LLC
1101 S. CAPITAL OF TEXAS HIGHWAY, BUILDING G–100
AUSTIN, TX 78746

TEL: (512) 614–6171
T.B.P.E. FIRM NO. F–13162

BudaTx breathe easy here™

BUDA SPORTSPLEX - PHASE I

STATE OF TEXAS
DARREN C STROZEWSKI
87908
LICENSED PROFESSIONAL ENGINEER
08/04/2025

SOFTBALL FIELDS

STRUCTURAL - DUGOUT DETAILS - SHEET NO.1

DATE: JULY 2025

SCALE: AS NOTED

DRAWING: 02S-01

FILENAME: Z:\Projects 1551–1599\20101597 – Buda – Sportsplex\510 – Re–bid Dwgs\500 – Final_Design\500 – Final_Design\5.1 – Drawings\Sheet Files\Construction Plans\02S–01.dwg, LAST SAVED ON: Aug 01 2025 2:43pm, PLOTTED BY: RMALDONADO, ON: Aug 07 2025 8:26am, CFG:

WATER POLLUTION ABATEMENT PLAN ATTACHMENT G

INSPECTION, MAINTENANCE, REPAIR, AND RETROFIT PLAN

Attachment G: Inspection, Maintenance, Repair, and Retrofit Plan

Inspection, Maintenance, Repair, and Retrofit Plan, and Schedule for Batch Detention BMP

PROJECT NAME: Buda Sportsplex

ADDRESS: 310 Buda Sportsplex Dr.

CITY, STATE ZIP: Buda, Tx 78610

BATCH DETENTION

Routine Maintenance:

Batch detention basins may have somewhat higher maintenance requirements than an extended detention basin since they are active stormwater controls. The maintenance activities are identical to those of extended detention basins with the addition of maintenance and inspections of the automatic controller and the valve at the outlet.

Inspections. Inspections should take place a minimum of twice a year. One inspection should take place during wet weather to determine if the basin is meeting the target detention time of 12 hours and a drawdown time of no more than 48 hours. The remaining inspections should occur between storm events so that manual operation of the valve and controller can be verified. The level sensor in the basin should be inspected and any debris or sediment in the area should be removed. The outlet structure and the trash screen should be inspected for signs of clogging. Debris and sediment should be removed from the orifice and outlet(s) as described in previous sections. Debris obstructing the valve should be removed. During each inspection, erosion areas inside and downstream of this BMP should be identified and repaired/revegetated immediately.

Mowing. The basin, basin side-slopes, and embankment of the basin must be mowed to prevent woody growth and control weeds. A mulching mower should be used, or the grass clippings should be caught and removed. Mowing should take place at least twice a year, or more frequently if vegetation exceeds 18 inches in height. More frequent mowing to maintain aesthetic appeal may be necessary in landscaped areas.

Litter and Debris Removal. Litter and debris removal should take place at least twice a year, as part of the periodic mowing operations and inspections. Debris and litter should be removed from the surface of the basin. Particular attention should be paid to floatable debris around the outlet structure. The outlet should be checked for possible clogging or obstructions and any debris removed.

Erosion control. The basin side slopes and embankment all may periodically suffer from slumping and erosion. To correct these problems, corrective action, such as regrading and revegetation, may be necessary. Correction of erosion control should take place whenever required based on the periodic inspections.

Nuisance Control. Standing water or soggy conditions may occur in the basin. Some standing water may occur after a storm event since the valve may close with 2 to 3 inches of water in the basin. Some flow into the basin may also occur between storms due to spring flow and residential water use that enters the storm sewer system. Twice a year, the facility should be evaluated in terms of nuisance control (insects, weeds, odors, algae, etc.).

Structural Repairs and Replacement. With each inspection, any damage to structural elements of the basin (pipes, concrete drainage structures, retaining walls, etc.) should be identified and repaired immediately. An example of this type of repair can include patching of cracked concrete, sealing of voids, removal of vegetation from cracks and joints. The various inlet/outlet structures in a basin will eventually deteriorate and must be replaced.

Sediment Removal. A properly designed batch detention basin will accumulate quantities of sediment over time. The accumulated sediment can detract from the appearance of the facility and reduce the pollutant removal performance of the facility. The sediment also tends to accumulate near the outlet structure and can interfere with the level sensor operation. Sediment shall be removed from the basin at least every 5 years, when sediment depth exceeds 6 inches, when the sediment interferes with the level sensor or when the basin does not drain within 48 hours. Care should be taken not to compromise the basin lining during maintenance.

Logic Controller. The Logic Controller should be inspected as part of the twice- yearly investigations. Verify that the external indicators (active, cycle in progress) are operating properly by turning the controller off and on, and by initiating a cycle by triggering the level sensor in the basin. The valve should be manually opened and closed using the open/close switch to verify valve operation and to assist in inspecting the valve for debris. The solar panel should be inspected and any dust or debris on the panel should be carefully removed. The controller and all other circuitry and wiring should be inspected for signs of corrosion, damage from insects, water leaks, or other damage. At the end of the inspection, the controller should be reset.

VEGETATIVE FILTER STRIPS

Routine Maintenance:

Once a vegetated area is well established, little additional maintenance is generally necessary. The key to establishing a viable vegetated feature is the care and maintenance it receives in the first few months after it is planted. Once established, all vegetated BMPs require some basic maintenance to ensure the health of the plants including:

Pest Management: An Integrated Pest Management (IPM) Plan should be developed for vegetated areas. This plan should specify how problem insects and weeds will be controlled with minimal or no use of insecticides and herbicides.

Seasonal Mowing and Lawn Care: If the filter strip is made up of turf grass, it should be mowed as needed to limit vegetation height to 18 inches, using a mulching mower (or removal of clippings). If native grasses are used, the filter may require less frequent mowing, but a minimum of twice annually. Grass clippings and brush debris should not be deposited on vegetated filter strip areas. Regular mowing should also include weed control practices; however, herbicide use should be kept to a minimum (Urbonas et al., 1992). Healthy grass can be maintained without using fertilizers because runoff usually contains sufficient nutrients. Irrigation of the site can help assure a dense and healthy vegetative cover.

Inspection: Inspect filter strips at least twice annually for erosion or damage to vegetation; however, additional inspection after periods of heavy runoff is most desirable. The strip should be checked for uniformity of grass cover, debris and litter, and areas of sediment accumulation. More frequent inspections of the grass cover during the first few years after establishment will help to determine if any problems are developing, and to plan for long-term restorative maintenance needs. Bare spots and areas of erosion identified during semi-annual inspections must be replanted and restored to meet specifications. Construction of a level spreader device may be necessary to reestablish shallow overland flow.

Debris and Litter Removal: Trash tends to accumulate in vegetated areas, particularly along highways. Any filter strip structures (i.e. level spreaders) should be kept free of obstructions to reduce floatable being flushed downstream, and for aesthetic reasons. The need for this practice is determined through periodic inspection but should be performed no less than 4 times per year.

Sediment Removal: Sediment removal is not normally required in filter strips, since the vegetation normally grows through it and binds it to the soil. However, sediment may accumulate along the upstream boundary of the strip preventing uniform overland flow. Excess sediment should be removed by hand or with flat- bottomed shovels.

Grass Reseeding and Mulching: A healthy dense grass should be maintained on the filter strip. If areas are eroded, they should be filled, compacted, and reseeded so that the final grade is level. Grass damaged during the sediment removal process should be promptly replaced using the same seed mix used during filter strip establishment. If possible, flow should be diverted from the damaged areas until the grass is firmly established. Bare spots and areas of erosion identified during semi-annual inspections must be replanted and restored to meet specifications. Corrective maintenance, such as weeding or replanting should be done more frequently in the first two to three years after installation to ensure stabilization. Dense vegetation may require irrigation immediately after planting, and during particularly dry periods, particularly as the vegetation is initially established.

An amended copy of this document will be provided to the Texas Commission on Environmental Quality within thirty (30) days for any changes in the following information.

Responsible Party for Maintenance: Tony Host

Address: 405 E. Loop St

City, State, Zip: Buda Tx 78610

Telephone Number: 512-394-2338

Signature of Responsible Party:

