UNDERGROUND STORAGE TANK FACILITY PLAN MODIFICATION APPLICATION

FOR

HEB 388

6001 W Parmer Ln,
Austin, TX 78727

Prepared For:

H.E.B. GROCERY COMPANY, LP
P.O. BOX 240910
SAN ANTONIO, TX 78224

Prepared By:

Sandlin Services, LLC
TBPELS Firm # 21356
P: (806) 679-7303

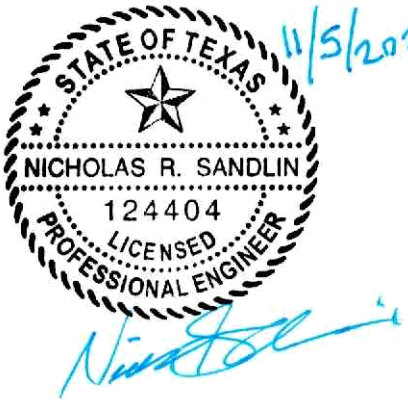

November 5, 2025

TABLE OF CONTENTS

Edwards Aquifer Application Cover Page (TCEQ-20705)

General Information Form (TCEQ-0587)
- Attachment A – Road Map
- Attachment B – USGS / Edwards Recharge Zone Map
- Attachment C – Project Description

Geologic Assessment Form (TCEQ-0585)
- Attachment A – Geologic Assessment Table (TCEQ-0585-Table)
- Attachment B – Stratigraphic Column
- Attachment C – Site Geology
- Attachment D – Site Geologic Map(s)

Modification of a Previously Approved Plan (TCEQ-0590)
- Attachment A – Original Approval Letter and Approved Modification Letters
- Attachment B – Narrative of Proposed Modification
- Attachment C – Current Site Plan of the Approved Project

Underground Storage Tank Facility Plan (TCEQ-0583)
- Attachment A – Detailed Narrative of UST Facility
- Attachment B – Manufacturer Information for Tanks
- Attachment C – Alternative Design and Protection Method for Tanks (if proposed)
- Attachment D – Manufacturer Information for Piping
- Attachment E – Alternative Design and Protection Method for piping (if proposed)
- Attachment F – Tertiary Containment Method
- Attachment G – Exception to the Geologic Assessment (if requested)
- Attachment H – Profile Drawing(s)
- Attachment I – Initial and Continuing Training
- Attachment J – Release Detection Maintenance
- Site Plan

Temporary Stormwater Section (TCEQ-0602)
- Attachment A – Spill Response Actions
- Attachment B – Potential Sources of Contamination
- Attachment C – Sequence of Major Activities
- Attachment D – Temporary Best Management Practices and Measures
- Attachment E – Request to Temporarily Seal a Feature, if sealing a feature
- Attachment F – Structural Practices
- Attachment G – Drainage Area Map
- Attachment H – Temporary Sediment Pond(s) Plans and Calculations
- Attachment I – Inspection and maintenance for BMPs
- Attachment J – Schedule of Interim and Permanent Soil Stabilization Practices

Agent Authorization Form (TCEQ-0599)

Application Fee Form (TCEQ-0574)

Check Payable to the "Texas Commission on Environmental Quality"

Core Data Form (TCEQ-10400)

Edwards Aquifer Application Cover Page (TCEQ-20705)

Texas Commission on Environmental Quality

Edwards Aquifer Application Cover Page

Our Review of Your Application

The Edwards Aquifer Program staff conducts an administrative and technical review of all applications. The turnaround time for administrative review can be up to 30 days as outlined in 30 TAC 213.4(e). Generally administrative completeness is determined during the intake meeting or within a few days of receipt. The turnaround time for technical review of an administratively complete Edwards Aquifer application is 90 days as outlined in 30 TAC 213.4(e). Please know that the review and approval time is directly impacted by the quality and completeness of the initial application that is received. In order to conduct a timely review, it is imperative that the information provided in an Edwards Aquifer application include final plans, be accurate, complete, and in compliance with 30 TAC 213.

Administrative Review

1. Edwards Aquifer applications must be deemed administratively complete before a technical review can begin. To be considered administratively complete, the application must contain completed forms and attachments, provide the requested information, and meet all the site plan requirements. The submitted application and plan sheets should be final plans. Please submit one full-size set of plan sheets with the original application, and half-size sets with the additional copies.

   To ensure that all applicable documents are included in the application, the program has developed tools to guide you and web pages to provide all forms, checklists, and guidance. Please visit the below website for assistance: http://www.tceq.texas.gov/field/eapp.

2. This Edwards Aquifer Application Cover Page form (certified by the applicant or agent) must be included in the application and brought to the administrative review meeting.

3. Administrative reviews are scheduled with program staff who will conduct the review. Applicants or their authorized agent should call the appropriate regional office, according to the county in which the project is located, to schedule a review. The average meeting time is one hour.

4. In the meeting, the application is examined for administrative completeness. Deficiencies will be noted by staff and emailed or faxed to the applicant and authorized agent at the end of the meeting, or shortly after. Administrative deficiencies will cause the application to be deemed incomplete and returned.

   An appointment should be made to resubmit the application. The application is re-examined to ensure all deficiencies are resolved. The application will only be deemed administratively complete when all administrative deficiencies are addressed.

5. If an application is received by mail, courier service, or otherwise submitted without a review meeting, the administrative review will be conducted within 30 days. The applicant and agent will be contacted with the results of the administrative review. If the application is found to be administratively incomplete, it can be retrieved from the regional office or returned by regular mail. If returned by mail, the regional office may require arrangements for return shipping.

6. If the geologic assessment was completed before October 1, 2004 and the site contains "possibly sensitive" features, the assessment must be updated in accordance with the *Instructions to Geologists* (TCEQ-0585 Instructions).

Technical Review

1. When an application is deemed administratively complete, the technical review period begins. The regional office will distribute copies of the application to the identified affected city, county, and groundwater conservation district whose jurisdiction includes the subject site. These entities and the public have 30 days to provide comments on the application to the regional office. All comments received are reviewed by TCEQ.

2. A site assessment is usually conducted as part of the technical review, to evaluate the geologic assessment and observe existing site conditions. The site must be accessible to our staff. The site boundaries should be

clearly marked, features identified in the geologic assessment should be flagged, roadways marked and the alignment of the Sewage Collection System and manholes should be staked at the time the application is submitted. If the site is not marked the application may be returned.

3. We evaluate the application for technical completeness and contact the applicant and agent via Notice of Deficiency (NOD) to request additional information and identify technical deficiencies. There are two deficiency response periods available to the applicant. There are 14 days to resolve deficiencies noted in the first NOD. If a second NOD is issued, there is an additional 14 days to resolve deficiencies. If the response to the second notice is not received, is incomplete or inadequate, or provides new information that is incomplete or inadequate, the application must be withdrawn or will be denied. Please note that because the technical review is underway, whether the application is withdrawn or denied **the application fee will be forfeited**.
4. The program has 90 calendar days to complete the technical review of the application. If the application is technically adequate, such that it complies with the Edwards Aquifer rules, and is protective of the Edwards Aquifer during and after construction, an approval letter will be issued. Construction or other regulated activity may not begin until an approval is issued.

Mid-Review Modifications

It is important to have final site plans prior to beginning the permitting process with TCEQ to avoid delays.

Occasionally, circumstances arise where you may have significant design and/or site plan changes after your Edwards Aquifer application has been deemed administratively complete by TCEQ. This is considered a "Mid-Review Modification". Mid-Review Modifications may require redistribution of an application that includes the proposed modifications for public comment.

If you are proposing a Mid-Review Modification, two options are available:

- If the technical review has begun your application can be denied/withdrawn, your fees will be forfeited, and the plan will have to be resubmitted.
- TCEQ can continue the technical review of the application as it was submitted, and a modification application can be submitted at a later time.

If the application is denied/withdrawn, the resubmitted application will be subject to the administrative and technical review processes and will be treated as a new application. The application will be redistributed to the affected jurisdictions.

Please contact the regional office if you have questions. If your project is located in Williamson, Travis, or Hays County, contact TCEQ's Austin Regional Office at 512-339-2929. If your project is in Comal, Bexar, Medina, Uvalde, or Kinney County, contact TCEQ's San Antonio Regional Office at 210-490-3096

Please fill out all required fields below and submit with your application.

1. Regulated Entity Name: HEB 388					**2. Regulated Entity No.: RN101499580**			
3. Customer Name: H-E-B LP					**4. Customer No.: CN601297963**			
5. Project Type: **(Please circle/check one)**	New		Modification		Extension		Exception	
6. Plan Type: **(Please circle/check one)**	WPAP	CZP	SCS	UST	AST	EXP	EXT	Technical Clarification	Optional Enhanced Measures
7. Land Use: **(Please circle/check one)**	Residential		Non-residential			**8. Site (acres):**		1.81
9. Application Fee:	$650		**10. Permanent BMP(s):**			Sedimentation/Filtration Basin (exist)		
11. SCS (Linear Ft.):	N/A		**12. AST/UST (No. Tanks):**			1 – 30,000 Gal		
13. County:	Travis		**14. Watershed:**			Walnut Creek		

Application Distribution

Instructions: Use the table below to determine the number of applications required. One original and one copy of the application, plus additional copies (as needed) for each affected incorporated city, county, and groundwater conservation district are required. Linear projects or large projects, which cross into multiple jurisdictions, can require additional copies. Refer to the "Texas Groundwater Conservation Districts within the EAPP Boundaries" map found at:

http://www.tceq.texas.gov/assets/public/compliance/field_ops/eapp/EAPP%20GWCD%20map.pdf

For more detailed boundaries, please contact the conservation district directly.

Austin Region			
County:	**Hays**	**Travis**	**Williamson**
Original (1 req.)	___	_x_	___
Region (1 req.)	___	_x_	___
County(ies)	___	_x_	___
Groundwater Conservation District(s)	___Edwards Aquifer Authority ___Barton Springs/ Edwards Aquifer ___Hays Trinity ___Plum Creek	___Barton Springs/ Edwards Aquifer	NA
City(ies) Jurisdiction	___Austin ___Buda ___Dripping Springs ___Kyle ___Mountain City ___San Marcos ___Wimberley ___Woodcreek	_x_Austin ___Bee Cave ___Pflugerville ___Rollingwood ___Round Rock ___Sunset Valley ___West Lake Hills	___Austin ___Cedar Park ___Florence ___Georgetown ___Jerrell ___Leander ___Liberty Hill ___Pflugerville ___Round Rock

San Antonio Region					
County:	**Bexar**	**Comal**	**Kinney**	**Medina**	**Uvalde**
Original (1 req.)	___	___	___	___	___
Region (1 req.)	___	___	___	___	___
County(ies)	___	___	___	___	___
Groundwater Conservation District(s)	___ Edwards Aquifer Authority ___Trinity-Glen Rose	___Edwards Aquifer Authority	___Kinney	___EAA ___Medina	___EAA ___Uvalde
City(ies) Jurisdiction	___Castle Hills ___Fair Oaks Ranch ___Helotes ___Hill Country Village ___Hollywood Park ___San Antonio (SAWS) ___Shavano Park	___Bulverde ___Fair Oaks Ranch ___Garden Ridge ___New Braunfels ___Schertz	NA	___San Antonio ETJ (SAWS)	NA

I certify that to the best of my knowledge, that the application is complete and accurate. This application is hereby submitted to TCEQ for administrative review and technical review. Nick Sandlin, P.E. (Sandlin Services, LLC)
Print Name of Customer/Authorized Agent  11/05/2025 Signature of Customer/Authorized Agent Date

FOR TCEQ INTERNAL USE ONLY				
Date(s)Reviewed:		Date Administratively Complete:		
Received From:		Correct Number of Copies:		
Received By:		Distribution Date:		
EAPP File Number:		Complex:		
Admin. Review(s) (No.):		No. AR Rounds:		
Delinquent Fees (Y/N):		Review Time Spent:		
Lat./Long. Verified:		SOS Customer Verification:		
Agent Authorization Complete/Notarized (Y/N):		Fee Check:	Payable to TCEQ (Y/N):	
Core Data Form Complete (Y/N):			Signed (Y/N):	
Core Data Form Incomplete Nos.:			Less than 90 days old (Y/N):	

General Information Form
(TCEQ-0587)

General Information Form

Texas Commission on Environmental Quality

For Regulated Activities on the Edwards Aquifer Recharge and Transition Zones and Relating to 30 TAC §213.4(b) & §213.5(b)(2)(A), (B) Effective June 1, 1999

To ensure that the application is administratively complete, confirm that all fields in the form are complete, verify that all requested information is provided, consistently reference the same site and contact person in all forms in the application, and ensure forms are signed by the appropriate party.

Note: Including all the information requested in the form and attachments contributes to more streamlined technical reviews.

Signature

To the best of my knowledge, the responses to this form accurately reflect all information requested concerning the proposed regulated activities and methods to protect the Edwards Aquifer. This **General Information Form** is hereby submitted for TCEQ review. The application was prepared by:

Print Name of Customer/Agent: NICK SANDLIN, P.E.

Date: 11/05/2025

Signature of Customer/Agent:



Project Information

1. Regulated Entity Name: HEB 388
2. County: TRAVIS
3. Stream Basin: WALNUT CREEK
4. Groundwater Conservation District (If applicable): _____
5. Edwards Aquifer Zone:

   ☒ Recharge Zone
   ☐ Transition Zone

6. Plan Type:

   ☐ WPAP
   ☐ SCS
   ☒ Modification
   ☐ AST
   ☒ UST
   ☐ Exception Request

7. Customer (Applicant):

   Contact Person: NICK RIEMER
   Entity: H-E-B LP
   Mailing Address: PO BOX 839999
   City, State: SAN ANTONIO, TX Zip: 78283
   Telephone: (737) 356-8116 FAX: _____
   Email Address: RIEMER.NICK@HEB.COM

8. Agent/Representative (If any):

   Contact Person: NICK SANDLIN, PE
   Entity: SANDLIN SERVICES, LLC
   Mailing Address: 9111 JOLLYVILLE RD
   City, State: AUSTIN, TX Zip: 78759
   Telephone: (806) 679-7303 FAX: _____
   Email Address: NICK@SANDLINSERVICES.COM

9. Project Location:

   ☒ The project site is located inside the city limits of AUSTIN.
   ☐ The project site is located outside the city limits but inside the ETJ (extra-territorial jurisdiction) of _____.
   ☐ The project site is not located within any city's limits or ETJ.

10. ☒ The location of the project site is described below. The description provides sufficient detail and clarity so that the TCEQ's Regional staff can easily locate the project and site boundaries for a field investigation.

    6001 W PARMER LN, AUSTIN TX 78727

11. ☒ **Attachment A – Road Map**. A road map showing directions to and the location of the project site is attached. The project location and site boundaries are clearly shown on the map.

12. ☒ **Attachment B - USGS / Edwards Recharge Zone Map**. A copy of the official 7 ½ minute USGS Quadrangle Map (Scale: 1" = 2000') of the Edwards Recharge Zone is attached. The map(s) clearly show:

    ☒ Project site boundaries.
    ☒ USGS Quadrangle Name(s).
    ☒ Boundaries of the Recharge Zone (and Transition Zone, if applicable).
    ☒ Drainage path from the project site to the boundary of the Recharge Zone.

13. ☒ **The TCEQ must be able to inspect the project site or the application will be returned**. Sufficient survey staking is provided on the project to allow TCEQ regional staff to locate the boundaries and alignment of the regulated activities and the geologic or manmade features noted in the Geologic Assessment.

    ☒ Survey staking will be completed by this date: 5/1/2026

14. ☒ **Attachment C – Project Description**. Attached at the end of this form is a detailed narrative description of the proposed project. The project description is consistent throughout the application and contains, at a minimum, the following details:

- ☒ Area of the site
- ☒ Offsite areas
- ☒ Impervious cover
- ☒ Permanent BMP(s)
- ☒ Proposed site use
- ☒ Site history
- ☒ Previous development
- ☒ Area(s) to be demolished

15. Existing project site conditions are noted below:

- ☒ Existing commercial site
- ☐ Existing industrial site
- ☐ Existing residential site
- ☒ Existing paved and/or unpaved roads
- ☐ Undeveloped (Cleared)
- ☐ Undeveloped (Undisturbed/Uncleared)
- ☐ Other: _____

Prohibited Activities

16. ☒ I am aware that the following activities are prohibited on the Recharge Zone and are not proposed for this project:

(1) Waste disposal wells regulated under 30 TAC Chapter 331 of this title (relating to Underground Injection Control);

(2) New feedlot/concentrated animal feeding operations, as defined in 30 TAC §213.3;

(3) Land disposal of Class I wastes, as defined in 30 TAC §335.1;

(4) The use of sewage holding tanks as parts of organized collection systems; and

(5) New municipal solid waste landfill facilities required to meet and comply with Type I standards which are defined in §330.41(b), (c), and (d) of this title (relating to Types of Municipal Solid Waste Facilities).

(6) New municipal and industrial wastewater discharges into or adjacent to water in the state that would create additional pollutant loading.

17. ☒ I am aware that the following activities are prohibited on the Transition Zone and are not proposed for this project:

(1) Waste disposal wells regulated under 30 TAC Chapter 331 (relating to Underground Injection Control);

(2) Land disposal of Class I wastes, as defined in 30 TAC §335.1; and

(3) New municipal solid waste landfill facilities required to meet and comply with Type I standards which are defined in §330.41 (b), (c), and (d) of this title.

Administrative Information

18. The fee for the plan(s) is based on:

- ☐ For a Water Pollution Abatement Plan or Modification, the total acreage of the site where regulated activities will occur.
- ☐ For an Organized Sewage Collection System Plan or Modification, the total linear footage of all collection system lines.
- ☒ For a UST Facility Plan or Modification or an AST Facility Plan or Modification, the total number of tanks or piping systems.
- ☐ A request for an exception to any substantive portion of the regulations related to the protection of water quality.
- ☐ A request for an extension to a previously approved plan.

19. ☒ Application fees are due and payable at the time the application is filed. If the correct fee is not submitted, the TCEQ is not required to consider the application until the correct fee is submitted. Both the fee and the Edwards Aquifer Fee Form have been sent to the Commission's:

- ☐ TCEQ cashier
- ☒ Austin Regional Office (for projects in Hays, Travis, and Williamson Counties)
- ☐ San Antonio Regional Office (for projects in Bexar, Comal, Kinney, Medina, and Uvalde Counties)

20. ☒ Submit one (1) original and one (1) copy of the application, plus additional copies as needed for each affected incorporated city, groundwater conservation district, and county in which the project will be located. The TCEQ will distribute the additional copies to these jurisdictions. The copies must be submitted to the appropriate regional office.

21. ☒ No person shall commence any regulated activity until the Edwards Aquifer Protection Plan(s) for the activity has been filed with and approved by the Executive Director.

General Information Form (TCEQ-0587)

Attachment A: Road Map



Source: Google Earth Pro (accessed 9/15/2025)

General Information Form
(TCEQ-0587)

Attachment B:
USGS Quadrangle Map
Edwards Aquifer Recharge Zone Map
FEMA FIRM Map

USGS QUADRANGLE MAP

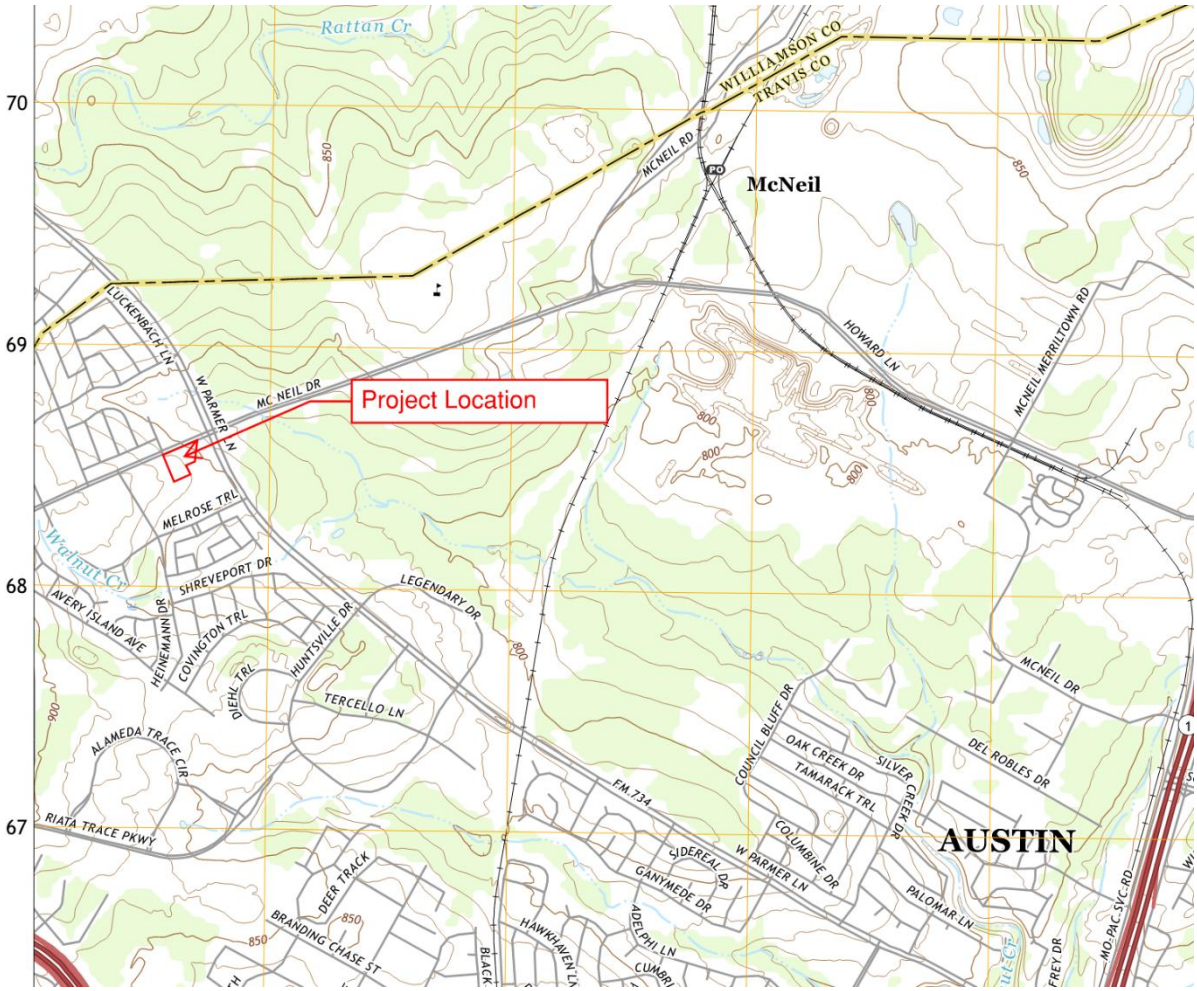

Source: Portion of USGS Quadrangle Map (TX_Pflugerville_West_20220811_TM)

FEMA FIRM MAP PANEL

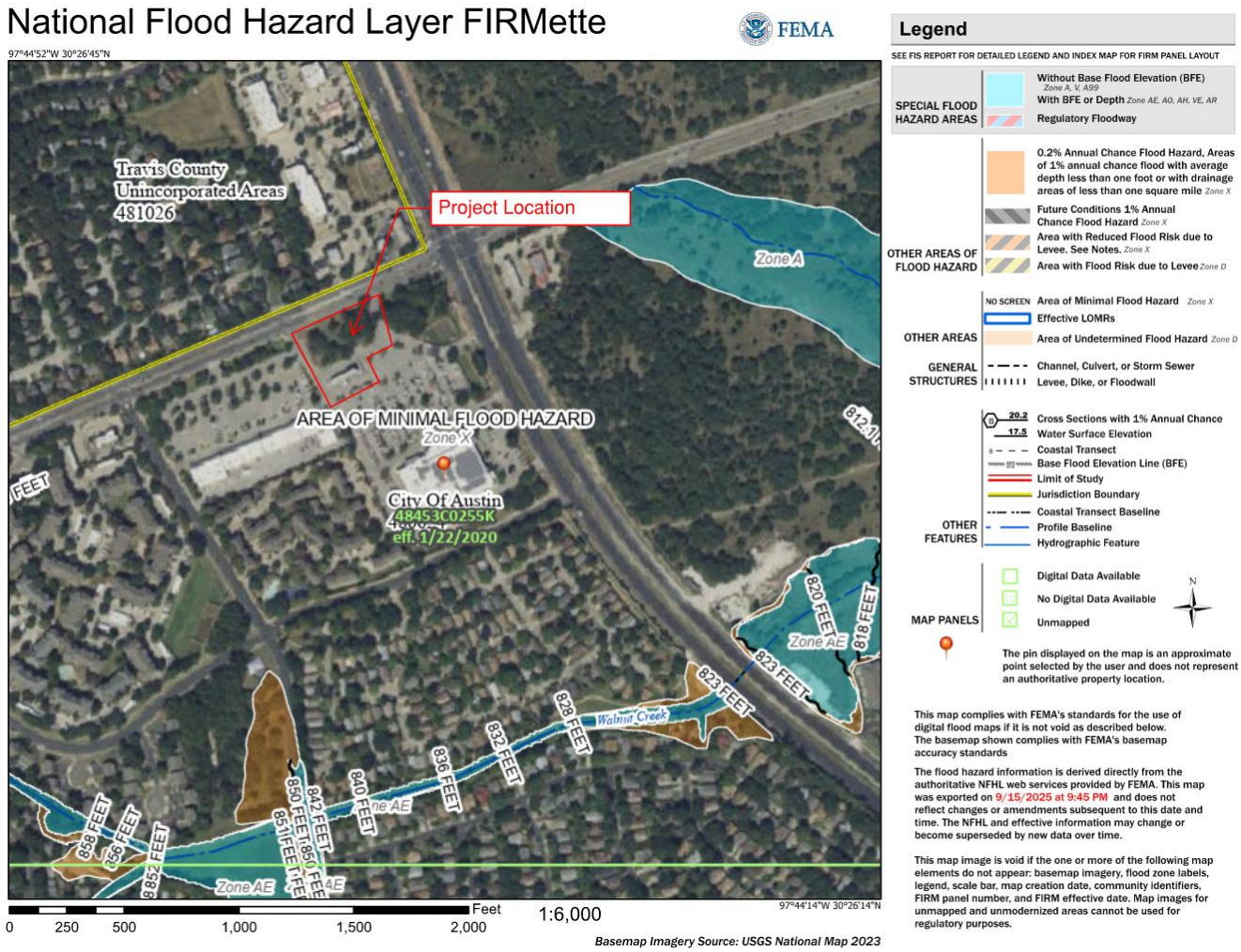

Source: FEMA FIRMette Map Panel 48453C0255K (effective 1/22/2020)

EDWARDS AQUIFER ZONE MAP
HEB 388
6001 W Parmer Ln
Austin, TX 78633
Source: TCEQ Edwards Aquifer Viewer
Prepared: September 15, 2025

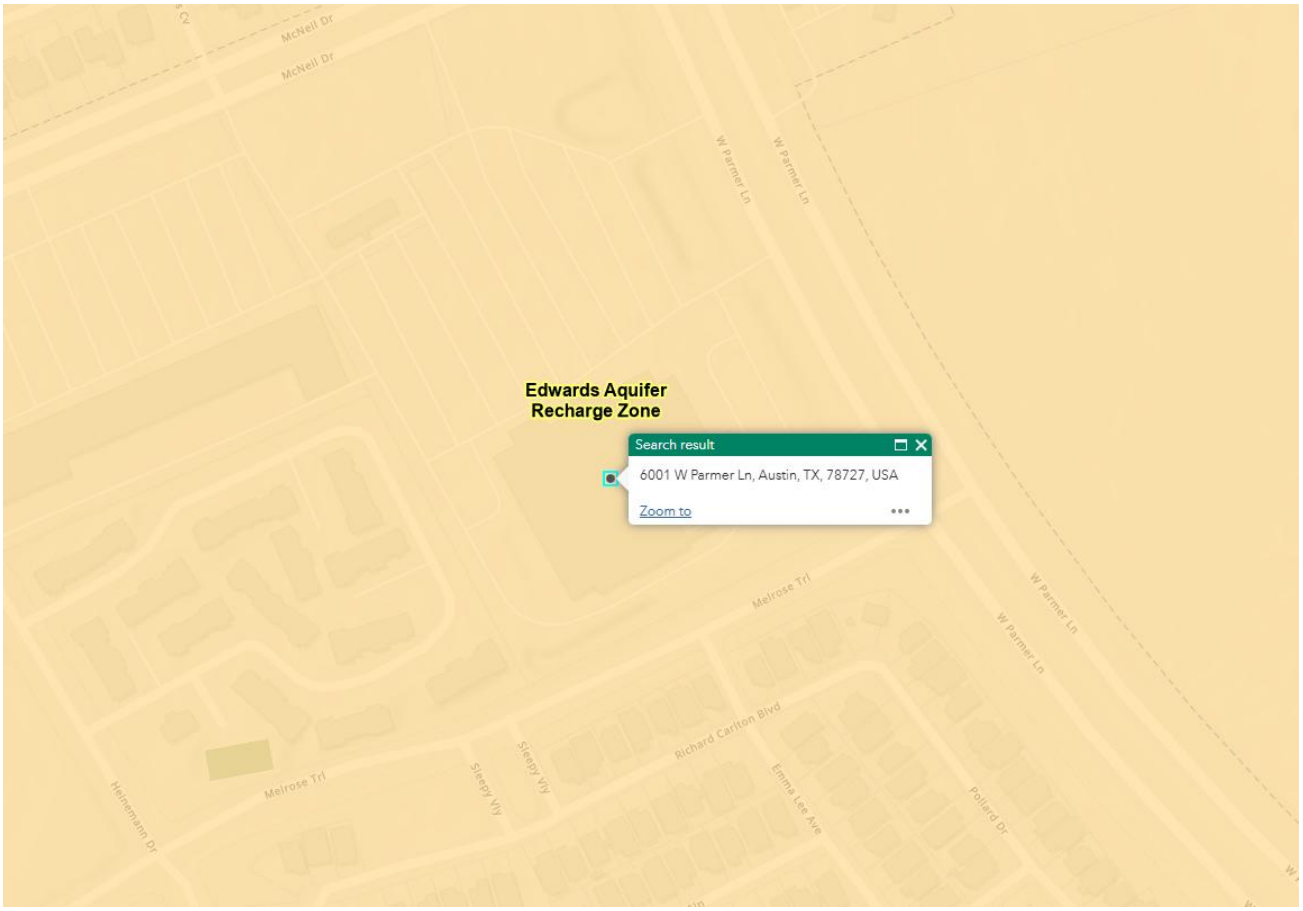

General Information Form (TCEQ-0587)

Attachment C: Project Description

Proposed Development

The HEB 388 project (RN102727070) is located on a 1.81-acre property at 6001 W Parmer Ln, Austin, Texas 78727. The site lies within the City of Austin and is located in the Edwards Aquifer Recharge Zone. An existing Water Pollution Abatement Plan (WPAP) for the site was originally approved on July 7, 1995.

The current project proposes a modification to the existing underground storage tank (UST) system associated with the on-site fuel station. The scope of work is limited to removing and replacing the existing 12/8K gallon fuel tank along with the associated fuel canopy and drainage improvements over existing impervious cover. No additional impervious cover or modifications to the previously approved BMP are proposed with this application. The proposed fuel improvements include a 30,000-gallon fuel tank with unleaded and premium fuel, manufactured by Xerxes. This tank will be UL 1316 listed and double-walled. Four existing multiple product dispensers will also be replaced with new Wayne Anthem Dispensers. Please refer to the UST portion of this application for UST infrastructure details and specifications.

Site Description and History

The 1.81 AC property is owned by HEB LP. Legal description of the property is LOT 2 BLK A HEB/PARMER RESUB.

Soils on the property are 43.9% Speck clay loam, 1 to 5 percent slopes, stony; and 56.1% Eckrant and Speck soils, 0 to 2 percent slopes. The site has hydrologic group type D soils.

The site ranges in elevation from approximately 870 feet above sea level at the southwestern boundary to approximately 840 feet at the northeastern boundary, indicating a general eastward slope across the property. The site is relatively flat, with slopes ranging between 0 and 15%.

Access

Access to the property currently exists at McNeil Dr in Austin, Texas.

Impervious Cover (IC)

The existing impervious cover (IC) is 67.6% IC. No changes to the impervious cover of the initially approved application are proposed.

Watershed and FEMA Floodplain Information

The project is within Walnut Creek watershed in the Colorado River Basin. According to the FEMA Flood Insurance Rate Map #48453C0255K (Effective 01/22/2020) no portion of the project site lies within the 100-Year floodplain. The project site is located in the Edwards Aquifer Recharge Zone.

Temporary Best Management Practices (BMPs)

Construction practices shall disturb the minimal amount of existing ground cover as required for land clearing, grading, and construction activity for the shortest amount of time possible to minimize the potential of erosion and sedimentation from the site.

Prior to soil disturbing construction activity, temporary BMPs will be installed. Silt fencing will be installed along the down-gradient sides of the property to intercept and detain waterborne sediment from unprotected areas. The silt fence shall remain in place until the disturbed area is permanently stabilized.

Permanent Best Management Practices (BMPs)

No new permanent BMPs are proposed as part of this project and the existing and approved BMPs will continue to function as originally designed.

An existing approved Water Pollution Abatement Plan (WPAP) for this site (EAPP ID No. 11-95041002) is already in place, which includes and manages the permanent BMPs necessary for stormwater drainage and water quality treatment at the site.

Offsite Areas

No offsite areas are anticipated to be affected by pre and post construction activities at the site. Temporary BMPs will minimize any anticipated effects of the proposed construction activities. Permanent BMPs will address any anticipated stormwater issues at the developed site.

Geologic Assessment Form (TCEQ-0585)

N/A – See Exception Request

Geologic Assessment

REGULATED ENTITY NAME: HEB 388
TYPE OF PROJECT: __ WPAP __ AST __ SCS _x_ UST

LOCATION OF PROJECT: _x_ Recharge Zone __ Transition Zone __ Contributing Zone within the Transition Zone

Ranger Environmental Services, LLC (Ranger) field personnel attempted to perform the required Geologic Assessment at the facility located at 6001 W. Parmer Lane, Travis County, Austin, Texas, on December 29, 2025. During the site visit, it was observed that the site had at least 90% impervious cover, as it is currently developed. It should be noted that this UST Facility Plan is a modification to a previously approved UST Facility Plan.

Therefore, given that the site currently has at least 90% impervious cover and that the native soils are not exposed, it is requested that an exception to the Geologic Assessment requirement be granted.

To the best of my knowledge, the responses to this form accurately reflect all requested information regarding the proposed regulated activities and methods to protect the Edwards Aquifer. My signature certifies that I am qualified as a geoscientist/geologist as defined by 30 TAC Chapter 213.

Chad M. Copeland, P.G., PWS — 512/335-1785 (Telephone)

Signature of Geoscientist — 12/29/2025 (Date)

Representing: Ranger Environmental Services, LLC
(Name of Company)

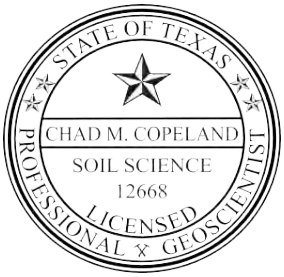

12/29/2025

Geologic Assessment Form (TCEQ-0585)

Attachment A: Geologic Assessment Table (TCEQ-0585-Table)

N/A – See Exception Request

Geologic Assessment Form (TCEQ-0585)

Attachment B: Stratigraphic Column

N/A – See Exception Request

Geologic Assessment Form (TCEQ-0585)

Attachment C: Site Geology

N/A – See Exception Request

Geologic Assessment Form (TCEQ-0585)

Attachment D: Site Geologic Map(s)

N/A – See Exception Request

Modification of a Previously Approved Plan (TCEQ-0590)

Modification of a Previously Approved Plan

Texas Commission on Environmental Quality

for Regulated Activities on the Edwards Aquifer Recharge Zone and Transition Zone and Relating to 30 TAC 213.4(j), Effective June 1, 1999

To ensure that the application is administratively complete, confirm that all fields in the form are complete, verify that all requested information is provided, consistently reference the same site and contact person in all forms in the application, and ensure forms are signed by the appropriate party.

Note: Including all the information requested in the form and attachments contributes to more streamlined technical reviews.

Signature

To the best of my knowledge, the responses to this form accurately reflect all information requested concerning the proposed regulated activities and methods to protect the Edwards Aquifer. This request for a **Modification of a Previously Approved Plan** is hereby submitted for TCEQ review and executive director approval. The request was prepared by:

Print Name of Customer/Agent: NICK SANDLIN, P.E.

Date: 11/05/2025

Signature of Customer/Agent:





Project Information

1. Current Regulated Entity Name: HEB 388
   Original Regulated Entity Name: HEB 388
   Regulated Entity Number(s) (RN): 101499580
   Edwards Aquifer Protection Program ID Number(s): 11-96031302
   ☒ The applicant has not changed and the Customer Number (CN) is: 601297963
   ☐ The applicant or Regulated Entity has changed. A new Core Data Form has been provided.

2. ☒ **Attachment A: Original Approval Letter and Approved Modification Letters**. A copy of the original approval letter and copies of any modification approval letters are attached.

3. A modification of a previously approved plan is requested for (check all that apply):
   - ☐ Physical or operational modification of any water pollution abatement structure(s) including but not limited to ponds, dams, berms, sewage treatment plants, and diversionary structures;
   - ☐ Change in the nature or character of the regulated activity from that which was originally approved or a change which would significantly impact the ability of the plan to prevent pollution of the Edwards Aquifer;
   - ☐ Development of land previously identified as undeveloped in the original water pollution abatement plan;
   - ☐ Physical modification of the approved organized sewage collection system;
   - ☒ Physical modification of the approved underground storage tank system;
   - ☐ Physical modification of the approved aboveground storage tank system.

4. ☒ Summary of Proposed Modifications (select plan type being modified). If the approved plan has been modified more than once, copy the appropriate table below, as necessary, and complete the information for each additional modification.

WPAP Modification Summary	***Approved Project***	***Proposed Modification***
Acres	_____	_____
Type of Development	_____	_____
Number of Residential Lots	_____	_____
Impervious Cover (acres)	_____	_____
Impervious Cover (%	_____	_____
Permanent BMPs	_____	_____
Other	_____	_____

SCS Modification Summary	***Approved Project***	***Proposed Modification***
Linear Feet	_____	_____
Pipe Diameter	_____	_____
Other	_____	_____

AST Modification Summary	*Approved Project*	*Proposed Modification*
Number of ASTs	_____	_____
Volume of ASTs	_____	_____
Other	_____	_____

UST Modification Summary	*Approved Project*	*Proposed Modification*
Number of USTs	1	1
Volume of USTs	20,000 GAL	30,000 GAL
Other	_____	_____

5. ☒ **Attachment B: Narrative of Proposed Modification**. A detailed narrative description of the nature of the proposed modification is attached. It discusses what was approved, including any previous modifications, and how this proposed modification will change the approved plan.

6. ☒ **Attachment C: Current Site Plan of the Approved Project**. A current site plan showing the existing site development (i.e., current site layout) at the time this application for modification is attached. A site plan detailing the changes proposed in the submitted modification is required elsewhere.
   - ☐ The approved construction has not commenced. The original approval letter and any subsequent modification approval letters are included as Attachment A to document that the approval has not expired.
   - ☒ The approved construction has commenced and has been completed. Attachment C illustrates that the site was constructed as approved.
   - ☐ The approved construction has commenced and has been completed. Attachment C illustrates that the site was **not** constructed as approved.
   - ☐ The approved construction has commenced and has **not** been completed. Attachment C illustrates that, thus far, the site was constructed as approved.
   - ☐ The approved construction has commenced and has **not** been completed. Attachment C illustrates that, thus far, the site was **not** constructed as approved.

7. ☐ The acreage of the approved plan has increased. A Geologic Assessment has been provided for the new acreage.
   ☒ Acreage has not been added to or removed from the approved plan.

8. ☒ Submit one (1) original and one (1) copy of the application, plus additional copies as needed for each affected incorporated city, groundwater conservation district, and county in which the project will be located. The TCEQ will distribute the additional copies to these jurisdictions. The copies must be submitted to the appropriate regional office.

Modification of a Previously Approved Plan (TCEQ-0590)

Attachment A: Original Approval Letter and Approved Modification Letters

Barry R. McBee, *Chairman*
R. B. "Ralph" Marquez, *Commissioner*
John M. Baker, *Commissioner*
Dan Pearson, *Executive Director*

TEXAS NATURAL RESOURCE CONSERVATION COMMISSION

Protecting Texas by Reducing and Preventing Pollution

June 10, 1996

Mr. Mike Sweatt
H.E.B. Grocery Company
646 South Main
San Antonio, Texas 78283

Re: Edwards Aquifer, Travis County.
PROJECT NAME: H.E.B. - Austin #20, Southwest corner of McNeil Road and Parmer Lane, Austin, Texas.
PLAN TYPE: Request for Approval of Underground Storage Tank (UST) Facility Construction Plans and Specifications; 31 Texas Administrative Code (TAC) §313.10; Edwards Aquifer Protection Program.

Edwards Protection Program File Number: 96031302

Dear Mr. Sweatt:

The Texas Natural Resource Conservation Commission (TNRCC) has completed its review of the plans and specifications for the referenced project that were submitted by Bury & Pittman, Inc., on behalf of the H.E.B. Grocery Company and received by the Region 11 Office on March 13, 1996.

A site inspection was conducted by a Region 11 field investigator on April 10, 1995 and June 5, 1996. The field investigator found the site to be generally as described in the geologic assessment.

PROJECT DESCRIPTION

The proposed new underground static hydrocarbon storage system will consist of one (1) new 20,000 gallon double-wall fiberglass reinforced plastic coated steel tank (manufactured by Fluid Containment) to be used for the storage of gasoline fuels. Ancillary equipment will include: a double wall product piping system, dispenser and pump end flexible connectors fitted with containment sumps, spill containers, overfill prevention, an interstitial leak detection for continuous monitoring of the tank and piping systems, and all other equipment required under 30 TAC §334.

REPLY TO: REGION 11 • 1921 CEDAR BEND, STE. 150 • AUSTIN, TEXAS 78758 • AREA CODE 512/339-2929 • FAX 512/339-3795

P.O. Box 13087 • Austin, Texas 78711-3087 • 512/239-1000
printed on recycled paper using soy-based ink

APPROVAL

The planning materials for the proposed underground static hydrocarbon storage facility have been reviewed by the Commission's staff and have been found to be in general agreement with the requirements of 31 TAC §334, Underground Storage Tanks, and 31 TAC §313.10, which establishes the criteria for static hydrocarbon and hazardous substance storage facilities located in the Edwards Aquifer Recharge Zone. Therefore, the planning materials for construction of the proposed facilities are hereby approved, subject to the following conditions.

Failure to comply with any of the following conditions or any other specific conditions of approval is a violation of these rules. Pursuant to Section 26.136 of the Texas Water Code, violations of these rules may result in administrative **penalties of up to $10,000 for each act of violation and for each day of violation.**

Standard Conditions

1. For projects on the recharge zone all temporary Erosion and Sedimentation (E&S) controls shall be installed prior to all other construction at the site. (1) **Silt fences** should be used when the drainage area is less than 2 acres and the slope is less than 10%. (2) **Rock berms with filtration** should be used when the drainage areas are greater than two acres or when the slopes are in excess of 10%. The bottom edge of the filter fabric must be buried a minimum of 6 inches below grade.

2. The TNRCC may monitor stormwater discharges from the site to evaluate the adequacy of the temporary erosion and sedimentation control measures. Additional protection may be necessary if excessive solids are being discharged from the site.

3. **A copy of any local construction permit should be submitted to Region 11 within 30 days of the issuance of this approval.**

4. **Please note, following this approval of the regulated activities described in the referenced submittal, any amendment to these activities that is required by some other regulating authority or is desired by the applicant will require the submittal of a new UST application to amend this approval. And, as indicated in 31 TAC §313.27, an application to amended any approved regulated activity shall include payment of appropriate fees and all information necessary for its review and Executive Director approval.**

5. All contractors conducting regulated activities associated with this proposed regulated development shall be provided with copies of this approval letter and the entire contents of the submitted UST Plans & Specifications so as to convey to the contractors the specific conditions of approval. During the course of regulated activities, the contractors shall be required to keep on-site copies of the UST Plans and this approval letter.

6. **Pursuant to 31 TAC §313.4(d)(1), prior to commencing construction, the applicant must notify the Region 11 Office at least 48 hours prior to initiation of construction.**

7. If any solution openings or sinkholes are discovered during the construction of the tank excavation, all excavation and installation activities shall be immediately suspended, and the owner or his designated representative shall notify the Commission's Region 11 Office. Upon completion of the excavation, a qualified geologist shall inspect the pit. Further excavation and installation activities shall not proceed until the Commission has reviewed and approved the methods proposed to protect such features from any potential adverse impacts of the hydrocarbon storage facility.

8. All UST installations, repairs, and removals must be conducted by a registered UST contractor who has a licensed installer or on-site supervisor at the site during all critical junctures, as required by 31 TAC §334 Subchapter I.

9. Installation, testing, and operation of the tanks, piping, and all other components of the proposed storage and monitoring systems shall be in conformance with the manufacturer's specifications and the procedures described in this letter.

10. An "as-built" project-specific site design plan shall be drawn to scale and of sufficient accuracy, clarity, and detail to depict the specific locations and dimensions of all components of the underground storage tank system, including the tanks, piping and fittings, pumps, observation wells, containment equipment, release detection devices, and other auxiliary equipment. Also, detailed construction drawings of plan and profile views and detail drawings of specific components shall be prepared. A copy of such "as-built" site plan and construction drawings, as well as operating instructions for all major system components and written records of all tank tests, piping tests, release detection monitoring results, and other inspections, shall be maintained in a secure location at the site of the proposed facility and shall be available for examination by Commission personnel.

11. The owner of the proposed facility shall assure that the storage tank system is installed, operated, and maintained in full compliance with the applicable provisions of 31 TAC §334 of Commission rules, which establishes the requirements for the design, installation, operation, construction notification, registration, fee assessment, financial responsibility, release reporting, and corrective action related to such system.

12. All underground metallic components of the proposed system which are not electrically isolated from the backfill material (including any vent line fittings and connectors, risers for monitoring equipment and fill tubes, containment manholes, etc.) must be properly protected from corrosion in accordance with 31 TAC §334.49 of Commission rules.

13. The flexible connectors at the dispenser-end of the product piping lines, which are enclosed within secondary containment sleeves and which cannot be visibly inspected for evidence of corrosion, shall be periodically tested by a qualified corrosion technician or specialist to ensure that the metal components of such connectors remain electrically isolated from the surrounding backfill, groundwater, and other metal components. Such tests shall be conducted within three to six months after installation and at least once every three years thereafter, in full conformance with the requirements in 31 TAC §334.49(d)(1) of Commission rules.

14. All piping must slope at least one-eighth inch per foot in the direction of the tank [as required by 31 TAC §334.46(c)(1)].

15. When applicable, field-installed cathodic protection systems shall be designed by a qualified corrosion specialist [as required by 31 TAC §334.49(c)(2)]. Additionally, all factory-installed and field-installed cathodic protection systems shall be properly tested for operability and adequacy of protection by a qualified corrosion technician or corrosion specialist after the UST system installation is completed but prior to placing the system into operation [as required by 31 TAC §334.46(d)(4)(c)].

16. The facility owner should be aware of the proposed federal EPA regulations for benzene emissions (40 CFR Part 61). The proposed regulations will require the addition of Stage I vapor recovery equipment by 1991 or 1992 (depending on volume of throughput) for all service stations with an annual throughput greater than 120,000 gallons. The owner should consider the feasibility of installing the Stage I vapor recovery equipment as part of this installation project to preclude the need for additional construction in the future.

If you have any questions or require additional information, please contact Melissa Lopez with the Edwards Aquifer Protection Program at the Region 11 Office at (512)339-2929.

Sincerely,

for

Dan Pearson
Executive Director
Texas Natural Resource Conservation Commission

DP/MML

cc: James Knight, P.E., Bury & Pittman, Inc.
Michael Heitz, Director of Drainage Utilities, City of Austin
The Honorable Bill Aleshire, County Judge, Travis County
Rosalinda Escalon, Field Operations, Administration, TNRCC

John Hall, *Chairman*
Pam Reed, *Commissioner*
R. B. "Ralph" Marquez, *Commissioner*
Dan Pearson, *Executive Director*

JUL 11 1995

TEXAS NATURAL RESOURCE CONSERVATION COMMISSION

Protecting Texas by Reducing and Preventing Pollution

July 7, 1995

Mr. Mike Sweatt
H.E.B. Grocery Company
646 South Main
San Antonio, Texas 78283

Re: Edwards Aquifer, Travis County
NAME OF PROJECT: H.E.B. - Austin #20; Southwest corner of McNeil Road and Parmer Lane, Austin, Texas.
TYPE OF PLAN: Request for Approval of Water Pollution Abatement Plan (WPAP); 30 Texas Administrative Code (TAC) §313.4; Edwards Aquifer Protection Program.

Dear Mr. Sweatt:

The Texas Natural Resource Conservation Commission (TNRCC) has completed its review of the WPAP application for the referenced project that was submitted by Bury & Pittman, Inc. on behalf of the H.E.B. Grocery Company to the Austin Regional Office on April 10, 1995. Final review of the WPAP submittal was completed after additional material was received on July 5, 1995.

PROJECT DESCRIPTION

The proposed commercial project will consist of a grocery store, retail shops, a gasoline station, and associated parking areas. The site is located within the City of Austin and will conform with applicable codes and requirements of the City of Austin. Potable water will be supplied by the City of Austin.

The normal population of the development is estimated to be 832 persons. Approximately 14,000 gallons per day of wastewater is to be generated by this project, 0% domestic and 100% industrial wastewater.

Project wastewater will be disposed of by conveyance to the existing Walnut Creek Sewage Treatment Plant owned by the City of Austin.

The proposed impervious cover for the development, approximately 14.926 acres (76.4%), includes roof tops and paved parking surfaces.

The storm water runoff will be typical of a commercial site.

The sedimentation/filtration basins are designed in accordance with the City of Austin Environmental Criteria Manual. The basins will incorporate detention, sedimentation, and filtration.

GEOLOGY

According to the geologic assessment included with the submittal, there are no recharge features on the site.

The Austin Regional Office site inspection of June 15, 1995, revealed the site to be generally as describe in the geologic assessment.

APPROVAL

The water pollution abatement plan for H.E.B. #20 has been reviewed for compliance with 30 TAC §313.4 which sets forth pollution abatement criteria for any regulated development on the recharge zone of the Edwards Aquifer. The proposed plan is in general agreement with 30 TAC §313.4; therefore, approval of the plan is hereby granted subject to the conditions listed below.

Failure to comply with any of the requirements of 30 TAC §313 or any of the following conditions of this approval is a violation of the Edwards Aquifer Protection Rules. Pursuant to §26.136 of the Texas Water Code, any violations of these Rules may result in administrative penalties of up to $10,000 for each act of violation and for each day of violation.

STANDARD CONDITIONS OF APPROVAL

1. The applicant shall record this water pollution abatement plan approval in the county deed records within 30 days of receiving this written notice of approval. Enclosed is a suggested format you may use to deed record the approved WPAP.

2. Prior to commencing construction at this project, the applicant must submit the following to the appropriate regional office:

   a. proof of application for recordation of notice in the county deed records.

b. copies of any changes made to the plans and specifications of this project which are required by any special conditions of this approval.

c. 24 to 48 hour advance notification of the pre-construction meeting at the project site. The applicant must also notify the Regional Office of the date on which the regulated activity will commence.

3. Following the approval of this WPAP application, the Austin Regional Office shall be notified in writing of any proposed physical modifications to these regulated activities that are required by some other regulating authority, the conditions encountered at the site, or the applicant. The request to modify a previously approved application may require the submittal of appropriate review fees and all information necessary for its review and Executive Director approval. The proposed modification shall not be initiated prior TNRCC review.

4. The primary contractors conducting regulated activities associated with this proposed regulated project shall be provided copies of this approval letter and the entire contents of the WPAP submittal so as to convey the specific conditions of this approval.

During the course of these regulated activities, the primary contractors shall be required to maintain copies of the WPAP and this approval letter on-site and are responsible for informing their subcontractors of the contents of these items.

5. The temporary erosion and sedimentation (E&S) controls for the entire project shall be installed prior to beginning any other construction work on this project. If water quality pond(s) are required for this project, they shall be excavated during the installation of the temporary E&S controls and shall be used as a sedimentation basin(s) until the contractor is ready to proceed with their final construction.

The E&S controls shall be inspected periodically during construction and following any significant rainfall occurrences. Necessary repairs to the E&S controls shall be made as soon as possible.

6. During the course of any construction related to this regulated development, the applicant shall comply with all applicable provisions of 30 TAC §313.4. Any site on which construction is initiated and abandoned or will not be completed, shall be returned to a permanent condition such that groundwater in the Edwards Aquifer is protected from

future contamination.

Additionally, the H.E.B. Grocery Company, applicant, shall remain responsible for the provisions and conditions of this approval until such responsibility is legally transferred to another person or entity. Upon transferring the title of the referenced property, the applicant shall place a restriction in the deed that states that the property is subject to the water pollution plan approval and that the new owner assumes the responsibility for all provisions and conditions of this approval.

7. If any significant recharge feature, such as solution cavities or sinkholes, is discovered during construction, the contractor shall immediately suspend all regulated activities near the feature and notify the Austin Regional Office.

   The contractor may not resume activities in the area of the noted feature until the proposed methods to protect the aquifer from any potentially adverse impact has been reviewed and approved by the Executive Director.

8. Please note that 30 TAC §313.5(h) states that this approval expires two years from this date unless, prior to the expiration date, construction has commenced on the regulated development.

9. Upon completion of the regulated activities, the applicant shall reseed or sod all areas disturbed during construction.

10. The Austin Regional Office shall be provided written notification of the completion date of the project.

11. The appropriate temporary E&S controls that shall be used during the construction of the project are as follows: (1) **Stabilized construction entrances** shall be installed at all sites of ingress and egress prior to initiation of any other regulated activity. (2) **Silt fences** should be used when the drainage areas are less than 2 acres or when the slopes are less than 10%. The ends of silt fences and rock berms should be installed along constant contour lines and curved slightly upgradient. (3) **Rock berms with filtration** should be used when the drainage areas are greater than two acres or when the slopes are in excess of 10%. The bottom edge of the filter fabric must be buried a minimum of 6 inches below grade.

12. The TNRCC may monitor storm water discharges from the site to evaluate the adequacy of the temporary erosion and sedimentation control measures. Additional protection may be necessary if excessive solids are being discharged from the

site.

13. No wells were reported in the WPAP application to exist at this proposed site. If any abandoned wells are encountered during the construction of the proposed development, they shall be plugged in accordance with the local underground water conservation district's plugging procedures, if applicable, or 30 TAC §287.50(a) of this title (relating to Standards for Plugging Wells that Penetrate Undesirable Water Zones), or an equivalent method, as approved by the Executive Director. Pursuant to 30 TAC §287.48(e), the person that plugs such a well shall, within 30 days after plugging is complete, submit a Water Well Completion and Plugging Report to the Executive Director, through the Austin Regional Office and to the Barton Springs/Edwards Aquifer Conservation District.

Any drill holes resulting from core sampling on-site or down-gradient of the site shall be plugged with cement slurry, from the bottom of the hole to the top of the hole, so as to not allow water or contaminants to enter the subsurface environment.

14. No waste-disposal wells, new confined animal feeding operations, land disposal of Class I wastes, or use of sewage holding tanks as parts of organized collection systems shall be allowed on the recharge zone of this regulated development.

If you have any questions or require additional information, please contact Melissa Lopez at the Austin Regional Office at (512) 463-7803.

Sincerely,

Dan Pearson
Executive Director
Texas Natural Resource Conservation Commission

MML:mml

cc: James Knight, Bury & Pittman, Inc.
Austan Librach, Environmental & Conservation Services Dept., City of Austin
The Honorable Bill Aleshire, County Judge, Travis County
Rosalinda Escalon, Field Operations, Administration, TNRCC

Modification of a Previously Approved Plan (TCEQ-0590)

Attachment B: Narrative of Proposed Modification

The proposed project involves the installation of one 30,000-gallon underground storage tank manufactured by Xerxes, model 10FT DWX MC UL (Drawing No. XS-007481). The double-walled fiberglass tank has an approximate diameter of 10 feet and is UL 1316 listed. The tank will contain 20,000 gallons (Compartment A) for unleaded gasoline and 10,000 gallons (Compartment B) for premium gasoline. The proposed fuel improvements will include the following:

1. One (1) 30,000 Gallon Double-Walled UST – split 20,000 gal unleaded/10,000 gal premium
2. Four (4) Wayne Anthem UX Dispensers
3. One (1) Park StormTrooper HMI-100 with trench drain
4. NOV Dualoy 3000 2" product piping
5. FFS Hydrostatic Interstitional Sensor
6. Evo 600 Tank Gauge
7. Franklin Electric Systems Emergency Stop Operator

The proposed construction will not change the existing Impervious Cover. Therefore, the UST Modification request does not require any additional Permanent BMPs. Refer to the UST section for additional UST infrastructure details and specifications.

Modification of a Previously Approved Plan (TCEQ-0590)

Attachment C: Current Site Plan of the Approved Project

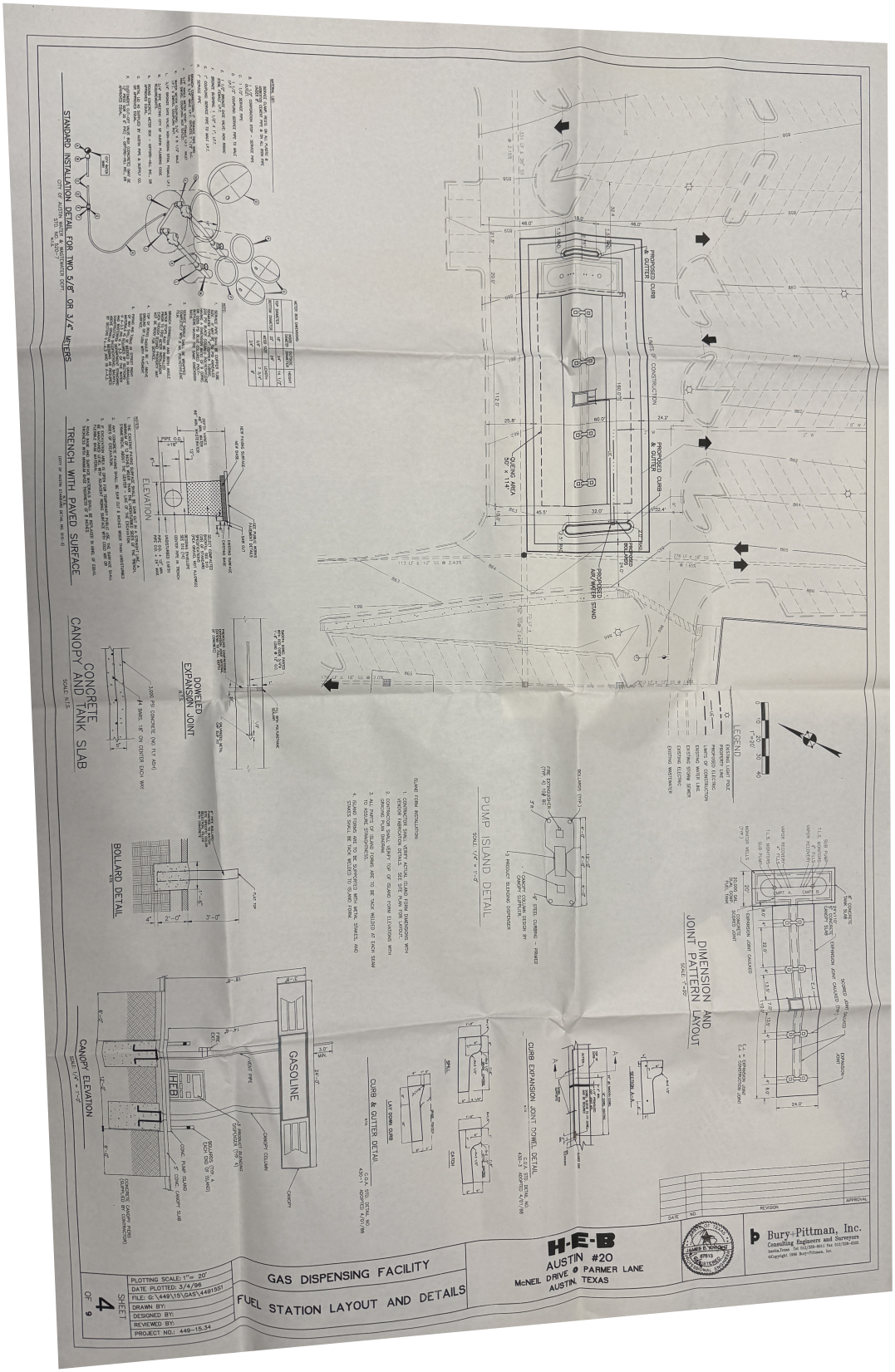
STANDARD INSTALLATION DETAIL FOR TWO 5/8" OR 3/4" METERS
TRENCH WITH PAVED SURFACE
ELEVATION
CONCRETE CANOPY AND TANK SLAB
DOWELED EXPANSION JOINT
BOLLARD DETAIL
PUMP ISLAND DETAIL
LEGEND
DIMENSION AND JOINT PATTERN LAYOUT
CANOPY ELEVATION
GASOLINE
DIESEL
CURB & GUTTER DETAIL
CURB EXPANSION JOINT DOWEL DETAIL
GAS DISPENSING FACILITY
FUEL STATION LAYOUT AND DETAILS
H-E-B
AUSTIN #20
McNEIL DRIVE @ PARMER LANE
AUSTIN, TEXAS
Bury+Pittman, Inc.
Consulting Engineers and Surveyors
SHEET 4 OF 9
PLOTTING SCALE: 1"= 20'
DATE PLOTTED: 3/4/96
FILE: G:\449\15\GAS\4491501
DRAWN BY:
DESIGNED BY:
REVIEWED BY:
PROJECT NO.: 449-15.34

Underground Storage Tank Facility Plan Application

TCEQ-0583

RANGER
ENVIRONMENTAL SERVICES, LLC

Underground Storage Tank Facility Plan Application

Texas Commission on Environmental Quality

for Storage on the Edwards Aquifer Recharge and Transition Zones and Relating to 30 TAC §213.5(d), Effective June 1, 1999

To ensure that the application is administratively complete, confirm that all fields in the form are complete, verify that all requested information is provided, consistently reference the same site and contact person in all forms in the application, and ensure forms are signed by the appropriate party.

Note: Including all the information requested in the form and attachments contributes to more streamlined technical reviews.

Signature

To the best of my knowledge, the responses to this form accurately reflect all information requested concerning the proposed regulated activities and methods to protect the Edwards Aquifer. All components used for this facility are U.L. listed or certified by a 3rd party and are compatible and will function pursuant to 30 TAC §213.5(d) and 30 TAC Chapter 334 Subchapter C. This **Underground Storage Tank Facility Plan Application** is hereby submitted for TCEQ review and Executive Director approval. The application was prepared by:

Print Name of Customer/Agent: Chad M. Copeland, P.G., PWS

Date: 1/9/2026

Signature of Customer/Agent:



Regulated Entity Name: HEB 388

Underground Storage Tank (UST) System Information

1. ☒ **Attachment A – Detailed Narrative of UST Facility**. A detailed narrative description of the proposed UST Facility is attached. Note: Example descriptions are provided in the instructions (TCEQ-0583-Instructions)
2. Tanks and substance to be stored:

Table 1 - Tanks and Substances Stored

UST Number	*Size(Gallons)*	*Substance to be Stored*	*Double-wall Tank Material*
1	30,000	20k - Gasoline (reg); 10k - Gasoline (premium)	Xerxes - DW Fiberglass UL1316
2			
3			
4			
5			

3. Tanks:

   ☒ **Attachment B – Manufacturer Information for Tanks**. New or replacement systems for the underground storage of static hydrocarbons or hazardous substances must be double-walled or provide an equivalent method of protection approved by the executive director. Tanks must comply with technical standards as required by 30 TAC 334.45(b) relating to technical standards for new tanks. Manufacturer information is attached.

   ☐ **Attachment C – Alternative Design and Protection Method for Tanks**. Information required by 30 TAC 334.43, relating to variances and alternative procedures is attached.

4. Piping:

   ☒ **Attachment D – Manufacturer Information for Piping**. Piping must comply with technical standards as required by 30 TAC 334.45(c) relating to technical standards for new piping. Manufacturer information is attached.

   ☐ **Attachment E – Alternative Design and Protection Method for Piping**. Information required by 30 TAC 334.43, relating to variances and alternative procedures is attached.

5. ☒ Any new underground storage tank system that does not incorporate a method for tertiary containment shall be located a minimum horizontal distance of 150 feet from any domestic, industrial, irrigation, or public water supply well, or other sensitive feature as required by 30 TAC §213.5(d)(1)(B).

   ☒ The UST system(s) will not be installed within 150 feet of a domestic, industrial, irrigation, or public water supply well, or other sensitive feature.

   ☐ **Attachment F - Tertiary Containment Method**. The UST system(s) will be required to have tertiary containment provided. A description of the method proposed to provide tertiary containment is attached.

6. ☒ Corrosion protection equipment to be installed or type of non-corrodible materials:

Table 2 - Corrosion Protection

Equipment	*Corrosion Protection (Method)*
Tanks	Xerxes - Double-wall FG (UL 1316)
Product Delivery Piping	Dualoy 3000/LCX (double-wall FG)
Vapor Recovery Piping	NA
Submersible Pumps	Isolated in sump
Flex Connector (dispenser end)	Isolated in sump
Flex Connector (pump end)	Isolated in sump
Riser	Dielectric tape wrap

7. ☒ Overfill protection equipment to be installed:

   ☐ Overfill prevention restrictor positioned at 90% capacity.
   ☐ Overfill prevention valve positioned at 95% capacity.
   ☒ Overfill audible and visual alarm positioned at 90% capacity.

8. ☒ Methods for detecting leaks in the inside wall of a double-walled system must be included in the facility's design and construction. The leak detection system must provide continuous monitoring of the system and must be capable of immediately alerting the system's owner of possible leakages. Release detection equipment to be installed: (Check all that apply)

   ☐ Central on-site monitor
   ☒ Interstitial tank probes
   ☒ Automatic tank gauge
   ☒ Pump/manway sump probes
   ☐ Observation well probes
   ☐ Mechanical line leak detectors (for pressurized lines only)
   ☒ Automatic (electronic) line leak detectors

Excavation and Backfill

9. ☒ The depth of the tank excavation will be sufficient to accommodate piping fall requirements, tank diameter, bedding, and a minimum cover of three (3) feet [30 TAC §334.46].

   The depth of the tank excavation will be 15 feet.

10. ☒ The minimum thickness of the tank bedding will conform to 30 TAC §334.46(a)(5)(C and D).

    The tank bedding thickness will be 12 inches.

11. ☒ The material to be used as backfill will conform to 30 TAC §334.46(a)(5)(A and B) and will consist of:

☐ Clean washed non-corrosive sand
☒ Pea gravel
☐ Crushed rock
☐ Other: _____

12. ☒ The slope of the product delivery line(s) will conform to 30 TAC §334.46(c)(2) and will be 1/8" (1/8" per foot minimum).

Site Plan Requirements

Items 13 - 24 must be included on the Site Plan.

13. ☒ The Site Plan must have a minimum scale of 1" = 400'.

    Site Plan Scale: 1" = 10'.

14. 100-year floodplain boundaries:

    ☐ The 100-year floodplain boundaries are based on the following specific (including date of material) sources(s): _____

    ☐ Some part(s) of the project site is located within the 100-year floodplain. The floodplain is shown and labeled.
    ☒ No part of the project site is located within the 100-year floodplain.

15. ☐ The layout of the development is shown with existing and finished contours at appropriate, but not greater than ten-foot contour intervals. Show lots, recreation centers, buildings, roads, etc.

    ☒ The layout of the development is shown with existing contours. Finished topographic contours will not differ from the existing topographic configuration and are not shown.

16. All known wells (oil, water, unplugged, capped and/or abandoned, test holes, etc.):

    ☐ There are _____(#) wells present on the project site and the locations are shown and labeled. (Check all of the following that apply)

    ☐ The wells are not in use and have been properly abandoned.
    ☐ The wells are not in use and will be properly abandoned.
    ☐ The wells are in use and comply with 16 TAC §76.

    ☒ There are no wells or test holes of any kind known to exist on the project site.

17. Geologic or manmade features which are on the site:

    ☐ All sensitive geologic or manmade features identified in the Geologic Assessment are shown and labeled.
    ☐ No sensitive geologic or manmade features were identified in the Geologic Assessment.
    ☒ **Attachment G - Exception to the Geologic Assessment**. A request and justification for an exception to a portion of the Geologic Assessment is attached.

18. ☒ The drainage patterns and approximate slopes anticipated after major grading activities.

19. ☒ Areas of soil disturbance and areas which will not be disturbed.

20. ☒ Locations of major structural and nonstructural controls. These are the temporary best management practices.

21. ☒ Locations where soil stabilization practices are expected to occur.

22. ☐ Surface waters (including wetlands).

    ☒ N/A

23. ☐ Locations where stormwater discharges to surface water or sensitive features.

    ☒ There will be no discharges to surface water or sensitive features.

24. ☒ Legal boundaries of the site are shown.

UST System Profiles

25. ☒ **Attachment H - Profile Drawing(s)**. A profile drawing(s) of the proposed UST system with all components shown and labeled is attached.

Best Management Practices

26. ☒ **Attachment I - Initial and Continuing Training**. A description of the initial and continuing training of on-site personnel for operation of release detection equipment is attached. The description should include how personnel will respond to warning and alarm conditions of the leak detection monitoring system.

27. ☒ **Attachment J - Release Detection Maintenance**. A description of the program and schedule for maintaining release detection and cathodic protection equipment is attached. Any such equipment should be operated and maintained in accordance with the manufacturer's specifications and instructions.

Administrative Information

28. A Water Pollution Abatement Plan (WPAP) is required for construction of any associated commercial, industrial or residential project located on the Recharge Zone.

    ☒ The WPAP application for this project was approved by letter dated July 7, 1995. A copy of the approval letter is attached at the end of this application.

    ☐ The WPAP application for this project was submitted to the TCEQ on _____, but has not been approved.

    ☐ A WPAP application is required for an associated project, but it has not been submitted.

    ☐ There will be no building or structure associated with this project. In the event a building or structure is needed in the future, the required WPAP will be submitted to the TCEQ.

    ☐ The proposed UST is located on the **Transition Zone** and a WPAP is not required. Information requested in 30 TAC 213.5 subsection (b)(4)(B) and (C) and (5) is provided with this application. (Forms TCEQ-0600 Permanent Stormwater Section and TCEQ-0602 Temporary Stormwater Section or Stormwater Pollution Prevention Plan/SW3P).

29. ☒ UST systems must be installed by a person possessing a valid certificate of registration in accordance with the requirements of 30 TAC Chapter 334 Subchapter I.

30. ☒ This facility is subject to and must meet the requirements of 30 TAC Chapter 334, including but not limited to the 30 day construction notification and reporting and cleanup of surface spills and overfills.

31. ☒ Upon completion of the tankhold excavation, a geologist must certify that the excavation was inspected for the presence of sensitive features. The certification must be submitted to the appropriate regional office. If sensitive features are found, then excavation near the feature may not proceed until the methods to protect the Edwards Aquifer are reviewed and approved by the executive director.

32. ☒ Submit one (1) original and one (1) copy of the application, plus additional copies as needed for each affected incorporated city, groundwater conservation district, and county in which the project will be located. The TCEQ will distribute the additional copies to these jurisdictions. The copies must be submitted to the appropriate regional office.

33. ☒ Any modification of this UST application will require TCEQ approval, prior to construction, and may require submission of a revised application, with appropriate fees.

ATTACHMENT A

Detailed Narrative of UST Facility

RANGER
ENVIRONMENTAL SERVICES, LLC

PROJECT DESCRIPTION

General Information

The HEB 388 project (RN102727070) is located on a 1.81-acre property at 6001 W Parmer Lane, Austin, Texas 78727. The site lies within the City of Austin and is in the Edwards Aquifer Recharge Zone. An existing Water Pollution Abatement Plan (WPAP) for the site was initially approved on July 7, 1995. For more site-specific details, please refer to the general project description found in the General Information Section.

The following pertains specifically to the UST proposal

The proposed replacement of the underground storage tank system will include one (1) Xerxes underground storage tank. The tank will be a 30,000-gallon compartmentalized tank (UL 1316). The compartments will store 20,000 gallons of gasoline (regular) and 10,000 gallons of gasoline (premium). This tank will be associated with four (4) new Wayne Anthem dispensers and double-wall FRP piping.

Each compartment will be equipped with 2.0 hp variable Franklin Fueling submersible pumps. Overfill prevention for each tank compartment will be provided by a valve that initiates audible and visual alarms positioned at 90% of the tank capacity.

Product piping will be UL listed Dualoy 3000/LCX fiberglass-reinforced plastic piping. Vent lines will be 2-inch diameter single-wall pipe. Under each dispenser for each product grade, a shear valve will be mounted to a rigid framework and installed at the dispenser island surface level to assure automatic shut-off of product flow during impact or fire emergencies. In addition, FLEX-ING flexible connectors will be installed at both ends of each product line, in isolation sumps, to connect to the dispenser unit and the submersible pump.

Corrosion protection for the metallic components of the underground storage systems will be provided by electrical isolation. The submersible pump housings and pump-end flexible connectors will be installed within double-wall sumps, which will provide isolation from the backfill material. The dispenser-end flexible connectors will be similarly isolated by enclosure within Bravo double-wall fiberglass sumps under the dispensers. The vapor recovery risers and the fill tube risers will be installed within a Bravo double-wall sumps, thoroughly wrapped with a suitable dielectric material, and isolated from the tank using isolation bushings.

The proposed tank and piping will be monitored for leaks by means of inventory control, sump and interstitial leak detection, and automatic line leak detection (brine). The tank will be equipped with a liquid discrimination sensor, installed adjacent to the submersible pumps in the sumps and in all dispenser sumps. The tank will also be fitted with an electronic automatic tank gauging inventory probe to monitor the product volume in the tank.

The controller will use interstitial monitoring, as viewed in the Sensor Status Report, to meet TCEQ release detection requirements. The tank interstitial (brine) is monitored with an interstitial sensor, which triggers an alarm if product enters the interstitial, lowering the brine level. This central monitoring unit is designed to provide visual and audible alarms when changes within the interstitials are detected. Each product piping line will be equipped with electronic line leak detection. The probes and sensors from all tanks will be connected to a Franklin Fueling EVO 600 programmable control unit in the store building.

ATTACHMENT B

Manufacturer Information for Tanks

RANGER
ENVIRONMENTAL SERVICES, LLC

LAST SAVED DATE: JULY 8, 2025 2:26:09 PM

ITEM NO.	QTY.	DESCRIPTION	PART NO.
1	1	MONITOR RESERVOIR-18IN	C230003
2	6	KIT_FITTING, SINGLE, SS, 4IN H, LAYUP, ON 10FT TANK (WITH SS STRIKER PLATE)	C310133
3	2	KIT_FITTING, SINGLE, SS, 1IN BRINE PORT, LAYUP, FRP ENCASED	C600476
4	2	KIT_MANWAY ASSY, DW, 22IN, SS, ON 10FT TANK (WITH SS STRIKER PLATE)	C600215
5	2	GASKET, MANWAY, 22IN, 1/8IN THK, HC-60	C430020
6	2	KIT_MANWAY COVER, SS, 22IN, 3-4IN H (0, CTR, 180), TYPE C	C330105
7	2	COLLAR, DW, 42IN, TRIMMED-10FT	C220005
8	2	COLLAR, DW, 48IN, TRIMMED-10FT	C220006
9	1	SUMP, DWFS, 42IN DIA, 48IN HT, 36IN OPENING, BRINE, FIELD LAM KIT	C710045
10	1	SUMP, DWFS, 42IN DIA, 48IN HT, 36IN OPENING, BRINE, FIELD LAM KIT	C710045
11	1	SUMP, DWFS, 48IN DIA, 48IN HT, 36IN WT, BRINE, FIELD LAM KIT	C710031
12	1	SUMP, DWFS, 48IN DIA, 48IN HT, 36IN WT, BRINE, FIELD LAM KIT	C710031
13	6	KIT_LIFT LUG, ON BENT PLATE, 10" X 12", 10' (ADHESIVE)	C340010
14	2	KIT_STEEL GUIDE LUG	C340014
15	2	DEADMEN, PREFAB CONCRETE, 18INX8.75IN-18FT LONG+AP (10FT)	C821003
16	4	DEADMEN, PREFAB CONCRETE, 18INX8.75IN-18FT LONG+AP (10FT)	C821003
17	10	ANCHOR STRAP ASSEMBLY (10FT DWX TANK)	-

NICK RIEMER
PETROLEUM
8/5/2025

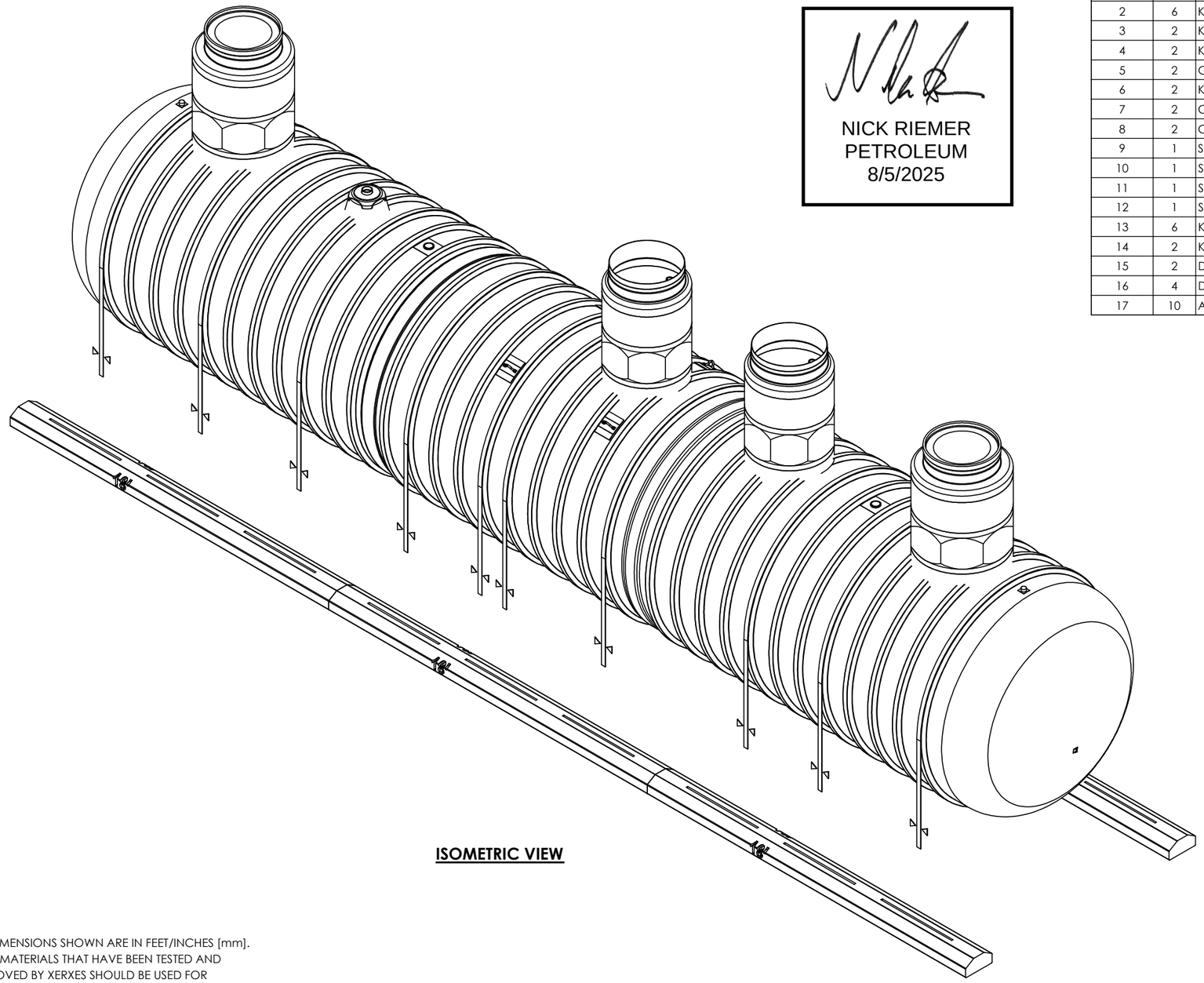

ISOMETRIC VIEW

NOTES:
1. ALL DIMENSIONS SHOWN ARE IN FEET/INCHES [mm].
2. ONLY MATERIALS THAT HAVE BEEN TESTED AND APPROVED BY XERXES SHOULD BE USED FOR BONDING OF CONTAINMENT SUMP COMPONENTS.
3. DRAWING EXPIRATION: DRAWING VALID FOR SIX (6) MONTHS FROM DATE OF LAST REVISION. XERXES RESERVES THE RIGHT TO REVIEW AND UPDATE.
4. MAXIMUM ESTIMATED WEIGHT: 17,000 LBS [7,700 KG]
5. TANK INTERSTICE IS FACTORY BRINE FILLED.
6. 10FT DW MFG. CONFIG.: XS-009756.
7. BRINE TEST PORTS: FITTING IS CAPPED DURING MANUFACTURE, DO NOT REMOVE OR USE.

REV	DESCRIPTION	REV BY	REV DATE	CHK BY	CHK DATE
5	ADDED CROSS REFERENCE NOTE, ADDED SS.BRINE PORT,AND NOTE. BOM UPDATE TO REFLECT THIS CHANGES.	IL	07-08-25	DD	07-08-25
4	CENTERED COLLARS AROUND FITTINGS WITH RIB. UPDATED BOM DESCRIPTIONS & PART NO.	DD	06-12-25	IL	06-12-25
3	REVISED MANWAY LOCATION TO RIB 28/29, RELOCATED STRAPS TO RIB 11/12, 19/3, 15/16, 23/24 . ADDED SEAM DIMENSIONS	IL	03-27-25	DD	03-27-25
2	CHANGE MANWAYS, FITTINGS, AND GASKETS TO MATCH SS, FROM CS	JP	10-15-24	IL	10-15-24
1	ADDED FITTING ON FLAT #10 & 25	IL	08-22-24	DD	08-22-24

INDUSTRY: M101 FUEL MARKETS
SALES MANAGER: CARY ETTER
THIRD ANGLE PROJECTION
UNITS: INCH [mm] DATE: MM/DD/YY

PROPRIETARY AND CONFIDENTIAL
THIS DRAWING IS THE PROPERTY OF MATTR CORP. THE COPYRIGHT/ OWNERSHIP OF THIS DRAWING IS AND WILL REMAIN WITH MATTR CORP. THE PHYSICAL POSSESSION OF THIS DRAWING DOES NOT CONVEY THE RIGHT TO USE ITS DESIGN CONCEPT, OR TO REPRODUCE IT, OR TO MANUFACTURE IN WHOLE OR IN PART THE ITEM(S) DEPICTED HEREIN WITHOUT WRITTEN PERMISSION AND AUTHORIZATION OF MATTR CORP.

DRAWN BY: IL
APPR. BY: KVL
APPR. DATE: 08-02-24

XERXES

DESCR: 10FT DWX MC UL
CAP. 20,000 X 10,000 GALLONS
HEB GROCERY

SIZE: B
DWG NO.: XS-007481
REV.: 5
SHEET: 1 of 3 - ISOMETRIC-BOM

FILE LOCATION: Z:\DRAFTING\TANKBUILDER EXPORTED FILES

LAST SAVED DATE: JULY 8, 2025 2:26:09 PM

NICK RIEMER
PETROLEUM
8/5/2025

ITEM NO.	QTY.	DESCRIPTION	PART NO.
1	1	MONITOR RESERVOIR-18IN	C230003
2	6	KIT_FITTING, SINGLE, SS, 4IN H, LAYUP, ON 10FT TANK (WITH SS STRIKER PLATE)	C310133
3	2	KIT_FITTING, SINGLE, SS, 1IN BRINE PORT, LAYUP, FRP ENCASED	C600476
4	2	KIT_MANWAY ASSY, DW, 22IN, SS, ON 10FT TANK (WITH SS STRIKER PLATE)	C600215
5	2	GASKET, MANWAY, 22IN, 1/8IN THK, HC-60	C430020
6	2	KIT_MANWAY COVER, SS, 22IN, 3-4IN H (0, CTR, 180), TYPE C	C330105
7	2	COLLAR, DW, 42IN, TRIMMED-10FT	C220005
8	2	COLLAR, DW, 48IN, TRIMMED-10FT	C220006

ITEM NO.	QTY.	DESCRIPTION	PART NO.
9	1	SUMP, DWFS, 42IN DIA, 48IN HT, 36IN OPENING, BRINE, FIELD LAM KIT	C710045
10	1	SUMP, DWFS, 42IN DIA, 48IN HT, 36IN OPENING, BRINE, FIELD LAM KIT	C710045
11	1	SUMP, DWFS, 48IN DIA, 48IN HT, 36IN WT, BRINE, FIELD LAM KIT	C710031
12	1	SUMP, DWFS, 48IN DIA, 48IN HT, 36IN WT, BRINE, FIELD LAM KIT	C710031
13	6	KIT_LIFT LUG, ON BENT PLATE, 10" X 12", 10' (ADHESIVE)	C340010
14	2	KIT_STEEL GUIDE LUG	C340014
15	2	DEADMEN, PREFAB CONCRETE, 18INX8.75IN-18FT LONG+AP (10FT)	C821003
16	4	DEADMEN, PREFAB CONCRETE, 18INX8.75IN-18FT LONG+AP (10FT)	C821003
17	10	ANCHOR STRAP ASSEMBLY (10FT DWX TANK)	-

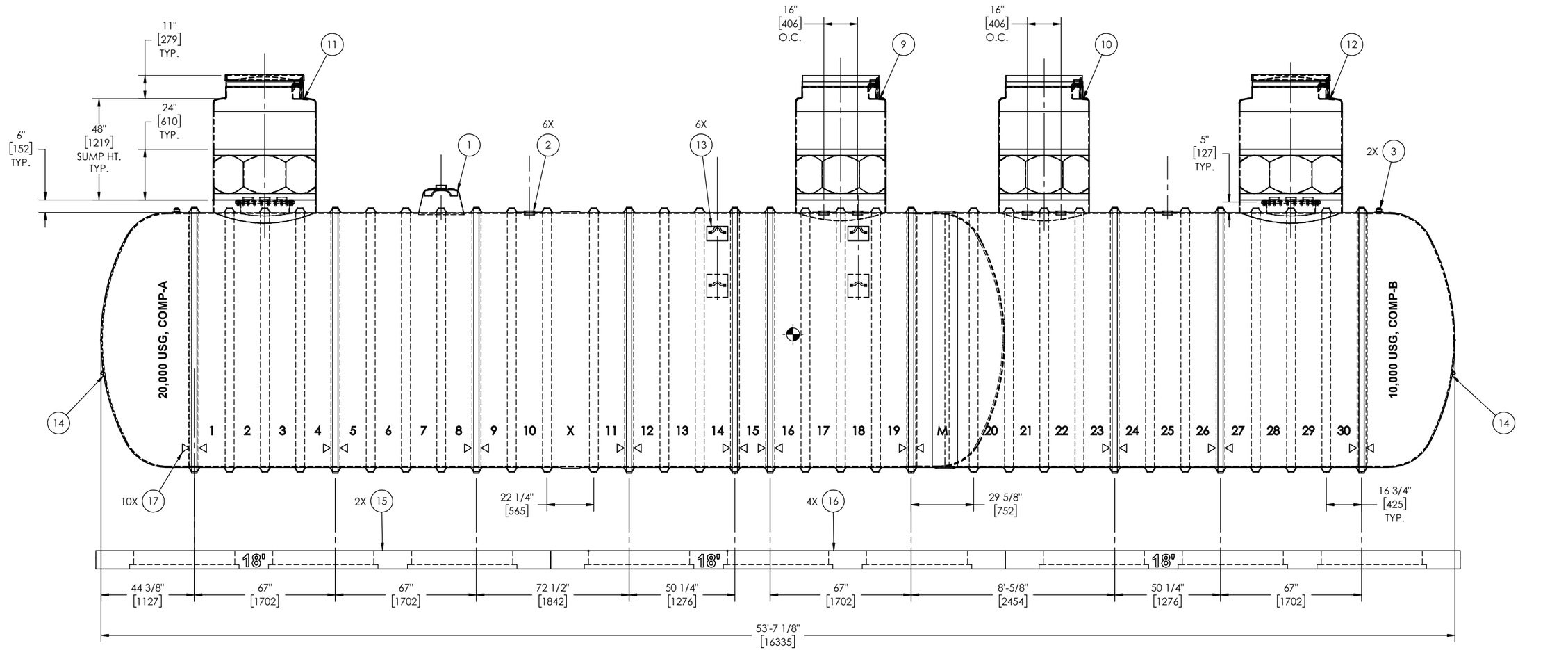

FRONT ELEVATION

REV	DESCRIPTION	REV BY	REV DATE	CHK BY	CHK DATE
5	ADDED CROSS REFERENCE NOTE, ADDED SS.BRINE PORT,AND NOTE. BOM UPDATE TO REFLECT THIS CHANGES.	IL	07-08-25	DD	07-08-25
4	CENTERED COLLARS AROUND FITTINGS WITH RIB. UPDATED BOM DESCRIPTIONS & PART NO.	DD	06-12-25	IL	06-12-25
3	REVISED MANWAY LOCATION TO RIB 28/29, RELOCATED STRAPS TO RIB 11/12, 19/3, 15/16, 23/24 . ADDED SEAM DIMENSIONS	IL	03-27-25	DD	03-27-25
2	CHANGE MANWAYS, FITTINGS, AND GASKETS TO MATCH SS, FROM CS	JP	10-15-24	IL	10-15-24
1	ADDED FITTING ON FLAT #10 & 25	IL	08-22-24	DD	08-22-24

INDUSTRY: M101 FUEL MARKETS
SALES MANAGER: CARY ETTER

PROPRIETARY AND CONFIDENTIAL
THIS DRAWING IS THE PROPERTY OF MATTR CORP. THE COPYRIGHT/ OWNERSHIP OF THIS DRAWING IS AND WILL REMAIN WITH MATTR CORP. THE PHYSICAL POSSESSION OF THIS DRAWING DOES NOT CONVEY THE RIGHT TO USE ITS DESIGN CONCEPT, OR TO REPRODUCE IT, OR TO MANUFACTURE IN WHOLE OR IN PART THE ITEM(S) DEPICTED HEREIN WITHOUT WRITTEN PERMISSION AND AUTHORIZATION OF MATTR CORP.

THIRD ANGLE PROJECTION
UNITS: INCH [mm]
DATE: MM/DD/YY

DRAWN BY: IL
APPR. BY: KVL
APPR. DATE: 08-02-24

XERXES*

DESCR: 10FT DWX MC UL
CAP. 20,000 X 10,000 GALLONS
HEB GROCERY

SIZE: B
DWG NO.: XS-007481
REV.: 5
SHEET: 2 of 3 - FRONT ELEVATION

FILE LOCATION: Z:\DRAFTING\TANKBUILDER EXPORTED FILES

LAST SAVED DATE: JULY 8, 2025 2:26:09 PM

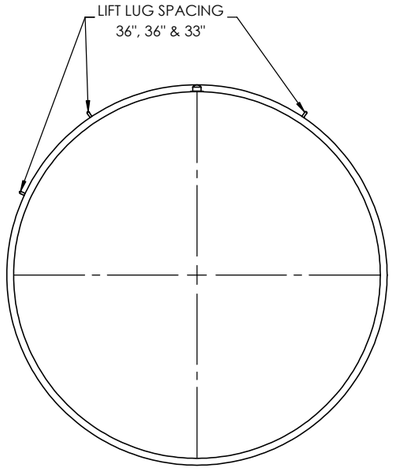

ITEM NO.	QTY.	DESCRIPTION	PART NO.
1	1	MONITOR RESERVOIR-18IN	C230003
2	6	KIT_FITTING, SINGLE, SS, 4IN H, LAYUP, ON 10FT TANK (WITH SS STRIKER PLATE)	C310133
3	2	KIT_FITTING, SINGLE, SS, 1IN BRINE PORT, LAYUP, FRP ENCASED	C600476
4	2	KIT_MANWAY ASSY, DW, 22IN, SS, ON 10FT TANK (WITH SS STRIKER PLATE)	C600215
5	2	GASKET, MANWAY, 22IN, 1/8IN THK, HC-60	C430020
6	2	KIT_MANWAY COVER, SS, 22IN, 3-4IN H (0, CTR, 180), TYPE C	C330105
7	2	COLLAR, DW, 42IN, TRIMMED-10FT	C220005
8	2	COLLAR, DW, 48IN, TRIMMED-10FT	C220006
9	1	SUMP, DWFS, 42IN DIA, 48IN HT, 36IN OPENING, BRINE, FIELD LAM KIT	C710045
10	1	SUMP, DWFS, 42IN DIA, 48IN HT, 36IN OPENING, BRINE, FIELD LAM KIT	C710045
11	1	SUMP, DWFS, 48IN DIA, 48IN HT, 36IN WT, BRINE, FIELD LAM KIT	C710031
12	1	SUMP, DWFS, 48IN DIA, 48IN HT, 36IN WT, BRINE, FIELD LAM KIT	C710031
13	6	KIT_LIFT LUG, ON BENT PLATE, 10" X 12", 10' (ADHESIVE)	C340010
14	2	KIT_STEEL GUIDE LUG	C340014
15	4	DEADMEN, PREFAB CONCRETE, 18INX8.75IN-18FT LONG+AP (10FT)	C821003
16	2	DEADMEN, PREFAB CONCRETE, 18INX8.75IN-18FT LONG+AP (10FT)	C821003
17	10	ANCHOR STRAP ASSEMBLY (10FT DWX TANK)	-

NICK RIEMER
PETROLEUM
8/5/2025

LIFT LUG ORIENTATION

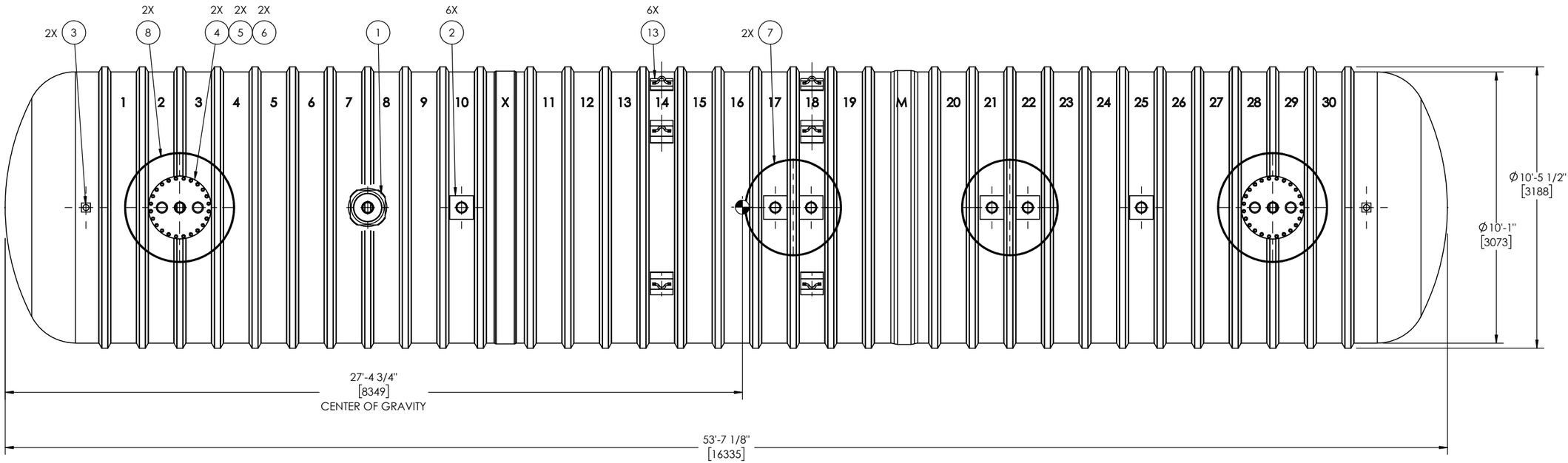

TOP VIEW

REV	DESCRIPTION	REV BY	REV DATE	CHK BY	CHK DATE
5	ADDED CROSS REFERENCE NOTE, ADDED SS.BRINE PORT,AND NOTE. BOM UPDATE TO REFLECT THIS CHANGES.	IL	07-08-25	DD	07-08-25
4	CENTERED COLLARS AROUND FITTINGS WITH RIB. UPDATED BOM DESCRIPTIONS & PART NO.	DD	06-12-25	IL	06-12-25
3	REVISED MANWAY LOCATION TO RIB 28/29, RELOCATED STRAPS TO RIB 11/12, 19/3, 15/16, 23/24 . ADDED SEAM DIMENSIONS	IL	03-27-25	DD	03-27-25
2	CHANGE MANWAYS, FITTINGS, AND GASKETS TO MATCH SS, FROM CS	JP	10-15-24	IL	10-15-24
1	ADDED FITTING ON FLAT #10 & 25	IL	08-22-24	DD	08-22-24

INDUSTRY: M101 FUEL MARKETS
SALES MANAGER: CARY ETTER
THIRD ANGLE PROJECTION
UNITS: INCH [mm]
DATE: MM/DD/YY

PROPRIETARY AND CONFIDENTIAL
THIS DRAWING IS THE PROPERTY OF MATTR CORP. THE COPYRIGHT/ OWNERSHIP OF THIS DRAWING IS AND WILL REMAIN WITH MATTR CORP. THE PHYSICAL POSSESSION OF THIS DRAWING DOES NOT CONVEY THE RIGHT TO USE ITS DESIGN CONCEPT, OR TO REPRODUCE IT, OR TO MANUFACTURE IN WHOLE OR IN PART THE ITEM(S) DEPICTED HEREIN WITHOUT WRITTEN PERMISSION AND AUTHORIZATION OF MATTR CORP.

DRAWN BY: IL
APPR. BY: KVL
APPR. DATE: 08-02-24

XERXES

DESCR: 10FT DWX MC UL
CAP. 20,000 X 10,000 GALLONS
HEB GROCERY

SIZE: B
DWG NO.: XS-007481
REV.: 5
SHEET: 3 of 3 - TOP VIEW-LIFT LUGS

FILE LOCATION: Z:\DRAFTING\TANKBUILDER EXPORTED FILES

XERXES®

Double-Wall and Triple-Wall Tanks

Underground tanks backed by proven longevity

Fuel marketers, equipment distributors and commercial accounts rely on proven technology when planning their underground installations. It makes sense that they look to Xerxes, the manufacturer that developed the first UL-listed double-wall fiberglass tank.

Xerxes tanks were in early compliance with the updated certification requirements of the bi-national standard ANSI/CAN/UL/ULC 1316:2018.

Tank geometry and materials create structural strength

- Xerxes fuel tanks are designed and manufactured to provide decades of secure storage for any application
- Cylindrical tank with hemispherical or elliptical end caps is designed to withstand the stresses of underground storage
- Integrally manufactured fiberglass ribs function like I-beams and enhance tank strength
- Premium resin and glass-fiber reinforcement create a structurally strong tank

Multicompartment tanks

- Store more than one grade or type of fuel in the same tank
- Double-wall tanks are available in models with two, three or four compartments
- Provide space-saving installation with a single tank
- Can provide cost savings in installation and insurance costs



Double-wall and triple-wall tanks

- No added corrosion protection needed to store ethanol-blended fuel (E10, E15, E85), biodiesel fuels and ultra-low sulfur diesel (ULSD)
- Incorporates Xerxes' proprietary 3D glass fabric (Parabeam®) to create interstitial monitoring space between tank walls
- Tertiary containment available for added protection in sensitive environments, such as nearby acquifers, lakes or streams

Key Features

Designed to withstand **H-20/ HS-20 axle loads**

Compatible with **traditional fuels and new biofuels**

Lightweight tanks for **easy shipping and installation**

Corrosion-resistant inside and out

30-year limited warranty

Double-Wall and Triple-Wall Tanks

Product and project reliability

- Stringent quality control of manufacturing
- Ongoing technical support ensures that each tank is a long-term investment
- Comprehensive installation training is available
- 45+ years of composite manufacturinng and 225,000+ installed tanks assure customers that Xerxes stands behind its products and warranties

Easy shipping and installation

- Lightweight tank and engineered deadmen can generally fit on the same truck flatbed
- No special, heavy equipment needed for unloading and installing tanks
- Ideal for tight site footprints and remote locations



Single-Compartment Tanks
Double-Wall

Nominal Diameter	Nominal Capacities for Tanks Specified in U.S. Gallons	Nominal Capacities for Tanks Specified in Liters
4-foot	600 – 2,000	2,900 – 5,000
6-foot	2,500 – 6,000	Not available
8-foot	6,000 – 20,000	25,000 – 65,000
10-foot	9,000 – 40,000	40,000 – 150,000
12-foot	20,000 – 50,000	Not available



Multicompartment Tanks
Double-Wall

Nominal Diameter	Nominal Capacities for Tanks Specified in U.S. Gallons	Nominal Capacities for Tanks Specified in Liters
6-foot	4,500 – 12,000	Not available
8-foot	9,000 – 25,000	35,000 – 95,000
10-foot	15,000 – 40,000	60,000 – 150,000

Typical fuel tank accessories

- Engineered anchoring system
- Truchek® hydrostatic monitoring system
- Containment collars, sumps and covers
- Manways, extensions and covers
- Fittings and nozzles
- Fill tubes

For over 45 years, Xerxes has designed and manufactured fiberglass underground storage tanks for fuel, water and wastewater. Xerxes' most recent expansion is its HydroChain™ stormwater product line — highly engineered products with site-specific designs for stormwater management solutions. Xerxes is a key brand of Mattr, a global materials technology company serving critical infrastructure markets.

FDTW0425 | xerxes.com | **fuelsales@mattr.com**
© 2025 Mattr Corp. All rights reserved.

XERXES®

ATTACHMENT D

Manufacturer Information for Piping

RANGER
ENVIRONMENTAL SERVICES, LLC

Dualoy® 3000/LCX Product Data

Applications

Rigid fiberglass coaxial fuel handling systems requiring Underwriters Laboratories Listing for integral primary and containment piping conveying the following fuels:

- Motor Vehicle (MV)
- Aviation and Marine A&M)
- High Blend (HB)
- Bio-Diesel
- Concentrated (CT)
- Diesel Exhaust Fluid

Description

Dualoy 3000/LCX rigid fiberglass coaxial piping is a cost-effective solution for contained piping systems. LCX is used for product delivery lines in underground fuel handling systems to convey fuel from the tank to the dispensers. Dualoy 3000/LCX pipe is UL Listed for use with motor vehicle (MV), high blend (HB), concentrated (CT) and aviation and marine (A&M) fuels. Based on currently known tests, NOV Fiber Glass Systems found this product to be suitable for conveying all blends of biodiesel and ethanol type fuels and the conveyance of DEF.

The LCX pipe is manufactured as an integral unit. The primary is made of chemically inert, non-permeable, fiberglass reinforced epoxy resin which is inherently resistant to deterioration due to water and microbial attack. This layer is covered with a porous layer to provide the small volume interstitial space, which facilitates rapid leak detection. Then, the containment layer, comprised of the same material as the primary, is wound over the primary and porous layers.

The containment system is installed with custom designed clamshell containment fittings. Both the primary and containment systems are bonded for long-term, reliable performance.

- Dualoy 3000/LCX containment fittings are typically bolted in place while the adhesive cures.
- Dualoy 3000/LCX reduces installation and inspection time dramatically, retaining system integrity.
- Dualoy 3000/LCX double wall design significantly improves impact resistance over single wall pipe.
- Dualoy 3000/LCX systems provide true double wall design which permits rapid communication through the interstice.

Listings and Approvals

The rigid fiberglass piping used in Dualoy 3000/LCX is Listed in the United States with Underwriters Laboratories for nonmetallic underground piping for MV, HB, CT and A&M fuels under File No. MH9162. Dualoy 3000/LCX pipe and fittings are also Listed with Underwriters Laboratories of Canada for Petroleum Products and Oxygenated Fuels (File CMH715). Underwriters Laboratories has also approved Dualoy 3000/L and Dualoy 3000/LCX for use with MTBE fluids.

Performance

Primary operating pressures to 200 psig (13.8 bar)

Continuous operating temperature to 150°F (66°C)

Containment system pressures to 50 psig (3.45 bar)

Individual system components may not have the same ratings as the pipe. Refer to the detailed product information for the specific components to determine the pressure rating for the system as a whole.

Composition

Primary pipe: Filament-wound fiberglass reinforced epoxy pipe with integral epoxy liner. When classified in accordance with ASTM D2310 and ASTM D2996, the pipe meets the following cell limits: RTRP 11CF1-5420.

Pipe containment: Filament-wound fiberglass reinforced epoxy pipe.

Interstitial space: Dry, graded glass beads secured in place with adhesive backed tape.

Fittings: Compression molded or filament-wound fiberglass reinforced epoxy primary fittings. Containment fittings are molded.

Adhesive: PSX™ •20 or PSX™ •34 ambient-cure, two-part epoxy for all services (including alcohols and MTBE).

Joining System

Primary:

Bell and spigot taper/taper adhesive-bonded joint

Containment:

Adhesive-bonded clamshell fittings. Parts are compression molded for exact fit and match. Material is identical to primary fittings and is UL Listed for all services, including use in MTBE fluids.

Pipe Lengths

Standard 20 ft. (6.1 m) random lengths 17 to 21 ft. (5.2 to 6.4 m)
and 30 ft. (9.1 m) random lengths 27 to 32 ft. (8.2 to 9.7 m)

Other lengths up to 42 ft. (12.8 m) available upon request.

Fittings

Primary	Adapters: bell x NPT male[1]	Flange stub ends[1]
	Adapters: bell x NPT female[2]	Isolation bushings[1]
	Adapters: spigot x NPT female[2]	Nipples[2]
	Adapters: spigot x NPT male[2]	Reducer bushings[1]
	45° elbows[1]	Repair couplings[1]
	90° elbows[1]	Sleeve couplings[2]
	End caps[1]	Tees[1]
	Flange rings[1]	Dispenser pan penetration fittings[1]
Containment	45° elbows[1]	Couplings[1]
	90° elbows[1]	Tees[1]
	Termination sleeves[1], [3]	

[1] Molded fitting
[2] Filament-wound fitting
[3] 2" (50 mm) available with or without test valve. 3" and 4" (80 and 100 mm) available only with test valve

Typical Pipe Dimensions and Weights

Pipe Size		Primary Pipe ID		Primary Pipe OD[1]		Primary Wall Thickness		Containment OD		Capacity		Weight	
in	mm	in	mm	in	mm	in	mm	in	mm	gal/ft	l/m	lb/ft	kg/m
2	50	2.21	56	2.37	60	0.080	2.03	2.59	66	0.20	0.76	0.90	1.34
3	80	3.32	84	3.50	89	0.085	2.16	3.70	94	0.45	1.70	1.30	1.93
4	100	4.33	110	4.50	114	0.087	2.21	4.70	119	0.77	2.92	1.74	2.59

[1] Typical outside diameters of 2"-4" (50 -100 mm) pipe are within API, ASTM and ANSI fiberglass and steel pipe dimensions.

Typical Primary Pipe Performance

Pipe Size		Pressure Rating[1]		Ultimate Internal Pressure[1]		Ultimate Collapse Pressure[2]	
in	mm	psig	MPa	psig	MPa	psig	MPa
2	50	200	2.07	1500	10.3	153	1.05
3	80	200	1.38	1000	6.9	90	0.62
4	100	175	1.21	750	5.2	39	0.27

[1] At 80°F (27°C)
[2] At 80°F (27°C) For continuous service do not exceed 75% of these values.

Fittings Pressure Performance

Pipe Size		Primary All Fittings		Containment Clamshell Fittings	
in	mm	psig	MPa	psig	kPa
2	50	200	1.38	50[1]	345
3	80	125	0.86	50[1]	345
4	100	100	0.69	20	138

[1] With reinforcing rings

For dimensions of primary fittings, consult Dualoy 3000/L Fittings Dimensions document. Pressure ratings of fittings without UL Listing are available on request.

Dualoy 3000/LCX piping systems are designed to function at temperatures ranging from -40 to 150°F (-40 to 66°C) at service pressures between -1 and 13.8 bar. Dualoy 3000/LCX pipe conforms to ASTM D2310, D2517 and D2996.

Typical Physical Properties of Primary Pipe

Pipe Property	Units	Value	ASTM
Thermal conductivity	Btu-in/(h•ft²•°F) W/m•°C	1.7 7.6	C177
Linear thermal expansion	10^{-6} in/in/°F 10^{-6} cm/cm/°C	8.5 15.3	D696
Friction factor	Hazen-Williams	150.0	—
Absolute roughness	10^{-6} ft 10^{-6}m	15.0 4.6	—
Specific gravity	—	1.81	D792
Barcol Hardness	Impressor 934-1	65.0	D2583

Typical Mechanical Properties of Primary Pipe

Pipe Property[1]	Units	Value[1]	ASTM
Tensile strength			
Longitudinal	10^3 psi MPA	35.0 241.0	D2105
Circumferential	10^3 psi MPA	70.0 483.0	D1599
Tensile modulus			
Longitudinal	10^6 psi GPa	2.5 17.2	D2105
Circumferential	10^6 psi GPa	3.8 26.2	FGSTM
Compressive strength			
Longitudinal	10^3 psi MPa	24.5 168.9	FGSTM
Compressive modulus			
Longitudinal	10^6 psi GPa	2.6 17.8	FGSTM
Cyclic	10^3 psi MPa	8.0 55.0	D2992(A)
Poisson's Ratio[2]			
ν_{xy}	—	0.16	FGSTM
ν_{yx}	—	0.17	FGSTM

(1) Based on structural wall thickness.

(2) The first subscript denotes the direction of applied stress and the second that of measured contraction
x denotes longitudinal direction.
y denotes circumferential direction.

Bending Radius

Pipe Size		Minimum Bending Radius[1]		Maximum Deflection per 20 ft Joint	Minimum Length Required for 10° Change	
in	mm	ft	m	deg	ft	m
2	50	75	23	15	13	4
3	80	100	38	9	22	7
4	100	150	46	7.5	27	8

(1) At rated pressure. Sharper bends may create excessive stress concentrations. Do not bend pipe until adhesive has cured.

National Oilwell Varco has produced this brochure for general information only, and it is not intended for design purposes. Although every effort has been made to maintain the accuracy and reliability of its contents, National Oilwell Varco in no way assumes responsibility for liability for any loss, damage or injury resulting from the use of information and data herein nor is any warranty expressed or implied. Always cross-reference the bulletin date with the most current version listed at the web site noted in this literature.

North America
17115 San Pedro Ave. Suite 200
San Antonio, Texas 78232 USA
Phone: 210 477 7500

South America
Avenida Fernando Simoes
Recife, Brazil 51020-390
Phone: 55 31 3501 0023

Europe
P.O. Box 6, 4190 CA
Geldermalsen, The Netherlands
Phone: 31 345 587 587

Asia Pacific
No. 7A, Tuas Avenue 3
Jurong, Singapore 639407
Phone: 65 6861 6118

Middle East
P.O. Box 17324
Dubai, UAE
Phone: 971 4881 3566

www.fgspipe.com • fgspipe@nov.com

NOV Fiber Glass Systems

©2012 National Oilwell Varco. All rights reserved.
FH3600 September 2012

ATTACHMENT G

Exception to the Geologic Assessment

RANGER
ENVIRONMENTAL SERVICES, LLC

Geologic Assessment

REGULATED ENTITY NAME: HEB 388
TYPE OF PROJECT: __ WPAP __ AST __ SCS _x_ UST

LOCATION OF PROJECT: _x_ Recharge Zone __ Transition Zone __ Contributing Zone within the Transition Zone

Ranger Environmental Services, LLC (Ranger) field personnel attempted to perform the required Geologic Assessment at the facility located at 6001 W. Parmer Lane, Travis County, Austin, Texas, on December 29, 2025. During the site visit, it was observed that the site had at least 90% impervious cover, as it is currently developed. It should be noted that this UST Facility Plan is a modification to a previously approved UST Facility Plan.

Therefore, given that the site currently has at least 90% impervious cover and that the native soils are not exposed, it is requested that an exception to the Geologic Assessment requirement be granted.

To the best of my knowledge, the responses to this form accurately reflect all requested information regarding the proposed regulated activities and methods to protect the Edwards Aquifer. My signature certifies that I am qualified as a geoscientist/geologist as defined by 30 TAC Chapter 213.

Chad M. Copeland, P.G., PWS — 512/335-1785 (Telephone)

Signature of Geoscientist — 12/29/2025 (Date)

Representing: Ranger Environmental Services, LLC
(Name of Company)

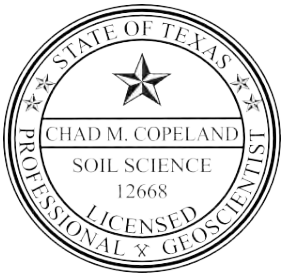

12/29/2025

ATTACHMENT H

Profile Drawings

RANGER
ENVIRONMENTAL SERVICES, LLC

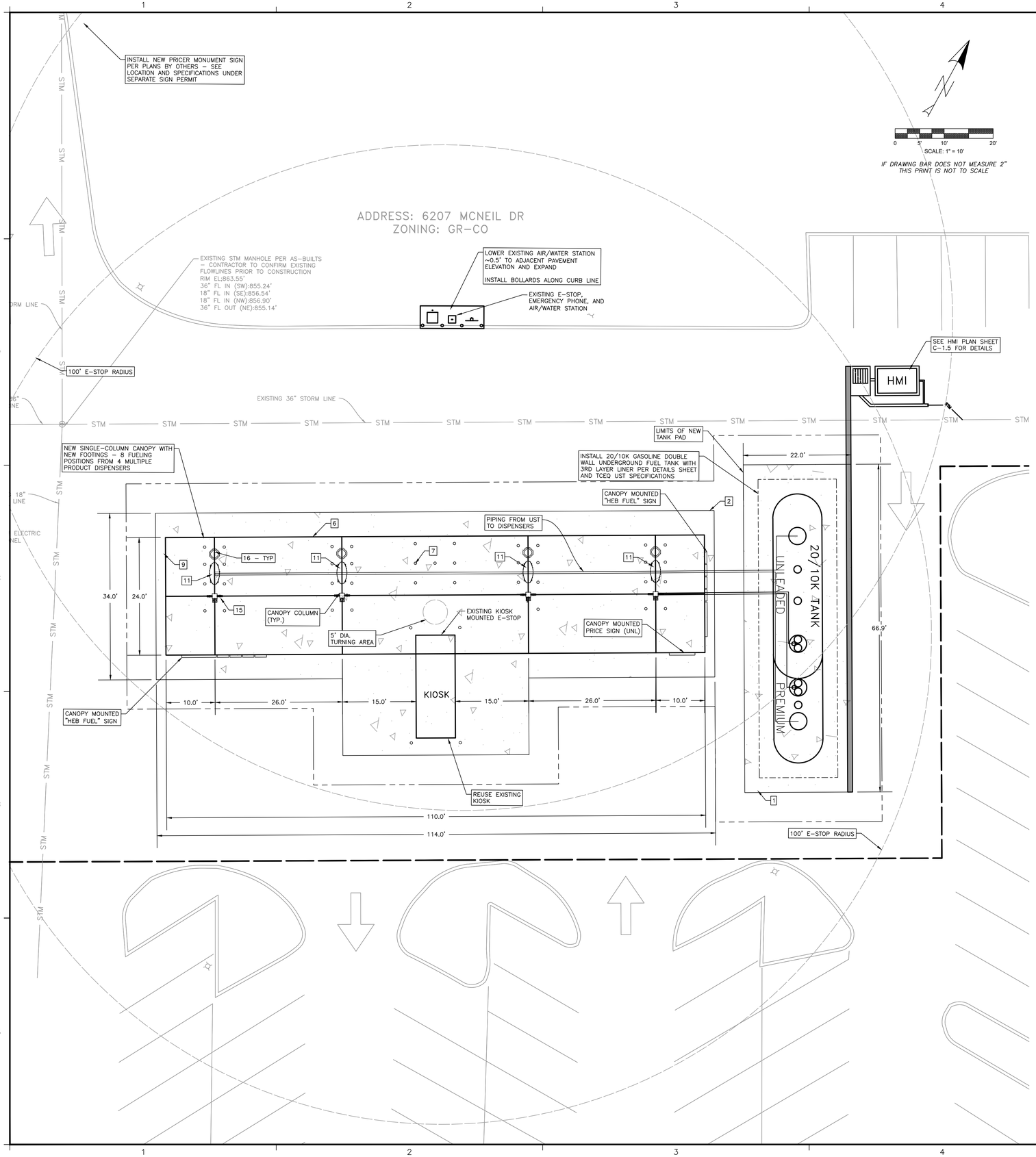

CITY OF AUSTIN SITE PLAN NOTES:

1. WATER AND WASTEWATER SERVICE ARE PROVIDED BY THE CITY OF AUSTIN WITH EXISTING SERVICE LINES (TO REMAIN IN SERVICE).
2. FOR CONSTRUCTION WITHIN THE RIGHT-OF-WAY, A ROW EXCAVATION PERMIT IS REQUIRED.
3. COMPLIANCE WITH THE COMMERCIAL AND MULTI-FAMILY RECYCLING ORDINANCE IS MANDATORY FOR MULTI-FAMILY COMPLEXES WITH 100 OR MORE UNITS AND BUSINESSES AND OFFICE BUILDINGS WITH 100 OR MORE EMPLOYEES ON SITE [AUSTIN CITY CODE, SEC. 15-6-91].
4. ALL EXTERIOR LIGHTING WILL BE FULL CUT-OFF AND FULLY SHIELDED IN COMPLIANCE WITH SUBCHAPTER E 2.5. ALL SITE LIGHTING TO BE LOCATED ON THE BUILDING WILL BE IN COMPLIANCE WITH SUBCHAPTER E 2.5, AND WILL BE REVIEWED DURING BUILDING PLAN REVIEW. ANY CHANGE OR SUBSTITUTION OF LAMP/LIGHT FIXTURES SHALL BE SUBMITTED TO THE DIRECTOR FOR APPROVAL IN ACCORDANCE WITH SECTION 2.5.2.E.
   a) ALL EXTERIOR LIGHTING WILL BE HOODED OR SHIELDED FROM THE VIEW OF ADJACENT RESIDENTIAL PROPERTY. [SECTION 25-2-1064].
   b) ALL DUMPSTERS AND ANY PERMANENTLY PLACED REFUSE RECEPTACLES WILL BE LOCATED AT A MINIMUM OF TWENTY (20) FEET FROM A PROPERTY USED OR ZONED AS SF-5 OR MORE RESTRICTIVE. [SECTION 25-2-1067].
   c) THE USE OF HIGHLY REFLECTIVE SURFACES, SUCH AS REFLECTIVE GLASS AND REFLECTIVE METAL ROOFS, WHOSE PITCH IS MORE THAN A RUN OF SEVEN (7) TO A RISE OF TWELVE (12), WILL BE PROHIBITED. [SECTION 25-2-1067].
   d) THE NOISE LEVEL OF MECHANICAL EQUIPMENT WILL NOT EXCEED 70 DBA AT THE PROPERTY LINE ADJACENT TO RESIDENTIAL USES. [SECTION 25-2-1067].
5. SEE FIGURE 42 FROM SECTION 2.5 OF THE CITY OF AUSTIN LAND DEVELOPMENT CODE BELOW:



6. SCREENING FOR SOLID WASTE COLLECTION AND LOADING AREAS SHALL BE THE SAME AS, OR OF EQUAL QUALITY TO, PRINCIPAL BUILDING MATERIALS.
7. ADEQUATE BARRIERS BETWEEN ALL VEHICULAR USE AREAS AND ADJACENT LANDSCAPE AREAS, SUCH AS A 6" CONCRETE CURB ARE REQUIRED. IF A STANDARD 6" CURB AND GUTTER ARE NOT PROVIDED FOR ALL VEHICULAR USE AREAS AND ADJACENT LANDSCAPE AREAS, COMPLY WITH ECM, SECTION 2.4.7, "PROTECTION OF LANDSCAPE AREAS".
8. AUSTIN ENERGY HAS THE RIGHT TO PRUNE AND/OR REMOVE TREES, SHRUBBERY AND OTHER OBSTRUCTIONS TO THE EXTENT NECESSARY TO KEEP THE EASEMENTS CLEAR. AUSTIN ENERGY WILL PERFORM ALL TREE WORK IN COMPLIANCE WITH CHAPTER 25-8, SUBCHAPTER B OF THE CITY OF AUSTIN LAND DEVELOPMENT CODE.
9. THE OWNER/DEVELOPER OF THIS SUBDIVISION/LOT SHALL PROVIDE AUSTIN ENERGY WITH ANY EASEMENT AND/OR ACCESS REQUIRED, IN ADDITION TO THOSE INDICATED, FOR THE INSTALLATION AND ONGOING MAINTENANCE OF OVERHEAD AND UNDERGROUND ELECTRIC FACILITIES. THESE EASEMENTS AND/OR ACCESS ARE REQUIRED TO PROVIDE ELECTRIC SERVICE TO THE BUILDING AND WILL NOT BE LOCATED SO AS TO CAUSE THE SITE TO BE OUT OF COMPLIANCE WITH CHAPTER 25-8 OF THE CITY OF AUSTIN LAND DEVELOPMENT CODE.
10. THE OWNER SHALL BE RESPONSIBLE FOR INSTALLATION OF TEMPORARY EROSION CONTROL, REVEGETATION AND TREE PROTECTION. IN ADDITION, THE OWNER SHALL BE RESPONSIBLE FOR ANY INITIAL TREE PRUNING AND TREE REMOVAL THAT IS WITHIN TEN FEET OF THE CENTER LINE OF THE PROPOSED OVERHEAD ELECTRICAL FACILITIES DESIGNED TO PROVIDE ELECTRIC SERVICE TO THIS PROJECT. THE OWNER SHALL INCLUDE AUSTIN ENERGY'S WORK WITHIN THE LIMITS OF CONSTRUCTION FOR THIS PROJECT.
11. THE OWNER OF THE PROPERTY IS RESPONSIBLE FOR MAINTAINING CLEARANCES REQUIRED BY THE NATIONAL ELECTRIC SAFETY CODE, OCCUPATIONAL SAFETY AND HEALTH ADMINISTRATION (OSHA) REGULATIONS, CITY OF AUSTIN RULES AND REGULATIONS AND TEXAS STATE LAWS PERTAINING TO CLEARANCES WHEN WORKING IN CLOSE PROXIMITY TO OVERHEAD POWER LINES AND EQUIPMENT. AUSTIN ENERGY WILL NOT RENDER ELECTRIC SERVICE UNLESS REQUIRED CLEARANCES ARE MAINTAINED. ALL COSTS INCURRED BECAUSE OF FAILURE TO COMPLY WITH THE REQUIRED CLEARANCES WILL BE CHARGED TO THE OWNER.
12. WATER, WASTEWATER, DRAINAGE AND ANY OTHER UTILITY IMPROVEMENTS ARE SHOWN FOR INFORMATIONAL PURPOSES ONLY. REFER TO SPECIFIC PLAN SHEETS FOR CONSTRUCTION.
13. EVERY ACCESSIBLE PARKING SPACE MUST BE IDENTIFIED BY A SIGN, CENTERED AT THE HEAD OF THE PARKING SPACE. THE SIGN MUST INCLUDE THE INTERNATIONAL SYMBOL OF ACCESSIBILITY AND STATE RESERVED OR EQUIVALENT LANGUAGE, CHARACTERS AND SYMBOLS ON SUCH SIGNS MUST BE LOCATED 60" MINIMUM ABOVE THE GROUND SO THAT THEY CANNOT BE OBSCURED BY A VEHICLE PARKED IN THE SPACE.
14. IN AREAS WHERE UTILITY LINES ARE PRESENT OR PROPOSED ONLY TREES FROM THE UTILITY COMPATIBLE SHADE TREES LIST (SEE APPENDIX F) SHALL BE PLANTED WITH IN: A) 10 LATERAL FEET FROM ANY OVERHEAD DISTRIBUTION CONDUCTOR; B) 30 TO 40 LATERAL FEET FROM ANY OVERHEAD TRANSMISSION CONDUCTOR, UNLESS A MORE RESTRICTIVE DEDICATED RIGHT-OF-WAY HAS BEEN ESTABLISHED; C) 10 LATERAL FEET FROM ANY UNDERGROUND ELECTRIC FACILITY
15. APPROVAL OF THESE PLANS BY THE CITY OF AUSTIN INDICATES COMPLIANCE WITH APPLICABLE CITY REGULATIONS ONLY. COMPLIANCE WITH ACCESSIBILITY STANDARDS SUCH AS THE 2010 STANDARDS FOR ACCESSIBLE DESIGN OR THE 2012 TEXAS ACCESSIBILITY STANDARDS WAS NOT VERIFIED. THE APPLICANT IS RESPONSIBLE FOR COMPLIANCE WITH ALL APPLICABLE ACCESSIBILITY STANDARDS.
16. ALL IMPROVEMENTS SHALL BE MADE IN ACCORDANCE WITH THE RELEASED SITE PLAN. ANY ADDITIONAL IMPROVEMENTS WILL REQUIRE SITE PLAN REVISION OR CORRECTION AND APPROVAL OF THE DEVELOPMENT SERVICES DEPARTMENT.
17. APPROVAL OF THIS SITE PLAN DOES NOT INCLUDE BUILDING AND FIRE CODE APPROVAL NOR BUILDING PERMIT APPROVAL.
18. ALL SIGNS MUST COMPLY WITH REQUIREMENTS OF THE LAND DEVELOPMENT CODE (CHAPTER 25-10).

SITE PLAN RELEASE NOTES:

1. ALL SIGNS MUST COMPLY WITH REQUIREMENTS OF THE LAND DEVELOPMENT CODE (CHAPTER 25-10).
2. ALL EXISTING STRUCTURES SHOWN TO BE REMOVED WILL REQUIRE A DEMOLITION PERMIT FROM THE CITY OF AUSTIN DEVELOPMENT SERVICES DEPT.
3. A DEVELOPMENT PERMIT MUST BE ISSUED PRIOR TO AN APPLICATION FOR BUILDING PERMIT FOR NON-CONSOLIDATED OR PLANNING COMMISSION APPROVED SITE PLANS.

SITE PLAN EXEMPTION NOTES:

1. TOTAL ADDITIONAL CONSTRUCTION NOT TO EXCEED 1,000 SF AND DOES NOT IMPEDE OR DIVERT DRAINAGE.
2. NO ADDITIONAL IMPERVIOUS COVER IS PROPOSED FROM EXISTING CONDITIONS.
3. SEE EROSION CONTROL PLAN SHEET C-1.2 FOR LIMITS OF CONSTRUCTION.

FUEL STATION KEYNOTES

1	CONCRETE TANK SLAB. RE: A2
2	CONCRETE CANOPY SLAB. RE:D1
3	GENERAL SITE CONTRACTOR OR DEVELOPER SHALL INSTALL ALL CONDUITS AND SERVICES 1' INTO CANOPY AREA. FUEL CONTRACTOR TO CONTINUE CONDUIT INSIDE CANOPY AREA.
4	EMERGENCY SHUT-OFF SWITCH AND EMERGENCY PHONE. "EMERGENCY SHUT-OFF" SIGN SHALL BE MOUNTED ABOVE SWITCH. RE: C2/C-2.0.
5	AIR/WATER STAND RE: A2 OR E3/C-2.0.
6	LIMITS OF CANOPY
7	BOLLARDS SHALL BE INSTALLED RE: A3/C-2.0.
8	MERCHANDISE CART
9	LED FUEL PRICE SIGN (UNLD, E85, DSL – BY HEB SIGN VENDOR)
10	3+1 DISPENSER (DIESEL)
11	3+0 DISPENSER
12	VACUUM STATION
13	INSTALL ADA VAN ACCESSIBLE SIGN PER TAS REQUIREMENTS. RE: D6/C-2.0.
14	CASTELLATED CURB – SEE GRADING SHEET FOR DETAIL
15	FIRE EXTINGUISHER AND CABINET
16	WASTE CONTAINER AND WINDOW WASH
17	PRODUCT COOLERS

LEGEND

EXISTING	PROPOSED	
		1/2" IRON ROD FOUND
		1/2" IRON ROD SET
		IRON PIPE FOUND
		NAIL FOUND
P.O.B.		COMPUTED POINT
		MONUMENT FOUND
		POINT OF BEGINNING
(XXX)		BENCHMARK
		RECORD INFORMATION
		LIGHT POLE
		POWER POLE
		DOWN GUY
		FIRE HYDRANT
		WATER VALVE
		WATER METER
		GAS METER
		GAS VALVE
		WOOD FENCE
		CHAIN LINK FENCE
		WIRE FENCE
EMH	EMH	ELECTRICAL MANHOLE
WWMH	WWMH	WASTEWATER MANHOLE
SSMH	SSMH	STORMSEWER MANHOLE
WTR	WTR	WATER MANHOLE
CO		CLEAN OUT
		DRAINAGE INLET
		CURB INLET
		CURB & GUTTER
		FIRE LANE
		HANDICAPPED PARKING SPACE
		SIGN
		VARIABLE HEIGHT CONCRETE RETAINING WALL
		ELECTRIC PULL BOX
		ELECTRIC METER
		ELECTRIC TRANSFORMER
		TELEPHONE SERVICE BOX
		BOLLARD
OE	OE	OVER HEAD ELEC. LINE
OT	OT	OVER HEAD TELEPHONE
SS	SS	STORM SEWER LINE
W	W	WATER LINE
WW	WW	WASTEWATER LINE
FM	FM	FORCE MAIN
UE	UE	UNDERGROUND ELECTRIC
UT	UT	UNDERGROUND TELEPHONE
G	G	GAS LINE
		PROPERTY LINE
678	678	CONTOUR
704	704	SPOT ELEVATION
		CUT/FILL SLOPES
		FLOW DIRECTION
		CONCRETE SURFACE
1170		EXISTING TREE
1124		TREE TO BE REMOVED

PLEASE BE ADVISED: THIS DOCUMENT MAY CONTAIN SENSITIVE AND/OR PROPRIETARY INFORMATION AND THEREFORE MUST BE TREATED AS A CONFIDENTIAL DOCUMENT. ACCEPTANCE OF THIS DOCUMENT CONSTITUTES AN AGREEMENT THAT THIS DOCUMENT AND THE INFORMATION CONTAINED HEREIN SHALL BE MAINTAINED AND TRANSMITTED IN A CONFIDENTIAL MANNER. NO PART OF THIS DOCUMENT SHALL BE REPRODUCED, RELEASED OR DISTRIBUTED WITHOUT THE EXPRESS WRITTEN PERMISSION OF H.E.B. GROCERY AND ANY DISTRIBUTION TO NON-H.E.B. ENTITIES OR PERSONS MUST BE SUBJECT TO A WRITTEN CONFIDENTIALITY AGREEMENT.

WARNING !!!! CONTRACTOR TO FIELD VERIFY ALL EXIST. UTILITIES VERTICALLY AND HORIZONTALLY PRIOR TO CONSTRUCTION. THE CONTRACTOR IS TO CONTACT ENGINEER IF ANY EXISTING UTILITY INFORMATION DIFFERS FROM DATA SHOWN IN THE PLANS. CALL 811 BEFORE YOU DIG.

PLEASE BE ADVISED: THIS DOCUMENT MAY CONTAIN SENSITIVE AND/OR PROPRIETARY INFORMATION AND THEREFORE MUST BE TREATED AS A CONFIDENTIAL DOCUMENT. ACCEPTANCE OF THIS DOCUMENT CONSTITUTES AN AGREEMENT THAT THIS DOCUMENT AND THE INFORMATION CONTAINED HEREIN SHALL BE MAINTAINED AND TRANSMITTED IN A CONFIDENTIAL MANNER. NO PART OF THIS DOCUMENT SHALL BE REPRODUCED, RELEASED OR DISTRIBUTED WITHOUT THE EXPRESS WRITTEN PERMISSION OF H.E.B. GROCERY AND ANY DISTRIBUTION TO NON-H.E.B. ENTITIES OR PERSONS MUST BE SUBJECT TO A WRITTEN CONFIDENTIALITY AGREEMENT.

28	PLAN MOD 28 – PETROLEUM FUEL REMODEL	11/21/25

11/21/2025
STATE OF TEXAS
NICHOLAS R. SANDLIN
124404
LICENSED PROFESSIONAL ENGINEER

ENGINEERING | CONSULTING
SANDLIN SERVICES LLC
TBPELS FIRM #21356
9111 JOLLYVILLE RD. STE 212
AUSTIN, TX 78759

H-E-B

SITE PLAN

HEB AUSTIN 20
REMODEL CONSTRUCTION PLANS
6001 WEST PARMER LN. AUSTIN, TX 78727

SCALE:	AS INDICATED
DRAWN BY:	
PROJ. NO.:	388-26
DATE:	11.21.2025
SHEET NO.	C-1.2

Drainage Area	Drainage Area		2-year			25-year			100-year		
		T_c*	C	I**	Q	C	I**	Q	C	I**	Q
	(Ac)	(min)		(in/hr)	(cfs)		(in/hr)	(cfs)		(in/hr)	(cfs)
HMI DA	0.33	5.00	0.95	6.77	2.12	0.95	11.79	3.70	0.95	15.42	4.84

*Most conservative Tc value of 5.0 minutes and impervious cover value of 100% assumed for each drainage area

**City of Austin Atlas 14 IDF curve coefficients used to calculate intensity values

ADDRESS: 6207 MCNEIL DR
ZONING: GR-CO

EXISTING STM MANHOLE PER AS-BUILTS – CONTRACTOR TO CONFIRM EXISTING FLOWLINES PRIOR TO CONSTRUCTION
RIM EL:863.55'
36" FL IN (SW):855.24'
18" FL IN (SE):856.54'
18" FL IN (NW):856.90'
36" FL OUT (NE):855.14'

EXISTING 18" STORM LINE
EXISTING 36" STORM LINE
EXISTING 18" STORM LINE
EXISTING 36" STORM LINE
CAUTION!!! ELECTRIC METER/PANEL

HMI DA
0.33 AC

HMI

KIOSK

20/10K TANK
UNLEADED
PREMIUM

SCALE: 1" = 10'
IF DRAWING BAR DOES NOT MEASURE 2" THIS PRINT IS NOT TO SCALE

LEGEND

EXISTING	PROPOSED	
		1/2" IRON ROD FOUND
		1/2" IRON ROD SET
		IRON PIPE FOUND
		NAIL FOUND
		COMPUTED POINT
		MONUMENT FOUND
P.O.B.		POINT OF BEGINNING
(XXX)		BENCHMARK
		RECORD INFORMATION
		LIGHT POLE
		POWER POLE
		DOWN GUY
		FIRE HYDRANT
		WATER VALVE
		WATER METER
		GAS METER
		GAS VALVE
		WOOD FENCE
		CHAIN LINK FENCE
		WIRE FENCE
EMH	EMH	ELECTRICAL MANHOLE
WWMH	WWMH	WASTEWATER MANHOLE
SSMH	SSMH	STORMSEWER MANHOLE
WTR	WTR	WATER MANHOLE
CO		CLEAN OUT
		DRAINAGE INLET
		CURB INLET
		CURB & GUTTER
		FIRE LANE
		HANDICAPPED PARKING SPACE
		SIGN
		VARIABLE HEIGHT CONCRETE RETAINING WALL
		ELECTRIC PULL BOX
		ELECTRIC METER
		ELECTRIC TRANSFORMER
		TELEPHONE SERVICE BOX
		BOLLARD
OE	OE	OVER HEAD ELEC. LINE
OT	OT	OVER HEAD TELEPHONE
SS	SS	STORM SEWER LINE
W	W	WATER LINE
WW	WW	WASTEWATER LINE
FM	FM	FORCE MAIN
UE	UE	UNDERGROUND ELECTRIC
UT	UT	UNDERGROUND TELEPHONE
G	G	GAS LINE
		PROPERTY LINE
678	678	CONTOUR
704	704	SPOT ELEVATION
		CUT/FILL SLOPES
		FLOW DIRECTION
		CONCRETE SURFACE
1170		EXISTING TREE
1124		TREE TO BE REMOVED

PLEASE BE ADVISED: THIS DOCUMENT MAY CONTAIN SENSITIVE AND/OR PROPRIETARY INFORMATION AND THEREFORE MUST BE TREATED AS A CONFIDENTIAL DOCUMENT. ACCEPTANCE OF THIS DOCUMENT CONSTITUTES AN AGREEMENT THAT THIS DOCUMENT AND THE INFORMATION CONTAINED HEREIN SHALL BE MAINTAINED AND TRANSMITTED IN A CONFIDENTIAL MANNER. NO PART OF THIS DOCUMENT SHALL BE REPRODUCED, RELEASED OR DISTRIBUTED WITHOUT THE EXPRESS WRITTEN PERMISSION OF H.E.B. GROCERY AND ANY DISTRIBUTION TO NON-H.E.B. ENTITIES OR PERSONS MUST BE SUBJECT TO A WRITTEN CONFIDENTIALITY AGREEMENT.

WARNING !!!! CONTRACTOR TO FIELD VERIFY ALL EXIST. UTILITIES VERTICALLY AND HORIZONTALLY PRIOR TO CONSTRUCTION. THE CONTRACTOR IS TO CONTACT ENGINEER IF ANY EXISTING UTILITY INFORMATION DIFFERS FROM DATA SHOWN IN THE PLANS. CALL 811 BEFORE YOU DIG.

TRENCH DRAIN CALCULATIONS

COA based Grate Inlet Calculations - Inlet		
Grate Inlet Equation - weir		
Q=Cw*P*d^1.5*Cf		
Cw	3	
Size of Inlet (length)	87	ft
Size of Inlet (width)	0.8	ft
Ag= Area of Inlet	72.5	ft2
d= avg. depth across grate	0.1	ft
Cf= Clogging factor	0.5	
Q25 from Drainage Calcs	3.70	cfs
Q100 from Drainage Calcs	4.84	cfs
Inlet Capacity	**8.33**	cfs

PLAN MOD 28 – PETROLEUM FUEL REMODEL 11/21/25

11/21/2025
STATE OF TEXAS
NICHOLAS R. SANDLIN
124404
LICENSED
PROFESSIONAL ENGINEER

SANDLIN SERVICES LLC
ENGINEERING CONSULTING
TBPELS FIRM #21356
9111 JOLLYVILLE RD, STE 212
AUSTIN, TX 78759

H-E-B

HMI PLAN 1

HEB AUSTIN 20
REMODEL CONSTRUCTION PLANS
6001 WEST PARMER LN, AUSTIN, TX 78727

SCALE: AS INDICATED
DRAWN:
PROJ. NO.: 388-26
DATE: 11.21.2025
SHEET NO. C-1.5

ADDRESS: 6001 W PARMER LN
ZONING: GR-CO

CONNECT TRENCH DRAIN TO HMI WEIR BASIN FL:858.2'

RIM EL:859.8' FL:858.2'

HMI

CONNECT HMI TO EXISTING STORM LINE - CONTRACTOR TO VERIFY EXISTING FLOWLINES PRIOR TO CONSTRUCTION EX 18" FL:851.18'

EXISTING CURB INLET

EXISTING STM MANHOLE PER AS-BUILTS - CONTRACTOR TO CONFIRM EXISTING FLOWLINES PRIOR TO CONSTRUCTION
RIM EL:853.55'
36" FL IN (SW):848.03'
18" FL IN (N):856.54'
36" FL OUT (E):848.03'

STM

20/10K TANK
UNLEADED
PREMIUM

RIM EL:860.0' FL:858.4'

87 LF TRENCH DRAIN @0.5% TO HMI

RIM EL:859.9' FL:858.6'

CONTRACTOR TO USE THIS HMI DETAIL OR APPROVED EQUAL

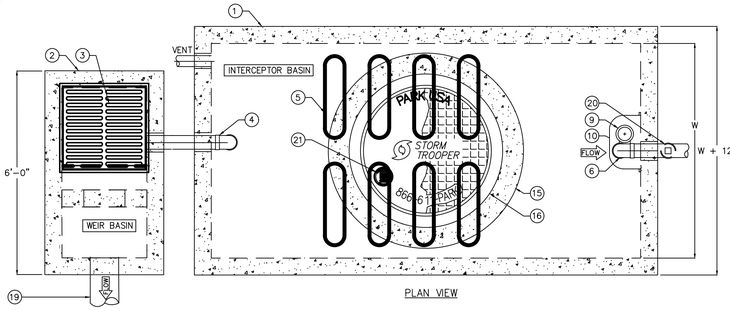

PLAN VIEW

KEYED NOTES		
MARK	QTY	DESCRIPTION
1	1	INTERCEPTOR BASIN
2	1	WEIR BASIN
3	1	INLET CAST IRON FRAME & GRATE, H-20 RATED
4	1	INLET PIPING
5	8	HYDROPHOBIC MEDIA
6	1	6 MONTH STORM OUTLET PIPE
7	1	REMOVABLE DEBRIS BASKET STAINLESS STEEL
8	1	HIGH OIL FLOAT SWITCH
9	1	AUTOMATIC OIL STOP VALVE
10	1	SLUDGE BAFFLE
11	–	BITUMASTIC INTERIOR LINER
12	1	DIFFUSION BAFFLE
13	1	25YR STORM OVERFLOW WEIR
14	1	STORM EVENT OVERFLOW WEIR
15	–	MANWAY EXTENSIONS AS REQ'D
16	1	GALVANIZED BOLT DOWN RING & COVER, H-20 RATED
17	–	ALL JOINTS TO BE SEALED W/ PLASTIC FLEXIBLE GASKET
18	1	HIGH OIL ALARM PANEL MOUNTED AT REMOTE LOCATION
19	1	OVERFLOW PIPING
20	1	OUTLET PIPE CLEAN-OUT (BY OTHERS)
21	1	NAMEPLATE INDICATING: MFG: PARKUSA.COM TEL 888-611-PARK MODEL: HMI-1 DATE MANUFACTURED

STORMTROOPER XXXXXX SWST-XXC XXXXXX XX/XX PARK USA STORMWATER INTERCEPTOR

Storm® Trooper
Stormwater Treatment System Patent No: 7,470,351

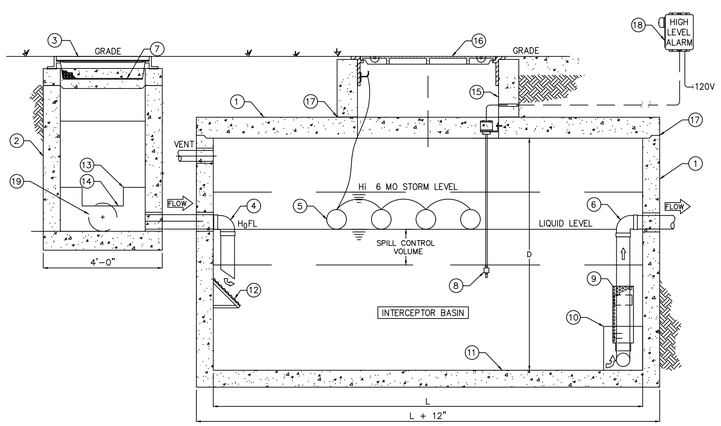

ELEVATION

STORMTROOPER HMI					
MODEL NO.	W, WIDTH (FT)	L, LENGTH (FT)	D, DEPTH (FT)	VOLUME (GAL)	Q (GPM)
HMI-100	5.0	8.0	5.0	1,496	126
HMI-125	6.0	12.0	6.0	3,231	158
HMI-150	6.0	12.0	7.5	4,039	190
HMI-165	6.0	15.0	6.0	4,039	221
HMI-175	7.5	15.0	7.0	5,891	253
HMI-200	7.6	15.0	7.6	6,481	284
HMI-225	7.5	15.0	9.0	7,574	316
HMI-250	8.0	17.0	9.5	9,664	348
HMI-275	8.0	17.0	10.5	10,681	379
HMI-300	10.0	20.0	9.0	13,464	411
HMI-325	10.0	20.0	9.8	14,586	442
HMI-350	10.0	20.0	10.5	15,708	474
HMI-375	10.0	20.0	11.3	16,830	506
HMI-400	10.0	20.0	12.5	18,700	537

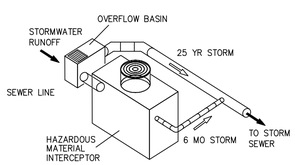

SPECIFICATIONS

CONCRETE: DESIGN STRENGTH OF 4500 PSI AT 28 DAYS. UNIT IS OF MONOLITHIC CONSTRUCTION AT FLOOR AND FIRST STAGE OF WALL WITH SECTIONAL RISER TO REQUIRED DEPTH.

REINFORCEMENT: GRADE 60 REINFORCED WITH STEEL REBAR CONFORMING TO ASTM A615 ON REQUIRED CENTERS OR EQUAL.

C.I. CASTINGS: MANHOLE FRAMES, COVERS OR GRATES ARE MANUFACTURED OF GREY CAST IRON CONFORMING TO ASTM A48-76 CLASS 30. MANHOLE SHALL BE TRAFFIC DUTY.

ENGINEERING DATA

INTERCEPTOR IS STRUCTURALLY AND HYDRAULICALLY ENGINEERED CONFORMING TO REGULATORY STANDARDS. NOMINAL TOTAL LIQUID CAPACITY AND OIL HOLDING CAPACITY AS INDICATED. FIELD EXCAVATION AND PREPARATION SHALL BE COMPLETED PRIOR TO DELIVERY OF INTERCEPTOR. USE DIMENSIONAL DATA AS SHOWN.

STORMWATER INTERCEPTOR ARE UTILIZED TO REDUCE NON-POINT SOURCE POLLUTION ASSOCIATED WITH OIL AND SEDIMENT. THE INTERCEPTOR IS DESIGNED TO ALLOW FOR THE DETAINMENT OF SETTLABLE & FLOATABLE SOLIDS & LIQUIDS. THE INTERCEPTOR SHOULD BE INSPECTED ON A REGULAR BASIS TO DETERMINE PROPER OPERATION AND CLEANING.

INFLUENT OILY WATER CONTAINS OIL DROPLETS OF MANY DIFFERENT SIZES. THESE DROPLETS RISE AT DIFFERENT RATES. PARK UTILIZES A STATISTICAL PROGRAM THAT DIVIDES THE DROPLETS INTO RANGES OF SIZES AND CALCULATES THE RISE RATES OF EACH RANGE. THIS CALCULATION DETERMINES WHICH DROPLETS THE SEPARATOR CAN CAPTURE.

CONTACT OUR ENGINEERING DEPT. @ 866-611-PARK FOR A FREE PERFORMANCE EVALUATION.

APPLICATIONS
- MAINTENANCE WASHDOWN & GARAGES
- GOLF COURSES
- EQUIPMENT & TRANSPORTATION WASHDOWN FACILITIES
- CARWASHES
- STORMWATER RUNOFF
- SERVICE STATION FUEL DEPOTS
- MANUFACTURING FACILITY EFFLUENT WATER
- REMEDIATION WATER CLEANUP
- GENERAL INDUSTRY

Design Tip:
The ParkUSA StormTrooper HMI is a patented stormwater wet vault specifically designed to accommodate fuel spills up to 750 gallons and intercept free oil, grease, TSS, debris and other pollutants found in stormwater. The system qualifies as a permanent best management practice (BMP) for EPA Stormwater Quality and SPCC management programs.

© ParkUSA. ALL RIGHTS RESERVED.

PARK USA
A Northwest Pipe Company

HAZARDOUS MATERIAL INTERCEPTOR
STORMTROOPER MODELS HMI-100 THRU HMI 400

PM	PC	DRN	ENG	DWG. NO.	REV.
.	.	.	.	HIMI-1	.
DATE 2023					

LEGEND

EXISTING	PROPOSED	
		1/2" IRON ROD FOUND
		1/2" IRON ROD SET
		IRON PIPE FOUND
		NAIL FOUND
		COMPUTED POINT
		MONUMENT FOUND
P.O.B.		POINT OF BEGINNING
(XXX)		BENCHMARK
		RECORD INFORMATION
		LIGHT POLE
		POWER POLE
		DOWN GUY
		FIRE HYDRANT
		WATER VALVE
		WATER METER
		GAS METER
		GAS VALVE
		WOOD FENCE
		CHAIN LINK FENCE
		WIRE FENCE
EMH	EMH	ELECTRICAL MANHOLE
WMH	WMH	WASTEWATER MANHOLE
SSMH	SSMH	STORMSEWER MANHOLE
WTR	WTR	WATER MANHOLE
CO	CO	CLEAN OUT
		DRAINAGE INLET
		CURB INLET
		CURB & GUTTER
		FIRE LANE
		HANDICAPPED PARKING SPACE
		SIGN
		VARIABLE HEIGHT CONCRETE RETAINING WALL
		ELECTRIC PULL BOX
		ELECTRIC METER
		ELECTRIC TRANSFORMER
		TELEPHONE SERVICE BOX
		BOLLARD
OE	OE	OVER HEAD ELEC. LINE
OT	OT	OVER HEAD TELEPHONE
SS	SS	STORM SEWER LINE
	W	WATER LINE
WW	WW	WASTEWATER LINE
FM	FM	FORCE MAIN
UE	UE	UNDERGROUND ELECTRIC
UT	UT	UNDERGROUND TELEPHONE
G	G	GAS LINE
		PROPERTY LINE
678	678	CONTOUR
704	704	SPOT ELEVATION
		CUT/FILL SLOPES
		FLOW DIRECTION
		CONCRETE SURFACE
1170		EXISTING TREE
1124		TREE TO BE REMOVED

PLEASE BE ADVISED: THIS DOCUMENT MAY CONTAIN SENSITIVE AND/OR PROPRIETARY INFORMATION AND THEREFORE MUST BE TREATED AS A CONFIDENTIAL DOCUMENT. ACCEPTANCE OF THIS DOCUMENT CONSTITUES AN AGREEMENT THAT THIS DOCUMENT AND THE INFORMATION CONTAINED HEREIN SHALL BE MAINTAINED AND TRANSMITTED IN A CONFIDENTIAL MANNER. NO PART OF THIS DOCUMENT SHALL BE REPRODUCED, RELEASED OR DISTRIBUTED WITHOUT THE EXPRESS WRITTEN PERMISSION OF H.E.B. GROCERY AND ANY DISTRIBUTION TO NON-H.E.B. ENTITIES OR PERSONS MUST BE SUBJECT TO A WRITTEN CONFIDENTIALITY AGREEMENT.

PLEASE BE ADVISED: THIS DOCUMENT MAY CONTAIN SENSITIVE AND/OR PROPRIETARY INFORMATION AND THEREFORE MUST BE TREATED AS A CONFIDENTIAL DOCUMENT. ACCEPTANCE OF THIS DOCUMENT CONSTITUES AN AGREEMENT THAT THIS DOCUMENT AND THE INFORMATION CONTAINED HEREIN SHALL BE MAINTAINED AND TRANSMITTED IN A CONFIDENTIAL MANNER. NO PART OF THIS DOCUMENT SHALL BE REPRODUCED, RELEASED OR DISTRIBUTED WITHOUT THE EXPRESS WRITTEN PERMISSION OF H.E.B. GROCERY AND ANY DISTRIBUTION TO NON-H.E.B. ENTITIES OR PERSONS MUST BE SUBJECT TO A WRITTEN CONFIDENTIALITY AGREEMENT.

28	PLAN MOD 28 – PETROLEUM FUEL REMODEL							11/21/25

11/21/2025
STATE OF TEXAS
NICHOLAS R. SANDLIN
124404
LICENSED
PROFESSIONAL ENGINEER

SANDLIN
ENGINEERING | CONSULTING
SERVICES, LLC
TBPELS FIRM #21356
9111 JOLLYVILLE RD, STE 212
AUSTIN, TX 78759

WARNING !!!! CONTRACTOR TO FIELD VERIFY ALL EXIST. UTILITIES VERTICALLY AND HORIZONTALLY PRIOR TO CONSTRUCTION. THE CONTRACTOR IS TO CONTACT ENGINEER IF ANY EXISTING UTILITY INFORMATION DIFFERS FROM DATA SHOWN IN THE PLANS. CALL 811 BEFORE YOU DIG.

0 5' 10' 20'
SCALE: 1" = 10'

IF DRAWING BAR DOES NOT MEASURE 2" THIS PRINT IS NOT TO SCALE

H-E-B

HMI PLAN 2

HEB AUSTIN 20
REMODEL CONSTRUCTION PLANS
6001 WEST PARMER LN, AUSTIN, TX 78727

SCALE:	AS INDICATED
DESIGN:	
PROJ. NO.:	388-26
DATE:	11.21.2025
SHEET NO.	C – 1.6

PLOTTED ON 1/9/2026 9:41 AM BY Engineer: G:\shared drives\sandlin services llc\sandlin services projects\petroleum & environmental engineering division\388-0104-001 heb fuel stations\22_388 austin parmer lv\CAD\construction sheets\3 388 HMI

ITEM NO.	QTY.	DESCRIPTION	PART NO.
1	1	MONITOR RESERVOIR-18IN	C230003
2	6	KIT_FITTING, SINGLE, SS, 4IN H, LAYUP, ON 10FT TANK (WITH SS STRIKER PLATE)	C310133
3	2	KIT_FITTING, SINGLE, SS, 1IN BRINE PORT, LAYUP, FRP ENCASED	C600476
4	2	KIT_MANWAY ASSY, DW, 22IN, SS, ON 10FT TANK (WITH SS STRIKER PLATE)	C600215
5	2	GASKET, MANWAY, 22IN, 1/8IN THK, HC-60	C430020
6	2	KIT_MANWAY COVER, SS, 22IN, 3-4IN H (0, CTR, 180), TYPE C	C330105
7	2	COLLAR, DW, 42IN, TRIMMED-10FT	C220005
8	2	COLLAR, DW, 48IN, TRIMMED-10FT	C220006
9	1	SUMP, DWFS, 42IN DIA, 48IN HT, 36IN OPENING, BRINE, FIELD LAM KIT	C710045
10	1	SUMP, DWFS, 42IN DIA, 48IN HT, 36IN OPENING, BRINE, FIELD LAM KIT	C710045
11	1	SUMP, DWFS, 48IN DIA, 48IN HT, 36IN WT, BRINE, FIELD LAM KIT	C710031
12	1	SUMP, DWFS, 48IN DIA, 48IN HT, 36IN WT, BRINE, FIELD LAM KIT	C710031
13	6	KIT_LIFT LUG, ON BENT PLATE, 10' X 12', 10' (ADHESIVE)	C340010
14	2	KIT_STEEL GUIDE LUG	C340014
15	2	DEADMEN, PREFAB CONCRETE, 18INX8.75IN-18FT LONG+AP (10FT)	C821003
16	4	DEADMEN, PREFAB CONCRETE, 18INX8.75IN-18FT LONG+AP (10FT)	C821003
17	10	ANCHOR STRAP ASSEMBLY (10FT DWX TANK)	-

NICK RIEMER
PETROLEUM
8/5/2025

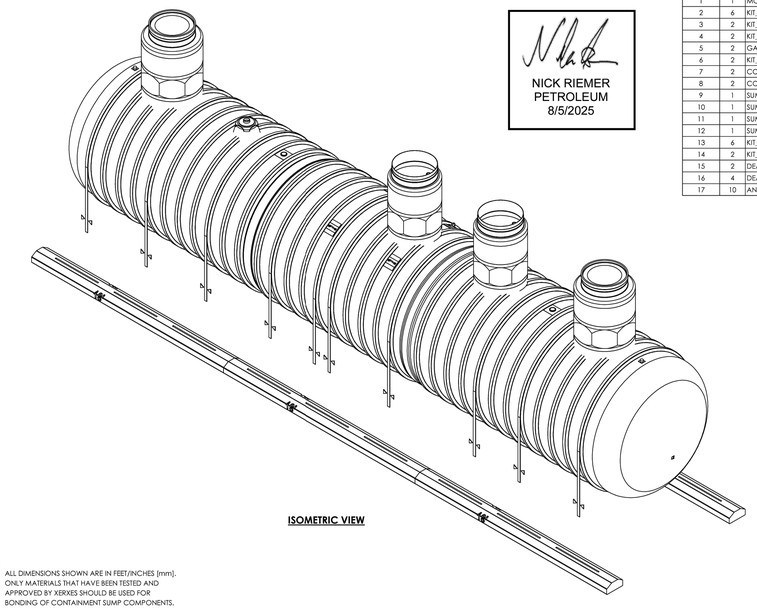

ISOMETRIC VIEW

NOTES:
1. ALL DIMENSIONS SHOWN ARE IN FEET/INCHES [mm].
2. ONLY MATERIALS THAT HAVE BEEN TESTED AND APPROVED BY XERXES SHOULD BE USED FOR BONDING OF CONTAINMENT SUMP COMPONENTS.
3. DRAWING EXPIRATION: DRAWING VALID FOR SIX (6) MONTHS FROM DATE OF LAST REVISION. XERXES RESERVES THE RIGHT TO REVIEW AND UPDATE.
4. MAXIMUM ESTIMATED WEIGHT: 17,000 LBS [7,700 KG]
5. TANK INTERSTICE IS FACTORY BRINE FILLED.
6. 10FT DW MFG. CONFIG.: XS-009756.
7. BRINE TEST PORTS: FITTING IS CAPPED DURING MANUFACTURE. DO NOT REMOVE OR USE.

REV	DESCRIPTION	REV BY	REV DATE	CHK BY	CHK DATE
5	ADDED CROSS REFERENCE NOTE, ADDED SS BRINE PORT,AND NOTE. BOM UPDATE TO REFLECT THIS CHANGES.	IL	07-08-25	DD	07-08-25
4	CENTERED COLLARS AROUND FITTINGS WITH RIB. UPDATED BOM DESCRIPTIONS & PART NO.	DD	06-12-25	IL	06-12-25
3	REVISED MANWAY LOCATION TO RIB 28/29', RELOCATED STRAPS TO RIB 11/12, 19/3, 15/16, 23/24 . ADDED SEAM DIMENSIONS	IL	03-27-25	DD	03-27-25
2	CHANGE MANWAYS, FITTINGS, AND GASKETS TO MATCH SS, FROM CS	JP	10-15-24	IL	10-15-24
1	ADDED FITTING ON FLAT #10 & 25	IL	08-22-24	DD	08-22-24

INDUSTRY	M101 FUEL MARKETS		
SALES MANAGER	CARY ETTER		
PROPRIETARY AND CONFIDENTIAL THIS DRAWING IS THE PROPERTY OF MATRIX CORP. THE COPYRIGHT/ OWNERSHIP OF THIS DRAWING IS AND WILL REMAIN WITH MATRIX CORP. THE PHYSICAL POSSESSION OF THIS DRAWING DOES NOT CONVEY THE RIGHT TO USE ITS DESIGN CONCEPT, OR TO REPRODUCE IT, OR TO MANUFACTURE IN WHOLE OR IN PART THE ITEM(S) DEPICTED HEREIN WITHOUT WRITTEN PERMISSION AND AUTHOREATION OF MATRIX CORP.			
THIRD ANGLE PROJECTION			
DATE MM/DD/YY			
DRAWN BY:	IL	DESCR:	10FT DWX MC UL CAP. 20,000 X 10,000 GALLONS HEB GROCERY
APPR. BY:	KVL		
APPR. DATE:	08-02-24	SIZE: B	DWG NO.: XS-007481 REV.: 5
			SHEET: 1 of 3 - ISOMETRIC-BOM

XERXES

ITEM NO.	QTY.	DESCRIPTION	PART NO.
1	1	MONITOR RESERVOIR-18IN	C230003
2	6	KIT_FITTING, SINGLE, SS, 4IN H, LAYUP, ON 10FT TANK (WITH SS STRIKER PLATE)	C310133
3	2	KIT_FITTING, SINGLE, SS, 1IN BRINE PORT, LAYUP, FRP ENCASED	C600476
4	2	KIT_MANWAY ASSY, DW, 22IN, SS, ON 10FT TANK (WITH SS STRIKER PLATE)	C600215
5	2	GASKET, MANWAY, 22IN, 1/8IN THK, HC-60	C430020
6	2	KIT_MANWAY COVER, SS, 22IN, 3-4IN H (0, CTR, 180), TYPE C	C330105
7	2	COLLAR, DW, 42IN, TRIMMED-10FT	C220005
8	2	COLLAR, DW, 48IN, TRIMMED-10FT	C220006
9	1	SUMP, DWFS, 42IN DIA, 48IN HT, 36IN OPENING, BRINE, FIELD LAM KIT	C710045
10	1	SUMP, DWFS, 42IN DIA, 48IN HT, 36IN OPENING, BRINE, FIELD LAM KIT	C710045
11	1	SUMP, DWFS, 48IN DIA, 48IN HT, 36IN WT, BRINE, FIELD LAM KIT	C710031
12	1	SUMP, DWFS, 48IN DIA, 48IN HT, 36IN WT, BRINE, FIELD LAM KIT	C710031
13	6	KIT_LIFT LUG, ON BENT PLATE, 10' X 12', 10' (ADHESIVE)	C340010
14	2	KIT_STEEL GUIDE LUG	C340014
15	2	DEADMEN, PREFAB CONCRETE, 18INX8.75IN-18FT LONG+AP (10FT)	C821003
16	4	DEADMEN, PREFAB CONCRETE, 18INX8.75IN-18FT LONG+AP (10FT)	C821003
17	10	ANCHOR STRAP ASSEMBLY (10FT DWX TANK)	-

NICK RIEMER
PETROLEUM
8/5/2025

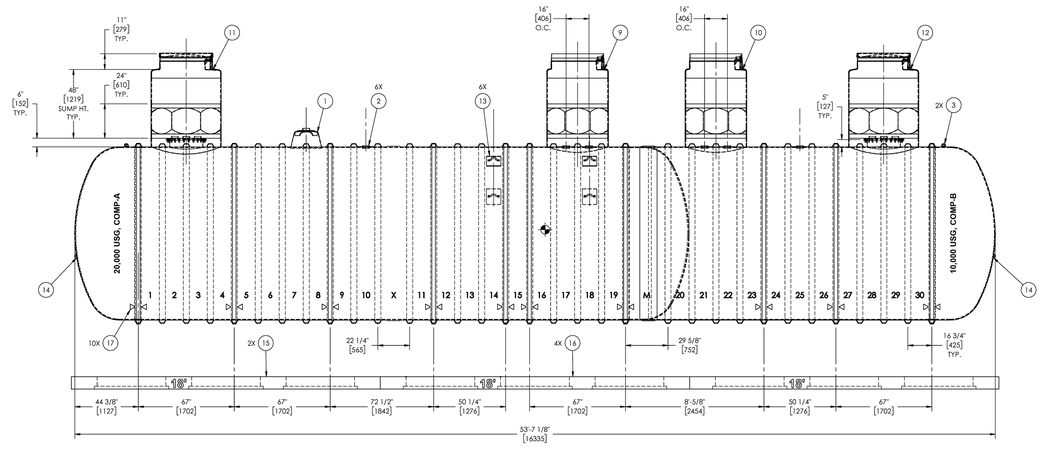

FRONT ELEVATION

REV	DESCRIPTION	REV BY	REV DATE	CHK BY	CHK DATE
5	ADDED CROSS REFERENCE NOTE, ADDED SS BRINE PORT,AND NOTE. BOM UPDATE TO REFLECT THIS CHANGES.	IL	07-08-25	DD	07-08-25
4	CENTERED COLLARS AROUND FITTINGS WITH RIB. UPDATED BOM DESCRIPTIONS & PART NO.	DD	06-12-25	IL	06-12-25
3	REVISED MANWAY LOCATION TO RIB 28/29', RELOCATED STRAPS TO RIB 11/12, 19/3, 15/16, 23/24 . ADDED SEAM DIMENSIONS	IL	03-27-25	DD	03-27-25
2	CHANGE MANWAYS, FITTINGS, AND GASKETS TO MATCH SS, FROM CS	JP	10-15-24	IL	10-15-24
1	ADDED FITTING ON FLAT #10 & 25	IL	08-22-24	DD	08-22-24

INDUSTRY	M101 FUEL MARKETS		
SALES MANAGER	CARY ETTER		
PROPRIETARY AND CONFIDENTIAL THIS DRAWING IS THE PROPERTY OF MATRIX CORP. THE COPYRIGHT/ OWNERSHIP OF THIS DRAWING IS AND WILL REMAIN WITH MATRIX CORP. THE PHYSICAL POSSESSION OF THIS DRAWING DOES NOT CONVEY THE RIGHT TO USE ITS DESIGN CONCEPT, OR TO REPRODUCE IT, OR TO MANUFACTURE IN WHOLE OR IN PART THE ITEM(S) DEPICTED HEREIN WITHOUT WRITTEN PERMISSION AND AUTHOREATION OF MATRIX CORP.			
THIRD ANGLE PROJECTION			
DATE MM/DD/YY			
DRAWN BY:	IL	DESCR:	10FT DWX MC UL CAP. 20,000 X 10,000 GALLONS HEB GROCERY
APPR. BY:	KVL		
APPR. DATE:	08-02-24	SIZE: B	DWG NO.: XS-007481 REV.: 5
			SHEET: 2 of 3 - FRONT ELEVATION

XERXES

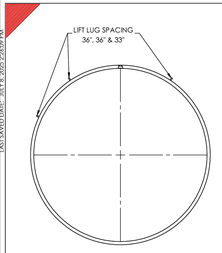

LIFT LUG ORIENTATION

ITEM NO.	QTY.	DESCRIPTION	PART NO.
1	1	MONITOR RESERVOIR-18IN	C230003
2	6	KIT_FITTING, SINGLE, SS, 4IN H, LAYUP, ON 10FT TANK (WITH SS STRIKER PLATE)	C310133
3	2	KIT_FITTING, SINGLE, SS, 1IN BRINE PORT, LAYUP, FRP ENCASED	C600476
4	2	KIT_MANWAY ASSY, DW, 22IN, SS, ON 10FT TANK (WITH SS STRIKER PLATE)	C600215
5	2	GASKET, MANWAY, 22IN, 1/8IN THK, HC-60	C430020
6	2	KIT_MANWAY COVER, SS, 22IN, 3-4IN H (0, CTR, 180), TYPE C	C330105
7	2	COLLAR, DW, 42IN, TRIMMED-10FT	C220005
8	2	COLLAR, DW, 48IN, TRIMMED-10FT	C220006
9	1	SUMP, DWFS, 42IN DIA, 48IN HT, 36IN OPENING, BRINE, FIELD LAM KIT	C710045
10	1	SUMP, DWFS, 42IN DIA, 48IN HT, 36IN OPENING, BRINE, FIELD LAM KIT	C710045
11	1	SUMP, DWFS, 48IN DIA, 48IN HT, 36IN WT, BRINE, FIELD LAM KIT	C710031
12	1	SUMP, DWFS, 48IN DIA, 48IN HT, 36IN WT, BRINE, FIELD LAM KIT	C710031
13	6	KIT_LIFT LUG, ON BENT PLATE, 10' X 12', 10' (ADHESIVE)	C340010
14	2	KIT_STEEL GUIDE LUG	C340014
15	4	DEADMEN, PREFAB CONCRETE, 18INX8.75IN-18FT LONG+AP (10FT)	C821003
16	2	DEADMEN, PREFAB CONCRETE, 18INX8.75IN-18FT LONG+AP (10FT)	C821003
17	10	ANCHOR STRAP ASSEMBLY (10FT DWX TANK)	-

NICK RIEMER
PETROLEUM
8/5/2025

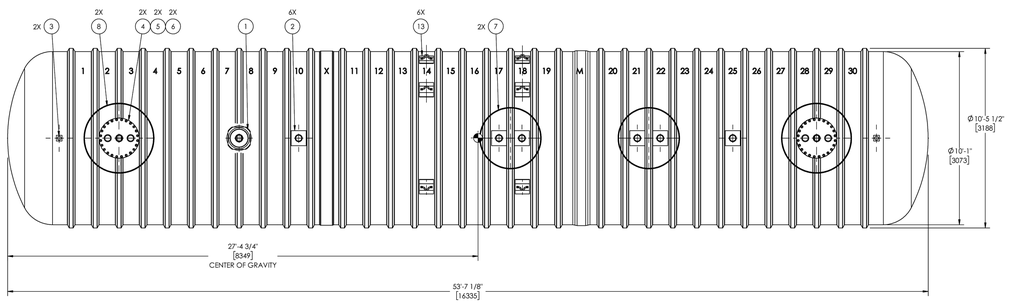

TOP VIEW

REV	DESCRIPTION	REV BY	REV DATE	CHK BY	CHK DATE
5	ADDED CROSS REFERENCE NOTE, ADDED SS BRINE PORT,AND NOTE. BOM UPDATE TO REFLECT THIS CHANGES.	IL	07-08-25	DD	07-08-25
4	CENTERED COLLARS AROUND FITTINGS WITH RIB. UPDATED BOM DESCRIPTIONS & PART NO.	DD	06-12-25	IL	06-12-25
3	REVISED MANWAY LOCATION TO RIB 28/29', RELOCATED STRAPS TO RIB 11/12, 19/3, 15/16, 23/24 . ADDED SEAM DIMENSIONS	IL	03-27-25	DD	03-27-25
2	CHANGE MANWAYS, FITTINGS, AND GASKETS TO MATCH SS, FROM CS	JP	10-15-24	IL	10-15-24
1	ADDED FITTING ON FLAT #10 & 25	IL	08-22-24	DD	08-22-24

INDUSTRY	M101 FUEL MARKETS		
SALES MANAGER	CARY ETTER		
PROPRIETARY AND CONFIDENTIAL THIS DRAWING IS THE PROPERTY OF MATRIX CORP. THE COPYRIGHT/ OWNERSHIP OF THIS DRAWING IS AND WILL REMAIN WITH MATRIX CORP. THE PHYSICAL POSSESSION OF THIS DRAWING DOES NOT CONVEY THE RIGHT TO USE ITS DESIGN CONCEPT, OR TO REPRODUCE IT, OR TO MANUFACTURE IN WHOLE OR IN PART THE ITEM(S) DEPICTED HEREIN WITHOUT WRITTEN PERMISSION AND AUTHOREATION OF MATRIX CORP.			
THIRD ANGLE PROJECTION			
DATE MM/DD/YY			
DRAWN BY:	IL	DESCR:	10FT DWX MC UL CAP. 20,000 X 10,000 GALLONS HEB GROCERY
APPR. BY:	KVL		
APPR. DATE:	08-02-24	SIZE: B	DWG NO.: XS-007481 REV.: 5
			SHEET: 3 of 3 - TOP VIEW-LIFT LUGS

XERXES

PLEASE BE ADVISED: THIS DOCUMENT MAY CONTAIN SENSITIVE AND/OR PROPRIETARY INFORMATION AND THEREFORE MUST BE TREATED AS A CONFIDENTIAL DOCUMENT. THIS DOCUMENT AND THE INFORMATION CONTAINED HEREIN CONSTITUTES AN AGREEMENT THAT THIS DOCUMENT SHALL BE HANDLED, USED, DISCLOSED, COPIED AND STORED IN A MANNER WHICH WILL PROTECT ITS CONFIDENTIAL NATURE AND SHALL BE MAINTAINED AND TRANSMITTED IN A CONFIDENTIAL MANNER. NO PART OF THIS DOCUMENT SHALL BE REPRODUCED, STORED IN A RETRIEVAL SYSTEM OR TRANSMITTED IN ANY FORM WITHOUT THE EXPRESS WRITTEN PERMISSION OF H.E.B. ANY DISCLOSURE OF THIS DOCUMENT TO UNAUTHORIZED ENTITIES OR PERSONS MUST BE SUBJECT TO A WRITTEN CONFIDENTIALITY AGREEMENT.

REV	DESCRIPTION	DATE
2B	PLAN MOD 28 – PETROLEUM FUEL REMODEL	11/21/25

11/21/2025

STATE OF TEXAS
NICHOLAS R. SANDLIN
124404
LICENSED
PROFESSIONAL ENGINEER

ENGINEERING | CONSULTING
SANDLIN SERVICES, LLC
TBPELS FIRM #21356
9111 JOLLYVILLE RD, STE 212
AUSTIN, TX 78759

H-E-B

TANK DETAILS

HEB AUSTIN 20
REMODEL CONSTRUCTION PLANS
6001 WEST PARMER LN., AUSTIN, TX 78727

SCALE: AS INDICATED
DRAWN BY: JP
PROJ. NO.: 388-26
DATE: 11.21.2025
SHEET NO. C-1.8

FILL TUBE DETAIL

N.T.S

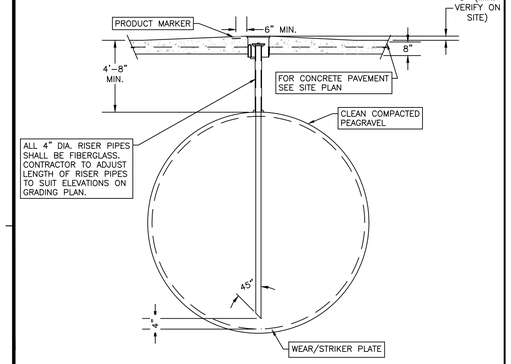

SUBMERSIBLE PUMP DETAIL

N.T.S

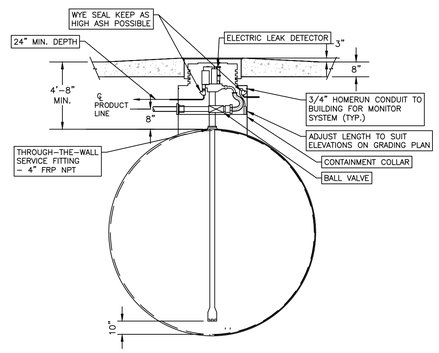

1" HOMERUN CONDUIT TO ELEC. PANEL IN BLDG.

BUNG

N.T.S

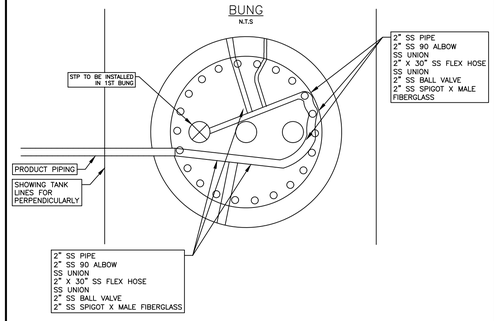

NOTE:

KEEP OTHER TWO BUNGS ACCESSIBLE

MANWAY MUST HAVE BUNGS PERPENDICULAR TO TANK – INSTALL STP IN 1ST BUNG.

ONE PIECE TANK STRAP WITH TURNBUCKLES

N.T.S

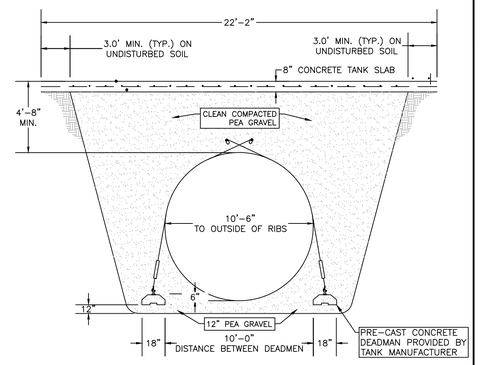

NOTE:

USE ONE #10 ANCHOR PER TURNBUCKLE TIE, EACH SIDE.

TANK EXCAVATION LIMITS DETAIL

N.T.S

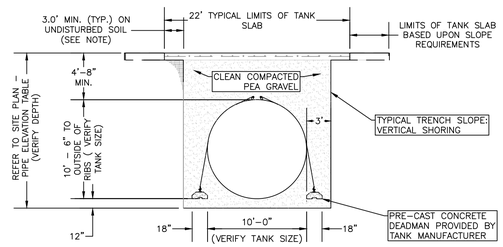

NOTES:

1. CONTRACTOR REQUIRED TO UTILIZE SHORING SYSTEM FOR TANK HOLE EXCAVATION.
2. TANK SLAB SHALL EXTEND 3–FT MIN. PAST TANK HOLE EXCAVATION TO REST ON UNDISTURBED SOIL (ALL SIDES OF TANK HOLE).

TANK PLAN LAYOUT

N.T.S

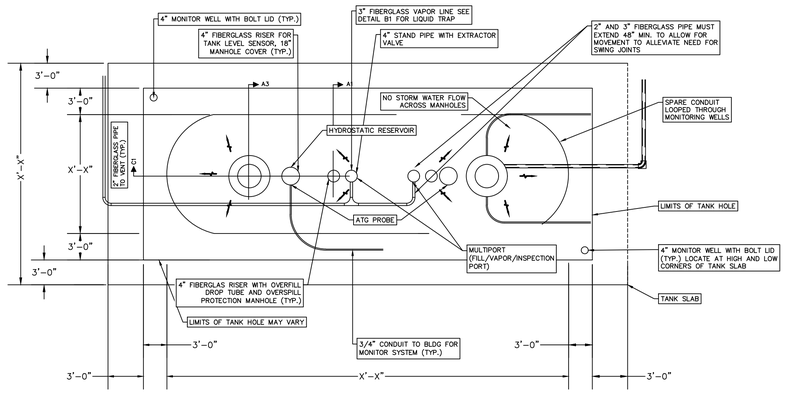

TANK SLAB

N.T.S

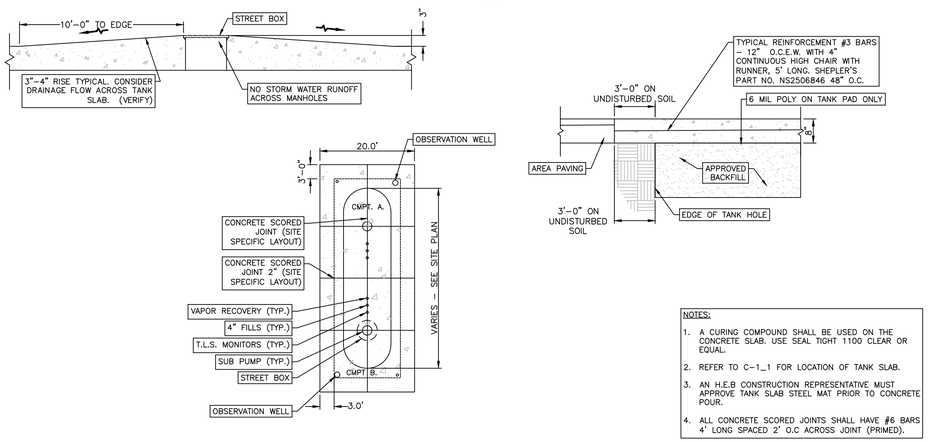

NOTES:

1. A CURING COMPOUND SHALL BE USED ON THE CONCRETE SLAB. USE SEAL TIGHT 1100 CLEAR OR EQUAL.
2. REFER TO C–1_1 FOR LOCATION OF TANK SLAB.
3. AN H.E.B CONSTRUCTION REPRESENTATIVE MUST APPROVE TANK SLAB STEEL MAT PRIOR TO CONCRETE POUR.
4. ALL CONCRETE SCORED JOINTS SHALL HAVE #6 BARS 4' LONG SPACED 2' O.C ACROSS JOINT (PRIMED).

PLEASE BE ADVISED: THIS DOCUMENT MAY CONTAIN SENSITIVE AND/OR PROPRIETARY INFORMATION AND THEREFORE MUST BE TREATED AS A CONFIDENTIAL DOCUMENT. THIS DOCUMENT CONTAINS AND CONSTITUTES AN AGREEMENT THAT THIS DOCUMENT AND ALL INFORMATION CONTAINED HEREIN SHALL BE MAINTAINED AND TRANSMITTED IN A CONFIDENTIAL MANNER. NO PART OF THIS DOCUMENT SHALL BE PHOTOCOPIED, DISCLOSED, OR DISTRIBUTED WITHOUT THE EXPRESS WRITTEN PERMISSION OF H.E.B. THE DISCLOSURE AND/OR DISTRIBUTION OF THIS PLAN TO ENTITIES OR PERSONS MUST BE SUBJECT TO A WRITTEN CONFIDENTIALITY AGREEMENT.

28	PLAN MOD 28 – PETROLEUM FUEL REMODEL	11/21/25

11/21/2025

STATE OF TEXAS
NICHOLAS R. SANDLIN
124404
LICENSED PROFESSIONAL ENGINEER

ENGINEERING | CONSULTING
SANDLIN SERVICES, LLC
TBPELS FIRM #21356 SUITE 212
9111 JOLLYVILLE RD.
AUSTIN, TX 78759

H·E·B

FUEL DETAILS 1

HEB AUSTIN 20
REMODEL CONSTRUCTION PLANS
6001 WEST PARMER LN., AUSTIN, TX 78727

SCALE: AS INDICATED
DRAWN: CHECKED:
PROJ. NO.: 388-26
DATE: 11.21.2025

SHEET NO.
C–1.9

BOLLARD TYPE 'A' THRU 'E'

FOR USE AT FUEL STATION AND CAR WASH PROJECTS ONLY

N.T.S

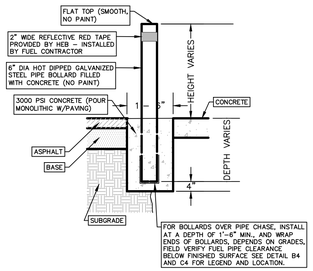

BOLLARD LEGEND			
TYPE	DEPTH	HEIGHT	LOCATION
A	18"	32"	DISPENSER CORNERS
B	36"	36"	ISLAND CORNERS
C	36"	48"	KIOSK CORNERS, A/W, E-STOP, PAY PHONE, CAR WASH ENTRY PAY STATION, CAR WASH DOOR CORNERS
D	32"	32"	CAR WASH ENTRANCE & EXIT DOORS

BOLLARD TYPE 'AR'

FOR USE AT SIDE OF DIESEL NOZZLE HANG UP

N.T.S

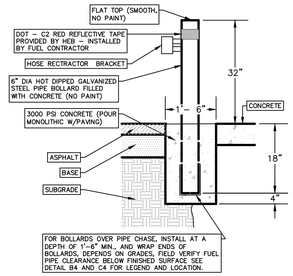

BOLLARD LEGEND			
TYPE	DEPTH	HEIGHT	LOCATION
AR	18"	32"	SIDE OF DIESEL NOZZLE HANG UP

SUB PUMP SUMP

N.T.S

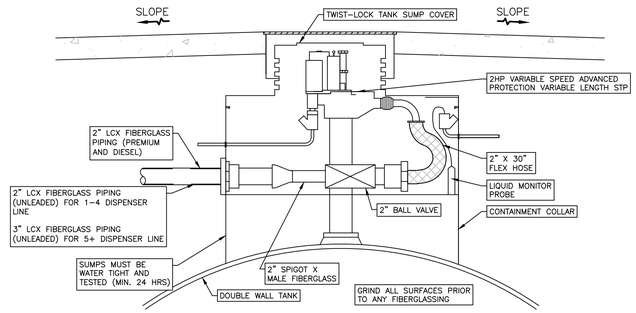

3

REMOTE EMERGENCY STOP

N.T.S

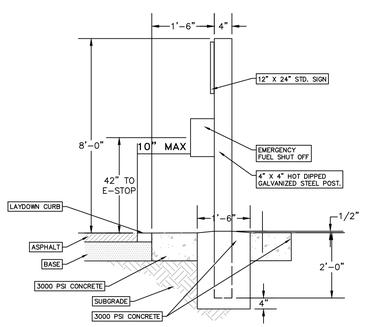

3

FRONT OF FUEL STATION

PIPE CHASE

FOR STATIONS WITH UNLEADED PRODUCT ONLY

N.T.S

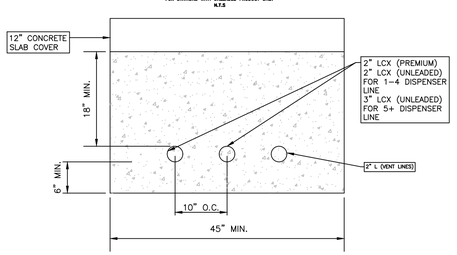

REFER TO PIPE TABLE, DETAIL C5 THIS SHEET FOR LIMITS OF 2" AND 3" PRIMARY PIPE

ADDITIONAL PIPE DIAMETER GOES FURTHER DOWN IN PIPE TRENCH. TOP OF PIPE NOT TO ENCROACH 18" MINIMUM COVER.

BACK OF FUEL STATION

FRONT OF FUEL STATION

PIPE CHASE

FOR STATIONS WITH E85 AND DIESEL PRODUCT

N.T.S

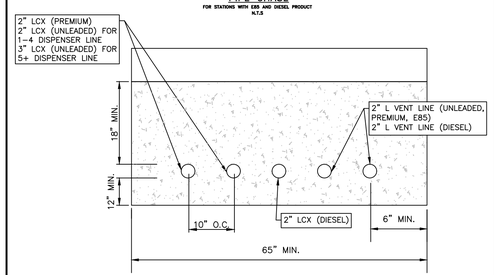

ADDITIONAL PIPE DIAMETER GOES FURTHER DOWN IN PIPE TRENCH. TOP OF PIPE NOT TO ENCROACH 18" MINIMUM COVER.

BACK OF FUEL STATION

PLEASE BE ADVISED: THIS DOCUMENT MAY CONTAIN SENSITIVE AND/OR PROPRIETARY INFORMATION AND THEREFORE MUST BE TREATED AS A CONFIDENTIAL DOCUMENT. ACCEPTANCE OF THIS DOCUMENT CONSTITUTES AN AGREEMENT THAT THIS DOCUMENT AND THE INFORMATION CONTAINED HEREIN SHALL BE MAINTAINED AND TRANSMITTED IN A CONFIDENTIAL MANNER. NO PART OF THIS DOCUMENT SHALL BE REPRODUCED, DISTRIBUTED OR TRANSMITTED WITHOUT THE EXPRESS WRITTEN PERMISSION OF H.E.B. ANY UNAUTHORIZED DISTRIBUTION TO UNAUTHORIZED ENTITIES OR PERSONS MUST BE SUBJECT TO A WRITTEN CONFIDENTIALITY AGREEMENT.

28	PLAN MOD 28 – PETROLEUM FUEL REMODEL	11/21/25

11/21/2025

STATE OF TEXAS
NICHOLAS R. SANDLIN
124404
LICENSED
PROFESSIONAL ENGINEER

ENGINEERING | CONSULTING
SANDLIN SERVICES, LLC
TBPELS FIRM #21356
9111 JOLLYVILLE RD, STE 212
AUSTIN, TX 78759

H-E-B

FUEL DETAILS 2

HEB AUSTIN 20
REMODEL CONSTRUCTION PLANS
6001 WEST PARMER LN., AUSTIN, TX 78727

SCALE: AS INDICATED
DRAWN BY: CHECKED BY:
PROJ. NO.: 388-26
DATE: 11.21.2025
SHEET NO.
C-2.0

GRATE INLET SKIMMER BOX
N.T.S.

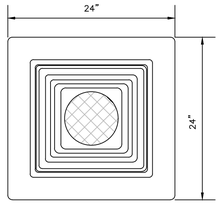

TOP VIEW

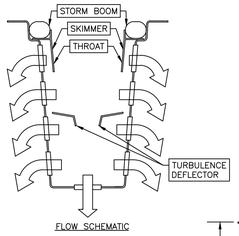

FLOW SCHEMATIC

Flow Specifications				
Description of filter opening	Percent Open (Based on Screen Dimensions)	Total Square Inches per Unit	Square Inches of Total Unobstructed Openings	Flow Rate (Cubic Feet per Second)
Skimmer protected By-Pass	100%	*162.3*	*162.3*	*6.7cfs*
Coarse Screen 3/4" x 1-3/4" stainless steel flattened expanded	62%	*143.5*	*89.0*	*3.8cfs*
Medium Screen 10x10 mesh stainless steel	56%	*143.5*	*80.4*	*3.9cfs*
Fine screen 14 x 18 mesh stainless steel	68%	*156.1*	*106.1*	*6.3cfs*
THROAT FLOW RATE Total: 4.4 cfs		TREATED FLOW RATE Total: 14.0 cfs		
FLOW RATES BASED ON UNOBSTRUCTED OPENINGS				

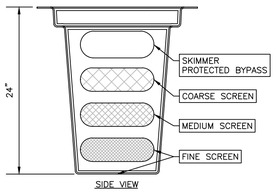

SIDE VIEW

BOX MANUFACTURED FROM MARINE GRADE FIBERGLASS & GEL COATED FOR UV PROTECTION 5 YEAR MANUFACTURERS WARRANTY PATENTED ALL FILTER SCREENS ARE STRAINLESS STEEL.

SUNTREE QUALITY PRODUCTS ARE BUILT FOR EASY CLEANING AND ARE DESIGNED TO BE PERMANENT INFRASTRUCTURE AND SHOULD LAST FOR DECADES.

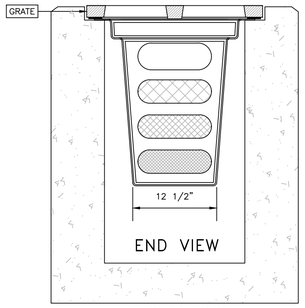

CONCRETE STRUCTURE

REMOVE GRATE INSERT GISB REINSTALL GRATE

HAZARDOUS MATERIALS INTERCEPTOR FOR HEB FUEL PROJECTS. INSTALL APPROPRIATELY SIZED UNIT INTO CONVENTIONAL STORM SEWER/DRAINAGE STRUCTURE FOR ALL INLETS WITHIN 100 FEET OF THE FUEL STATION THAT RECEIVES STORM WATER RUNOFF FROM THE FUEL STATION.

DISPENSER PUMP
N.T.S

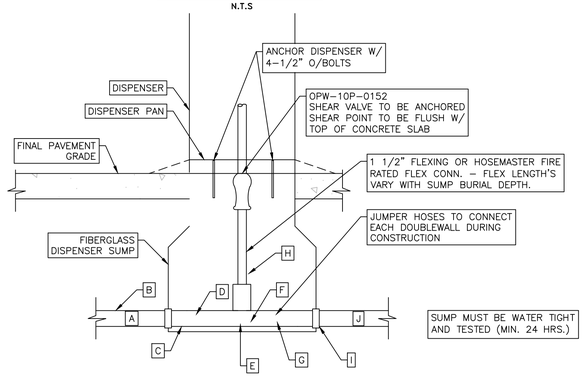

SUMP MUST BE WATER TIGHT AND TESTED (MIN. 24 HRS.)

DISPENSER NO.	Ⓐ F.G. PIPE	Ⓑ BULKHEAD	Ⓓ F.G. PIPE	Ⓔ	Ⓖ F.G. PIPE	Ⓗ TERMINATION REDUCER	Ⓘ BULKHEAD	Ⓙ F.G. PIPE
1.	2"	2"	2"	2" 90° ELL	—	2X1.5	—	—
2.	2"	2"	2"	2" F.G TEE	2"	2X1.5	2"	2"
3.	2"	2"	2"	2" F.G TEE	2"	2X1.5	2"	2"
4.	2"	2"	2"	2" 90° TEE	—	2X1.5	4"	4"

PIPE CHASE VENT
N.T.S

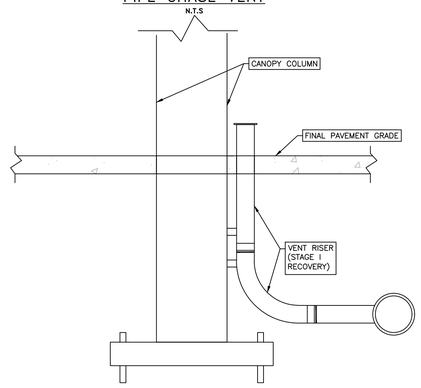

NOTES:

COORDINATE LOCATION AND ROUTE OF PIPE CHASE VENT PIPE WITH HEB PETROLEUM AT TIME OF PRODUCT LINE INSTALLATION

VENT RISER
N.T.S

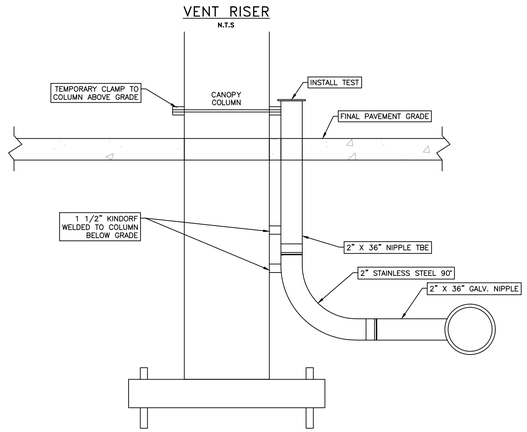

NOTE:

COAT ALL METAL SURFACES WITH BITUMASTIC BELOW CONCRETE GRADE.

BOLLARD LAYOUT FOR DISPENSER WITH MERCHANDISER
N.T.S

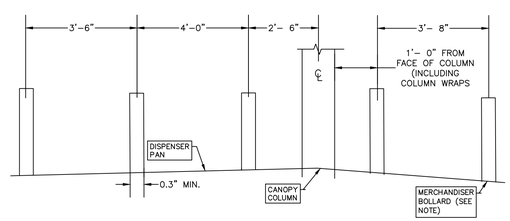

BOLLARD SPACING INCREASES WHEN COLUMN WRAPS ARE USED. COLUMN WRAP DIMENSIONS ARE SITE SPECIFIC AND SHALL BE COORDINATED WITH ARCHITECTURAL PLANS.

NOTES:

1. MAX. SLOPE AWAY FROM DISPENSER SUMP 1:50 (2%)
2. MERCHANDISER BOLLARD REQUIRED WHEN VENDING MACHINE PROTECTION IS NEEDED. (REFER TO FUEL STATION SLAB AND BOLLARD PLAN FOR LOCATION)

TRENCH
N.T.S

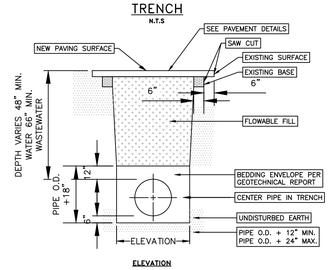

ELEVATION

NOTES:

1. THE EXISTING PAVING SURFACE SHALL BE SAW CUT IN A STRAIGHT LINE, A MINIMUM OF 12 INCHES WIDER THAN THE UNDISTURBED SIDES OF THE TRENCH, SYMMETRICAL ABOUT THE CENTER – LINE OF THE EXCAVATION.
2. ANY CONCRETE PAVING SHALL BE SAW CUT 6 INCHES WIDER THAN THE UNDISTURBED SIDES OF EXCAVATION.
3. IF EXCAVATION AREA IS OPEN FOR TEMPORARY PUBLIC USE, THE SURFACE SHALL BE MAINTAINED LEVEL WITH ADJACENT RIDING SURFACE WITH COLD MIX OR FLEXIBLE BASE MATERIAL.
4. ROAD BASE AND SURFACE MATERIALS SHALL BE REPLACED IN KIND, OF EQUAL THICKNESS WITH MINIMUM BASE THICKNESS OF 8 INCHES.
5. COORDINATE WITH HEB REPRESENTATIVE IF DIRECTIONAL BORING IS TO BE USED.
6. THIS DETAIL SHOULD BE USED WHEN TRENCHING AND BACKFILLING WITHIN EXISTING PAVEMENT OR INSTALLED PAVEMENT BASE (BLUE TOP).

DISPENSER ISLAND
N.T.S

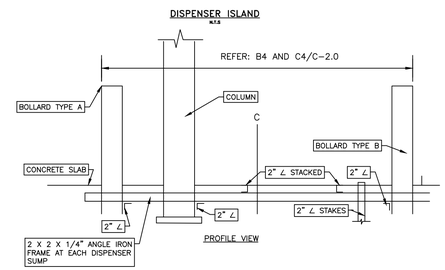

PROFILE VIEW

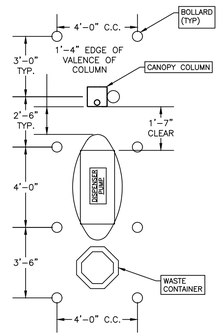

PLAN VIEW

BOLLARD LAYOUT DISPENSER
N.T.S

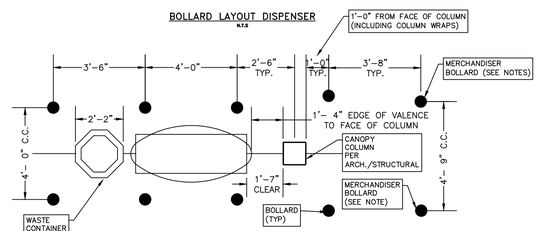

NOTES:

1. BOLLARD SPACING INCREASES WHEN COLUMN WRAPS ARE USED. COLUMN WRAP DIMENSIONS ARE SITE SPECIFIC AND SHALL BE COORDINATED WITH ARCHITECTURAL PLANS.
2. MERCHANDISER BOLLARD REQUIRE WHEN VENDING MACHINE PROTECTION IS NEEDED (REFER TO FUEL STATION LAB AND BOLLARD PLAN FOR LOCATION).

PLEASE BE ADVISED: THIS DOCUMENT MAY CONTAIN SENSITIVE AND/OR PROPRIETARY INFORMATION AND THEREFORE MUST BE TREATED AS A CONFIDENTIAL COMMUNICATION. ACCEPTANCE OF THIS DOCUMENT CONSTITUTES AN AGREEMENT THAT THIS DOCUMENT AND ITS CONTENTS, EXCEPTING ITEMS IN THE PUBLIC DOMAIN, SHALL BE MAINTAINED AND TRANSMITTED IN A CONFIDENTIAL MANNER. NO PART OF THIS DOCUMENT SHALL BE REPRODUCED, DISTRIBUTED OR TRANSMITTED IN ANY FORM OR BY ANY MEANS WITHOUT THE EXPRESS WRITTEN PERMISSION OF H.E.B. ORGANIZATION. ANY UNAUTHORIZED DISCLOSURE TO H.E.B. ENTITIES OR PERSONS MUST BE SUBJECT TO A WRITTEN CONFIDENTIALITY AGREEMENT.

| | | | |

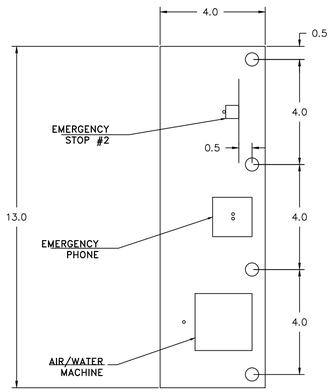

ANCILLARY SLAB DETAIL

N.T.S.

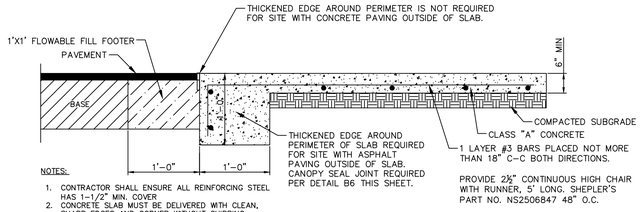

NOTES:

1. CONTRACTOR SHALL ENSURE ALL REINFORCING STEEL HAS 1-1/2" MIN. COVER
2. CONCRETE SLAB MUST BE DELIVERED WITH CLEAN, SHARP EDGES AND CORNER WITHOUT CHIPPING, CRACKING OR PATCHING.

PROVIDE 2½" CONTINUOUS HIGH CHAIR WITH RUNNER, 5' LONG, SHEPLER'S PART NO. NS2506847 48" O.C.

FUEL CANOPY SLAB DETAIL

N.T.S.

TEMPORARY MOVABLE CHAIN LINK FENCE WITH PRIVACY / WIND SCREEN

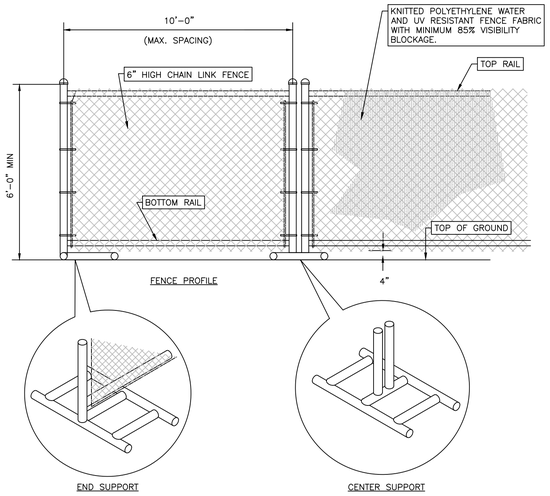

NOTES:
1. ALL POSTS, TUBES, AND RAILS SHALL BE SCH. 40.
2. ALL CHAIN LINK FABRIC SHALL BE 9 GAUGE.
3. FENCE LOCATION TO BE DETERMINED BY CONTRACTOR.
4. ALL END AND CENTER SUPPORT DIMENSIONS SHALL BE DETERMINED BY FENCE MANUFACTURER TO INSURE STABILITY, WIND LOADS, AND SAFETY OF FENCE.

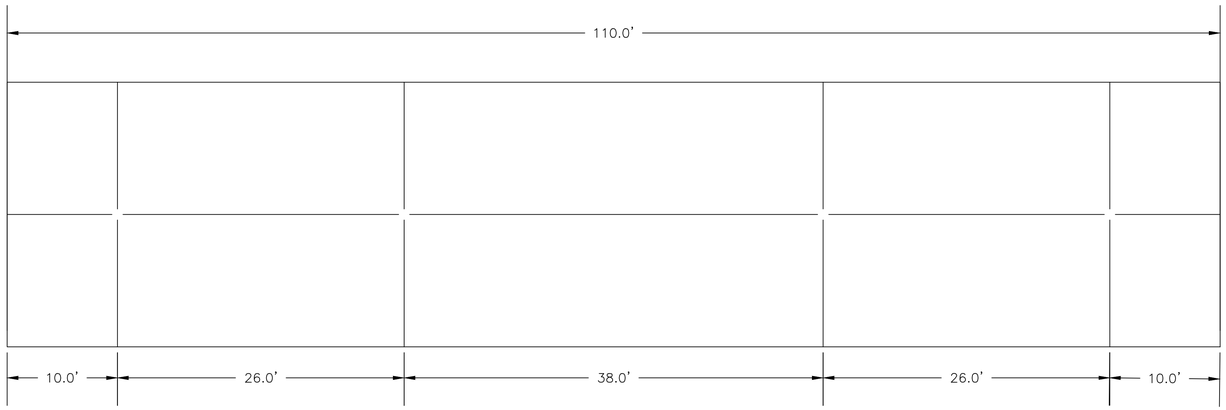

CANOPY DIMENSIONS

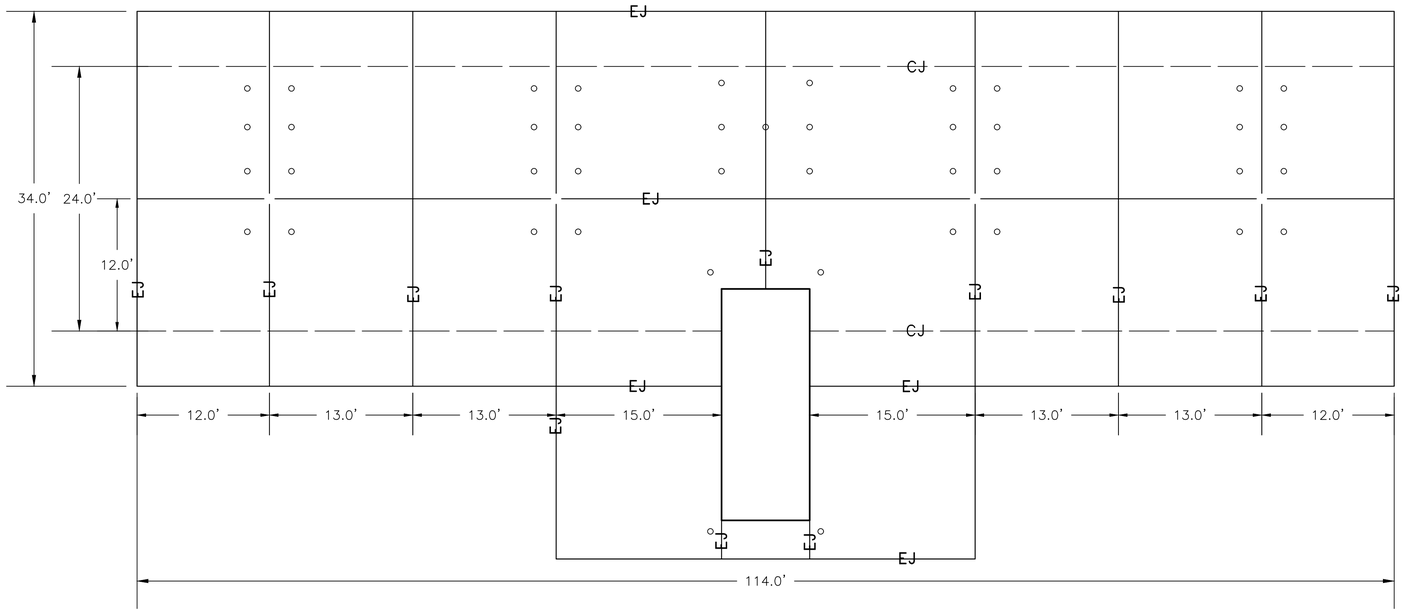

CANOPY SLAB

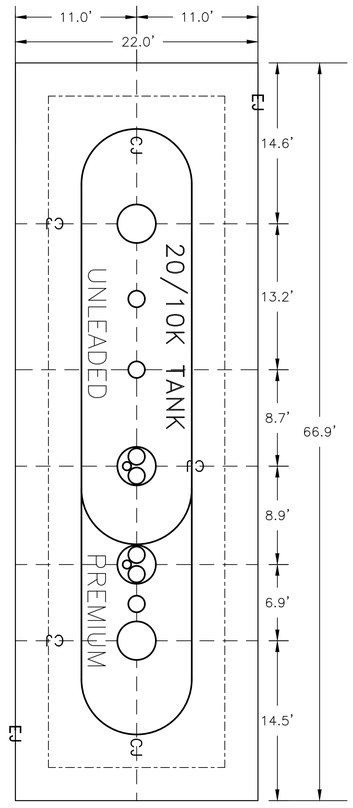

TANK SLAB

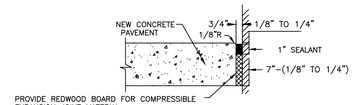

EXPANSION JOINT AT CONCRETE PAVEMENT AND PROPOSED BUILDING

N.T.S.

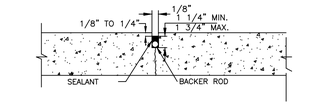

CONCRETE PAVEMENT SAW JOINT (CJ)

N.T.S.

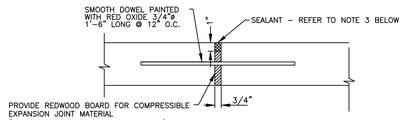

DOWELED EXPANSION JOINT (EJ)

N.T.S.

NOTES:

1. THESE DETAILS ARE SPECIFIC TO THE CONCRETE PAVING FOR THE FUEL STATION CANOPY & TANK SLAB AND CAR WASH APRONS.
2. EXPANSION JOINT SHALL BE PROVIDED EVERY 40 FEET AND/OR AS SHOWN ON THE PLANS.
3. BACKER ROD IS NOT ALLOWED WITHIN THE EXPANSION JOINT. CONTRACTOR TO USE DOW CORNING 890 SEALANT FOR THE FULL DEPTH. NO SUBSTITUTIONS.
4. BACKER ROAD MAY BE USED IN THE CONTROL JOINTS. CONTROL JOINTS SHALL BE CUT THE DAY OF THE POUR AND WHEN CONCRETE CAN BE WALKED ON.
5. CONSTRUCTION JOINTS (SAW JOINTS) SHALL BE PROVIDED EVERY 12' – 15' FEET AND/OR AS SHOWN ON THE PLAN.

PAVEMENT JOINT DETAILS

N.T.S.

PLEASE BE ADVISED: THIS DOCUMENT MAY CONTAIN SENSITIVE AND/OR PROPRIETARY INFORMATION AND THEREFORE MUST BE TREATED AS A CONFIDENTIAL TRADE SECRET. ACCEPTANCE OF THIS DOCUMENT CONSTITUTES AN AGREEMENT THAT THIS DOCUMENT AND ITS CONTENTS, INCLUDING ANY DIGITAL FILES, SHALL BE MAINTAINED AND TRANSMITTED IN A CONFIDENTIAL MANNER. NO PART OF THIS DOCUMENT SHALL BE REPRODUCED, DISTRIBUTED OR USED FOR ANY PURPOSE WITHOUT THE EXPRESS WRITTEN PERMISSION OF H.E.B. NO RELEASE OF INFORMATION CONTAINED HEREIN SHALL BE MADE TO ENTITIES OR PERSONS MUST BE SUBJECT TO A WRITTEN CONFIDENTIALITY AGREEMENT.

28	PLAN MOD 28 – PETROLEUM FUEL REMODEL	11/21/25

11/21/2025

STATE OF TEXAS
NICHOLAS R. SANDLIN
124404
LICENSED PROFESSIONAL ENGINEER

SANDLIN ENGINEERING CONSULTING SERVICES, LLC
TBPELS FIRM #21356 #21356
9111 JOLLYVILLE RD, STE 212
AUSTIN, TX 78759

H-E-B

SITE DETAILS

HEB AUSTIN 20
REMODEL CONSTRUCTION PLANS
6001 WEST PARMER LN., AUSTIN, TX 78727

SCALE: AS INDICATED
DRAWN BY:
PROJ. NO.: 388-26
DATE: 11.21.2025
SHEET NO. C-2.2

LAST SAVED DATE: JULY 8, 2025 2:26:09 PM

ITEM NO.	QTY.	DESCRIPTION	PART NO.
1	1	MONITOR RESERVOIR-18IN	C230003
2	6	KIT_FITTING, SINGLE, SS, 4IN H, LAYUP, ON 10FT TANK (WITH SS STRIKER PLATE)	C310133
3	2	KIT_FITTING, SINGLE, SS, 1IN BRINE PORT, LAYUP, FRP ENCASED	C600476
4	2	KIT_MANWAY ASSY, DW, 22IN, SS, ON 10FT TANK (WITH SS STRIKER PLATE)	C600215
5	2	GASKET, MANWAY, 22IN, 1/8IN THK, HC-60	C430020
6	2	KIT_MANWAY COVER, SS, 22IN, 3-4IN H (0, CTR, 180), TYPE C	C330105
7	2	COLLAR, DW, 42IN, TRIMMED-10FT	C220005
8	2	COLLAR, DW, 48IN, TRIMMED-10FT	C220006
9	1	SUMP, DWFS, 42IN DIA, 48IN HT, 36IN OPENING, BRINE, FIELD LAM KIT	C710045
10	1	SUMP, DWFS, 42IN DIA, 48IN HT, 36IN OPENING, BRINE, FIELD LAM KIT	C710045
11	1	SUMP, DWFS, 48IN DIA, 48IN HT, 36IN WT, BRINE, FIELD LAM KIT	C710031
12	1	SUMP, DWFS, 48IN DIA, 48IN HT, 36IN WT, BRINE, FIELD LAM KIT	C710031
13	6	KIT_LIFT LUG, ON BENT PLATE, 10" X 12", 10' (ADHESIVE)	C340010
14	2	KIT_STEEL GUIDE LUG	C340014
15	2	DEADMEN, PREFAB CONCRETE, 18INX8.75IN-18FT LONG+AP (10FT)	C821003
16	4	DEADMEN, PREFAB CONCRETE, 18INX8.75IN-18FT LONG+AP (10FT)	C821003
17	10	ANCHOR STRAP ASSEMBLY (10FT DWX TANK)	-

NICK RIEMER
PETROLEUM
8/5/2025

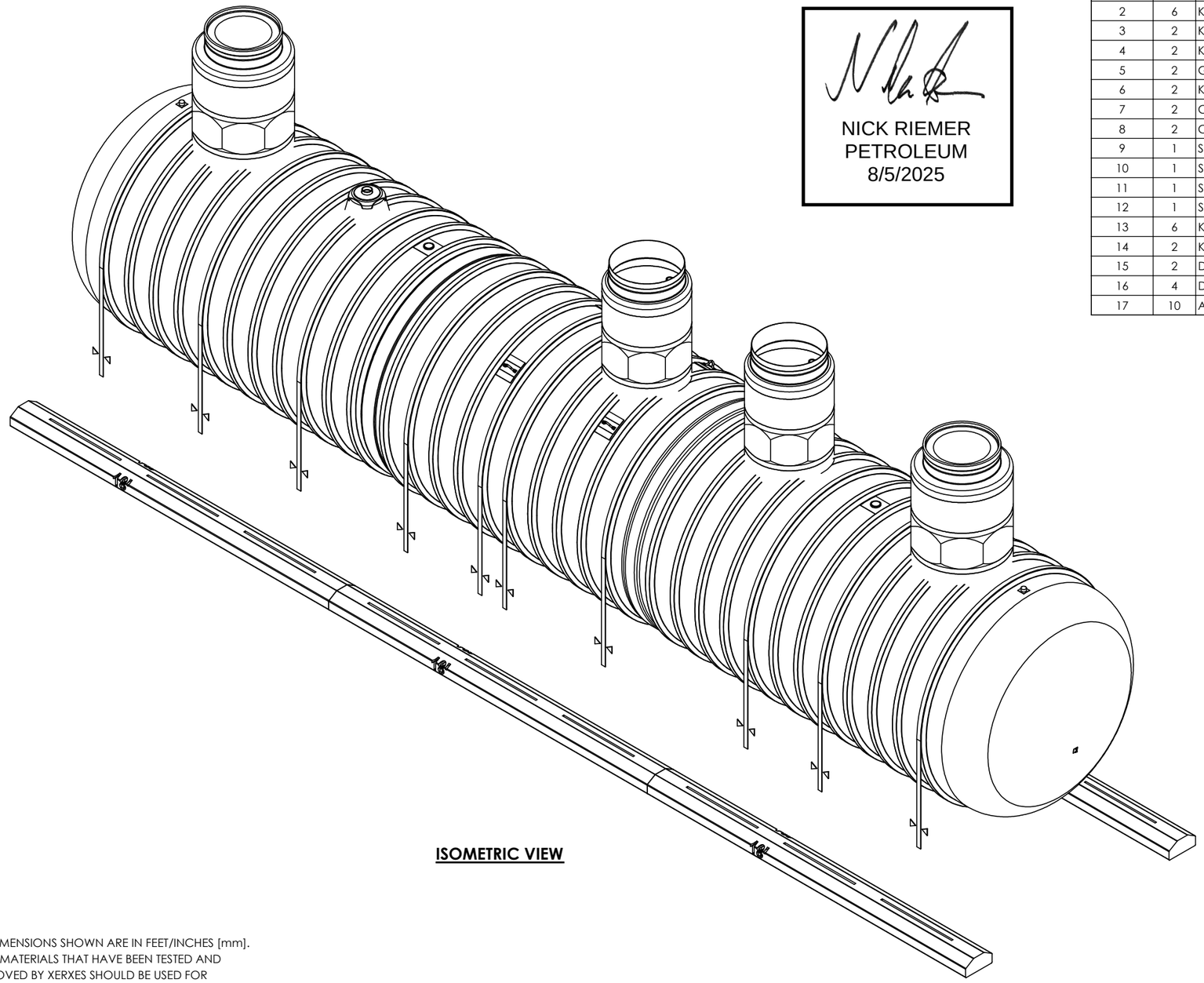

ISOMETRIC VIEW

NOTES:
1. ALL DIMENSIONS SHOWN ARE IN FEET/INCHES [mm].
2. ONLY MATERIALS THAT HAVE BEEN TESTED AND APPROVED BY XERXES SHOULD BE USED FOR BONDING OF CONTAINMENT SUMP COMPONENTS.
3. DRAWING EXPIRATION: DRAWING VALID FOR SIX (6) MONTHS FROM DATE OF LAST REVISION. XERXES RESERVES THE RIGHT TO REVIEW AND UPDATE.
4. MAXIMUM ESTIMATED WEIGHT: 17,000 LBS [7,700 KG]
5. TANK INTERSTICE IS FACTORY BRINE FILLED.
6. 10FT DW MFG. CONFIG.: XS-009756.
7. BRINE TEST PORTS: FITTING IS CAPPED DURING MANUFACTURE, DO NOT REMOVE OR USE.

REV	DESCRIPTION	REV BY	REV DATE	CHK BY	CHK DATE
5	ADDED CROSS REFERENCE NOTE, ADDED SS.BRINE PORT,AND NOTE. BOM UPDATE TO REFLECT THIS CHANGES.	IL	07-08-25	DD	07-08-25
4	CENTERED COLLARS AROUND FITTINGS WITH RIB. UPDATED BOM DESCRIPTIONS & PART NO.	DD	06-12-25	IL	06-12-25
3	REVISED MANWAY LOCATION TO RIB 28/29, RELOCATED STRAPS TO RIB 11/12, 19/3, 15/16, 23/24 . ADDED SEAM DIMENSIONS	IL	03-27-25	DD	03-27-25
2	CHANGE MANWAYS, FITTINGS, AND GASKETS TO MATCH SS, FROM CS	JP	10-15-24	IL	10-15-24
1	ADDED FITTING ON FLAT #10 & 25	IL	08-22-24	DD	08-22-24

INDUSTRY: M101 FUEL MARKETS
SALES MANAGER: CARY ETTER
THIRD ANGLE PROJECTION
UNITS: INCH [mm] DATE: MM/DD/YY

PROPRIETARY AND CONFIDENTIAL
THIS DRAWING IS THE PROPERTY OF MATTR CORP. THE COPYRIGHT/ OWNERSHIP OF THIS DRAWING IS AND WILL REMAIN WITH MATTR CORP. THE PHYSICAL POSSESSION OF THIS DRAWING DOES NOT CONVEY THE RIGHT TO USE ITS DESIGN CONCEPT, OR TO REPRODUCE IT, OR TO MANUFACTURE IN WHOLE OR IN PART THE ITEM(S) DEPICTED HEREIN WITHOUT WRITTEN PERMISSION AND AUTHORIZATION OF MATTR CORP.

DRAWN BY: IL
APPR. BY: KVL
APPR. DATE: 08-02-24

XERXES

DESCR: 10FT DWX MC UL
CAP. 20,000 X 10,000 GALLONS
HEB GROCERY

SIZE: B
DWG NO.: XS-007481
REV.: 5
SHEET: 1 of 3 - ISOMETRIC-BOM

FILE LOCATION: Z:\DRAFTING\TANKBUILDER EXPORTED FILES

LAST SAVED DATE: JULY 8, 2025 2:26:09 PM

NICK RIEMER
PETROLEUM
8/5/2025

ITEM NO.	QTY.	DESCRIPTION	PART NO.
1	1	MONITOR RESERVOIR-18IN	C230003
2	6	KIT_FITTING, SINGLE, SS, 4IN H, LAYUP, ON 10FT TANK (WITH SS STRIKER PLATE)	C310133
3	2	KIT_FITTING, SINGLE, SS, 1IN BRINE PORT, LAYUP, FRP ENCASED	C600476
4	2	KIT_MANWAY ASSY, DW, 22IN, SS, ON 10FT TANK (WITH SS STRIKER PLATE)	C600215
5	2	GASKET, MANWAY, 22IN, 1/8IN THK, HC-60	C430020
6	2	KIT_MANWAY COVER, SS, 22IN, 3-4IN H (0, CTR, 180), TYPE C	C330105
7	2	COLLAR, DW, 42IN, TRIMMED-10FT	C220005
8	2	COLLAR, DW, 48IN, TRIMMED-10FT	C220006

ITEM NO.	QTY.	DESCRIPTION	PART NO.
9	1	SUMP, DWFS, 42IN DIA, 48IN HT, 36IN OPENING, BRINE, FIELD LAM KIT	C710045
10	1	SUMP, DWFS, 42IN DIA, 48IN HT, 36IN OPENING, BRINE, FIELD LAM KIT	C710045
11	1	SUMP, DWFS, 48IN DIA, 48IN HT, 36IN WT, BRINE, FIELD LAM KIT	C710031
12	1	SUMP, DWFS, 48IN DIA, 48IN HT, 36IN WT, BRINE, FIELD LAM KIT	C710031
13	6	KIT_LIFT LUG, ON BENT PLATE, 10" X 12", 10' (ADHESIVE)	C340010
14	2	KIT_STEEL GUIDE LUG	C340014
15	2	DEADMEN, PREFAB CONCRETE, 18INX8.75IN-18FT LONG+AP (10FT)	C821003
16	4	DEADMEN, PREFAB CONCRETE, 18INX8.75IN-18FT LONG+AP (10FT)	C821003
17	10	ANCHOR STRAP ASSEMBLY (10FT DWX TANK)	-

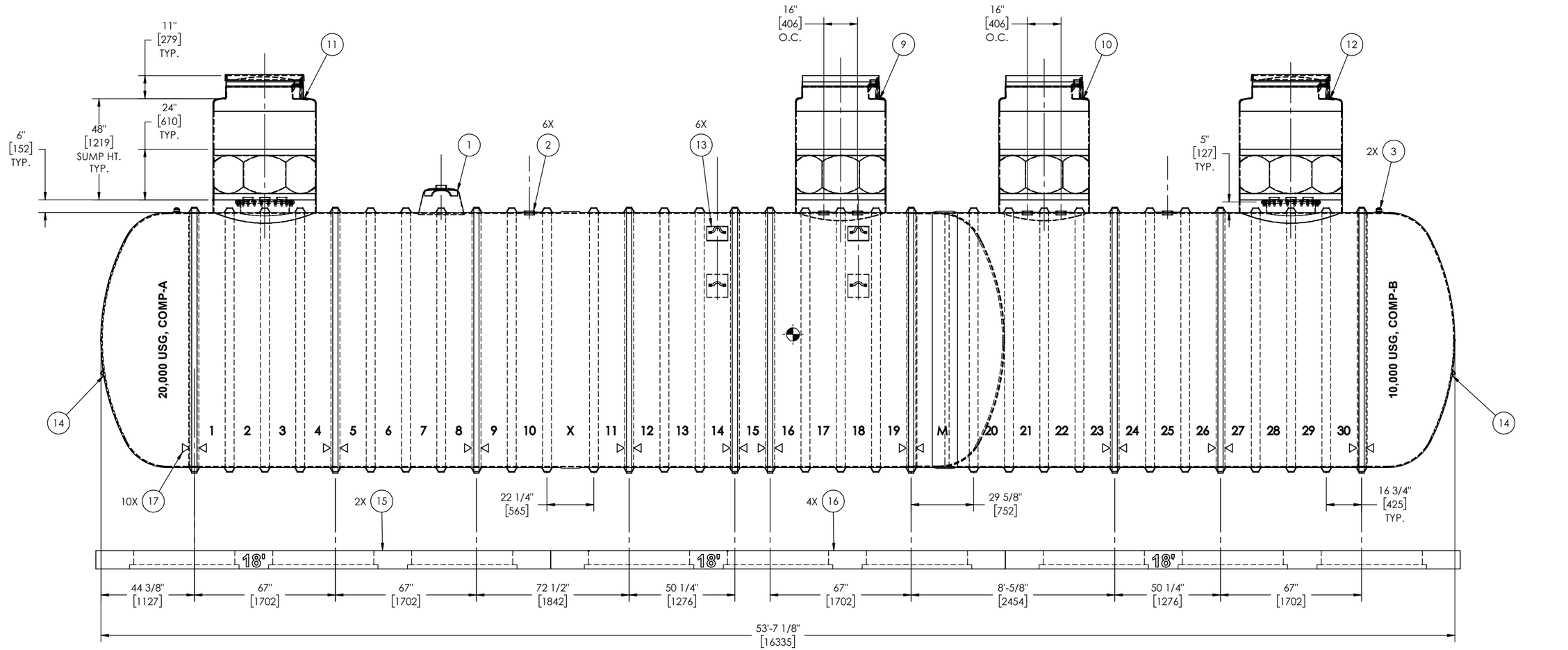

FRONT ELEVATION

REV	DESCRIPTION	REV BY	REV DATE	CHK BY	CHK DATE
5	ADDED CROSS REFERENCE NOTE, ADDED SS.BRINE PORT,AND NOTE. BOM UPDATE TO REFLECT THIS CHANGES.	IL	07-08-25	DD	07-08-25
4	CENTERED COLLARS AROUND FITTINGS WITH RIB. UPDATED BOM DESCRIPTIONS & PART NO.	DD	06-12-25	IL	06-12-25
3	REVISED MANWAY LOCATION TO RIB 28/29, RELOCATED STRAPS TO RIB 11/12, 19/3, 15/16, 23/24 . ADDED SEAM DIMENSIONS	IL	03-27-25	DD	03-27-25
2	CHANGE MANWAYS, FITTINGS, AND GASKETS TO MATCH SS, FROM CS	JP	10-15-24	IL	10-15-24
1	ADDED FITTING ON FLAT #10 & 25	IL	08-22-24	DD	08-22-24

INDUSTRY: M101 FUEL MARKETS
SALES MANAGER: CARY ETTER

PROPRIETARY AND CONFIDENTIAL
THIS DRAWING IS THE PROPERTY OF MATTR CORP. THE COPYRIGHT/ OWNERSHIP OF THIS DRAWING IS AND WILL REMAIN WITH MATTR CORP. THE PHYSICAL POSSESSION OF THIS DRAWING DOES NOT CONVEY THE RIGHT TO USE ITS DESIGN CONCEPT, OR TO REPRODUCE IT, OR TO MANUFACTURE IN WHOLE OR IN PART THE ITEM(S) DEPICTED HEREIN WITHOUT WRITTEN PERMISSION AND AUTHORIZATION OF MATTR CORP.

THIRD ANGLE PROJECTION
UNITS: INCH [mm]
DATE: MM/DD/YY

DRAWN BY: IL
APPR. BY: KVL
APPR. DATE: 08-02-24

XERXES*

DESCR: 10FT DWX MC UL
CAP. 20,000 X 10,000 GALLONS
HEB GROCERY

SIZE: B
DWG NO.: XS-007481
REV.: 5
SHEET: 2 of 3 - FRONT ELEVATION

FILE LOCATION: Z:\DRAFTING\TANKBUILDER EXPORTED FILES

LAST SAVED DATE: JULY 8, 2025 2:26:09 PM

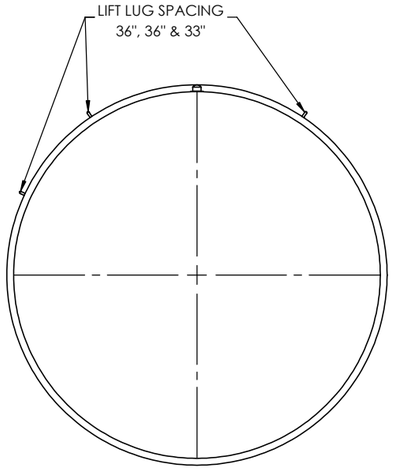

ITEM NO.	QTY.	DESCRIPTION	PART NO.
1	1	MONITOR RESERVOIR-18IN	C230003
2	6	KIT_FITTING, SINGLE, SS, 4IN H, LAYUP, ON 10FT TANK (WITH SS STRIKER PLATE)	C310133
3	2	KIT_FITTING, SINGLE, SS, 1IN BRINE PORT, LAYUP, FRP ENCASED	C600476
4	2	KIT_MANWAY ASSY, DW, 22IN, SS, ON 10FT TANK (WITH SS STRIKER PLATE)	C600215
5	2	GASKET, MANWAY, 22IN, 1/8IN THK, HC-60	C430020
6	2	KIT_MANWAY COVER, SS, 22IN, 3-4IN H (0, CTR, 180), TYPE C	C330105
7	2	COLLAR, DW, 42IN, TRIMMED-10FT	C220005
8	2	COLLAR, DW, 48IN, TRIMMED-10FT	C220006
9	1	SUMP, DWFS, 42IN DIA, 48IN HT, 36IN OPENING, BRINE, FIELD LAM KIT	C710045
10	1	SUMP, DWFS, 42IN DIA, 48IN HT, 36IN OPENING, BRINE, FIELD LAM KIT	C710045
11	1	SUMP, DWFS, 48IN DIA, 48IN HT, 36IN WT, BRINE, FIELD LAM KIT	C710031
12	1	SUMP, DWFS, 48IN DIA, 48IN HT, 36IN WT, BRINE, FIELD LAM KIT	C710031
13	6	KIT_LIFT LUG, ON BENT PLATE, 10" X 12", 10' (ADHESIVE)	C340010
14	2	KIT_STEEL GUIDE LUG	C340014
15	4	DEADMEN, PREFAB CONCRETE, 18INX8.75IN-18FT LONG+AP (10FT)	C821003
16	2	DEADMEN, PREFAB CONCRETE, 18INX8.75IN-18FT LONG+AP (10FT)	C821003
17	10	ANCHOR STRAP ASSEMBLY (10FT DWX TANK)	-

NICK RIEMER
PETROLEUM
8/5/2025

LIFT LUG ORIENTATION

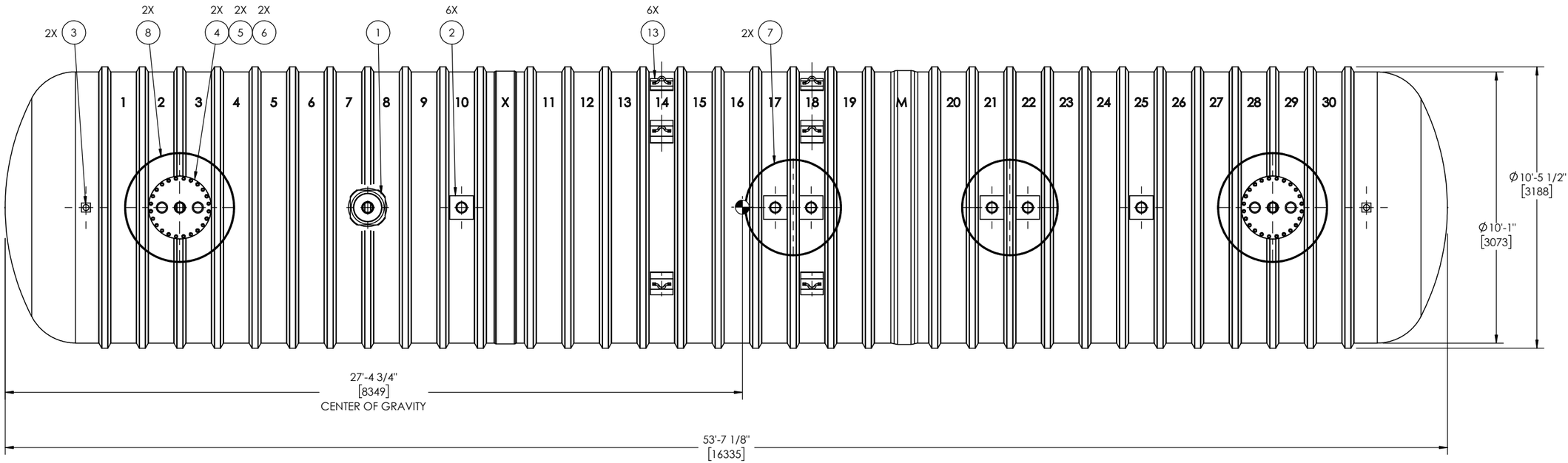

TOP VIEW

REV	DESCRIPTION	REV BY	REV DATE	CHK BY	CHK DATE
5	ADDED CROSS REFERENCE NOTE, ADDED SS.BRINE PORT,AND NOTE. BOM UPDATE TO REFLECT THIS CHANGES.	IL	07-08-25	DD	07-08-25
4	CENTERED COLLARS AROUND FITTINGS WITH RIB. UPDATED BOM DESCRIPTIONS & PART NO.	DD	06-12-25	IL	06-12-25
3	REVISED MANWAY LOCATION TO RIB 28/29, RELOCATED STRAPS TO RIB 11/12, 19/3, 15/16, 23/24 . ADDED SEAM DIMENSIONS	IL	03-27-25	DD	03-27-25
2	CHANGE MANWAYS, FITTINGS, AND GASKETS TO MATCH SS, FROM CS	JP	10-15-24	IL	10-15-24
1	ADDED FITTING ON FLAT #10 & 25	IL	08-22-24	DD	08-22-24

INDUSTRY: M101 FUEL MARKETS
SALES MANAGER: CARY ETTER
THIRD ANGLE PROJECTION
UNITS: INCH [mm]
DATE: MM/DD/YY

PROPRIETARY AND CONFIDENTIAL
THIS DRAWING IS THE PROPERTY OF MATTR CORP. THE COPYRIGHT/ OWNERSHIP OF THIS DRAWING IS AND WILL REMAIN WITH MATTR CORP. THE PHYSICAL POSSESSION OF THIS DRAWING DOES NOT CONVEY THE RIGHT TO USE ITS DESIGN CONCEPT, OR TO REPRODUCE IT, OR TO MANUFACTURE IN WHOLE OR IN PART THE ITEM(S) DEPICTED HEREIN WITHOUT WRITTEN PERMISSION AND AUTHORIZATION OF MATTR CORP.

DRAWN BY: IL
APPR. BY: KVL
APPR. DATE: 08-02-24

XERXES

DESCR: 10FT DWX MC UL
CAP. 20,000 X 10,000 GALLONS
HEB GROCERY

SIZE: B
DWG NO.: XS-007481
REV.: 5
SHEET: 3 of 3 - TOP VIEW-LIFT LUGS

FILE LOCATION: Z:\DRAFTING\TANKBUILDER EXPORTED FILES

XERXES®

Double-Wall and Triple-Wall Tanks

Underground tanks backed by proven longevity

Fuel marketers, equipment distributors and commercial accounts rely on proven technology when planning their underground installations. It makes sense that they look to Xerxes, the manufacturer that developed the first UL-listed double-wall fiberglass tank.

Xerxes tanks were in early compliance with the updated certification requirements of the bi-national standard ANSI/CAN/UL/ULC 1316:2018.

Tank geometry and materials create structural strength

- Xerxes fuel tanks are designed and manufactured to provide decades of secure storage for any application
- Cylindrical tank with hemispherical or elliptical end caps is designed to withstand the stresses of underground storage
- Integrally manufactured fiberglass ribs function like I-beams and enhance tank strength
- Premium resin and glass-fiber reinforcement create a structurally strong tank

Multicompartment tanks

- Store more than one grade or type of fuel in the same tank
- Double-wall tanks are available in models with two, three or four compartments
- Provide space-saving installation with a single tank
- Can provide cost savings in installation and insurance costs



Double-wall and triple-wall tanks

- No added corrosion protection needed to store ethanol-blended fuel (E10, E15, E85), biodiesel fuels and ultra-low sulfur diesel (ULSD)
- Incorporates Xerxes' proprietary 3D glass fabric (Parabeam®) to create interstitial monitoring space between tank walls
- Tertiary containment available for added protection in sensitive environments, such as nearby acquifers, lakes or streams

Key Features

Designed to withstand **H-20/ HS-20 axle loads**

Compatible with **traditional fuels and new biofuels**

Lightweight tanks for **easy shipping and installation**

Corrosion-resistant inside and out

30-year limited warranty

Double-Wall and Triple-Wall Tanks

Product and project reliability

- Stringent quality control of manufacturing
- Ongoing technical support ensures that each tank is a long-term investment
- Comprehensive installation training is available
- 45+ years of composite manufacturinng and 225,000+ installed tanks assure customers that Xerxes stands behind its products and warranties

Easy shipping and installation

- Lightweight tank and engineered deadmen can generally fit on the same truck flatbed
- No special, heavy equipment needed for unloading and installing tanks
- Ideal for tight site footprints and remote locations



Single-Compartment Tanks
Double-Wall

Nominal Diameter	Nominal Capacities for Tanks Specified in U.S. Gallons	Nominal Capacities for Tanks Specified in Liters
4-foot	600 – 2,000	2,900 – 5,000
6-foot	2,500 – 6,000	Not available
8-foot	6,000 – 20,000	25,000 – 65,000
10-foot	9,000 – 40,000	40,000 – 150,000
12-foot	20,000 – 50,000	Not available



Multicompartment Tanks
Double-Wall

Nominal Diameter	Nominal Capacities for Tanks Specified in U.S. Gallons	Nominal Capacities for Tanks Specified in Liters
6-foot	4,500 – 12,000	Not available
8-foot	9,000 – 25,000	35,000 – 95,000
10-foot	15,000 – 40,000	60,000 – 150,000

Typical fuel tank accessories

- Engineered anchoring system
- Truchek® hydrostatic monitoring system
- Containment collars, sumps and covers
- Manways, extensions and covers
- Fittings and nozzles
- Fill tubes

For over 45 years, Xerxes has designed and manufactured fiberglass underground storage tanks for fuel, water and wastewater. Xerxes' most recent expansion is its HydroChain™ stormwater product line — highly engineered products with site-specific designs for stormwater management solutions. Xerxes is a key brand of Mattr, a global materials technology company serving critical infrastructure markets.

FDTW0425 | xerxes.com | **fuelsales@mattr.com**
© 2025 Mattr Corp. All rights reserved.

XERXES®

Anthem UX™

User experience platform powered by

Dover Fueling Solutions

Branding Proposal

Prepared for

H-E-B



DOVER®
FUELING SOLUTIONS

Bezel Features

1. 27” Display screen – 1920 x 1080 pixel, screen border is always black.
2. U-Frame bezel – always A040 silver.
3. Proximity camera – senses when user approaches dispenser to prompt welcome screen in Anthem app. Do not obscure with any decals!
4. Secondary display – shows last transaction information in the event of a power outage as well as totalizer values. Dashed line indicates size and position, do not obscure.
5. Payment panel – houses EMV card reader and keypad assembly.
6. WayneTap – the contactless card reader is located behind the glass; lights will indicate its activation; icon will be hidden if option not included, do not obscure.
7. WayneScan – 2D scanner located behind the glass; clear glass area will be hidden if option not included. Dashed line indicates size and position, do not obscure.
8. Printer panel – location for printed receipt when printer option is included; blank panel when printer is not included.
9. User interface controls – Dark mode feature (see page 10), language, volume and call attendant.



PROPRIETARY INFORMATION - THIS DOCUMENT CONTAINS PROPRIETARY AND CONFIDENTIAL INFORMATION. IT IS LOANED FOR LIMITED PURPOSES ONLY AND REMAINS THE PROPERTY OF WAYNE FUELING SYSTEMS LLC. IT MAY NOT BE REPRODUCED IN WHOLE OR IN PART WITHOUT THE WRITTEN CONSENT OF WAYNE FUELING SYSTEMS LLC AND MUST NOT BE DISCLOSED TO PERSONS NOT HAVING NEED OF SUCH DISCLOSURE CONSISTENT WITH THE PURPOSE OF THE LOAN. IT MUST NOT BE USED FOR ANY PURPOSE OTHER THAN FOR THE BENEFIT OF WAYNE FUELING SYSTEMS LLC. THIS DOCUMENT IS TO BE RETURNED TO WAYNE FUELING SYSTEMS LLC UPON REQUEST, AND/OR UPON COMPLETION OF THE USE FOR WHICH IT WAS LOANED.

APPROVED BY	Rev.01	05/14/2020	
DRAWN BY JEFF SANCHEZ	REV	DATE	ECN NO.

MATERIAL	
THICKNESS	
SURFACE TREATMENT	
SURFACE FINISH	
GENERAL TOLERANCE	
REPLACED BY	

DEBURR AND BREAK SHARP EDGES	SCALE N/A	DO NOT SCALE DRAWING	Wayne FUELING SYSTEMS	Related Drawing

TITLE

SPECIFICATION,ANTHEM,
BRANDING PROPOSAL

DRAWING NO.

ANTHEM-BRANDING PROPOSAL

SHEET 2 A3

DESCRIPTION OF CHANGE

Existing branded Ovation example



Existing Ovation branding with Anthem



Reference Specifications

This proposal was created referencing your current Ovation branding specification:
WU010233-0189

In the event you would like to develop your own Anthem digital assets as shown in this document, you may request the **Anthem Branding Guidelines** from our graphics department.

Anthem digital assets are designed to be WCAG 2.1 AA-Large compliant [4.5 Color Contrast] for legibility at the dispenser.

PROPRIETARY INFORMATION - THIS DOCUMENT CONTAINS PROPRIETARY AND CONFIDENTIAL INFORMATION. IT IS LOANED FOR LIMITED PURPOSES ONLY AND REMAINS THE PROPERTY OF WAYNE FUELING SYSTEMS LLC. IT MAY NOT BE REPRODUCED IN WHOLE OR IN PART WITHOUT THE WRITTEN CONSENT OF WAYNE FUELING SYSTEMS LLC AND MUST NOT BE DISCLOSED TO PERSONS NOT HAVING NEED OF SUCH DISCLOSURE CONSISTENT WITH THE PURPOSE OF THE LOAN. IT MUST NOT BE USED FOR ANY PURPOSE OTHER THAN FOR THE BENEFIT OF WAYNE FUELING SYSTEMS LLC. THIS DOCUMENT IS TO BE RETURNED TO WAYNE FUELING SYSTEMS LLC UPON REQUEST, AND/OR UPON COMPLETION OF THE USE FOR WHICH IT WAS LOANED.

APPROVED BY	Rev.01	05/14/2020	
DRAWN BY JEFF SANCHEZ	REV	DATE	ECN NO.

MATERIAL	
THICKNESS	
SURFACE TREATMENT	
SURFACE FINISH	
GENERAL TOLERANCE	
REPLACED BY	

DEBURR AND BREAK SHARP EDGES	SCALE N/A	DO NOT SCALE DRAWING	Wayne FUELING SYSTEMS	Related Drawing

TITLE

SPECIFICATION, ANTHEM, BRANDING PROPOSAL

DRAWING NO.

ANTHEM-BRANDING PROPOSAL

SHEET 3 A3

AI FORM REF: WM003167 Revision 01.1

DESCRIPTION OF CHANGE

MODEL: B23/4, R24/4



Simulated onscreen advertising

Actuator buttons (default):



Digital Assets

Header



Product grades

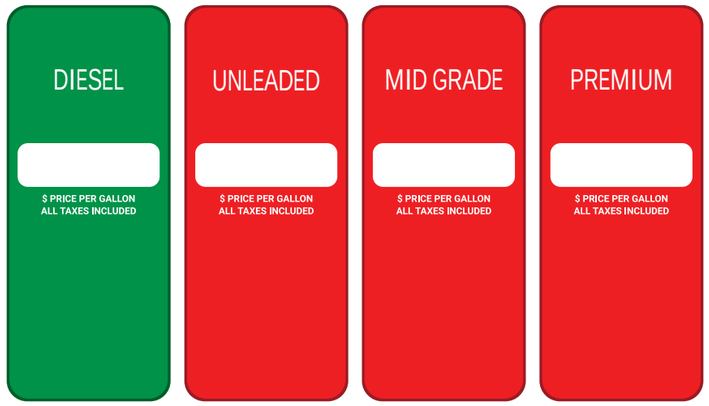

Footer



Printed Assets

1. New decal designs, either resized or redesigned to accomodate the new bezel dimensions.

Branding notes:

PROPRIETARY INFORMATION - THIS DOCUMENT CONTAINS PROPRIETARY AND CONFIDENTIAL INFORMATION. IT IS LOANED FOR LIMITED PURPOSES ONLY AND REMAINS THE PROPERTY OF WAYNE FUELING SYSTEMS LLC. IT MAY NOT BE REPRODUCED IN WHOLE OR IN PART WITHOUT THE WRITTEN CONSENT OF WAYNE FUELING SYSTEMS LLC AND MUST NOT BE DISCLOSED TO PERSONS NOT HAVING NEED OF SUCH DISCLOSURE CONSISTENT WITH THE PURPOSE OF THE LOAN. IT MUST NOT BE USED FOR ANY PURPOSE OTHER THAN FOR THE BENEFIT OF WAYNE FUELING SYSTEMS LLC. THIS DOCUMENT IS TO BE RETURNED TO WAYNE FUELING SYSTEMS LLC UPON REQUEST, AND/OR UPON COMPLETION OF THE USE FOR WHICH IT WAS LOANED.

APPROVED BY	Rev.01	05/14/2020	
DRAWN BY JEFF SANCHEZ	REV	DATE	ECN NO.

MATERIAL	
THICKNESS	
SURFACE TREATMENT	
SURFACE FINISH	
GENERAL TOLERANCE	
REPLACED BY	

DEBURR AND BREAK SHARP EDGES	SCALE N/A	DO NOT SCALE DRAWING	Wayne FUELING SYSTEMS	Related Drawing

TITLE

SPECIFICATION, ANTHEM, BRANDING PROPOSAL

DRAWING NO.

ANTHEM-BRANDING PROPOSAL

SHEET 4 A3

AI FORM REF: WM003167 Revision 01.1

DESCRIPTION OF CHANGE

MODEL: B12/3, R13/3



Simulated onscreen advertising

Actuator buttons (default):



Digital Assets

Header



Product grades



Footer



Printed Assets

Branding notes:

PROPRIETARY INFORMATION - THIS DOCUMENT CONTAINS PROPRIETARY AND CONFIDENTIAL INFORMATION. IT IS LOANED FOR LIMITED PURPOSES ONLY AND REMAINS THE PROPERTY OF WAYNE FUELING SYSTEMS LLC. IT MAY NOT BE REPRODUCED IN WHOLE OR IN PART WITHOUT THE WRITTEN CONSENT OF WAYNE FUELING SYSTEMS LLC AND MUST NOT BE DISCLOSED TO PERSONS NOT HAVING NEED OF SUCH DISCLOSURE CONSISTENT WITH THE PURPOSE OF THE LOAN. IT MUST NOT BE USED FOR ANY PURPOSE OTHER THAN FOR THE BENEFIT OF WAYNE FUELING SYSTEMS LLC. THIS DOCUMENT IS TO BE RETURNED TO WAYNE FUELING SYSTEMS LLC UPON REQUEST, AND/OR UPON COMPLETION OF THE USE FOR WHICH IT WAS LOANED.

APPROVED BY	Rev.01	05/14/2020	
DRAWN BY JEFF SANCHEZ	REV	DATE	ECN NO.

MATERIAL	
THICKNESS	
SURFACE TREATMENT	
SURFACE FINISH	
GENERAL TOLERANCE	
REPLACED BY	

DEBURR AND BREAK SHARP EDGES	SCALE N/A	DO NOT SCALE DRAWING	Wayne FUELING SYSTEMS	Related Drawing

TITLE

SPECIFICATION, ANTHEM, BRANDING PROPOSAL

DRAWING NO.

ANTHEM-BRANDING PROPOSAL

SHEET 5 A3

AI FORM REF: WM003167 Revision 01.1

DESCRIPTION OF CHANGE

MODEL: R11/1, ER11/1



Simulated onscreen advertising

Actuator buttons (default):



Digital Assets

Header



Product grades

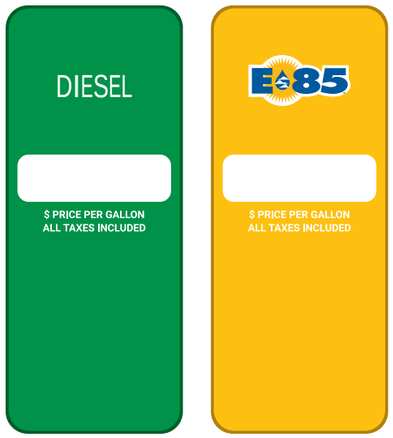

Footer



Printed Assets

Branding notes:

PROPRIETARY INFORMATION - THIS DOCUMENT CONTAINS PROPRIETARY AND CONFIDENTIAL INFORMATION. IT IS LOANED FOR LIMITED PURPOSES ONLY AND REMAINS THE PROPERTY OF WAYNE FUELING SYSTEMS LLC. IT MAY NOT BE REPRODUCED IN WHOLE OR IN PART WITHOUT THE WRITTEN CONSENT OF WAYNE FUELING SYSTEMS LLC AND MUST NOT BE DISCLOSED TO PERSONS NOT HAVING NEED OF SUCH DISCLOSURE CONSISTENT WITH THE PURPOSE OF THE LOAN. IT MUST NOT BE USED FOR ANY PURPOSE OTHER THAN FOR THE BENEFIT OF WAYNE FUELING SYSTEMS LLC. THIS DOCUMENT IS TO BE RETURNED TO WAYNE FUELING SYSTEMS LLC UPON REQUEST, AND/OR UPON COMPLETION OF THE USE FOR WHICH IT WAS LOANED.

APPROVED BY	Rev.01	05/14/2020	
DRAWN BY JEFF SANCHEZ	REV	DATE	ECN NO.

MATERIAL	
THICKNESS	
SURFACE TREATMENT	
SURFACE FINISH	
GENERAL TOLERANCE	
REPLACED BY	

DEBURR AND BREAK SHARP EDGES

SCALE N/A

DO NOT SCALE DRAWING

Wayne FUELING SYSTEMS

Related Drawing

TITLE

SPECIFICATION, ANTHEM, BRANDING PROPOSAL

DRAWING NO.

ANTHEM-BRANDING PROPOSAL

SHEET 6 A3

AI FORM REF: WM003167 Revision 01.1

DESCRIPTION OF CHANGE



B23/4, R24/4



B12/3, R13/3



R11/1, ER11/1

PROPRIETARY INFORMATION - THIS DOCUMENT CONTAINS PROPRIETARY AND CONFIDENTIAL INFORMATION. IT IS LOANED FOR LIMITED PURPOSES ONLY AND REMAINS THE PROPERTY OF WAYNE FUELING SYSTEMS LLC. IT MAY NOT BE REPRODUCED IN WHOLE OR IN PART WITHOUT THE WRITTEN CONSENT OF WAYNE FUELING SYSTEMS LLC AND MUST NOT BE DISCLOSED TO PERSONS NOT HAVING NEED OF SUCH DISCLOSURE CONSISTENT WITH THE PURPOSE OF THE LOAN. IT MUST NOT BE USED FOR ANY PURPOSE OTHER THAN FOR THE BENEFIT OF WAYNE FUELING SYSTEMS LLC. THIS DOCUMENT IS TO BE RETURNED TO WAYNE FUELING SYSTEMS LLC UPON REQUEST, AND/OR UPON COMPLETION OF THE USE FOR WHICH IT WAS LOANED.

APPROVED BY	Rev.01	05/14/2020	
DRAWN BY JEFF SANCHEZ	REV	DATE	ECN NO.

MATERIAL
THICKNESS
SURFACE TREATMENT
SURFACE FINISH
GENERAL TOLERANCE
REPLACED BY

DEBURR AND BREAK SHARP EDGES	SCALE N/A	DO NOT SCALE DRAWING		Wayne FUELING SYSTEMS	Related Drawing

TITLE

SPECIFICATION, ANTHEM, BRANDING PROPOSAL

DRAWING NO.

ANTHEM-BRANDING PROPOSAL

SHEET 7 A3

AI FORM REF: WM003167 Revision 01.1

Dark Mode Feature

Dark Mode feature is designed for ease of nighttime viewing as well as providing an alternative for the visually-impaired.

When selected at any time during the fueling process, the screen background color and onscreen instructional prompts will invert.

Fuel product assets and the screen footer graphic do not change.





PROPRIETARY INFORMATION - THIS DOCUMENT CONTAINS PROPRIETARY AND CONFIDENTIAL INFORMATION. IT IS LOANED FOR LIMITED PURPOSES ONLY AND REMAINS THE PROPERTY OF WAYNE FUELING SYSTEMS LLC. IT MAY NOT BE REPRODUCED IN WHOLE OR IN PART WITHOUT THE WRITTEN CONSENT OF WAYNE FUELING SYSTEMS LLC AND MUST NOT BE DISCLOSED TO PERSONS NOT HAVING NEED OF SUCH DISCLOSURE CONSISTENT WITH THE PURPOSE OF THE LOAN. IT MUST NOT BE USED FOR ANY PURPOSE OTHER THAN FOR THE BENEFIT OF WAYNE FUELING SYSTEMS LLC. THIS DOCUMENT IS TO BE RETURNED TO WAYNE FUELING SYSTEMS LLC UPON REQUEST, AND/OR UPON COMPLETION OF THE USE FOR WHICH IT WAS LOANED.

APPROVED BY	Rev.01	05/14/2020	
DRAWN BY JEFF SANCHEZ	REV	DATE	ECN NO.

MATERIAL
THICKNESS
SURFACE TREATMENT
SURFACE FINISH
GENERAL TOLERANCE
REPLACED BY

DEBURR AND BREAK SHARP EDGES	SCALE N/A	DO NOT SCALE DRAWING	Wayne FUELING SYSTEMS	Related Drawing

TITLE

SPECIFICATION, ANTHEM, BRANDING PROPOSAL

DRAWING NO.

ANTHEM-BRANDING PROPOSAL

SHEET 8 A3

Header Short Grade



1. Once a customer has selected a product and initiated the fueling process, a short grade version of their selected product will appear on the header and is visible for the entire fueling process.The octane panel is also displayed as shown.

2. The interface maximizes the remaining display area to deliver instructions, targeted promotions and interactive media.

PROPRIETARY INFORMATION - THIS DOCUMENT CONTAINS PROPRIETARY AND CONFIDENTIAL INFORMATION. IT IS LOANED FOR LIMITED PURPOSES ONLY AND REMAINS THE PROPERTY OF WAYNE FUELING SYSTEMS LLC. IT MAY NOT BE REPRODUCED IN WHOLE OR IN PART WITHOUT THE WRITTEN CONSENT OF WAYNE FUELING SYSTEMS LLC AND MUST NOT BE DISCLOSED TO PERSONS NOT HAVING NEED OF SUCH DISCLOSURE CONSISTENT WITH THE PURPOSE OF THE LOAN. IT MUST NOT BE USED FOR ANY PURPOSE OTHER THAN FOR THE BENEFIT OF WAYNE FUELING SYSTEMS LLC. THIS DOCUMENT IS TO BE RETURNED TO WAYNE FUELING SYSTEMS LLC UPON REQUEST, AND/OR UPON COMPLETION OF THE USE FOR WHICH IT WAS LOANED.

APPROVED BY	Rev.01	05/14/2020	
DRAWN BY JEFF SANCHEZ	REV	DATE	ECN NO.

MATERIAL	
THICKNESS	
SURFACE TREATMENT	
SURFACE FINISH	
GENERAL TOLERANCE	
REPLACED BY	

DEBURR AND BREAK SHARP EDGES | SCALE N/A | DO NOT SCALE DRAWING

Wayne FUELING SYSTEMS

Related Drawing

TITLE

SPECIFICATION,ANTHEM,
BRANDING PROPOSAL

DRAWING NO.

ANTHEM-BRANDING PROPOSAL

SHEET 9 | A3

Branding Approval



B23/4, R24/4

Single/Dual Price Posting

Indicate below which price posting options you require and any other special instructions.

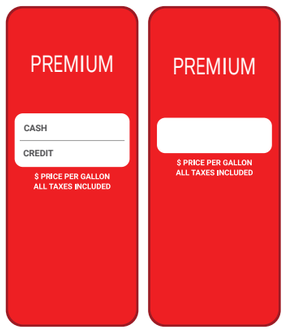

- ☐ Single price posting
- ☐ Dual price posting
- ☐ Both

Bezel/Column colors***

Review and approve color selections

- ☐ Bezel: A017 (SIlver)
- ☐ Side columns: A017 (Silver)
- ☐ Outer column covers: A017 (Silver)

Special instructions

Please review the following components of this proposal for accuracy:

- ☐ **Color specifications** (sht 2)
- ☐ **Fonts used**
- ☐ **Product names**
- ☐ **Logo usage**
- ☐ **Bezel decals**
- ☐ **Valance/lower door art/chassis artwork*****
- ☐ **Models required*****

***This pertains only to new customer proposals, existing brand specifications will, unless otherwise indicated, use the existing approved branding specifications we have on file.

Customer Signature: _____

Printed Name: _____

Date: _____

Please sign and return by either email (**austin.graphics@doverfs.com**) or mail to the Wayne Fueling Systems Graphics Dept.

Wayne Fueling Systems
Graphics Department
3814 Jarrett Way
Austin, TX 78728

We must have a signed approval before we can release any new parts or process an order for this branding specification.

PROPRIETARY INFORMATION - THIS DOCUMENT CONTAINS PROPRIETARY AND CONFIDENTIAL INFORMATION. IT IS LOANED FOR LIMITED PURPOSES ONLY AND REMAINS THE PROPERTY OF WAYNE FUELING SYSTEMS LLC. IT MAY NOT BE REPRODUCED IN WHOLE OR IN PART WITHOUT THE WRITTEN CONSENT OF WAYNE FUELING SYSTEMS LLC AND MUST NOT BE DISCLOSED TO PERSONS NOT HAVING NEED OF SUCH DISCLOSURE CONSISTENT WITH THE PURPOSE OF THE LOAN. IT MUST NOT BE USED FOR ANY PURPOSE OTHER THAN FOR THE BENEFIT OF WAYNE FUELING SYSTEMS LLC. THIS DOCUMENT IS TO BE RETURNED TO WAYNE FUELING SYSTEMS LLC UPON REQUEST, AND/OR UPON COMPLETION OF THE USE FOR WHICH IT WAS LOANED.

APPROVED BY	Rev.01	05/14/2020	
DRAWN BY JEFF SANCHEZ	REV	DATE	ECN NO.

MATERIAL	
THICKNESS	
SURFACE TREATMENT	
SURFACE FINISH	
GENERAL TOLERANCE	
REPLACED BY	

DEBURR AND BREAK SHARP EDGES

SCALE N/A

DO NOT SCALE DRAWING

Wayne FUELING SYSTEMS

TITLE

SPECIFICATION,ANTHEM, BRANDING PROPOSAL

Related Drawing

DRAWING NO.

ANTHEM-BRANDING PROPOSAL

SHEET 9 A3

AI FORM REF: WM003167 Revision 01.1

4" SUBMERSIBLE TURBINE PUMPS



Since hitting the market in 1988, FE PETRO® brand submersible pumps have developed a reputation as the standard in performance, quality and dependability with innovative features only available from Franklin Fueling Systems. It is, and always will be about filling cars faster. With best-in-class flow rates and backed by a long history of dependability, FE PETRO® pumps are responsible for delivering fuel to thousands of customers around the globe, day in and day out.

HIGHLIGHTS

Variable Speed

With faster fill times during peak hours and power savings during non-peak hours, variable speed submersible pumping systems allow you to maximize profits with consistent flow rates while mitigating operating expenses.

MagShell®

The patented stainless steel MagShell®, available on 2 Hp and 4 Hp pumps, is designed to maximize flow rate capabilities, potential throughput, and profits. By expanding the pump motor shell, the MagShell® increases the area for product flow by 45%.

Biofuel Blend Compatibility

FE PETRO® Alcohol-Gas (AG) and Advanced Protection (AP) pumps are UL listed with both UL79A (up to 85% Ethanol) and UL79B (up to 20% or 100% Biodiesel).

Variable Length

The patented telescoping pump shaft lets installers adjust the length of the pump onsite for the perfect fit.

Advanced Protection

Stop corrosion in its tracks. Special powder-coated, e-coated, and stainless steel components defend your pump in the tank and in the sump from accelerated corrosion.

Turbine Pump Interface

Remote enhanced pump monitoring and control including pump-in-water automation, clogged intake escalation, tank leveling, and tank priority.

Intake Filter Screen

Avoid system damage, pumping slowdowns, and reduce filter changes by keeping harmful tank debris, sediment, and corrosion from entering the pumping system with this factory-installed option.

FEATURE SELECTION

	4 HP	2 HP	1½ HP	1/3 3/4 HP
Variable Speed	✓	✓		
Fixed Speed		✓	✓	✓
MagShell®	✓	✓		
Biofuel Compatibility*	✓	✓	✓	✓
Variable Length	✓	✓	✓	✓
Fixed Length		✓	✓	✓
Advanced Protection	✓	✓	✓	✓
Turbine Pump Interface**	✓	✓	✓	✓
Intake Filter Screen	✓	✓	✓	✓

**Up to 85% Ethanol and up to 20% or 100% Biodiesel.*

***Fixed speed models require a Guardian Series™ Single Phase Smart Controller (SPGC-220) to network with EVO™ Series Automatic Tank Gauges.*

SPECIFICATIONS

4" Submersible Pump Components & Key Dimensions

1. Manhole
2. Leak Detector
3. Manifold
4. Containment Sump
5. 4" Riser
6. Tank Adapter
7. Tank Manway
8. Column Pipe
9. Variable Length Coupler
10. Pump Motor Assembly (PMA)
11. End Bell

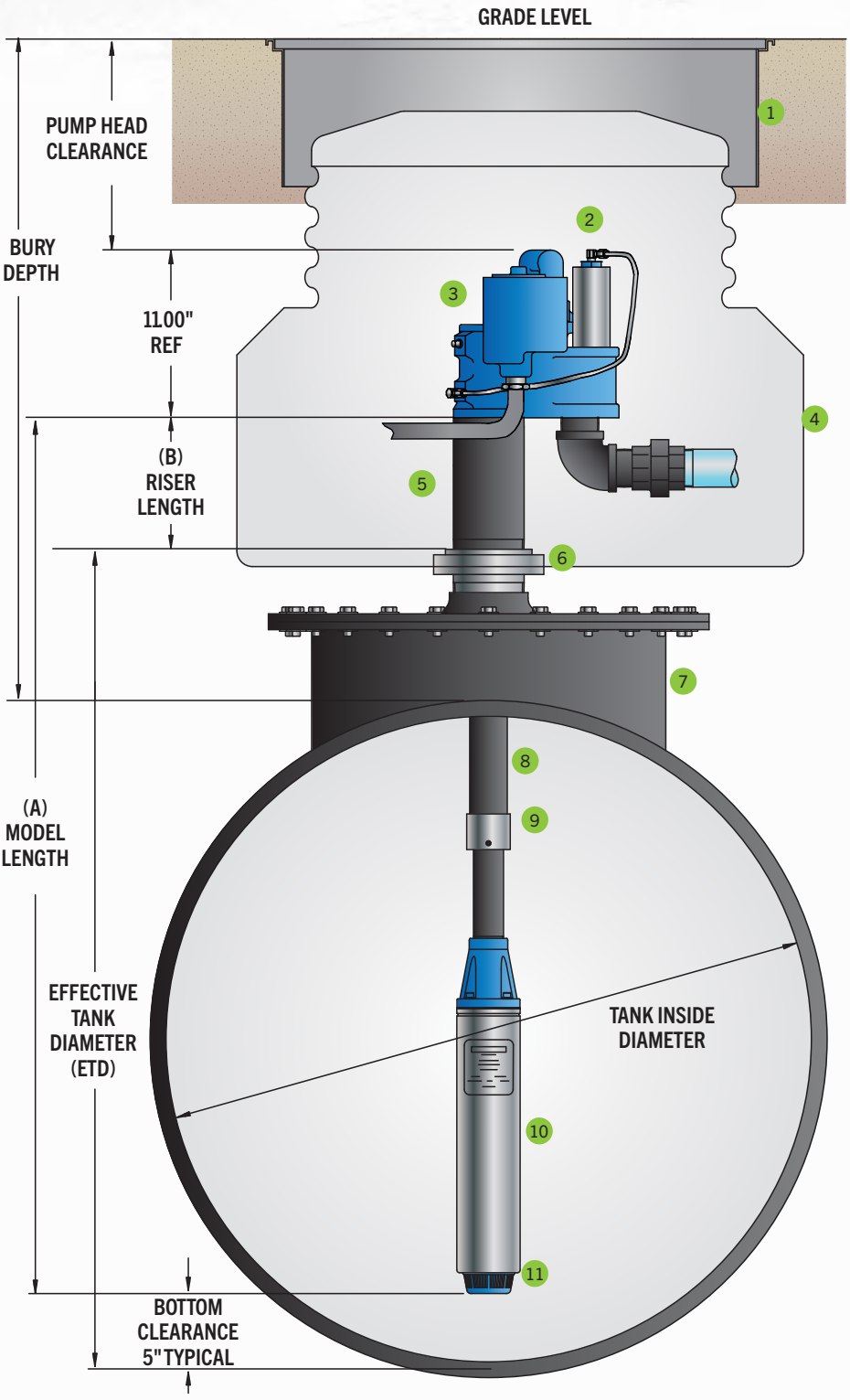

Notes:

1. Effective tank diameter (ETD) = Inside tank diameter (to top of 4" bung), including tank manway and/or sump adapter.

2. Model length (A) = ETD plus riser length minus bottom clearance minus 1" thread engagement.

3. Riser length (B) = Bury depth (to top of tank) minus pump head clearance minus tank manway and/or minus sump adapter.

SPECIFICATIONS CONTINUED

4" Submersible Pump Manifold Components & Key Dimensions

1. Line Test Port, ¼" NPT
2. Leak Detector Port, 2" NPT
3. Syphon Port, ¼" NPT
4. Tank Port, ¼" NPT
5. Riser Pipe, 4" NPT
6. Discharge Outlet, 2" NPT

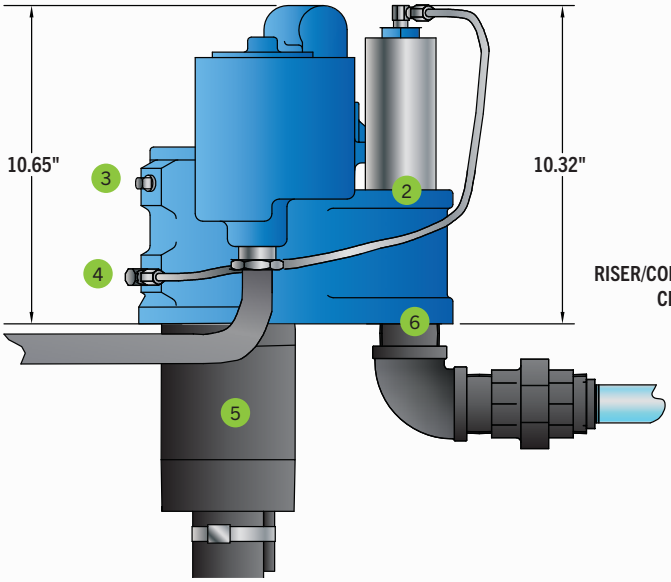

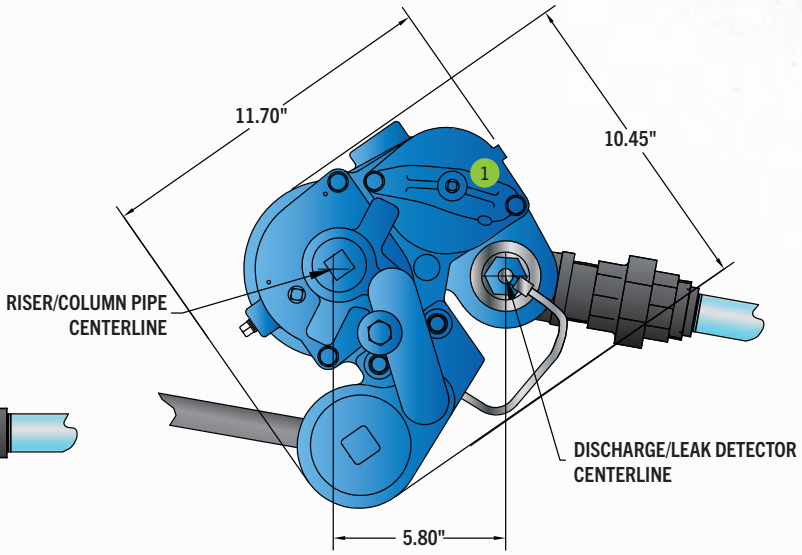

Fuel Compatibility for All Submersible Turbine Pumps

STP Standard Submersible Turbine Pumps with Fixed or Variable Speed Pump Motor Assembly

- UL79 for petroleum dispensing products intended for use with gasoline or gasoline/ethanol blends with nominal ethanol concentrations up to 10 percent (gasohol, E10), diesel fuel, diesel/biodiesel blends with nominal biodiesel concentrations up to 5 percent (B5), kerosene, or fuel oil.
- 20% MTBE, 20% ETBE or 17% TAME with gasoline.

STPAG, STPAP, IST, ISTAP Alcohol-Grade Compatible and Advanced Protection Fixed or Variable Speed Submersible Turbine Pumps

- UL79A for gasoline and gasoline/ethanol blends with nominal ethanol concentrations up to 85 percent (E0 - E85) for products intended for use with gasoline or gasoline/ethanol blends with nominal ethanol concentrations up to 85 percent (E85).
- 20% MTBE, 20% ETBE or 17% TAME with gasoline.
- UL79B for diesel fuel, biodiesel fuel, diesel/biodiesel blends with nominal biodiesel concentrations up to 20 percent (B20), kerosene, and fuel oil for products intended for use with diesel fuel, biodiesel fuel, diesel/biodiesel blends with nominal biodiesel concentrations up to 20 percent (B20), kerosene or fuel oil.
- 100% biodiesel.

4 HP SUBMERSIBLE TURBINE PUMPS

With faster fill times during peak hours and power savings during non-peak hours, FE PETRO® 4 Hp variable speed submersible pumps deliver maximized profits while mitigating operating expenses.



HIGHLIGHTS

OPTIONAL FEATURES

Biofuel Blend Compatibility

FE PETRO® pumps are UL listed with both UL79A (up to 85% Ethanol) and UL79B (up to 20% or 100% Biodiesel).

Advanced Protection

Stop corrosion in its tracks. Special powder-coated, e-coated, and stainless steel components defend your pump in the tank and in the sump from accelerated corrosion.

Turbine Pump Interface

Remote enhanced pump monitoring and control including pump-in-water automation, clogged intake escalation, tank leveling, and tank priority.

Intake Filter Screen

Avoid system damage, pumping slowdowns, and reduce filter changes by keeping harmful tank debris, sediment, and corrosion from entering the pumping system with this factory-installed option.

STANDARD FEATURES

Variable Speed

With faster fill times during peak hours and power savings during non-peak hours, variable speed submersible pumping systems allow you to maximize profits with consistent flow rates while mitigating operating expenses.

MagShell®

The patented stainless steel MagShell® is designed to maximize flow rate capabilities, potential throughput, and profits. By expanding the pump motor shell, the MagShell® increases the area for product flow by 45%.

Variable Length

The patented telescoping pump shaft lets installers adjust the length of the pump onsite for the perfect fit.

Active Air Eliminator

FE PETRO® STPs come standard with active air elimination, which eliminates air through the highest point in the pump head at all times when the pump is running, assuring air does not pass into discharge piping.

Safety and Ease of Maintenance

FE PETRO® STPs include a contractor electrical disconnect, which requires loosening only one bolt, allowing motor wiring to be disconnected without venting the dangerous tank vapors into the sump when servicing FE PETRO® submersible products.

Simple Servicing

If ever required, the pump can be easily removed from the tank by unthreading three bolts. There is no need to disconnect the syphon system or to remove the leak detector from the system to service the STP.

Manual Pressure Relief

As a standard FE PETRO® feature, a vent screw is provided to bleed line pressure to zero when necessary. By turning this screw, product is diverted back to the tank, dropping line pressure to zero. This reduces fuel discharged into the sump manhole or dispenser pan during servicing, further protecting service technicians and the environment.

Outlast, Outperform with Franklin Electric Inside

FE PETRO® STPs are powered by the legendary Franklin Electric motor and built for long term performance. Franklin Electric-powered submersible pumps provide maximum uptime and a proven track record in the fueling industry that spans more than four decades. They feature best-in-class flow rates and a long history of dependability.

Quality Certification

Franklin Fueling Systems is an ISO 9001 Certified Manufacturer.

SPECIFICATIONS

General

- Variable speed models are available in variable lengths only.
- Check valve: 2¾" diameter fluorocarbon seal constructed with cast aluminum body and steel backing washer.
- Pressure relief valve: available in four pressure relief settings, integral to check valve. Standard model relieves at 40 psi and resets above 35 psi.
- Syphon: venturi-type syphon primer supplied with every submersible. Syphon check valve and secondary syphon sold separately.
- Air eliminator: every submersible includes a tank return path with one-way check valve to provide active air elimination.
- Electrical disconnect: electrical yoke for positive contractor disconnect during service.

Pump Motor

- 4 Hp, variable speed, two-stage centrifugal type pump motor with integral, automatic, thermal overload protection.
- Max. pressure: selectable operating pressure on MagVFC™ between 24 psi and 42 psi deadhead.
- Available with MagShell® which results in 45% increased flow area around motor.

Approvals

- cULus listed.
- Consult factory for applicable approvals.

Power Requirements

- Variable speed pumps can only be controlled by a MagVFC™ variable frequency controller.
- VS4 models require three-phase incoming power supply to the MagVFC™ for proper operation.
- Incoming power supply to the MagVFC™ can be 200-250 VAC, 50 or 60 Hz.
- MagVFC™ outputs a three-phase, variable frequency signal, valid for FE PETRO® variable speed pumps only.
- MagVFC™ max. line draw: 20 Amps.
- Max motor draw: 15 Amps.

Liquid Compatibility

- Max. liquid viscosity: 70 SSU at 60 °F (15 °C).
- STP variable speed models are UL listed for fuel mixtures containing up to 10% ethanol, and 20% MTBE, 20% ETBE or 17% TAME with gasoline.
- IST/ISTAP variable speed models are UL and cUL listed for fuel mixtures containing diesel fuel with up to 20% Biodiesel, 100% Biodiesel, up to 85% ethanol with gasoline, and 20% MTBE, 20% ETBE or 17% TAME with gasoline.
- All variable speed models can also be used with diesel fuels, fuel oils, kerosene, Avgas and jet fuels in a non-gelled pourable state.
- All wetted elastomers are made of a high grade, fluorocarbon compound.

4 Hp Variable Speed Pump Performance Chart

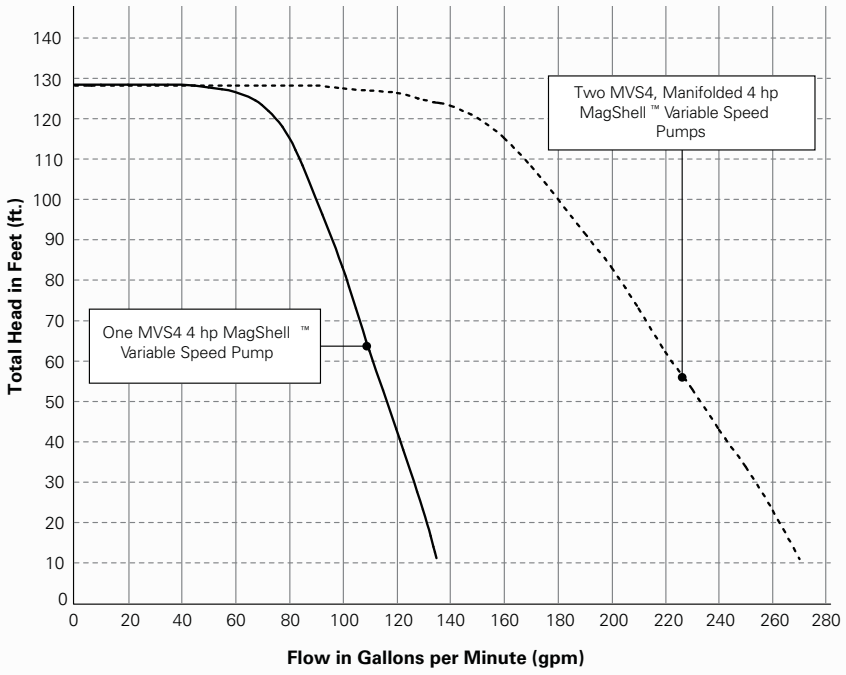

Note: Performance based on pumping gasoline (0.76 specific gravity). Pressure is taken at the manifold discharge outlet. ISTMVS4 and STPMVS4 turbines can only be powered by a MagVFC with three phase incoming power

ORDERING INFORMATION

4 Hp Submersible Pump Ordering Guide

A typical turbine model designation has up to five components to define the pump being supplied as follows:

XXX YYYYY Z - A - B

XXX = Basic Model Designation

STP = These standard variable speed and variable length models are capable of up to 10% ethanol with gasoline

IST = These variable speed and variable length models include alcohol-gasoline compatibility (up to 85% ethanol, up to 20% Biodiesel, or 100% Biodiesel).

ISTAP = These variable speed and variable length models include alcohol-gasoline compatibility (up to 85% ethanol, up to 20% Biodiesel, or 100% Biodiesel) and Advanced Protection with powder-coated, e-coated, and stainless steel components.

YYYYY = Factory Installed Options

Model designations may include one or more of the following characters in alphabetical order:

F = Floating suction adapter (1½" NPT female adapter)

K = Intake filter screen (IFS, factory installed to PMA)

M = MagShell® (flow enhancing, expanded PMA shell)

R* = Model R check valve (24 psi relief/22 psi reset for PLLD)

W* = Model W check valve (16 psi relief/13 psi reset for PPM4000)

Z = Pump Motor Horsepower Rating

VS4 = 4 Hp variable speed

A = Model Length (see table)

VL1 = STP variable length range #1

VL2 = STP variable length range #2

VL3 = STP variable length range #3

B = Riser Pipe Length (see diagram)

Riser pipe length is expressed as two numeric characters that indicate the total length of the riser in inches. Riser pipes are available from 7" to 60" in 1" increments (additional charge for risers 31" or longer).

Notes:
**If not otherwise specified, all models are supplied with standard model check valve (40 psi relief / 35 psi reset for MLD, TS-LS300, and TS-LS500).*

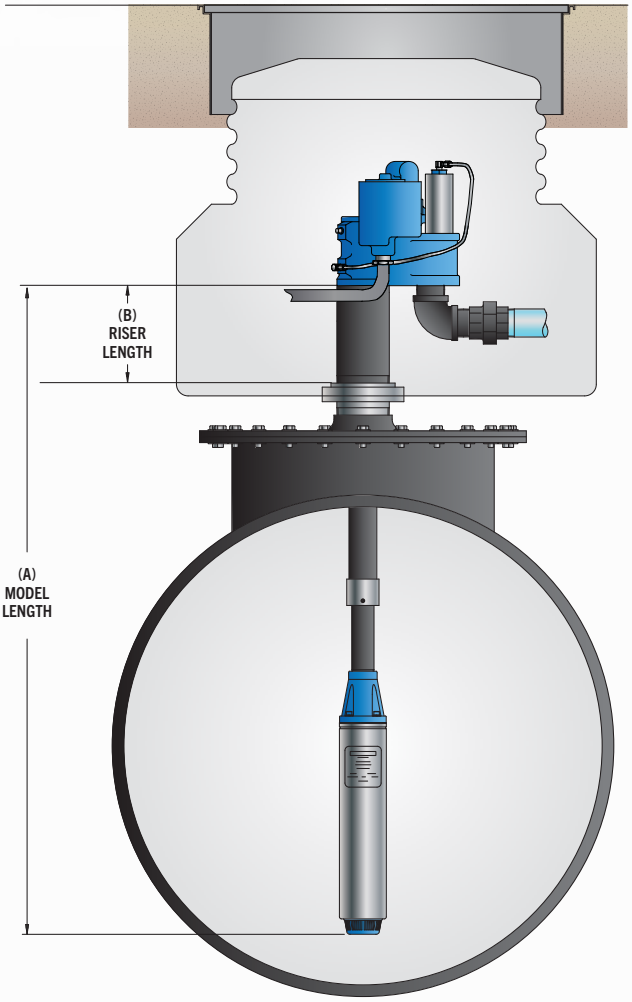

Model Length (A)

STP Horsepower	Model Length Range	Model Length Designation
4 Hp	64" – 92"	VL1
	95" – 156"	VL2
	127" – 218"	VL3

ORDERING INFORMATION CONTINUED

4 Hp Variable Speed Submersible Turbine Pumps

Variable speed, variable length.

Model	Description	Model Length Range Number	Model Length Range*
STPMVS4-VL1	4 Hp variable speed with MagShell®	VL1	64" – 92"
STPMVS4-VL2	4 Hp variable speed with MagShell®	VL2	95" – 156"
STPMVS4-VL3	4 Hp variable speed with MagShell®	VL3	127" – 218"

4 Hp Variable Speed Intelligent Submersible Turbine Pumps

Variable speed, variable length, and AG compatible.

Model	Description	Model Length Range Number	Model Length Range*
ISTMVS4-VL1	4 Hp AG variable speed with MagShell®	VL1	64" – 92"
ISTMVS4-VL2	4 Hp AG variable speed with MagShell®	VL2	95" – 156"
ISTMVS4-VL3	4 Hp AG variable speed with MagShell®	VL3	127" – 218"
ISTAPMVS4-VL1	4 Hp AG variable speed with Advanced Protection, and MagShell®	VL1	64" – 92"
ISTAPMVS4-VL2	4 Hp AG variable speed with Advanced Protection, and MagShell®	VL2	95" – 156"
ISTAPMVS4-VL3	4 Hp AG variable speed with Advanced Protection, and MagShell®	VL3	127" – 218"

Notes:

1. Remove "M" from model number for non-MagShell® pump motor assembly.

2. All STP models are UL and cUL listed for compatibility with fuel mixtures containing up to 10% ethanol with gasoline, up to 5% Biodiesel with diesel fuels, and 20% MTBE, 20% ETBE or 17% TAME with gasoline.

3. All IST/ISTAP models are compatible with fuel mixtures containing diesel fuel with up to 20% Biodiesel, 100% Biodiesel, up to 85% ethanol with gasoline, and 20% MTBE, 20% ETBE or 17% TAME with gasoline.

4. All models are supplied with a standard check valve unless factory option "R" or "W" is specified.

5. All above models can only be powered by a MagVFC™. 4 hp models require three-phase incoming power supply, 2 hp models can be supplied with single- or three-phase incoming power.

6. 4" riser pipe, if supplied locally, must be 4½" OD by 3/16" WT tubing.

7. For riser pipe length 31" to 60", additional charge applies (call Customer Service for lead times).

**Model length (A) defined as the dimension from turbine manifold bottom to pump motor inlet.*

Factory Installed Options

Specified in model number at time of STP order.

Model	Description
F	Floating suction adapter, 1½" NPT female, must be factory installed
K	IFS (intake filter screen) factory assembled to pump motor assembly
R	Model R check valve, factory installed, for Veeder-Root® PLLD Line Leak
W	Model W check valve, factory installed, for Red Jacket PPM4000 Line Leak

Field Installed Options

Intelligent submersible turbine pump specific accessories.

Model	Description
5874202800	MagVFC™, 2 Hp or 4 Hp variable frequency controller, one required per STPM VS2 or VS4
400137908	Syphon check valve, alcohol-gasoline compatible (when ordered with STPM VS2 or VS4)
402459931	Model 65 psi check valve AG compatible, (for secondary of manifolded STPM VS2 or VS4 with Veeder-Root® PLLD)
402507930	Secondary syphon kit (when two syphon primes are required for one STPM VS2 or VS4)
5800300100	STP-DHI dispenser hook isolation for 120 Volt dispenser handle switches, up to eight each

2 HP SUBMERSIBLE TURBINE PUMPS



With faster fill times during peak hours and power savings during non-peak hours, FE PETRO® 2 Hp variable speed submersible pumps deliver maximized profits while mitigating operating expenses. 2 Hp submersible pumps are also available in fixed speed models.

HIGHLIGHTS

OPTIONAL FEATURES

Variable Speed

With faster fill times during peak hours and power savings during non-peak hours, variable speed submersible pumping systems allow you to maximize profits with consistent flow rates while mitigating operating expenses.

Biofuel Blend Compatibility

FE PETRO® pumps are UL listed with both UL79A (up to 85% Ethanol) and UL79B (up to 20% or 100% Biodiesel).

Advanced Protection

Stop corrosion in its tracks. Special powder-coated, e-coated, and stainless steel components defend your pump in the tank and in the sump from accelerated corrosion.

Turbine Pump Interface

Remote enhanced pump monitoring and control including pump-in-water automation, clogged intake escalation, tank leveling, and tank priority.

Intake Filter Screen

Avoid system damage, pumping slowdowns, and reduce filter changes by keeping harmful tank debris, sediment, and corrosion from entering the pumping system with this factory-installed option.

STANDARD FEATURES

MagShell®

The patented stainless steel MagShell® is designed to maximize flow rate capabilities, potential throughput, and profits. By expanding the pump motor shell, the MagShell® increases the area for product flow by 45%.

Variable Length

The patented telescoping pump shaft lets installers adjust the length of the pump onsite for the perfect fit.

Active Air Eliminator

FE PETRO® STPs come standard with active air elimination, which eliminates air through the highest point in the pump head at all times when the pump is running, assuring air does not pass into discharge piping.

Safety and Ease of Maintenance

FE PETRO® STPs include a contractor electrical disconnect, which requires loosening only one bolt, allowing motor wiring to be disconnected without venting the dangerous tank vapors into the sump when servicing FE PETRO® submersible products.

Simple Servicing

If ever required, the pump can be easily removed from the tank by unthreading three bolts. There is no need to disconnect the syphon system or to remove the leak detector from the system to service the STP.

Manual Pressure Relief

As a standard FE PETRO® feature, a vent screw is provided to bleed line pressure to zero when necessary. By turning this screw, product is diverted back to the tank, dropping line pressure to zero. This reduces fuel discharged into the sump manhole or dispenser pan during servicing, further protecting service technicians and the environment.

Outlast, Outperform with Franklin Electric Inside

FE PETRO® STPs are powered by the legendary Franklin Electric motor and built for long term performance. Franklin Electric-powered submersible pumps provide maximum uptime and a proven track record in the fueling industry that spans more than four decades. They feature best-in-class flow rates and a long history of dependability.

Quality Certification

Franklin Fueling Systems is an ISO 9001 Certified Manufacturer.

SPECIFICATIONS

General

- Variable speed models are available in variable lengths only.
- Fixed speed models are available in variable length and fixed length options.
- Check valve: 2¾" diameter fluorocarbon seal constructed with cast aluminum body and steel backing washer.
- Pressure relief valve: available in four pressure relief settings, integral to check valve. Standard model relieves at 40 psi and resets above 35 psi.
- Syphon: venturi-type syphon primer supplied with every submersible. Syphon check valve and secondary syphon sold separately.
- Air eliminator: every submersible includes a tank return path with one-way check valve to provide active air elimination.
- Electrical disconnect: electrical yoke for positive contractor disconnect during service.

Variable Speed Pump Motor

- 2 Hp, variable speed, two-stage centrifugal type pump motor with integral, automatic, thermal overload protection.
- Max. pressure: selectable operating pressure on MagVFC™ between 24 psi and 42 psi deadhead.
- Available with MagShell® which results in 45% increased flow area around motor.

Fixed Speed Pump Motor

- 2 Hp fixed speed, 3450 rpm, multi-stage centrifugal type pump motor with integral, automatic, thermal overload protection.
- Standard pressure (M200, two-stage) model, max. pressure = 36 psi.
- High pressure (HM200, three-stage) model, max. pressure = 45 psi.
- Available with MagShell™ for 45% increased flow area around motor.

Approvals

- cULus listed.
- Consult factory for applicable approvals.

Liquid Compatibility

- Max. liquid viscosity: 70 SSU at 60 °F (15 °C).
- STP variable speed models are UL and cUL listed for fuel mixtures containing up to 10% ethanol, and 20% MTBE, 20% ETBE or 17% TAME with gasoline.
- STPAG (AG compatible) models are UL listed for fuel mixtures containing diesel fuel with up to 20% Biodiesel, 100% Biodiesel, up to 85% ethanol with gasoline, and 20% MTBE, 20% ETBE or 17% TAME with gasoline.
- All variable speed (non-AG) models can also be used with diesel fuels, fuel oils, kerosene, Avgas and jet fuels in a non-gelled pourable state.
- 2 Hp fixed speed models can also be used with diesel fuels, fuel oils, kerosene, Avgas and jet fuels in a non-gelled pourable state.
- All wetted elastomers are made of a high grade, fluorocarbon compound.

Variable Speed Power Requirements

- Variable speed pumps can only be controlled by a MagVFC™ variable frequency controller.
- VS2 models can operate with single- or three-phase incoming power supply to the MagVFC™.
- Incoming power supply to the MagVFC™ can be 200-250 VAC, 50 or 60 Hz.
- MagVFC™ outputs a three-phase, variable frequency signal, valid for FE PETRO® variable speed pumps only.
- MagVFC™ max. line draw: 20 Amps.
- Max motor draw: 7 Amps.

Fixed Speed Power Requirements

- 2 Hp fixed speed models require single-phase, 208-230 VAC, 60 Hz incoming power.
- 2 Hp fixed speed models incorporate a starting and running capacitor, with internal bleed resistor, rated 370 Volt, 40 microfarad.
- STP-SCI single-phase Smart Controllers and STP-CBS single-phase control boxes are available for 2 hp pump control.
- Max. motor draw: 12 Amps.

SPECIFICATIONS CONTINUED

2 Hp Variable Speed Pump Performance Chart

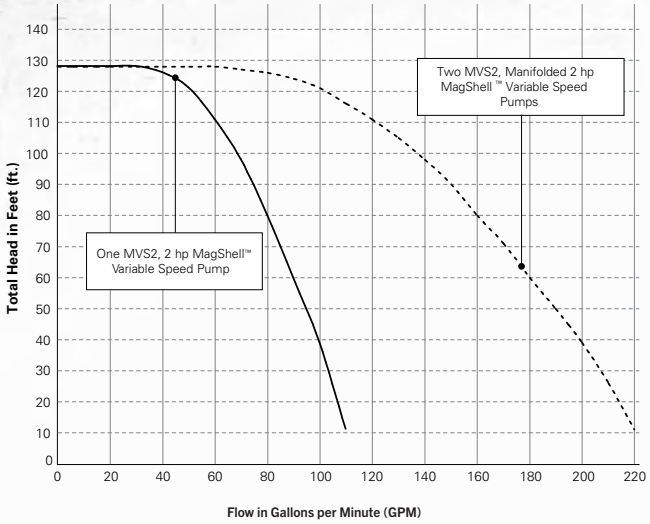

Performance based on pumping gasoline (0.76 specific gravity). Pressure is taken at the manifold discharge outlet.
ISTM and STPMVS2 turbines can only be powered by a MagVFC with single or three phase incoming power.

2 Hp Fixed Speed Pump Performance Chart

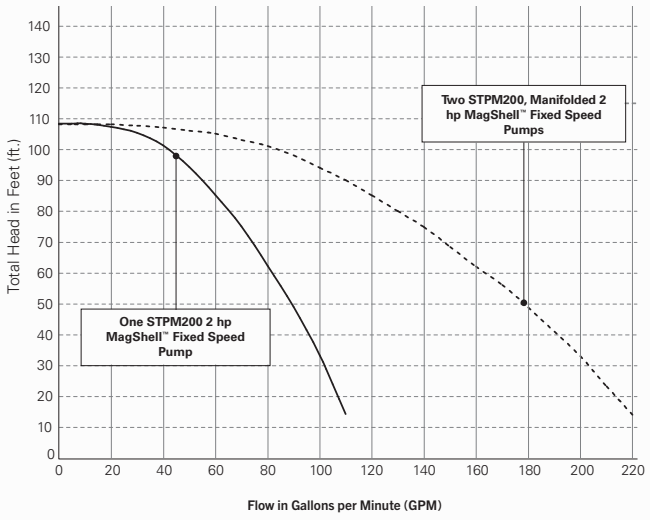

Performance based on pumping gasoline (0.78 specific gravity). Pressure is taken at the manifold discharge outlet.
STPM200 are powered by a single-phase, 60 Hz, 208/230 Volt power supply.

2 Hp High Pressure Fixed Speed Pump Performance Chart

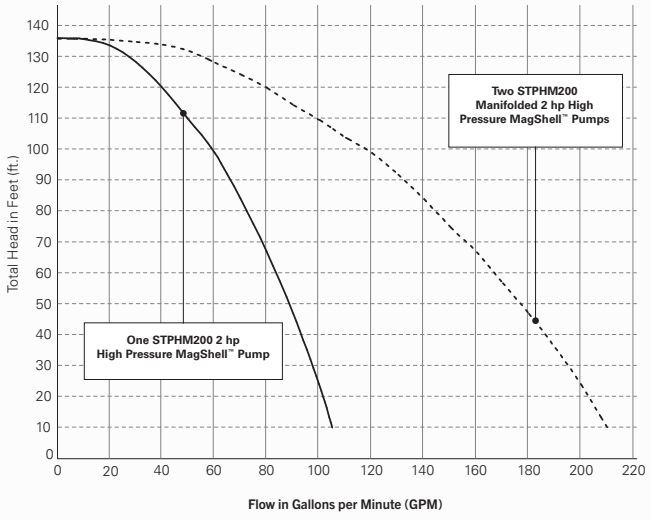

Performance based on pumping gasoline (0.78 specific gravity). Pressure is taken at the manifold discharge outlet.
STPHM200 are powered by a single-phase, 60 Hz, 208/230 Volt power supply.

ORDERING INFORMATION

2 Hp Variable Speed Submersible Pump Ordering Guide

A typical model designation has up to five components to define the pump being supplied as follows:

XXX YYYYY Z - A - B

XXX = Basic Model Designation

STP = These standard variable speed and variable length models are capable of up to 10% ethanol with gasoline

IST** = These variable speed and variable length models include alcohol-gasoline compatibility (up to 85% ethanol, up to 20% Biodiesel, or 100% Biodiesel).

ISTAP** = These variable speed and variable length models include alcohol-gasoline compatibility (up to 85% ethanol, up to 20% Biodiesel, or 100% Biodiesel) and Advanced Protection with powder-coated, e-coated, and stainless steel components.

YYYYY = Factory Installed Options

Model designations may include one or more of the following characters:

F = Floating suction adapter (1½" NPT female adapter)

K = Intake filter screen (IFS, factory installed to PMA)

M = MagShell® (flow enhancing, expanded PMA shell)

R* = Model R check valve (24 psi relief/22 psi reset for PLLD)

W* = Model W check valve (16 psi relief/13 psi reset for PPM4000)

Z = Pump Motor Horsepower Rating

VS2 = 2 Hp variable speed

A = Model Length (see table)

VL1 = STP variable length range #1

VL2 = STP variable length range #2

VL3 = STP variable length range #3

B = Riser Pipe Length (see diagram)

Riser pipe length is expressed as two numeric characters that indicate the total length of the riser in inches. Riser pipes are available from 7" to 60" in 1" increments (additional charge for risers 31" or longer).

Notes:
**If not otherwise specified, all models are supplied with standard model check valve (40 psi relief / 35 psi reset for MLD, TS-LS300, and TS-LS500).*

***If not otherwise specified, 2 Hp variable speed pump motor horsepower rating is implied for IST models.*

2 Hp Fixed Speed Submersible Pump Ordering Guide

A typical model designation has up to five components to define the pump being supplied as follows:

STP XXXXX Y - A - B

STP = Basic Model Designation

XXXXX = Factory Installed Options

Model designations may include one or more of the following characters:

AP = Advanced Protection with powder-coated, e-coated, and stainless steel components, alcohol-gasoline compatible (up to E85, up to B20, and B100) (Note standard models up to 10% ethanol capable)

AG = Alcohol-gasoline compatible (up to E85, up to B20, and B100) (Note standard models up to 10% ethanol capable)

F = Floating suction adapter (1½" NPT female adapter)

K = Intake filter screen (IFS, factory installed to PMA)

M = MagShell® (flow enhancing, expanded PMA shell)

*R = Model R check valve (24 psi relief / 22 psi reset for PLLD)

*W = Model W check valve (16 psi relief / 13 psi reset for PPM4000)

Y = Pump Motor Horsepower Rating

200 = 2 Hp fixed speed

A = Model Length (see table)

VL1 = Variable length range #1

VL2 = Variable length range #2

VL3 = Variable length range #3

(Note VL2 models fit 94% of all known installations)

B = Riser Pipe Length (see diagram)

Riser pipe length is expressed as two numeric characters that indicate the total length of the riser in inches. Riser pipes are available from 7" to 60" in 1" increments (additional charge for risers 31" or longer).

*Notes: *If not otherwise specified, all STP models are supplied with standard model check valve (40 psi relief / 35 psi reset for MLD, TS-LS300, and TS-LS500).*

Model Length (A)

STP Horsepower	Model Length Range	Model Length Designation
2 Hp Variable Speed	59" – 87"	VL1
	90" – 151"	VL2
	122" – 213"	VL3
2 Hp Fixed Speed	63" – 92"	VL1
	94" – 154"	VL2
	126" – 218"	VL3
2 Hp Fixed Speed High Pressure	63" – 92"	VL1
	94" – 155"	VL2
	126" – 218"	VL3

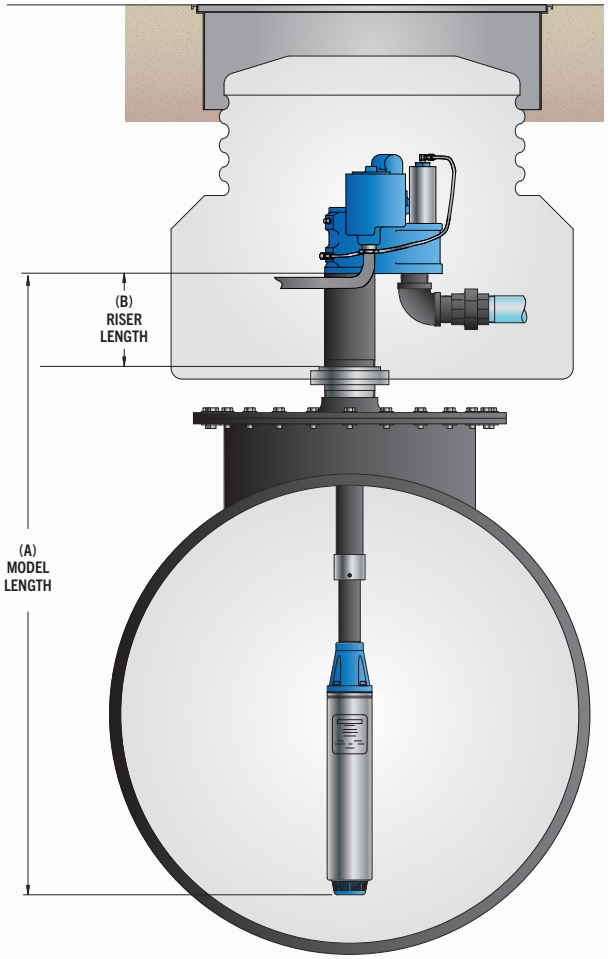

ORDERING INFORMATION

2 Hp Variable Speed Submersible Turbine Pumps

Variable speed, variable length.

Model	Description	Model Length Range Number	Model Length Range*
STPMVS2-VL1	2 Hp variable speed with MagShell®	VL1	59" – 87"
STPMVS2-VL2	2 Hp variable speed with MagShell®	VL2	90" – 151"
STPMVS2-VL3	2 Hp variable speed with MagShell®	VL3	122" – 213"

2 Hp Variable Speed Intelligent Submersible Turbine Pumps

Variable speed, variable length, and AG compatible.

Model	Description	Model Length Range Number	Model Length Range*
ISTM-1	2 Hp AG variable speed with MagShell®	VL1	59" – 87"
ISTM-2	2 Hp AG variable speed with MagShell®	VL2	90" – 151"
ISTM-3	2 Hp AG variable speed with MagShell®	VL3	122" – 213"
ISTAPM-1	2 Hp AG variable speed with Advanced Protection, and MagShell®	VL1	59" – 87"
ISTAPM-2	2 Hp AG variable speed with Advanced Protection, and MagShell®	VL2	90" – 151"
ISTAPM-3	2 Hp AG variable speed with Advanced Protection, and MagShell®	VL3	122" – 213"

Standard 2 Hp Fixed Speed Submersible Turbine Pumps

Model	Description	Model Length Range Number	Model Length Range*
STPM200-VL1	2 Hp fixed speed with MagShell®	VL1	63" – 91"
STPM200-VL2	2 Hp fixed speed with MagShell®	VL2	94" – 154"
STPM200-VL3	2 Hp fixed speed with MagShell®	VL3	126" – 217"
STPHM200-VL1	2 Hp high pressure fixed speed with MagShell®	VL1	63" – 92"
STPHM200-VL2	2 Hp high pressure fixed speed with MagShell®	VL2	94" – 155"
STPHM200-VL3	2 Hp high pressure fixed speed with MagShell®	VL3	126" – 218"

Alcohol-Gas (AG) 2 Hp Fixed Speed Submersible Turbine Pumps

Model	Description	Model Length Range Number	Model Length Range*
STPAGM200-VL1	2 Hp AG fixed speed with MagShell®	VL1	63" – 91"
STPAGM200-VL2	2 Hp AG fixed speed with MagShell®	VL2	94" – 154"
STPAGM200-VL3	2 Hp AG fixed speed with MagShell®	VL3	126" – 217"
STPAGHM200-VL1	2 Hp AG high pressure fixed speed with MagShell®	VL1	63" – 92"
STPAGHM200-VL2	2 Hp AG high pressure fixed speed with MagShell®	VL2	94" – 155"
STPAGHM200-VL3	2 Hp AG high pressure fixed speed with MagShell®	VL3	126" – 218"
STPAPM200-VL1	2 Hp fixed speed with Advanced Protection, and MagShell®	VL1	63" – 91"
STPAPM200-VL2	2 Hp fixed speed with Advanced Protection, and MagShell®	VL2	94" – 154"
STPAPM200-VL3	2 Hp fixed speed with Advanced Protection, and MagShell®	VL3	126" – 217"
STPAPHM200-VL1	2 Hp high pressure fixed speed with Advanced Protection, and MagShell®	VL1	63" – 92"
STPAPHM200-VL2	2 Hp high pressure fixed speed with Advanced Protection, and MagShell®	VL2	94" – 155"
STPAPHM200-VL3	2 Hp high pressure fixed speed with Advanced Protection, and MagShell®	VL3	126" – 218"

Notes:

1. Remove "M" from model number for non-MagShell® pump motor assembly.

2. STP models are compatible with fuel mixtures containing up to 10% ethanol with gasoline, up to 5% Biodiesel with diesel fuels, and 20% MTBE, 20% ETBE or 17% TAME with gasoline. STPAG/ STPAP models are compatible with fuel mixtures containing diesel fuel with up to 20% Biodiesel, 100% Biodiesel, up to 85% ethanol with gasoline, and 20% MTBE, 20% ETBE or 17% TAME with gasoline.

3. All models are supplied with a standard check valve unless factory option "R" or "W" is specified.

4. All above models require single-phase, 208-230 VAC, 60 Hz incoming power.

5. 4" riser pipe, if supplied locally, must be 4½" OD by 3⁄16" WT tubing.

6. For riser pipe lengths 31" to 60", additional charges apply (call Customer Service for lead times).

7. All above IST and STPMVS2 models can only be powered by a MagVFC. MagvFC must be supplied with single- or three-phase incoming power for all above models.

**Model length (A) defined as the dimension from turbine manifold bottom to pump motor inlet.*

ORDERING INFORMATION CONTINUED

Factory Installed Options

Specified in model number at time of STP order.

Model	Description
F	Floating suction adapter, 1½" NPT female, must be factory installed
K	IFS (intake filter screen) factory assembled to pump motor assembly
R	Model R check valve, factory installed, for Veeder-Root® PLLD Line Leak
W	Model W check valve, factory installed, for Red Jacket PPM4000 Line Leak

Field Installed Options

2 Hp submersible pump specific accessories.

Model	Description
400137908	Syphon check valve, alcohol-gasoline compatible (when ordered with STP)
5874202800	MagVFC™, 2 hp or 4 hp variable frequency controller, one required per STPM VS2 or VS4
400818921	STP-CBS, single-phase control box with lockout switch, 120 Volt coil
402312931	STP-DHI + SPGC-220 Guardian Series™ Single Phase Smart Controller bundle
402313921	STP-DHI-CBS, combo DHI with factory-wired STP-CBS
402459931	Model 65 psi check valve AG compatible, (for secondary of manifolded STPs with Veeder-Root® PLLD)
402507930	Secondary syphon kit (when two syphon primes are required for one STP)
5800100220	SPGC-220 Guardian Series™ Single Phase Smart Controller
5800300100	STP-DHI, dispenser hook isolation for 120 Volt dispenser handle switches, up to eight each

1½ HP SUBMERSIBLE TURBINE PUMPS

FE PETRO® 1½ Hp fixed speed submersible pumps deliver consistent flow rates for medium throughput fuels.



HIGHLIGHTS

OPTIONAL FEATURES

Biofuel Blend Compatibility

FE PETRO® pumps are UL listed with both UL79A (up to 85% Ethanol) and UL79B (up to 20% or 100% Biodiesel).

Variable Length

The patented telescoping pump shaft lets installers adjust the length of the pump onsite for the perfect fit.

Advanced Protection

Stop corrosion in its tracks. Special powder-coated, e-coated, and stainless steel components defend your pump in the tank and in the sump from accelerated corrosion.

Turbine Pump Interface

Remote enhanced pump monitoring and control including pump-in-water automation, clogged intake escalation, tank leveling, and tank priority.

Intake Filter Screen

Avoid system damage, pumping slowdowns, and reduce filter changes by keeping harmful tank debris, sediment, and corrosion from entering the pumping system with this factory-installed option.

STANDARD FEATURES

Active Air Eliminator

FE PETRO® STPs come standard with active air elimination, which eliminates air through the highest point in the pump head at all times when the pump is running, assuring air does not pass into discharge piping.

Safety and Ease of Maintenance

FE PETRO® STPs include a contractor electrical disconnect, which requires loosening only one bolt, allowing motor wiring to be disconnected without venting the dangerous tank vapors into the sump when servicing FE PETRO® submersible products.

Simple Servicing

If ever required, the pump can be easily removed from the tank by unthreading three bolts. There is no need to disconnect the syphon system or to remove the leak detector from the system to service the STP.

Manual Pressure Relief

As a standard FE PETRO® feature, a vent screw is provided to bleed line pressure to zero when necessary. By turning this screw, product is diverted back to the tank, dropping line pressure to zero. This reduces fuel discharged into the sump manhole or dispenser pan during servicing, further protecting service technicians and the environment.

Outlast, Outperform with Franklin Electric Inside

FE PETRO® STPs are powered by the legendary Franklin Electric motor and built for long term performance. Franklin Electric-powered submersible pumps provide maximum uptime and a proven track record in the fueling industry that spans more than four decades. They feature best-in-class flow rates and a long history of dependability.

Quality Certification

Franklin Fueling Systems is an ISO 9001 Certified Manufacturer.

SPECIFICATIONS

General

- 1½ Hp fixed speed models are available in variable length and fixed length options.
- Check valve: 2¾" diameter fluorocarbon seal constructed with cast aluminum body and steel backing washer.
- Pressure relief valve: available in four pressure relief settings, integral to check valve. Standard model relieves at 40 psi and resets above 35 psi.
- Syphon: venturi-type syphon primer supplied with every submersible. Syphon check valve and secondary syphon sold separately.
- Air eliminator: every submersible includes a tank return path with one-way check valve to provide active air elimination.
- Electrical disconnect: electrical yoke for positive contractor disconnect during service.

Pump Motor

- 1½ Hp fixed speed, 3450 rpm, multi-stage centrifugal type pump motor with integral, automatic, thermal overload protection.
- Standard pressure (150, two-stage) model, max. pressure = 32 psi.
- High pressure (H150, three-stage) model, max. pressure = 45 psi.

Approvals

- cULus listed.
- Consult factory for applicable approvals.

Power Requirements

- 1½ Hp fixed speed models require single-phase, 208-230 VAC, 60 Hz incoming power.
- 1½ Hp fixed speed models incorporate a starting and running capacitor, with internal bleed resistor, rated 370 Volt, 15 microfarad.
- STP-SCI single-phase Smart Controllers and STP-CBS single-phase control boxes are available for 1½ Hp pump control.
- Max. motor draw: 11 Amps.

Liquid Compatibility

- Max. liquid viscosity: 70 SSU at 60 °F (15 °C).
- Standard STP models are UL and cUL listed for fuel mixtures containing up to 10% ethanol with gasoline, and 20% MTBE, 20% ETBE or 17% TAME with gasoline.
- STPAP/STPAG (AG compatible) models are UL listed for fuel mixtures containing diesel fuel with up to 20% Biodiesel, 100% Biodiesel, up to 85% ethanol with gasoline, and 20% MTBE, 20% ETBE or 17% TAME with gasoline.
- 1½ Hp fixed speed models can also be used with diesel fuels, fuel oils, kerosene, Avgas, and jet fuels in a non-gelled pourable state.
- All wetted elastomers are made of a high grade, fluorocarbon compound.

1½ Hp Fixed Speed Pump Performance Chart

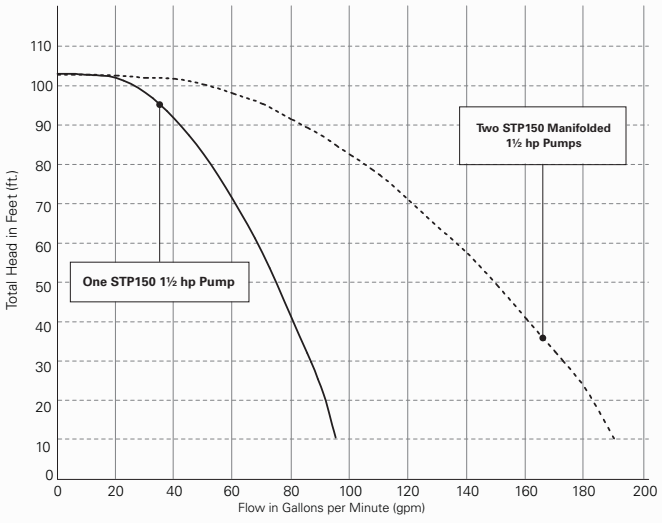

Note: Performance based on pumping gasoline (0.78 specific gravity). Pressure is taken at the manifold discharge outlet. STP150 models are powered by a single-phase, 60 Hz, 208/230 Volt power supply.

1½ Hp High Pressure Fixed Speed Pump Performance Chart

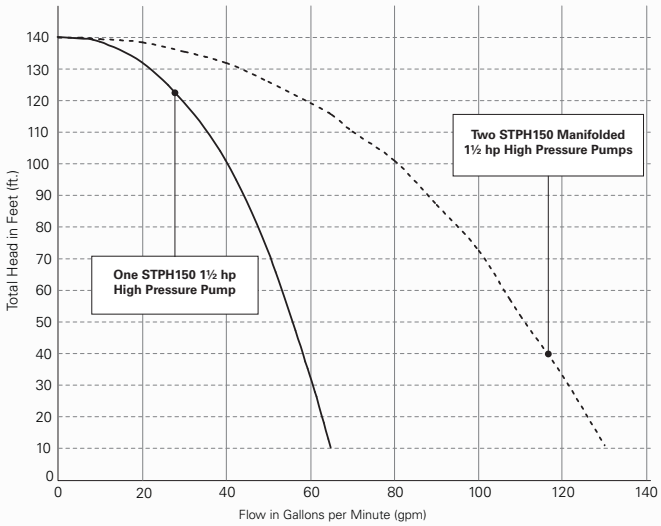

Note: Performance based on pumping gasoline (0.78 specific gravity). Pressure is taken at the manifold discharge outlet. STPH150 models are powered by a single-phase, 60 Hz, 208/230 Volt power supply.

ORDERING INFORMATION

1½ Hp Fixed Speed Submersible Pump Ordering Guide

A typical turbine model designation has up to five components to define the pump being supplied as follows:

STP XXXXX Y - A - B

STP = Basic Model Designation

XXXXX = Factory Installed Options (Model designations may include one or more of the following characters in alphabetical order.)

AP = Advanced Protection with powder-coated, e-coated, and stainless steel components, alcohol-gasoline compatible (up to E85, up to B20, and B100) (Note standard models up to 10% ethanol capable)

AG = Alcohol-gasoline compatible (up to E85, up to B20, and B100) (Note standard models up to 10% ethanol capable)

F = Floating suction adapter (1½" NPT female adapter)

K = Intake filter screen (IFS, factory installed to PMA)

*R = Model R check valve (24 psi relief / 22 psi reset for PLLD)

*W = Model W check valve (16 psi relief / 13 psi reset for PPM4000)

Y = Pump Motor Horsepower Rating

150 = 1½ hp fixed speed

A = Model Length (see table)

VL1 = Variable length range #1.

VL2 = Variable length range #2.

VL3 = Variable length range #3.

(Note VL2 models fit 94% of all known installations)

B = Riser Pipe Length (see diagram)

Riser pipe length is expressed as two numeric characters that indicate the total length of the riser in inches. Riser pipes are available from 7" to 60" in 1" increments (additional charge for risers 31" or longer).

*Notes: *If not otherwise specified, all STP models are supplied with standard model check valve (40 psi relief / 35 psi reset for MLD, TS-LS300, and TS-LS500).*

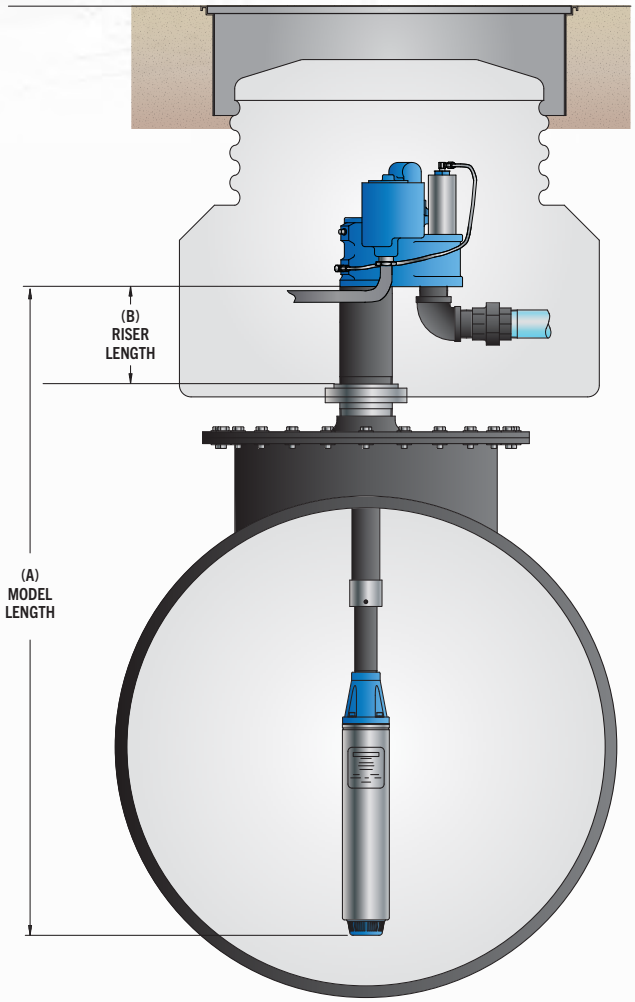

Model Length (A)

STP Horsepower	Model Length Range	Model Length Designation
1½ Hp	60" – 88"	VL1
	91" – 152"	VL2
	123" – 214"	VL3
1½ Hp High Pressure	61" – 89"	VL1
	92" – 152"	VL2
	124" – 215"	VL3

ORDERING INFORMATION CONTINUED

Standard 1½ Hp Fixed Speed Submersible Turbine Pumps

Model	Description	Model Length Range Number	Model Length Range*
STP150-VL1	1½ Hp fixed speed	VL1	60" – 88"
STP150-VL2	1½ Hp fixed speed	VL2	91" – 152"
STP150-VL3	1½ Hp fixed speed	VL3	123" – 214"
STPH150-VL1	1½ Hp high pressure fixed speed	VL1	61" – 89"
STPH150-VL2	1½ Hp high pressure fixed speed	VL2	92" – 152"
STPH150-VL3	1½ Hp high pressure fixed speed	VL3	124" – 215"

Alcohol-Gas (AG) 1½ Hp Fixed Speed Submersible Turbine Pumps

Model	Description	Model Length Range Number	Model Length Range*
STPAG150-VL1	1½ Hp AG fixed speed	VL1	60" – 88"
STPAG150-VL2	1½ Hp AG fixed speed	VL2	91" – 152"
STPAG150-VL3	1½ Hp AG fixed speed	VL3	123" – 214"
STPAGH150-VL1	1½ Hp AG high pressure fixed speed	VL1	61" – 89"
STPAGH150-VL2	1½ Hp AG high pressure fixed speed	VL2	92" – 152"
STPAGH150-VL3	1½ Hp AG high pressure fixed speed	VL3	124" – 215"
STPAP150-VL1	1½ Hp fixed speed with Advanced Protection	VL1	60" – 88"
STPAP150-VL2	1½ Hp fixed speed with Advanced Protection	VL2	91" – 152"
STPAP150-VL3	1½ Hp fixed speed with Advanced Protection	VL3	123" – 214"
STPAPH150-VL1	1½ Hp high pressure fixed speed with Advanced Protection	VL1	61" – 89"
STPAPH150-VL2	1½ Hp high pressure fixed speed with Advanced Protection	VL2	92" – 152"
STPAPH150-VL3	1½ Hp high pressure fixed speed with Advanced Protection	VL3	124" – 215"

Notes:
1. STP models are compatible with fuel mixtures containing up to 10% ethanol with gasoline, up to 5% Biodiesel with diesel fuels, and 20% MTBE, 20% ETBE or 17% TAME with gasoline. STPAG/STPAP models are compatible with fuel mixtures containing diesel fuel with up to 20% Biodiesel, 100% Biodiesel, up to 85% ethanol with gasoline, and 20% MTBE, 20% ETBE or 17% TAME with gasoline.

2. All models are supplied with a standard check valve unless factory option "R" or "W" is specified.

3. All above models require single-phase, 208-230 VAC, 60 Hz incoming power.

4. 4" riser pipe, if supplied locally, must be 4½" OD by 3⁄16" WT tubing.

5. For riser pipe lengths 31" to 60", additional charges apply (call Customer Service for lead times).

**Model length (A) defined as the dimension from turbine manifold bottom to pump motor inlet.*

Factory Installed Options

Specified in model number at time of STP order.

Model	Description
F	Floating suction adapter, 1½" NPT female, must be factory installed
K	IFS (intake filter screen) factory assembled to pump motor assembly
R	Model R check valve, factory installed, for Veeder-Root® PLLD Line Leak
W	Model W check valve, factory installed, for Red Jacket PPM4000 Line Leak

Field Installed Options

1½ Hp fixed speed specific accessories.

Model	Description
400137908	Syphon check valve, alcohol-gasoline compatible (when ordered with STP)
400818921	STP-CBS, single-phase control box with lockout switch, 120 Volt coil
402312931	STP-DHI + SPGC-220 Guardian Series™ Single Phase Smart Controller bundle
402313921	STP-DHI-CBS, combo DHI with factory-wired STP-CBS
402459931	Model 65 psi check valve AG compatible, (for secondary of manifolded STPs with Veeder-Root® PLLD)
402507930	Secondary syphon kit (when two syphon primes are required for one STP)
5800100220	SPGC-220 Guardian Series™ Single Phase Smart Controller
5800300100	STP-DHI, dispenser hook isolation for 120 Volt dispenser handle switches, up to eight each

⅓ & ¾ HP SUBMERSIBLE TURBINE PUMPS

FE PETRO® ⅓ & ¾ Hp fixed speed submersible pumps deliver consistent flow rates for low throughput fuels.



HIGHLIGHTS

OPTIONAL FEATURES

Biofuel Blend Compatibility

FE PETRO® pumps are UL listed with both UL79A (up to 85% Ethanol) and UL79B (up to 20% or 100% Biodiesel).

Variable Length

The patented telescoping pump shaft lets installers adjust the length of the pump onsite for the perfect fit.

Advanced Protection

Stop corrosion in its tracks. Special powder-coated, e-coated, and stainless steel components defend your pump in the tank and in the sump from accelerated corrosion.

Turbine Pump Interface

Remote enhanced pump monitoring and control including pump-in-water automation, clogged intake escalation, tank leveling, and tank priority.

Intake Filter Screen

Avoid system damage, pumping slowdowns, and reduce filter changes by keeping harmful tank debris, sediment, and corrosion from entering the pumping system with this factory-installed option.

STANDARD FEATURES

Active Air Eliminator

FE PETRO® STPs come standard with active air elimination, which eliminates air through the highest point in the pump head at all times when the pump is running, assuring air does not pass into discharge piping.

Safety and Ease of Maintenance

FE PETRO® STPs include a contractor electrical disconnect, which requires loosening only one bolt, allowing motor wiring to be disconnected without venting the dangerous tank vapors into the sump when servicing FE PETRO® submersible products.

Simple Servicing

If ever required, the pump can be easily removed from the tank by unthreading three bolts. There is no need to disconnect the syphon system or to remove the leak detector from the system to service the STP.

Manual Pressure Relief

As a standard FE PETRO® feature, a vent screw is provided to bleed line pressure to zero when necessary. By turning this screw, product is diverted back to the tank, dropping line pressure to zero. This reduces fuel discharged into the sump manhole or dispenser pan during servicing, further protecting service technicians and the environment.

Outlast, Outperform with Franklin Electric Inside

FE PETRO® STPs are powered by the legendary Franklin Electric motor and built for long term performance. Franklin Electric-powered submersible pumps provide maximum uptime and a proven track record in the fueling industry that spans more than four decades. They feature best-in-class flow rates and a long history of dependability.

Quality Certification

Franklin Fueling Systems is an ISO 9001 Certified Manufacturer.

SPECIFICATIONS

General

- ⅓ and ¾ Hp fixed speed models are available in variable length and fixed length options.
- Check valve: 2¾" diameter fluorocarbon seal constructed with cast aluminum body and steel backing washer.
- Pressure relief valve: available in four pressure relief settings, integral to check valve. Standard model relieves at 40 psi and resets above 35 psi.
- Syphon: venturi-type syphon primer supplied with every submersible. Syphon check valve and secondary syphon sold separately.
- Air eliminator: every submersible includes a tank return path with one-way check valve to provide active air elimination.
- Electrical disconnect: electrical yoke for positive contractor disconnect during service.

Pump Motor

- ⅓ and ¾ Hp fixed speed, 3450 rpm, two-stage centrifugal type pump motor with integral, automatic thermal overload protection.
- ⅓ Hp models have a max. pressure of 27 psi.
- ¾ Hp models have a max. pressure of 30 psi.

Approvals

- cULus listed.
- Consult factory for applicable approvals.

Power Requirements

- ⅓ and ¾ hp fixed speed models require single-phase, 208-230 VAC, 60 Hz incoming power.
- ⅓ and ¾ hp fixed speed models incorporate a starting and running capacitor, with internal bleed resistor, rated 370 Volt, 15 microfarad.
- STP-SCI single-phase Smart Controllers and STP-CBS single-phase control boxes are available for ⅓ and ¾ hp pump control.
- ⅓ hp max. motor draw: 4 Amps.
- ¾ hp max. motor draw: 7 Amps.

Liquid Compatibility

- Max. liquid viscosity: 70 SSU at 60 °F (15 °C).
- Standard STP models are UL and cUL listed for fuel mixtures containing up to 10% ethanol with gasoline, and 20% MTBE, 20% ETBE or 17% TAME with gasoline.
- STPAG/STPAP (AG compatible) models are UL listed for fuel mixtures containing diesel fuel with up to 20% Biodiesel, 100% Biodiesel, up to 85% ethanol with gasoline, and 20% MTBE, 20% ETBE or 17% TAME with gasoline.
- ⅓ and ¾ hp fixed speed models can also be used with diesel fuels, fuel oils, kerosene, Avgas, and jet fuels in a non-gelled pourable state.
- All wetted elastomers are made of a high grade, fluorocarbon compound.

⅓ Hp Fixed Speed Pump Performance Chart

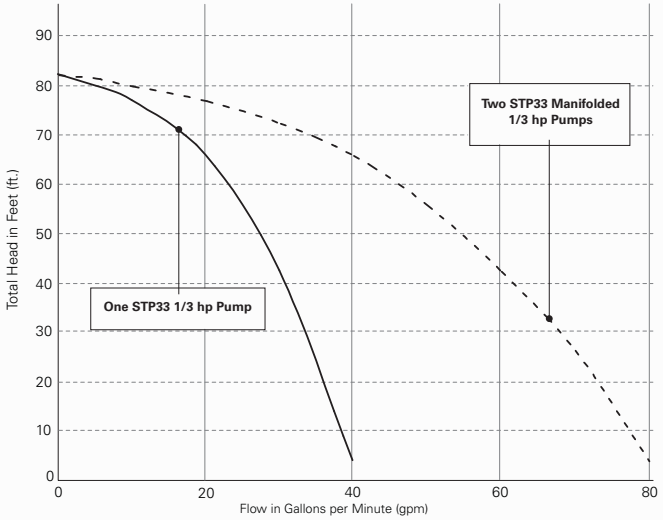

Note: Performance based on pumping gasoline (0.78 specific gravity). Pressure is taken at the manifold discharge outlet.
STP33 models are powered by a single-phase, 60 Hz, 208/230 Volt power supply.

¾ Hp Fixed Speed Pump Performance Chart

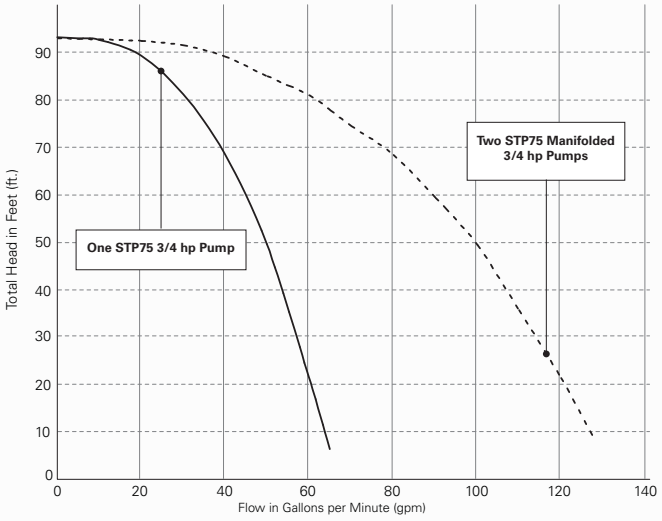

Note: Performance based on pumping gasoline (0.78 specific gravity). Pressure is taken at the manifold discharge outlet.
STP75 models are powered by a single-phase, 60 Hz, 208/230 Volt power supply.

ORDERING INFORMATION

⅓ & ¾ Hp Fixed Speed Submersible Pump Ordering Guide

A typical turbine model designation has up to five components to define the pump being supplied as follows:

STP XXXXX Y - A - B

STP = **Basic Model Designation**

XXXXX = **Factory Installed Options** (Model designations may include one or more of the following characters in alphabetical order.)

AP = Advanced Protection with powder-coated, e-coated, and stainless steel components, alcohol-gasoline compatible (up to E85, up to B20, and B100) (Note standard models up to 10% ethanol capable)

AG = Alcohol-gasoline compatible (up to E85, up to B20, and B100) (Note standard models up to 10% ethanol capable)

F = Floating suction adapter (1½" NPT female adapter)

K = Intake filter screen (IFS, factory installed to PMA)

*R = Model R check valve (24 psi relief / 22 psi reset for PLLD)

*W = Model W check valve (16 psi relief / 13 psi reset for PPM4000)

Y = **Pump Motor Horsepower Rating**

33 = ⅓ Hp fixed speed

75 = ¾ Hp fixed speed

A = **Model Length** (see table)

VL1 = Variable length range #1.

VL2 = Variable length range #2.

VL3 = Variable length range #3.

(Note VL2 models fit 94% of all known installations)

B = **Riser Pipe Length** (see diagram)

Riser pipe length is expressed as two numeric characters that indicate the total length of the riser in inches. Riser pipes are available from 7" to 60" in 1" increments (additional charge for risers 31" or longer).

*Notes: *If not otherwise specified, all STP models are supplied with standard model check valve (40 psi relief / 35 psi reset for MLD, TS-LS300, and TS-LS500).*

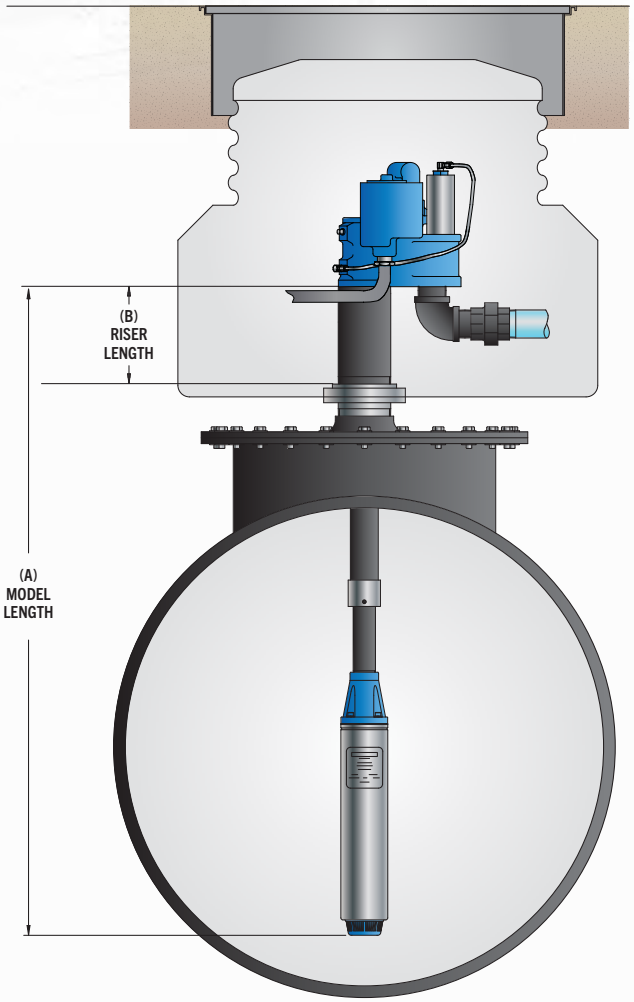

Model Length (A)

STP Horsepower	Model Length Range	Model Length Designation
⅓ Hp	55" – 83"	VL1
	86" – 147"	VL2
	118" – 209"	VL3
¾ Hp	57" – 86"	VL1
	88" – 149"	VL2
	120" – 212"	VL3

ORDERING INFORMATION CONTINUED

Standard ⅓ and ¾ Hp Fixed Speed Submersible Turbine Pumps

Model	Description	Model Length Range Number	Model Length Range*
STP33-VL1	⅓ Hp fixed speed	VL1	55" – 83"
STP33-VL2	⅓ Hp fixed speed	VL2	86" – 147"
STP33-VL3	⅓ Hp fixed speed	VL3	118" – 209"
STP75-VL1	¾ Hp fixed speed	VL1	57" – 86"
STP75-VL2	¾ Hp fixed speed	VL2	88" – 149"
STP75-VL3	¾ Hp fixed speed	VL3	120" – 212"

Alcohol-Gas (AG) ⅓ and ¾ Hp Fixed Speed Submersible Turbine Pumps

Model	Description	Model Length Range Number	Model Length Range*
STPAG33-VL1	⅓ Hp AG fixed speed	VL1	55" – 83"
STPAG33-VL2	⅓ Hp AG fixed speed	VL2	86" – 147"
STPAG33-VL3	⅓ Hp AG fixed speed	VL3	118" – 209"
STPAG75-VL1	¾ Hp AG fixed speed	VL1	57" – 86"
STPAG75-VL2	¾ Hp AG fixed speed	VL2	88" – 149"
STPAG75-VL3	¾ Hp AG fixed speed	VL3	120" – 212"
STPAP33-VL1	⅓ Hp fixed speed with Advanced Protection	VL1	55" – 83"
STPAP33-VL2	⅓ Hp fixed speed with Advanced Protection	VL2	86" – 147"
STPAP33-VL3	⅓ Hp fixed speed with Advanced Protection	VL3	118" – 209"
STPAP75-VL1	¾ Hp fixed speed with Advanced Protection	VL1	57" – 86"
STPAP75-VL2	¾ Hp fixed speed with Advanced Protection	VL2	88" – 149"
STPAP75-VL3	¾ Hp fixed speed with Advanced Protection	VL3	120" – 212"

Notes:
1. STP models are compatible with fuel mixtures containing up to 10% ethanol with gasoline, up to 5% Biodiesel with diesel fuels, and 20% MTBE, 20% ETBE or 17% TAME with gasoline. STPAG/STPAP models are compatible with fuel mixtures containing diesel fuel with up to 20% Biodiesel, 100% Biodiesel, up to 85% ethanol with gasoline, and 20% MTBE, 20% ETBE or 17% TAME with gasoline.

2. All models are supplied with a standard check valve unless factory option "R" or "W" is specified.

3. All above models require single-phase, 208-230 VAC, 60 Hz incoming power.

4. 4" riser pipe, if supplied locally, must be 4½" OD by 3⁄16" WT tubing.

5. For riser pipe lengths 31" to 60", additional charges apply. (Call Customer Service for lead times.)

**Model length (A) defined as the dimension from turbine manifold bottom to pump motor inlet.*

Factory Installed Options

Specified in model number at time of STP order.

Model	Description
F	Floating suction adapter, 1½" NPT female, must be factory installed
K	IFS (intake filter screen) factory assembled to pump motor assembly
R	Model R check valve, factory installed, for Veeder-Root® PLLD Line Leak
W	Model W check valve, factory installed, for Red Jacket PPM4000 Line Leak

Field Installed Options

⅓ and ¾ Hp fixed speed specific accessories.

Model	Description
400137908	Syphon check valve, alcohol-gasoline compatible (when ordered with STP)
400818921	STP-CBS, single-phase control box with lockout switch, 120 Volt coil
402312931	STP-DHI + SPGC-220 Guardian Series™ Single Phase Smart Controller bundle
402313921	STP-DHI-CBS, combo DHI with factory-wired STP-CBS
402459931	Model 65 psi check valve AG compatible, (for secondary of manifolded STPs with Veeder-Root® PLLD)
402507930	Secondary syphon kit (when two syphon primes are required for one STP)
5800100220	SPGC-220 Guardian Series™ Single Phase Smart Controller
5800300100	STP-DHI, dispenser hook isolation for 120 Volt dispenser handle switches, up to eight each

FIXED LENGTH SUBMERSIBLE TURBINE PUMPS

FE PETRO® 2 Hp, 1½ Hp, ¾ Hp, and ⅓ Hp fixed speed submersible pumps are available with fixed lengths.



SPECIFICATIONS

General

- Check valve: 2¾" diameter fluorocarbon seal constructed on cast aluminum body and aluminum backing washer.
- Pressure relief valve: available in four pressure relief settings, integral to check valve. Standard model relieves at 40 psi and resets above 35 psi.
- Syphon: venturi-type syphon primer supplied with every submersible. Syphon check valve and secondary syphon sold separately.
- Air eliminator: every submersible includes a tank return path with one-way check valve to provide active air elimination.
- Electrical disconnect: electrical yoke for positive contractor disconnect during service.

Pump Motor

- Fixed speed, 3450 rpm, multi-stage centrifugal type pump motor with integral, automatic, thermal overload protection.
- ⅓ and ¾ Hp fixed speed models are available as two-stage versions.
- 1½ and 2 Hp fixed speed models are available in standard pressure (two-stage) versions and high pressure (H option, three-stage) versions.

Approvals

- cULus listed.
- Consult factory for applicable approvals.
- Franklin Fueling Systems is an ISO 9001 Certified Manufacturer.

Power Requirements

- Fixed length, fixed speed models require single-phase, 208-230 VAC, 60 Hz incoming power.
- Fixed length, fixed speed models are available in ⅓, ¾, 1½, and 2 Hp versions.
- Fixed length, fixed speed models incorporate a starting and running capacitor with internal bleed resistor.
- A 370 Volt, 15 microfarad rated capacitor is used with ⅓, ¾, and 1½ Hp fixed length, fixed speed versions.
- A 370 Volt, 40 microfarad rated capacitor is used with 2Hp fixed length, fixed speed versions.
- SPGC-220 Guardian Series™ Single Phase Smart Controller and STP-CBS single-phase control boxes are available for fixed speed pump control.

Liquid Compatibility

- Max. liquid viscosity: 70 SSU at 60 °F (15 °C).
- Fixed length STP models are UL listed for fuel mixtures containing up to 10% ethanol with gasoline, and 20% MTBE, 20% ETBE or 17% TAME with gasoline.
- STPAG/STPAP (AG compatible) models are UL listed for fuel mixtures containing diesel fuel with up to 20% Biodiesel, 100% Biodiesel, up to 85% ethanol with gasoline, and 20% MTBE, 20% ETBE or 17% TAME with gasoline.
- Fixed length models can also be used with diesel fuels, fuel oils, kerosene, Avgas, and jet fuels in a non-gelled pourable state.
- All wetted elastomers are made of a high grade, fluorocarbon compound.

ORDERING INFORMATION

Fixed Length Submersible Pump Ordering Guide

A typical turbine model designation has up to five components to define the pump being supplied as follows:

A typical turbine model designation has up to five components to define the pump being supplied as follows:

STP XXXXX Y - A - B

STP = Basic Model Designation

XXXXX = Factory Installed Options

STP model designations may include one or more of the following characters in alphabetical order:

AG = Alcohol-gasoline compatible (up to E85, up to B20, and B100)

Note: Standard models up to 10% ethanol capable.

F = Floating suction adapter (1½" NPT female adapter)

H = High pressure (1½ hp and 2 hp models only)

K = Intake filter screen (IFS, factory installed to PMA)

M = MagShell® (2 Hp models only)

*R = Model R check valve (24 psi relief / 22 psi reset for PLLD)

*W = Model W check valve (16 psi relief/13 psi reset for PPM4000)

Y = Pump Motor Horsepower Rating

33 = ⅓ Hp fixed speed

75 = ¾ Hp fixed speed

150 = 1½ Hp fixed speed

200 = 2 Hp fixed speed

A = Model Length

Model length is expressed as three numeric characters that indicate the length of the STP from the turbine manifold bottom to the pump motor inlet in inches, available from 37" to 246" (additional charge for models 133" and longer).

B = Riser Pipe Length

Riser pipe length is expressed as two numeric characters that indicate the total length of the riser in inches. Riser pipes are available from 7" to 60" in 1" increments (additional charge for risers 31" or longer).

*Note: If not otherwise specified, all STP models supplied with standard model check valve (40 psi relief / 35 psi reset for MLD, TS-LS300, and TS-LS500).

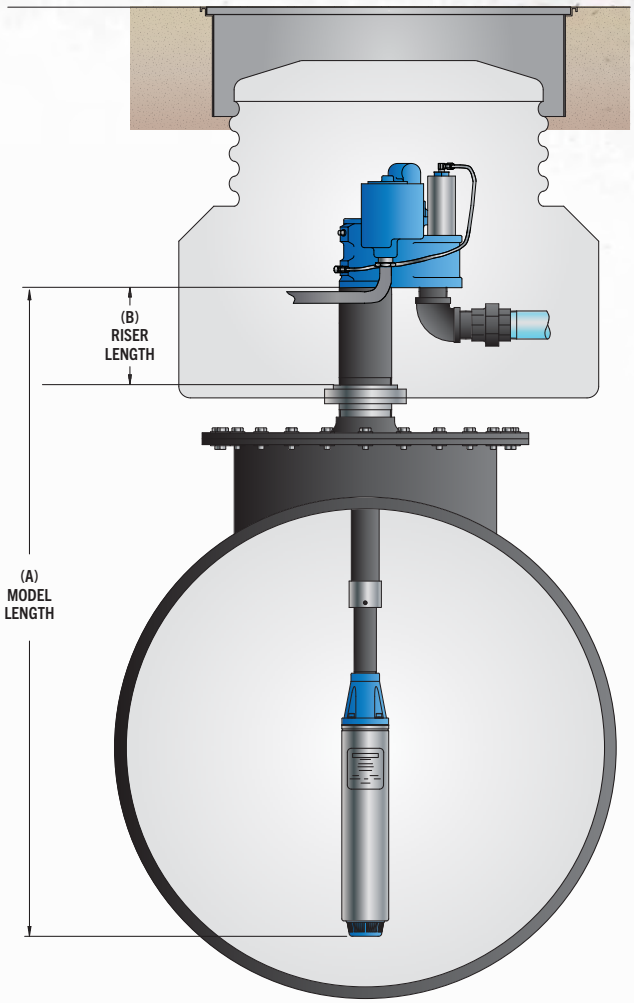

ORDERING INFORMATION CONTINUED

Fixed Length Submersible Turbine Pumps

Model	Description	Model Length* Range
STP33	⅓ Hp fixed speed	37" – 132"
STP75	¾ Hp fixed speed	
STP150	1½ Hp fixed speed	
STPH150	1½ Hp high pressure fixed speed	
STPM200	2 Hp fixed speed with MagShell®	
STPHM200	2 Hp high pressure fixed speed with MagShell®	

Notes:
1. Remove "M" from model number for non-MagShell® pump motor assembly.

2. STP models are compatible with fuel mixtures containing up to 10% ethanol with gasoline, up to 5% Biodiesel with diesel fuels, and 20% MTBE, 20% ETBE or 17% TAME with gasoline. STPAG models are compatible with fuel mixtures containing diesel fuel with up to 20% Biodiesel, 100% Biodiesel, up to 85% ethanol with gasoline, and 20% MTBE, 20% ETBE or 17% TAME with gasoline.

3. All models are supplied with a standard check valve unless factory option "R" or "W" is specified.

4. All above models require single-phase, 208-230 VAC, 60 Hz incoming power.

5. 4" riser pipe, if supplied locally, must be 4½" OD by 3⁄16" WT tubing.

6. For riser pipe lengths 31" to 60", additional charges apply (call Customer Service for lead times).

**Model length (A) defined as the dimension from turbine manifold bottom to pump motor inlet. Model length (A) can be a minimum of 37" to a maximum of 211". Adder (p/n 400326912) applies if model length is 133" to 180" (charge is for boards to protect STP shipment). Adder (p/n 400326917) applies if model length is 181" to 211" and (p/n 400389112) applies if model length is 212" to 246" (additional charge is for crating to protect the STP).*

Factory Installed Options

Model	Description
AG	Alcohol-gasoline compatible
F	Floating suction adapter, 1½" NPT female, must be factory installed
K	IFS (intake filter screen), factory assembled to pump motor assembly
R	Model R check valve, factory installed, for Veeder-Root® PLLD Line Leak
W	Model W check valve, factory installed, for Red Jacket™ PPM4000 Line Leak

Field Installed Options

Model	Description
400137908	Syphon check valve, alcohol-gasoline compatible (when ordered with STP)
400818921	STP-CBS, single-phase control box with lockout switch, 120 Volt coil
402312931	STP-DHI + SPGC-220 Guardian Series™ Single Phase Smart Controller bundle
402313921	STP-DHI-CBS, combo DHI with factory-wired STP-CBS
402459931	Model 65 psi check valve AG compatible, (for secondary of manifolded STPs with Veeder-Root® PLLD)
402507930	Secondary syphon kit (when two syphon primes are required for one STP)
5800100220	SPGC-220 Guardian Series™ Single Phase Smart Controller
5800300100	STP-DHI, dispenser hook isolation for 120 Volt dispenser handle switches, up to eight each

REPLACEMENT PARTS & ACCESSORIES



The rock solid design of FE PETRO® pumps has remained virtually unchanged since day one, meaning we can, and still do, service our pumps installed since 1988 with backward compatibility.

ORDERING INFORMATION



Replacement Pump Motor Assemblies*

Model	Description
PMA33	⅓ Hp pump motor assembly (16" long)
PMA75	¾ Hp 18¼" pump motor assembly (18¼" long)
PMA150	1½ Hp pump motor assembly (21" long)
PMAH150	1½ Hp high pressure pump motor assembly (21¾" long)
PMA200	2 Hp pump motor assembly (23¾" long)
PMAM200	2 Hp pump motor assembly with MagShell® (23¾" long)
PMAH200	2 Hp high pressure pump motor assembly (24½" long)
PMAHM200	2 Hp high pressure pump motor assembly with MagShell® (24½" long)



Replacement Gasoline Motor Assemblies*

Model	Description
PMAAG33	⅓ Hp AG pump motor assembly (16" long)
PMAAG75	¾ Hp AG pump motor assembly (18¼" long)
PMAAG150	1½ Hp AG pump motor assembly (21" long)
PMAAGH150	1½ Hp AG high pressure pump motor assembly (21¾" long)
PMAAG200	2 Hp AG pump motor assembly (23¾" long)
PMAAGM200	2 Hp AG high pressure pump motor assembly with MagShell® (23¾" long)
PMAAGH200	2 Hp AG high pressure pump motor assembly (24½" long)
PMAAGHM200	2 Hp AG high pressure pump motor assembly with MagShell® (24½" long)



Replacement Variable Speed Pump Motor Assemblies*

Model	Description
PMAMVS2	2 Hp variable speed pump motor assembly with MagShell® (20" long)
PMAAGMVS2	2 Hp AG variable speed pump motor assembly with MagShell® (20" long)
PMAMVS4	4 Hp variable speed pump motor assembly with MagShell® (25" long)
PMAAGMVS4	4 Hp AG variable speed pump motor assembly with MagShell® (25" long)



4" STP Extractable Sections (Less Manifold, Riser, and PMA)

Model	Description
STPEXT-XXX	Fixed length extractable (XXX indicates model length, p/n 400394901) **
STPAGEXT-XXX	AG Fixed length extractable (XXX indicates Model Length, p/n 400394905) **
STPEXT-VL1	Variable length #1 extractable (p/n 402074901)
STPEXT-VL2	Variable length #2 extractable (p/n) 402075902)
STPEXT-VL3	Variable length #3 extractable (p/n 402075903)
STPAGEXT-VL1	AG variable length #1 extractable (p/n 402201902)
STPAGEXT-VL2	AG variable length #2 extractable (p/n 402202902)
STPAGEXT-VL3	AG variable length #3 extractable (p/n 402203902)
STPAPEXT-VL1	AP variable length #1 extractable (p/n 403614901) ***
STPAPEXT-VL2	AP variable length #2 extractable (p/n 403614902) ***
STPAPEXT-VL3	AP variable length #3 extractable (p/n 403614903) ***

Note: Remove "M" from model number for non-MagShell® pump motor assemblies.

** For pump motor assemblies (PMAs) with floating section adapters (1½" NPT female connections), specify "F" in the number; adder charge applies when ordering PMA. For PMAs with intake filter screen, specify "K" in the model number; adder charge applies when ordering PMA.*

***Model length (XXX) defined as the dimension form turbine manifold bottom to pump motor inlet. Model length (A) can be a minimum of 37' to a maximum of 211", Fixed Length adders apply for Extractable Model Lengths 133" and longer (please call Customer Service for lead times of Extractables with a model length of 181" and longer).*

***Please call Customer Service for lead times of AP Extractables.*

ORDERING INFORMATION CONTINUED

PMA, Riser, and Check Valve for Variable Length and Fixed Length Pumps

Use the parts drawing on the following page.

Item	Model	Description	Qty
1	400125001	3⁄16" × 1 5⁄8" spiral pin	1
2	400615001	Manual relief plug (400615002 AG compatible)	1
3	400211114	O-ring, MPR plug	1
4	400627001	Retaining ring, MPR	1
5	400616001	Manual relief screw (400616002 AG Compatible)	1
6	400333012	Relief screw, top O-ring	1
7	400333007	Relief screw, bottom O-ring	1
8	400628901	Manual relief plug assembly, includes items #2 and #3 (400628902 AG compatible)	1
9	400629901	Manual relief screw assembly, includes items #4, #5, #6, and #7 (400629902 AG compatible)	1
10	400259001	¼" NPT pipe plug, may be purchased locally	3
	403499001	¼" NPT pipe plug, may be purchased locally (stainless steel, for AP models)	
11	400137937	Syphon check valve	-
12	400221930	Discharge manifold, includes #1, #8, #9, and two #10	1
	400221931	Discharge manifold (includes item #1, #8, #9, and #10) (for AP models)	-
13	151213930 151213932	156" lead assembly 240" lead assembly	1
14	Purchase locally	Stationary vapor tube, 3/8 OD × 7/20 WT	-
15	4001689XX (XX = length)	Riser, 4½" OD × 3⁄16" WT steel tubing (consult factory for lead times for 31"-60" lengths) 7" - 19" 20" - 30" 31" - 49" 50" - 60"	1
	4035229XX (XX = length)	Riser, 4½" OD × 4.12" ID (stainless steel, for AP models) consult factory for lead time 7" - 19" 20" - 30" 31" - 49" 50" - 60"	
16	Purchase locally	½" steel banding (stainless steel for AP models)	-
17	400600002	5⁄16-24 × 7⁄16" set screw for variable lengths only	3
	403432002	5⁄16-24 × 7⁄16" set screw for VL models only (stainless steel, for AP models)	-
18	400333015	Lead assembly O-ring	4
19	400264009	5⁄16-18 × 1⅛" socket head cap screw, may be purchased locally	4
	403506001	5⁄16-18 × 1⅛" socket head cap screw, may be purchased locally (stainless steel, for AP models)	
20	400263004	5⁄16" high-collar lock washer, may be purchased locally	1
	403505001	5⁄16" high-collar lock washer, may be purchased locally (stainless steel, for AP models)	
21	403403001	PMA gasket (403403002 AG/AP compatible)	1
22	PMA XXX	Pump motor assembly, includes item #30 (XXX indicates options and horsepower)	1
23	400981001	3⁄8-16 × 1" Hex head screw	2
	403504001	3⁄8-16 × 1" Hex head screw (stainless steel, for AP models)	
24	400285002	3⁄8" standard lock washer, may be purchased locally	2
	1117703	3⁄8" standard lock washer (stainless steel, for AP models)	
25	400197930	Manifold assembly cover, includes #10, #26, two #23, and two #24	1
	400197931	Manifold Assembly Cover (includes item #10, #23, #24, and #26 for AP models)	
26	400333238	O-ring, manifold cover (AG compatible)	1
27	400147930	Clamp valve assembly (AG compatible)	1
28	400174930	Check valve spring	1
29	400988931 400988932 400988933 402459931	Standard check valve, includes item #26 (400988934 AG compatible) Model R check valve, (for Veeder-Root™ PLLD) includes item #26 (400988935 AG compatible) Model W check valve, (for Red Jacket PPM4000) includes item #26 (400988936 AG compatible) Model 65 psi check valve, AG compatible (for secondary manifolded STPs with Veeder-Root™ PLLD)	1
30	152350902	PMA hardware pack, includes #21, and four #19 and #20 (152350904 AG compatible)	-
--	400216905	AG compatible O-ring kit, includes items #3, #6, #7, and #26 on this page and items #2, #10, #13, #19 and #20 on the Discharge Manifold Assembly page	-

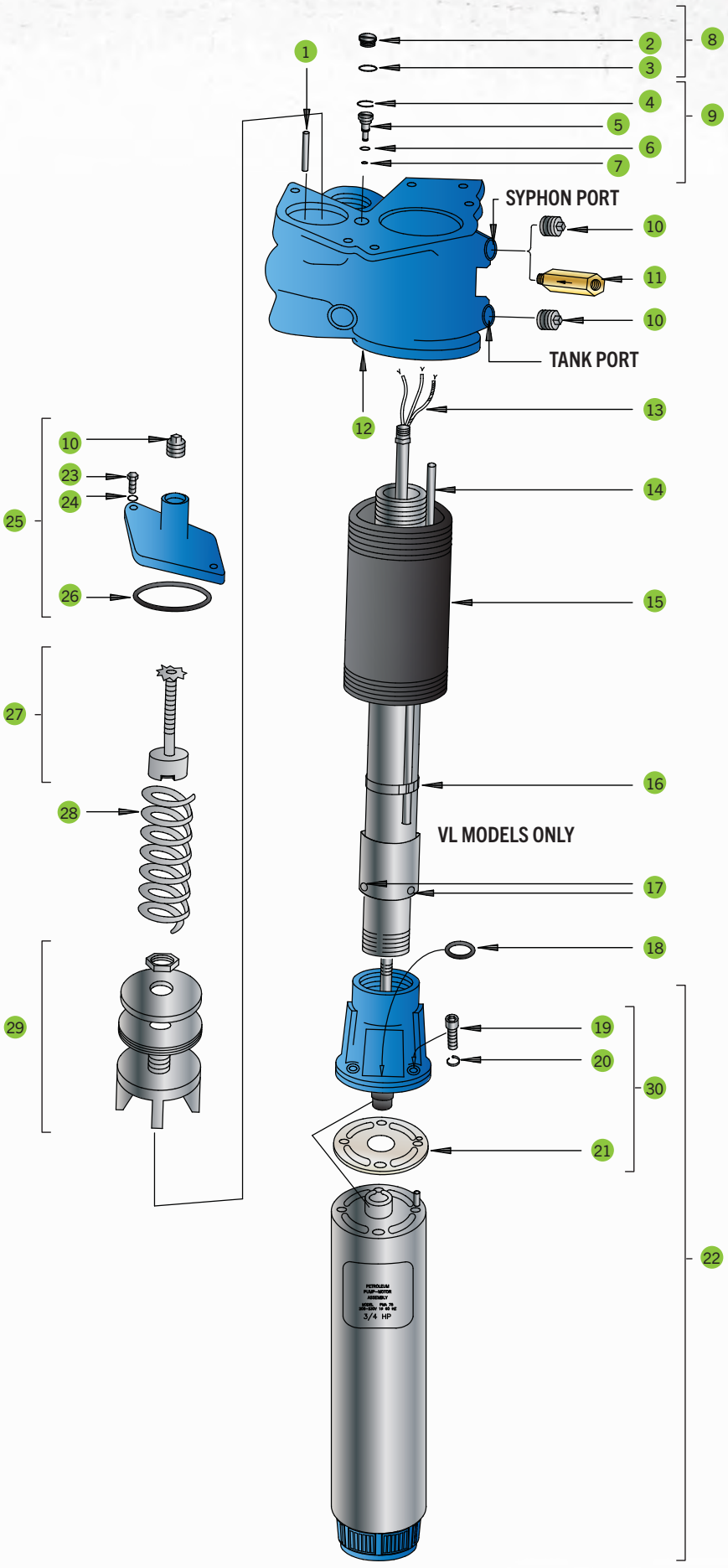
1
2
3
8
4
5
6
7
9
SYPHON PORT
10
11
10
TANK PORT
12
13
14
15
16
VL MODELS ONLY
17
18
19
20
30
21
22
10
23
24
25
26
27
28
29
3/4 HP

ORDERING INFORMATION CONTINUED

Discharge Manifold Assembly

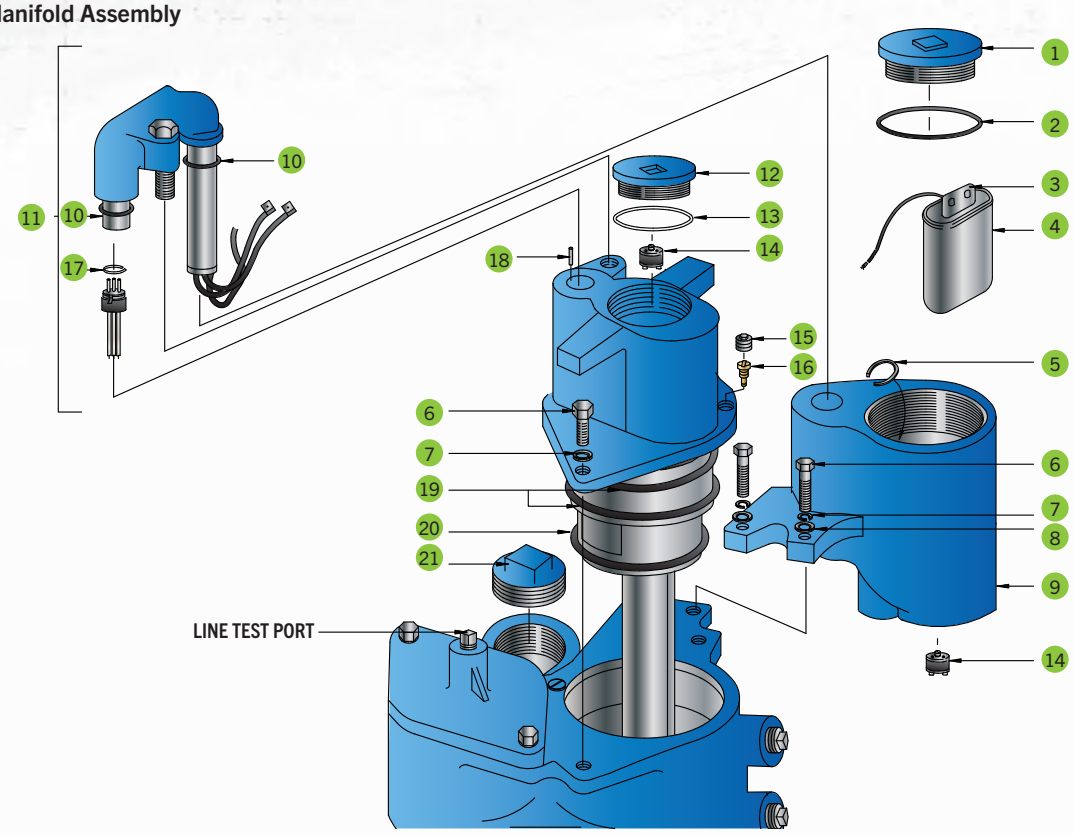

Item	Model	Description	Qty.
1	400192930	Junction box cover, includes item #2	1
	400192931	Junction box cover, includes item #2 (for AP models)	
2	400210233	O-ring, junction box cover	1
3	400655001	Capacitor boot	1
4	400170931	Capacitor assembly for ⅓ to 1½ hp, 60 Hz, 15µfd, 370 Volt single-phase; includes one black lead	1
	400170934	Capacitor assembly for 2 hp, fixed speed, 60 Hz, 40µfd, 370 Volt single-phase; includes one black lead	
5	400257001	Retaining ring, Female connector	1
6	400258002	⅜-16 × 1¼" Hex head bolt, may be purchased locally	4
	602011016	⅜-16 × 1¼" Hex head bolt (stainless steel, for AP models)	
7	400285002	⅜ standard lock washer, may be purchased locally	4
	1117703	⅜ standard lock washer (stainless steel, for AP models)	
8	400280001	⅜ standard flat washer, may be purchased locally	2
	403500001	⅜ standard flat washer (stainless steel, for AP models)	
9	400651930	Junction box assembly, includes two #6, #7, and #8	1
	400651931	Junction box assembly (includes item #6, #7, and #8, for AP models)	
10	400210212	O-ring, Female connector	2
11	400200930	Wire connector kit, includes male/female connectors, two #10, one #5, and #18	1
	400200931	Wire connector kit, includes male/female connectors, two #10, one #5, and #18 (for AP models)	
12	400589930	Cover, includes item #13	1
--	400589931	Cover, includes item #13 (for AP models)	
13	400210229	O-ring	1
14	400236903	Contractor's plug, 4-wire	2
15	400259002	⅜" NPT pipe plug, may be purchased locally (403499002, stainless steel for AP models)	1
16	400562901	Syphon jet assembly (400562903 AG compatible)	1
17	400249001	Retaining ring	1
18	400250002	⅛" dia. × ½" roll pin	1
19	400333343	AG compatible O-ring, extractable (upper, large)	2
20	400333340	AG compatible O-ring, extractable (lower)	1
21	400259005	2" NPT square head plug	1
	403499003	2" NPT square head plug (stainless steel, for AP models)	

ORDERING INFORMATION CONTINUED

Intake Filter Screen

An Intake Filter Screen (IFS) provides fuel filtration for the entire system down to about the size of a grain of sand (0.009” openings). It’s designed to keep harmful debris, sediment, and tank corrosion from entering the pumping system and creating service events including dispenser filter changes. Mounts to FE PETRO® or competitive 4" pump motor end bell and only adds about 1" to assembly length.



Model	Description
400660901	Intake filter screen, single pack
400660912	Intake filter screen, 12-pack carton

Check Valves



Model	Description
400988931	Standard check valve
400988934	Standard check valve, AG compatible
400988932	Model R check valve (for Veeder-Root® PLLD)
400988935	Model R check valve (for Veeder-Root® PLLD), AG compatible
400988933	Model W check valve (for Red Jacket® PPM4000)
400988936	Model W check valve (for Red Jacket® PPM4000), AG compatible
402459931	Model 65 psi check valve (for secondary manifolded STPs with Veeder-Root® PLLD), AG compatible

Secondary Syphon Kit

For use when two syphon primers are required for one 4" STP. Not available factory installed.



Model	Description
402507930	Secondary syphon kit (when two syphon primes are required for one STP)

franklinfueling.com
3760 Marsh Rd. • Madison, WI 53718, USA
Tel: USA & Canada +1 800 225 9787 • Fax: +1 608 838 6433
Tel: UK +44 (0) 1473 243300 • Tel: Mex 001 800 738 7610
Tel: DE +49 6571 105 380 • Tel: CH +86 10 8565 4566

Veeder-Root® and Red Jacket® are registered trademarks of Fortive Corporation.

© 2022 Franklin Fueling Systems. All Rights Reserved.

Franklin Electric
FUELING SYSTEMS

E-STOP SOLUTIONS

EMERGENCY STOP OPERATORS

Emergency Stop Operators provide immediate shut off of dispensers and submersible pumps for compliance with National Electrical Code requirements. A full line of emergency stop operators are available to meet the specific site requirements of every application.



HIGHLIGHTS

- Available with optional integrated audible alarm.
- Includes twist-to-reset emergency stop push button.
- Clear cover protects against accidental activation, damage, and vandalism.
- Standard operator includes (1) NO and (1) NC contact.
- Outdoor rated.

SPECIFICATIONS

Approvals	cULus listed
Certifications	- For compliance with NEC® 514.11 and NFPA® 30A Section 6.7 requirements for Emergency Disconnects at Motor Fuel Dispensing Facilities (controlled by E-Stop system).

Components & Dimensions

1. Clear protective cover
2. Emergency stop push button
3. Integrated audible alarm (optional)

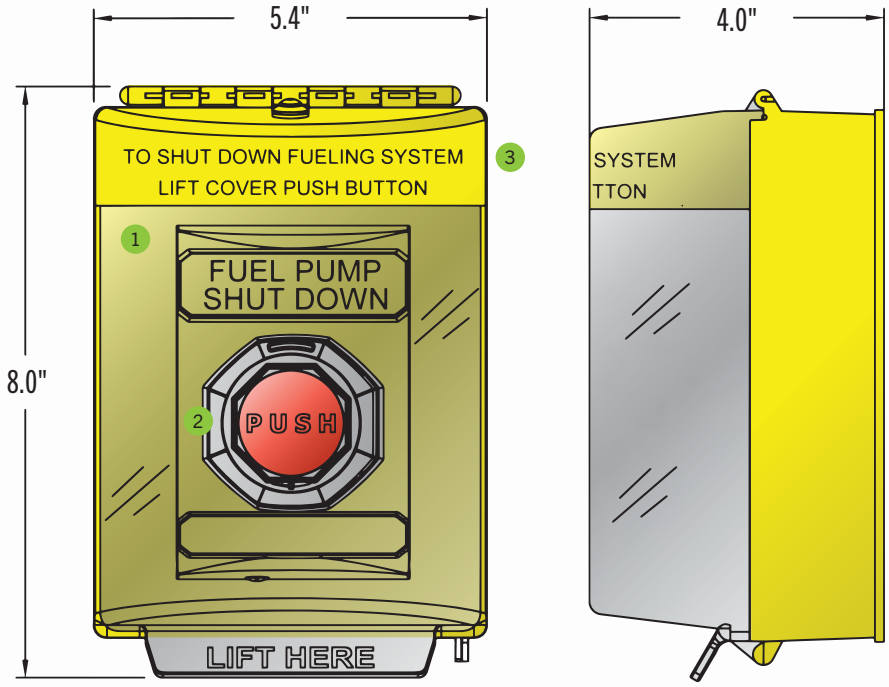

ORDER INFORMATION

Emergency Stop Operators

Model	Description
IA-ESOC	Emergency Stop Operator with lift-up clear cover (yellow)
IA-ESOCA	Emergency Stop Operator with lift-up clear cover and alarm (yellow)
IA-ESOCA-RD	Emergency Stop Operator with lift-up clear cover and alarm (red)
IA-ESOC-T	Emergency Stop Operator, twist to release with lift-up clear cover (yellow)
IA-ESOCA-T	Emergency Stop Operator, twist to release with lift-up clear cover and alarm (yellow)
IA-ESOCA-T-RD	Emergency Stop Operator, twist to release with lift-up clear cover and alarm (red)
IA-ESOC-F-T	Emergency Stop Operator, twist to release with lift-up clear cover, French language (yellow)
IA-ESOC-F	Emergency Stop Operator with lift-up clear cover, French language (yellow)

Emergency Stop Operator Accessories

Model	Description
IA-ESPLATE	Emergency Stop Operator mounting plate with “EMERGENCY FUEL SHUTOFF” nameplate
IA-ESPLATE-F	Emergency Stop Operator mounting plate with “EMERGENCY FUEL SHUTOFF” nameplate, French language
IA-BREAKTAB	Locking mechanism block with (5) one-time use breakaway seals

Emergency Stop Replacement Parts

Model	Description
IA-PBCOVS	Emergency Stop Operator replacement cover (yellow)
IA-PBCOVSA	Emergency Stop Operator replacement cover with integrated audible alarm (yellow)
IA-PBCOVSA-RD	Emergency Stop Operator replacement cover (red)

3760 Marsh Rd. • Madison, WI 53718
www.franklinfueling.com • +1 844.344.5025

© 2023 Franklin Electric Co., Inc. All Rights Reserved.

Franklin Fueling Systems

DISPENSER HOOK ISOLATION

The FE PETRO® Dispenser Hook Isolation device prevents electrical feedback between dispenser hook circuits as required by most electrical codes.



HIGHLIGHTS

- Optically isolates inputs from up to eight dispensers preventing damage to dispenser relay boards caused by cross-phasing.
- Prevents electrical feedback between dispenser hook circuits during periods of maintenance and service as required by NEC 514-3, 2002 and other international codes.
- Can be supplied factory-wired in tandem with a smart controller or standard control box.
- Eliminates false STP run due to voltage leakage of multiple dispensers connected in parallel.
- Fuse-protected output to submersible pump controller.
- The STP-DHI/STP-DHIB can retrofit to any existing site.

Conventional Wiring

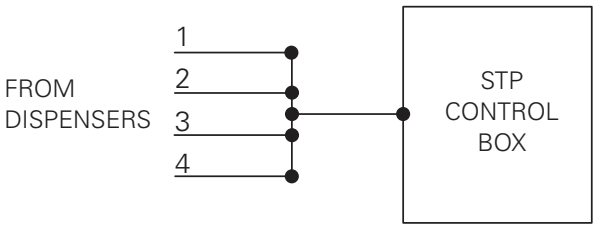

STP-DHI Wiring

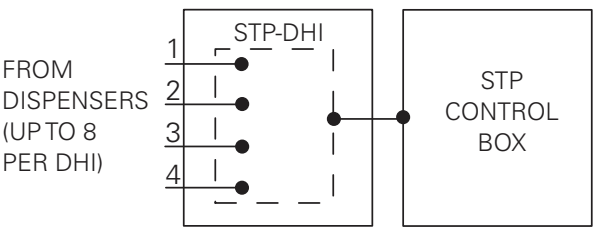

SPECIFICATIONS

- Enclosure size: 8½" x 5" x 3" (215 mm x 127 mm x 76 mm).
- Eight optically isolated inputs from dispenser.
- One STP-DHI/STP-DHIB required per product grade for up to eight dispensers.
- STP-DHI: 120 V 30 V A input from supply, eight 120 V 10mA inputs from dispensers.
- STP-DHIB: 240 V 30 V A input from supply, eight 240 V 10mA inputs from dispensers.
- Output fuse rating: 250 V 1A, fast-acting.
- 300 Volt surge protection.
- Maximum ambient temperature rating: 120 °F.
- LEDs indicate when source power is applied and dispenser hook signals are present.
- Compatible with any submersible pump controller.

Approvals/Certifications

- Consult factory for applicable approvals.
- Franklin Fueling Systems is an ISO 9001 Certified Manufacturer.

SPECIFICATIONS

Dispenser Hook Isolation Wiring

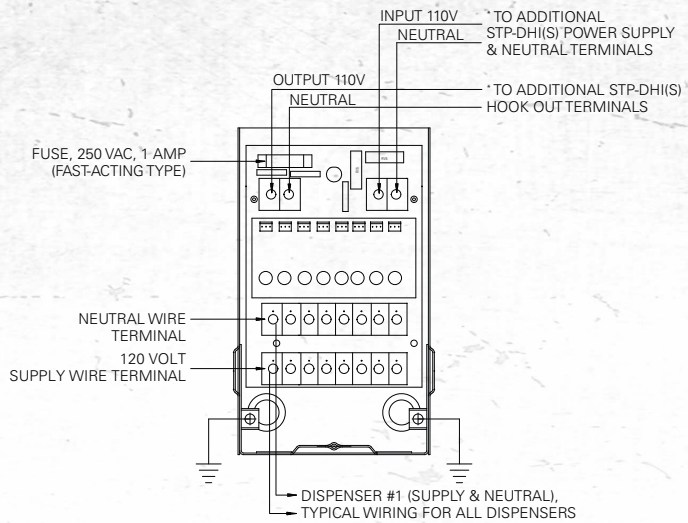

Wiring is polarity-sensitive when multiple units are connected together.

ORDERING INFORMATION

Dispenser Hook Isolation, 110 Volt



Model	Description
5800300100	STP-DHI, dispenser hook isolation for 110 Volt dispenser handle switches, up to eight each
402312931	STP-DHI + SPGC-220 Guardian Series™ Single-Phase Controller bundle (220 Volt supply, 110 Volt hook)

DHI models are compatible with FE PETRO® submersible pump controllers and competitive pump controller makes accepting 120 Volt dispenser hook signal.

DHI models can be connected together for products with more than eight dispenser handle inputs.

Dispenser Hook Isolation, 240 Volt



Model	Description
5800300200	STP-DHIB, dispenser hook isolation for 240 Volt dispenser handle switches, up to eight each
402312932	STP-DHIB + SPGC-220 Guardian Series™ Single-Phase Controller bundle (220 Volt supply, 240 Volt hook)

DHIB models are compatible with FE PETRO® submersible pump controllers and competitive pump controller makes accepting 240 Volt dispenser hook signal.

DHIB models can be connected together for products with more than eight dispenser handle inputs.

Dispenser Hook Isolation Repair Parts

Model	Description
223885901	DHI circuit board, 120 Volt dispenser hook signal
223885931	DHIB circuit board, 240 Volt dispenser hook signal
223243103	DHI fast-acting fuse, 250 VAC, 1 Amp

franklinfueling.com
3760 Marsh Rd. • Madison, WI 53718, USA
Tel: USA & Canada +1 800 225 9787 • Fax: +1 608 838 6433
Tel: UK +44 (0) 1473 243300 • Tel: Mex 001 800 738 7610
Tel: DE +49 6571 105 380 • Tel: CH +86 10 8565 4566

© 2021 Franklin Fueling Systems. All Rights Reserved.

MPC CONTAINMENT
Design. Fabricate. Install.

PETROGARD™ X

	Standard	SI Units
Base Fabric Type	Nylon	Nylon
Base Fabric Weight (nominal)	13.0 oz/yd^2	441 g/m^2
Coating Type	Polyester based polyurethane	Polyester based polyurethane
Thickness ASTM D751	38 ± 3 mil 0	.97 ± 0.08 mm
Weight ASTM D751	38 oz/yd^2 ± 2 oz/yd^2	1221 g/m^2 ± 102 g/m^2
Grab Tensile ASTM D751	1100/1100 lb	4895/4895 N
Strip Tensile ASTM D751 Procedure B	775/725 lb/in	679/635 daN/5 cm
Low Temperature ASTM D2136	*1/8 in mandrel, 4 hr* Pass @ -30° F	*3 mm mandrel, 4 hr* Pass @ -34° C
Adhesion ASTM D751 Dielectric Weld	20 lb/in 1	7.5 daN/5 cm
Dead Load ASTM D751	*2 in. seam, 4 hr, 1 in strip* 200 lb @ 70º F 8 100 lb@ 160° F	*50 mm seam, 4 hr, 25 mm strip* 90 N @ 21º C 445 N @ 71° C
Bursting Strength ASTM D751 (Ball Tip)	1750 lb	7788 N
Hydrostatic Resistance ASTM D751 Procedure A	800 psi	5.52 MPa
Blocking Resistance ASTM D751 *180ºF/82ºC*	# 2 rating (max.)	#2 rating (max.)
Weathering Resistance ASTM G23 (Carbon-Arc)	8000 hrs (minimum) - No appreciable changes or stiffening or cracking of coating	
Abrasion Resistance ASTM D3389 *H-22 wheel/1000g load*	10,000 cycles (minimum) before fabric exposure	

4834 South Oakley Avenue Chicago, Illinois 60609 Phone: 773.927.4120 Fax: 773.650.6028 Toll-Free: 800.621.0146 www.mpccontainment.com

Patent Pending

Testable 71SO Overfill Prevention Valve

Are you Prepared for New EPA Overfill Valve Test Requirements?

Spend 60 Seconds vs 60 Minutes per Tank!

CARB EVR CERTIFIED



NEW!

Now you can be with the New OPW Testable 71SO Overfill Prevention Valve

The easiest, most affordable way to ensure overfill compliance

- UST systems (drop tube, overfill prevention valve, spill containers) must be tested for vapor tightness
- Overfill prevention valves shut off devices must be manually inspected

OPW A DOVER COMPANY 9393 Princeton-Glendale Road ◆ Hamilton, Ohio USA 45011 Phone: (800) 422-2525 ◆ Fax: (800) 421-3297

Testable 71SO Overfill Prevention Valve

Patent Pending

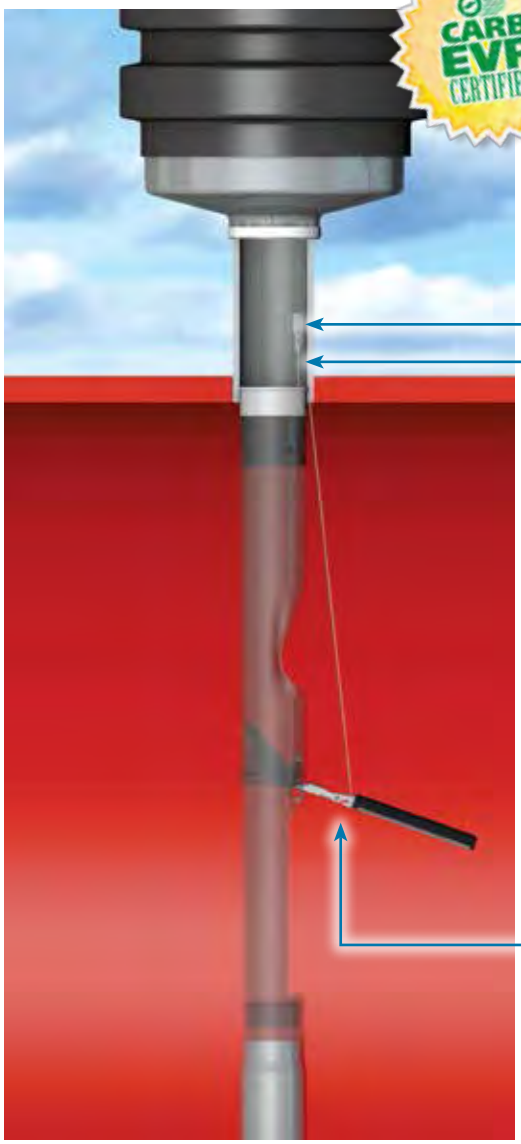

Testing & Verification

Easy as 1·2·3



Loosen test plug

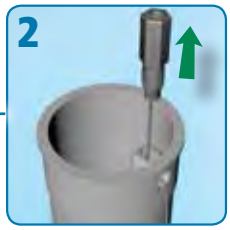

Lift float with cable to simulate fill

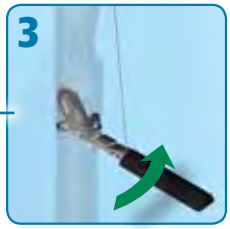

Validate proper poppet operation

The OPW Testable 71SO helps you prepare for these regulations

- The Only UST Overfill Prevention Valve that is testable without removal from the tank
- A testable feature is attached to a sealed plug in the inlet Adaptor
- The plug is easily accessed with a standard socket extension
- Attached to the extension, the testable feature can be raised and lowered, allowing the user to inspect the valve operation from the inside of the tube
- The plug is then easily reinstalled to the inlet Adaptor from grade
- No fill components, overfill valves, or vapor tight seals have to be removed - avoids compromising vapor tight compliance
- The Testable 71SO uses the same industry leading overfill prevention technology for strong vapor tight compliance

NOTE: The OPW 71SO is designed for use on tight-fill gravity drop applications only. Do not use for pressure fill applications.

Ordering Specifications

Product #	Description	A- Upper Tube Length		B- Lower Tube Length		C- Overall Length		Max. Riser Length		Max. Nominal Tank Dia.		Max. Actual Tank Dia.		Weight	
		in.	m	in.	m	in.	m	in.	m	in.	m	in.	m	lbs.	kg
71SO-400CT	Testable Vapor-Tight Overfill Valve, 5 Ft. Bury, 8 Foot Tank	60	1.5	83	2.1	154 3/4	3.9	53 1/2	1.4	96	2.4	107	2.7	16	7
71SO-410CT	Testable Vapor-Tight Overfill Valve, 10 Ft. Bury, 10 Foot Tank	120	3.1	102	2.6	234 3/4	5.9	113 1/2	2.9	120	3.1	126	3.2	25	11
71SO-420CT	Testable Vapor-Tight Overfill Valve, 10 Ft. Bury, 12 Foot Tank	120	3.1	126	3.2	258 3/4	6.5	113 1/2	2.9	144	3.7	150	3.8	26	12

Listings and Certifications



Look for this label for authentic OPW EVR Approved products.

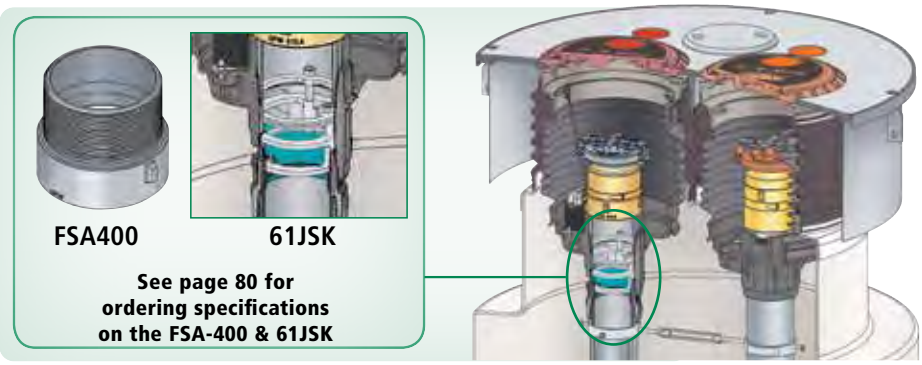

See page 80 for ordering specifications on the FSA-400 & 61JSK

Model Descriptions

- **OPW 411 Series –** features a flush-mounted manhole lid and raised dual dam and groove spill container rings, with P2105 Buckets using OPW 1-2105 Style Slip-On 5-gallon containers. Base is standard 1" offset from center and can be used for 12", 14", 16" or wider riser spacing. Optional 1P-2105 Hand Pump available
- **OPW 500 Series (511 / 521) EVR Multi-Port –** features a flush-mounted manhole lid and raised dual dam and groove spill container ring, with P511-EVR Buckets using OPW 1-2100 Style Thread-On Spill Containers. All Fill Ports in these spill containers feature an enhanced 1DK-2100-EVR vapor tight drain valve. The Vapor Return Spill Container features a permanent plug in the drain port as per EVR requirements. EVR Multi-Port Thread-On Spill containers are available in Composite or Cast Iron bases with 5 gallon buckets. Drain Valve Spill Bucket & Plug Spill Bucket standard on Dual Ports, Drain Valve Spill Bucket standard on Single Port
- **Required for EVR APPLICATIONS –** the FSA-400 Threaded Riser Face Seal Adaptor is installed on the fill pipe below the spill container to provide a true sealing for the drop tube flange on the 71SO overfill prevention valve. The 61SO and/or 71SO series valve is installed in the base of the OPW EVR spill container with the patent pending 61JSK jack screw device. This configuration allows liquid in the spill container to be drained directly into the drop tube, thereby isolating the drain valve from the tank ullage, eliminating a notorious leak point in previous systems

Features

- **Contractor-Friendly Installation –** studded mounting ring simply bolts together inside the spill containment bucket. No need to align bolt holes in the manhole cover
- **Raintight Service –** nitrile gaskets on the manhole and spill bucket mounting rings help prevent contamination of the sump area from surface water intrusion
- **Highway 20 Load Rating –** the rugged diamond plate steel manhole covers, as well as the ductile iron (RT) or aluminum (SC) spill container covers meet H20 Load Rating requirements
- **Spill Container and Manhole Positive I.D. System –** special recesses cast into spill container covers allow product I.D. tags to be attached to the lids. Matching bucket tags can be affixed to the inside of the spill container to prevent covers from getting switched
- **Fill/Vapor Ports –** configurations are available to accommodate a single fill riser, dual ports for both a fill and vapor riser, and triple and quad ports for multiple fill and vapor risers. Ports can be supplied with or without containment buckets
- **Port Configurations –** standard port locations match the popular riser spacings (16" or 24") and bung configurations on underground storage tanks. Custom port locations are easily accommodated. For riser spacings less than 16", old style buckets must be used
- **CARB Certified –** 500 Series CARB EVR Approved Executive Order #VR-102
- **Manhole Cover Sizes –** standard bolt-down manhole cover diameters of 30" (76 cm), 37" (94 cm), 42" (107 cm) and 48" (122 cm) allow ample access to the sump area. Heavy-duty reinforced lid options are also available upon request

OPW 400 and 500 Series Multi-Port Spill Containment Manholes

OPW Multi-Port Spill Containment Manholes provide spill containment for underground storage tank (UST) fill pipes and vapor recovery risers in a completely integrated single manhole package. Multi-ports are installed over the top of tank sumps to preserve future access to the tank top and to facilitate containment of tank bung fittings. OPW offers a vast array of standard multi-port configurations and options, in addition to an almost unlimited ability to provide custom solutions for virtually any spill containment application.

- **Spill Container Cover Options –** standard spill container options include the patented OPW dam and groove raintight (RT) design and the watertight Sealable Cover (SC) "plumber's plug" design. The raintight cover features a finger-grip lifting facility and an integral seal. The Sealable Cover features a cam-operated mechanism that expands the seal against the vertical wall of the mounting ring. Both of these water-shedding covers are protected by raised mounting rings.
- **Fastener Options –** two types of fasteners are available to secure the manhole lid and monitoring port to mounting rings. Standard are 5/16"-18 hex head bolts. Optional are OPW Roto-Lock Fasteners. The OPW Roto-Lock system enables a secure, watertight connection without the need to locate threaded bolt holes on the mounting ring.
- **Powder Coated Rings & Covers –** available upon request.
- **Replacement Covers –** see Part Number Configurations at **www.opwglobal.com**.

Listings and Certifications



Look for this label for authentic OPW EVR Approved products.

CARB EVR Executive Order #VR-102
NYCFD Certified (6571Series) #5053
Florida EQ-145

9393 Princeton-Glendale Road ◆ Hamilton, Ohio USA 45011 ◆ Phone: (800) 422-2525 ◆ Fax: (800) 421-3297

Materials

Body: Aluminum
Seals: Buna-N and Viton®
Weight: See matrix below



Features

- UL and ULC listed for use in gasoline, diesel and up to 10% ethanol blends. Specific listings available at **www.opwglobal.com**.
- Prevents Costly Damage to Dispensers – pulls apart at less the designed pull force during drive-offs.
- Certainty of Operation – designed for single use, so you know it is replaced instead of re-assembled.
- Prevents Hazardous and Costly Clean Up – unique double poppet design closes leak path from both dispenser and separated hose side.

Design working pressure

- 50 psi (3.45 bar) maximum pressure.

NOTE: OPW 66V Series Breakaways must always be installed with a "straightening" hose with a minimum length of 9" for the ¾" Series and a minimum length of 12" for the 1" Series, such as the 66H Series hoses.

Ordering Specifications

Product #	Connection Size in.	Connection Size mm	Weight lbs.	Weight kg	Description - Pull Force
66V-0300	¾" F x ¾" F (NPT)	19 F x 19 F	0.60	0.27	Valve / No More Than 300 lb.
66V-030RF**	¾" F x ¾" F (NPT)	19 F x 19 F	0.60	0.27	Valve / No More Than 300 lb.
66V-0492*	¾" F x ¾" F (NPT)	19 F x 19 F	0.60	0.27	Valve for up to E85 / No More Than 300 lb.
66V-1300	1" F x 1" F (NPT)	25 F x 25 F	0.98	0.45	Valve / No More Than 300 lb.
66V-130RF***	1" F x 1" F (NPT)	25 F x 25 F	0.98	0.45	Valve / No More Than 300 lb.
66V-1350	1" F x 1" F (NPT)	25 F x 25 F	0.98	0.45	Valve / No More Than 350 lb.
66V-135RF***	1" F x 1" F (NPT)	25 F x 25 F	0.98	0.45	Valve / No More Than 350 lb.

* 66V-0492 is UL Listed for up to 85% Ethanol
** 66V-030RF is UL Listed for up to 25% Ethanol and 20% Biodiesel
*** 66V-130RF and 66V-135RF are UL Listed for up to 20% Biodiesel

Accessories

66-0075	¾" F x ¾" M (NPT)	19 F x 19 M	1.46	0.66	Valve w/ 9" Hose / No More Than 300 lb.
66-1300	1" F x 1" M (NPT)	25 F x 25 M	2.50	1.13	Valve w/ 12" Hose / Maximum 300 lb.
66S-0075	¾"	19	0.20	0.10	Black Vinyl Scuff Guard Cover
66S-1300	1"	25	0.20	0.10	Black Vinyl Scuff Guard Cover

OPW 66V Series Breakaways

The OPW 66V Series breakaways are designed and rigorously tested for use in today's fuels. Installed on fuel dispensing hoses, they will separate at the designed pull force, reducing expensive damage to the dispenser and piping system. Internal dual valves close automatically during separation, stopping the flow of fuel from both the dispenser and the separated hose, reducing environmental and health risks of potential spilled fuel.

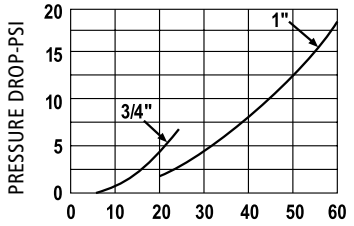

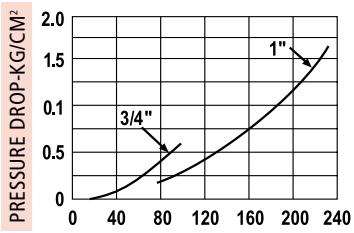

66V Series 3/4" Instruction Sheet Order Number: **H10993PA**
66V Series 1" Instruction Sheet Order Number: **H10993PA**
66S Series Instruction Sheet Order Number: **H11015PA**

Listings and Certifications

66H Series of Hoses

The 66H Series Hoses are UL approved, steel reinforced hardwall flexible to -40°F. 3/4 inch inside diameter with 3/4 inch male NPT chrome crimped ends. Compatible with fuel blends up to E-15 & B-20. Maximum working pressure 50PSI. Also available in Low Permeation per UL330.



Ordering Specifications

Product #	Length	Connection Size in.	Connection Size mm	Weight lbs.	Weight kg	Description
66H-0975	9 inch (23 cm)	¾" M x ¾" M (NPT)	19 M x 19 M	0.75	0.34	Straightening Hose
66H-0975-LP	9 inch (23 cm)	¾" M x ¾" M (NPT)	19 M x 19 M	0.75	0.34	Straightening Hose LOW PERMEATION per UL330
66H-1300	12 inch (30 cm)	1" M x 1" M (NPT)	25 M x 25 M	1.40	0.63	Straightening Hose
66H-08575	8.5 feet (2.6 m)	¾" M x ¾" M (NPT)	19 M x 19 M	4	1.8	Curb Hose
66H-08575-LP	8.5 feet (2.6 m)	¾" M x ¾" M (NPT)	19 M x 19 M	4	1.8	Curb Hose LOW PERMEATION per UL330

9393 Princeton-Glendale Road ◆ Hamilton, Ohio USA 45011 ◆ Phone: (800) 422-2525 ◆ Fax: (800) 421-3297

10 Plus Series Emergency Shut-Off Valves

OPW raised the protection standard in emergency valves when it introduced the first double-poppet valve back in 1989. This industry-changing OPW innovation helped to significantly reduce the risk of fire, explosion, personal injury, property damage and environmental contamination at sites around the world. Major oil companies and jobbers agreed that providing added protection for their customers, investments and the environment were the three most convincing reasons for switching to the innovative new valves.

Dimensions

	1.5 in.	2.0 in.
A	$7^{9}/_{16}$	$8^{7}/_{8}$
B	$2^{25}/_{32}$	$3^{1}/_{2}$
C	$2^{21}/_{32}$	
D	$2^{11}/_{16}$	$3^{1}/_{2}$
E	$2^{9}/_{16}$	$3^{3}/_{16}$
F	$4^{21}/_{32}$	$5^{31}/_{32}$

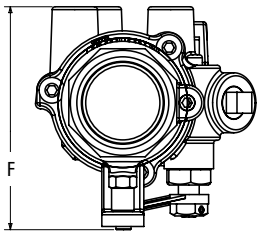

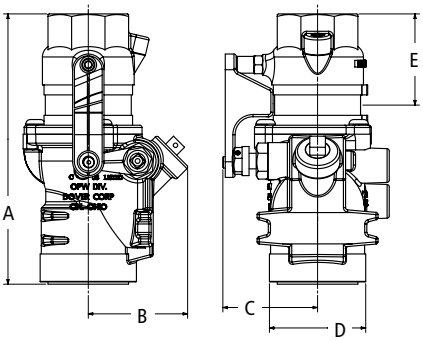

Materials

Top: Cast iron

Body: Cast iron

UL Listed for up to 85% Ethanol



1.5" 10 Plus | 2" 10 Plus (B100) | 1.5" 10 Plus (E85) | 2" 10 Plus

Features

- The ONLY emergency shut-off valve in the world designed to protect your customers, investments, and the environment against the potential hazards of undetected shear groove leaks caused by low-impact incidents
- The patented SmartGuard™ design contains shear groove leaks, preventing fuel from leaking into sumps to help reduce the risk of fire, explosion, personal injury, property damage, environmental contamination, product loss and costly clean-up
- Superior shear groove design and engineering results in reliable valve shut-off in the event of a pull-over or dislodged dispenser. The 10 Plus utilizes the same time-tested field-proven design of the OPW 10 Series Emergency Shut-off Valve – the most specified emergency shut-off valve in the world
- Fusible link releases to automatically close the valve to reduce fire hazard
- Rigorously tested to meet OPW's rigid quality standards
- E85 model has orange arm for visual indicator

Ordering Specifications

Model #	Body Size		Body Weight		Connection Threads	Poppet Configuration	Application	Mounting System
	in.	cm	lb.	kg				
10P-0150	$1^{1}/_{2}$	4	6.7	3.05	NPT	Single	Pressure	Combination
10P-0152	$1^{1}/_{2}$	4	6.8	3.10	NPT	Double	Pressure	Combination
10P-0152E85 ***E85**	$1^{1}/_{2}$	4	6.8	3.10	NPT	Double	Pressure	Combination
10P-0200	2	5	11.2	5.12	NPT	Single	Pressure	Combination
10P-0202	2	5	11.2	5.12	NPT	Double	Pressure	Combination
10P-0202RF ***B100**	2	5	11.2	5.12	NPT	Double	Pressure	Combination

*E85 Applications

Listings and Certifications

10 Plus Series Instruction Sheet Order Number: **201614**



10 Plus Replacement Parts

Part #	Description
10RPLUS-0150	10 Plus Single Poppet Replacement Top
10RPLUS-0152	10 Plus Double Poppet Replacement Top
202950	$1^{1}/_{2}$" Tetra Seal
200143	Safety Hub/Fusible Link
213273	E85 Safety Hub S/A Orange
H11361M	2" Tetra Seal

9393 Princeton-Glendale Road ◆ Hamilton, Ohio USA 45011 ◆ Phone: (800) 422-2525 ◆ Fax: (800) 421-3297

OPW 241TPS Series Hose Swivels

The OPW 241TPS Series of swivels are designed and rigorously tested for applications where easy nozzle and hose handling is important for customer convenience. Swivels are installed in between the nozzle and the hose to provide flexibility in the system to reduce customer strain, position the nozzle properly and reduce premature hose wear.

Materials

Body: Aluminum
Inlet Adaptor: Zinc
Outlet Adaptor: Zinc
Seals: Buna-N, Viton®
Bearing: Nylon
Weight: 3/4": .65 lbs., .30 kg
1": 1.55 lbs., .703 kg
Packed: 60 per Case

OPW 241TPS-0492 UL Listed for up to 85% Ethanol



241TPS - 3/4"



241TPS - 1"

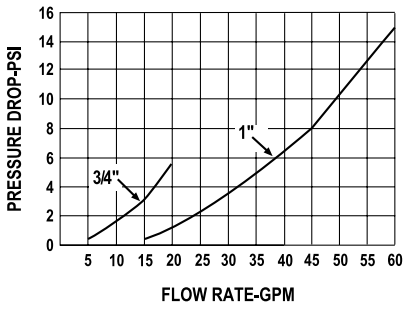

Features

- UL and ULC listed for use in gasoline, diesel, and up to 10% ethanol blends. Specific listings available at **www.opwglobal.com**.
- Allows for easy nozzle positioning in fill pipes – utilizing two planes of rotation.
- Reduces premature hose wear – utilizing two planes of rotation.
- Added protection vs. thermal and chemical degradation – Dual Seals.
- 50 psi (3.45 bar) maximum pressure.

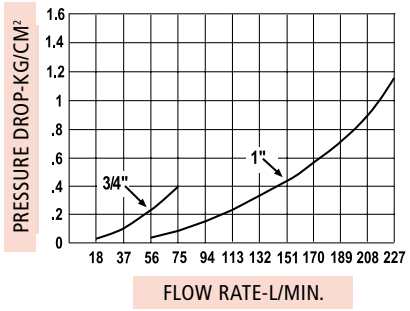

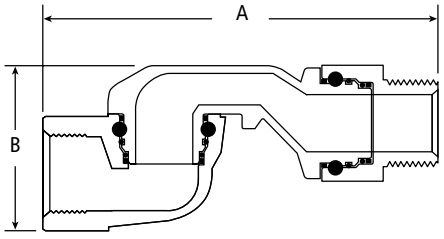

Ordering Specifications

Product #	Inlet/Outlet	Length A	Depth B
241TPS-0241 241TPS-0492* (E85) 241TPS-75RF** (E25/B20)	3/4" F x 3/4" M (NPT)	4 7/8"	2 3/16"
	19 mm x 19 mm	124 mm	56 mm
241TPS-1000 241TPS-10RF*** (B20)	1" F x 1" M (NPT)	6 1/32"	2 17/32"
	25 mm x 25 mm	153 mm	64 mm

*241TPS-0492 is UL Listed for up to 85% Ethanol.
**241TPS-75RF is UL Listed for up to 25% Ethanol and 20% Biodiesel.
***241TPS-10RF is UL Listed for up to 20% Biodiesel.

Listings and Certifications

NOTE: See OPW's Website at www.opwglobal.com for product instruction sheets, trouble-shooting guides, how-to-use guide and to view the Do's & Don'ts at the Gas Pump video.

VPH B1000 Series Doublewall UDC

UDC SUMPS



Product Shown
B1380-D30

SIZES

- 28” width at base

**See page 2 for dimension drawing and dimension chart*

MATERIAL

- Tank-spec doublewall fiberglass
- Galvannealed steel
- Doublewall construction allows for constant monitoring

SPECIFICATIONS

- Triennial testing exempt when constantly monitored
- Quality FRP construction
- Pre-plumb options available
- 30-year corrosion warranty
- AB2481 compliant in California
- UL2447 listed, the benchmark for fuel compatibility

About the VPH B1000 Doublewall UDC

The B1000 Series Doublewall VPH is available in models for most modern dispensers. All metal work is galvanized for corrosion resistance and the splash is FRP for a distinct corrosion advantage over other designs. Electrical offsets on both ends of the UDC provide needed flexibility to accommodate modern station designs.

Bravo Solution Center
Call or Text (323) 541-3851
orders@sbravo.com

UL LISTED UL 2447

VPH B1000 Series Doublewall UDC Dimensions

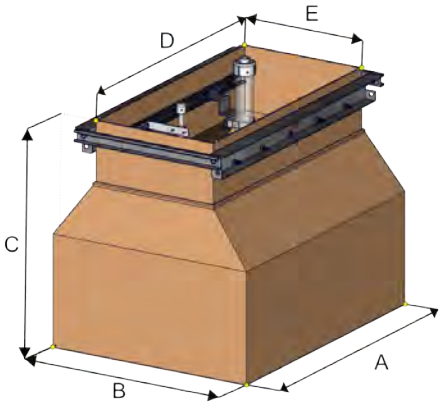

Bracket and Kits for VPH B1000 Series Doublewall

Stabilizer Bar and Bracket Assembly		
Encore/Helix Wide	BK-1017	Boss-mount bracket for B1000 & stabilizer bar for 17”. Wide assembly with hardware.
Ovation/Ovation High Speed/Helix Narrow/Pacific/Reliance/Select	BK-1015	Boss-mount bracket for B1000 & stabilizer bar for 15“. Wide assembly with hardware.
Atlas/Bennett 3000	BK1011	Boss-mount bracket for B1000 & stabilizer bar for 11“. Wide assembly with hardware.

VPH B1000 Series Doublewall

Dispenser Model	Part #	A	B	C	D	E
Gilbarco Encore 300, 500, 700	B1380-D30	37”	28”	29.5”	36”	17”
Wayne Ovation (3+0) (3+1) up to 3 inlets	B1250-D30	37”	28”	29.5”	35”	14.75”
Wayne Helix Wide Frame	B1256-D30	37”	28”	29.5”	37.5”	17”
Wayne Helix Narrow Frame	B1242-D30	29”	28”	29.5”	27”	14.75”
Wayne Ovation High-speed Diesel/Ovation HL Series	B1254-D30	35”	28”	29.5”	35”	14.75”
Wayne Ovation High-speed Diesel/Ovation HS Series *	B1257-D30	29”	28”	29.5”	27”	14.75”
Wayne Reliance Select	B1210-D30	29”	28”	29.5”	27”	14.75”
Bennett Pacific	B1411-D30	37”	28”	29.5”	35”	14.75”
Bennett 3000 Big Fueler*	B1430-D30	19”	29.5”	29.5”	19”	11.5”
Gasboy Atlas	B1670-D30	19”	29.5”	29.5”	19”	11.5”

* Electrical Offsets on one end

UL LISTED UL 2447

Franklin Fueling Systems

EVO™ 600 & EVO™ 6000 AUTOMATIC TANK GAUGES



EVO™ 600 & EVO™ 6000 Automatic Tank Gauges (ATGs) provide highly accurate inventory management and full-featured compliance monitoring for any size fuel system. These module-based ATGs are highly configurable for site-specific probe and sensor requirements. Their simple setup and operation, remote connectivity, and advanced security features protect your fuel system while keeping you directly connected to vital site data whenever, and wherever. The highly-intuitive, full-color, icon-based touch screen provides user-friendly on-site access to inventory, alarm, and compliance data.

TECHNICAL ADVANTAGES

- Provides inventory monitoring, static (included feature) and continuous tank testing (optional feature), tank autocalibration, inventory reconciliation, containment compliance monitoring, and flow rate monitoring.
- With the EVO™ 600, six total modules can be installed with a maximum of four intrinsically safe modules and a maximum of three of any one kind of module. With the EVO™ 6000, eleven total modules can be installed with a maximum of nine intrinsically safe modules and a maximum of three of any one kind of module.
- Customizable user roles and log-in security features protect against unwanted access while keeping track of user activity within your system.
- Optional AutoLearn™ Electronic Line Leak Detection capability including 24-hour Statistical Line Leak Detection for high throughput sites.
- Streamlined setup and programming includes hardware auto-detection and wiring confirmation, multipoint tank charting, network printer auto-detection, and the ability to download and upload entire programming profiles from one ATG to another.
- Intuitive full-color 7" (17.78 cm) touch screen interface provides simplified on-site access features including:
  - Six available One Touch buttons that are custom programmed to carry out common automated tasks with a single tap.
  - Quick Jump menu allows you to quickly maneuver from application to application using a single button.
  - Programmable product colors.
- Turbine Pump Interface (TPI) capability for enhanced and automated submersible turbine pump control.
- Web interface allows you to directly connect to your ATG via FFS PRO® Connect from any web-enabled device.
- Optional Wifi allows secure and protected on-site viewing of inventory levels for fuel delivery drivers.

Approvals/Certifications

- UL, cUL, ATEX, IECEx
- Third party certification of leak detection capabilities

SPECIFICATIONS

- Maximum tanks monitored: 36 (EVO™ 600)/36 (EVO™ 6000)
- Maximum sensor input capacity: 48 (EVO™ 600) / 96 (EVO™ 6000)
- Lines capacity: 24 (EVO™ 600 and EVO™ 6000)
- Dry contact input channels: 2
- AC input channels: 36 (EVO™ 600 and EVO™ 6000)
- Relay output channels: 26 (EVO™ 600) / 50 (EVO™ 6000)
- Connectivity: Ethernet, Wifi RS-485, standard USB (qty 2)
- Display type: 7" (17.78 cm) color LCD touch screen
- Printer type: thermal (also network or USB)
- Alarm: internal audible alarm
- LEDs: alarm, warning, and power
- Applicable liquids: petroleum, chemicals, and waste
- Level units: inches, centimeters, and millimeters
- Volume units: gallons or liters (mass with density option)
- Power requirements: 110 to 240 VAC, 50/60 hz, 1.5 Amps
- Operating temperature: 32° to 104 °F (0° to 40 °C)
- Humidity: 0-90% non-condensing
- EVO™ 600: Height 11.75"(300 mm), Width 10¼"(260 mm), Depth 9"(229 mm)
- EVO™ 6000: Height 11.75"(300 mm), Width 16½"(419 mm), Depth 9"(229 mm)

Capabilities

- High/low product, water, and temperature alarm set points
- Inventory reconciliation/tank autocalibration/flow rate monitoring
- Density, mass, and phase separation measurement
- Email and SMS notifications
- Back-up generator monitoring/conditions programming
- Advanced logic control for DEF/AdBlue® recirculation system
- MODBUS™ support

SPECIFICATIONS CONTINUED

Components

1. Cover
2. LCD touch screen
3. LED indicators
4. Printer
5. Mounting tabs
6. Cooling vents
7. Module slots
8. Communication ports
9. Annunciator (audible alarm)
10. Ethernet port
11. Ethernet port
12. USB ports (qty 2)
13. Mini-USB
14. Ground comm port
15. Wi-Fi
16. Bus extension
17. Serial comm port 2
18. RS-485 comm port
19. Controller module
20. Power supply module
21. AC input module
22. 10 Amp relay module
23. I/O module
24. 4-20mA module EXP
25. Relay module
26. Blank
27. Intrinsically safe barrier
28. Probe module
29. 4-20mA module
30. 2 wire sensor module
31. 3 wire sensor module



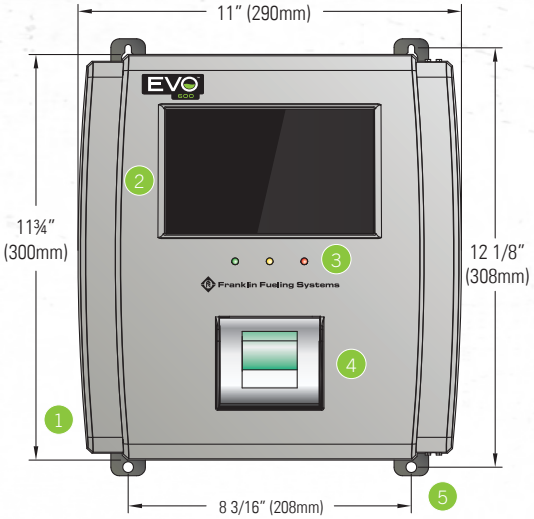

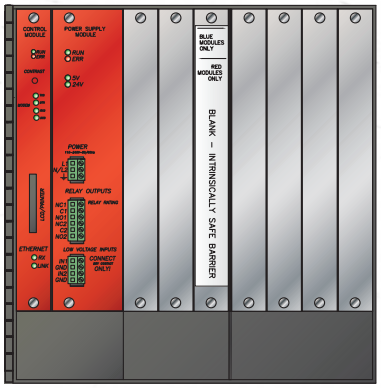

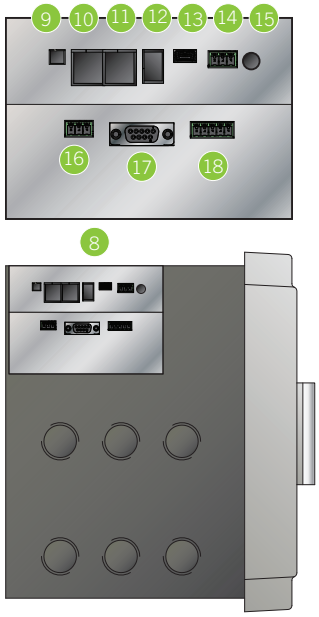

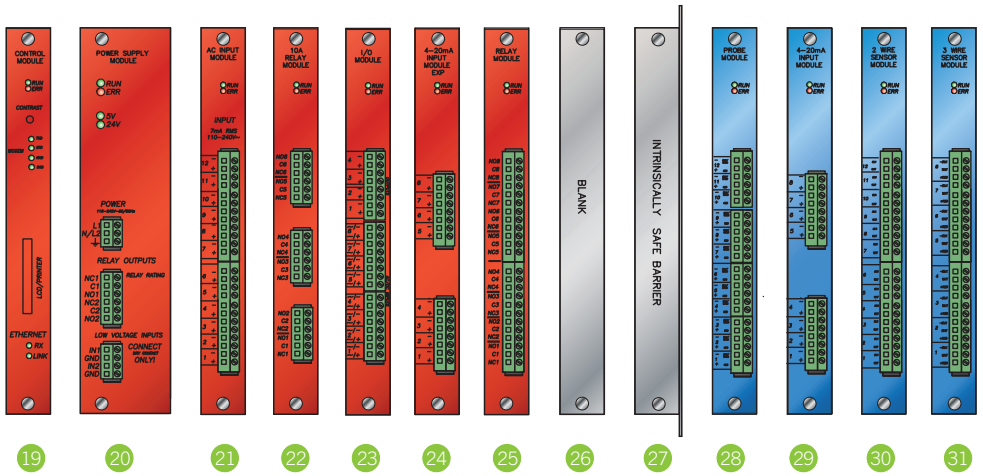

- There can only be three types of one module in an EVO™ Series ATG.
- If you require more than three types of one module, please contact your FFS sales representative to review your needs.
- The intrinsically safe barrier must be installed in the third slot or greater. (The third slot after the power supply module.)

ORDERING INFORMATION

Ordering Guide

ATG model, software and hardware options can be listed separately or combined when ordering. Systems shipped from the factory will list the combined part number. Complete part numbers have a specific order and are created using the following guidelines:

EVOX DPWIE / TRFLGC

EVOX = **Base Model Options**

EVO600 = EVO™ 600 base ATG

EVO6000 = EVO™ 6000 base ATG

DPWIE = **Hardware Options** (choose all that apply)*

D = Display

P = Printer

W = Wifi

I = Dispenser interface module

E = LON module

TRFLGC = **Software Options** (choose all that apply)

T = SCALD 24-hour tank testing

R or F = (R) Reconciliation/autocalibration or

(F) Reconciliation/autocalibration with flow rate monitoring

L or G = (L) Line leak detection or

(G) Generator line leak detection

C = Recirculation, scheduling, and timer conditions

*Only one EVO-DIM or EVO-LON module can be installed per ATG.

Example: EVO600DPI/TRL = EVO™ 600 base model with display, with printer, with dispenser interface module, with SCALD, with reconciliation/autocalibration, with line leak detection.

EVO™ 600 & EVO™ 6000 Base Models

Model	Description
EVO600	EVO™ 600 base model automatic tank gauge
EVO6000	EVO™ 6000 base model automatic tank gauge

EVO™ 600 & EVO™ 6000 Hardware & Software Options

EVO™ 600 and EVO™ 6000 ATGs come standard with the ability to perform in-tank static leak detection. The following software and hardware options can be added to customize your ATG. The internal hardware options will be factory installed when ordered with the ATG.

Internal Hardware Options

Model	Description
EVO-DIMIB	(I) Internal dispenser interface module, dispenser interface cable must be ordered separately
EVO-LON	(E) Lon™ communication module, IFSF protocol capability

Note: Only one EVO™-DIM or EVO™-LON module can be installed per ATG.

Internal Software Options / Field Upgrades

Model	Description
TS-TT	(T) Statistical continuous automatic leak detection, 24 hour continuous tank testing software
TS-TRAC	(R) Tank inventory reconciliation and autocalibration
TS-TRAC-F	(F) Reconciliation/autocalibration and flow rate monitoring software
TS-FLOW	Flow rate monitoring software (Field upgrade for ATGs with reconciliation/autocalibration)
TS-ELLD	(L) Electronic line leak detection
TS-ELLD-G	(G) Electronic line leak detection for generator applications
TS-CON	(C) DEF/AdBlue® recirculation, scheduling, and timer conditions

Expansion Consoles

Model	Description
EVO-EXPC2	Secondary console to add six additional plug-in modules to the primary EVO™ 600 or EVO™ 6000 ATG, comes without a display or printer
EVO-EXPC	Secondary console to add eleven additional plug-in modules to the primary EVO™ 600 or EVO™ 6000 ATG, comes without a display or printer

Note: Both of these consoles are for the EVO™ 600 and EVO™ 6000

Upgrade Kits

EVO™ Series Upgrade Kits include everything needed to transform the existing EVO 550™ or EVO™ 5000 to an EVO™ 600 or EVO™ 6000.

Model	Description
EVO-600UPG	Upgrade kit for EVO™ 550 to EVO™ 600, includes control module, comm port cover, and EVO 600™ jewel
EVO-6000UPG	Upgrade kit for EVO™ 5000 to EVO™ 6000, includes control module, comm port cover, and EVO™ 6000 jewel
EVO-600UPG-W	Upgrade kit for EVO™ 550 to EVO™ 600 with Wifi, includes control module, comm port cover, Wifi hardware, and EVO 600™ jewel
EVO-6000UPG-W	Upgrade kit for EVO™ 5000 to EVO™ 6000 with Wifi, includes control module, comm port cover, Wifi hardware, and EVO™ 6000 jewel

franklinfueling.com
3760 Marsh Rd. • Madison, WI 53718, USA
Tel: USA & Canada +1 800 225 9787 • Fax: +1 608 838 6433
Tel: UK +44 (0) 1473 243300 • Tel: Mex 001 800 738 7610
Tel: DE +49 6571 105 380 • Tel: CH +86 10 8565 4566

© 2020 Franklin Fueling Systems. All Rights Reserved.

ATTACHMENT I

Initial and Continuing Training

RANGER
ENVIRONMENTAL SERVICES, LLC

Initial and Continuing Training

The release detection system at the facility will be a Franklin Fueling EVO 600. The system will have sump sensors installed in the submersible sump containment area to monitor sub pump, sump sensors installed in the dispenser sumps and tank interstitial sensors. The system will be equipped with automatic line leak detection for the product delivery lines. The system will be installed by a Franklin Fueling certified technician. The system will be installed in accordance with Franklin Fueling specifications and instructions. The system is UL listed and is third party certified for release detection under USEPA guidelines. The system has self- diagnostic programs to test and warn of failures of the external devices as well as internal electronics. The system has been tested by a Third Party and found to be compliant with USEPA requirements for release detection.

Annual maintenance of the system will be conducted to certify the function of all modules in the system.

On-site employees will monitor the system condition locally and remotely on a daily basis, with particular emphasis on any sensor alarms or release detection alarms as indicated on the panel of the system. In the case of any sensor or inventory alarm, employees will notify the Owner or General Manager who will make the determination of a proper course of action. Site employees are not authorized to reset of disable any alarm conditions on the system.

New facility employees will be trained in the proper operation and functional modes of the system. Ongoing reviews of the system operation will be presented to all employees to ensure operation and function status is understood.

Ongoing maintenance will be conducted by a certified/licensed UST contractor.

Operating And Maintaining Underground Storage Tank Systems

Practical Help And Checklists



Printed on Recycled Paper

Contents

How to Use This Booklet 1

Section 1 — Identifying The Equipment At Your UST Facility 3

Section 2 — Release Detection 5

Section 3 — Suspected Or Confirmed Releases 21

Section 4 — Spill And Overfill Protection 24

Section 5 — Corrosion Protection 34

Section 6 — Frequent Walk-Through Inspections 42

Section 7 — For More Information 44

DISCLAIMER

This document provides information on operating and maintaining underground storage tank (UST) systems. The document is not a substitute for U.S. Environmental Protection Agency regulations nor is it a regulation itself — it does not impose legally binding requirements.

For regulatory requirements regarding UST systems, refer to the federal regulations governing UST systems (40 CFR Part 280).

How To Use This Booklet

Who Should Read This Booklet?

This booklet is for owners and operators of underground storage tank systems (USTs).

You are responsible for making sure your USTs do not leak. This booklet can help you meet your UST responsibilities.

Key Terms Used In This Booklet

An **UST** is an **underground storage tank and underground piping connected to the tank** that has at least 10 percent of its combined volume underground. The federal regulations apply only to USTs storing petroleum or certain hazardous substances.

O&M stands for **operation and maintenance procedures** that must be followed to keep USTs from causing leaks and creating costly cleanups.

What Can This Booklet Help You Do?

- Identify and understand the operation and maintenance (O&M) procedures you need to follow routinely to make sure your USTs don't have leaks that damage the environment or endanger human health.
- Identify good O&M procedures you can use to avoid cleanup costs and liability concerns.
- Maintain useful records of your O&M.

Your UST System Is New Or Upgraded — Is That Enough?

Being new or upgraded is not enough. New and upgraded USTs are made of a complex collection of mechanical and electronic devices that can fail under certain conditions. These failures can be prevented or quickly detected by following routine O&M procedures. Having a new or upgraded UST system is a good start, but the system must be properly operated and continuously maintained to ensure that leaks are avoided or quickly detected.

What Should You Do With Each Section Of This Booklet?

Read through each section carefully and use the checklists to help you establish clear O&M procedures.

By identifying and understanding the O&M tasks you need to perform routinely, you will ensure timely repair or replacement of components when problems are identified.



How Can You Use The Following Checklists Effectively?

This booklet's pages are 3-hole punched and unbound so you can put all the materials in a handy 3-ring binder. You can easily remove any of the following checklists from the binder, reproduce them, and then fill them out.

You can select the specific mix of checklists that matches your UST facility. Once you have your select group of checklists together, make several copies that you can fill out periodically over time.

In this way you can keep track of your O&M activities and know that you've done what was necessary to keep your UST site safe and clean, avoiding any threats to the environment or nearby people as a result of costly and dangerous UST releases.

Use This Booklet Often — Effective O&M Requires Constant Vigilance.

Note: This booklet describes quality O&M practices put together by a work group of state and federal environmental regulators. This booklet is not a federal regulation nor legally binding, but it does provide useful information on effective O&M procedures. You should check with your state UST program for information on any additional or different O&M practices that may be required in your state.
See Section 7 for contact information.

Section 1 — Identifying The Equipment At Your UST Facility

Determine what UST equipment you have at your facility by completing the checklist below. Note that each part of the checklist below refers you to the appropriate section of this O&M booklet for relevant information. After you have identified your equipment, proceed to the following sections to identify the O&M actions necessary for your specific UST system.

General Facility Information (optional)

Facility Name
Facility ID #

Release Detection (See Section 2 for information on release detection)

A. Release Detection for Tanks

Check at least one for each tank:	Tank #1	Tank #2	Tank #3	Tank #4
Automatic Tank Gauging System				
Interstitial Monitoring (with secondary containment)				
Groundwater Monitoring				
Vapor Monitoring				
Inventory Control and Tank Tightness Testing (TTT)*				
Manual Tank Gauging Only **				
Manual Tank Gauging and Tank Tightness Testing (TTT)***				
Other Release Detection Method, such as SIR (please specify)				

* Allowed only for 10 years after upgrading or installing tank with corrosion protection. TTT required every 5 years.
** Allowed only for tanks of 1,000 gallon capacity or less.
*** Allowed only for tanks of 2,000 gallon capacity or less and only for 10 years after upgrading or installing tank with corrosion protection. TTT required every 5 years.

B. Release Detection for Pressurized Piping

Check at least one from A & B for each tank's piping:		Tank #1	Tank #2	Tank #3	Tank #4
A (Automatic Line Leak Detectors)	Automatic Flow Restrictor				
	Automatic Shutoff Device				
	Continuous Alarm				
B	Annual Line Tightness Test				
	Monthly Monitoring*				

* Monthly Monitoring for piping includes Interstitial Monitoring, Vapor Monitoring, Groundwater Monitoring, and other accepted methods (such as SIR and Electronic Line Leak Detectors)

C. Release Detection for Suction Piping

Check at least one for each tank's piping:	Tank #1	Tank #2	Tank #3	Tank #4
Line Tightness Testing Every Three Years				
Monthly Monitoring*				
No Release Detection Required For Safe Suction **				

* Monthly Monitoring for piping includes Interstitial Monitoring, Vapor Monitoring, Groundwater Monitoring, and SIR
** No release detection required only if it can be verified that you have a safe suction piping system with the following characteristics:

1) Only one check valve per line located directly below the dispenser;
2) Piping sloping back to the tank; and
3) System must operate under atmospheric pressure.

Spill and Overfill Protection (See Section 4 for more information)

Check for each tank:	Tank #1	Tank #2	Tank #3	Tank #4
Spill Catchment Basin/ Spill Bucket				
Check at least one overfill device for each tank:				
Automatic Shutoff Device				
Overfill Alarm				
Ball Float Valve				

Corrosion Protection (See Section 5 for more information)

A. Corrosion Protection for Tanks

Check at least one for each tank:	Tank #1	Tank #2	Tank #3	Tank #4
Coated and Cathodically Protected Steel				
Noncorrodible Material (such as Fiberglass Reinforced Plastic)				
Steel Jacketed or Clad with Noncorrodible Material				
Cathodically Protected Noncoated Steel*				
Internally Lined Tank*				
Cathodically Protected Noncoated Steel and Internally Lined Tank*				
Other Method Used to Achieve Corrosion Protection (please specify):				

* These options may be used only for tanks installed before December 22, 1988.

B. Corrosion Protection for Piping

Check at least one for each:	Tank #1	Tank #2	Tank #3	Tank #4
Coated and Cathodically Protected Steel				
Noncorrodible Material (such as Fiberglass Reinforced Plastic or Flexible Plastic)				
Cathodically Protected Noncoated Metal*				
Other Method Used to Achieve Corrosion Protection (please specify):				

* This option may be used only for piping installed before December 22, 1988.

Any Problems Filling Out This Checklist?

If you have trouble filling out this checklist or any following checklist, remember these sources of assistance you can contact:

- Your UST contractor, the vendor of your equipment, and the manufacturer of your UST equipment should be ready to help you. Look through your records for contact information. You may also want to use some of the industry contacts and other contact information provided in Section 7.

- Your state regulatory agency may be able to help you identify equipment or sources of information about your UST equipment. You should, in any event, make yourself aware of any ways in which your state may have additional or different O&M procedures than those presented in this booklet. See Section 7 for state agency contact information.

Section 2 — Release Detection

What Is Release Detection?

You must be able to determine at least every 30 days whether or not your tank and piping are leaking by using proper release detection methods.

Your release detection method must be able to detect a release from any portion of the tank and connected underground piping that routinely contains product.

Release detection must be installed, calibrated, operated, and maintained according to the manufacturer's instructions.

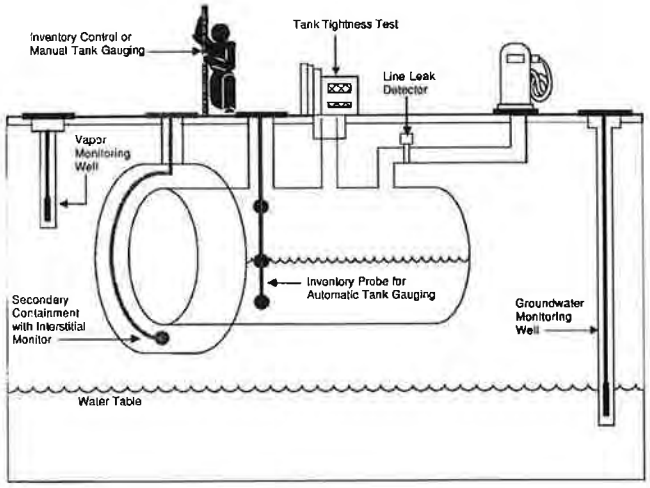

Do You Know If Your Release Detection Is Certified To Work At Your UST Site?

Release detection must meet specific performance requirements. You should have documentation from the manufacturer, vendor, or installer of your release detection equipment showing certification that it can meet performance requirements.

Some vendors or manufacturers supply their own certification, but more often an impartial "third party" is paid to test the release detection equipment and certify that performance requirements are met. An independent workgroup of release detection experts periodically evaluates all third-party certifications, thus providing a free and reliable list of evaluations of third-party certifications for various release detection equipment. Frequently updated, this list is available on the Internet at **http://www.nwglde.org/** (the publication's title is ***List Of Leak Detection Evaluations For Underground Storage Tank Systems***). If you can't find the certification anywhere, contact your state regulatory agency (see Section 7 for contact information).

By checking the certification, you may discover the method you use has not been approved for use with the type of tank or piping you have or the type of product being stored. For example, you may learn from the certification that your method won't work with manifolded tanks, certain products, high throughput, or with certain tank sizes.

That's why you need to make sure your release detection method has clear certification that it will work effectively at your site with its specific characteristics.

How Can You Make Sure Your Leak Detection Method Is Working At Your UST Site?

If you don't understand your O&M responsibilities and don't know what O&M tasks you must routinely perform, you may allow your UST site to become contaminated — then you will face cleanup costs and associated problems.

To avoid these problems use the checklists on the following pages that describe each type of leak detection method, discuss actions necessary for proper O&M, and note the records you should keep.

Locate the methods of release detection you are using at your facility, review these pages, and periodically complete the checklist. You might want to copy a page first and periodically fill out copies later.

If you have questions about your release detection system, review your owner's manual or call the vendor of your system. Your state or local regulatory agency may be able to provide assistance as well.

You will find leak detection recordkeeping forms in the following pages of this Section. Keeping these records increases the likelihood that you are conducting good O&M and providing effective release detection at your UST site. For example, see page 20 for a 30-Day Release Detection Monitoring Record.

If you ever suspect or confirm a leak, refer to Section 3. **Never ignore leak detection alarms or failed leak detection tests. Treat them as potential leaks**!

Automatic Tank Gauging (ATG) Systems (for tanks only)	
Description Of Release Detection	**An automatic tank gauging (ATG) system consists of a probe permanently installed in a tank and wired to a monitor to provide information on product level and temperature. ATG systems automatically calculate the changes in product volume that can indicate a leaking tank.**
Have Certification For Your Release Detection Method	❑ **Make sure your ATG system is certified for the types of tanks and stored contents on which the ATG system is used.** Most manufacturers have their leak detection devices tested and certified by a third party to verify that their equipment meets specific performance requirements set by regulatory agencies. If you don't have certified performance claims, have the manufacturer provide them to you.
Perform These O&M Actions	❑ **Use your ATG system to test for leaks at least every 30 days.** Most systems are already programmed by the installer to run a leak test periodically. If your system is not programmed to automatically conduct the leak test, refer to your ATG system manual to identify which buttons to push to conduct the leak test. Testing more often than monthly can catch leaks sooner and reduce cleanup costs and problems. ❑ **Make sure that the amount of product in your tank is sufficient to run the ATG leak test.** The tank must contain a minimum amount of product to perform a valid leak detection test. One source for determining that minimum amount is the certification for your leak detection equipment (as discussed above). ❑ **Frequently test your ATG system according to the manufacturer's instructions to make sure it is working properly.** Don't assume that your release detection system is working and never needs checking. Read your owner's manual, run the appropriate tests, and see if your ATG system is set up and working properly. Most ATG systems have a test or self-diagnosis mode that can easily and routinely run these checks. ❑ **If your ATG ever fails a test or indicates a release, see Section 3 of this booklet for information on what to do next.** ❑ **Periodically have a qualified UST contractor, such as the vendor who installed your ATG, service all the ATG system components according to the manufacturer's service instructions.** Tank probes and other components can wear out and must be checked periodically. Many vendors recommend or require this maintenance activity at least annually. ❑ **Check your ATG system owner's manual often to answer questions and to make sure you know the ATG's operation and maintenance procedures.** Call the ATG manufacturer or vendor for a copy of the owner's manual if you don't have one. ❑ **Make sure employees who run, monitor, or maintain the release detection system know exactly what they have to do and to whom to report problems.** Develop and maintain regular training programs for all employees.
Keep These O&M Records	❑ **Keep results of your ATG system tests for at least 1 year.** Your monitoring equipment may provide printouts that can be used as records. Unless you are recording actual release detection results at least every 30 days and maintaining records for at least 1 year, you are not doing leak detection right. ❑ **Keep all records of calibration, maintenance, and repair of your release detection equipment for at least 1 year.** ❑ **Keep all performance claims supplied by the installer, vendor, or manufacturer for at least 5 years.** These records include the certification of your leak detection equipment described above.

Secondary Containment With Interstitial Monitoring (for tanks & piping)	
Description Of Release Detection	**Secondary containment is a barrier between the portion of an UST system that contains product and the outside environment. Examples of secondary containment include an outer tank or piping wall, an excavation liner, and a bladder inside an UST. The area between the inner and outer barriers — called the interstitial space — is monitored manually or automatically for evidence of a leak.**
Have Certification For Your Release Detection Method	❑ **Make sure your interstitial monitoring equipment and any probes are certified for the types of tanks, piping, and stored contents on which the release detection system is used.** Most manufacturers have their leak detection devices tested and certified by a third party to verify that their equipment meets specific performance requirements set by regulatory agencies. If you don't have certified performance claims, have the manufacturer provide them to you.
Perform These O&M Actions	❑ **Use your release detection system to test for leaks at least every 30 days.** Testing more often than monthly can catch leaks sooner and reduce cleanup costs and problems. ❑ **Frequently test your release detection system according to the manufacturer's instructions to make sure it is working properly.** Don't assume that your release detection system is working and never needs checking. Read your owner's manual, run the appropriate tests, and see if your system is set up and working properly. Some interstitial monitoring systems have a test or self-diagnosis mode that can easily and routinely run these checks. ❑ **If your interstitial monitoring ever fails a test or indicates a release, see Section 3 of this booklet for information on what to do next.** ❑ **Periodically have a qualified UST contractor, such as the vendor who installed your release detection system, service all the system components according to the manufacturer's service instructions.** Tank probes and other components can wear out and must be checked periodically. Many vendors recommend or require this maintenance activity at least annually. ❑ **Keep interstitial monitoring access ports clearly marked and secured.** ❑ **Check your interstitial monitoring system owner's manual often to answer questions and to make sure you know the system's O&M procedures.** Call the system's vendor or manufacturer for a copy of the owner's manual if you don't have one. ❑ **Make sure employees who run, monitor, or maintain the release detection system know exactly what they have to do and to whom to report problems.** Develop and maintain regular training programs for all employees.
Keep These O&M Records	❑ **Keep results of your release detection system tests for at least 1 year.** Your monitoring equipment may provide printouts that can be used as records. Unless you are recording actual release detection results at least every 30 days and maintaining records for at least 1 year, you are not doing leak detection right. ❑ **Keep all records of calibration, maintenance, and repair of your release detection equipment for at least 1 year.** ❑ **Keep all performance claims supplied by the installer, vendor, or manufacturer for at least 5 years.** These records include the certification of your leak detection equipment described above.

Statistical Inventory Reconciliation (SIR) (for tanks & piping)	
Description Of Release Detection	**SIR is typically a method in which a trained professional uses sophisticated computer software to conduct a statistical analysis of inventory, delivery, and dispensing data. You must supply the professional with data every month. There are also computer programs that enable an owner/operator to perform SIR. In either case, the result of the analysis may be pass, inconclusive, or fail.**
Have Certification For Your Release Detection Method	❑ **Make sure your SIR vendor's methodology is certified for the types of tanks, piping, and product on which you use SIR.** Most vendors have their leak detection methodology tested and certified by a third party to verify that their equipment meets specific performance requirements set by regulatory agencies. If you don't have certified performance claims, have the vendor provide them to you.
Perform These O&M Actions	❑ **Supply daily inventory data to your SIR vendor (as required) at least every 30 days.** The vendor will provide you with your leak detection results after the statistical analysis is completed. Otherwise, use your computer software at least every 30 days to test your tank for leaks. ❑ **See Section 3 of this manual if your UST system fails a leak test.** ❑ **If you receive an inconclusive result, you must work with your SIR vendor to correct the problem and document the results of the investigation.** An inconclusive result means that you have not performed leak detection for that month. If you cannot resolve the problem, treat the inconclusive result as a suspected release and refer to Section 3. ❑ **If you use an ATG system to gather data for the SIR vendor or your software, periodically have a qualified UST contractor, such as the vendor who installed your ATG, service all the ATG system components according to the manufacturer's service instructions.** Tank probes and other components can wear out and must be checked periodically. Many vendors recommend or require this maintenance activity at least annually. Do this according to manufacturer's instructions. See the checklist for ATG systems on page 7. ❑ **If you stick your tank to gather data for the SIR vendor or your software, make sure your stick can measure to one-eighth of an inch and can measure the level of product over the full range of the tank's height.** You should check your measuring stick periodically to make sure you can read the markings and numbers and that the bottom of the stick is not worn. ❑ **Make sure employees who run, monitor, or maintain the release detection system know exactly what they have to do and to whom to report problems.** Develop and maintain regular training programs for all employees.
Keep These O&M Records	❑ **Keep results of your SIR tests for at least 1 year.** Unless you are keeping records of the 30-day release detection results and maintaining those records for at least 1 year, you are not doing leak detection right. ❑ **Keep all vendor performance claims for at least 5 years.** This includes the certification of the SIR method discussed above. ❑ **If you use an ATG system, keep all records of calibration, maintenance, and repair of your release detection equipment for at least 1 year.** ❑ **Keep the records of investigations conducted as a result of any monthly monitoring conclusion of inconclusive or fail for at least 1 year.** This may include the results of a tightness test performed during the investigation or a re-evaluation based on corrected delivery or dispenser data.

Vapor Monitoring (for tanks & piping)	
Description Of Release Detection	**Vapor monitoring measures product vapors in the soil at the UST site to check for a leak. A site assessment must determine the number and placement of monitoring wells that make sure a release is detected. NOTE: vapor monitors will not work well with substances that do not easily vaporize (such as diesel fuel).**
Have Certification For Your Release Detection Method	❑ **Make sure your vapor monitoring equipment is certified for the types of stored contents on which the release detection system is used.** Most manufacturers have their leak detection devices tested and certified by a third party to verify that their equipment meets specific performance requirements set by regulatory agencies. If you don't have certified performance claims, have the manufacturer provide them to you.
Perform These O&M Actions	❑ **Use your release detection system to test for leaks at least every 30 days.** Testing more often than monthly can catch leaks sooner and reduce cleanup costs and problems. **Be sure you check all of your vapor monitoring wells.** ❑ **See Section 3 of this manual if your UST system fails a leak test.** ❑ **Frequently test your release detection system according to the manufacturer's instructions to make sure it is working properly.** Don't assume that your release detection system is working and never needs checking. Some electronic vapor monitoring systems have a test or self-diagnosis mode. If you have components (such as monitoring equipment, probes or sensors) for your vapor monitoring system, read your manual and test your equipment to see if it is working properly. ❑ **Periodically have a qualified UST contractor, such as the vendor who installed your release detection system, service all the system components according to the manufacturer's service instructions.** Probes and other components can wear out and must be checked periodically. Many vendors recommend or require this maintenance activity at least annually. ❑ **Keep your vapor monitoring wells clearly marked and secured.** ❑ **Check your vapor monitoring system owner's manual often to answer questions and to make sure you know the system's operation and maintenance procedures.** Call the system's vendor or manufacturer for a copy of the owner's manual if you don't have one. ❑ **Make sure employees who run, monitor, or maintain the release detection system know exactly what they have to do and to whom to report problems.** Develop and maintain regular training programs for all employees.
Keep These O&M Records	❑ **Keep results of your release detection system tests for at least 1 year.** Your monitoring equipment may provide printouts that can be used as records. Unless you are recording actual release detection results at least every 30 days and maintaining records for at least 1 year, you are not doing leak detection right. ❑ **Keep all records of calibration, maintenance, and repair of your release detection equipment for at least 1 year.** ❑ **Keep all performance claims supplied by the installer, vendor, or manufacturer for at least 5 years.** These records include the certification of your leak detection equipment described above.

Groundwater Monitoring (for tanks & piping)	
Description Of Release Detection	**Groundwater monitoring looks for the presence of liquid product floating on the groundwater at the UST site. A site assessment must determine the number and placement of monitoring wells that make sure a release is detected. NOTE: this method cannot be used at sites where groundwater is more than 20 feet below the surface.**
Have Certification For Your Release Detection Method	❑ **Make sure any automated groundwater monitoring equipment is certified for the types of stored contents on which the release detection system is used.** Most manufacturers have their leak detection devices tested and certified by a third party to verify that their equipment meets specific performance requirements set by regulatory agencies. If you don't have certified performance claims, have the manufacturer provide them to you. (Manual devices such as bailers are not generally certified.)
Perform These O&M Actions	❑ **Use your release detection system to test for leaks at least every 30 days.** Testing more often than monthly can catch leaks sooner and reduce cleanup costs and problems. **Be sure you check all of your groundwater monitoring wells.** ❑ **See Section 3 of this manual if your UST system fails a leak test.** ❑ **Frequently test your automated release detection system according to the manufacturer's instructions to make sure it is working properly.** Don't assume that your release detection system is working and never needs checking. Some electronic groundwater monitoring systems have a test or self-diagnosis mode. If you have.components (such as monitoring equipment, probes or sensors) for your groundwater monitoring system, read your manual and test your equipment to see if it is working properly. Manual devices should be periodically checked to make sure they are working properly. ❑ **Periodically have a qualified UST contractor, such as the vendor who installed your release detection system, service all the system components according to the manufacturer's service instructions.** Probes and other components can wear out and must be checked periodically. Many vendors recommend or require this maintenance activity at least annually. ❑ **Keep your groundwater monitoring wells clearly marked and secured.** ❑ **Check your groundwater monitoring system owner's manual often to answer questions and to make sure you know the system's operation and maintenance procedures.** Call the system's vendor or manufacturer for a copy of the owner's manual if you don't have one. ❑ **Make sure employees who run, monitor, or maintain the release detection system know exactly what they have to do and to whom to report problems.** Develop and maintain regular training programs for all employees.
Keep These O&M Records	❑ **Keep results of your release detection system tests for at least 1 year.** Your monitoring equipment may provide printouts that can be used as records. Unless you are recording actual release detection results at least every 30 days and maintaining records for at least 1 year, you are not doing leak detection right. ❑ **Keep all records of calibration, maintenance, and repair of your release detection equipment for at least 1 year.** ❑ **Keep all performance claims supplied by the installer, vendor, or manufacturer for at least 5 years.** These records include the certification of your leak detection equipment described above.

Inventory Control And Tank Tightness Testing (for tanks only)	
Description Of Release Detection	**This temporary method combines monthly inventory control with periodic tank tightness testing. Inventory control involves taking measurements of tank contents and recording the amount of product pumped each operating day, measuring and recording tank deliveries, and reconciling all this data at least once a month. This combined method also includes tightness testing, a sophisticated test performed by trained professionals.** ***NOTE: This combination method can only be used temporarily for up to 10 years after installing a new UST or for up to 10 years after your tank meets the corrosion protection requirements.***
Have Certification For Your Release Detection Method	❑ **Make sure your tank tightness testing method is certified for the types of tanks and stored contents on which the tightness test is used.** Most tightness test methods are certified by a third party to verify that they meet specific performance requirements set by regulatory agencies. If you don't have certified performance claims, have the tightness tester provide them to you.
Perform These O&M Actions	❑ **Take inventory readings and record the numbers at least each day that product is added to or taken out of the tank.** You may want to use the Daily Inventory Worksheet provided for you on the next page. ❑ **Reconcile the fuel deliveries with delivery receipts by taking inventory readings before and after each delivery.** Record these readings on a Daily Inventory Worksheet (see next page). ❑ **Reconcile all your data at least every 30 days.** Use a Monthly Inventory Record (see page 14 for an example). ❑ **Have a tank tightness test conducted at least every 5 years. This testing needs to be conducted by a professional trained in performing tank tightness testing.** ❑ **See Section 3 of this manual if your tank fails a tightness test or if fails two consecutive months of inventory control.** ❑ **Ensure that your measuring stick can measure to the nearest one-eighth inch and can measure the level of product over the full range of the tank's height.** You should check your measuring stick periodically to make sure that you can read the markings and numbers and that the bottom of the stick is not worn. ❑ **Ensure that your product dispenser is calibrated according to local standards or to an accuracy of 6 cubic inches for every 5 gallons of product withdrawn.** ❑ **Measure the water in your tank to the nearest one-eighth inch at least once a month and record the results on the reconciliation sheet.** You can use a paste that changes color when it comes into contact with water. ❑ **Make sure employees who run, monitor, or maintain the release detection system know exactly what they have to do and to whom to report problems.** Develop and maintain regular training programs for all employees.
Keep These O&M Records	❑ **Keep results of your release detection system tests for at least 1 year.** Your monitoring equipment may provide printouts that can be used as records. Unless you are recording actual release detection results at least every 30 days and maintaining records for at least 1 year, you are not doing leak detection right. ❑ **Keep the results of your most recent tightness test.** ❑ **Keep all certification and performance claims for tank tightness test performed at your UST site for at least 5 years.**

Daily Inventory Worksheet

Facility Name: _____

Your Name: _____

Date: _____

Tank Identification					
Type Of Fuel					
Tank Size In Gallons					
End Stick Inches					
Amount Pumped	↓	↓	↓	↓	↓
Totalizer Reading					
Totalizer Reading					
Totalizer Reading					
Totalizer Reading					
Totalizer Reading					
Totalizer Reading					
Totalizer Reading					
Totalizer Reading					
Today's Sum Of Totalizers					
Previous Day's Sum Of Totalizers					
Amount Pumped Today					
Delivery Record	↓	↓	↓	↓	↓
Inches of Fuel Before Delivery					
Gallons of Fuel Before Delivery (from tank chart)					
Inches of Fuel After Delivery					
Gallons of Fuel After Delivery (from tank chart)					
Gallons Delivered (Stick) [Gallons After - Gallons Before]					
Gross Gallons Delivered (Receipt)					

Monthly Inventory Record

Month/Year :_____/_____

Tank Identification & Type Of Fuel:_____

Facility Name:_____

Date Of Water Check: _____ Level Of Water (Inches):_____

Date	Start Stick Inventory (Gallons)	Gallons Delivered	Gallons Pumped	Book Inventory (Gallons)	End Stick Inventory (Inches)	End Stick Inventory (Gallons)	Daily Over (+) Or Short (-) [End - Book]	Initials
1	(+)	(-)	(=)					
2	(+)	(-)	(=)					
3	(+)	(-)	(=)					
4	(+)	(-)	(=)					
5	(+)	(-)	(=)					
6	(+)	(-)	(=)					
7	(+)	(-)	(=)					
8	(+)	(-)	(=)					
9	(+)	(-)	(=)					
7	(+)	(-)	(=)					
8	(+)	(-)	(=)					
9	(+)	(-)	(=)					
10	(+)	(-)	(=)					
11	(+)	(-)	(=)					
12	(+)	(-)	(=)					
13	(+)	(-)	(=)					
14	(+)	(-)	(=)					
15	(+)	(-)	(=)					
16	(+)	(-)	(=)					
17	(+)	(-)	(=)					
18	(+)	(-)	(=)					
19	(+)	(-)	(=)					
20	(+)	(-)	(=)					
21	(+)	(-)	(=)					
22	(+)	(-)	(=)					
23	(+)	(-)	(=)					
24	(+)	(-)	(=)					
25	(+)	(-)	(=)					
26	(+)	(-)	(=)					
27	(+)	(-)	(=)					
28	(+)	(-)	(=)					
29	(+)	(-)	(=)					
30	(+)	(-)	(=)					
31	(+)	(-)	(=)					

Total Gallons Pumped > _____ **Total Gallons Over Or Short >** _____

Leak Check:
Drop the last two digits from the **Total Gallons Pumped** number and enter here: _____ + 130 =

Compare these numbers

_____ gallons

Is the total gallons over or short **larger** than leak check result? **Yes** **No** (circle one)

If your answer is Yes for 2 months in a row, **notify the regulatory agency** as soon as possible.

Keep This Piece Of Paper On File For At Least 1 Year

Manual Tank Gauging (for tanks 1,000 gallons or less only)	
Description Of Release Detection	**<u>This method may be used only for tanks of 1,000 gallons or less capacity</u> meeting certain requirements. These requirements (tank size, tank dimension, and test time) are found in the manual tank gauging record on the next page. Manual tank gauging involves taking your tank out of service for the testing period (at least 36 hours) each week, during which time the contents of the tank are measured twice at the beginning and twice at the end of the test period. The measurements are then compared to weekly and monthly standards to determine if the tank is tight.**
Have Certification For Your Release Detection Method	**None required.**
Perform These O&M Actions	❑ **Once a week, record two inventory readings at the beginning of the test, allow the tank to sit undisturbed for the time specified in the Manual Tank Gauging Record on the next page, and record two inventory readings at the end of the test (use any form comparable to the one on the following page).** ❑ **Reconcile the numbers weekly and record them on a Manual Tank Gauging Record (see the next page).** ❑ **See Section 3 of this manual if your tank fails the weekly standard.** ❑ **At the end of 4 weeks, reconcile your records for the monthly standard and record the result on a Manual Tank Gauging Record (see the next page).** ❑ **See Section 3 of this manual if your tank fails the monthly standard.** ❑ **Ensure that your measuring stick can measure to the nearest one-eighth inch and can measure the level of product over the full range of the tank's height.** You should check your measuring stick periodically to make sure that you can read the markings and numbers and that the bottom of the stick is not worn. ❑ **Make sure employees who run, monitor, or maintain the release detection system know exactly what they have to do and to whom to report problems.** Develop and maintain regular training programs for all employees.
Keep These O&M Records	❑ **Keep your manual tank gauging records for at least 1 year.** Unless you are recording actual release detection results weekly and at least every 30 days and maintaining records for at least 1 year, you are not doing leak detection right.

Manual Tank Gauging Record

Month _____ Year _____
Tank Identification: _____
Person Completing Form: _____
Facility Name: _____

Circle your tank size, test duration, and weekly/monthly standards in the table below:

Tank Size	Minimum Duration Of Test	Weekly Standard (1 test)	Monthly Standard (4-test average)
up to 550 gallons	36 hours	10 gallons	5 gallons
551-1,000 gallons (when tank diameter is 64")	44 hours	9 gallons	4 gallons
551-1,000 gallons (when tank diameter is 48")	58 hours	12 gallons	6 gallons
551-1,000 gallons (also requires periodic tank tightness testing)	36 hours	13 gallons	7 gallons
1,001-2,000 gallons (also requires periodic tank tightness testing)	36 hours	26 gallons	13 gallons

Compare your weekly readings and the monthly average of the 4 weekly readings with the standards shown in the table on the left.

If the calculated change exceeds the weekly standard, the UST may be leaking. Also, the monthly average of the 4 weekly test results must be compared to the monthly standard in the same way.

If either the weekly or monthly standards have been exceeded, the UST may be leaking. As soon as possible, call your implementing agency to report the suspected leak and get further instructions.

Start Test (month, day, and time)	First Initial Stick Reading	Second Initial Stick Reading	Average Initial Reading	Initial Gallons (convert inches to gallons) [a]	End Test (month, day, and time)	First End Stick Reading	Second End Stick Reading	Average End Reading	End Gallons (convert inches to gallons) [b]	Change In Tank Volume In Gallons + or (—) [a—b]	Tank Passes Test (circle Yes or No)
Date: Time: AM/PM					Date: Time: AM/PM						Y N
Date: Time: AM/PM					Date: Time: AM/PM						Y N
Date: Time: AM/PM					Date: Time: AM/PM						Y N
Date: Time: AM/PM					Date: Time: AM/PM						Y N
									To see how close you are to the monthly standard, divide the sum of the 4 weekly readings by 4 and enter result here >		Y N

Keep This Piece Of Paper On File For At Least 1 Year

Manual Tank Gauging And Tank Tightness Testing (for tanks 2,000 gallons or less only)	
Description Of Release Detection	**This temporary method combines manual tank gauging with periodic tank tightness testing. <u>It may be used only for tanks of 2,000 gallons or less capacity.</u> Manual tank gauging involves taking your tank out of service for the testing period (at least 36 hours) each week, during which the contents of the tank are measured twice at the beginning and twice at the end of the test period. The measurements are then compared to weekly and monthly standards to determine if the tank is tight. This combined method also includes tightness testing, a sophisticated test performed by trained professionals.** ***NOTE: This combination method can only be used temporarily for up to ten years after installing a new UST or for up to 10 years after your tank meets the corrosion protection requirements.***
Have Certification For Your Release Detection Method	❑ **Make sure your tank tightness testing is certified for the types of tanks and stored contents on which the tightness test is used.** Most tightness test methods are certified by a third party to verify that they meet specific performance requirements set by regulatory agencies. If you don't have certified performance claims, have the tightness tester provide them to you.
Perform These O&M Actions	❑ **Once a week, record two inventory readings at the beginning of the test, allow the tank to sit undisturbed for the time specified in the Manual Tank Gauging Record on page 16, and record two inventory readings at the end of the test (use any form comparable to the one on page 16).** ❑ **Reconcile the numbers weekly and record them on a Manual Tank Gauging Record (see page 16).** ❑ **See Section 3 of this manual if your tank fails the weekly standard.** ❑ **At the end of 4 weeks, reconcile your records for the monthly standard and record the result on a Manual Tank Gauging Record (see page 16).** ❑ **See Section 3 of this manual if your tank fails the monthly standard.** ❑ **Conduct a tank tightness test at least every 5 years.** This testing needs to be conducted by a professional trained in performing tank tightness testing. ❑ **See Section 3 of this manual if your tank fails the tightness test.** ❑ **Ensure that your measuring stick can measure to the nearest one-eighth inch and can measure the level of product over the full range of the tank's height.** You should check your measuring stick periodically to make sure that you can read the markings and numbers and that the bottom of the stick is not worn. ❑ **Make sure employees who run, monitor, or maintain the release detection system know exactly what they have to do and to whom to report problems.** Develop and maintain regular training programs for all employees.
Keep These O&M Records	❑ **Keep your manual tank gauging records for at least 1 year.** Unless you are recording actual release detection results at least weekly and every 30 days and maintaining records for at least 1 year, you are not doing leak detection right. ❑ **Keep the results of your most recent tightness test.** ❑ **Keep all certification and performance claims for tank tightness test performed at your UST site for at least 5 years.**

Automatic Line Leak Detection (for pressurized piping only)	
Description Of Release Detection	**Automatic line leak detectors (LLDs) are designed to detect a catastrophic release from pressurized piping. Automatic LLDs must be designed to detect a leak at least as small as 3 gallons per hour at a line pressure of 10 psi within 1 hour. When a leak is detected, automatic LLDs must shut off the product flow, restrict the product flow, or trigger an audible or visual alarm. NOTE: Mechanical automatic LLDs need to be installed and operated as close as possible to the tank (LLDs are designed to detect a leak, restrict flow, etc. only between the detector and the dispenser).**
Have Certification For Your Release Detection Method	❑ **Make sure your release detection equipment is certified for the types of piping and stored contents on which the release detection system is used.** Most manufacturers have their leak detection devices tested and certified by a third party to verify that their equipment meets specific performance requirements set by regulatory agencies. If you don't have certified performance claims, have the manufacturer provide them to you.
Perform These O&M Actions	❑ **Frequently test your automatic LLDs according to the manufacturer's instructions to make sure it is working properly.** Don't assume that your release detection system is working and never needs checking. Some monitoring systems have a test or self-diagnosis mode. ❑ **Periodically have a qualified UST contractor, such as the vendor who installed your release detection system, service all the system components according to the manufacturers' service instructions.** Components can wear out and must be checked periodically. Many vendors recommend or require this maintenance activity at least annually. ❑ **See Section 3 of this manual if your LLD detects a leak.** ❑ **Make sure employees who run, monitor, or maintain the release detection system know exactly what they have to do and to whom to report problems.** Develop and maintain regular training programs for all employees.
Keep These O&M Records	❑ **For at least a year, keep the annual test that demonstrates that the LLD is functioning properly.** ❑ **If used for monthly monitoring, keep results of your release detection system tests for at least 1 year.** Your monitoring equipment system may provide printouts that can be used as records. Unless you are recording actual release detection results at least every 30 days and maintaining records for at least 1 year, you are not doing leak detection right. ❑ **Keep all records of calibration, maintenance, and repair of your release detection equipment for at least 1 year.** ❑ **Keep all performance claims supplied by the installer, vendor, or manufacturer for at least 5 years.** These records include the certification of your leak detection equipment described above.

Line Tightness Testing (for piping only)	
Description Of Release Detection	**This method uses a periodic line tightness test to determine if your piping is leaking. Tightness testing can be performed by either a trained professional or by using a permanently installed electronic system (sometimes connected to an automatic tank gauging system).**
Have Certification For Your Release Detection Method	❑ **Make sure your line tightness testing or permanently installed electronic system is certified for the types of piping and stored contents on which the release detection system is used.** Most tightness test methods and release detection equipment have been tested and certified by a third party to verify that the equipment or services meet specific performance requirements set by regulatory agencies. If you don't have certified performance claims, have the tightness tester or equipment manufacturer provide them to you.
Perform These O&M Actions	❑ **If line tightness testing is used for pressurized piping, the test must be conducted at least annually.** ❑ **If line tightness testing is used for suction piping, the test must be conducted at least every three years.** Safe suction piping as described at the bottom of page 3 may not need release detection testing. ❑ **This tightness testing must be conducted by a professional trained in performing line tightness testing or by using a permanently installed electronic system.** ❑ **See Section 3 of this manual if your piping fails the tightness test or if the electronic system indicates a leak.** ❑ **Periodically have a qualified UST contractor, such as the vendor who installed your release detection system, service all the system components according to the manufacturers' service instructions.** Components can wear out and must be checked periodically. Many vendors recommend or require this maintenance activity at least annually. ❑ **Make sure employees who run, monitor, or maintain the release detection system know exactly what they have to do and to whom to report problems.** Develop and maintain regular training programs for all employees.
Keep These O&M Records	❑ **Keep results of your release detection system tests for at least 1 year.** Your monitoring equipment may provide printouts that can be used as records. Unless you are recording actual release detection results at least every 30 days and maintaining records for at least 1 year, you are not doing leak detection right. ❑ **If you use a permanently installed electronic system, keep all records of calibration, maintenance, and repair of your equipment for at least 1 year.** ❑ **Keep all performance claims supplied by the installer, vendor, or manufacturer for at least 5 years.** These records include the certification of your leak detection equipment described above.

30-Day Release Detection Monitoring Record

(May be used for monitoring wells, interstitial monitoring, and automatic tank gauging)

Release Detection Method: _____

Facility Name: _____

Date	Your Name	UST System (Tank & Piping) (Enter N for No Release Detected or Y for a Suspected Or Confirmed Release)			
		UST #	UST #	UST #	UST #

Keep This Piece Of Paper And Any Associated Printouts On File For At Least 1 Year From The Date Of The Last Entry

Section 3 — Suspected Or Confirmed Releases

You need to be fully prepared to respond to releases **before** they may occur. You need to know what to do when release detection methods indicate a suspected or confirmed release. Be ready to take the following steps, as appropriate.

Stop The Release

- Take immediate action to prevent the release of more product.
- Turn off the power to the dispenser and bag the nozzle.
- Make sure you know where your emergency shutoff switch is located.
- Empty the tank, if necessary, without further contaminating the site. You may need the assistance of your supplier or distributor.

Contain The Release

Contain, absorb, and clean up any surface spills or overfills. You should keep enough absorbent material at your facility to contain a spill or overfill of petroleum products until emergency response personnel can respond to the incident. The suggested supplies include, but are not limited to, the following:

- Containment devices, such as containment booms, dikes, and pillows.
- Absorbent material, such as kitty litter, chopped corn cob, sand, and sawdust. (Be sure you properly dispose of used absorbent materials.)
- Mats or other material capable of keeping spill or overfill out of nearby storm drains.
- Spark-free flash light.
- Spark-free shovel.
- Buckets.
- Reels of caution tape, traffic cones, and warning signs.
- Personal protective gear.

Also, identify any fire, explosion, or vapor hazards and take action to neutralize these hazards.

Call For Help

Contact your local fire or emergency response authority. Make sure you have these crucial telephone numbers prominently posted where you and your employees can easily see them. See the next page for a form you can copy and post.

Report To Authorities

If you observe any of the following, contact your state's underground storage tank regulatory authority to report a suspected or confirmed release as soon as possible (within 24 hours):

- Any spill or overfill of petroleum that exceeds 25 gallons or that causes a sheen on nearby surface water. (Spills and overfills under 25 gallons that are contained and immediately cleaned up do not have to be reported. If they can't be quickly cleaned up they must be reported to your regulatory agency.)

- Any released regulated substances at the UST site or in the surrounding area — such as the presence of liquid petroleum; soil contamination; surface water or groundwater contamination; or petroleum vapors in sewer, basement, or utility lines.

- Any unusual operating conditions you observe — such as erratic behavior of the dispenser, a sudden loss of product, or an unexplained presence of water in the tank. However, you are not required to report if:

    - The system equipment is found to be defective, but not leaking, and is immediately repaired or replaced.

- Results from your release detection system indicate a suspected release. However, you are not required to report if:

    - The monitoring device is found to be defective and is immediately repaired, recalibrated, or replaced and further monitoring does not confirm the initial suspected release, or

    - In the case of inventory control, a second month of data does not confirm the initial result.

The next page contains a blank list for names and phone numbers of important contacts. Fill out this information for your facility so that you will know who to call in case of an emergency. Remove this page from the manual, copy it, fill it out, and post it in a prominent place at your facility.

Copy the next page and update it often. Make sure everyone at your UST facility is familiar with this list of contacts.

Release Response
Important Contact Information

	Contact Name	Phone #
State UST Agency:		
Local UST Agency:		
Fire Department:		
Ambulance:		
Police Department:		
Repair Contractor:		
Other Contacts:		

✔ Release Response Checklist

- ❑ **Stop the release:** Take immediate action to prevent the release of more product. Turn off the power to the dispenser and bag the nozzle. Make sure you know where your emergency shutoff switch is located. Empty the tank, if necessary, without further contaminating the site.
- ❑ **Contain the release:** Contain, absorb, and clean up any surface releases. Identify any fire, explosion, or vapor hazards and take action to neutralize these hazards.
- ❑ **Call for help and to report suspected or confirmed releases:** Contact your local fire or emergency response authority. Contact your state's underground storage tank regulatory authority within 24 hours.

Section 4 — Spill And Overfill Protection

The purpose of spill and overfill protection equipment is to eliminate the potential for a release during fuel deliveries. The equipment must be in working order and used properly to provide adequate protection from spills and overfills.

Even the best spill and overfill protection equipment can become faulty over time if not properly operated and maintained.

Only one gallon of fuel leaking each week from a poorly maintained spill bucket can result in up to 195 tons of contaminated soil in a year.

Improper maintenance of the spill bucket at the UST site pictured below contributed to significant contamination of soil and groundwater.

What's The Difference?

Spill Protection:
A spill bucket is installed at the fill pipe to contain the drips and spills of fuel that can occur when the delivery hose is uncoupled from the fill pipe after delivery.

Overfill Protection:
Equipment is installed on the UST that is designed to stop product flow, reduce product flow, or alert the delivery person during delivery **before** the tank becomes full and begins releasing petroleum into the environment.

The following pages in this section focus on how you can routinely make sure your spill and overfill equipment is operating effectively.



What Are The Basics Of Spill Protection?

Your USTs must have catchment basins — also called spill buckets — installed at the fill pipe to contain spills that may occur as a result of fuel deliveries.

- The spill bucket is designed to temporarily contain product spills that might occur during fuel delivery. To contain a spill, the spill bucket must be liquid tight.
- **The spill bucket is not designed to contain fuel for long periods of time.** After each delivery, empty and dispose of contents properly.
- Spill buckets need to be large enough to contain any fuel that may spill when the delivery hose is uncoupled from the fill pipe. Spill buckets typically range in size from 5 gallons to 25 gallons.
- If you use a checklist for correct delivery practices (see page 33), spills should be eliminated or reduced to very small volumes that your spill bucket can easily handle.

If your UST ***never*** receives deliveries of more than 25 gallons at a time, the UST does not need to meet the spill protection requirements. Many used oil tanks fall into this category. Even though these USTs are not required to have spill protection, you should consider using spill protection as part of good UST system management.

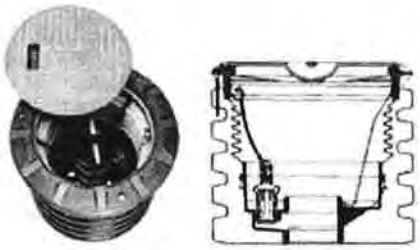

Examples Of Spill Buckets

How Do You Maintain Your Spill Bucket?

The checklist below provides information on properly maintaining your spill bucket.

✔ Spill Bucket O&M Checklist

- ❑ **Keep your spill bucket empty of liquids.**
  Some spill buckets are equipped with a valve that allows you to drain accumulated fuel into your UST. Others may be equipped with a manual pump so fuel can be put into your UST by pumping it through the fill pipe. However, keep in mind that when you pump out or drain your spill bucket into your UST, any water and debris may also enter the UST. If a basin is not equipped with drain valve or pump, then any accumulated fuel or water must be removed manually and disposed of properly.
- ❑ **Periodically check your spill bucket to remove any debris.**
  Debris could include soil, stones, or trash.
- ❑ **Periodically check to see if your spill bucket is still liquid tight.**
  Have a qualified UST contractor inspect your spill bucket for signs of wear, cracks, or holes. Based on this inspection, the contractor may suggest a test to determine if the spill bucket is tight or needs repair or replacement.

What Are The Basics Of Overfill Protection?

Your USTs must have overfill protection installed to help prevent the overfilling of tanks.

Three types of overfill protection devices are commonly used:

- Automatic shutoff devices
- Overfill alarms
- Ball float valves

Each of these forms of overfill protection is discussed in detail on the following pages.

If your UST ***never*** receives deliveries of more than 25 gallons at a time, the UST does not need to meet the overfill protection requirements. Many used oil tanks fall into this category. Even though these USTs are not required to have overfill protection, you should consider using overfill protection as part of good UST system management.

How Can You Help The Delivery Person Avoid Overfills?

To protect your business, you must make every effort to help the delivery person avoid overfilling your UST.

Use A Checklist On Correct Filling Practices

If correct filling practices are used, you will not exceed the UST's capacity — see page 33 for a checklist on correct filling procedures. Overfills are caused when the delivery person makes a mistake, such as ignoring an overfill alarm.

Use Signs, Alert Your Delivery Person

The delivery person should know what type of overfill device is present on each tank at your facility and what action will occur if the overfill device is triggered — such as a visual and/or audible alarm or that the product flow into the tank will stop or slow significantly.

Educate and alert your delivery person by placing a clear sign near your fill pipes, in plain view of the delivery person. An example of such a sign follows on the next page.

Delivery Person — Avoid Overfills

- An **overfill alarm** is used for overfill protection at this facility.
- Do not tamper with this alarm in any attempt to defeat its purpose.
- When the tank is 90% full, the overfill alarm whistles and a red light flashes.
- **If you hear the alarm whistle or see the red light flashing,**

Stop The Delivery Immediately!

Make Sure You Order The Right Amount Of Product

Also, you need to **make sure you've ordered the right amount of product for delivery**. Order only the quantity of fuel that will fit into 90% of the tank. For example, if you have a 10,000 gallon tank with 2,000 gallons already in the tank, you would order at the most a 7,000 gallon delivery (90% of 10,000 is 9,000 gallons; subtracting the 2,000 gallons already in the tank leaves a maximum delivery of 7,000 gallons). Use the checklist formula on page 33. Do your homework right and you reduce the chance of overfills.

What Should You Do To Operate And Maintain Your Automatic Shutoff Device?

The automatic shutoff device is a mechanical device installed in line with the drop tube within the fill pipe riser. It slows down and then stops the delivery when the product has reached a certain level in the tank. It should be positioned so that the float arm is not obstructed and can move through its full range of motion.

When installed and maintained properly, the shutoff valve will shut off the flow of fuel to the UST at 95% of the tank's capacity or before the fittings at the top of the tank are exposed to fuel.

You should not use an automatic shutoff device for overfill protection if your UST receives pressurized deliveries.

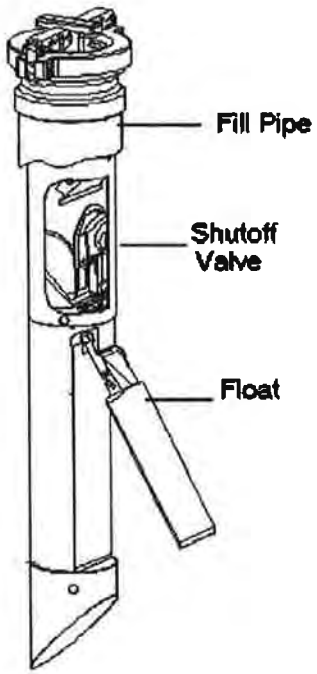

✔ Basic O&M Checklist For Automatic Shutoff Devices

- ❑ A qualified UST contractor periodically checks to make sure that the automatic shutoff device is functioning properly and that the device will shut off fuel flowing into the tank at 95% of the tank capacity or before the fittings at the top of the tank are exposed to fuel:
  - Make sure the float operates properly.
  - Make sure there are no obstructions in the fill pipe that would keep the floating mechanism from working.
- ❑ You have posted signs that the delivery person can easily see and that alert the delivery person to the overfill warning devices and alarms in use at your facility.

What Should You Do To Operate And Maintain Your Electronic Overfill Alarm?



This type of overfill device activates an audible and/or visual warning to delivery personnel when the tank is either 90% full or is within one minute of being overfilled. **The alarm *must* be located so it can be seen and/or heard from the UST delivery location.** Once the electronic overfill alarm sounds, the delivery person has approximately one minute to stop the flow of fuel to the tank.

Electronic overfill alarm devices have no mechanism to shut off or restrict flow. Therefore, the fuel remaining in the delivery hose after the delivery has been stopped will flow into the tank as long as the tank is not yet full.

✔ Basic O&M Checklist For Overfill Alarms

- ❑ A qualified UST contractor periodically checks your electronic overfill alarm to make sure that it is functioning properly and that the alarm activates when the fuel reaches 90% of the tank capacity or is within one minute of being overfilled:
  - Ensure that the alarm can be heard and/or seen from where the tank is fueled.
  - Make sure that the electronic device and probe are operating properly.
- ❑ You have posted signs that the delivery person can easily see and that alert the delivery person to the overfill warning devices and alarms in use at your facility.

What Should You Do To Operate And Maintain Your Ball Float Valve?



The ball float valve — also called a float vent valve — is installed at the vent pipe in the tank and restricts vapor flow in an UST as the tank gets close to being full. The ball float valve should be set at a depth which will restrict vapor flow out of the vent line during delivery at 90% of the UST's capacity or 30 minutes prior to overfilling.

As the tank fills, the ball in the valve rises, restricting the flow of vapors out of the UST during delivery. The flow rate of the delivery will decrease noticeably and should alert the delivery person to stop the delivery.

For ball float valves to work properly, the top of the tank must be air tight so that vapors cannot escape from the tank. Everything from fittings to drain mechanisms on spill buckets must be tight and be able to hold the pressure created when the ball float valve engages.

You should not use a ball float valve for overfill protection if any of the following apply:

- **Your UST receives pressurized deliveries.**
- **Your UST system has suction piping.**
- **Your UST system has single point (coaxial) stage 1 vapor recovery.**

✔ Basic O&M Checklist For Ball Float Valves

❑ A qualified UST contractor periodically checks to make sure that the ball float valve is functioning properly and that it will restrict fuel flowing into the tank at 90% of the tank capacity or 30 minutes prior to overfilling:

- Ensure that the air hole is not plugged.
- Make sure the ball cage is still intact.
- Ensure the ball still moves freely in the cage.
- Make sure the ball still seals tightly on the pipe.

❑ You have posted signs that the delivery person can easily see and that alert the delivery person to the overfill warning devices and alarms in use at your facility.

✔ Spill And Overfill O&M Checklist	
Spill Bucket	❑ **Keep your spill bucket empty of liquids.** Some spill buckets are equipped with a drainage valve which allows you to drain accumulated fuel into your UST. Others can be equipped with a manual pump so fuel can be put into your UST by pumping it through the fill pipe. However, keep in mind that when you pump out or drain your spill bucket into your UST, any water and debris may also enter the UST. If a spill bucket is not equipped with a drain valve or pump, then any accumulated fuel or water must be removed manually and disposed of properly. ❑ **Periodically check your spill bucket to remove any debris.** Debris could include soil, stones, or trash. ❑ **Periodically check to see if your spill bucket is still liquid tight.** Have a qualified UST contractor inspect your spill bucket for signs of wear, cracks, or holes. Based on this inspection, the contractor may suggest a test to determine if the spill bucket is tight or needs repair or replacement.
Automatic Shutoff Devices	❑ A qualified UST contractor periodically checks to make sure that the automatic shutoff device is functioning properly and that the device will shut off fuel flowing into the tank at 95% of the tank capacity or before the fittings at the top of the tank are exposed to fuel: • Make sure the float operates properly. • Make sure that there are no obstructions in the fill pipe that would keep the floating mechanism from working. ❑ You have posted signs that the delivery person can easily see and that alert the delivery person to the overfill warning devices and alarms in use at your facility.
Overfill Alarms	❑ A qualified UST contractor periodically checks your electronic overfill alarm to make sure that it is functioning properly and that the alarm activates when the fuel reaches 90% of the tank capacity or is within one minute of being overfilled: • Ensure that the alarm can be heard and/or seen from where the tank is fueled. • Make sure that the electronic device and probe are operating properly. ❑ You have posted signs that the delivery person can easily see and that alert the delivery person to the overfill warning devices and alarms in use at your facility.
Ball Float Valves	❑ A qualified UST contractor periodically checks to make sure that the ball float valve is functioning properly and that it will restrict fuel flowing into the tank at 90% of the tank capacity or 30 minutes prior to overfilling: • Ensure that the air hole is not plugged. • Make sure the ball cage is still intact. • Ensure the ball still moves freely in the cage. • Make sure the ball still seals tightly on the pipe. ❑ You have posted signs that the delivery person can easily see and that alert the delivery person to the overfill warning devices and alarms in use at your facility.

What Are Your Responsibilities For Correct Filling Practices?

As an owner or operator you are responsible for ensuring that releases due to spilling or overfilling do not occur during fuel delivery.

As part of this responsibility, you must:

- Ensure the amount of product to be delivered will fit into the available empty space in the tank; and

- Ensure the transfer operation is monitored constantly to prevent overfilling and spilling.

One way help ensure the above requirements are met is to follow the checklist on the next page. The checklist describes activities to perform before, during, and after a fuel delivery.

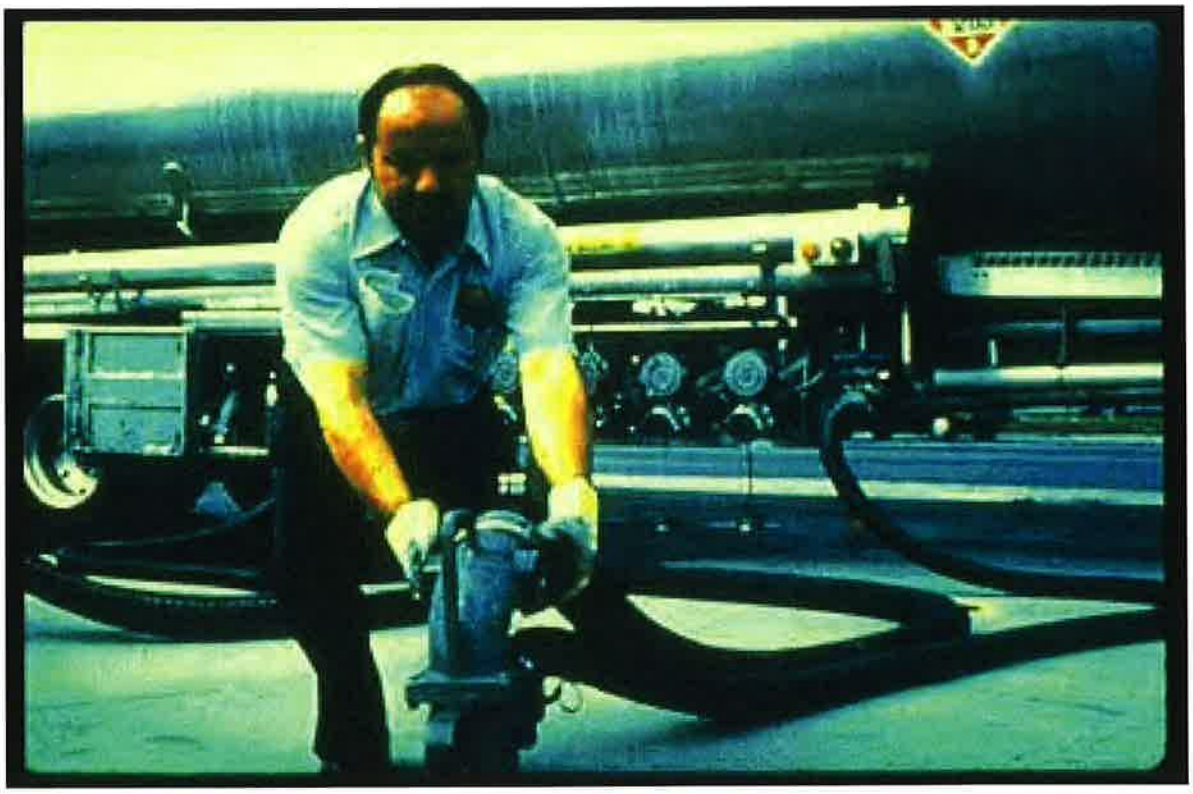

✔ Correct Filling Checklist

What To Do Before Your USTs Are Filled	❑ Post clear signs that alert delivery persons to the overfill devices and alarms in use at your facility. ❑ Make and record accurate readings for product and water in the tank before fuel delivery. ❑ Order only the quantity of fuel that will fit into 90% of the tank. **Remember, the formula for determining the maximum amount of gasoline to order is:** (Tank capacity in gallons X 90%) — Product currently in tank = Maximum amount of fuel to order **Example:** (10,000 gal X 0.9) — 2,000 gal = 7,000 gal maximum amount to order ❑ Ensure fuel delivery personnel know the type of overfill device present at the tank and what actions to perform if it activates. For example, use sample sign on page 27 of this chapter. ❑ Review and understand the spill response procedures. ❑ Verify that your spill bucket is empty, clean, and will contain spills.
What To Do While Your USTs Are Being Filled	❑ Keep fill ports locked until the fuel delivery person requests access. ❑ Have an accurate tank capacity chart available for the fuel delivery person. ❑ The fuel delivery person makes all hook-ups. The person responsible for monitoring the delivery should remain attentive and observe the entire fuel delivery, be prepared to stop the flow of fuel from the truck to the UST at any time, and respond to any unusual condition, leak, or spill which may occur during delivery. ❑ Have response supplies readily available for use in case a spill or overfill occurs (see Section 3). ❑ Provide safety barriers around the fueling zone. ❑ Make sure there is adequate lighting around the fueling zone.
What To Do After Your USTs Are Filled	❑ Following complete delivery, the fuel delivery person is responsible for disconnecting all hook-ups. ❑ Return spill response kit and safety barriers to proper storage locations. ❑ Make and record accurate readings for product and water in the tank after fuel delivery. ❑ Verify the amount of fuel received. ❑ Make sure fill ports are properly secured. ❑ Ensure the spill bucket is free of product and clean up any small spills.

Section 5 — Corrosion Protection

To prevent leaks, all parts of your UST system that are underground and routinely contain product need to be protected from corrosion. The UST system includes the tank, piping, and ancillary equipment, such as flexible connectors, fittings, and pumps. Unprotected metal UST components can deteriorate and leak when underground electrical currents act upon them.



One way to protect UST components from corrosion is to **make them with nonmetallic, noncorrodible materials**, such as USTs made of (or clad or jacketed with) fiberglass reinforced plastic (FRP) or other noncorrodible materials — as illustrated by the FRP tank on the right. Noncorrodible USTs like these do not require O&M for corrosion protection.

UST components made from metal, however, that routinely contain product and are in direct contact with the ground need corrosion protection provided by cathodic protection or (in some cases) lining the interior of the tank, as described below. These options require O&M.

Note: Metal tanks or piping installed after December 22, 1988 must have a dielectric coating (a coating that does not conduct electricity) in addition to the cathodic protection described below.

Cathodic Protection Using Sacrificial Anode Systems



Sacrificial anodes are buried and attached to UST components for corrosion protection — as illustrated on the right by an anode attached to a tank. Anodes are pieces of metal that are more electrically active than steel, and thus they suffer the destructive effects of corrosion rather than the steel they are attached to.

Cathodic Protection Using Impressed Current Systems

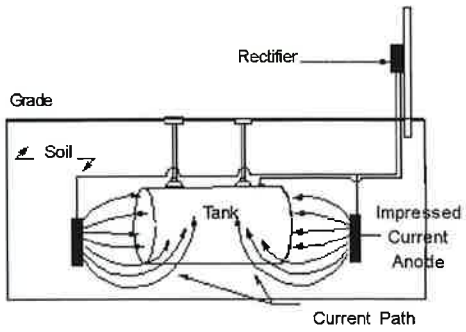

An impressed current system — as shown on the right — uses a rectifier to provide direct current through anodes to the tank or piping to achieve corrosion protection. The steel is protected because the current going to the steel overcomes the corrosion-causing current flowing away from it. **The cathodic protection rectifier must always be on and operating to protect your UST system from corrosion.**

Corrosion Protection Using Internal Lining Of The Tank



This corrosion protection option applies only to tanks installed before December 22, 1988. These older tanks can be internally lined by trained professionals to meet the corrosion protection requirements — as shown on the right, in which a professional follows industry codes to safely and effectively line a tank's interior.

It may help you to see your corrosion protection options displayed in the following table.

Corrosion Protection Choices	
Option	**Description**
Noncorrodible Material	The tank or piping is constructed of noncorrodible material.
Steel Tank Clad Or Jacketed With A Noncorrodible Material	Examples of cladding or jacket material include fiberglass and urethane. Does not apply to piping.
Coated And Cathodically Protected Steel Tanks Or Piping	Steel tank and piping is well-coated with a dielectric material and cathodically protected.
Cathodically Protected Noncoated Steel Tanks Or Piping	*This option is only for steel tanks and piping installed before December 22, 1988.* Cathodic protection is usually provided by an impressed current system.
Internal Lining Of Tanks	*This option is only for steel tanks installed before December 22, 1988.* A lining is applied to the inside of the tank. Does not apply to piping.
Combination Of Cathodically Protected Steel And Internal Lining Of Tanks	*This option is only for steel tanks installed before December 22, 1988.* Cathodic protection is usually provided by an impressed current system. Does not apply to piping.
Other Methods Used To Achieve Corrosion Protection	If you have tanks or piping that do not meet any of the descriptions above, check with your state UST agency to see if your UST system meets the requirements for corrosion protection. You also will need to ask about the operation, maintenance, and record keeping requirements applicable to this type of UST system.

Note: In addition to tanks and piping, all other metal components in direct contact with the ground that routinely hold product — such as flexible connectors, swing joints, fittings, and pumps — must also be cathodically protected.

Use the O&M checklist on the next page. Following the checklist look for record keeping forms and discussions of special corrosion protection situations.

✔ Basic O&M Checklist For Corrosion Protection

Sacrificial Anode Cathodic Protection Systems	**You need to have a periodic test conducted by a qualified corrosion tester to make sure your cathodic protection system is adequately protecting your UST system. This test needs to be conducted:** ❑ Within 6 months of installation. ❑ At least every 3 years after the previous test. ❑ Within 6 months after any repairs to your UST system. • Make sure the professional tester is qualified to perform the test and follows a standard code of practice to determine that test criteria are adequate. • If any test indicates your tanks are not adequately protected, you need to have a corrosion expert examine and fix your system. • Testing more frequently can catch problems before they become big problems. ❑ **You need to keep the results of at least the last two tests on file.** See the next page for a cathodic protection test record keeping form.
Impressed Current Cathodic Protection Systems	**You need to have a periodic test conducted by a qualified corrosion tester to make sure your cathodic protection system is adequately protecting your UST system. This test needs to be conducted:** ❑ Within 6 months of installation. ❑ At least every 3 years after the previous test. ❑ Within 6 months after any repairs to your UST system. • Make sure the professional tester is qualified to perform the test and follows a standard code of practice to determine that test criteria are adequate. • If any test indicates your tanks are not adequately protected, you need to have a corrosion expert examine and fix your system. • Testing more frequently can catch problems before they become big problems. ❑ **You need to keep the results of at least the last two tests on file.** See next page for a cathodic protection test record keeping form. ❑ **You need to inspect your rectifier at least every 60 days to make sure that it is operating within normal limits.** • This inspection involves reading and recording the voltage and amperage readouts on the rectifier. You or your employees can perform this periodic inspection. • Make sure your cathodic protection professional provides you with the rectifier's acceptable operating levels so you can compare the readings you take with an acceptable operating level. If your readings are not within acceptable levels, you must contact a cathodic protection professional to address the problem. ❑ **You need to keep records of at least the last 3 rectifier readings.** See page 39 for a 60-Day Inspection Results record keeping form. ❑ **You should have a trained professional periodically service your impressed current system.** ❑ **Never turn off your rectifier!**
Internally Lined Tanks	❑ Within 10 years after lining and at least every 5 years thereafter, the lined tank must be inspected by a trained professional and found to be structurally sound with the lining still performing according to original design specifications. Make sure the professional performing the inspection follows a standard code of practice. ❑ **Keep records of the inspection (as specified in industry standards for lining inspections).**

Record For Periodic Testing Of Cathodic Protection Systems

(for use by a qualified cathodic protection tester)

Test Date:____/____/____ Facility Name/ID:_____

Note: Provide site sketch as directed on the back of this page.

Cathodic Protection (CP) Tester Information:

Name: _____ Phone Number:_____

Address: _____

Testing must be conducted by a qualified CP tester. Indicate your qualifications as a CP tester:

Identify which of the following testing situations applies:

- ❑ Test required within 6 months of installation of CP system (installation date was __/__/__)
- ❑ Test required at least every 3 years after installation test noted above
- ❑ Test required within 6 months of any repair activity – note repair activity and date below:

Indicate which industry standard you used to determine that the cathodic protection test criteria are adequate: _____

	Cathodic Protection Test Method Used (check one)
	100 mV Cathodic Polarization Test
	-850 mV Test (Circle 1 or 2 below) 1) Polarized Potential (instant off) 2) Potential with CP Applied, IR Drop Considered **Note: All readings taken must meet the -850 mV criteria to pass**
	Other Accepted Method (please describe):

Is the cathodic protection system working properly? Yes No (circle one)

If answer is no, go to the directions at the bottom on the back of this page.

My signature below affirms that I have sufficient education and experience to be a cathodic protection tester; I am competent to perform the tests indicated above; and that the results on this form are a complete and truthful record of all testing at this location on the date shown.

CP Tester Signature: _____ Date:_____

Keep This Paper On File For At Least Six Years

Site Sketch: Provide a rough sketch of the tanks and piping, the location of each CP test, and each voltage value obtained (use space below or attach separate drawing). Voltage readings through concrete or asphalt do not provide accurate readings and are not acceptable. Perform sufficient testing to evaluate the entire UST system.

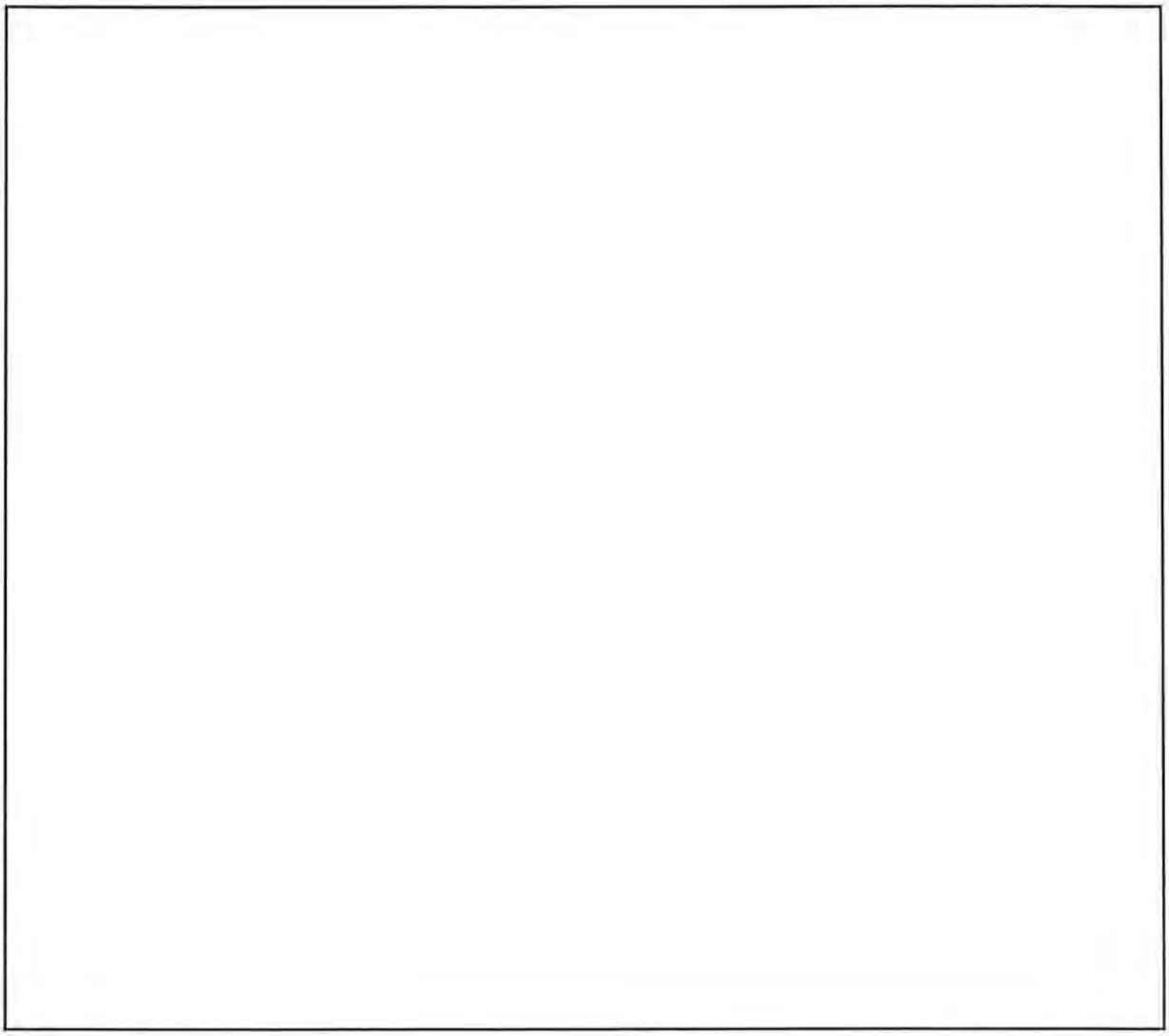

If CP system fails test, you must have a corrosion expert fix the system.

If the answer was no, indicating that your CP system is not working, you must have a ***corrosion expert*** investigate and fix the problem. A corrosion expert has additional training, skills, and certification beyond the corrosion tester who filled out the bulk of this form. A corrosion expert must be:

- Accredited/certified by NACE International (The Corrosion Society) as a corrosion specialist or cathodic protection specialist, or
- Be a registered professional engineer with certification or licensing in corrosion control.

As long as you have the UST, be sure you keep a record that clearly documents what the corrosion expert did to fix your CP system.

Keep This Paper On File For At Least Six Years

60-Day Inspection Results For Impressed Current Cathodic Protection Systems

Facility Name: _____

Amp Range Recommended: _____

Voltage Range Recommended: _____

Date	Your Name	Voltage Reading	Amp Reading	Is Your System Running Properly? (Yes/No)

- **If the rectifier voltage and/or amperage output(s) are outside the recommended operating levels, contact a cathodic protection expert to address the problem.**
- **Never turn off your rectifier.**
- **Keep this record for at least 6 months after the date of the last reading.**

Some Special Corrosion Protection Situations

What If You Have An STI-P3 Tank With A PP4 Test Station?

If you have a PP4 test station installed with an STI-P3 tank, you may perform the periodic testing of your cathodic protection system by using the meter provided to you with the PP4 test station.

- Don't forget to record the result of the reading and keep at least the last two results.
- If your test readings do not pass, you must take action to correct the problem. Call your installer and ask that the corrosion expert who designed the system examine it and correct the problem.

What If You Combine Internal Lining And Cathodic Protection?

If you chose the combination of internal lining and cathodic protection for meeting corrosion protection requirements on your UST, you may not have to meet the periodic inspection requirement for the lined tank. However, you must always meet the requirements for checking and testing your cathodic protection system as described in the basic O&M checklist for corrosion protection on page 36. The 10-year and subsequent 5-year inspections of the lined tank are not required if the integrity of the tank was ensured when cathodic protection was added. You should be able to show an inspector documentation of the passed integrity assessment.

Example 1:
If you have cathodic protection and internal lining applied to your tank at the same time, periodic inspections of the lined tank **are not** required because an integrity assessment of the tank is required prior to adding the cathodic protection and internal lining.

Example 2:
If you had cathodic protection added to a tank in 1997 that was internally lined in 1994 and the contractor did not perform an integrity assessment of the tank at the time cathodic protection was added (or you cannot show an inspector documentation of the passed integrity assessment), then periodic inspections of the lined tank **are** required because you cannot prove that the tank was structurally sound and free of corrosion holes when the cathodic protection was added. The lined tank needs to be periodically inspected because the lining may be the only barrier between your gasoline and the surrounding environment.

What If You Have A Double Walled Steel UST With Interstitial Monitoring And Cathodic Protection?

If you have a cathodically protected double walled steel tank and you use interstitial monitoring capable of detecting a breach in both the inner and outer wall or ingress of product and water as your method of leak detection, then you should monitor your cathodic protection system within six months of installation and following any activity that could affect the CP system.

If you are using impressed current cathodic protection, you still need to perform the 60-day checks of your rectifier to make sure it is operating within normal limits.

- Testing the cathodic protection system more frequently may help catch problems quicker.
- If your test readings do not pass, you must take action to correct the problem. Call your installer and ask that the corrosion expert who designed the system examine it and correct the problem.
- Don't forget to keep at least the last two results of your cathodic protection testing.

Do All UST Sites Need Corrosion Protection?

A corrosion expert may be able to determine the soil at an UST site is not conducive to corrosion and will not cause the tank or piping to have a release during its operating life. If so, you must keep a record of that corrosion expert's analysis for the life of the tank or piping to demonstrate why your UST has no corrosion protection.

Section 6 — Frequent Walk-Through Inspections

You should conduct basic walk-through inspections of your facility **at least monthly** to make sure your essential equipment is working properly and you have release response supplies on hand.

These inspections would not be as thorough as following the O&M checklists presented earlier in this booklet, but they can provide a quick overview you can do more often than the longer checklists. You might think of this level of inspection as similar to automobile dashboard indicators that provide us with status warnings like low battery.

When you perform your walk-through inspection you should quickly check at least the following:

- **Release Detection System:** Is your release detection equipment working properly? For example, did you run a quick self-test of the ATG to verify it's working properly? Or did you check your manual dip stick to make sure it's not warped or worn?
- **Spill Buckets:** Are spill buckets clean, empty, and in good condition?
- **Overfill Alarm (if you have one):** Is your overfill alarm working and easily seen or heard?
- **Impressed Current Cathodic Protection System (if you have one):** Is your cathodic protection system turned on? Are you checking your rectifier at least every 60 days?
- **Fill And Monitoring Ports:** Are covers and caps tightly sealed and locked?
- **Spill And Overfill Response Supplies:** Do you have the appropriate supplies for cleaning up a spill or overfill?

In addition, good UST site management should also include the following quick visual checks:

- **Dispenser Hoses, Nozzles, And Breakaways:** Are they in good condition and working properly?
- **Dispenser And Dispenser Sumps:** Any signs of leaking? Are the sumps clean and empty?
- **Piping Sumps:** Any signs of leaking? Are the sumps clean and empty?

If you find any problems during the inspection, you or your UST contractor need to take action quickly to resolve these problems and avoid serious releases.

A frequent walk-through checklist is provided for your use on the next page.

✔ Frequent Walk-Through Inspection Checklist						
Date Of Inspection						
Release Detection System: Inspect for proper operation.						
Spill Buckets: Ensure spill buckets are clean and empty.						
Overfill Alarm: Inspect for proper operation. Can a delivery person hear or see the alarm when it alarms?						
Impressed Current System: Inspect for proper operation.						
Fill And Monitoring Ports: Inspect all fill/monitoring ports and other access points to make sure that the covers and caps are tightly sealed and locked.						
Spill And Overfill Response Supplies: Inventory and inspect the emergency spill response supplies. If the supplies are low, restock the supplies. Inspect supplies for deterioration and improper functioning.						
Dispenser Hoses, Nozzles, And Breakaways: Inspect for loose fittings, deterioration, obvious signs of leakage, and improper functioning.						
Dispenser And Dispenser Sumps: Open each dispenser and inspect all visible piping, fittings, and couplings for any signs of leakage. If any water or product is present, remove it and dispose of it properly. Remove any debris from the sump.						
Piping Sumps: Inspect all visible piping, fittings, and couplings for any signs of leakage. If any water or product is present, remove it and dispose of it properly. Remove any debris from the sump.						

Your initials in each box below the date of the inspection indicate the device/system was inspected and OK on that date.

Section 7 — For More Information

This section identifies UST program contacts and other resources to help answer your questions and provide you with information about good UST management.

Internet Resources

Government Links

Directory of State UST Program Contacts: http://www.epa.gov/oust/states/statcon1.htm
Directory of State UST Program Internet Sites: http://www.epa.gov/oust/states/stateurl.htm
U.S. Environmental Protection Agency's Office of Underground Storage Tanks Home Page: http://www.epa.gov/oust. To go directly to the compliance assistance section of the Home page go to: http://www.epa.gov/swerust1/cmplastc/index.htm
Tanks Subcommittee of the Association of State and Territorial Solid Waste Management Officials (ASTSWMO): http://www.astswmo.org/programs_tanks.htm
New England Interstate Water Pollution Control Commission (NEIWPCC): http://www.neiwpcc.org

Professional And Trade Association Links

American Petroleum Institute (API): http://www.api.org
American Society of Testing and Materials (ASTM): http://www.astm.org
Fiberglass Tank and Pipe Institute (FTPI): http://www.fiberglasstankandpipe.com
NACE International - The Corrosion Society: http://www.nace.org
National Fire Protection Association (NFPA) : http://www.nfpa.org
Petroleum Equipment Institute (PEI): http://www.pei.org
Steel Tank Institute (STI): http://www.steeltank.com
Underwriters Laboratories (UL): http://www.ul.com

Free Informative Publications Available

The publications listed below are free and available from the U.S. Environmental Protection Agency (EPA). You can access these publications in the following ways.

Go to EPA's web site at http://www.epa.gov/oust/pubs/index.htm to order, read, or download documents online.
Write and ask for **free** publications by addressing your request to EPA's publication distributor: National Service Center for Environmental Publications (NSCEP), Box 42419, Cincinnati, OH 45242.
For **free** copies, call EPA's publication distributor's **toll-free** number at (800) 490-9198. Or go to http://www.epa.gov/nscep/ordering.htm for additional ordering methods.

Catalog Of EPA Materials On USTs
An annotated list of UST materials, including ordering information. Most of the leaflets, booklets, videos, and software items listed provide UST owners and operators with information to help them comply with federal UST requirements (32 pages).

Musts For USTs: A Summary Of Federal Regulations For Underground Storage Tank Systems
Plain language summary of federal UST requirements for installation, release detection, spill, overfill, and corrosion protection, corrective action, closure, reporting and recordkeeping. Updated & revised 1995 (36 pages).

Model Underground Storage Tank Environmental Results Program Workbook
Workbook, which states can modify to reflect their laws, helps improve owner and operator compliance with UST regulations. Contains general information about ERP; instructions on how to use the workbook; regulatory requirements, best management practices, and compliance checklists for USTs; and draft forms and worksheets in the appendices (164 pages). (Available on web only)

UST Systems: Inspecting And Maintaining Sumps And Spill Buckets – Practical Help And Checklist
Manual presents recommended inspection guidelines and best management practices for UST system sumps and spill buckets. Includes safety considerations; a general introduction to the kinds of sumps; basic maintenance procedures for sumps and spill buckets; and a sump and spill bucket inspection checklist (16 pages).

Straight Talk On Tanks: Leak Detection Methods For Petroleum Underground Storage Tanks
Explains federal regulatory requirements for leak detection and briefly describes allowable leak detection methods. Updated & revised 2005 (28 pages).

Getting The Most Out Of Your Automatic Tank Gauging System
Trifold leaflet provides UST owners and operators with a basic checklist they can use to make sure their automatic tank gauging systems work effectively and provide compliance with federal leak detection requirements.

Doing Inventory Control Right: For Underground Storage Tanks
Booklet describes how owners and operators of USTs can use inventory control and periodic tightness testing to temporarily meet federal leak detection requirements. Contains recordkeeping forms (16 pages).

Manual Tank Gauging: For Small Underground Storage Tanks
Booklet provides simple, step-by-step directions for conducting manual tank gauging for tanks 2,000 gallons or smaller. Contains recordkeeping forms (12 pages).

List Of Leak Detection Evaluations For UST Systems
A summary of specifications, based on third-party certifications, for over 275 systems that detect leaks from USTs and their piping. Each summary provides information on such items as certified detectable leak rate/threshold, test period duration, product applicability, calibration requirements, restrictions on the use of the device, and so on. (Available on web only)

List Of Integrity Assessment Evaluations For USTs
A list of integrity assessment procedures that have been successfully evaluated and certified by a qualified independent third party to meet specified performance criteria. (Available on web only)

Introduction To Statistical Inventory Reconciliation: For Underground Storage Tanks
Booklet describes how Statistical Inventory Reconciliation (SIR) can meet federal leak detection requirements (12 pages).

Closing Underground Storage Tanks: Brief Facts
Trifold leaflet presents "brief facts" on properly closing USTs in order to comply with federal closure requirements.

Underground Storage Tanks: Requirements And Options
Trifold leaflet alerts UST owners and operators who are "nonmarketers" (who do not sell stored petroleum) that they need either to find alternatives to managing their USTs or to make decisions about UST compliance.

Dollars And Sense: Financial Responsibility Requirements For Underground Storage Tanks
Booklet summarizes the "financial responsibility" required of UST owners and operators (16 pages).

List Of Known Insurance Providers For Underground Storage Tanks
Provides UST owners and operators with a list of insurance providers who may be able to help them comply with financial responsibility requirements by providing suitable insurance mechanisms (12 pages). (Available on web only)

Financing Underground Storage Tank Work: Federal And State Assistance Programs
Booklet identifies potential sources of financial assistance to cover the costs of upgrading, replacing, or closing an UST, or of cleaning up an UST release. Updated and revised March 1999 (23 pages).

State Regulatory Agency Contacts

See EPA's web site at http://www.epa.gov/oust/states/statcon1.htm for state underground storage tank program contact information.

United States
Environmental Protection
Agency

Solid Waste And
Emergency Response
5401G

EPA 510-B-05-002
September 2005
www.epa.gov

Getting The Most Out Of Your Automatic Tank Gauging System

As an owner or operator of an underground storage tank, you have invested a lot of money in your automatic tank gauging system to detect leaks—but are you getting your money's worth?

If you don't operate your automatic tank gauging system (ATGS) effectively, you may be letting stored product leak into the environment. If so, you may face costly cleanups and liability actions. Also, you can be cited and fined for not meeting the federal requirements for properly operating and maintaining an ATGS to detect leaks from underground storage tanks (USTs).

Note that a simple ATGS will detect leaks only from tanks. To detect leaks from piping, you will need an ATGS that supports connection to line leak detectors.

The checklist that follows can help you avoid some common problems and make sure your ATGS is working as required:

Know your ATGS. Insist that your ATGS installer trains you and provides clear instructions in the proper operation and maintenance of the ATGS.

Make sure your ATGS is constantly "on" and plugged into a power source. This may sound obvious, but inspectors have written many citations when they discovered that the ATGS was "off" and not monitoring for leaks.

Respond to alarms. Ignoring an alarm defeats the purpose for having the ATGS. Don't ignore the "FAIL" alarm. Large leaks have gone undetected when operators ignored an alarm or turned their ATGS off.

Run your ATGS in its "test mode" at least once a month. You must test when tank is relatively full. Since an ATGS does not detect leaks above the product level, test when the tank is as full as it typically gets (try testing soon after delivery, but after product settles). Also, you should test frequently. The more frequently you test, the greater the likelihood you will detect leaks as quickly as possible. The earlier you detect a leak, the easier and less costly the cleanup.

Have your ATGS maintained and calibrated according to manufacturers' instructions. Make sure you read the directions in the manual that came with your ATGS. Use the manufacturer or installer representative's phone number to get answers to any questions you have about using the ATGS correctly. Don't hesitate to contact the manufacturer or installer for help.

Report problems. You must report test results indicating a leak to your implementing agency (usually your state environmental agency), generally within 24 hours. You do not need to report if the ATGS is found to be defective, is repaired immediately, recalibrated or replaced, and subsequent monitoring shows tank is tight. You must immediately investigate and confirm all suspected leaks. When in doubt, report.

Keep records. Federal regulations require you to keep the following records:

Keep for at least one year:

- Monthly test results.
- Documentation of all calibration, maintenance, and repair.

Keep for at least five years:

- Any written performance claim for your ATGS. This will usually be an evaluation document signed by a third-party evaluator showing how a sample ATGS performed under test conditions.
- Manufacturer-supplied schedules for calibration and maintenance.

Keep records either at the UST site or at a readily available alternative site, and provide them for inspection upon request.

Put ATGS monitoring in the most responsible hands. Do not rely on the vigilance of part-time or under-trained employees. If necessary, have ATGS alarms go to a central, 24-hour contact or use other mechanisms that put ATGS monitoring in the most responsible hands.

Check state and local regulations. State or local regulations may differ from the federal requirements, so find out which requirements apply to your UST. Check with your implementing agency.

Please note: You may need to continue doing monthly inventory control as you use your ATGS. If your ATGS was installed after December 22, 1990 and does not meet performance standards for minimum leak detection rates, you must continue to perform proper inventory control. Check the third-party evaluation of your ATGS to see if it meets the performance standard requiring ATGS to detect a leak of 0.2 gallons per hour with 95% probability of detection and 5% probability of false alarm. ***If you are not sure, check with your implementing agency.***

Need More Information?

EPA can provide free, plain-English publications that concisely describe all aspects of federal UST requirements.

To order free publications, determine if your tanks need to meet federal UST requirements, get more information about UST requirements, or identify state regulatory authorities, please call **EPA's toll-free Hotline at 800-424-9346**. Remember, requirements and deadlines may be different in some states, so check with your state UST program office.

You can also find UST publications, links to state regulatory authorities, and other UST information at EPA's Office of Underground Storage Tanks Web site at **http://www.epa.gov/OUST/**

Remember, it's in your best interest that your ATGS works and detects leaks as soon as possible—

before leaks become big cleanup and liability problems.

Protect your ATGS investment by making sure your ATGS installer:

- Trains you in proper operation of the ATGS.
- Demonstrates that the ATGS has been correctly installed and programmed for the tank it monitors.
- Gives you an operation manual, schedules and documentation for calibration/maintenance, third-party evaluation, and phone numbers for technical support.
- Schedules maintenance with you as required by manufacturers' instructions.

United States Environmental Protection Agency
EPA 510-F-98-011
March 1998
www.epa.gov

Solid Waste and Emergency Response (5401G)

EPA

Getting The Most Out Of Your Automatic Tank Gauging System

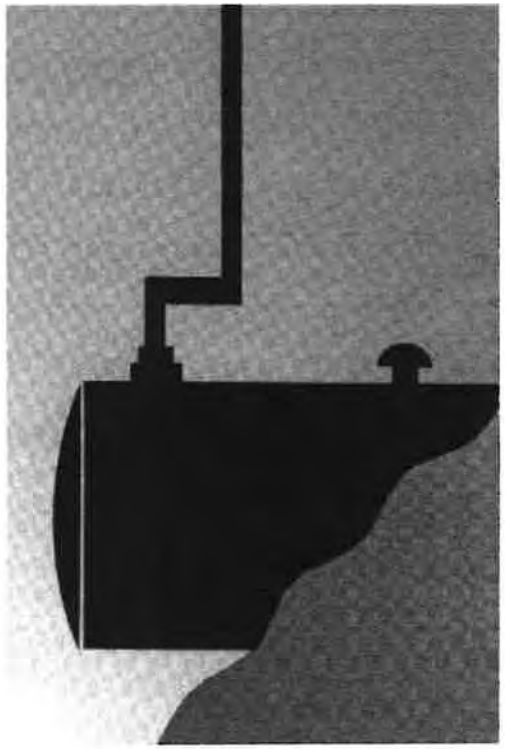

Printed on Recycled Paper

UST Systems: Inspecting And Maintaining Sumps And Spill Buckets

Practical Help And Checklist



Printed on recycled paper

Contents

Introduction 1
Who Should Read This Manual? 1
How Will This Manual Help You? 1
Why Should You Care About Sump Maintenance? 1
Safety Considerations 3
Getting To Know Your Sumps 4
What Is A Sump? 4
What Kinds Of Sumps Are Associated With My UST System And Where Are They Located? 4
How Do You Access Your Sumps And Spill Buckets? 6
Basic Maintenance Procedures For Sumps And Spill Buckets 7
What Can You Do To Ensure Your Sumps and Spill Buckets Are In Good Condition? 7
What Should You Look For When You Inspect Your Turbine, Dispenser, And Transition/Intermediate Sumps? 7
What Should You Look For When You Inspect Your Spill Buckets? 12
Where Can You Get More Information On This Topic? 15

Appendix A: Sample Underground Storage Tank Sump And Spill Bucket Inspection Checklist

This document provides information on inspecting and maintaining sumps and spill buckets. The information provided in this manual is not intended to replace or contradict your specific manufacturer's instructions for maintaining your sumps. Nothing in this manual is intended to endorse or criticize any specific type of equipment or any manufacturer. Photographs of common sump problems are provided for instructional purposes only. This document does not replace existing federal or state regulations, nor is it a regulation itself - it does not impose legally binding requirements. For regulatory requirements regarding UST systems, refer to the federal regulations governing underground storage tank systems (40 CFR Part 280) or corresponding state regulations.

Additional copies of this manual are available at no cost by calling EPA's toll-free distribution center at 800-490-9198. Or you can download a color copy by going to OUST's World Wide Web Home Page at http://www.epa/gov/oust/pubs

Introduction

Who Should Read This Manual?

This manual is intended for owners and operators of underground storage tank (UST) systems; specifically, anyone who oversees the operation and maintenance of UST systems that contain and dispense petroleum products. UST owners/operators should ensure that only qualified personnel conduct inspection and maintenance activities.

After reading this manual, you should be able to identify the different types of sumps associated with your UST system and be familiar with how to identify some common sump-related problems.

How Will This Manual Help You?

This manual covers recommended inspection guidelines and best management practices for sumps associated with your UST system. This manual will:

- Help you identify and inspect the sumps associated with your UST system, including the equipment in your sumps.
- Explain some simple steps you can take to maintain your sumps and the equipment in your sumps, as well as identify potential problems.
- Provide you with tips for fixing common problems before they cause a release to the environment.

For more complete guidance on how to operate and maintain your UST system, refer to the U.S. Environmental Protection Agency (EPA) document, *Operating And Maintaining Underground Storage Tank Systems, Practical Help And Checklists (EPA 510-B-05-002, May 2005)*.

The average cleanup cost for a leaking UST is about $100,000. The cost can be more than $1,000,000 if groundwater is affected.

Why Should You Care About Sump Maintenance?

Despite advances that have greatly reduced the threat of petroleum releases from UST systems into the environment, some UST systems continue to experience releases. Inadequate operation and maintenance is one reason these systems continue to experience releases.

Sumps, including the sumps beneath dispensers, sumps around the submersible pump (turbine) head[1], transition/intermediate sumps, and spill buckets are common sources of releases. Releases of even small volumes of product can seep into the ground and contaminate soil and groundwater. Inspecting and maintaining your sumps is generally simple and can prevent or minimize such releases.

While this manual addresses a number of issues related to sump maintenance, it may not cover some details specific to your particular sumps. Keep in mind the information provided in this manual is not intended to replace or contradict your specific manufacturer's instructions for maintaining your sumps and the equipment in your sumps.

This manual presents practical help and a checklist for inspecting and maintaining sumps. State and local agencies may require these or other activities. Please check with your state or local agency to determine their specific requirements.

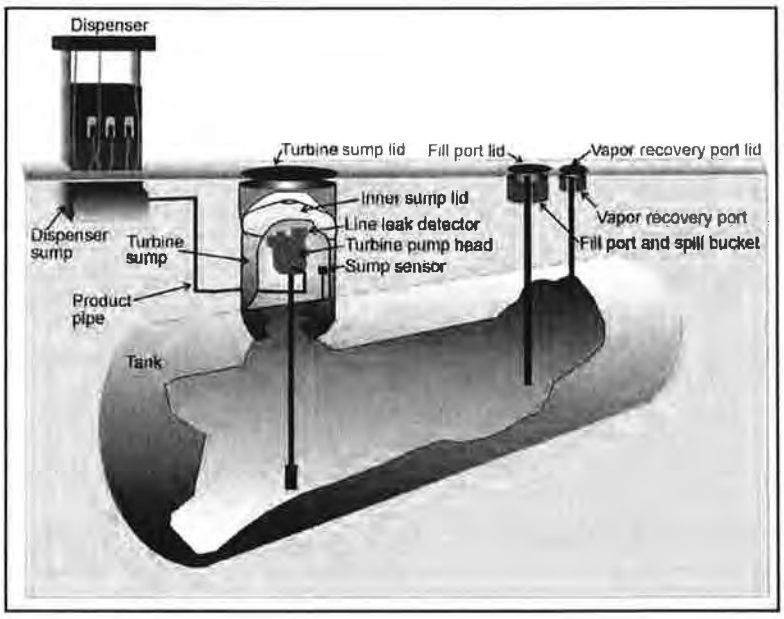

Diagram of an UST system

[1] Submersible turbine pumps are often known by their acronym STP.

Safety Considerations

If you perform sump inspection and maintenance activities, you should be experienced and aware of hazards and safety issues. Chances are you will be working in a high-traffic area, such as a gas station. You should properly mark off your work area and take appropriate steps to protect yourself. You should have the following items:

- Safety barriers, such as traffic cones or yellow plastic tape to mark off your work area
- Orange safety vest
- Hard hat (for construction sites)
- Steel-toed boots
- First-aid kit
- Chemical resistant gloves



Person wearing safety gear while inspecting a sump

You should consider these additional safety precautions:

- Sump lids may be large and very heavy and may require more than one person to lift. Use caution when lifting large steel lids.

- Be aware of the possibility of explosive or harmful vapors when inspecting and maintaining sumps. Avoid breathing in petroleum vapors.

- Please note that OSHA designates some sumps as confined spaces. See OSHA's standard on confined spaces in Title 29 of the *Code of Federal Regulations,* Part 1910.146. http://www.osha.gov/pls/oshaweb/owadisp.show_document?p_table=STANDARDS&p_id=9797



Person removing a sump lid within a marked inspection area

Getting To Know Your Sumps

What Is A Sump?

A sump is a subsurface area (pit) designed to provide access to equipment located below ground and, when contained, to prevent liquids from releasing into the environment.


Uncontained turbine sump

Sumps may or may not be contained. Contained sumps have sides and a bottom, are designed to be liquid tight, and may have a special cover designed to keep out water. Uncontained sumps generally do not have a bottom and are not designed to prevent liquid from entering or exiting the sump. These sumps may use wooden or metal sheeting to restrict the slumping of soil or crushed rock onto the equipment and to prevent the surface pavement from buckling or caving.

What Kinds Of Sumps Are Associated With My UST System And Where Are They Located?

The types of sumps likely to be associated with your UST system are:

Turbine Sumps – Turbine sumps are designed to provide access to the turbine area above the tank. The turbine area may house the submersible turbine pump head, piping, line leak detectors, interstitial monitoring devices, wiring, and other equipment. You generally will find turbine sumps directly above your USTs. Turbine sump lids generally range from 3 to 4 feet in diameter and can be round, oval, square, or rectangular in shape.


Contained turbine sump

Dispenser Sumps – Dispenser sumps are designed to provide access to piping, flex connectors, shear valves, and other equipment located beneath the dispenser. Dispenser sumps are found directly under your dispensers.


Contained dispenser sump

Transition/Intermediate Sumps – Transition/intermediate sumps are less common than other sumps, but can be found along the piping runs that connect the tanks to the dispensers, and are designed to provide access to the piping. Transition sumps are used to transition from above-ground piping to below-ground piping or, in some cases, to transition between different types of piping. Intermediate sumps are located at key points in the piping system (e.g., low spots, branches, tees). Transition/intermediate sump lids generally range from 3 to 4 feet in diameter and can be round, oval, square, or rectangular in shape.



Transition/intermediate sump

Spill Buckets – Spill buckets are contained sumps installed at the fill and/or vapor recovery connection points to contain drips and spills of fuel that can occur during delivery. Spill buckets are located where the delivery driver connects the product and/or vapor recovery hoses to your tank. Spill buckets can be found directly above your UST, at a location that is away from your UST (remote), or both. They typically range in size from 5 to 25 gallons, and lids range from 1 to 2 feet in diameter. Spill buckets may also be installed within a larger sump, similar in construction to a turbine sump, for secondary containment. In this case, you will only need to open your smaller lids to access your spill buckets.



Spill bucket



Fill and vapor recovery lids installed within a larger sump lid



View of sump lids

Did You Know?
Most UST systems must have spill buckets at each fill pipe where fuel is delivered into the UST. Some facilities also may have a second spill bucket around the Stage I vapor recovery line.

How Do You Access Your Sumps And Spill Buckets?



Circular steel sump lid pulled back to show the inner lid covering the turbine sump

You may need tools such as a large screwdriver, pry bar, wrench, or hammer to open your sump lids. Composite lids may require a specialized tool that you probably have on site. Have someone help you in lifting large lids, as they may be very heavy. Use caution when opening the lids and be aware of the following:

- Square, rectangular, or oval sump lids can fall through the opening and damage the piping, submersible pump, or tank.
- Round lids, while not typically capable of falling into the sump, may swing down and damage the turbine head or line leak detector.
- If applicable, follow your equipment manufacturer's recommendations if special instructions are necessary to open the sump lids.
- You may need a key to remove the dispenser cover in order to access the dispenser sumps.



Square steel sump lid pulled up to show the inside of an uncontained turbine sump



Circular spill bucket lid pulled back to show the fill port with a spill bucket

Generally, sumps will have a traffic load rated lid, beneath which may be either direct access to the equipment or, if contained, an inner lid covering the contained area.



Dispenser cover pulled off to show the dispenser piping and equipment

Basic Maintenance Procedures For Sumps And Spill Buckets

What Can You Do To Ensure Your Sumps and Spill Buckets Are In Good Condition?

Maintaining your sumps and spill buckets will involve gaining access to them, inspecting them on a regular basis, assessing whether any problems exist, and ensuring any problems are addressed. For serious problems (e.g., obvious leaks occurring on the piping and equipment, cracked spill buckets or sidewalls, cracked or missing seal around the lid), it's best to contact your UST contractor or the manufacturer of your UST equipment to have the problem fixed. Appendix A contains a sample checklist you may want to use to guide your sump inspections.

Note: To avoid accumulation of surface water, you should check the seals of your sumps' lids more frequently if they are located at a low point on the property or in the path of surface water runoff.

If you identify or suspect a release of fuel to the environment, report this to your implementing agency. For a list of state UST websites, go to: http://www.epa.gov/oust/states/statcon1.htm

What Should You Look For When You Inspect Your Turbine, Dispenser, And Transition/Intermediate Sumps?

Are The Lids Tight And Sealed Correctly? Check to ensure the lids to the turbine, transition, and intermediate sumps create a tight seal when closed and are securely fastened. The seals of the sump lids often dry out, crack, and require replacement; so you need to ensure they are in good condition. Water in your sumps may be an indication of a bad seal.

Are The Sump Walls Intact? Check to ensure the walls of your sump are intact and are not slumping or warping. If your sump is not contained, check the sidewalls to ensure there is no caving.



Contained turbine sump full of liquid

Is The Sump Free Of Debris, Liquid, Or Ice? Debris, liquid, and ice can damage equipment, reduce capacity (if contained), and interfere with your equipment's ability to operate correctly. For example, water in your sump will reduce capacity and may cause metal equipment in your sump to corrode. Fuel in your sump will also reduce capacity and may damage some plastic sumps and other components not designed for long term contact with petroleum. Similarly, used dispenser filters may contain small amounts of petroleum, so they should not be left inside your sump. You should carefully remove and properly dispose of any debris, liquid, or ice in your sumps.

Did You Know?
Some sensors may alarm only when in contact with petroleum. If covered completely with water, they will not alarm, even in the event of a petroleum leak.



Dry, debris-free contained turbine sump



Contained sump with liquid and debris

Is The Sump Free Of Cracks Or Holes? Examine your contained sumps for signs of damage (e.g., cracks or holes). Check to ensure no cracks are present around the areas where components, such as wiring conduit and piping, enter your sumps. Cracks and holes mean your sump will no longer contain product or prevent releases to the environment.

Are Sump Components Leak-Free? Check to ensure the piping, fittings, and connections in your sump are not leaking or dripping fuel.

Is The Sump Free Of Staining/New Staining? Check to ensure no new stains are present since your last inspection. New staining indicates a drip or spill has occurred.



Staining

Are The Sensors Positioned Correctly?[2] If you have sensors, check to ensure they are positioned properly in the lowest part of your sump and below the piping entry. Sensors should not be raised as the result of false alarms or for any other reason. Raised or disabled sensors will take longer or fail to detect a leak and could violate regulatory requirements.

Sump sensor

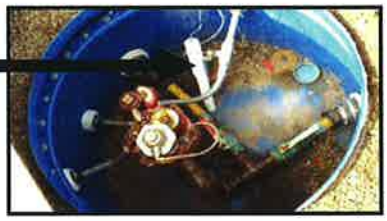

Sump sensor in contained turbine sump



Float sump sensor



Liquid sump sensor

Did You Know?
A crack or hole in your sump below the sump sensor will not allow liquid to accumulate in the sump to a level necessary to activate the sensor. As a result, liquid may be released undetected. Such cracks or holes need to be repaired immediately.

Are All Penetrations Into The Sump In Good Condition?[2]
Check to ensure all areas where electrical wires, conduits, and piping enter the sump are sealed. Cracked or loose seals around the penetrations can allow liquids to enter the sump and can allow fuel to be released into the surrounding soils if a release occurs inside the sump.



Sump penetration seals in poor condition



Sump penetration seals in good condition

Did You Know?
Some plastic flexible piping is installed within a larger pipe (or chase). There may be a seal between the primary pipe and the chase. Check with the piping maker to determine the proper position of the seal.

[2] Only for contained sumps

Are The Test Boots Positioned Correctly And In Good Condition?[3] A test boot is found on secondarily-contained piping and is a flexible sleeve usually made of rubber with a valve located either at the entry to the sump or on the piping in the sump. It is used to test the space between the inner and outer piping walls for tightness. Check to ensure the test boots are in good condition, not cracked or torn, and positioned correctly in the sump.

To ensure a leak can be detected by your leak detection equipment, test boots should be positioned so they allow product to enter your sump if a leak from the primary piping occurs. There are a variety of different configurations for test boots. If you are unsure of the appropriate configuration, check with your contractor.



Test boot located in a sump



Test boots positioned at sump wall, right test boot is torn

Is The Piping And Other Equipment In Good Condition? Sumps may contain various types of piping and equipment such as leak detection equipment, turbine motors, line leak detectors, sensors, conduits, and flex connectors.





Contained turbine sumps and equipment in good condition

Did You Know?
If your metal piping, including metal flex connectors, is in contact with the ground, it must be protected from corrosion.

[3] Typically only for contained sumps

When inspecting the piping and equipment in your sumps, you should watch for the following conditions:

- For metal piping, check to ensure the piping is not severely corroded, in contact with the ground if it does not have corrosion protection, or otherwise degraded.
- For fiberglass piping, check to ensure the piping is not cracked, delaminated, or otherwise degraded.
- For flexible piping, check to ensure the piping does not have abnormal bends, breaks, cracks, or kinks; is not bulging, swelling, or growing; has not become soft, spongy, or discolored; and is not otherwise distorted or degraded.
- Check to ensure the fittings and flexible connectors are not twisted or misaligned and the flexible connectors are not cracked, kinked, etc.
- Check to ensure other pieces of equipment, including pump head, line leak detector, and sensors, are not visibly damaged, severely corroded, etc.



Equipment and metal piping covered with dirt in uncontained sump



Fiberglass piping is cracked

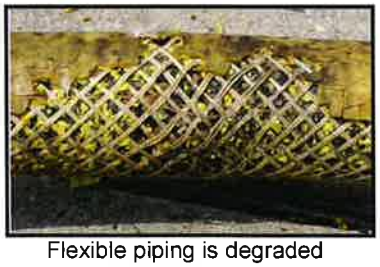

Flexible piping is degraded due to microbial growth



Flexible piping is cracked



Flexible piping is kinked



Metal flexible connector is twisted due to growth of flexible plastic piping



Flexible piping is bulging

What Should You Look For When You Inspect Your Spill Buckets?

Are The Lids To Your Spill Buckets In Good Condition? Check to ensure the lids to your spill buckets are in good condition so they will keep water out when the lid is closed. Ensure that when the lids to your spill buckets are in the closed position, they create a good seal and are secured tightly. Some spill buckets contain a rubber gasket inside the cover; check to ensure the rubber gasket is in good condition and creates a proper seal when the lid is closed.

A missing or damaged spill bucket lid may be a safety hazard. Replace it as soon as possible. Until the lid is replaced, cover and barricade the area to prevent potential accidents.



Cracked spill bucket lid



Spill bucket lid gasket

Check to ensure the lid is not touching the fill cap. This situation should be repaired because it could potentially damage the fill pipe and the tank if it is in an area where vehicles drive over the lid.

Is The Spill Bucket Free Of Debris, Liquid, Or Ice? Examine your spill buckets to determine whether they contain debris, liquid, or ice. For example, water in your spill bucket will reduce capacity and may cause metal equipment in your sump to corrode. Fuel in your spill bucket will also reduce capacity and may damage some plastic spill buckets not designed for long term contact with petroleum. You should carefully remove and properly dispose of any debris, liquid, or ice found in your spill buckets during your inspections. You should also check for and remove any liquid and debris present in your spill buckets before and after every delivery.



Spill bucket that contains liquid

Some spill buckets are equipped with a valve that allows you to drain accumulated liquid into your UST. Others may be equipped with a manual pump so fuel can be transferred to your UST system by pumping it through the fill pipe or removing the fuel and disposing of it properly. However, keep in mind that when you pump out or drain your spill bucket into your UST, any water and debris present also will enter the UST. This could lead to internal corrosion, dispensing problems, and the need to remove contaminated water from the tank. If your spill bucket is not equipped with a drain valve or pump, you can still remove the liquid and debris and dispose of them appropriately. Liquid can be removed with a portable pump, such as the one on the right.



Portable pump

If your spill bucket is always dry, this may be an indication that it is not able to contain product. You may need to test to ensure it is liquid tight.

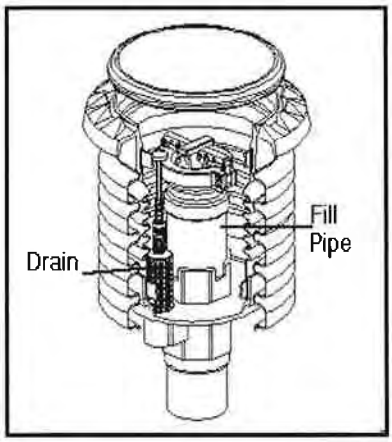

Spill bucket with a drain valve

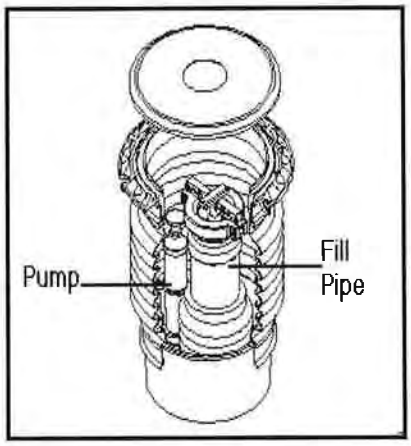

Spill bucket with a manual pump

Is The Spill Bucket Free Of Cracks Or Holes? Examine the spill buckets for evidence of cracks or holes. If you have a metal bucket, check for corrosion and rust. Also check for deformations in the spill buckets or separation of the spill bucket from the fill pipe.



Spill bucket in poor condition – note the gap between the spill bucket and the fill pipe

Are The Drain Valves Operational? Some spill buckets have drain valves. Check to ensure the drain valve is free of debris and operational (e.g., it can close tightly and be opened to drain fuel in the spill bucket). If the drain valve is left open:

- It will act as a vent
  - Possibly affecting the ability of your overfill device to function properly;
  - Allowing potentially dangerous vapors to build up in the spill bucket or to be released to the soil or groundwater;
  - Possibly affecting the operation of the Stage II vapor recovery system.
- It can allow water and debris to enter your tank.



Spill bucket drain valve

***Never* pump fuel from your spill buckets into storm or sewer drains as a method of disposal. Improper disposal can contaminate surface and groundwater, result in vapor/explosion hazards, damage sewage treatment plants, and may be in violation of state or federal law.**

Where Can You Get More Information On This Topic?

Federal Agencies

U.S. EPA
Office of Underground Storage Tanks
http://www.epa.gov/oust

U.S. Department of Labor
Occupational Safety and Health Administration
http://www.osha.gov
1-800-321-OSHA (6742)

Organizations

API - American Petroleum Institute
www.api.org
(202) 682-8000

FTPI - Fiberglass Tank and Pipe Institute
www.fiberglasstankandpipe.com
(281) 568-4100

NACE International - Formerly National Association of Corrosion Engineers
www.nace.org
(281) 228-6200

NFPA - National Fire Protection Association
www.nfpa.org
(617) 770-3000

PEI - Petroleum Equipment Institute
www.pei.org
(918) 494-9696

STI - Steel Tank Institute
www.steeltank.com
(847) 438-8265

Publications

The publications listed below are free and available from the U.S. EPA. You can access these publications via EPA's website or you can call, write to, or fax EPA.

- You can download, read, or order documents from http://www.epa.gov/oust/pubs/index.htm
- To order free copies or ask questions, call EPA's publication distribution toll-free number at 800-490-9198 or fax301-604-3408. You can also write and ask for free publications by addressing your request to EPA's publication distributor: National Service Center for Environmental Publications (NSCEP), Box 42419, Cincinnati, OH 45242.

Operating and Maintaining Underground Storage Tank Systems: Practical Help and Checklists, U.S. EPA, Office of Underground Storage Tanks, Washington DC, EPA 510-B-05-002, May 2005.

Musts for USTs: A Summary of the New Regulations for Underground Storage Tank Systems, U.S. EPA, Solid Waste and Emergency Response, Washington DC, EPA-510-K-95-002, July 1995.

Model Underground Storage Tank Environmental Results Program Workbook, U.S. EPA, Solid Waste and Emergency Response, Washington DC, EPA R-04-003, June 2004.

Other Sources

For additional information on UST system operation and maintenance, go to U.S. EPA Office of Underground Storage Tanks, List of Operation and Maintenance Tools
http://www.epa.gov/oust/ustsystm/tanko&m.htm

For links to state UST websites go to
http://www.epa.gov/oust/states/statcon1.htm

Appendix A

Note: Federal UST regulations do not require you to report your maintenance activities, use this form, or keep any specific records of your sump inspection and maintenance practices.

Sample Underground Storage Tank Sump And Spill Bucket Inspection Checklist

Name: _____ Date/Time Of Inspection: _____

Comments/Follow-Up Needed: _____

Choose yes or no for each question that applies.
Choosing no on any item indicates a problem that should be corrected.
When you have corrected the problem, check the fixed box.

Turbine/Transition/Intermediate Sumps	Sump No.: ____			Sump No.: ____			Sump No.: ____			Sump No.: ____		
	Yes	No	Fixed?	Yes	No	Fixed?	Yes	No	Fixed?	Yes	No	Fixed?
Are The Lids Tight And Sealed Correctly?			☐			☐			☐			☐
Are The Sump Walls Intact?			☐			☐			☐			☐
Is The Sump Free Of Debris, Liquid, Or Ice?			☐			☐			☐			☐
Is The Sump Free Of Cracks Or Holes?*			☐			☐			☐			☐
Are Sump Components Leak-Free (No Leak Or Drips)?			☐			☐			☐			☐
Is The Sump Free Of Staining/New Staining?			☐			☐			☐			☐
Are The Sensors Positioned Correctly?*			☐			☐			☐			☐
Are All Penetrations Into The Sump In Good Condition?*			☐			☐			☐			☐
Are The Test Boots Positioned Correctly And In Good Condition?*			☐			☐			☐			☐
Is The Piping And Other Equipment In Good Condition?			☐			☐			☐			☐
Dispenser Sumps	Dispenser No.: ___			Dispenser No.: ___			Dispense No.: ___			Dispenser No.:___		
	Yes	No	Fixed?	Yes	No	Fixed?	Yes	No	Fixed?	Yes	No	Fixed?
Is The Sump Free Of Debris, Liquid, Or Ice In The Sump?			☐			☐			☐			☐
Is The Sump Free Of Cracks Or Holes?			☐			☐			☐			☐
Are Sump Components Leak-Free (No Leak Or Drips)?			☐			☐			☐			☐
Is The Sump Free Of Staining/New Staining?			☐			☐			☐			☐
Are The Sensors Positioned Correctly?			☐			☐			☐			☐
Are All Penetrations Into The Sump In Good Condition?			☐			☐			☐			☐
Are The Test Boots Positioned Correctly And In Good Condition?			☐			☐			☐			☐
Is The Piping And Other Equipment In Good Condition?			☐			☐			☐			☐
Spill Buckets	Bucket No.: ____			Bucket No.: ____			Bucket No.: ____			Bucket No.: ____		
	Yes	No	Fixed?	Yes	No	Fixed?	Yes	No	Fixed?	Yes	No	Fixed?
Are The Lids To Your Spill Buckets In Good Condition?			☐			☐			☐			☐
Is The Spill Bucket Free Of Debris, Liquid, Or Ice?			☐			☐			☐			☐
Is The Spill Bucket Free Of Cracks Or Holes?			☐			☐			☐			☐
Are The Drain Valves Operational?			☐			☐			☐			☐

*Only for contained sumps

Helpful Hints For Maintaining Spill Buckets

United States Environmental Protection Agency
Solid Waste And Emergency Response 5401G
EPA 510-R-05-001
May 2005
www.epa.gov/oust/pubs

United States
Environmental Protection
Agency

Solid Waste And
Emergency Response
5403W

EPA 510-B-93-004
November 1993

EPA

Doing Inventory Control Right

For Underground Storage Tanks

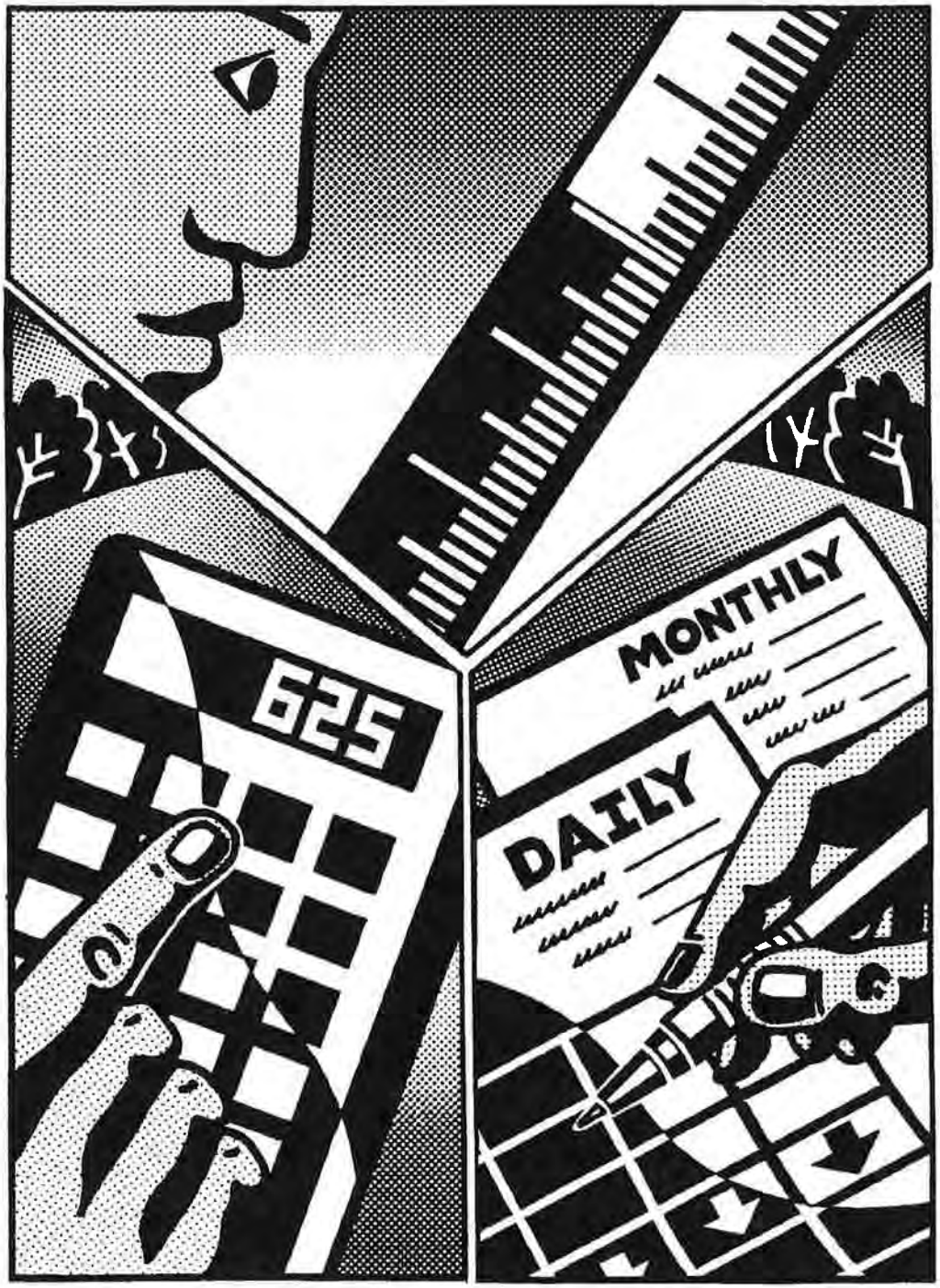

CONTENTS

Why You Should Read This Booklet
If You Use Inventory Control 1

How Does Inventory Control Work? 2

Do You Have The Right Equipment? 4

Step 1 — Measure The Tank's Contents 6

Step 2 — Record The Amount Pumped 7

Step 3 — Record Fuel Deliverables 8

Using Tank Charts Without 1/8-Inch Conversions 9

Step 4 — Calculate Daily Change In Inventory 10

Step 5 — Calculate Monthly Changes In Inventory 12

Why You Should Read This Booklet If You Use Inventory Control

Federal and state laws require underground storage tanks (USTs) to have leak detection.

If your USTs do not have leak detection, you can be cited for violations and fined. Leak detection violations can also keep you from getting legally required insurance coverage and reimbursement for cleanup costs. Without leak detection, you constantly risk discovering a leak only after it becomes a major financial burden for yourself and an environmental problem for everyone.

If inventory control is part of your leak detection, then this booklet can help you make sure you do inventory control correctly.

Inspections conducted nationwide indicate that most people who think they are doing inventory control are not doing it in a way that is likely to find leaks and meet the law's requirements for leak detection. So even if you are SURE you are doing inventory control right, read this booklet carefully—it could save you a lot of grief and money.

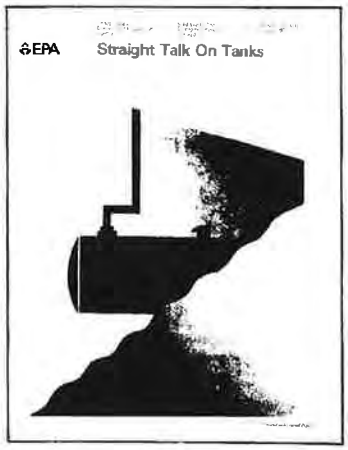

If you need information on federal leak detection requirements and the various methods of leak detection available to you, see "Straight Talk On Tanks." Call EPA's toll-free Hotline at 800 424-9346 and order this free publication by number: EPA 530/UST-90/012.

How Does Inventory Control Work?



This booklet helps you use inventory control to meet federal regulatory leak detection requirements by showing you how to do three important tasks:

- ! Good sticking
- ! Good math
- ! Good recordkeeping

Without these three, you may fail to meet the leak detection requirements. To do inventory control right, you have to spend time to make sure that you consistently measure the tank's contents correctly, that you don't let math errors creep into your daily and monthly calculations, and that you keep complete, easy-to-read records on file for at least a year.



Basically, inventory control requires daily measurements of tank contents and math calculations that let you compare your **"stick" inventory** (what you've measured) to your **"book" inventory** (what your recordkeeping indicates you should have). Some people call this process "inventory reconciliation." If the difference between your **"stick"** and **"book"** inventory is too large, your tank may be leaking.



Be sure you read about several important restrictions on the use of inventory control that are described on the next page.

To use INVENTORY CONTROL correctly,

follow Steps 1—5 starting on page 6.

Please note these important restrictions on the use of inventory control as leak detection:

- **Inventory control can never be used alone.** Inventory control must always be used in combination with tank tightness testing. Tanks must be tightness tested every 12 months if they do not have corrosion protection and spill/overfill devices. Tanks with corrosion protection and spill/overfill devices must be tested every 5 years.

- **Inventory control is a TEMPORARY leak detection method.** You can use inventory control only for 10 years after installing a new tank that has corrosion protection and spill/overfill devices or for 10 years after upgrading an old tank with corrosion protection and spill/overfill devices. After the 10-year period, you must use a monthly monitoring method, such as groundwater monitoring or interstitial monitoring.

  Tanks without corrosion protection and spill/overfill devices can use inventory control only until December 1998, when these tanks must be upgraded or closed. (See "Straight Talk On Tanks.")

- **The combined use of inventory control and tank tightness testing does not meet your tank system's leak detection requirements for piping.** Pressurized and some suction piping must use other methods of leak detection, such as interstitial monitoring. (See "Straight Talk On Tanks.")

If you don't pay careful attention to these restrictions, you will fail to meet the leak detection requirements.

Do You Have The Right Equipment?

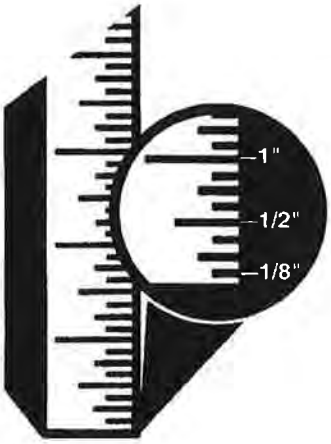

Gauge Stick Or Other Gauges

The gauge stick used to measure the depth of liquid in an underground tank must be marked or notched to the ⊂ inch, starting with zero at the bottom end. Check your stick to be sure the end has not been worn or cut off and that the stick is not warped. The stick should be made of non-sparking material, such as wood, and varnished to minimize the creeping of fuel above the actual fuel level in the tank. Instead of using a gauge stick, you may use a mechanical or electronic tank level monitor. Whatever measuring device you use must be capable of measuring the level of product over the full range of the tank's height to the nearest ⊂ inch.



Pastes For Finding Water Or Fuel

You must check for water in the bottom of the tank at least once each month by smearing a water-finding paste along the bottom of the gauge stick. The paste changes color when it comes in contact with water. Many operators improve their stick readings by smearing a fuel-finding paste on about 6 inches of the stick where they expect the fuel level to be. Fuel-finding paste changes color when it comes in contact with fuel.

Forms

The instructions in this booklet are keyed to two forms: the "DAILY INVENTORY WORKSHEET" and the "MONTHLY INVENTORY RECORD." You will find filled-in sample copies of these forms on the last two pages of this booklet. These samples are on perforated pages, so tear them out and refer to them while you read through the directions that are keyed alphabetically to the sample forms. Also, **near the back of the booklet, you will find "masters" you can copy repeatedly to provide forms for use in your recordkeeping.** If these forms are filled out according to the instructions in this booklet, you will be in compliance with federal regulations for inventory control. You should find out if state or local requirements have limitations on the use of inventory control or have requirements that are different from those presented in this booklet. You can use other standard recordkeeping forms, as long as they are clear, consistent, and contain all the information required by the federal and state leak detection regulations.



Tank Chart

A tank chart is a table that converts the number of inches of liquid in the tank into the number of gallons. You need a tank chart that exactly matches your storage tank (tank manufacturers usually provide charts for their tanks). If you have more than one tank, you will need a chart for each tank unless the tanks are identical. The tank chart must show conversion to gallons for each ⊂ inch stick reading. If your tank chart does not convert each ⊂ inch reading into gallons, contact the tank manufacturer, or, if you have a steel tank, the Steel Tank Association (708 438-8265) to get an appropriate chart.

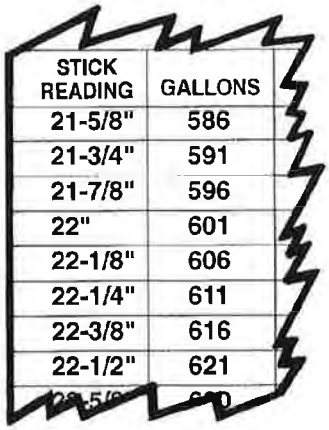

STICK READING	GALLONS
21-5/8"	586
21-3/4"	591
21-7/8"	596
22"	601
22-1/8"	606
22-1/4"	611
22-3/8"	616
22-1/2"	621

You always need to convert inches into gallons in order to fill out the forms correctly and to do the necessary math. To convert inches into gallons, find your stick's reading to the nearest ⊂ inch on the tank chart, then simply read across to the gallons column to find the number of gallons. If you cannot get a tank chart showing conversion to gallons for each ⊂ inch reading, you must do the additional math explained on page 9.

Drop Tube

The fill pipe through which the fuel is delivered into the tank must have a drop tube extending to within 1 foot of the bottom of the tank. Stick measurements should be made through a drop tube in the fill pipe or gauging port. If your fill pipe does not have a drop tube, call your petroleum equipment supplier to have one installed.

Calibrated Dispensing Meters

Meters must be calibrated according to local standards.

Manifolded Tanks

If you have manifolded tanks or dispensers that blend fuel, consider these tanks as one tank system if they share a common inventory of stored fuel. As you follow the directions on the following pages, you will need to combine your measurements and calculations for all the tanks manifolded into one system.

Step 1—Measure The Tank's Contents

You must measure the tank every day that fuel is added or removed. You may take measurements using a gauge stick or a mechanical or electronic tank level monitor.

No fuel can be added or removed from the tank while you are performing Step 1 or Step 2.

Every day you measure the tank, you should fill out a "DAILY INVENTORY WORKSHEET." As you go through the following directions, refer to the sample DAILY INVENTORY WORKSHEET you will find on the last pages of this booklet. For easy reference, the sample is on a perforated page so you can tear it out and keep it handy as you read through the directions. Also, near the back of the booklet is a "master copy" on a perforated page you can tear out to make copies of the DAILY INVENTORY WORKSHEET for your recordkeeping.

Use the sample "DAILY INVENTORY WORKSHEET" from the last two pages of the booklet to see where you put the information from letters "A" through "M" in the following directions.

Ⓐ Fill in the identifying information at the top of the worksheet.

Ⓑ Next to the "TANK IDENTIFICATION" box are empty vertical columns. Each column represents one tank—consistently enter all information on that one tank in the same vertical column. NOTE: Once you have filled in the tank identification boxes, make copies of the worksheet so you won't have to repeatedly enter the same information.

USE GOOD STICKING PRACTICES: Slowly lower the gauge stick to the tank's bottom. Let the stick gently touch the bottom, then quickly bring it back up. Read the depth of fuel indicated by the wet mark to the closest ⅛ inch division on the stick. Use of fuel-finding paste will make your stick readings more accurate.



Ⓒ Write your measurement in the box labeled "END STICK INCHES" for the tank you measured.

NOTE: If your tank is equipped with an automatic tank gauge (ATG), you may record the inches of product and gallons of product directly from the ATG's printed tape or simply staple the tape with this information to the worksheet.

Step 2—Record The Amount Pumped



At the same time you measure the tank contents (Step 1), you must record on the DAILY INVENTORY WORKSHEET the amount of fuel pumped. **No fuel can be added or removed from the tank while you are sticking the tank and recording the amount pumped.**

D Locate the box labeled "AMOUNT PUMPED" on the left side of the worksheet. Copy the numbers from each dispenser's totalizer onto the worksheet. **Be very careful that you write all the meter readings for a tank in the same column**. You may have several dispensers and totalizers for one tank, so the worksheet provides boxes in which you can enter several readings in any order.

E Add up the totalizer meter readings in each column and write the result in the box labeled "TODAY'S SUM OF TOTALIZERS."

F Find the last DAILY INVENTORY WORKSHEET you completed. Copy "TODAY'S SUM OF TOTALIZERS" from that worksheet into the "Previous Day's Sum of Totalizers" box of the worksheet you are working on today.

G On today's worksheet, subtract "Previous Day's Sum of Totalizers" from "TODAY'S SUM OF TOTALIZERS" and write the result in the box labeled "AMOUNT PUMPED TODAY."

If you pumped fuel through a dispenser and back into a tank, for example during a test, subtract the number of gallons you pumped from "AMOUNT PUMPED TODAY."

You may have an alternative to reading totalizers. If you have a self-service fueling operation where the cashier can authorize fuel sales from inside the facility, you can probably print out a daily report that gives you the total sales for each type of fuel. **NOTE: You can use the sales volumes from this report instead of reading your totalizer meters only if no fuel sales are made between the time you print the report from the cash register and the time you measure your tanks (Step 1).**

H If you are using cash register reports to record the amount pumped, enter the amount of each type of fuel pumped in the box labeled "AMOUNT PUMPED TODAY" or staple the printout to the worksheet.

Step 3—Record Fuel Deliveries



You must check how much fuel has been delivered every time any amount of fuel is delivered to your tank. **NOTE: You should not pump any fuel during the time it takes to do items "I" and "J" below.**

Before the delivery begins, the liquid level in the tank must be measured. Always use good sticking practices: slowly lower the gauge stick, gently touch the stick to the bottom of the tank, then quickly bring the stick back up. Read the depth of fuel indicated by the wet mark to the nearest ⊂ inch division on the stick.

I Write your measurement in the box labeled "Inches of Fuel Before Delivery" for each tank you measured.

The delivery person can now deliver fuel into the tank. After the delivery, wait at least 5 minutes for the fuel level in the tank to stabilize, and then measure again as described above.

J Record fuel level in the box labeled "Inches of Fuel After Delivery."

K Using your tank chart with ⊂ inch readings, convert both delivery readings to the correct number of gallons. Record these numbers in the boxes labeled "Gallons of Fuel Before Delivery" and "Gallons of Fuel After Delivery." (If necessary, see page 9 on converting inches into gallons.)

An automatic tank gauge (ATG) can usually print a delivery report. If your tank has an ATG that prints such a report, you may simply staple the ATG's delivery report to the DAILY INVENTORY WORKSHEET.

L Subtract "Gallons of Fuel Before Delivery" from "Gallons of Fuel After Delivery." Record the result in the box labeled "GALLONS DELIVERED (STICK)."

Now look at the delivery receipt and find the volume of each type of product that was delivered. If two volumes are given, one labeled "net" and the other "gross," use the gross gallons as the volume of product delivered.

M For each type of fuel delivered, copy the gross gallons delivered from the delivery receipt onto the worksheet in the box labeled "GROSS GALLONS DELIVERED (RECEIPT)." The gallons in items "L" and "M" should roughly match. If they don't, contact your supplier.

Using Tank Charts Without c Inch Conversions

If your tank chart does not list direct conversions from inches to gallons for every c inch, then you must **do the additional math described below every time you stick your tank**.

The easiest way to explain this procedure is with an example. Let's say you have a stick reading of 43d inches and you need to figure how many gallons are in your tank.

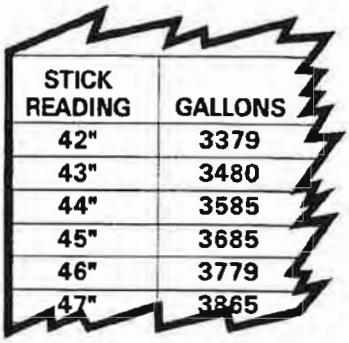

STICK READING	GALLONS
42"	3379
43"	3480
44"	3585
45"	3685
46"	3779
47"	3865

1. Look on your tank chart and find the inch measurements that are just above and below your stick reading and write down the number of gallons for these inch readings. Subtract the gallon readings to find the difference between the two readings:

   Chart reading at 44 inches: 3,585 gallons
   Chart reading at 43 inches: 3,480 gallons

   Difference: 105 gallons

2. Dividing 105 by 8 will give you the number of gallons per c inch, which in this example is 13. (More exactly it is 13.125, but do round off the number to the nearest whole number.) Because your fraction is d, multiply 13 gallons by 3, which gives you 39 gallons as the volume represented by d inch.

   CAUTION: The gallons represented by each c inch will vary from top to bottom of the tank and must be calculated for each conversion.

3. Take the number of gallons you have just calculated and add it to the inch reading just below your actual stick reading:

   Chart reading at 43 inches: 3,480 gallons
   Gallons at d inch: + 39 gallons

   Sum: 3,519 gallons

Thus, your stick reading of 43d inches converts to 3,519 gallons.

NOTE: If your tank chart is in half or quarter inches, you must still use this procedure so that your gallon readings are accurate to c inch.

After all of this math, you can see why it pays to have the correct tank chart that indicates gallons for each c inch.

Step 4—Calculate Daily Changes In Inventory

In this step, you will copy information from the DAILY INVENTORY WORKSHEET onto the **MONTHLY INVENTORY RECORD**. You will then do some math to determine your daily inventory. You need one MONTHLY INVENTORY RECORD for each tank that you have.

As you go through the following directions, refer to the sample MONTHLY INVENTORY RECORD you will find on the reverse side of the DAILY INVENTORY WORKSHEET sample you have already been using. For easy reference, the sample is on a perforated page so you can tear it out and keep it handy as you read through the directions. Also, near the back of the booklet is a "master copy" on a perforated page you can tear out to make copies of the MONTHLY INVENTORY RECORD for your recordkeeping.

Use the sample "MONTHLY INVENTORY RECORD" from the last two pages of the booklet to see where you put the information from letters "N" through "Z" in the following directions.

N Fill in the identifying information at the top of the MONTHLY INVENTORY RECORD.

If this is the very first day of your inventory recordkeeping, convert the "END STICK INCHES" from the DAILY WORKSHEET into gallons and enter on the MONTHLY RECORD under "END STICK INVENTORY (GALLONS)" for that starting date. (If necessary, see page 9 on converting inches into gallons.) This is all you can do today. Starting tomorrow, follow all of the instructions listed below.

O Find the line in the left column on the MONTHLY RECORD with today's date listed. Copy the previous day's "END STICK INVENTORY (GALLONS)" number into the box for today's "START STICK INVENTORY (GALLONS)."

P Enter the amount of fuel delivered from the DAILY INVENTORY WORKSHEET. If you were NOT pumping fuel during the time when the delivery was taking place, then use the "GALLONS DELIVERED (STICK)" number. However, if you had to pump fuel while the delivery was taking place, then use the "GROSS GALLONS DELIVERED (RECEIPT)" number as your delivery amount.

Q Copy the "AMOUNT PUMPED TODAY" number from the DAILY INVENTORY WORKSHEET into the "GALLONS PUMPED" column of the MONTHLY INVENTORY RECORD.

Ⓡ Add the "START STICK INVENTORY (GALLONS)" and the "GALLONS DELIVERED" columns; then subtract the "GALLONS PUMPED" column. Enter the result in the column labeled "BOOK INVENTORY (GALLONS)."

Ⓢ Copy the "END STICK INCHES" number from the DAILY WORKSHEET into the column labeled "END STICK INVENTORY (INCHES)" on the MONTHLY RECORD. Convert inches into gallons and enter the result in the column on the MONTHLY RECORD labeled "END STICK INVENTORY (GALLONS)." (If necessary, see page 9 on converting inches into gallons.)

Ⓣ Subtract the "BOOK INVENTORY (GALLONS)" from the "END STICK INVENTORY (GALLONS)." Enter the difference into today's "DAILY OVER OR SHORT" box. This number will usually be a positive or negative number (only rarely will it be zero).

Ⓤ Enter your initials to show who entered today's information.

GOOD ADVICE: If you are "over" for 5 days in a row (or "under" for 5 days in a row), you should check for problems with your math and your UST.

At least once each month, you must also measure for water in the tank. Smear water-finding paste on the bottom few inches of the gauge stick. Open the fill pipe and **slowly** lower the stick to the tank's bottom. Hold the stick on the bottom for 10 seconds for gasoline (30 seconds for diesel). Then remove the stick. If there is water in the bottom of the tank, the water-finding paste will change color. Read the depth of water indicated by the line where the water-finding paste has changed color to the closest ⊂ inch division on the stick. **Do not use this stick reading to measure the amount of fuel in the tank**, because the fuel will creep up the stick and will give you an inaccurate reading.

Ⓥ If you checked the tank for water today, enter the number of inches of water in the tank on the line under "Facility Name" at the top of the monthly record. If there is no water present, enter a zero to indicate that you in fact checked for water but found none. If you find more than 1 inch of water, you should arrange for its immediate removal, notify the product supplier, and conduct further tests to ensure that the tank is not leaking.





Step 5—Calculate Monthly Changes In Inventory

At the end of each month, follow the directions below to see if the difference between "stick" and "book" inventory indicates a possible leak.

W Add all of the month's "GALLONS PUMPED" numbers and write this total at the bottom of the column in the box labeled "TOTAL GALLONS PUMPED."

X Add all the month's "DAILY OVER OR SHORT" numbers: pay careful attention to positive and negative numbers to get an accurate total. For example, adding +4 and +3 and -2 should equal +5. Enter the total at the bottom of the column in the box labeled "TOTAL GALLONS OVER OR SHORT."

Y Fill out the "LEAK CHECK" line at the bottom of the MONTHLY INVENTORY RECORD as follows:

- Take the "TOTAL GALLONS PUMPED" number and drop the last two digits to get 1% (for example: 6594 becomes 65).
- Add 130 (for example: 65 + 130 = 195).

Enter the result of this calculation at the end of the "LEAK CHECK" line. This number is the **maximum change in inventory allowed** by federal regulations (1% of throughput plus 130 gallons).

Z At the bottom of the MONTHLY INVENTORY RECORD, circle "YES" or "NO" to show whether your "TOTAL GALLONS OVER OR SHORT" number is **LARGER** than the "LEAK CHECK" number you identified in the previous item. Even if your "TOTAL GALLONS OVER OR SHORT" is a negative number, treat it as a positive number for the purpose of this comparison. For example, -74 would become +74.

If you circle "YES" for 2 months in a row, you must notify your regulatory agency as soon as possible (usually within 24 hours) that your tank may be leaking.

NOTE: Keep your inventory control records on file for at least 1 year. Your state, however, may have different rules about when you have to report a leak or how long you must keep the inventory records. Be sure you know the rules that apply to you.

DAILY INVENTORY WORKSHEET

FACILITY NAME: _____

YOUR NAME: _____

DATE: _____

TANK IDENTIFICATION					
Type of Fuel					
Tank Size in Gallons					
END STICK INCHES					
AMOUNT PUMPED	↓	↓	↓	↓	↓
Totalizer Reading					
Totalizer Reading					
Totalizer Reading					
Totalizer Reading					
Totalizer Reading					
Totalizer Reading					
Totalizer Reading					
Totalizer Reading					
TODAY'S SUM OF TOTALIZERS					
Previous Day's Sum of Totalizers					
AMOUNT PUMPED TODAY					
DELIVERY RECORD	↓	↓	↓	↓	↓
Inches of Fuel Before Delivery					
Gallons of Fuel Before Delivery (from tank chart)					
Inches of Fuel After Delivery					
Gallons of Fuel After Delivery (from tank chart)					
GALLONS DELIVERED (STICK) [Gallons "After" Gallons "Before"]					
GROSS GALLONS DELIVERED (RECEIPT)					

MONTHLY INVENTORY RECORD

TANK IDENTIFICATION & TYPE OF FUEL: _____

MONTH/YEAR: ____/____

FACILITY NAME: _____

DATE OF WATER CHECK: _____ LEVEL OF WATER (INCHES): _____

DATE	START STICK INVENTORY (GALLONS)	GALLONS DELIVERED	GALLONS PUMPED	BOOK INVENTORY (GALLONS)	END STICK INVENTORY (INCHES)	END STICK INVENTORY (GALLONS)	DAILY OVER (+) OR SHORT ( ) ["End" "Book"]	INITIALS
1	(+)	( )	(=)					
2	(+)	( )	(=)					
3	(+)	( )	(=)					
4	(+)	( )	(=)					
5	(+)	( )	(=)					
6	(+)	( )	(=)					
7	(+)	( )	(=)					
8	(+)	( )	(=)					
9	(+)	( )	(=)					
10	(+)	( )	(=)					
11	(+)	( )	(=)					
12	(+)	( )	(=)					
13	(+)	( )	(=)					
14	(+)	( )	(=)					
15	(+)	( )	(=)					
16	(+)	( )	(=)					
17	(+)	( )	(=)					
18	(+)	( )	(=)					
19	(+)	( )	(=)					
20	(+)	( )	(=)					
21	(+)	( )	(=)					
22	(+)	( )	(=)					
23	(+)	( )	(=)					
24	(+)	( )	(=)					
25	(+)	( )	(=)					
26	(+)	( )	(=)					
27	(+)	( )	(=)					
28	(+)	( )	(=)					
29	(+)	( )	(=)					
30	(+)	( )	(=)					
31	(+)	( )	(=)					

TOTAL GALLONS PUMPED > _____ **TOTAL GALLONS OVER OR SHORT >** _____

DROP THE LAST 2 DIGITS from the **PUMPED** number and enter on the **TOTAL GALLONS** line below

Compare these numbers

LEAK CHECK: _____ **+ 130 =** _____ **gallons**

Is "TOTAL GALLONS OVER OR SHORT" **LARGER** than "LEAK CHECK" result? **YES NO** (circle one)

If answer is "YES" for 2 MONTHS IN A ROW, **notify regulatory agency** as soon as possible.

KEEP THIS PIECE OF PAPER ON FILE FOR AT LEAST 1 YEAR

SAMPLE

DAILY INVENTORY WORKSHEET

A FACILITY NAME: LAST CHANCE #2

YOUR NAME: JUAN DOE

DATE: 9/22/93

B	**TANK IDENTIFICATION**	1	2	3	4	
	Type of Fuel	REG UNL	PREM UNL	DIESEL	MID UNL	
	Tank Size in Gallons	6000	6000	6000	10,000	
C	**END STICK INCHES**	41 1/4	58 7/8	69	86 1/2	
D	**AMOUNT PUMPED**	↓	↓	↓	↓	↓
	Totalizer Reading	24383	30798	92485	44013	
	Totalizer Reading	55138	11017	70178	38974	
	Totalizer Reading					
	Totalizer Reading					
	Totalizer Reading					
	Totalizer Reading					
	Totalizer Reading					
	Totalizer Reading					
E	**TODAY'S SUM OF TOTALIZERS**	79 521	41815	162663	82987	
F	Previous Day's Sum of Totalizers	78271	40260	161663	82584	
G H	**AMOUNT PUMPED TODAY**	1250	1555	1000	403	
	DELIVERY RECORD	↓	↓	↓	↓	↓
I	Inches of Fuel Before Delivery	13 7/8			49 7/8	
K	Gallons of Fuel Before Delivery (from tank chart)	537			5246	
J	Inches of Fuel After Delivery	41 1/4			86 1/2	
K	Gallons of Fuel After Delivery (from tank chart)	2672			9423	
L	**GALLONS DELIVERED (STICK)** (Gallons "After" – Gallons "Before")	2135			4177	
M	**GROSS GALLONS DELIVERED (RECEIPT)**	2100			4200	

SAMPLE

MONTHLY INVENTORY RECORD

(N) TANK IDENTIFICATION & TYPE OF FUEL: 4 MIDGRADE UNL

MONTH/YEAR: 9/93

FACILITY NAME: LAST CHANCE #2

DATE OF WATER CHECK: 9/1 LEVEL OF WATER (INCHES): 0 (V)

DATE	(O) START STICK INVENTORY (GALLONS)	(P) GALLONS DELIVERED	(Q) GALLONS PUMPED	(R) BOOK INVENTORY (GALLONS)	(S) END STICK INVENTORY (INCHES)	(S) END STICK INVENTORY (GALLONS)	(T) DAILY OVER (+) OR SHORT (−) ["End" − "Book"]	(U) INITIALS
1	4047 (+)	—	(−) 333	(=) 3714	38 1/4	3690	−24	JD
2	3690 (+)	—	(−) 44	(=) 3646	38	3658	+12	JD
3	3658 (+)	—	(−) 329	(=) 3329	35 3/8	3323	−6	JD
4	3323 (+)	—	(−) 60	(=) 3263	35	3275	+12	JD
5	3275 (+)	—	(−) 145	(=) 3130	33 3/4	3117	−13	JD
6	3117 (+)	—	(−) 238	(=) 2879	31 1/8	2790	−89	JD
7	2790 (+)	6134	(−) 117	(=) 8807	80	8844	+37	JD
8	8844 (+)	—	(−) 127	(=) 8717	78 7/8	8732	+15	JD
9	8732 (+)	—	(−) 182	(=) 8550	77 1/2	8591	+41	JD
10	8591 (+)	—	(−) 205	(=) 8386	75 1/2	8379	−7	JD
11	8379 (+)	—	(−) 204	(=) 8175	73 5/8	8173	−2	JD
12	8173 (+)	—	(−) 166	(=) 8007	72	7991	−16	JD
13	7991 (+)	—	(−) 320	(=) 7671	69 3/4	7730	+59	JD
14	7730 (+)	—	(−) 307	(=) 7423	67	7402	−21	JD
15	7402 (+)	—	(−) 76	(=) 7326	66 1/2	7342	+16	JD
16	7342 (+)	—	(−) 224	(=) 7118	64 1/8	7050	−68	JD
17	7050 (+)	—	(−) 390	(=) 6660	61	6657	−3	JD
18	6657 (+)	—	(−) 296	(=) 6361	58 5/8	6354	−7	JD
19	6354 (+)	—	(−) 78	(=) 6276	58 1/8	6290	+14	JD
20	6290 (+)	—	(−) 424	(=) 5866	54 3/8	5869	+3	JD
21	5869 (+)	—	(−) 205	(=) 5664	53 1/8	5639	−25	JD
22	5639 (+)	4177	(−) 403	(=) 9413	86 1/2	9423	+10	JD
23	9423 (+)	—	(−) 87	(=) 9336	85 1/2	9343	+7	JD
24	9343 (+)	—	(−) 311	(=) 9032	82	9036	+4	JD
25	9036 (+)	—	(−) 239	(=) 8797	79 1/8	8757	−40	JD
26	8757 (+)	—	(−) 256	(=) 8501	76 7/8	8526	+25	JD
27	8526 (+)	—	(−) 264	(=) 8262	74 1/2	8270	+8	JD
28	8270 (+)	—	(−) 263	(=) 8007	72	7991	−16	JD
29	7991 (+)	—	(−) 185	(=) 7806	69	7811	+5	JD
30	7811 (+)	—	(−) 116	(=) 7695	68	7690	−5	JD
31	(+)		(−)	(=)				

(W) TOTAL GALLONS PUMPED > 6594 TOTAL GALLONS OVER OR SHORT > −74 (X)

DROP THE LAST 2 DIGITS from the PUMPED number and enter on the TOTAL GALLONS line below

Compare these numbers

(Y) LEAK CHECK: 65 + 130 = 195 gallons

Is "TOTAL GALLONS OVER OR SHORT" LARGER than "LEAK CHECK" result? YES (NO) (circle one) (Z)

If answer is "YES" for 2 MONTHS IN A ROW, notify regulatory agency as soon as possible

KEEP THIS PIECE OF PAPER ON FILE FOR AT LEAST 1 YEAR

>>>Copy and post this reminder where employees who measure tanks can see it!<<<

GET GOOD INVENTORY CONTROL MEASUREMENTS!

- ! Measure each tank every operating day

- ! Use gauge sticks that are
  - ✓ marked to the ⊂ inch
  - ✓ not cut off or worn off at the "0" end
  - ✓ varnished and not warped

- ! Measure through the same drop tube each time

- ! Use good sticking practices
  - ✓ SLOWLY lower stick
  - ✓ GENTLY touch stick on tank bottom
  - ✓ QUICKLY pull stick out

- ! Measure just before each delivery

- ! Wait at least 5 minutes after delivery, then measure again

- ! Read and record totalizer meters carefully

- ! Check for water at least once a month using water-finding paste

Developed in cooperation with...

Fiberglass
Petroleum Tank & Pipe Institute













ATTACHMENT J

Release Detection Maintenance

RANGER
ENVIRONMENTAL SERVICES, LLC

Release Detection

The release detection system to be used at the facility is a Franklin Fueling EVO 600. The system will have inventory probes installed in the tanks, sump sensors installed in the submersible sump containment areas to monitor sub pump, sump sensors installed in the dispenser sumps and tank interstitial sensors. The system will be installed by a Franklin Fueling certified technician. The system will be installed in accordance with Franklin Fueling specifications and instructions. The system is UL listed and is third party certified for release detection under USEPA guidelines. The system has self- diagnostic programs to test and warn of failures of the external devices as well as internal electronics. The system has been tested by a Third Party and found to be compliant with USEPA requirements for release detection.

Ongoing maintenance will be conducted by a certified/licensed UST contractor.

Franklin Fueling Systems

EVO™ 600 & EVO™ 6000 AUTOMATIC TANK GAUGES



EVO™ 600 & EVO™ 6000 Automatic Tank Gauges (ATGs) provide highly accurate inventory management and full-featured compliance monitoring for any size fuel system. These module-based ATGs are highly configurable for site-specific probe and sensor requirements. Their simple setup and operation, remote connectivity, and advanced security features protect your fuel system while keeping you directly connected to vital site data whenever, and wherever. The highly-intuitive, full-color, icon-based touch screen provides user-friendly on-site access to inventory, alarm, and compliance data.

TECHNICAL ADVANTAGES

- Provides inventory monitoring, static (included feature) and continuous tank testing (optional feature), tank autocalibration, inventory reconciliation, containment compliance monitoring, and flow rate monitoring.
- With the EVO™ 600, six total modules can be installed with a maximum of four intrinsically safe modules and a maximum of three of any one kind of module. With the EVO™ 6000, eleven total modules can be installed with a maximum of nine intrinsically safe modules and a maximum of three of any one kind of module.
- Customizable user roles and log-in security features protect against unwanted access while keeping track of user activity within your system.
- Optional AutoLearn™ Electronic Line Leak Detection capability including 24-hour Statistical Line Leak Detection for high throughput sites.
- Streamlined setup and programming includes hardware auto-detection and wiring confirmation, multipoint tank charting, network printer auto-detection, and the ability to download and upload entire programming profiles from one ATG to another.
- Intuitive full-color 7" (17.78 cm) touch screen interface provides simplified on-site access features including:
  - Six available One Touch buttons that are custom programmed to carry out common automated tasks with a single tap.
  - Quick Jump menu allows you to quickly maneuver from application to application using a single button.
  - Programmable product colors.
- Turbine Pump Interface (TPI) capability for enhanced and automated submersible turbine pump control.
- Web interface allows you to directly connect to your ATG via FFS PRO® Connect from any web-enabled device.
- Optional Wifi allows secure and protected on-site viewing of inventory levels for fuel delivery drivers.

Approvals/Certifications

- UL, cUL, ATEX, IECEx
- Third party certification of leak detection capabilities

SPECIFICATIONS

- Maximum tanks monitored: 36 (EVO™ 600)/36 (EVO™ 6000)
- Maximum sensor input capacity: 48 (EVO™ 600) / 96 (EVO™ 6000)
- Lines capacity: 24 (EVO™ 600 and EVO™ 6000)
- Dry contact input channels: 2
- AC input channels: 36 (EVO™ 600 and EVO™ 6000)
- Relay output channels: 26 (EVO™ 600) / 50 (EVO™ 6000)
- Connectivity: Ethernet, Wifi RS-485, standard USB (qty 2)
- Display type: 7" (17.78 cm) color LCD touch screen
- Printer type: thermal (also network or USB)
- Alarm: internal audible alarm
- LEDs: alarm, warning, and power
- Applicable liquids: petroleum, chemicals, and waste
- Level units: inches, centimeters, and millimeters
- Volume units: gallons or liters (mass with density option)
- Power requirements: 110 to 240 VAC, 50/60 hz, 1.5 Amps
- Operating temperature: 32° to 104 °F (0° to 40 °C)
- Humidity: 0-90% non-condensing
- EVO™ 600: Height 11.75"(300 mm), Width 10¼"(260 mm), Depth 9"(229 mm)
- EVO™ 6000: Height 11.75"(300 mm), Width 16½"(419 mm), Depth 9"(229 mm)

Capabilities

- High/low product, water, and temperature alarm set points
- Inventory reconciliation/tank autocalibration/flow rate monitoring
- Density, mass, and phase separation measurement
- Email and SMS notifications
- Back-up generator monitoring/conditions programming
- Advanced logic control for DEF/AdBlue® recirculation system
- MODBUS™ support

SPECIFICATIONS CONTINUED

Components

1. Cover
2. LCD touch screen
3. LED indicators
4. Printer
5. Mounting tabs
6. Cooling vents
7. Module slots
8. Communication ports
9. Annunciator (audible alarm)
10. Ethernet port
11. Ethernet port
12. USB ports (qty 2)
13. Mini-USB
14. Ground comm port
15. Wi-Fi
16. Bus extension
17. Serial comm port 2
18. RS-485 comm port
19. Controller module
20. Power supply module
21. AC input module
22. 10 Amp relay module
23. I/O module
24. 4-20mA module EXP
25. Relay module
26. Blank
27. Intrinsically safe barrier
28. Probe module
29. 4-20mA module
30. 2 wire sensor module
31. 3 wire sensor module



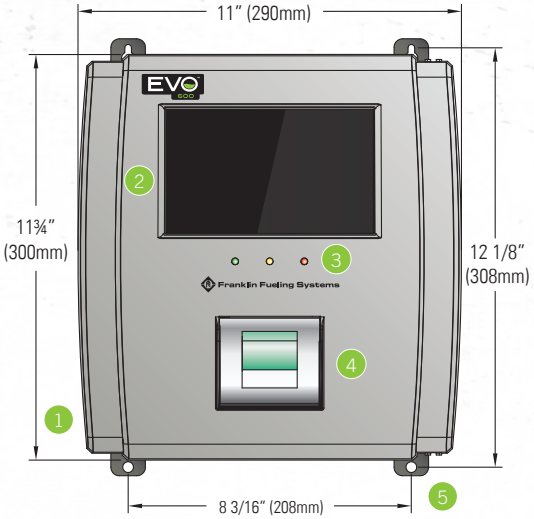

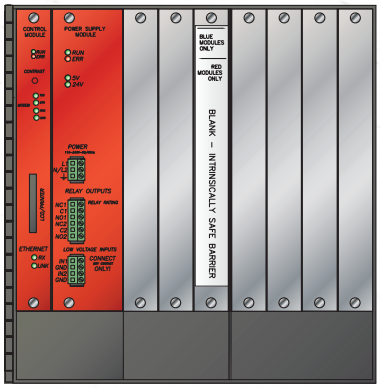

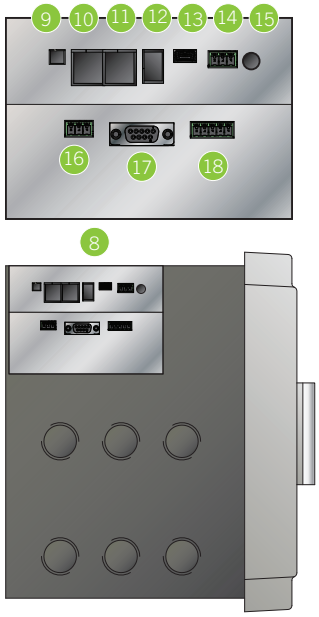

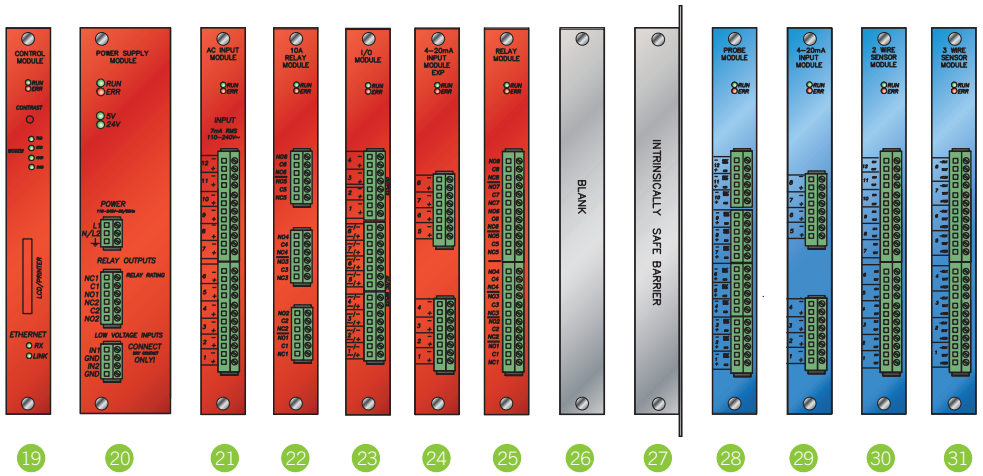

- There can only be three types of one module in an EVO™ Series ATG.
- If you require more than three types of one module, please contact your FFS sales representative to review your needs.
- The intrinsically safe barrier must be installed in the third slot or greater. (The third slot after the power supply module.)

ORDERING INFORMATION

Ordering Guide

ATG model, software and hardware options can be listed separately or combined when ordering. Systems shipped from the factory will list the combined part number. Complete part numbers have a specific order and are created using the following guidelines:

EVOX DPWIE / TRFLGC

EVOX = **Base Model Options**

EVO600 = EVO™ 600 base ATG

EVO6000 = EVO™ 6000 base ATG

DPWIE = **Hardware Options** (choose all that apply)*

D = Display

P = Printer

W = Wifi

I = Dispenser interface module

E = LON module

TRFLGC = **Software Options** (choose all that apply)

T = SCALD 24-hour tank testing

R or F = (R) Reconciliation/autocalibration or

(F) Reconciliation/autocalibration with flow rate monitoring

L or G = (L) Line leak detection or

(G) Generator line leak detection

C = Recirculation, scheduling, and timer conditions

*Only one EVO-DIM or EVO-LON module can be installed per ATG.

Example: EVO600DPI/TRL = EVO™ 600 base model with display, with printer, with dispenser interface module, with SCALD, with reconciliation/autocalibration, with line leak detection.

EVO™ 600 & EVO™ 6000 Base Models

Model	Description
EVO600	EVO™ 600 base model automatic tank gauge
EVO6000	EVO™ 6000 base model automatic tank gauge

EVO™ 600 & EVO™ 6000 Hardware & Software Options

EVO™ 600 and EVO™ 6000 ATGs come standard with the ability to perform in-tank static leak detection. The following software and hardware options can be added to customize your ATG. The internal hardware options will be factory installed when ordered with the ATG.

Internal Hardware Options

Model	Description
EVO-DIMIB	(I) Internal dispenser interface module, dispenser interface cable must be ordered separately
EVO-LON	(E) Lon™ communication module, IFSF protocol capability

Note: Only one EVO™-DIM or EVO™-LON module can be installed per ATG.

Internal Software Options / Field Upgrades

Model	Description
TS-TT	(T) Statistical continuous automatic leak detection, 24 hour continuous tank testing software
TS-TRAC	(R) Tank inventory reconciliation and autocalibration
TS-TRAC-F	(F) Reconciliation/autocalibration and flow rate monitoring software
TS-FLOW	Flow rate monitoring software (Field upgrade for ATGs with reconciliation/autocalibration)
TS-ELLD	(L) Electronic line leak detection
TS-ELLD-G	(G) Electronic line leak detection for generator applications
TS-CON	(C) DEF/AdBlue® recirculation, scheduling, and timer conditions

Expansion Consoles

Model	Description
EVO-EXPC2	Secondary console to add six additional plug-in modules to the primary EVO™ 600 or EVO™ 6000 ATG, comes without a display or printer
EVO-EXPC	Secondary console to add eleven additional plug-in modules to the primary EVO™ 600 or EVO™ 6000 ATG, comes without a display or printer

Note: Both of these consoles are for the EVO™ 600 and EVO™ 6000

Upgrade Kits

EVO™ Series Upgrade Kits include everything needed to transform the existing EVO 550™ or EVO™ 5000 to an EVO™ 600 or EVO™ 6000.

Model	Description
EVO-600UPG	Upgrade kit for EVO™ 550 to EVO™ 600, includes control module, comm port cover, and EVO 600™ jewel
EVO-6000UPG	Upgrade kit for EVO™ 5000 to EVO™ 6000, includes control module, comm port cover, and EVO™ 6000 jewel
EVO-600UPG-W	Upgrade kit for EVO™ 550 to EVO™ 600 with Wifi, includes control module, comm port cover, Wifi hardware, and EVO 600™ jewel
EVO-6000UPG-W	Upgrade kit for EVO™ 5000 to EVO™ 6000 with Wifi, includes control module, comm port cover, Wifi hardware, and EVO™ 6000 jewel

franklinfueling.com
3760 Marsh Rd. • Madison, WI 53718, USA
Tel: USA & Canada +1 800 225 9787 • Fax: +1 608 838 6433
Tel: UK +44 (0) 1473 243300 • Tel: Mex 001 800 738 7610
Tel: DE +49 6571 105 380 • Tel: CH +86 10 8565 4566

© 2020 Franklin Fueling Systems. All Rights Reserved.

Underground Storage Tank Facility Plan (TCEQ-0583)

Site Plan

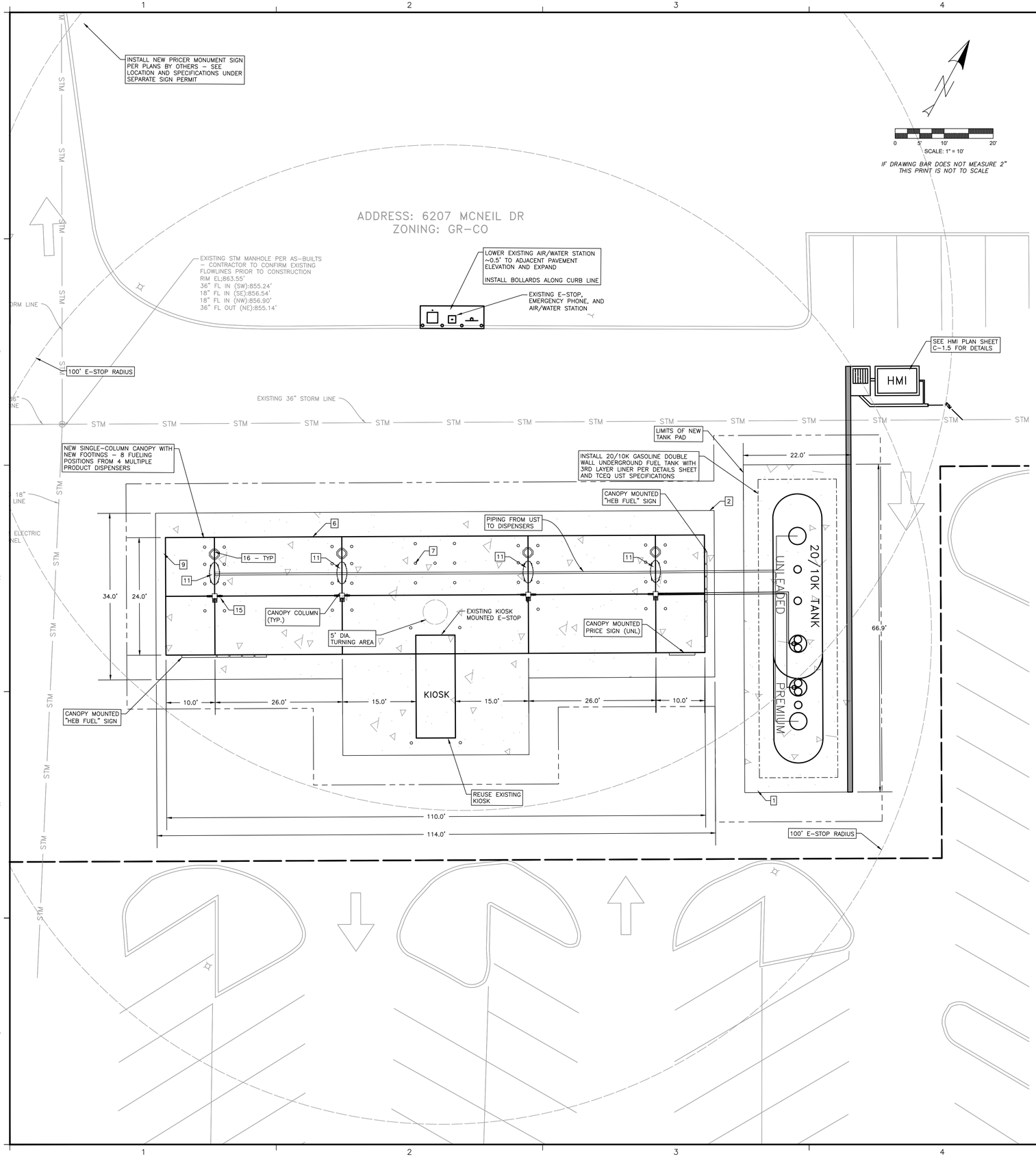

CITY OF AUSTIN SITE PLAN NOTES:

1. WATER AND WASTEWATER SERVICE ARE PROVIDED BY THE CITY OF AUSTIN WITH EXISTING SERVICE LINES (TO REMAIN IN SERVICE).
2. FOR CONSTRUCTION WITHIN THE RIGHT-OF-WAY, A ROW EXCAVATION PERMIT IS REQUIRED.
3. COMPLIANCE WITH THE COMMERCIAL AND MULTI-FAMILY RECYCLING ORDINANCE IS MANDATORY FOR MULTI-FAMILY COMPLEXES WITH 100 OR MORE UNITS AND BUSINESSES AND OFFICE BUILDINGS WITH 100 OR MORE EMPLOYEES ON SITE [AUSTIN CITY CODE, SEC. 15-6-91].
4. ALL EXTERIOR LIGHTING WILL BE FULL CUT-OFF AND FULLY SHIELDED IN COMPLIANCE WITH SUBCHAPTER E 2.5. ALL SITE LIGHTING TO BE LOCATED ON THE BUILDING WILL BE IN COMPLIANCE WITH SUBCHAPTER E 2.5, AND WILL BE REVIEWED DURING BUILDING PLAN REVIEW. ANY CHANGE OR SUBSTITUTION OF LAMP/LIGHT FIXTURES SHALL BE SUBMITTED TO THE DIRECTOR FOR APPROVAL IN ACCORDANCE WITH SECTION 2.5.2.E.
   a) ALL EXTERIOR LIGHTING WILL BE HOODED OR SHIELDED FROM THE VIEW OF ADJACENT RESIDENTIAL PROPERTY. [SECTION 25-2-1064].
   b) ALL DUMPSTERS AND ANY PERMANENTLY PLACED REFUSE RECEPTACLES WILL BE LOCATED AT A MINIMUM OF TWENTY (20) FEET FROM A PROPERTY USED OR ZONED AS SF-5 OR MORE RESTRICTIVE. [SECTION 25-2-1067].
   c) THE USE OF HIGHLY REFLECTIVE SURFACES, SUCH AS REFLECTIVE GLASS AND REFLECTIVE METAL ROOFS, WHOSE PITCH IS MORE THAN A RUN OF SEVEN (7) TO A RISE OF TWELVE (12), WILL BE PROHIBITED. [SECTION 25-2-1067].
   d) THE NOISE LEVEL OF MECHANICAL EQUIPMENT WILL NOT EXCEED 70 DBA AT THE PROPERTY LINE ADJACENT TO RESIDENTIAL USES. [SECTION 25-2-1067].
5. SEE FIGURE 42 FROM SECTION 2.5 OF THE CITY OF AUSTIN LAND DEVELOPMENT CODE BELOW:



6. SCREENING FOR SOLID WASTE COLLECTION AND LOADING AREAS SHALL BE THE SAME AS, OR OF EQUAL QUALITY TO, PRINCIPAL BUILDING MATERIALS.
7. ADEQUATE BARRIERS BETWEEN ALL VEHICULAR USE AREAS AND ADJACENT LANDSCAPE AREAS, SUCH AS A 6" CONCRETE CURB ARE REQUIRED. IF A STANDARD 6" CURB AND GUTTER ARE NOT PROVIDED FOR ALL VEHICULAR USE AREAS AND ADJACENT LANDSCAPE AREAS, COMPLY WITH ECM, SECTION 2.4.7, "PROTECTION OF LANDSCAPE AREAS".
8. AUSTIN ENERGY HAS THE RIGHT TO PRUNE AND/OR REMOVE TREES, SHRUBBERY AND OTHER OBSTRUCTIONS TO THE EXTENT NECESSARY TO KEEP THE EASEMENTS CLEAR. AUSTIN ENERGY WILL PERFORM ALL TREE WORK IN COMPLIANCE WITH CHAPTER 25-8, SUBCHAPTER B OF THE CITY OF AUSTIN LAND DEVELOPMENT CODE.
9. THE OWNER/DEVELOPER OF THIS SUBDIVISION/LOT SHALL PROVIDE AUSTIN ENERGY WITH ANY EASEMENT AND/OR ACCESS REQUIRED, IN ADDITION TO THOSE INDICATED, FOR THE INSTALLATION AND ONGOING MAINTENANCE OF OVERHEAD AND UNDERGROUND ELECTRIC FACILITIES. THESE EASEMENTS AND/OR ACCESS ARE REQUIRED TO PROVIDE ELECTRIC SERVICE TO THE BUILDING AND WILL NOT BE LOCATED SO AS TO CAUSE THE SITE TO BE OUT OF COMPLIANCE WITH CHAPTER 25-8 OF THE CITY OF AUSTIN LAND DEVELOPMENT CODE.
10. THE OWNER SHALL BE RESPONSIBLE FOR INSTALLATION OF TEMPORARY EROSION CONTROL, REVEGETATION AND TREE PROTECTION. IN ADDITION, THE OWNER SHALL BE RESPONSIBLE FOR ANY INITIAL TREE PRUNING AND TREE REMOVAL THAT IS WITHIN TEN FEET OF THE CENTER LINE OF THE PROPOSED OVERHEAD ELECTRICAL FACILITIES DESIGNED TO PROVIDE ELECTRIC SERVICE TO THIS PROJECT. THE OWNER SHALL INCLUDE AUSTIN ENERGY'S WORK WITHIN THE LIMITS OF CONSTRUCTION FOR THIS PROJECT.
11. THE OWNER OF THE PROPERTY IS RESPONSIBLE FOR MAINTAINING CLEARANCES REQUIRED BY THE NATIONAL ELECTRIC SAFETY CODE, OCCUPATIONAL SAFETY AND HEALTH ADMINISTRATION (OSHA) REGULATIONS, CITY OF AUSTIN RULES AND REGULATIONS AND TEXAS STATE LAWS PERTAINING TO CLEARANCES WHEN WORKING IN CLOSE PROXIMITY TO OVERHEAD POWER LINES AND EQUIPMENT. AUSTIN ENERGY WILL NOT RENDER ELECTRIC SERVICE UNLESS REQUIRED CLEARANCES ARE MAINTAINED. ALL COSTS INCURRED BECAUSE OF FAILURE TO COMPLY WITH THE REQUIRED CLEARANCES WILL BE CHARGED TO THE OWNER.
12. WATER, WASTEWATER, DRAINAGE AND ANY OTHER UTILITY IMPROVEMENTS ARE SHOWN FOR INFORMATIONAL PURPOSES ONLY. REFER TO SPECIFIC PLAN SHEETS FOR CONSTRUCTION.
13. EVERY ACCESSIBLE PARKING SPACE MUST BE IDENTIFIED BY A SIGN, CENTERED AT THE HEAD OF THE PARKING SPACE. THE SIGN MUST INCLUDE THE INTERNATIONAL SYMBOL OF ACCESSIBILITY AND STATE RESERVED OR EQUIVALENT LANGUAGE, CHARACTERS AND SYMBOLS ON SUCH SIGNS MUST BE LOCATED 60" MINIMUM ABOVE THE GROUND SO THAT THEY CANNOT BE OBSCURED BY A VEHICLE PARKED IN THE SPACE.
14. IN AREAS WHERE UTILITY LINES ARE PRESENT OR PROPOSED ONLY TREES FROM THE UTILITY COMPATIBLE SHADE TREES LIST (SEE APPENDIX F) SHALL BE PLANTED WITH IN: A) 10 LATERAL FEET FROM ANY OVERHEAD DISTRIBUTION CONDUCTOR; B) 30 TO 40 LATERAL FEET FROM ANY OVERHEAD TRANSMISSION CONDUCTOR, UNLESS A MORE RESTRICTIVE DEDICATED RIGHT-OF-WAY HAS BEEN ESTABLISHED; C) 10 LATERAL FEET FROM ANY UNDERGROUND ELECTRIC FACILITY
15. APPROVAL OF THESE PLANS BY THE CITY OF AUSTIN INDICATES COMPLIANCE WITH APPLICABLE CITY REGULATIONS ONLY. COMPLIANCE WITH ACCESSIBILITY STANDARDS SUCH AS THE 2010 STANDARDS FOR ACCESSIBLE DESIGN OR THE 2012 TEXAS ACCESSIBILITY STANDARDS WAS NOT VERIFIED. THE APPLICANT IS RESPONSIBLE FOR COMPLIANCE WITH ALL APPLICABLE ACCESSIBILITY STANDARDS.
16. ALL IMPROVEMENTS SHALL BE MADE IN ACCORDANCE WITH THE RELEASED SITE PLAN. ANY ADDITIONAL IMPROVEMENTS WILL REQUIRE SITE PLAN REVISION OR CORRECTION AND APPROVAL OF THE DEVELOPMENT SERVICES DEPARTMENT.
17. APPROVAL OF THIS SITE PLAN DOES NOT INCLUDE BUILDING AND FIRE CODE APPROVAL NOR BUILDING PERMIT APPROVAL.
18. ALL SIGNS MUST COMPLY WITH REQUIREMENTS OF THE LAND DEVELOPMENT CODE (CHAPTER 25-10).

SITE PLAN RELEASE NOTES:

1. ALL SIGNS MUST COMPLY WITH REQUIREMENTS OF THE LAND DEVELOPMENT CODE (CHAPTER 25-10).
2. ALL EXISTING STRUCTURES SHOWN TO BE REMOVED WILL REQUIRE A DEMOLITION PERMIT FROM THE CITY OF AUSTIN DEVELOPMENT SERVICES DEPT.
3. A DEVELOPMENT PERMIT MUST BE ISSUED PRIOR TO AN APPLICATION FOR BUILDING PERMIT FOR NON-CONSOLIDATED OR PLANNING COMMISSION APPROVED SITE PLANS.

SITE PLAN EXEMPTION NOTES:

1. TOTAL ADDITIONAL CONSTRUCTION NOT TO EXCEED 1,000 SF AND DOES NOT IMPEDE OR DIVERT DRAINAGE.
2. NO ADDITIONAL IMPERVIOUS COVER IS PROPOSED FROM EXISTING CONDITIONS.
3. SEE EROSION CONTROL PLAN SHEET C-1.2 FOR LIMITS OF CONSTRUCTION.

FUEL STATION KEYNOTES

1	CONCRETE TANK SLAB. RE: A2
2	CONCRETE CANOPY SLAB. RE:D1
3	GENERAL SITE CONTRACTOR OR DEVELOPER SHALL INSTALL ALL CONDUITS AND SERVICES 1' INTO CANOPY AREA. FUEL CONTRACTOR TO CONTINUE CONDUIT INSIDE CANOPY AREA.
4	EMERGENCY SHUT-OFF SWITCH AND EMERGENCY PHONE. "EMERGENCY SHUT-OFF" SIGN SHALL BE MOUNTED ABOVE SWITCH. RE: C2/C-2.0.
5	AIR/WATER STAND RE: A2 OR E3/C-2.0.
6	LIMITS OF CANOPY
7	BOLLARDS SHALL BE INSTALLED RE: A3/C-2.0.
8	MERCHANDISE CART
9	LED FUEL PRICE SIGN (UNLD, E85, DSL – BY HEB SIGN VENDOR)
10	3+1 DISPENSER (DIESEL)
11	3+0 DISPENSER
12	VACUUM STATION
13	INSTALL ADA VAN ACCESSIBLE SIGN PER TAS REQUIREMENTS. RE: D6/C-2.0.
14	CASTELLATED CURB – SEE GRADING SHEET FOR DETAIL
15	FIRE EXTINGUISHER AND CABINET
16	WASTE CONTAINER AND WINDOW WASH
17	PRODUCT COOLERS

LEGEND

EXISTING	PROPOSED	
		1/2" IRON ROD FOUND
		1/2" IRON ROD SET
		IRON PIPE FOUND
		NAIL FOUND
P.O.B.		COMPUTED POINT
		MONUMENT FOUND
		POINT OF BEGINNING
(XXX)		BENCHMARK
		RECORD INFORMATION
		LIGHT POLE
		POWER POLE
		DOWN GUY
		FIRE HYDRANT
		WATER VALVE
		WATER METER
		GAS METER
		GAS VALVE
		WOOD FENCE
		CHAIN LINK FENCE
		WIRE FENCE
EMH	EMH	ELECTRICAL MANHOLE
WWMH	WWMH	WASTEWATER MANHOLE
SSMH	SSMH	STORMSEWER MANHOLE
WTR	WTR	WATER MANHOLE
CO		CLEAN OUT
		DRAINAGE INLET
		CURB INLET
		CURB & GUTTER
		FIRE LANE
		HANDICAPPED PARKING SPACE
		SIGN
		VARIABLE HEIGHT CONCRETE RETAINING WALL
		ELECTRIC PULL BOX
		ELECTRIC METER
		ELECTRIC TRANSFORMER
		TELEPHONE SERVICE BOX
		BOLLARD
OE	OE	OVER HEAD ELEC. LINE
OT	OT	OVER HEAD TELEPHONE
SS	SS	STORM SEWER LINE
W	W	WATER LINE
WW	WW	WASTEWATER LINE
FM	FM	FORCE MAIN
UE	UE	UNDERGROUND ELECTRIC
UT	UT	UNDERGROUND TELEPHONE
G	G	GAS LINE
		PROPERTY LINE
678	678	CONTOUR
704	704	SPOT ELEVATION
		CUT/FILL SLOPES
		FLOW DIRECTION
		CONCRETE SURFACE
1170		EXISTING TREE
1124		TREE TO BE REMOVED

PLEASE BE ADVISED: THIS DOCUMENT MAY CONTAIN SENSITIVE AND/OR PROPRIETARY INFORMATION AND THEREFORE MUST BE TREATED AS A CONFIDENTIAL DOCUMENT. ACCEPTANCE OF THIS DOCUMENT CONSTITUTES AN AGREEMENT THAT THIS DOCUMENT AND THE INFORMATION CONTAINED HEREIN SHALL BE MAINTAINED AND TRANSMITTED IN A CONFIDENTIAL MANNER. NO PART OF THIS DOCUMENT SHALL BE REPRODUCED, RELEASED OR DISTRIBUTED WITHOUT THE EXPRESS WRITTEN PERMISSION OF H.E.B. GROCERY AND ANY DISTRIBUTION TO NON-H.E.B. ENTITIES OR PERSONS MUST BE SUBJECT TO A WRITTEN CONFIDENTIALITY AGREEMENT.

WARNING !!!! CONTRACTOR TO FIELD VERIFY ALL EXIST. UTILITIES VERTICALLY AND HORIZONTALLY PRIOR TO CONSTRUCTION. THE CONTRACTOR IS TO CONTACT ENGINEER IF ANY EXISTING UTILITY INFORMATION DIFFERS FROM DATA SHOWN IN THE PLANS. CALL 811 BEFORE YOU DIG.

PLEASE BE ADVISED: THIS DOCUMENT MAY CONTAIN SENSITIVE AND/OR PROPRIETARY INFORMATION AND THEREFORE MUST BE TREATED AS A CONFIDENTIAL DOCUMENT. ACCEPTANCE OF THIS DOCUMENT CONSTITUTES AN AGREEMENT THAT THIS DOCUMENT AND THE INFORMATION CONTAINED HEREIN SHALL BE MAINTAINED AND TRANSMITTED IN A CONFIDENTIAL MANNER. NO PART OF THIS DOCUMENT SHALL BE REPRODUCED, RELEASED OR DISTRIBUTED WITHOUT THE EXPRESS WRITTEN PERMISSION OF H.E.B. GROCERY AND ANY DISTRIBUTION TO NON-H.E.B. ENTITIES OR PERSONS MUST BE SUBJECT TO A WRITTEN CONFIDENTIALITY AGREEMENT.

28	PLAN MOD 28 – PETROLEUM FUEL REMODEL	11/21/25

11/21/2025
STATE OF TEXAS
NICHOLAS R. SANDLIN
124404
LICENSED PROFESSIONAL ENGINEER

ENGINEERING | CONSULTING
SANDLIN SERVICES LLC
TBPELS FIRM #21356
9111 JOLLYVILLE RD. STE 212
AUSTIN, TX 78759

H-E-B

SITE PLAN

HEB AUSTIN 20
REMODEL CONSTRUCTION PLANS
6001 WEST PARMER LN. AUSTIN, TX 78727

SCALE:	AS INDICATED
DRAWN BY:	
PROJ. NO.:	388-26
DATE:	11.21.2025
SHEET NO.	C-1.2

Temporary Stormwater Section
(TCEQ-0602)

Temporary Stormwater Section

Texas Commission on Environmental Quality

for Regulated Activities on the Edwards Aquifer Recharge Zone and Relating to 30 TAC §213.5(b)(4)(A), (B), (D)(I) and (G); Effective June 1, 1999

To ensure that the application is administratively complete, confirm that all fields in the form are complete, verify that all requested information is provided, consistently reference the same site and contact person in all forms in the application, and ensure forms are signed by the appropriate party.

Note: Including all the information requested in the form and attachments contributes to more streamlined technical reviews.

Signature

To the best of my knowledge, the responses to this form accurately reflect all information requested concerning the proposed regulated activities and methods to protect the Edwards Aquifer. This **Temporary Stormwater Section** is hereby submitted for TCEQ review and executive director approval. The application was prepared by:

Print Name of Customer/Agent: NICK SANDLIN, PE

Date: 11/05/2025

Signature of Customer/Agent:



Regulated Entity Name: HEB 388

Project Information

Potential Sources of Contamination

Examples: Fuel storage and use, chemical storage and use, use of asphaltic products, construction vehicles tracking onto public roads, and existing solid waste.

1. Fuels for construction equipment and hazardous substances which will be used during construction:

   ☐ The following fuels and/or hazardous substances will be stored on the site: _____

   These fuels and/or hazardous substances will be stored in:

   ☐ Aboveground storage tanks with a cumulative storage capacity of less than 250 gallons will be stored on the site for less than one (1) year.

☐ Aboveground storage tanks with a cumulative storage capacity between 250 gallons and 499 gallons will be stored on the site for less than one (1) year.

☐ Aboveground storage tanks with a cumulative storage capacity of 500 gallons or more will be stored on the site. An Aboveground Storage Tank Facility Plan application must be submitted to the appropriate regional office of the TCEQ prior to moving the tanks onto the project.

☒ Fuels and hazardous substances will not be stored on the site.

2. ☒ **Attachment A - Spill Response Actions**. A site specific description of the measures to be taken to contain any spill of hydrocarbons or hazardous substances is attached.

3. ☒ Temporary aboveground storage tank systems of 250 gallons or more cumulative storage capacity must be located a minimum horizontal distance of 150 feet from any domestic, industrial, irrigation, or public water supply well, or other sensitive feature.

4. ☒ **Attachment B - Potential Sources of Contamination**. A description of any activities or processes which may be a potential source of contamination affecting surface water quality is attached.

Sequence of Construction

5. ☒ **Attachment C - Sequence of Major Activities**. A description of the sequence of major activities which will disturb soils for major portions of the site (grubbing, excavation, grading, utilities, and infrastructure installation) is attached.

   ☒ For each activity described, an estimate (in acres) of the total area of the site to be disturbed by each activity is given.

   ☐ For each activity described, include a description of appropriate temporary control measures and the general timing (or sequence) during the construction process that the measures will be implemented.

6. ☒ Name the receiving water(s) at or near the site which will be disturbed or which will receive discharges from disturbed areas of the project: Walnut Creek

Temporary Best Management Practices (TBMPs)

Erosion control examples: tree protection, interceptor swales, level spreaders, outlet stabilization, blankets or matting, mulch, and sod. Sediment control examples: stabilized construction exit, silt fence, filter dikes, rock berms, buffer strips, sediment traps, and sediment basins. Please refer to the Technical Guidance Manual for guidelines and specifications. All structural BMPs must be shown on the site plan.

7. ☒ **Attachment D – Temporary Best Management Practices and Measures**. TBMPs and measures will prevent pollution of surface water, groundwater, and stormwater. The construction-phase BMPs for erosion and sediment controls have been designed to retain sediment on site to the extent practicable. The following information is attached:

☐ A description of how BMPs and measures will prevent pollution of surface water, groundwater or stormwater that originates upgradient from the site and flows across the site.

☒ A description of how BMPs and measures will prevent pollution of surface water or groundwater that originates on-site or flows off site, including pollution caused by contaminated stormwater runoff from the site.

☐ A description of how BMPs and measures will prevent pollutants from entering surface streams, sensitive features, or the aquifer.

☐ A description of how, to the maximum extent practicable, BMPs and measures will maintain flow to naturally-occurring sensitive features identified in either the geologic assessment, TCEQ inspections, or during excavation, blasting, or construction.

8. ☐ The temporary sealing of a naturally-occurring sensitive feature which accepts recharge to the Edwards Aquifer as a temporary pollution abatement measure during active construction should be avoided.

   ☐ **Attachment E - Request to Temporarily Seal a Feature**. A request to temporarily seal a feature is attached. The request includes justification as to why no reasonable and practicable alternative exists for each feature.

   ☒ There will be no temporary sealing of naturally-occurring sensitive features on the site.

9. ☒ **Attachment F - Structural Practices**. A description of the structural practices that will be used to divert flows away from exposed soils, to store flows, or to otherwise limit runoff discharge of pollutants from exposed areas of the site is attached. Placement of structural practices in floodplains has been avoided.

10. ☒ **Attachment G - Drainage Area Map**. A drainage area map supporting the following requirements is attached:

    ☐ For areas that will have more than 10 acres within a common drainage area disturbed at one time, a sediment basin will be provided.

    ☐ For areas that will have more than 10 acres within a common drainage area disturbed at one time, a smaller sediment basin and/or sediment trap(s) will be used.

    ☐ For areas that will have more than 10 acres within a common drainage area disturbed at one time, a sediment basin or other equivalent controls are not attainable, but other TBMPs and measures will be used in combination to protect down slope and side slope boundaries of the construction area.

    ☐ There are no areas greater than 10 acres within a common drainage area that will be disturbed at one time. A smaller sediment basin and/or sediment trap(s) will be used in combination with other erosion and sediment controls within each disturbed drainage area.

☒ There are no areas greater than 10 acres within a common drainage area that will be disturbed at one time. Erosion and sediment controls other than sediment basins or sediment traps within each disturbed drainage area will be used.

11. ☐ **Attachment H - Temporary Sediment Pond(s) Plans and Calculations**. Temporary sediment pond or basin construction plans and design calculations for a proposed temporary BMP or measure have been prepared by or under the direct supervision of a Texas Licensed Professional Engineer. All construction plans and design information must be signed, sealed, and dated by the Texas Licensed Professional Engineer. Construction plans for the proposed temporary BMPs and measures are attached.

☒ N/A

12. ☒ **Attachment I - Inspection and Maintenance for BMPs.** A plan for the inspection of each temporary BMP(s) and measure(s) and for their timely maintenance, repairs, and, if necessary, retrofit is attached. A description of the documentation procedures, recordkeeping practices, and inspection frequency are included in the plan and are specific to the site and/or BMP.

13. ☒ All control measures must be properly selected, installed, and maintained in accordance with the manufacturer's specifications and good engineering practices. If periodic inspections by the applicant or the executive director, or other information indicate a control has been used inappropriately, or incorrectly, the applicant must replace or modify the control for site situations.

14. ☒ If sediment escapes the construction site, off-site accumulations of sediment must be removed at a frequency sufficient to minimize offsite impacts to water quality (e.g., fugitive sediment in street being washed into surface streams or sensitive features by the next rain).

15. ☒ Sediment must be removed from sediment traps or sedimentation ponds not later than when design capacity has been reduced by 50%. A permanent stake will be provided that can indicate when the sediment occupies 50% of the basin volume.

16. ☒ Litter, construction debris, and construction chemicals exposed to stormwater shall be prevented from becoming a pollutant source for stormwater discharges (e.g., screening outfalls, picked up daily).

Soil Stabilization Practices

Examples: establishment of temporary vegetation, establishment of permanent vegetation, mulching, geotextiles, sod stabilization, vegetative buffer strips, protection of trees, or preservation of mature vegetation.

17. ☒ **Attachment J - Schedule of Interim and Permanent Soil Stabilization Practices**. A schedule of the interim and permanent soil stabilization practices for the site is attached.

18. ☒ Records must be kept at the site of the dates when major grading activities occur, the dates when construction activities temporarily or permanently cease on a portion of the site, and the dates when stabilization measures are initiated.

19. ☒ Stabilization practices must be initiated as soon as practicable where construction activities have temporarily or permanently ceased.

Administrative Information

20. ☒ All structural controls will be inspected and maintained according to the submitted and approved operation and maintenance plan for the project.

21. ☒ If any geologic or manmade features, such as caves, faults, sinkholes, etc., are discovered, all regulated activities near the feature will be immediately suspended. The appropriate TCEQ Regional Office shall be immediately notified. Regulated activities must cease and not continue until the TCEQ has reviewed and approved the methods proposed to protect the aquifer from any adverse impacts.

22. ☒ Silt fences, diversion berms, and other temporary erosion and sediment controls will be constructed and maintained as appropriate to prevent pollutants from entering sensitive features discovered during construction.

Temporary Stormwater Section (TCEQ-0602)

Attachment A: Spill Response Actions

Spill Response Actions

In the event of an accidental spill, immediate action shall be undertaken by the General Contractor to contain and remove the spilled material. All hazardous materials, including contaminated soil and liquid concrete waste (if applicable), shall be disposed of by the Contractor in the manner specified by Federal, State and Local regulations and by the manufacturer of such products. As soon as possible, the spill shall be reported to the appropriate agencies. As required under the provisions of the Clean Water Act, any spill or discharge entering waters of the United States shall be properly reported. The General Contractor shall prepare a written record of any spill and associated clean-up activities of petroleum products or hazardous materials in excess of 1 gallon or reportable quantities, whichever is less. The General Contractor shall provide notice to the Owner immediately upon identification of a reportable spill.

All spills of petroleum products or hazardous materials in excess of Reportable Quantities as defined by EPA or the State or Local agency regulations, shall be immediately reported within 24 hours to the EPA National Response Center (1-800-424-8802), TCEQ (1-800-832-8224), and local Fire Department (911).

The reportable quantity for hazardous materials can be found in 40 CFR 302:

Reportable Quantities		
Material	**Media Released to**	**Reportable Quantities**
Engine Oil, Fuel, Hydraulic & Brake Fluid	Land	25 gallons
Engine Oil, Fuel, Hydraulic & Brake Fluid	Water	Visible sheen
Antifreeze	Land	100 lbs (13 gal.)
Battery Acid	Land, Water	100 lbs
Refrigerant	Air	1 lb
Gasoline	Air, Land, Water	100 lbs
Engine Degreasers	Air, Land, Water	100 lbs

Please visit https://www.tceq.texas.gov/response/spills/spill_rq.html for more information.

In order to minimize the potential for a spill of petroleum product or hazardous materials to come in contact with stormwater, the following steps shall be implemented.

1) All materials with hazardous properties (such as pesticides, petroleum products, fertilizers, detergents, construction chemicals, acids paints, paint solvents, additives for soil stabilization,

concrete curing compounds and additives, etc.) shall be stored in a secure location, under cover and in appropriate, tightly sealed containers when not in use.

2) The minimum practical quantity of all such materials shall be kept on the job site and scheduled for delivery as close to the time of use as practical. Post Material Safety Data Sheets (MSDS), as well as proper storage, cleanup, and spill reporting instructions for hazardous materials stored or used on the project site in an open, conspicuous, and accessible location.

3) A spill control and containment kit (containing for example: absorbent material such as kitty litter or sawdust, acid neutralizing agent, brooms, dust pans, mops, rags, gloves, goggles, plastic and metal trash containers, etc.) shall be provided on the construction site and construction employees shall be trained in when and how to use spill containment materials.

4) The contractor personnel will immediately clean up any oil, fuel or hydraulic fluid if observed being released from equipment or vehicles. Vehicles or equipment will cease operation until required repairs are made to the equipment.

5) All of the product in a container shall be used before the container is disposed of. All such containers shall be triple rinsed with water prior to disposal. The rinse water used in these containers shall be disposed of in a manner in compliance with State and Federal regulations and shall not be allowed to mix with stormwater discharges.

6) All products shall be stored in and used from the original container with the original product label.

7) All products shall be used in strict compliance with instructions on the product label.

8) The disposal of the excess or used products shall be in strict compliance with instructions on the product's label.

Spill Prevention and Control

Education

1) Be aware that different materials pollute in different amounts. Make sure that each employee knows what a "significant spill" is for each material they use, and what is the appropriate response for "significant" and "insignificant" spills. Employees should also be aware of when a spill must be reported to the TCEQ. Information is available in 30 TAC 327.4 and 40 CFR 302.4.
2) Educate employees and subcontractors on potential dangers to humans and the environment from spills and leaks.
3) Hold regular meetings to discuss and reinforce appropriate disposal procedures (incorporate into regular safety meetings).
4) Establish a continuing education program to indoctrinate new employees.
5) Have contractor's superintendent or representative oversee and enforce proper spill prevention and control measures.

General Measures

1) To the extent that the work can be accomplished safely, spills of oil, petroleum products, substances listed under 40 CFR parts 110, 117, and 302, and sanitary and septic wastes should be contained and cleaned up immediately.
2) Store hazardous materials and wastes in covered containers and protect from vandalism.
3) Place a stockpile of spill cleanup materials where it will be readily accessible.
4) Train employees in spill prevention and cleanup.
5) Designate responsible individuals to oversee and enforce control measures.
6) Spills should be covered and protected from stormwater run-on during rainfall to the extent that it doesn't compromise cleanup activities.
7) Do not bury or wash spills with water.
8) Store and dispose of used clean up materials, contaminated materials, and recovered spill material that is no longer suitable for the intended purpose in conformance with the provisions in applicable BMPs.
9) Do not allow water used for leaning and decontamination to enter storm drains or watercourses. Collect and dispose of contaminated water in accordance with applicable regulations.
10) Contain water overflow or minor water spillage and do not allow it to discharge into drainage facilities or watercourses.
11) Place Material Safety Data Sheets (MSDS), as well as proper storage, cleanup, and spill reporting instructions for hazardous materials stored or used on the project site in an open, conspicuous, and accessible location.
12) Keep waste storage areas clean, well-organized, and equipped with ample cleanup supplies as appropriate for the materials being stored. Perimeter controls, containment structures, covers, and liners should be repaired or replaced as needed to maintain proper function.

Cleanup

1) Clean up leaks and spills immediately.
2) Use a rag for small spills on paved surfaces, a damp mop for general cleanup, and absorbent material for larger spills. If the spilled material is hazardous, then the used cleanup materials are also hazardous and must be disposed of as hazardous waste.
3) Never hose down or bury dry material spills. Clean up as much of the material as possible and dispose of it properly. See the waste management BMPs in this section for specific information.

Minor Spills

1) Minor spills typically involve small quantities of oil, gasoline, paint, etc. which can be controlled by the first responder at the discovery of the spill.
2) Use absorbent materials on small spills rather than hosing down or burying the spill.
3) Absorbent materials should be promptly removed and disposed of properly.

4) Follow the practice below for a minor spill:
5) Contain the spread of the spill.
6) Recover spilled materials.
7) Clean the contaminated area and properly dispose of contaminated materials.

Semi-Significant Spills

Semi-significant spills still can be controlled by the first responder along with the aid of other personnel such as laborers and the foreman, etc. This response may require the cessation of all other activities. Spills should be cleaned up immediately.

1) Contain spread of the spill.
2) Notify the project foreman immediately.
3) If the spill occurs on paved or impermeable surfaces, clean up using "dry" methods (absorbent materials, cat litter and/or rags). Contain the spill by encircling with absorbent materials and do not let the spill spread widely.
4) If the spill occurs in dirt areas, immediately contain the spill by constructing an earthen dike. Dig up and properly dispose of contaminated soil.
5) If the spill occurs during rain, cover the spill with tarps or other material to prevent contaminating runoff.

Significant/Hazardous Spills

For significant or hazardous spills that are in reportable quantities:

1) Notify the TCEQ by telephone as soon as possible and within 24 hours at 512-339-2929 (Austin) or 210-490-3096 (San Antonio) between 8 AM and 5 PM. After hours, contact the Environmental Release Hotline at 1-800-832-8224. It is the contractor's responsibility to have all emergency phone numbers at the construction site.
2) For spills of federal reportable quantities, in conformance with the requirements in 40 CFR parts 110,009, and 302, the contractor should notify the National Response Center at (800)424-8802.
3) Notification should first be made by telephone and followed up with a written report.
4) The services of a spill's contractor or a Haz-Mat team should be obtained immediately. Construction personnel should not attempt to clean up until the appropriate and qualified staff have arrived at the job site.
5) Other agencies which may need to be consulted include, but are not limited to, the City Police Department, County sheriff Office, Fire Departments, etc.

More information on spill rules and appropriate responses is available on the TCEQ website at: https://www.tceq.texas.gov/downloads/compliance/investigations/spills/spill-poster-x.pdf

Vehicle and Equipment Maintenance

1) If maintenance must occur onsite, use a designated area and a secondary containment, located away from drainage course, to prevent the runon of stormwater and the runoff of spills.

2) Regularly inspect onsite vehicles and equipment for leaks and repair immediately.
3) Check incoming vehicles and equipment (including delivery trucks, and employee and subcontractor vehicles) for leaking oil and fluids. Do not allow leaking vehicles or equipment onsite.
4) Always use secondary containment, such as a drain pan or drop cloth, to catch spills or leaks when removing or changing fluids.
5) Place drip pans or absorbent materials under paving equipment when not in use.
6) Use absorbent materials on small spills rather than hosing down or burying the spill. Remove the absorbent materials promptly and dispose of them properly.
7) Promptly transfer used fluids to the proper waste or recycling drums. Don't leave full drip pans or other open containers lying around.
8) Oil filters disposed of in trashcans or dumpsters can leak oil and pollute stormwater. Place the oil filter in a funnel over a waste oil-recycling drum to drain excess oil before disposal. Oil filters can also be recycled. Ask the oil supplier or recycler about recycling oil filters.
9) Store cracked batteries in a non-leaking secondary container. Do this with all cracked batteries even if you think all the acid has drained out. If you drop a battery, treat it as if it is cracked. Put it into the containment area until you are sure it is not leaking.

Vehicle and Equipment Fueling

1) If fueling must occur on site, use designated areas, located away from drainage courses, to prevent the runon of stormwater and the runoff of spills.
2) Discourage 'topping off' of fuel tanks.

Always use secondary containment, such as a drain pan, when fueling to catch spills/leaks.

SPILL REPORT FORM

Notes to General Contractor:

- Control and contain the spill.
- Contact the appropriate regulatory agencies if the spill exceeds the applicable reportable quantity.
- Clean up the spill and dispose of waste according to federal, state and local regulations.
- Complete the Spill Report Form in full for each spill that exceeds the applicable reportable quantity and submit to the Owner.
- Call the Owner.
- Resolve as appropriate and as required by regulatory authorities.

SPILL REPORT FORM

DATE:
PROJECT:
PROJECT ADDRESS:

Spill Reported By: _____

Date / Time of Spill: _____

Describe spill location and events leading to spill: _____

_____

Material Spilled: _____

Source of Spill: _____

Amount Spilled: _____

Amount Spilled to Waterway (Name Waterway): _____

Containment or Clean up Action: _____

_____

Approximate depth (yards) of soil excavation: _____

List injuries or Personal Contamination: _____

Action to be taken to prevent future spills:
_____

Agencies notified of spill:
_____

_____

_____ _____
Contractor Signature and Printed Name **Date**

AFTER NOTIFYING GOVERNING AUTHORITIES, IMMEDIATELY COMPLETE THIS FORM AND CONTACT THE OWNER IF THE SPILL EXCEEDS THE REPORTABLE QUANTITY FOR THE GOVERNING AGENCY

Temporary Stormwater Section (TCEQ-0602)

Attachment B: Potential Sources of Contamination

Potential Sources of Contamination and Preventive Measures:

Potential Source: Concrete and concrete products used on-site during construction.
Preventive Measures: Concrete washout structure will be used if necessary.

Potential Source: Oil, grease, fuel, and hydraulic fluid contamination from construction equipment and vehicle dripping.
Preventative Measures: Vehicle maintenance will be performed at a local maintenance shop.

Potential Source: Miscellaneous trash and litter from construction workers and material wrappings.
Preventative Measures: Trash containers will be placed throughout the site to encourage proper disposal of trash.

Potential Source: Silt leaving the site.
Preventative Measures: Contractor will install all temporary best management practices prior to start of construction including the stabilized construction entrance to prevent tracking onto adjoining streets.

Potential Source: Construction debris
Preventative Measures: Construction debris will be monitored daily by contractor. Debris will be collected weekly and placed in disposal bins. Situations requiring immediate attention will be addressed on a case-by-case basis.

Potential Source: Soil and mud from construction vehicle tires as they leave the site.
Preventative Measures: a stabilized construction exit shall be utilized as vehicles leave the site. And soil, mud, etc. carried from the project onto public roads shall be cleaned up within 24 hours.

Potential Source: Sediment from soil, sand, gravel, and excavated materials stockpiled on site.
Preventative Measures: Silt fence shall be installed on the downgradient side of the stockpiled materials. Reinforced rock berms shall be installed at all downstream discharge locations.

Potential Source: Portable toilet spill
Preventative Measures: Toilets on the site will be emptied on a regular basis by the contracted toilet company.

Temporary Stormwater Section (TCEQ-0602)

Attachment C: Sequence of Major Activities

The installation of erosion and sedimentation controls shall occur prior to any excavation of materials or major disturbances on the site. The sequence of major construction activities will be as follows. Approximate acreage (AC) expected to be disturbed is listed in parentheses next to each activity.

Intended Schedule or Sequence of Major Activities:

1. Submit written notice of construction to TCEQ regional office at least 48 hours prior to the start of any regulated activities. (See Permanent Stormwater Section – Attachment F)

2. A pre-construction conference prior to commencement of construction. All contractors conducting regulated activities associated with this project must be provided with complete copies of the approved Water Pollution Abatement Plan (WPAP) and the TCEQ letter indicating the specific conditions of its approval. During the course of these regulated activities, the contractors are required to keep on-site copies of the approved plan and approval letter.

3. Contractors must follow requirements as outlined in TCEQ General Construction Notes for the Water Pollution Abatement Plan (WPAP). WPAP Construction Notes are included on the Construction Plan sheets (See Permanent Stormwater Section – Attachment F).

4. Prior to beginning any construction activity, all temporary erosion and sedimentation BMPs and control measures must be properly installed and maintained in accordance with the approved plans and manufacturers specifications (0.913 Acres).

5. Evaluate temporary erosion control installation. If inspections indicate a control has been used inappropriately, or incorrectly, the applicant must replace or modify the control for site situations. These controls must remain in place until the disturbed areas have been permanently stabilized.

6. Review construction schedule and the Water Pollution Abatement Plan (WPAP) requirements.

7. Complete Permanent BMP construction and install landscaping (0.913 Acres).

8. Topsoil, Irrigation and Landscaping: Revegetate all disturbed areas according to plan.

9. Site cleanup and removal of temporary erosion/sedimentation BMP controls. (0.913 Acres)

Maximum total construction time is not expected to exceed 12 months.

Temporary Stormwater Section
(TCEQ-0602)

Attachment D:
Temporary Best Management Practices and Measures

1. There is approximately 0.0 AC of storm water that originates up gradient from the site and flows across the site through an onsite BMP.

2. Temporary BMPs will be installed prior to soil disturbing construction activity. Silt fencing will be placed along the down-gradient sides of the property and limits of construction to prevent silt from escaping the construction area during permanent BMP construction.

3. The existing on-site driveway will be utilized for construction vehicle access. The contractor shall monitor the adjacent roadways daily and clean as needed. A concrete washout pit may be used to collect all excess concrete during construction, if needed.

4. Temporary BMPs for this project will protect surface water or groundwater from turbid water, phosphorus, sediment, oil and other contaminants, which may mobilize in stormwater flows by slowing the flow of runoff to allow sediment and suspended solids to settle out of the runoff.

5. Practices may also be implemented on site for interim and permanent stabilization. Stabilization practices may include but are not limited to establishment of temporary vegetation; establishment of permanent vegetation; mulching; geotextiles; sod stabilization; vegetative buffer strips; protection of existing trees and vegetation; and other similar measures.

6. There are no sensitive features or surface streams within the boundaries of the project that would require temporary BMPs. The temporary onsite BMPs will be used to treat stormwater runoff before it leaves the project and prevent pollutants from entering into surface streams or any sensitive features down gradient of the site.

Temporary Stormwater Section
(TCEQ-0602)

Attachment E:
Request to Temporarily Seal a Feature
(NOT APPLICABLE)

Temporary Stormwater Section (TCEQ-0602)

Attachment F: Structural Practices

Structural BMPs will be used to limit runoff discharge of pollutants from exposed areas of the site. BMPs will be installed prior to soil disturbing construction activity. Silt fencing will be placed along the down-gradient sides of the property to prevent silt from escaping the construction area. A temporary construction entrance will be placed at the site entry/exit point to reduce tracking onto adjoining streets. A construction staging area will be used onsite to perform all vehicle maintenance and for equipment and material storage. A concrete truck washout pit will be placed on site to provide containment and easier cleanup of waste from concrete operations. The location of all structural temporary BMPs are shown within the Site Plan.

Description of Temporary BMPs

Silt Fence:
The purpose of a silt fence is to intercept and detain water-borne sediment from unprotected areas of a limited extent. Silt fence is used during the period of construction near the perimeter of a disturbed area to intercept sediment while allowing water to percolate through. This fence should remain in place until the disturbed area is permanently stabilized. Silt fence should not be used where there is a concentration of water in a channel or drainage way. If concentrated flow occurs after installation, corrective action must be taken such as placing a rock berm in the areas of concentrated flow.

Silt fencing within the site may be temporarily moved during the day to allow construction activity provided it is replaced and properly anchored to the ground at the end of the day. Silt fences on the perimeter of the site or around drainage ways should not be moved at any time.

Triangular Sediment Filter Dikes
Triangular sediment filter dikes (18"x18"x18" filter material with 6" square folded wire mesh frame) will be installed downgradient of the AST construction area with filter cloth placed over any existing stormwater collection drains. The dike and filter cloth will be held in place with cloth sandbags. The facility existing topography will not change as the AST will be placed on existing crushed rock.

Concrete Washout Area (if applicable)
The purpose of concrete washout areas is to prevent or reduce the discharge of pollutants to stormwater from concrete waste by conducting washout offsite, performing onsite washout in a designated area, and training employees and subcontractors.

The following steps will help reduce stormwater pollution from concrete wastes:

- Incorporate requirements for concrete waste management into material supplier and subcontractor agreements.

- Avoid mixing excess amounts of fresh concrete.
- Perform washout of concrete trucks in designated areas only.
- Do not wash out concrete trucks into storm drains, open ditches, streets, or streams.
- Do not allow excess concrete to be dumped onsite, except in designated areas.
- For onsite washout:
- Locate washout area at least 50 feet from sensitive features, storm drains, open ditches, or water bodies. Do not allow runoff from this area by constructing a temporary pit or bermed area large enough for liquid and solid waste.
- Wash out wastes into the temporary pit where the concrete can set, be broken up, and then disposed properly.

Temporary Stormwater Section (TCEQ-0602)

Attachment G: Drainage Area Map

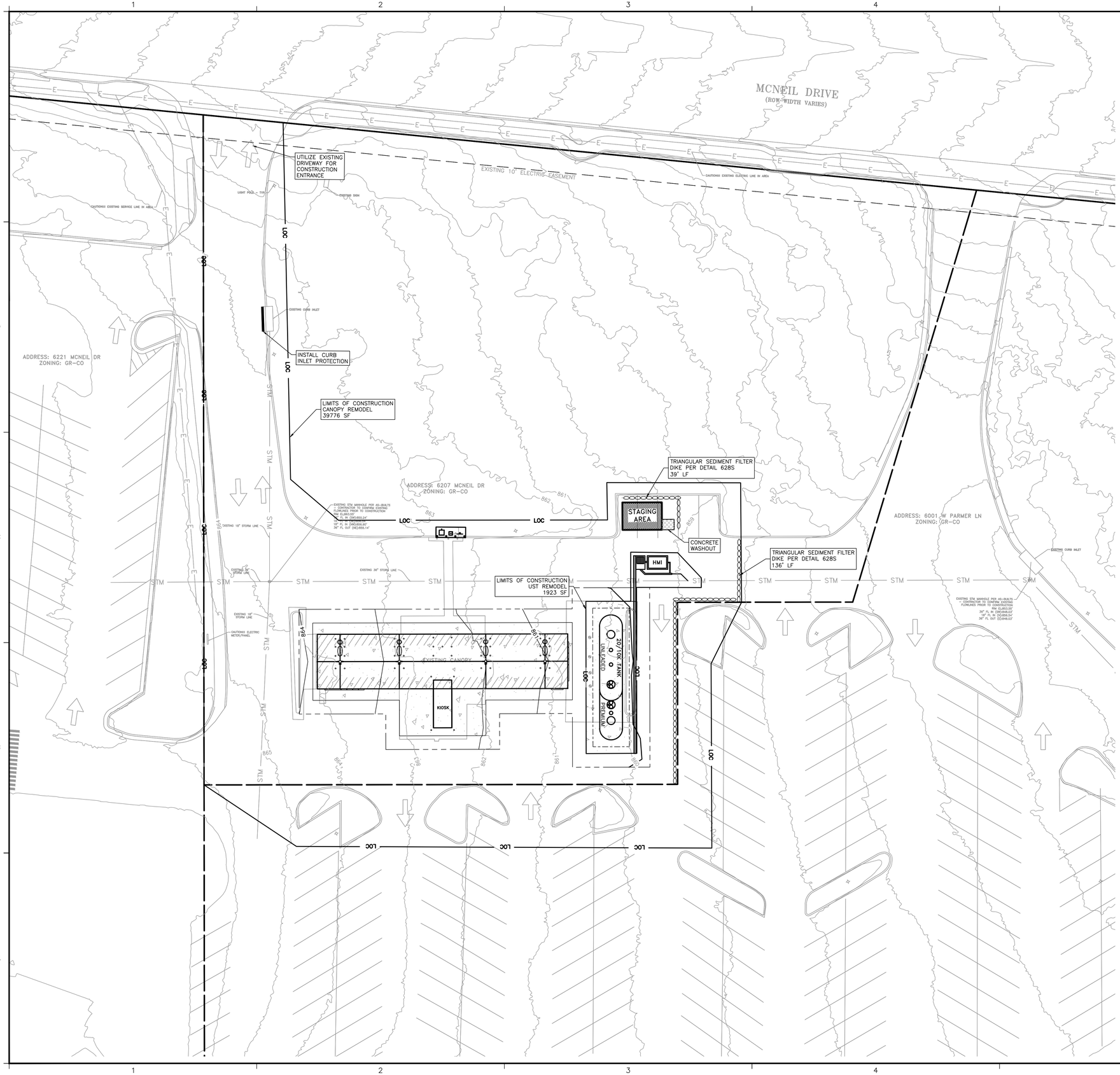

0 10' 20' 40'

SCALE: 1" = 20'

IF DRAWING BAR DOES NOT MEASURE 2" THIS PRINT IS NOT TO SCALE

EROSION CONTROL NOTES:

1. LIMITS OF CONSTRUCTION OF CANOPY REMODEL: 39,776 SF
2. LIMITS OF CONSTRUCTION OF UST REMODEL: 1,923 SF (< 3,000 SF)
2. NO TREES OVER 8" ARE PROPOSED FOR REMOVAL WITH THIS SITE PLAN EXEMPTION.
3. EXISTING DRIVEWAY SHALL FUNCTION AS CONSTRUCTION ENTRANCE.
4. INSTALL EROSION CONTROLS PER PLAN. WITH THE APPROVAL OF THE ENVIRONMENTAL INSPECTOR, ADJUST AS NEEDED DURING CONSTRUCTION.
5. CONTRACTOR SHALL REMOVE ALL SILT AND DEBRIS FROM ALL EXISTING OR NEWLY PAVED SURFACES AT THE END OF CONSTRUCTION.
6. TEMPORARY STAGING & STORAGE AREA/TEMPORARY SPOILS AREA IS TO BE USED DURING NORMAL WORK HOURS (7 A.M. TO 7 P.M.). ONCE CONSTRUCTION IS COMPLETE, CONTRACTOR SHALL REMOVE ALL SILT AND DEBRIS FROM AREA AND RESTORE TO ORIGINAL CONDITION OR BETTER.
7. ALL INLETS SHALL HAVE INLET PROTECTION IN PLACE UNTIL THE COMPLETION OF GRADING AND REVEGETATION.
8. IN AREAS WHERE SILT FENCE IS TO BE INSTALLED CROSSING CONTOURS, J-HOOKS SHALL BE ADDED TO THE SILT FENCE EVERY 100 FEET.
9. STABILIZATION OF ALL SLOPES 3:1 OR GREATER, SUITABLE MATTING (TYPE I) WILL BE UTILIZED IN CONJUNCTION WITH REVEGETATIVE EFFORTS ONSITE. CHANNEL STABILIZATION WILL USE TYPE II.

LEGEND

EXISTING	PROPOSED	
●		1/2" IRON ROD FOUND
○		1/2" IRON ROD SET
⊙		IRON PIPE FOUND
▲		NAIL FOUND
△		COMPUTED POINT
⊕		MONUMENT FOUND
P.O.B.		POINT OF BEGINNING
◍		BENCHMARK
(XXX)		RECORD INFORMATION
✳	✱	LIGHT POLE
Ø	Ø	POWER POLE
⤹	⤹	DOWN GUY
⊤	⊤	FIRE HYDRANT
⊘	⊘	WATER VALVE
⊠	⊠	WATER METER
⊠	⊠	GAS METER
Ⓖ	Ⓖ	GAS VALVE
		WOOD FENCE
		CHAIN LINK FENCE
		WIRE FENCE
EMH ○	EMH ●	ELECTRICAL MANHOLE
WWMH ○	WWMH ●	WASTEWATER MANHOLE
SSMH ○	SSMH ●	STORMSEWER MANHOLE
WTR ○	WTR ●	WATER MANHOLE
CO ○	CO ●	CLEAN OUT
▤	▤	DRAINAGE INLET
▭	▭	CURB INLET
		CURB & GUTTER
		FIRE LANE
♿	♿	HANDICAPPED PARKING SPACE
▫	▫	SIGN
		VARIABLE HEIGHT CONCRETE RETAINING WALL
⊠	⊠	ELECTRIC PULL BOX
E	E	ELECTRIC METER
T	T	ELECTRIC TRANSFORMER
△	△	TELEPHONE SERVICE BOX
○	●	BOLLARD
— OE —	— OE —	OVER HEAD ELEC. LINE
— OT —	— OT —	OVER HEAD TELEPHONE
— SS —	— SS —	STORM SEWER LINE
— W —	— W —	WATER LINE
— WW —	— WW —	WASTEWATER LINE
— FM —	— FM —	FORCE MAIN
— UE —	— UE —	UNDERGROUND ELECTRIC
— UT —	— UT —	UNDERGROUND TELEPHONE
— G —	— G —	GAS LINE
		PROPERTY LINE
678	678	CONTOUR
704	704	SPOT ELEVATION
		CUT/FILL SLOPES
		FLOW DIRECTION
		CONCRETE SURFACE
1170		EXISTING TREE
1124		TREE TO BE REMOVED

PLEASE BE ADVISED: THIS DOCUMENT MAY CONTAIN SENSITIVE AND/OR PROPRIETARY INFORMATION AND THEREFORE MUST BE TREATED AS A CONFIDENTIAL DOCUMENT. ACCEPTANCE OF THIS DOCUMENT CONSTITUTES AN AGREEMENT THAT THIS DOCUMENT AND THE INFORMATION CONTAINED HEREIN SHALL BE MAINTAINED AND TRANSMITTED IN A CONFIDENTIAL MANNER. NO PART OF THIS DOCUMENT SHALL BE REPRODUCED, RELEASED OR DISTRIBUTED WITHOUT THE EXPRESS WRITTEN PERMISSION OF H.E.B. GROCERY AND ANY DISTRIBUTION TO NON-H.E.B. ENTITIES OR PERSONS MUST BE SUBJECT TO A WRITTEN CONFIDENTIALITY AGREEMENT.

WARNING !!!! CONTRACTOR TO FIELD VERIFY ALL EXIST. UTILITIES VERTICALLY AND HORIZONTALLY PRIOR TO CONSTRUCTION. THE CONTRACTOR IS TO CONTACT ENGINEER IF ANY EXISTING UTILITY INFORMATION DIFFERS FROM DATA SHOWN IN THE PLANS. CALL 811 BEFORE YOU DIG.

28	PLAN MOD 28 - PETROLEUM FUEL REMODEL	11/21/25						

11/21/2025

STATE OF TEXAS
NICHOLAS R. SANDLIN
124404
LICENSED
PROFESSIONAL ENGINEER

SANDLIN SERVICES LLC
ENGINEERING | CONSULTING
TBPELS FIRM #21356
9111 JOLLYVILLE RD, STE 212
AUSTIN, TX 78759

H-E-B

EROSION CONTROL PLAN

HEB AUSTIN 20
REMODEL CONSTRUCTION PLANS
6001 WEST PARMER LN, AUSTIN, TX 78727

SCALE:	AS INDICATED
DESIGN:	
PROJ. NO.:	388-26
DATE:	11.21.2025
SHEET NO.	C - 1.0

APPENDIX P–2: CITY OF AUSTIN STANDARD NOTES FOR TREE AND NATURAL AREA PROTECTION

1. ALL TREES AND NATURAL AREAS SHOWN ON PLAN TO BE PRESERVED SHALL BE PROTECTED DURING CONSTRUCTION WITH TEMPORARY FENCING.
2. PROTECTIVE FENCES SHALL BE ERECTED ACCORDING TO CITY OF AUSTIN STANDARDS FOR TREE PROTECTION.
3. PROTECTIVE FENCES SHALL BE INSTALLED PRIOR TO THE START OF ANY SITE PREPARATION WORK (CLEARING, GRUBBING OR GRADING), AND SHALL BE MAINTAINED THROUGHOUT ALL PHASES OF THE CONSTRUCTION PROJECT.
4. EROSION AND SEDIMENTATION CONTROL BARRIERS SHALL BE INSTALLED OR MAINTAINED IN A MANNER WHICH DOES NOT RESULT IN SOIL BUILD–UP WITHIN TREE DRIP LINES.
5. PROTECTIVE FENCES SHALL SURROUND THE TREES OR GROUP OF TREES, AND WILL BE LOCATED AT THE OUTERMOST LIMIT OF BRANCHES (DRIP LINE) , FOR NATURAL AREAS, PROTECTIVE FENCES SHALL FOLLOW THE LIMIT OF CONSTRUCTION LINE, IN ORDER TO PREVENT THE FOLLOWING:
   A. SOIL COMPACTION IN THE ROOT ZONE AREA RESULTING FROM VEHICULAR TRAFFIC OR STORAGE OF EQUIPMENT OR MATERIALS;
   B. ROOT ZONE DISTURBANCES DUE TO GRADE CHANGES (GREATER THAN 6 INCHES CUT OR FILL), OR TRENCHING NOT REVIEWED AND AUTHORIZED BY THE CITY ARBORIST;
   C. WOUNDS TO EXPOSED ROOTS, TRUNK OR LIMBS BY MECHANICAL EQUIPMENT;
   D. OTHER ACTIVITIES DETRIMENTAL TO TREES SUCH AS CHEMICAL STORAGE, CEMENT TRUCK CLEANING, AND FIRES.
6. EXCEPTIONS TO INSTALLING FENCES AT TREE DRIP LINES MAY BE PERMITTED IN THE FOLLOWING CASES:
   A. WHERE THERE IS TO BE AN APPROVED GRADE CHANGE, IMPERMEABLE PAVING SURFACE, TREE WELL, OR OTHER SUCH SITE DEVELOPMENT, ERECT THE FENCE APPROXIMATELY 2 TO 4 FEET BEYOND THE AREA DISTURBED.
   B. WHERE PERMEABLE PAVING IS TO BE INSTALLED WITHIN A TREE'S DRIP LINE, ERECT THE FENCE AT THE OUTER LIMITS OF THE PERMEABLE PAVING AREA (PRIOR TO SITE GRADING SO THAT THIS AREA IS GRADED SEPARATELY PRIOR TO PAVING INSTALLATION TO MINIMIZED ROOT DAMAGE);
   C. WHERE TREES ARE CLOSE TO PROPOSED BUILDINGS, ERECT THE FENCE TO ALLOW 8 TO 10 FEET OF WORK SPACE BETWEEN THE FENCE AND THE BUILDING;
   D. WHERE THERE ARE SEVERE SPACE CONSTRAINTS DUE TO TRACT SIZE, OR OTHER SPECIAL REQUIREMENTS, CONTACT THE CITY ARBORIST AT 974–1876 TO DISCUSS ALTERNATIVES.

SPECIAL NOTE: FOR THE PROTECTION OF NATURAL AREAS, NO EXCEPTIONS TO INSTALLING FENCES AT THE LIMIT OF CONSTRUCTION LINE WILL BE PERMITTED.

7. WHERE ANY OF THE ABOVE EXCEPTIONS RESULT IN A FENCE BEING CLOSER THAN 4 FEET TO A TREE TRUNK, PROTECT THE TRUNK WITH STRAPPED–ON PLANKING TO A HEIGHT OF 8 FT (OR TO THE LIMITS OF LOWER BRANCHING) IN ADDITION TO THE REDUCED FENCING PROVIDED.
8. TREES APPROVED FOR REMOVAL SHALL BE REMOVED IN A MANNER WHICH DOES NOT IMPACT TREES TO BE PRESERVED.
9. ANY ROOTS EXPOSED BY CONSTRUCTION ACTIVITY SHALL BE PRUNED FLUSH WITH THE SOIL. BACKFILL ROOT AREAS WITH GOOD QUALITY TOP SOIL AS SOON AS POSSIBLE. IF EXPOSED ROOT AREAS ARE NOT BACKFILLED WITHIN 2 DAYS, COVER THEM WITH ORGANIC MATERIAL IN A MANNER WHICH REDUCES SOIL TEMPERATURE AND MINIMIZES WATER LOSS DUE TO EVAPORATION.
10. ANY TRENCHING REQUIRED FOR THE INSTALLATION OF LANDSCAPE IRRIGATION SHALL BE PLACED AS FAR FROM EXISTING TREE TRUNKS AS POSSIBLE.
11. NO LANDSCAPE TOPSOIL DRESSING GREATER THAN 4 INCHES SHALL BE PERMITTED WITHIN THE DRIP LINE OF TREES. NO SOIL IS PERMITTED ON THE ROOT FLARE OF ANY TREE.
12. PRUNING TO PROVIDE CLEARANCE FOR STRUCTURES, VEHICULAR TRAFFIC AND EQUIPMENT SHALL TAKE PLACE BEFORE DAMAGE OCCURS (RIPPING OF BRANCHES, ETC.).
13. ALL FINISHED PRUNING SHALL BE DONE ACCORDING TO RECOGNIZED, APPROVED STANDARDS OF THE INDUSTRY (REFERENCE THE NATIONAL ARBORIST ASSOCIATION PRUNING STANDARDS FOR SHADE TREES AVAILABLE ON REQUEST FROM THE CITY ARBORIST),
14. VIOLATIONS FROM THE ABOVE NOTES MAY BE CONSIDERED ORDINANCE VIOLATIONS IF THERE IS SUBSTANTIAL NON–COMPLIANCE OR IF A TREE SUSTAINS DAMAGE AS A RESULT.

APPENDIX P–6: REMEDIAL TREE CARE NOTES
AERATION AND SUPPLEMENTAL NUTRIENT REQUIREMENTS FOR TREES WITHIN CONSTRUCTION AREAS

AS A COMPONENT OF AN EFFECTIVE REMEDIAL TREE CARE PROGRAM PER ENVIRONMENTAL CRITERIA MANUAL SECTION 3.5.4, PRESERVED TREES WITHIN THE LIMITS OF CONSTRUCTION MAY REQUIRE SOIL AERATION AND SUPPLEMENTAL NUTRIENTS. SOIL AND/OR FOLIAR ANALYSIS SHOULD BE USED TO DETERMINE THE NEED FOR SUPPLEMENTAL NUTRIENTS. THE CITY ARBORIST MAY REQUIRE THESE ANALYSES AS PART OF A COMPREHENSIVE TREE CARE PLAN. SOIL PH SHALL BE CONSIDERED WHEN DETERMINING THE FERTILIZATION COMPOSITION AS SOIL PH INFLUENCES THE TREE'S ABILITY TO UPTAKE NUTRIENTS FROM THE SOIL. IF ANALYSES INDICATE THE NEED FOR SUPPLEMENTAL NUTRIENTS, THEN HUMATE/NUTRIENT SOLUTIONS WITH MYCORRHIZAE COMPONENTS ARE HIGHLY RECOMMENDED. IN ADDITION, SOIL ANALYSIS MAY BE NEEDED TO DETERMINE IF ORGANIC MATERIAL OR BENEFICIAL MICROORGANISMS ARE NEEDED TO IMPROVE SOIL HEALTH. MATERIALS AND METHODS ARE TO BE APPROVED BY THE CITY ARBORIST (512–974–1876) PRIOR TO APPLICATION. THE OWNER OR GENERAL CONTRACTOR SHALL SELECT A FERTILIZATION CONTRACTOR AND ENSURE COORDINATION WITH THE CITY ARBORIST.

PRE–CONSTRUCTION TREATMENT SHOULD BE APPLIED IN THE APPROPRIATE SEASON, IDEALLY THE SEASON PRECEDING THE PROPOSED CONSTRUCTION. MINIMALLY, AREAS TO BE TREATED INCLUDE THE ENTIRE CRITICAL ROOT ZONE OF TREES AS DEPICTED ON THE CITY APPROVED PLANS. TREATMENT SHOULD INCLUDE, BUT NOT LIMITED TO, FERTILIZATION, SOIL TREATMENT, MULCHING, AND PROPER PRUNING.

POST–CONSTRUCTION TREATMENT SHOULD OCCUR DURING FINAL REVEGETATION OR AS DETERMINED BY A QUALIFIED ARBORIST AFTER CONSTRUCTION. CONSTRUCTION ACTIVITIES OFTEN RESULT IN A REDUCTION IN SOIL MACRO AND MICRO PORES AND AN INCREASE IN SOIL BULK DENSITY. TO AMELIORATE THE DEGRADED SOIL CONDITIONS, AERATION VIA WATER AND/OR AIR INJECTED INTO THE SOIL IS NEEDED OR BY OTHER METHODS AS APPROVED BY THE CITY ARBORIST. THE PROPOSED NUTRIENT MIX SPECIFICATIONS AND SOIL AND/OR FOLIAR ANALYSIS RESULTS NEED TO BE PROVIDED TO AND APPROVED BY THE CITY ARBORIST PRIOR TO APPLICATION (FAX # 512–974–3010). CONSTRUCTION WHICH WILL BE COMPLETED IN LESS THAN 90 DAYS MAY USE MATERIALS AT ½ RECOMMENDED RATES. ALTERNATIVE ORGANIC FERTILIZER MATERIALS ARE ACCEPTABLE WHEN APPROVED BY THE CITY ARBORIST. WITHIN 7 DAYS AFTER FERTILIZATION IS PERFORMED, THE CONTRACTOR SHALL PROVIDE DOCUMENTATION OF THE WORK PERFORMED TO THE CITY ARBORIST, PLANNING AND DEVELOPMENT REVIEW DEPARTMENT. P.O. BOX 1088, AUSTIN, TX 78767. THIS NOTE SHOULD BE REFERENCED AS ITEM #1 IN THE SEQUENCE OF CONSTRUCTION.

DUST CONTROL

1. DESCRIPTION.
CONTROLLING DUST MOVEMENT ON CONSTRUCTION–SITES AND ROADS.
2. PURPOSE.
TO PREVENT BLOWING AND MOVEMENT OF DUST FROM EXPOSED SOIL SURFACES, REDUCE ON AND OFF–SITE DAMAGE, HEALTH HAZARDS AND IMPROVE TRAFFIC SAFETY.
3. CONDITIONS WHERE PRACTICE APPLIES.
THIS PRACTICE IS APPLICABLE TO AREAS SUBJECT TO DUST BLOWING AND MOVEMENT WHERE ON AND OFF–SITE DAMAGE IS LIKELY WITHOUT TREATMENT.
4. PROCEDURES
TEMPORARY METHODS.
– MULCHES – SEE SECTION 1.4.4. CHEMICAL MULCH BINDERS MAY BE USED INSTEAD OF ASPHALT TO BIND MULCH MATERIAL. BINDERS SUCH AS CURASOL OR TERRA TACK SHOULD BE USED ACCORDING TO MANUFACTURER'S RECOMMENDATIONS.
– VEGETATIVE COVER – SEE SECTION 1.4.4.
– SPRAY–ON ADHESIVES – ON MINERAL SOILS (NOT EFFECTIVE ON MUCK SOILS). KEEP TRAFFIC OFF THESE AREAS.

TABLE 1–5
SPRAY–ON ADHESIVES

	WATER DILUTION	TYPE OF NOZZLE	APPLY–GALLONS/ACRE
ANIONIC ASPHALT EMULSION	7:1	FINE SPRAY	
LATEX EMULSION	12½ :1	FINE SPRAY	
RESIN–IN–WATER EMULSION	4:1	FINE SPRAY	

SOURCE: CITY OF SAN MARCOS

– TILLAGE – TO ROUGHEN SURFACE AND BRING CLODS TO THE SURFACE. THIS IS AN EMERGENCY MEASURE WHICH SHOULD BE USED BEFORE SOIL BLOWING STARTS. BEGIN PLOWING ON WINDWARD SIDE OF SITE. CHISEL–TYPE PLOWS SPACED ABOUT 12 INCHES APART, SPRING–TOOTHED HARROWS AND SIMILAR PLOWS ARE EXAMPLES OF EQUIPMENT WHICH MAY PRODUCE THE DESIRED EFFECT.
– IRRIGATION – THIS IS GENERALLY DONE AS AN EMERGENCY TREATMENT. SITE IS SPRINKLED WITH WATER UNTIL THE SURFACE IS MOIST. REPEAT AS NEEDED.
– BARRIERS – SOLID BOARD FENCES, SNOW FENCES, BURLAP FENCES, CRATE WALLS, BALES OF HAY AND SIMILAR MATERIALS CAN BE USED TO CONTROL AIR CURRENTS AND SOIL BLOWING. BARRIERS PLACED AT RIGHT ANGLES TO PREVAILING CURRENTS AT INTERVALS OF ABOUT 15 TIMES THEIR HEIGHT ARE EFFECTIVE IN CONTROLLING SOIL BLOWING.

PERMANENT METHODS.
– PERMANENT VEGETATION –– SEE SECTION 1.4.3 AND SECTION 1.4.4 E. TREES OR LARGE SHRUBS MAY AFFORD VALUABLE PROTECTION LEFT IN PLACE.
– TOPSOILING – COVERING WITH LESS EROSIVE SOIL MATERIAL. SEE 1.4.5 B.
– STONE – COVER SURFACE WITH CRUSHED STONE OR COARSE GRAVEL.

APPENDIX P–1: EROSION CONTROL NOTES

1. THE CONTRACTOR SHALL INSTALL EROSION/SEDIMENTATION CONTROLS AND TREE/NATURAL AREA PROTECTIVE FENCING PRIOR TO ANY SITE PREPARATION WORK (CLEARING, GRUBBING OR EXCAVATION).
2. THE PLACEMENT OF EROSION/SEDIMENTATION CONTROLS SHALL BE IN ACCORDANCE WITH THE ENVIRONMENTAL CRITERIA MANUAL AND THE APPROVED EROSION AND SEDIMENTATION CONTROL PLAN. THE COA ESC PLAN SHALL BE CONSULTED AND USED AS THE BASIS FOR A TPDES REQUIRED SWPPP. IF A SWPPP IS REQUIRED, IT SHALL BE AVAILABLE FOR REVIEW BY THE CITY OF AUSTIN ENVIRONMENTAL INSPECTOR AT ALL TIMES DURING CONSTRUCTION, INCLUDING AT THE PRE–CONSTRUCTION MEETING. THE CHECKLIST BELOW CONTAINS THE BASIC ELEMENTS THAT SHALL BE REVIEWED FOR PERMIT APPROVAL BY COA EV PLAN REVIEWERS AS WELL AS COA EV INSPECTORS.
3. THE PLACEMENT OF TREE/NATURAL AREA PROTECTIVE FENCING SHALL BE IN ACCORDANCE WITH THE CITY OF AUSTIN STANDARD NOTES FOR TREE AND NATURAL AREA PROTECTION AND THE APPROVED GRADING/TREE AND NATURAL AREA PLAN.
4. A PRE–CONSTRUCTION CONFERENCE SHALL BE HELD ON–SITE WITH THE CONTRACTOR, DESIGN ENGINEER/PERMIT APPLICANT AND ENVIRONMENTAL INSPECTOR AFTER INSTALLATION OF THE EROSION/SEDIMENTATION CONTROLS AND TREE/NATURAL AREA PROTECTION MEASURES AND PRIOR TO BEGINNING ANY SITE PREPARATION WORK. THE OWNER OR OWNER'S REPRESENTATIVE SHALL NOTIFY THE PLANNING AND DEVELOPMENT REVIEW DEPARTMENT, 974–2278, AT LEAST THREE DAYS PRIOR TO THE MEETING DATE. COA APPROVED ESC PLAN AND TPDES SWPPP (IF REQUIRED) SHOULD BE REVIEWED BY COA EV INSPECTOR AT THIS TIME.
5. ANY MAJOR VARIATION IN MATERIALS OR LOCATIONS OF CONTROLS OR FENCES FROM THOSE SHOWN ON THE APPROVED PLANS WILL REQUIRE A REVISION AND MUST BE APPROVED BY THE REVIEWING ENGINEER, ENVIRONMENTAL SPECIALIST OR CITY ARBORIST AS APPROPRIATE. MAJOR REVISIONS MUST BE APPROVED BY AUTHORIZED COA STAFF. MINOR CHANGES TO BE MADE AS FIELD REVISIONS TO THE EROSION AND SEDIMENTATION CONTROL PLAN MAY BE REQUIRED BY THE ENVIRONMENTAL INSPECTOR DURING THE COURSE OF CONSTRUCTION TO CORRECT CONTROL INADEQUACIES.
6. THE CONTRACTOR IS REQUIRED TO PROVIDE A CERTIFIED INSPECTOR WITH EITHER A CERTIFIED PROFESSIONAL IN EROSION AND SEDIMENT CONTROL (CPESC), CERTIFIED EROSION, SEDIMENT AND STORMWATER– INSPECTOR (CESSWI) OR CERTIFIED INSPECTOR OF SEDIMENTATION AND EROSION CONTROLS (CISEC) CERTIFICATION TO INSPECT THE CONTROLS AND FENCES AT WEEKLY INTERVALS AND AFTER SIGNIFICANT RAINFALL EVENTS TO INSURE THAT THEY ARE FUNCTIONING PROPERLY. THE PERSON(S) RESPONSIBLE FOR MAINTENANCE OF CONTROLS AND FENCES SHALL IMMEDIATELY MAKE ANY NECESSARY REPAIRS TO DAMAGED AREAS. SILT ACCUMULATION AT CONTROLS MUST BE REMOVED WHEN THE DEPTH REACHES SIX (6) INCHES.
7. PRIOR TO FINAL ACCEPTANCE BY THE CITY, HAUL ROADS AND WATERWAY CROSSINGS CONSTRUCTED FOR TEMPORARY CONTRACTOR ACCESS MUST BE REMOVED, ACCUMULATED SEDIMENT REMOVED FROM THE WATERWAY AND THE AREA RESTORED TO THE ORIGINAL GRADE AND REVEGETATED. ALL LAND CLEARING DEBRIS SHALL BE DISPOSED OF IN APPROVED SPOIL DISPOSAL SITES.
8. ALL WORK MUST STOP IF A VOID IN THE ROCK SUBSTRATE IS DISCOVERED WHICH IS; ONE SQUARE FOOT IN TOTAL AREA; BLOWS AIR FROM WITHIN THE SUBSTRATE AND/OR CONSISTENTLY RECEIVES WATER DURING ANY RAIN EVENT. AT THIS TIME IT IS THE RESPONSIBILITY OF THE PROJECT MANAGER TO IMMEDIATELY CONTACT A CITY OF AUSTIN ENVIRONMENTAL INSPECTOR FOR FURTHER INVESTIGATION.
9. TEMPORARY AND PERMANENT EROSION CONTROL: ALL DISTURBED AREAS SHALL BE RESTORED AS NOTED BELOW:
   A. ALL DISTURBED AREAS TO BE REVEGETATED ARE REQUIRED TO PLACE A MINIMUM OF SIX (6) INCHES OF TOPSOIL [SEE STANDARD SPECIFICATION ITEM NO. 601S.3(A)]. DO NOT ADD TOPSOIL WITHIN THE CRITICAL ROOT ZONE OF EXISTING TREES.
      TOPSOIL SALVAGED FROM THE EXISTING SITE IS ENCOURAGED FOR USE, BUT IT SHOULD MEET THE STANDARDS SET FORTH IN 601S.
      AN OWNER/ENGINEER MAY PROPOSE USE OF ONSITE SALVAGED TOPSOIL WHICH DOES NOT MEET THE CRITERIA OF STANDARD SPECIFICATION 601S BY PROVIDING A SOIL ANALYSIS AND A WRITTEN STATEMENT FROM A QUALIFIED PROFESSIONAL IN SOILS, LANDSCAPE ARCHITECTURE, OR AGRONOMY INDICATING THE ONSITE TOPSOIL WILL PROVIDE AN EQUIVALENT GROWTH MEDIA AND SPECIFYING WHAT, IF ANY, SOIL AMENDMENTS ARE REQUIRED.
      SOIL AMENDMENTS SHALL BE WORKED INTO THE EXISTING ONSITE TOPSOIL WITH A DISC OR TILLER TO CREATE A WELL–BLENDED MATERIAL.

THE VEGETATIVE STABILIZATION OF AREAS DISTURBED BY CONSTRUCTION SHALL BE AS FOLLOWS:

TEMPORARY VEGETATIVE STABILIZATION:

1. FROM SEPTEMBER 15 TO MARCH 1, SEEDING SHALL BE WITH OR INCLUDE A COOL SEASON COVER CROP: (WESTERN WHEATGRASS (PASCOPYRUM SMITHII) AT 5.6 POUNDS PER ACRE, OATS (AVENA SATIVA) AT 4.0 POUNDS PER ACRE, CEREAL RYE GRAIN (SECALE CEREALE) AT 48.0 POUNDS PER ACRE). CONTRACTOR MUST ENSURE THAT ANY SEED APPLICATION REQUIRING A COOL SEASON COVER CROP DOES NOT UTILIZE ANNUAL RYEGRASS (LOLIUM MULTIFLORUM) OR PERENNIAL RYEGRASS (LOLIUM PERENNE). COOL SEASON COVER CROPS ARE NOT PERMANENT EROSION CONTROL.
2. FROM MARCH 2 TO SEPTEMBER 14, SEEDING SHALL BE WITH HULLED BERMUDA AT A RATE OF 45 POUNDS PER ACRE OR A NATIVE PLANT SEED MIX CONFORMING TO ITEMS 604S OR 609S.
   A. FERTILIZER SHALL BE APPLIED ONLY IF WARRANTED BY A SOIL TEST AND SHALL CONFORM TO ITEM NO. 606S, FERTILIZER. FERTILIZATION SHOULD NOT OCCUR WHEN RAINFALL IS EXPECTED OR DURING SLOW PLANT GROWTH OR DORMANCY. CHEMICAL FERTILIZER MAY NOT BE APPLIED IN THE CRITICAL WATER QUALITY ZONE.
   B. HYDROMULCH SHALL COMPLY WITH TABLE 1, BELOW.
   C. TEMPORARY EROSION CONTROL SHALL BE ACCEPTABLE WHEN THE GRASS HAS GROWN AT LEAST 1½ INCHES HIGH WITH A MINIMUM OF 95% TOTAL COVERAGE SO THAT ALL AREAS OF A SITE THAT RELY ON VEGETATION FOR TEMPORARY STABILIZATION ARE UNIFORMLY VEGETATED, AND PROVIDED THERE ARE NO BARE SPOTS LARGER THAN 10 SQUARE FEET.
   D. WHEN REQUIRED, NATIVE PLANT SEEDING SHALL COMPLY WITH REQUIREMENTS OF THE CITY OF AUSTIN ENVIRONMENTAL CRITERIA MANUAL, AND STANDARD SPECIFICATIONS 604S OR 609S.

TABLE 1: HYDROMULCHING FOR TEMPORARY VEGETATIVE STABILIZATION

MATERIAL	DESCRIPTION	LONGEVITY	TYPICAL APPLICATIONS	APPLICATION RATES
100% OR ANY BLEND OF WOOD, CELLULOSE, STRAW, AND/OR COTTON PLANT MATERIAL (EXCEPT NO MULCH SHALL EXCEED 30% PAPER)	70% OR GREATER WOOD/STRAW 30% OR LESS PAPER OR NATURAL FIBERS	0–3 MONTHS	MODERATE SLOPES; FROM FLAT TO 3:1	1500 TO 2000 LBS PER ACRE

PERMANENT VEGETATIVE STABILIZATION:

1. FROM SEPTEMBER 15 TO MARCH 1, SEEDING IS CONSIDERED TO BE TEMPORARY STABILIZATION ONLY. IF COOL SEASON COVER CROPS EXIST WHERE PERMANENT VEGETATIVE STABILIZATION IS DESIRED, THE GRASSES SHALL BE MOWED TO A HEIGHT OF LESS THAN ONE–HALF (½) INCH AND THE AREA SHALL BE RE–SEEDED IN ACCORDANCE WITH TABLE 2 BELOW. ALTERNATIVELY, THE COOL SEASON COVER CROP CAN BE MIXED WITH BERMUDAGRASS OR NATIVE SEED AND INSTALLED TOGETHER, UNDERSTANDING THAT GERMINATION OF WARM–SEASON SEED TYPICALLY REQUIRES SOIL TEMPERATURES OF 60 TO 70 DEGREES.
2. FROM MARCH 2 TO SEPTEMBER 14, SEEDING SHALL BE WITH HULLED BERMUDA AT A RATE OF 45 POUNDS PER ACRE WITH A PURITY OF 95% AND A MINIMUM PURE LIVE SEED (PLS) OF 0.83. BERMUDA GRASS IS A WARM SEASON GRASS AND IS CONSIDERED PERMANENT EROSION CONTROL. PERMANENT VEGETATIVE STABILIZATION CAN ALSO BE ACCOMPLISHED WITH A NATIVE PLANT SEED MIX CONFORMING TO ITEMS 604S OR 609S.
   A. FERTILIZER USE SHALL FOLLOW THE RECOMMENDATION OF A SOIL TEST. SEE ITEM 606S, FERTILIZER. APPLICATIONS OF FERTILIZER (AND PESTICIDE) ON CITY–OWNED AND MANAGED PROPERTY REQUIRES THE YEARLY SUBMITTAL OF A PESTICIDE AND FERTILIZER APPLICATION RECORD, ALONG WITH A CURRENT COPY OF THE APPLICATOR'S LICENSE. FOR CURRENT COPY OF THE RECORD TEMPLATE CONTACT THE CITY OF AUSTIN'S IPM COORDINATOR.
   B. HYDROMULCH SHALL COMPLY WITH TABLE 2, BELOW.
   C. WATER THE SEEDED AREAS IMMEDIATELY AFTER INSTALLATION TO ACHIEVE GERMINATION AND A HEALTHY STAND OF PLANTS THAT CAN ULTIMATELY SURVIVE WITHOUT SUPPLEMENTAL WATER. APPLY THE WATER UNIFORMLY TO THE PLANTED AREAS WITHOUT CAUSING DISPLACEMENT OR EROSION OF THE MATERIALS OR SOIL. MAINTAIN THE SEEDBED IN A MOIST CONDITION FAVORABLE FOR PLANT GROWTH. WATERING SHALL COMPLY WITH CITY CODE CHAPTER 6–4 (WATER CONSERVATION), AT RATES AND FREQUENCIES DETERMINED BY A LICENSED IRRIGATOR OR OTHER QUALIFIED PROFESSIONAL, AND AS ALLOWED BY THE AUSTIN WATER UTILITY AND CURRENT WATER RESTRICTIONS AND WATER CONSERVATION INITIATIVES.
   D. PERMANENT EROSION CONTROL SHALL BE ACCEPTABLE WHEN THE GRASS HAS GROWN AT LEAST 1½ INCHES HIGH WITH A MINIMUM OF 95 PERCENT FOR THE NON–NATIVE MIX, AND 95 PERCENT COVERAGE FOR THE NATIVE MIX SO THAT ALL AREAS OF A SITE THAT RELY ON VEGETATION FOR STABILITY MUST BE UNIFORMLY VEGETATED, AND PROVIDED THERE ARE NO BARE SPOTS LARGER THAN 16 SQUARE FEET.
   E. WHEN REQUIRED, NATIVE PLANT SEEDING SHALL COMPLY WITH REQUIREMENTS OF THE CITY OF AUSTIN ENVIRONMENTAL CRITERIA MANUAL, ITEMS 604S AND 609S.

.

TABLE 2: HYDROMULCHING FOR PERMANENT VEGETATIVE STABILIZATION

MATERIAL	DESCRIPTION	LONGEVITY	TYPICAL APPLICATIONS	APPLICATION RATES
BONDED FIBER MATRIX	80% THERMALLY 10% TACKIFIER	6 MONTHS	ON SLOPES UP TO 2:1 AND EROSIVE SOIL CONDITIONS	2500 TO 4000 LBS PER AC. (SEE MANUFACTURER)
FIBER REINFORCED MATRIX	65% ORGANIC DEFIBRATED FIBERS 25% REINFORCING FIBERS 10% TACKIFIER	12 MONTHS	ON SLOPES UP TO 1:1 AND EROSIVE SOIL CONDITIONS	3000 TO 4000 LBS PER AC. (SEE MANUFACTURER)

10. DEVELOPER INFORMATION:
HEB GROCERY COMPANY, LP
646 SOUTH MAIN, SOUTH BUILDING, 1ST FLOOR
SAN ANTONIO, TX 78204
PH: 737–356–8116
CONTACT: NICK RIEMER, EIT
MANAGER OF PETROLEUM OPERATIONS

OWNER'S REPRESENTATIVE RESPONSIBLE FOR PLAN ALTERATIONS, NICHOLAS SANDLIN, PE, PHONE # (806) 679–7303

PERSON OR FIRM RESPONSIBLE FOR EROSION/SEDIMENTATION CONTROL MAINTENANCE:
CONTRACTOR PHONE # _____

PERSON OR FIRM RESPONSIBLE FOR TREE/NATURAL AREA PROTECTION MAINTENANCE:
CONTRACTOR PHONE # _____

11. THE CONTRACTOR SHALL NOT DISPOSE OF SURPLUS EXCAVATED MATERIAL FROM THE SITE WITHOUT NOTIFYING THE PLANNING AND DEVELOPMENT REVIEW DEPARTMENT AT 974–2278 AT LEAST 48 HOURS PRIOR WITH THE LOCATION AND A COPY OF THE PERMIT ISSUED TO RECEIVE THE MATERIAL.

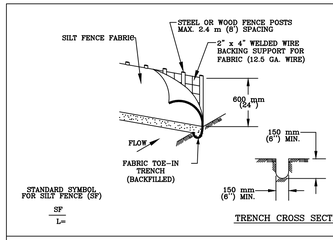

TRENCH CROSS SECTION

1. STEEL OR WOOD POSTS WHICH SUPPORT THE SILT FENCE SHALL BE INSTALLED ON A SLIGHT ANGLE TOWARD THE ANTICIPATED RUNOFF SOURCE. POST MUST BE EMBEDDED A MINIMUM OF 300 mm (12 INCHES). IF WOOD POSTS CANNOT ACHIEVE 300 mm (12 inches) DEPTH, USE STEEL POSTS.
2. THE TOE OF THE SILT FENCE SHALL BE TRENCHED IN WITH A SPADE OR MECHANICAL TRENCHER, SO THAT THE DOWNSLOPE FACE OF THE TRENCH IS FLAT AND PERPENDICULAR TO THE LINE OF FLOW.
3. THE TRENCH MUST BE A MINIMUM OF 150 mm (6 inches) DEEP AND 150 mm (6 inches) WIDE TO ALLOW FOR THE SILT FENCE FABRIC TO BE LAID IN THE GROUND AND BACKFILLED WITH COMPACTED MATERIAL.
4. SILT FENCE FABRIC SHOULD BE SECURELY FASTENED TO EACH STEEL OR WOOD SUPPORT POST OR TO WOVEN WIRE , WHICH IS IN TURN ATTACHED TO THE STEEL OR WOOD FENCE POST.
5. INSPECTION SHALL BE MADE WEEKLY OR AFTER EACH RAINFALL EVENT AND REPAIR OR REPLACEMENT SHALL BE MADE PROMPTY AS NEEDED.
6. SILT FENCE SHALL BE REMOVED WHEN THE SITE IS COMPLETELY STABILIZED SO AS NOT TO BLOCK OR IMPEDE STORM FLOW OR DRAINAGE.
7. ACCUMULATED SILT SHALL BE REMOVED WHEN IT REACHES A DEPTH OF 150 mm (6 inches). THE SILT SHALL BE DISPOSED OF ON AN APPROVED SITE AND IN SUCH A MANNER THAT WILL NOT CONTRIBUTE TO ADDITIONAL SILTATION.

CITY OF AUSTIN WATERSHED PROTECTION DEPARTMENT	SILT FENCE			CITY OF AUSTIN WATERSHED PROTECTION DEPARTMENT	TREE PROTECTION FENCE LOCATIONS		
RECORD COPY SIGNED BY MORGAN BYARS 09/01/2011 ADOPTED	THE ARCHITECT/ENGINEER ASSUMES RESPONSIBILITY FOR APPROPRIATE USE OF THIS STANDARD.	STANDARD NO. 642S–1		RECORD COPY SIGNED BY J. PATRICK MURPHY 11/16/99 ADOPTED	THE ARCHITECT/ENGINEER ASSUMES RESPONSIBILITY FOR APPROPRIATE USE OF THIS STANDARD.	STANDARD NO. 610S–1	

LINEAR CONSTRUCTION THROUGH TREES

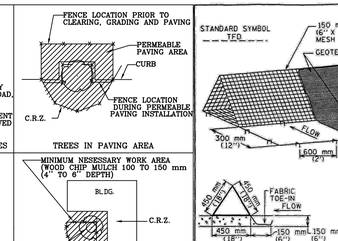

TREES IN PAVING AREA

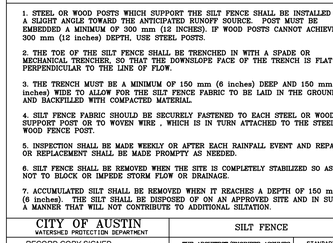

NATURAL AREAS

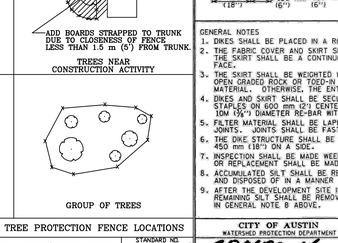

TREES NEAR CONSTRUCTION ACTIVITY

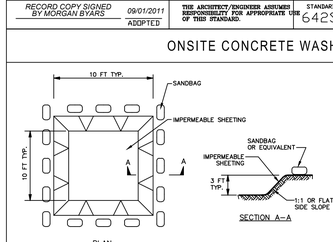

INDIVIDUAL TREE

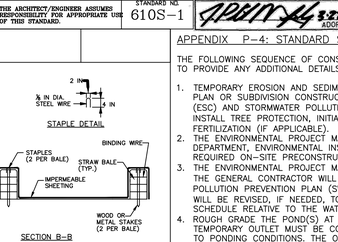

GROUP OF TREES

CITY OF AUSTIN WATERSHED PROTECTION DEPARTMENT	TRIANGULAR SEDIMENT FILTER DIKE		
APPROVED 3-27-00 ADOPTED	THE ARCHITECT/ENGINEER ASSUMES RESPONSIBILITY FOR APPROPRIATE USE OF THIS STANDARD.	STANDARD NO. 628S	

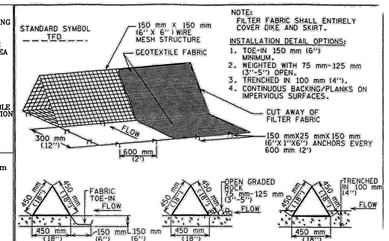

GENERAL NOTES
1. DIKES SHALL BE PLACED IN A ROW WITH ENDS TIGHTLY ABUTTING THE ADJACENT DIKE.
2. THE FABRIC COVER AND SKIRT SHALL BE A CONTINUOUS WRAPPING OF GEOTEXTILE. THE SKIRT SHALL BE A CONTINUOUS EXTENSION OF THE FABRIC ON THE UPSTREAM FACE.
3. THE SKIRT SHALL BE WEIGHTED WITH A CONTINUOUS LAYER OF 75–125 mm (3–5") OPEN GRADED ROCK OR TOED–IN 150 mm (6") WITH MECHANICALLY COMPACTED MATERIAL. OTHERWISE, THE ENTIRE STRUCTURE SHALL BE TRENCHED IN 100 mm (4").
4. DIKES AND SKIRT SHALL BE SECURELY ANCHORED IN PLACE USING 150 mm (6") WIRE STAPLES ON 600 mm (2') CENTERS ON BOTH EDGES AND SKIRT, OR STAKE USING 10M ⅝"x1 DIAMETER RE–BAR WITH TEE ENDS.
5. FILTER MATERIAL SHALL BE LAPPED OVER ENDS 150 mm (6") TO COVER DIKE TO DIKE JOINTS. JOINTS SHALL BE FASTENED WITH GALVANIZED STAPLES AND RINGS.
6. THE DIKE STRUCTURE SHALL BE MM40–150 mmX 150 mm (6 GA. 6"X6") WIRE MESH, 450 mm (18") DIN A SIDE.
7. INSPECTION SHALL BE MADE WEE

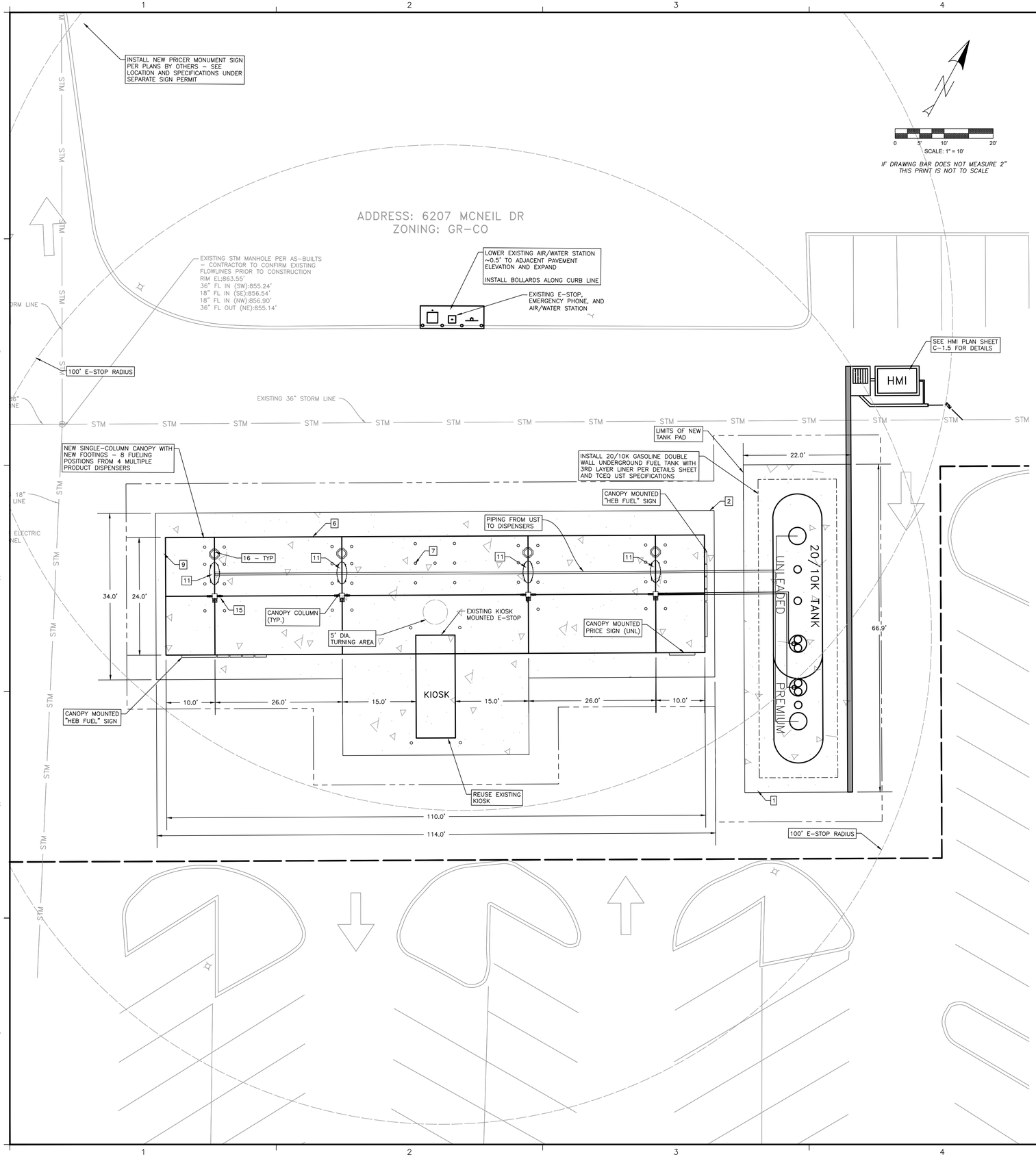

CITY OF AUSTIN SITE PLAN NOTES:

1. WATER AND WASTEWATER SERVICE ARE PROVIDED BY THE CITY OF AUSTIN WITH EXISTING SERVICE LINES (TO REMAIN IN SERVICE).
2. FOR CONSTRUCTION WITHIN THE RIGHT-OF-WAY, A ROW EXCAVATION PERMIT IS REQUIRED.
3. COMPLIANCE WITH THE COMMERCIAL AND MULTI-FAMILY RECYCLING ORDINANCE IS MANDATORY FOR MULTI-FAMILY COMPLEXES WITH 100 OR MORE UNITS AND BUSINESSES AND OFFICE BUILDINGS WITH 100 OR MORE EMPLOYEES ON SITE [AUSTIN CITY CODE, SEC. 15-6-91].
4. ALL EXTERIOR LIGHTING WILL BE FULL CUT-OFF AND FULLY SHIELDED IN COMPLIANCE WITH SUBCHAPTER E 2.5. ALL SITE LIGHTING TO BE LOCATED ON THE BUILDING WILL BE IN COMPLIANCE WITH SUBCHAPTER E 2.5, AND WILL BE REVIEWED DURING BUILDING PLAN REVIEW. ANY CHANGE OR SUBSTITUTION OF LAMP/LIGHT FIXTURES SHALL BE SUBMITTED TO THE DIRECTOR FOR APPROVAL IN ACCORDANCE WITH SECTION 2.5.2.E.
   a) ALL EXTERIOR LIGHTING WILL BE HOODED OR SHIELDED FROM THE VIEW OF ADJACENT RESIDENTIAL PROPERTY. [SECTION 25-2-1064].
   b) ALL DUMPSTERS AND ANY PERMANENTLY PLACED REFUSE RECEPTACLES WILL BE LOCATED AT A MINIMUM OF TWENTY (20) FEET FROM A PROPERTY USED OR ZONED AS SF-5 OR MORE RESTRICTIVE. [SECTION 25-2-1067].
   c) THE USE OF HIGHLY REFLECTIVE SURFACES, SUCH AS REFLECTIVE GLASS AND REFLECTIVE METAL ROOFS, WHOSE PITCH IS MORE THAN A RUN OF SEVEN (7) TO A RISE OF TWELVE (12), WILL BE PROHIBITED. [SECTION 25-2-1067].
   d) THE NOISE LEVEL OF MECHANICAL EQUIPMENT WILL NOT EXCEED 70 DBA AT THE PROPERTY LINE ADJACENT TO RESIDENTIAL USES. [SECTION 25-2-1067].
5. SEE FIGURE 42 FROM SECTION 2.5 OF THE CITY OF AUSTIN LAND DEVELOPMENT CODE BELOW:



6. SCREENING FOR SOLID WASTE COLLECTION AND LOADING AREAS SHALL BE THE SAME AS, OR OF EQUAL QUALITY TO, PRINCIPAL BUILDING MATERIALS.
7. ADEQUATE BARRIERS BETWEEN ALL VEHICULAR USE AREAS AND ADJACENT LANDSCAPE AREAS, SUCH AS A 6" CONCRETE CURB ARE REQUIRED. IF A STANDARD 6" CURB AND GUTTER ARE NOT PROVIDED FOR ALL VEHICULAR USE AREAS AND ADJACENT LANDSCAPE AREAS, COMPLY WITH ECM, SECTION 2.4.7, "PROTECTION OF LANDSCAPE AREAS".
8. AUSTIN ENERGY HAS THE RIGHT TO PRUNE AND/OR REMOVE TREES, SHRUBBERY AND OTHER OBSTRUCTIONS TO THE EXTENT NECESSARY TO KEEP THE EASEMENTS CLEAR. AUSTIN ENERGY WILL PERFORM ALL TREE WORK IN COMPLIANCE WITH CHAPTER 25-8, SUBCHAPTER B OF THE CITY OF AUSTIN LAND DEVELOPMENT CODE.
9. THE OWNER/DEVELOPER OF THIS SUBDIVISION/LOT SHALL PROVIDE AUSTIN ENERGY WITH ANY EASEMENT AND/OR ACCESS REQUIRED, IN ADDITION TO THOSE INDICATED, FOR THE INSTALLATION AND ONGOING MAINTENANCE OF OVERHEAD AND UNDERGROUND ELECTRIC FACILITIES. THESE EASEMENTS AND/OR ACCESS ARE REQUIRED TO PROVIDE ELECTRIC SERVICE TO THE BUILDING AND WILL NOT BE LOCATED SO AS TO CAUSE THE SITE TO BE OUT OF COMPLIANCE WITH CHAPTER 25-8 OF THE CITY OF AUSTIN LAND DEVELOPMENT CODE.
10. THE OWNER SHALL BE RESPONSIBLE FOR INSTALLATION OF TEMPORARY EROSION CONTROL, REVEGETATION AND TREE PROTECTION. IN ADDITION, THE OWNER SHALL BE RESPONSIBLE FOR ANY INITIAL TREE PRUNING AND TREE REMOVAL THAT IS WITHIN TEN FEET OF THE CENTER LINE OF THE PROPOSED OVERHEAD ELECTRICAL FACILITIES DESIGNED TO PROVIDE ELECTRIC SERVICE TO THIS PROJECT. THE OWNER SHALL INCLUDE AUSTIN ENERGY'S WORK WITHIN THE LIMITS OF CONSTRUCTION FOR THIS PROJECT.
11. THE OWNER OF THE PROPERTY IS RESPONSIBLE FOR MAINTAINING CLEARANCES REQUIRED BY THE NATIONAL ELECTRIC SAFETY CODE, OCCUPATIONAL SAFETY AND HEALTH ADMINISTRATION (OSHA) REGULATIONS, CITY OF AUSTIN RULES AND REGULATIONS AND TEXAS STATE LAWS PERTAINING TO CLEARANCES WHEN WORKING IN CLOSE PROXIMITY TO OVERHEAD POWER LINES AND EQUIPMENT. AUSTIN ENERGY WILL NOT RENDER ELECTRIC SERVICE UNLESS REQUIRED CLEARANCES ARE MAINTAINED. ALL COSTS INCURRED BECAUSE OF FAILURE TO COMPLY WITH THE REQUIRED CLEARANCES WILL BE CHARGED TO THE OWNER.
12. WATER, WASTEWATER, DRAINAGE AND ANY OTHER UTILITY IMPROVEMENTS ARE SHOWN FOR INFORMATIONAL PURPOSES ONLY. REFER TO SPECIFIC PLAN SHEETS FOR CONSTRUCTION.
13. EVERY ACCESSIBLE PARKING SPACE MUST BE IDENTIFIED BY A SIGN, CENTERED AT THE HEAD OF THE PARKING SPACE. THE SIGN MUST INCLUDE THE INTERNATIONAL SYMBOL OF ACCESSIBILITY AND STATE RESERVED OR EQUIVALENT LANGUAGE, CHARACTERS AND SYMBOLS ON SUCH SIGNS MUST BE LOCATED 60" MINIMUM ABOVE THE GROUND SO THAT THEY CANNOT BE OBSCURED BY A VEHICLE PARKED IN THE SPACE.
14. IN AREAS WHERE UTILITY LINES ARE PRESENT OR PROPOSED ONLY TREES FROM THE UTILITY COMPATIBLE SHADE TREES LIST (SEE APPENDIX F) SHALL BE PLANTED WITH IN: A) 10 LATERAL FEET FROM ANY OVERHEAD DISTRIBUTION CONDUCTOR; B) 30 TO 40 LATERAL FEET FROM ANY OVERHEAD TRANSMISSION CONDUCTOR, UNLESS A MORE RESTRICTIVE DEDICATED RIGHT-OF-WAY HAS BEEN ESTABLISHED; C) 10 LATERAL FEET FROM ANY UNDERGROUND ELECTRIC FACILITY
15. APPROVAL OF THESE PLANS BY THE CITY OF AUSTIN INDICATES COMPLIANCE WITH APPLICABLE CITY REGULATIONS ONLY. COMPLIANCE WITH ACCESSIBILITY STANDARDS SUCH AS THE 2010 STANDARDS FOR ACCESSIBLE DESIGN OR THE 2012 TEXAS ACCESSIBILITY STANDARDS WAS NOT VERIFIED. THE APPLICANT IS RESPONSIBLE FOR COMPLIANCE WITH ALL APPLICABLE ACCESSIBILITY STANDARDS.
16. ALL IMPROVEMENTS SHALL BE MADE IN ACCORDANCE WITH THE RELEASED SITE PLAN. ANY ADDITIONAL IMPROVEMENTS WILL REQUIRE SITE PLAN REVISION OR CORRECTION AND APPROVAL OF THE DEVELOPMENT SERVICES DEPARTMENT.
17. APPROVAL OF THIS SITE PLAN DOES NOT INCLUDE BUILDING AND FIRE CODE APPROVAL NOR BUILDING PERMIT APPROVAL.
18. ALL SIGNS MUST COMPLY WITH REQUIREMENTS OF THE LAND DEVELOPMENT CODE (CHAPTER 25-10).

SITE PLAN RELEASE NOTES:

1. ALL SIGNS MUST COMPLY WITH REQUIREMENTS OF THE LAND DEVELOPMENT CODE (CHAPTER 25-10).
2. ALL EXISTING STRUCTURES SHOWN TO BE REMOVED WILL REQUIRE A DEMOLITION PERMIT FROM THE CITY OF AUSTIN DEVELOPMENT SERVICES DEPT.
3. A DEVELOPMENT PERMIT MUST BE ISSUED PRIOR TO AN APPLICATION FOR BUILDING PERMIT FOR NON-CONSOLIDATED OR PLANNING COMMISSION APPROVED SITE PLANS.

SITE PLAN EXEMPTION NOTES:

1. TOTAL ADDITIONAL CONSTRUCTION NOT TO EXCEED 1,000 SF AND DOES NOT IMPEDE OR DIVERT DRAINAGE.
2. NO ADDITIONAL IMPERVIOUS COVER IS PROPOSED FROM EXISTING CONDITIONS.
3. SEE EROSION CONTROL PLAN SHEET C-1.2 FOR LIMITS OF CONSTRUCTION.

FUEL STATION KEYNOTES

1	CONCRETE TANK SLAB. RE: A2
2	CONCRETE CANOPY SLAB. RE:D1
3	GENERAL SITE CONTRACTOR OR DEVELOPER SHALL INSTALL ALL CONDUITS AND SERVICES 1' INTO CANOPY AREA. FUEL CONTRACTOR TO CONTINUE CONDUIT INSIDE CANOPY AREA.
4	EMERGENCY SHUT-OFF SWITCH AND EMERGENCY PHONE. "EMERGENCY SHUT-OFF" SIGN SHALL BE MOUNTED ABOVE SWITCH. RE: C2/C-2.0.
5	AIR/WATER STAND RE: A2 OR E3/C-2.0.
6	LIMITS OF CANOPY
7	BOLLARDS SHALL BE INSTALLED RE: A3/C-2.0.
8	MERCHANDISE CART
9	LED FUEL PRICE SIGN (UNLD, E85, DSL – BY HEB SIGN VENDOR)
10	3+1 DISPENSER (DIESEL)
11	3+0 DISPENSER
12	VACUUM STATION
13	INSTALL ADA VAN ACCESSIBLE SIGN PER TAS REQUIREMENTS. RE: D6/C-2.0.
14	CASTELLATED CURB – SEE GRADING SHEET FOR DETAIL
15	FIRE EXTINGUISHER AND CABINET
16	WASTE CONTAINER AND WINDOW WASH
17	PRODUCT COOLERS

LEGEND

EXISTING	PROPOSED	
		1/2" IRON ROD FOUND
		1/2" IRON ROD SET
		IRON PIPE FOUND
		NAIL FOUND
P.O.B.		COMPUTED POINT
		MONUMENT FOUND
		POINT OF BEGINNING
(XXX)		BENCHMARK
		RECORD INFORMATION
		LIGHT POLE
		POWER POLE
		DOWN GUY
		FIRE HYDRANT
		WATER VALVE
		WATER METER
		GAS METER
		GAS VALVE
		WOOD FENCE
		CHAIN LINK FENCE
		WIRE FENCE
EMH	EMH	ELECTRICAL MANHOLE
WWMH	WWMH	WASTEWATER MANHOLE
SSMH	SSMH	STORMSEWER MANHOLE
WTR	WTR	WATER MANHOLE
CO		CLEAN OUT
		DRAINAGE INLET
		CURB INLET
		CURB & GUTTER
		FIRE LANE
		HANDICAPPED PARKING SPACE
		SIGN
		VARIABLE HEIGHT CONCRETE RETAINING WALL
		ELECTRIC PULL BOX
		ELECTRIC METER
		ELECTRIC TRANSFORMER
		TELEPHONE SERVICE BOX
		BOLLARD
OE	OE	OVER HEAD ELEC. LINE
OT	OT	OVER HEAD TELEPHONE
SS	SS	STORM SEWER LINE
W	W	WATER LINE
WW	WW	WASTEWATER LINE
FM	FM	FORCE MAIN
UE	UE	UNDERGROUND ELECTRIC
UT	UT	UNDERGROUND TELEPHONE
G	G	GAS LINE
		PROPERTY LINE
678	678	CONTOUR
704	704	SPOT ELEVATION
		CUT/FILL SLOPES
		FLOW DIRECTION
		CONCRETE SURFACE
1170		EXISTING TREE
1124		TREE TO BE REMOVED

PLEASE BE ADVISED: THIS DOCUMENT MAY CONTAIN SENSITIVE AND/OR PROPRIETARY INFORMATION AND THEREFORE MUST BE TREATED AS A CONFIDENTIAL DOCUMENT. ACCEPTANCE OF THIS DOCUMENT CONSTITUTES AN AGREEMENT THAT THIS DOCUMENT AND THE INFORMATION CONTAINED HEREIN SHALL BE MAINTAINED AND TRANSMITTED IN A CONFIDENTIAL MANNER. NO PART OF THIS DOCUMENT SHALL BE REPRODUCED, RELEASED OR DISTRIBUTED WITHOUT THE EXPRESS WRITTEN PERMISSION OF H.E.B. GROCERY AND ANY DISTRIBUTION TO NON-H.E.B. ENTITIES OR PERSONS MUST BE SUBJECT TO A WRITTEN CONFIDENTIALITY AGREEMENT.

WARNING !!!! CONTRACTOR TO FIELD VERIFY ALL EXIST. UTILITIES VERTICALLY AND HORIZONTALLY PRIOR TO CONSTRUCTION. THE CONTRACTOR IS TO CONTACT ENGINEER IF ANY EXISTING UTILITY INFORMATION DIFFERS FROM DATA SHOWN IN THE PLANS. CALL 811 BEFORE YOU DIG.

PLEASE BE ADVISED: THIS DOCUMENT MAY CONTAIN SENSITIVE AND/OR PROPRIETARY INFORMATION AND THEREFORE MUST BE TREATED AS A CONFIDENTIAL DOCUMENT. ACCEPTANCE OF THIS DOCUMENT CONSTITUTES AN AGREEMENT THAT THIS DOCUMENT AND THE INFORMATION CONTAINED HEREIN SHALL BE MAINTAINED AND TRANSMITTED IN A CONFIDENTIAL MANNER. NO PART OF THIS DOCUMENT SHALL BE REPRODUCED, RELEASED OR DISTRIBUTED WITHOUT THE EXPRESS WRITTEN PERMISSION OF H.E.B. GROCERY AND ANY DISTRIBUTION TO NON-H.E.B. ENTITIES OR PERSONS MUST BE SUBJECT TO A WRITTEN CONFIDENTIALITY AGREEMENT.

28	PLAN MOD 28 – PETROLEUM FUEL REMODEL	11/21/25

11/21/2025
STATE OF TEXAS
NICHOLAS R. SANDLIN
124404
LICENSED PROFESSIONAL ENGINEER

ENGINEERING | CONSULTING
SANDLIN SERVICES LLC
TBPELS FIRM #21356
9111 JOLLYVILLE RD. STE 212
AUSTIN, TX 78759

H-E-B

SITE PLAN

HEB AUSTIN 20
REMODEL CONSTRUCTION PLANS
6001 WEST PARMER LN. AUSTIN, TX 78727

SCALE:	AS INDICATED
DRAWN BY:	
PROJ. NO.:	388-26
DATE:	11.21.2025
SHEET NO.	C-1.2

Drainage Area	Drainage Area		2-year			25-year			100-year		
		T_c*	C	I**	Q	C	I**	Q	C	I**	Q
	(Ac)	(min)		(in/hr)	(cfs)		(in/hr)	(cfs)		(in/hr)	(cfs)
HMI DA	0.33	5.00	0.95	6.77	2.12	0.95	11.79	3.70	0.95	15.42	4.84

*Most conservative Tc value of 5.0 minutes and impervious cover value of 100% assumed for each drainage area

**City of Austin Atlas 14 IDF curve coefficients used to calculate intensity values

ADDRESS: 6207 MCNEIL DR
ZONING: GR-CO

EXISTING STM MANHOLE PER AS-BUILTS – CONTRACTOR TO CONFIRM EXISTING FLOWLINES PRIOR TO CONSTRUCTION
RIM EL:863.55'
36" FL IN (SW):855.24'
18" FL IN (SE):856.54'
18" FL IN (NW):856.90'
36" FL OUT (NE):855.14'

EXISTING 18" STORM LINE
EXISTING 36" STORM LINE
EXISTING 18" STORM LINE
EXISTING 36" STORM LINE
CAUTION!!! ELECTRIC METER/PANEL

HMI DA
0.33 AC

HMI

KIOSK

20/10K TANK
UNLEADED
PREMIUM

SCALE: 1" = 10'
IF DRAWING BAR DOES NOT MEASURE 2" THIS PRINT IS NOT TO SCALE

LEGEND

EXISTING	PROPOSED	
		1/2" IRON ROD FOUND
		1/2" IRON ROD SET
		IRON PIPE FOUND
		NAIL FOUND
		COMPUTED POINT
		MONUMENT FOUND
P.O.B.		POINT OF BEGINNING
(XXX)		BENCHMARK
		RECORD INFORMATION
		LIGHT POLE
		POWER POLE
		DOWN GUY
		FIRE HYDRANT
		WATER VALVE
		WATER METER
		GAS METER
		GAS VALVE
		WOOD FENCE
		CHAIN LINK FENCE
		WIRE FENCE
EMH	EMH	ELECTRICAL MANHOLE
WWMH	WWMH	WASTEWATER MANHOLE
SSMH	SSMH	STORMSEWER MANHOLE
WTR	WTR	WATER MANHOLE
CO		CLEAN OUT
		DRAINAGE INLET
		CURB INLET
		CURB & GUTTER
		FIRE LANE
		HANDICAPPED PARKING SPACE
		SIGN
		VARIABLE HEIGHT CONCRETE RETAINING WALL
		ELECTRIC PULL BOX
		ELECTRIC METER
		ELECTRIC TRANSFORMER
		TELEPHONE SERVICE BOX
		BOLLARD
OE	OE	OVER HEAD ELEC. LINE
OT	OT	OVER HEAD TELEPHONE
SS	SS	STORM SEWER LINE
W	W	WATER LINE
WW	WW	WASTEWATER LINE
FM	FM	FORCE MAIN
UE	UE	UNDERGROUND ELECTRIC
UT	UT	UNDERGROUND TELEPHONE
G	G	GAS LINE
		PROPERTY LINE
678	678	CONTOUR
704	704	SPOT ELEVATION
		CUT/FILL SLOPES
		FLOW DIRECTION
		CONCRETE SURFACE
1170		EXISTING TREE
1124		TREE TO BE REMOVED

PLEASE BE ADVISED: THIS DOCUMENT MAY CONTAIN SENSITIVE AND/OR PROPRIETARY INFORMATION AND THEREFORE MUST BE TREATED AS A CONFIDENTIAL DOCUMENT. ACCEPTANCE OF THIS DOCUMENT CONSTITUTES AN AGREEMENT THAT THIS DOCUMENT AND THE INFORMATION CONTAINED HEREIN SHALL BE MAINTAINED AND TRANSMITTED IN A CONFIDENTIAL MANNER. NO PART OF THIS DOCUMENT SHALL BE REPRODUCED, RELEASED OR DISTRIBUTED WITHOUT THE EXPRESS WRITTEN PERMISSION OF H.E.B. GROCERY AND ANY DISTRIBUTION TO NON-H.E.B. ENTITIES OR PERSONS MUST BE SUBJECT TO A WRITTEN CONFIDENTIALITY AGREEMENT.

WARNING !!!! CONTRACTOR TO FIELD VERIFY ALL EXIST. UTILITIES VERTICALLY AND HORIZONTALLY PRIOR TO CONSTRUCTION. THE CONTRACTOR IS TO CONTACT ENGINEER IF ANY EXISTING UTILITY INFORMATION DIFFERS FROM DATA SHOWN IN THE PLANS. CALL 811 BEFORE YOU DIG.

TRENCH DRAIN CALCULATIONS

COA based Grate Inlet Calculations - Inlet		
Grate Inlet Equation - weir		
Q=Cw*P*d^1.5*Cf		
Cw	3	
Size of Inlet (length)	87	ft
Size of Inlet (width)	0.8	ft
Ag= Area of Inlet	72.5	ft2
d= avg. depth across grate	0.1	ft
Cf= Clogging factor	0.5	
Q25 from Drainage Calcs	3.70	cfs
Q100 from Drainage Calcs	4.84	cfs
Inlet Capacity	**8.33**	cfs

PLAN MOD 28 – PETROLEUM FUEL REMODEL 11/21/25

11/21/2025
STATE OF TEXAS
NICHOLAS R. SANDLIN
124404
LICENSED
PROFESSIONAL ENGINEER

SANDLIN SERVICES LLC
ENGINEERING CONSULTING
TBPELS FIRM #21356
9111 JOLLYVILLE RD, STE 212
AUSTIN, TX 78759

H-E-B

HMI PLAN 1

HEB AUSTIN 20
REMODEL CONSTRUCTION PLANS
6001 WEST PARMER LN, AUSTIN, TX 78727

SCALE: AS INDICATED
DRAWN:
PROJ. NO.: 388-26
DATE: 11.21.2025
SHEET NO. C-1.5

Temporary Stormwater Section
(TCEQ-0602)

Attachment H:
Temporary Sediment Pond(s) Plans and Calculations
(NOT APPLICABLE)

Temporary Stormwater Section (TCEQ-0602)

Attachment I: Inspection and Maintenance for BMPs

Inspection and Maintenance Guidelines for Construction BMPs

Silt Fence – Section 1.4.3
(1) Inspect all fencing weekly, and after any rainfall.
(2) Remove sediment when buildup reaches 6 inches.
(3) Replace any torn fabric or install a second line of fencing parallel to the torn section.
(4) Replace or repair any sections crushed or collapsed in the course of construction activity. If a section of fence is obstructing vehicular access, consider relocating it to a spot where it will provide equal protection, but will not obstruct vehicles. A triangular filter dike may be preferable to a silt fence at common vehicle access points.
(5) When construction is complete, the sediment should be disposed of in a manner that will not cause additional siltation and the prior location of the silt fence should be revegetated. The fence itself should be disposed of in an approved landfill.

Rock Berms – Section 1.4.5
(1) Inspection should be made weekly and after each rainfall by the responsible party. For installations in streambeds, additional daily inspections should be made.
(2) Remove sediment and other debris when buildup reaches 6 inches and dispose of the accumulated silt in an approved manner that will not cause any additional siltation.
(3) Repair any loose wire sheathing.
(4) The berm should be reshaped as needed during inspection.
(5) The berm should be replaced when the structure ceases to function as intended due to silt accumulation among the rocks, washout, construction traffic damage, etc.
(6) The rock berm should be left in place until all upstream areas are stabilized and accumulated silt removed.

Temporary Construction Entrance/Exit – Section 1.4.2
(1) The entrance should be maintained in a condition which will prevent tracking or flowing of sediment onto public rights-of-way. This may require periodic top dressing with additional stone as conditions demand and repair and/or cleanout of any measures used to trap sediment.
(2) All sediment spilled, dropped, washed or tracked onto public rights-of-way should be removed immediately by contractor.
(3) When necessary, wheels should be cleaned to remove sediment prior to entrance onto public right-of-way.
(4) When washing is required, it should be done on an area stabilized with crushed stone that drains into an approved sediment trap or sediment basin.

(5) All sediment should be prevented from entering any storm drain, ditch or water course by using approved methods.

Concrete Washout Area

The purpose of concrete washout areas is to prevent or reduce the discharge of pollutants to stormwater from concrete waste by conducting washout offsite, performing onsite washout in a designated area, and training employees and subcontractors.

The following steps will help reduce stormwater pollution from concrete wastes:

- Incorporate requirements for concrete waste management into material supplier and subcontractor agreements.
- Avoid mixing excess amounts of fresh concrete.
- Perform washout of concrete trucks in designated areas only.
- Do not wash out concrete trucks into storm drains, open ditches, streets, or streams.
- Do not allow excess concrete to be dumped onsite, except in designated areas.
- For onsite washout:
- Locate washout area at least 50 feet from sensitive features, storm drains, open ditches, or water bodies. Do not allow runoff from this area by constructing a temporary pit or bermed area large enough for liquid and solid waste.
- Wash out waste into the temporary pit where the concrete can set, be broken up, and then disposed properly.

Personnel Responsible for Inspections

The agent that performs the inspections should be knowledgeable of this general permit, familiar with the construction site, and knowledgeable of the SWPPP for the site. Documentation of the inspector's qualifications is to be included in the attached Inspector Qualifications Log.

Inspection Schedule

The primary operator is required to choose one of the two inspections listed below.

☐ **Option 1:** Once every seven calendar days. If this alternative schedule is developed, then the inspection must occur regardless of whether or not there has been a rainfall event since the previous inspection.

☐ **Option 2:** Once every 14 calendar days and within 24 hours of the end of a storm event of two inches or greater.

The inspections may occur on either schedule provided that documentation reflects the current schedule and that any changes to the schedule are conducted in accordance with the following provisions: the schedule may be changed a maximum of one time each month, the schedule change must be implemented at the beginning of a calendar month, and the reason for the schedule change must be documented (e.g., end of "dry" season and beginning of "wet" season).

If option 2 is the chosen frequency of inspections a rain gauge must be properly maintained on site or the storm event information from a weather station that is representative of the site location. For any day of

rainfall during normal business hours that measures 0.25 inches or greater, proper documentation of the total rainfall measured for that day must be recorded.

Personnel provided by the permittee must inspect:

- disturbed areas of the construction site that have not been finally stabilized,
- areas used for storage of materials that are exposed to precipitation,
- structural controls (for evidence of, or the potential for, pollutants entering the drainage system),
- sediment and erosion control measures identified in the SWP3 (to ensure they are operating correctly), and
- locations where vehicles enter or exit the site (for evidence of off-site sediment tracking).

Reductions in Inspection Frequency

Where sites have been finally or temporarily stabilized or where runoff is unlikely due to winter conditions (e.g., site is covered with snow, ice, or frozen ground exists), inspections must be conducted at least once every month. In arid, semi-arid, or drought-stricken areas, inspections must be conducted at least once every month and within 24 hours after the end of a storm event of 0.5 inches or greater. A record of the total rainfall measured, as well as the approximate beginning and ending dates of winter or drought conditions resulting in monthly frequency of inspections in the attached Rain Gauge Log.

In the event of flooding or other uncontrollable situations which prohibit access to the inspection sites, inspections must be conducted as soon as access is practicable.

Inspection Report Forms

Use the Inspection Report Forms given as a checklist to ensure that all required areas of the construction site are addressed. There is space to document the inspector's name as well as when the inspections regularly take place. The tables will document that the required area was inspected. (If there were any areas of concern, briefly describe them in this space with a more detailed description in the narrative section. Use the last table to document any discharges found during the inspections).

Describe how effective the installed BMPs are performing. Describe any BMP failures that were noted during the investigation and describe any maintenance required due to the failure. If new BMPs are needed as the construction site changes, the inspector can use the space at the bottom of the section to list BMPs to be implemented before the next inspection.

Describe the inspector's qualifications, how the inspection was conducted, and describe any areas of non-compliance in detail. If an inspection report does not identify any incidents of non- compliance, then it must contain a certifying signature stating that the facility or site is in compliance. The report must be signed by a person and in a manner required by 30 TAC 305.128. There is space at the end of the form to allow for this certifying signature.

Whenever an inspection shows that BMP modifications are needed to better control pollutants in runoff, the changes must be completed within seven calendar days following the inspection. If existing BMPs are modified or if additional BMPs are needed, you must describe your implementation schedule, and wherever possible, make the required BMP changes before the next storm event.

The Inspection Report Form functions as the required report and must be signed in accordance with TCEQ rules at 30 TAC 305.128.

Corrective Action

Personnel Responsible for Corrective Actions

Both Primary and Secondary Operators are responsible for maintaining all necessary Corrective Actions. If an individual is specifically identified as the responsible party for modifying the contact information for that individual should be documented in the attached Inspector Qualifications Log.

Corrective Action Forms

The Temporary BMPs must be modified based on the results of inspections, as necessary, to better control pollutants in runoff. Revisions must be completed within seven (7) calendar days following the inspection. If existing BMPs are modified or if additional BMPs are necessary, an implementation schedule must be described in the attached forms and wherever possible those changes implemented before the next storm event. If implementation before the next anticipated storm event is impracticable, these changes must be implemented as soon as practicable. Actions taken as a result of inspections must be properly documented by completing the corrective action forms given.

Inspector Qualifications Log*

Inspector Name: _____
Qualifications (Check as appropriate and provide description):
☐ Training Course _____
☐ Supervised Experience _____
☐ Other _____

Inspector Name: _____
Qualifications (Check as appropriate and provide description):
☐ Training Course _____
☐ Supervised Experience _____
☐ Other _____

Inspector Name: _____
Qualifications (Check as appropriate and provide description):
☐ Training Course _____
☐ Supervised Experience _____
☐ Other _____

Inspector Name: _____
Qualifications (Check as appropriate and provide description):
☐ Training Course _____
☐ Supervised Experience _____
☐ Other _____

Inspector Name: _____
Qualifications (Check as appropriate and provide description):
☐ Training Course _____
☐ Supervised Experience _____
☐ Other _____

Inspector Name: _____
Qualifications (Check as appropriate and provide description):
☐ Training Course _____
☐ Supervised Experience _____
☐ Other _____

*The agent that performs the inspections should be knowledgeable of this general permit, familiar with the construction site, and knowledgeable of the SWPPP for the site. The contractor is to provide an inspector with a CPESC, CESSWI, or CISEC certification.

Amendment Log

No.	Description of the Amendment	Date of Amendment	Amendment Prepared by [Name(s) and Title]

Construction Activity Sequence Log*

Name of Operator	Projected Dates Month/Year	Activity Disturbing Soil clearing, excavation, etc.	Location on-site where activity will be conducted	Acreage being disturbed

*Construction activity sequences for linear projects may be conducted on a rolling basis. As a result, construction activities may be at different stages at different locations in the project area. The Contractor is required to complete and update the schedule and adjust as necessary.

Stormwater Control Installation and Removal Log

Stormwater Control	Location On-Site	Installation Date	Removal Date

Stabilization Activities Log*

Date Activity Initiated	Description of Activity	Description of Stabilization Measure and Location	Date Activity Ceased (Indicate Temporary or Permanent)	Date When Stabilization Measures Initiated

*****Stabilization and erosion control practices may include, but are not limited to, establishing temporary or permanent vegetation, mulching, geotextiles, sod stabilization, vegetative buffer strips, and protecting existing trees and vegetation. List practices used where they are located, when they will be implemented, and whether they are temporary (interim) or permanent.

Inspection Frequency Log

Date	Frequency

Rain Gauge Log

Date	Location of Rain Gauge	Gauge Reading

General Information

Name of Project		**Tracking Number**		**Inspection Date**	
Inspector Name, Title & Contact Information					
Present Phase of Construction					
Inspection Location (if multiple inspections are required, specify location where this inspection is being conducted)					

Inspection Frequency

Standard Frequency: ☐ Weekly ☐Every 14 days and within 24 hours of a 0.25" rain

Increased Frequency: ☐ Every 7 days and within 24 hours of a 0.25" rain

Reduced Frequency:

☐ Once per month (for stabilized areas)

☐ Once per month and within 24 hours of a 0.25" rain (for arid, semi-arid, or drought-stricken areas during seasonally dry periods or during drought)

☐ Once per month (for frozen conditions where earth-disturbing activities are being conducted)

Was this inspection triggered by a 0.25" storm event? ☐ Yes ☐ No

If yes, how did you determine whether a 0.25" storm event has occurred?

☐ Rain gauge on site ☐Weather station representative of site. Specify weather station source.

Total rainfall amount that triggered the inspection (in inches):

Unsafe Conditions for Inspection

Did you determine that any portion of your site was unsafe for inspection? ☐ Yes ☐No

If "yes," complete the following:

- Describe the conditions that prevented you from conducting the inspection in this location:
- Location(s) where conditions were found:

Condition and Effectiveness of Erosion and Sediment (E&S) Controls				
Type / Location of E&S Control	**Repairs or Other Maintenance Needed?**	**Corrective Action Required?**	**Date on Which Maintenance of Corrective Action First Identified?**	**Notes**
1.	☐ Yes ☐ No	☐ Yes ☐ No		
2.	☐ Yes ☐ No	☐ Yes ☐ No		
3.	☐ Yes ☐ No	☐ Yes ☐ No		
4.	☐ Yes ☐ No	☐ Yes ☐ No		
5.	☐ Yes ☐ No	☐ Yes ☐ No		
6.	☐ Yes ☐ No	☐ Yes ☐ No		
7.	☐ Yes ☐ No	☐ Yes ☐ No		
8.	☐ Yes ☐ No	☐ Yes ☐ No		
9.	☐ Yes ☐ No	☐ Yes ☐ No		

Condition and Effectiveness of Pollution Prevention (P_2) Practices				
Type / Location of P_2 Practices	**Repairs or Other Maintenance Needed?**	**Corrective Action Required?**	**Identification Date**	**Notes**
1.	☐ Yes ☐ No	☐ Yes ☐ No		
2.	☐ Yes ☐ No	☐ Yes ☐ No		
3.	☐ Yes ☐ No	☐ Yes ☐ No		
4.	☐ Yes ☐ No	☐ Yes ☐ No		
5.	☐ Yes ☐ No	☐ Yes ☐ No		
6.	☐ Yes ☐ No	☐ Yes ☐ No		
7.	☐ Yes ☐ No	☐ Yes ☐ No		
8.	☐ Yes ☐ No	☐ Yes ☐ No		
9.	☐ Yes ☐ No	☐ Yes ☐ No		

Stabilization of Exposed Soil			
Stabilization Area	**Stabilization Method**	**Have you Initiated Stabilization?**	**Notes**

1.		☐ YES ☐ NO If yes, provide date:	
2.		☐ YES ☐ NO If yes, provide date:	
3.		☐ YES ☐ NO If yes, provide date:	
4.		☐ YES ☐ NO If yes, provide date:	

Description of Discharges

Was a stormwater discharge or other discharge occurring from any part of your site at the time of the inspection? ☐ YES ☐ NO
If "YES," provide the following information for each point of discharge:

Discharge Locations	**Observations**
1.	Describe the discharge: At points of discharge and the channels and banks of surface waters in the immediate vicinity, are there any visible signs of erosion and / or sediment accumulation that can be attributed to your discharge? ☐ YES. ☐ NO If yes, describe what you see, specify the location(s) where these conditions were found, and indicate whether modification, maintenance, or corrective action is needed to resolve the issue:
2.	Describe the discharge: At points of discharge and the channels and banks of surface waters in the immediate vicinity, are there any visible signs of erosion and / or sediment accumulation that can be attributed to your discharge? ☐ YES. ☐ NO If yes, describe what you see, specify the location(s) where these conditions were found, and indicate whether modification, maintenance, or corrective action is needed to resolve the issue:
3.	Describe the discharge: At points of discharge and the channels and banks of surface waters in the immediate vicinity, are there any visible signs of erosion and / or sediment accumulation that can be attributed to your discharge? ☐ YES. ☐ NO If yes, describe what you see, specify the location(s) where these conditions were found, and indicate whether modification, maintenance, or corrective action is needed to resolve the issue:

Contractor or Subcontractor Certification and Signature

"I certify under penalty of law that this document and all attachments were prepared under my direction or supervision in accordance with a system designed to assure that qualified personnel properly gathered and evaluated the information, submitted. Based on my inquiry of the person or persons who manage the system, or those persons directly responsible for gathering the information, the information submitted is, to the best of my knowledge and belief, true, accurate, and complete. I am, aware that there are significant penalties for submitting false information, including the possibility of fine and imprisonment for knowing violations."

Signature of Contractor or Subcontractor: _____ Date**:**

Printed Name and Affiliation:

Certification and Signature by Permittee

"I certify under penalty of law that this document and all attachments were prepared under my direction or supervision in accordance with a system designed to assure that qualified personnel properly gathered and evaluated the information, submitted. Based on my inquiry of the person or persons who manage the system, or those persons directly responsible for gathering the information, the information submitted is, to the best of my knowledge and belief, true, accurate, and complete. I am, aware that there are significant penalties for submitting false information, including the possibility of fine and imprisonment for knowing violations."

Signature of Permittee or
"Duly Authorized Representative": _____ **Date:**

Printed Name and Affiliation:

Section A – Initial Report **(Complete this section within 24 hours of discovering the condition that triggered corrective action.)**		
Name of Project:	Tracking Number:	Today's Date
Date Problem First Discovered:	Time Problem First Discovered:	
Name of Individual Completing this Form:	Contact Information:	

What site conditions triggered the requirement to conduct corrective action:

☐ A required stormwater control was never installed, was installed incorrectly, or not in accordance with the requirements in Part 2 and/or Part 3

☐ The stormwater controls that have been installed and maintained are not effective enough for the discharge to meet applicable water quality standards

☐ A prohibited discharge has occurred or is occurring

Provide a description of the problem:

Deadline for completing corrective action (Enter date that is either: (1) no more than 7 calendar days after the date you discovered the problem, or (2) if it is infeasible to complete work within the first 7 days, enter the date that is as soon as practicable following the 7th day):

If your estimated date of completion falls after the 7-day deadline, explain (1) why you believe it is infeasible to complete work within 7 days, and (2) why the date you have established for making the new or modified stormwater control operational is the soonest practicable timeframe:

Section B – Corrective Action Progress

(Complete this section no later than 7 calendar days after discovering the condition that triggered corrective action.)

Section B.1 – Why the Problem Occurred

Cause(s) of Problem (Add an additional sheet if necessary)	How This Was Determined and the Date You Determined the Cause
1.	1.
2.	2.

Section B.2 – Stormwater Control Modifications to be Implemented to Correct the Problem

List of Stormwater control Modification(s) Needed to Correct Problem (Add an additional sheet if necessary)	Completion Date	SWPPP Update Necessary?	Notes
1.		☐ Yes ☐ No Date:	
2.		☐ Yes ☐ No Date:	

Section A – Initial Report **(Complete this section within 24 hours of discovering the condition that triggered corrective action.)**		
Name of Project:	Tracking Number:	Today's Date
Date Problem First Discovered:	Time Problem First Discovered:	
Name of Individual Completing this Form:	Contact Information:	

What site conditions triggered the requirement to conduct corrective action:

☐ A required stormwater control was never installed, was installed incorrectly, or not in accordance with the requirements in Part 2 and/or Part 3

☐ The stormwater controls that have been installed and maintained are not effective enough for the discharge to meet applicable water quality standards

☐ A prohibited discharge has occurred or is occurring

Provide a description of the problem:

Deadline for completing corrective action (Enter date that is either: (1) no more than 7 calendar days after the date you discovered the problem, or (2) if it is infeasible to complete work within the first 7 days, enter the date that is as soon as practicable following the 7th day):

If your estimated date of completion falls after the 7-day deadline, explain (1) why you believe it is infeasible to complete work within 7 days, and (2) why the date you have established for making the new or modified stormwater control operational is the soonest practicable timeframe:

Section B – Corrective Action Progress

(Complete this section no later than 7 calendar days after discovering the condition that triggered corrective action.)

Section B.1 – Why the Problem Occurred

Cause(s) of Problem (Add an additional sheet if necessary)	How This Was Determined and the Date You Determined the Cause
1.	1.
2.	2.

Section B.2 – Stormwater Control Modifications to be Implemented to Correct the Problem

List of Stormwater control Modification(s) Needed to Correct Problem (Add an additional sheet if necessary)	Completion Date	SWPPP Update Necessary?	Notes
1.		☐ Yes ☐ No Date:	
2.		☐ Yes ☐ No Date:	

Contractor or Subcontractor Certification and Signature

"I certify under penalty of law that this document and all attachments were prepared under my direction or supervision in accordance with a system designed to assure that qualified personnel properly gathered and evaluated the information, submitted. Based on my inquiry of the person or persons who manage the system, or those persons directly responsible for gathering the information, the information submitted is, to the best of my knowledge and belief, true, accurate, and complete. I am, aware that there are significant penalties for submitting false information, including the possibility of fine and imprisonment for knowing violations."

Signature of Contractor or Subcontractor: _____ **Date:**

Printed Name and Affiliation:

Certification and Signature by Permittee

"I certify under penalty of law that this document and all attachments were prepared under my direction or supervision in accordance with a system designed to assure that qualified personnel properly gathered and evaluated the information, submitted. Based on my inquiry of the person or persons who manage the system, or those persons directly responsible for gathering the information, the information submitted is, to the best of my knowledge and belief, true, accurate, and complete. I am, aware that there are significant penalties for submitting false information, including the possibility of fine and imprisonment for knowing violations."

Signature of Permittee or
"Duly Authorized Representative": _____ **Date:**

Printed Name and Affiliation:

Temporary Stormwater Section
TCEQ-0602)

Attachment J:
Schedule of Interim and Permanent
Soil Stabilization Practices

Interim Vegetative Stabilization

Interim soil stabilization will not be required.

Permanent Vegetative Stabilization

Construction practices shall disturb the minimal amount of existing ground cover as required for land clearing, grading, and construction activity for the shortest amount of time possible to minimize the potential of erosion and sedimentation from the site. Existing vegetation shall be maintained and left in place until it is necessary to disturb for construction activity. For this project, the following stabilization practices will be implemented:

1. Hydraulic Mulch and Seeding: Disturbed areas subject to erosion shall be stabilized with hydraulic mulch and/or seeded and watered to provide interim stabilization.

2. Sodding and Wood Mulch: As per the project landscaping plan, sodding and wood mulch will be applied to landscaped areas to provide permanent stabilization prior to project completion.

Records of the following shall be maintained:

1. The dates when major grading activities occur,

2. The dates when construction activities temporarily or permanently cease on a portion of the site, and

3. The dates when stabilization measures are initiated.

Stabilization measures must be initiated as soon as practical in portions of the site where construction activities have temporarily or permanently ceased, and except as provided in the following, must be initiated no more than fourteen (14) days after the construction activity in that portion of the site has temporarily or permanently ceased:

Where the initiation of stabilization measures by the 14th day after construction activity temporarily or permanently ceased is precluded by snow cover or frozen ground conditions, stabilization measures must be initiated as soon as practical.

Where construction activity on a portion of the site is temporarily ceased and earth disturbing activities will be resumed within twenty-one (21) days, temporary stabilization measures do not have to be initiated on that portion of the site.

In arid areas (areas with an average rainfall of 0-10 inches), semiarid areas (areas with an average annual rainfall of 10 to 20 inches), and areas experiencing droughts where the initiation of stabilization measures by the 14th day after construction activity has temporarily or permanently ceased is precluded by seasonably arid conditions, stabilization measures must be initiated as soon as practical.

Agent Authorization Form
(TCEQ-0599)

Agent Authorization Form
For Required Signature
Edwards Aquifer Protection Program
Relating to 30 TAC Chapter 213
Effective June 1, 1999

I NICK RIEMER,
Print Name

OTHER – MANAGER OF FUEL CONSTRUCTION,
Title - Owner/President/Other

of H-E-B LP,
Corporation/Partnership/Entity Name

have authorized NICK SANDLIN, P.E.
Print Name of Agent/Engineer

of SANDLIN SERVICES, LLC
Print Name of Firm

to represent and act on the behalf of the above named Corporation, Partnership, or Entity for the purpose of preparing and submitting this plan application to the Texas Commission on Environmental Quality (TCEQ) for the review and approval consideration of regulated activities.

I also understand that:

1. The applicant is responsible for compliance with 30 Texas Administrative Code Chapter 213 and any condition of the TCEQ's approval letter. The TCEQ is authorized to assess administrative penalties of up to $10,000 per day per violation.

2. For those submitting an application who are not the property owner, but who have the right to control and possess the property, additional authorization is required from the owner.

3. Application fees are due and payable at the time the application is submitted. The application fee must be sent to the TCEQ cashier or to the appropriate regional office. The application will not be considered until the correct fee is received by the commission.

4. A notarized copy of the Agent Authorization Form must be provided for the person preparing the application, and this form must accompany the completed application.

5. No person shall commence any regulated activity on the Edwards Aquifer Recharge Zone, Contributing Zone or Transition Zone until the appropriate application for the activity has been filed with and approved by the Executive Director.

SIGNATURE PAGE:

Applicant's Signature

12-9-2025
Date

THE STATE OF TEXAS §

County of Bexar §

BEFORE ME, the undersigned authority, on this day personally appeared Nick Rimmer known to me to be the person whose name is subscribed to the foregoing instrument, and acknowledged to me that (s)he executed same for the purpose and consideration therein expressed.

GIVEN under my hand and seal of office on this 9th day of December 2025.

Zuleica L. Piatt
NOTARY PUBLIC

ZULEICA L. PIATT
Notary Public, State of Texas
Comm. Expires 09-02-2027
Notary ID 124576547

Zuleica L. Piatt
Typed or Printed Name of Notary

MY COMMISSION EXPIRES: 09-02-27

Application Fee Form
(TCEQ-0574)

Application Fee Form

Texas Commission on Environmental Quality
Name of Proposed Regulated Entity: HEB 388
Regulated Entity Location: 6001 W Parmer Ln., Austin, TX 78727
Name of Customer: H-E-B LP
Contact Person: Nick Riemer Phone: (737) 356-8116
Customer Reference Number (if issued):CN 601297963
Regulated Entity Reference Number (if issued):RN 101499580

Austin Regional Office (3373)

☐ Hays ☒ Travis ☐ Williamson

San Antonio Regional Office (3362)

☐ Bexar ☐ Medina ☐ Uvalde
☐ Comal ☐ Kinney

Application fees must be paid by check, certified check, or money order, payable to the **Texas Commission on Environmental Quality**. Your canceled check will serve as your receipt. **This form must be submitted with your fee payment**. This payment is being submitted to:

☒ Austin Regional Office
☐ Mailed to: TCEQ - Cashier
Revenues Section
Mail Code 214
P.O. Box 13088
Austin, TX 78711-3088

☐ San Antonio Regional Office
☐ Overnight Delivery to: TCEQ - Cashier
12100 Park 35 Circle
Building A, 3rd Floor
Austin, TX 78753
(512)239-0357

Site Location (Check All That Apply):

☒ Recharge Zone ☐ Contributing Zone ☐ Transition Zone

Type of Plan	***Size***	***Fee Due***
Water Pollution Abatement Plan, Contributing Zone Plan: One Single Family Residential Dwelling	Acres	$
Water Pollution Abatement Plan, Contributing Zone Plan: Multiple Single Family Residential and Parks	Acres	$
Water Pollution Abatement Plan, Contributing Zone Plan: Non-residential	Acres	$
Sewage Collection System	L.F.	$
Lift Stations without sewer lines	Acres	$
Underground or Aboveground Storage Tank Facility	1 Tanks	$ 650
Piping System(s)(only)	Each	$
Exception	Each	$
Extension of Time	Each	$

Signature:  Date: 11/05/2025

Application Fee Schedule

Texas Commission on Environmental Quality
Edwards Aquifer Protection Program 30 TAC Chapter 213 (effective 05/01/2008)

Water Pollution Abatement Plans and Modifications

Contributing Zone Plans and Modifications

Project	*Project Area in Acres*	*Fee*
One Single Family Residential Dwelling	< 5	$650
Multiple Single Family Residential and Parks	< 5 5 < 10 10 < 40 40 < 100 100 < 500 ≥ 500	$1,500 $3,000 $4,000 $6,500 $8,000 $10,000
Non-residential (Commercial, industrial, institutional, multi-family residential, schools, and other sites where regulated activities will occur)	< 1 1 < 5 5 < 10 10 < 40 40 < 100 ≥ 100	$3,000 $4,000 $5,000 $6,500 $8,000 $10,000

Organized Sewage Collection Systems and Modifications

Project	*Cost per Linear Foot*	*Minimum Fee-Maximum Fee*
Sewage Collection Systems	$0.50	$650 - $6,500

Underground and Aboveground Storage Tank System Facility Plans and Modifications

Project	*Cost per Tank or Piping System*	*Minimum Fee-Maximum Fee*
Underground and Aboveground Storage Tank Facility	$650	$650 - $6,500

Exception Requests

Project	*Fee*
Exception Request	$500

Extension of Time Requests

Project	*Fee*
Extension of Time Request	$150

Check Payable to the "Texas Commission on Environmental Quality"

Core Data Form
(TCEQ-10400)

TCEQ Use Only

TCEQ Core Data Form

For detailed instructions on completing this form, please read the Core Data Form Instructions or call 512-239-5175.

SECTION I: General Information

1. Reason for Submission (*If other is checked please describe in space provided.*)

☒ New Permit, Registration or Authorization (*Core Data Form should be submitted with the program application.*)

☐ Renewal *(Core Data Form should be submitted with the renewal form)*

☐ Other

2. Customer Reference Number *(if issued)*	Follow this link to search for CN or RN numbers in Central Registry**	**3. Regulated Entity Reference Number** *(if issued)*
CN 601297963		**RN 101499580**

SECTION II: Customer Information

4. General Customer Information	**5. Effective Date for Customer Information Updates** (mm/dd/yyyy)	11/5/2025

☐ New Customer ☒ Update to Customer Information ☐ Change in Regulated Entity Ownership
☐ Change in Legal Name (Verifiable with the Texas Secretary of State or Texas Comptroller of Public Accounts)

The Customer Name submitted here may be updated automatically based on what is current and active with the Texas Secretary of State (SOS) or Texas Comptroller of Public Accounts (CPA).

6. Customer Legal Name *(If an individual, print last name first: eg: Doe, John)*	*If new Customer, enter previous Customer below:*
H-E-B LP	

7. TX SOS/CPA Filing Number	**8. TX State Tax ID** (11 digits)	**9. Federal Tax ID** (9 digits)	**10. DUNS Number** *(if applicable)*
0015370710	17430106579		

11. Type of Customer:	☐ Corporation	☐ Individual	Partnership: ☐ General ☒ Limited
Government: ☐ City ☐ County ☐ Federal ☐ Local ☐ State ☐ Other		☐ Sole Proprietorship	☐ Other:

12. Number of Employees	**13. Independently Owned and Operated?**
☐ 0-20 ☐ 21-100 ☐ 101-250 ☐ 251-500 ☒ 501 and higher	☒ **Yes** ☐ **No**

14. Customer Role (Proposed or Actual) – *as it relates to the Regulated Entity listed on this form. Please check one of the following*

☐ Owner ☐ Operator ☒ Owner & Operator
☐ Occupational Licensee ☐ Responsible Party ☐ VCP/BSA Applicant ☐ Other:

15. Mailing Address:	PO BOX 839999						
	City	SAN ANTONIO	**State**	TX	**ZIP**	78283	**ZIP + 4**

16. Country Mailing Information *(if outside USA)*	**17. E-Mail Address** *(if applicable)*
	RIEMER.NICK@HEB.COM

18. Telephone Number	19. Extension or Code	20. Fax Number *(if applicable)*
(737) 356-8116		( ) -

SECTION III: Regulated Entity Information

21. General Regulated Entity Information *(If 'New Regulated Entity" is selected, a new permit application is also required.)*

☐ New Regulated Entity ☐ Update to Regulated Entity Name ☒ Update to Regulated Entity Information

The Regulated Entity Name submitted may be updated, in order to meet TCEQ Core Data Standards (removal of organizational endings such as Inc, LP, or LLC).

22. Regulated Entity Name *(Enter name of the site where the regulated action is taking place.)*

HEB 388

23. Street Address of the Regulated Entity: ***(No PO Boxes)***	6001 W PARMER LN							
	City	AUSTIN	**State**	TX	**ZIP**	78727	**ZIP + 4**	
24. County	TRAVIS							

If no Street Address is provided, fields 25-28 are required.

25. Description to Physical Location:					
26. Nearest City			**State**	**Nearest ZIP Code**	
AUSTIN			TX	78727	

Latitude/Longitude are required and may be added/updated to meet TCEQ Core Data Standards. (Geocoding of the Physical Address may be used to supply coordinates where none have been provided or to gain accuracy).

27. Latitude (N) In Decimal:	30.442542		**28. Longitude (W) In Decimal:**	-97.743792	
Degrees	Minutes	Seconds	Degrees	Minutes	Seconds
30	26	33.15	-97	44	37.65

29. Primary SIC Code (4 digits)	**30. Secondary SIC Code** (4 digits)	**31. Primary NAICS Code** (5 or 6 digits)	**32. Secondary NAICS Code** (5 or 6 digits)
5411	5541	445110	457120

33. What is the Primary Business of this entity? *(Do not repeat the SIC or NAICS description.)*

GROCERY STORE AND FUEL STATION

34. Mailing Address:	**PO BOX 839999**							
	City	**SAN ANTONIO**	**State**	**TX**	**ZIP**	**78283**	**ZIP + 4**	
35. E-Mail Address:	**RIEMER.NICK@HEB.COM**							

36. Telephone Number	37. Extension or Code	38. Fax Number *(if applicable)*
(737) 356-8116		( ) -

39. TCEQ Programs and ID Numbers Check all Programs and write in the permits/registration numbers that will be affected by the updates submitted on this form. See the Core Data Form instructions for additional guidance.

☐ Dam Safety	☐ Districts	☒ Edwards Aquifer	☐ Emissions Inventory Air	☐ Industrial Hazardous Waste
		11-95041002 11-96031302		
☐ Municipal Solid Waste	☐ New Source Review Air	☐ OSSF	☐ Petroleum Storage Tank	☐ PWS
☐ Sludge	☐ Storm Water	☐ Title V Air	☐ Tires	☐ Used Oil
☐ Voluntary Cleanup	☐ Wastewater	☐ Wastewater Agriculture	☐ Water Rights	☐ Other:

SECTION IV: Preparer Information

40. Name:	NICK SANDLIN	**41. Title:**	PROFESSIONAL ENGINEER

42. Telephone Number	**43. Ext./Code**	**44. Fax Number**	**45. E-Mail Address**
(806 **)** 679-7303		**( ) -**	operations@sandlinservices.com

SECTION V: Authorized Signature

46. By my signature below, I certify, to the best of my knowledge, that the information provided in this form is true and complete, and that I have signature authority to submit this form on behalf of the entity specified in Section II, Field 6 and/or as required for the updates to the ID numbers identified in field 39.

Company:	SANDLIN SERVICES, LLC	**Job Title:**	PRINCIPAL & PROFESSIONAL ENGINEER
Name *(In Print):*	NICK SANDLIN	**Phone:**	**(** 806 **)** 679- **7303**
Signature:		**Date:**	11/5/2025