Kirkman Engineering, LLC
5200 State Highway 121
Colleyville, TX 76034
817.488.4960

February 25,2026

Franklin Anciano
Edwards Aquifer Protection Program
Texas Commission on Environmental Quality
PH: 512-239-7017

RE: Sparkle Montessori Academy CZPMOD- Administrative NOD#1

Below are the responses to the comments issued on 02/24/2026 regarding the review of Sparkle Montessori Academy Modified CZP application

Core Data Form (TCEQ-10400)

1. Line 6-7. Please provide information.

   RE: Information has been provided.

2. Line 22. Please provide information.

   RE: Information has been provided.

3. Item 27-28. Please provide information.
   RE: Information has been provided.

Should you have any questions or concerns, please feel free to contact me.

Sincerely,

Prashantika Gautam
PH: 713-775-9897 (c)
Email: Prashantika.gautam@trustke.com

Texas Commission on Environmental Quality

Edwards Aquifer Application Cover Page

Our Review of Your Application

The Edwards Aquifer Program staff conducts an administrative and technical review of all applications. The turnaround time for administrative review can be up to 30 days as outlined in 30 TAC 213.4(e). Generally administrative completeness is determined during the intake meeting or within a few days of receipt. The turnaround time for technical review of an administratively complete Edwards Aquifer application is 90 days as outlined in 30 TAC 213.4(e). Please know that the review and approval time is directly impacted by the quality and completeness of the initial application that is received. In order to conduct a timely review, it is imperative that the information provided in an Edwards Aquifer application include final plans, be accurate, complete, and in compliance with 30 TAC 213.

Administrative Review

1. Edwards Aquifer applications must be deemed administratively complete before a technical review can begin. To be considered administratively complete, the application must contain completed forms and attachments, provide the requested information, and meet all the site plan requirements. The submitted application and plan sheets should be final plans. Please submit one full-size set of plan sheets with the original application, and half-size sets with the additional copies.

   To ensure that all applicable documents are included in the application, the program has developed tools to guide you and web pages to provide all forms, checklists, and guidance. Please visit the below website for assistance: http://www.tceq.texas.gov/field/eapp.

2. This Edwards Aquifer Application Cover Page form (certified by the applicant or agent) must be included in the application and brought to the administrative review meeting.

3. Administrative reviews are scheduled with program staff who will conduct the review. Applicants or their authorized agent should call the appropriate regional office, according to the county in which the project is located, to schedule a review. The average meeting time is one hour.

4. In the meeting, the application is examined for administrative completeness. Deficiencies will be noted by staff and emailed or faxed to the applicant and authorized agent at the end of the meeting, or shortly after. Administrative deficiencies will cause the application to be deemed incomplete and returned.

   An appointment should be made to resubmit the application. The application is re-examined to ensure all deficiencies are resolved. The application will only be deemed administratively complete when all administrative deficiencies are addressed.

5. If an application is received by mail, courier service, or otherwise submitted without a review meeting, the administrative review will be conducted within 30 days. The applicant and agent will be contacted with the results of the administrative review. If the application is found to be administratively incomplete, it can be retrieved from the regional office or returned by regular mail. If returned by mail, the regional office may require arrangements for return shipping.

6. If the geologic assessment was completed before October 1, 2004 and the site contains “possibly sensitive” features, the assessment must be updated in accordance with the *Instructions to Geologists* (TCEQ-0585 Instructions).

Technical Review

1. When an application is deemed administratively complete, the technical review period begins. The regional office will distribute copies of the application to the identified affected city, county, and groundwater conservation district whose jurisdiction includes the subject site. These entities and the public have 30 days to provide comments on the application to the regional office. All comments received are reviewed by TCEQ.

2. A site assessment is usually conducted as part of the technical review, to evaluate the geologic assessment and observe existing site conditions. The site must be accessible to our staff. The site boundaries should be

clearly marked, features identified in the geologic assessment should be flagged, roadways marked and the alignment of the Sewage Collection System and manholes should be staked at the time the application is submitted. If the site is not marked the application may be returned.

3. We evaluate the application for technical completeness and contact the applicant and agent via Notice of Deficiency (NOD) to request additional information and identify technical deficiencies. There are two deficiency response periods available to the applicant. There are 14 days to resolve deficiencies noted in the first NOD. If a second NOD is issued, there is an additional 14 days to resolve deficiencies. If the response to the second notice is not received, is incomplete or inadequate, or provides new information that is incomplete or inadequate, the application must be withdrawn or will be denied. Please note that because the technical review is underway, whether the application is withdrawn or denied **the application fee will be forfeited**.

4. The program has 90 calendar days to complete the technical review of the application. If the application is technically adequate, such that it complies with the Edwards Aquifer rules, and is protective of the Edwards Aquifer during and after construction, an approval letter will be issued. Construction or other regulated activity may not begin until an approval is issued.

Mid-Review Modifications

It is important to have final site plans prior to beginning the permitting process with TCEQ to avoid delays.

Occasionally, circumstances arise where you may have significant design and/or site plan changes after your Edwards Aquifer application has been deemed administratively complete by TCEQ. This is considered a "Mid-Review Modification". Mid-Review Modifications may require redistribution of an application that includes the proposed modifications for public comment.

If you are proposing a Mid-Review Modification, two options are available:

- If the technical review has begun your application can be denied/withdrawn, your fees will be forfeited, and the plan will have to be resubmitted.
- TCEQ can continue the technical review of the application as it was submitted, and a modification application can be submitted at a later time.

If the application is denied/withdrawn, the resubmitted application will be subject to the administrative and technical review processes and will be treated as a new application. The application will be redistributed to the affected jurisdictions.

Please contact the regional office if you have questions. If your project is located in Williamson, Travis, or Hays County, contact TCEQ's Austin Regional Office at 512-339-2929. If your project is in Comal, Bexar, Medina, Uvalde, or Kinney County, contact TCEQ's San Antonio Regional Office at 210-490-3096

Please fill out all required fields below and submit with your application.

1. Regulated Entity Name: Sparkle Montessori Academy						**2. Regulated Entity No.:** N/A			
3. Customer Name: Srikanth Nagunoori						**4. Customer No.:**			
5. Project Type: **(Please circle/check one)**	New		Modification			Extension		Exception	
6. Plan Type: **(Please circle/check one)**	WPAP	CZP	SCS	UST	AST	EXP	EXT	Technical Clarification	Optional Enhanced Measures
7. Land Use: **(Please circle/check one)**	Residential		Non-residential			**8. Site (acres):**			1.684
9. Application Fee:	$4,000		**10. Permanent BMP(s):**			VFS, Jellyfish Unit			
11. SCS (Linear Ft.):			**12. AST/UST (No. Tanks):**			N/A			
13. County:	Williamson		**14. Watershed:**			South Fork San Gabriel River			

Application Distribution

Instructions: Use the table below to determine the number of applications required. One original and one copy of the application, plus additional copies (as needed) for each affected incorporated city, county, and groundwater conservation district are required. Linear projects or large projects, which cross into multiple jurisdictions, can require additional copies. Refer to the "Texas Groundwater Conservation Districts within the EAPP Boundaries" map found at:

http://www.tceq.texas.gov/assets/public/compliance/field_ops/eapp/EAPP%20GWCD%20map.pdf

For more detailed boundaries, please contact the conservation district directly.

Austin Region			
County:	**Hays**	**Travis**	**Williamson**
Original (1 req.)	__	__	__
Region (1 req.)	__	__	__
County(ies)	__	__	__
Groundwater Conservation District(s)	__Edwards Aquifer Authority __Barton Springs/ Edwards Aquifer __Hays Trinity __Plum Creek	__Barton Springs/ Edwards Aquifer	NA
City(ies) Jurisdiction	__Austin __Buda __Dripping Springs __Kyle __Mountain City __San Marcos __Wimberley __Woodcreek	__Austin __Bee Cave __Pflugerville __Rollingwood __Round Rock __Sunset Valley __West Lake Hills	__Austin __Cedar Park __Florence __Georgetown __Jerrell ✓Leander __Liberty Hill __Pflugerville __Round Rock

San Antonio Region					
County:	**Bexar**	**Comal**	**Kinney**	**Medina**	**Uvalde**
Original (1 req.)	__	__	__	__	__
Region (1 req.)	__	__	__	__	__
County(ies)	__	__	__	__	__
Groundwater Conservation District(s)	__ Edwards Aquifer Authority __Trinity-Glen Rose	__Edwards Aquifer Authority	__Kinney	__EAA __Medina	__EAA __Uvalde
City(ies) Jurisdiction	__Castle Hills __Fair Oaks Ranch __Helotes __Hill Country Village __Hollywood Park __San Antonio (SAWS) __Shavano Park	__Bulverde __Fair Oaks Ranch __Garden Ridge __New Braunfels __Schertz	NA	__San Antonio ETJ (SAWS)	NA

I certify that to the best of my knowledge, that the application is complete and accurate. This application is hereby submitted to TCEQ for administrative review and technical review. PRASHANTIKA GAUTAM
Print Name of Customer/Authorized Agent
Prashantika Gautam 1/30/2026
Signature of Customer/Authorized Agent Date

FOR TCEQ INTERNAL USE ONLY				
Date(s)Reviewed:		Date Administratively Complete:		
Received From:		Correct Number of Copies:		
Received By:		Distribution Date:		
EAPP File Number:		Complex:		
Admin. Review(s) (No.):		No. AR Rounds:		
Delinquent Fees (Y/N):		Review Time Spent:		
Lat./Long. Verified:		SOS Customer Verification:		
Agent Authorization Complete/Notarized (Y/N):		Fee Check:	Payable to TCEQ (Y/N):	
Core Data Form Complete (Y/N):			Signed (Y/N):	
Core Data Form Incomplete Nos.:			Less than 90 days old (Y/N):	

Modification of a Previously Approved Contributing Zone Plan

Texas Commission on Environmental Quality

for Regulated Activities on the Edwards Aquifer Recharge Zone and Transition Zone and Relating to 30 TAC 213.4(j), Effective June 1, 1999

To ensure that the application is administratively complete, confirm that all fields in the form are complete, verify that all requested information is provided, consistently reference the same site and contact person in all forms in the application, and ensure forms are signed by the appropriate party.

Note: Including all the information requested in the form and attachments contributes to more streamlined technical reviews.

Signature

To the best of my knowledge, the responses to this form accurately reflect all information requested concerning the proposed regulated activities and methods to protect the Edwards Aquifer. This **Modification of a Previously Approved Contributing Zone Plan** is hereby submitted for TCEQ review and executive director approval. The request was prepared by:

Print Name of Customer/Agent: SRIKANTH NAGUNOORI

Date: 1/30/2026

Signature of Customer/Agent:

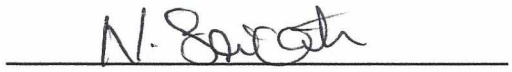

Project Information

1. Current Regulated Entity Name: Sparkle Montessori Academy
   Original Regulated Entity Name: Sparkle Montessori Academy
   Assigned Regulated Entity Number(s) (RN): N/A
   Edwards Aquifer Protection Program ID Number(s): N/A
   ☐ The applicant has not changed and the Customer Number (CN) is: _____
   ☑ The applicant or Regulated Entity has changed. A new Core Data Form has been provided.

2. ☑ **Attachment A: Original Approval Letter and Approved Modification Letters.** A copy of the original approval letter and copies of any modification approval letters are attached.

3. A modification of a previously approved plan is requested for (check all that apply):

- ☐ Any physical or operational modification of any best management practices or structure(s), including but not limited to temporary or permanent ponds, dams, berms, silt fences, and diversionary structures;
- ☐ Any change in the nature or character of the regulated activity from that which was originally approved;
- ☐ A change that would significantly impact the ability to prevent pollution of the Edwards Aquifer and hydrologically connected surface water; or
- ☑ Any development of land previously identified in a contributing zone plan as undeveloped.

4. ☑ Summary of Proposed Modifications (select plan type being modified). If the approved plan has been modified more than once, copy the appropriate table below, as necessary, and complete the information for each additional modification.

CZP Modification Summary	***Approved Project***	***Proposed Modification***
Acres	25.25	1.73
Type of Development	Residential	Commercial
Number of Residential Lots	8	N/A
Impervious Cover (acres)	11.11	0.94
Impervious Cover (%)	44%	54%
Permanent BMPs	Wet Pond	No modification
Other		

AST Modification Summary	***Approved Project***	***Proposed Modification***
Number of ASTs	0	0
Other	N/A	N/A

UST Modification Summary	***Approved Project***	***Proposed Modification***
Number of USTs	0	0
Other	N/A	N/A

5. ☑ **Attachment B: Narrative of Proposed Modification**. A detailed narrative description of the nature of the proposed modification is attached. It discusses what was approved,

including previous modifications, and how this proposed modification will change the approved plan.

6. ☑ **Attachment C: Current Site Plan of the Approved Projec**t. A current site plan showing the existing site development (i.e., current site layout) at the time this application for modification is attached. A site plan detailing the changes proposed in the submitted modification is required elsewhere.
   - ☐ The approved construction has not commenced. The original approval letter and any subsequent modification approval letters are included as Attachment A to document that the approval has not expired.
   - ☑ The approved construction has commenced and has been completed. Attachment C illustrates that the site was constructed as approved.
   - ☐ The approved construction has commenced and has been completed. Attachment C illustrates that the site was **not** constructed as approved.
   - ☐ The approved construction has commenced and has **not** been completed. Attachment C illustrates that, thus far, the site was constructed as approved.
   - ☐ The approved construction has commenced and has **not** been completed. Attachment C illustrates that, thus far, the site was **not** constructed as approved.

7. ☑ Acreage has not been added to or removed from the approved plan.
   ☐ Acreage has been added to or removed from the approved plan and is discussed in *Attachment B: Narrative of Proposed Modification*.

8. ☑ Submit one (1) original and one (1) copy of the application, plus additional copies as needed for each affected incorporated city, groundwater conservation district, and county in which the project will be located. The TCEQ will distribute the additional copies to these jurisdictions. The copies must be submitted to the appropriate regional office.

ATTACHMENT A
ORIGINAL APPROVAL LETTER AND APPROVED MODIFICATION LETTERS

COPY

Bryan W. Shaw, Ph.D., P.E., *Chairman*
Toby Baker, *Commissioner*
Jon Niermann, *Commissioner*
Richard A. Hyde, P.E., *Executive Director*

TEXAS COMMISSION ON ENVIRONMENTAL QUALITY

Protecting Texas by Reducing and Preventing Pollution

November 9, 2017

Mr. Robert E. Tesch
Tesch Development & Management Company, LLC
921 W. New Hope Dr., Ste. 502
Cedar Park, TX 78613

Re: Edwards Aquifer, Williamson County

NAME OF PROJECT: Valley Vista East Phase One; Located SE of Bradley Branch Road and Ronald Reagan Boulevard; Leander, Texas

TYPE OF PLAN: Request for Approval of a Contributing Zone Plan (CZP); 30 Texas Administrative Code (TAC) Chapter 213 Subchapter B Edwards Aquifer

Edwards Aquifer Protection Program ID No. 11000817; Regulated Entity No. RN109944678

Dear Mr. Tesch:

The Texas Commission on Environmental Quality (TCEQ) has completed its review of the CZP Application for the above-referenced project submitted to the Austin Regional Office by Jones|Carter on behalf of Tesch Development & Management Company, LLC on September 7, 2017. Final review of the CZP was completed after additional material was received on October 30 and November 7, 2017. As presented to the TCEQ, the Temporary and Permanent Best Management Practices (BMPs) were selected and construction plans were prepared by a Texas Licensed Professional Engineer to be in general compliance with the requirements of 30 TAC Chapter 213. These planning materials were sealed, signed and dated by a Texas Licensed Professional Engineer. Therefore, based on the engineer's concurrence of compliance, the planning materials for construction of the proposed project and pollution abatement measures are hereby approved subject to applicable state rules and the conditions in this letter. The applicant or a person affected may file with the chief clerk a motion for reconsideration of the executive director's final action on this Edwards Aquifer Protection Plan. A motion for reconsideration must be filed no later than 23 days after the date of this approval letter. *This approval expires two (2) years from the date of this letter unless, prior to the expiration date, more than 10 percent of the construction has commenced on the project or an extension of time has been requested.*

PROJECT DESCRIPTION

The proposed commercial and residential project will have an area of approximately 25.25 acres. It will include the construction of condominium lots, utilities, streets, drainage facilities, and associated appurtenances. The impervious cover will be 11.11 acres (44 percent). Project wastewater will be disposed of by conveyance to the existing Brushy Creek Regional Wastewater Treatment Plant.

certification letter must be submitted to the Austin Regional Office within 30 days of site completion.

15. The applicant shall be responsible for maintaining the permanent BMPs after construction until such time as the maintenance obligation is either assumed in writing by another entity having ownership or control of the property (such as without limitation, an owner's association, a new property owner or lessee, a district, or municipality) or the ownership of the property is transferred to the entity. Such entity shall then be responsible for maintenance until another entity assumes such obligations in writing or ownership is transferred. A copy of the transfer of responsibility must be filed with the executive director through the Austin Regional Office within 30 days of the transfer. A copy of the transfer form (TCEQ-10263) is enclosed.
16. Upon legal transfer of this property, the new owner(s) is required to comply with all terms of the approved CZP. If the new owner intends to commence any new regulated activity on the site, a new CZP that specifically addresses the new activity must be submitted to the executive director. Approval of the plan for the new regulated activity by the executive director is required prior to commencement of the new regulated activity.
17. A CZP approval or extension will expire and no extension will be granted if more than 50 percent of the total construction has not been completed within ten years from the initial approval of a plan. A new CZP must be submitted to the Austin Regional Office with the appropriate fees for review and approval by the executive director prior to commencing any additional regulated activities.
18. At project locations where construction is initiated and abandoned, or not completed, the site shall be returned to a condition such that the aquifer is protected from potential contamination.

This action is taken under authority delegated by the Executive Director of the Texas Commission on Environmental Quality. If you have any questions or require additional information, please contact Ms. Michelle Zvonkovic of the Edwards Aquifer Protection Program of the Austin Regional Office at (512) 339-2929.

Sincerely,

Shawn Stewart, Water Section Manager
Austin Region Office
Texas Commission on Environmental Quality

CSS/maz

Enclosure: Change in Responsibility for Maintenance of Permanent BMPs, Form TCEQ-10263

cc: Mr. David W. Peek, P.E., Jones|Carter, 3100 Alvin Devane Blvd., Ste. 150, Austin, TX 78741

The Honorable Dan A. Gattis, County Judge, Williamson County
Mr. Terron Evertson, P.E., County Engineer, Williamson County
Mr. Patrick Womack, P.E., City Engineer, City of Leander

COPY

Bryan W. Shaw, Ph.D., P.E., *Chairman*
Toby Baker, *Commissioner*
Jon Niermann, *Commissioner*
Richard A. Hyde, P.E., *Executive Director*

TEXAS COMMISSION ON ENVIRONMENTAL QUALITY

Protecting Texas by Reducing and Preventing Pollution

October 19, 2017

Mr. David W. Peek, P.E.
Jones|Carter
3100 Alvin Devane Blvd., Ste. 150
Austin, TX 78741

Re: Edwards Aquifer, Williamson County

NAME OF PROJECT: Valley Vista East Phase One, located SE of Bradley Ranch Road and Ronald Reagan Boulevard, Leander, Texas

TYPE OF PLAN: Request for Approval of a Contributing Zone Plan (CZP)
30 Texas Administrative Code (TAC) Chapter 213 Edwards Aquifer

Edwards Aquifer Protection Program ID No. 11000817; Regulated Entity No. RN109944678

Dear Mr. Peek:

We are in the process of technically reviewing the CZP application you submitted on the above-referenced project. Before we can proceed with our review, the following comments relating to the application must be addressed.

1. Please clarify the site acreage. In the CZP project narrative and the TCEQ TSS Removal Calculations, it is noted as 25.17 acres. However, in the application fee form, it is listed at 25.29 acres. In addition, the provided plat shows the total acreage as 23.01 acres.
2. The project narrative refers to VFS which will be used to treat a single family lot. However, the VFS is not shown on the engineering plan sheets and is not called out in the IMRR. If the VFS is proposed in this application, please clarify whether the VFS will be engineered or natural. Update the application as necessary.
3. The application shows commercial and condo-style lots, but does not provide final plans for the lots. Does this application seek approval for the buildings, parking, etc. to be built on these lots?
    a. If so, final plans must be provided. In addition, the E&S engineering plan sheets should be revised to include these areas in the limits of construction.
    b. If not, please note that a CZP Modification plan will need to be submitted and approved before any regulated activity on the lots can begin.
4. The fee provided was for multiple single family residences. However, this application proposes mixed use, commercial and condo-style lots. Please revise the fee form to properly reflect the site and provide the additional fee.

COPY

Bryan W. Shaw, Ph.D., P.E., *Chairman*
Toby Baker, *Commissioner*
Jon Niermann, *Commissioner*
Richard A. Hyde, P.E., *Executive Director*

TEXAS COMMISSION ON ENVIRONMENTAL QUALITY

Protecting Texas by Reducing and Preventing Pollution

November 7, 2017

Mr. David W. Peek, P.E.
Jones|Carter
3100 Alvin Devane Blvd., Ste. 150
Austin, TX 78741

Re: Edwards Aquifer, Williamson County

NAME OF PROJECT: Valley Vista East Phase One, located SE of Bradley Ranch Road and Ronald Reagan Boulevard, Leander, Texas

TYPE OF PLAN: Request for Approval of a Contributing Zone Plan (CZP)
30 Texas Administrative Code (TAC) Chapter 213 Edwards Aquifer

Edwards Aquifer Protection Program ID No. 11000817; Regulated Entity No. RN109944678

Dear Mr. Peek:

We are in receipt of the additional information you have submitted on the above-referenced project for the CZP application and are in the process of technically reviewing the additional information. Before we can proceed with our review, the following comments relating to the application must be addressed.

1. The first NOD response (received 10/30/2017) states that this application seeks approval for the buildings, etc. to be built on the commercial lots. However, no final plans have been provided for these lots. Please clarify.

2. The proposed natural VFS does not meet the requirements of the RG-348.
    a. The VFS cannot use a level spreader.
    b. The VFS is oriented such that the strips are only 20'; the minimum dimension should be 50' for natural VFS.

We ask that you submit one original and one copy of the amended materials to supplement the CZP application to this office by no later than **14 days from the date of this letter**, to avoid denial of the plan. If the response to this notice is not received, is incomplete or inadequate, or provides new information that is incomplete or inadequate, the application will be denied unless you provide written notification that the application is being withdrawn. Please note that because the technical review is in progress the application fee will be forfeited. If you

have any questions or require additional information, please contact Ms. Michelle Zvonkovic of the Edwards Aquifer Protection Program of the Austin Region office at (512) 339-2929.

Sincerely,

Michelle A. Zvonkovic (for)

Shawn Stewart, Water Section Manager
Austin Region Office
Texas Commission on Environmental Quality

CSS/maz

cc: Mr. Robert E. Tesch
Tesch Development & Management Company, LLC
921 W. New Hope Dr., Ste. 502
Cedar Park, TX 78613

ATTACHMENT B
NARRATIVE OF PROPOSED MODIFICATION

The proposed modification of the previously approved CZP application is as follows:

The previously approved site is located at 18130 Ronald W. Reagan Boulevard, within the city limits of Leander, Williamson County, Texas. The approved project encompasses 25.25 acres and was authorized under the Valley Vista East Phase One CZP application, Program ID No. 11000817. The site proposed under this permit modification is located within the limits of the area covered by the previously approved CZP.

The proposed development site is located within Drainage Area D-3, which comprises 4.05 acres as shown on the "Proposed Drainage Area Map A" of the approved CZP (page 73). As part of the new development, the original tract is being subdivided, and the proposed lot consists of a 1.684-acre tract fronting Gabriels Horn Road. Refer to Attachment M of the CZP application for the construction plans.

Under the approved phase of development, approximately 16.90 acres of the project site were disturbed, with a total impervious cover of 11.11 acres. For Drainage Area D-3, the approved CZP accounts for 80 percent impervious cover, equivalent to 3.24 acres.

Under the proposed modified phase, approximately 1.5 acres of the previously approved site will be disturbed. The proposed tract is 1.684 acres; the proposed project site, including the right-of-way area, totals 1.73 acres; and the proposed impervious cover is 0.94 acres. The proposed impervious cover is less than the amount accounted for under the approved CZP.

Future building will be developed on the proposed tract with Phase 2. The impervious for Phase 2 has been accounted for with this permit. It is understood that future development will only be required to go through the TCEQ Contributing Zone Plan application during design and development if the impervious for it exceeds what has been accounted for.

Under the approved phase of development (25.25 acres), impervious cover increased from 0 percent to 44 percent. The amount of the TSS generated from the site gets treated in the west basin designed with the approved study before being discharged into the South Fork San Gabriel River. The basin was sized to treat the commercial lots, including the proposed site. Permanent BMPs in the approved study include a wet basin and vegetative filter strips.

The modified phase of development will result in more than 20 percent impervious cover (project area of 1.73 acres with 0.94 acres of impervious cover). For this phase, Jellyfish units will be used along with a vegetative filter strip as permanent BMPs.

The stormwater runoff and collection pattern will not change with this modification. Treated stormwater from the proposed site will follow the same drainage pattern shown in the approved study, and runoff will not increase compared to the approved condition.

ATTACHMENT C
CURRENT SITE PLAN OF THE APPROVED PROJECT

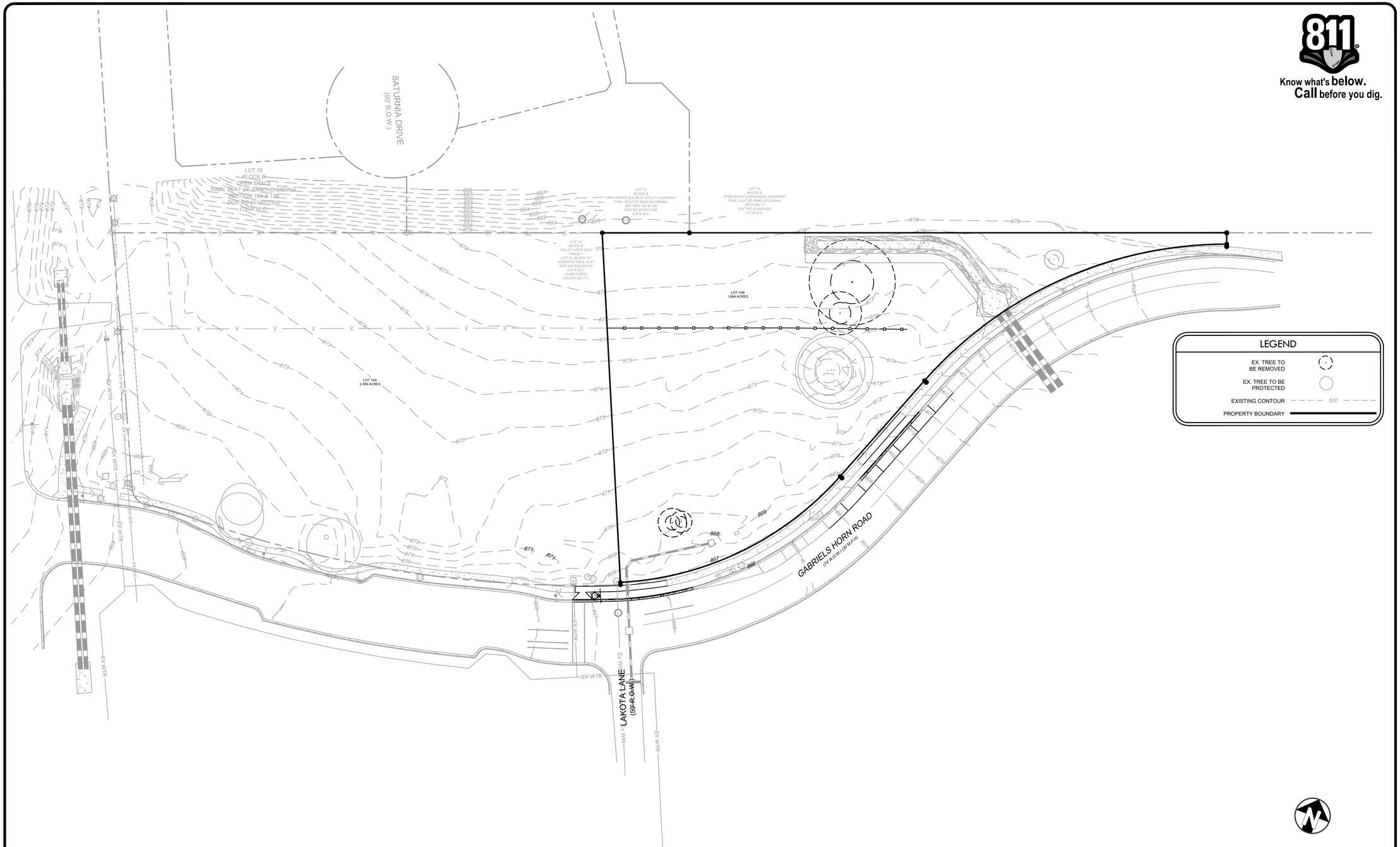

811
Know what's **below.**
Call before you dig.

SPARKLE
PRESCHOOL

SRIKANTH
NAGUNOORI

2345 BASE BURNER PATH
LEANDER, TX 78641

SPARKLE MONTESSORI ACADEMY

LOT 1A-R, BLOCK A
CITY OF LEANDER
WILLIAMSON COUNTY, TEXAS

REV:	DATE:	DESCRIPTION:

kirkman ENGINEERING
KIRKMAN ENGINEERING, LLC
1500 ARROW POINT DRIVE STE. 804
CEDAR PARK, TEXAS 78613
TEXAS FIRM NO. 15874

JOB NUMBER: NAG25001

ISSUE DATE: 2/9/2026

EXISTING CONDITION SITE PLAN

SHEET:

OF 30

SD-25-0378

Contributing Zone Plan Application

Texas Commission on Environmental Quality

for Regulated Activities on the Contributing Zone to the Edwards Aquifer and Relating to 30 TAC §213.24(1), Effective June 1, 1999

To ensure that the application is administratively complete, confirm that all fields in the form are complete, verify that all requested information is provided, consistently reference the same site and contact person in all forms in the application, and ensure forms are signed by the appropriate party.

Note: Including all the information requested in the form and attachments contributes to more streamlined technical reviews.

Signature

To the best of my knowledge, the responses to this form accurately reflect all information requested concerning the proposed regulated activities and methods to protect the Edwards Aquifer. This **Contributing Zone Plan Application** is hereby submitted for TCEQ review and Executive Director approval. The application was prepared by:

Print Name of Customer/Agent: SRIKANTH NAGUNOORI

Date: 1/30/2026

Signature of Customer/Agent:

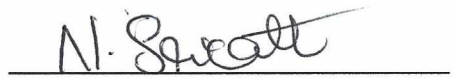

Regulated Entity Name: Sparkle Montessori Academy

Project Information

1. County: Williamson
2. Stream Basin: Brazos River Basin
3. Groundwater Conservation District (if applicable): N/A
4. Customer (Applicant):

   Contact Person: Srikanth Nagunoori
   Entity: Sparkle Daycare LLC
   Mailing Address: 2345 Base Burner Path
   City, State: Leander Zip: 78641
   Telephone: 408-806-2464 Fax: _____
   Email Address: skanth.n@gmail.com

5. Agent/Representative (If any):

Contact Person: Prashantika Gautam
Entity: Kirkman Engineering
Mailing Address: 5200 State HWY 121
City, State: Colleyville, TX Zip: 76034
Telephone: 817-488-4960 Fax: _____
Email Address: prashantika.gautam@trustke.com

6. Project Location:

☑ The project site is located inside the city limits of Leander
☐ The project site is located outside the city limits but inside the ETJ (extra-territorial jurisdiction) of _____.
☐ The project site is not located within any city's limits or ETJ.

7. ☑ The location of the project site is described below. Sufficient detail and clarity has been provided so that the TCEQ's Regional staff can easily locate the project and site boundaries for a field investigation.

Gabriels Horn Road, Northeast(NE) of Lakota Ln and Northwest (NW) of Pueblo Pass (2865 Gabriels Horn Road)

8. ☑ **Attachment A - Road Map**. A road map showing directions to and the location of the project site is attached. The map clearly shows the boundary of the project site.

9. ☑ **Attachment B - USGS Quadrangle Map**. A copy of the official 7 ½ minute USGS Quadrangle Map (Scale: 1" = 2000') is attached. The map(s) clearly show:

☑ Project site boundaries.
☑ USGS Quadrangle Name(s).

10. ☑ **Attachment C - Project Narrative**. A detailed narrative description of the proposed project is attached. The project description is consistent throughout the application and contains, at a minimum, the following details:

☑ Area of the site
☑ Offsite areas
☑ Impervious cover
☑ Permanent BMP(s)
☑ Proposed site use
☑ Site history
☑ Previous development
☑ Area(s) to be demolished

11. Existing project site conditions are noted below:

☐ Existing commercial site
☐ Existing industrial site
☐ Existing residential site

☐ Existing paved and/or unpaved roads
☐ Undeveloped (Cleared)
☑ Undeveloped (Undisturbed/Not cleared)
☐ Other: _____

12. The type of project is:

☐ Residential: # of Lots: _____
☐ Residential: # of Living Unit Equivalents: _____
☑ Commercial
☐ Industrial
☐ Other: _____

13. Total project area (size of site): 1.73 Acres (Proposed boundary area + ROW with development) 1.684 +.0.9 acres

Total disturbed area: 1.50 Acres (Includes proposed impervious + grading on offsite drainage area OS-1)

14. Estimated projected population: N/A

15. The amount and type of impervious cover expected after construction is complete is shown below:

Table 1 - Impervious Cover

Impervious Cover of Proposed Project	*Sq. Ft.*	*Sq. Ft./Acre*	*Acres*
Structures/Rooftops	10,326+2,200=12,526	÷ 43,560 =	0.29
Parking	5,870.83	÷ 43,560 =	0.13
Other paved surfaces	22,698.17	÷ 43,560 =	0.52
Total Impervious Cover	41,095	÷ 43,560 =	0.94

Total Impervious Cover 0.94 **÷ Total Acreage** 1.73 **X 100 =** 54 **% Impervious Cover**

16. ☑ **Attachment D - Factors Affecting Surface Water Quality**. A detailed description of all factors that could affect surface water quality is attached. If applicable, this includes the location and description of any discharge associated with industrial activity other than construction.

17. ☑ Only inert materials as defined by 30 TAC 330.2 will be used as fill material.

For Road Projects Only

Complete questions 18 - 23 if this application is exclusively for a road project.

☑ N/A

18. Type of project:

- ☐ TXDOT road project.
- ☐ County road or roads built to county specifications.
- ☐ City thoroughfare or roads to be dedicated to a municipality.
- ☐ Street or road providing access to private driveways.

19. Type of pavement or road surface to be used:

- ☐ Concrete
- ☐ Asphaltic concrete pavement
- ☐ Other: _____

20. Right of Way (R.O.W.):

Length of R.O.W.: _____ feet.
Width of R.O.W.: _____ feet.
L x W = _____Ft^2 ÷ 43,560 Ft^2/Acre = _____ acres.

21. Pavement Area:

Length of pavement area: _____ feet.
Width of pavement area: _____ feet.
L x W = _____Ft^2 ÷ 43,560 Ft^2/Acre = _____ acres.
Pavement area _____ acres ÷ R.O.W. area _____ acres x 100 = _____% impervious cover.

22. ☐ A rest stop will be included in this project.

☐ A rest stop will not be included in this project.

23. ☐ Maintenance and repair of existing roadways that do not require approval from the TCEQ Executive Director. Modifications to existing roadways such as widening roads/adding shoulders totaling more than one-half (1/2) the width of one (1) existing lane require prior approval from the TCEQ.

Stormwater to be generated by the Proposed Project

24. ☑ **Attachment E - Volume and Character of Stormwater**. A detailed description of the volume (quantity) and character (quality) of the stormwater runoff which is expected to occur from the proposed project is attached. The estimates of stormwater runoff quality and quantity are based on area and type of impervious cover. Include the runoff coefficient of the site for both pre-construction and post-construction conditions.

Wastewater to be generated by the Proposed Project

25. ☐ Wastewater is to be discharged in the contributing zone. Requirements under 30 TAC §213.6(c) relating to Wastewater Treatment and Disposal Systems have been satisfied.

☑ N/A

26. Wastewater will be disposed of by:

☐ On-Site Sewage Facility (OSSF/Septic Tank):

☐ **Attachment F - Suitability Letter from Authorized Agent**. An on-site sewage facility will be used to treat and dispose of the wastewater from this site. The appropriate licensing authority's (authorized agent) written approval is attached. It states that the land is suitable for the use of private sewage facilities and will meet or exceed the requirements for on-site sewage facilities as specified under 30 TAC Chapter 285 relating to On-site Sewage Facilities.

☐ Each lot in this project/development is at least one (1) acre (43,560 square feet) in size. The system will be designed by a licensed professional engineer or registered sanitarian and installed by a licensed installer in compliance with 30 TAC Chapter 285.

☑ Sewage Collection System (Sewer Lines):

The sewage collection system will convey the wastewater to the Brushy Creek Regional Wastewater Authority (name) Treatment Plant. The treatment facility is:

☑ Existing.
☐ Proposed.

☐ N/A

Permanent Aboveground Storage Tanks(ASTs) ≥ 500 Gallons

Complete questions 27 - 33 if this project includes the installation of AST(s) with volume(s) greater than or equal to 500 gallons.

☑ N/A

27. Tanks and substance stored:

Table 2 - Tanks and Substance Storage

AST Number	*Size (Gallons)*	*Substance to be Stored*	*Tank Material*
1			
2			
3			
4			
5			

Total x 1.5 = _____ Gallons

28. ☐ The AST will be placed within a containment structure that is sized to capture one and one-half (1 1/2) times the storage capacity of the system. For facilities with more than

one tank system, the containment structure is sized to capture one and one-half (1 1/2) times the cumulative storage capacity of all systems.

☐ **Attachment G - Alternative Secondary Containment Methods**. Alternative methods for providing secondary containment are proposed. Specifications showing equivalent protection for the Edwards Aquifer are attached.

29. Inside dimensions and capacity of containment structure(s):

Table 3 - Secondary Containment

Length (L)(Ft.)	*Width(W)(Ft.)*	*Height (H)(Ft.)*	*L x W x H = (Ft3)*	*Gallons*

Total: _____ Gallons

30. Piping:

☐ All piping, hoses, and dispensers will be located inside the containment structure.
☐ Some of the piping to dispensers or equipment will extend outside the containment structure.
☐ The piping will be aboveground
☐ The piping will be underground

31. ☐ The containment area must be constructed of and in a material impervious to the substance(s) being stored. The proposed containment structure will be constructed of: _____.

32. ☐ **Attachment H - AST Containment Structure Drawings**. A scaled drawing of the containment structure is attached that shows the following:

☐ Interior dimensions (length, width, depth and wall and floor thickness).
☐ Internal drainage to a point convenient for the collection of any spillage.
☐ Tanks clearly labeled
☐ Piping clearly labeled
☐ Dispenser clearly labeled

33. ☐ Any spills must be directed to a point convenient for collection and recovery. Spills from storage tank facilities must be removed from the controlled drainage area for disposal within 24 hours of the spill.

☐ In the event of a spill, any spillage will be removed from the containment structure within 24 hours of the spill and disposed of properly.

☐ In the event of a spill, any spillage will be drained from the containment structure through a drain and valve within 24 hours of the spill and disposed of properly. The drain and valve system are shown in detail on the scaled drawing.

Site Plan Requirements

Items 34 - 46 must be included on the Site Plan.

34. ☑ The Site Plan must have a minimum scale of 1" = 400'.

    Site Plan Scale: 1" = 30' '.

35. 100-year floodplain boundaries:

    ☐ Some part(s) of the project site is located within the 100-year floodplain. The floodplain is shown and labeled.

    ☑ No part of the project site is located within the 100-year floodplain.

    The 100-year floodplain boundaries are based on the following specific (including date of material) sources(s): FEMA FIRM Panel No. 48491C0455F effective date December 20, 2019.

36. ☑ The layout of the development is shown with existing and finished contours at appropriate, but not greater than ten-foot contour intervals. Lots, recreation centers, buildings, roads, etc. are shown on the site plan.

    ☐ The layout of the development is shown with existing contours at appropriate, but not greater than ten-foot contour intervals. Finished topographic contours will not differ from the existing topographic configuration and are not shown. Lots, recreation centers, buildings, roads, etc. are shown on the site plan.

37. ☑ A drainage plan showing all paths of drainage from the site to surface streams.

38. ☑ The drainage patterns and approximate slopes anticipated after major grading activities.

39. ☑ Areas of soil disturbance and areas which will not be disturbed.

40. ☑ Locations of major structural and nonstructural controls. These are the temporary and permanent best management practices.

41. ☑ Locations where soil stabilization practices are expected to occur.

42. ☐ Surface waters (including wetlands).

    ☑ N/A

43. ☐ Locations where stormwater discharges to surface water.

    ☑ There will be no discharges to surface water.

44. ☐ Temporary aboveground storage tank facilities.

    ☑ Temporary aboveground storage tank facilities will not be located on this site.

45. ☐ Permanent aboveground storage tank facilities.

☑ Permanent aboveground storage tank facilities will not be located on this site.

46. ☑ Legal boundaries of the site are shown.

Permanent Best Management Practices (BMPs)

Practices and measures that will be used during and after construction is completed.

47. ☑ Permanent BMPs and measures must be implemented to control the discharge of pollution from regulated activities after the completion of construction.

☐ N/A

48. ☑ These practices and measures have been designed, and will be constructed, operated, and maintained to insure that 80% of the incremental increase in the annual mass loading of total suspended solids (TSS) from the site caused by the regulated activity is removed. These quantities have been calculated in accordance with technical guidance prepared or accepted by the executive director.

☑ The TCEQ Technical Guidance Manual (TGM) was used to design permanent BMPs and measures for this site.

☐ A technical guidance other than the TCEQ TGM was used to design permanent BMPs and measures for this site. The complete citation for the technical guidance that was used is: _____.

☐ N/A

49. ☑ Owners must insure that permanent BMPs and measures are constructed and function as designed. A Texas Licensed Professional Engineer must certify in writing that the permanent BMPs or measures were constructed as designed. The certification letter must be submitted to the appropriate regional office within 30 days of site completion.

☐ N/A

50. Where a site is used for low density single-family residential development and has 20 % or less impervious cover, other permanent BMPs are not required. This exemption from permanent BMPs must be recorded in the county deed records, with a notice that if the percent impervious cover increases above 20% or land use changes, the exemption for the whole site as described in the property boundaries required by 30 TAC §213.4(g) (relating to Application Processing and Approval), may no longer apply and the property owner must notify the appropriate regional office of these changes.

☐ The site will be used for low density single-family residential development and has 20% or less impervious cover.

☐ The site will be used for low density single-family residential development but has more than 20% impervious cover.

☑ The site will not be used for low density single-family residential development.

51. The executive director may waive the requirement for other permanent BMPs for multi-family residential developments, schools, or small business sites where 20% or less impervious cover is used at the site. This exemption from permanent BMPs must be recorded in the county deed records, with a notice that if the percent impervious cover increases above 20% or land use changes, the exemption for the whole site as described in the property boundaries required by 30 TAC §213.4(g) (relating to Application Processing and Approval), may no longer apply and the property owner must notify the appropriate regional office of these changes.

    ☐ **Attachment I - 20% or Less Impervious Cover Waiver**. The site will be used for multi-family residential developments, schools, or small business sites and has 20% or less impervious cover. A request to waive the requirements for other permanent BMPs and measures is attached.
    ☑ The site will be used for multi-family residential developments, schools, or small business sites but has more than 20% impervious cover.
    ☐ The site will not be used for multi-family residential developments, schools, or small business sites.

52. ☑ **Attachment J - BMPs for Upgradient Stormwater**.

    ☑ A description of the BMPs and measures that will be used to prevent pollution of surface water, groundwater, or stormwater that originates upgradient from the site and flows across the site is attached.
    ☐ No surface water, groundwater or stormwater originates upgradient from the site and flows across the site, and an explanation is attached.
    ☐ Permanent BMPs or measures are not required to prevent pollution of surface water, groundwater, or stormwater that originates upgradient from the site and flows across the site, and an explanation is attached.

53. ☑ **Attachment K - BMPs for On-site Stormwater**.

    ☑ A description of the BMPs and measures that will be used to prevent pollution of surface water or groundwater that originates on-site or flows off the site, including pollution caused by contaminated stormwater runoff from the site is attached.
    ☐ Permanent BMPs or measures are not required to prevent pollution of surface water or groundwater that originates on-site or flows off the site, including pollution caused by contaminated stormwater runoff, and an explanation is attached.

54. ☑ **Attachment L - BMPs for Surface Streams**. A description of the BMPs and measures that prevent pollutants from entering surface streams is attached.

    ☐ N/A

55. ☑ **Attachment M - Construction Plans**. Construction plans and design calculations for the proposed permanent BMPs and measures have been prepared by or under the direct supervision of a Texas Licensed Professional Engineer, and are signed, sealed, and dated. Construction plans for the proposed permanent BMPs and measures are

attached and include: Design calculations, TCEQ Construction Notes, all proposed structural plans and specifications, and appropriate details.

☐ N/A

56. ☑ **Attachment N - Inspection, Maintenance, Repair and Retrofit Plan**. A site and BMP specific plan for the inspection, maintenance, repair, and, if necessary, retrofit of the permanent BMPs and measures is attached. The plan fulfills all of the following:

    ☑ Prepared and certified by the engineer designing the permanent BMPs and measures
    ☑ Signed by the owner or responsible party
    ☑ Outlines specific procedures for documenting inspections, maintenance, repairs, and, if necessary, retrofit.
    ☑ Contains a discussion of record keeping procedures

    ☐ N/A

57. ☐ **Attachment O - Pilot-Scale Field Testing Plan**. Pilot studies for BMPs that are not recognized by the Executive Director require prior approval from the TCEQ. A plan for pilot-scale field testing is attached.

    ☑ N/A

58. ☐ **Attachment P - Measures for Minimizing Surface Stream Contamination**. A description of the measures that will be used to avoid or minimize surface stream contamination and changes in the way in which water enters a stream as a result of the construction and development is attached. The measures address increased stream flashing, the creation of stronger flows and in-stream velocities, and other in-stream effects caused by the regulated activity, which increase erosion that result in water quality degradation.

    ☑ N/A

Responsibility for Maintenance of Permanent BMPs and Measures after Construction is Complete.

59. ☑ The applicant is responsible for maintaining the permanent BMPs after construction until such time as the maintenance obligation is either assumed in writing by another entity having ownership or control of the property (such as without limitation, an owner's association, a new property owner or lessee, a district, or municipality) or the ownership of the property is transferred to the entity. Such entity shall then be responsible for maintenance until another entity assumes such obligations in writing or ownership is transferred.

60. ☑ A copy of the transfer of responsibility must be filed with the executive director at the appropriate regional office within 30 days of the transfer if the site is for use as a multiple single-family residential development, a multi-family residential development,

or a non-residential development such as commercial, industrial, institutional, schools, and other sites where regulated activities occur.

Administrative Information

61. ☑ Submit one (1) original and one (1) copy of the application, plus additional copies as needed for each affected incorporated city, groundwater conservation district, and county in which the project will be located. The TCEQ will distribute the additional copies to these jurisdictions.

62. ☑ Any modification of this Contributing Zone Plan may require TCEQ review and Executive Director approval prior to construction, and may require submission of a revised application, with appropriate fees.

63. ☐ The site description, controls, maintenance, and inspection requirements for the storm water pollution prevention plan (SWPPP) developed under the EPA NPDES general permits for stormwater discharges have been submitted to fulfill paragraphs 30 TAC §213.24(1-5) of the technical report. All requirements of 30 TAC §213.24(1-5) have been met by the SWPPP document.

☑ The Temporary Stormwater Section (TCEQ-0602) is included with the application.

ATTACHMENT A
ROAD MAP

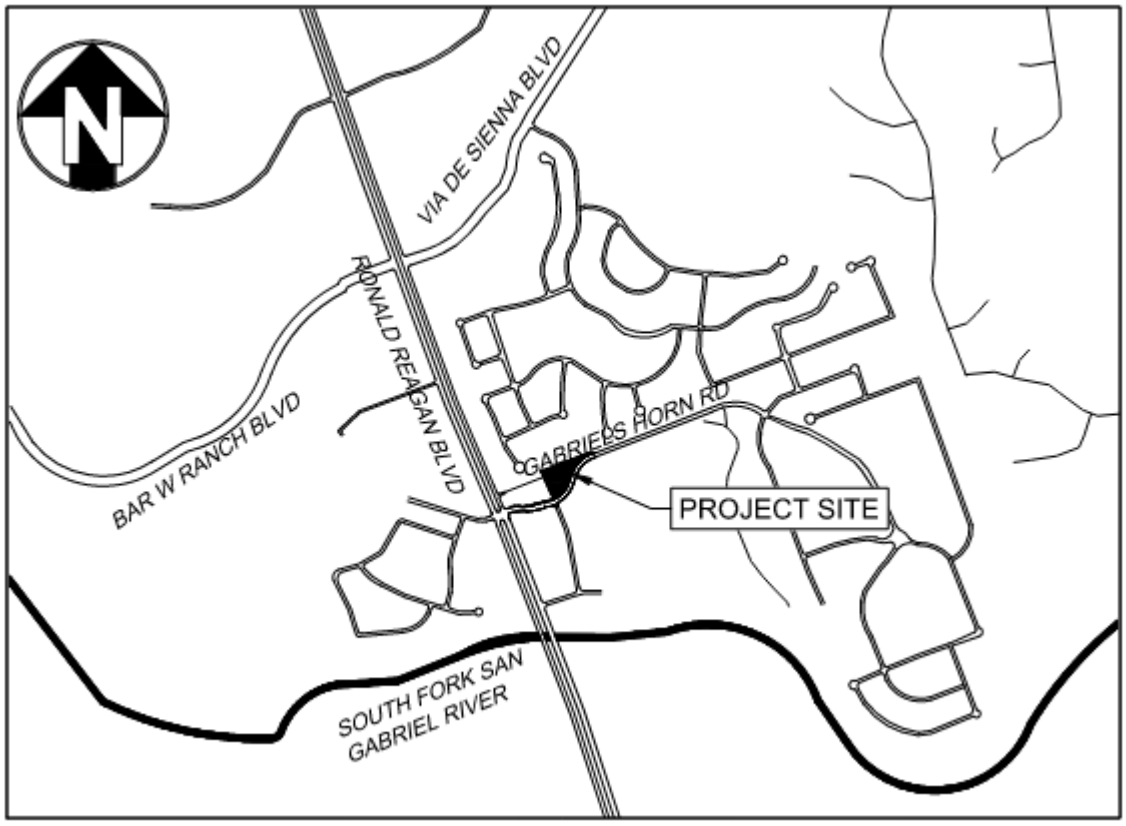

SITE MAP

1”=2000’

USGS science for a changing world

U.S. DEPARTMENT OF THE INTERIOR
U.S. GEOLOGICAL SURVEY

The National Map OnDemand Topo

LEANDER QUADRANGLE
TEXAS
7.5-MINUTE TOPO


Project Site
GEORGETOWN
LEANDER
CEDAR PARK
ROUND ROCK
BRUSHY CREEK
AUSTIN
White Stone
Walls Cemetery
Upchurch Cemetery
Whitley Cemetery
Austin Community College - San Gabriel Campus
Davis Cemetery
Bagdad Cemetery
New Hope Cemetery
Cedar Park Cemetery
Bonnet Cemetery
Gilreath Cemetery
Champion Cemetery
Hank Sasser Airport at Breakaway
South Fork San Gabriel River
North Fork Brushy Cr
South Fork Brushy Cr
Brushy Cr
Post Oak Cr
Cottonwood Cr
Spanish Oak Cr
Chuck Cr
Lake Will Wilson
Walsh Lake
Dog Fork Cr
Chandler Br
Block House Cr
Bee Cave Hollow
Lime Cr
Mason Cr
HWY 183A
RONALD W REAGAN BLVD
E SAN GABRIEL PKWY
E CRYSTAL FALLS PKWY
GRAND LAKE PKWY
E NEW HOPE DR
RANCH RD 2243
RANCH RD 1431
CO RD 269
CO RD 177
CO RD 175
CO RD 172
CO RD 181
CO RD 178
CO RD 179
CO RD 176
CO RD 173
CO RD 174
CO RD 170
CO RD 171
CO RD 269
CO RD 270
CO RD 271
CO RD 272
CO RD 273
CO RD 275
CO RD 276
CO RD 277
CO RD 278
CO RD 279
CO RD 280
CO RD 281
CO RD 282
CO RD 283
CO RD 284
CO RD 285
CO RD 286
CO RD 287
CO RD

ATTACHMENT C
PROJECT NARRATIVE

The subject property is located at 2865 Gabriels Horn Road, situated northeast of Lakota Ln and northwest of Pueblo Pass within the Leander City Limits, Williamson County. The tract is currently undeveloped with a concrete channel as the only impervious on site. Existing impervious will remain unchanged under the proposed development.

The existing site is a vacant 1.712-acre land zoned Valley Vista East Planned Unit Development; Local Commercial (PUD-LC-2-A). The site is located within the South Fork San Gabriel watershed and lies in zone "X" per Flood Insurance Rate Map (FIRM) Panel No. 48491C0455F effective date December 20, 2019.The existing site topography consists of natural slope ranging from 2-20%. The highest point is located at the northeast corner at elevation +/- 879 feet. The lowest point is located at southern property line, adjacent to Gabriels Horn Road at elevation of +/- 867.

Majority of the existing stormwater from the site sheet flows toward Gabriels Horn Road and will be captured and conveyed through existing storm drain system to the water quality facility designed with the Valley Vista Ease Phase One permit plans (TCEQ permit#11000817). A portion of the existing site sheet flows into the existing concrete channel.

The subject tract is proposed to be 1.684 acres (ac) following the updated plat with City of Leander. The proposed development will consist of approximately 10,326 SF of daycare building and will have a phase 2 development in future consisting of a commercial 2,200 SF building. Approximately 1.5 acres of the site and right of way (ROW) will be disturbed with the development. The proposed impervious cover with the development is 0.94 ac, of which 0.04 ac is proposed on the ROW and 0.01 ac is proposed on the adjacent lot at the joint access driveway.

Proposed drainage areas on the site will enter the existing storm system through proposed stormwater system consisting of grate inlets, vane drain and curb inlet. Proposed underground storm system connects to the existing storm drain on site, conveying the stormwater to the water quality facility designed with the Valley Vista Ease Phase One permit plans. Runoff from Drainage area 8 will drain to the road through vegetative filter strips, then to the existing curb inlet. Off-site drainage from the northwest of the site continues to drain as existing.

The site will feature a vegetative filter strip and Contech Jellyfish stormwater treatment system as permanent BMP measure. There shall be no increase in stormwater discharge to downstream properties, and water quality will meet TCEQ standards.

The proposed impervious cover for the site, including impervious areas located outside the property boundary, is shown on the "Impervious Area Exhibit". Refer to the "Impervious Area Exhibit" sheet following this narrative for impervious areas within the property boundary and off-site areas contributing flow to the site and BMPs. For Total Suspended Solids (TSS) calculations, the total project area analyzed is 1.73 acres, which includes the property boundary and the two driveways.

Know what's **below.**
Call before you dig.

TOTAL PROJECT AREA 1.73 ACRES

LOT 75 BLOCK B OPEN SPACE & PUBLIC UTILITY EASEMENT FINAL PLAT OF RANCHO SIENNA SECTION 13A & 13B DOC NO 2019011306 O.P.R.W.C.

LOT 34 BLOCK B OPEN SPACE & DRAINAGE EASEMENT FINAL PLAT OF RANCHO SIENNA SECTION 17 DOC NO 2019024520 O.P.R.W.C

LOT 1A BLOCK A VALLEY VISTA EAST PHASE 1 LOT 1A, BLOCK "A" AMENDED FINAL PLAT DOC NO 202200740 O.P.R.W.C. (4.248 ACRES) (185,024 SQ. FT.)

DA1 0.11 ac. 0.91

PROP. GRATE INLET #1

DA3 0.23 ac. 3.39

DA5 0.26 ac. 2.45

NE FLOW LINE: 872.04'
SW FLOW LINE:872.03'

AREAS TO BMP#1

AREA TO BMP#2

OS-1 0.53 ac. 4.13

DA2 0.27 ac. 3.26

DA4 0.40 ac. 4.87

DA9 0.04 ac. 0.32

EX. 2' X 5' CULVERT PIPES
NE FLOW LINE: 871.46'
SW FLOW LINE:871.38'

PROP. STORM WATER QUALITY SYSTEM JELLYFISH UNIT #2

LOW POINT

DA10 0.02 ac. 0.29

PROP. VANE DRAIN

BMP#2

IMPERVIOUS FOR FUTURE BUILDING ACCOUNTED FOR IN THE DESIGN

PROPOSED IMPERVIOUS AREA ON ADJACENT LOT (0.01 ACRES)

PROP. GRATE INLET #2

DA 2.1 0.08 ac. 1.18

DA6 0.08 ac. 1.12

DA8 0.19 ac. 1.46

VEGETATIVE FILTER STRIP (0.033 AC)

PROPOSED IMPERVIOUS AREAS NOT BEING TREATED. (DA 9: 0.01ACRES) (DA10: 0.02 ACRES)

AREA TREATED WITH VSF

PROPOSED IMPERVIOUS AREAS (0.02 ACRES)

OS-2 0.83 ac. 8.83

PROP. WATER QUALITY SYSTEM WITH GRATE INLET JELLYFISH UNIT#1

DA7 0.02 ac. 0.15

BMP#1

EX. 10" RCP @ 1.15% (87.38 LF)

DESIGN POINT#2 CONNECT TO EX. 4 SIDED AREA INLET RIM: 867.86 FL: 861.11

GABRIELS HORN ROAD (74 R.O.W.) (30 M.P.H)

0.03 ac. 0.34

DESIGN POINT#1
EX. 15' CURB INLET
EX. Q_{25}= 10.4 CFS
EX. Q_{100}= 15.3 CFS
PROP. Q_{25}= 7.52 CFS
RPOP. Q_{100}= 11.26 CFS
(REFERENCE 17-PICP-021 BLUFFVIEW PHASE 1 RECORD DRAWINGS, PAGE 75 FOR THE EXISTING Q VALUES USED)

EX. 30" RCP
PRE Q_{25}: 32.27

EX. 6' X 6' JUNCTION BOX (J-BOX 3)
PRE Q_{25}: 32.27 CFS
PRE Q_{FULL}: 47.86 CFS
POST Q_{25}:

(REFERENCE THE "VALLEY VISTA EAST PHASE ONE CONDOS SITE DEVELOPMENT PLANS" DATED NOVEMBER 2018 FOR DRAINAGE DATA)

PROPOSED IMPERVIOUS AREAS NOT BEING TREATED. (0.02 ACRES)

LAKOTA LANE (50' R.O.W.)

EX WTR

LEGEND

PROPOSED DRAINAGE AREA LABEL	BASIN NAME DA1 / ACRES 1.82 Ac. / Q100 (cfs) 14.52
PROPOSED DRAINAGE AREA DIVIDE	
EXISTING DRAINAGE FLOW ARROW	
PROPOSED DRAINAGE FLOW ARROW	
EXISTING CONTOUR	500
PROPOSED CONTOUR	500
EXISTING STORM PIPE	
PROPOSED STORM PIPE	
PROPERTY BOUNDARY	

NOTE TO CONTRACTOR
EXISTING PRIVATE AND PUBLIC STORM SEWER AND UTILITY INFRASTRUCTURE ARE SHOWN PER RECORD DRAWING PLANS. THE CONTRACTOR SHALL FIELD VERIFY THE LOCATION AND DEPTH OF ALL EXISTING UTILITIES (WHETHER SHOWN ON PLANS OR NOT) PRIOR TO COMMENCING CONSTRUCTION. IF FIELD CONDITIONS DIFFER SIGNIFICANTLY FROM LOCATIONS SHOWN ON THE PLANS, THE CONTRACTOR SHALL CONTACT THE PROJECT ENGINEER PRIOR TO PROCEEDING WITH CONSTRUCTION.

DRAINAGE NOTE
REFERENCE THE "VALLEY VISTA EAST PHASE ONE CONDOS" SITE DEVELOPMENT PLANS (17-SD-043) DATED NOVEMBER 2018 FOR THE EXISTING OVERALL DRAINAGE.
(REF. SHEET 25 FOR THE DRAINAGE ANALYSIS OF THE OVERALL SITE.)

THE SPARKLE DAYCARE SITE HAS BEEN INCLUDED IN THE DRAINAGE ANALYSIS AND HAS BEEN ACCOUNTED FOR THE CHANGE IN FLOW DUE TO IMPERVIOUS COVER.

THE FLOW OFF THE PROPOSED SITE HAS NOT BEEN INCREASED FROM EXISTING CONDITION. THERE SHALL BE NO ADVERSE IMPACT TO EX. DOWNSTREAM INFRASTRUCTURE.

PROPOSED DRAINAGE AREA CALCULATIONS

NOAA ATLAS 14 Rainfall Zone: Williamson County - San Gabriel River

Area No.	Acres	T_c (min.)	C_2	I_2 (in./hr.)	Q_2 (c.f.s.)	C_5	I_5 (in./hr.)	Q_5 (c.f.s.)	C_{10}	I_{10} (in./hr.)	Q_{10} (c.f.s.)	C_{25}	I_{25} (in./hr.)	Q_{25} (c.f.s.)	C_{50}	I_{50} (in./hr.)	Q_{50} (c.f.s.)	C_{100}	I_{100} (in./hr.)	Q_{100} (c.f.s.)	Comments
1	0.11	5.00	0.39	6.14	**0.25**	0.43	7.58	**0.34**	0.46	9.19	**0.44**	0.50	11.30	**0.59**	0.53	11.97	**0.67**	0.57	15.00	**0.91**	Drains to Grate Inlet#1
2	0.27	5.00	0.61	6.14	**1.00**	0.65	7.58	**1.32**	0.68	9.19	**1.68**	0.73	11.30	**2.20**	0.77	11.97	**2.45**	0.81	15.00	**3.26**	Drains to Grate Inlet#2
2.1	0.08	5.00	0.72	6.14	**0.37**	0.77	7.58	**0.49**	0.80	9.19	**0.62**	0.85	11.30	**0.81**	0.89	11.97	**0.89**	0.94	15.00	**1.18**	Drains to Grate Inlet#3
3	0.23	5.00	0.75	6.14	**1.07**	0.80	7.58	**1.41**	0.83	9.19	**1.78**	0.88	11.30	**2.32**	0.92	11.97	**2.57**	0.97	15.00	**3.39**	Roof Drains to DA 1
4	0.40	5.00	0.60	6.14	**1.49**	0.65	7.58	**1.97**	0.68	9.19	**2.50**	0.72	11.30	**3.29**	0.76	11.97	**3.66**	0.81	15.00	**4.87**	Drains to Vane Drain and into Curb Inlet#1
5	0.26	5.00	0.45	6.14	**0.71**	0.49	7.58	**0.95**	0.52	9.19	**1.22**	0.56	11.30	**1.63**	0.59	11.97	**1.82**	0.63	15.00	**2.45**	Drains to Ex. Concrete Channel
6	0.08	5.00	0.69	6.14	**0.35**	0.74	7.58	**0.46**	0.77	9.19	**0.58**	0.81	11.30	**0.76**	0.85	11.97	**0.84**	0.90	15.00	**1.12**	Drains to DA 2
7	0.02	5.00	0.29	6.14	**0.04**	0.32	7.58	**0.05**	0.35	9.19	**0.07**	0.39	11.30	**0.09**	0.42	11.97	**0.11**	0.46	15.00	**0.15**	Drains to Ex. 4 sided Area Inlet
8	0.19	5.00	0.34	6.14	**0.40**	0.37	7.58	**0.53**	0.40	9.19	**0.70**	0.44	11.30	**0.95**	0.47	11.97	**1.08**	0.51	15.00	**1.46**	Drains to Gabriels Horn Road
9	0.04	5.00	0.37	6.14	**0.09**	0.40	7.58	**0.12**	0.43	9.19	**0.16**	0.48	11.30	**0.22**	0.51	11.97	**0.25**	0.55	15.00	**0.33**	Drains to Ex. Curb Inlet at Gabriels Horn Road
10	0.02	5.00	0.75	6.14	**0.09**	0.80	7.58	**0.12**	0.83	9.19	**0.15**	0.88	11.30	**0.20**	0.92	11.97	**0.22**	0.97	15.00	**0.29**	Drains to Ex. Curb Inlet at Gabriels Horn Road
11	0.03	5.00	0.68	6.14	**0.11**	0.73	7.58	**0.14**	0.76	9.19	**0.18**	0.81	11.30	**0.23**	0.85	11.97	**0.26**	0.90	15.00	**0.34**	Drains to Ex. Curb Inlet at Gabriels Horn Road
OS-1	0.53	5.00	0.36	6.14	**1.17**	0.39	7.58	**1.56**	0.42	9.19	**2.04**	0.45	11.30	**2.69**	0.49	11.97	**3.10**	0.52	15.00	**4.13**	Drains to DA 2
OS-2	0.83	5.00	0.52	6.14	**2.67**	0.56	7.58	**3.54**	0.59	9.19	**4.52**	0.63	11.30	**5.92**	0.67	11.97	**6.67**	0.71	15.00	**8.83**	Drains to Ex. Curb Inlet at Gabriels Horn Road

NOTE: DRAINAGE CRITERIA TAKEN FROM CITY OF AUSTIN ENGINEERING DESIGN MANUAL DATED JANUARY 3, 2025. MINIMUM TC OF 5 MINUTES USED FOR THE PROPOSED DEVELOPMENT PER THE CODE. I VALUE TAKEN FROM CITY OF LEANDER'S DRAINAGE CRITERIA TECHNICAL MEMO NUMBER 1.

GRAPHIC SCALE
0 30 60 FEET
SCALE: 1" = 30'

SPARKLE PRESCHOOL

SRIKANTH NAGUNOORI

2345 BASE BURNER PATH
LEANDER, TX 78641

SPARKLE MONTESSORI ACADEMY

LOT 1A-R, BLOCK A
CITY OF LEANDER
WILLIAMSON COUNTY, TEXAS

REV:	DATE:	DESCRIPTION:

kirkman ENGINEERING
KIRKMAN ENGINEERING, LLC
1500 ARROW POINT DRIVE STE. 804
CEDAR PARK, TEXAS 78613
TEXAS FIRM NO. 15874

JOB NUMBER: NAG25001

ISSUE DATE: 2/5/2026

IMPERVIOUS AREA EXHIBIT

SHEET:

OF 30

FILE PATH: K:\Ish\ANG25001_Sprkl\4 Leander\Drawings\02_ENGR\03 - Pre\Active\K:\Ish\ANG25001_Sprkl\4 Leander\Drawings\02_ENGR\03 - Pre\Active\01-1 PROPOSED DRAINAGE AREA MAP_ANG25001.dwg
PLOTTED BY: Prashantha Gautam
PLOTTED DATE: 4/2/2026

ATTACHMENT D
FACTORS AFFECTING SURFACE WATER QUALITY

The factors that could affect surface water quality for the site are as follows:

1- Lack of natural infiltration can cause dirt and silt to flow into the surface water.
2- Pollutants from vehicles can affect the quality of surface water.
3- Pesticides or herbicides used for landscaping can runoff into surface drains.
4- Areas disturbed during clearing will cause pollutants to runoff from the rainfall.

Temporary BMPs will be utilized during construction to reduce the pollutants from the runoff leaving the site.

ATTACHMENT E
VOLUME AND CHARACTER OF STORMWATER

Preconstruction condition of the site shows the land sheet flowing into two (2) design points. The site was analyzed using the rational method and the criteria from the City of Leander and City of Austin Drainage Manual.

For the post-construction condition of the site, the stormwater flows to the proposed underground storm systems, which connects to the existing storm pipe system.

Design point#1 used for analysis is an existing curb inlet located at the right of way, on Gabriels Horn Road. The existing 100-year runoff at this point is 19.09 cfs and the proposed 100-year runoff is 11.26 cfs. Refer to the table on the Existing and Proposed Drainage Area Map for detailed information on the areas within the drainage boundary that drain to this point. Refer to area EX OS-1 and EX 2 on Existing Drainage Area Map and Drainage Areas 8-11 and OS-2 on Proposed Drainage Area Map sheet.

Design point#2 used for analysis is an existing area inlet located on project site. The existing 100-year runoff at this point is 2.41 cfs, and the proposed 100-year runoff is 0.15 cfs. Refer to the table on the Existing and Proposed Drainage Area Map for detailed information on the areas within the drainage boundary that drain to this point. Refer to area EX 1 on Existing Drainage Area Map and Drainage Areas 7 on Proposed Drainage Area Map sheet.

The City of Leander Drainage Criteria Technical Memo Number 1 was used for the e,b,d values to calculate the intensity value used for the calculation.

The Existing and Proposed Drainage Area Maps for the project site are included in the construction plan and show the drainage areas, flow patterns, and design points within the project area. The drainage area maps also show a table with pre- and post-construction C-values and runoff from the site. Based on the results from the analysis, the proposed project does not cause an adverse hydrological impact, hence does not require on-site stormwater detention.

Reference Attachment M- Construction Plans for more detailed information.

ATTACHMENT J
BMPs UPGRADIENT STORMWATER

The upgradient stormwater that flows into the site from drainage area OS-1 flows into the Jellyfish-stormwater treatment system, Jellyfish#1. The jellyfish unit has 86% removal efficiency.

Reference attachment K and supporting calculations for details on the BMP.

ATTACHMENT K
BMPs FOR ON-SITE STORMWATER

The following temporary BMPs will be used throughout construction. The BMPs have been identified on the Erosion Control Plan.

1. Silt Fence
2. Stabilized Construction Exit
3. Inlet Protection
4. Concrete Washout Pit
5. Vegetation

Permanent BMP

6. Jellyfish- Stormwater treatment (Permanent BMP)
7. Vegetative Filter Stripe

Onsite water will enter the underground stormwater system and be treated by the Jellyfish stormwater treatment system, which will then be conveyed to the existing water quality pond through the existing underground stormwater system. The stormwater system consists of proposed grate inlet, curb inlets and existing area inlet on site and existing curb inlet on the right of way.

There are two jellyfish units designed to treat the onsite stormwater. The removal efficiency of the BMP's are shown below:

BMP#1 has 86% removal efficiency.
BMP#2 has 86% removal efficiency.

Refer to the following attachments for the BMP calculations.

2/9/2026



Contech Engineered Solutions Calculations for Texas Commission on Environmental Quality
TSS Removal Calculations

Project Name: Sparkle Montessori Academy
Date Prepared: 2/4/2026

1. The Required Load Reduction for the total project:

Calculations from RG-348
Pages 3-27 to 3-30

Page 3-29 Equation 3.3: $L_M = 27.2(A_N \times P)$

$L_{M\ TOTAL\ PROJECT}$ = Required TSS removal resulting from the proposed development = 80% of increased load
A_N = Net increase in impervious area for the project
P = Average annual precipitation, inches

Site Data: Determine Required Load Removal Based on the Entire Project

County =	Williamson	
Total project area included in plan * =	1.73	acres
Predevelopment impervious area within the limits of the plan * =	0.07	acres
Total post-development impervious area within the limits of the plan* =	1.00	acres
Total post-development impervious cover fraction * =	0.58	
P =	32	inches
$L_{M\ TOTAL\ PROJECT}$ =	809	lbs.
Number of drainage basins / outfalls areas leaving the plan area =	11	

2. Drainage Basin Parameters (This information should be provided for each basin):

Drainage Basin/Outfall Area No. =	1-3, 6	
Total drainage basin/outfall area =	0.77	acres
Predevelopment impervious area within drainage basin/outfall area =	0.00	acres
Post-development impervious area within drainage basin/outfall area =	0.59	acres
Post-development impervious fraction within drainage basin/outfall area =	0.77	
$L_{M\ THIS\ BASIN}$ =	514	lbs.

3. Indicate the proposed BMP Code for this basin.

Proposed BMP =	JF	abbreviation
Removal efficiency =	86	percent

4. Calculate Maximum TSS Load Removed (L_R) for this Drainage Basin by the selected BMP Type.

RG-348 Page 3-33 Equation 3.7:
$LR = (\text{BMP efficiency}) \times P \times (A_I \times 34.6 + A_P \times 0.54)$

A_C = Total On-Site drainage area in the BMP catchment area
A_I = Impervious area proposed in the BMP catchment area
A_P = Pervious area remaining in the BMP catchment area
L_R = TSS Load removed from this catchment area by the proposed BMP

A_C =	0.77	acres
A_I =	0.59	acres
A_P =	0.18	acres
L_R =	564	lbs.

5. Calculate Fraction of Annual Runoff to Treat the drainage basin / outfall area

Desired $L_{M\ THIS\ BASIN}$ =	531	lbs.
F =	0.94	

6. Calculate Treated Flow required by the BMP Type for this drainage basin / outfall area.

Offsite area draining to BMP =	0.53	acres
Offsite impervious cover draining to BMP =	0.01	acres

Calculations from RG-348
Pages Section 3.2.22

Rainfall Intensity =	1.50	inches per hour
Effective Area =	0.56	acres
Cartridge Length =	54	inches
Peak Treatment Flow Required =	0.85	cubic feet per second

7. Jellyfish
Designed as Required in RG-348
Section 3.2.22

Flow Through Jellyfish Size	Vault	
Jellyfish Size for Flow-Based Configuration =	JFPD0406-4-2	
Jellyfish Treatment Flow Rate =	0.89	cfs

2/9/2026



Contech Engineered Solutions Calculations for Texas Commission on Environmental Quality
TSS Removal Calculations

Project Name: Sparkle Montessori Academy
Date Prepared: 2/4/2026

1. The Required Load Reduction for the total project:

Calculations from RG-348
Pages 3-27 to 3-30

Page 3-29 Equation 3.3: $L_M = 27.2(A_N \times P)$

$L_{M\ TOTAL\ PROJECT}$ = Required TSS removal resulting from the proposed development = 80% of increased load
A_N = Net increase in impervious area for the project
P = Average annual precipitation, inches

Site Data: Determine Required Load Removal Based on the Entire Project

County =	Williamson	
Total project area included in plan * =	1.73	acres
Predevelopment impervious area within the limits of the plan * =	0.07	acres
Total post-development impervious area within the limits of the plan* =	1.00	acres
Total post-development impervious cover fraction * =	0.58	
P =	32	inches
$L_{M\ TOTAL\ PROJECT}$ =	809	lbs.
Number of drainage basins / outfalls areas leaving the plan area =	10	

2. Drainage Basin Parameters (This information should be provided for each basin):

Drainage Basin/Outfall Area No. =	4	
Total drainage basin/outfall area =	0.02	acres
Predevelopment impervious area within drainage basin/outfall area =	0.00	acres
Post-development impervious area within drainage basin/outfall area =	0.27	acres
Post-development impervious fraction within drainage basin/outfall area =	13.50	
$L_{M\ THIS\ BASIN}$ =	235	lbs.

3. Indicate the proposed BMP Code for this basin.

Proposed BMP =	JF	abbreviation
Removal efficiency =	86	percent

4. Calculate Maximum TSS Load Removed (L_R) for this Drainage Basin by the selected BMP Type.

RG-348 Page 3-33 Equation 3.7:
$LR = (\text{BMP efficiency}) \times P \times (A_I \times 34.6 + A_P \times 0.54)$

A_C = Total On-Site drainage area in the BMP catchment area
A_I = Impervious area proposed in the BMP catchment area
A_P = Pervious area remaining in the BMP catchment area
L_R = TSS Load removed from this catchment area by the proposed BMP

A_C =	0.40	acres
A_I =	0.27	acres
A_P =	0.13	acres
L_R =	259	lbs.

5. Calculate Fraction of Annual Runoff to Treat the drainage basin / outfall area

Desired $L_{M\ THIS\ BASIN}$ =	257	lbs.
F =	0.99	

6. Calculate Treated Flow required by the BMP Type for this drainage basin / outfall area.

Offsite area draining to BMP =	0.00	acres
Offsite impervious cover draining to BMP =	0.00	acres

Calculations from RG-348
Pages Section 3.2.22

Rainfall Intensity =	3.00	inches per hour
Effective Area =	0.25	acres
Cartridge Length =	54	inches
Peak Treatment Flow Required =	0.75	cubic feet per second

7. Jellyfish
Designed as Required in RG-348
Section 3.2.22

Flow Through Jellyfish Size	Vault	
Jellyfish Size for Flow-Based Configuration =	JFPD0406-4-1	
Jellyfish Treatment Flow Rate =	0.80	cfs

2/9/2026



Texas Commission on Environmental Quality

TSS Removal Calculations 04-20-2009

Project Name: SPARKLE MONTESSORI ACADEMY
Date Prepared: 1/22/2026

Additional information is provided for cells with a red triangle in the upper right corner. Place the cursor over the cell.
Text shown in blue indicate location of instructions in the Technical Guidance Manual - RG-348.
Characters shown in red are data entry fields.
Characters shown in black (Bold) are calculated fields. Changes to these fields will remove the equations used in the spreadshe

1. The Required Load Reduction for the total project: Calculations from RG-348 Pages 3-27 to 3-30

Page 3-29 Equation 3.3: $L_M = 27.2(A_N \times P)$

where:
$L_{M\ TOTAL\ PROJECT}$ = Required TSS removal resulting from the proposed development = 80% of increased load
A_N = Net increase in impervious area for the project
P = Average annual precipitation, inches

Site Data: Determine Required Load Removal Based on the Entire Project

County =	Williamson	
Total project area included in plan * =	1.73	acres
Predevelopment impervious area within the limits of the plan * =	0.07	acres
Total post-development impervious area within the limits of the plan * =	1.00	acres
Total post-development impervious cover fraction * =	0.58	
P =	32	inches
$L_{M\ TOTAL\ PROJECT}$ =	809	lbs.

* **The values entered in these fields should be for the total project area.**

Number of drainage basins / outfalls areas leaving the plan area = 1

2. Drainage Basin Parameters (This information should be provided for each basin):

Drainage Basin/Outfall Area No. = 1

Total drainage basin/outfall area =	0.19	acres
Predevelopment impervious area within drainage basin/outfall area =	0.00	acres
Post-development impervious area within drainage basin/outfall area =	0.02	acres
Post-development impervious fraction within drainage basin/outfall area =	0.08	
$L_{M\ THIS\ BASIN}$ =	14	lbs.

3. Indicate the proposed BMP Code for this basin.

Proposed BMP = Vegetated Filter Strips
Removal efficiency = 85 percent

Aqualogic Cartridge Filter
Bioretention
Contech StormFilter
Constructed Wetland
Extended Detention
Grassy Swale
Retention / Irrigation
Sand Filter
Stormceptor
Vegetated Filter Strips
Vortechs
Wet Basin
Wet Vault

4. Calculate Maximum TSS Load Removed (L_R) for this Drainage Basin by the selected BMP Type.

RG-348 Page 3-33 Equation 3.7: L_R = (BMP efficiency) x P x (A x 34.6 + A_P x 0.54)

where:
A_C = Total On-Site drainage area in the BMP catchment area
A_I = Impervious area proposed in the BMP catchment area
A_P = Pervious area remaining in the BMP catchment area
L_R = TSS Load removed from this catchment area by the proposed BMP

A_C =	0.19	acres
A_I =	0.02	acres
A_P =	0.17	acres
L_R =	21	lbs

5. Calculate Fraction of Annual Runoff to Treat the drainage basin / outfall area

Desired $L_{M\ THIS\ BASIN}$ = 21 lbs.

F = 0.99

6. Calculate Capture Volume required by the BMP Type for this drainage basin / outfall area. Calculations from RG-348 Pages 3-34 to 3-36

Rainfall Depth =	3.66	inches
Post Development Runoff Coefficient =	0.13	
On-site Water Quality Volume =	327	cubic feet

Calculations from RG-348 Pages 3-36 to 3-37

Off-site area draining to BMP =	0.00	acres
Off-site Impervious cover draining to BMP =	0.00	acres
Impervious fraction of off-site area =	0	
Off-site Runoff Coefficient =	0.00	
Off-site Water Quality Volume =	0	cubic feet
Storage for Sediment =	65	
Total Capture Volume (required water quality volume(s) x 1.20) =	393	cubic feet

The following sections are used to calculate the required water quality volume(s) for the selected BMP.
The values for BMP Types not selected in cell C45 will show NA.

7. Retention/Irrigation System Designed as Required in RG-348 Pages 3-42 to 3-46

Required Water Quality Volume for retention basin = NA cubic feet

Irrigation Area Calculations:

Soil infiltration/permeability rate =	0.1	in/hr	Enter determined permeability rate or assumed value of 0.1
Irrigation area =	NA	square feet	
	NA	acres	

8. Extended Detention Basin System Designed as Required in RG-348 Pages 3-46 to 3-51

Required Water Quality Volume for extended detention basin = NA cubic feet

9. Filter area for Sand Filters Designed as Required in RG-348 Pages 3-58 to 3-63

9A. Full Sedimentation and Filtration System

Water Quality Volume for sedimentation basin =	NA	cubic feet	
Minimum filter basin area =	NA	square feet	
Maximum sedimentation basin area =	NA	square feet	For minimum water depth of 2 feet
Minimum sedimentation basin area =	NA	square feet	For maximum water depth of 8 feet

9B. Partial Sedimentation and Filtration System

Water Quality Volume for combined basins =	NA	cubic feet	
Minimum filter basin area =	NA	square feet	
Maximum sedimentation basin area =	NA	square feet	For minimum water depth of 2 feet
Minimum sedimentation basin area =	NA	square feet	For maximum water depth of 8 feet

10. Bioretention System Designed as Required in RG-348 Pages 3-63 to 3-65

Required Water Quality Volume for Bioretention Basin = NA cubic feet

2.9 Vegetation

Erosion Control

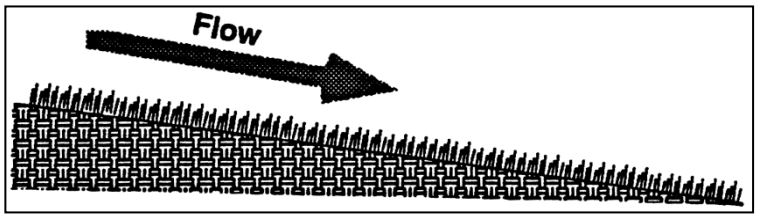

Description: Vegetation, used as an erosion control, is the sowing or sodding of grasses, small grains, or legumes to provide temporary and final vegetative stabilization for disturbed areas.

KEY CONSIDERATIONS

DESIGN CRITERIA:

- Specify preparation of the soil surface before seeding or sodding
- Minimum of 4 to 6 inches of top soil required, depending on subsurface conditions
- Specify soil amendments depending on soil conditions
- Select seed or sod species appropriate for the climate, season, and soil

ADVANTAGES / BENEFITS:

- More effective and easier to maintain than sediment controls during a long construction period
- May be used for temporary or final stabilization

DISADVANTAGES / LIMITATIONS:

- Not appropriate for areas with heavy pedestrian, vehicular traffic, or concentrated, high velocity flow
- May require days to weeks for adequate establishment
- Alternate erosion control is needed until vegetation is established

MAINTENANCE REQUIREMENTS:

- Inspect regularly
- Protect newly seeded areas from excessive runoff, high velocity flow, and traffic until vegetation is established
- Water and fertilize until vegetation is established
- Reseed and/or provide mulch or another control for bare spots
- Rake accumulations of sediment from the vegetation

TARGETED POLLUTANTS

- ● Sediment
- ◒ Nutrients & Toxic Materials
- ○ Oil & Grease
- ○ Floatable Materials
- ○ Other Construction Wastes

APPLICATIONS

Perimeter Control

Slope Protection

Sediment Barrier

Channel Protection

Temporary Stabilization

Final Stabilization

Waste Management

Housekeeping Practices

Fe=0.90
(*When fully established; lower while vegetation is first growing*)

IMPLEMENTATION CONSIDERATIONS

- ◒ Capital Costs
- ◒ Maintenance
- ○ Training
- ◒ Suitability for Slopes > 5%

Other Considerations:

- *Design is unique to soil and other conditions at each site*
- *Watering and other maintenance required until vegetation is established*

2.9.1 Primary Use

Vegetation is used as a temporary or final stabilization measure for areas disturbed by construction. As a temporary control, vegetation is used to stabilize stockpiles, earthen dikes, and barren areas that are inactive for longer than two weeks. As a final control at the end of construction, grasses and other vegetation provide good protection from erosion along with some filtering for overland runoff. Subjected to acceptable runoff velocities, vegetation can provide a positive method of long-term stormwater management as well as a visual amenity to the site.

Other control measures may be required to assist during the establishment of vegetation. These other controls include erosion control blankets, mulching, swales, and dikes to direct flow around newly seeded areas and proper grading to limit runoff velocities during construction.

2.9.2 Applications

Vegetation effectively reduces erosion in channels and swales and on stockpiles, dikes, and mild to medium slopes. Vegetative strips can provide some protection and sediment trapping when used as a perimeter control for utility and site development construction. Refer to *Section 3.15 Vegetated Filter Strips and Buffers* for more information.

In many cases, the initial cost of temporary seeding may be high compared to tarps or covers for stockpiles or other barren areas subject to erosion. This initial cost should be weighed with the amount of time the area is to remain inactive, since vegetation is more effective and the maintenance cost for vegetated areas is much less than most structural controls.

2.9.3 Design Criteria

General

- Vegetation is a highly effective erosion control when the vegetation is fully established. Until then, additional controls are needed. Sediment controls should not be removed from vegetated areas until the vegetation is established.
- On grades steeper than 20:1 (5 percent), anchored mulch or erosion control blankets are required to protect seeded areas until vegetation is established. Refer to *Section 2.5 Mulching* and *Section 2.3 Erosion Control Blankets* for design criteria.
- Vegetation may be used by itself for channel protection when the channel grade is less than 2 percent and the temporary control design storm (2-year, 24-hour) and the conveyance storm (25-year, 24-hour) flow velocities are less than 6 feet per second.
- If the velocity of the temporary control design storm is greater than 2 feet per second, erosion control blankets shall be used in the channel while vegetation is being established. Turf reinforcement mats are required when the velocity exceeds 6 feet per second. Refer to *Section 2.3 Erosion Control Blankets* and *Section 2.8 Turf Reinforcement Mats* for design criteria.
- Stabilization of channels with vegetation is limited to channels that have side slopes of 3:1 or flatter.
- On cut/fill slopes and channels designed to receive temporary or final vegetation, establishment of vegetation shall be initiated immediately after completing grading of the cut/fill slope or channel, and in no case later than 14 days after completion of grading on these features. It is not acceptable to delay establishing vegetation on these highly-erodible areas until completion of construction activities and stabilization of the remainder of the site.

Surface Preparation

- Unless infeasible, remove and stockpile existing topsoil at the start of grading activities. Store topsoil in a series of small stockpiles instead of one large stockpile to decrease the loss of aerobic soil micro-organisms during stockpiling.

- Interim or final grading must be completed prior to seeding or sodding.
- To minimize soil compaction of areas to be vegetated, limit vehicle and equipment traffic in these areas to the minimum necessary to accomplish grading.
- Install all necessary erosion structures such as dikes, swales, diversions, etc. prior to seeding or sodding.
- Spread stockpiled topsoil evenly over the disturbed area to be vegetated.
- Depth of topsoil shall be a minimum of 4 inches, with 6 inches required where the topsoil is over rock, gravel or otherwise unsuitable material for root growth. After spreading stockpiled topsoil, provide additional top soil as needed to achieve these depths.
- Compost Manufactured Topsoil as specified in TxDOT Special Specification 1001 may be used to achieve the specified depths or when it's infeasible to stockpile topsoil. Topsoil may also be acquired from another construction site if there is no space to stockpile the topsoil at that site.
- Topsoil shall have an organic content of 10 to 20 percent using ASTM D2974 Standard Test Methods for Moisture, Ash, and Organic Matter of Peat and Other Organic Soils.
- Topsoil that does not meet the organic content requirement shall be amended with General Use Compost as specified in TxDOT Special Specification 1001. Amendment should be three parts of topsoil to one part compost by volume thoroughly blended.
- Seed bed should be well pulverized and loosened to a minimum depth of 3 inches and then raked to have a uniform surface.
- When establishing vegetation from seed, groove or furrow slopes steeper than 3:1 on the contour line before seeding.

Plant Selection, Fertilization and Seeding

- Use only high quality, USDA certified seed.
- Use an appropriate species or species mixture adapted to the local climate, onsite soil conditions and the season as shown below, or consult with the local office of the Natural Resource Conservation Service (NRCS) or Texas AgriLife Extension Service for selection of proper species and application technique in this area.
- Seeding rate should be in accordance with the Tables 2.4, 2.5 and 2.6 as follow in this section or as recommended by the Natural Resources Conservation Service (NRCS) or Texas AgriLife Extension Service.
- Chemical fertilization is not recommended at the time of seeding, because it typically stimulates and is consumed by fast growing weeds that out-compete the slower growing grasses and legumes. If the topsoil has not been amended by compost as discussed above, an 0.5 inch layer of General Use Compost (TxDOT Special Specification 1001) is recommended as a surface treatment to protect the seed and provide slow release nutrients
- Evenly apply seed using a seed drill, cultipacker, terraseeding, or hydroseeder.
- Hydro-seeding should not be used on slopes of 5:1 or steeper unless Bonded Fiber Matrix is used.
- Seeded areas shall be thoroughly watered immediately after planting. Water shall be applied at a rate that moistens the top 6 inches of soil without causing runoff. Provide water daily for the first 14 days after seeding and thereafter as needed to aid in establishment of vegetation.
- Use appropriate mulching techniques (*Section 2.5 Mulching*) where necessary, especially during cold periods of the year. Mulch consisting of chipped site vegetation is discouraged, since the wood content may result in depleting nitrogen from the soil.

Sodding

- Use of sod should be limited to planned landscapes due to the relatively high water use of most types of sod grass.
- When sod is necessary to achieve immediate stabilization, buffalograss (*Buchloe dactyloides*) is recommended. Other types of sod may be used in landscaping when specified by a landscape architect for a commercial property or a homebuyer for a residential lot.
- The sod should be mowed prior to sod cutting so that the height of the grass shall not exceed 3 inches and should not be harvested or planted when its moisture condition is so excessively wet or dry that its survival shall be affected.
- Sod shall have a healthy, virile, system of dense, thickly matted roots throughout a minimum soil thickness of 0.75 inch.
- Sod shall be planted within 3 days after it is excavated.
- In areas subject to direct sunlight, pre-moisten prepared sod bed by watering immediately prior to placing sod.
- Sodded areas shall be thoroughly watered immediately after they are planted.

Temporary Vegetation

The following table lists recommended plant species for the North Central Texas region depending on the season for planting.

Table 2.4 Recommended Grass Mixture for Temporary Erosion Control

Season	*Common Name*	*Pure Live Seed Rate (Lbs/Acre)*
Sep 1 - Nov 30	Tall Fescue Western Wheat Grass Wheat (Red, Winter)	4.5 5.6 34.0
May 1 - Aug 31	Foxtail Millet	34.0
Feb 15 – May 31 Sep 1 – Dec 31	Annual Rye	20.0

Areas receiving temporary seeding and vegetation shall be landscaped, re-seeded or sodded with perennial species to establish final vegetation at the end of construction.

Vegetation for Final Stabilization

Sodding or seeding may be used to establish vegetation for final stabilization of areas disturbed by construction activity. The vegetation must achieve a cover that is 70 percent of the native background vegetative cover to be considered final stabilization. Sod will achieve this coverage quicker than seeding; however, sod is usually more expensive than seeding. Sod is most cost-effective for small areas or areas of concentrated flow or heavy pedestrian traffic where it will be difficult to establish vegetation by seeding.

Grass seed for establishing final stabilization can be sown at the same time as seeding for temporary (annual) vegetation. Drought tolerant native vegetation is recommended rather than exotics as a long-term water conservation measure. Native grasses can be planted as seed or placed as sod. Buffalo 609, for example, is a hybrid grass that is placed as sod. Fertilizers are not normally used to establish native grasses, but mulching is effective in retaining soil moisture for the native plants.

Table 2.5 Recommended Grass Mixture for Final Stabilization of Upland in Rural Areas

County	Planting Date	Clay Soils Species and Pure Live Seed Rate (Lbs/Acre)		Sandy Soils Species and Pure Live Seed Rate (Lbs/Acre)	
Erath Hood Johnson Palo Pinto Parker Somervell Tarrant Wise	February 1 – May 15	Green Sprangletop Sideoats Grama (El Reno) Bermudagrass Little Bluestem (Native) Blue Grama (Hachita) Illinois Bundleflower	0.3 2.7 0.9 1.0 0.9 1.0	Green Sprangletop Sand Lovegrass Bermudagrass Weeping Lovegrass (Ermelo) Sand Dropseed Partridge Peal	0.3 0.5 1.8 0.8 0.4 1.0
Collin Dallas Denton Ellis Kaufman Navarro Rockwell	February 1 – May 15	Green Sprangletop Bermudagrass Sideoats Grama (El Reno) Little Bluestem (Native) Buffalograss (Texoka) Illinois Bundleflower	0.3 1.2 2.7 2.0 1.6 1.0	Green Sprangletop Bermudagrass Weeping Lovegrass (Ermelo) Sand Lovegrass Sand Dropseed Partridge Pea	0.3 1.8 0.6 0.6 0.4 1.0
Hunt	February 1 – May 15	Green Sprangletop Sideoats Grama (El Reno) Bermudagrass Little Bluestem (Native) Illinois Bundleflower	0.3 3.2 1.8 1.7 1.0	Green Sprangletop Bermudagrass Bahiagrass (Pensacola) Sand Lovegrass Weeping Lovegrass (Ermelo) Partridge Pea	0.3 1.5 6.0 0.6 0.8 1.0

(Source: TxDOT Standard Specifications for Construction and Maintenance of Highways, Streets and Bridges, Item 164)

Table 2.6 Recommended Grass Mixture for Final Stabilization of Upland in Urban Areas

County	Planting Date	Clay Soils Species and Pure Live Seed Rate (Lbs/Acre)		Sandy Soils Species and Pure Live Seed Rate (Lbs/Acre)	
Erath Hood Johnson Palo Pinto Parker Somervell Tarrant Wise	February 1 – May 15	Green Sprangletop Sideoats Grama (El Reno) Bermudagrass Buffalograss (Texoka)	0.3 3.6 2.4 1.6	Green Sprangletop Sideoats Grama (El Reno) Bermudagrass Sand Dropseed	0.3 3.6 2.1 0.3
Collin Dallas Denton Ellis Kaufman Navarro Rockwell	February 1 – May 15	Green Sprangletop Sideoats Grama (El Reno) Buffalograss (Texoka) Bermudagrass	0.3 3.6 1.6 2.4	Green Sprangletop Buffalograss (Texoka) Bermudagrass Sand Dropseed	0.3 1.6 3.6 0.4
Hunt	February 1 – May 15	Green Sprangletop Bermudagrass Sideoats Grama (Haskell)	0.3 2.4 4.5	Green Sprangletop Bermudagrass	0.3 5.4

(Source: TxDOT Standard Specifications for Construction and Maintenance of Highways, Streets and Bridges, Item 164)

Vegetation for final stabilization of channels requires grasses that are tolerant of periodic inundation, such as Bermuda grass, Kentucky bluegrass or a grass-legume mixture.

Additional Considerations

- Conditions for establishing vegetation vary significantly from site to site. Therefore, specifics of the vegetation design should be prepared based on the soil, slopes, drainage patterns, and the purpose of the vegetation at a each site.
- For construction activities that include landscaping in the development plans, the landscape architect should be consulted when specifying vegetation for temporary or final stabilization of disturbed areas.
- Vegetation is easier to establish if equipment and vehicle traffic is managed onsite to minimize soil compaction by traffic in the disturbed area that will be vegetated.
- Establishing a good vegetative cover is dependent on the season of the year. Projects that commence in the fall of the year may not be candidates for using vegetation as an erosion control.
- Where vegetation is used in swales and channels it may be necessary to use sod, rather than seeding, to establish an erosion resistant surface that accommodates rainfall runoff flows.
- Mulch should be used to enhance vegetative growth, in that mulch protects seeds from heat, prevents soil moisture loss, and provides erosion protection until the vegetation is established. Compost mulch has the additional benefit of providing some slow-release nutrients.
- Fertilizers have both beneficial and adverse effects. Fertilizers provide nutrients to the vegetation, but fertilizers are also a source of unwanted nutrients in streams and lakes. In this latter regard, they are a pollutant. The use of native vegetation rather than exotics reduces the need for fertilizers. Organic fertilizers, such as compost mulch, are generally preferred over chemical fertilizers. They provide a slow release of nutrients over a longer period of time and are less likely to cause environmental problems.
- Steep slopes represent a problem for establishing vegetation. Hydraulic mulches are useful for establishing vegetation on slopes. Refer to *Section 2.5 Mulching*.

2.9.4 Design Guidance and Specifications

Additional criteria for the application of vegetation in channels are in *Section 3.6.3 of the iSWM Criteria Manual* and design guidance is in *Section 3.2 of the Hydraulics Technical Manual*.

Specifications for construction of this item may be found in the Standard Specifications for Public Works Construction – North Central Texas Council of Governments, Item 202 Landscaping. Additional specifications for the following components of this item are in the Standard Specifications for Construction and Maintenance of Highways, Streets, and Bridges (TxDOT 2004):

- Topsoil, Item 160.
- Compost, Item 161.
- Sodding for Erosion Control, Item 162.
- Seeding for Erosion Control, Item 163.
- Fertilization, Item 164.
- Vegetative Watering 165.

2.9.5 Inspection and Maintenance Requirements

Protect newly seeded areas from excessive runoff and traffic until vegetation is established. Include a watering and fertilizing schedule in the iSWM Construction Plan facilitate the establishment of the vegetation. Vegetation for final stabilization must be maintained until the vegetative cover is 70 percent of the native background vegetative cover.

Vegetation should be inspected regularly (at least as often as required by the TPDES Construction General Permit) to ensure that the plant material is established properly and remains healthy. Bare spots shall be reseeded and/or protected from erosion by mulch or other measures. Accumulated sediment

deposited by runoff should be removed to prevent smothering of the vegetation. In addition, determine the source of excess sediment and implement appropriate measures to control the erosion.

3.15 Vegetated Filter Strips and Buffers

Sediment Control

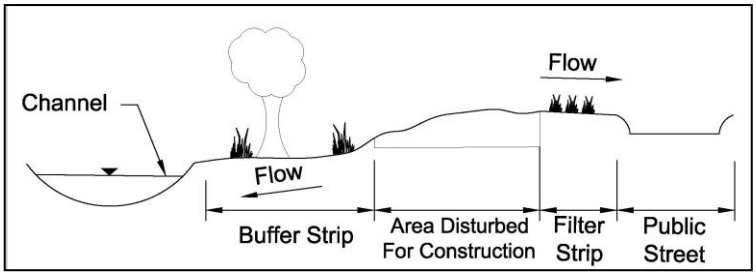

Description: Buffer strips (existing vegetation) and filter strips (planted vegetation) are sections of vegetated land adjacent to disturbed areas. They are designed with low slopes to convey sheet flow runoff from disturbed areas, resulting in the removal of sediment and other pollutants as the runoff passes through vegetation and infiltration occurs.

KEY CONSIDERATIONS

DESIGN CRITERIA:

- Minimum width (direction of flow across the vegetation) dependent on slope of disturbed area
- Maximum ratio of disturbed area to vegetated area dependent on slope
- Existing vegetation must meet criteria for type and coverage
- Dense grass required for planted vegetation
- Demarcate limits of vegetation and protect from traffic

ADVANTAGES / BENEFITS:

- Effective secondary control for removing clay particles
- Disperses flow and slows velocities to decrease erosion potential in receiving water
- Preserves the character of existing riparian corridor
- May become part of the permanent stormwater controls

DISADVANTAGES / LIMITATIONS:

- Appropriate as a primary control only for drainage areas of 2 acres or less and under certain site conditions
- Maximum 150 feet of flow to vegetated strip or buffer is used as a primary control
- Cannot treat large volumes or concentrated flows
- Not effective as a perimeter control when the perimeter cuts across contours instead of following contours
- Must limit access to vegetated portion of the site

MAINTENANCE REQUIREMENTS:

- Inspect regularly
- Rake accumulations of sediment from the vegetation
- Repair bare areas

TARGETED POLLUTANTS

- ● Sediment
- ◒ Nutrients & Toxic Materials
- ○ Oil & Grease
- ○ Floatable Materials
- ○ Other Construction Wastes

APPLICATIONS

Perimeter Control
Slope Protection
Sediment Barrier

Channel Protection

Temporary Stabilization

Final Stabilization

Waste Management

Housekeeping Practices

Fe=0.35-0.85
(*Depends on many conditions in addition to soil type*)

IMPLEMENTATION CONSIDERATIONS

- ◒ Capital Costs
- ○ Maintenance
- ○ Training
- ◒ Suitability for Slopes > 5%

Other Considerations:

- *Coordination with final landscaping*

3.15.1 Primary Use

Vegetated filter strips and buffers are used to reduce the velocity of sheet flow and reduce the volume of runoff through infiltration. In the process, sediment is removed as the runoff is filtered through the vegetation and infiltration occurs.

Vegetated filter strips and buffers are frequently used a secondary sediment control, since their performance is highly variable. They may be used as a primary sediment control only for small areas and under select site conditions.

3.15.2 Applications

Vegetated buffers are most applicable on development projects that are adjacent or near to floodplains, wetlands, streams and other natural waterways. Vegetated strips may be established along roads and property lines as a perimeter control for development. They are also applicable along the down slope side of utility line projects.

Vegetated buffers may be a primary sediment control for small areas where the conditions meet design criteria. They are also commonly used as a secondary control with other perimeter controls to provide higher levels of sediment removal. Vegetated areas have more capability to remove fine particle sizes than many conventional sediment controls. Combinations such as an organic filter tube or silt fence at the upslope edge of a vegetated strip are very effective.

In addition to perimeter control, vegetated strips are applicable for slope protection. Strips may be established at regular intervals to interrupt long or steep slopes. The strips maintain sheet flow, decrease velocities, and decrease erosion on the slopes.

3.15.3 Design Criteria

Vegetated buffers should be preserved along existing floodplains, wetlands, channels, and other natural waters whenever possible, even when the buffer is not a primary sediment control. Check for local requirements, as many municipalities mandate a vegetated buffer to maintain the character of the riparian corridor along a natural waterway. Vegetated buffers are encouraged to protect existing waterways by decreasing velocities, dispersing flow, and attenuating volume before the runoff reaches the waterway. If the development plans necessitate disturbing the riparian corridor, phase the development (when possible) to retain a vegetated buffer until final grading and landscaping at the end construction.

The evaluation and use of vegetated strips and buffers for use as a sediment control are unique to each site. The designer should carefully consider slope, vegetation, soils, depth to impermeable layer, depth to ground water, and runoff sediment characteristics before specifying a vegetated strip or buffer as a primary sediment control. This consideration is especially true for buffer strips of existing vegetation. If the buffer is not correctly planned, the first storm event can damage the natural vegetation beyond repair.

Design criteria in this section are only applicable when a vegetated strip or buffer is intended to be a primary or secondary sediment control for the construction site. As discussed above, a vegetated buffer may be preserved for other reasons that do not necessitate the use of these criteria if other sediment controls are provided for the construction site.

General

- Maximum slope of the vegetated strip or buffer shall be 5% across the width of the vegetation in the direction of flow.
- To maintain sheet flow, maximum distance of flow to the vegetated filter shall be 150 feet.
- Vegetated buffers and strips may only serve as a primary sediment control when the contributing drainage area has a slope of 15% or less. On steeper slopes, another perimeter control (e.g. organic filter tube, silt fence) may be installed at the upslope edge of the vegetated buffer or strip as a primary control, with the vegetation serving as a secondary control.

- Maximum disturbed area contributing runoff to the vegetated strip or buffer shall be 2 acres.
- Vegetated filter strips and buffers shall be a minimum of 15 feet wide. Width shall be increased based on the slope of the disturbed area as shown in the following table. Although the slope of the disturbed area may be up 15%, the slope of the vegetated strip or buffer is still limited to 5% maximum if used as a primary control for sediment.

Table 3.10 Sizing of Vegetated Buffers and Strips

Maximum Slope of Contributing Drainage Area	*Maximum Ratio of Disturbed Area to Vegetated Area*	*Minimum Width of Vegetated Area (Direction of Flow)*
5%	8:1	15 feet
10%	5:1	30 feet
15%	3:1	50 feet

- Access to vegetated buffers and strips shall be prohibited. These areas shall be protected from all traffic. No activities should occur in these areas, including no parking of the workers' vehicles, no eating of lunch, etc.
- Install controlled and stabilized ingress/egress points to manage traffic and direct it away from vegetation. Fence the vegetation or provide other means of protection to prevent vehicles and equipment from driving on the vegetated areas.
- Vegetated buffers and filter strips should not be used when high ground water, shallow depth to bedrock, or low soil permeability will inhibit infiltration of runoff.

Buffers of Existing Vegetation

- Fencing, flagged stakes spaced at a maximum of 6 feet, or other measures shall be used to clearly mark existing vegetation that is being preserved as a buffer before the start of any clearing, grubbing, or grading.
- Existing vegetation must be well established to be used as a vegetated buffer. It may be a mix of trees, sapling/shrubs, vines and herbaceous plants. However, the herbaceous plants shall cover at least 80 percent of the ground area.
- Bare soil shall not be visible within the buffer. Area between herbaceous plants shall be covered with a natural litter of organic matter (e.g. leaves, dead grass).
- Lots with a thick stand of existing grasses may preserve strips of the grasses as perimeter control in addition to using vegetation as a buffer along a natural waterway.

Strips of Planted Vegetation

- Vegetated strips should only be used when the site perimeter is along (parallel to) contours. Erosion of the vegetated strip will be a problem when the strip is placed along roads or site perimeters that cut across contours, resulting in runoff flowing along, instead of across, the filter strip.
- Minimize vehicle and equipment traffic and other activities that could compact soils on areas that will be planted for vegetated strips.
- Sod is required when the strip is intended to immediately function as a sediment control.
- Erosion control blankets (ECBs) should be used to prevent erosion and provide sediment control while establishing vegetation for a filter strip. If ECBs are not used, than another perimeter control is required until the vegetation is mature. Refer to *Section 2.3 Erosion Control Blankets*.
- Refer to the *Section 2.9 Vegetation* for criteria on establishing vegetation.
- When using vegetated strips for slope protection, spacing of the strips should be designed based on

slope steepness and type of soil. The strips may be planted directly on the slope grade when the slope is flatter than 2:1. For slopes of 2:1 and steeper, vegetation should be established on terraces. Terraces shall have a transverse slope of 1 percent in the opposite direction of the slope (i.e. back into the ground).

3.15.4 Design Guidance and Specifications

Guidance for analysis of the hydraulic loading on filter strips is in *Section 13.3 of the Stormwater Controls Technical Manual*.

No specification for vegetated filter strips and buffers is currently available in the Standard Specifications for Public Works Construction – North Central Texas Council of Governments.

3.15.5 Inspection and Maintenance Requirements

Vegetated filter strips and buffers should be inspected regularly (at least as often as required by the TPDES Construction General Permit). If rill erosion is developing, additional controls are needed to spread the flow before it enters the vegetated area. Rake light accumulations of sediment from the vegetation. Remove trash that accumulates in the vegetation. Additional sediment controls (e.g. a line of organic filter tubes or silt fence), are needed if sediment accumulations are large enough to bury the vegetation.

Inspect established planted vegetation for bare areas and place sod or install seeded erosion control blankets, as appropriate. Mow as needed after planted vegetation is mature.

3.15.6 Example Schematics

The following schematics are example applications of the construction control. They are intended to assist in understanding the control's design and function.

The schematics are **not for construction**. They may serve as a starting point for creating a construction detail, but they must be site adapted by the designer. In addition, dimensions and notes appropriate for the application must be added by the designer.

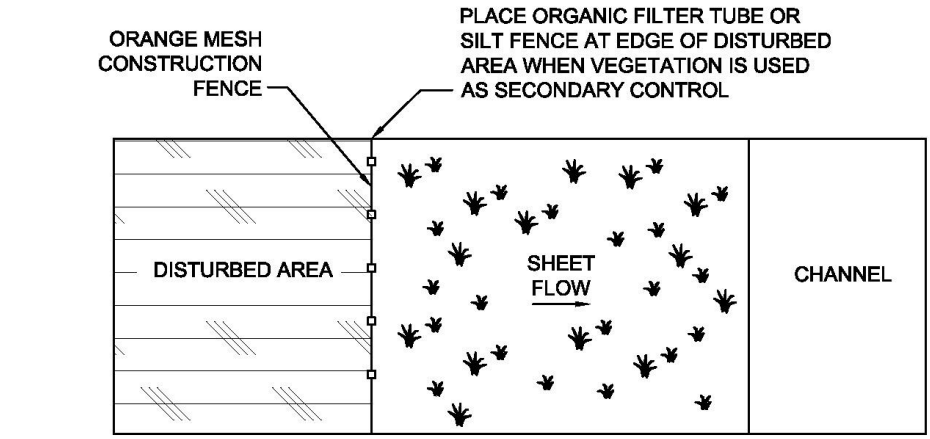

VEGETATED FILTER STRIP PLAN VIEW
N.T.S.

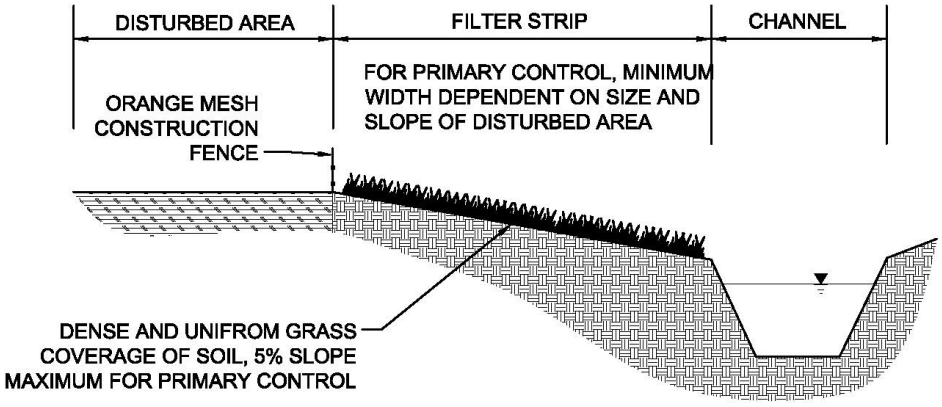

VEGETATED FILTER STRIP PROFILE VIEW
N.T.S.

Figure 3.40 Schematics of Vegetated Filter Strip

ATTACHMENT L
BMPS FOR SURFACE STREAM

During construction the following method will be used to prevent pollutants from the site from entering surface streams.

Silt fencing will be installed prior to land disturbance – 1 day
Site grading – 2 weeks
Temporary stabilization will occur throughout site grading using BMPs such as watering, erosion control blankets, and/or temporary vegetation – as needed
Establish permanent vegetation or provide alternative permanent BMP to ensure stabilization – 2-6 weeks

During construction, no pollutants will be present on site. For sediment control, silt fences, temporary sediment control BMPs, construction exits will be provided. The silt fences are placed along the limits of construction downstream of the project to prevent sediment from leaving the site. Silt fences have also been provided on the northern side along the existing concrete channel to contain potential runoff within the limits of disturbance.

Runoff from the site will ultimately be treated by the existing wet pond designed with the Valley Vista East Phase one permit plans and supported by the CZP document.

ATTACHMENT M
CONSTRUCTION PLANS

Reference the attached Construction plans and TCEQ Construction Notes.

Texas Commission on Environmental Quality
Contributing Zone Plan
General Construction Notes

Edwards Aquifer Protection Program Construction Notes – Legal Disclaimer

The following/listed "construction notes" are intended to be advisory in nature only and do not constitute an approval or conditional approval by the Executive Director (ED), nor do they constitute a comprehensive listing of rules or conditions to be followed during construction. Further actions may be required to achieve compliance with TCEQ regulations found in Title 30, Texas Administrative Code (TAC), Chapters 213 and 217, as well as local ordinances and regulations providing for the protection of water quality. Additionally, nothing contained in the following/listed "construction notes" restricts the powers of the ED, the commission or any other governmental entity to prevent, correct, or curtail activities that result or may result in pollution of the Edwards Aquifer or hydrologically connected surface waters. The holder of any Edwards Aquifer Protection Plan containing "construction notes" is still responsible for compliance with Title 30, TAC, Chapters 213 or any other applicable TCEQ regulation, as well as all conditions of an Edwards Aquifer Protection Plan through all phases of plan implementation. Failure to comply with any condition of the ED's approval, whether or not in contradiction of any "construction notes," is a violation of TCEQ regulations and any violation is subject to administrative rules, orders, and penalties as provided under Title 30, TAC § 213.10 (relating to Enforcement). Such violations may also be subject to civil penalties and injunction. The following/listed "construction notes" in no way represent an approved exception by the ED to any part of Title 30 TAC, Chapters 213 and 217, or any other TCEQ applicable regulation

1. A written notice of construction must be submitted to the TCEQ regional office at least 48 hours prior to the start of any ground disturbance or construction activities. This notice must include:
   - the name of the approved project;
   - the activity start date; and
   - the contact information of the prime contractor.

2. All contractors conducting regulated activities associated with this project should be provided with complete copies of the approved Contributing Zone Plan (CZP) and the TCEQ letter indicating the specific conditions of its approval. During the course of these regulated activities, the contractor(s) should keep copies of the approved plan and approval letter on-site.

3. No hazardous substance storage tank shall be installed within 150 feet of a water supply source, distribution system, well, or sensitive feature.

4. Prior to beginning any construction activity, all temporary erosion and sedimentation (E&S) control measures must be properly installed and maintained in accordance with the manufacturers specifications. If inspections indicate a control has been used inappropriately, or incorrectly, the applicant must replace or modify the control for site situations. These controls must remain in place until the disturbed areas have been permanently stabilized.

5. Any sediment that escapes the construction site must be collected and properly disposed of before the next rain event to ensure it is not washed into surface streams, sensitive features, etc.

6. Sediment must be removed from the sediment traps or sedimentation basins when it occupies 50% of the basin's design capacity.

7. Litter, construction debris, and construction chemicals exposed to stormwater shall be prevented from being discharged offsite.

8. All excavated material that will be stored on-site must have proper E&S controls.

9. If portions of the site will have a cease in construction activity lasting longer than 14 days, soil

stabilization in those areas shall be initiated as soon as possible prior to the 14th day of inactivity. If activity will resume prior to the 21st day, stabilization measures are not required. If drought conditions or inclement weather prevent action by the 14th day, stabilization measures shall be initiated as soon as possible.

10. The following records should be maintained and made available to the TCEQ upon request:
    - the dates when major grading activities occur;
    - the dates when construction activities temporarily or permanently cease on a portion of the site; and
    - the dates when stabilization measures are initiated.

11. The holder of any approved CZP must notify the appropriate regional office in writing and obtain approval from the executive director prior to initiating any of the following:

    A. any physical or operational modification of any best management practices (BMPs) or structure(s), including but not limited to temporary or permanent ponds, dams, berms, silt fences, and diversionary structures;

    B. any change in the nature or character of the regulated activity from that which was originally approved;

    C. any change that would significantly impact the ability to prevent pollution of the Edwards Aquifer; or

    D. any development of land previously identified as undeveloped in the approved contributing zone plan.

Austin Regional Office 12100 Park 35 Circle, Building A Austin, Texas 78753-1808 Phone (512) 339-2929 Fax (512) 339-3795	San Antonio Regional Office 14250 Judson Road San Antonio, Texas 78233-4480 Phone (210) 490-3096 Fax (210) 545-4329

THESE GENERAL CONSTRUCTION NOTES MUST BE INCLUDED ON THE CONSTRUCTION PLANS PROVIDED TO THE CONTRACTOR AND ALL SUBCONTRACTORS.

DATE OF SUBMITTAL: OCTOBER 7, 2025

OWNER/DEVELOPER:
SPARKLE DAYCARE LLC
2345 BASE BURNER PATH,
LEANDER TEXAS 78641
PHONE: (408) 806 - 2464
CONTACT: SRIKANTH NAGUNOORI
SKANTH.N@GMAIL.COM

ENGINEER:
KIRKMAN ENGINEERING, LLC
5200 STATE HIGHWAY 121
COLLEYVILLE, TX 76034
PHONE: (817) 488 - 4960
CONTACT: PATRICK FILSON, P.E.
PATRICK.FILSON@TRUSTKE.COM

SURVEYOR:
LONE WOLF LAND SURVEYING, LLC
163 COOL WATER DRIVE
BASTROP, TX 78602
PHONE: (512) 718- 5868
CONTACT: MATTHEW LEE TAYLOR, RPLS
LONEWOLFLANDSURVEYING@GMAIL.com

LAND USE SUMMARY:

ZONING: VALLEY VIEW EAST PUD-LC-2-A(LOCAL COMMERCIAL)
FUTURE LAND USE: MULTI-USE CORRIDOR-PRIORITY CORRIDOR
PROPOSED LAND USE: DAYCARE
ACREAGE: 1.684
TOTAL IMPERVIOUS COVER: 41,095 SF (0.94AC)
BUILDING IMPERVIOUS COVER: 10,156 SF

PROPERTY DESCRIPTION:

LOCATED ON GABRIELS HORN ROAD, NORTHEAST(NE) OF LAKOTA LN AND
ADDRESS: 2865 GABRIELS HORN RD
NORTHWEST (NW) OF PUEBLO PASS
LEGAL DESCRIPTION :S13022-VALLEY VISTA EAST, PHASE 1, LOT 1AB, BLOCK A AMENDED

FINAL PLAT:
FP-25-0259
TREE PERMIT:
TRP-26-0052
PICP PERMIT:
PICP-26-0279

NOTE:
THE ENGINEER-OF-RECORD IS SOLELY RESPONSIBLE FOR THE COMPLETENESS, ACCURACY, REGULATORY COMPLIANCE, AND ADEQUACY OF THESE PLANS AND/OR SPECIFICATIONS WHETHER THE PLANS AND/OR SPECIFICATIONS WERE REVIEWED BY THE CITY ENGINEER(S).

UTILITY PROVIDER INDEX

UTILITY	PROVIDER	CONTACT	PHONE NUMBER	EMAIL ADDRESS
GAS	ATMOS	MICHAEL ANDREWS	512-413-0284	MICHAEL.ANDREWS@ATMOSENERGY.COM
ELECTRIC	PERDENALES ELECTRIC COOPERATIVE INC.	CARRIE GARRETT	830-330-4924	CARRIE.GARRETT@PEC.COM
TELEPHONE/FIBER	AT&T	GREGORY SIFUENTEZ	512-413-2122	GS7821@ATT.COM
WATER	CITY OF LEANDER	KENLEY CROWDER	512-259-2640	KCROWDER@LEANDERTX.GOV
SANITARY SEWER	CITY OF LEANDER	KENLEY CROWDER	512-259-2640	KCROWDER@LEANDERTX.GOV
STORM SEWER	STORM SEWER PROVIDER	PATRICK WELLS	512-528-2766	PWELLS@LEANDERTX.GOV

REVISION #	DESCRIPTION:	APPROVAL

kirkman ENGINEERING
TEXAS FIRM NO. 15874

PROJECT NO. NAG25001

SPARKLE MONTESSORI ACADEMY

SITE DEVELOPMENT PLANS

PROJECT NUMBER: SD-25-0378

LOT 1A-R, BLOCK A
THE CITY OF LEANDER,
WILLIAMSON COUNTY, TEXAS

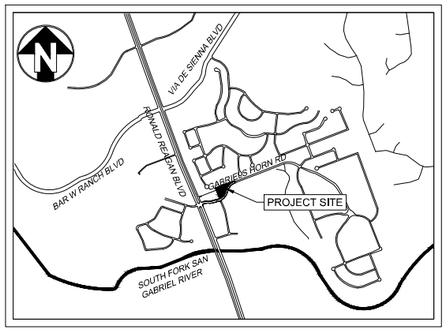

VICINITY MAP
1"= 2000'

APPROVED BY:

ROBIN M. GRIFFIN, AICP, EXECUTIVE DIRECTOR OF DEVELOPMENT SERVICES — DATE

EMILY TRUMAN, P.E., CFM, CITY ENGINEER — DATE

ASHLEA BOYLE, CPRE, DIRECTOR OF PARKS AND RECREATION — DATE

CHIEF JOSHUA DAVIS, FIRE MARSHAL — DATE

FEBRUARY 2026

Sheet List Table

Sheet Number	Sheet Title
1	COVER SHEET
2	GENERAL NOTES
3	CITY OF LEANDER NOTES
4	FINAL PLAT I
5	FINAL PLAT II
6	FINAL PLAT III
7	EXISTING CONDITION & DEMOLITION PLAN
8	TREE PRESERVATION PLAN
9	EROSION CONTROL PLAN
10	GRADING PLAN
11	EXISTING DRAINAGE AREA MAP
12	PROPOSED DRAINAGE AREA MAP
13	SITE PLAN
14	UTILITY PLAN
15	UTILITY PROFILE
16	STORM PLAN
17	STORM PROFILE
18	PAVING PLAN
19	SITE DETAILS
20	DRAINAGE DETAILS I
21	DRAINAGE DETAILS II
22	DRAINAGE DETAILS III
23	WATER DETAILS
24	SANITARY SEWER DETAILS I
25	SANITARY SEWER DETAILS II
26	EROSION CONTROL DETAILS
27	PAVING DETAILS
28	TRAFFIC CONTROL PLAN
29	LANDSCAPE PLAN
30	LANDSCAPE DETAIL

FLOOD CERTIFICATION:

THIS PROPERTY LIES IN ZONE "X" AND IS NOT LOCATED WITHIN ANY PRESENTLY ESTABLISHED 100-YEAR FLOODPLAIN, AS SHOWN BY THE FEDERAL EMERGENCY MANAGEMENT AGENCY, FLOOD INSURANCE RATE MAP FOR CITY OF LEANDER IN WILLIAMSON COUNTY, COMMUNITY PANEL NUMBER 48491C0455F EFFECTIVE DATE DECEMBER 20,2019.

2/9/2026

STATE OF TEXAS
PATRICK C. FILSON
108577
LICENSED
PROFESSIONAL ENGINEER

SHEET: 1 OF 30

PLANS FOR THE CONSTRUCTION OF WATER, SANITARY SEWER, PAVING, GRADING & DRAINAGE IMPROVEMENTS TO SERVE: SPARKLE MONTESSORI ACADEMY
SD-25-0378

FILE PATH: K:\Wtr\NAG25001_Sparkle Leander\Drawings\02_ENGR\01 - Production\Sheets\NAG25001_Sparkle Leander(Drawings)(02_ENGR)(01 - Production)(C1.0 COVER_NAG25001
FILENAME: C1.0 COVER_NAG25001.dwg
PLOTTED BY: Nadezhda Gusarin
PLOTTED ON: Wednesday, October 15, 2025
PLOTTED AT: 3:39:18 PM
PLOTTED WITH: _DWGtoPDF.PIP (General Documentation).pc3

GENERAL NOTES

1. STANDARDS AND SPECIFICATIONS: ALL MATERIALS, CONSTRUCTION METHODS, WORKMANSHIP, EQUIPMENT, SERVICES AND TESTING FOR ALL PUBLIC IMPROVEMENTS SHALL BE IN ACCORDANCE WITH THE GOVERNING AUTHORITIES' ORDINANCES, REGULATIONS, REQUIREMENTS, STATUTES, SPECIFICATIONS AND DETAILS, LATEST PRINTING AND AMENDMENTS THERETO, THE GOVERNING AUTHORITIES' PUBLIC WORKS AND WATER DEPARTMENT REQUIREMENTS, PLUMBING CODES, AND FIRE DEPARTMENT REGULATIONS SHALL TAKE PRECEDENT FOR ALL PRIVATE IMPROVEMENTS WHERE APPLICABLE. ALL OTHER PRIVATE CONSTRUCTION, NOT REGULATED BY THE GOVERNING AUTHORITY, SHALL BE IN ACCORDANCE WITH THE STANDARD SPECIFICATIONS FOR PUBLIC WORKS CONSTRUCTION, NORTH CENTRAL TEXAS COUNCIL OF GOVERNMENTS, LATEST PRINTING AND AMENDMENTS THERETO, EXCEPT AS MODIFIED BY THE PROJECT CONTRACT DOCUMENTS.
2. EXAMINATION OF PLANS: PRIOR TO COMMENCING ANY CONSTRUCTION, THE CONTRACTOR SHALL FAMILIARIZE THEMSELVES WITH THE CONTRACTOR DOCUMENTS, CONSTRUCTION DOCUMENTS, AND SPECIFICATIONS. FAILURE ON THE PART OF THE CONTRACTOR TO FAMILIARIZE THEIR SELF WITH ALL STANDARDS AND SPECIFICATIONS PERTAINING TO THE WORK SHALL IN NO WAY RELIEVE THE CONTRACTOR OF RESPONSIBILITY FOR PERFORMING THE WORK IN ACCORDANCE WITH ALL SUCH APPLICABLE STANDARDS AND SPECIFICATIONS.
3. EXAMINATION OF SITE: THE CONTRACTOR SHALL BE RESPONSIBLE FOR INVESTIGATING AND SATISFYING THEIR SELF AS TO THE CONDITIONS AFFECTING THE WORK, INCLUDING BUT NOT RESTRICTED TO THE BEARING UPON TRANSPORTATION, DISPOSAL, HANDLING AND STORAGE OF MATERIALS, AVAILABILITY OF LABOR, WATER, ELECTRIC POWER, ROADS AND UNCERTAINTIES OF WEATHER, OR SIMILAR PHYSICAL CONDITIONS AT THE SITE, CONDITIONS OF THE GROUND, THE CHARACTER OF EQUIPMENT AND FACILITIES NEEDED PRELIMINARY TO AND DURING THE PERFORMANCE OF THE WORK. FAILURE BY THE CONTRACTOR TO ACQUAINT HIMSELF WITH THE AVAILABLE INFORMATION WILL NOT RELIEVE HIM FROM RESPONSIBILITY FOR ESTIMATING THE DIFFICULTY OR COST OF SUCCESSFULLY PERFORMING THE WORK.
4. ADEQUATE AREA TO PERFORM WORK: CONTRACTOR TO VERIFY ADEQUATE AREA EXISTS ON-SITE TO PERFORM THE WORK SHOWN IN THESE CONSTRUCTION DOCUMENTS. IF ADDITIONAL AREA IS REQUIRED TO PERFORM THE WORK, THE CONTRACTOR SHALL NOTIFY THE OWNER AND ENGINEER PRIOR TO CONSTRUCTION.
5. SUBSURFACE INVESTIGATION: SUBSURFACE EXPLORATION TO ASCERTAIN THE NATURE OF SOILS HAS BEEN PERFORMED BY THE GEOTECHNICAL ENGINEER OF RECORD ON THE PROJECT. THE SUBSURFACE INFORMATION WILL BE MADE AVAILABLE FOR THE CONTRACTOR'S USE. THE ENGINEER DISCLAIMS ANY RESPONSIBILITY FOR THE ACCURACY, TRUE LOCATION AND EXTENT OF THE SOILS INFORMATION PREPARED BY OTHERS.
6. TOPOGRAPHY SURVEY: TOPOGRAPHIC SURVEY INFORMATION SHOWN ON THE PLANS IS PROVIDED FOR INFORMATIONAL PURPOSES. THE CONTRACTOR SHALL BE RESPONSIBLE FOR VERIFYING THAT THE INFORMATION SHOWN IS CORRECT, AND SHALL NOTIFY THE ENGINEER IMMEDIATELY OF ANY ERRORS, DISCREPANCIES OR OMISSIONS TO THE SURVEY INFORMATION PROVIDED.
7. COMPLIANCE WITH LAWS: THE CONTRACTOR SHALL FULLY COMPLY WITH ALL LOCAL, STATE AND FEDERAL LAWS, INCLUDING ALL CODES, ORDINANCES AND REGULATIONS APPLICABLE TO THIS CONTRACT AND THE WORK TO BE DONE THEREUNDER, WHICH EXIST OR MAY BE ENACTED LATER BY GOVERNMENTAL BODIES HAVING JURISDICTION OR AUTHORITY FOR SUCH ENACTMENT, ALL WORK REQUIRED UNDER THIS CONTRACT SHALL COMPLY WITH ALL REQUIREMENTS OF LAW, REGULATION, PERMIT OR LICENSE. IF THE CONTRACTOR FINDS THAT THERE IS A VARIANCE, HE SHALL IMMEDIATELY REPORT THIS TO THE OWNER FOR RESOLUTION.
8. PUBLIC CONVENIENCE AND SAFETY: IN ACCORDANCE WITH GENERALLY ACCEPTED CONSTRUCTION PRACTICES, THE CONTRACTOR SHALL BE SOLELY AND COMPLETELY RESPONSIBLE FOR CONDITIONS OF THE JOB SITE, INCLUDING SAFETY OF ALL PERSONNEL AND PROPERTY DURING PERFORMANCE OF THE WORK. THIS REQUIREMENT SHALL APPLY CONTINUOUSLY AND NOT BE LIMITED TO NORMAL WORKING HOURS. MATERIALS STORED ON THE WORK SITE SHALL BE PLACED, AND THE WORK SHALL AT ALL TIMES BE SO CONDUCTED, AS TO CAUSE NO GREATER OBSTRUCTION TO THE TRAVELING PUBLIC THAN IS CONSIDERED ACCEPTABLE BY THE GOVERNING AUTHORITIES AND THE DEVELOPER AND NOT TO PREVENT FREE UNINTERRUPTED ACCESS TO ALL FIRE HYDRANTS, WATER VALVES, GAS VALVES, MANHOLES AND FIRE ALARM OR POLICE CALL BOXES IN THE VICINITY.
9. STORM WATER POLLUTION PREVENTION PLAN (SWPPP): THE CONTRACTOR SHALL COMPLY WITH THE CONDITIONS OF THE SWPPP WHILE CONDUCTING THEIR ACTIVITIES ON THE PROJECT.
10. PERMITS AND LICENSES: THE CONTRACTOR SHALL SECURE AND PAY FOR ALL PERMITS AND LICENSES NECESSARY FOR THE EXECUTION OF THE WORK AND SHALL FULLY COMPLY WITH ALL THEIR TERMS AND CONDITIONS, WHENEVER THE WORK UNDER THIS CONTRACT REQUIRES THE OBTAINING OF PERMITS FROM THE GOVERNING AUTHORITIES, THE CONTRACTOR SHALL FURNISH DUPLICATE COPIES OF SUCH PERMITS TO THE DEVELOPER BEFORE THE WORK COVERED THEREBY IS STARTED, NO WORK WILL BE ALLOWED TO PROCEED BEFORE SUCH PERMITS HAVE BEEN OBTAINED, COSTS ASSOCIATED WITH PERMITS SHALL BE INCLUDED IN THE CONTRACT AMOUNT.
11. APPROVED PLANS: THE CONTRACTOR SHALL HAVE AT LEAST ONE SET OF APPROVED PLANS ON-SITE AT ALL TIMES. WORK PERFORMED WITHOUT THE USE OF APPROVED PLANS IS NOT AUTHORIZED AND SHALL BE AT THE RISK OF THE CONTRACTOR.
12. BONDS: PERFORMANCE, PAYMENT AND MAINTENANCE BONDS MAY BE REQUIRED FROM THE CONTRACTOR FOR "PUBLIC" IMPROVEMENTS. IF REQUIRED, THE CONTRACTOR SHALL PROVIDE THE BONDS IN THE FORM AND IN THE AMOUNTS AS REQUIRED BY THE GOVERNING AUTHORITIES. COSTS ASSOCIATED WITH PROVIDING THE BONDS SHALL BE INCLUDED IN THE CONTRACT AMOUNT.
13. TESTING: THE TESTING AND CONTROL OF ALL MATERIALS USED IN THE WORK SHALL BE PERFORMED BY AN INDEPENDENT TESTING LABORATORY, EMPLOYED AND PAID DIRECTLY BY THE CONTRACTOR, IN THE EVENT THE RESULTS OF THE INITIAL TESTING DO NOT COMPLY WITH THE PLANS AND SPECIFICATIONS, SUBSEQUENT TESTS NECESSARY TO DETERMINE THE ACCEPTABILITY OF MATERIALS OR CONSTRUCTION SHALL BE AT THE CONTRACTOR'S EXPENSE.
14. INSPECTION: THE GOVERNING AUTHORITIES AND/OR THE DEVELOPER WILL PROVIDE INSPECTION OF THE PROPOSED CONSTRUCTION. THE OWNER WILL PAY THE COSTS FOR INSPECTIONS/SERVICES. THE CONTRACTOR SHALL PROVIDE SUFFICIENT NOTICE WELL IN ADVANCE OF PENDING CONSTRUCTION ACTIVITIES TO THE GOVERNING AUTHORITIES AND/OR OWNER FOR SCHEDULING OF INSPECTION SERVICES.
15. SHOP DRAWINGS: THE CONTRACTOR SHALL PREPARE, REVIEW, AND SUBMIT ALL SHOP DRAWING, PRODUCT DATA AND SAMPLES REQUIRED BY THE GOVERNING AUTHORITIES AND THE CONTRACT DOCUMENTS IN ACCORDANCE WITH ITEM 1.28 OF THE STANDARD SPECIFICATIONS FOR PUBLIC WORKS CONSTRUCTION, NORTH CENTRAL TEXAS - NORTH CENTRAL TEXAS COUNCIL OF GOVERNMENTS.
16. SURVEYING: ALL SURVEYING REQUIRED FOR CONSTRUCTION STAKING SHALL BE THE RESPONSIBILITY OF THE CONTRACTOR. THE OWNER SHALL PROVIDE TWO BENCHMARKS FOR USE AS HORIZONTAL AND VERTICAL DATUM. THE CONTRACTOR SHALL EMPLOY A REGISTERED PROFESSIONAL LAND SURVEY TO PERFORM ALL ADDITIONAL SURVEY, LAYOUT AND MEASUREMENT WORK NECESSARY FOR THE COMPLETION OF THE PROJECT, THE COSTS ASSOCIATED WITH THE CONSTRUCTION STAKING SHALL BE INCLUDED IN THE CONTRACT AMOUNT.
17. PROTECTION OF PROPERTY CORNERS AND BENCHMARKS: THE CONTRACTOR SHALL PROTECT ALL PROPERTY CORNER MARKERS AND BENCHMARKS, WHEN ANY SUCH MARKERS OR MONUMENTS ARE IN DANGER OF BEING DISTURBED, THEY SHALL BE PROPERLY REFERENCED AND IF DISTURBED SHALL BE RESET BY A REGISTERED PUBLIC SURVEYOR AT THE EXPENSE OF THE CONTRACTOR.
18. EXISTING STRUCTURES: THE PLANS SHOW THE LOCATION OF ALL KNOWN SURFACE AND SUB SURFACE STRUCTURES, HOWEVER, THE DEVELOPER AND ENGINEER ASSUME NO RESPONSIBILITY FOR THE FAILURE TO SHOW ANY OR ALL OF THESE STRUCTURES ON THE PLANS, OR TO SHOW THEM IN THEIR EXACT LOCATION. SUCH FAILURE SHALL NOT BE CONSIDERED SUFFICIENT BASIS FOR CLAIMS FOR ADDITIONAL COMPENSATION FOR EXTRA WORK OR FOR INCREASING THE PAY QUANTITIES IN ANY MANNER WHATSOEVER, UNLESS THE OBSTRUCTION ENCOUNTERED IN SUCH AS TO REQUIRE CHANGES IN THE LINES OR GRADES, OR REQUIRE THE CONSTRUCTION OF SPECIAL WORK, FOR WHICH PROVISIONS ARE NOT MADE IN THE PLANS.
19. PROTECTION OF EXISTING UTILITIES: AS REQUIRED BY "THE TEXAS UNDERGROUND FACILITY DAMAGE PREVENTION AND SAFETY ACT", TEXAS ONE CALL SYSTEM MUST BE CONTACTED (800-245-4545) AT LEAST 48 HOURS PRIOR TO ANY EXCAVATION OPERATIONS BEING PERFORMED. IT IS THE CONTRACTOR'S RESPONSIBILITY TO CONTACT TEXAS ONE CALL SYSTEM, THE LOCATION OF EXISTING UTILITIES SHOWN ON THE PLANS ARE BASED ON THE BEST RECORDS AND/OR FIELD INFORMATION AVAILABLE AND ARE NOT GUARANTEED BY THE DEVELOPER OR ENGINEER TO BE ACCURATE AS TO THE LOCATION AND DEPTH. IT SHALL BE THE CONTRACTORS RESPONSIBILITY TO VERIFY LOCATIONS OF ADJACENT AND/OR CONFLICTING UTILITIES SUFFICIENTLY IN ADVANCE OF HIS ACTIVITIES IN ORDER THAT HE MAY NEGOTIATE SUCH LOCAL ADJUSTMENTS AS NECESSARY IN THE CONSTRUCTION PROCESS TO PROVIDE ADEQUATE CLEARANCES. THE CONTRACTOR SHALL TAKE ALL NECESSARY PRECAUTIONS IN ORDER TO PROTECT ALL EXISTING UTILITIES, SERVICES, AND STRUCTURES ENCOUNTERED WHETHER OR NOT SHOWN ON THE PLANS, ANY DAMAGE TO UTILITIES RESULTING FROM THE CONTRACTOR'S OPERATIONS SHALL BE RESTORED AT HIS EXPENSE. TO AVOID UNNECESSARY INTERFERENCE'S OR DELAYS, THE CONTRACTOR SHALL COORDINATE ALL UTILITY REMOVALS, REPLACEMENTS AND CONSTRUCTION WITH THE APPROPRIATE GOVERNING AUTHORITIES. THE DEVELOPER WILL NOT BE LIABLE FOR DAMAGES DUE TO DELAY BECAUSE OF THE ABOVE.
20. DAMAGE TO EXISTING FACILITIES: ALL DAMAGE DURING CONSTRUCTION ACTIVITIES SHALL BE REPLACED AT THE CONTRACTOR'S EXPENSE TO A CONDITION AS GOOD AS OR BETTER THAN THE CONDITIONS PRIOR TO STARTING THE WORK.
21. FIRE AND LIFE SAFETY SYSTEMS: THE CONTRACTOR SHALL NOT REMOVE, DISABLE OR DISRUPT EXISTING FIRE OR LIFE SAFETY SYSTEMS WITHOUT RECEIVING PRIOR WRITTEN PERMISSION FROM THE GOVERNING AUTHORITY.
22. TRENCH SAFETY: THE CONTRACTOR IS RESPONSIBLE FOR HAVING A TRENCH SAFETY PLAN PREPARED IN ACCORDANCE WITH OSHA REQUIREMENTS BY A PROFESSIONAL ENGINEER LICENSED IN THE STATE OF TEXAS FOR THE IMPLEMENTATION OF TRENCH SAFETY CONTROL MEASURES THAT WILL BE IN EFFECT DURING THE CONSTRUCTION OF THE PROJECT. THE COSTS FOR PREPARATION OF THE TRENCH SAFETY PLAN SHALL BE INCLUDED IN THE CONTRACT AMOUNT.
23. TRAFFIC CONTROL: IT SHALL BE THE RESPONSIBILITY OF THE CONTRACTOR TO IMPLEMENT TRAFFIC CONTROL. THE COSTS ASSOCIATED WITH THE IMPLEMENTATION OF THE TRAFFIC CONTROL PLAN SHALL BE INCLUDED IN THE CONTRACT AMOUNT.
24. ACCESS TO ADJACENT PROPERTIES: ACCESS TO ADJACENT PROPERTIES SHALL BE MAINTAINED AT ALL TIMES UNLESS OTHERWISE DIRECTED BY THE GOVERNING AUTHORITIES AND/OR OWNER.
25. ACCESS ROUTES, STAGING AREAS AND STORAGE AREAS: ALL PRIVATE HAUL ROADS AND ACCESS ROUTES AND THE LOCATION OF ALL STAGING AREAS AND STORAGE AREAS SHALL BE SUBJECT TO THE APPROVAL OF THE OWNER. THE CONTRACTOR SHALL BE RESPONSIBLE FOR MAINTAINING AND REPAIRING ALL ROADS AND OTHER FACILITIES USED DURING CONSTRUCTION, UPON COMPLETION OF THE PROJECT, ALL HAUL ROADS, ACCESS ROADS, STAGING AREAS AND STORAGE AREAS SHALL BE RESTORED TO A CONDITION EQUAL TO OR BETTER THAN THAT AT THE TIME THE CONTRACTOR COMMENCES WORK ON THE PROJECT.
26. PARKING CONSTRUCTION EQUIPMENT: AT NIGHT AND DURING ALL PERIODS OF TIME WHEN EQUIPMENT IS NOT BEING ACTIVELY USED FOR THE CONSTRUCTION WORK, THE CONTRACTOR SHALL PARK THE EQUIPMENT AT LOCATIONS WHICH ARE APPROVED BY THE OWNER. DURING THE CONSTRUCTION OF THE PROJECT, THE CONTRACTOR SHALL COMPLY WITH THE PRESENT ZONING REQUIREMENTS OF THE GOVERNING AUTHORITIES IN THE USE OF VACANT PROPERTY FOR STORAGE PURPOSES. THE CONTRACTOR SHALL ALSO PROVIDE ADEQUATE BARRICADES, MARKERS AND LIGHTS TO PROTECT THE OWNER'S, GOVERNING AUTHORITIES, THE PUBLIC AND THE OTHER WORK. ALL BARRICADES, LIGHTS, AND MARKERS MUST MEET THE REQUIREMENTS OF THE GOVERNING AUTHORITIES' REGULATIONS.
27. WATER FOR CONSTRUCTION: THE CONTRACTOR SHALL MAKE THE NECESSARY ARRANGEMENTS FOR PURCHASING WATER FROM THE GOVERNING AUTHORITY FOR HIS USE ON THE PROJECT SITE, COST ASSOCIATED WITH THIS SERVICE SHALL BE INCLUDED IN THE CONTRACT AMOUNT.
28. TEMPORARY ELECTRIC AND COMMUNICATIONS FOR CONSTRUCTION: THE CONTRACTOR SHALL MAKE THE NECESSARY ARRANGEMENTS FOR THE INSTALLATION AND PURCHASING OF TEMPORARY ELECTRIC AND COMMUNICATIONS SERVICES FROM THE GOVERNING AUTHORITIES FOR HIS USE ON THE PROJECT SITE. COSTS ASSOCIATED WITH THIS SERVICE SHALL BE INCLUDED IN THE CONTRACT AMOUNT.
29. FENCES: ALL FENCES ENCOUNTERED AND REMOVED DURING CONSTRUCTION, EXCEPT THOSE DESIGNATED TO BE REMOVED OR RELOCATED, SHALL BE RESTORED TO THE ORIGINAL OR BETTER THAN CONDITION UPON COMPLETION OF THE PROJECT.WHERE WIRE FENCING, EITHER WIRE MESH OR BARBED WIRE, IS NOT TO BE CROSSED, THE CONTRACTOR SHALL SET CROSS-BRACED POSTS ON EITHER SIDE OF THE CROSSING. TEMPORARY FENCING SHALL BE ERECTED IN PLACE OF THE FENCING REMOVED WHENEVER THE WORK IS NOT IN PROGRESS AND WHEN THE SITE IS VACATED OVERNIGHT AND/OR AT ALL TIMES TO PREVENT PERSONS AND/OR LIVESTOCK FROM ENTERING THE CONSTRUCTION AREA. THE COST OF FENCE REMOVAL, TEMPORARY CLOSURES AND REPLACEMENT SHALL BE INCLUDED IN THE CONTRACT AMOUNT.
30. COORDINATION WITH OTHERS: IN THE EVENT THAT OTHER CONTRACTORS ARE DOING WORK IN THE SAME AREA SIMULTANEOUSLY WITH THE PROJECT, THE CONTRACTOR SHALL COORDINATE HIS PROPOSED CONSTRUCTION WITH THAT OF THE OTHER CONTRACTORS.
31. CONDITION OF THE SITE DURING CONSTRUCTION: THE CONTRACTOR SHALL KEEP THE SITE OF THE WORK AND ADJACENT PREMISES AS FREE FROM MATERIAL, DEBRIS AND RUBBISH AS IS PRACTICABLE. THE CONTRACTOR SHALL REMOVE MATERIAL, DEBRIS AND RUBBISH FROM ANY PORTION OF THE SITE IF, IN THE OPINION OF THE DEVELOPER, SUCH MATERIAL, DEBRIS AND RUBBISH CONSTITUTES A NUISANCE OR IS OBJECTIONABLE.
32. EXISTING ROADWAYS: THE CONTRACTOR SHALL BE RESPONSIBLE FOR MAINTAINING THE CLEANLINESS OF EXISTING PAVED ROADS, COSTS ASSOCIATED WITH MAINTAINING THE CLEANLINESS OF EXISTING ROADS SHALL BE INCLUDED IN THE CONTRACT AMOUNT.
33. SITE RECONNAISSANCE: THE CONTRACTOR SHALL VISIT THE SITE PRIOR TO BIDDING TO DETERMINE EXISTING CONDITIONS.
34. CONSULTANT COORDINATION: CONTRACTOR SHALL THOROUGHLY CHECK COORDINATION OF CIVIL, LANDSCAPE, MEP, ARCHITECTURAL, AND OTHER PLANS PRIOR TO COMMENCING CONSTRUCTION. OWNER/ENGINEER SHALL BE NOTIFIED OF ANY DISCREPANCY PRIOR TO COMMENCING WITH CONSTRUCTION.
35. DUST CONTROL: THE CONTRACTOR SHALL TAKE ALL PRECAUTIONS NECESSARY TO CONTROL DUST ON THE PROJECT SITE BY SPRINKLING OF WATER, OR ANY OTHER METHODS APPROVED BY THE GOVERNING AUTHORITIES. COSTS ASSOCIATED WITH DUST CONTROL SHALL BE INCLUDED IN THE CONTRACT AMOUNT.
36. CLEAN UP FOR FINAL ACCEPTANCE: THE CONTRACTOR SHALL MAKE A FINAL CLEAN UP OF ALL PARTS OF THE WORK BEFORE ACCEPTANCE BY THE OWNER. THIS CLEAN UP SHALL INCLUDE REMOVAL OF ALL OBJECTIONABLE E MATERIALS AND, IN GENERAL, PREPARING THE SITE OF THE WORK IN AN ORDERLY MANNER OF APPEARANCE.
37. REMOVAL OF DEFECTIVE AND UNAUTHORIZED WORK: ALL WORK, WHICH HAS BEEN REJECTED OR CONDEMNED, SHALL BE REPAIRED, OR IF IT CANNOT BE REPAIRED SATISFACTORILY, IT SHALL BE REMOVED AND REPLACED AT THE CONTRACTOR'S EXPENSE. DEFECTIVE MATERIALS SHALL BE IMMEDIATELY REMOVED FROM THE WORK SITE, WORK DONE BEYOND THE LINE OR NOT IN THE CONFORMITY WITH THE GRADES SHOWN ON THE DRAWINGS OR AS WRITTEN AUTHORITY AND PRIOR AGREEMENT IN WRITING AS TO PRICES, SHALL BE AT THE CONTRACTOR'S RISK, AND WILL BE CONSIDERED UNAUTHORIZED, AND AT THE OPTION OF THE OWNER MAY NOT BE MEASURED AND PAID FOR AND MAY BE ORDERED REMOVED AT THE CONTRACTOR'S EXPENSE. UPON FAILURE OF THE CONTRACTOR TO REPAIR SATISFACTORY OR TO REMOVE AND REPLACE, IF SO DIRECTED, REJECTED, UNAUTHORIZED OR CONDEMNED WORK OR MATERIALS IMMEDIATELY AFTER RECEIVING NOTICE FROM THE OWNER, THE OWNER WILL AFTER GIVING WRITTEN NOTICE TO THE CONTRACTOR, HAVE THE AUTHORITY TO CAUSE DEFECTIVE WORK TO BE REMEDIED OR REMOVED AND REPLACED, OR TO CAUSE UNAUTHORIZED WORK TO BE REMOVED AND TO DEDUCT THE COST THEREOF ANY MONIES DUE OR TO BECOME DUE THE CONTRACTOR.
38. DISPOSITION AND DISPOSAL OF EXCESS AND UNSUITABLE MATERIALS: ALL MATERIALS TO BE REMOVED FROM THE SITE INCLUDED BUT NOT LIMITED TO EXCESS MATERIAL AND UNSUITABLE MATERIALS SUCH AS CONCRETE, ASPHALT, LARGE ROCKS, REFUSE, AND OTHER DEBRIS SHALL BECOME THE PROPERTY OF THE CONTRACTOR AND SHALL BE DISPOSED OF OUTSIDE THE LIMITS OF THE PROJECT. CONTRACTOR SHALL ALSO COMPLY WITH ALL APPLICABLE LAWS GOVERNING SPILLAGE OF DEBRIS WHILE TRANSPORTING TO A DISPOSAL SITE. COSTS ASSOCIATED WITH THE DISPOSAL OF EXCESS AND UNSUITABLE MATERIALS SHALL BE INCLUDED IN THE CONTRACT AMOUNT.
39. RECORD DRAWINGS: THE CONTRACTOR SHALL MAINTAIN AN ACCURATE RECORD OF THE INSTALLATION OF ALL MATERIALS AND SYSTEM COVERED BY THE PROJECT CONTRACT DOCUMENTS. THE COMPLETE SET OF "RECORD DRAWINGS" MUST BE DELIVERED TO THE OWNER AND/OR ENGINEER BEFORE REQUESTING FINAL PAYMENT.
40. FRANCHISE UTILITIES: THE CONTRACTOR IS RESPONSIBLE FOR COORDINATING THE INSTALLATION OF FRANCHISE UTILITIES THAT ARE NECESSARY FOR ON-SITE AND OFF-SITE CONSTRUCTION, AND SERVICE TO THE PROPOSED DEVELOPMENT.
41. SCOPE OF WORK: THE SCOPE OF WORK FOR THE CIVIL IMPROVEMENTS SHOWN ON THESE PLANS TERMINATES 5-FEET FROM THE BUILDING. REFERENCE THE BUILDING PLANS (E.G. ARCHITECTURAL/STRUCTURAL/MEP) FOR AREAS WITHIN 5-FEET OF THE BUILDING AND WITHIN THE BUILDING FOOTPRINT.
42. SITE DRAINAGE: CONTRACTOR SHALL MAINTAIN ADEQUATE SITE DRAINAGE DURING ALL PHASES OF CONSTRUCTION, INCLUDING BUT NOT LIMITED TO, MAINTAINING EXISTING DITCHES OR CULVERTS FREE OF OBSTRUCTIONS AT ALL TIMES.
43. THE CONTRACTOR SHALL FULLY EXECUTE THE WORK DESCRIBED AS SHOWN IN THE CONSTRUCTION PLANS OR REASONABLY INFERABLE THEREFROM OR ASCERTAINABLE IN THE EXERCISE OF PROFESSIONAL EFFORTS (AS HEREINAFTER DEFINED) AS NECESSARY TO PRODUCE THE RESULTS INTENDED BY THE CONSTRUCTION PLANS. EXCEPT AS SPECIFICALLY INDICATED IN THE CONSTRUCTION PLANS TO BE THE RESPONSIBILITY OF OTHERS. AS USED HEREIN, THE TERM "PROFESSIONAL EFFORTS" MEANS THAT LEVEL OF SKILL AND CARE ORDINARILY EXERCISED BY EXPERIENCED CONTRACTORS AND CONSTRUCTION MANAGERS COMPARABLE TO CONTRACTOR ENGAGING IN INSTITUTIONAL AND COMMERCIAL PROJECTS SIMILAR IN SIZE AND COMPLEXITY TO THE PROJECT IN MAJOR UNITED STATES URBAN AREAS, WHEN PERFORMING DUTIES, RESPONSIBILITIES AND OBLIGATIONS COMPARABLE TO THOSE UNDER THE CONTRACT DOCUMENTS.

EROSION CONTROL NOTES:

1. LAND DISTURBING ACTIVITIES SHALL NOT COMMENCE UNTIL APPROVAL TO DO SO HAS BEEN RECEIVED BY THE GOVERNING AUTHORITIES, PERMITS ARE OBTAINED, AND ALL EROSION CONTROL MEASURES ARE IN PLACE.
2. CONTRACTOR SHALL COMPLY WITH ALL STATE AND LOCAL ORDINANCES THAT APPLY.
3. THE GENERAL CONTRACTOR (AND ALL SUBCONTRACTORS INVOLVED WITH ANY CONSTRUCTION ACTIVITIES RELATED TO EARTHWORK, EROSION CONTROL, ETC. OR WHICH UTILIZE POSSIBLE POLLUTANTS AS DEFINED IN THE TPDES GENERAL PERMIT) SHALL REVIEW AND ADHERE TO THE STORM WATER POLLUTION PREVENTION PLAN (SWPPP) FOR THE PROJECT, AS WELL AS ALL THE TCEQ REQUIREMENTS SET FORTH IN THE TPDES GENERAL PERMIT.
4. THIS EROSION CONTROL PLAN IS A SUPPLEMENT TO THE SWPPP PREPARED BY OTHERS. REFER TO THE SWPPP FOR ADDITIONAL REQUIREMENTS.
5. ALL WASH WATER SHALL BE DISPOSED OF IN A MANNER THAT PREVENTS CONTACT BETWEEN WASH WATER POLLUTANTS AND STORM RUNOFF DISCHARGED FROM THIS SITE.
6. OIL AND GREASE ABSORBING MATERIALS SHALL BE READILY AVAILABLE ON-SITE AND SHALL BE PROMPTLY USED TO CONTAIN AND/OR CLEAN UP ALL FUEL OR CHEMICAL SPILLS OR LEAKS.
7. DUST CONTROL SHALL BE ACCOMPLISHED BY WATERING DRY, EXPOSED AREAS ON A REGULAR BASIS, SPRAYING OF PETROLEUM BASED OR TOXIC LIQUIDS FOR THIS IS PROHIBITED.
8. DISTURBED AREAS ON THE SITE WHERE CONSTRUCTION ACTIVITY HAS CEASED FOR AT LEAST 14 DAYS SHALL BE TEMPORARILY PLANTED AND/OR SEEDED AND WATERED.
9. DISTURBED AREAS ON THE SITE WHERE CONSTRUCTION ACTIVITY HAS PERMANENTLY CEASED SHALL BE PERMANENTLY PLANTED AND/OR SEEDED WITHIN 14 DAYS.
10. PLANTING AND/OR SEEDING OF VEGETATED AREAS TO ACCOMPLISH STABILIZATION SHALL BE PERFORMED IN ACCORDANCE WITH THE LANDSCAPING PLAN. AREAS BEYOND THE LIMITS OF THE LANDSCAPING PLAN (OR WHEN A LANDSCAPING PLAN DOES NOT EXIST) SHALL BE HYDROMULCHED WITH HIGHWAY MIX AND WATERED WITH TEMPORARY ABOVE GROUND IRRIGATION UNTIL THE VEGETATION IS ESTABLISHED.
11. ALL VEHICLES SHALL BE CLEANED AT THE CONSTRUCTION EXIT POINT(S) BEFORE LEAVING THE SITE.
12. ALL MATERIALS SPILLED, DROPPED, WASHED OR TRACKED ONTO ADJACENT ROADWAYS BY ANY VEHICLES EXITING THE SITE SHALL BE CLEANED OR REMOVED IMMEDIATELY.
13. THE CONTRACTOR SHALL REMOVE ALL ACCUMULATED SILT IN ANY STORM SEWER INLETS AND PIPES, AND ALONG SILT FENCES, WITHIN 48 HOURS AFTER INSPECTION OF DEVICES REVEALS THE PRESENCE OF EXCESS SILTATION.
14. SILT FENCES SHALL BE PLACED AROUND ANY STOCKPILES USED ON THE SITE. STONE OVERFLOW POINTS SHALL BE ADDED AT ALL LOW POINTS ALONG SILT FENCING.
15. ADDITIONAL EROSION CONTROL MEASURES MAY BE IMPLEMENTED BY THE CONTRACTOR AT HIS DISCRETION AT NO ADDITIONAL EXPENSE TO THE OWNER, THE ADDITION OR DELETION OF ANY EROSION CONTROL MEASURE MAY REQUIRE THAT THE SWPPP BE MODIFIED IN ACCORDANCE WITH THE TCEQ'S TPDES GENERAL PERMIT GUIDELINES.
16. ALL TEMPORARY EROSION CONTROL DEVICES (SILT FENCE, ETC.) SHALL BE REMOVED AND PROPERLY DISPOSED OF OFF SITE WITHIN THIRTY DAYS AFTER STABILIZATION OF ALL DISTURBED SURFACES IS COMPLETE.
17. THE CONTRACTOR SHALL ASSUME LIABILITY FOR DAMAGE TO ADJACENT PROPERTIES AND/OR PUBLIC RIGHT OF WAY RESULTING FROM FAILURE TO FULLY IMPLEMENT AND EXECUTE ALL EROSION CONTROL PROCEDURES SHOWN AND NOTED IN THESE PLANS AND IN THE SWPPP.
18. THE CONTRACTOR SHALL MODIFY THIS PLAN TO SHOW LOCATIONS OF TEMPORARY WASH DOWN AREA, PORTABLE TOILETS, EQUIPMENT MAINTENANCE/REPAIR AREAS, STOCKPILE AREAS, FUEL STORAGE AREAS, ETC. AND POLLUTANT CONTROLS FOR EACH.
19. THE GENERAL CONTRACTOR, AS THE TCEQ DEFINED "OPERATOR," SHALL PERFORM ALL REQUIRED INSPECTIONS OF STORM WATER CONTROLS AND PRACTICES AT FREQUENCIES OUTLINED IN THE TPDES GENERAL PERMIT, AND SHALL FILL OUT APPROPRIATE INSPECTION FORMS (AS PROVIDED IN THE SWPPP).
20. IF DIRT OR ROCK IS EXPORTED FROM THIS SITE, OR IF DIRT OR ROCK IS IMPORTED FROM AN OFF SITE BORROW LOCATION, THE CONTRACTOR SHALL ASSUME RESPONSIBILITY FOR COMPLIANCE WITH ALL TCEQ STORM WATER REQUIREMENTS FOR THE REMOTE SITE. THE CONTRACTOR SHALL FURNISH THE OWNER WITH A COPY OF THE WRITTEN AGREEMENT WITH THE LANDOWNER OF THE REMOTE SITE INDICATING PERMITTING AND EROSION CONTROL MEASURES WILL BE IMPLEMENTED AND MAINTAINED.
21. THE CONTRACTOR SHALL BE RESPONSIBLE FOR REESTABLISHING VEGETATION IN ALL DISTURBED AREAS WHETHER SHOWN IN THIS PLAN SET OR NOT. VEGETATION SHALL BE REESTABLISHED IN ACCORDANCE WITH THE STANDARDS OF THE GOVERNING MUNICIPALITY.
22. CONTRACTOR TO MAINTAIN EXISTING DRAINAGE PATTERNS DURING CONSTRUCTION UNTIL SUCH TIME THAT THE PROPOSED DRAINAGE INFRASTRUCTURE SHOWN IN THESE CONSTRUCTION PLANS IS INSTALLED AND OPERATIONAL.

PAVING NOTES

1. THE CONTRACTOR SHALL BE RESPONSIBLE FOR THE COST OF OF PASSING FIELD DENSITY TESTS ON THE STABILIZED SUBGRADE FOR SITE PAVING EQUAL TO THE RATIO OF 1 PER 5,000 SQUARE FEET OF PAVEMENT (AND ALL FAILING DENSITY TESTS AND REQUIRED MOISTURE DENSITY CURVES). ADDITIONAL FIELD DENSITY TESTS MAY BE REQUIRED FOR FOUNDATIONS. REFER TO STRUCTURAL PLANS AND SPECIFICATIONS FOR SUCH. IN ADDITION, THE CONTRACTOR SHALL PROVIDE THE OWNER TEN (10) PASSING SITE PAVEMENT CORES FOR THE OWNERS USE IN THE OWNER'S TESTING FOR THICKNESS AND COMPRESSIVE STRENGTH. CORE LOCATIONS TO BE DESIGNATED BY THE OWNER. CONTRACTOR SHALL PATCH CORE HOLES AND FINISH WITH LIKE AND MATCHING MATERIALS. CONTRACTOR SHALL BE RESPONSIBLE FOR ANY ADDITIONAL TESTING COSTS SHOULD THE ABOVE TESTS FAIL MINIMUM CRITERIA AS ESTABLISHED BY NCTCOG. ANY NON-CONFORMING PAVING SHALL BE REPLACED OR RESOLVED IN ACCORDANCE WITH NCTCOG SPECIFICATIONS AND THESE CONSTRUCTION PLANS.
2. ALL EARTHWORK AND SUBGRADE PREPARATION SHALL BE IN ACCORDANCE WITH THE GEOTECHNICAL INVESTIGATION AND REPORT FOR THIS PROJECT AND THOSE RECOMMENDATIONS LISTED WITHIN THE REPORT. REFER TO THIS REPORT FOR ALL EARTHWORK AND RELATED ITEMS. REFER TO STRUCTURAL FOR BUILDING PREP. THE REPORT REFERENCES AGENCY/INDUSTRY STANDARDS. IN THE EVENT THAT THERE IS A QUESTION OR DISPUTE BETWEEN GOVERNING SPECIFICATIONS, THE MOST STRINGENT SHALL APPLY SUCH THAT THE OWNER RECEIVES THE MOST ADVANTAGEOUS FIN

GENERAL NOTES FOR SUBDIVISIONS AND SITE DEVELOPMENT PLANS

REVISED July 22, 2024
CITY CONTACTS:
ENGINEERING MAIN LINE: 512-528-2721;PLANNING DEPARTMENT:512-528-2750 ; PUBLIC WORKS MAIN LINE:512-259-2640; STORMWATER INSPECTIONS: 512-285-0055
UTILITIES MAIN LINE: 512-259-1142; UTILITIES ON-CALL: 512-690-4760;
PEC CONTACTS:
PUBLIC SAFETY LINE: 1-888-343-7702; CUSTOMER OUTAGE LINE:1-800-396-9037

GENERAL:

1. CONTRACTORS SHALL HAVE AN APPROVED SET OF PLANS WITH APPROVED REVISIONS ON SITE AT ALL TIMES. FAILURE TO HAVE APPROVED PLANS ON SITE MAY RESULT IN ISSUANCE OF WORK STOPPAGE.
2. CONTACT 811 SYSTEM FOR EXISTING WATER AND WASTEWATER LOCATIONS 48 HOURS PRIOR TO CONSTRUCTION.
   a. **REFRESH ALL LOCATES *BEFORE* 14 DAYS –** LOCATE REFRESH REQUESTS MUST INCLUDE A COPY OF YOUR 811 TICKET. TEXAS PIPELINE DAMAGE PREVENTION LAWS REQUIRE THAT A LOCATE REFRESH REQUEST BE SUBMITTED BEFORE 14 DAYS, OR IF LOCATION MARKERS ARE NO LONGER VISIBLE.
   b. **REPORT PIPELINE DAMAGE IMMEDIATELY –** IF YOU WITNESS OR EXPERIENCE PIPELINE EXCAVATION DAMAGE, PLEASE CONTACT THE CITY OF LEANDER BY PHONE AT 512-259- 2640.
3. THE CONTRACTOR SHALL CONTACT THE CITY INSPECTOR 48 HOURS BEFORE:
   a. BEGINNING EACH PHASE OF CONSTRUCTION. CONTACT ASSIGNED CITY INSPECTOR.
   b. ANY TESTING. CONTRACTOR SHALL PROVIDE QUALITY TESTING FOR ALL INFRASTRUCTURES TO BE ACCEPTED AND MAINTAINED BY THE CITY OF LEANDER AFTER COMPLETION.
   c. PROOF ROLLING SUB-GRADE AND EVERY LIFT OF ROADWAY EMBANKMENT, IN-PLACE DENSITY TESTING OF EVERY BASE COURSE, AND ASPHALT CORES. ALL OF THIS TESTING MUST BE WITNESSED BY A CITY OF LEANDER REPRESENTATIVE.
   d. CONNECTING TO THE EXISTING WATER LINES.
   e. THE INSTALLATION OF ANY DRAINAGE FACILITY WITHIN A DRAINAGE EASEMENT OR STREET ROW. THE METHOD OF PLACEMENT AND COMPACTION OF BACKFILL IN THE CITY'S ROW MUST BE APPROVED PRIOR TO THE START OF BACKFILL OPERATIONS.
4. ALL RESPONSIBILITILY FOR THE ACCURACY OF THESE PLANS REMAINS WITH THE ENGINEER OF RECORD WHO PREPARED THEM. IN REVIEWING THESE PLANS, THE CITY MUST RELY ON THE ADEQUACY OF THE WORK OF THE ENGINEER OF RECORD.
5. **EXCESS SOIL SHALL BE REMOVED AT THE CONTRACTOR'S EXPENSE. NOTIFY THE CITY OF LEANDER IF THE DISPOSAL SITE IS INSIDE THE CITY'S JURISDICTIONAL BOUNDARIES.**
6. BURNING IS PROHIBITED.
7. NO WORK IS TO BE PERFORMED BETWEEN THE HOURS OF 9:00 P.M. AND 7:00 A.M. OR WEEKENDS. THE CITY INSPECTOR RESERVES THE RIGHT TO REQUIRE THE CONTRACTOR TO UNCOVER ALL WORK PERFORMED WITHOUT INSPECTION.
8. CONTACT THE CITY INSPECTOR 4 DAYS PRIOR TO WORK FOR APPROVAL TO SCHEDULE ANY INSPECTIONS ON WEEKENDS OR CITY HOLIDAYS.
9. NO BLASTING IS ALLOWED.
10. ANY CHANGES OR REVISIONS TO THESE PLANS MUST FIRST BE SUBMITTED TO THE CITY BY THE DESIGN ENGINEER FOR REVIEW AND WRITTEN APPROVAL PRIOR TO CONSTRUCTION OF THE REVISION. ALL CHANGES AND REVISIONS SHALL USE REVISION CLOUDS TO HIGHLIGHT ALL REVISIONS AND CHANGES WITH EACH SUBMITTAL. REVISION TRIANGLE MARKERS AND NUMBERS SHALL BE USED TO MARK REVISIONS. ALL CLOUDS AND TRIANGLE MARKERS FROM PREVIOUS REVISIONS MUST BE REMOVED. REVISION INFORMATION SHALL BE UPDATED ON COVER SHEET AND AFFECTED PLAN SHEET TITLE BLOCK.
11. THE CONTRACTOR AND ENGINEER SHALL KEEP ACCURATE RECORDS OF ALL CONSTRUCTION THAT DEVIATES FROM THE PLANS. THE ENGINEER SHALL FURNISH THE CITY OF LEANDER ACCURATE "RECORD DRAWINGS" FOLLOWING THE COMPLETION OF ALL CONSTRUCTION. THESE "RECORD DRAWINGS" SHALL MEET THE SATISFACTION OF THE ENGINEERING DEPARTMENTS PRIOR TO FINAL ACCEPTANCE.
12. THE CONTRACTOR WILL REIMBURSE THE CITY FOR ALL REPAIR AND/OR COST INCURRED AS A RESULT OF ANY DAMAGE TO ANY PUBLIC INFRASTRUCTURE WITHIN CITY EASEMENT OR PUBLIC RIGHT-OF-WAY, REGARDLESS OF THESE PLANS.
13. WHEN CONSTRUCTION IS BEING CARRIED OUT WITHIN EASEMENTS, THE CONTRACTOR SHALL CONFINE HIS WORK TO WITHIN THE PERMANENT AND TEMPORARY EASEMENTS. PRIOR TO ACCEPTANCE, THE CONTRACTOR SHALL BE RESPONSIBLE FOR REMOVING ALL TRASH AND DEBRIS WITHIN THE PERMANENT EASEMENTS. CLEANUP SHALL BE TO THE SATISFACTION OF THE ENGINEER OF RECORD AND CITY.
14. CONTRACTOR TO LOCATE, PROTECT, AND MAINTAIN BENCHMARKS, MONUMENTS, CONTROL POINTS AND PROJECT ENGINEERING REFERENCE POINTS. RE-ESTABLISH DISTURBED OR DESTROYED ITEMS BY REGISTERED PROFESSIONAL LAND SURVEYOR IN THE STATE OF TEXAS, AT NO ADDITIONAL COST TO THE PROPERTY OWNER.
15. ALL CONSTRUCTION OPERATIONS SHALL BE ACCOMPLISHED IN ACCORDANCE WITH APPLICABLE REGULATIONS OF THE U.S. OCCUPATIONAL SAFETY AND HEALTH ADMINISTRATION (OSHA). OSHA STANDARDS MAY BE PURCHASED FROM THE GOVERNMENT PRINTING OFFICE; INFORMATION AND RELATED REFERENCE MATERIALS MAY BE PURCHASED FROM OSHA, 1033 LA POSADA DR. SUITE 375, AUSTIN, TEXAS 78752-3832.
16. ALL MANHOLE FRAMES/COVERS AND WATERVALVE/METER BOXES MUST BE ADJUSTED TO FINISHED GRADE AT THE OWNER'S EXPENSE BY THE CONTRACTOR FOR CITY CONSTRUCTION INSPECTOR INSPECTION. ALL UTILITY ADJUSTMENTS SHALL BE COMPLETED PRIOR TO FINAL PAVING. CONTRACTOR SHALL BACKFILL AROUND MANHOLES AND VALVE BOXES WITH CLASS A CONCRETE.
17. ALL MATERIALS AND CONSTRUCTION PROCEDURES WITHIN THE SCOPE OF THIS CONTRACT WHERE NOT SPECIFICALLY COVERED IN THE PROJECT SPECIFICATIONS SHALL CONFORM TO ALL CITY OF LEANDER DETAILS AND CITY OF AUSTIN STANDARD SPECIFICATIONS.
18. PROJECT SPECIFICATIONS TAKE PRECEDENCE OVER PLANS AND SPECIAL CONDITIONS GOVERN OVER TECHNICAL SPECIFICATIONS.
19. THE CONTRACTOR SHALL BE RESPONSIBLE FOR ACQUIRING ALL PERMITS, TESTS, APPROVALS AND ACCEPTANCES REQUIRED TO COMPLETE CONSTRUCTION OF THIS PROJECT.
20. THE CONTRACTOR MUST OBTAIN A CONSTRUCTION WATER METER FOR ALL WATER USED DURING CONSTRUCTION. A COPY OF THIS PERMIT MUST BE CARRIED AT ALL TIMES BY ALL WHO USE WATER.
21. THE CONTRACTOR SHALL BE RESPONSIBLE FOR KEEPING ROADS AND DRIVES ADJACENT TO AND NEAR THE SITE FREE FROM SOIL, SEDIMENT AND DEBRIS. CONTRACTOR WILL NOT REMOVE SOIL, SEDIMENT OR DEBRIS FROM ANY AREA OR VEHICLE BY MEANS OF WATER. ONLY SHOVELING AND SWEEPING WILL BE ALLOWED. THE CONTRACTOR WILL BE RESPONSIBLE FOR DUST CONTROL FROM THE SITE. THE CONTRACTOR SHALL KEEP THE SITE AREA CLEAN AND MAINTAINED AT ALL TIMES, TO THE SATISFACTION OF THE CITY. THE SUBDIVISION (OR SITE) WILL NOT BE ACCEPTED (OR CERTIFICATE OF OCCUPANCY ISSUED) UNTIL THE SITE HAS BEEN CLEANED TO THE SATISFACTION OF THE CITY.

CONSTRUCTION SEQUENCING NOTES

NOTE: BELOW IS GENERAL SEQUENCE OF CONSTRUCTION. THE ENGINEER OF RECORD SHALL UPDATE BELOW WITH NOTES SPECIFIC TO THE PROJECT.

1. REACH OUT TO THE CITY FOR PRE-CONSTRUCTION MEETING AND CONSTRUCTION PERMIT.
2. SET-UP E/S CONTROLS AND TREE PROTECTION AND REACH OUT TO CITY FOR INSPECTION.
3. SET UP TEMPORARY TRAFFIC CONTROLS.
4. CONSTRUCT THE DRAINAGE PONDS AND STORM WATER FEATURES.
5. START UTILITY, ROAD, GRADING, FRANCHISE UTILITY AND ALL NECESSARY INFRASTRUCTURE CONSTRUCTION. [NOTE: PLEASE UPDATE AS PER THE PROJECT]
6. REQUEST FINAL WALKTHROUGH AND CONDUCT WALKTHROUGH WITH ENGINEER OF RECORD AND CITY DEPARTMENT.
7. ENGINEER OF RECORD IS RESPONSIBLE TO PREPARE AND SUBMIT CLOSEOUT DOCUMENTS FOR PROJECT CLOSEOUT.

EROSION CONTROL NOTES

1. THE CONTRACTOR IS REQUIRED TO INSPECT THE CONTROLS AND FENCES AT WEEKLY INTERVALS AND AFTER SIGNIFICANT RAINFALL EVENTS TO ENSURE THAT THEY ARE FUNCTIONING PROPERLY. THE CONTRACTOR IS RESPONSIBLE FOR MAINTENANCE OF CONTROLS AND FENCES AND SHALL IMMEDIATELY MAKE ANY NECESSARY REPAIRS TO DAMAGED AREAS. SILT ACCUMULATION AT CONTROLS MUST BE REMOVED WHEN THE DEPTH REACHES SIX (6) INCHES.
2. THE TEMPORARY SPOILS DISPOSAL SITE IS TO BE SHOWN IN THE EROSION CONTROL MAP.
3. ANY ON-SITE SPOILS DISPOSAL SHALL BE REMOVED PRIOR TO ACCEPTANCE UNLESS SPECIFICALLY SHOWN ON THE PLANS. THE DEPTH OF SPOIL SHALL NOT EXCEED 10 FEET IN ANY AREA.
4. ALL AREAS DISTURBED OR EXPOSED DURING CONSTRUCTION SHALL BE RESTORED WITH A MINIMUM OF 6 INCHES OF TOPSOIL AND COMPOST BLEND. TOPSOIL ON SINGLE FAMILY LOTS MAY BE INSTALLED WITH HOME CONSTRUCTION. THE TOPSOIL AND COMPOST BLEND SHALL CONSIST OF 75% TOPSOIL AND 25% COMPOST.
5. SEEDING FOR REESTABLISHING VEGETATION SHALL COMPLY WITH THE AUSTIN GROW GREEN GUIDE OR WILLIAMSON COUNTY'S PROTOCOL FOR SUSTAINABLE ROADSIDES (SPEC 164--WC001 SEEDING FOR EROSION CONTROL). RESEEDING VARIETIES OF BERMUDA SHALL NOT BE USED.
6. STABILIZED CONSTRUCTION ENTRANCE IS REQUIRED AT ALL POINTS WHERE CONSTRUCTION TRAFFIC IS EXITING THE PROJECT ONTO EXISTING PAVEMENT. LINEAR CONSTRUCTION PROJECTS MAY REQUIRE SPECIAL CONSIDERATION. ROADWAYS SHALL REMAIN CLEAR OF SILT AND MUD.
7. TEMPORARY STOP SIGNS SHOULD BE INSTALLED AT ALL CONSTRUCTION ENTRANCES WHERE A STOP CONDITION DOES NOT ALREADY EXIST.
8. IN THE EVENT OF INCLEMENT WEATHER THAT MAY RESULT IN A FLOODING SITUATION, THE CONTRACTOR SHALL REMOVE INLET PROTECTION MEASURES UNTIL SUCH TIME AS THE WEATHER EVENT HAS PASSED.

WATER AND WASTEWATER GENERAL NOTES

1. ALL NEWLY INSTALLED PIPES AND RELATED PRODUCTS MUST CONFORM TO AMERICAN NATIONAL STANDARDS INSTITUTE/NATIONAL SANITATION FOUNDATION (ANSI/NSF) STANDARD 61 AND MUST BE CERTIFIED BY AND ORGANIZATION ACCREDITED BY ANSI.
2. ALL WATER SERVICE, WASTEWATER SERVICE AND VALVE LOCATIONS SHALL BE APPROPRIATELY STAMPED AS FOLLOWS:
   WATER SERVICE "W" ON TOP OF CURB WASTEWATER SERVICE "S" ON TOP OF CURB VALVE "V" ON TOP OF CURB
3. OPEN UTILITIES SHALL NOT BE PERMITTED ACROSS THE EXISTING PAVED SURFACES. WATER AND WASTEWATER LINES ACROSS THE EXISTING PAVED SURFACES SHALL BE BORED AND INSTALLED IN STEEL ENCASEMENT PIPES. BELL RESTRAINTS SHALL BE PROVIDED AT JOINTS.
4. INTERIOR SURFACES OF ALL DUCTILE IRON POTABLE OR RECLAIMED WATER PIPE SHALL BE CEMENT-MORTAR LINED AND SEAL COATED AS REQUIRED BY AWWA C104.
5. SAND, AS DESCRIBED IN AUSTIN SPECIFICATION ITEM 510 PIPE, SHALL NOT BE USED AS BEDDING FOR WATER AND WASTEWATER LINES. ACCEPTABLE BEDDING MATERIALS ARE PIPE BEDDING STONE, PEA GRAVEL AND IN LIEU OF SAND, A NATURALLY OCCURRING OR MANUFACTURED STONE MATERIAL CONFORMING TO ASTM C33 FOR STONE QUALITY AND MEETING THE FOLLOWING GRADATION SPECIFICATION:

SIEVE SIZE	PERCENT RETAINED BY WEIGHT
1/2"	0
3/8"	0-2
#4	40-85
#10	95-100

6. DENSITY TESTING FOR TRENCH BACKFILL SHALL BE DONE IN MAXIMUM 12" LIFTS.

WATER

1. SAMPLING TAPS SHALL BE BROUGHT UP TO 3 FEET ABOVE GRADE AND SHALL BE EASILY ACCESSIBLE FOR CITY PERSONNEL. AT THE CONTRACTORS' REQUEST, AND IN HIS PRESENCE, SAMPLES FOR BACTERIOLOGICAL TESTING WILL BE COLLECTED BY THE CITY OF LEANDER NOT LESS THAN 24 HOURS AFTER THE TREATED LINE HAS BEEN FLUSHED OF THE CONCENTRATED CHLORINE SOLUTION AND CHARGED WITH WATER APPROVED BY THE CITY.
2. CITY PERSONNEL WILL OPERATE OR AUTHORIZE THE CONTRACTOR TO OPERATE ALL WATER VALVES THAT WILL PASS THROUGH THE CITY'S POTABLE WATER, THE CONTRACTOR MAY BE FINED $500 OR MORE, INCLUDING ADDITIONAL THEFT OF WATER FINES, IF A WATER VALVE IS OPERATED IN AN UNAUTHORIZED MANNER, REGARDLESS OF WHO OPERATED THE VALVE.
3. THE CONTRACTOR IS HEREBY NOTIFIED THAT CONNECTING TO, SHUTTING DOWN, OR TERMINATING EXISTING UTILITY LINES MAY HAVE TO OCCUR AT OFF-PEAK HOURS. SUCH HOURS ARE USUALLY OUTSIDE NORMAL WORKING HOURS AND POSSIBLY BETWEEN 12 AM AND 6 AM AFTER COORDINATING WITH CITY CONSTRUCTION INSPECTORS AND INFORMING AFFECTED PROPERTIES.
4. PRESSURE TAPS OR HOT TAPS SHALL BE IN ACCORDANCE WITH CITY OF LEANDER STANDARD SPECIFICATIONS. THE CONTRACTOR SHALL PERFORM ALL EXCAVATION AND SHALL FURNISH, INSTALL AND AIR TEST THE SLEEVE AND VALVE. A CITY OF LEANDER INSPECTOR MUST BE PRESENT WHEN THE CONTRACTOR MAKES A TAP, AND/OR ASSOCIATED TESTS. A MINIMUM OF TWO (2) WORKING DAYS NOTICE IS REQUIRED. "SIZE ON SIZE" TAPS SHALL NOT BE PERMITTED UNLESS MADE BY THE USE OF AN APPROVED FULL-CIRCLE GASKETED TAPPING SLEEVE. CONCRETE THRUST BLOCKS SHALL BE PLACED BEHIND AND UNDER ALL TAP SLEEVES A MINIMUM OF 24 HOURS PRIOR TO THE BRANCH BEING PLACED INTO SERVICE. THRUST BLOCKS SHALL BE INSPECTED PRIOR TO BACKFILL.
5. FIRE HYDRANTS ON MAINS UNDER CONSTRUCTION SHALL BE SECURELY WRAPPED WITH A BLACK POLY WRAP BAG AND TAPED INTO PLACE. THE POLY WRAP SHALL BE REMOVED WHEN THE MAINS ARE ACCEPTED AND PLACED INTO SERVICE.
6. THRUST BLOCKS OR RESTRAINTS SHALL BE IN ACCORDANCE WITH THE CITY OF LEANDER STANDARD SPECIFICATIONS AND REQUIRED AT ALL FITTINGS PER DETAIL OR MANUFACTURER'S RECOMMENDATION. ALL FITTINGS SHALL HAVE BOTH THRUST BLOCKS AND RESTRAINTS.
7. ALL DEAD END WATER MAINS SHALL HAVE "FIRE HYDRANT ASSEMBLY" OR "BLOW-OFF VALVE AND THRUST BLOCK" OR "BLOW-OFF VALVE AND THRUST RESTRAINTS". THRUST RESTRAINTS SHALL BE INSTALLED ON THE MINIMUM LAST THREE PIPE LENGTHS (STANDARD 20' LAYING LENGTH). ADDITIONALL THRUST RESTRAINTS MAY BE REQUIRED BASED UPON THE MANUFACTURERS RECOMMENDATION AND/OR ENGINEER'S DESIGN.
8. PIPE MATERIAL FOR PUBLIC WATER MAINS SHALL BE PVC (AWWA C900-DR14 MIN. 305 PSI PRESSURE RATING). WATER SERVICES (2" OR LESS) SHALL BE POLYETHYLENE TUBING (BLACK, 200PSI, AND SDR-(9)). COPPER PIPES AND FITTINGS ARE NOT ALLOWED IN THE PUBLIC RIGHT OF WAY. ALL PLASTIC PIPES FOR USE IN PUBLIC WATER SYSTEMS MUST BEAR THE NATIONAL SANITATION FOUNDATION SEAL OF APPROVAL (NSF-PW).
9. ALL FIRE HYDRANT LEADS SHALL BE DUCTILE IRON PIPE (AWWA C115/C151 PRESSURE CLASS 350).
10. ALL IRON PIPE AND FITTINGS SHALL BE WRAPPED WITH MINIMUM 8-MIL POLYETHYLENE.
11. LINE FLUSHING OR ANY ACTIVITY USING A LARGE QUANTITY OF WATER MUST BE COORDINATED WITH THE PUBLIC WORKS DEPARTMENT.
12. ALL WATER METER BOXES SHALL BE:
   a. SINGLE, 1" METER AND BELOW DFW37F-12-1CA, OR EQUAL
   b. DUAL, 1" METERS AND BELOW DFW39F-12-1CA, OR EQUAL
   c. 1.5" SINGLE METER DFW65C-14-1CA, OR EQUAL
   d. 2" SINGLE METER DFW1730F-12-1CA, OR EQUAL
13. ALL WATER VALVE COVERS ARE TO BE PAINTED BLUE.

WASTEWATER

1. CURVILINEAR WASTEWATER DESIGN LAYOUT IS NOT PERMITTED.
2. MANDREL TESTING SHALL BE CONDUCTED AFTER THE FINAL BACKFILL HAS BEEN IN PLACE AT LEAST 30 DAYS.
3. MANHOLES SHALL BE COATED PER CITY OF AUSTIN SPL WW-511 (RAVEN 405 OR SPRAYWALL). PENETRATIONS TO EXISTING WASTEWATER MANHOLES REQUIRE THE CONTRACTOR TO RECOAT THE ENTIRE MANHOLE IN ACCORDANCE WITH CITY OF AUSTIN STANDARD SPECIFICATIONS SECTION NO. 506.5.
4. RECLAIMED AND RECYCLED WATER LINE SHALL BE CONSTRUCTED OF "PURPLE PIPE." ALL RECLAIMED AND RECYCLED WATER VALVE COVERS SHALL BE SQUARE AND PAINTED PURPLE.
5. FORCE MAIN PIPES NEED TO HAVE SWEEPING WYES FOR JOINTS.

STREET AND DRAINAGE NOTES

1. THE CITY OF LEANDER HAS NOT REVIEWED THESE PLANS FOR COMPLIANCE WITH THE AMERICANS WITH DISABILITIES ACT (ADA). IT IS THE RESPONSIBILITY OF THE OWNER TO PROVIDE COMPLIANCE WITH ALL LEGISTATION RELATED TO ACCESSIBLITY WITHIN THE LIMITS OF CONSTRUCTION SHOWN IN THESE PLANS. ALL SIDEWALKS SHALL COMPLY WITH THE AMERICANS WITH DISABILITIES ACT AND TEXAS ACCESSIBILITY STANDARS (TAS).
2. BACKFILL BEHIND THE CURB SHALL BE COMPACTED TO OBTAIN A MINIMUM OF 95% MAXIMUM DENSITY TO WITHIN 6" OF TOP OF CURB. MATERIAL USED SHALL BE PRIMARILY GRANULAR WITH NO ROCKS LARGER THAN 6" IN THE GREATEST DIMENSION. THE REMAINING 6" SHALL BE CLEAN TOPSOIL FREE FROM ALL CLODS AND SUITABLE FOR SUSTAINING PLANT LIFE.
3. A MINIMUM OF 6" OF TOPSOIL SHALL BE PLACED BETWEEN THE CURB AND RIGHT-OF-WAY AND IN ALL DRAINAGE CHANNELS EXCEPT CHANNELS CUT IN STABLE ROCK.
4. DEPTH OF COVER FOR ALL CROSSINGS UNDER PAVEMENT, INCLUDING GAS, ELECTRIC TELEPHONE, CABLE TV, ETC., SHALL BE A MINIMUM OF 36" BELOW SUBGRADE.
5. STREET RIGHT-OF-WAY SHALL BE GRADED AT A SLOPE OF X" PER FOOT TOWARD THE CURB UNLESS OTHERWISE INDICATED.
6. ALL DRAINAGE PIPE IN PUBLIC RIGHT OF WAY OR EASEMENTS SHALL BE REINFORCED CONCRETE PIPE MINIMUM CLASS III OF TONGUE AND GROOVE OR 0-RING JOINT DESIGN. CORRUGATED METAL PIPE IS NOT ALLOWED IN PUBLIC RIGHT OR WAY OR EASEMENTS.
7. THE CONTRACTOR MUST PROVIDE A PNEUMATIC TRUCK PER TXDOT SPEC FOR PROOF ROLLING.
8. ALL STRIPING, WITH THE EXCEPTION OF STOP BARS, CROSS WALKS, WORDS AND ARROWS, IS TO BE TYPE II (WATER BASED). STOP BARS, CROSS WALKS, WORDS AND ARROWS REQUIRE TYPE I THERMOPLASTIC.
9. MANHOLE FRAMES, COVERS, VALVES, CLEAN-OUTS, ETC. SHALL BE RAISED TO GRADE PRIOR TO FINAL PAVEMENT CONSTRUCTION.
10. A STOP BAR SHALL BE PLACED AT ALL STOP SIGN LOCATIONS.
11. THE GEOTECHNICAL INVESTIGATION INFORMATION AND PAVEMENT RECOMMENDATIONS WERE PROVIDED BY SCI ENGINEERING INC REPORT NUMBER 2025-1533.10 DATED 10/2025. PAVEMENT RECOMMENDATIONS ARE AS FOLLOWS:
   a. LIGHT DUTY (PARKING AREAS): 100,000 18-KIP ESAL. 4" AGGREGATE BASE. 5" PORTLAND CEMENT.
   b. MEDIUM DUTY (DRIVE LANES): 300,000 18-KIP ESAL. 4" AGGREGATE BASE. 6" PORTLAND CEMENT.
12. A TRAFFIC CONTROL PLAN, IN ACCORDANCE WITH THE TEXAS MANUAL ON UNIFORM TRAFFIC CONTROL DEVICES, CITY OF AUSTIN TRANSPORTATION CRITERIA MANUAL, CITY OF LEANDER STANDARD DETAILS AND TEXAS DEPARTMENT OF TRANSPORTATION CRITERIA, SHALL BE SUBMITTED TO THE CITY OF LEANDER FOR REVIEW AND APPROVAL PRIOR TO ANY PARTIAL OR COMPLETE ROADWAY CLOSURES. TRAFFIC CONTROL PLANS MUST BE SITE SPECIFIC AND SIGNED AND SEALED BY A REGISTERED PROFESSIONAL ENGINEER.
13. ALL LANE CLOSURES SHALL OCCUR ONLY BETWEEN THE HOURS OF 9 AM AND 4 PM UNLESS OTHERWISE NOTED ON THE PLANS. ANY NIGHT TIME LANE CLOSURES REQUIRE APPROVAL OF THE CITY ENGINEER AND SHALL OCCUR BETWEEN THE HOURS OF 8 PM AND 6 AM. LANE CLOSURES OBSERVED BY THE CITY DURING PEAK HOURS OF 6 AM TO 9 AM OR 4 PM TO 8 PM WILL BE SUBJECT TO A FINE AND/OR SUBSEQUENT ISSUANCE OF WORK STOPPAGE.
14. TEMPORARY ROCK CRUSHING IS NOT ALLOWED. ALL SOURCES OF FLEXIBLE BASE MATERIAL ARE REQUIRED TO BE APPROVED BY THE CITY. PRIOR TO BASE PLACEMENT ALL CURRENT TRIAXIAL TEST REPORTS FOR PROPOSED STOCK PILES ARE TO BE SUBMITTED TO THE CITY CONSTRUCTION INSPECTOR FOR REVIEW AND APPROVAL.
15. AT ROAD INTERSECTIONS THAT HAVE A VALLEY GUTTER, THE CROWN TO THE INTERSECTING ROAD WILL BE CULMINATED AT A DISTANCE OF 40 FEET FROM THE INTERSECTING CURB LINE UNLESS OTHERWISE NOTED.
16. NO PONDING OF WATER SHALL BE ALLOWED TO COLLECT ON OR NEAR THE INTERSECTION OF PRIVATE DRIVEWAYS AND PUBLIC STREETS. RECONSTRUCTION OF THE DRIVEWAY APPROACH SHALL BE AT THE CONTRACTOR'S EXPENSE.
17. ALL DRIVEWAY APPROACHES SHALL HAVE A UNIFORM TWO PERCENT SLOPE WITHIN THE PUBLIC RIGHT OF WAY UNLESS APPROVED IN WRITING BY THE ENGINEERING DEPARTMENT.
18. IMPROVEMENTS THAT INCLUDE RECONSTRUCTION OF AN EXISTING TYPE II DRIVEWAY SHALL BE DONE IN A MANNER WHICH RETAINS OPERATIONS OF NOT LESS THAN HALF OF THE DRIVEWAY TO REMAIN OPEN AT ALL TIMES. FULL CLOSURE OF SUCH DRIVEWAY CAN BE CONSIDERED WITH WRITTEN AUTHORIZATION OBTAINED BY THE CONTRACTOR FROM ALL PROPERTY OWNERS AND ACCESS EASEMENT RIGHT HOLDERS ALLOWING THE FULL CLOSURE OF THE DRIVEWAY.
19. CONTRACTOR MUST CLEAR FIVE (5) FEET BEYOND ALL PUBLIC RIGHT OF WAY TO PREVENT FUTURE VEGETATIVE GROWTH INTO THE SIDEWALK AREAS.
20. SLOPE OF NATURAL GROUND ADJACENT TO THE PUBLIC RIGHT OF WAY SHALL NOT EXCEED 3:1 SLOPE. IF A 3:1 SLOPE IS NOT POSSIBLE, SLOPE PROTECTION OR RETAINING WALL MUST BE SUBMITTED TO THE CITY FOR REVIEW AND APPROVAL PRIOR TO FINAL ACCEPTANCE.
21. THERE SHALL BE NO WATER, WASTEWATER OR DRAINAGE APPURTENANCES, INCLUDING BUT NOT LIMITED TO VALVES, FITTINGS, METERS, CLEAN-OUTS, MANHOLES, OR VAULTS IN ANY DRIVEWAY, SIDEWALK, TRAFFIC OR PEDESTRIAN AREA.
22. PUBLIC SIDEWALKS SHALL NOT USE CURB INLETS AS PARTIAL WALKING SURFACE. SIDEWALKS SHALL NOT USE TRAFFIC CONTROL BOXES, METERS, CHECK VALVE VAULTS, COMMUNICATION VAULTS, OR OTHER BURIED OR PARTIALLY BURIED INFRASTRUCTURE AS A VEHICULAR OR PEDESTRIAN SURFACE.
23. ALL WET UTILITIES SHALL BE INSTALLED AND ALL DENSITIES MUST HAVE PASSED INSPECTION(S) PRIOR TO THE INSTALLATION OF DRY UTILITIES.
24. DRY UTILITIES SHALL BE INSTALLED AFTER SUBGRADE IS CUT AND BEFORE THE FIRST COURSE OF BASE. NO TRENCHING COMPACTED BASE. IF NECESSARY DRY UTILITIES INSTALLED AFTER FIRST COURSE BASE SHALL BE BORED ACROSS THE FULL WIDTH OF THE PUBLIC RIGHT-OF-WAY.
25. A MINIMUM OF SEVEN (7) DAYS OF CURE TIME IS REQUIRED FOR HMAC PRIOR TO THE INTRODUCTION OF VEHICULAR TRAFFIC TO ALL STREETS.

GRADING NOTES

1. POSITIVE DRAINAGE SHALL BE MAINTAINED ON ALL SURFACE AREAS WITHIN THE SCOPE OF THIS PROJECT. CONTRACTOR SHOULD TAKE PRECAUTIONS NOT TO ALLOW ANY PONDING OF WATER.
2. THE CONTRACTOR SHALL CONSTRUCT EARTHEN EMBANKMENTS WITH SLOPES NO STEEPER THAN 3:1 AND COMPACT SOIL TO 95% OF MAXIMUM DENSITY IN ACCORDANCE WITH THE CITY OF AUSTIN STANDARD SPECIFICATIONS.
3. AREAS OF SOIL DISTURBANCE ARE LIMITED TO GRADING AND IMPROVEMENTS SHOWN. ALL OTHER AREAS WILL NOT BE DISTURBED.

BENCHMARK NOTES

BM NO. 1 ⅝" IRON ROD WITH CAP STAMPED "PROP. COR."
ELEVATION = 868.15' (NAD '83)

BM NO. 2 ⅝" IRON ROD WITH CAP STAMPED "JONES CARTER"
ELEVATION = 879.24' (NAD '83)

2/9/2026

STATE OF TEXAS
PATRICK C. FILSON
108577
LICENSED
PROFESSIONAL ENGINEER

SPARKLE PRESCHOOL

SRIKANTH NAGUNOORI

2345 BASE BURNER PATH
LEANDER, TX 78641

SPARKLE MONTESSORI ACADEMY

LOT 1A-R, BLOCK A
CITY OF LEANDER
WILLIAMSON COUNTY, TEXAS

REV:	DATE:	DESCRIPTION:

kirkman ENGINEERING
KIRKMAN ENGINEERING, LLC
1500 ARROW POINT DRIVE STE. 804
CEDAR PARK, TEXAS 78613
TEXAS FIRM NO. 15874

JOB NUMBER: NAG25001
ISSUE DATE: 2/9/2026

CITY OF LEANDER NOTES

SHEET: 3 OF 30

SD-25-0378

FILE PATH: K:\Jobs\NAG2501_Sparkle Leander\Drawings\02_ENGR\01 - Production\K:\Jobs\NAG2501_Sparkle Leander\Drawings\02_ENGR\01 - Production\C1.1 GENERAL NOTES_NAG2501
FILENAME: C1.1 GENERAL NOTES_NAG2501.dwg
PLOTTED BY: Prashanthi Gautam
PLOTTED DATE: 2/9/2026

LOT 1AA & LOT 1AB
REPLAT OF LOT 1A, BLOCK A OF THE
VALLEY VISTA EAST PHASE 1 AMENDED
BEING ALL OF LOT 1A, BLOCK A
VALLEY VISTA EAST PHASE 1
RECORDED UNDER
INSTRUMENT NUMBER 2022093740
WILLIAMSON COUNTY, TEXAS

PROJECT INFORMATION

OWNER: TESCH DEVELOPMENT & MANAGEMENT CO LLC
BOB TESCH

ADDRESS: 8970 CR 133
CELINA TX 75009

MOBILE: (512) 970-0530

OWNER: SPARKLE DAYCARE LLC
SRIKANTH NAGUNOORI

ADDRESS: 2345 BASE BURNER PATH
LEANDER, TX 78641

MOBILE: (408) 806-2464

ACREAGE: 4.248 ACRES

LOT 1AA: COMMERCIAL 2.499 ACRES

R.O.W. 0.038 ACRE

LOT 1AB: COMMERCIAL 1.684 ACRES

R.O.W. 0.027 ACRE

DATE: OCTOBER 21, 2025

SURVEYOR: LONE WOLF LAND SURVEYING, LLC
(MATTHEW LEE TAYLOR, R.P.L.S.)
PHONE: (512) 718-5868
MOBILE: (512) 718-5868

ENGINEER: KIRKMAN ENGINEERING, LLC
5200 STATE HIGHWAY 121
COLLEYVILLE TX 76034
(817) 488-4960
SHEA KIRKMAN, PE

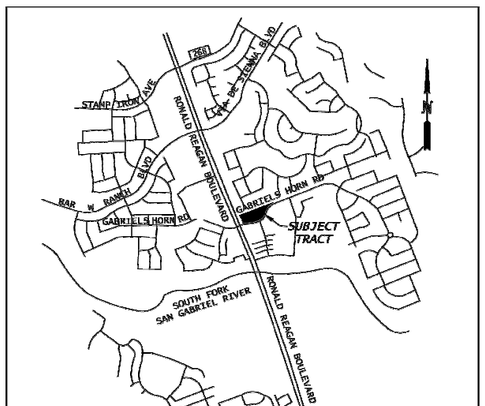

VICINITY MAP
1"=2000'

INDEX

SHEET 1: COVER SHEET

SHEET 2: SHORT FORM PLAT

SHEET 3: SIGNATURES AND PLAT NOTES

LONE WOLF
LAND SURVEYING, LLC
163 Cool Water Drive
Bastrop, TX 78602
512-718-5868, Firm #10194875
Lonewolflandsurveying.com

LOT 1AA & LOT 1AB
REPLAT OF LOT 1A, BLOCK A
OF THE VALLEY VISTA EAST PHASE 1 AMENDED
VALLEY VISTA EAST PHASE 1 RECORDED UNDER
INSTRUMENT NUMBER 2022093740

FILE: 2024-134_Gabriels Horn Rd Leander_sfp	
DATE: 10-07-2025	DRAWN BY: MLT
SCALE: 1" = 60'	FIELD CREW: MLT/JS
JOB#: 2024-134	

NO.	REVISION	BY	DATE

SPARKLE PRESCHOOL

SRIKANTH NAGUNOORI

2345 BASE BURNER PATH
LEANDER, TX 78641

SPARKLE MONTESSORI ACADEMY

LOT 1A-R, BLOCK A
CITY OF LEANDER
WILLIAMSON COUNTY, TEXAS

REV:	DATE:	DESCRIPTION:

kirkman ENGINEERING

KIRKMAN ENGINEERING, LLC
1500 ARROW POINT DRIVE STE. 804
CEDAR PARK, TEXAS 78613

TEXAS FIRM NO. 15874

JOB NUMBER: NAG25001

ISSUE DATE: 2/9/2026

FINAL PLAT I

SHEET: 4 OF 30

SD-25-0378

LOT 1AA & LOT 1AB
REPLAT OF LOT 1A, BLOCK A OF THE VALLEY VISTA EAST PHASE 1 AMENDED
BEING ALL OF LOT 1A, BLOCK A
VALLEY VISTA EAST PHASE 1
RECORDED UNDER
INSTRUMENT NUMBER 2022093740
WILLIAMSON COUNTY, TEXAS

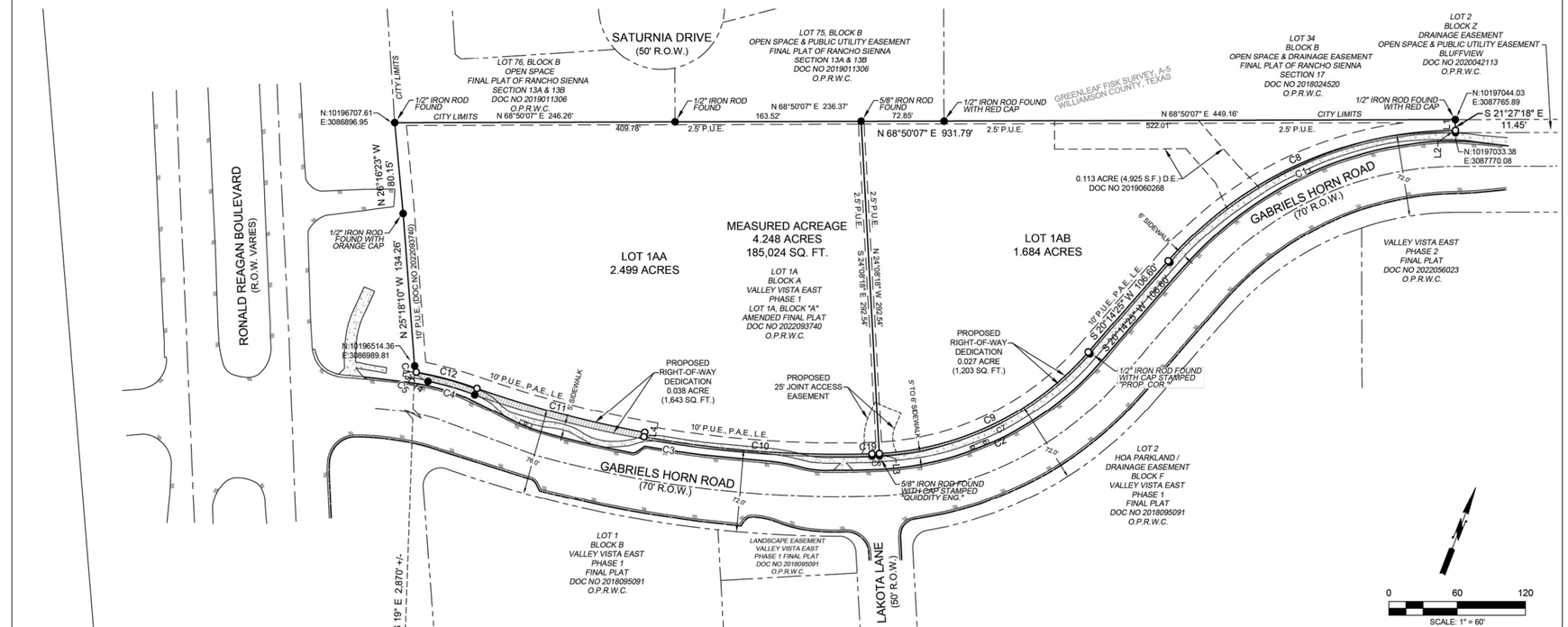

CURVE	RADIUS	DELTA ANGLE	ARC LENGTH	CHORD BEARING	CHORD LENGTH
C1	335.00'	48°35'04"	284.07'	S 44°31'42" W	275.63'
C2	265.00'	47°02'16"	217.56'	S 43°47'17" W	211.50'
C3	965.00'	21°05'53"	355.34'	S 77°50'20" W	353.34'
C4	335.00'	7°18'11"	42.70'	S 84°51'43" W	42.67'
C5	15.00'	73°27'27"	19.23'	N 61°57'33" W	17.94'
C6	265.00'	1°24'33"	6.52'	S 66°36'06" W	6.52'
C7	265.00'	45°37'43"	211.04'	S 43°05'00" W	205.50'
C8	337.00'	48°34'58"	285.75'	S 44°31'39" W	277.27'
C9	263.00'	45°37'43"	209.45'	S 43°05'01" W	203.95'
C10	963.00'	11°58'45"	201.34'	S 73°16'46" W	200.97'
C11	959.00'	9°07'07"	152.62'	S 83°49'42" W	152.46'
C12	341.00'	9°17'17"	55.28'	S 83°52'06" W	55.22'
C13	15.00'	21°24'48"	5.61'	N 35°56'13" W	5.57'
C14	15.00'	52°02'39"	13.63'	N 72°39'57" W	13.16'
C15	25.00'	27°07'08"	11.83'	S 10°34'44" E	11.72'
C16	50.00'	27°07'36"	23.67'	S 10°34'30" E	23.45'
C17	25.00'	27°07'36"	11.84'	N 10°34'30" W	11.73'
C18	25.00'	26°53'38"	11.73'	N 37°35'07" W	11.63'
C19	263.00'	1°24'33"	6.47'	S 66°36'09" W	6.47'

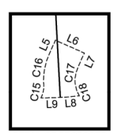

DETAIL OF PROPOSED
25' JOINT ACCESS EASEMENT
1" = 60'

LINE	BEARING	DISTANCE
L1	S 21°27'18" E	9.45'
L2	S 21°27'18" E	2.00'
L3	N 24°08'18" W	1.99'
L4	N 10°43'51" W	4.00'
L5	N 02°59'18" E	12.53'
L6	S 87°00'42" E	25.00'
L7	S 02°59'18" W	12.53'
L8	S 64°14'27" W	15.21'
L9	S 67°08'56" W	15.25'

SCALE: 1" = 60'

BEARING BASIS
TEXAS STATE PLANE COORDINATE SYSTEM, GRID NORTH, CENTRAL ZONE (4203), NAD 83. DISTANCES IN US SURVEY FEET (GRID). ELEVATION DATA NAVD 88, GEOID 12B.

LEGEND

- 5/8" IRON ROD FOUND WITH CAP STAMPED "JONES CARTER" (UNLESS NOTED)
- 1/2" IRON ROD SET WITH BLUE CAP STAMPED "LONE WOLF RPLS 6848"
- EDGE OF PAVEMENT
- CENTERLINE OF ROAD
- PROPERTY LINE
- ADJOINER LINE
- CONCRETE AREA
- DOC NO — DOCUMENT NUMBER
- O.P.R.W.C. — OFFICIAL PUBLIC RECORDS WILLIAMSON COUNTY
- D.E. — DRAINAGE EASEMENT
- L.E. — LANDSCAPE EASEMENT
- P.A.E. — PEDESTRIAN ACCESS EASEMENT
- P.U.E. — PUBLIC UTILITY EASEMENT
- R.O.W. — RIGHT OF WAY

LONE WOLF
LAND SURVEYING, LLC
163 Cool Water Drive
Bastrop, TX 78602
512-718-5868, Firm #10194675
Lonewolflandsurveying.com

LOT 1AA & LOT 1AB
REPLAT OF LOT 1A, BLOCK A
OF THE VALLEY VISTA EAST PHASE 1 AMENDED
VALLEY VISTA EAST PHASE 1 RECORDED UNDER
INSTRUMENT NUMBER 2022093740

FILE: 2024-134_Gabriels Horn Rd Leander_sfp	
DATE: 10-07-2025	DRAWN BY: MLT
SCALE: 1" = 60'	FIELD CREW: MLT/JS
JOB#: 2024-134	

NO.	REVISION	BY	DATE

SHEET 2 OF 3

SPARKLE
PRESCHOOL

SRIKANTH
NAGUNOORI

2345 BASE BURNER PATH
LEANDER, TX 78641

SPARKLE MONTESSORI ACADEMY
LOT 1A-R, BLOCK A
CITY OF LEANDER
WILLIAMSON COUNTY, TEXAS

REV:	DATE:	DESCRIPTION:

kirkman ENGINEERING

KIRKMAN ENGINEERING, LLC
1500 ARROW POINT DRIVE STE. 804
CEDAR PARK, TEXAS 78613

TEXAS FIRM NO. 15874

JOB NUMBER: NAG25001

ISSUE DATE: 2/9/2026

FINAL PLAT II

SHEET:
5
OF 30

SD-25-0378

FILE PATH: K:\Shr\WMC2500_Sparkle Leander\Drawings\02_ENGR\03 - Production\dwk:\Shr\WMC2500_Sparkle Leander\Drawings\02_ENGR\03 - Production\C1.0 COVER_(MAC2500)

FILENAME: C1.0 COVER_(MAC2500).dwg
PLOTTED BY: Prashanthi Gautam
PLOTTED DATE: 10/7/2025

LOT 1AA & LOT 1AB
REPLAT OF LOT 1A, BLOCK A OF THE VALLEY VISTA EAST PHASE 1 AMENDED
BEING ALL OF LOT 1A, BLOCK A VALLEY VISTA EAST PHASE 1 RECORDED UNDER INSTRUMENT NUMBER 2022093740 WILLIAMSON COUNTY, TEXAS

GENERAL PLAT NOTES:

1. THIS SUBDIVISION IS WHOLLY CONTAINED WITHIN THE CURRENT CORPORATE LIMITS OF THE CITY OF LEANDER, TEXAS.
2. NO LOT IN THIS SUBDIVISION SHALL BE OCCUPIED UNTIL CONNECTED TO THE CITY OF LEANDER WATER DISTRIBUTION AND WASTEWATER COLLECTION FACILITIES.
3. A BUILDING PERMIT IS REQUIRED FROM THE CITY OF LEANDER PRIOR TO CONSTRUCTION OF ANY BUILDING OR SITE IMPROVEMENTS ON ANY LOT IN THIS SUBDIVISION.
4. NO BUILDINGS, FENCES, LANDSCAPING OR OTHER STRUCTURES ARE PERMITTED WITHIN DRAINAGE EASEMENTS SHOWN EXCEPT AS APPROVED BY THE CITY OF LEANDER PUBLIC WORKS DEPARTMENT.
5. PROPERTY OWNER SHALL PROVIDE FOR ACCESS TO DRAINAGE EASEMENTS AS MAY BE NECESSARY AND SHALL NOT PROHIBIT ACCESS BY THE CITY OF LEANDER .
6. ALL EASEMENTS ON PRIVATE PROPERTY SHALL BE MAINTAINED BY THE PROPERTY OWNER OR HIS OR HER ASSIGNS.
7. IN ADDITION TO THE EASEMENT SHOWN HEREON, A TEN (10') FOOT WIDE PUBLIC UTILITY EASEMENT, LANDSCAPE EASEMENT, AND PEDESTRIAN ACCESS EASEMENT IS DEDICATED ALONG AND ADJACENT TO ALL RIGHT-OF-WAY AND A TWO AND A HALF (2.5') FOOT WIDE PUBLIC UTILITY EASEMENT IS DEDICATED ALONG ALL SIDE LOT LINES.
8. NO PORTION OF THIS TRACT IS WITHIN A FLOOD HAZARD AREA AS SHOWN ON THE FLOOD INSURANCE RATE MAP PANEL NO. 48491C0455F, DATED 12/20/2019, FOR WILLIAMSON COUNTY, TEXAS.
9. BUILDING SETBACKS NOT SHOWN HEREON SHALL COMPLY WITH THE MOST CURRENT ZONING ORDINANCE OF THE CITY OF LEANDER.
10. SIDEWALKS SHALL BE INSTALLED ON THE SUBDIVISION SIDE OF GABRIELS HORN ROAD. THOSE SIDEWALKS NOT ABUTTING A RESIDENTIAL, COMMERCIAL OR INDUSTRIAL LOT (INCLUDING SIDEWALKS ALONG STREET FRONTAGES OF LOTS PROPOSED FOR SCHOOLS, CHURCHES, PARK LOTS, DETENTION LOTS, DRAINAGE LOTS, LANDSCAPE LOTS, OR SIMILAR LOTS), SIDEWALKS ON ARTERIAL STREETS TO WHICH ACCESS IS PROHIBITED, SIDEWALKS ON DOUBLE FRONTAGE LOTS ON THE SIDE TO WHICH ACCESS IS PROHIBITED, AND ALL SIDEWALKS ON SAFE SCHOOL ROUTES SHALL BE INSTALLED WHEN THE ADJOINING STREET IS CONSTRUCTED.
11. ALL UTILITY LINES MUST BE LOCATED UNDERGROUND.
12. APPROVAL OF THIS FINAL PLAT DOES NOT CONSTITUTE THE APPROVAL OF VARIANCES OR WAIVERS TO ORDINANCE REQUIREMENTS.
13. THIS REPLAT DOES NOT REMOVE ANY RESTRICTIONS. THE SUBDIVISION IS SUBJECT TO ALL GENERAL NOTES AND RESTRICTIONS APPEARING ON THE PLAT OF "VALLEY VISTA EAST PHASE 1 LOT 1A BLOCK A AMENDED FINAL PLAT DOCUMENT NO. 2022093740, OF THE PLAT RECORDS OF WILLIAMSON COUNTY, TEXAS.
14. ALL DRIVE LANES, FIRE LANES, AND DRIVEWAYS WITHIN THIS SUBDIVISION SHALL PROVIDE FOR RECIPROCAL ACCESS FOR INGRESS AND EGRESS TO ALL OTHER LOTS WITHIN THE SUBDIVISION AND TO ADJACENT PROPERTIES.
15. THIS REPLAT CHANGES 1 LOT INTO TWO LOTS.

THE STATE OF TEXAS §
COUNTY OF WILLIAMSON §

THAT I, SHEA KIRKMAN, AM AUTHORIZED UNDER THE LAWS OF THE STATE OF TEXAS TO PRACTICE THE PROFESSION OF ENGINEERING, AND DO HEREBY STATE THAT THIS PLAT CONFORMS WITH THE APPLICABLE ORDINANCES OF THE CITY OF LEANDER, TEXAS.

PROFESSIONAL LICENSED ENGINEER DATE

THE STATE OF TEXAS §
COUNTY OF WILLIAMSON §

THAT I, MATTHEW LEE TAYLOR, AM AUTHORIZED UNDER THE LAWS OF THE STATE OF TEXAS TO PRACTICE THE PROFESSION OF LAND SURVEYING AND HEREBY STATE THAT I PREPARED THIS PLAT FROM AN ACTUAL AND ACCURATE ON-THE-GROUND SURVEY OF THE LAND AND THAT THE CORNER MONUMENTS SHOWN THEREON WERE PROPERLY PLACED UNDER MY PERSONAL SUPERVISION, IN ACCORDANCE WITH ALL CITY OF LEANDER ORDINANCE AND CODES.

Matthew Lee Taylor 1-07-2026
REGISTERED PROFESSIONAL LAND SURVEYOR DATE

STATE OF TEXAS · REGISTERED · MATTHEW LEE TAYLOR III · 6946 · PROFESSIONAL · LAND SURVEYOR

LONE WOLF
LAND SURVEYING, LLC
163 Cool Water Drive
Bastrop, TX 78602
512-715-5898, Firm #10194875
Lonewolflandsurveying.com

LOT 1AA & LOT 1AB REPLAT OF LOT 1A, BLOCK A OF THE VALLEY VISTA EAST PHASE 1 AMENDED VALLEY VISTA EAST PHASE 1 RECORDED UNDER INSTRUMENT NUMBER 2022093740			
FILE: 2024-134_Gabriels Horn Rd Leander_sfp			
DATE: 10-07-2025	DRAWN BY: MLT		
SCALE: 1" = 60'	FIELD CREW: MLT/JS		
JOB#: 2024-134			
NO.	REVISION	BY	DATE

THE STATE OF TEXAS §
COUNTY OF WILLIAMSON §

THAT TESCH DEVELOPMENT & MANAGEMENT CO LLC, AS THE OWNER OF THAT CERTAIN 2.538 ACRE PORTION OF LOT 1A, BLOCK A, VALLEY EAST PHASE 1, LOT 1A, BLOCK "A", AMENDED FINAL PLAT, AND RECORDED IN DOCUMENT NO. 2022093740, OFFICIAL PUBLIC RECORDS OF WILLIAMSON COUNTY, TEXAS, AND THAT SPARKLE DAYCARE LLC, AS THE OWNER OF THAT CERTAIN 1.712 ACRE TRACT OF LAND CONVEYED IN WARRANTY DEED, AND RECORDED IN DOCUMENT NO. 2025039167, OFFICIAL PUBLIC RECORDS OF WILLIAMSON COUNTY, TEXAS

DOES HEREBY DEDICATE TO THE PUBLIC FOREVER USE OF ALL ADDITIONAL ROW, STREETS, ALLEYS, EASEMENTS, PARKS, AND ALL OTHER LANDS INTENDED FOR PUBLIC DEDICATION, OR WHEN THE SUBDIVIDER HAS MADE PROVISION FOR PERPETUAL MAINTENANCE THEREOF, TO THE INHABITANTS OF THE SUBDIVISION AS SHOWN HEREON TO BE KNOWN AS "LOT 1AA & LOT 1AB REPLAT OF LOT 1A, BLOCK A OF THE VALLEY VISTA EAST PHASE 1 AMENDED VALLEY VISTA EAST PHASE 1 RECORDED UNDER INSTRUMENT NUMBER 2022093740".

TESCH DEVELOPMENT & MANAGEMENT CO LLC
BOB TESCH
MANAGER

THE STATE OF TEXAS §
COUNTY OF WILLIAMSON §

BEFORE ME, THE UNDERSIGNED AUTHORITY, A NOTARY PUBLIC IN AND FOR SAID COUNTY AND STATE, ON THIS THE _____ DAY OF _____, 2024, PERSONALLY APPEARED, BOB TESCH, AS MANAGER OF TESCH DEVELOPMENT & MANAGEMENT CO LLC, ON BEHALF OF SAID TESCH DEVELOPMENT & MANAGEMENT CO LLC, A DULY AUTHORIZED AGENT WITH AUTHORITY TO SIGN SAID DOCUMENT, PERSONALLY KNOWN TO ME (AND PROVED TO ME ON THE BASIS OF SATISFACTORY EVIDENCE) TO BE THE PERSON WHOSE NAME IS SUBSCRIBED TO THE FOREGOING INSTRUMENT, AND ACKNOWLEDGED TO ME THAT HE EXECUTED THE SAME FOR THE PURPOSES AND CONSIDERATION THEREIN EXPRESSED.

GIVEN UNDER MY HAND AND SEAL OF OFFICE ON THIS THE _____DAY OF _____, 2025. A.D.

NOTARY PUBLIC STATE OF _____

PRINTED NAME: _____

MY COMMISSION EXPIRES: _____

AND

SPARKLE DAYCARE LLC
SRIKANTH NAGUNOORI
MANAGER

THE STATE OF TEXAS §
COUNTY OF WILLIAMSON §

BEFORE ME, THE UNDERSIGNED AUTHORITY, A NOTARY PUBLIC IN AND FOR SAID COUNTY AND STATE, ON THIS THE _____ DAY OF _____, 2024, PERSONALLY APPEARED, SRIKANTH NAGUNOORI, AS MANAGER OF SPARKLE DAYCARE LLC, ON BEHALF OF SAID SPARKLE DAYCARE LLC, A DULY AUTHORIZED AGENT WITH AUTHORITY TO SIGN SAID DOCUMENT, PERSONALLY KNOWN TO ME (AND PROVED TO ME ON THE BASIS OF SATISFACTORY EVIDENCE) TO BE THE PERSON WHOSE NAME IS SUBSCRIBED TO THE FOREGOING INSTRUMENT, AND ACKNOWLEDGED TO ME THAT HE EXECUTED THE SAME FOR THE PURPOSES AND CONSIDERATION THEREIN EXPRESSED.

GIVEN UNDER MY HAND AND SEAL OF OFFICE ON THIS THE _____DAY OF _____, 2025. A.D.

NOTARY PUBLIC STATE OF _____

PRINTED NAME: _____

MY COMMISSION EXPIRES: _____

THE STATE OF TEXAS §
COUNTY OF WILLIAMSON §
KNOW ALL MEN BY THESE PRESENTS:

I, NANCY RISTER, CLERK OF THE COUNTY COURT OF WILLIAMSON COUNTY, TEXAS, DO HEREBY CERTIFY THAT THE FOREGOING INSTRUMENT IN WRITING, WITH ITS CERTIFICATE OF AUTHENTICATION WAS FILED FOR RECORD IN MY OFFICE ON THE

____ DAY OF _____, 2025, AD., AT ___ O'CLOCK, ___M. AND DULY RECORDED THIS THE

____ DAY OF _____, 2025, AD., AT ___ O'CLOCK, ___M. IN THE OFFICIAL PUBLIC RECORDS OF WILLIAMSON

COUNTY IN INSTRUMENT NO. _____

TO CERTIFY WHICH, WITNESS MY HAND AND SEAL AT THE COUNTY COURT OF WILLIAMSON COUNTY, AT MY OFFICE IN GEORGETOWN, TEXAS, THE DATE LAST SHOWN ABOVE WRITTEN.

NANCY RISTER,
CLERK COUNTY COURT OF WILLIAMSON COUNTY, TEXAS

BY: _____, DEPUTY

BEING A 4.248 ACRE TRACT OF LAND OUT OF THE GREENLEAF FISK SURVEY, ABSTRACT NO. 5, SITUATED IN WILLIAMSON COUNTY, TEXAS, SAID 4.248 ACRE TRACT BEING ALL OF LOT 1A, BLOCK A, VALLEY VISTA EAST, PHASE 1, LOT 1A, BLOCK "A", AMENDED FINAL PLAT, ACCORDING TO THE MAP OR PLAT THEREOF AS RECORDED IN DOCUMENT NO. 2022093740, OFFICIAL PUBLIC RECORDS OF WILLIAMSON COUNTY, TEXAS, SAID 4.248 ACRE TRACT BEING COMPRISED OF A CALLED 2.763 ACRE REMAINDER OF SAID LOT 1A CONVEYED TO TESCH DEVELOPMENT & MANAGEMENT CO LLC AND DESCRIBED IN NOTICE OF LIS PENDENS, AS RECORDED IN DOCUMENT NO. 2025051103, OFFICIAL PUBLIC RECORDS OF WILLIAMSON COUNTY, TEXAS, AND A CALLED 1.712 ACRE PORTION OF SAID LOT 1A CONVEYED TO SPARKLE DAYCARE LLC BY WARRANTY DEED, AS RECORDED IN DOCUMENT NO. 2025039167, OFFICIAL PUBLIC RECORDS OF WILLIAMSON COUNTY, TEXAS; SAID 4.248 ACRE TRACT HAVING BEEN SURVEYED BY LONE WOLF LAND SURVEYING DURING THE MONTH OF JULY 2025, AND BEING MORE PARTICULARLY DESCRIBED BY METES AND BOUNDS AS FOLLOWS:

BEGINNING at a 1/2" iron rod found in the east right-of-way line of Ronald Reagan Boulevard (a variable width right-of-way), for the **POINT OF BEGINNING**, and for the northwest corner of the herein described tract, said Lot 1A, and said 2.763 acre tract, the same being the southwest corner of Lot 76, Block B, Open Space, Final Plat of Rancho Sienna, Section 13A & 13B, according to the map or plat thereof as recorded in Document No. 2016011306, Official Public Records of Williamson County, Texas;

THENCE, leaving the east right-of-way line of Ronald Reagan Boulevard, with the south line of said Lot 76 and Lot 75 of said Final Plat of Rancho Sienna Section 13A & 13B, and a portion of the south line of Lot 34, Block B, Open Space & Drainage Easement, Final Plat of Rancho Sienna, Section 17, according to the map or plat thereof as recorded in Document No. 2018024520, Official Public Records of Williamson County, Texas, the same being the north line of said Lot 1A, said 2.763 acre tract, and said 1.712 acre tract, for the north line of the herein described tract, **N 68°50'07" E**, passing at a distance of 409.79 feet a 5/8" iron rod found for the north common corner of said 2.763 acre tract and said 1.712 acre tract, continuing and passing at 72.85 feet a 1/2" iron rod with red cap found for the common south corner of said Lot 76 and said Lot 34, and continuing 449.16 feet for a total distance of **531.78 feet** to a 1/2" iron rod with red cap found for the northeast corner of the herein described tract, said Lot 1A, and said 1.712 acre tract, the same being the northwest corner of Lot 2, Block Z, Bluffview, Phase 1 Final Plat, according to the map or plat thereof as recorded in Document No. 2020042113, Official Public Records of Williamson County, Texas;

THENCE, leaving the south line of said Lot 34, with the common line of said Lot 1A and said Lot 2, the same being the east line of said 1.712 acre tract, for the east line of the herein described tract, **S 21°27'18" E**, a distance of **11.48 feet** to a 5/8" iron rod with cap stamped "JONES CARTER" found in the arc of a curve concave southerly in the north right-of-way line of Gabriels Horn Boulevard (70 foot wide right-of-way) for the southeast corner of the herein described tract, said Lot 1A, and said 1.712 acre tract, the same being the southwest corner of said Lot 2;

THENCE, with the north right-of-way line of Gabriels Horn Boulevard, the same being the south line of said Lot 1A, said 1.712 acre tract, and said 2.763 acre tract, for the south line of the herein described tract, the following six (6) courses:

1. with a curve turning to the left with a radius of **335.00 feet**, with a **delta angle of 46°35'04"**, with an arc length of **284.07 feet**, with a **chord bearing of S 44°31'42" W**, with a **chord distance of 275.83 feet** to a 5/8" iron rod with cap stamped "JONES CARTER" found;
2. **S 20°14'28" W**, a distance of **106.60 feet** to a 1/2" iron rod with cap stamped "PROP. COR." found at the point of curvature of a non-tangent curve to the right;
3. with said non-tangent curve turning to the right with a radius of **265.00 feet**, with a delta angle of **47°02'16"**, passing at an arc length of **211.04 feet** a 5/8" iron rod with cap stamped "QUIDDITY ENG." found for the common south corner of said 1.712 acre tract and said 2.763 acre tract, continuing an arc length of **6.52 feet** for a **total arc length of 217.56 feet**, with a **chord bearing of S 43°47'17" W**, with a **chord distance of 211.50 feet** to a 5/8" iron rod with cap stamped "JONES CARTER" found at a point of compound curvature;
4. with said compound curve turning to the right with a radius of **985.00 feet**, with a delta angle of **21°00'03"**, with an arc length of **360.94 feet**, with a **chord bearing** of **S 77°50'26" W**, with a **chord distance of 383.34 feet** to a 5/8" iron rod with cap stamped "JONES CARTER" found at a point of reverse curvature;
5. with said reverse curve turning to the left with a radius of **335.00 feet**, with a delta angle of **07°18'11"**, with an arc length of **42.70 feet**, with a **chord bearing** of **S 84°21'43" W**, with a **chord distance of 42.67 feet** to a 5/8" iron rod with cap stamped "JONES CARTER" found at a point of reverse curvature;
6. with said reverse curve turning to the right with a radius of **15.00 feet**, with a delta angle of **73°27'27"**, with an arc length of **19.23 feet**, with a **chord bearing** of **N 61°57'33" W**, with a **chord distance of 17.94 feet** to a 5/8" iron rod with cap stamped "JONES CARTER" found at the intersection with the east right-of-way line of Ronald Reagan Boulevard and said north right-of-way line of Gabriels Horn Road, for the southwest corner of the herein described tract, said Lot 1A, and said 2.763 acre tract;

THENCE, with the east right-of-way line of Ronald Reagan Boulevard, the same being the west line of said Lot 1A and said 2.763 acre tract, for the west line of the herein described tract, the following two (2) courses:

1. **N 25°16'10" W**, a distance of **134.26 feet** to a 5/8" iron rod with orange cap found;
2. **N 26°16'23" W**, a distance of **80.15 feet** to the **POINT OF BEGINNING**, having an area of **4.248 acres**, or **185,024 square feet**.

APPROVED THIS THE _____ DAY OF _____, 2025 A.D. AND AUTHORIZED TO BE FILED FOR RECORD BY THE COUNTY CLERK OF WILLIAMSON COUNTY.

ROBIN M. GRIFFIN, AICP
EXEC DIRECTOR OF DEVELOPMENT SERVICES
CITY OF LEANDER, TEXAS

ATTEST: _____
DARA CRABTREE
CITY SECRETARY
CITY OF LEANDER, TEXAS

SHEET 3 OF 3

SPARKLE PRESCHOOL

SRIKANTH NAGUNOORI

2345 BASE BURNER PATH
LEANDER, TX 78641

SPARKLE MONTESSORI ACADEMY
LOT 1A-R, BLOCK A
CITY OF LEANDER
WILLIAMSON COUNTY, TEXAS

REV.:	DATE:	DESCRIPTION:

kirkman ENGINEERING
KIRKMAN ENGINEERING, LLC
1500 ARROW POINT DRIVE STE. 804
CEDAR PARK, TEXAS 78613
TEXAS FIRM NO. 15874

JOB NUMBER: NAG25001

ISSUE DATE: 2/9/2026

FINAL PLAT III

SHEET: 6 OF 30

SD-25-0378

FILE PATH: K:\Work\NAG25001_Sparkle Leander\Drawings\02_ENGR\01 - Production\Work\Site\NAG25001_Sparkle Leander\Drawings\02_ENGR\01 - Production\CL0 COVER_NAG25001

FILENAME: CL 0 COVER_NAG25001.dwg
PLOTTED BY: Prashanta Gautam
PLOTTED DATE: 1/7/2026

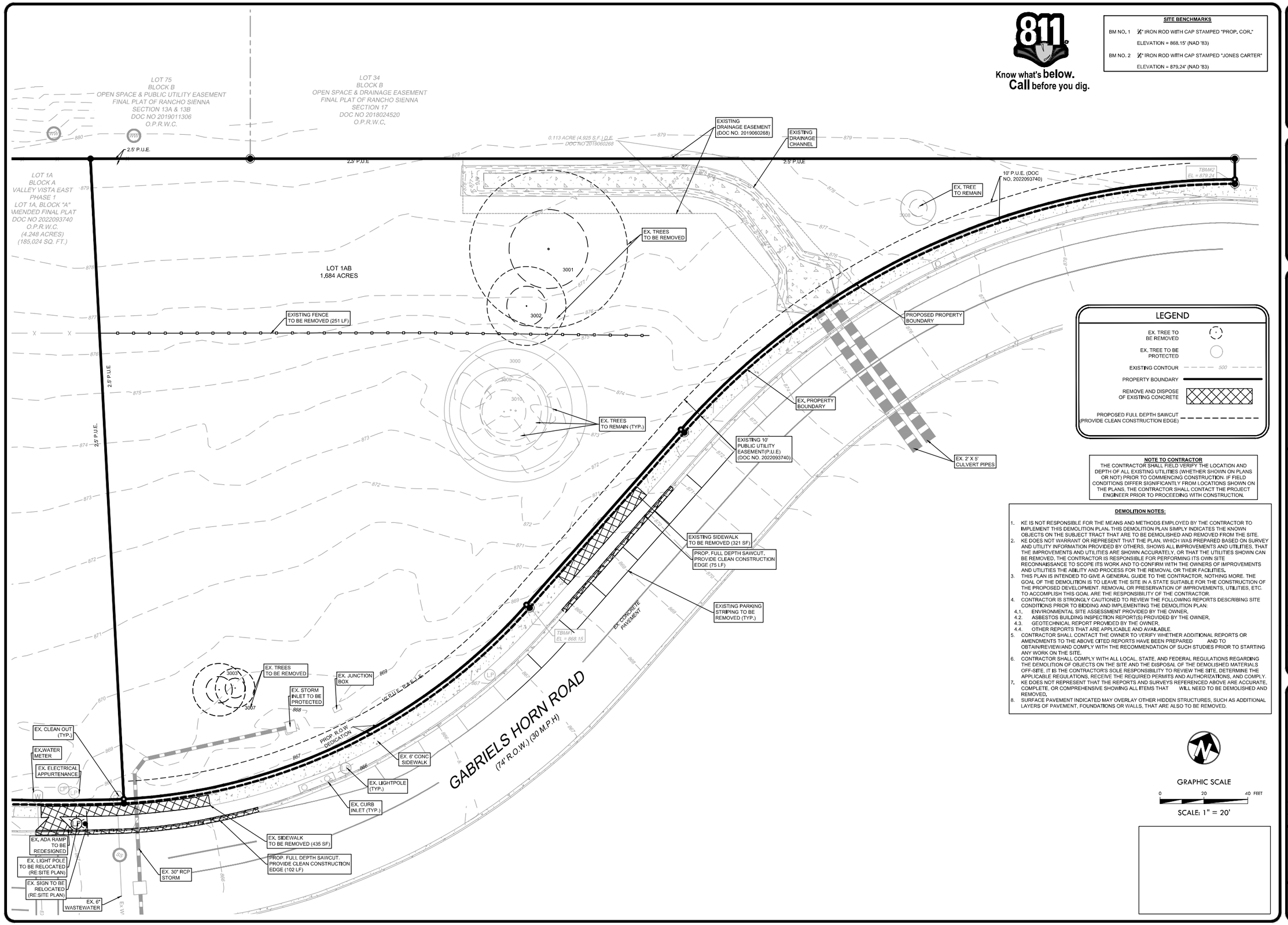

Know what's **below.**
Call before you dig.

SITE BENCHMARKS

BM NO. 1 ½" IRON ROD WITH CAP STAMPED "PROP. COR."
ELEVATION = 868.15' (NAD '83)

BM NO. 2 ½" IRON ROD WITH CAP STAMPED "JONES CARTER"
ELEVATION = 879.24' (NAD '83)

LEGEND

- EX. TREE TO BE REMOVED
- EX. TREE TO BE PROTECTED
- EXISTING CONTOUR 500
- PROPERTY BOUNDARY
- REMOVE AND DISPOSE OF EXISTING CONCRETE
- PROPOSED FULL DEPTH SAWCUT (PROVIDE CLEAN CONSTRUCTION EDGE)

NOTE TO CONTRACTOR

THE CONTRACTOR SHALL FIELD VERIFY THE LOCATION AND DEPTH OF ALL EXISTING UTILITIES (WHETHER SHOWN ON PLANS OR NOT) PRIOR TO COMMENCING CONSTRUCTION. IF FIELD CONDITIONS DIFFER SIGNIFICANTLY FROM LOCATIONS SHOWN ON THE PLANS, THE CONTRACTOR SHALL CONTACT THE PROJECT ENGINEER PRIOR TO PROCEEDING WITH CONSTRUCTION.

DEMOLITION NOTES:

1. KE IS NOT RESPONSIBLE FOR THE MEANS AND METHODS EMPLOYED BY THE CONTRACTOR TO IMPLEMENT THIS DEMOLITION PLAN. THIS DEMOLITION PLAN SIMPLY INDICATES THE KNOWN OBJECTS ON THE SUBJECT TRACT THAT ARE TO BE DEMOLISHED AND REMOVED FROM THE SITE.
2. KE DOES NOT WARRANT OR REPRESENT THAT THE PLAN, WHICH WAS PREPARED BASED ON SURVEY AND UTILITY INFORMATION PROVIDED BY OTHERS, SHOWS ALL IMPROVEMENTS AND UTILITIES. THAT THE IMPROVEMENTS AND UTILITIES ARE SHOWN ACCURATELY, OR THAT THE UTILITIES SHOWN CAN BE REMOVED, THE CONTRACTOR IS RESPONSIBLE FOR PERFORMING ITS OWN SITE RECONNAISSANCE TO SCOPE ITS WORK AND TO CONFIRM WITH THE OWNERS OF IMPROVEMENTS AND UTILITIES THE ABILITY AND PROCESS FOR THE REMOVAL OR THEIR FACILITIES.
3. THIS PLAN IS INTENDED TO GIVE A GENERAL GUIDE TO THE CONTRACTOR, NOTHING MORE. THE GOAL OF THE DEMOLITION IS TO LEAVE THE SITE IN A STATE SUITABLE FOR THE CONSTRUCTION OF THE PROPOSED DEVELOPMENT. REMOVAL OR PRESERVATION OF IMPROVEMENTS, UTILITIES, ETC. TO ACCOMPLISH THIS GOAL ARE THE RESPONSIBILITY OF THE CONTRACTOR.
4. CONTRACTOR IS STRONGLY CAUTIONED TO REVIEW THE FOLLOWING REPORTS DESCRIBING SITE CONDITIONS PRIOR TO BIDDING AND IMPLEMENTING THE DEMOLITION PLAN:
   - 4.1. ENVIRONMENTAL SITE ASSESSMENT PROVIDED BY THE OWNER,
   - 4.2. ASBESTOS BUILDING INSPECTION REPORT(S) PROVIDED BY THE OWNER,
   - 4.3. GEOTECHNICAL REPORT PROVIDED BY THE OWNER,
   - 4.4. OTHER REPORTS THAT ARE APPLICABLE AND AVAILABLE.
5. CONTRACTOR SHALL CONTACT THE OWNER TO VERIFY WHETHER ADDITIONAL REPORTS OR AMENDMENTS TO THE ABOVE CITED REPORTS HAVE BEEN PREPARED AND TO OBTAIN/REVIEW/AND COMPLY WITH THE RECOMMENDATION OF SUCH STUDIES PRIOR TO STARTING ANY WORK ON THE SITE.
6. CONTRACTOR SHALL COMPLY WITH ALL LOCAL, STATE, AND FEDERAL REGULATIONS REGARDING THE DEMOLITION OF OBJECTS ON THE SITE AND THE DISPOSAL OF THE DEMOLISHED MATERIALS OFF-SITE. IT IS THE CONTRACTOR'S SOLE RESPONSIBILITY TO REVIEW THE SITE, DETERMINE THE APPLICABLE REGULATIONS, RECEIVE THE REQUIRED PERMITS AND AUTHORIZATIONS, AND COMPLY.
7. KE DOES NOT REPRESENT THAT THE REPORTS AND SURVEYS REFERENCED ABOVE ARE ACCURATE, COMPLETE, OR COMPREHENSIVE SHOWING ALL ITEMS THAT WILL NEED TO BE DEMOLISHED AND REMOVED.
8. SURFACE PAVEMENT INDICATED MAY OVERLAY OTHER HIDDEN STRUCTURES, SUCH AS ADDITIONAL LAYERS OF PAVEMENT, FOUNDATIONS OR WALLS, THAT ARE ALSO TO BE REMOVED.

GRAPHIC SCALE
0 20 40 FEET
SCALE: 1" = 20'

2/9/2026

STATE OF TEXAS
PATRICK C. FILSON
108577
LICENSED
PROFESSIONAL ENGINEER

SPARKLE
PRESCHOOL

SRIKANTH
NAGUNOORI

2345 BASE BURNER PATH
LEANDER, TX 78641

SPARKLE MONTESSORI ACADEMY

LOT 1A-R, BLOCK A
CITY OF LEANDER
WILLIAMSON COUNTY, TEXAS

REV.:	DATE:	DESCRIPTION:

kirkman ENGINEERING
KIRKMAN ENGINEERING, LLC
1500 ARROW POINT DRIVE STE. 804
CEDAR PARK, TEXAS 78613
TEXAS FIRM NO. 15874

JOB NUMBER: NAG25001
ISSUE DATE: 2/9/2026

EXISTING CONDITION & DEMOLITION PLAN

SHEET: 7 OF 30

SD-25-0378

FILE PATH: K:\Civil\NAG25001_Sparkle Leander\Drawings\02_ENGR\01 - Production\Site\NAG25001_Sparkle Leander-Dr awings\02_ENGR\01 - Production\Civil\C2.0 DEMOLITION_NAG25001
FILENAME: C2.0 DEMOLITION_NAG25001.dwg
PLOTTED BY: Prabhatika Gautam
PLOTTED DATE: 2/9/2026

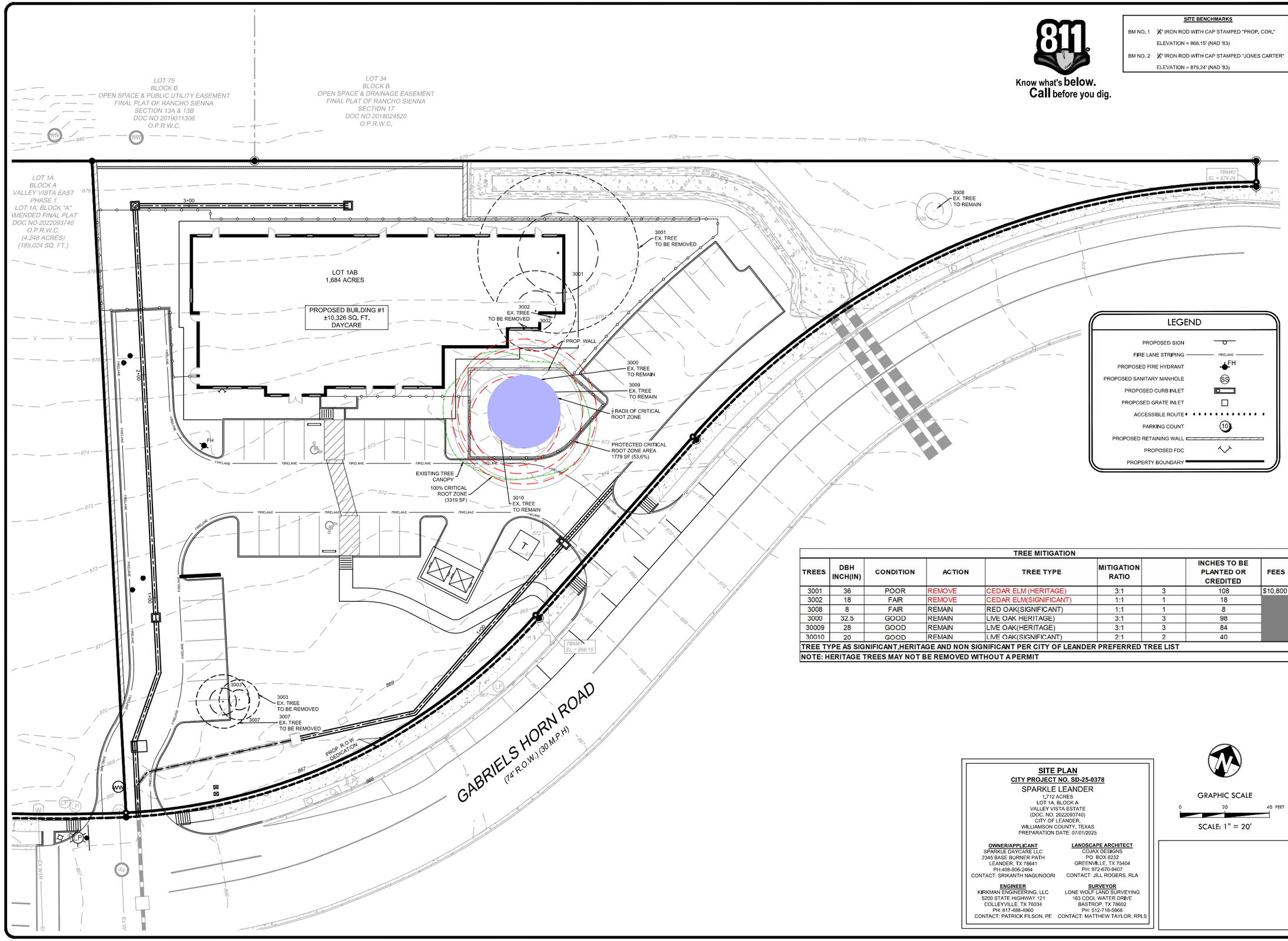

Know what's **below.**
Call before you dig.

SITE BENCHMARKS

BM NO. 1	½" IRON ROD WITH CAP STAMPED "PROP. COR."
	ELEVATION = 868.15' (NAD '83)
BM NO. 2	½" IRON ROD WITH CAP STAMPED "JONES CARTER"
	ELEVATION = 879.24' (NAD '83)

LEGEND

- PROPOSED SIGN
- FIRE LANE STRIPING — FIRELANE
- PROPOSED FIRE HYDRANT — FH
- PROPOSED SANITARY MANHOLE — SS
- PROPOSED CURB INLET
- PROPOSED GRATE INLET
- ACCESSIBLE ROUTE
- PARKING COUNT — 10
- PROPOSED RETAINING WALL
- PROPOSED FDC
- PROPERTY BOUNDARY

TREE MITIGATION

TREES	DBH INCH(IN)	CONDITION	ACTION	TREE TYPE	MITIGATION RATIO		INCHES TO BE PLANTED OR CREDITED	FEES
3001	36	POOR	REMOVE	CEDAR ELM (HERITAGE)	3:1	3	108	$10,800
3002	18	FAIR	REMOVE	CEDAR ELM(SIGNIFICANT)	1:1	1	18	
3008	8	FAIR	REMAIN	RED OAK(SIGNIFICANT)	1:1	1	8	
3000	32.5	GOOD	REMAIN	LIVE OAK HERITAGE)	3:1	3	98	
30009	28	GOOD	REMAIN	LIVE OAK(HERITAGE)	3:1	3	84	
30010	20	GOOD	REMAIN	LIVE OAK(SIGNIFICANT)	2:1	2	40	
TREE TYPE AS SIGNIFICANT,HERITAGE AND NON SIGNIFICANT PER CITY OF LEANDER PREFERRED TREE LIST								
NOTE: HERITAGE TREES MAY NOT BE REMOVED WITHOUT A PERMIT								

SITE PLAN
CITY PROJECT NO. SD-25-0378
SPARKLE LEANDER
1,712 ACRES
LOT 1A, BLOCK A
VALLEY VISTA ESTATE
(DOC. NO. 2022093740)
CITY OF LEANDER,
WILLIAMSON COUNTY, TEXAS
PREPARATION DATE: 07/01/2025

OWNER/APPLICANT
SPARKLE DAYCARE LLC
2345 BASE BURNER PATH
LEANDER, TX 78641
PH:408-806-2464
CONTACT: SRIKANTH NAGUNOORI

LANDSCAPE ARCHITECT
COJAX DESIGNS
PO BOX 8232
GREENVILLE, TX 75404
PH: 972-670-9407
CONTACT: JILL ROGERS, RLA

ENGINEER
KIRKMAN ENGINEERING, LLC
5200 STATE HIGHWAY 121
COLLEYVILLE, TX 76034
PH: 817-488-4960
CONTACT: PATRICK FILSON, PE

SURVEYOR
LONE WOLF LAND SURVEYING
163 COOL WATER DRIVE
BASTROP, TX 78602
PH: 512-718-5868
CONTACT: MATTHEW TAYLOR, RPLS

GRAPHIC SCALE
0 20 40 FEET
SCALE: 1" = 20'

2/9/2026

STATE OF TEXAS
PATRICK C. FILSON
108577
LICENSED
PROFESSIONAL ENGINEER

SPARKLE
PRESCHOOL

SRIKANTH
NAGUNOORI

2345 BASE BURNER PATH
LEANDER, TX 78641

SPARKLE MONTESSORI ACADEMY

LOT 1A-R, BLOCK A
CITY OF LEANDER
WILLIAMSON COUNTY, TEXAS

REV:	DATE:	DESCRIPTION:

kirkman ENGINEERING
KIRKMAN ENGINEERING, LLC
1500 ARROW POINT DRIVE STE. 804
CEDAR PARK, TEXAS 78613
TEXAS FIRM NO. 15874

JOB NUMBER: NAG25001
ISSUE DATE: 2/9/2026

TREE PRESERVATION PLAN

SHEET: 8 OF 30

SD-25-0378

FILE PATH: K:\Work\NAG25001_Sparkle Leander\Drawings\02_ENGR\01 - Production\Civil3d\NAG25001_Sparkle Leander\Drawings\02_ENGR\01 - Production\Civil\C17.0 TREE MITIGATION PLAN_NAG25001.dwg
PLOTTED BY: Prashanta Gautam
PLOTTED DATE: 2/5/2026

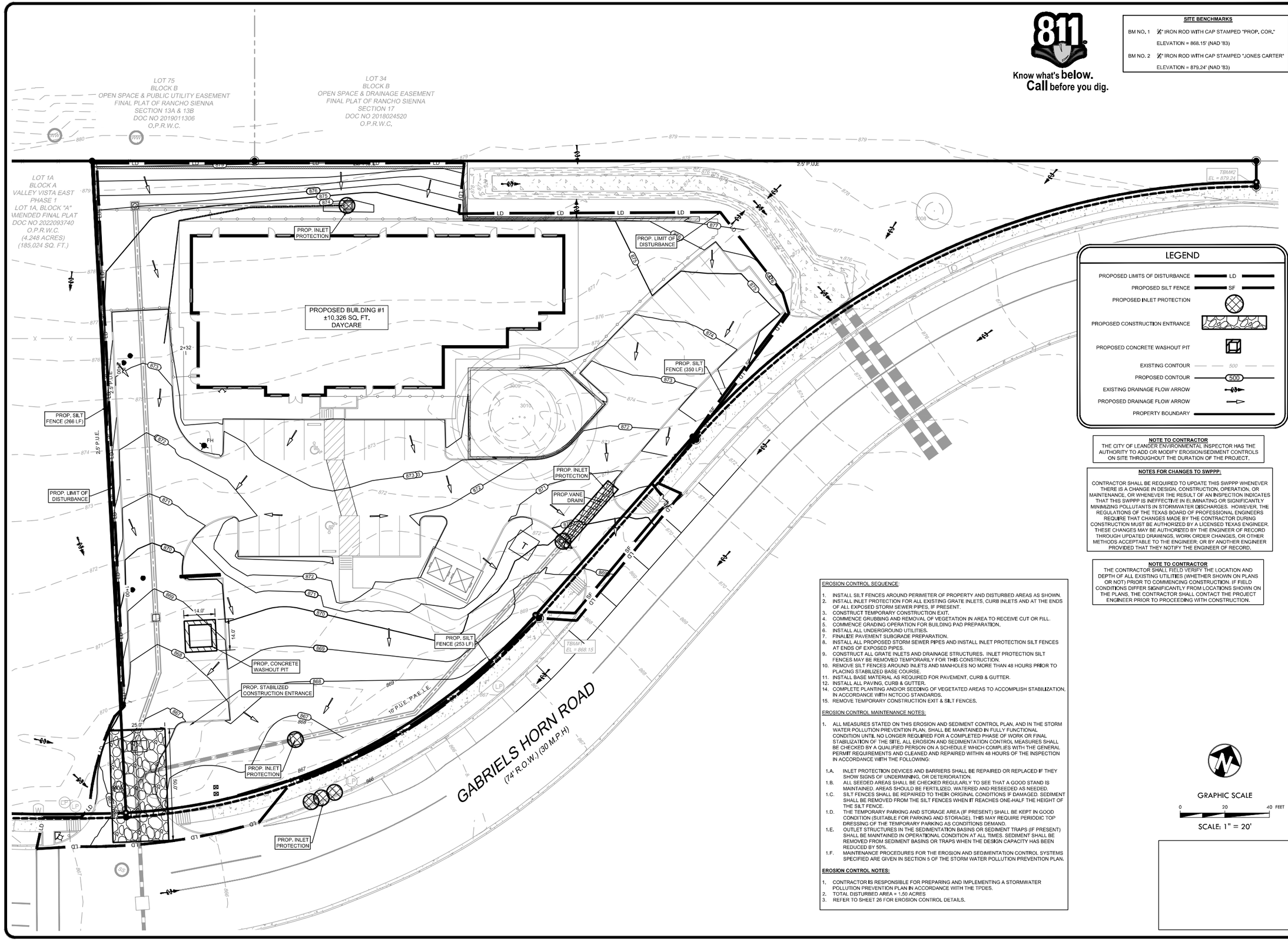

Know what's **below.**
Call before you dig.

SITE BENCHMARKS

BM NO. 1 ½" IRON ROD WITH CAP STAMPED "PROP. COR."
ELEVATION = 868.15' (NAD '83)

BM NO. 2 ½" IRON ROD WITH CAP STAMPED "JONES CARTER"
ELEVATION = 879.24' (NAD '83)

LEGEND

- PROPOSED LIMITS OF DISTURBANCE — LD
- PROPOSED SILT FENCE — SF
- PROPOSED INLET PROTECTION
- PROPOSED CONSTRUCTION ENTRANCE
- PROPOSED CONCRETE WASHOUT PIT
- EXISTING CONTOUR — 500
- PROPOSED CONTOUR — 500
- EXISTING DRAINAGE FLOW ARROW
- PROPOSED DRAINAGE FLOW ARROW
- PROPERTY BOUNDARY

NOTE TO CONTRACTOR
THE CITY OF LEANDER ENVIRONMENTAL INSPECTOR HAS THE AUTHORITY TO ADD OR MODIFY EROSION/SEDIMENT CONTROLS ON SITE THROUGHOUT THE DURATION OF THE PROJECT.

NOTES FOR CHANGES TO SWPPP:

CONTRACTOR SHALL BE REQUIRED TO UPDATE THIS SWPPP WHENEVER THERE IS A CHANGE IN DESIGN, CONSTRUCTION, OPERATION, OR MAINTENANCE, OR WHENEVER THE RESULT OF AN INSPECTION INDICATES THAT THIS SWPPP IS INEFFECTIVE IN ELIMINATING OR SIGNIFICANTLY MINIMIZING POLLUTANTS IN STORMWATER DISCHARGES. HOWEVER, THE REGULATIONS OF THE TEXAS BOARD OF PROFESSIONAL ENGINEERS REQUIRE THAT CHANGES MADE BY THE CONTRACTOR DURING CONSTRUCTION MUST BE AUTHORIZED BY A LICENSED TEXAS ENGINEER. THESE CHANGES MAY BE AUTHORIZED BY THE ENGINEER OF RECORD THROUGH UPDATED DRAWINGS, WORK ORDER CHANGES, OR OTHER METHODS ACCEPTABLE TO THE ENGINEER; OR BY ANOTHER ENGINEER PROVIDED THAT THEY NOTIFY THE ENGINEER OF RECORD.

NOTE TO CONTRACTOR
THE CONTRACTOR SHALL FIELD VERIFY THE LOCATION AND DEPTH OF ALL EXISTING UTILITIES (WHETHER SHOWN ON PLANS OR NOT) PRIOR TO COMMENCING CONSTRUCTION. IF FIELD CONDITIONS DIFFER SIGNIFICANTLY FROM LOCATIONS SHOWN ON THE PLANS, THE CONTRACTOR SHALL CONTACT THE PROJECT ENGINEER PRIOR TO PROCEEDING WITH CONSTRUCTION.

EROSION CONTROL SEQUENCE:

1. INSTALL SILT FENCES AROUND PERIMETER OF PROPERTY AND DISTURBED AREAS AS SHOWN.
2. INSTALL INLET PROTECTION FOR ALL EXISTING GRATE INLETS, CURB INLETS AND AT THE ENDS OF ALL EXPOSED STORM SEWER PIPES, IF PRESENT.
3. CONSTRUCT TEMPORARY CONSTRUCTION EXIT.
4. COMMENCE GRUBBING AND REMOVAL OF VEGETATION IN AREA TO RECEIVE CUT OR FILL.
5. COMMENCE GRADING OPERATION FOR BUILDING PAD PREPARATION.
6. INSTALL ALL UNDERGROUND UTILITIES.
7. FINALIZE PAVEMENT SUBGRADE PREPARATION.
8. INSTALL ALL PROPOSED STORM SEWER PIPES AND INSTALL INLET PROTECTION SILT FENCES AT ENDS OF EXPOSED PIPES.
9. CONSTRUCT ALL GRATE INLETS AND DRAINAGE STRUCTURES. INLET PROTECTION SILT FENCES MAY BE REMOVED TEMPORARILY FOR THIS CONSTRUCTION.
10. REMOVE SILT FENCES AROUND INLETS AND MANHOLES NO MORE THAN 48 HOURS PRIOR TO PLACING STABILIZED BASE COURSE.
11. INSTALL BASE MATERIAL AS REQUIRED FOR PAVEMENT, CURB & GUTTER.
12. INSTALL ALL PAVING, CURB & GUTTER.
14. COMPLETE PLANTING AND/OR SEEDING OF VEGETATED AREAS TO ACCOMPLISH STABILIZATION, IN ACCORDANCE WITH NCTCOG STANDARDS.
15. REMOVE TEMPORARY CONSTRUCTION EXIT & SILT FENCES.

EROSION CONTROL MAINTENANCE NOTES:

1. ALL MEASURES STATED ON THIS EROSION AND SEDIMENT CONTROL PLAN, AND IN THE STORM WATER POLLUTION PREVENTION PLAN, SHALL BE MAINTAINED IN FULLY FUNCTIONAL CONDITION UNTIL NO LONGER REQUIRED FOR A COMPLETED PHASE OF WORK OR FINAL STABILIZATION OF THE SITE. ALL EROSION AND SEDIMENTATION CONTROL MEASURES SHALL BE CHECKED BY A QUALIFIED PERSON ON A SCHEDULE WHICH COMPLIES WITH THE GENERAL PERMIT REQUIREMENTS AND CLEANED AND REPAIRED WITHIN 48 HOURS OF THE INSPECTION IN ACCORDANCE WITH THE FOLLOWING:

1.A. INLET PROTECTION DEVICES AND BARRIERS SHALL BE REPAIRED OR REPLACED IF THEY SHOW SIGNS OF UNDERMINING, OR DETERIORATION.
1.B. ALL SEEDED AREAS SHALL BE CHECKED REGULARLY TO SEE THAT A GOOD STAND IS MAINTAINED. AREAS SHOULD BE FERTILIZED, WATERED AND RESEEDED AS NEEDED.
1.C. SILT FENCES SHALL BE REPAIRED TO THEIR ORIGINAL CONDITIONS IF DAMAGED. SEDIMENT SHALL BE REMOVED FROM THE SILT FENCES WHEN IT REACHES ONE-HALF THE HEIGHT OF THE SILT FENCE.
1.D. THE TEMPORARY PARKING AND STORAGE AREA (IF PRESENT) SHALL BE KEPT IN GOOD CONDITION (SUITABLE FOR PARKING AND STORAGE), THIS MAY REQUIRE PERIODIC TOP DRESSING OF THE TEMPORARY PARKING AS CONDITIONS DEMAND.
1.E. OUTLET STRUCTURES IN THE SEDIMENTATION BASINS OR SEDIMENT TRAPS (IF PRESENT) SHALL BE MAINTAINED IN OPERATIONAL CONDITION AT ALL TIMES. SEDIMENT SHALL BE REMOVED FROM SEDIMENT BASINS OR TRAPS WHEN THE DESIGN CAPACITY HAS BEEN REDUCED BY 50%.
1.F. MAINTENANCE PROCEDURES FOR THE EROSION AND SEDIMENTATION CONTROL SYSTEMS SPECIFIED ARE GIVEN IN SECTION 5 OF THE STORM WATER POLLUTION PREVENTION PLAN.

EROSION CONTROL NOTES:

1. CONTRACTOR IS RESPONSIBLE FOR PREPARING AND IMPLEMENTING A STORMWATER POLLUTION PREVENTION PLAN IN ACCORDANCE WITH THE TPDES.
2. TOTAL DISTURBED AREA = 1.50 ACRES
3. REFER TO SHEET 26 FOR EROSION CONTROL DETAILS.

GRAPHIC SCALE
0 20 40 FEET
SCALE: 1" = 20'

2/9/2026

STATE OF TEXAS
PATRICK C. FILSON
108577
LICENSED
PROFESSIONAL ENGINEER

SPARKLE PRESCHOOL

SRIKANTH NAGUNOORI

2345 BASE BURNER PATH
LEANDER, TX 78641

SPARKLE MONTESSORI ACADEMY

LOT 1A-R, BLOCK A
CITY OF LEANDER
WILLIAMSON COUNTY, TEXAS

REV:	DATE:	DESCRIPTION:

kirkman ENGINEERING
KIRKMAN ENGINEERING, LLC
1500 ARROW POINT DRIVE STE. 804
CEDAR PARK, TEXAS 78613
TEXAS FIRM NO. 15874

JOB NUMBER: NAG25001
ISSUE DATE: 2/9/2026

EROSION CONTROL PLAN

SHEET:
9
OF 30

SD-25-0378

FULL PATH: K:\Jobs\NAG25001_Sparkle Leander\Drawings\02_ENGR\01 - Products\net\K:\Jobs\NAG25001_Sparkle Leander\Drawings\02_ENGR\01 - Products\net\02_6 EROSION CONTROL_NAG25001
RELTIMNT: C9_6 EROSION CONTROL_NAG25001.dwg
PLOTTED BY: Prashanthi Gudam
PLOTTED DATE: 2/9/2026

Know what's below. Call before you dig.

SITE BENCHMARKS

BM NO. 1 ½" IRON ROD WITH CAP STAMPED "PROP. COR." ELEVATION = 868.15' (NAD '83)

BM NO. 2 ½" IRON ROD WITH CAP STAMPED "JONES CARTER" ELEVATION = 879.24' (NAD '83)

LOT 75 BLOCK B OPEN SPACE & PUBLIC UTILITY EASEMENT FINAL PLAT OF RANCHO SIENNA SECTION 13A & 13B DOC NO 2019011306 O.P.R.W.C.

LOT 34 BLOCK B OPEN SPACE & DRAINAGE EASEMENT FINAL PLAT OF RANCHO SIENNA SECTION 17 DOC NO 2018024520 O.P.R.W.C.

LOT 1A BLOCK A VALLEY VISTA EAST PHASE 1 LOT 1A, BLOCK "A" AMENDED FINAL PLAT DOC NO 2022093740 O.P.R.W.C. (4.248 ACRES) (185,024 SQ. FT.)

PROPOSED BUILDING #1 ±10,326 SQ. FT. DAYCARE

FFE=874.65

FFE=868.87

10.0' BUILDING AND LANDSCAPE SETBACK

15.0' BUILDING SETBACK

10' P.U.E., P.A.E. I.E.

2.5' P.U.E

OVERFLOW SWALE

GRADE BREAK

PROP. 5' PARKING/PAVING SETBACK

PROP. 10' BUILDING SETBACK

END OF THE WALL, BEGIN RAISED CURB WITH GUARD RAILS (ADJACENT LOT TO GRADE DOWN TO CONNECT TO THE PROPOSED DRIVEWAY)

END OF THE RAISED CURB

EX. 4 SIDED AREA INLET

EX. 30" RCP

MATCH EXISTING GRADE

EX. 2' X 5' CULVERT PIPES NE FLOW LINE: 871.46' SW FLOW LINE:871.38'

GABRIELS HORN ROAD (74' R.O.W.) (30 M.P.H)

TBM#2 EL = 879.24

LEGEND

- PROPOSED CONTOUR — 500
- EXISTING CONTOUR — 500
- GRADE BREAK
- PPROPOSED FINISHED GRADE — FG 700.00
- PROPOSED TOP OF CURB/GUTTER — TC 700.50 G 700.00
- PROPOSED TOP OF WALL/ BOTTOM OF WALL — TW 700.00 BW 699.00
- PROPOSED TOP OF INLET — TI 700.00
- EXISTING SPOT GRADE — EX. 700.5±
- EXISTING TOP OF CURB/GUTTER — TC 700.5± G 700.0±
- PROPOSED DRAINAGE FLOW ARROW
- EXISTING DRAINAGE FLOW ARROW
- PROPERTY BOUNDARY

NOTE TO CONTRACTOR

THE CONTRACTOR SHALL FIELD VERIFY THE LOCATION AND DEPTH OF ALL EXISTING UTILITIES (WHETHER SHOWN ON PLANS OR NOT) PRIOR TO COMMENCING CONSTRUCTION. IF FIELD CONDITIONS DIFFER FROM LOCATIONS SHOWN ON THE PLANS, THE CONTRACTOR SHALL CONTACT THE PROJECT ENGINEER PRIOR TO PROCEEDING WITH CONSTRUCTION.

GRADING NOTES:

1. GEOTECHNICAL REPORT: SITE PREPARATION, GRADING, FILL COMPACTION, AND BUILDING PAD PREPARATION SHALL BE PERFORMED IN ACCORDANCE WITH THE GEOTECHNICAL REPORT PREPARED FOR THIS PROJECT BY SCI ENGINEERING, INC., DATED OCTOBER 2025. IN THE EVENT OF A CONFLICT BETWEEN THE RECOMMENDATIONS IN THE GEOTECHNICAL REPORT AND THE NOTES ON THE GRADING PLAN, THE GEOTECHNICAL REPORT SHALL GOVERN.
2. TOPOGRAPHIC SURVEY: TOPOGRAPHIC SURVEY INFORMATION IS BASED ON THE TOPOGRAPHIC SURVEY PREPARED BY LONE WOLF LAND SURVEYING, LLC, DATED 7/01/2025
3. EXISTING CONDITIONS: PRIOR TO COMMENCING CONSTRUCTION, THE CONTRACTOR SHALL BE RESPONSIBLE FOR VERIFYING THE EXISTING CONDITIONS, INCLUDING GRADES AND DIMENSIONS. THE CONTRACTOR SHALL NOTIFY THE PROJECT ENGINEER OF ANY DISCREPANCIES.
4. EROSION CONTROL: EROSION CONTROL DEVICES SHALL BE INSTALLED PRIOR TO COMMENCING CLEARING, STRIPPING AND GRADING OPERATIONS. REFER TO THE EROSION CONTROL PLAN FOR THE SEQUENCE OF EROSION CONTROL DEVICES TO BE INSTALLED.
5. PROPOSED GRADES: THE PROPOSED ELEVATIONS AND CONTOURS SHOWN ARE TO FINISHED GRADE. THE PROPOSED CONTOURS ARE APPROXIMATE. THE PROPOSED SPOT ELEVATIONS AND GRADIENTS ARE TO BE USED IN THE EVENT OF ANY DISCREPANCY WITH THE PROPOSED CONTOURS. MINOR ADJUSTMENT TO FINISH GRADE TO ACCOMPLISH SPOT DRAINAGE IS ACCEPTABLE.
6. ACCESSIBLE ROUTES/PARKING: SIDEWALKS AND CROSSWALKS ALONG ACCESSIBLE ROUTES SHALL BE IN ACCORDANCE WITH TAS AND ADA STANDARDS WITH A MAXIMUM RUNNING SLOPE OF 5% AND A MAXIMUM CROSS SLOPE OF 2%. ACCESSIBLE PARKING SPACES SHALL HAVE A MAXIMUM SLOPE OF 2% IN ALL DIRECTIONS.
7. TESTING: TESTING SHALL BE PERFORMED BY A QUALIFIED TESTING LABORATORY, EMPLOYED AND PAID DIRECTLY BY THE OWNER. TESTING SHALL BE PERFORMED AT A MINIMUM, IN ACCORDANCE WITH THE RECOMMENDATIONS IN THE GEOTECHNICAL REPORT. IN THE EVENT THE RESULTS OF THE INITIAL TESTING DO NOT COMPLY WITH THE PLANS AND SPECIFICATIONS, SUBSEQUENT TESTS NECESSARY TO DETERMINE THE ACCEPTABILITY OF CONSTRUCTION SHALL BE AT THE CONTRACTOR'S EXPENSE.
8. MAXIMUM SITE SLOPES SHALL BE 4:1 UNLESS OTHERWISE NOTED.
9. CONTRACTOR TO PROVIDE POSITIVE DRAINAGE AWAY FROM ALL BUILDINGS.
10. CONTRACTOR TO MAINTAIN EXISTING DRAINAGE PATTERNS DURING CONSTRUCTION UNTIL SUCH TIME THAT THE PROPOSED DRAINAGE INFRASTRUCTURE SHOWN IN THESE CONSTRUCTION PLANS IS INSTALLED AND OPERATIONAL.

RETAINING WALL NOTES:

1. RETAINING WALLS SHOWN ARE FOR SITE GRADING PURPOSES ONLY, AND INCLUDE ONLY LOCATION AND SURFACE SPOT ELEVATIONS AT THE TOP AND BOTTOM OF THE WALL.
2. RETAINING WALL TYPE OR SYSTEM SHALL BE SELECTED BY THE OWNER.
3. RETAINING WALL DESIGN SHALL BE PROVIDED BY OTHERS AND SHALL FIT IN THE WALL ZONE OR LOCATION SHOWN ON THESE PLANS. STRUCTURAL DESIGN AND PERMITTING OF RETAINING WALLS, RAILINGS, AND OTHER WALL SAFETY DEVICES SHALL BE PERFORMED BY A LICENSED ENGINEER AND ARE NOT PART OF THIS PLAN SET.
4. RETAINING WALL DESIGN SHALL MEET THE INTENT OF THE GRADING PLAN AND SHALL ACCOUNT FOR ANY INFLUENCE ON ADJACENT BUILDING FOUNDATIONS, UTILITIES, PROPERTY LINES AND OTHER CONSTRUCTABILITY NOTES.
5. RETAINING WALL ENGINEER SHALL CONSULT THESE PLANS AND THE GEOTECHNICAL REPORT FOR POTENTIAL CONFLICTS.

GRAPHIC SCALE

0 20 40 FEET

SCALE: 1" = 20'

2/9/2026

STATE OF TEXAS — PATRICK C. FILSON — 108577 — LICENSED — PROFESSIONAL ENGINEER

SPARKLE PRESCHOOL

SRIKANTH NAGUNOORI

2345 BASE BURNER PATH LEANDER, TX 78641

SPARKLE MONTESSORI ACADEMY

LOT 1A-R, BLOCK A
CITY OF LEANDER
WILLIAMSON COUNTY, TEXAS

REV.:	DATE:	DESCRIPTION:

kirkman ENGINEERING

KIRKMAN ENGINEERING, LLC
1500 ARROW POINT DRIVE STE. 804
CEDAR PARK, TEXAS 78613

TEXAS FIRM NO. 15874

JOB NUMBER: NAG25001

ISSUE DATE: 2/9/2026

GRADING PLAN

SHEET: 10 OF 30

SD-25-0378

FILE PATH: K:\Civil\NAG25001_Sparkle Leander\Drawings\02_ENGR\01 - Products\4.3\dbt\NAG25001_Sparkle Leander (Drawing)\02_ENGR\01 - Products\Civil\C5.0 GRADING PLAN_NAG25001.dwg

RELEASE: C5.0 GRADING PLAN_NAG25001.dwg
PLOTTED BY: Prathyusha Gadam
PLOTTED DATE: 02/9/2026

Know what's **below.**
Call before you dig.

SITE BENCHMARKS

BM NO. 1 ½" IRON ROD WITH CAP STAMPED "PROP. COR."
ELEVATION = 868.15' (NAD '83)

BM NO. 2 ½" IRON ROD WITH CAP STAMPED "JONES CARTER"
ELEVATION = 879.24' (NAD '83)

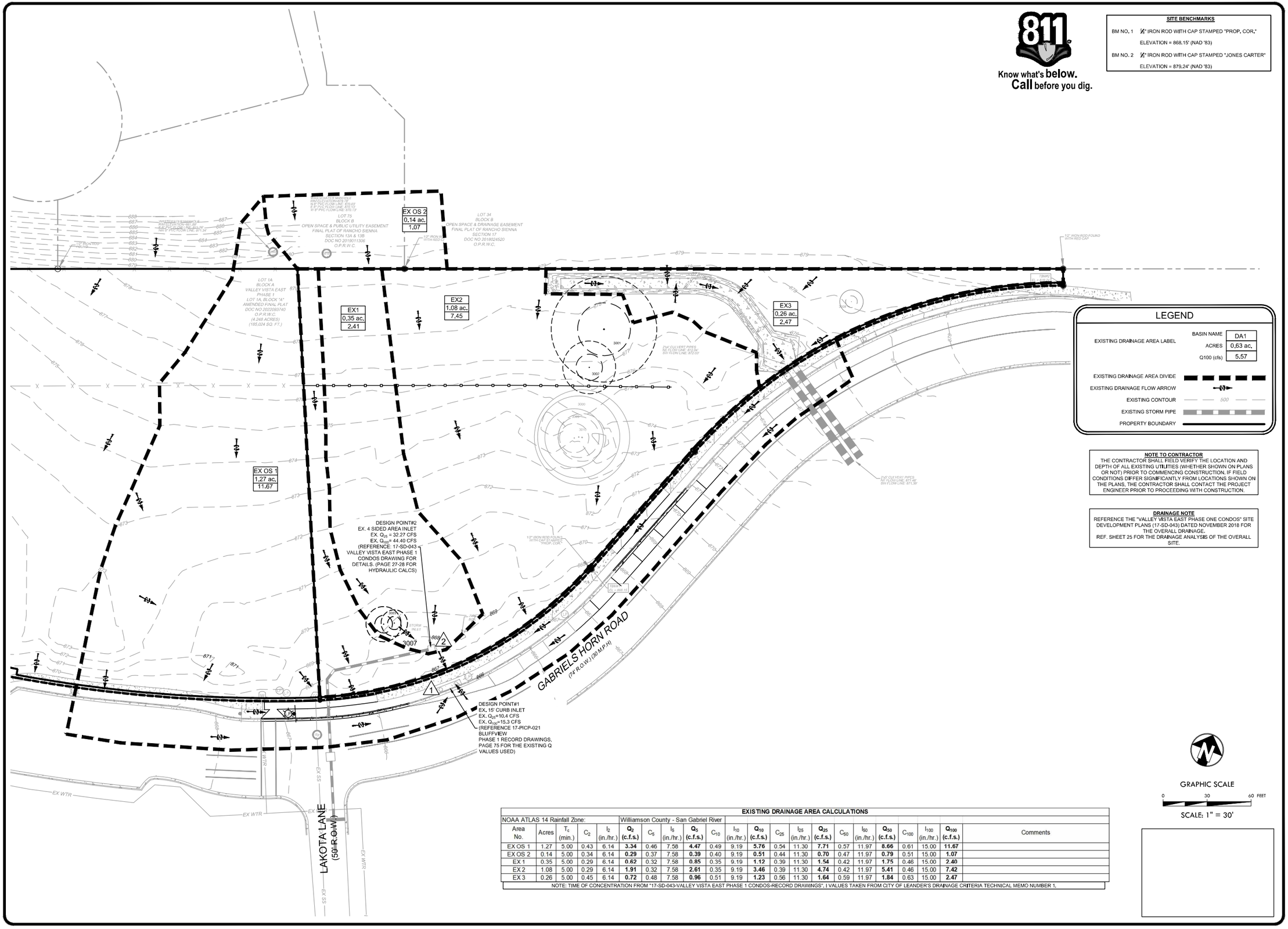

LEGEND

EXISTING DRAINAGE AREA LABEL	BASIN NAME: DA1 / ACRES: 0.63 ac. / Q100 (cfs): 5.57
EXISTING DRAINAGE AREA DIVIDE	
EXISTING DRAINAGE FLOW ARROW	
EXISTING CONTOUR	500
EXISTING STORM PIPE	
PROPERTY BOUNDARY	

NOTE TO CONTRACTOR
THE CONTRACTOR SHALL FIELD VERIFY THE LOCATION AND DEPTH OF ALL EXISTING UTILITIES (WHETHER SHOWN ON PLANS OR NOT) PRIOR TO COMMENCING CONSTRUCTION. IF FIELD CONDITIONS DIFFER SIGNIFICANTLY FROM LOCATIONS SHOWN ON THE PLANS, THE CONTRACTOR SHALL CONTACT THE PROJECT ENGINEER PRIOR TO PROCEEDING WITH CONSTRUCTION.

DRAINAGE NOTE
REFERENCE THE "VALLEY VISTA EAST PHASE ONE CONDOS" SITE DEVELOPMENT PLANS (17-SD-043) DATED NOVEMBER 2018 FOR THE OVERALL DRAINAGE.
REF. SHEET 25 FOR THE DRAINAGE ANALYSIS OF THE OVERALL SITE.

GRAPHIC SCALE
0 30 60 FEET
SCALE: 1" = 30'

EXISTING DRAINAGE AREA CALCULATIONS

NOAA ATLAS 14 Rainfall Zone: Williamson County - San Gabriel River

Area No.	Acres	T_c (min.)	C_2	I_2 (in./hr.)	Q_2 (c.f.s.)	C_5	I_5 (in./hr.)	Q_5 (c.f.s.)	C_{10}	I_{10} (in./hr.)	Q_{10} (c.f.s.)	C_{25}	I_{25} (in./hr.)	Q_{25} (c.f.s.)	C_{50}	I_{50} (in./hr.)	Q_{50} (c.f.s.)	C_{100}	I_{100} (in./hr.)	Q_{100} (c.f.s.)	Comments
EX OS 1	1.27	5.00	0.43	6.14	**3.34**	0.46	7.58	**4.47**	0.49	9.19	**5.76**	0.54	11.30	**7.71**	0.57	11.97	**8.66**	0.61	15.00	**11.67**	
EX OS 2	0.14	5.00	0.34	6.14	**0.29**	0.37	7.58	**0.39**	0.40	9.19	**0.51**	0.44	11.30	**0.70**	0.47	11.97	**0.79**	0.51	15.00	**1.07**	
EX 1	0.35	5.00	0.29	6.14	**0.62**	0.32	7.58	**0.85**	0.35	9.19	**1.12**	0.39	11.30	**1.54**	0.42	11.97	**1.75**	0.46	15.00	**2.40**	
EX 2	1.08	5.00	0.29	6.14	**1.91**	0.32	7.58	**2.61**	0.35	9.19	**3.46**	0.39	11.30	**4.74**	0.42	11.97	**5.41**	0.46	15.00	**7.42**	
EX 3	0.26	5.00	0.45	6.14	**0.72**	0.48	7.58	**0.96**	0.51	9.19	**1.23**	0.56	11.30	**1.64**	0.59	11.97	**1.84**	0.63	15.00	**2.47**	

NOTE: TIME OF CONCENTRATION FROM "17-SD-043-VALLEY VISTA EAST PHASE 1 CONDOS-RECORD DRAWINGS", I VALUES TAKEN FROM CITY OF LEANDER'S DRAINAGE CRITERIA TECHNICAL MEMO NUMBER 1.

2/9/2026

STATE OF TEXAS
PATRICK C. FILSON
108577
LICENSED
PROFESSIONAL ENGINEER

SPARKLE
PRESCHOOL

SRIKANTH
NAGUNOORI

2345 BASE BURNER PATH
LEANDER, TX 78641

SPARKLE MONTESSORI ACADEMY

LOT 1A-R, BLOCK A
CITY OF LEANDER
WILLIAMSON COUNTY, TEXAS

REV:	DATE:	DESCRIPTION:

kirkman ENGINEERING
KIRKMAN ENGINEERING, LLC
1500 ARROW POINT DRIVE STE. 804
CEDAR PARK, TEXAS 78613
TEXAS FIRM NO. 15874

JOB NUMBER: NAG25001
ISSUE DATE: 2/9/2026

EXISTING DRAINAGE AREA MAP

SHEET:
11
OF 30

SD-25-0378

FULL PATH: K:\ADV\NAG\25001_Sparkle Leander\Drawings\02_ENGR\03 - Production\K:\ADV\NAG\25001_Sparkle Leander\Drawings\02_ENGR\03 - Production\01.0 EXISTING DRAINAGE AREA MAP_NAG25001

FILENAME: 01.0 EXISTING DRAINAGE AREA MAP_NAG25001.dwg
PLOTTED BY: Prashantha Gautam
PLOTTED DATE: 2/2/2026

Know what's **below.**
Call before you dig.

SITE BENCHMARKS

BM NO. 1	½" IRON ROD WITH CAP STAMPED "PROP. COR."	ELEVATION = 868.15' (NAD '83)
BM NO. 2	½" IRON ROD WITH CAP STAMPED "JONES CARTER"	ELEVATION = 879.24' (NAD '83)

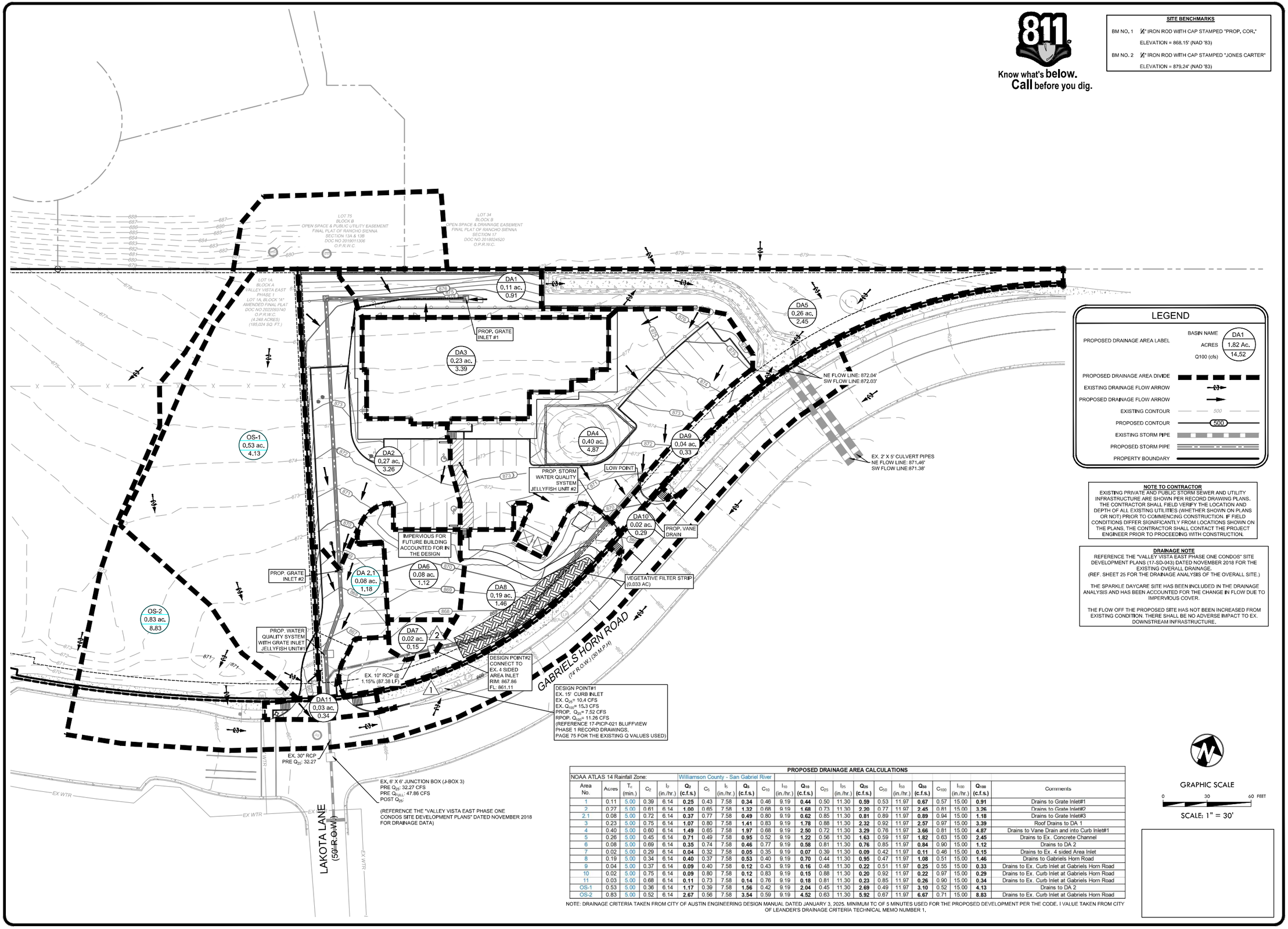

LEGEND

PROPOSED DRAINAGE AREA LABEL	BASIN NAME DA1; ACRES 1.82 Ac.; Q100 (cfs) 14.52
PROPOSED DRAINAGE AREA DIVIDE	
EXISTING DRAINAGE FLOW ARROW	
PROPOSED DRAINAGE FLOW ARROW	
EXISTING CONTOUR	500
PROPOSED CONTOUR	500
EXISTING STORM PIPE	
PROPOSED STORM PIPE	
PROPERTY BOUNDARY	

NOTE TO CONTRACTOR
EXISTING PRIVATE AND PUBLIC STORM SEWER AND UTILITY INFRASTRUCTURE ARE SHOWN PER RECORD DRAWING PLANS. THE CONTRACTOR SHALL FIELD VERIFY THE LOCATION AND DEPTH OF ALL EXISTING UTILITIES (WHETHER SHOWN ON PLANS OR NOT) PRIOR TO COMMENCING CONSTRUCTION. IF FIELD CONDITIONS DIFFER SIGNIFICANTLY FROM LOCATIONS SHOWN ON THE PLANS, THE CONTRACTOR SHALL CONTACT THE PROJECT ENGINEER PRIOR TO PROCEEDING WITH CONSTRUCTION.

DRAINAGE NOTE
REFERENCE THE "VALLEY VISTA EAST PHASE ONE CONDOS" SITE DEVELOPMENT PLANS (17-SD-043) DATED NOVEMBER 2018 FOR THE EXISTING OVERALL DRAINAGE.
(REF. SHEET 25 FOR THE DRAINAGE ANALYSIS OF THE OVERALL SITE.)

THE SPARKLE DAYCARE SITE HAS BEEN INCLUDED IN THE DRAINAGE ANALYSIS AND HAS BEEN ACCOUNTED FOR THE CHANGE IN FLOW DUE TO IMPERVIOUS COVER.

THE FLOW OFF THE PROPOSED SITE HAS NOT BEEN INCREASED FROM EXISTING CONDITION. THERE SHALL BE NO ADVERSE IMPACT TO EX. DOWNSTREAM INFRASTRUCTURE.

PROPOSED DRAINAGE AREA CALCULATIONS

NOAA ATLAS 14 Rainfall Zone: Williamson County - San Gabriel River

Area No.	Acres	T_c (min.)	C_2	I_2 (in./hr.)	Q_2 (c.f.s.)	C_5	I_5 (in./hr.)	Q_5 (c.f.s.)	C_{10}	I_{10} (in./hr.)	Q_{10} (c.f.s.)	C_{25}	I_{25} (in./hr.)	Q_{25} (c.f.s.)	C_{50}	I_{50} (in./hr.)	Q_{50} (c.f.s.)	C_{100}	I_{100} (in./hr.)	Q_{100} (c.f.s.)	Comments
1	0.11	5.00	0.39	6.14	**0.25**	0.43	7.58	**0.34**	0.46	9.19	**0.44**	0.50	11.30	**0.59**	0.53	11.97	**0.67**	0.57	15.00	**0.91**	Drains to Grate Inlet#1
2	0.27	5.00	0.61	6.14	**1.00**	0.65	7.58	**1.32**	0.68	9.19	**1.68**	0.73	11.30	**2.20**	0.77	11.97	**2.45**	0.81	15.00	**3.26**	Drains to Grate Inlet#2
2.1	0.08	5.00	0.72	6.14	**0.37**	0.77	7.58	**0.49**	0.80	9.19	**0.62**	0.85	11.30	**0.81**	0.89	11.97	**0.89**	0.94	15.00	**1.18**	Drains to Grate Inlet#3
3	0.23	5.00	0.75	6.14	**1.07**	0.80	7.58	**1.41**	0.83	9.19	**1.78**	0.88	11.30	**2.32**	0.92	11.97	**2.57**	0.97	15.00	**3.39**	Roof Drains to DA 1
4	0.40	5.00	0.60	6.14	**1.49**	0.65	7.58	**1.97**	0.68	9.19	**2.50**	0.72	11.30	**3.29**	0.76	11.97	**3.66**	0.81	15.00	**4.87**	Drains to Vane Drain and into Curb Inlet#1
5	0.26	5.00	0.45	6.14	**0.71**	0.49	7.58	**0.95**	0.52	9.19	**1.22**	0.56	11.30	**1.63**	0.59	11.97	**1.82**	0.63	15.00	**2.45**	Drains to Ex. Concrete Channel
6	0.08	5.00	0.69	6.14	**0.35**	0.74	7.58	**0.46**	0.77	9.19	**0.58**	0.81	11.30	**0.76**	0.85	11.97	**0.84**	0.90	15.00	**1.12**	Drains to DA 2
7	0.02	5.00	0.29	6.14	**0.04**	0.32	7.58	**0.05**	0.35	9.19	**0.07**	0.39	11.30	**0.09**	0.42	11.97	**0.11**	0.46	15.00	**0.15**	Drains to Ex. 4 sided Area Inlet
8	0.19	5.00	0.34	6.14	**0.40**	0.37	7.58	**0.53**	0.40	9.19	**0.70**	0.44	11.30	**0.95**	0.47	11.97	**1.08**	0.51	15.00	**1.46**	Drains to Gabriels Horn Road
9	0.04	5.00	0.37	6.14	**0.09**	0.40	7.58	**0.12**	0.43	9.19	**0.16**	0.48	11.30	**0.22**	0.51	11.97	**0.25**	0.55	15.00	**0.33**	Drains to Ex. Curb Inlet at Gabriels Horn Road
10	0.02	5.00	0.75	6.14	**0.09**	0.80	7.58	**0.12**	0.83	9.19	**0.15**	0.88	11.30	**0.20**	0.92	11.97	**0.22**	0.97	15.00	**0.29**	Drains to Ex. Curb Inlet at Gabriels Horn Road
11	0.03	5.00	0.68	6.14	**0.11**	0.73	7.58	**0.14**	0.76	9.19	**0.18**	0.81	11.30	**0.23**	0.85	11.97	**0.26**	0.90	15.00	**0.34**	Drains to Ex. Curb Inlet at Gabriels Horn Road
OS-1	0.53	5.00	0.36	6.14	**1.17**	0.39	7.58	**1.56**	0.42	9.19	**2.04**	0.45	11.30	**2.69**	0.49	11.97	**3.10**	0.52	15.00	**4.13**	Drains to DA 2
OS-2	0.83	5.00	0.52	6.14	**2.67**	0.56	7.58	**3.54**	0.59	9.19	**4.52**	0.63	11.30	**5.92**	0.67	11.97	**6.67**	0.71	15.00	**8.83**	Drains to Ex. Curb Inlet at Gabriels Horn Road

NOTE: DRAINAGE CRITERIA TAKEN FROM CITY OF AUSTIN ENGINEERING DESIGN MANUAL DATED JANUARY 3, 2025. MINIMUM TC OF 5 MINUTES USED FOR THE PROPOSED DEVELOPMENT PER THE CODE. I VALUE TAKEN FROM CITY OF LEANDER'S DRAINAGE CRITERIA TECHNICAL MEMO NUMBER 1.

GRAPHIC SCALE
0 30 60 FEET
SCALE: 1" = 30'

2/9/2026

STATE OF TEXAS
PATRICK C. FILSON
108577
LICENSED
PROFESSIONAL ENGINEER

SPARKLE
PRESCHOOL

SRIKANTH
NAGUNOORI

2345 BASE BURNER PATH
LEANDER, TX 78641

SPARKLE MONTESSORI ACADEMY

LOT 1A-R, BLOCK A
CITY OF LEANDER
WILLIAMSON COUNTY, TEXAS

REV.:	DATE:	DESCRIPTION:

kirkman ENGINEERING
KIRKMAN ENGINEERING, LLC
1500 ARROW POINT DRIVE STE. 804
CEDAR PARK, TEXAS 78613
TEXAS FIRM NO. 15874

JOB NUMBER: NAG25001

ISSUE DATE: 2/9/2026

PROPOSED DRAINAGE AREA MAP

SHEET:
12
OF 30

SD-25-0378

FILENAME: C6.1_PROPOSED DRAINAGE AREA MAP_NAG25001.dwg
PLOTTED BY: Prashvitha Gautam
PLOTTED DATE: 4/2/2026
FULL PATH: K:\Izm\NAG25001_Sparkle Leander\Drawings\03_ENGR\03 - Preliminary\K:\Izm\NAG25001_Sparkle Leander\Drawings\03_ENGR\03 - Preliminary\C6.1_PROPOSED DRAINAGE AREA MAP_NAG25001.dwg

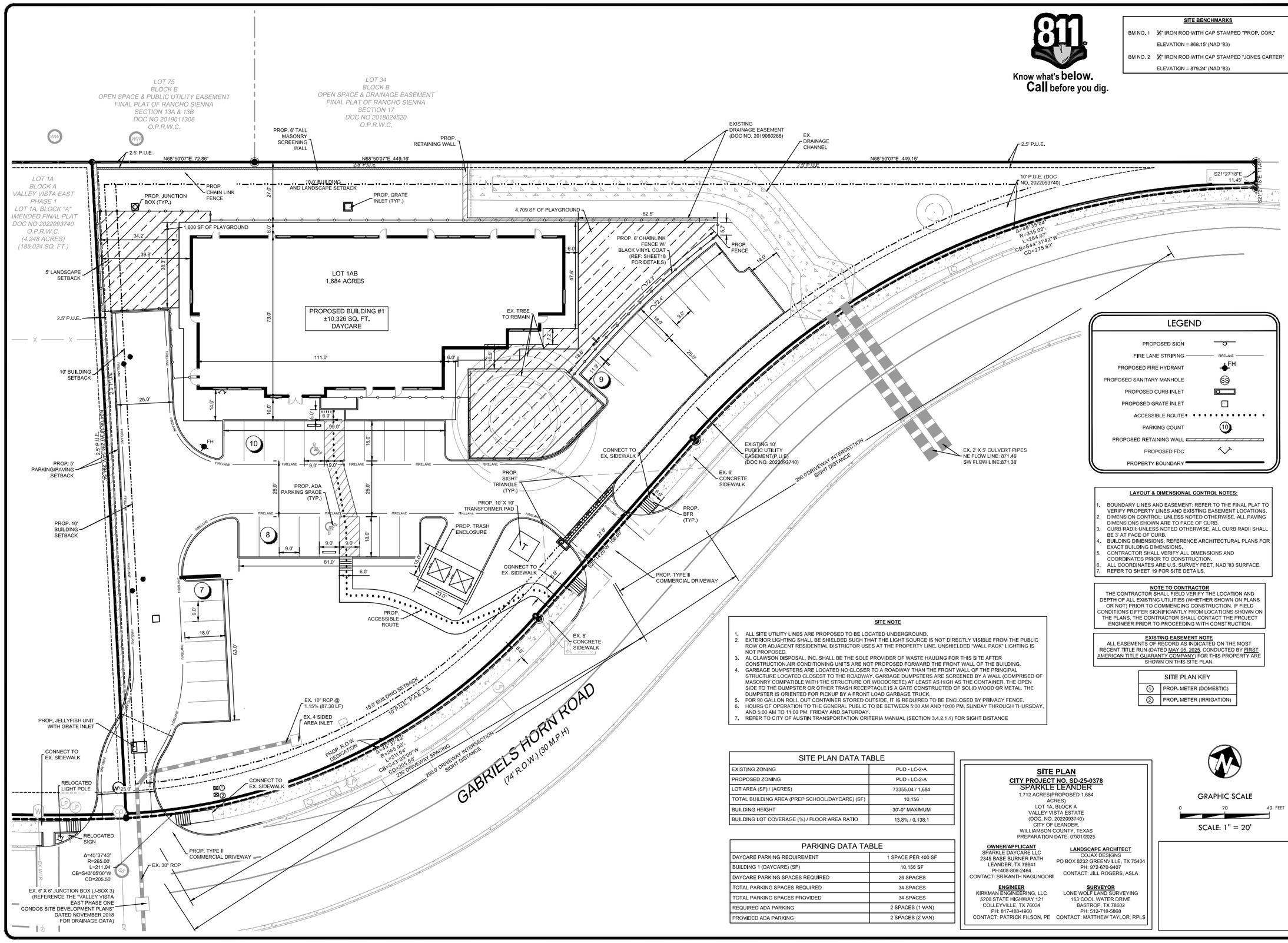

Know what's **below.**
Call before you dig.

SITE BENCHMARKS

BM NO. 1	½" IRON ROD WITH CAP STAMPED "PROP. COR." ELEVATION = 868.15' (NAD '83)
BM NO. 2	½" IRON ROD WITH CAP STAMPED "JONES CARTER" ELEVATION = 879.24' (NAD '83)

LEGEND

- PROPOSED SIGN
- FIRE LANE STRIPING (FIRELANE)
- PROPOSED FIRE HYDRANT (FH)
- PROPOSED SANITARY MANHOLE (SS)
- PROPOSED CURB INLET
- PROPOSED GRATE INLET
- ACCESSIBLE ROUTE
- PARKING COUNT (10)
- PROPOSED RETAINING WALL
- PROPOSED FDC
- PROPERTY BOUNDARY

LAYOUT & DIMENSIONAL CONTROL NOTES:

1. BOUNDARY LINES AND EASEMENT: REFER TO THE FINAL PLAT TO VERIFY PROPERTY LINES AND EXISTING EASEMENT LOCATIONS.
2. DIMENSION CONTROL: UNLESS NOTED OTHERWISE, ALL PAVING DIMENSIONS SHOWN ARE TO FACE OF CURB.
3. CURB RADII: UNLESS NOTED OTHERWISE, ALL CURB RADII SHALL BE 3' AT FACE OF CURB.
4. BUILDING DIMENSIONS: REFERENCE ARCHITECTURAL PLANS FOR EXACT BUILDING DIMENSIONS.
5. CONTRACTOR SHALL VERIFY ALL DIMENSIONS AND COORDINATES PRIOR TO CONSTRUCTION.
6. ALL COORDINATES ARE U.S. SURVEY FEET, NAD '83 SURFACE.
7. REFER TO SHEET 19 FOR SITE DETAILS.

NOTE TO CONTRACTOR

THE CONTRACTOR SHALL FIELD VERIFY THE LOCATION AND DEPTH OF ALL EXISTING UTILITIES (WHETHER SHOWN ON PLANS OR NOT) PRIOR TO COMMENCING CONSTRUCTION. IF FIELD CONDITIONS DIFFER SIGNIFICANTLY FROM LOCATIONS SHOWN ON THE PLANS, THE CONTRACTOR SHALL CONTACT THE PROJECT ENGINEER PRIOR TO PROCEEDING WITH CONSTRUCTION.

EXISTING EASEMENT NOTE

ALL EASEMENTS OF RECORD AS INDICATED ON THE MOST RECENT TITLE RUN (DATED MAY 05, 2025, CONDUCTED BY FIRST AMERICAN TITLE GUARANTY COMPANY) FOR THIS PROPERTY ARE SHOWN ON THIS SITE PLAN.

SITE NOTE

1. ALL SITE UTILITY LINES ARE PROPOSED TO BE LOCATED UNDERGROUND.
2. EXTERIOR LIGHTING SHALL BE SHIELDED SUCH THAT THE LIGHT SOURCE IS NOT DIRECTLY VISIBLE FROM THE PUBLIC ROW OR ADJACENT RESIDENTIAL DISTRICTOR USES AT THE PROPERTY LINE, UNSHIELDED "WALL PACK" LIGHTING IS NOT PROPOSED.
3. AL CLAWSON DISPOSAL, INC. SHALL BE THE SOLE PROVIDER OF WASTE HAULING FOR THIS SITE AFTER CONSTRUCTION.AIR CONDITIONING UNITS ARE NOT PROPOSED FORWARD THE FRONT WALL OF THE BUILDING.
4. GARBAGE DUMPSTERS ARE LOCATED NO CLOSER TO A ROADWAY THAN THE FRONT WALL OF THE PRINCIPAL STRUCTURE LOCATED CLOSEST TO THE ROADWAY. GARBAGE DUMPSTERS ARE SCREENED BY A WALL (COMPRISED OF MASONRY COMPATIBLE WITH THE STRUCTURE OR WOODCRETE) AT LEAST AS HIGH AS THE CONTAINER. THE OPEN SIDE TO THE DUMPSTER OR OTHER TRASH RECEPTACLE IS A GATE CONSTRUCTED OF SOLID WOOD OR METAL. THE DUMPSTER IS ORIENTED FOR PICKUP BY A FRONT LOAD GARBAGE TRUCK.
5. FOR 90 GALLON ROLL OUT CONTAINER STORED OUTSIDE, IT IS REQUIRED TO BE ENCLOSED BY PRIVACY FENCE.
6. HOURS OF OPERATION TO THE GENERAL PUBLIC TO BE BETWEEN 5:00 AM AND 10:00 PM, SUNDAY THROUGH THURSDAY, AND 5:00 AM TO 11:00 PM, FRIDAY AND SATURDAY.
7. REFER TO CITY OF AUSTIN TRANSPORTATION CRITERIA MANUAL (SECTION 3,4,2,1,1) FOR SIGHT DISTANCE

SITE PLAN KEY

1	PROP. METER (DOMESTIC)
2	PROP. METER (IRRIGATION)

SITE PLAN DATA TABLE

EXISTING ZONING	PUD - LC-2-A
PROPOSED ZONING	PUD - LC-2-A
LOT AREA (SF) / (ACRES)	73355.04 / 1.684
TOTAL BUILDING AREA (PREP SCHOOL/DAYCARE) (SF)	10,156
BUILDING HEIGHT	30'-0" MAXIMUM
BUILDING LOT COVERAGE (%) / FLOOR AREA RATIO	13.8% / 0.138:1

PARKING DATA TABLE

DAYCARE PARKING REQUIREMENT	1 SPACE PER 400 SF
BUILDING 1 (DAYCARE) (SF)	10,156 SF
DAYCARE PARKING SPACES REQUIRED	26 SPACES
TOTAL PARKING SPACES REQUIRED	34 SPACES
TOTAL PARKING SPACES PROVIDED	34 SPACES
REQUIRED ADA PARKING	2 SPACES (1 VAN)
PROVIDED ADA PARKING	2 SPACES (2 VAN)

SITE PLAN
CITY PROJECT NO. SD-25-0378
SPARKLE LEANDER
1.712 ACRES(PROPOSED 1.684 ACRES)
LOT 1A, BLOCK A
VALLEY VISTA ESTATE
(DOC. NO. 2022093740)
CITY OF LEANDER,
WILLIAMSON COUNTY, TEXAS
PREPARATION DATE: 07/01/2025

OWNER/APPLICANT
SPARKLE DAYCARE LLC
2345 BASE BURNER PATH
LEANDER, TX 78641
PH:408-806-2464
CONTACT: SRIKANTH NAGUNOORI

LANDSCAPE ARCHITECT
COJAX DESIGNS
PO BOX 8232 GREENVILLE, TX 75404
PH: 972-670-0407
CONTACT: JILL ROGERS, ASLA

ENGINEER
KIRKMAN ENGINEERING, LLC
5200 STATE HIGHWAY 121
COLLEYVILLE, TX 76034
PH: 817-488-4960
CONTACT: PATRICK FILSON, PE

SURVEYOR
LONE WOLF LAND SURVEYING
163 COOL WATER DRIVE
BASTROP, TX 78602
PH: 512-718-5868
CONTACT: MATTHEW TAYLOR, RPLS

GRAPHIC SCALE
0 20 40 FEET
SCALE: 1" = 20'

2/9/2026

STATE OF TEXAS
PATRICK C. FILSON
108577
LICENSED
PROFESSIONAL ENGINEER

SPARKLE PRESCHOOL
SRIKANTH NAGUNOORI
2345 BASE BURNER PATH
LEANDER, TX 78641

SPARKLE MONTESSORI ACADEMY
LOT 1A-R, BLOCK A
CITY OF LEANDER
WILLIAMSON COUNTY, TEXAS

REV:	DATE:	DESCRIPTION:

kirkman ENGINEERING
KIRKMAN ENGINEERING, LLC
1500 ARROW POINT DRIVE STE. 804
CEDAR PARK, TEXAS 78613
TEXAS FIRM NO. 15874

JOB NUMBER: NAG25001
ISSUE DATE: 2/9/2026

SITE PLAN

SHEET: 13 OF 30

SD-25-0378

FILE PATH: K:\Valo\NAG25001_Sparkle Leander\Drawings\02_ENGR\03 - Production\13-Site\NAG25001_Sparkle Leander(Drawings)\02_ENGR\03 - Production\C13 SITE PLAN_NAG25001
PLOTTED BY: Praveena Gulam
PLOTTED DATE: 2/9/2026
RUNAME: C13 SITE PLAN_NAG25001.dwg

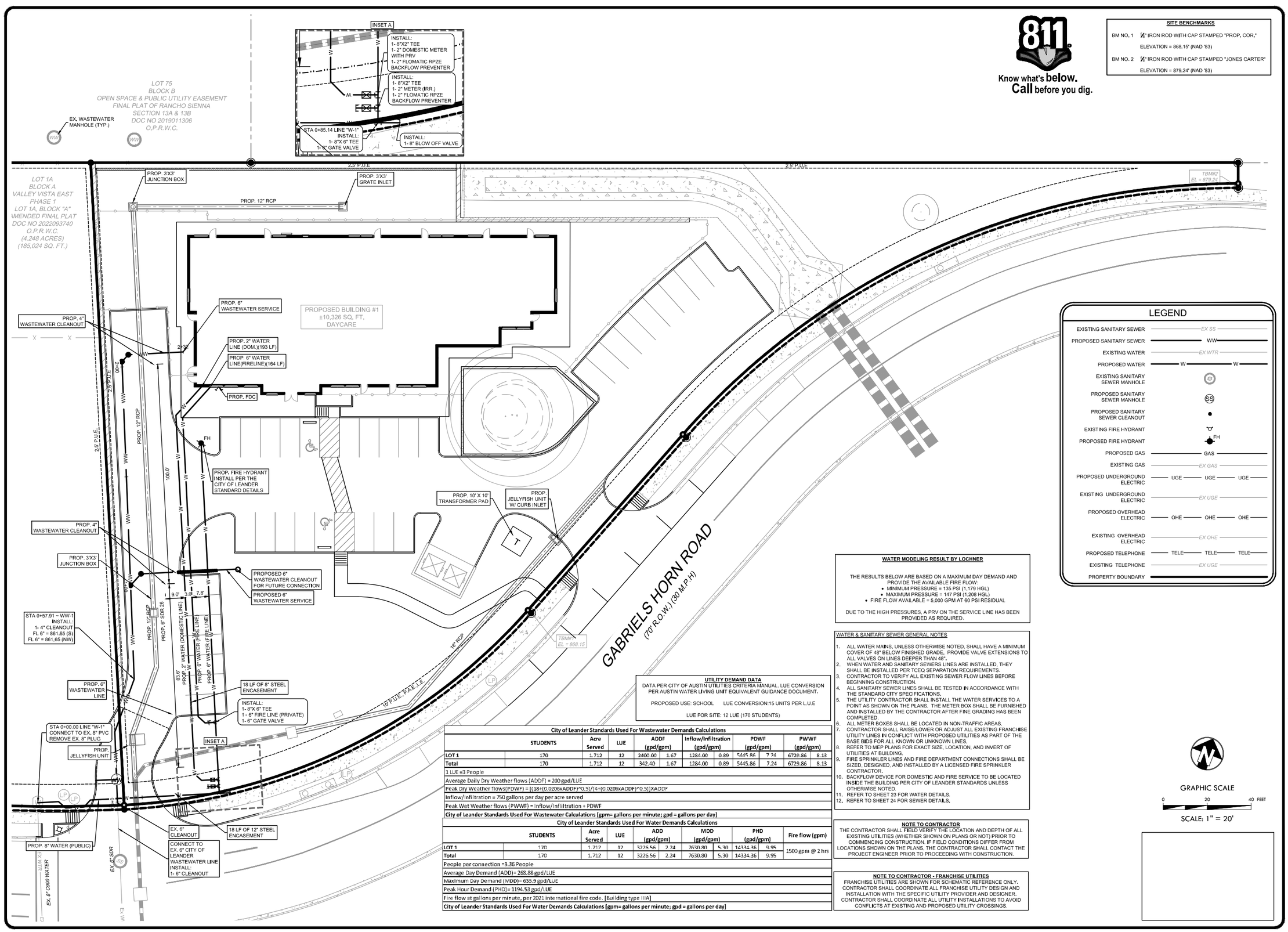

Know what's below. Call before you dig.

SITE BENCHMARKS

BM NO. 1	½" IRON ROD WITH CAP STAMPED "PROP. COR."	ELEVATION = 868.15' (NAD '83)
BM NO. 2	½" IRON ROD WITH CAP STAMPED "JONES CARTER"	ELEVATION = 879.24' (NAD '83)

UTILITY DEMAND DATA

DATA PER CITY OF AUSTIN UTILITIES CRITERIA MANUAL. LUE CONVERSION PER AUSTIN WATER LIVING UNIT EQUIVALENT GUIDANCE DOCUMENT.

PROPOSED USE: SCHOOL LUE CONVERSION:15 UNITS PER L.U.E

LUE FOR SITE: 12 LUE (170 STUDENTS)

City of Leander Standards Used For Wastewater Demands Calculations

STUDENTS		Acre Served	LUE	ADDF (gpd/gpm)		Inflow/Infiltration (gpd/gpm)		PDWF (gpd/gpm)		PWWF (gpd/gpm)	
LOT 1	170	1.712	12	2400.00	1.67	1284.00	0.89	5445.86	7.24	6729.86	8.13
Total	170	1.712	12	342.40	1.67	1284.00	0.89	5445.86	7.24	6729.86	8.13

1 LUE =3 People

Average Daily Dry Weather flows (ADDF) = 200 gpd/LUE

Peak Dry Weather flows(PDWF) = [(.18+(0.0206xADDF)^0.5)/(4+(0.0206xADDF)^0.5)]XADDF

Inflow/infiltration = 750 gallons per day per acre served

Peak Wet Weather flows (PWWF) = Inflow/infiltration + PDWF

City of Leander Standards Used For Wastewater Calculations [gpm= gallons per minute; gpd = gallons per day]

City of Leander Standards Used For Water Demands Calculations

STUDENTS		Acre Served	LUE	ADD (gpd/gpm)		MDD (gpd/gpm)		PHD (gpd/gpm)		Fire flow (gpm)
LOT 1	170	1.712	12	3226.56	2.24	7630.80	5.30	14334.96	9.95	1500 gpm @ 2 hrs
Total	170	1.712	12	3226.56	2.24	7630.80	5.30	14334.96	9.95	

People per connection =3.36 People

Average Day Demand (ADD)= 268.88 gpd/LUE

Maximum Day Demand (MDD)= 635.9 gpd/LUE

Peak Hour Demand (PHD)= 1194.53 gpd/LUE

Fire flow at gallons per minute, per 2021 international fire code. [Building type IIIA]

City of Leander Standards Used For Water Demands Calculations [gpm= gallons per minute; gpd = gallons per day]

WATER MODELING RESULT BY LOCHNER

THE RESULTS BELOW ARE BASED ON A MAXIMUM DAY DEMAND AND PROVIDE THE AVAILABLE FIRE FLOW:
- MINIMUM PRESSURE = 135 PSI (1,179 HGL)
- MAXIMUM PRESSURE = 147 PSI (1,208 HGL)
- FIRE FLOW AVAILABLE = 5,000 GPM AT 60 PSI RESIDUAL

DUE TO THE HIGH PRESSURES, A PRV ON THE SERVICE LINE HAS BEEN PROVIDED AS REQUIRED.

WATER & SANITARY SEWER GENERAL NOTES

1. ALL WATER MAINS, UNLESS OTHERWISE NOTED, SHALL HAVE A MINIMUM COVER OF 48" BELOW FINISHED GRADE. PROVIDE VALVE EXTENSIONS TO ALL VALVES ON LINES DEEPER THAN 48".
2. WHEN WATER AND SANITARY SEWERS LINES ARE INSTALLED, THEY SHALL BE INSTALLED PER TCEQ SEPARATION REQUIREMENTS.
3. CONTRACTOR TO VERIFY ALL EXISTING SEWER FLOW LINES BEFORE BEGINNING CONSTRUCTION.
4. ALL SANITARY SEWER LINES SHALL BE TESTED IN ACCORDANCE WITH THE STANDARD CITY SPECIFICATIONS.
5. THE UTILITY CONTRACTOR SHALL INSTALL THE WATER SERVICES TO A POINT AS SHOWN ON THE PLANS. THE METER BOX SHALL BE FURNISHED AND INSTALLED BY THE CONTRACTOR AFTER FINE GRADING HAS BEEN COMPLETED.
6. ALL METER BOXES SHALL BE LOCATED IN NON-TRAFFIC AREAS.
7. CONTRACTOR SHALL RAISE/LOWER OR ADJUST ALL EXISTING FRANCHISE UTILITY LINES IN CONFLICT WITH PROPOSED UTILITIES AS PART OF THE BASE BIDS FOR ALL KNOWN OR UNKNOWN LINES.
8. REFER TO MEP PLANS FOR EXACT SIZE, LOCATION, AND INVERT OF UTILITIES AT BUILDING.
9. FIRE SPRINKLER LINES AND FIRE DEPARTMENT CONNECTIONS SHALL BE SIZED, DESIGNED, AND INSTALLED BY A LICENSED FIRE SPRINKLER CONTRACTOR.
10. BACKFLOW DEVICE FOR DOMESTIC AND FIRE SERVICE TO BE LOCATED INSIDE THE BUILDING PER CITY OF LEANDER STANDARDS UNLESS OTHERWISE NOTED.
11. REFER TO SHEET 23 FOR WATER DETAILS.
12. REFER TO SHEET 24 FOR SEWER DETAILS.

NOTE TO CONTRACTOR

THE CONTRACTOR SHALL FIELD VERIFY THE LOCATION AND DEPTH OF ALL EXISTING UTILITIES (WHETHER SHOWN ON PLANS OR NOT) PRIOR TO COMMENCING CONSTRUCTION. IF FIELD CONDITIONS DIFFER FROM LOCATIONS SHOWN ON THE PLANS, THE CONTRACTOR SHALL CONTACT THE PROJECT ENGINEER PRIOR TO PROCEEDING WITH CONSTRUCTION.

NOTE TO CONTRACTOR - FRANCHISE UTILITIES

FRANCHISE UTILITIES ARE SHOWN FOR SCHEMATIC REFERENCE ONLY. CONTRACTOR SHALL COORDINATE ALL FRANCHISE UTILITY DESIGN AND INSTALLATION WITH THE SPECIFIC UTILITY PROVIDER AND DESIGNER. CONTRACTOR SHALL COORDINATE ALL UTILITY INSTALLATIONS TO AVOID CONFLICTS AT EXISTING AND PROPOSED UTILITY CROSSINGS.

2/9/2026

STATE OF TEXAS
PATRICK C. FILSON
108577
LICENSED
PROFESSIONAL ENGINEER

SPARKLE PRESCHOOL

SRIKANTH NAGUNOORI

2345 BASE BURNER PATH
LEANDER, TX 78641

SPARKLE MONTESSORI ACADEMY

LOT 1A-R, BLOCK A
CITY OF LEANDER
WILLIAMSON COUNTY, TEXAS

REV.	DATE:	DESCRIPTION:

kirkman ENGINEERING
KIRKMAN ENGINEERING, LLC
1500 ARROW POINT DRIVE STE. 804
CEDAR PARK, TEXAS 78613
TEXAS FIRM NO. 15874

JOB NUMBER: NAG25001

ISSUE DATE: 2/9/2026

UTILITY PLAN

SHEET: 14 OF 30

SD-25-0378

FULL PATH: K:\Izn\NAG25001_Sparkle Leander\Drawings\00_ENGR\03 - Production\Xrefs\NAG25001_Sparkle Leander(Drawings)\00_ENGR\03 - Production\C2.0 UTILITY PLAN_NAG25001
FILENAME: C2.0 UTILITY PLAN_NAG25001.dwg
PLOTTED BY: Prashanthi Gautam
PLOTTED DATE: 4/2026

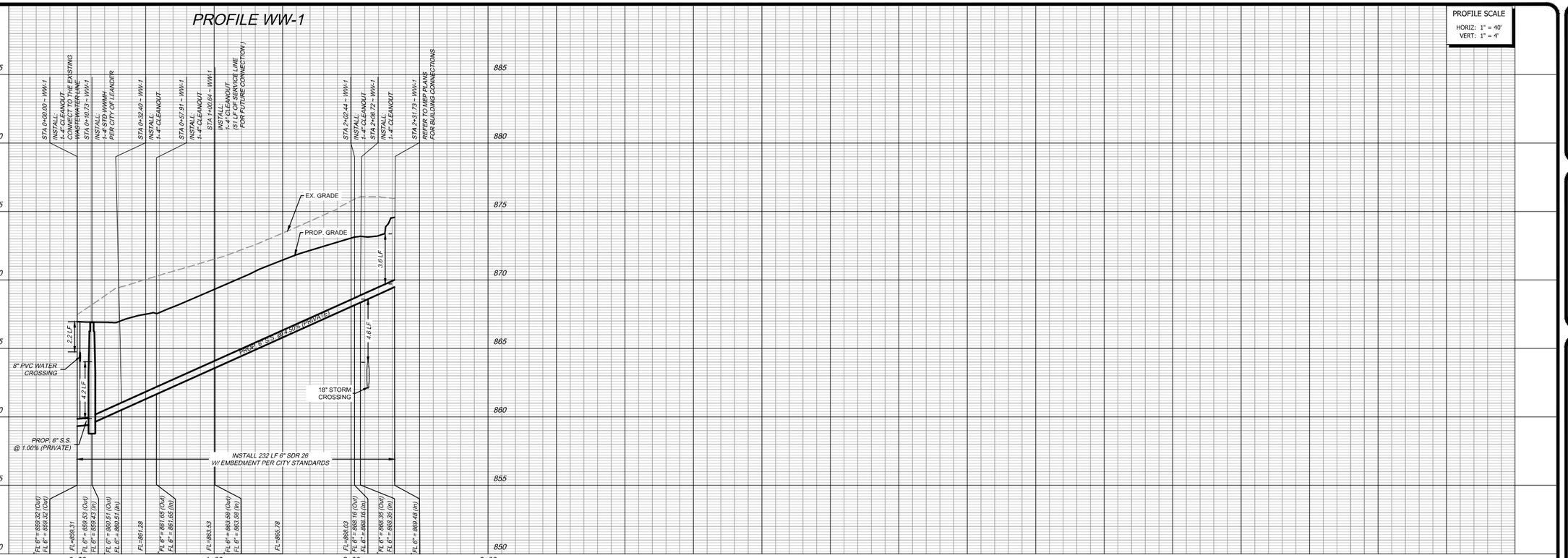

2/9/2026

STATE OF TEXAS
PATRICK C. FILSON
108577
LICENSED
PROFESSIONAL ENGINEER

SPARKLE
PRESCHOOL

SRIKANTH
NAGUNOORI

2345 BASE BURNER PATH
LEANDER, TX 78641

SPARKLE MONTESSORI ACADEMY

LOT 1A-R, BLOCK A
CITY OF LEANDER
WILLIAMSON COUNTY, TEXAS

REV:	DATE:	DESCRIPTION:

kirkman ENGINEERING

KIRKMAN ENGINEERING, LLC
1500 ARROW POINT DRIVE STE. 804
CEDAR PARK, TEXAS 78613

TEXAS FIRM NO. 15874

JOB NUMBER: NAG25001

ISSUE DATE: 2/9/2026

UTILITY PROFILE

SHEET:
15
OF 30

SD-25-0378

811 Know what's below. Call before you dig.

SITE BENCHMARKS

BM NO. 1 ½" IRON ROD WITH CAP STAMPED "PROP. COR."
ELEVATION = 868.15' (NAD '83)

BM NO. 2 ½" IRON ROD WITH CAP STAMPED "JONES CARTER"
ELEVATION = 879.24' (NAD '83)

LOT 75
BLOCK B
OPEN SPACE & PUBLIC UTILITY EASEMENT
FINAL PLAT OF RANCHO SIENNA
SECTION 13A & 13B
DOC NO 2019011306
O.P.R.W.C.

LOT 34
BLOCK B
OPEN SPACE & DRAINAGE EASEMENT
FINAL PLAT OF RANCHO SIENNA
SECTION 17
DOC NO 2018024520
O.P.R.W.C.

LOT 1A
BLOCK A
VALLEY VISTA EAST
PHASE 1
LOT 1A, BLOCK "A"
AMENDED FINAL PLAT
DOC NO 2022093740
O.P.R.W.C.
(4.248 ACRES)
(185,024 SQ. FT.)

EX. DRAINAGE CHANNEL

25' P.U.E.

STA 3+71.39 LINE "ST_B"
INSTALL:
1- 3'X 3' GRATE INLET
TI=873.90
FL 18" =863.89

3+00 PROP. 18" STORM @ 1.00% (PRIVATE)

STA 2+75.86 LINE "ST_B"
INSTALL:
1- 3' SQUARE
JUNCTION BOX
RIM=876.17
FL 18" =862.94
FL 18" =862.94

PROPOSED BUILDING #1
±10,326 SQ. FT.
DAYCARE

TBM#2
EL = 879.24

3008

EX. CURB INLET (TYP.)

3009

3010

EX. ROADWAY CULVERTS

PROP. TRENCH DRAIN

PROP. FIRE HYDRANT

PROP. 6" WASTEWATER

STA 1+52.65 LINE "ST_A"=
INSTALL:
1- JELLYFISH UNIT
W/ CURB INLET
(REF: SHEET 21 FOR
DETAIL, JFPD0806)

2' X 5' CULVERT PIPES
NE FL : 871.48'
SW FL : 871.38'

PROP. WASTEWATER CONNECTION FOR FUTURE

PROP. 18" STORM @ 1.50% (PRIVATE)

TBM#1
EL = 868.15

STA 0+90.97 LINE "ST_B"
INSTALL:
1- 3'X3'
GRATE INLET
RIM=868.48

STA 0+66.30 LINE "ST_B"=
INSTALL:
1- 12"X 12" X 45° BEND
FL 18" =860.84

STA 0+33.82 LINE "ST_B"=
INSTALL:
1- JELLYFISH UNIT W/
2.5'X2.5' GRATE INLET
(RE:SHEET 21 FOR DETAIL
692027-010)
FL 18" =860.51
FL 18" =860.51

PROP. 18" STORM @ 1.00% (PRIVATE)

PROP. 2" WATER (DOMESTIC LINE)

PROP. 6" WATER (WATER LINE)

PROP. 6" WATER (FIRE LINE)

EXISTING 18" RCP

PROP. 18" STORM @ 1.50% (PRIVATE)

PROP. 18" STORM @ 1.13% (PRIVATE)

PROP. 18" STORM @ 1.15% (PRIVATE)

STA 0+52.32 LINE "ST_A"=
1- 18" X 45° HORIZ. BEND
FL 18" =861.89

STA 0+00.00 LINE "ST_A"=
CONNECT TO
EX. 4 SIDED AREA INLET
RIM 867.86
FL 861.11
FL 18" =861.11

GABRIELS HORN ROAD
(74' R.O.W.) (30 M.P.H)

EXISTING 30" RCP

EX. WWR

EX. W

LEGEND

- PROPOSED CURB INLET
- PROPOSED STORM DRAIN
- EXISTING STORM DRAIN
- PROPOSED GRATE INLET
- PROPOSED STORM JUNCTION BOX
- PROPERTY BOUNDRAY

STORM DRAIN NOTES:

1. REFER TO SHEET 20 FOR STORM DRAIN DETAILS.
2. CONTRACTOR SHALL RAISE/LOWER OR ADJUST ALL EXISTING FRANCHISE UTILITY LINES IN CONFLICT WITH PROPOSED UTILITIES AS PART OF THE BASE BIDS FOR ALL KNOWN OR UNKNOWN LINES.

NOTE TO CONTRACTOR

EXISTING PRIVATE AND PUBLIC STORM SEWER AND UTILITY INFRASTRUCTURE ARE SHOWN PER RECORD DRAWING PLANS. THE CONTRACTOR SHALL FIELD VERIFY THE LOCATION AND DEPTH OF ALL EXISTING UTILITIES (WHETHER SHOWN ON PLANS OR NOT) PRIOR TO COMMENCING CONSTRUCTION. IF FIELD CONDITIONS DIFFER FROM LOCATIONS SHOWN ON THE PLANS, THE CONTRACTOR SHALL CONTACT THE PROJECT ENGINEER PRIOR TO PROCEEDING WITH CONSTRUCTION.

GRAPHIC SCALE
0 20 40 FEET
SCALE: 1" = 20'

2/9/2026

STATE OF TEXAS
PATRICK C. FILSON
108577
LICENSED
PROFESSIONAL ENGINEER

SPARKLE PRESCHOOL

SRIKANTH NAGUNOORI

2345 BASE BURNER PATH
LEANDER, TX 78641

SPARKLE MONTESSORI ACADEMY

LOT 1A-R, BLOCK A
CITY OF LEANDER
WILLIAMSON COUNTY, TEXAS

REV.:	DATE:	DESCRIPTION:

kirkman ENGINEERING
KIRKMAN ENGINEERING, LLC
1500 ARROW POINT DRIVE STE. 804
CEDAR PARK, TEXAS 78613
TEXAS FIRM NO. 15874

JOB NUMBER: NAG25001

ISSUE DATE: 2/9/2026

STORM PLAN

SHEET: 16 OF 30

SD-25-0378

FILE PATH: K:\Jobs\NAG25001_Sparkle Leander\Drawings\02_ENGR\03 - Production\Jobs\NAG25001_Sparkle Leander\Drawings\02_ENGR\03 - Production\02L2 STORM PLAN_NAG25001

FILENAME: 02L2 STORM PLAN_NAG25001.dwg
PLOTTED BY: Thanvantha Gautam
PLOTTED DATE: 2/9/2026

PROFILE ST_A

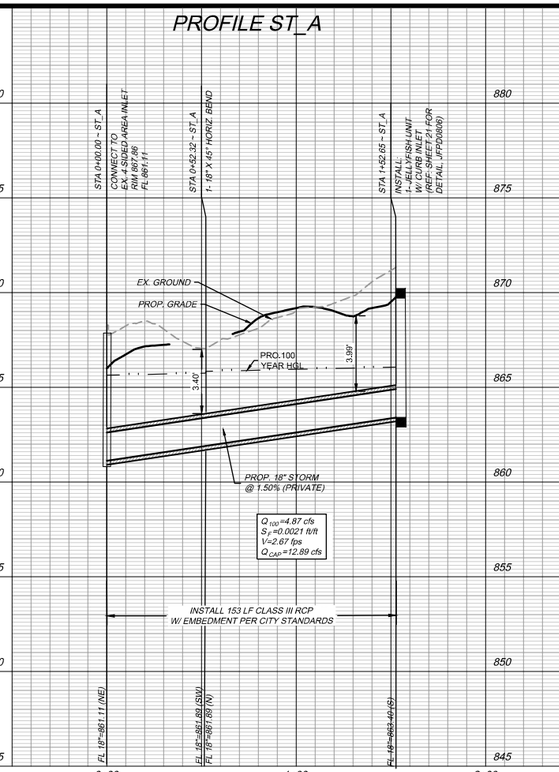

PROFILE ST_B

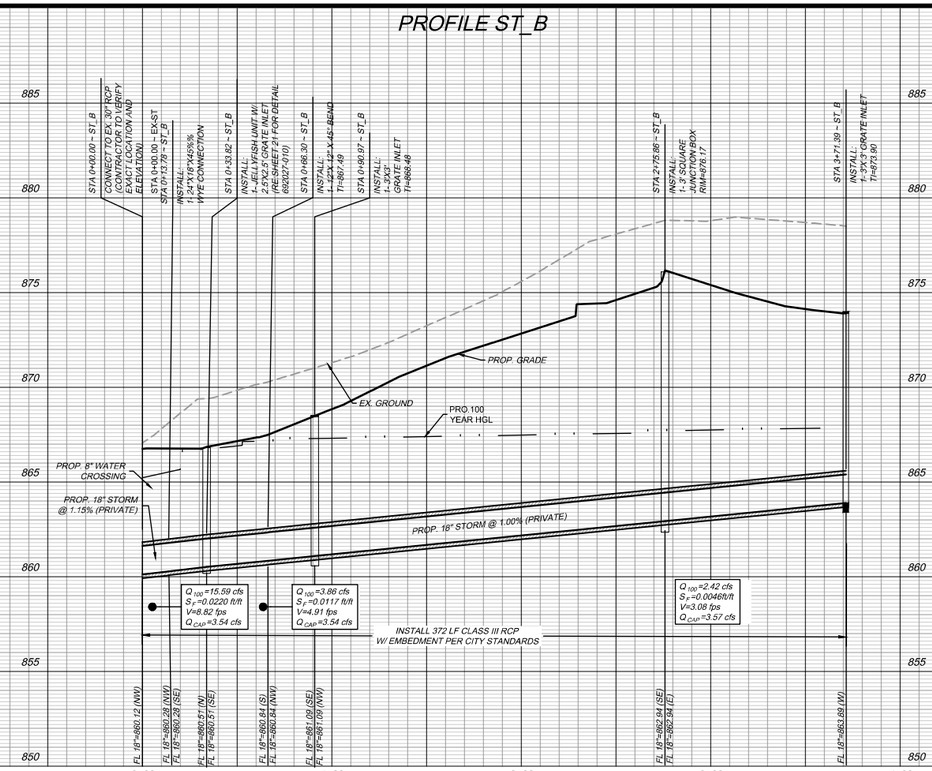

PROFILE SCALE
HORIZ: 1" = 40'
VERT: 1" = 4'

STORM PROFILE NOTE
Q_{cap} REPRESENTS THE PIPE CAPACITY IN FULL FLOW CONDITIONS. Q_{100} MAY EXCEED Q_{cap} WHEN PIPE IS UNDER PRESSURE FLOW CONDITIONS.

PROFILE SCALE
HORIZ: 1" = 40'
VERT: 1" = 4'

2/9/2026

STATE OF TEXAS
PATRICK C. FILSON
108577
LICENSED
PROFESSIONAL ENGINEER

SPARKLE PRESCHOOL

SRIKANTH NAGUNOORI

2345 BASE BURNER PATH
LEANDER, TX 78641

SPARKLE MONTESSORI ACADEMY

LOT 1A-R, BLOCK A
CITY OF LEANDER
WILLIAMSON COUNTY, TEXAS

REV:	DATE:	DESCRIPTION:

KIRKMAN ENGINEERING, LLC
1500 ARROW POINT DRIVE STE. 804
CEDAR PARK, TEXAS 78613

TEXAS FIRM NO. 15874

JOB NUMBER: NAG25001

ISSUE DATE: 2/9/2026

STORM PROFILE

SHEET:
17
OF 30

SD-25-0378

FILENAME: CV_2 STORM PLAN_NAG25001.dwg
PLOTTED ON: Monday, February 09, 2026
PLOTTED AT: 3:59:09 PM

FULL PATH: K:\Jobs\NAG2500\1_Sparkle Leander\Drawings\02_CNDR\03 - Production\K:\Jobs\NAG2500\1_Sparkle Leander\Drawings\02_CNDR\03 - Production\02\2.2 STORM PLAN_NAG25001

LOT 75
BLOCK B
OPEN SPACE & PUBLIC UTILITY EASEMENT
FINAL PLAT OF RANCHO SIENNA
SECTION 13A & 13B
DOC NO 2019011306
O.P.R.W.C.

LOT 34
BLOCK B
OPEN SPACE & DRAINAGE EASEMENT
FINAL PLAT OF RANCHO SIENNA
SECTION 17
DOC NO 2018024520
O.P.R.W.C.

LOT 1A
BLOCK A
VALLEY VISTA EAST
PHASE 1
LOT 1A, BLOCK "A"
MENDED FINAL PLAT
DOC NO 2022093740
O.P.R.W.C.
(4.248 ACRES)
(185,024 SQ. FT.)

Know what's below.
Call before you dig.

SITE BENCHMARKS

BM NO. 1 ½" IRON ROD WITH CAP STAMPED "PROP. COR."
ELEVATION = 868.15' (NAD '83)

BM NO. 2 ½" IRON ROD WITH CAP STAMPED "JONES CARTER"
ELEVATION = 879.24' (NAD '83)

NOTE TO CONTRACTOR

THE CONTRACTOR SHALL FIELD VERIFY THE LOCATION AND DEPTH OF ALL EXISTING UTILITIES (WHETHER SHOWN ON PLANS OR NOT) PRIOR TO COMMENCING CONSTRUCTION. IF FIELD CONDITIONS DIFFER FROM LOCATIONS SHOWN ON THE PLANS, THE CONTRACTOR SHALL CONTACT THE PROJECT ENGINEER PRIOR TO PROCEEDING WITH CONSTRUCTION.

2.5' P.U.E.
PROPOSED BUILDING #1
±10,326 SQ. FT.
DAYCARE
PROP. PRIVATE SIDEWALK
PROP. BFR
PROP. 5" REINFORCED CONC. PAVEMENT
PROP. 6" REINFORCED CONC. PAVEMENT
FIRELANE
FH
EX. TREE TO REMAIN (TYP.)
EX. DRAINAGE CHANNEL
EX. CONC. PUBLIC SIDEWALK (TYP.)
PROP. SIGHT VISIBILITY TRIANGLE (TYP.)
TBM#2
EL = 879.24
TBM#1
EL = 868.15
10' P.U.E. P.A.E. L.E.
GABRIELS HORN ROAD
(74' R.O.W.) (30 M.P.H)

LEGEND

- PARKING AREAS — 5" 4,000 PSI CLASS "C" (28 DAYS) REIN. CONC. PAVEMENT W/ No. 4 BARS @ 18" O.C.E.W.
- FIRE LANE — 6" 4,000 PSI CLASS "C" (28 DAYS) REIN. CONC. PAVEMENT W/ No. 4 BARS @ 18" O.C.E.W.
- DRIVEWAY — 6" 4,000 PSI CLASS "C" (28 DAYS) REIN. CONC. PAVEMENT W/ No. 4 BARS @ 18" O.C.E.W.
- DUMPSTER AREAS — 6" 4,000 PSI CLASS "C" (28 DAYS) REIN. CONC. PAVEMENT W/ No. 4 BARS @ 18" O.C.E.W.
- PRIVATE SIDEWALK — 4" 3,000 PSI CLASS "A" (28 DAYS) REIN. CONC. W/ No. 3 BARS @ 18" O.C.E.W.
- PUBLIC SIDEWALK — 4" 3,000 PSI CLASS "A" (28 DAYS) REIN. CONC. W/ No. 3 BARS @ 18" O.C.E.W.
- PROPERTY BOUNDARY

PAVING NOTES

1. PAVING RECOMMENDATIONS ARE MADE BY SCI ENGINEERING INC. REPORT No. 2025-1533.10 DATED 10/2025.
2. CONTRACTOR SHALL OBTAIN A COPY OF SAID GEOTECHNICAL ENGINEERING REPORT AND FAMILIARIZE THEMSELVES PRIOR TO BIDDING AND CONSTRUCTING THE IMPROVEMENTS OF THE PROJECT.
3. ALL PROPOSED PUBLIC PAVEMENT TO BE PER THE CITY OF LEANDER STANDARDS & SPECIFICATIONS.
4. PAINT PARKING STALL STRIPE 4" SOLID WHITE @ 9' O.C.C.
5. PAINT ACCESSIBLE PARKING LOGO SOLID WHITE.
6. PAINT ACCESSIBLE PEDESTRIAN CROSSWALK 6" SOLID WHITE REFLECTIVE @ 2' C.C. @ 45°.
7. PAINT FIRE LANE STRIPE IN ACCORDANCE WITH LOCAL AUTHORITIES' STANDARDS. STRIPE SHALL BE 6" "TRAFFIC RED" WITH 4" HIGH "TRAFFIC WHITE" LETTERS.
8. INSTALLATION AND PLACEMENT OF IRRIGATION SLEEVES AND UTILITY CONDUITS SHALL BE IN ACCORDANCE WITH LANDSCAPE ARCHITECT AND MEP PLANS. CONTRACTOR TO VERIFY ALL SLEEVES HAVE BEEN PLACED BEFORE PAVING BEING PLACED.
9. THE CONTRACTOR TO SUBMIT A JOINT SPACING PLAN TO THE ENGINEER FOR APPROVAL. EXPANSION SHALL BE 90' MAXIMUM EACH WAY WITH NO KEYWAYS AND SAWED DUMMY JOINT SPACING SHALL BE 15' EACH WAY UNLESS OTHERWISE NOTED.

GRAPHIC SCALE
0 20 40 FEET
SCALE: 1" = 20'

2/9/2026

STATE OF TEXAS
PATRICK C. FILSON
108577
LICENSED
PROFESSIONAL ENGINEER

SPARKLE
PRESCHOOL

SRIKANTH
NAGUNOORI

2345 BASE BURNER PATH
LEANDER, TX 78641

SPARKLE MONTESSORI ACADEMY

LOT 1A-R, BLOCK A
CITY OF LEANDER
WILLIAMSON COUNTY, TEXAS

REV.:	DATE:	DESCRIPTION:

kirkman ENGINEERING
KIRKMAN ENGINEERING, LLC
1500 ARROW POINT DRIVE STE. 804
CEDAR PARK, TEXAS 78613
TEXAS FIRM NO. 15874

JOB NUMBER: NAG25001
ISSUE DATE: 2/9/2026

PAVING PLAN

SHEET:
18
OF 30

SD-25-0378

FILE PATH: K:\Wil\WAG25001_SparkleLeander\Drawings\02_ENGR\01 - Production\Site\WAG25001_SparkleLeander(Drawings)02_ENGR(01) - Production\01_PAVING PLAN_WAG25001
FILENAME: 02_PAVING PLAN_WAG25001.dwg
PLOTTED BY: Prashanka Gautam
PLOTTED DATE: 2/9/2026

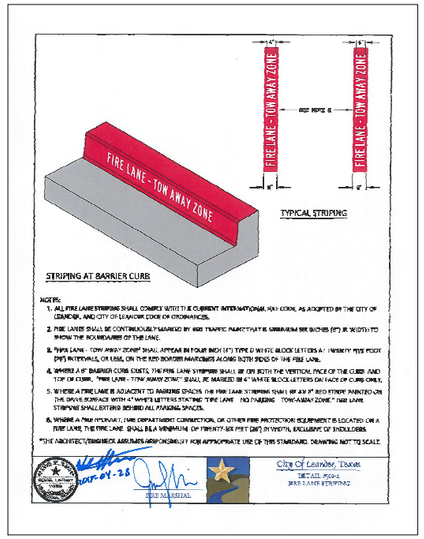

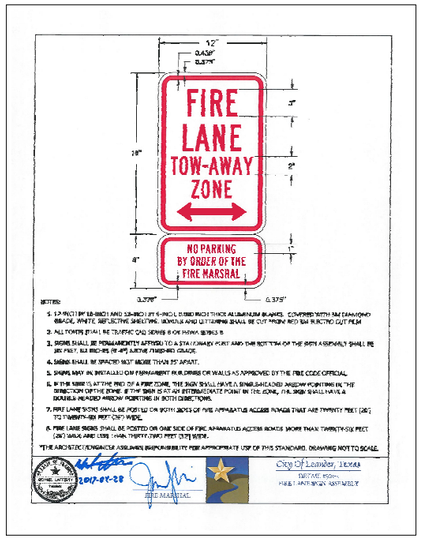

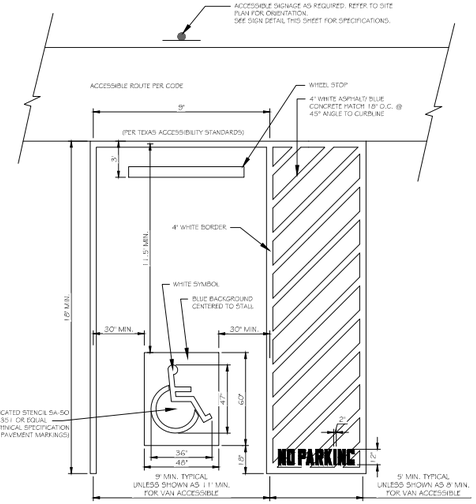

NOTES:
1. RE: SITE PLAN FOR LOCATION OF ADA PARKING SPACES AND ACCESS AISLE IN RELATIONSHIP TO THE DOOR LOCATION. (THIS DETAIL IS FOR STRIPING LAYOUT ONLY)
2. PARKING STRIPES AND THE ADA INTERNATIONAL HANDICAP SYMBOL ARE TO BE PAINTED PER THE MANUFACTURERS RECOMMENDATIONS.
3. THE WORDS "NO PARKING" SHALL BE PAINTED ON ANY ACCESS AISLE ADJACENT TO THE PARKING SPACE. THE WORDS MUST BE PAINTED IN ALL CAPITAL LETTERS, WITH A LETTER HEIGHT OF AT LEAST TWELVE INCHES, AND A STROKE WIDTH OF AT LEAST TWO INCHES.

ACCESSIBLE PARKING SPACE
N.T.S.

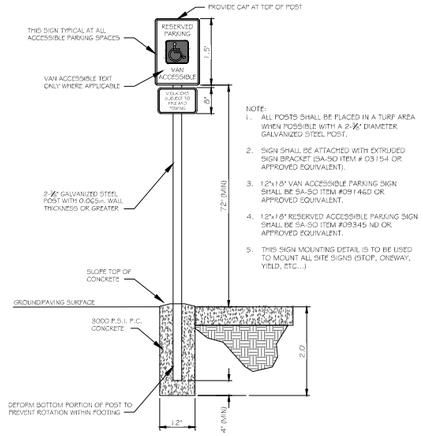

NOTE:
1. ALL POSTS SHALL BE PLACED IN A TURF AREA WHEN POSSIBLE WITH A 2-3/8" DIAMETER GALVANIZED STEEL POST.
2. SIGN SHALL BE ATTACHED WITH EXTRUDED SIGN BRACKET (SA-SO ITEM # 03154 OR APPROVED EQUIVALENT).
3. 12"x18" VAN ACCESSIBLE PARKING SIGN SHALL BE SA-SO ITEM #09146D OR APPROVED EQUIVALENT.
4. 12"x18" RESERVED ACCESSIBLE PARKING SIGN SHALL BE SA-SO ITEM #09345 ND OR APPROVED EQUIVALENT.
5. THIS SIGN MOUNTING DETAIL IS TO BE USED TO MOUNT ALL SITE SIGNS (STOP, ONEWAY, YIELD, ETC...)

SIGN MOUNTING DETAIL
N.T.S.

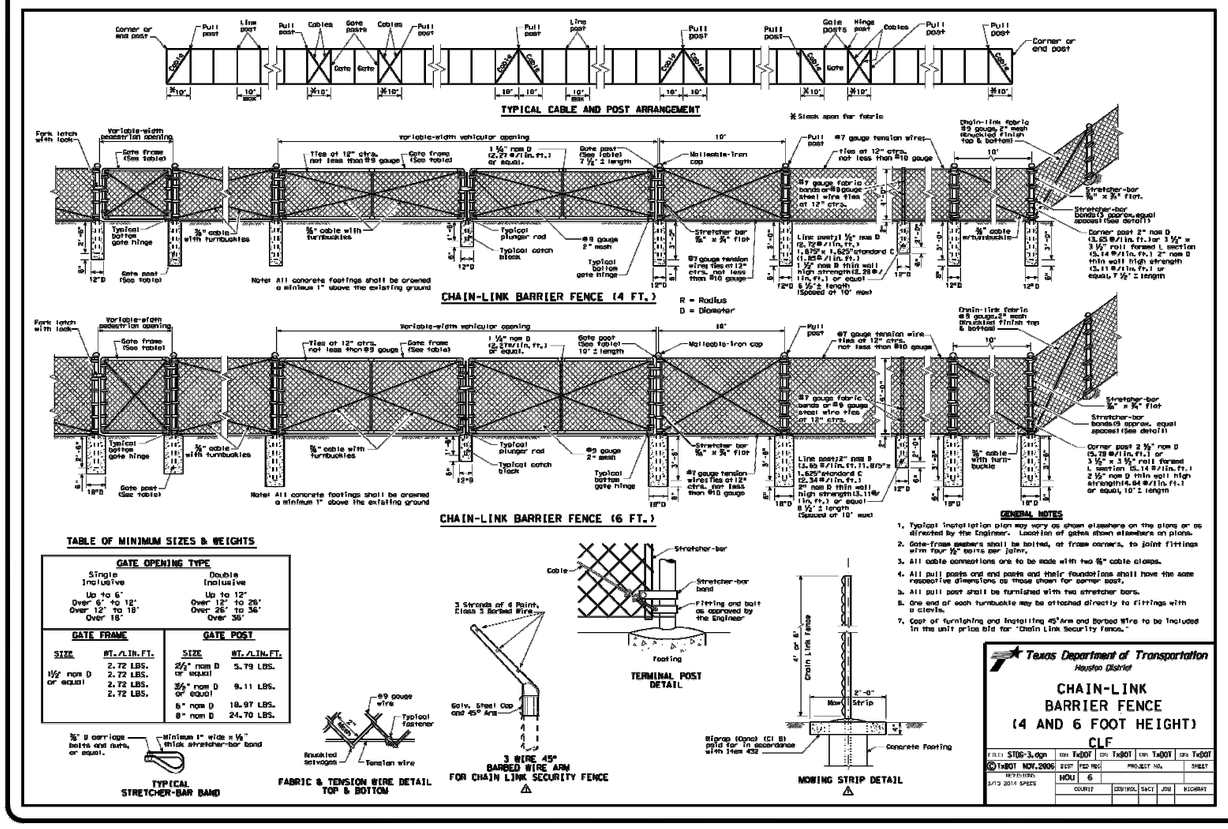

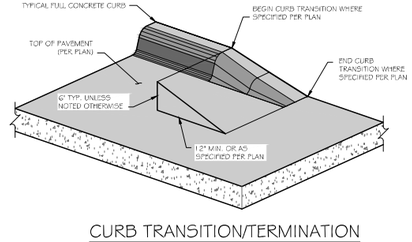

CURB TRANSITION/TERMINATION
N.T.S.

2/9/2026

STATE OF TEXAS
PATRICK C. FILSON
108577
LICENSED
PROFESSIONAL ENGINEER

SPARKLE PRESCHOOL

SRIKANTH NAGUNOORI

2345 BASE BURNER PATH
LEANDER, TX 78641

SPARKLE MONTESSORI ACADEMY

LOT 1A-R, BLOCK A
CITY OF LEANDER
WILLIAMSON COUNTY, TEXAS

REV:	DATE:	DESCRIPTION:

kirkman ENGINEERING

KIRKMAN ENGINEERING, LLC
1500 ARROW POINT DRIVE STE. 804
CEDAR PARK, TEXAS 78613
TEXAS FIRM NO. 15874

JOB NUMBER: NAG25001

ISSUE DATE: 2/9/2026

SITE DETAILS

SHEET: 19 OF 30

SD-25-0378

FILENAME: C:\D SITE DETAILS_NAG25001.dwg
PLOTTED BY: Priyadarsha Gautam
PLOTTED DATE: 2/9/2026
FULL PATH: K:\MAIN\NAG2001_Sparkle Leander\Drawings\00_ENGR\03 - Production\K:\Main\NAG2001_Sparkle Leander\Drawings\00_ENGR\03 - Production\C01.0 SITE DETAILS_NAG2001

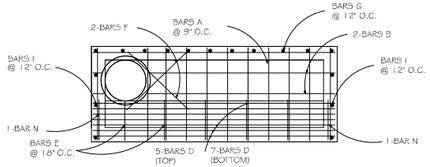

PLAN VIEW (5, 6, 8 AND 10 FOOT INLET)

N.T.S.

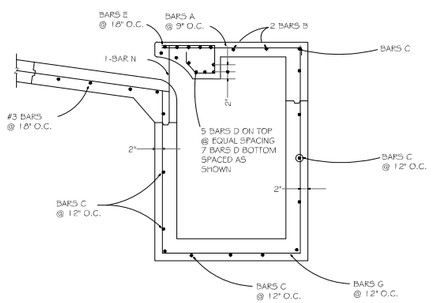

SECTION E-E

N.T.S.

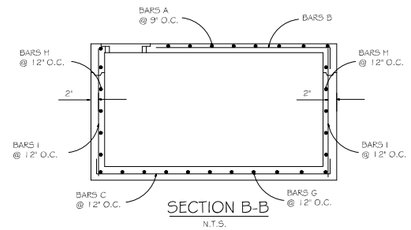

SECTION B-B

N.T.S.

CURB LINE INLET REINFORCING AT 5, 6, 8 AND 10 FOOT INLET

N.T.S.

NOTES:

1. THE FLOOR OF THE EXCAVATION FOR INLET BOX MUST PROVIDE A FIRM, LEVEL BED FOR THE BASE SECTION TO REST UPON.
2. A MINIMUM OF 6 INCHES OF 1" DIAMETER (MAXIMUM) ROCK OR GRAVEL SHALL BE USED TO PREPARE THE BEDDING TO FINAL GRADE OR LEU OF THIS, AT LEAST 6 INCHES OF 2-SACK CEMENT STABILIZED SAND SHALL BE USED TO PREPARE THE BEDDING TO GRADE. CEMENT EAST 6 INCHES OF 2-SACK CEMENT STABILIZED SAND SHALL BE USED TO PREPARE THE BEDDING TO GRADE. CEMENT STABILIZED-SAND SHALL BE ALLOWED TO SET BY KEEPING HOLE PUMPED DRY.
3. AFTER CASING HAS BEEN INSTALLED ON THE PROPER BEDDING, THE BACKFILL MATERIAL, WHICH IS FREE FLOWING AND CLEAR OF ROCKS, IN EXCESS OF 4" DIAMETER AND OTHER LUMPS WHICH WOULD PROHIBIT PROPER COMPACTION, SHALL BE COMMENCED IN LIFTS OF NO MORE THAN 18". THE MATERIAL USED FOR BACKFILL SHOULD BE A TYPE SUITABLE TO OBTAIN THE DENSITY REQUIREMENTS FOR THE SPECIFIC JOB.

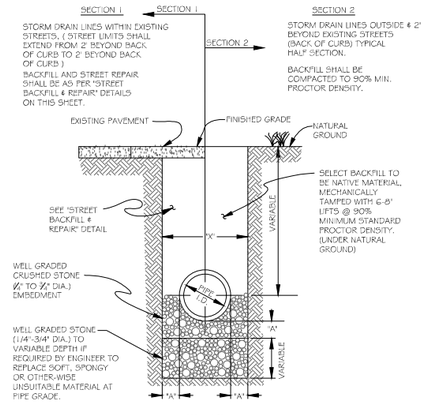

RCP EMBEDMENT DETAIL

N.T.S.

REINFORCING BAR SCHEDULE							
INLET LENGTH (ft)	BAR MARK NUMBER	BAR DIAGRAM TYPE	BAR SIZE	NUMBER REQUIRED	BAR BENDING DIMENSIONS		
					A	B	C
5 and 6	A	I	#3	8	3'-2"	6"	-
	B	I	#3	2	4'-8"	6"	-
	C	II	#4	VARIES	6'-8"	6"	-
	D	II	#4	12	6'-8"	6"	-
	E	IV	#3	7	*	*	*
	F	III	#3	2	4'-0"	-	-
	G	V	#4	10	**	3'-2"	**
	H	III	#4	VARIES	3'-2"	-	-
	I	III	#4	4	**	-	-
	N	III	#4	2	1'-6"	-	-

* SEE BAR DIAGRAM FOR DIMENSIONS.
** LENGTH VARIES DUE TO DEPTH OF INLET.



BAR DIAGRAM

CURB LINE INLET REINFORCING BAR SCHEDULE

N.T.S.

NOTES:

1. CONCRETE SHALL BE CLASS "C" AND SHALL HAVE A MINIMUM 28 DAY COMPRESSIVE STRENGTH OF 3600 PSI.
2. ALL REINFORCEMENT STEEL SHALL BE ASTM A615 GRADE 60.
3. REINFORCING STEEL SHALL BE INSTALLED FROM THE CENTER OF THE OUTSIDE LAYER OF BARS TO 2" FROM THE SURFACE OF THE CONCRETE AND SHALL BE ADJUSTED TO PROVIDE A MINIMUM OF 1 1/4 " CLEAR COVER.
4. TXDOT PARALLEL WING CONSTRUCTION CRITERIA SHALL GOVERN THE FORMING OF PROPOSED WALLS. DIMENSIONING OF STEEL BARS SHALL BE DONE BY CONTRACTOR.
5. ALL USED STEEL COMPONENTS # DOWEL BARS, SHALL BE GALVANIZED AFTER FABRICATION.
6. CHAMFER ALL EXPOSED CORNERS 3/4 " OF AN INCH.
7. ALLOWABLE SOIL BEARING VALUES ASSUMED TO BE 2600 PSF (MINIMUM) PER RECORD DRAWING, IF OTHER THAN ASSUMED VALUES IS INDICATED, CONTACT DESIGN ENGINEER BEFORE PROCEEDING.
8. OUTLET PIPE MAY BE LOCATED IN ANY WALL BUT SHALL NOT BE LOCATED AT ANY CORNER OR BOTTOM.
9. MANHOLE RING WITH LOCKING COVER SHALL BE PLACED OVER THE OUTLET PIPE, REINFORCING BARS ARE TO BE ADJUSTED.
10. INLETS OVER 4'-0" DEEP SHALL CONTAIN STEPS SPACED AT 12" O.C. STARTING 18" ABOVE THE BOTTOM OF THE INLET. STEPS SHALL BE OF THE CAST-IN-PLACE TYPE AND ARE TO BE RUBBER OR PLASTIC COATED (NEENAH R-1981-1 OR EQUAL).

NOTE:
1. CONCRETE SHALL BE 4,500 PSI CONCRETE @ 28 DAYS MIN.
2. FRAME AND GRATE SHALL BE RATED FOR H520 LOADING.

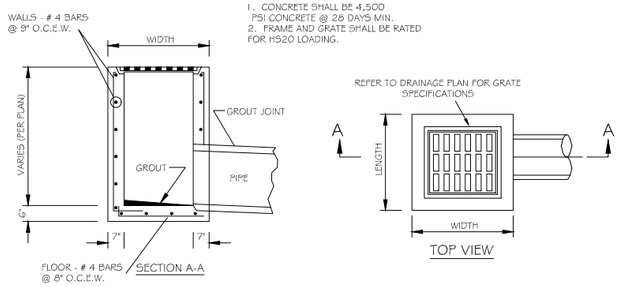

TYPICAL GRATE INLET DETAIL

N.T.S.

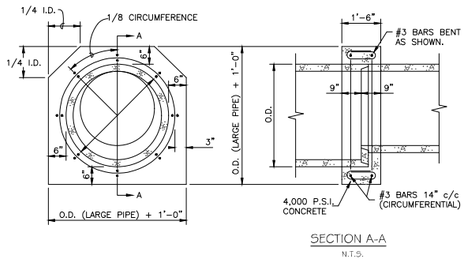

SECTION A-A

N.T.S.

CONCRETE COLLAR DETAIL (PIPE)

N.T.S.

2/9/2026

STATE OF TEXAS
PATRICK C. FILSON
108577
LICENSED
PROFESSIONAL ENGINEER

SPARKLE
PRESCHOOL

SRIKANTH
NAGUNOORI

2345 BASE BURNER PATH
LEANDER, TX 78641

SPARKLE MONTESSORI ACADEMY

LOT 1A-R, BLOCK A
CITY OF LEANDER
WILLIAMSON COUNTY, TEXAS

REV.:	DATE:	DESCRIPTION:

kirkman ENGINEERING

KIRKMAN ENGINEERING, LLC
1500 ARROW POINT DRIVE STE. 804
CEDAR PARK, TEXAS 78613

TEXAS FIRM NO. 15874

JOB NUMBER: NAG25001

ISSUE DATE: 2/9/2026

DRAINAGE DETAILS I

SHEET:
20
OF 30

SD-25-0378

FILE PATH: K:\Work\NAG25001_Sparkle Leander\Drawings\02_ENGR\01 - Production\Xdata\NAG25001_Sparkle Leander(Drawings)(01_ENGR)(01 - Production)(C1.0 DRAINAGE DETAILS_NAG25001

FILENAME: C1.0 DRAINAGE DETAILS_NAG25001.dwg
PLOTTED BY: Prabodika Gautam
PLOTTED DATE: 10/2026

VERTICAL AVAILABLE TO MEET REQUIRED DEPTH

SD-10

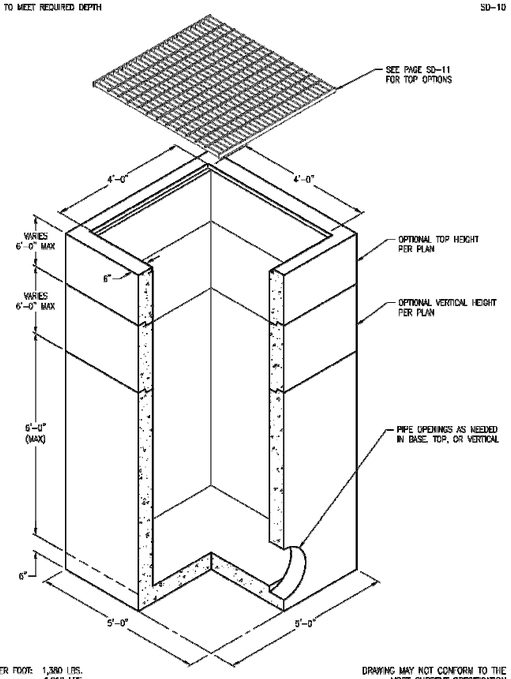

VERTICAL WEIGHT PER FOOT: 1,380 LBS.
FLOOR WEIGHT: 1,910 LBS.

DRAWING MAY NOT CONFORM TO THE MOST CURRENT SPECIFICATION

Oldcastle Precast

Northern California
Modesto ▪ Morgan Hill ▪ Pleasanton ▪ Santa Rosa ▪ Stockton ▪ Tulare
Phone: 925-780-9660 Fax: 925-780-9660

DI-4848	4'-0" X 4'-0" X VARIES (I.D.) DRAINAGE INLET STORM DRAIN
FILE NAME: SD-10.DWG	
REVISED: MARCH 2016	
www.oldcastleprecast.com	Copyright © 2016 Oldcastle Precast, Inc.

Oldcastle Precast

WATER

3'-0"x3'-0" ID Junction Box
Model: 33 JB

Junction Box

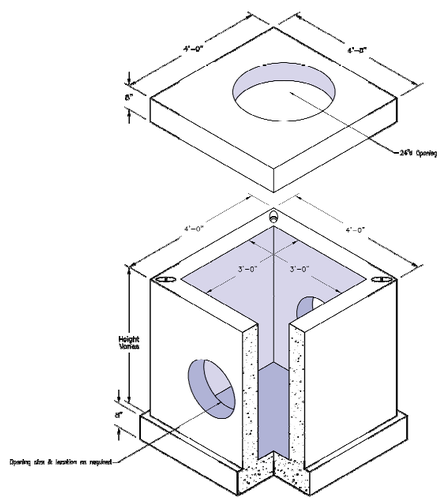

GENERAL NOTES:
1. Concrete: 28 Day Compressive Strength f'c = 4,000psi.
2. Steel Reinforcement: ASTM A-615, Grade 60.
3. Manhole meets ASTM C-478 specifications.

Mid Atlantic Region

For more information about our products please visit us on the web at:
oldcastleprecast.com
© 2013 Oldcastle Precast, Inc.
W-CD-6

888-9 Oldcastle
(888-965-3227)

Oldcastle Precast

WATER

Trench Drain
Various Dimensions
Model: Trench DIM

"A"	"B"	"C"	"D"	"E"
12"	16"	13"	16-5/8"	26"
16"	18"	16-7/8"	20-3/4"	30"
16"	24"	17-1/4"	20-3/4"	30"
24"	18"	24-7/8"	28-3/4"	38"
24"	24"	25-1/4"	28-3/4"	38"
26"	18"	26-7/8"	30-3/4"	40"
26"	24"	27-1/4"	30-3/4"	40"

"D" = GRATE WIDTH

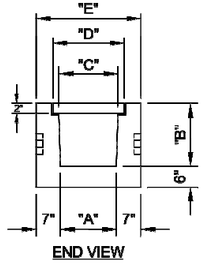

END VIEW

NOTE:
END CAPS ARE SOLD SEPARATELY.

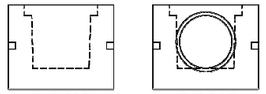

END CAP SOLID

END CAP WITH KNOCKOUT

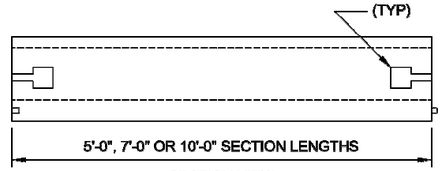

SECTION VIEW

- CONCRETE STRENGTH: 4000 PSI MIN. @ 28 DAYS
- REINFORCING CONFORMS TO ASTM A615 & A185
- DESIGN: HS-25 TRAFFIC LOADING
- GRATE DESIGN: HS-25 TRAFFIC LOADING, BICYCLE SAFE

Mid Atlantic Region

For more information about our products please visit us on the web at:
oldcastleprecast.com
© 2013 Oldcastle Precast, Inc.
W-T-10

888-9 Oldcastle
(888-965-3227)

PROPOSED PAVED SURFACE

UNPAVED SURFACE

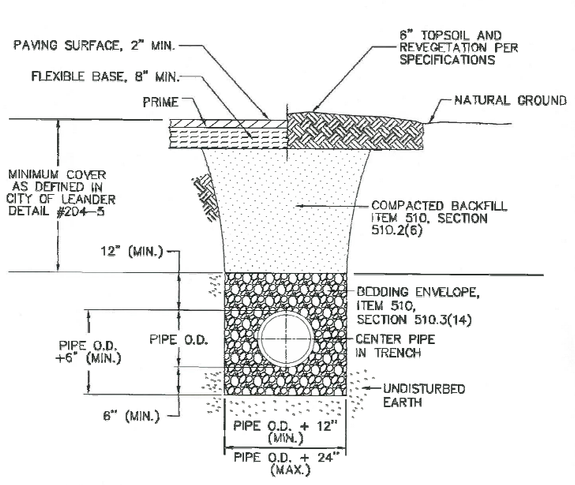

NOTES:

1. SEE CITY OF LEANDER DETAIL #104-2 FOR TYPICAL PIPE TRENCH AND EMBEDMENT IN EXISTING PAVED SURFACES.

REFERENCES:

1. CITY OF AUSTIN STANDARD SPECIFICATION MANUAL ITEM 510, SECTION 510.2(6), "SELECT BACKFILL OR BORROW"; SECTION 510.3(14), "PIPE BEDDING ENVELOPE"

STATE OF TEXAS
MICHAEL LAFFERTY
118769
2019-05-23

City Of Leander, Texas

DETAIL #104-1
TYPICAL PIPE TRENCH AND EMBEDMENT

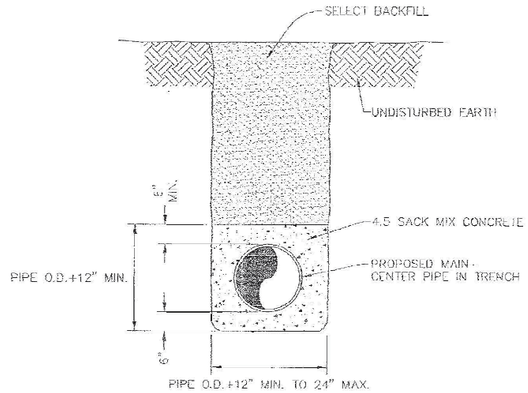

CITY OF LEANDER, TEXAS

Scale: NTS	Approved / Date	Drawn by: RPW
CONCRETE ENCASEMENT		Detail No. 105-1

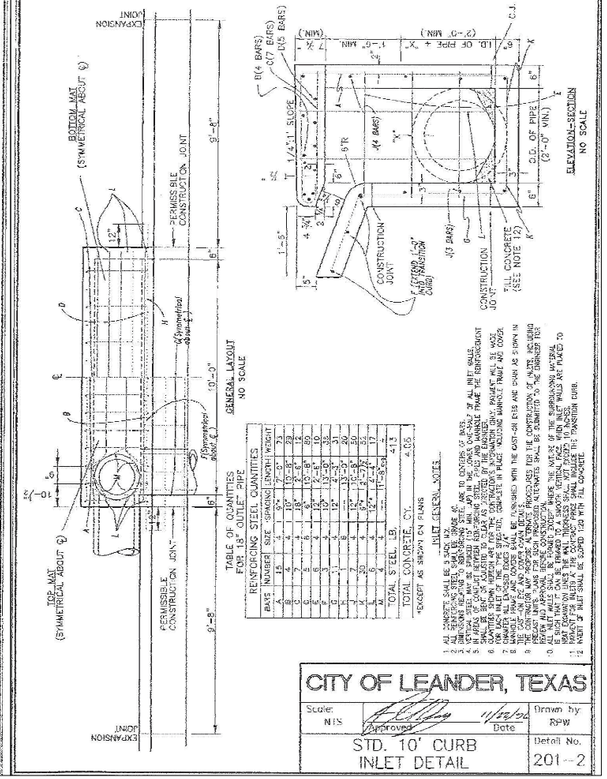

CITY OF LEANDER, TEXAS

Scale: NTS	Approved / Date	Drawn by: RPW
STD. 10' CURB INLET DETAIL		Detail No. 201-2

2/9/2026

STATE OF TEXAS
PATRICK C. FILSON
108577
LICENSED
PROFESSIONAL ENGINEER

SPARKLE
PRESCHOOL

SRIKANTH
NAGUNOORI

2345 BASE BURNER PATH
LEANDER, TX 78641

SPARKLE MONTESSORI ACADEMY

LOT 1A-R, BLOCK A
CITY OF LEANDER
WILLIAMSON COUNTY, TEXAS

REV:	DATE:	DESCRIPTION:

kirkman ENGINEERING

KIRKMAN ENGINEERING, LLC
1500 ARROW POINT DRIVE STE. 804
CEDAR PARK, TEXAS 78613

TEXAS FIRM NO. 15874

JOB NUMBER: NAG25001

ISSUE DATE: 2/9/2026

DRAINAGE DETAILS II

SHEET:
21
OF 30

SD-25-0378

FILE PATH: K:\Work\NAG25001_Sparkle Leander\Drawings\02_ENGR\01 - Production\K:\Work\NAG25001_Sparkle Leander\Drawings\02_ENGR\01 - Production\C1.0 DRAINAGE DETAILS_NAG25001

FILENAME: C1.0 DRAINAGE DETAILS_NAG25001.dwg
PLOTTED BY: Prabudeba Gautam
PLOTTED DATE: 5/2/2026

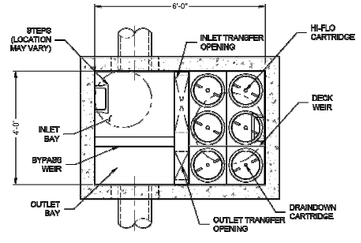

PLAN VIEW
(TOP SLAB NOT SHOWN FOR CLARITY)

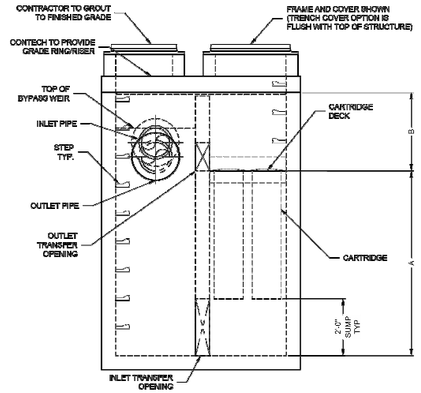

ELEVATION VIEW

JELLYFISH DESIGN NOTES

JELLYFISH TREATMENT CAPACITY IS A FUNCTION OF THE CARTRIDGE LENGTH AND THE NUMBER OF CARTRIDGES. THE STANDARD PEAK DIVERSION STYLE WITH PRECAST TOP SLAB IS SHOWN. ALTERNATE OFFLINE VAULT, CURB INLET OR SHALLOW PIPE INLET OPTIONS ARE AVAILABLE. PEAK CONVEYANCE CAPACITY TO BE DETERMINED BY ENGINEER OF RECORD.

CARTRIDGE SELECTION

CARTRIDGE LENGTH	54"	40"	27"	15"
OUTLET INVERT TO STRUCTURE INVERT (A)	5'-8"	5'-4"	4'-5"	3'-3"
FLOW RATE HIGH-FLO / DRAINDOWN (CFS) (PER CART)	0.175 / 0.099	0.133 / 0.067	0.089 / 0.045	0.048 / 0.026
MAX. TREATMENT (CFS)	0.88	0.67	0.45	0.25
DECK TO INSIDE TOP (MIN) (B)	5'-0"	4'-0"	4'-0"	4'-0"



FRAME AND COVER
(DIAMETER VARIES)
N.T.S.

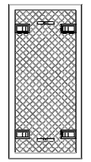

24" TRENCH COVER
N.T.S.

SITE SPECIFIC DATA REQUIREMENTS

STRUCTURE ID	*
WATER QUALITY FLOW RATE (cfs)	*
PEAK FLOW RATE (cfs)	*
RETURN PERIOD OF PEAK FLOW (yrs)	*
# OF CARTRIDGES REQUIRED (HF / DD)	*
CARTRIDGE LENGTH	*

PIPE DATA:	I.E.	MAT'L	DIA.	SLOPE %	HGL
INLET #1	*	*	*	*	*
INLET #2	*	*	*	*	*
OUTLET	*	*	*	*	*

SEE GENERAL NOTES 6-7 FOR INLET AND OUTLET HYDRAULIC AND SIZING REQUIREMENTS.

RIM ELEVATION	*

ANTI-FLOTATION BALLAST	WIDTH	HEIGHT
	*	*

NOTES/SPECIAL REQUIREMENTS:

* PER ENGINEER OF RECORD

GENERAL NOTES:
1. CONTECH TO PROVIDE ALL MATERIALS UNLESS NOTED OTHERWISE.
2. FOR SITE SPECIFIC DRAWING WITH DETAILED STRUCTURE DIMENSIONS AND WEIGHT, PLEASE CONTACT YOUR CONTECH ENGINEERED SOLUTIONS REPRESENTATIVE. www.ContechES.com
3. JELLYFISH WATER QUALITY STRUCTURE SHALL BE IN ACCORDANCE WITH ALL DESIGN DATA AND INFORMATION CONTAINED IN THIS DRAWING. CONTRACTOR TO CONFIRM STRUCTURE MEETS REQUIREMENTS OF PROJECT.
4. STRUCTURE SHALL MEET AASHTO HS-20 OR PER APPROVING JURISDICTION REQUIREMENTS, WHICHEVER IS MORE STRINGENT. ENGINEER OF RECORD TO CONFIRM ACTUAL GROUNDWATER ELEVATION AND SITE SPECIFIC EARTH COVER REQUIREMENT. TYPICAL CASTINGS SHALL MEET AASHTO M306 LOAD RATING AND BE CAST WITH THE CONTECH LOGO.
5. STRUCTURE SHALL BE PRECAST CONCRETE CONFORMING TO ASTM C-857, ASTM C-478, AND AASHTO LOAD FACTOR DESIGN METHOD.
6. OUTLET PIPE INVERT IS EQUAL TO THE CARTRIDGE DECK ELEVATION.
7. THE OUTLET PIPE DIAMETER FOR NEW INSTALLATIONS IS RECOMMENDED TO BE ONE PIPE SIZE LARGER THAN THE INLET PIPE (WHERE APPLICABLE) AT EQUAL OR GREATER SLOPE.
8. NO PRODUCT SUBSTITUTIONS SHALL BE ACCEPTED UNLESS SUBMITTED 10 DAYS PRIOR TO PROJECT BID DATE, OR AS DIRECTED BY THE ENGINEER OF RECORD.

INSTALLATION NOTES
A. ANY SUB-BASE, BACKFILL DEPTH, AND/OR ANTI-FLOTATION PROVISIONS ARE SITE-SPECIFIC DESIGN CONSIDERATIONS AND SHALL BE SPECIFIED BY ENGINEER OF RECORD.
B. CONTRACTOR TO PROVIDE EQUIPMENT WITH SUFFICIENT LIFTING AND REACH CAPACITY TO LIFT AND SET THE STRUCTURE.
C. CONTRACTOR WILL INSTALL AND LEVEL THE STRUCTURE, SEALING THE JOINTS. LINE ENTRY AND EXIT POINTS (NON-SHRINK GROUT WITH APPROVED WATERSTOP OR FLEXIBLE BOOT).
D. CARTRIDGE INSTALLATION, BY CONTECH, SHALL OCCUR ONLY AFTER SITE HAS BEEN STABILIZED AND THE JELLYFISH UNIT IS CLEAN AND FREE OF DEBRIS. CONTACT CONTECH TO COORDINATE CARTRIDGE INSTALLATION WITH SITE STABILIZATION.

Jellyfish Filter
THIS PRODUCT MAY BE PROTECTED BY ONE OR MORE OF THE FOLLOWING: U.S. PATENT NO. 8,557,109; 8,821,916; 9,120,690; OTHER INTERNATIONAL PATENTS PENDING

CONTECH ENGINEERED SOLUTIONS LLC
www.ContechES.com
9025 Centre Pointe Dr., Suite 400, West Chester, OH 45069
800-338-1122 513-645-7000 513-645-7993 FAX

JELLYFISH JFPD0406
STANDARD DETAIL
PEAK DIVERSION CONFIGURATION

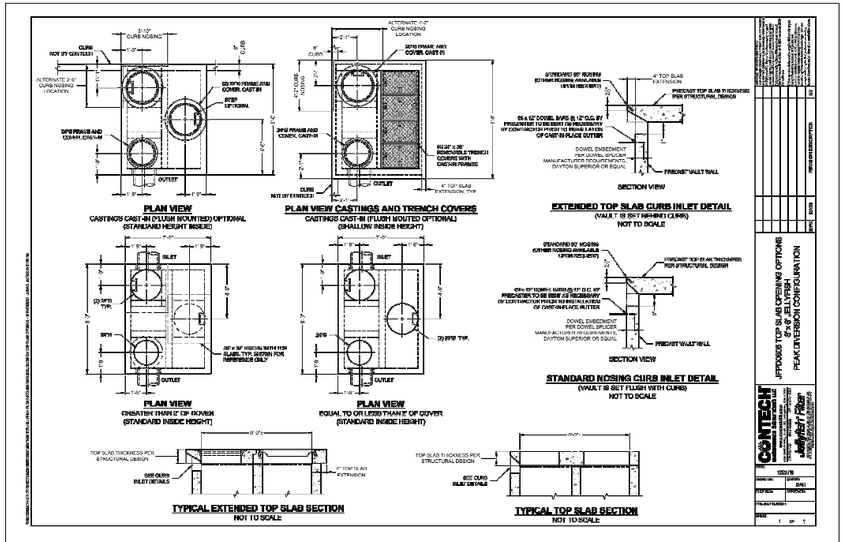

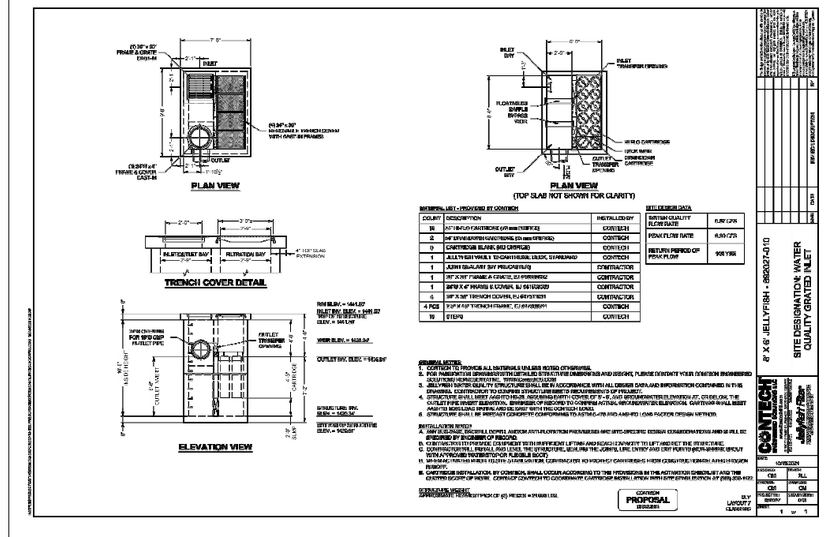

FILENAME: C:\J DRAINAGE DETAILS_MAC25001.dwg
PLOTTED BY: Prashanthi Goutam
PLOTTED DATE: 1/7/2026

FILE PATH: K:\Active\NAG25001_Sparkle Leander\Drawings\02_ENGR\03 - Preliminal\13dsv\NAG25001_Sparkle Leander\Drawings\02_ENGR\03 - Preliminal\C3.0 DRAINAGE DETAILS_NAG25001

2/9/2026

STATE OF TEXAS
PATRICK C. FILSON
108577
LICENSED
PROFESSIONAL ENGINEER

SPARKLE PRESCHOOL

SRIKANTH NAGUNOORI

2345 BASE BURNER PATH
LEANDER, TX 78641

SPARKLE MONTESSORI ACADEMY

LOT 1A-R, BLOCK A
CITY OF LEANDER
WILLIAMSON COUNTY, TEXAS

REV:	DATE:	DESCRIPTION:

kirkman ENGINEERING

KIRKMAN ENGINEERING, LLC
1500 ARROW POINT DRIVE STE. 804
CEDAR PARK, TEXAS 78613

TEXAS FIRM NO. 15874

JOB NUMBER: NAG25001

ISSUE DATE: 2/9/2026

DRAINAGE DETAILS III

SHEET:
22
OF 30

SD-25-0378

FIRE HYDRANTS LACKING INTEGRAL STORZ CONNECTOR SHALL BE REJECTED (NO STORZ ADAPTERS ALLOWED)

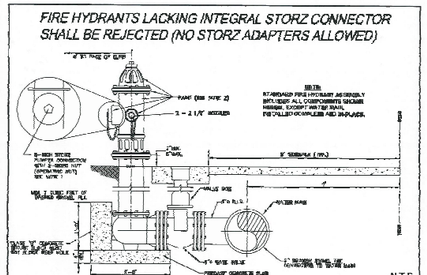

NOTES:
1. FIRE HYDRANT SHALL BE CLOW MEDALLION F2545, AMERICAN DARLING B-84-B-O, MUELLER SUPER CENTURION, EJ ENGEDSO WATERMASTER, KENNEDY KAP13 GUARDIAN, AVK 2780, OR APPROVED EQUAL WA SUBMITTAL PRECEDES. THE PRIMARY FEATURES REQUIRED INCLUDE FACTORY INSTALLED INTERNAL 5-INCH STORZ PUMPER NOZZLES; 1-3-INCH PORT OPERATING NUT ON NOZZLE CAP; OPEN LEFT; FACTORY PAINTED.
2. HYDRANTS SHALL BE FACTORY PAINTED WITH PLANT ALUMINUM SILVER PAINT OR SHERWIN WILLIAMS SILVER BOOST. HYDRANTS WILL NOT BE ACCEPTED IF PAINTED AFTER DELIVERY OR IF PAINT IS FLAT IN APPEARANCE.
3. ALL DUCTILE OR CAST IRON FITTINGS AND/OR PIPE SHALL BE POLYWRAPPED.
4. ALL HYDRANTS SHALL BE EQUIPPED WITH A BREAKAWAY FLANGE. ALL PIPINGS SHALL BE EQUIPPED WITH JOINT RESTRAINT "MEGALUG" OR APPROVED EQUAL. ALL ANCHOR FITTING TO BE CONCRETE THRUST BLOCKED.
5. BLUE BI-DIRECTIONAL REFLECTIVE PAVEMENT MARKER, ULTRA-LITE HOT MELT MODEL 9" OR 12" TO BE INSTALLED PER MANUFACTURER'S RECOMMENDATION AT THE CORRESPONDING ROADWAY STATION OFFSET 6" (TEN INCHES) FROM CENTER OF STREET TO THE SIDE HYDRANT IS LOCATED. AT INTERSECTIONS, MARKERS SHALL BE PLACED ON BOTH ROADWAYS ADJACENT TO HYDRANT.

LOCATION:
6. SET P.I. ON LOT LINE (EXTENDED WHEN POSSIBLE)
7. P.I. LOCATED AT STREET INTERSECTIONS SHALL BE PLACED A MINIMUM OF TEN FEET (10') FROM RADIUS TANGENT POINT.
8. NO OBSTRUCTIONS SHALL BE PERMITTED WITHIN THREE FEET (3') IN ALL DIRECTIONS FROM P.I.
9. 5-INCH STORZ PUMPER NOZZLE SHALL FACE THE FIRE LANE OR TRAVEL WAY UNLESS OTHERWISE NOTED.

City Of Leander, Texas
DETAIL #604-2
STANDARD FIRE HYDRANT ASSEMBLY

TYPICAL SINGLE / TYPICAL DOUBLE

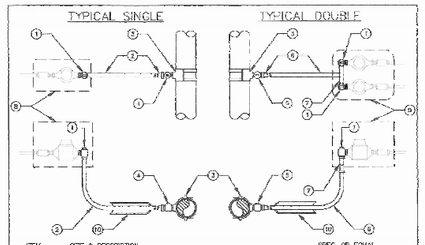

ITEM	SIZE & DESCRIPTION	SPEC. OR EQUAL
1	1" X 1" ANGLE METER STOP, LOCKING	AS APPROVED
2	1" SDR9 POLYETHYLENE TUBING	CLASS 250
3	EPOXY COATED DUCTILE IRON TAPPING SADDLE	AS APPROVED
4	1" CORPORATION STOP	AS APPROVED
5	1" CORP X 1" MIP COUPLING	AS APPROVED
6	1 1/2" SDR9 POLYETHYLENE TUBING	CLASS 250
7	BRASS U BRANCH, 1 1/2" X 1"	FORD, OR EQUAL
8	METER BOX, SINGLE	DFW09F-12-1CA, OR EQUAL
9	METER BOX, DOUBLE	DFW09F-12-1CA, OR EQUAL
10	3" SCH. 40 PVC SLEEVE FOR LONG SIDE SERVICES (TYP.)	

NOTES:
1. SERVICE SADDLE SHALL BE WRAPPED COMPLETELY WITH 8 MIL POLYETHYLENE ITEM.
2. PIPING AND TUBING IN STREET RIGHT-OF-WAY SHALL BE BEDDED IN GRANULAR MATERIALS.
3. BRANCH CONNECTION AND BOTH ANGLE METER STOPS SHALL BE INSTALLED PRIOR TO FIRST METER INSTALLATION.
4. SLEEVES FOR LONG-SIDE SERVICE TO BEGIN AND TERMINATE 6" BEHIND BACK OF CURB.
5. TOP OF METER BOXES SHOULD BE 1" ABOVE GROUND.
6. METER BOX SHALL BE SEVEN CURB AT ROW/PROPERTY LINE OR EASEMENT. METER BOX SHALL NOT BE INSTALLED IN SIDEWALK, DRIVEWAY OR VEHICULAR TRAVEL AREA.
7. 1" X 3/4" BRASS METER BUSHING REQUIRED FOR 5/8" AND 3/4" METERS.
8. AXIS OF METER ASSEMBLY (LINE THROUGH METER STOP, METER, CHECK VALVE, PIPING AND OWNER'S CUTOFF) SHALL BE 11" BELOW TOP OF BOX. METER BOXES ARE SIZED TO ACCOMMODATE METER STOP, WATER MAIN TAP AND CHECK VALVE.

City Of Leander, Texas
DETAIL #604-1
WATER SERVICE CONNECTIONS

PROPOSED PAVED SURFACE / UNPAVED SURFACE

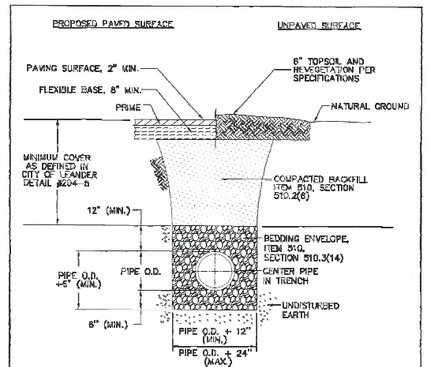

NOTES:
1. SEE CITY OF LEANDER DETAIL #604-2 FOR TYPICAL PIPE TRENCH AND EMBEDMENT IN EXISTING PAVED SURFACES.

REFERENCES:
1. CITY OF AUSTIN STANDARD SPECIFICATION MANUAL ITEM 510, SECTION 510.2(6), "SELECT BACKFILL OR BORROW"; SECTION 510.3(14), "PIPE BEDDING ENVELOPE"

2019-03-23

City Of Leander, Texas
DETAIL #604-1
TYPICAL PIPE TRENCH AND EMBEDMENT

STEEL ENCASEMENT PIPE

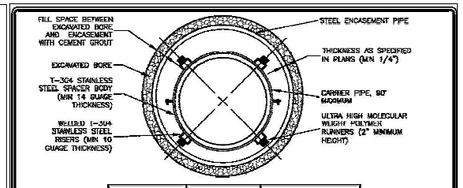

PIPE SIZE-CARRIER (DIAMETER)	PIPE SIZE-CASING (DIAMETER) (MIN.)	MINIMUM PIPE THICKNESS (INCHES)	
6"	16"	1/4	0.2500
8"	18"	1/4	0.2500
10"	20"	5/16	0.3125
12" ~ 14"	24"	3/8	0.3750
16" ~ 18"	30"	7/16	0.4375
20"	36"	1/2	0.5000
24"	42"	1/2	0.5000
30"	48"	1/2	0.5000

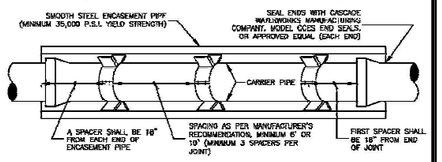

NOTES:
1. CASING SPACER CONFIGURATION AND SPACING SHALL BE AS SHOWN ON MANUFACTURER'S DRAWINGS FOR SPECIFIC WORK; THESE MUST BE ACCEPTABLE TO THE CITY OF ROUND ROCK.
2. CASING SPACER SHALL BE AS MANUFACTURED BY CASCADE WATERWORKS MANUFACTURING COMPANY, MODEL CCS, OR APPROVED EQUAL.

RECORD SIGNED COPY ON FILE AT PUBLIC WORKS
APPROVED
04-01-10
DATE
THE ARCHITECT/ENGINEER ASSUMES RESPONSIBILITY FOR THE APPROPRIATE USE OF THIS DETAIL. (NOT TO SCALE)

CITY OF ROUND ROCK

PIPE ENCASEMENT DETAIL

DRAWING NO: WT-16

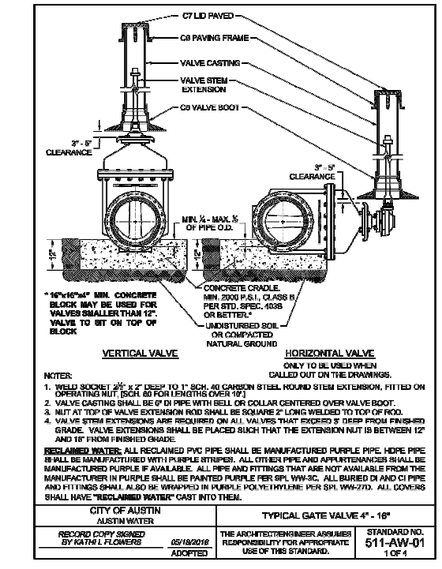

NOTES:
1. WELD SOCKET 3/8" x 3" DEEP TO 1" SCH. 40 CARBON STEEL ROUND STEM EXTENSION, FITTED ON OPERATING NUT. [SCH. 80 FOR LENGTHS OVER 10']
2. VALVE CASTING SHALL BE 6" DI PIPE WITH BELL OR COLLAR CENTERED OVER VALVE BOOT.
3. NUT AT TOP OF VALVE EXTENSION ROD SHALL BE SQUARE 2" LONG WELDED TO TOP OF ROD.
4. VALVE STEM EXTENSIONS ARE REQUIRED ON ALL VALVES THAT EXCEED 5' DEEP FROM FINISH-ED GRADE. VALVE EXTENSIONS SHALL BE PLACED SUCH THAT THE EXTENSION NUT IS BETWEEN 12" AND 18" FROM FINISHED GRADE.

RECLAIMED WATER: ALL RECLAIMED PVC PIPE SHALL BE MANUFACTURED PURPLE PIPE. HDPE PIPE IS NOT ALLOWED. ALL RECLAIMED PIPE SHALL BE MANUFACTURED WITH CONTINUOUS PURPLE STRIPES. ALL CITIES PIPE AND APPURTENANCES SHALL BE MANUFACTURED PURPLE IF AVAILABLE. ALL PIPE AND FITTINGS THAT ARE NOT AVAILABLE FROM THE MANUFACTURER IN PURPLE SHALL BE PAINTED PURPLE PER SPL WW-3C. ALL BURIED DI AND CI PIPE AND FITTINGS SHALL ALSO BE WRAPPED IN PURPLE POLYETHYLENE PER SPL WW-27D. ALL COVERS SHALL HAVE "RECLAIMED WATER" CAST INTO THEM.

CITY OF AUSTIN AUSTIN WATER	TYPICAL GATE VALVE 4" - 16"	
RECORD COPY SIGNED BY KATHI L FLOWERS 05/19/2016 ADOPTED	THE ARCHITECT/ENGINEER ASSUMES RESPONSIBILITY FOR APPROPRIATE USE OF THIS STANDARD.	STANDARD NO. 511-AW-01 1 OF 4

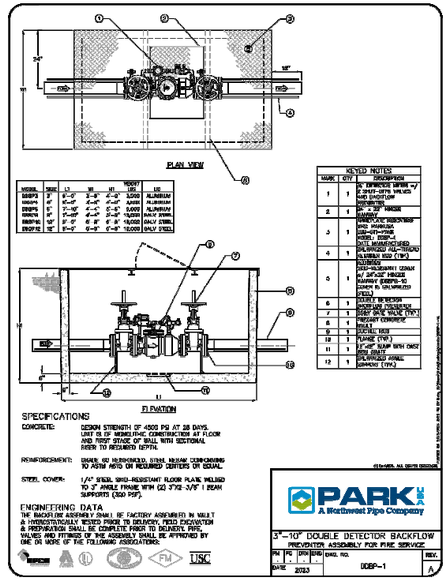

SPECIFICATIONS
CONCRETE: DESIGN STRENGTH OF 4000 PSI AT 28 DAYS. LIMIT 05 OF MEMBRANE CONSTRUCTION AT FLOOR AND FIRST STAGE OF WALL WITH SECTIONAL DEPTH TO RETAINING DEPTH.
REINFORCEMENT: GRADE 60 DEFORMED, STEEL MESH CONFORMING TO ASTM A615 OR REQUIRED QUANTITY OR EQUAL
STEEL COVER: 1/4" STEEL SHIELD-RESISTANT FLOOR PLATE WELDED TO 2" ANGLE FRAME WITH (2) 3"X2" 3/8" I BEAM SUPPORTS (300 PSF).

ENGINEERING DATA
THE BACKFLOW ASSEMBLY SHALL BE FACTORY ASSEMBLED IN VAULT & HYDROSTATICALLY TESTED PRIOR TO DELIVERY. FIELD EXCAVATION & PREPARATION SHALL BE COMPLETE PRIOR TO DELIVERY. PIPE, VALVES AND FITTINGS OF THIS ASSEMBLY SHALL BE APPROVED BY ONE OR MORE OF THE FOLLOWING ASSOCIATIONS:

PARK
A Northwest Pipe Company

3"-10" DOUBLE DETECTOR BACKFLOW PREVENTION ASSEMBLY FOR FIRE SERVICE

DRAWN	PC	DATE	DWG. NO.	REV.
DATE	2023		DDBP-1	A

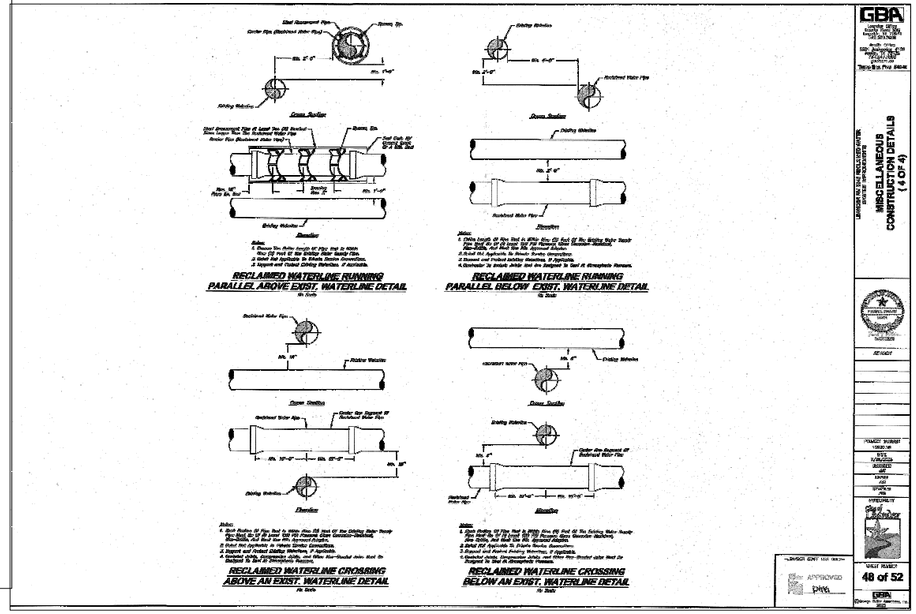

RECLAIMED WATERLINE RUNNING PARALLEL ABOVE EXIST. WATERLINE DETAIL

RECLAIMED WATERLINE RUNNING PARALLEL BELOW EXIST. WATERLINE DETAIL

RECLAIMED WATERLINE CROSSING ABOVE AN EXIST. WATERLINE DETAIL

RECLAIMED WATERLINE CROSSING BELOW AN EXIST. WATERLINE DETAIL

GBA
MISCELLANEOUS CONSTRUCTION DETAILS (4 OF 4)
SHEET NUMBER 48 of 52

2/9/2026

STATE OF TEXAS
PATRICK C. FILSON
108577
LICENSED
PROFESSIONAL ENGINEER

SPARKLE PRESCHOOL

SRIKANTH NAGUNOORI

2345 BASE BURNER PATH
LEANDER, TX 78641

SPARKLE MONTESSORI ACADEMY

LOT 1A-R, BLOCK A
CITY OF LEANDER
WILLIAMSON COUNTY, TEXAS

REV.:	DATE:	DESCRIPTION:

kirkman ENGINEERING

KIRKMAN ENGINEERING, LLC
1500 ARROW POINT DRIVE STE. 804
CEDAR PARK, TEXAS 78613

TEXAS FIRM NO. 15874

JOB NUMBER: NAG25001

ISSUE DATE: 2/9/2026

WATER DETAILS

SHEET:
23
OF 30

SD-25-0378

FILE PATH: K:\Job\NAG25001_Sparkle Leander\Drawings\SD_ENGR\SD - Productivity\C2.0 WATER DETAILS_NAG25001

FILENAME: C2.0 WATER DETAILS_NAG25001.dwg
PLOTTED BY: Prashantha Gautam
PLOTTED DATE: 4/2026

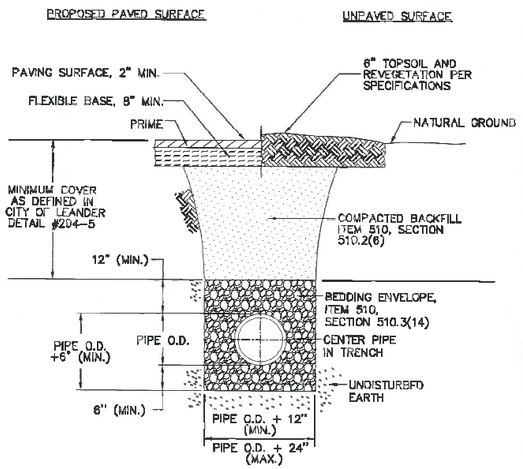

NOTES:

1. SEE CITY OF LEANDER DETAIL #104-2 FOR TYPICAL PIPE TRENCH AND EMBEDMENT IN EXISTING PAVED SURFACES.

REFERENCES:

1. CITY OF AUSTIN STANDARD SPECIFICATION MANUAL ITEM 510, SECTION 510.2(6), "SELECT BACKFILL OR BORROW"; SECTION 510.3(14), "PIPE BEDDING ENVELOPE"

City Of Leander, Texas
DETAIL #104-1
TYPICAL PIPE TRENCH AND EMBEDMENT

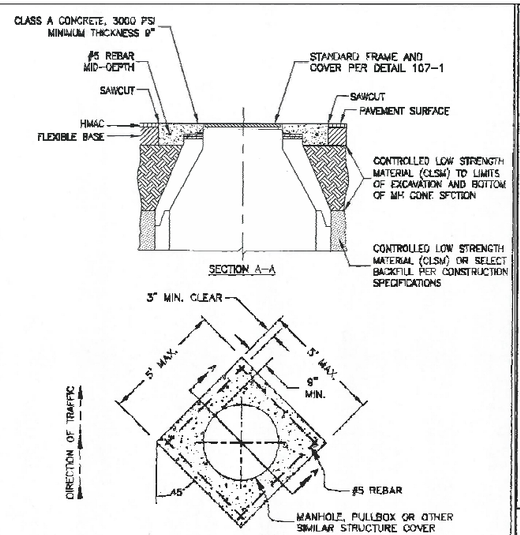

NOTES:

1. CONCRETE SHALL BE CLASS A, 3000 PSI MINIMUM AND SHALL BE REINFORCED WITH #5 BARS AS SHOWN. THE CONCRETE SHALL EXTEND TO SAW CUT PAVEMENT EDGE.
2. PLACEMENT OF CLSM SHALL BE BELOW FLEXIBLE BASE LAYER TO LIMITS OF EXCAVATION.
3. INSTALLATION OF HMAC OVER CONCRETE ADJUSTMENT SHALL NOT BE ALLOWED.
4. INSTALLATION OF CONCRETE CASTING ADJUSTMENT IS REQUIRED FOR ALL TYPES OF MANHOLES TO BE LOCATED IN THE ROADWAY.

City Of Leander, Texas
DETAIL #107-4
MANHOLE CASTING ADJUSTMENT

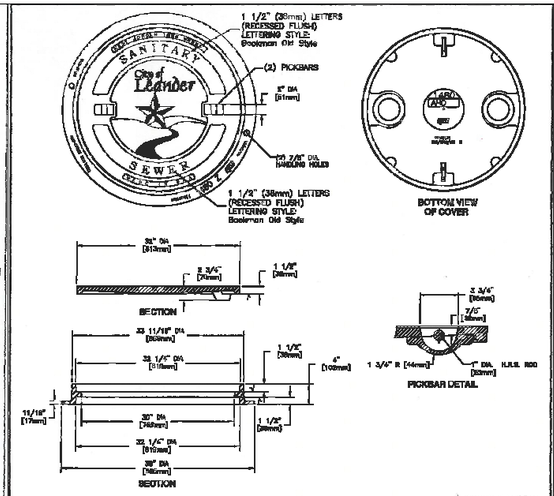

MANHOLE ASSEMBLY	EST. WT. COVER: 200 LBS 91kg; FRAME: 155 LBS 70kg; UNIT: 355 LBS 161kg
EAST JORDAN IRON WORKS PRODUCT NO. 00148107 OR NEENAH FOUNDRY DF-1274 LEANDER SANITARY	OPEN AREA: N/A MAT'L SPEC. COVER – GRAY IRON ASTM A48 CL35B FRAME – GRAY IRON ASTM A48 CL35B

LOAD RATING: HEAVY DUTY (H20)

City Of Leander, Texas
DETAIL #107-1
SANITARY SEWER MANHOLE COVER

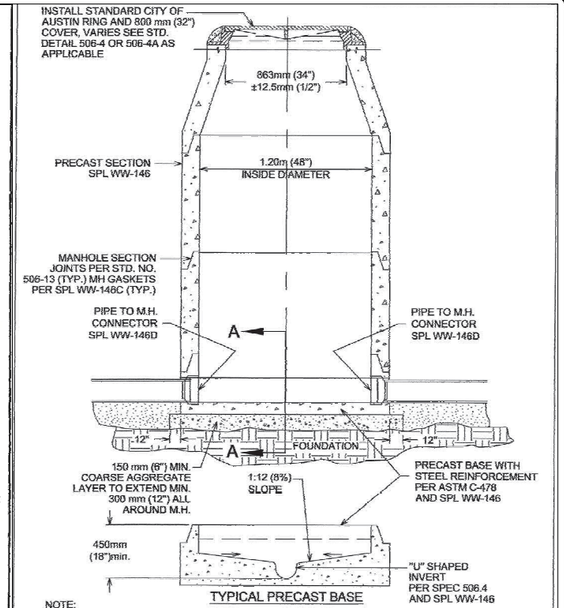

NOTE:
1. THE MANHOLE BASE SHALL BE BEDDED ON 150 mm (6") COARSE AGGREGATE. THE CONTRACTOR SHALL LEVEL AND PLUMB THE BASE PRIOR TO SETTING THE PRECAST MANHOLE RISER SECTIONS ON THE PRECAST CONCRETE BASE.
2. MH FOUNDATION SHALL MEET OR EXCEED STD. SPEC. 506.5B.

CITY OF AUSTIN AUSTIN WATER UTILITY	WASTEWATER MANHOLE ON PRECAST BASE	
Kathi L Flowers 8/31/2011	THE ARCHITECT/ENGINEER ASSUMES RESPONSIBILITY FOR APPROPRIATE USE OF THIS STANDARD	STANDARD NO. 506S-10

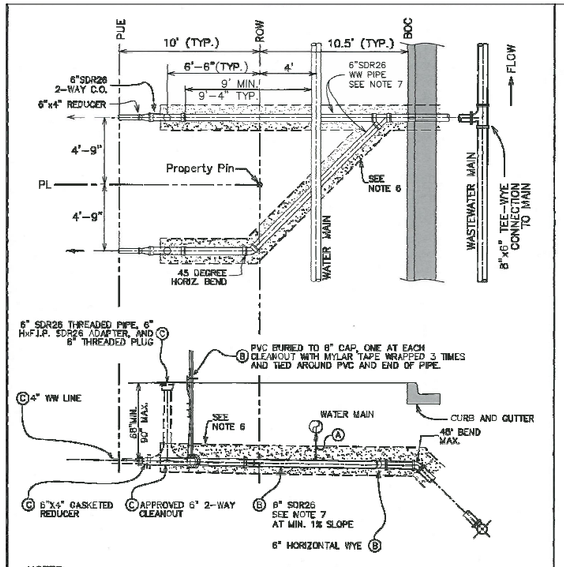

NOTES:

(A) WATER MAIN SHALL CROSS ABOVE 6" WASTEWATER SERVICE, TWO-FOOT (2') MINIMUM VERTICAL SEPARATION.

(B) TO BE INSTALLED AND INSPECTED DURING SUBDIVISION CONSTRUCTION. UTILITY CONTRACTOR INSTALLS SERVICE STUB WITH PLUG OR CAP.

(C) 2-WAY CLEANOUTS, 6" HxF.I.P. ADAPTER, REDUCER, AND 4" SERVICE LINE INSTALLED BY BLDG. PLUMBER. PERMITS DEPARTMENT SHALL INSPECT CUSTOMER'S WASTEWATER LINE AND ALL APPURTENANCES INSTALLED BY BUILDING PLUMBER.

City Of Leander, Texas
DETAIL #101-2
1 OF 2
WASTEWATER SERVICE CONNECTIONS

NOTES

1. DURING SUBDIVISION CONSTRUCTION, UTILITY CONTRACTOR INSTALLS WASTEWATER CONNECTION TO MAIN, 6" HORIZONTAL WYE FOR DOUBLE SERVICES, 6" SERVICE BRANCH, AND PLUG(S) FOR 6" SERVICE BRANCH STUB. CONTRACTOR TIES MYLAR TAPE TO END OF 6" STUB, WRAPS 3 TIMES AROUND LENGTH OF PVC BURIED TO THE DEPTH OF THE 6" STUB AND TIES TO TOP OF PVC EXTENDING A MINIMUM OF 2 FEET ABOVE GROUND.

ALL WASTEWATER PIPING SHALL HAVE ELASTOMERIC GASKET TYPE JOINTS AND SHALL SLOPE DOWNWARD TO MAIN 1% (1/8" PER FOOT) MINIMUM TO 45° MAXIMUM. DEPTH OF SERVICE STUB AT PROPERTY LINE WILL BE SHOWN ON PLANS BY ENGINEER. IF GREATER THAN 8', OTHERWISE THE INSTALLED DEPTH WILL TYPICALLY BE 6' TO 8'. IF WASTEWATER SERVICE LINE TO MAIN REQUIRES DEFLECTION EXCEEDING 45°, REFER TO DETAIL 520-6. ALL INSTALLATIONS SHALL BE MADE IN ACCORDANCE WITH INFORMATION SHOWN ON APPLICABLE STANDARD DRAWINGS AND WILL BE INSPECTED BY CITY OF LEANDER CONSTRUCTION INSPECTION PERSONNEL.

2. CUSTOMER REMOVES PLUG FROM 6" SERVICE LINE STUB, INSTALLS 6" 2-WAY CLEANOUT, 6" BY 4" REDUCER, RISER FOR CLEANOUT, 6" HxF.I.P. ADAPTER, 6" THREADED PLUG, AND 4" SERVICE LINE TO STRUCTURE. IF WASTEWATER WILL NOT SATISFACTORILY FLOW BY GRAVITY FROM STRUCTURE TO SEWER SERVICE STUB & WASTEWATER MAIN, PUMP EQUIPMENT MUST BE PROVIDED BY THE CUSTOMER AS PART OF CUSTOMER'S WASTEWATER SYSTEM.

3. CUSTOMER IS RESPONSIBLE FOR PUBLIC PIPING SYSTEM UNTIL WASTEWATER IS CONNECTED. ANY MISSING OR DAMAGED PARTS SHALL BE REINSTALLED BY CUSTOMER WHO SHALL GUARANTEE, FOR A PERIOD OF TWO (2) YEARS FROM DATE OF ACCEPTANCE, THAT CONNECTIONS TO CITY SYSTEMS ARE FREE FROM DEFECTS IN WORKMANSHIP OR MATERIAL. CUSTOMER ALSO HAS THE RESPONSIBILITY TO ASSURE THAT ALL 2-WAY-CLEANOUTS REMAIN CLEAR OF SIDEWALKS AND OTHER OBSTRUCTIONS.

4. CITY OF LEANDER ACTIVITY IS LIMITED TO INSPECTION OF CONNECTIONS TO THE CITY'S WASTEWATER SYSTEM. FOR MAINTENANCE PURPOSES, THE CITY'S RESPONSIBILITY ENDS AT THE CUSTOMER'S WASTEWATER CONNECTION TO THE 2-WAY-CLEANOUT.

5. PIPING AND TUBING IN STREET RIGHT-OF-WAY AND IN EASEMENT AREA SHALL BE BEDDED IN GRANULAR MATERIALS AS REQUIRED BY CITY OF AUSTIN STANDARD SPECIFICATION SECTION 510.3 (14) UNLESS OTHERWISE NOTED ON THIS DETAIL. MATERIALS SHALL BE AS SPECIFIED IN 510.2 (2)(A) AND (3)(B); BACKFILL ABOVE THE GRANULAR BEDDING SHALL BE AS REQUIRED BY SECTION 510.3 (25). SERVICE LINES IN THESE AREAS SHALL HAVE A MINIMUM COVER BELOW FINAL STREET GRADE OF 42". ANY EXCEPTION MUST BE SPECIFICALLY APPROVED BY THE ENGINEER.

6. ALL SANITARY SEWER PIPE WITHIN 9' OF WATER MAINS SHALL BE BEDDED IN CEMENT STABILIZED SAND PER TCEQ CHAPTER 217 & 290 REQUIREMENTS. BEDDING SHALL EXTEND A MINIMUM OF 12" ABOVE PIPE, 4" BELOW PIPE, AND 12" BEYOND JOINTS AT EACH END.

7. PIPE MATERIAL FOR WASTEWATER SERVICES SHALL BE 6" SDR-26 PVC D2241 160 PSI RATED.

8. NO METER BOX OR CLEAN OUT SHALL BE SET IN SIDEWALK OR DRIVEWAY AREA WITHOUT WRITTEN APPROVAL FROM THE CITY ENGINEERING DEPT.

9. NO JOINTS SHALL BE PERMITTED BETWEEN THE 6"x6" HORIZONTAL WYE AND THE 6" 2-WAY CLEANOUT EXCEPT FOR THE 6" 45-DEGREE BEND REQUIRED FOR DOUBLE SERVICES.

City Of Leander, Texas
DETAIL #101-2
2 OF 2
WASTEWATER SERVICE CONNECTIONS

2/9/2026

STATE OF TEXAS
PATRICK C. FILSON
108577
LICENSED
PROFESSIONAL ENGINEER

SPARKLE PRESCHOOL

SRIKANTH NAGUNOORI

2345 BASE BURNER PATH
LEANDER, TX 78641

SPARKLE MONTESSORI ACADEMY

LOT 1A-R, BLOCK A
CITY OF LEANDER
WILLIAMSON COUNTY, TEXAS

REV.:	DATE:	DESCRIPTION:

kirkman ENGINEERING

KIRKMAN ENGINEERING, LLC
1500 ARROW POINT DRIVE STE. 804
CEDAR PARK, TEXAS 78613

TEXAS FIRM NO. 15874

JOB NUMBER: NAG25001

ISSUE DATE: 2/9/2026

SANITARY SEWER DETAILS I

SHEET: 24 OF 30

SD-25-0378

FILENAME: C:\10 SANITARY SEWER DETAILS_NAG25001.dwg
PLOTTED BY: Priyavrutha Gautam
PLOTTED DATE: 2/9/2026

FULL PATH: K:\ANW\NAG25001_Sparkle Leander\Drawings\02_ENGR\03 - Production\K:\ANW\NAG25001_Sparkle Leander\Drawings\02_ENGR\03 - Production\C10 SANITARY SEWER DETAILS_NAG25001

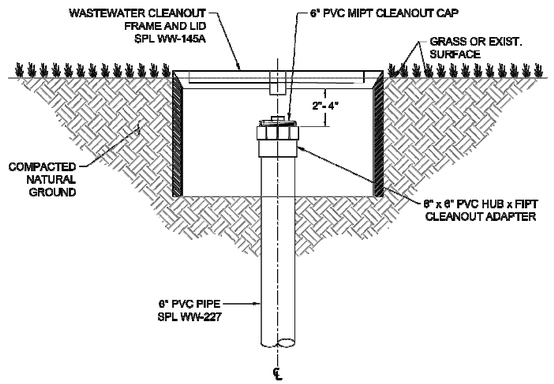

NOTE:

1. **WASTEWATER CLEANOUT FRAME AND LID SHALL NOT BE PLACED IN PAVED AREAS, INCLUDING SIDEWALKS, DRIVEWAYS, OR PARKING LOTS, AND MUST BE LOCATED A MINIMUM OF 6' FROM ALL PAVED AREAS.**

CITY OF AUSTIN AUSTIN WATER	WASTEWATER CLEANOUT FRAME AND LID	
JEFF A. KYLE *08/16/2019* ADOPTED	THE ENGINEER/ARCHITECT ASSUMES RESPONSIBILITY FOR APPROPRIATE USE OF THIS STANDARD. MODIFICATIONS TO THIS STANDARD ARE PROHIBITED.	STANDARD NO. 520-AW-03 1 OF 1

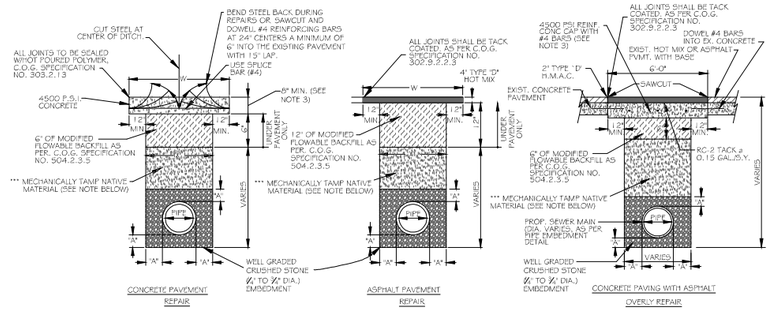

NOTE:
CRUSHED STONE SHALL BE USED TO REPLACE SOFT, SPONGY OR OTHERWISE UNSUITABLE MATERIAL AT PIPE GRADE.

NOTE:
1.) FULL-DEPTH SAWCUT TO REPAIR ASPHALT OR CONCRETE PAVEMENT PRIOR TO OPENING THE DITCH IN ORDER TO ENSURE A NEAT STRAIGHT EDGE.
2.) MODIFIED FLOWABLE BACKFILL MAY BE UTILIZED IN-LIEU OF NATIVE MATERIAL.
3.) DEPTH OF CONCRETE REPAIR SHALL MATCH EXISTING PAVING DEPTH OR 8" MINIMUM.

WASTEWATER PIPE PAVEMENT BACKFILL & REPAIR

N.T.S.

NORMAL SIZE OF PIPE IN INCHES	O.D. OF PIPE BELL IN INCHES (PVC-SDR35)	MINIMUM TRENCH WALL CLEARANCE "A" IN INCHES	WIDTH OF TRENCH (W)		WIDTH OF PVMT. REPLACEMENT *
			MAXIMUM ** IN INCHES	MINIMUM ** IN INCHES	(W) CONC. & ASPHALT **
4	4.67	6	24	18	42
6	6.74	6	24	19	48
8	8.99	6	24	21	48
10	11.27	6	28	24	48
12	13.27	6	30	26	50
15	16.45	8	37	33	57
18	20.73	8	41	37	61
21	24.42	8	45	41	65
24	27.21	8	46	44	68
27	30.61	8	51	47	71

NOTE:
* REFER TO THE PLANS FOR SPECIFIED WIDTH OF REPLACEMENT.
** RECOMMENDED WIDTHS - VARY BASED ON DEPTH AND SOIL MATERIAL.
*** MECHANICALLY TAMP NATIVE MATERIAL (6"Ø CLODS OR SMALLER IN 6"-8" LIFTS) TO 95% OF THE MAXIMUM DRY DENSITY DETERMINED BY THE STD. PROCTOR TEST, ASTM D698 WITH MOISTURE CONTENT OF THE FILL AT THE TIME OF COMPACTION TO BE NEAR OPTIMUM TO 4% ABOVE PROCTOR OPTIMUM VALUE.

NOTE:
(A) CONCRETE FOR PAVING REPAIRS SHALL BE MADE WITH A MINIMUM OF 6 1/2 SACKS OF CEMENT AND HAVE A MINIMUM COMPRESSIVE STRENGTH OF 4,500 PSI AT 28 DAYS.
(B) ALL REINFORCING STEEL SHALL BE NEW, NEAT, BILLET STEEL PER ASTM DESIGNATION A-615, GRADE 60, AND SHALL BE DETAILED AND PLACED PER ACI MANUALS SP-66 AND 316, LATEST ADDITIONS. ALL REINFORCING STEEL SHALL HAVE MINIMUM 15 INCH LAP SPLICES, UNLESS NOTED OTHERWISE ON THE PLANS.
(C) THE CONTRACTOR SHALL USE A LIQUID MEMBRANE-FORMING CURING COMPOUND PER COG ITEM ITEM 303.2.12.1.1.

TABLE OF DIMENSIONS FOR WIDTH OF TRENCH AND PAVEMENT REPLACEMENT

N.T.S.

2/9/2026

STATE OF TEXAS
PATRICK C. FILSON
108577
LICENSED
PROFESSIONAL ENGINEER

SPARKLE PRESCHOOL

SRIKANTH NAGUNOORI

2345 BASE BURNER PATH
LEANDER, TX 78641

SPARKLE MONTESSORI ACADEMY

LOT 1A-R, BLOCK A
CITY OF LEANDER
WILLIAMSON COUNTY, TEXAS

REV:	DATE:	DESCRIPTION:

kirkman ENGINEERING
KIRKMAN ENGINEERING, LLC
1500 ARROW POINT DRIVE STE. 804
CEDAR PARK, TEXAS 78613
TEXAS FIRM NO. 15874

JOB NUMBER: NAG25001

ISSUE DATE: 2/9/2026

SANITARY SEWER DETAILS II

SHEET: 25 OF 30

SD-25-0378

FILE PATH: K:\AUS\NAG25001_Sparkle Leander\Drawings\02_ENGR\03 - Production\K:\AUS\NAG25001_Sparkle Leander\Drawings\02_ENGR\03 - Production\C3.0 SANITARY SEWER DETAILS_NAG25001
FILENAME: C3.0 SANITARY SEWER DETAILS_NAG25001.dwg
PLOTTED BY: Prashanthi Gudem
PLOTTED DATE: 2/9/2026

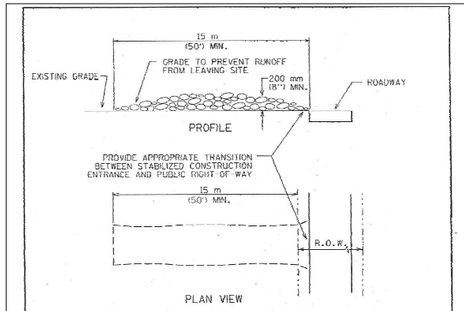

NOTES:
1. STONE SIZE: 75-125 mm (3-5") OPEN GRADED ROCK.
2. LENGTH: AS EFFECTIVE BUT NOT LESS THAN 15 m (50').
3. THICKNESS: NOT LESS THAN 200 mm (8").
4. WIDTH: NOT LESS THAN FULL WIDTH OF ALL POINTS OF INGRESS/EGRESS.
5. WASHING: WHEN NECESSARY, VEHICLE WHEELS SHALL BE CLEANED TO REMOVE SEDIMENT PRIOR TO ENTRANCE ONTO PUBLIC ROADWAY. WHEN WASHING IS REQUIRED, IT SHALL BE DONE ON AN AREA STABILIZED WITH CRUSHED STONE AND DRAINS INTO AN APPROVED TRAP OR SEDIMENT BASIN. ALL SEDIMENT SHALL BE PREVENTED FROM ENTERING ANY STORM DRAIN, DITCH OR WATERCOURSE USING APPROVED METHODS.
6. MAINTENANCE: THE ENTRANCE SHALL BE MAINTAINED IN A CONDITION THAT WILL PREVENT TRACKING OR FLOWING OF SEDIMENT ONTO PUBLIC ROADWAY. THIS MAY REQUIRE PERIODIC TOP DRESSING WITH ADDITIONAL STONE AS CONDITIONS DEMAND, AS WELL AS REPAIR AND CLEAN OUT OF ANY MEASURE DEVICES USED TO TRAP SEDIMENT. ALL SEDIMENTS THAT IS SPILLED, DROPPED, WASHED OR TRACKED ONTO PUBLIC ROADWAY MUST BE REMOVED IMMEDIATELY.
7. DRAINAGE: ENTRANCE MUST BE PROPERLY GRADED OR INCORPORATE A DRAINAGE SWALE TO PREVENT RUNOFF FROM LEAVING THE CONSTRUCTION SITE.

CITY OF AUSTIN WATERSHED PROTECTION DEPARTMENT	STABILIZED CONSTRUCTION ENTRANCE	
5/23/06 ADOPTED	THE ARCHITECT/ENGINEER ASSUMES RESPONSIBILITY FOR APPROPRIATE USE OF THIS STANDARD.	STANDARD NO. 641S-1

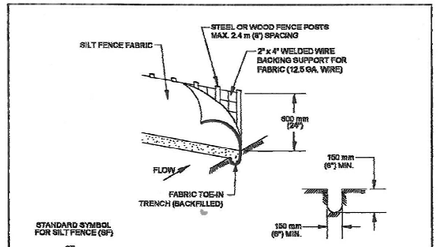

1. STEEL OR WOOD POSTS WHICH SUPPORT THE SILT FENCE SHALL BE INSTALLED ON A SLIGHT ANGLE TOWARD THE ANTICIPATED RUNOFF SOURCE. POST MUST BE EMBEDDED A MINIMUM OF 300 mm (12 INCHES). IF WOOD POSTS CANNOT ACHIEVE 300 mm (12 inches) DEPTH, USE STEEL POSTS.
2. THE TOE OF THE SILT FENCE SHALL BE TRENCHED IN WITH A SPADE OR MECHANICAL TRENCHER, SO THAT THE DOWNSLOPE FACE OF THE TRENCH IS FLAT AND PERPENDICULAR TO THE LINE OF FLOW.
3. THE TRENCH MUST BE A MINIMUM OF 150 mm (6 inches) DEEP AND 150 mm (6 inches) WIDE TO ALLOW FOR THE SILT FENCE FABRIC TO BE LAID IN THE GROUND AND BACKFILLED WITH COMPACTED MATERIAL.
4. SILT FENCE FABRIC SHOULD BE SECURELY FASTENED TO EACH STEEL OR WOOD SUPPORT POST OR TO WOVEN WIRE, WHICH IS IN TURN ATTACHED TO THE STEEL OR WOOD FENCE POST.
5. INSPECTION SHALL BE MADE WEEKLY OR AFTER EACH RAINFALL EVENT AND REPAIR OR REPLACEMENT SHALL BE MADE PROMPTLY AS NEEDED.
6. SILT FENCE SHALL BE REMOVED WHEN THE SITE IS COMPLETELY STABILIZED SO AS NOT TO BLOCK OR IMPEDE STORM FLOW OR DRAINAGE.
7. ACCUMULATED SILT SHALL BE REMOVED WHEN IT REACHES A DEPTH OF 150 mm (6 inches). THE SILT SHALL BE DISPOSED OF ON AN APPROVED SITE AND IN SUCH A MANNER THAT WILL NOT CONTRIBUTE TO ADDITIONAL SILTATION.

CITY OF AUSTIN WATERSHED PROTECTION DEPARTMENT	SILT FENCE	
9/1/2011 ADOPTED	THE ARCHITECT/ENGINEER ASSUMES RESPONSIBILITY FOR APPROPRIATE USE OF THIS STANDARD.	STANDARD NO. 642S-1

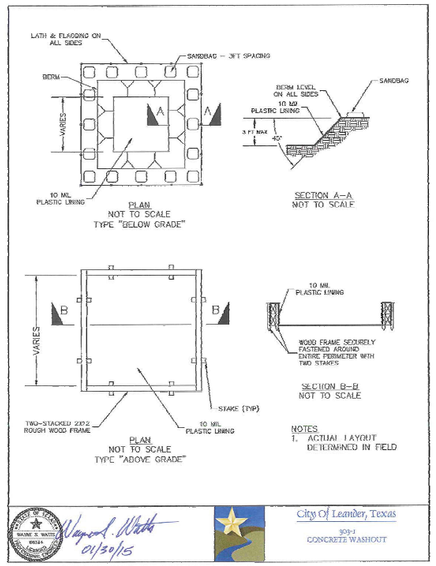

SPECIFICATIONS

PROPERTY	TEST METHOD	VALUE
	DEVICE	
Device Flow Rate	*Empirical Flow Test*	*300 gal/min/sf of inlet open area*
	FILTER FABRIC: Monofilament Woven Filter Fabric	
Fabric Weight	ASTM D 3776	4.5 oz/sy
Grab Tensile Strength	ASTM D 4632	200 lbs
Mullen Burst Strength	ASTM D 3786	410 lbs/sq in
UV Stability	ASTM D 4355	80%
Water Flow Rate	ASTM D 4491	200 gal/min/sf

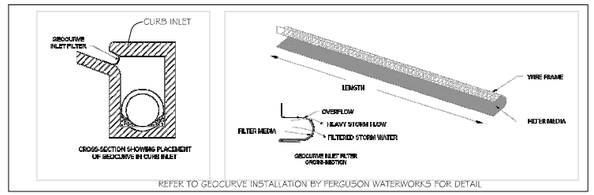

REFER TO GEOCURVE INSTALLATION BY FERGUSON WATERWORKS FOR DETAIL

INLET PROTECTION

N.T.S.

2/9/2026

STATE OF TEXAS
PATRICK C. FILSON
108577
LICENSED
PROFESSIONAL ENGINEER

SPARKLE
PRESCHOOL

SRIKANTH
NAGUNOORI

2345 BASE BURNER PATH
LEANDER, TX 78641

SPARKLE
MONTESSORI
ACADEMY

LOT 1A-R, BLOCK A
CITY OF LEANDER
WILLIAMSON COUNTY, TEXAS

REV:	DATE:	DESCRIPTION:

KIRKMAN ENGINEERING, LLC
1500 ARROW POINT DRIVE STE. 804
CEDAR PARK, TEXAS 78613

TEXAS FIRM NO. 15874

JOB NUMBER: NAG25001

ISSUE DATE: 2/9/2026

EROSION CONTROL DETAILS

SHEET:
26
OF 30

SD-25-0378

FILENAME: C15.0 EROSION CONTROL DETAILS_NAG25001.dwg
PLOTTED BY: Priyanshka Godara
PLOTTED DATE: 2/9/2026

FULL PATH: K:\Info\NAG2001\LS\Sparkle Leander\Drawings\02_ENGR\03 - Production\K:\Info\NAG2001\Sparkle Leander\Drawings\02_ENGR\03 - Production\C15.0 EROSION CONTROL DETAILS_NAG2001

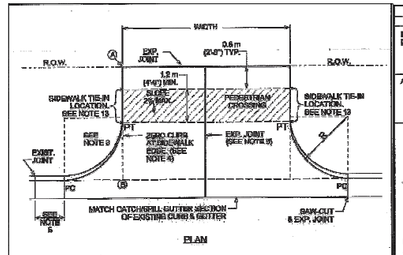

CITY OF AUSTIN DEPARTMENT OF PUBLIC WORKS	TYPE II DRIVEWAY	
2/9/26 ADDITED	THE ARCHITECT/ENGINEER ASSUMES RESPONSIBILITY FOR APPROPRIATE USE OF THIS STANDARD.	STANDARD NO. 433S-2 1 OF 2

USE	THICKNESS	REINFORCEMENT
DRIVEWAYS FOR PASSENGER VEHICLE PARKING LOTS	150 mm (6") MIN.	135 mm (5") MIN. CONCRETE WITH ONE LAYER OF 13M (#5) BARS PLACED ON CHAIRS AT MIDDEPTH OF SLAB, AT NO MORE THAN 450 mm (18") O.C. BOTH DIRECTIONS
ALL OTHERS	175 mm (7") MIN.	125 MPA (5") MIN. CONCRETE WITH ONE LAYER OF 13M (#4) BARS PLACED ON CHAIRS AT MIDDEPTH OF SLAB, AT NO MORE THAN 450 mm (18") O.C. BOTH DIRECTIONS

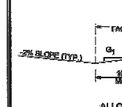

ALLOWABLE GRADES

DRIVEWAY VOLUME (ADT)	DRIVEWAY GRADE MIN	DRIVEWAY GRADE MAX
<300	0%	8%
300-5000	0%	6%
>5000	0%	10%

NOTES:
1. ALL TYPE II DRIVEWAYS SHALL HAVE RADIUS ENDS.
2. DRIVEWAY APPROACHES SHALL BE DESIGNED AND CONSTRUCTED WITH A MINIMUM GRADE OF 2% ASPHALT AND CONCRETE AND 0.5% CONCRETE PAVEMENT AND SHALL BE CONSTRUCTED IN ACCORDANCE WITH THE TRANSPORTATION CRITERIA MANUAL, SECTION 9. DRIVEWAYS.
3. THE LONGITUDINAL SLOPE SHOWN IS ACHIEVED BY TRANSITIONING INTO THE SIDEWALK TIE-IN LOCATION REFERENCED AT THE PROJECT LINE.
4. "ZERO" CURB AT PT OR SIDEWALK ENDS, WHICH IS TO BE CONSTRUCTED FIRST.
5. PLACE AN EXPANSION JOINT DOWN THE CENTER OF DRIVEWAY ALL TRANSITIONS.
6. IF THE CURB IS BEING REMOVED WITHIN THE CURB AND GUTTER WHERE REMOVED, BACKFILL WITH CONCRETE TO ENSURE NO CRACKS WITHIN THE DRIVEWAY.
7. TYPE II DRIVEWAYS SHOULD BE LOCATED NO CLOSER TO THE CORNER OF INTERSECTING RIGHT OF WAY THAN ONE-HALF OF PARCEL FRONTAGE AT THE SETBACK LINE OR FIFTY FEET (50') WHICHEVER IS LESS.
8. DRIVEWAY SHALL NOT BE CONSTRUCTED WITHIN THE CURB RETURN OF A STREET INTERSECTION.
9. WHERE THE PROPERTY OWNER IS WORKING RESPONSIBLE FOR GRADE BREAKS WITHIN PRIVATE PROPERTY, SUCH GRADE BREAKS SHALL BE LOCATED AT THE SETBACK LINE AND AT LEAST FIVE FEET (5') FROM THE PROPERTY LINE. WHERE IT IS ESSENTIAL TO ENSURE ONLY VEHICLE ACCESS AND "CS" IS CHECKED, THAN USE.
10. USE 19 MM (3/4") ASPHALTIC CONCRETE OR OTHER APPROVED MATERIAL FOR CURB AND GUTTER EXPANSION JOINTS. SIDEWALK AT THE EXPANSION JOINT AT THE SETBACK LINE AND AT LEAST FIVE FEET (5') FROM THE PROPERTY LINE. WHERE IT IS ESSENTIAL TO ENSURE ONLY VEHICLE ACCESS AND "CS" IS CHECKED, THAN USE.
11. SEE TRANSPORTATION CRITERIA MANUAL, SECTION 9 FOR OTHER DRIVEWAY REQUIREMENTS.
12. THE SIDEWALK, REGARDLESS OF ITS LOCATION WITH RESPECT TO THE CURB OR PROPERTY LINE, SHALL BE CONNECTED TO THE DRIVEWAY AT THESE LOCATIONS.
13. WATER BOX, MANHOLE AND WASHINGTON CURB CUTS ARE PROHIBITED FROM BEING LOCATED IN DRIVEWAY AREAS.

CITY OF AUSTIN DEPARTMENT OF PUBLIC WORKS	TYPE II DRIVEWAY	
2/9/26 ADDITED	THE ARCHITECT/ENGINEER ASSUMES RESPONSIBILITY FOR APPROPRIATE USE OF THIS STANDARD.	STANDARD NO. 433S-2 2 OF 2

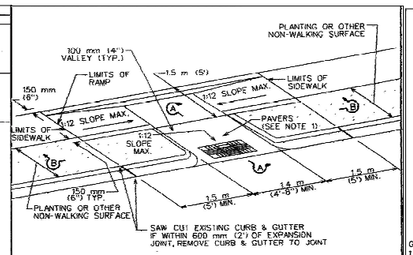

CITY OF AUSTIN DEPARTMENT OF PUBLIC WORKS	COMBINED SIDEWALK CURB RAMP WITH PAVERS	
Bill Bardon 3/13/26 ADOPTED	THE ARCHITECT/ENGINEER ASSUMES RESPONSIBILITY FOR APPROPRIATE USE OF THIS STANDARD.	STANDARD NO. 432S-3F 1 OF 2

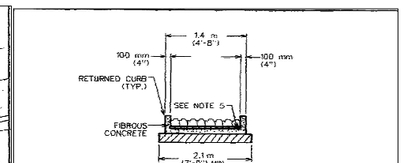

SECTION B-B

GENERAL NOTES:
1. THIS STANDARD IS APPLICABLE FOR RAMP CONSTRUCTION WITHIN RIGHT-OF-WAY OR EASEMENT ONLY.
2. PAVERS WILL HAVE DETECTABLE WARNING THAT CONSISTS OF RAISED TRUNCATED DOMES WITH A DIAMETER OF 23 mm (0.9"). A NOMINAL HEIGHT OF 5 mm (0.2") AND A NOMINAL CENTER TO CENTER SPACING OF 60 mm (2.35") AND SHALL CONTRAST VISUALLY WITH ADJOINING SURFACES, EITHER LIGHT-ON-DARK OR DARK-ON-LIGHT (Ref ADAAG SECTION 4.29.2). MATERIAL USED TO PROVIDE CONTRAST SHALL BE AN INTEGRAL PART OF THE WALKING SURFACE. A BASKET WEAVE PAVER PATTERN SHALL BE USED UNLESS DIRECTED BY THE ENGINEER OR DESIGNATED REPRESENTATIVE. PAVER PATTERN VARIES PER MANUFACTURER'S RECOMMENDATIONS. REFER TO STANDARD DETAIL 432S-5 FOR PAVER BASE PREPARATION DETAILS.
3. THE CURB, GUTTER AND RAMP SYSTEM SHALL BE CONFIGURED TO MAINTAIN ALL RUNOFF FROM A 25 YEAR FREQUENCY STORM WITHIN THE RIGHT-OF-WAY (DRAINAGE CRITERIA MANUAL SECTION 1.2.2.B).
4. TYPICAL SIDEWALK WIDTHS AND CURB RADII ARE SHOWN FOR ILLUSTRATION ONLY. REFER TO THE TRANSPORTATION CRITERIA MANUAL FOR SIDEWALK WIDTHS, CURB RADII AND CURB BASIC REQUIREMENTS.
5. THE PERMISSIBLE CONSTRUCTION JOINT BETWEEN THE PAVERS AND THE ADJOINING SURFACE SHALL BE LIMITED TO 6 mm (1/4") JOINT SIZE. CAPS LARGER THAN 6 mm (1/4") MUST BE APPROVED BY THE ENGINEER OR DESIGNATED REPRESENTATIVE. ALL JOINTS BETWEEN BRICKS AND ADJOINING SURFACE SHALL BE MORTAR FILLED UNLESS DIRECTED OTHERWISE BY THE ENGINEER OR DESIGNATED REPRESENTATIVE.
6. MORTAR SHALL CONFORM TO STD. SPECIFICATION ITEM SECTION 403S.3.5, MORTAR AND GROUT. ALL OTHER CONCRETE SHALL CONFORM TO STD. SPECIFICATION ITEM 403S, CONCRETE FOR STRUCTURES, UNLESS OTHERWISE NOTED.
7. CURB RAMPS WITH 100 mm (4") CONCRETE VALLEY MAY ONLY BE USED WHERE PEDESTRIANS WOULD NOT NORMALLY WALK DIAGONALLY ACROSS THE RAMP.

CITY OF AUSTIN DEPARTMENT OF PUBLIC WORKS	COMBINED SIDEWALK CURB RAMP WITH PAVERS	
Bill Bardon 3/13/26 ADOPTED	THE ARCHITECT/ENGINEER ASSUMES RESPONSIBILITY FOR APPROPRIATE USE OF THIS STANDARD.	STANDARD NO. 432S-3F 2 OF 2

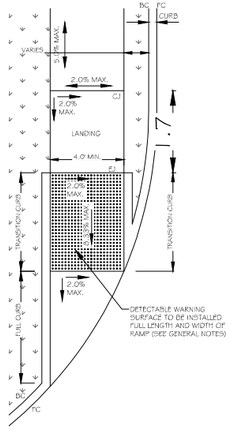

DIRECTIONAL RAMP WITHIN RADIUS DETAIL

N.T.S. -SIDEWALK SET BACK FROM CURB

GENERAL NOTES

NOTES:
1. CROSS SLOPE NOT TO EXCEED 2% ON ANY PORTION OF RAMP OR TRANSITION SURFACE.
2. RAMPS SHALL BE CONSTRUCTED PER ADA & APPLICABLE STATE ACCESSIBILITY STANDARDS.
3. CURB RAMPS SHALL BE MONOLITHIC POUR & SEPARATED FROM SITE PAVING WITH A DOWELED EXPANSION JOINT.

DETECTABLE WARNING SURFACE:
1. TRUNCATED DOMES SHALL CONTRAST VISUALLY WITH ADJOINING SURFACES, EITHER LIGHT-ON-DARK, OR DARK-ON-LIGHT. THE MATERIAL USED TO PROVIDE CONTRAST SHALL BE AN INTEGRAL PART OF THE WALKING SURFACE.
2. TRUNCATED DOMES TO RUN PARALLEL TO PEDESTRIAN TRAVEL.
3. DETECTABLE WARNING PAVERS, OR PLATES MEETING ADA & STATE REQUIREMENTS ARE ACCEPTABLE.

GROOVED SURFACE:
1. CURB RAMP SURFACES SHALL BE TEXTURED WITH GROOVES 1/4" DEEP, 3/4" WIDE, 2" APART AND ARRANGED SO THAT WATER WILL NOT ACCUMULATE IN THE GROOVES.
2. CURB RAMP SURFACE SHALL HAVE A LIGHT REFLECTIVE VALUE AND TEXTURE THAT SIGNIFICANTLY CONTRASTS WITH THAT OF THE ADJOINING PEDESTRIAN ROUTE.

2/9/2026

STATE OF TEXAS
PATRICK C. FILSON
108577
LICENSED
PROFESSIONAL ENGINEER

SPARKLE PRESCHOOL

SRIKANTH NAGUNOORI

2345 BASE BURNER PATH
LEANDER, TX 78641

SPARKLE MONTESSORI ACADEMY

LOT 1A-R, BLOCK A
CITY OF LEANDER
WILLIAMSON COUNTY, TEXAS

REV:	DATE:	DESCRIPTION:

kirkman ENGINEERING

KIRKMAN ENGINEERING, LLC
1500 ARROW POINT DRIVE STE. 804
CEDAR PARK, TEXAS 78613

TEXAS FIRM NO. 15874

JOB NUMBER: NAG25001

ISSUE DATE: 2/9/2026

PAVING DETAILS

SHEET:
27
OF 30

SD-25-0378

FULL PATH: K:\Info\NAG2001_Sparkle Leander\Drawings\00_ENGR\03 - Productwork \Info\NAG2001_Sparkle Leander\Drawings\00_ENGR\01 - Production\C4.6 PAVING DETAILS_NAG25001

FILENAME: C4.6 PAVING DETAILS_NAG25001.dwg
PLOTTED BY: Priyanshka Gautam
PLOTTED DATE: 2/9/2026

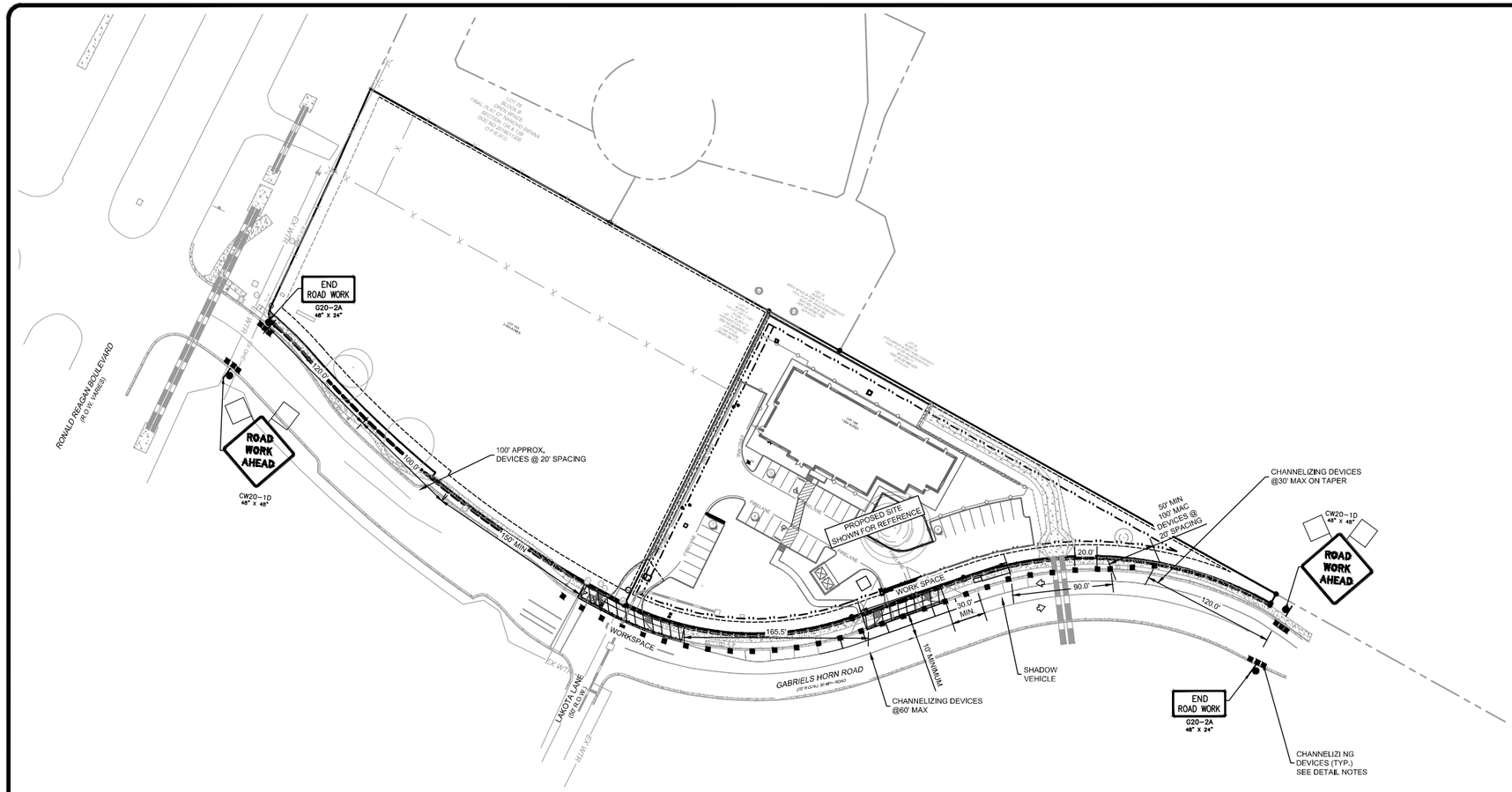

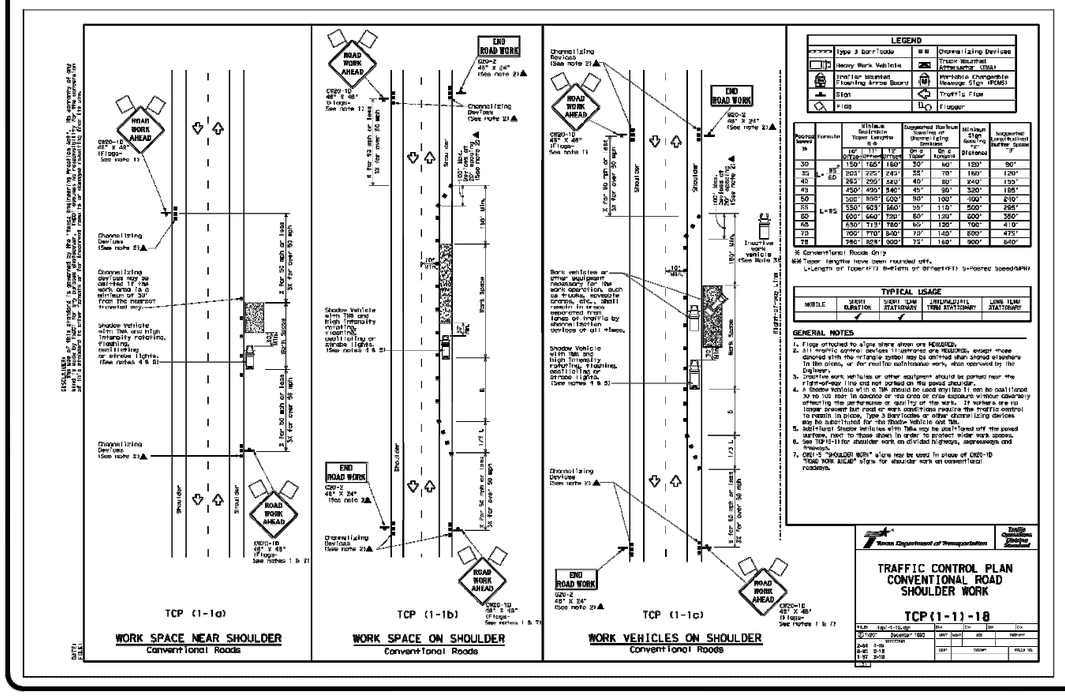

GRAPHIC SCALE

0 60 120 FEET

SCALE: 1" = 60'

2/9/2026

STATE OF TEXAS
PATRICK C. FILSON
108577
LICENSED
PROFESSIONAL ENGINEER

SPARKLE PRESCHOOL

SRIKANTH NAGUNOORI

2345 BASE BURNER PATH
LEANDER, TX 78641

SPARKLE MONTESSORI ACADEMY

LOT 1A-R, BLOCK A
CITY OF LEANDER
WILLIAMSON COUNTY, TEXAS

REV:	DATE:	DESCRIPTION:

kirkman ENGINEERING

KIRKMAN ENGINEERING, LLC
1500 ARROW POINT DRIVE STE. 804
CEDAR PARK, TEXAS 78613

TEXAS FIRM NO. 15874

JOB NUMBER: NAG25001

ISSUE DATE: 2/9/2026

TRAFFIC CONTROL PLAN

SHEET: 28 OF 30

SD-25-0378

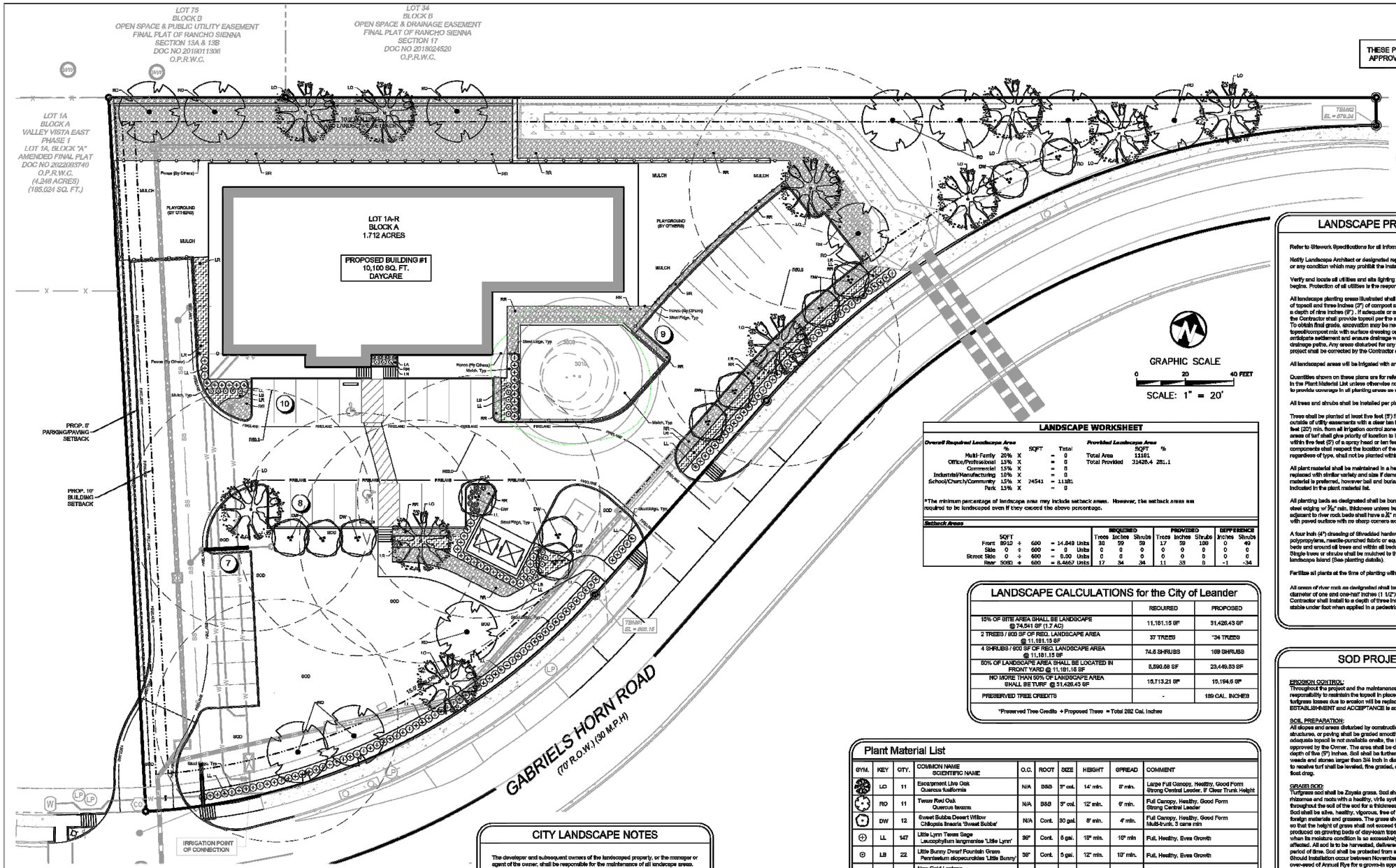

THESE PLANS ARE SUBJECT TO REVIEW & APPROVAL BY JURISDICTIONAL ENTITIES

811 Know what's below. Call before you dig.

GRAPHIC SCALE
0 20 40 FEET
SCALE: 1" = 20'

LANDSCAPE PROJECT NOTES

Refer to Sitework Specifications for all information needed for landscape work.

Notify Landscape Architect or designated representative of any layout discrepancies or any condition which may prohibit the installation as shown.

Verify and locate all utilities and site lighting conduits before landscape construction begins. Protection of all utilities is the responsibility of the Contractor.

All landscape planting areas illustrated shall be graded smooth with three inches (3") of topsoil and three inches (3") of compost applied and consistently blended (tilled) to a depth of nine inches (9"). If adequate or sufficient topsoil is not available on site, the Contractor shall provide topsoil per the specifications and approved by the Owner. To obtain final grade, excavation may be necessary to accept the required depth of topsoil/compost mix with surface dressing or mulch. All beds shall be crowned to anticipate settlement and ensure drainage without disrupting surrounding planned drainage paths. Any areas disturbed for any reason prior to final acceptance of the project shall be corrected by the Contractor at no additional expense to the Owner.

All landscaped areas will be irrigated with an underground automatic system.

Quantities shown on these plans are for reference only. Plant spacing is as indicated in the Plant Material List unless otherwise noted. The Contractor has full responsibility to provide coverage in all planting areas as specified.

All trees and shrubs shall be installed per planting details.

Trees shall be planted at least five feet (5') from any utility line or sidewalk, to the outside of utility easements with a clear ten feet (10') around fire hydrants and twenty feet (20') min. from all irrigation control zone valve boxes. Furthermore, planting within areas of turf shall give priority of location to irrigation. Trees, shall not be planted within five feet (5') of a spray head or ten feet (10') of a rotor. Remaining irrigation components shall respect the location of the illustrated landscape design. Shrubs, regardless of type, shall not be planted within thirty inches (30") of bed perimeters.

All plant material shall be maintained in a healthy and growing condition, and must be replaced with similar variety and size if damaged or removed. Container grown plant material is preferred, however ball and burlap material may be substituted as indicated in the plant material list.

All planting beds as designated shall be bordered by Owner approved four inch (4") steel edging w/ ¼" min. thickness unless bed is bordered by concrete. Steel edging adjacent to river rock beds shall have a 3/8" min. thickness. Terminate edging flush with paved surface with no sharp corners exposed.

A four inch (4") dressing of Shredded hardwood mulch over a 4.1 oz. woven polypropylene, needle-punched fabric or equal weed barrier shall be used in all plant beds and around all trees and within all beds with plants spaced 18" o.c. or greater. Single trees or shrubs shall be mulched to the outside edge of the saucer or landscape island (See planting details).

Fertilize all plants at the time of planting with 10-10-10 time release fertilizer.

All areas of river rock as designated shall be locally available and of an average diameter of one and one-half inches (1 1/2") minimum to three inches (3") maximum. Contractor shall install to a depth of three inches (3"). Rock should be compacted and stable under foot when applied in a pedestrian area.

LANDSCAPE WORKSHEET

Overall Required Landscape Area

	%		SQFT	Total
Multi-Family	20%	X		= 0
Office/Professional	15%	X		= 0
Commercial	15%	X		= 0
Industrial/Manufacturing	10%	X		= 0
School/Church/Community	15%	X	74541	= 11181
Park	15%	X		= 0

Provided Landscape Area

	SQFT	%
Total Area	11181	
Total Provided	31426.4	281.1

*The minimum percentage of landscape area may include setback areas. However, the setback areas are required to be landscaped even if they exceed the above percentage.

Setback Areas

	SQFT				REQUIRED			PROVIDED			DIFFERENCE	
					Trees	Inches	Shrubs	Trees	Inches	Shrubs	Inches	Shrubs
Front	8910	÷	600	= 14.849 Units	30	59	59	17	59	100	0	40
Side	0	÷	600	= 0 Units	0	0	0	0	0	0	0	0
Street Side	0	÷	600	= 0.00 Units	0	0	0	0	0	0	0	0
Rear	5080	÷	600	= 8.4667 Units	17	34	34	11	33	0	-1	-34

LANDSCAPE CALCULATIONS for the City of Leander

	REQUIRED	PROPOSED
15% OF SITE AREA SHALL BE LANDSCAPE @ 74,541 SF (1.7 AC)	11,181.15 SF	31,426.43 SF
2 TREES / 600 SF OF REQ. LANDSCAPE AREA @ 11,181.15 SF	37 TREES	34 TREES
4 SHRUBS / 600 SF OF REQ. LANDSCAPE AREA @ 11,181.15 SF	74.6 SHRUBS	169 SHRUBS
50% OF LANDSCAPE AREA SHALL BE LOCATED IN FRONT YARD @ 11,181.16 SF	5,590.58 SF	23,469.83 SF
NO MORE THAN 50% OF LANDSCAPE AREA SHALL BE TURF @ 31,426.43 SF	15,713.21 SF	15,194.6 SF
PRESERVED TREE CREDITS	-	189 CAL. INCHES

*Preserved Tree Credits ÷ Proposed Trees = Total 282 Cal. Inches

SOD PROJECT NOTES

EROSION CONTROL:
Throughout the project and the maintenance period for turfgrass, it is the Contractor's responsibility to maintain the topsoil in place at specified grades. Topsoil and turfgrass losses due to erosion will be replaced by the Contractor until ESTABLISHMENT and ACCEPTANCE is achieved.

SOIL PREPARATION:
All slopes and areas disturbed by construction, except those occupied by buildings, structures, or paving shall be graded smooth and four (4") inches of topsoil applied. If adequate topsoil is not available onsite, the Contractor shall provide topsoil as approved by the Owner. The area shall be dressed to typical sections and plowed to a depth of five (5") inches. Soil shall be further prepared by the removal of debris, weeds and stones larger than 3/4 inch in diameter. After tillage and disking, all areas to receive turf shall be leveled, fine graded, and drug with a weighted spike harrow or float drag.

GRASS SOD:
Turfgrass sod shall be Zoysia grass. Sod shall consist of stolons, leaf blades, rhizomes and roots with a healthy, virile system of dense, thickly matted roots throughout the soil of the sod for a thickness not less than three-quarters (3/4") inch. Sod shall be alive, healthy, vigorous, free of insects, diseases, clones, and undesirable foreign materials and grasses. The grass shall have been mowed prior to sod cutting so that the height of grass shall not exceed two (2") inches. Sod shall have been produced on growing beds of clay-loam topsoil. Sod shall not be harvested or planted when its moisture condition is so excessively wet or dry that its survival will be affected. All sod is to be harvested, delivered, and planted within a thirty-six (36) hour period of time. Sod shall be protected from exposure to wind, sun, and freezing. Should installation occur between November and March, sod shall include an over-seed of Annual Rye for a grown-in appearance.

IRRIGATION:
In the absence of an irrigation system or areas beyond the coverage limits of a permanent irrigation system, Contractor shall water sod temporarily to develop adequate growth and establishment before regular maintenance begins. Turf shall be watered until firmly established.

Water shall be furnished by the Contractor with means and methods available to achieve acceptable turf. The water source shall be clean and free of industrial wastes or other substances harmful to the growth of the turf.

MAINTENANCE REQUIREMENTS:
Vegetation should be inspected regularly to ensure that plant material is established properly and remains healthy. Mowing, trimming and supervision of water applications shall be the responsibility of the Contractor until the Owner or Owner's Representative accepts and assumes regular maintenance.

CITY LANDSCAPE NOTES

The developer and subsequent owners of the landscaped property, or the manager or agent of the owner, shall be responsible for the maintenance of all landscape areas. Said areas shall be maintained so as to present a healthy, neat and orderly appearance at all times and shall be kept free of refuse and debris. All planted areas shall be provided with an automatic irrigation system and watered as necessary to ensure continuous healthy growth and development. Maintenance shall include the replacement of all dead plant material if that material was used to meet the requirements of the Landscape Ordinance.

Tree caliper is the trunk diameter of a tree at twelve (12") inches above natural grade per the Composite Zoning Ordinance.

All new landscapes (non-residential and residential) are required to have a minimum of six inches (6") of soil depth in areas planted with turfgrass. The six-inch (6") minimum soil depth will consist of 75 percent soil blended with 25 percent compost. The soil/compost blend shall be incorporated into the top two inches of the native soil. The six-inch (6") depth requirement does not apply to the area between the drip line and trunk of existing trees, shrub beds or wildscape areas. Areas with existing native vegetation that remain undisturbed shall be exempt from the soil depth provision; provided that native soil and vegetation in such area is fenced during construction and protected from disturbance and compaction during the construction process.

All disturbed areas and ROW will be re-vegetated by the developer.

All invasive species shall be removed from the property.

No more than 60% of the same species may be planted to meet the tree planting requirements.

In the event of a conflict with tree removal/preservation call outs on plan sheet(s) versus tree removal/preservation matrix, the tree removal/preservation matrix shall apply. It is the contractors responsibility to verify with City staff should any inconsistency exist within an approved plan set. No in-field changes are made to approved plans, no exceptions.

IRRIGATION NOTE

IRRIGATION:
Irrigation system requires a separate irrigation application for the irrigation permit (irrigation is not reviewed, approved, or included under the Site or Building Permits)

Plant Material List

SYM.	KEY	QTY.	COMMON NAME / SCIENTIFIC NAME	O.C.	ROOT	SIZE	HEIGHT	SPREAD	COMMENT
	LO	11	Escarpment Live Oak Quercus fusiformis	N/A	B&B	3" cal.	14' min.	8' min.	Large Full Canopy, Healthy, Good Form Strong Central Leader, 8' Clear Trunk Height
	RO	11	Texas Red Oak Quercus texana	N/A	B&B	3" cal.	12' min.	6' min.	Full Canopy, Healthy, Good Form Strong Central Leader
	DW	12	Sweet Bubba Desert Willow Chilopsis linearis 'Sweet Bubba'	N/A	Cont.	30 gal.	8' min.	4' min.	Full Canopy, Healthy, Good Form Multi-trunk, 3 cane min
	LL	147	Little Lynn Texas Sage Leucophyllum langmaniae 'Little Lynn'	36"	Cont.	5 gal.	18" min.	18" min	Full, Healthy, Even Growth
	LB	22	Little Bunny Dwarf Fountain Grass Pennisetum alopecuroides 'Little Bunny'	36"	Cont.	5 gal.	12" min.	10" min.	Full, Healthy, Even Growth
	LA	13	New Gold Lantana Lantana x 'New Gold'	36"	Cont	5 gal.	12" min.	12" min.	Full, Healthy, Even Growth
	LP	936 sf	Liriope Liriope spicata	12"	Cont.	1 gal.	8" min.	6" min.	Full, Healthy, Even Growth
	RR	7,620 sf	River Rock	-	-	-	-	-	Locally Available Stabilize in Pedestrian Areas
	SOD	-	Zoysia Grass	-	-	-	-	-	Full, Healthy, Even Growth

In Accordance to the Current Edition of The American Standard for Nursery Stock

TREE MITIGATION

TREES	DBH INCH(IN)	CONDITION	ACTION	TREE TYPE	MITIGATION RATIO		INCHES TO BE PLANTED OR CREDITED	FEES
3001	36	POOR	REMOVE	CEDAR ELM (HERITAGE)	3:1	3	108	$10,800
3002	18	FAIR	REMOVE	CEDAR ELM(SIGNIFICANT)	1:1	1	18	
3008	8	FAIR	REMAIN	RED OAK(SIGNIFICANT)	1:1	1	8	
3000	32.5	GOOD	REMAIN	LIVE OAK HERITAGE)	3:1	3	98	
30009	28	GOOD	REMAIN	LIVE OAK(HERITAGE)	3:1	3	84	
30010	20	GOOD	REMAIN	LIVE OAK(SIGNIFICANT)	2:1	2	40	
TREE TYPE AS SIGNIFICANT,HERITAGE AND NON SIGNIFICANT PER CITY OF LEANDER PREFERRED TREE LIST								
NOTE: HERITAGE TREES MAY NOT BE REMOVED WITHOUT A PERMIT								

COJAX designs
P.O. Box 8232 Greenville, TX 75404 • Direct: 972.670.9407
Jill@cojaxdesigns.com

REGISTERED LANDSCAPE ARCHITECT MARGARET J. ROGERS 2705 STATE OF TEXAS
01.06.2026

No.	Date	
1	9/18/25	ISSUE FOR REVIEW
2	10/1/25	REVISED PER CLIENT COMMENTS
3	01/06/26	REVISED PER CITY COMMENTS & SITE CHANGES

L1.0 LANDSCAPE PLAN

Sparkle Preschool
GABRIELS HORN ROAD
LOT1A-R, BLOCK A
LEANDER, TEXAS

Drawn By M.J.R.
Checked By M.J.R.
Date SEPTEMBER 2025
Sheet No. 29 OF 30
File No. COJAX2025.0079

THESE PLANS ARE SUBJECT TO REVIEW & APPROVAL BY JURISDICTIONAL ENTITIES

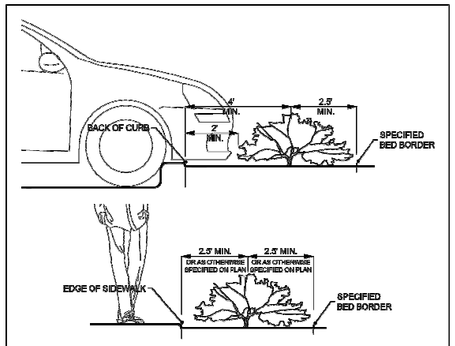

NOTE: SEE LANDSCAPE NOTES AND SHRUB PLANTING AND SPACING DETAIL FOR INSTALLATION.

SHRUB DISTANCE FROM EDGE OF BED N.T.S.

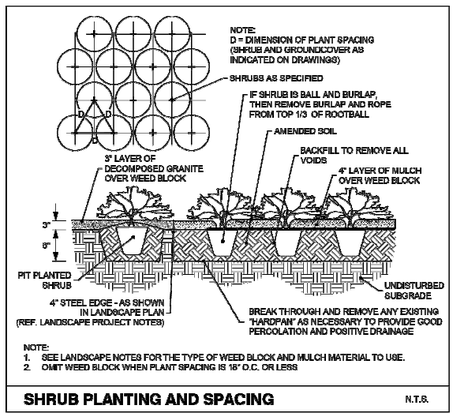

NOTE:
1. SEE LANDSCAPE NOTES FOR THE TYPE OF WEED BLOCK AND MULCH MATERIAL TO USE.
2. OMIT WEED BLOCK WHEN PLANT SPACING IS 18" O.C. OR LESS

SHRUB PLANTING AND SPACING N.T.S.

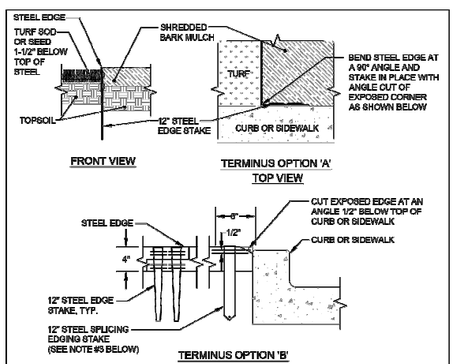

NOTES:
1. INSTALL STEEL EDGING TO UTILIZE FULL SECTIONS UNLESS CONTROLLED OTHERWISE WITH PLAN SHEET DIMENSIONS.
2. CUT STEEL EDGING AT AN ANGLE TO ACHIEVE A FINISHED STEEL EDGE HEIGHT OF 1/2" BELOW THE TOP OF ADJACENT HARDSCAPE.
3. IF STAKING IS NOT AVAILABLE WITHIN 12" OF THE EDGING TERMINATION, INSTALL A SPLICING EDGING STAKE WITHIN 8" OF THE TERMINATING EDGE AS SHOWN WITH OPTION 'B'
4. WHERE POSSIBLE, EDGE TERMINATION SHALL BE INSTALLED AS SHOWN IN TERMINUS OPTION 'A'.

STEEL EDGE TERMINATION N.T.S.

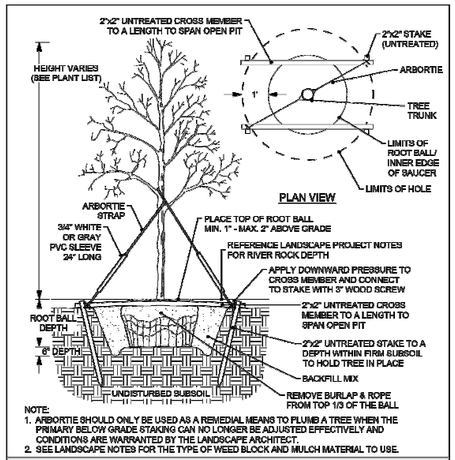

NOTE:
1. ARBORTIE SHOULD ONLY BE USED AS A REMEDIAL MEANS TO PLUMB A TREE WHEN THE PRIMARY BELOW GRADE STAKING CAN NO LONGER BE ADJUSTED EFFECTIVELY AND CONDITIONS ARE WARRANTED BY THE LANDSCAPE ARCHITECT.
2. SEE LANDSCAPE NOTES FOR THE TYPE OF WEED BLOCK AND MULCH MATERIAL TO USE.

TREE PLANTING IN RIVER ROCK N.T.S.

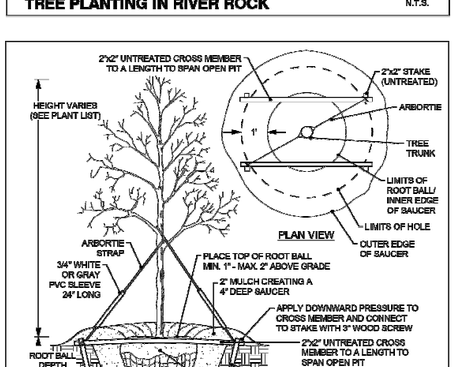

NOTE:
1. ARBORTIE SHOULD ONLY BE USED AS A REMEDIAL MEANS TO PLUMB A TREE WHEN THE PRIMARY BELOW GRADE STAKING CAN NO LONGER BE ADJUSTED EFFECTIVELY AND CONDITIONS ARE WARRANTED BY THE LANDSCAPE ARCHITECT.
2. SEE LANDSCAPE NOTES FOR THE TYPE OF WEED BLOCK AND MULCH MATERIAL TO USE.

TREE PLANTING N.T.S.

COJAX designs
P.O. Box 8232 Greenville, TX 75404 • Direct: 972.670.7407
jill@cojaxdesigns.com

REGISTERED LANDSCAPE ARCHITECT
MARGARET J. ROGERS
2705
STATE OF TEXAS
01.08.2026

	Date	Revision	By	Appr
1	9/18/25	ISSUE FOR REVIEW	M.J.R.	M.J.R.
2	10/13/25	REVISED PER CLIENT COMMENTS	M.J.R.	M.J.R.
3	01/08/26	REVISED PER CITY COMMENTS & SITE CHANGES	M.J.R.	M.J.R.

L1.1 LANDSCAPE DETAILS

Sparkle Preschool
GABRIELS HORN ROAD
LOT1A-R, BLOCK A
LEANDER, TEXAS

Drawn By M.J.R.
Checked By M.J.R.
Date SEPTEMBER 2025
Sheet No. 30 30
File No. COJAX2025.0079

ATTACHMENT N
INSPECTION AND MAINTENANCE FOR BMPs

The following worksheets may be used during and after construction for inspection and maintenance of permanent BMPs.

PERMANENT BMP INSPECTION AND MAINTENANCE WORKSHEET

Complete this worksheet twice annually; OR, after periods of heavy runoff for erosion or damage to vegetation. The strip should be checked for uniformity of grass cover, debris and litter, and areas of sediment accumulation. More frequent inspections of the grass cover during the first few years after establishment will help to determine if any problems are developing, and to plan for long-term restorative maintenance needs. Bare spots and areas of erosion identified during semi-annual inspections must be replanted and 3-91 restored to meet specifications. Construction of a level spreader device may be necessary to reestablish shallow overland flow.

Inspector (name/title): Inspection Date: Day: Time: am/pm

Scope of inspection (circle one): Semi-annual Inspection or Heavy runoff Inspection

Day of week normally conducted: 0.5 inch Rainfall Event: yes / no

Type	Inspected? (Y/N)	Areas of Concern
Grass Cover		
Debris and Litter		
Sediment accumulation		

BMP & Location	OK? (Y/N)	BMP Failure? (describe)	BMP Failure? (describe)

"I certify that the facility or site is in compliance with the stormwater pollution prevention plan and this permit."

I further certify that I am authorized to sign this report under TCEQ rules at 30 TAC 305.128 (relating to Signatories to Reports)

Name/Title: Srikanth Nagunoori Date: 02/06/2026

Sparkle Daycare LLC

Signature: 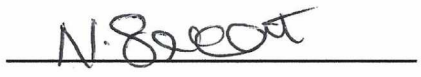

Jellyfish® Filter Inspection and Maintenance

Jellyfish cartridges are passively backwashed automatically after each storm event, which removes accumulated sediment from the membranes and significantly extends the service life of the cartridges and the maintenance interval. If required, the cartridges can be easily manually backwashed without removing the cartridges. Additionally, the lightweight cartridges can be removed by hand and externally rinsed, and rinsed cartridges then re-installed. These simple maintenance options allow for cartridge regeneration, thereby minimizing cartridge replacement costs and life-cycle treatment costs while ensuring long-term treatment performance.

Regular inspection and maintenance are proven, cost-effective ways to maximize water resource protection for all stormwater pollution control practices, and are required to insure proper functioning of the Jellyfish® Filter. Inspection of the Jellyfish® Filter is performed from the surface, while proper maintenance requires a combination of procedures conducted from the surface and with worker entry into the structure.

Please refer to the following information and guidelines before conducting inspection and maintenance activities:

- **When is inspection needed?**

Post-construction inspection is required prior to putting the Jellyfish Filter into service.

Routine inspections are recommended quarterly during the first year of operation to accurately assess the sediment and floatable pollutant accumulation, and to ensure that the automatic backwash feature is functioning properly.

Inspection frequency in subsequent years is based on the maintenance plan developed in the first year, but must occur annually at a minimum.

Inspections should also be performed immediately after oil, fuel or other chemical spill.

- **When is maintenance service needed?**

The unit must be cleaned annually. This cleaning includes removal and appropriate disposal of all water, sediment, oil and grease, and debris that has accumulated within the unit. The Jellyfish Filter is inspected and maintained by professional vacuum
cleaning service providers with experience in the maintenance of underground tanks, sewers and catch basins. Since some of the maintenance procedures require manned entry into the Jellyfish structure, only professional maintenance service providers trained in confined space entry procedures should enter the vessel. Service provider companies typically have personnel who are trained and certified in confined space entry procedures according to local, state, and federal standards.

Filter cartridges should be tested for adequate flow rate, every 12 months and cleaned and re-commissioned, or replaced if necessary. A manual backflush must be performed on a single draindown cartridge using a Jellyfish Cartridge Backflush Pipe (described in the Jellyfish® Filter Owner's Manual). If the time required to drain 14 gallons of backflush water from the Backflush Pipe (from top of pipe to the top of the open flapper valve) exceeds 15 seconds, it is recommended to perform a manual backflush on each of the cartridges. After the manual backflush, the draindown test should be repeated on a single cartridge to determine if the cartridge can drain 14 gallons of water in 15 seconds. If the cartridge still does not achieve the design flow rate, it must be replaced.

The unit should be cleaned out immediately after an oil, fuel or chemical spill.

- **External Rinsing**

This cartridge cleaning procedure is performed by removing the cartridge from the cartridge deck and externally rinsing the filtration tentacles using a low-pressure water sprayer, as described in the Jellyfish® Filter Owner's Manual. If this procedure is performed within the structure, the cartridge or individual filtration tentacles should be rinsed while safely suspended over the maintenance access wall opening in the cartridge deck, such that rinsate flows into the lower chamber of the Jellyfish® Filter. If the rinsing procedure is performed outside the structure, the cartridge or individual filtration tentacles should be rinsed in a suitable basin such as a plastic barrel or tub, and rinsate subsequently poured into the maintenance access wall opening in the cartridge deck.

Sediment is subsequently removed from the lower chamber by standard vacuum service.

Inspection / Maintenance Completion - Summary

Company Name: Sparkle Daycare LLC

Company Address: 2345 Base Burner Path

City/State/Zip: Leander, Texas 78641

Phone: 408-806-2464

Engineer: Kirkman Engineering

Engineers Address: 5200 State Hwy 121

City/State/Zip: Colleyville, Texas 76034

Phone: 817-488-4960

Property Owner: Srikanth Nagunoori

*Jellyfish Model

Monitoring / Maintenance Table

	Jan	Feb	Mar	Apr	May	Jun	July	Aug	Sep	Oct	Nov	Dec
Oil Depth (inches)												
Sediment Depth (inches)												
Completed By												
Date												
Floatables (optional)												

I hereby certify that the monitoring and maintenance of the Jellyfish Filter unit was completed in accordance with the directions of the Jellyfish inspection and maintenance plan.



(Signed by property owner or designee)

MAINTENANCE WORKSHEET FOR VEGETATIVE FILTER STRIPS (VFS)

Complete this worksheet as required in the description for each type or twice a year if not specified, at least once during/following a large storm event and within 24 hours following large rainstorms (greater than 1 inch in 24 hours) during the first year of operation and retain this worksheet with your SWP3.

Inspector (Name/Title):_____
Inspection Date: _____ Day:_____ Time:_____am/pm
Scope of Inspection (circle one): Semi-annual or As required in Description*
During/Following large storm event
First Year Rain Storm (> 1 in. of rainfall within 24 hours)

Type	Inspected? (Y/N)	Measures Taken*	Areas of Concern
Pest Management Plan*			
Seasonal Mowing and Lawn Care*			
Debris and Litter Removal*			
Sediment Removal			
Grass Reseeding and Mulching			

*Description for each maintenance as required for VFS from RG-348, stated below.

Pest Management: An Integrated Pest Management (IPM) Plan should be developed for vegetated areas. This plan should specify how problem insects and weeds will be controlled with minimal or no use of insecticides and herbicides.

Seasonal Mowing and Lawn Care: If the filter strip is made up of turf grass, it should be mowed as needed to limit vegetation height to 18 inches, using a mulching mower (or removal of clippings). If native grasses are used, the filter may require less frequent mowing, but a minimum of twice annually. Grass clippings and brush debris should not be deposited on vegetated filter strip areas. Regular mowing should also include weed control practices, however herbicide use should be kept to a minimum (Urbonas et al., 1992). Healthy grass can be maintained without using fertilizers because runoff usually contains sufficient nutrients. Irrigation of the site can help assure a dense and healthy vegetative cover.

Debris and Litter Removal: Trash tends to accumulate in vegetated areas, particularly along highways. Any filter strip structures (i.e. level spreaders) should be kept free of obstructions to reduce floatables being flushed downstream, and for aesthetic reasons. The need for this practice is determined through periodic inspection, but should be performed no less than 4 times per year.

Sediment Removal: Sediment removal is not normally required in filter strips, since the vegetation normally grows through it and binds it to the soil. However, sediment may accumulate along the upstream boundary of the strip preventing uniform overland flow. Excess sediment should be removed by hand or with flat-bottomed shovels.

Grass Reseeding and Mulching: A healthy dense grass should be maintained on the filter strip. If areas are eroded, they should be filled, compacted, and reseeded so that the final grade is level. Grass damaged during the sediment removal process should be promptly replaced using the same seed mix used during filter strip establishment. If possible, flow should be diverted from the damaged areas until the grass is firmly established. Bare spots and areas of erosion identified during semi-annual inspections must be replanted and restored to meet specifications. Corrective maintenance, such as weeding or replanting should be done more frequently in the first two to three years after installation to ensure stabilization. Dense vegetation may require irrigation immediately after planting, and during particularly dry periods, particularly as the vegetation is initially established.

"I certify that the facility or site is in compliance with the stormwater pollution prevention plan and this permit. I further certify that I am authorized to sign this report under TCEQ rules at 30 TAC 305.128 (relating to Signatories to Reports)."

Printed Name/Title: Srikanth Nagunoori Date: 02/06/2026

Signature: N. Srikanth

Temporary Stormwater Section

Texas Commission on Environmental Quality

for Regulated Activities on the Edwards Aquifer Recharge Zone and Relating to 30 TAC §213.5(b)(4)(A), (B), (D)(I) and (G); Effective June 1, 1999

To ensure that the application is administratively complete, confirm that all fields in the form are complete, verify that all requested information is provided, consistently reference the same site and contact person in all forms in the application, and ensure forms are signed by the appropriate party.

Note: Including all the information requested in the form and attachments contributes to more streamlined technical reviews.

Signature

To the best of my knowledge, the responses to this form accurately reflect all information requested concerning the proposed regulated activities and methods to protect the Edwards Aquifer. This **Temporary Stormwater Section** is hereby submitted for TCEQ review and executive director approval. The application was prepared by:

Print Name of Customer/Agent: SRIKANTH NAGUNOORI

Date: 01/30/2026

Signature of Customer/Agent:

N. Srikanth

Regulated Entity Name: Sparkle Montessori Academy

Project Information

Potential Sources of Contamination

Examples: Fuel storage and use, chemical storage and use, use of asphaltic products, construction vehicles tracking onto public roads, and existing solid waste.

1. Fuels for construction equipment and hazardous substances which will be used during construction:

   ☐ The following fuels and/or hazardous substances will be stored on the site: _____

   These fuels and/or hazardous substances will be stored in:

   ☐ Aboveground storage tanks with a cumulative storage capacity of less than 250 gallons will be stored on the site for less than one (1) year.

☐ Aboveground storage tanks with a cumulative storage capacity between 250 gallons and 499 gallons will be stored on the site for less than one (1) year.

☐ Aboveground storage tanks with a cumulative storage capacity of 500 gallons or more will be stored on the site. An Aboveground Storage Tank Facility Plan application must be submitted to the appropriate regional office of the TCEQ prior to moving the tanks onto the project.

☑ Fuels and hazardous substances will not be stored on the site.

2. ☑ **Attachment A - Spill Response Actions**. A site specific description of the measures to be taken to contain any spill of hydrocarbons or hazardous substances is attached.

3. ☑ Temporary aboveground storage tank systems of 250 gallons or more cumulative storage capacity must be located a minimum horizontal distance of 150 feet from any domestic, industrial, irrigation, or public water supply well, or other sensitive feature.

4. ☑ **Attachment B - Potential Sources of Contamination**. A description of any activities or processes which may be a potential source of contamination affecting surface water quality is attached.

Sequence of Construction

5. ☑ **Attachment C - Sequence of Major Activities**. A description of the sequence of major activities which will disturb soils for major portions of the site (grubbing, excavation, grading, utilities, and infrastructure installation) is attached.

   ☑ For each activity described, an estimate (in acres) of the total area of the site to be disturbed by each activity is given.

   ☑ For each activity described, include a description of appropriate temporary control measures and the general timing (or sequence) during the construction process that the measures will be implemented.

6. ☑ Name the receiving water(s) at or near the site which will be disturbed or which will receive discharges from disturbed areas of the project: South Fork San Gabriel River

Temporary Best Management Practices (TBMPs)

Erosion control examples: tree protection, interceptor swales, level spreaders, outlet stabilization, blankets or matting, mulch, and sod. Sediment control examples: stabilized construction exit, silt fence, filter dikes, rock berms, buffer strips, sediment traps, and sediment basins. Please refer to the Technical Guidance Manual for guidelines and specifications. All structural BMPs must be shown on the site plan.

7. ☑ **Attachment D – Temporary Best Management Practices and Measures**. TBMPs and measures will prevent pollution of surface water, groundwater, and stormwater. The construction-phase BMPs for erosion and sediment controls have been designed to retain sediment on site to the extent practicable. The following information is attached:

- [x] A description of how BMPs and measures will prevent pollution of surface water, groundwater or stormwater that originates upgradient from the site and flows across the site.
- [x] A description of how BMPs and measures will prevent pollution of surface water or groundwater that originates on-site or flows off site, including pollution caused by contaminated stormwater runoff from the site.
- [x] A description of how BMPs and measures will prevent pollutants from entering surface streams, sensitive features, or the aquifer.
- [x] A description of how, to the maximum extent practicable, BMPs and measures will maintain flow to naturally-occurring sensitive features identified in either the geologic assessment, TCEQ inspections, or during excavation, blasting, or construction.

8. [x] The temporary sealing of a naturally-occurring sensitive feature which accepts recharge to the Edwards Aquifer as a temporary pollution abatement measure during active construction should be avoided.

   - [ ] **Attachment E - Request to Temporarily Seal a Feature**. A request to temporarily seal a feature is attached. The request includes justification as to why no reasonable and practicable alternative exists for each feature.
   - [x] There will be no temporary sealing of naturally-occurring sensitive features on the site.

9. [x] **Attachment F - Structural Practices**. A description of the structural practices that will be used to divert flows away from exposed soils, to store flows, or to otherwise limit runoff discharge of pollutants from exposed areas of the site is attached. Placement of structural practices in floodplains has been avoided.

10. [x] **Attachment G - Drainage Area Map**. A drainage area map supporting the following requirements is attached:

    - [ ] For areas that will have more than 10 acres within a common drainage area disturbed at one time, a sediment basin will be provided.
    - [ ] For areas that will have more than 10 acres within a common drainage area disturbed at one time, a smaller sediment basin and/or sediment trap(s) will be used.
    - [ ] For areas that will have more than 10 acres within a common drainage area disturbed at one time, a sediment basin or other equivalent controls are not attainable, but other TBMPs and measures will be used in combination to protect down slope and side slope boundaries of the construction area.
    - [ ] There are no areas greater than 10 acres within a common drainage area that will be disturbed at one time. A smaller sediment basin and/or sediment trap(s) will be used in combination with other erosion and sediment controls within each disturbed drainage area.

☑ There are no areas greater than 10 acres within a common drainage area that will be disturbed at one time. Erosion and sediment controls other than sediment basins or sediment traps within each disturbed drainage area will be used.

11. ☐ **Attachment H - Temporary Sediment Pond(s) Plans and Calculations**. Temporary sediment pond or basin construction plans and design calculations for a proposed temporary BMP or measure have been prepared by or under the direct supervision of a Texas Licensed Professional Engineer. All construction plans and design information must be signed, sealed, and dated by the Texas Licensed Professional Engineer. Construction plans for the proposed temporary BMPs and measures are attached.

    ☑ N/A

12. ☑ **Attachment I - Inspection and Maintenance for BMPs.** A plan for the inspection of each temporary BMP(s) and measure(s) and for their timely maintenance, repairs, and, if necessary, retrofit is attached. A description of the documentation procedures, recordkeeping practices, and inspection frequency are included in the plan and are specific to the site and/or BMP.

13. ☑ All control measures must be properly selected, installed, and maintained in accordance with the manufacturer's specifications and good engineering practices. If periodic inspections by the applicant or the executive director, or other information indicate a control has been used inappropriately, or incorrectly, the applicant must replace or modify the control for site situations.

14. ☑ If sediment escapes the construction site, off-site accumulations of sediment must be removed at a frequency sufficient to minimize offsite impacts to water quality (e.g., fugitive sediment in street being washed into surface streams or sensitive features by the next rain).

15. ☑ Sediment must be removed from sediment traps or sedimentation ponds not later than when design capacity has been reduced by 50%. A permanent stake will be provided that can indicate when the sediment occupies 50% of the basin volume.

16. ☑ Litter, construction debris, and construction chemicals exposed to stormwater shall be prevented from becoming a pollutant source for stormwater discharges (e.g., screening outfalls, picked up daily).

Soil Stabilization Practices

Examples: establishment of temporary vegetation, establishment of permanent vegetation, mulching, geotextiles, sod stabilization, vegetative buffer strips, protection of trees, or preservation of mature vegetation.

17. ☑ **Attachment J - Schedule of Interim and Permanent Soil Stabilization Practices**. A schedule of the interim and permanent soil stabilization practices for the site is attached.

18. ☑ Records must be kept at the site of the dates when major grading activities occur, the dates when construction activities temporarily or permanently cease on a portion of the site, and the dates when stabilization measures are initiated.

19. ☑ Stabilization practices must be initiated as soon as practicable where construction activities have temporarily or permanently ceased.

Administrative Information

20. ☑ All structural controls will be inspected and maintained according to the submitted and approved operation and maintenance plan for the project.

21. ☑ If any geologic or manmade features, such as caves, faults, sinkholes, etc., are discovered, all regulated activities near the feature will be immediately suspended. The appropriate TCEQ Regional Office shall be immediately notified. Regulated activities must cease and not continue until the TCEQ has reviewed and approved the methods proposed to protect the aquifer from any adverse impacts.

22. ☑ Silt fences, diversion berms, and other temporary erosion and sediment controls will be constructed and maintained as appropriate to prevent pollutants from entering sensitive features discovered during construction.

ATTACHMENT A
SPILL RESPONSE ACTIONS

General

- An effective spill and leak response depends on proper recognition and response practices by construction workers and supervisors. Key elements are education and training.
- Records of releases that exceed the Reportable Quantity (RQ) for oil and hazardous substances should be maintained in accordance with the Federal and State regulations.
- Emergency contact information and spill response procedures shall be posted in a readily available area for access by all employees and subcontractors.
- Spill containment kits should be maintained for petroleum products and other chemicals that are regularly onsite. Materials in kits should be based on containment guidelines in the Material Safety and Data Sheets (MSDSs) for the substance most frequently onsite.
- Spill kits are intended for response to small spills, typically less than 5 gallons, of substances that are not extremely hazardous.
- Significant spills or other releases warrant immediate response by trained professionals.
- Suspected job-site contamination should be immediately reported to regulatory authorities and protective actions taken.

Coordinator

- The contractor should be required to designate a site superintendent, foreman, safety officer, or other senior person who is onsite daily to be the Spill and Leak Response Coordinator.
- The coordinator must have knowledge of and be trained in correct spill and leak response procedures.
- The coordinator shall be responsible for implementing the spill and leak procedures and training all employees and sub-contractors on the site-specific spill and leak procedures. The training should include their responsibility to immediately notify the coordinator if a spill or leak occurs.

Spill Response

- Upon discovery of a spill, employees and subcontractors shall implement the following procedures:
    - Immediately stop work and clear the area by moving upwind of the spill.
    - Remove all ignition sources.
    - Notify the Spill and Leak Response Coordinator.
    - If there is an immediate danger to health or life, contact 911.

- The Spill and Leak Response Coordinator shall perform the following when the spill is not immediately dangerous to health and safety:
    - Consult the MSDS for safety and response procedures.
    - If it can be done safely, use onsite spill kits and soil to contain the spill.
    - Notify a hazardous response company to remove and properly dispose of the spilled material and the contaminated containment materials.

Spill Reporting

- The Spill and Leak Response Coordinator is responsible for notifying authorities of spills and leaks. Notification requirements are based on Reportable Quantities as established by the type or material, quantity and location (onto land or into water in the state) of the release. https://www.tceq.texas.gov/response/spills/spill_rq.html
- Reportable Quantities (RQ) in the State of Texas are established by the TCEQ in Texas Administrative Code Title 30, Chapter 327 (30 TAC 327) Spill Prevention and Control.
- The Texas RQ for petroleum products and used oil is 25 gallons released onto land or any amount that causes sheen on water.
- Reportable Quantities for all other substances are listed in 30 TAC 327.4, which references the EPA List of Lists (EPA 550-B-01-003) available at: http://www.epa.gov/ceppo/pubs/title3.pdf
- The Spill and Leak Response Coordinator shall notify the following:
    - The municipality that operates the local Municipal Separate Storm Sewer System (MS4) if a spill or leak enters public rights-of-way or any type of drainage way or drainage infrastructure within the jurisdiction of the municipality.
    - State of Texas Spill Report Hotline at 1-800-832-8224 if the spill or leak exceeds the RQ.
    - National Spill Response Center at 1-800-424-8802 if the spill or leak exceeds the RQ.
    - TCEQ regional office at normal office hours.

ATTACHMENT B
POTENTIAL SOURCES OF CONTAMINATION

Pollutant	Activity	Response
Fuels, grease, and oils	Trucks, generators, machinery used during construction activity	Secondary containment will be established around all above-ground storage tanks. Any emergency maintenance will utilize drip pans, and no scheduled maintenance will occur onsite.
Sediment	General construction activity	Sediment and erosion control measures will be established and operating prior to any soil disturbance
Sanitary/septic systems	General construction activity	Portable toilets will be located in designated sites within the construction site. Licensed sanitary sewer services will ensure facilities are in working order at all times.

ATTACHMENT C
SEQUENCE OF CONSTRUCTION

1. Install Construction Entrance/Exit per Erosion Control Plans in the Construction Drawings.
2. Install tree protection (as needed).
3. Begin silt fence installation.
4. Strip topsoil and organic materials and store onsite in stockpiles for later use. All stockpiles shall be temporarily seeded and mulched to prevent loss due to erosion and encircled with a silt fence or filter tube. (1.5 acres)
5. Begin site grading. (1.5 acres)
6. Install underground stormwater system.
7. As an area reaches final grade, install permanent stabilization as soon as possible but in no case longer than 14 days from reaching final grade.
8. Any area that will remain undisturbed for 14 days or more shall be temporarily stabilized.
9. Construct pavement/road.
10. Finish grading of all areas. (1.5 acres)
11. Complete permanent stabilization of all disturbed areas. Once a minimum of 70 percent of the vegetated areas have been stabilized, remove the erosion control BMPs.

ATTACHMENT D
TEMPORARY BEST MANAGEMENT PRACTICES AND MEASURES

The following temporary BMPs have been identified on the Erosion Control Plan.

1. Stabilized Construction Exit – Minimizes sediment and aggregate from exiting the project site from equipment trucks and construction vehicles.
2. Silt Fence – Protects downstream property from sediment due to storm events.
3. Concrete Washout Pit – To capture the concrete and debris from concrete vehicles and equipment.
4. Inlet Protection – To capture the concrete and debris from entering the underground storm system.

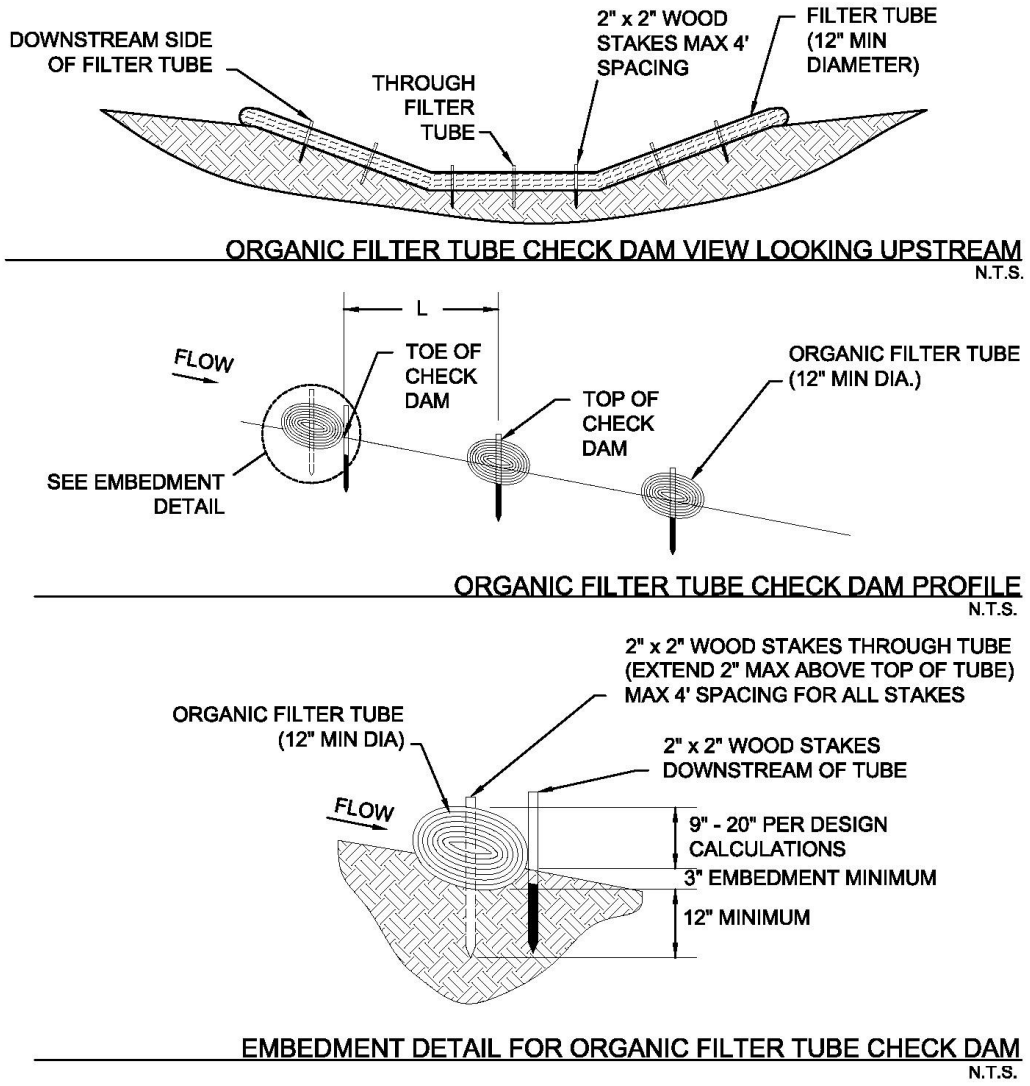

NOTES: ACTUAL DIMENSIONS OF THE CHECK DAMS SHALL BE DESIGNED BASED ON FLOW CONDITIONS IN THE DRAINAGE SWALE OR DITCH. PROVIDE CALCULATIONS THAT DOCUMENT THE FOLLOWING PARAMETERS USED TO DESIGN THE CHECK DAMS.

- HEIGHT OF CHECK DAMS BASED ON SWALE OR DITCH DIMENSIONS AND FLOW CONDITIONS.
- SPACING OF CHECK DAMS BASED ON GRADE OF THE SWALE OR DITCH. TOP OF DOWNSTREAM DAM SHALL BE AT SAME ELEVATION AS TOE OF UPSTREAM DAM.

Figure 2.5 Schematics of Organic Filter Tube Check Dams
(Source: Modified from City of Plano BMP S-7)

3.4 Inlet Protection

Sediment Control

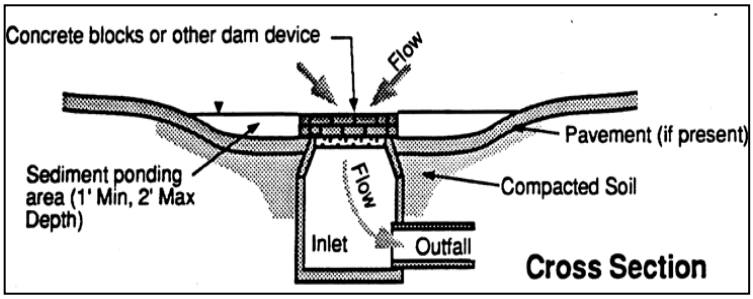

Description: Inlet protection consists of a variety of methods to intercept sediment at low point inlets through the use of depressed grading, filter stone, filter fabric, inlet inserts, organic filter tubes and other materials. The protection devices are placed around or across the inlet openings to provide localized detention or filtration of sediment and floatable materials in stormwater. Protection devices may be assembled onsite or purchased as manufactured assemblies.

KEY CONSIDERATIONS

DESIGN CRITERIA:

- Evaluate drainage patterns to ensure inlet protection will not cause flooding of roadway, property or structures
- Never block entire inlet opening
- Size according to drainage area and flow rates
- Include flow bypass for clogged controls and large storm events

ADVANTAGES / BENEFITS:

- May be the only feasible sediment control when all construction is located within rights-of-way

DISADVANTAGES / LIMITATIONS:

- Limited effectiveness and reliability
- High maintenance requirements
- Has potential to flood roadways or adjacent properties

MAINTENANCE REQUIREMENTS:

- Inspect regularly
- Check for and remove blockage of inlet after every storm event
- Remove sediment before it reaches half the design height or volume of the inlet protection, more frequently for curb inlets
- Repair or replace damaged materials
- Clean or replace filter stone and organic filter tubes is when clogged with sediment

TARGETED POLLUTANTS

- ◒ Sediment
- ○ Nutrients & Toxic Materials
- ○ Oil & Grease
- ◒ Floatable Materials
- ○ Other Construction Wastes

APPLICATIONS

Perimeter Control

Slope Protection

Sediment Barrier

Channel Protection

Temporary Stabilization

Final Stabilization

Waste Management

Housekeeping Practices

Fe=0.35-0.65
(*Depends on soil type*)

IMPLEMENTATION CONSIDERATIONS

- ◒ Capital Costs
- ● Maintenance
- ○ Training
- ○ Suitability for Slopes > 5%

Other Considerations:

- *Traffic hazards*
- *Passage of larger storm events without causing flooding*
- *Flow diversion to other inlets or drainage points*

3.4.1 Primary Use

Inlet protection is typically used as a secondary sediment barrier, due to its limited effectiveness and numerous disadvantages. It is used to reduce sediment in storm sewer systems by serving as a back-up system for areas that have newly applied erosion controls or for other sediment controls that cannot achieve adequate sediment removal by themselves.

Inlet protection may be used as a primary sediment control only when all other primary controls are infeasible because of site configuration or the type of construction activity.

3.4.2 Applications

Inlet protection is best applied at low point (sump) inlets where stormwater runoff will pond behind the protection measure, and then either filter through the protection measure or flow over a weir created by it. Most inlet protection measures depend on ponding to be effective. These types of inlet protection are not applicable to on-grade curb inlets, where the inlet protection will cause stormwater runoff to bypass the inlet and overload downstream inlets. Only inlet protection measures that allow for use of the inlet opening (e.g. inlet inserts) are applicable as inlet protection for on-grade inlets.

Inlet protection is normally used in new developments with new inlets and roads that are not in public use. It has limited applications in developed areas due to the potential for flooding, traffic safety, pedestrian safety, and maintenance problems. Potential applications in developed areas are on parking lot inlets where water can pond without causing damage and during major repairs to existing roadways where no other controls are viable.

The application of inlet protection is highly variable due to the wide variety of inlet configurations (existing and new) and site conditions. The schematics in Section 6 show example applications; however, applications in most cases must be site adapted. Different methods and materials may be used. It is the responsibility of the designer to ensure that the methods and materials applied for inlet protection are appropriate to the site and flow conditions following the design criteria in Section 3.

3.4.3 Design Criteria

General

- Drainage patterns shall be evaluated to ensure inlet protection will not divert flow or flood the roadway or adjacent properties and structures.
- Inlet protection measures or devices that completed block the inlet are prohibited. They must also include a bypass capability in case the protection measures are clogged.
- Inlet protection must be designed to pass the conveyance storm (25-year, 24-hour) without creating a road hazard or damaging adjacent property. This may be accomplished by any of the following measures:
    - An overflow weir on the protection measure.
    - An existing positive overflow swale on the inlet.
    - Sufficient storage volume around the inlet to hold the ponded water until it can all filter into the inlet.
    - Other engineered method.
- Positive overflow drainage is critical in the design of inlet protection. If overflow is not provided for at the inlet, temporary means shall be provided to route excess flows through established swales, streets, or other watercourses to minimize damage due to flooding.
- Filter fabric and wire mesh used for inlet protection shall meet the material requirements specified in *Section 3.10 Silt Fence*.

- Block and gravel (crushed stone or recycled concrete) protection is used when flows exceed 0.5 cubic feet per second and it is necessary to allow for overtopping to prevent flooding.
- The tube and filler for organic filter tubes shall be in accordance with the criteria in *Section 3.6 Organic Filter Tube*.
- Bags used to secure inlet protection devices on pavement shall be filled with aggregate, filter stone, or crushed rock that is less likely than sand to be washed into an inlet if the bag is broken. Filled bags shall be 24 to 30 inches long, 16 to 18 inches wide, and 6 to 8 inches thick. Bags shall be polypropylene, polyethylene, or polyamide woven fabric with a minimum unit weight of 4 ounces per square yard and meet the following criteria:
    - Greater than 300 psi Mullen Burst Strength using ASTM D3786 Standard Test Method for Hydraulic Bursting Strength of Textile Fabrics-Diaphragm Bursting Strength Tester Method.
    - Greater than 70 percent UV Stability using ASTM D4355 Standard Test Method for Deterioration of Geotextiles by Exposure to Light, Moisture, and Heat in a Xenon Arc Type Apparatus.

Curb Inlet Protection

- Municipality approval is required before installing inlet protection on public streets.
- Special caution must be exercised when installing curb inlet protection on publicly traveled streets or in developed areas. Ensure that inlet protection is properly designed, installed and maintained to avoid flooding of the roadway or adjacent properties and structures.
- A two inch overflow gap or weir is required on all curb inlet protection devices.
- Traffic cones, warning signs, or other measures shall be installed to warn motorists when the inlet protection measures extend beyond the gutter line.
- 2 inch X 4 inch Weir Protection:
    - Bend wire mesh around the 2 inch x 4 inch board and staple to the board. Bend wire mesh around the bottom of the board, the curb opening, and along the pavement to form a cage for the rock.
    - Rock bags shall be placed perpendicular to the curb, at both ends of the wooden frame, to disrupt the flow and direct water into the rock filter. Stack the bags two high if needed.
- Organic Filter Tube Protection:
    - The diameter of the tube shall be at least 2 inches less than the height of the inlet opening. The tube should not be allowed to block the entire opening, since it will clog.
    - The tube shall be placed on 4 inch x 4 inch or 2 inch x 4 inch wire mesh to prevent the tube from sagging into the inlet.
    - The tube should be long enough to extend a minimum of 12 inches past the curb opening on each side of the inlet.
- Hog Wire Weir Protection:
    - The filter fabric and wire mesh shall extend a minimum of 12 inches past the curb opening on each side of the inlet.
    - Filter fabric shall be placed on 2 inch x 4 inch wire mesh to prevent the tube from sagging into the inlet.
    - Rock bags are used to hold the wire mesh and filter fabric in contact with the pavement. At least one bag shall be placed on either side of the opening, parallel to and up against the concrete curb. The bags are in intended to disrupt and slow the flow and ensure it does not go under the fabric. Add bags if needed.

- If a board is used to anchor the wire mesh and fabric instead of rock bags, the board shall be secured with concrete nails at 3 inches on center. Upon removal clean any dirt or debris from the nailing locations, apply chemical sanding agent, and apply non-shrink grout flush with surface of concrete.

- Block and Gravel Protection:
  - Concrete blocks shall be standard 8 inch x 8 inch x 16 inch concrete masonry units and shall be in accordance with ASTM C139, Concrete Masonry Units for Construction. Filter gravel shall be ¾ inch washed stone containing no fines. Angular shaped stone is preferable to rounded shapes.
  - Concrete blocks are to be placed on their sides in a single row around the perimeter of the inlet, with ends abutting. Openings in the blocks should face outward, not upward. ½ inch x ½ inch wire mesh shall then be placed over the outside face of the blocks covering the holes. Filter gravel shall then be piled against the wire mesh to the top of the blocks with the base of the stone being a minimum of 18 inches from the blocks.
  - Alternatively, where loose stone is a concern (streets, etc.), the filter gravel may be placed in appropriately sized filter fabric bags.
  - Periodically, when the gravel filter becomes clogged, the gravel must be removed and cleaned in a proper manner or replaced with new gravel and piled back against the wire mesh.
- Organic Filter Tube On-Grade Protection:
  - Organic filter tubes may be used to provide sediment control at on-grade curb inlets where the tube will not be a traffic hazard, such as on residential streets where the pavement adjacent to the curb is allocated to parked cars. Tubes should not be used in this manner where they will extend into an active travel lane.
  - The filter tube shall be secured in a U-shape by rock bags. Runoff flowing in the gutter will pond within the U until it filters through the tube or overflows around the end.
- Inlet protection shall be phased on curb inlets being constructed. Controls shall be installed on the pipe inlet at the bottom of the catch basin as soon as it is installed and while the inlet box and top are being formed or placed.

Area Inlet Protection

- Installation methods for protection on area inlets vary depending on the type of inlet (drop, "Y," or other) and the type and use of the surface surrounding the inlet (parking lot, playground, etc.). It is the responsibility of the designer to appropriately adapt inlet protection measures and their installation methods for each site condition. Several types may be needed on one project.
- Filter Fabric Protection:
  - Filter fabric protection is appropriate where the drainage area is less than one acre and the basin slope is less than five (5) percent. Filter fabric, posts, and wire mesh shall meet the material requirements specified in *Section 3.10 Silt Fence*.
  - A 6 inch wide trench is to be cut 6 inches deep at the toe of the fence to allow the fabric to be laid below the surface and backfilled with compacted earth or gravel. This entrenchment prevents any bypass of runoff under the fence.
  - Stone overflow structures, according to the criteria in *Section 3.10 Silt Fence* shall be installed where flow to the inlet is concentrated and more than 1 cubic feet per second.
- Excavated Impoundment Protection:
  - Excavated inlet protection is usually the most effective type of area inlet protection; however, it is only applicable to drop inlets. It should not be applied to Y inlets because it will undermine the concrete pad surrounding the inlet opening. Nor can it be used for inlets on pavement.

- With this protection method, it is necessary to install weep holes to allow the impoundment to drain completely.
- The impoundment shall be sized such that the volume of excavation is equal to or exceeds the runoff volume from the temporary control design storm (2-year, 24-hour) for the inlet's drainage area.
- The trap shall have a minimum depth of one foot and a maximum depth of 2 feet as measured from the top of the inlet and shall have side slopes of 2:1 or flatter.

- Block and Gravel Protection:
  - Block and gravel inlet protection is the most stable area inlet protection and can handle more concentrated flows. It may be installed on paved or vegetated surfaces. Loose stone shall be carefully removed from vegetated surfaces at the end of construction to prevent the stone from becoming a mowing hazard.
  - The inlet protection may be one or two blocks high. Single block heights are applicable for drainage areas up to 3 acres in size. The double block height shall be used for larger drainage areas.
  - Concrete blocks shall be standard 8 inch x 8 inch x 16 inch concrete masonry units and shall be in accordance with ASTM C139, Concrete Masonry Units for Construction. Filter gravel shall be ¾ inch washed stone containing no fines. Angular shaped stone is preferable to rounded shapes.
- Organic Filter Tube Protection:
  - Organic filter tubes may be used on paved or unpaved surfaces.
  - On paved surfaces, tubes shall be secured in place by rock bags. On unpaved surfaces, the tubes shall be embedded in the ground a minimum of 3 inches and staked at 4 foot spacing.
  - Designer shall provide calculations and specify the diameter of tube to be used based on the inlet's drainage area and the flow rate of runoff to the inlet. The minimum allowable diameter is 12 inches.

Proprietary Inlet Protection

- Numerous proprietary protection devices are available from commercial vendors. The devices often have the advantage of being reusable on several projects if they are maintained in good condition.
- It is the policy of this manual not to recommend any specific commercial vendors for proprietary controls. However, this subsection is included in order to provide municipalities with a rationale for approving the use of a proprietary inlet protection device within their jurisdiction.
- The designer shall work with the supplier to provide the municipality with flow calculations or independent third-party tests that document the device's performance for conditions similar to the ones in which it is proposed to be installed. The conditions that should be considered include: type and size of inlet, inlet configuration, size of contributing drainage area, design flow rate, soil particle sizes to be removed, and other pollutants to be removed.
- The designer or vendor of the proprietary device shall provide a minimum of three references for projects where the device has been installed and maintained in operation at a construction site for at least six months. Local references are preferred; but references from other regions can be accepted if a similarity between the reference project and the proposed application can be demonstrated.
- Proprietary devices must not completely block the inlet. The device shall have a minimum of a 2 inch wide opening for the length of the inlet when it will be used in areas that water can safely pond to depths deeper than the design depths for the inlet. If ponding is not an option, then the device must have overflow capacity equal to the inlet design flow rate.
- Some proprietary devices are available with replaceable pads or filters. These pads or filters have the added benefit or removing pollutants such as metals and oils in addition to removing sediment.

These types of inserts are recommended in applications where prior or current land use in or adjacent to the construction areas may result in the discharge of pollutants.

- Proprietary protection devices shall be in accordance with the General criteria at the beginning of this section and any criteria listed under Curb Inlet Protection and Area Inlet Protection that are not specific to an inlet protection method.

3.4.4 Design Guidance and Specifications

Specifications for construction of this item may be found in the Standard Specifications for Public Works Construction – North Central Texas Council of Governments, Section 201.15 Inlet Protection.

3.4.5 Inspection and Maintenance Requirements

Inlet protection should be inspected regularly (at least as often as required by the TPDES Construction General Permit). Inlet controls should also be inspected after every storm event to check for collapse into the inlet or other damages that may block flow in the inlet. In addition to routine inspection, inlet protection devices should be observed and monitored during larger storm events to verify that they are not ponding or diverting water in a manner that floods a roadway or damages property.

Floatable debris and other trash caught by the inlet protection should be removed after each storm event. Sediment should also be removed from curb inlet protection after each storm event because of the limited storage area associated with curb inlets.

Sediment collected at area inlet protection should be removed before it reaches half the height of the protection device. Sediment should be removed from inlets with excavated impoundment protection before the volume of the excavation is reduced by 50 percent. In addition, the weep holes should be checked and kept clear of blockage.

Concrete blocks, 2 inch x 4 inch boards, stakes, and other materials used to construct inlet protection should be checked for damaged and repaired or replaced if damaged.

When filter fabric or organic filter tubes are used, they should be cleaned or replaced when the material becomes clogged. For systems using filter stone, when the filter stone becomes clogged with sediment, the stones must be pulled away from the inlet and cleaned or replaced.

Because of the potential for inlet protection to divert runoff or cause localized flooding, remove inlet protection as soon as the drainage area contributing runoff to the inlet is stabilized. Ensure that all inlet protection devices are removed at the end of the construction.

3.4.6 Example Schematics

The following schematics are example applications of the construction control. They are intended to assist in understanding the control's design and function.

The schematics are **not for construction**. They may serve as a starting point for creating a construction detail, but they must be site adapted by the designer. In addition, dimensions and notes appropriate for the application must be added by the designer.

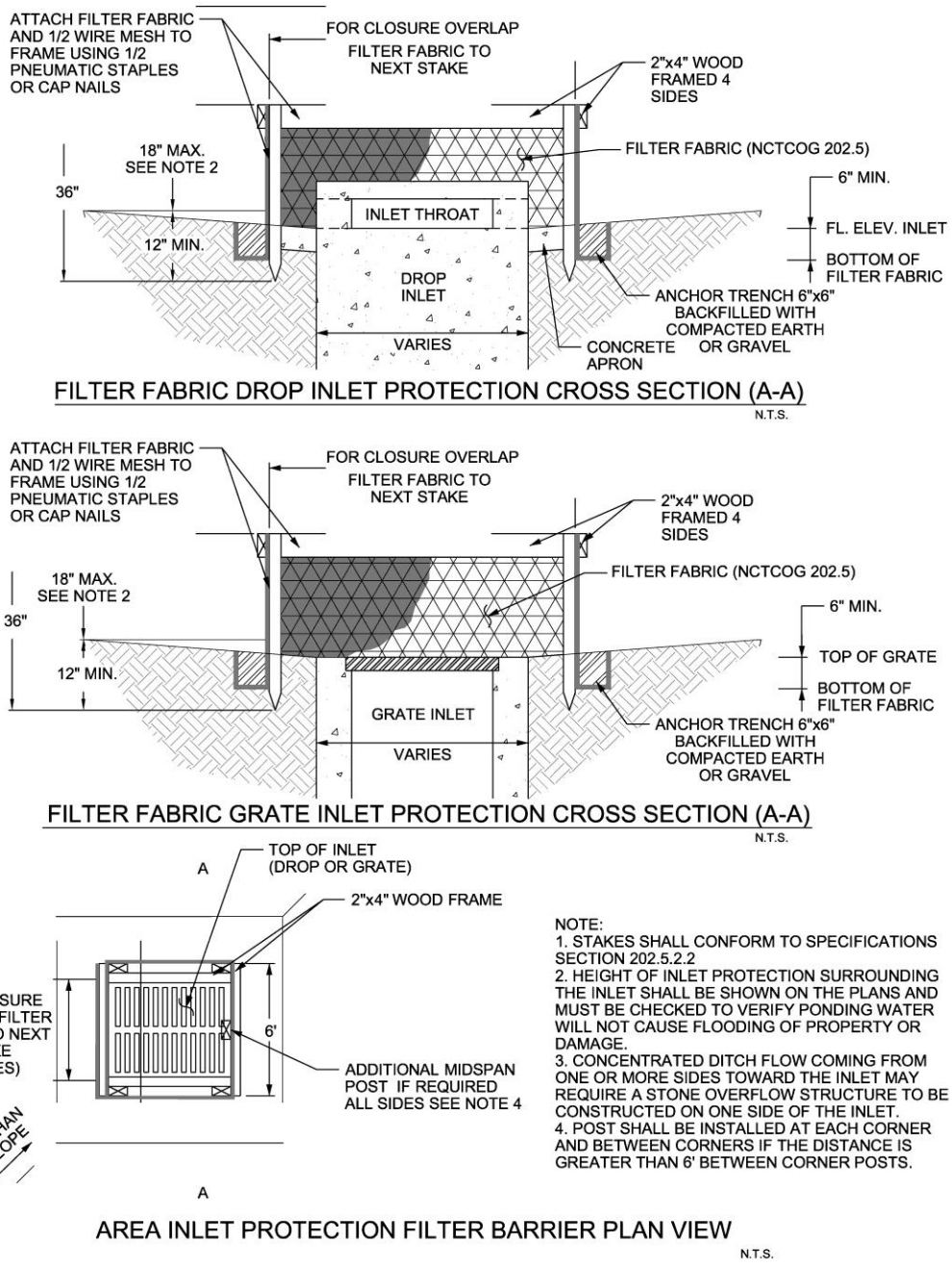

Figure 3.12 Schematics of Filter Fabric Area Inlet Protection
(Source: City of Plano BMP SP-4)

3.10 Silt Fence

Sediment Control

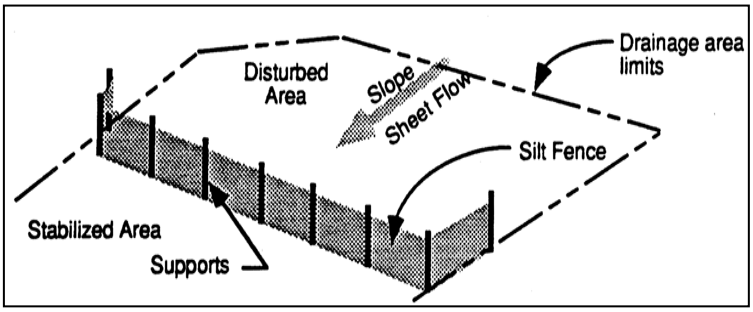

Description: A silt fence consists of geotextile fabric supported by wire mesh netting or other backing stretched between metal posts with the lower edge of the fabric securely embedded six-inches in the soil. The fence is typically located downstream of disturbed areas to intercept runoff in the form of sheet flow. A silt fence provides both filtration and time for sediment settling by reducing the velocity of the runoff.

KEY CONSIDERATIONS

DESIGN CRITERIA:

- Maximum drainage area of 0.25 acre per 100 linear feet of silt fence
- Maximum 200 feet distance of flow to silt fence; 50 feet if slope exceeds 10 percent
- Minimum fabric overlap of 3 feet at abutting ends; join fabric to prevent leakage
- Turn end of silt fence line upslope a minimum of 10 feet
- Install stone overflow structure at low points or spaced at approximately 300 feet if no apparent low point

ADVANTAGES / BENEFITS:

- Economical means to treat sheet flow
- Most effective with coarse to silty soil types

DISADVANTAGES / LIMITATIONS:

- Limited effectiveness with clay soils due to clogging
- Localized flooding due to minor ponding at the upslope side of the silt fence
- Not for use as check dams in swales or low areas subject to concentrated flow
- Not for use where soil conditions prevent a minimum toe-in depth of 6 inches or installation of support posts to a depth of 12 inches
- Can fail structurally under heavy storm flows, creating maintenance problems and reducing effectiveness

MAINTENANCE REQUIREMENTS:

- Inspect regularly
- Repair undercutting, sags and other fence failures
- Remove sediment before it reaches half the height of the fence
- Repair or replace damaged or clogged filter fabric

TARGETED POLLUTANTS

- ● Sediment
- ○ Nutrients & Toxic Materials
- ○ Oil & Grease
- ◒ Floatable Materials
- ○ Other Construction Wastes

APPLICATIONS

- **Perimeter Control**
- **Slope Protection**
- **Sediment Barrier**
- **Channel Protection**
- **Temporary Stabilization**
- **Final Stabilization**
- **Waste Management**
- **Housekeeping Practices**

Fe=0.50-0.75
(*Depends on soil type*)

IMPLEMENTATION CONSIDERATIONS

- ◒ Capital Costs
- ● Maintenance
- ○ Training
- ◒ Suitability for Slopes > 5%

Other Considerations:

- *Effects of ponding or the redirection of flow onto adjacent areas and property*

3.10.1 Primary Use

Silt fence is normally used as a perimeter control on the down slope side of disturbed areas and on side slopes where stormwater may runoff the area. It is only feasible for non-concentrated, sheet flow conditions. If it becomes necessary to place a silt fence where concentrated flows may be occur (e.g. where two silt fences join at an angle, or across minor channels or gullies), it will be necessary to reinforce the silt fence at that area by a rock berm or sand bag berm, or other structural measures that will support the silt fence.

3.10.2 Applications

Silt fence is an economical means to treat overland, non-concentrated flows for all types of projects. Silt fences are used as perimeter control devices for both site developers and linear (roadway) type projects. They are most effective with coarse to silty soil types. Due to the potential of clogging and limited effectiveness, silt fences should be used with caution in areas that have predominantly clay soil types. In this latter instance, a soils engineer or soil scientist should confirm the suitability of silt fence for that application. Additional controls may be needed to remove fine silts and clay soils suspended in stormwater.

3.10.3 Design Criteria

- Fences are to be constructed along a line of constant elevation (along a contour line) where possible.
- Silt fence can interfere with construction operations; therefore, planning of access routes onto the site is critical.
- Maximum drainage area shall be 0.25 acre per 100 linear feet of silt fence.
- Maximum flow to any 20 foot section of silt fence shall be 1 CFS.
- Maximum distance of flow to silt fence shall be 200 feet or less. If the slope exceeds 10 percent the flow distance shall be less than 50 feet.
- Maximum slope adjacent to the fence shall be 2:1.
- Silt fences shall not be used where there is a concentration of water in a channel, drainage ditch or swale, nor should it be used as a control on a pipe outfall.
- If 50 percent or less soil, by weight, passes the U.S. Standard Sieve No. 200; select the apparent opening size (A.O.S.) to retain 85percent of the soil.
- If 85 percent or more of soil by weight, passes the U.S. Standard Sieve No. 200, silt fences shall not be used unless the soil mass is evaluated and deemed suitable by a soil scientist or geotechnical engineer concerning the erodiblity of the soil mass, dispersive characteristics, and the potential grain-size characteristics of the material that is likely to be eroded.
- Stone overflow structures or other outlet control devices shall be installed at all low points along the fence or spaced at approximately 300 feet if there is no apparent low point.
- Filter stone for overflow structure shall be 1 ½ inches washed stone containing no fines. Angular shaped stone is preferable to rounded shapes.
- Silt fence fabric must meet the following minimum criteria:
    - Tensile Strength, ASTM D4632 Test Method for Grab Breaking Load and Elongation of Geotextiles, 90-lbs.
    - Puncture Rating, ASTM D4833 Test Method for Index Puncture Resistance of Geotextiles, Geomembranes, and Related Products, 60-lbs.
    - Mullen Burst Rating, ASTM D3786 Standard Test Method for Hydraulic Bursting Strength of Textile Fabrics-Diaphragm Bursting Strength Tester Method, 280-psi.

  - Apparent Opening Size, ASTM D4751 Test Method for Determining Apparent Opening Size of a Geotextile, U.S. Sieve No. 30(max) to No. 100 (min).
  - Ultraviolet Resistance, ASTM D4355 Standard Test Method for Deterioration of Geotextiles by Exposure to Light, Moisture, and Heat in a Xenon Arc Type Apparatus, Minimum 70 percent.
- Fence posts shall be steel and may be T-section or L-section, 1.3 pounds per linear foot minimum, and 4 feet in length minimum. Wood posts may be used depending on anticipated length of service and provided they are 4 feet in length minimum and have a nominal cross section of 2 inches by 4 inches for pine or 2 inches by 2 inches for hardwoods.
- Silt fence shall be supported by steel wire fence fabric as follows:
  - 4 inch x 4 inch mesh size, W1.4 /1.4, minimum 14 gauge wire fence fabric;
  - Hog wire, 12 gauge wire, small openings installed at bottom of silt fence;
  - Standard 2 inch x 2 inch chain link fence fabric; or
  - Other welded or woven steel fabrics consisting of equal or smaller spacing as that listed herein and appropriate gauge wire to provide support.
- Silt Fence shall consist of synthetic fabric supported by wire mesh and steel posts set a minimum of 1-foot depth and spaced not more than 6-feet on center.
- A 6 inch wide trench is to be cut 6 inches deep at the toe of the fence to allow the fabric to be laid below the surface and backfilled with compacted earth or gravel to prevent bypass of runoff under the fence. Fabric shall overlap at abutting ends a minimum of 3 feet and shall be joined such that no leakage or bypass occurs. If soil conditions prevent a minimum toe-in depth of 6 inches or installation of support post to depth of 12 inches, silt fences shall not be used.
- Sufficient room for the operation of sediment removal equipment shall be provided between the silt fence and other obstructions in order to properly maintain the fence.
- The last 10 feet (or more) at the ends of a line of silt fence shall be turned upslope to prevent bypass of stormwater. Additional upslope runs of silt fence may be needed every 200 to 400 linear feet, depending on the traverse slope along the line of silt fence.

3.10.4 Design Guidance and Specifications

Specifications for construction of this item may be found in the Standard Specifications for Public Works Construction – North Central Texas Council of Governments, Section 201.5 Silt Fence and in the Standard Specifications for Construction and Maintenance of Highways, Streets and Bridges (TxDot 2004) Item 506.2.J and Item 506.4.C.9.

The American Society for Testing and Materials has established standard specifications for silt fence materials (ASTM D6461) and silt fence installation (ASTM D6462).

3.10.5 Inspection and Maintenance Requirements

Silt fence should be inspected regularly (at least as often as required by the TPDES Construction General Permit) for buildup of excess sediment, undercutting, sags, and other failures. Sediment should be removed before it reaches half the height of the fence. In addition, determine the source of excess sediment and implement appropriate measures to control the erosion. Damaged or clogged fabric must be repaired or replaced as necessary.

3.10.6 Example Schematics

The following schematics are example applications of the construction control. They are intended to assist in understanding the control's design and function.

The schematics are **not for construction**. They may serve as a starting point for creating a construction detail, but they must be site adapted by the designer. In addition, dimensions and notes appropriate for the application must be added by the designer.

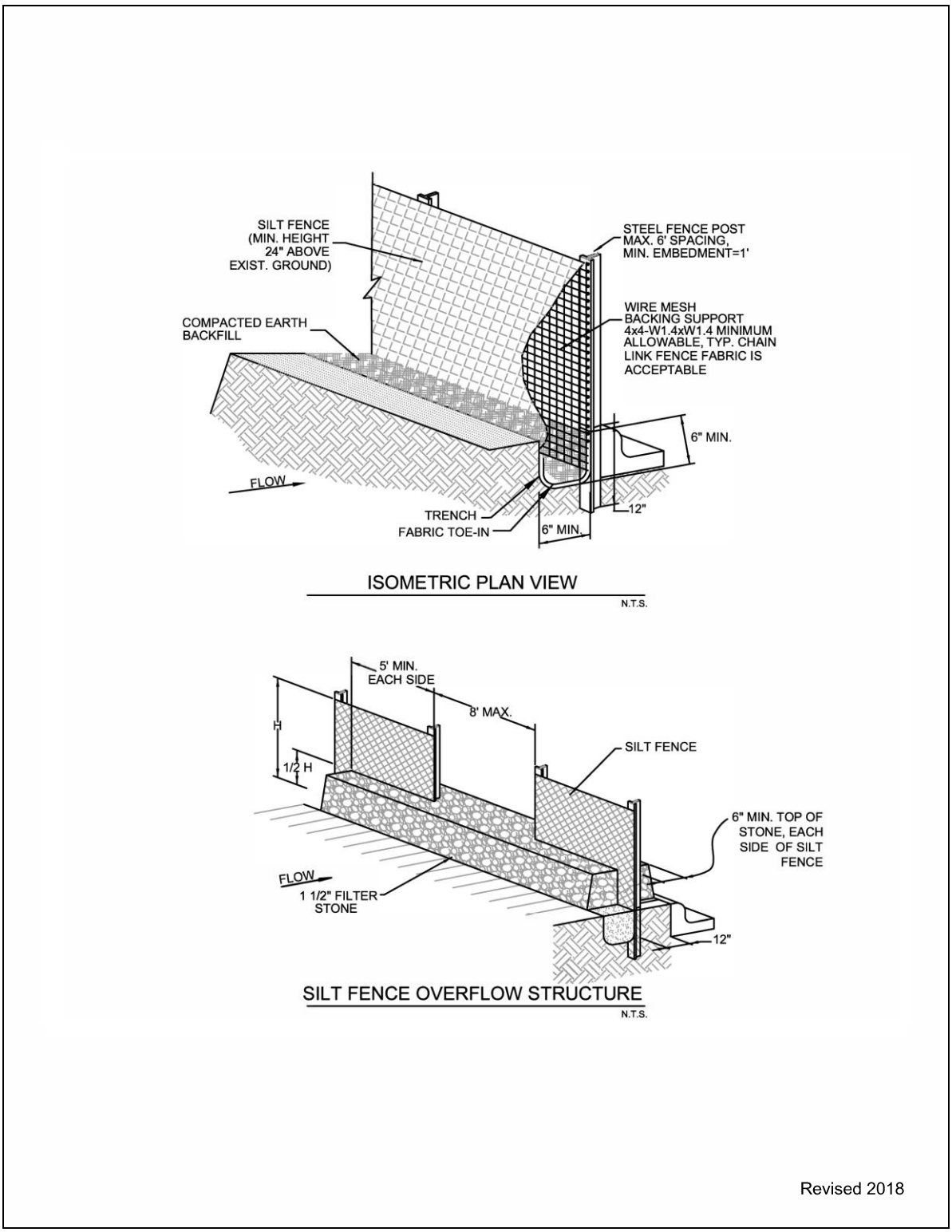

Figure 3.30 Schematics of Silt Fence

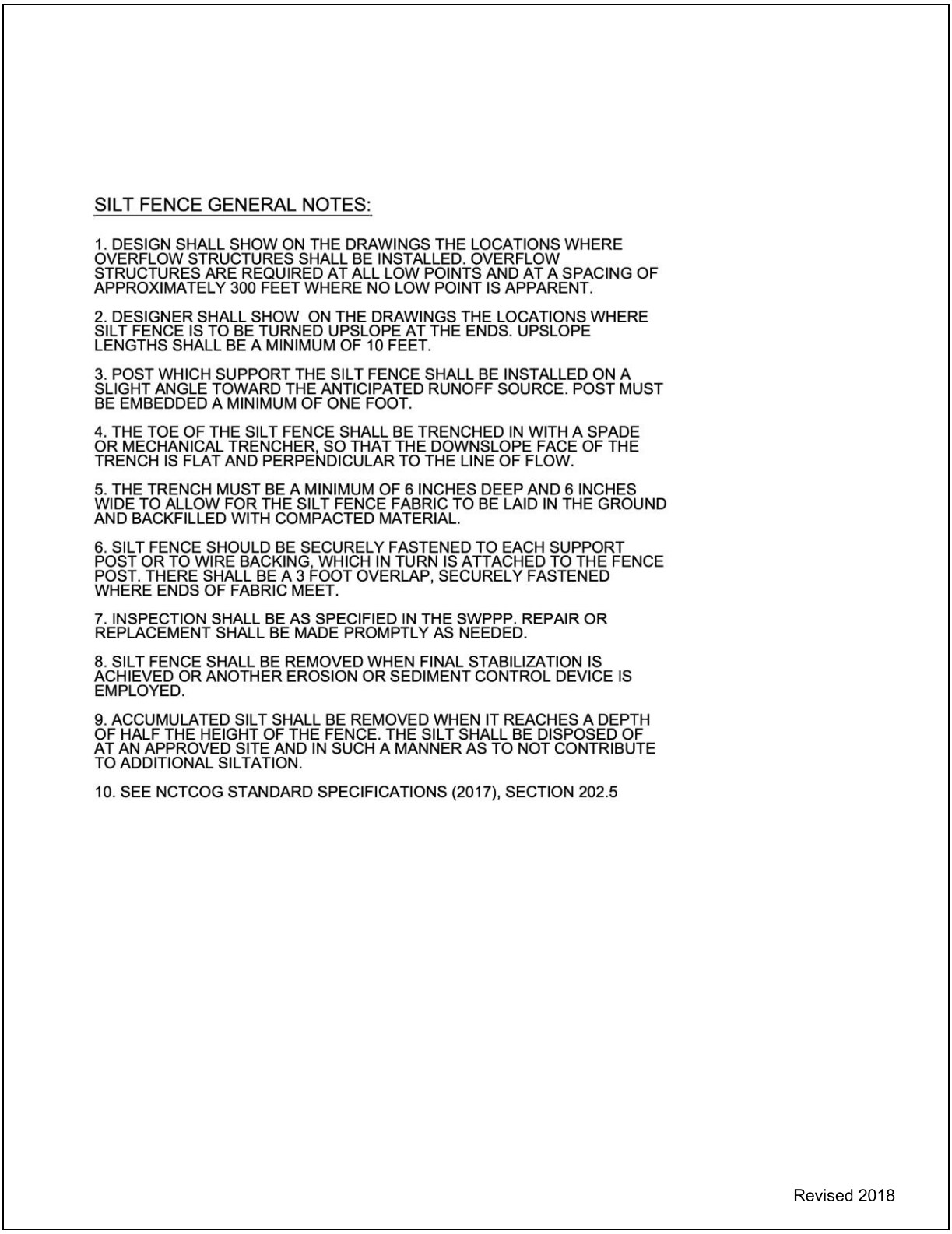

SILT FENCE GENERAL NOTES:

1. DESIGN SHALL SHOW ON THE DRAWINGS THE LOCATIONS WHERE OVERFLOW STRUCTURES SHALL BE INSTALLED. OVERFLOW STRUCTURES ARE REQUIRED AT ALL LOW POINTS AND AT A SPACING OF APPROXIMATELY 300 FEET WHERE NO LOW POINT IS APPARENT.

2. DESIGNER SHALL SHOW ON THE DRAWINGS THE LOCATIONS WHERE SILT FENCE IS TO BE TURNED UPSLOPE AT THE ENDS. UPSLOPE LENGTHS SHALL BE A MINIMUM OF 10 FEET.

3. POST WHICH SUPPORT THE SILT FENCE SHALL BE INSTALLED ON A SLIGHT ANGLE TOWARD THE ANTICIPATED RUNOFF SOURCE. POST MUST BE EMBEDDED A MINIMUM OF ONE FOOT.

4. THE TOE OF THE SILT FENCE SHALL BE TRENCHED IN WITH A SPADE OR MECHANICAL TRENCHER, SO THAT THE DOWNSLOPE FACE OF THE TRENCH IS FLAT AND PERPENDICULAR TO THE LINE OF FLOW.

5. THE TRENCH MUST BE A MINIMUM OF 6 INCHES DEEP AND 6 INCHES WIDE TO ALLOW FOR THE SILT FENCE FABRIC TO BE LAID IN THE GROUND AND BACKFILLED WITH COMPACTED MATERIAL.

6. SILT FENCE SHOULD BE SECURELY FASTENED TO EACH SUPPORT POST OR TO WIRE BACKING, WHICH IN TURN IS ATTACHED TO THE FENCE POST. THERE SHALL BE A 3 FOOT OVERLAP, SECURELY FASTENED WHERE ENDS OF FABRIC MEET.

7. INSPECTION SHALL BE AS SPECIFIED IN THE SWPPP. REPAIR OR REPLACEMENT SHALL BE MADE PROMPTLY AS NEEDED.

8. SILT FENCE SHALL BE REMOVED WHEN FINAL STABILIZATION IS ACHIEVED OR ANOTHER EROSION OR SEDIMENT CONTROL DEVICE IS EMPLOYED.

9. ACCUMULATED SILT SHALL BE REMOVED WHEN IT REACHES A DEPTH OF HALF THE HEIGHT OF THE FENCE. THE SILT SHALL BE DISPOSED OF AT AN APPROVED SITE AND IN SUCH A MANNER AS TO NOT CONTRIBUTE TO ADDITIONAL SILTATION.

10. SEE NCTCOG STANDARD SPECIFICATIONS (2017), SECTION 202.5

Revised 2018

Figure 3.31 Silt Fence General Notes

3.11 Stabilized Construction Exit

Sediment Control

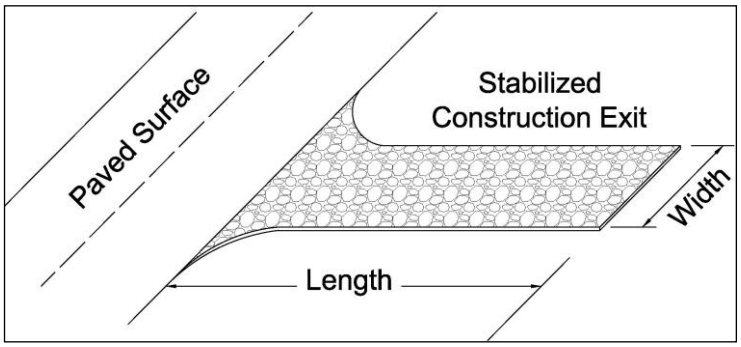

Description: A stabilized construction exit is a pad of crushed stone, recycled concrete or other rock material placed on geotextile filter cloth to dislodge soil and other debris from construction equipment and vehicle tires prior to exiting the construction site. The object is to minimize the tracking of soil onto public roadways where it will be suspended by stormwater runoff.

KEY CONSIDERATIONS

DESIGN CRITERIA:

- Slope exit away from offsite paved surface
- Minimum width and length dependent on size of disturbed area, which correlates to traffic volume
- 6 inches minimum thickness of stone layer
- Stone of 3 to 5 inches in size
- Add a wheel cleaning system when inspections reveal the stabilized exit does not prevent tracking

ADVANTAGES / BENEFITS:

- Reduces tracking of soil onto public streets
- Directs traffic to a controlled access point
- Protects other sediment controls by limiting the area disturbed

DISADVANTAGES / LIMITATIONS:

- Effectiveness dependent on limiting ingress and egress to the stabilized exit
- A wheel washing system may also be required to remove clay soil from tires, particularly in wet conditions

MAINTENANCE REQUIREMENTS:

- Inspect regularly
- Replace rock when sediment in the void area between the rocks is visible on the surface
- Periodically re-grade and top dress with additional stone to maintain efficiency

TARGETED POLLUTANTS

- ◒ Sediment
- ○ Nutrients & Toxic Materials
- ○ Oil & Grease
- ○ Floatable Materials
- ○ Other Construction Wastes

APPLICATIONS

Perimeter Control
Slope Protection
Sediment Barrier
Channel Protection
Temporary Stabilization
Final Stabilization
Waste Management
Housekeeping Practices

Fe=N/A

IMPLEMENTATION CONSIDERATIONS

- ◒ Capital Costs
- ◒ Maintenance
- ○ Training
- ○ Suitability for Slopes > 5%

Other Considerations:

- *None*

3.11.1 Primary Use

Stabilized construction exits are used to remove soil, mud and other matter from vehicles that drive off of a construction site onto public streets. Stabilized exits reduce the need to remove sediment from streets. When used properly, they also control traffic by directing vehicles a single (or two for larger sites) location. Controlling traffic onto and off of the site reduces the number and quantity of disturbed areas and provides protection for other sediment controls by decreasing the potential for vehicles to drive over the control.

3.11.2 Applications

Stabilized construction exits are used on all construction sites with a disturbed area of one acre or larger and are a recommended practice for smaller construction sites. A stabilized exit is used on individual residential lots until the driveway is placed. Stabilized construction exits may be used in conjunction with wheel cleaning systems as described in *Section 3.16 Wheel Cleaning Systems*.

3.11.3 Design Criteria

- Limit site access to one route during construction, if possible; two routes for linear and larger projects.
- Prevent traffic from avoiding or shortcutting the full length of the construction exit by installing barriers. Barriers may consist of silt fence, construction safety fencing, or similar barriers.
- Design the access point(s) to be at the upslope side of the construction site. Do not place construction access at the lowest point on the construction site.
- Stabilized construction exits are to be constructed such that drainage across the exit is directed to a controlled, stabilized outlet onsite with provisions for storage, proper filtration, and removal of wash water.
- The exit must be sloped away from the paved surface so that stormwater from the site does not discharge through the exit onto roadways.
- Minimum width of exit shall be 15 feet.
- The construction exit material shall be a minimum thickness of 6 inches. The stone or recycled concrete used shall be 3 to 5 inches in size with little or no fines.
- The geotextile fabric must meet the following minimum criteria:
    - Tensile Strength, ASTM D4632 Test Method for Grab Breaking Load and Elongation of Geotextiles, 300 lbs.
    - Puncture Strength, ASTM D4833 Test Method for Index Puncture Resistance of Geotextiles, Geomembranes, and Related Products, 120 lbs.
    - Mullen Burst Rating, ASTM D3786 Standard Test Method for Hydraulic Bursting Strength of Textile Fabrics-Diaphragm Bursting Strength Tester Method, 600 psi.
    - Apparent Opening Size, ASTM D4751 Test Method for Determining Apparent Opening Size of a Geotextile, U.S. Sieve No. 40 (max).
- Rock by itself may not be sufficient to remove clay soils from wheels, particularly in wet conditions. When necessary, vehicles must be cleaned to remove sediment prior to entering paved roads, streets, or parking lots. Refer to *Section 3.16 Wheel Cleaning Systems* for additional controls.
- Using water to wash sediment from streets is prohibited
- Minimum dimensions for the stabilized exit shall be as follows:

Table 3.9 Minimum Exit Dimensions		
Disturbed Area	*Min. Width of Exit*	*Min. Length of Exit*
< 1 Acre	15 feet	20 feet
≥ 1 Acre but < 5 Acres	25 feet	50 feet
≥ 5 Acres	30 feet	50 feet

- If a wheel cleaning system is used, the width of the stabilized exit may be reduced to funnel traffic into the system. Refer to *Section 3.16 Wheel Cleaning*.

3.11.4 Design Guidance and Specifications

Specifications for construction of this item may be found in the Standard Specifications for Public Works Construction – North Central Texas Council of Governments, Section 201.10 Stabilized Construction Entrance and in the Standard Specifications for Construction and Maintenance of Highways, Streets and Bridges (TxDOT 2004) Item 506.2.E and Item 506.4.C.5.

3.11.5 Inspection and Maintenance Requirements

Construction exits should be inspected regularly (at least as often as required by the TPDES Construction General Permit). The stabilized construction exit shall be maintained in a condition that prevents tracking or flow of sediment onto paved surfaces. Periodic re-grading and top dressing with additional stone must be done to keep the efficiency of the exit from diminishing. The rock shall be re-graded when ruts appear. Additional rock shall be added when soil is showing through the rock surface.

Additional controls are needed if inspections reveal a properly installed and maintained exit, but tracking of soil outside the construction area is still evident. Additional controls may be daily sweeping of all soil spilled, dropped, or tracked onto public rights-of-way or the installation of a wheel cleaning system.

3.11.6 Example Schematics

The following schematics are example applications of the construction control. They are intended to assist in understanding the control's design and function.

The schematics are **not for construction**. They may serve as a starting point for creating a construction detail, but they must be site adapted by the designer. In addition, dimensions and notes appropriate for the application must be added by the designer.

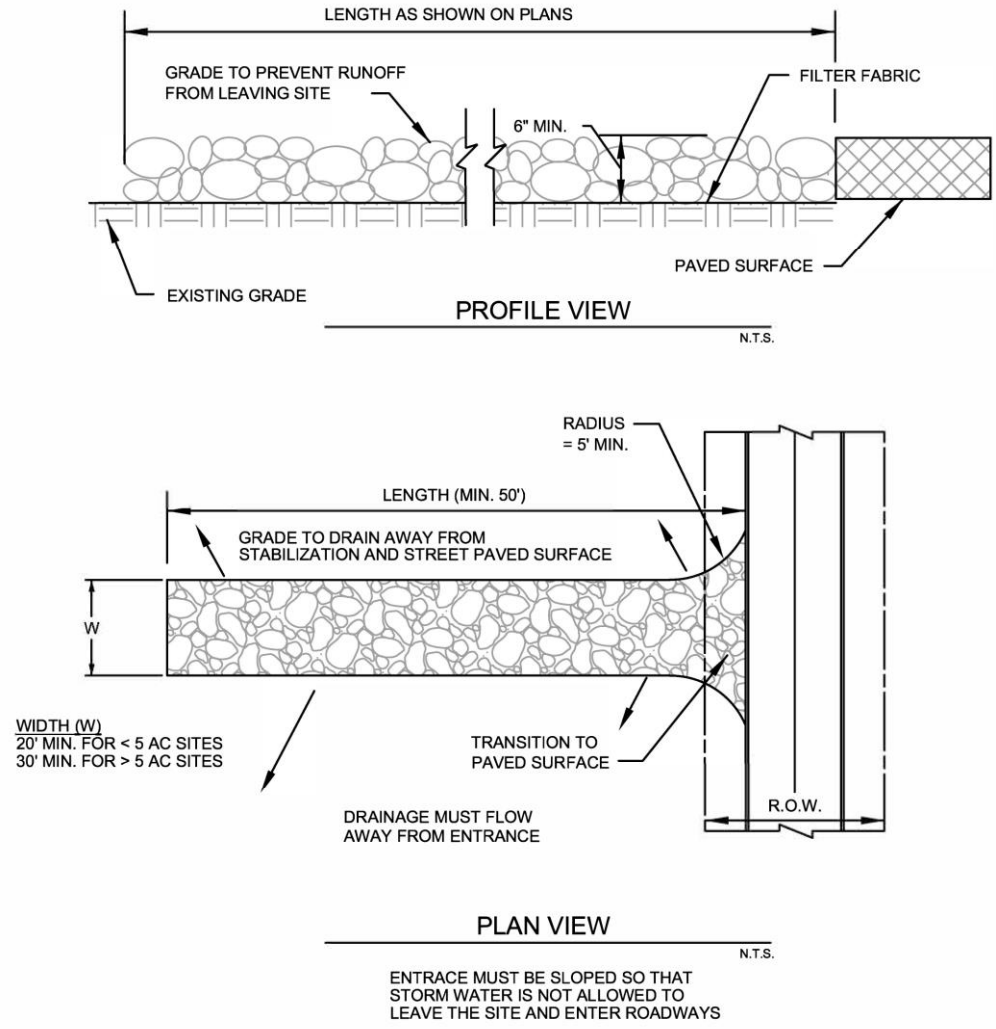

Revised 2018

Figure 3.32 Schematics of Stabilized Construction Exit

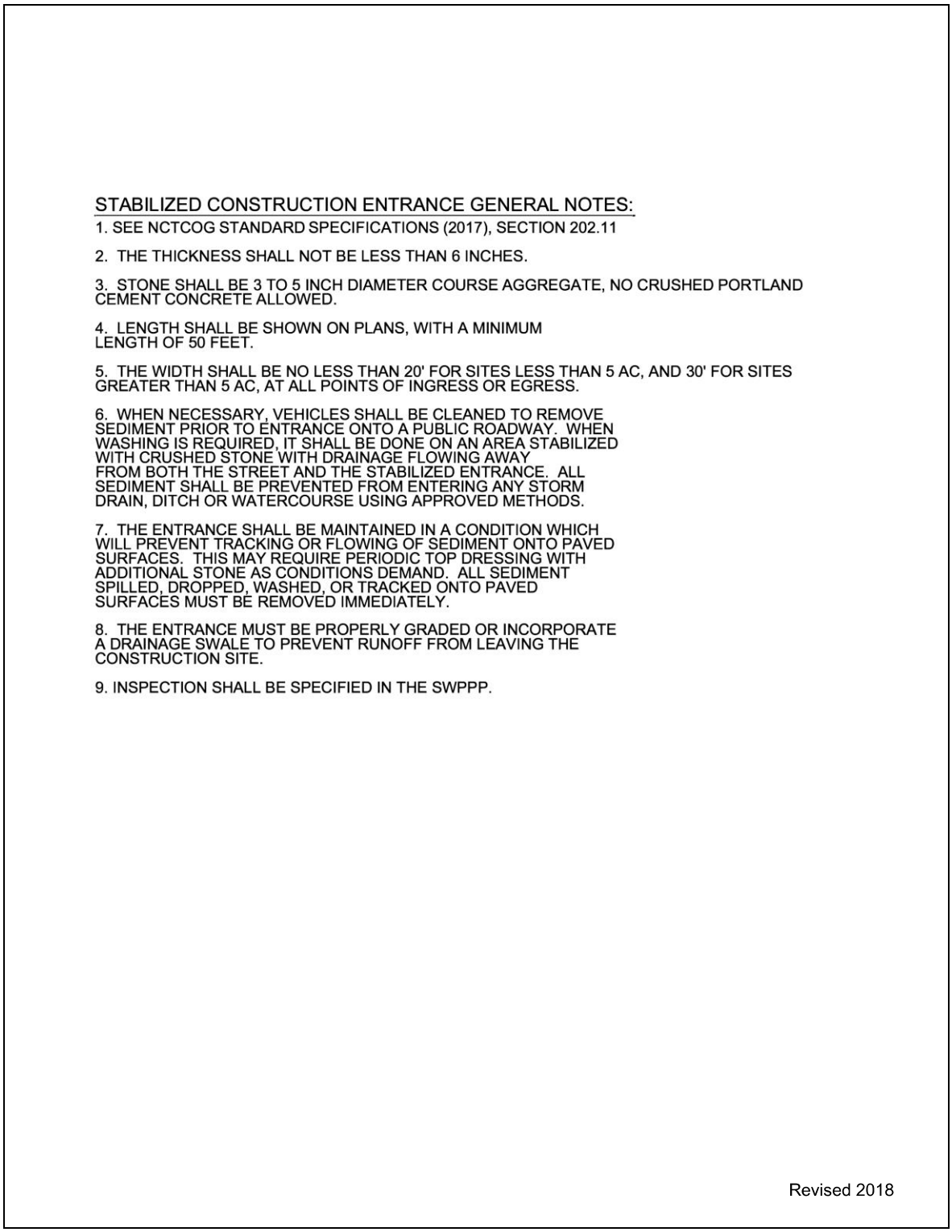

STABILIZED CONSTRUCTION ENTRANCE GENERAL NOTES:

1. SEE NCTCOG STANDARD SPECIFICATIONS (2017), SECTION 202.11

2. THE THICKNESS SHALL NOT BE LESS THAN 6 INCHES.

3. STONE SHALL BE 3 TO 5 INCH DIAMETER COURSE AGGREGATE, NO CRUSHED PORTLAND CEMENT CONCRETE ALLOWED.

4. LENGTH SHALL BE SHOWN ON PLANS, WITH A MINIMUM LENGTH OF 50 FEET.

5. THE WIDTH SHALL BE NO LESS THAN 20' FOR SITES LESS THAN 5 AC, AND 30' FOR SITES GREATER THAN 5 AC, AT ALL POINTS OF INGRESS OR EGRESS.

6. WHEN NECESSARY, VEHICLES SHALL BE CLEANED TO REMOVE SEDIMENT PRIOR TO ENTRANCE ONTO A PUBLIC ROADWAY. WHEN WASHING IS REQUIRED, IT SHALL BE DONE ON AN AREA STABILIZED WITH CRUSHED STONE WITH DRAINAGE FLOWING AWAY FROM BOTH THE STREET AND THE STABILIZED ENTRANCE. ALL SEDIMENT SHALL BE PREVENTED FROM ENTERING ANY STORM DRAIN, DITCH OR WATERCOURSE USING APPROVED METHODS.

7. THE ENTRANCE SHALL BE MAINTAINED IN A CONDITION WHICH WILL PREVENT TRACKING OR FLOWING OF SEDIMENT ONTO PAVED SURFACES. THIS MAY REQUIRE PERIODIC TOP DRESSING WITH ADDITIONAL STONE AS CONDITIONS DEMAND. ALL SEDIMENT SPILLED, DROPPED, WASHED, OR TRACKED ONTO PAVED SURFACES MUST BE REMOVED IMMEDIATELY.

8. THE ENTRANCE MUST BE PROPERLY GRADED OR INCORPORATE A DRAINAGE SWALE TO PREVENT RUNOFF FROM LEAVING THE CONSTRUCTION SITE.

9. INSPECTION SHALL BE SPECIFIED IN THE SWPPP.

Revised 2018

Figure 3.33 Stabilized Construction Entrance General Notes

ATTACHMENT F
STRUCTURAL PRACTICES

The structural practices that will be implemented are silt fence, construction exits, inlet protections, vegetation and other temporary BMPs as needed. These BMP's will limit runoff discharge of pollutants from exposed areas by collecting the sediments and debris and diverting the flows.

The placement of a silt fence along the property boundaries will prevent sediments from leaving the site and into the downstream properties.

ATTACHMENT G
DRAINAGE AREA MAP

Know what's **below.**
Call before you dig.

SITE BENCHMARKS

BM NO. 1 ½" IRON ROD WITH CAP STAMPED "PROP. COR."
ELEVATION = 868.15' (NAD '83)

BM NO. 2 ½" IRON ROD WITH CAP STAMPED "JONES CARTER"
ELEVATION = 879.24' (NAD '83)

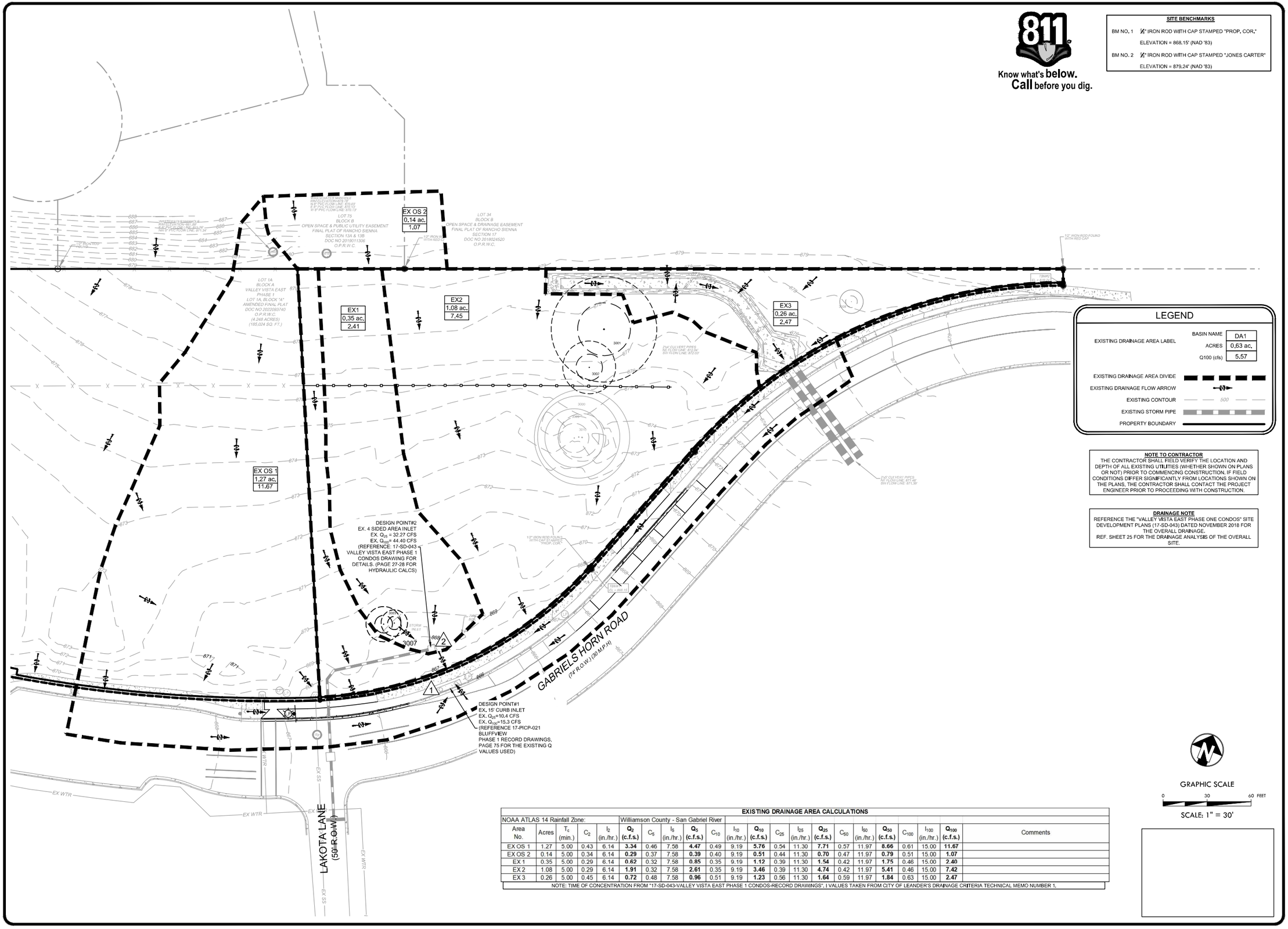

LEGEND

EXISTING DRAINAGE AREA LABEL	BASIN NAME: DA1 / ACRES: 0.63 ac. / Q100 (cfs): 5.57
EXISTING DRAINAGE AREA DIVIDE	
EXISTING DRAINAGE FLOW ARROW	
EXISTING CONTOUR	500
EXISTING STORM PIPE	
PROPERTY BOUNDARY	

NOTE TO CONTRACTOR
THE CONTRACTOR SHALL FIELD VERIFY THE LOCATION AND DEPTH OF ALL EXISTING UTILITIES (WHETHER SHOWN ON PLANS OR NOT) PRIOR TO COMMENCING CONSTRUCTION. IF FIELD CONDITIONS DIFFER SIGNIFICANTLY FROM LOCATIONS SHOWN ON THE PLANS, THE CONTRACTOR SHALL CONTACT THE PROJECT ENGINEER PRIOR TO PROCEEDING WITH CONSTRUCTION.

DRAINAGE NOTE
REFERENCE THE "VALLEY VISTA EAST PHASE ONE CONDOS" SITE DEVELOPMENT PLANS (17-SD-043) DATED NOVEMBER 2018 FOR THE OVERALL DRAINAGE.
REF. SHEET 25 FOR THE DRAINAGE ANALYSIS OF THE OVERALL SITE.

GRAPHIC SCALE
0 30 60 FEET
SCALE: 1" = 30'

EXISTING DRAINAGE AREA CALCULATIONS

NOAA ATLAS 14 Rainfall Zone: Williamson County - San Gabriel River

Area No.	Acres	T_c (min.)	C_2	I_2 (in./hr.)	Q_2 (c.f.s.)	C_5	I_5 (in./hr.)	Q_5 (c.f.s.)	C_{10}	I_{10} (in./hr.)	Q_{10} (c.f.s.)	C_{25}	I_{25} (in./hr.)	Q_{25} (c.f.s.)	C_{50}	I_{50} (in./hr.)	Q_{50} (c.f.s.)	C_{100}	I_{100} (in./hr.)	Q_{100} (c.f.s.)	Comments
EX OS 1	1.27	5.00	0.43	6.14	**3.34**	0.46	7.58	**4.47**	0.49	9.19	**5.76**	0.54	11.30	**7.71**	0.57	11.97	**8.66**	0.61	15.00	**11.67**	
EX OS 2	0.14	5.00	0.34	6.14	**0.29**	0.37	7.58	**0.39**	0.40	9.19	**0.51**	0.44	11.30	**0.70**	0.47	11.97	**0.79**	0.51	15.00	**1.07**	
EX 1	0.35	5.00	0.29	6.14	**0.62**	0.32	7.58	**0.85**	0.35	9.19	**1.12**	0.39	11.30	**1.54**	0.42	11.97	**1.75**	0.46	15.00	**2.40**	
EX 2	1.08	5.00	0.29	6.14	**1.91**	0.32	7.58	**2.61**	0.35	9.19	**3.46**	0.39	11.30	**4.74**	0.42	11.97	**5.41**	0.46	15.00	**7.42**	
EX 3	0.26	5.00	0.45	6.14	**0.72**	0.48	7.58	**0.96**	0.51	9.19	**1.23**	0.56	11.30	**1.64**	0.59	11.97	**1.84**	0.63	15.00	**2.47**	

NOTE: TIME OF CONCENTRATION FROM "17-SD-043-VALLEY VISTA EAST PHASE 1 CONDOS-RECORD DRAWINGS", I VALUES TAKEN FROM CITY OF LEANDER'S DRAINAGE CRITERIA TECHNICAL MEMO NUMBER 1.

2/9/2026

STATE OF TEXAS
PATRICK C. FILSON
108577
LICENSED
PROFESSIONAL ENGINEER

SPARKLE
PRESCHOOL

SRIKANTH
NAGUNOORI

2345 BASE BURNER PATH
LEANDER, TX 78641

SPARKLE MONTESSORI ACADEMY

LOT 1A-R, BLOCK A
CITY OF LEANDER
WILLIAMSON COUNTY, TEXAS

REV:	DATE:	DESCRIPTION:

kirkman ENGINEERING
KIRKMAN ENGINEERING, LLC
1500 ARROW POINT DRIVE STE. 804
CEDAR PARK, TEXAS 78613
TEXAS FIRM NO. 15874

JOB NUMBER: NAG25001
ISSUE DATE: 2/9/2026

EXISTING DRAINAGE AREA MAP

SHEET:
11
OF 30

SD-25-0378

FULL PATH: K:\ADV\NAG\25001_Sparkle Leander\Drawings\02_ENGR\03 - Production\K:\ADV\NAG\25001_Sparkle Leander\Drawings\02_ENGR\03 - Production\01.0 EXISTING DRAINAGE AREA MAP_NAG25001.dwg

FILENAME: 01.0 EXISTING DRAINAGE AREA MAP_NAG25001.dwg
PLOTTED BY: Prashantha Gautam
PLOTTED DATE: 2/2/2026

Know what's **below.**
Call before you dig.

SITE BENCHMARKS

BM NO. 1	½" IRON ROD WITH CAP STAMPED "PROP. COR."	ELEVATION = 868.15' (NAD '83)
BM NO. 2	½" IRON ROD WITH CAP STAMPED "JONES CARTER"	ELEVATION = 879.24' (NAD '83)

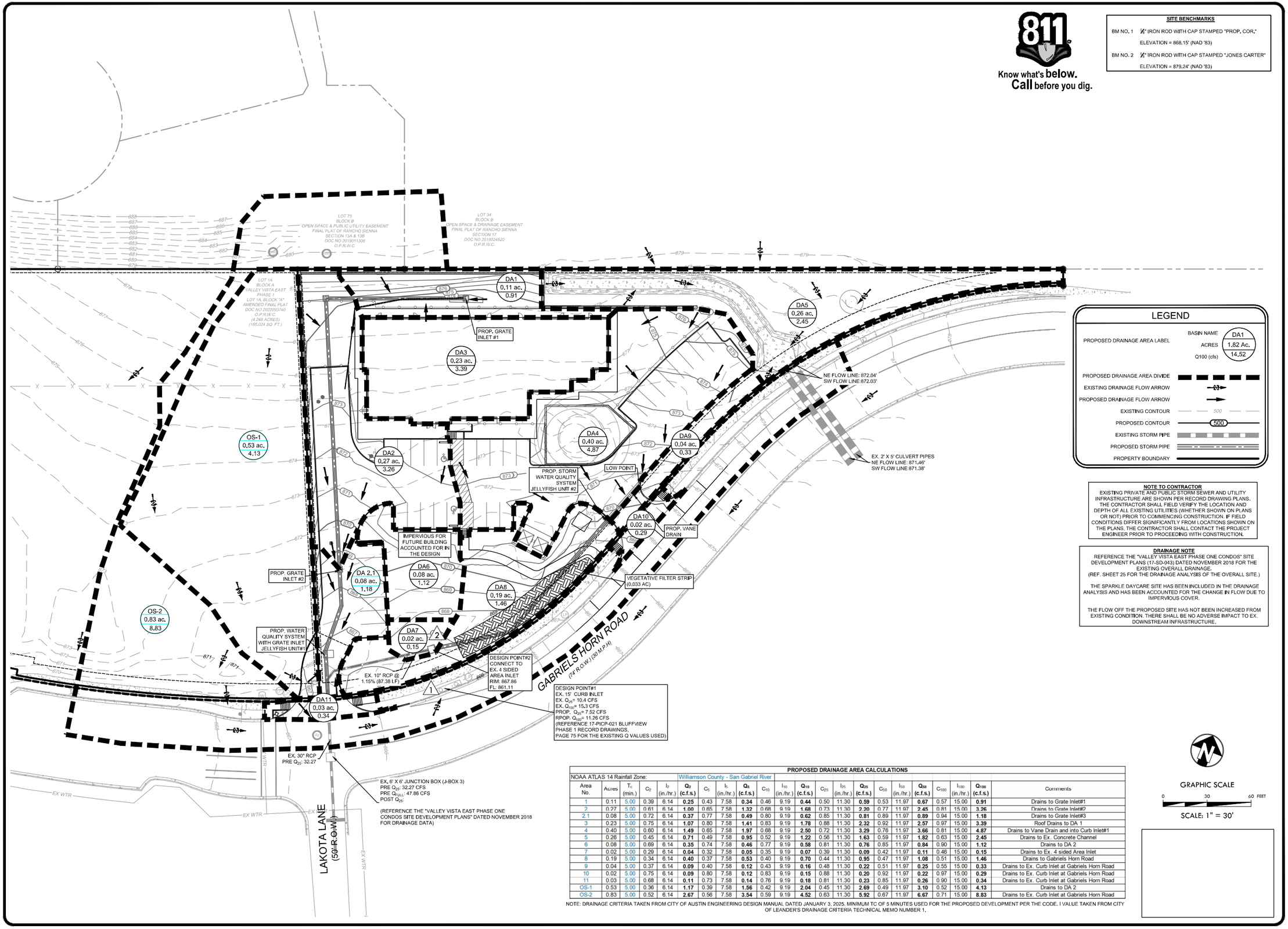

LEGEND

PROPOSED DRAINAGE AREA LABEL	BASIN NAME DA1; ACRES 1.82 Ac.; Q100 (cfs) 14.52
PROPOSED DRAINAGE AREA DIVIDE	
EXISTING DRAINAGE FLOW ARROW	
PROPOSED DRAINAGE FLOW ARROW	
EXISTING CONTOUR	500
PROPOSED CONTOUR	500
EXISTING STORM PIPE	
PROPOSED STORM PIPE	
PROPERTY BOUNDARY	

NOTE TO CONTRACTOR
EXISTING PRIVATE AND PUBLIC STORM SEWER AND UTILITY INFRASTRUCTURE ARE SHOWN PER RECORD DRAWING PLANS. THE CONTRACTOR SHALL FIELD VERIFY THE LOCATION AND DEPTH OF ALL EXISTING UTILITIES (WHETHER SHOWN ON PLANS OR NOT) PRIOR TO COMMENCING CONSTRUCTION. IF FIELD CONDITIONS DIFFER SIGNIFICANTLY FROM LOCATIONS SHOWN ON THE PLANS, THE CONTRACTOR SHALL CONTACT THE PROJECT ENGINEER PRIOR TO PROCEEDING WITH CONSTRUCTION.

DRAINAGE NOTE
REFERENCE THE "VALLEY VISTA EAST PHASE ONE CONDOS" SITE DEVELOPMENT PLANS (17-SD-043) DATED NOVEMBER 2018 FOR THE EXISTING OVERALL DRAINAGE.
(REF. SHEET 25 FOR THE DRAINAGE ANALYSIS OF THE OVERALL SITE.)

THE SPARKLE DAYCARE SITE HAS BEEN INCLUDED IN THE DRAINAGE ANALYSIS AND HAS BEEN ACCOUNTED FOR THE CHANGE IN FLOW DUE TO IMPERVIOUS COVER.

THE FLOW OFF THE PROPOSED SITE HAS NOT BEEN INCREASED FROM EXISTING CONDITION. THERE SHALL BE NO ADVERSE IMPACT TO EX. DOWNSTREAM INFRASTRUCTURE.

PROPOSED DRAINAGE AREA CALCULATIONS

NOAA ATLAS 14 Rainfall Zone: Williamson County - San Gabriel River

Area No.	Acres	T_c (min.)	C_2	I_2 (in./hr.)	Q_2 (c.f.s.)	C_5	I_5 (in./hr.)	Q_5 (c.f.s.)	C_{10}	I_{10} (in./hr.)	Q_{10} (c.f.s.)	C_{25}	I_{25} (in./hr.)	Q_{25} (c.f.s.)	C_{50}	I_{50} (in./hr.)	Q_{50} (c.f.s.)	C_{100}	I_{100} (in./hr.)	Q_{100} (c.f.s.)	Comments
1	0.11	5.00	0.39	6.14	**0.25**	0.43	7.58	**0.34**	0.46	9.19	**0.44**	0.50	11.30	**0.59**	0.53	11.97	**0.67**	0.57	15.00	**0.91**	Drains to Grate Inlet#1
2	0.27	5.00	0.61	6.14	**1.00**	0.65	7.58	**1.32**	0.68	9.19	**1.68**	0.73	11.30	**2.20**	0.77	11.97	**2.45**	0.81	15.00	**3.26**	Drains to Grate Inlet#2
2.1	0.08	5.00	0.72	6.14	**0.37**	0.77	7.58	**0.49**	0.80	9.19	**0.62**	0.85	11.30	**0.81**	0.89	11.97	**0.89**	0.94	15.00	**1.18**	Drains to Grate Inlet#3
3	0.23	5.00	0.75	6.14	**1.07**	0.80	7.58	**1.41**	0.83	9.19	**1.78**	0.88	11.30	**2.32**	0.92	11.97	**2.57**	0.97	15.00	**3.39**	Roof Drains to DA 1
4	0.40	5.00	0.60	6.14	**1.49**	0.65	7.58	**1.97**	0.68	9.19	**2.50**	0.72	11.30	**3.29**	0.76	11.97	**3.66**	0.81	15.00	**4.87**	Drains to Vane Drain and into Curb Inlet#1
5	0.26	5.00	0.45	6.14	**0.71**	0.49	7.58	**0.95**	0.52	9.19	**1.22**	0.56	11.30	**1.63**	0.59	11.97	**1.82**	0.63	15.00	**2.45**	Drains to Ex. Concrete Channel
6	0.08	5.00	0.69	6.14	**0.35**	0.74	7.58	**0.46**	0.77	9.19	**0.58**	0.81	11.30	**0.76**	0.85	11.97	**0.84**	0.90	15.00	**1.12**	Drains to DA 2
7	0.02	5.00	0.29	6.14	**0.04**	0.32	7.58	**0.05**	0.35	9.19	**0.07**	0.39	11.30	**0.09**	0.42	11.97	**0.11**	0.46	15.00	**0.15**	Drains to Ex. 4 sided Area Inlet
8	0.19	5.00	0.34	6.14	**0.40**	0.37	7.58	**0.53**	0.40	9.19	**0.70**	0.44	11.30	**0.95**	0.47	11.97	**1.08**	0.51	15.00	**1.46**	Drains to Gabriels Horn Road
9	0.04	5.00	0.37	6.14	**0.09**	0.40	7.58	**0.12**	0.43	9.19	**0.16**	0.48	11.30	**0.22**	0.51	11.97	**0.25**	0.55	15.00	**0.33**	Drains to Ex. Curb Inlet at Gabriels Horn Road
10	0.02	5.00	0.75	6.14	**0.09**	0.80	7.58	**0.12**	0.83	9.19	**0.15**	0.88	11.30	**0.20**	0.92	11.97	**0.22**	0.97	15.00	**0.29**	Drains to Ex. Curb Inlet at Gabriels Horn Road
11	0.03	5.00	0.68	6.14	**0.11**	0.73	7.58	**0.14**	0.76	9.19	**0.18**	0.81	11.30	**0.23**	0.85	11.97	**0.26**	0.90	15.00	**0.34**	Drains to Ex. Curb Inlet at Gabriels Horn Road
OS-1	0.53	5.00	0.36	6.14	**1.17**	0.39	7.58	**1.56**	0.42	9.19	**2.04**	0.45	11.30	**2.69**	0.49	11.97	**3.10**	0.52	15.00	**4.13**	Drains to DA 2
OS-2	0.83	5.00	0.52	6.14	**2.67**	0.56	7.58	**3.54**	0.59	9.19	**4.52**	0.63	11.30	**5.92**	0.67	11.97	**6.67**	0.71	15.00	**8.83**	Drains to Ex. Curb Inlet at Gabriels Horn Road

NOTE: DRAINAGE CRITERIA TAKEN FROM CITY OF AUSTIN ENGINEERING DESIGN MANUAL DATED JANUARY 3, 2025. MINIMUM TC OF 5 MINUTES USED FOR THE PROPOSED DEVELOPMENT PER THE CODE. I VALUE TAKEN FROM CITY OF LEANDER'S DRAINAGE CRITERIA TECHNICAL MEMO NUMBER 1.

GRAPHIC SCALE
0 30 60 FEET
SCALE: 1" = 30'

2/9/2026

STATE OF TEXAS
PATRICK C. FILSON
108577
LICENSED
PROFESSIONAL ENGINEER

SPARKLE
PRESCHOOL

SRIKANTH
NAGUNOORI

2345 BASE BURNER PATH
LEANDER, TX 78641

SPARKLE MONTESSORI ACADEMY

LOT 1A-R, BLOCK A
CITY OF LEANDER
WILLIAMSON COUNTY, TEXAS

REV.:	DATE:	DESCRIPTION:

kirkman ENGINEERING
KIRKMAN ENGINEERING, LLC
1500 ARROW POINT DRIVE STE. 804
CEDAR PARK, TEXAS 78613
TEXAS FIRM NO. 15874

JOB NUMBER: NAG25001

ISSUE DATE: 2/9/2026

PROPOSED DRAINAGE AREA MAP

SHEET:
12
OF 30

SD-25-0378

FILENAME: C6.1_PROPOSED DRAINAGE AREA MAP_NAG25001.dwg
PLOTTED BY: Prashvitha Gautam
PLOTTED DATE: 4/2/2026
FULL PATH: K:\Izm\NAG25001_Sparkle Leander\Drawings\03_ENGR\03 - Preliminary\K:\Izm\NAG25001_Sparkle Leander\Drawings\03_ENGR\03 - Preliminary\C6.1_PROPOSED DRAINAGE AREA MAP_NAG25001.dwg

ATTACHMENT J
SCHEDULE OF INTERIM AND PERMANENT SOIL STABILIZATION PRACTICES

The following soil stabilization practices shall be used:

1. All stockpiles shall be temporarily seeded and mulched to prevent loss due to erosion and encircled with a silt fence or filter tube.
2. As an area reaches final grade, install permanent stabilization as soon as possible but in no case longer than 14 days from reaching final grade.
3. Any area that will remain undisturbed for 14 days or more shall be temporarily stabilized.
4. Complete permanent stabilization of all disturbed areas. Once a minimum of 70 percent of the vegetated areas have been stabilized, remove the erosion control BMPs.

ATTACHMENT I
INSPECTION AND MAINTENANCE FOR BMPS

Complete this worksheet every seven days; OR, every 14 days and within 24 hours of a 0.5 inch rainfall event, and retain in your SWP3.

Inspector (name/title): Inspection Date: Day: Time: am/pm
Scope of inspection (circle one): 14 Day Inspection or Weekly Inspection
Day of week normally conducted: 0.5 inch Rainfall Event: yes / no

Type	Inspected? (Y/N)	Areas of Concern
Disturbed Soil Areas		
Sediment & Erosion Controls		
Entrance(s) and Exit(s)		

BMP & Location	OK? (Y/N)	BMP Failure? (describe)	BMP Failure? (describe)

"I certify that the facility or site is in compliance with the stormwater pollution prevention plan and this permit."

I further certify that I am authorized to sign this report under TCEQ rules at 30 TAC 305.128 (relating to Signatories to Reports)

Name/Title: Srikanth Nagunoori/owner
Sparkle Daycare LLC

Date:

Signature: N. Sarot

Agent Authorization Form
For Required Signature
Edwards Aquifer Protection Program
Relating to 30 TAC Chapter 213
Effective June 1, 1999

I SRIKANTH NAGUNOORI,
Print Name

OWNER/DEVELOPER,
Title - Owner/President/Other

of SPARKLE DAYCARE LLC,
Corporation/Partnership/Entity Name

have authorized PRASHANTIKA GAUTAM
Print Name of Agent/Engineer

of KIRKMAN ENGINEERING
Print Name of Firm

to represent and act on the behalf of the above named Corporation, Partnership, or Entity for the purpose of preparing and submitting this plan application to the Texas Commission on Environmental Quality (TCEQ) for the review and approval consideration of regulated activities.

I also understand that:

1. The applicant is responsible for compliance with 30 Texas Administrative Code Chapter 213 and any condition of the TCEQ's approval letter. The TCEQ is authorized to assess administrative penalties of up to $10,000 per day per violation.

2. For those submitting an application who are not the property owner, but who have the right to control and possess the property, additional authorization is required from the owner.

3. Application fees are due and payable at the time the application is submitted. The application fee must be sent to the TCEQ cashier or to the appropriate regional office. The application will not be considered until the correct fee is received by the commission.

4. A notarized copy of the Agent Authorization Form must be provided for the person preparing the application, and this form must accompany the completed application.

5. No person shall commence any regulated activity on the Edwards Aquifer Recharge Zone, Contributing Zone or Transition Zone until the appropriate application for the activity has been filed with and approved by the Executive Director.

SIGNATURE PAGE:

N. Sweatt
Applicant's Signature

02/02/2026
Date

THE STATE OF Texas §

County of Williamson §

BEFORE ME, the undersigned authority, on this day personally appeared Srikanth Nagumoju known to me to be the person whose name is subscribed to the foregoing instrument, and acknowledged to me that (s)he executed same for the purpose and consideration therein expressed.

GIVEN under my hand and seal of office on this 2nd day of February, 2026

NOTARY PUBLIC

SHANNON BURKE
Notary ID #134040438
My Commission Expires
October 28, 2026

Shannon Burke
Typed or Printed Name of Notary

MY COMMISSION EXPIRES: 10/28/2026

Application Fee Form

Texas Commission on Environmental Quality

Name of Proposed Regulated Entity: Sparkle Montessori Academy

Regulated Entity Location: Gabriels Horn Road, Northeast(NE) of Lakota Ln and Northwest (NW) of Pueblo Pass.

Name of Customer: Sparkle Daycare LLC

Contact Person: Srikanth Nagunoori Phone: 408-806-2464

Customer Reference Number (if issued):CN _____

Regulated Entity Reference Number (if issued):RN _____

Austin Regional Office (3373)

☐ Hays ☐ Travis ☑ Williamson

San Antonio Regional Office (3362)

☐ Bexar ☐ Medina ☐ Uvalde

☐ Comal ☐ Kinney

Application fees must be paid by check, certified check, or money order, payable to the **Texas Commission on Environmental Quality**. Your canceled check will serve as your receipt. **This form must be submitted with your fee payment.** This payment is being submitted to:

☑ Austin Regional Office

☐ Mailed to: TCEQ - Cashier
Revenues Section
Mail Code 214
P.O. Box 13088
Austin, TX 78711-3088

☐ San Antonio Regional Office

☐ Overnight Delivery to: TCEQ - Cashier
12100 Park 35 Circle
Building A, 3rd Floor
Austin, TX 78753
(512)239-0357

Site Location (Check All That Apply):

☐ Recharge Zone ☑ Contributing Zone ☐ Transition Zone

Type of Plan	*Size*	*Fee Due*
Water Pollution Abatement Plan, Contributing Zone Plan: One Single Family Residential Dwelling	Acres	$
Water Pollution Abatement Plan, Contributing Zone Plan: Multiple Single Family Residential and Parks	Acres	$
Water Pollution Abatement Plan, Contributing Zone Plan: Non-residential	1.712 Acres	$ $4,000
Sewage Collection System	L.F.	$
Lift Stations without sewer lines	Acres	$
Underground or Aboveground Storage Tank Facility	Tanks	$
Piping System(s)(only)	Each	$
Exception	Each	$
Extension of Time	Each	$

Signature: N. Bassett Date: 2/6/2026

TCEQ Use Only

TCEQ Core Data Form

For detailed instructions on completing this form, please read the Core Data Form Instructions or call 512-239-5175.

SECTION I: General Information

1. Reason for Submission (*If other is checked please describe in space provided.*)

☑ New Permit, Registration or Authorization (*Core Data Form should be submitted with the program application.*)

☐ Renewal *(Core Data Form should be submitted with the renewal form)*

☐ Other

2. Customer Reference Number *(if issued)*	Follow this link to search for CN or RN numbers in Central Registry**	**3. Regulated Entity Reference Number** *(if issued)*
CN		**RN**

SECTION II: Customer Information

4. General Customer Information | **5. Effective Date for Customer Information Updates** (mm/dd/yyyy)

☑ New Customer ☐ Update to Customer Information ☐ Change in Regulated Entity Ownership
☐ Change in Legal Name (Verifiable with the Texas Secretary of State or Texas Comptroller of Public Accounts)

The Customer Name submitted here may be updated automatically based on what is current and active with the Texas Secretary of State (SOS) or Texas Comptroller of Public Accounts (CPA).

6. Customer Legal Name *(If an individual, print last name first: eg: Doe, John)* — *If new Customer, enter previous Customer below:*

Sparkle Daycare LLC

7. TX SOS/CPA Filing Number	**8. TX State Tax ID** (11 digits)	**9. Federal Tax ID** (9 digits)	**10. DUNS Number** *(if applicable)*
0804801702			

11. Type of Customer:

☐ Corporation ☐ Individual Partnership: ☐ General ☑ Limited

Government: ☐ City ☐ County ☐ Federal ☐ Local ☐ State ☐ Other ☐ Sole Proprietorship ☐ Other:

12. Number of Employees

☑ 0-20 ☐ 21-100 ☐ 101-250 ☐ 251-500 ☐ 501 and higher

13. Independently Owned and Operated?

☐ **Yes** ☐ **No**

14. Customer Role (Proposed or Actual) – *as it relates to the Regulated Entity listed on this form. Please check one of the following*

☐ Owner ☐ Operator ☑ Owner & Operator
☐ Occupational Licensee ☐ Responsible Party ☐ VCP/BSA Applicant ☐ Other:

15. Mailing Address:	2345 Base Burner Path						
	City	Leander	**State**	TX	**ZIP**	78641	**ZIP + 4**

16. Country Mailing Information *(if outside USA)*	**17. E-Mail Address** *(if applicable)*
	skanth.n@gmail.com

18. Telephone Number	19. Extension or Code	20. Fax Number *(if applicable)*
(408) 806-2464		( ) -

SECTION III: Regulated Entity Information

21. General Regulated Entity Information *(If 'New Regulated Entity" is selected, a new permit application is also required.)*

☑ New Regulated Entity ☐ Update to Regulated Entity Name ☐ Update to Regulated Entity Information

The Regulated Entity Name submitted may be updated, in order to meet TCEQ Core Data Standards (removal of organizational endings such as Inc, LP, or LLC).

22. Regulated Entity Name *(Enter name of the site where the regulated action is taking place.)*

Sparkle Montessori Academy

23. Street Address of the Regulated Entity: *(No PO Boxes)*	2865 Gabriels Horn Rd						
	City	Leander	**State**	TX	**ZIP**	78641	**ZIP + 4**
24. County	Williamson						

If no Street Address is provided, fields 25-28 are required.

25. Description to Physical Location:					
26. Nearest City			**State**		**Nearest ZIP Code**

Latitude/Longitude are required and may be added/updated to meet TCEQ Core Data Standards. (Geocoding of the Physical Address may be used to supply coordinates where none have been provided or to gain accuracy).

27. Latitude (N) In Decimal:	30.615833		**28. Longitude (W) In Decimal:**	97.818889	
Degrees	Minutes	Seconds	Degrees	Minutes	Seconds
30	36	57	97	49	08

29. Primary SIC Code (4 digits)	**30. Secondary SIC Code** (4 digits)	**31. Primary NAICS Code** (5 or 6 digits)	**32. Secondary NAICS Code** (5 or 6 digits)
8351		624410	

33. What is the Primary Business of this entity? *(Do not repeat the SIC or NAICS description.)*

Commercial Land Development. Pre-school.

34. Mailing Address:	2345 Base Burner Path						
	City	Leander	**State**	TX	**ZIP**	78641	**ZIP + 4**
35. E-Mail Address:	skanth.n@gmail.com						

36. Telephone Number	37. Extension or Code	38. Fax Number *(if applicable)*
(408) 806-2464		( ) -

39. TCEQ Programs and ID Numbers Check all Programs and write in the permits/registration numbers that will be affected by the updates submitted on this form. See the Core Data Form instructions for additional guidance.

☐ Dam Safety	☐ Districts	☑ Edwards Aquifer	☐ Emissions Inventory Air	☐ Industrial Hazardous Waste
☐ Municipal Solid Waste	☐ New Source Review Air	☐ OSSF	☐ Petroleum Storage Tank	☐ PWS
☐ Sludge	☑ Storm Water	☐ Title V Air	☐ Tires	☐ Used Oil
☐ Voluntary Cleanup	☐ Wastewater	☐ Wastewater Agriculture	☐ Water Rights	☐ Other:

SECTION IV: Preparer Information

40. Name:	Prashantika Gautam	41. Title:	EIT

42. Telephone Number	43. Ext./Code	44. Fax Number	45. E-Mail Address
(817) 488- 4960		( ) -	prashantika.gautam@trustke.com

SECTION V: Authorized Signature

46. By my signature below, I certify, to the best of my knowledge, that the information provided in this form is true and complete, and that I have signature authority to submit this form on behalf of the entity specified in Section II, Field 6 and/or as required for the updates to the ID numbers identified in field 39.

Company:	Sparkle Daycare LLC	Job Title:	
Name *(In Print)*:	SRIKANTH NAGUNOORI	Phone:	(408) 806-2464
Signature:	N Srikanth	Date:	01/30/26